October 19, 2011

Ms. Kimberly D. Bose
Secretary
Federal Energy Regulatory Commission
888 First Street, N.E.
Washington, D.C. 20426

Re: ***North American Electric Reliability Corporation***
Docket No. RM__-__-___

Dear Ms. Bose:

The North American Electric Reliability Corporation ("NERC") hereby submits this filing in accordance with Section 215(d)(1) of the Federal Power Act ("FPA") and Part 39.5 of the Federal Energy Regulatory Commission's ("FERC" or "Commission") regulations, seeking approval for one proposed revised Reliability Standard, the associated Violation Risk Factors and Violation Severity Levels, and five new definitions to be added to the NERC Glossary of Terms, as well as the retirement of four approved Reliability Standards and the withdrawal of two pending Reliability Standards. NERC also seeks approval of the attached implementation plan which establishes the schedule for implementing the proposed Reliability Standard.

NERC seeks the Commission's approval of the following revised Reliability Standard contained in **Exhibit A** to this petition: TPL-001-2 - Transmission System Planning Performance Requirements. NERC also seeks FERC approval of the

1120 G Street N.W.
Suite 990
Washington, D.C.
202-393-3998 | www.nerc.com

proposed definitions of Bus-tie Breaker, Consequential Load Loss, Long-Term Transmission Planning Horizon, Non-Consequential Load Loss, and Planning Assessment.

This proposal also includes a request that FERC retire four existing Reliability Standards:

- TPL-001-1 — System Performance Under Normal (No Contingency) Conditions (Category A)
- TPL-002-1b — System Performance Following Loss of a Single [Bulk Electric System] ("BES") Element (Category B)
- TPL-003-1a — System Performance Following Loss of Two or More Bulk Electric System Elements (Category C)
- TPL-004-1 — System Performance Following Extreme Events Resulting in the Loss of Two or More Bulk Electric System Elements (Category D)

In addition, this proposal includes a request for the withdrawal of two pending Reliability Standards:

- TPL-005-0 — Regional and Interregional Self-Assessment Reliability Reports
- TPL-006-0.1 – Data From the Regional Reliability Organization Needed to Assess Reliability

The proposed TPL-001-2 Reliability Standard addresses the important reliability goal of establishing transmission planning performance requirements for reliable Bulk Electric System ("BES") operations across normal and Contingency conditions. TPL-001-2 — Transmission System Planning Performance Requirements

will serve as the foundational standard for annual planning assessments conducted by Planning Coordinators and Transmission Planners to plan the Bulk Electric System ("BES") reliably in response to a range of potential contingencies. The standard presents clear, measurable, and enforceable Requirements that each Planning Coordinator and Transmission Planner must follow when planning its System.

The proposed TPL-001-2 standard combines elements of the approved Reliability Standards TPL-001-1 — System Performance Under Normal (No Contingency) Conditions (Category A), TPL-002-1b — System Performance Following Loss of a Single BES Element (Category B), TPL-003-1a — System Performance Following Loss of Two or More Bulk Electric System Elements (Category C), and TPL-004-1 — System Performance Following Extreme Events Resulting in the Loss of Two or More Bulk Electric System Elements. The proposed standard also incorporates and expands upon the revised Footnote "b" to Table 1 of the previously approved TPL group of standards. The requirements from the two Reliability Standards not approved in FERC Order No. 693 (TPL-005-0 — Regional and Interregional Self-Assessment Reliability Reports and TPL-006-0.1 — Data from the Regional Reliability Organization Needed to Assess Reliability) have been moved to Sections 803 and 804 of the NERC Rules of Procedure.

In replacing these previous standards, TPL-001-2 introduces significant revisions and improvements including increased specificity of data requirements and modeling conditions. For example, sensitivity studies varying one or more modeling conditions by a sufficient amount to stress the system will be required. Annual assessments addressing Near-Term and Long-Term Planning Horizons for steady state, short circuit, and stability conditions must be conducted under the proposed standard. Planners will be required to address the impact of the unavailability of long lead-time critical equipment in a manner consistent with their entity's spare equipment strategy. The proposed standard clarifies how load loss may be utilized by transmission planners. Proper assessments conducted in accordance with the proposed standard will include an entity's criteria outlining acceptable voltage limits and deviations as well as the criteria used for analysis of instability. These assessments will then be distributed to other nearby entities for the purpose of facilitating a peer review so that entities may coordinate and improve their planning assessments across an Interconnection.

Proposed TPL-001-2 addresses twenty-seven Commission directives issued in Order No. 693 and subsequent orders as well as addressing numerous other concerns expressed by stakeholders, including the industry and the Commission Staff, during the development of the standard. Twenty-four of the responses to the Commission's

directives directly adhere to the directives issued. The standard drafting team addressed an additional three directives by equally effective and efficient solutions as provided for in Order No. 693.[1]

Accordingly, NERC respectfully requests that the proposed TPL-001-2 Reliability Standard be approved because it serves the important reliability goal of ensuring that a Transmission System is planned to operate reliably under normal and Contingency conditions. Additionally, the proposed standard improves uniformity and transparency in the planning process and clarifies the instances where planners may utilize load loss.

The TPL-001-2 — Transmission System Planning Performance Requirements Reliability Standard was approved by the NERC Board of Trustees on August 4, 2011.

This petition consists of the following:

- This transmittal letter;
- A table of contents for the entire petition;
- A narrative description explaining how the proposed Reliability Standard TPL-001-2 — Transmission System Planning Performance Requirements meets FERC's requirements;
- Reliability Standard TPL-001-2 — Transmission System Planning Performance Requirements submitted for approval (**Exhibit A**);

[1] *Mandatory Reliability Standards for the Bulk-Power* System, Order No. 693, FERC Stats. & Regs. ¶ 31,242 (2007), *order on reh'*g Order No. 693-A, 120 FERC ¶ 61,053 (2007)("Order No. 693") at P 31.

- Implementation Plan for Reliability Standard TPL-001-2 — Transmission System Planning Performance Requirements submitted for Approval (**Exhibit B**);
- Violation Risk Factors and Violation Severity Levels analysis for TPL-001-2 (**Exhibit C**)
- Consideration of Comments Reports created during the development of Reliability Standard TPL-001-2 — Transmission System Planning Performance Requirements (**Exhibit D)**
- Mapping Document Explaining the transposition of requirements from previous TPL Reliability Standards to TPL-001-2 — Transmission System Planning Performance Requirements (**Exhibit E**);
- The complete development record of the proposed Reliability Standard (**Exhibit F**); and
- The Standard Drafting Team roster and biographical information for NERC Standards Development Project 2006-02 Assess Transmission Future Needs and Develop Transmission Plans (**Exhibit G**).

For the reasons stated above and in this petition, NERC respectfully requests that

the Commission approve the standard presented herein for approval.

Respectfully submitted,

/s/ Andrew M. Dressel

Andrew M. Dressel
Attorney
North American Electric Reliability Corporation

UNITED STATES OF AMERICA
BEFORE THE
FEDERAL ENERGY REGULATORY COMMISSION

NORTH AMERICAN ELECTRIC RELIABILITY CORPORATION	**)** **)**	**Docket No. RM__-__-___**

PETITION OF THE NORTH AMERICAN ELECTRIC RELIABILITY CORPORATION FOR APPROVAL OF A REVISED TRANSMISSION PLANNING SYSTEM PERFORMANCE REQUIREMENTS RELIABILITY STANDARD AND SEVEN NEW GLOSSARY TERMS AND FOR RETIREMENT OF SIX EXISTING RELIABILITY STANDARDS

Gerald W. Cauley
President and Chief Executive Officer
North American Electric Reliability Corporation
3353 Peachtree Road N.E.
Suite 600, North Tower
Atlanta, GA 30326-1001

David N. Cook
Senior Vice President and General Counsel
North American Electric Reliability Corporation
1120 G Street N.W., Suite 990
Washington, D.C. 20005-3801
david.cook@nerc.net

Holly A. Hawkins
Assistant General Counsel for Standards and Critical Infrastructure Protection

Andrew M. Dressel
Attorney
North American Electric Reliability Corporation
1120 G Street, N.W.
Suite 990
Washington, D.C. 20005-3801
(202) 393-3998
(202) 393-3955 – facsimile
holly.hawkins@nerc.net
andrew.dressel@nerc.net

October 19, 2011

TABLE OF CONTENTS

I. Introduction 1

II. Notices and Communications 3

III. Executive Summary 3

IV. Background: 5

a. Regulatory Framework 5

b. Basis for Approval of Proposed Reliability Standard 6

c. Basis for Proposed Changes to Reliability Standard 7

d. Background of Proposed Transmission Planning Standard, Footnotes "9" and "12" and Previously Filed Version 1, Footnote "b' 10

V. Regulatory Directives 18

VI. Justification for Approval of the Proposed Reliability Standard 50

VII. Violation Risk Factors and Violation Severity Levels 61

VIII. Summary of the Reliability Standard Development Proceedings 62

a. Reliability Standards Development Procedure 62

b. Progress in Improving Proposed Reliability Standards 62

c. Development History 63

d. Issues Raised during the Development Process including Minority Issues 64

e. Initial Ballot 68

f. Balloting and Approval 69

IX. Conclusion 70

Exhibit A — Reliability Standard TPL-001-2 — Transmission System Planning Performance Requirements submitted for approval

Exhibit B — Implementation Plan for Reliability Standard TPL-001-2 — Transmission System Planning Performance Requirements submitted for Approval

Exhibit C — Violation Risk Factors and Violation Severity Levels analysis for TPL-001-2 — Transmission System Planning Performance Requirements

Exhibit D — Consideration of Comments Reports created during the development of Reliability Standard TPL-001-2 — Transmission System Planning Performance Requirements

Exhibit E — Mapping Document Explaining the transposition of requirements from previous TPL Reliability Standards to TPL-001-2 — Transmission System Planning Performance Requirements

Exhibit F — The complete development record of the proposed Reliability Standard

Exhibit G — The Standard Drafting Team roster and biographical information for NERC Standards Development *Project 2006-02 Assess Transmission Future Needs and Develop Transmission Plans*

I. INTRODUCTION

The North American Electric Reliability Corporation ("NERC")[1] respectfully requests the Federal Energy Regulatory Commission ("FERC" or "the Commission") approve, in accordance with Section 215(d)(1) of the Federal Power Act ("FPA")[2] and Section 39.5 of FERC's regulations, 18 C.F.R. § 39.5, one proposed revised Reliability Standard:TPL-001-2 — Transmission System Planning Performance Requirements, the associated Violation Risk Factors ("VRFs") and Violation Severity Levels ("VSLs"), and the implementation plan which establishes the schedule for implementing the proposed Reliability Standard. NERC is also requesting the retirement of four existing Reliability Standards: (1) TPL-001-1 — System Performance Under Normal (No Contingency) Conditions (Category A), (2) TPL-002-1b — System Performance Following Loss of a Single [Bulk Electric System] ("BES") Element (Category B), (3) TPL-003-1a — System Performance Following Loss of Two or More Bulk Electric System Elements (Category C), and (4) TPL-004-1 — System Performance Following Extreme Events Resulting in the Loss of Two or More Bulk Electric System Elements (Category D). Additionally, NERC is requesting to withdraw two standards TPL-005-0 — Regional and Interregional Self-Assessment Reliability Reports, and TPL-006-0.1 – Data From the Regional Reliability Organization Needed to Assess Reliability which were never approved by the Commission.

The NERC Board of Trustees approved this proposed Reliability Standard on August 4, 2011. NERC requests that the Commission approve the proposed Reliability Standard to become effective in accordance with the effective date provisions set forth in the proposed Reliability

[1] NERC has been certified by FERC as the Electric Reliability Organization ("ERO") authorized by Section 215 of the Federal Power Act. FERC certified NERC as the ERO in its order issued July 20, 2006 in Docket No. RR06-1-000. 116 FERC ¶ 61,062 (2006) ("ERO Certification Order).
[2] 16 U.S.C. 824o.

Standard and the Implementation Plan. Specifically, NERC is requesting that TPL-001-1, TPL-002-1b, TPL-003-1a, and TPL-004-1 be

> retired at midnight the day before TPL-001-2 becomes effective as the previous standards are replaced in their entirety by TPL-001-2. TPL-005-0 and TPL-006-0.1 are being retired at midnight the day before TPL-001-2 becomes effective because their requirements are adequately covered by the revised TPL-001-2 and NERC's Rules of Procedure, Section 800. However, during this 24-month period, all aspects of the latest enforceable versions of TPL-001 through TPL-006 shall remain in effect for compliance monitoring. This 24 month period is to allow entities to develop, perform or validate new or modified studies, methodologies, assessments, procedures, etc. necessary to implement and meet the TPL-001-2 requirements.[3]

Thus, all of the requirements of the previously-approved TPL standards will remain in effect until all of the requirements in the proposed standard become effective.

Exhibit A to this filing sets forth the proposed Reliability Standard. **Exhibit B** to this filing is the Implementation Plan for Reliability Standard TPL-001-2 — Transmission System Planning Performance Requirements submitted for Approval. **Exhibit C** is an analysis demonstrating that the proposed VRFs and VSLs for TPL-001-2 meet the Commission-approved VRF and VSL guidelines. **Exhibit D** contains the Matrix of FERC Directives and Industry Issues Considered in the development of this proposed standard. **Exhibit E** contains the Mapping Document which explains the transposition of requirements from previous TPL Reliability Standards to TPL-001-2 — Transmission System Planning Performance Requirements. **Exhibit F** is the complete development record of the proposed Reliability Standard. **Exhibit G** includes the standard drafting team ("SDT") roster and a short biography of each SDT member that developed the proposed Reliability Standard.

NERC is also filing this proposed Reliability Standard with applicable governmental authorities in Canada.

---

[3] Implementation Plan for TPL-001-2, **Exhibit B,** *infra*.

II. NOTICES AND COMMUNICATIONS

Notices and communications with respect to this filing may be addressed to the following:

Gerald W. Cauley
President and Chief Executive Officer
North American Electric Reliability Corporation
3353 Peachtree Road NE
Suite 600, North Tower
Atlanta, GA 30326-1001

David N. Cook*
Senior Vice President and General Counsel
North American Electric Reliability Corporation
1120 G Street N.W., Suite 990
Washington, D.C. 20005-3801
david.cook@nerc.net

Holly A. Hawkins*
Assistant General Counsel for Standards and Critical Infrastructure Protection
North American Electric Reliability Corporation

Andrew M. Dressel*
Attorney
1120 G Street, N.W.
Suite 990
Washington, D.C. 20005-3801
(202) 393-3998
(202) 393-3955 – facsimile
holly.hawkins@nerc.net
andrew.dressel@nerc.net

*Persons to be included on FERC's service list are indicated with an asterisk. NERC requests waiver of FERC's rules and regulations to permit the inclusion of more than two people on the service list.

III. EXECUTIVE SUMMARY

The proposed TPL-001-2 Reliability Standard addresses the important reliability goal of establishing transmission planning performance requirements for the reliable planning of the Bulk Electric System ("BES") across normal and Contingency conditions. TPL-001-2 — Transmission System Planning Performance Requirements will serve as the foundational standard for annual planning assessments conducted by Planning Coordinators and Transmission Planners to plan the BES reliably in response to a range of potential contingencies. The standard presents clear, measurable, and enforceable Requirements that each Planning Coordinator and Transmission Planner must follow when planning its System.

The proposed TPL-001-2 combines elements of the approved Reliability Standards TPL-001-1 — System Performance Under Normal (No Contingency) Conditions (Category A), TPL-002-1b — System Performance Following Loss of a Single BES Element (Category B), TPL-003-1a — System Performance Following Loss of Two or More Bulk Electric System Elements (Category C), and TPL-004-1 — System Performance Following Extreme Events Resulting in the Loss of Two or More Bulk Electric System Elements.

In replacing the TPL-001-1 through TPL-004-1 standards, the proposed TPL-001-2 standard introduces significant revisions and improvements including increased specificity of data requirements and modeling conditions. The proposed standard also incorporates and expands upon the revised Footnote "b" to Table 1 of the previously approved TPL group of standards. Sensitivity studies varying one or more modeling conditions by a sufficient amount to stress the system will be required. Annual assessments addressing Near-Term and Long-Term Planning Horizons for steady state, short circuit, and stability conditions must be conducted under the proposed standard. Planners will be required to address the impact of the unavailability of long lead-time critical equipment in a manner consistent with their entity's spare equipment strategy. The proposed standard also provides limitations on the conditions under which planned load loss is permitted. Proper assessments conducted in accordance with the proposed standard will include an entity's criteria outlining acceptable voltage limits and deviations as well as the criteria used for analysis of instability. These assessments will then be distributed to affected entities for the purpose of facilitating a peer review so that entities may coordinate and improve their planning assessments across an Interconnection.

Proposed TPL-001-2 addresses twenty-seven Commission directives issued in Order No. 693 and subsequent orders as well as addressing numerous other concerns expressed by

stakeholders, including the industry and the Commission Staff, during the development of the standard. Twenty-four of the responses to the Commission's directives directly conform to the directives issued. The standard drafting team addressed an additional three directives through equally effective and efficient solutions as permitted in Order No. 693.[4]

Accordingly, the proposed TPL-001-2 Reliability Standard should be approved because it serves the important reliability goal of ensuring that a Transmission System is planned to operate reliably under normal and Contingency conditions. Additionally, the proposed standard improves uniformity and transparency in the planning process and clarifies the instances where planners may utilize load loss. This standard will improve achieve reliability performance beyond that achieved by the previous standards being replaced.

The proposed TPL-001-2 Reliability Standard was approved by a ballot pool that was conducted from July 13 to July 24, 2011. With a 94.33 percent quorum participating in the ballot; the proposed Reliability Standard achieved a weighted segment approval vote of 75.37 percent. The proposed Reliability Standard thus achieved the required two-thirds weighted segment vote and at least a 75 percent quorum of the ballot pool. The Transmission System Planning Performance Requirements Reliability Standard was approved by the NERC Board of Trustees on August 4, 2011.

IV. BACKGROUND

a. Regulatory Framework

By enacting the Energy Policy Act of 2005,[5] Congress entrusted FERC with the duties of approving and enforcing rules to ensure the reliability of the Nation's bulk power system, and

[4] *Mandatory Reliability Standards for the Bulk-Power* System, Order No. 693, FERC Stats. & Regs. ¶ 31,242 (2007), *order on reh'*g Order No. 693-A, 120 FERC ¶ 61,053 (2007)("Order No. 693") at P 31.
[5] Energy Policy Act of 2005, Pub. L. No. 109-58, Title XII, Subtitle A, 119 Stat. 594, 941 (2005) (codified at 16 U.S.C. § 824o).

with the duties of certifying an Electric Reliability Organization ("ERO") that would be charged with developing and enforcing mandatory Reliability Standards, subject to Commission approval. Section 215 states that all users, owners, and operators of the BPS in the United States will be subject to Commission-approved Reliability Standards.

b. Basis for Approval of Proposed Reliability Standard

Section 39.5(a) of FERC's regulations requires the ERO to file with the Commission for its approval each Reliability Standard that the ERO proposes to become mandatory and enforceable in the United States, and each modification to a Reliability Standard that the ERO proposes to be made effective. The Commission has the regulatory responsibility to approve standards that protect the reliability of the BPS. In discharging its responsibility to review, approve, and enforce mandatory Reliability Standards, FERC is authorized to approve those proposed Reliability Standards that meet the criteria detailed by Congress. The Federal Power Act states, "the Commission may approve, by rule or order, a proposed Reliability Standard or modification to a Reliability Standard if it determines that the standard is just, reasonable, not unduly discriminatory or preferential, and in the public interest."[6]

When evaluating proposed Reliability Standards, the Commission is expected to give "due weight" to the technical expertise of the ERO.[7] The technical expertise of the ERO is derived from the SDT. For this project, the SDT consisted of 13 industry experts with over 395 years of collective experience. The SDT included several registered professional engineers, a number of individuals with advanced engineering degrees, and industry thought leaders that generously lend their expertise to NERC and other professional organizations such as the Institute of Electrical and Electronics Engineers ("IEEE"), the International Council on Large

[6] Section 215(d)(2) of the FPA, 16 U.S.C. § 824o(d)(2) (2005).
[7] *Id.*

Electric Systems ("CIGRE"), and the Electric Power Research Institute ("EPRI"). The SDT members on this project provided a diversity of transmission planning experience ranging across North America, including both the continental United States and Canada. A detailed set of biographical information for each of the team members is included along with the SDT roster in **Exhibit G**.

Order No. 672 provides guidance on the factors the Commission will consider when determining whether proposed Reliability Standards meet the statutory criteria.[8]

c. Basis for Proposed Changes to Reliability Standards

The proposed Reliability Standard, TPL-001-2 — Transmission System Planning Performance Requirements, is intended to ensure that a set of coordinated Planning Assessments are in place and that planners have engaged in system planning based on established performance criteria. The proposed standard will apply to Planning Coordinators and Transmission Planners.

The proposed standard represents a substantial revision yielding significant improvements relative to the current set of enforceable standards. This project advances the overall quality of the transmission planning ("TPL") standards group, eliminating gaps in the requirements, removing ambiguity, eliminating the "fill-in-the-blank" components, and addressing numerous FERC regulatory directives, as highlighted here and shown in **Exhibit D**.

Highlights of the improvements are that the proposed standard:

- Clarifies when loss of load may be utilized for Transmission Planning drawing distinctions between Consequential Load Loss and Non-Consequential Load Loss
- Provides a clear requirement for the Transmission Planner and Planning Coordinator to maintain System models for performing studies by requiring:

[8] *Rules Concerning Certification of the Electric Reliability Organization; Procedures for the Establishment, Approval and Enforcement of Electric Reliability Standards, FERC Stats. & Regs*., ¶ 31,204 at PP 320-338 ("Order No. 672"), *order on reh'g*, FERC Stats. & Regs. ¶ 31,212 (2006) ("Order No. 672-A").

- A direct linkage to the MOD-010-0 and MOD-012-0 Reliability Standards
- That items from Corrective Action Plans need to be included in the models
- That projected system conditions shall be represented
- Specified list of items to be represented in the models

- Requires distribution of Planning Assessment results to adjacent Planning Coordinators and adjacent Transmission Planners. Planning Assessments must also be distributed to other registered entities with a reliability-related need that submit a written request for the information. This will allow all of an applicable entity's peers to review Planning Assessments for events that will impact their System.

- Requires an annual Planning Assessment that:

  - Addresses both the Near-Term Transmission Planning Horizon and the Long-Term Transmission Planning Horizon
  - Requires steady state, short circuit, and stability analysis supported by required studies

- Requires that studies shall be based on:

  - A Contingency list for planning events and extreme events
  - Simulation of the removal of multiple elements where a protection system or other automatic control are expected to disconnect them for a Contingency
  - Tripping of elements that are expected to be disconnected because of voltage ride-through issues, relay loadability issues or transient swings

- Includes sensitivity studies varying one or more conditions by a sufficient amount to stress the system

- Addresses the need to plan for the unavailability of major equipment with a lead time of one year or more based on an entity's spare equipment strategy

- Qualifies when past studies may be used to support the Planning Assessment

- Requires the creation of System deficiencies lists and Corrective Action Plans when system analyses indicate an inability to meet performance requirements

- Requires criteria for acceptable System steady-state voltage limits, post-Contingency voltage deviations, and transient voltage response
- Requires registered entities to submit the criteria or methodology utilized to identify System instability
- Determines and identifies individual or joint responsibilities for the Planning Assessment
- Includes a complete revision of Table 1 to clearly articulate the contingencies that must be evaluated to ensure that the planned System meets the performance requirements. These changes include changing the classification of the events, clarifying events and Fault types, and removing the ambiguity of performance requirements.
- For extreme events, the revised Table 1 describes System performance for Wide Area events, including cyber attacks, and the standard clearly defines when further evaluation is required

NERC is also requesting that FERC approve five new definitions:

Bus-tie Breaker: A circuit breaker that is positioned to connect two individual substation bus configurations.

Consequential Load Loss: All Load that is no longer served by the Transmission system as a result of Transmission Facilities being removed from service by a Protection System operation designed to isolate the fault.

Long-Term Transmission Planning Horizon: Transmission planning period that covers years six through ten or beyond when required to accommodate any known longer lead time projects that may take longer than ten years to complete.

Non-Consequential Load Loss: Non-Interruptible Load loss that does not include: (1) Consequential Load Loss, (2) the response of voltage sensitive Load, or (3) Load that is disconnected from the System by end-user equipment.

Planning Assessment: Documented evaluation of future Transmission system performance and Corrective Action Plans to remedy identified deficiencies.

The proposed revisions consolidate requirements from four existing standards into one standard. Thus NERC is proposing to retire the following four Reliability Standards: (1) TPL-001-1 — System Performance Under Normal Conditions, (2)TPL-002-1b — System Performance Following Loss of a Single BES Element, (3) TPL-003-1a — System Performance Following Loss of Two or More BES Elements, and (4) TPL-004-1 — System Performance Following Extreme BES Events, because they are no longer needed. In addition, NERC is proposing to withdraw two Reliability Standards (1) TPL-005-0 — Regional and Interregional Self-Assessment Reliability Reports, and (2) TPL-006-0.1 — Data From the Regional Reliability Organization Needed to Assess Reliability in their entirety.[9]

As shown in **Exhibit D** the changes in this proposed standard reflect consideration of a number of issues that were captured during NERC's original translation of former Operating Policies and Planning Standards to what are called the "Version 0" standards. Also considered were issues noted during the development of compliance measures for the Phase III and Phase IV Reliability Standards Project developed subsequent to Version 0 development, the development of Violation Risk Factors Project in 2006, Order No. 693, and subsequent FERC Orders.

d. Background of proposed Transmission Planning standard footnotes "9" and "12" to Table 1 and Previously Filed Version 1, Footnote "b"

On March 31, 2011, NERC submitted a Petition for Approval of Four Transmission Planning System Performance Reliability Standards and Retirement of Four Existing Reliability

[9] These two proposed standards were among the group of 24 proposed standards that the Commission withheld action on when it issued Order No. 693, because the standards applied only to Regional Reliability Organizations.

Standards[10] ("March 31 Footnote B Filing") pursuant to FERC's March 18, 2010 Order Setting Deadline for Compliance on the TPL-002-0 standard[11] to comply with the directives in Order No. 693.[12] In the March 31 Footnote B Filing, NERC proposed a solution to FERC's directive from Order No. 693 that is as efficient and effective as the approach described in the directive. On May 17, 2011[13] FERC issued a data request to NERC requesting additional information on NERC's proposed Footnote b, and NERC responded to the data request on June 7, 2011.[14] Procedurally, NERC's proposed Footnote b is still pending in FERC Docket No. RM11-18-000.

For the Commission's reference, the proposed Footnote b of Table 1 for version 1 of the following transmission planning Reliability Standards is identical for each of the four standards:

- TPL-001-1 - System Performance Under Normal (No Contingency) Conditions (Category A), TPL-002-1b - System
- Performance Following Loss of a Single Bulk Electric System Element (Category B),
- TPL-003-1a - System Performance Following Loss of Two or More Bulk Electric System Elements (Category C), and
- TPL-004-1 - System Performance Following Extreme Events Resulting in the Loss of Two or More Bulk Electric System Elements (Category D)

Version 1 of these four transmission planning reliability standards was filed with the Commission with the March 31 Footnote B Filing and has not yet been acted on by the Commission. Version 2 of the transmission planning reliability standard TPL-001-2, which is the standard proposed in this filing, replaces in their entirety the four version 1 transmission planning reliability standards identified immediately above. In creating TPL-001-2, the proposed Footnote b of Table 1 of version 1 of the transmission planning reliability standards ("Footnote

[10] *Petition of the North American Electric Reliability Corporation for Approval of Four Transmission Planning System Performance Reliability Standards and Retirement of Four Existing Reliability Standards*, Docket No. RM11-18-000 (March 31,2011).
[11] *Setting Deadline For Compliance*, 130 FERC ¶ 61,200 (2010).
[12] Order No. 693 at P 1773.
[13] Letter from the Commission seeking additional information from NERC regarding Reliability Standards TPL-001-1, TPL-002-1b, TPL-003-1a, and TPL-004-1, Docket No. RM11-18-000 (May 17, 2011).
[14] *Response of the North American Electric Reliability Corporation to the Federal Energy Regulatory Commission's May 17, 2011 Letter Requesting Additional Information Regarding NERC's Request for Approval of Four Transmission Planning System Performance Reliability Standards*, Docket No. RM11-18-000 (June 7, 2011).

b”) was modified slightly and carried over as Steady State & Stability Performance Footnotes 9 and 12 (“Notes “9” and 12”) in TPL-001-2.

Footnote b reads as follows:

> An objective of the planning process should be to minimize the likelihood and magnitude of interruption of firm transfers or Firm Demand following Contingency events. Curtailment of firm transfers is allowed when achieved through the appropriate re-dispatch of resources obligated to re-dispatch, where it can be demonstrated that Facilities, internal and external to the Transmission Planner’s planning region, remain within applicable Facility Ratings and the re-dispatch does not result in the shedding of any Firm Demand. It is recognized that Firm Demand will be interrupted if it is: (1) directly served by the Elements removed from service as a result of the Contingency, or (2) Interruptible Demand or Demand-Side Management Load. Furthermore, in limited circumstances Firm Demand may need to be interrupted to address BES performance requirements. When interruption of Firm Demand is utilized within the planning process to address BES performance requirements, such interruption is limited to circumstances where the use of Demand interruption are documented, including alternatives evaluated; and where the Demand interruption is subject to review in an open and transparent stakeholder process that includes addressing stakeholder comments.

While proposed Note 9 reads as follows:

> An objective of the planning process should be to minimize the likelihood and magnitude of interruption of Firm Transmission Service following Contingency events. Curtailment of Firm Transmission Service is allowed both as a System adjustment (as identified in the column entitled ‘Initial Condition’) and a corrective action when achieved through the appropriate re-dispatch of resources obligated to re-dispatch, where it can be demonstrated that Facilities, internal and external to the Transmission Planner’s planning region, remain within applicable Facility Ratings and the re-dispatch does not result in any Non-Consequential Load Loss. Where limited options for re-dispatch exist, sensitivities associated with the availability of those resources should be considered.

And Note 12 states:

> An objective of the planning process should be to minimize the likelihood and magnitude of Non-Consequential Load Loss following Contingency events. However, in limited circumstances Non-Consequential Load Loss may be needed to address BES performance requirements. When Non-Consequential Load Loss is utilized within the planning process to address BES performance requirements, such interruption is limited to circumstances where the Non-Consequential Load Loss is documented, including alternatives evaluated; and where the utilization of Non-Consequential Load Loss is subject to review in an open and transparent stakeholder process that includes addressing stakeholder comments.

> Where Non-Consequential Load Loss is proposed to be defined in TPL-001-2 as: "Non-Interruptible Load loss that does not include: (1) Consequential Load Loss, (2) the response of voltage sensitive Load, or (3) Load that is disconnected from the System by end-user equipment."

Proposed Notes 9 and 12 addresses the directives from Order No. 693, as clarified in the Commission's June 11, 2010 order denying rehearing and granting partial clarification.[15] In the Commission's June 11 Order, the Commission did not strictly prohibit planning to shed firm Load in all circumstances. The Commission stated:

> 21. [] the above passage from Order No. 693 acknowledged that the ERO could consider the comments of Entergy and Northern Indiana regarding planning for the loss of firm service "at the fringes of various systems," as NERC now characterizes the issue.[f.n. omitted] However, the Commission expressed concern that whatever approach is chosen by the ERO does not reflect a "lowest common denominator," i.e., "[t]he proposed Reliability Standard must not simply reflect a compromise in the ERO's Reliability Standard development process based on the least effective North American practice – the so-called 'lowest common denominator' – if such practice does not adequately protect Bulk-Power System reliability." [f.n. omitted] Moreover, the Commission, in the same passage from Order No. 693, then provided a clarification that an entity may seek a regional difference to the Reliability Standard from the ERO for case-specific circumstances. We believe that a regional difference, or a case-specific exception process that can be technically justified, to plan for the loss of firm service "at the fringes of various systems" would be an acceptable approach. Thus, the Commission did not dictate a single solution as NERC and others now claim. In any event, NERC must provide a strong technical justification for its proposal.[16]

NERC addressed FERC's instruction to clarify Footnote b regarding Load loss following a single contingency, specifying the amount and duration of load loss and system adjustments permitted after the first contingency to return the system to a normal operating state. However, NERC did not delete in its entirety the ability of an entity "to plan for the loss of non-consequential load in the event of a single contingency." Rather, both Footnote b and Notes 9 and 12 meet the Commission's objective while simultaneously meeting the needs of industry and respecting jurisdictional bounds. No longer can those registered with NERC as Planning

---

[15] *Order Denying Rehearing and Granting Partial Clarification, Denying Request for Stay, and Granting Extension of Time*, 131 FERC ¶ 61,231 (2010)
[16] *Id.* at P 21.

Authorities or Transmission Planners plan to interrupt Load under a Category B (N-1) Contingency event unless the registered functions meet the specified conditions detailed in the Footnote.

After extensive consideration during the standards development process of the Commission's suggestion in Order No. 693 that NERC develop a case-specific exceptions procedure,[17] NERC, through the standards development process, chose a response that NERC believes is at least as efficient and effective as the Commission's suggested process. As described in the March 31 Footnote B Filing, NERC believes that an ERO-sponsored planning process is not likely to be efficient or effective because of complex jurisdictional issues between NERC, FERC, and the many authorities having jurisdiction that would have to be resolved in perhaps forty-eight states and Canada, before implementation could occur. A NERC-centered process would at best duplicate planning actions going on elsewhere (where resource allocation decisions are actually being made), and such a process could lead to inconsistent results. It appeared to the industry and to NERC that a more reasonable and expeditious path would be to rely on existing stakeholder processes, many of which are driven by other FERC orders. Such processes would be more likely to engage the appropriate local-level decision-makers and policy-makers. For these reasons, NERC's March 31 Footnote B Filing proposed an efficient and effective alternative in responding to the directive and implementing Footnote b planned outages by leveraging current, existing stakeholder processes already established to address transmission planning choices. The same rationale applies to Notes 9 and12 as well.

FERC already mandates transmission planning processes through specific requirements addressed in Order No. 890 and subsequent orders. Order No. 890 reformed the *pro forma* Open Access Transmission Tariff to require each public utility transmission provider to have a

[17] Order No. 693 at P 1794.

coordinated, open, and transparent regional transmission planning process. FERC's recent Order No. 1000 builds upon Order No. 890 by broadening participation in regional transmission planning processes.[18] Specifically, Order No. 1000 requires that each public utility transmission provider participate in a regional transmission planning process that produces a regional transmission plan.[19]

FERC's Order No. 1000 bolsters Commission-mandated transmission planning processes by broadening participation in stakeholder processes. FERC enhanced transmission planning requirements by finding that "it is necessary to have an affirmative obligation in these transmission planning regions to evaluate alternatives that may meet the needs of the region more efficiently or cost-effectively."[20] FERC stated that "In the absence of the reforms implemented below, we are concerned that public utility transmission providers may not adequately assess the potential benefits of alternative transmission solutions at the regional level that may meet the needs of a transmission planning region more efficiently or cost-effectively than solutions identified by individual public utility transmission providers in their local transmission planning process."[21]

Additionally, Order No. 1000 provides a mechanism for Regional Entity engagement and broadens the scope to include public policy considerations. FERC's reinforcement of stakeholder processes in Order No. 1000 avoids the competing jurisdictional concerns that could result from a new process created exclusively for the purpose of assuring reliability.

The planning principles articulated by the Commission in Order No. 1000 reinforces NERC's position presented in the March 31, 2011 Footnote b filing, NERC's June 17, 2011

---

[18] *Transmission Planning and Cost Allocation by Transmission Owning and Operating Public Utilities*, 136 FERC ¶ 61,051, Order No. 1000 (2011) at P 1, 3, Sec. III. ("Order No. 1000").
[19] *Id.* at P 80
[20] *Id.*.
[21] *Id.* at P 81.

response to the data request, and reiterated in this petition for approval of the proposed TPL-001-2 standard. Specifically, the Commission, through Order No. 1000, is promoting a stakeholder process that includes: coordination; openness; transparency; information exchange; comparability; dispute resolution; and economic planning studies.

Accordingly, relying on existing stakeholder processes to implement Footnote b and Note 9, including stakeholder processes developed under FERC Order Nos. 890 and 1000, will provide mechanisms for NERC and the Regional Entities to effectively monitor an entity's planned interruptions of Firm Transmission Service by making these planned interruptions visible. Proposed Note 9 recognizes that it is generally inappropriate to plan to interrupt Firm Transmission Service to meet reliability performance metrics. However, in limited circumstances, an entity may rely on planned Load shedding. The magnitude and timeframe for which the entity plans to rely on Load shedding will be limited to circumstances where its use is documented and subject to an open and transparent stakeholder process.

The language in Note 12 of the proposed TPL-001-2 standard specifically provides that: "[w]hen Non-Consequential Load Loss is utilized within the planning process to address BES performance requirements, such interruption is limited to circumstances where the Non-Consequential Load Loss is documented, including alternatives evaluated; and where the utilization of Non-Consequential Load Loss is subject to review in an open and transparent stakeholder process that includes addressing stakeholder comments." In other words, the language in Note 12 specifically provides for a review of how the Non-Consequential Load Loss was determined, whether any alternatives were evaluated, and how the determination to plan to shed Non-Consequential Load Loss was made through an open and transparent stakeholder process.

In an audit or spot check of an entity, one of the first questions asked will be whether the entity planned on interrupting Firm Demand to meet reliability performance requirements. If so, the entity will be required to provide all relevant documents pertaining to such transmission planning decisions, including any documentation used to make such a determination through an open and transparent stakeholder process. This documentation should include the specifics of what Load will be shed and under what circumstances. The entity will also be required to provide a description of other alternatives the entity considered and a description of the stakeholder process in which the decision to rely on Load shedding was made. Additionally, the audit or spot check will include a discussion of the activity or participation by the relevant governmental authority with jurisdiction over the matter. Based on all of this information, NERC or the Regional Entities will be able to determine whether the decision by the entity to rely on Load shedding to meet performance requirements was reasonable given the circumstances.

Accordingly, for the reasons stated in NERC's March 31 Footnote B Filing, NERC's June 17, 2011 response to FERC's data request, and in this petition, the approach proposed in Notes 9 and 12 presents an equally efficient and effective alternative to responding to the Commission's Order No. 693 directive because many of the stakeholder processes that will be used in planning decisions are already in place, as implemented by FERC in Order No. 890 and in state regulatory jurisdictions, or will be in place, pursuant to FERC's Order No. 1000. More localized decision-making is preferable to an ERO-centric exceptions process because of the inevitable debate about cost which is implicit in planning decisions. Additionally, the approach is effective because the ERO process will be able to monitor any planned use of Notes 9 and 12 through audits of the transmission planners. These audits will ensure that the use of Notes 9 and

12 is being addressed under the open and transparent guidelines established there. For these reasons, the approach presented in Notes 9 and 12 fulfills the FERC directive in an equally efficient and effective manner, and is achievable in a reasonably short time frame having gained the acceptance of the industry. Proposed Notes 9 and 12 raises the bar because it now requires full documentation and disclosure of planning choices impacting reliability.

V. REGULATORY DIRECTIVES

The SDT addressed twenty-seven directives issued by the Commission in Order No. 693.[22] These directives are presented below with resolutions proposed by the SDT. The text of the complete proposed standard TPL-001-2— Transmission System Planning Performance Requirements is included in **Exhibit A**. These resolutions are summarized in **Exhibit D** along with the resolutions to industry concerns.

1. Paragraph 1691(of Order No. 693) - Ensure that the planning requirements are specific enough to promote rigor and consistency in assessments and provide clear and measurable rules for mandatory and enforceable Reliability Standards.
    - SDT resolution: The SDT directly addressed the specifics of this directive. The proposed standard strikes a balance between rigidity for specific requirements (for example, Table 1 event descriptions and performance requirements) and flexibility where individual system concerns are best served through engineering judgment (for example, Requirement R2, Parts 2.1.4 & 2.4.3 list the factors and sensitivities that should be addressed to stress the System). The proposed Reliability Standard ensures that the planning process and the BES are robust enough to be able to withstand a range of probable

[22] *Mandatory Reliability Standards for the Bulk-Power* System, Order No. 693, FERC Stats. & Regs. ¶ 31,242 (2007), *order on reh'*g Order No. 693-A, 120 FERC ¶ 61,053 (2007)("Order No. 693").

contingencies while reliably serving customer demand and preventing identified outages. Conversely the standard is flexible enough to accommodate a broad range of system conditions over a planning horizon to account for the lead times needed to place facilities in service. This will promote rigor and consistency in assessments and provide clear and measurable rules for mandatory and enforceable standards.

2. Paragraph 1691 - The planning standards should require planning entities to consider the probable range of contingencies when determining critical system conditions but only those deemed to be significant need to be assessed with the documentation provided that explain the rationale for selection. Additionally, the Commission stated "that it would be appropriate for planning entities to conduct sensitivity studies to 'bracket' the range of probable outcomes."[23]
    - SDT resolution: The SDT has directly adopted the specifics of this suggestion. In the proposed TPL-001-2, Requirement R2, Part 2.1 mandates the types of sensitivity studies that must be run. Building upon Requirement R2, Requirement R3 demands that an entity must perform Planning Assessments that meet system performance criteria for steady-state conditions. Requirement R3, Part 3.1 requires analysis of those contingencies that may cause the most severe system impact as determined in Requirement R3, Part 3.4. A similar expectation is found in Requirement R4 for stability studies in Parts 4.1 and 4.4.

[23] Order 693 at P 1694.

3. Paragraph 1692 - Consider integrating TPL-001 through TPL-004 into a single Reliability Standard.
    - SDT resolution: The SDT directly adopted this directive. The proposed TPL-001-2 incorporates TPL-001-1 through TPL-004-1.
4. Paragraph 1693 - Submit an informational filing, in addition to regional criteria, addressing all utility and RTO/ISO differences in transmission planning criteria that are more stringent than those specified by the TPL group of Reliability Standards.
    - SDT resolution: The data was collected and filed by the ERO and distributed to the SDT. The SDT reviewed the compiled information and found that the majority of the planning practices identified in the survey were based on local conditions and not applicable to a continent-wide standard. However, one common practice, a generation outage coupled with another single Contingency without load loss treated as a single Contingency, was adopted by the SDT as part of planning category P3 (loss of generator unit followed by System adjustments ((g-1)+(n-1)) in Table 1.
5. Paragraph 1716 - System performance should be assessed based on single contingencies that faithfully duplicate what will happen in the actual power system.
    - SDT resolution: The SDT directly adopted the specifics of this directive in Requirement R3, Part 3.3.1 and Requirement R4, Part 4.4.1 of the proposed standard.
6. Paragraph 1716 - Entities that have planned and designed their systems on the basis of a different approach to single contingencies based on the existing standards should work with NERC in developing plans to transition to this new approach.

- SDT resolution: The SDT directly addressed this directive. The SDT considered this issue and determined that a phased implementation approach to this proposed standard will allow entities to transition to the new or changed requirements in this proposed standard. Consequently, a phased implementation plan has been proposed.

7. Paragraph 1719 - Consider appropriate revisions to the Reliability Standards to address cyber security events. The system impacts of cyber security events are best addressed in the TPL group of Reliability Standards, particularly TPL-004-0 (extreme events).
    - SDT resolution: The SDT has addressed this directive by adding Cyber security events to the list of steady state Wide Area extreme events in Table 1, Steady State, 3.a.v, in proposed TPL-001-2.
8. Paragraph 1755 - Require a peer review of planning assessments with neighboring entities.
    - SDT resolution: The SDT developed an equally effective and efficient manner to provide for the appropriate sharing of information with neighboring systems. This is covered in proposed TPL-001-2, Requirement R3, Part 3.4.1, Requirement R4, part 4.4.1, and Requirement R8.
    - Requirement R8 addresses the appropriate sharing of information with neighboring systems. The SDT believes that requiring applicable entities to distribute to adjacent Planning Coordinators and Transmission Planners is a better approach than a “peer review” approach, as an entity may always decline an offer to participate in a peer review even when they should

participate. The distribution approach means that the entity will always receive the Planning Assessment. Requirement R8 ensures that information is shared in a timely manner[24] with those affected and input from those systems is received, without dictating how the two-way sharing must take place. In the course of the continuing cycle of Planning Assessments, comments from other entities at the end of a planning cycle will be utilized at the beginning of the next cycle as the planner moves forward in time. This approach does not dictate how information is shared but still makes certain that the goal is achieved. This is an equally effective and efficient approach to the directive in Order No. 693.

- To cover those entities that may not be adjacent, the proposed standard requires the Transmission Planner and Planning Coordinator to distribute the Planning Assessment to additional entities that exhibit a "reliability-related need," who have requested information in writing, and require a documented response to their comments. This is an equally, effective and efficient manner to provide for the appropriate sharing of information with neighboring systems.
- Requirement R3, Part 3.4.1 and Requirement R4, Part 4.4.1 address the concern expressed by the Commission regarding sharing information and coordinating responses to system contingencies that may affect adjacent[25] Systems.

[24] Requirement R8 requires distribution to adjacent Planning Coordinators and Transmission Planners within 90 days and to others with a reliability related need that submits a request within 30 days of receiving such a request.
[25] Although Order No. 693 uses the term "neighboring" the proposed Reliability Standard uses "adjacent." "Adjacent" better clarifies the intent of the requirement to cover transmission systems that interconnect with the

9. Paragraph 1759 - Modify Requirement R1.3 to substitute the reference to Regional Reliability Organization with Regional Entity.
    - SDT resolution: The SDT directly adopted the specifics of this directive. All references to the Regional Reliability Organization have been removed. Furthermore, all new and future revisions to all NERC Reliability Standards will use the term Regional Entity instead of the previous term Regional Reliability Organization.
10. Paragraph 1765 - Determine critical system conditions and study years by conducting sensitivity analysis with due consideration of the factors outlined by the Commission.
    - SDT resolution: The SDT directly addressed the specifics of this directive. This is covered in proposed TPL-001-2, Requirement R2, Part 2.1.4 for steady state and Requirement R2, Part 2.4.3 for stability analyses. Inclusion of sensitivity analyses represent an important improvement to the proposed planning standard aimed at better understanding a range of probable outcomes of potential system conditions. Proposed TPL-001-2, Requirement R1 requires the System model to represent projected System conditions. Specifically, the proposed Reliability Standard requires planners to assess the potential impact of one or more changes to these assumed conditions which stress the system. The results of the sensitivity analyses help the planner develop a portfolio of information by identifying performance issues related to credible assumptions. This information is valuable to the planner to identify which set of assumptions have the most severe impacts on the performance of

---

entity's System whereas "neighbor" is vague and could include systems in the vicinity of an entity's system, but not directly connected.

the planned system. Because the end of one planning cycle is the beginning of the next planning cycle, the results of the sensitivity studies will be available to the planner as they develop the following year's projected System conditions and to direct additional sensitivity analysis in future assessments.

11. Paragraph 1769 - Address concerns with footnote (a) of Table 1 with regard to applicability of emergency ratings and consistency of normal ratings and voltages with values obtained from other reliability standards.
    - SDT resolution: The SDT directly addressed the specifics of this directive. Proposed TPL-001-2, Requirement R3, Part 3.1 requires that studies shall be performed for planning events to determine that the BES meets the performance requirements in Table 1. Table 1, header notes 'e' and 'f' are part of the performance requirements of Table 1. Header note 'e' states that planned system adjustments must be executable within the time duration applicable to the facility ratings. Header note 'f states that applicable facility ratings shall not be exceeded.
12. Paragraph 1773 – Submit a modification to Footnote (b) that clarifies that firm load shedding or curtailment of firm transfers is not allowed as part of the system adjustments.
    - SDT resolution: NERC addressed this directive in *Project 2010-11 TPL Table 1* and its subsequent petition requesting approval of four TPL standards

submitted March 31, 2011.[26] The SDT has transferred that solution to the proposed TPL-001-2 as footnotes 9 and 12 in Table 1.

13. Paragraph 1786 - Require assessments of planned outages of critical long lead-time equipment, consistent with an entity's spare equipment strategy.

    - SDT resolution: The SDT directly adopted the specifics of this directive. This is covered in proposed TPL-001-2, Requirement R2, Part 2.1.5. The proposed requirement addresses steady state conditions to determine system response when equipment is unavailable for prolonged periods of time. The studies shall be performed for the P0, P1, and P2 categories identified in Table 1 under the conditions that the system is expected to experience during the possible periods of unavailability of the long lead-time equipment. Stability impacts related to outages of critical long lead-time equipment will not be addressed in a separate requirement but rather will be analyzed in the normal planning process in the evaluation of multiple Contingency events. Additionally, any known equipment outages of six months or more must be included in the modeled system in proposed TPL-001-2, Requirement R1.

14. Paragraph 1787 - Requires all generators to ride through the same set of Category B and C contingencies, as required by wind generators in Order No. 661, or to simulate those generators without this capability as tripping during modeling.

    - SDT resolution: The SDT directly adopted the specifics of this directive in proposed TPL-001-2, Requirement R3, Part 3.3.1.1 and Requirement R4, Part

[26] *Petition of the North American Electric Reliability Corporation for Approval of Four Transmission Planning System Performance Reliability Standards and Retirement of Four Existing Reliability Standards*, Docket No. RM11-18-000 (March 31, 2011) ("March 31 Petition").

4.3.1.1. No distinctions are made among different generation resources in the proposed Requirements.

15. Paragraph 1788 - Consider comments clarifying that for operations purposes clarifying that the N-1 state is always analyzed from the conditions being experienced.
    - SDT resolution: The SDT considered the comments and agrees with the Commission that these conditions are real-time oriented and not part of a planning process. N-1 conditions are studied as part of planning events P1 and P2 in the proposed TPL-001-2, Table 1.
16. Paragraph 1789 - Document the load models used in system studies and the supporting rationale for their use.
    - SDT resolution: The SDT directly addressed the specifics of this directive in proposed TPL-001-2, Requirement R2 which requires entities to document assumptions made in their Planning Assessments.
17. Paragraph 1790 - Clarify the phrase "permit operating steps necessary to maintain system control" in footnote (a) to clarify the use of emergency ratings.
    - SDT resolution: The SDT directly addressed the specifics of this directive. Proposed TPL-001-2, Requirement R3, Part 3.1 requires performing studies for planning events to determine whether the BES meets the performance requirements in Table 1. Additionally, Table 1, header notes 'e' and 'f,' that are a part of the performance requirements of Table 1, demand more details. Header note 'e' states that planned system adjustments must be executable

within the time duration applicable to the facility ratings. Header note ‘f states that applicable facility ratings shall not be exceeded.

18. Paragraph 1794 – The standard should not allow an entity to plan for the loss of non-consequential load in the event of a single contingency. The standard should be clarified accordingly.
    - SDT resolution: This directive was addressed in *Project 2010-11 TPL Table 1* and the SDT has transferred that solution to the proposed TPL-001-2 as footnotes 9 and 12 in Table 1.
19. Paragraph 1795 - Consider developing a ceiling on the amount and duration of consequential load loss that will be acceptable.
    - SDT resolution: The directive was to “consider” the need for a ceiling on load and duration and if “appropriate” to develop the ceiling through the standards development process. The SDT originally included requirements covering the reporting of the magnitude and duration of Consequential Load Loss. Industry overwhelming protested the inclusion of these requirements which were panned as additional administrative tasks that did not address any reliability need. Initial comments submitted by industry focused more on the topic of duration than magnitude so the SDT attempted to craft a compromise position. The duration element of the requirement was deleted and a revised requirement covering only magnitude of Consequential Load Loss was crafted and posted for comment.
    - The SDT was again overwhelmed by negative industry comments pushing back about the inclusion of an administrative task without a reliability need in

a Reliability Standard. At that point, the SDT discussed the matter at length, determined they agreed with the industry comments, and decided to delete the requirement in its entirety. The SDT addressed the directive to "consider developing a ceiling" as directed in Order No. 693 as evidenced in meeting notes and by its attempt to include the requirements for an equally effective method in the proposed Reliability Standard. Therefore, the SDT considers that it has fulfilled its obligation in this regard.

20. Paragraph 1796 - Clarify footnote (b) in regard to load loss following a single contingency to specify the amount and duration of consequential load loss and what types of system adjustments are permitted after the first contingency to return the system to a normal operating state, provided these adjustments can be accomplished within the time period allowed by the short term or emergency ratings.
    - SDT resolution: NERC addressed this directive in *Project 2010-11 TPL Table 1*, the March 31 Petition,[27] and the SDT has addressed a solution to the proposed TPL-001-2 in footnotes 9 and 12 in Table 1.
21. Paragraph 1818 - Clarify the term "controlled load interruption".
    - SDT resolution: The term "controlled load interruption" is not included in the proposed TPL-001-2 Reliability Standard.
22. Paragraph 1820 - The Reliability Standard must define and document the proxies necessary to simulate cascading outages.

[27] *Id.* See also *Response of the North American Electric Reliability Corporation to the Federal Energy Regulatory Commission's May 17, 2011 Letter Requesting Additional Information Regarding NERC's Request for Approval of Four Transmission Planning System Performance Reliability Standards*, Docket No. RM11-18-000, (June 7, 2011).

- SDT resolution: The SDT directly adopted the specifics of this directive. This is covered in proposed TPL-001-2 in Requirement R6. This requirement mandates that the entity must define and document its criteria or methodology (proxies) used in its analysis.

23. Paragraph 1821, 1835 - Tailor the purpose statement to reflect the specific goal of the standard.

    - SDT resolution: The SDT directly adopted the specifics of this directive. The purpose statement of proposed TPL-001-2 has been rewritten to reflect the specific goal of the proposed standard.

24. Paragraph 1822 - Address Nuclear Regulatory Commission ("NRC") concerns as described in TPL-003 through the standards development process.

    - SDT resolution: The SDT considered the comments and agrees with the Commission that the NRC's concerns involve real-time issues and not the planning process. N-1 conditions are studied as part of planning events P1 and P2 in the proposed TPL-001-2, Table 1.[28]

25. Paragraph 1833 - Identify options for reducing the probability or impacts of extreme events that cause cascading.

    - SDT resolution: The SDT directly addressed the specifics of this directive. This is covered in proposed TPL-001-2, Requirement R3, Part 3.5 & Requirement R4, Part 4.5. The requirements state that if an analysis concludes cascading will be caused by the occurrence of certain extreme events, applicable entities shall conduct an evaluation of possible actions

[28] *See* 14 above addressing P 1788.

designed to reduce the likelihood of those events from occurring or mitigate the consequences and adverse impacts of the event.

26. Paragraph 1836 - Expand the list of category D events to include recent actual events.
    - SDT resolution: The SDT has directly adopted the specifics of this directive. The list of Table 1 Steady State and Stability Extreme Events has been expanded to include wide-area events in extreme events 3b (steady state) and 2f (stability).
27. Paragraph 1841 - Utilize input from the Commission's technical conferences on regional planning as directed in Order No. 890 into the Reliability Standards development process to improve this standard.
    - SDT resolution: The SDT directly adopted the specifics of this directive. The SDT utilized knowledge gained from the Commission's technical conferences and added Requirement R8 to proposed TPL-001-2 to facilitate the distribution of planning results and to provide a mechanism for obtaining input from various entities. Additionally, TPL-001-2 will complement FERC's ongoing transmission planning efforts set forth in Order Nos. 890 and 1000.

In addition to addressing the FERC directives, the SDT has incorporated many other clarifications, improvements, and enhancements to the existing standards as outlined below:

- In Footnote 461 of Order No. 693, FERC stated "Consequential load is the load that is directly served by the elements that are removed from service as a result of the Contingency." The proposed definition for Consequential Load Loss in the proposed Reliability Standard states, "All Load that is no longer served by the Transmission

system as a result of Transmission Facilities being removed from service by a Protection System operation designed to isolate the fault." The proposed definition parallels the language required for Contingency analyses mandated in the proposed TPL-001-2, Requirement R3, Part 3.3.1 and Requirement R4, Part 4.3.1.

- In addition to the definition of Consequential Load Loss, the SDT determined that a corresponding definition for Non-Consequential Load Loss was necessary to adequately describe how a planner may consider planned load loss for specific events. These events are described in Table 1 of the proposed TPL-001-2. In the proposed standard, Non-Consequential Load Loss is defined as:

> Non-Interruptible Load loss that does not include: (1) Consequential Load Loss, (2) the response of voltage sensitive Load, or (3) Load that is disconnected from the System by end-user equipment.

Importantly, this clarifies that interruptible load, *i.e*. load that is under contract or agreement for curtailment, is not Non-Consequential Load. Additionally, the definition clarified that "the response of voltage sensitive Load" or "Load that is disconnected from the System by end-user equipment" are not Non-Consequential Load. The SDT determined that the planner cannot control the sensitivity of load to voltage excursions or whether load may be disconnected by end-user equipment under certain conditions. The planner may have a valid plan that may include load loss that the planner cannot control because of one or both of these situations. The planner should not be held accountable for those situations. Consequently, the planner should not depend on this load loss to meet the performance requirements. Therefore, the SDT added Head Note "i" to Table 1 – Steady State & Stability Performance Planning Events,

to ensure that the planned system can meet performance requirements while serving the load, including the voltage sensitive load. Head note “i" states that “The response of voltage sensitive Load that is disconnected from the System by end-user equipment associated with an event shall not be used to meet steady state performance requirements.”

- The Implementation Plan consists of three effective dates – 12 months, 24 months, and 84 months following regulatory approval – that provides industry the time needed to transition to new reliability expectations.
    - Two of the eight reliability requirements (Requirements R1 and R7) of proposed standard TPL-001-2 are proposed to become effective on the first day of the first calendar quarter, 12 months after applicable regulatory approval.
        - In Requirement R1, the Transmission Planner and Planning Coordinator must develop and maintain system simulation models representing projected system conditions.
        - In Requirement R7, the Transmission Planner and Planning Coordinator will work together to identify each entity’s individual and joint responsibilities for completing the required planning studies associated with the standard. The 12 month period is necessary to allow planners sufficient time to meet these new, more detailed modeling and coordination requirements.
    - The remaining requirements of the standard – Requirements R2 through R6 and R8 – are proposed to be effective on the first day of the first calendar

quarter, 24 months after applicable regulatory approval (except for certain performance requirements stated in Table 1 that represent a significant change for industry related to planning of the BES transmission system). This 24 month period is needed to allow the applicable entities to develop, perform, and validate new or modified studies, methodologies, assessments, and procedures to implement and meet the proposed requirements in TPL-001-2. The effective date allows sufficient time for proper assessment of the available options necessary to create a viable Corrective Action Plan compliant with the proposed TPL-001-2.

- An extended implementation period beyond the 24 month milestone is permitted for situations where loss of Non-Consequential Load or interruption of firm transfers is no longer allowed for certain planning events. In such cases, the proposed TPL-001-2 allows an additional 60 months because Corrective Action Plans created by the Transmission Planner and Planning Coordinator may have significant budget, siting, permitting, and construction impacts on many Transmission Owners and developers. During the extended 60 month transition period, the Transmission Planner and Planning Coordinator may continue to rely on Non-Consequential Load Loss and interruption of firm transfers within its submitted Corrective Action Plan related to the select planning events.
- As stated in the implementation plan (**Exhibit B)**, for 84 months beginning the first calendar day of the first calendar quarter following approval, Corrective Action Plans applying to certain categories of Contingencies and

events identified in TPL-001-2, Table 1 will be allowed to include Non-Consequential Load Loss and curtailment of Firm Transmission Service that would not otherwise be permitted by the requirements of TPL-001-2.

- Requirement R1
    - Requirement R1 of the proposed TPL-001-2 explicitly requires the Transmission Planner and Planning Coordinator to maintain System models. This represents an improvement over the existing TPL standards where the requirement to maintain the model was only implied, not explicitly required.
    - The proposed TPL-001-2 also provides a specific list of items required for the System models in Requirement R1, Part 1.1. The proposed TPL-001-2 links the models to the data provided in accordance with MOD-010-0 and MOD-012-0 to ensure that the planner utilizes data that is consistent with the data provided to the planner but still allows the data to be supplemented by data from other sources as needed. The proposed TPL-001-2, Requirement R1 also incorporates Requirement R1.4 from the existing TPL standard by including items represented in the Corrective Action Plan.
    - Requirement R1 also requires that the System models represent projected System conditions. The planner is required to model the items that are variable, such as load and generation dispatch, based specifically on the expected system conditions. For example, for a 60% load level study, the planner should model the load at 60% of the peak value and the generation that is expected to be operating at that load level. Therefore, generation with low run times, such as combustion turbines, would not be utilized for this load

level, unless the planner had specific knowledge that they would be expected to operate for this load level.

- Requirement R1, Part 1.1.2 mandates that the System models "shall represent … known outage(s) of generation or Transmission Facility(ies) with a duration of at least six months." Requirement R1.3 of the existing TPL-001-1 standard states, "The specific elements selected (from each of the following categories) for inclusion in these studies and simulations shall be acceptable to the associated Regional Reliability Organization(s)." Requirement R1.3.12 of the existing TPL-002-0b standard addresses planned (including maintenance outages) and is one of the following categories referenced in Requirement R1.3. Therefore, in the existing TPL-002-0b standard, the specific elements selected to be evaluated as a part of Requirement R1.3.12 were selected by the Transmission Planner or Planning Coordinator and must be acceptable to the associated Regional Reliability Organization. The SDT determined that having the planner select specific planned outages to include in their studies was not the appropriate manner to address this issue. Furthermore, the Regional Entities should not have the role of determining the appropriateness for inclusion or exclusion of specific planned outages in the studies in today's regulatory framework. Therefore, the SDT adopted a bright-line test to determine whether an outage should be included in the system models.
- The SDT determined that the appropriate manner to address planned outages, including maintenance outages, in the planning horizon begins with determining what length of outages could readily be scheduled without

impacting BES reliability at peak load conditions. The SDT determined that, in the planning horizon, a six-month or longer outage duration would necessarily extend over a seasonal peak load period and should be included in the planning models. Requirement R1.3.12 of the existing standard included Protection Systems or their components in the items that could be selected by the planner. However, since Protection System maintenance or other outages are not ever anticipated to last six months, this language was not included in the proposed standard. The language in proposed TPL-001-2, R1, Part 1.1.2 removes the ambiguity of what the planner needs to include in the specific studies and requires the planner to evaluate all of the six-month or longer duration outages within its system. These outages are the significant outages that need to be evaluated in the planning horizon to ensure that the outages can be accommodated and still meet performance requirements.

- Requirement R2
    - To further enhance the evaluation of known outages, the SDT added Requirement R2, Part 2.1.3 that requires the planner to assess system performance utilizing a current annual study or qualified past study for each known outage with a duration of at least six months for Table 1, P1 events. This requirement ensures planners evaluate every known outage with known duration of six months or more, even if the known outage is not within one of the study years selected by the planner as required by the proposed Requirement R2, Part 2.1.1 or 2.1.2.

- The existing TPL standards refer to valid assessments, but ambiguity exists regarding what constitutes a valid assessment leading to inconsistency. Subjectivity that was allowed before is now replaced with specifics. The requirements and parts of proposed TPL-001-2 leave no doubt as to what a valid study must entail, timeframes for use of past studies, minimum conditions (years and peak/off-peak conditions), what needs to be included in the model, and what performance must be achieved.
- The proposed TPL-001-2 Requirement R2 mandates that short-circuit studies must be included in the assessment. Short-circuit studies were not included in the existing TPL standards. Short-circuit studies ensure that when a planner is considering System improvements that the interrupting capability of the breakers is addressed. Therefore, the inclusion of short-circuit studies represents a significant improvement in the proposed TPL-001-2 over the prior TPL standards.
- The proposed TPL-001-2 clarifies that qualified past studies can be utilized in the analysis while tightly defining the qualifications for those studies. Currently, there are no limits on the use of past studies in the existing TPL standards. The use of qualified past studies allows an entity to continue to use validated studies to complete its assessment. This allows computational efficiency, maintains the legitimacy of the studies, and allows the planner to better utilize limited resources.
- The proposed TPL-001-2 standard provides greater clarity for near-term planning horizon steady-state and stability studies. The existing TPL

standards are vague and open to entity discretion regarding the studies to be performed. Proposed TPL-001-2, Requirement R2, Parts 2.1 and 2.4 now explicitly require both peak and off-peak studies for both steady-state and stability. This change provides the industry greater clarity over the existing standard.

- The SDT has introduced sensitivity analyses to be completed as part of a Planning Assessment in proposed TPL-001-2, Requirement R2, Part 2.1.4 (for steady state) and Requirement R2, Part 2.4.3 (for stability). Conducting a sensitivity analysis is an important improvement to the proposed standard that will improve planners' understanding of the range of probable outcomes of potential system conditions. Sensitivity analyses demand that planners assess the potential impact of one or more changes in the assumed System conditions to stress the System. The results of the sensitivity studies help planners develop a portfolio of information by identifying potential performance issues related to credible assumptions. This information is valuable to the planner to identify which set of assumptions have the most severe impact on the performance of the planned system. Because the end of one planning cycle is the beginning of the next planning cycle, the results of the previous sensitivity studies will be available to the planners when they develop their System's projected conditions and also for directing additional sensitivity analysis in the following year's assessment. Furthermore, the proposed Requirement R2, Part 2.7.2 addresses the issue of how to address performance deficiencies

identified in multiple sensitivity studies. This represents a significant improvement in the planning process.

- An entity's spare equipment strategy is addressed in proposed Requirement 2.1.5 by requiring that entities account for equipment that will be unavailable for prolonged periods of time when determining the system response for steady state conditions. Studies shall be performed for the P0, P1, and P2 categories identified in Table 1 under the conditions a System can be expected to experience during the possible unavailability of critical long lead-time equipment. Stability impacts related to critical outages of long lead-time equipment are not included as a separate requirement because they are required to be analyzed in the normal planning process by evaluating multiple Contingency events. Any known equipment outages of six months or more must be included in the modeled system as shown in proposed TPL-001-2, Requirement R1. This condition was not included in the existing TPL standards, which created a reliability gap that will now be filled.
- Proposed Requirement R2, Part 2.2 offers a significant improvement over the existing TPL standards by requiring an annual "fresh" or "current year" steady-state study for the long-term planning horizon. During the standard development process, the SDT responded to industry comments and indicated that the requirement to conduct a current annual study for one of the study years in the long-term transmission planning horizon will enable earlier identification of potential transmission performance limitations and earlier

development of Corrective Action Plans. These study results may then be used as qualified past studies in later years.

- The proposed TPL-001-2 includes a new requirement, Requirement R2, Part 2.7.3 that allows Transmission Planners and Planning Coordinators to utilize Non-Consequential Load Loss to meet performance requirements if the applicable entities are unable to complete a Corrective Action Plan due to circumstances beyond their control. This requirement is necessitated by the improvements within the proposed TPL-001-2 that do not allow the Loss of Non-Consequential Load where it was previously allowed in the existing TPL standards, *e.g.*, planning event P2-3 for EHV. Historically, the planners could have planned for controlled interruption of demand for this event. That option is no longer available under the proposed TPL-001-2. Without proposed Requirement R2, Part 2.7.3, a planner may develop a valid Corrective Action Plan that resolves an issue and begin work on the plan with a realistic expectation to complete the plan six months before the required in-service date. However, actions beyond the control of the planner may derail that plan and make the Corrective Action Plan no longer viable. Some examples of situations beyond the control of the planner could include a state road-widening project taking substation land that was targeted for expansion or a ruling preventing the entity from condemning the land necessary for a project. For these situations, planners need to be able to take temporary steps to ensure bulk power system reliability until alternative permanent solutions can be developed and implemented. In some cases, it may be necessary and

advisable to plan for the loss of non-consequential load rather than to risk more widespread systemic problems. The proposed standard requires that the planner must document the situation necessitating the use of Non-Consequential Load Loss including alternatives evaluated in the planning assessment to ensure transparency. This represents an improvement over the existing TPL standards which allow for planned load loss without documentation of the circumstances that necessitated dropping load.

- Requirements R3 and R4[29]

  The proposed Requirement R3 describes the requirements for steady state studies and the proposed Requirement R4 elucidates the requirements for stability studies. This is an improvement from the existing standard in which the study requirements for stability and steady state analysis were combined creating confusion.

  - In addition, the proposed TPL-001-2, Requirement R3, Part 3.3.1 and Requirement R4, Part 4.3.1 require that simulations faithfully duplicate what will happen in an actual power system based on the expected performance of the Protection Systems. These requirements ensure that if a Protection System is designed to remove multiple Elements from service for an event that the simulation will be run with all of those Elements removed from service. This proposal instills event-based analysis over simple Element analysis which will provide for more accurate simulations.
  - Proposed Requirement R3, Parts 3.3.1.1 and 3.3.1.2 are new requirements that ensure that steady state analyses include: (1) the impact of subsequent tripping

[29] TPL-001-2 Requirements R3 and R4 largely mirror each other. R3 addresses the steady state portion of the Planning Assessment while R4 addresses the stability portion.

of generators for voltage ride through or steady-state voltage limits, and (2) tripping of transmission elements where relay loadability limits are exceeded. This will provide consistent treatment of the event impacts and improve the accuracy of the simulation.

- Requirement R4, Parts 4.3.1.1, 4.3.1.2 and 4.3.1.3 are new requirements that ensure that the stability analyses include: (1) the impact of subsequent successful and unsuccessful high-speed re-closing of circuits, (2) tripping of generators for low-voltage ride through, and (3) tripping of transmission lines and transformers where transient swings cause Protection System operation. This will ensure consistent treatment of event impacts and improve the accuracy of the simulations.
- The proposed TPL-001-2, Requirement R3, Part 3.3.2 and Requirement R4, Part 4.3.2 each require simulation of expected automatic operations of existing and planned control devices with more detail than the existing TPL standards. This will ensure consistent treatment of the event impacts and improve the accuracy of the simulation.
- The proposed TPL-001-2, Requirement R3, Part 3.4.1 and Requirement R4, Part 4.4.1 are new requirements that assure the planners coordinate with other Transmission Planners and Planning Coordinators to develop their Contingency list to ensure that contingencies on adjacent systems that may impact the planner's system are included in the Contingency list. This will ensure coordination between planners and improve the accuracy of the simulation.

- The proposed TPL-001-2, Requirement R3, Part 3.5 and Requirement R4, Part 4.5 are new requirements that require the planners to conduct an evaluation of possible actions designed to reduce the likelihood or the consequences of extreme events that cause cascading. Table 1 of the existing TPL-004-1 standard required planners to evaluate the risk and consequences of Category 'D' events but did not require the evaluation of possible actions. The evaluation of possible mitigating actions provides transparency of possible solutions to minimize the likelihood and impact of cascading caused by extreme events.

- Requirement R5

  The proposed TPL-001-2 offers improvement over the existing TPL standards related to voltage criteria and voltage performance. In proposed Requirement R5, each Transmission Planner and Planning Coordinator must have criteria for acceptable System steady state voltage limits, post-Contingency voltage deviations, and the transient voltage response for its system. For transient voltage response the criteria shall, at a minimum, specify a low-voltage level and a maximum length of time that transient voltages may remain below that level. This requirement will establish more robust transmission planning for organizations and greater consistency as these voltage criteria are shared.

- Requirement R6

  Proposed Requirement R6 specifies that an entity must define and document the criteria or methodology used to identify system instability for conditions such as cascading, voltage instability, or uncontrolled islanding within its Planning

Assessment. This specificity in identifying what some including the Commission refer to as "proxies" is an important clarification in the proposed revised standard and will lead to greater transparency in the planner's evaluation techniques. This transparency should enable better understanding of what is required in the assessment and lead to the adoption of more consistent criteria and methodologies as information is shared.

- Requirement R7

  Proposed Requirement R7 mandates coordination of individual and joint responsibilities for the Planning Coordinator and the Transmission Planner. This eliminates confusion regarding the responsibilities of the applicable entities and assures that all Elements needed for regional and Wide Area studies are defined with a specific entity responsible for each Element and that no gaps will exist in planning for the BPS.

- Requirement R8

  Proposed Requirement R8 addresses the sharing of Planning Assessments with neighboring Systems. The requirement ensures that information is shared with and input received from adjacent entities and other entities with a reliability related need that may be affected an entity's System planning.

- Withdrawal of TPL-005-0 and TPL-006-0 Reliability Standards

  This project recommends the dismissal of pending Reliability Standards TPL-005-0 and TPL-006–0. These standards required the Regional Reliability Organizations to assume certain regional and interregional assessment responsibilities. These standards mandated the Regional Reliability Organizations conduct assessments and

supply the resulting data and reports to the ERO. These two proposed standards were among the group of 24 proposed standards that the Commission withheld action on when it issued Order No. 693, because the standards applied only to Regional Reliability Organizations. This type of standard is no longer needed because the issue has been addressed by amendments to the ERO Rules of Procedure ("ROP"). The ROP allows the ERO to request reliability-related data and reports at any time and mandate that the requested entities must supply that information.[30]

- Table 1Steady State & Performance Planning Events

  Similar to the existing TPL standards, the proposed TPL-001-2 includes a table, Table 1, that serves as an integral part of the transmission planning reliability requirements. Table 1 describes system performance requirements for a range of potential system contingencies required to be evaluated by the planner. Many of the contingencies are similar to the existing table; however, the table has been revised to categorize the events as either "planning events" or "extreme events" compared to the existing Category A, B, C, and D structure. The proposed table lists seven Contingency planning events (P1 through P7) that require steady-state and stability analysis as well as five extreme event contingencies – three for steady-state and two for stability. Each planning event and extreme event contains multiple sub-parts. The proposed table also includes a no Contingency "event" labeled as P0 which requires steady-state analysis.

[30] NERC Rules of Procedure Sections 803 and 804. Available at http://www.nerc.com/files/NERC_Rules_of_Procedure_EFFECTIVE_20110825.pdf.

The proposed Table 1will help establish more robust transmission planning across the ERO footprint and offers a number of enhancements over the existing TPL standards including:

- The proposed standard reclassifies some existing multiple Contingency (Category C) events as single Contingency planning events. The proposed planning event P2 includes bus faults and internal breaker faults as a single Contingency due to the events initiated by a single common mode condition that typically removes multiple BES facilities due to automatic action by Protection Systems. The proposed standard also establishes a higher performance level for these reclassified single Contingency events. Non-Consequential Load Loss and interruption of firm transfer is no longer permitted for the proposed P2 event when evaluating the extra-high voltage (> 300kV) ("EHV") Transmission Systems, which are considered the backbone of many Systems.
- In addition to the proposed P2 event described above, other planning events also include bifurcated performance criteria expectations placing a higher level of reliability on the EHV systems. Proposed planning events P4 (stuck breaker) and P5 (relay failure) are multiple Contingency events which must also meet a higher level of reliability for the EHV systems. These changes are viewed as significant improvements in establishing BES reliability.
- The proposed planning event P3 is another enhancement that provides another example of an event whose performance requirement is presently treated as a multiple Contingency (Category C) event. A P3 event considers the loss of a

generator unit followed by the loss of another single element such as a transmission circuit, generator, or transformer. Based on the high probability of a generator unit outage in combination with another facility outage, the proposed TPL-001-2 no longer allows the loss of non-consequential load or interruption of firm transfers for this event.

- Table 1 has also been enhanced by explicitly including reactive power shunt devices as an element outage that must be evaluated in various Contingency events.
- The proposed planning event P5 and the accompanying footnote 13 add clarity and consistency in how delayed Fault clearing will be modeled in planning studies. The SDT recognizes that the BES Protection Systems are complex systems and can vary widely in their design. However, the basic elements of any BES Protection System design involve inputs (current, d.c. voltage, a.c. voltage, *etc.*) to protective relays and outputs (trip signals, close signals, alarms, *etc.*) from protective relays. The SDT determined that a more focused approach than that utilized in the existing TPL standards was desirable, so it adopted an approach that addresses specific relay types to more effectively analyze the impact of delayed Fault clearing.
- BES reliability issues associated with improper clearing of a Fault on the BES can result from the failure of hundreds of individual Protection System components in a BES substation. However, while the population of components that could fail and result in improper clearing is quite large, that population can be reduced dramatically by eliminating those components

which share failure modes with other components. The critical components in BES Protection Systems are the protective relays themselves and a failure of a non-redundant protective relay will often result in undesired consequences during a Fault. Other Protection System components related to the protective relay could fail and lead to a BES issue, but the event to be studied would be identical, from both transient and steady state perspectives, to the event resulting from a protective relay failure if the population of protective relays to be considered is adequate.

- For example, the failure of a current transformer applied in a typical stepped distance transmission line protection system would compromise the system and likely prevent the distance relay from detecting a fault within its protection zone. The failure of the distance relay to function, regardless of root cause, would require reliance on protection systems functioning in a backup role to the failed distance relay. Similarly, the loss of a non-redundant pilot (communications) channel such as a fiber optic cable or microwave radio channel between two BES substations would result in delayed clearing for faults near either end of a transmission line. However, the failure of the pilot relay would result in the same failure mode and lead to the same event in terms of BES reliability. Focusing on these critical components (the protective relays) allows the planner to efficiently assess the BES performance during almost any conceivable protection system failure pertinent to BES reliability.

- Virtually all BES protection systems fall into a few general design types centered on a few critical protective relay types and typically includes one or more tripping relays . Transmission line Protection Systems fall into three general classes of Protection Systems: (1) a stepped distance, impedance measurement-based system with distance relays applied, (2) a pilot-based system where directional or distance relays communicate Fault direction from end to end via a communications medium (*e.g.* fiber, power line carrier, etc.) where pilot relays and either distance or directional relays are applied, or (3) a multi-location current differential system with differential relays applied.
- Protection Systems designed to protect virtually any BES Facility in one location such as transformers, capacitor banks, reactors, busses, etc., generally fall into two general classes of protection systems: (1) a differential-based system with differential relays applied or (2) an over/under voltage/current system with current relays or voltage relays applied.
- Selecting an adequate population of protective relays to consider and focusing only on those failures will allow the planner to efficiently assess the performance of the BES during virtually any Protection System failure.
- The proposed TPL-001-2, Table 1, P5 events are limited to the Single Line to Ground ("SLG") Fault type consistent with the comparable C6 – C9 events from Table 1 in the existing TPL standards. The proposed TPL-001-2 standard treats SLG and three phase Faults as different events even if an SLG event migrates into a three phase Fault. Three phase events in the existing

TPL standards are shown in Table 1, D1 – D4 and are retained in TPL-001-2, Table 1, extreme events.

- In total, this is an equal and effective alternative approach to match the performance requirements in Table 1 of the existing TPL standards. The proposed extreme events have been improved to require evaluation of Wide Area events including those based on operating experience as well as those initiated by a cyber attack. Overall, the proposed Table 1 adds significant clarity and raises the bar on performance expectations in several areas.

VI. JUSTIFICATION FOR APPROVAL OF PROPOSED RELIABILITY STANDARDS

This section summarizes the development of the proposed Reliability Standard, TPL-001-2 — Transmission System Planning Performance Requirements and demonstrates the proposed Reliability Standard meets the criteria for approval set by the Commission, that is, the proposed Reliability Standard is just, reasonable, not unduly discriminatory or preferential, and in the public interest.

Exhibit D identifies the comments received on the various postings of the proposed Reliability Standard and discusses how the SDT addressed those comments. The complete development record for the proposed Reliability Standard is available in **Exhibit F**. This record includes the Standard Authorization Request ("SAR"), the draft of the proposed Reliability Standard through the development, the implementation plan, the ballot pool, and the final ballot results by registered ballot body members, stakeholder comments received during the development of the proposed Reliability Standard, and consideration of those comments by the SDT in developing the proposed Reliability Standard.

The purpose of the proposed TPL-001-2 standard is to "establish Transmission system planning performance requirements within the planning horizon to develop a BES that will operate reliably over a broad spectrum of system conditions and following a wide range of probable contingencies."[31] The proposed TPL-001-2 standard applies to Planning Coordinators and Transmission Planners and consists of eight requirements and associated parts, addressing the following topics:

- Maintaining System models with consistent data including items in the Corrective Action Plan and representing projected System conditions
- Preparation of an annual Planning Assessment with requisite documentation and covering the Near-Term and Long-Term Transmission Planning Horizons for steady state, short circuit, and stability analysis
- Inclusion of sensitivity studies varying one or more conditions not already included in the normal studies by a sufficient amount to stress the system
- The need for a spare equipment strategy
- Defining when past studies may be used in the Planning Assessment
- Creation of Corrective Action Plans when performance is not met
- For steady state and stability analyses, defining the events that must be studied to ensure performance is maintained
- Defining the extreme events that must be studied
- Establishing criteria for acceptable voltage limits
- Establishing criteria for identifying system instability
- Determining responsibilities for performing studies
- Distribution of Planning Assessments to adjacent and necessary entities

Currently-effective Reliability Standards TPL-001-1, TPL-002-1b, TPL-003-1a, and TPL-004-1 are proposed to be retired in their entirety. All of the requirements from these standards are now included in the proposed TPL-001-2 standard, and the reliability objectives of the earlier TPL standards are met by the proposed standard. Additionally, Reliability Standards TPL-005-0 and TPL-006.1 will be withdrawn.

[31] TPL-001-2 — Transmission System Planning Performance Requirements, at A.3.

The implementation plan (**Exhibit B**) for this proposed standard requires compliance consistent with the scheduled effective dates of twelve, twenty-four, or eighty-four months after the first day of the first calendar quarter following applicable regulatory approval depending on the requirement. In those jurisdictions where no regulatory approval is required, all requirements go into effect twelve, twenty-four, or eighty-four months after NERC Board of Trustees adoption depending on the requirement as detailed in the implementation plan.

a. Demonstration that the proposed Reliability Standard is just, reasonable, not unduly discriminatory or preferential and in the public interest

Section 215 of the FPA requires that Reliability Standards be just, reasonable, not unduly discriminatory or preferential, and in the public interest.[32] In Order No. 672, the Commission identified criteria it will use to analyze proposed Reliability Standards to ensure that the requirements of Section 215 are met. A review of the proposed Reliability Standards for consistency with these criteria is presented below.

1. Proposed Reliability Standards must be designed to achieve a specified reliability goal

> Order No. 672 at P 321. The proposed Reliability Standard must address a reliability concern that falls within the requirements of section 215 of the FPA. That is, it must provide for the reliable operation of Bulk-Power System facilities. It may not extend beyond reliable operation of such facilities or apply to other facilities. Such facilities include all those necessary for operating an interconnected electric energy transmission network, or any portion of that network, including control systems. The proposed Reliability Standard may apply to any design of planned additions or modifications of such facilities that is necessary to provide for reliable operation. It may also apply to Cyber security protection.

The proposed Reliability Standard, TPL-001-2 — Transmission System Planning Performance Requirements, establishes Transmission system planning performance requirements

[32] Section 215(d)(2)(A) of the FPA; 18 C.F.R. §39.5.

within the planning horizon to develop a BES that will operate reliably over a broad spectrum of System conditions and following a wide range of Contingencies. This standard includes specific requirements for Planning Assessments in both the near-term and long-term time horizons as well as studies for steady state, short circuit, and stability analysis and describes the coordination and documentation required to properly prepare such assessments.

2. Proposed Reliability Standards must contain a technically sound method to achieve the goal

> Order No. 672 at P 324. The proposed Reliability Standard must be designed to achieve a specified reliability goal and must contain a technically sound means to achieve this goal. Although any person may propose a topic for a Reliability Standard to the ERO, in the ERO's process, the specific proposed Reliability Standard should be developed initially by persons within the electric power industry and community with a high level of technical expertise and be based on sound technical and engineering criteria. It should be based on actual data and lessons learned from past operating incidents, where appropriate. The process for ERO approval of a proposed Reliability Standard should be fair and open to all interested persons.

The proposed Reliability Standard contains technically sound methods to achieve the goal of establishing acceptable Transmission system planning performance. This proposed standard describes:

- What must be in the models employed in the assessment (Requirement R1).
- What studies must be performed and for what years in the respective time horizons they must be done (Requirement R2).
- Steady state (Requirement R3) and stability performance requirements (Requirement R4).
- Establishing criteria for voltage limits and responses (Requirement R5).
- Establishing criteria for defining conditions for voltage instability, cascading, and uncontrolled islanding (Requirement R6).
- Identification of respective responsibilities (Requirement R7).
- Distribution of the Planning Assessment (Requirement R8).

The requirements in the proposed Reliability Standard define the various aspects of planning that need to be completed by the planner to ensure that the as-planned system meets acceptable

performance levels throughout the planning horizon. The details within the requirements provide the necessary specifics starting from the maintenance of the System models, through the simulations and assessments that need to be completed, the documentation of criteria and corrective action plans, and conclude with the distribution of the results of the planning assessment. When combined with the table, which articulates performance requirements for the planning and extreme events, the requirements frame the elements necessary to ensure that the system is planned to provide BES reliability.

3. Proposed Reliability Standards must be applicable to users, owners, and operators of the bulk power system, and not others

> Order No. 672 at P 322. The proposed Reliability Standard may impose a requirement on any user, owner, or operator of such facilities, but not on others.

The proposed Reliability Standard is applicable to users, owners, and operators of the bulk power system, and not others. The proposed standard is specifically applicable to Planning Coordinators and Transmission Planners, both of which are users, owners, or operators of the bulk power system.

4. Proposed Reliability Standards must be clear and unambiguous as to what is required and who is required to comply

> Order No. 672 at P 325. The proposed Reliability Standard should be clear and unambiguous regarding what is required and who is required to comply. Users, owners, and operators of the Bulk-Power System must know what they are required to do to maintain reliability.

The proposed Reliability Standard is clear and unambiguous as to what is required and who is required to comply. Each requirement clearly states the applicable entities must comply with the requirement and what those entities are required to do. For example, Requirement R1 of the proposed revised standard now clearly states that Transmission Planners and Planning Coordinators shall maintain System models for performing the studies needed to complete their

Planning Assessments as well as what conditions must be included in those models. It also defines the division of effort and responsibilities between the Planning Coordinator and the Transmission Planner (Requirement R7).

5. **Proposed Reliability Standards must include clear and understandable consequences and a range of penalties (monetary and/or non-monetary) for a violation**

   Order No. 672 at P 326. The possible consequences, including range of possible penalties, for violating a proposed Reliability Standard should be clear and understandable by those who must comply.

The proposed Reliability Standard includes clear and understandable consequences. Each primary requirement is assigned a Violation Risk Factor ("VRF") and a Violation Severity Level ("VSL") which supports the determination of a base penalty amount for violations of the requirements as required by NERC Sanction Guidelines. NERC's review of the VSLs for this proposed standard for consistency with FERC's VRF and VSL guidelines is included in Section VII and **Exhibit C** of this document.

6. **Proposed Reliability Standards must identify clear and objective criterion or measure for compliance, so that it can be enforced in a consistent and non-preferential manner**

   Order No. 672 at P 327. There should be a clear criterion or measure of whether an entity is in compliance with a proposed Reliability Standard. It should contain or be accompanied by an objective measure of compliance so that it can be enforced and so that enforcement can be applied in a consistent and non-preferential manner.

The proposed Reliability Standard identifies clear and objective criteria to support enforcement in a consistent and non-preferential manner. Each requirement has an associated measure, and each requirement clearly identifies the expected performance that will serve as the basis for development of compliance enforcement objectives. The language used in the requirements clearly identifies what is expected of the applicable entity.

7. Proposed Reliability Standards should achieve a reliability goal effectively and efficiently — but do not necessarily have to reflect "best practices" without regard to implementation cost

> Order No. 672 at P 328. The proposed Reliability Standard does not necessarily have to reflect the optimal method, or "best practice," for achieving its reliability goal without regard to implementation cost or historical regional infrastructure design. It should however achieve its reliability goal effectively and efficiently.

The proposed Reliability Standards achieve their reliability goal effectively and efficiently. Expanding the requirements to meet the reliability objectives of the standards was carefully considered in the Reliability Standards development process, and the proposed standard was structured to address the objective without unduly burdening the applicable entities. For example, the implementation plan for the proposed standard has been phased to allow entities that have previously planned and designed their systems on the basis of the existing approach to single Contingencies time to transition to the new, higher performance requirements.

8. Proposed Reliability Standards cannot be "lowest common denominator," *i.e.*, cannot reflect a compromise that does not adequately protect bulk power system reliability

> Order No. 672 at P 330. A proposed Reliability Standard may take into account the size of the entity that must comply with the Reliability Standard and the cost to those entities of implementing the proposed Reliability Standard. However, the ERO should not propose a "lowest common denominator" Reliability Standard that would achieve less than excellence in operating system reliability solely to protect against reasonable expenses for supporting this vital national infrastructure. For example, a small owner or operator of the Bulk-Power System must bear the cost of complying with each Reliability Standard that applies to it.

The proposed Reliability Standard is more stringent than current set of TPL standards in several areas. As described above, details of what model data must be utilized, requiring simulations to model actual behavior, and including actions from the Corrective Action Plan in subsequent years' data (Requirement R1), mandating sensitivity studies (Requirement R2, Parts 2.1.4 and 2.4.3), detailing a requirement for Contingency analysis (Requirement R3, Part 3.3 and

Requirement R4, Part 4.3), establishing criteria for voltage limits, deviations, and response (Requirement R5), establishing criteria for identifying system instability conditions (Requirement R6), requiring distribution of Planning Assessments (Requirement R8), and elevating performance for facilities greater than 300 kV and eliminating dropping firm load for single contingencies (Table 1 - P1-2, P1-3, P2-1, P2-2, and P2-3), all reflect significant increases in responsibilities and expectations for applicable entities and clearly do not represent a lowest common denominator.

9. Proposed Reliability Standards may consider costs to implement for smaller entities but not at consequence of less than excellence in operating system reliability

> Order No. 672 at P 330. A proposed Reliability Standard may take into account the size of the entity that must comply with the Reliability Standard and the cost to those entities of implementing the proposed Reliability Standard. However, the ERO should not propose a "lowest common denominator" Reliability Standard that would achieve less than excellence in operating system reliability solely to protect against reasonable expenses for supporting this vital national infrastructure. For example, a small owner or operator of the Bulk-Power System must bear the cost of complying with each Reliability Standard that applies to it.

The proposed Reliability Standards do not differentiate among entities based on size or cost. These requirements apply to all Planning Coordinator and Transmission Planner entities with responsibility for planning equally.

10. Proposed Reliability Standards must be designed to apply throughout North America to the maximum extent achievable with a single Reliability Standard while not favoring one area or approach

> Order No. 672 at P 331. A proposed Reliability Standard should be designed to apply throughout the interconnected North American Bulk-Power System, to the maximum extent this is achievable with a single Reliability Standard. The proposed Reliability Standard should not be based on a single geographic or regional model but should take into account geographic variations in grid characteristics, terrain, weather, and other such factors; it should also take into account regional variations in the organizational and corporate structures of transmission owners and operators, variations in generation fuel type and

ownership patterns, and regional variations in market design if these affect the proposed Reliability Standard.

The proposed Reliability Standards are designed to apply continent-wide. The proposed standard proposes no regional differences or variances.

11. Proposed Reliability Standards should cause no undue negative effect on competition or restriction of the grid

Order No. 672 at P 332. As directed by section 215 of the FPA, the Commission itself will give special attention to the effect of a proposed Reliability Standard on competition. The ERO should attempt to develop a proposed Reliability Standard that has no undue negative effect on competition. Among other possible considerations, a proposed Reliability Standard should not unreasonably restrict available transmission capability on the Bulk-Power System beyond any restriction necessary for reliability and should not limit use of the Bulk-Power System in an unduly preferential manner. It should not create an undue advantage for one competitor over another.

NERC does not anticipate that the proposed Reliability Standards will adversely affect competition or restrict available transmission capability.

12. The implementation time for the proposed Reliability Standards must be reasonable

Order No. 672 at P 333. In considering whether a proposed Reliability Standard is just and reasonable, the Commission will consider also the timetable for implementation of the new requirements, including how the proposal balances any urgency in the need to implement it against the reasonableness of the time allowed for those who must comply to develop the necessary procedures, software, facilities, staffing or other relevant capability.

The proposed Reliability Standard includes a reasonable implementation schedule for this standard. As noted, the proposed Reliability Standard is more stringent in several areas: details of what model data must be utilized, requiring simulations to model actual behavior, and including actions from the Corrective Action Plan in subsequent years data (Requirement R1), mandating sensitivity studies (Requirement R2, Parts 2.1.4 and 2.4.3), detailing requirement for Contingency analysis (Requirement R3, Part 3.3 and Requirement R4, Part 4.3), establishing

criteria for voltage limits, deviations, and response (Requirement R5), establishing criteria for identifying system instability conditions (Requirement R6), requiring distribution of Planning Assessments (Requirement R8), and elevating performance for facilities greater than 300 kV and eliminating dropping firm load for single contingencies (Table 1 - P1-2, P1-3, P2-1, P2-2, and P2-3).

Additionally, NERC believes the proposed effective dates represent a reasonable time frame to allow all entities to adequately prepare for compliance with the new requirements. Compliance is already required for Reliability Standards TPL-001-1, TPL-002-1b, TPL-003-1a, and TPL-004-1.

13. The Reliability Standard development process must be open and fair

> Order No. 672 at P 334. Further, in considering whether a proposed Reliability Standard meets the legal standard of review, we will entertain comments about whether the ERO implemented its Commission-approved Reliability Standard development process for the development of the particular proposed Reliability Standard in a proper manner, especially whether the process was open and fair. However, we caution that we will not be sympathetic to arguments by interested parties that choose, for whatever reason, not to participate in the ERO's Reliability Standard development process if it is conducted in good faith in accordance with the procedures approved by the Commission

NERC develops Reliability Standards in accordance with Section 300 (Reliability Standards Development) of its Rules of Procedure and the NERC *Standard Processes Manual*,[33] which is included in the Rules of Procedure as Appendix 3A. In the ERO Certification Order, FERC found that NERC's proposed rules provide for reasonable notice and opportunity for public comment, due process, openness, and a balance of interests in developing Reliability Standards. The development process is open to any person or entity with a legitimate interest in

[33] FERC approved NERC's *Standard Processes Manual* on September 3, 2010 (FERC Docket No. RR10-12-000). The *Standard Processes Manual* replaced the previous FERC-approved *Reliability Standards Development Procedure* in its entirety. The SDT developed this standard in accordance with the then-effective standards development processes until the *Standard Processes Manual* was approved in 2010, at which time the *Standard Processes Manual* was used to complete development of the proposed standard.

the reliability of the bulk power system. NERC considers the comments of all stakeholders and a vote of stakeholders and the NERC Board of Trustees is required to approve a proposed Reliability Standard for submission to the Commission.

The proposed Reliability Standard set out in **Exhibit A** has been developed and approved by industry stakeholders using the process found in NERC's *Standard Processes Manual*, and was approved by the NERC Board of Trustees on August 4, 2011. Therefore, NERC developed the proposed standard in a manner that is open and fair.

14. Proposed Reliability Standards must balance with other vital public interests

> Order No. 672 at P 335. Finally, we understand that at times development of a proposed Reliability Standard may require that a particular reliability goal must be balanced against other vital public interests, such as environmental, social and other goals. We expect the ERO to explain any such balancing in its application for approval of a proposed Reliability Standard.

This proposed standard focuses on ensuring that transmission system planning performance principles within the planning horizon are met in order to develop a BES that will operate reliably over a broad spectrum of System conditions and following a wide range of probable contingencies. No other environmental, social, or other goals are reflected or considered in this proposed standard. NERC does not, however, anticipate any conflicts with other vital public interests.

15. Proposed Reliability Standards must consider any other relevant factors

> Order No. 672 at P 323. In considering whether a proposed Reliability Standard is just and reasonable, we will consider the following general factors, as well as other factors that are appropriate for the particular Reliability Standard proposed.
>
> Order No. 672 at P 337. In applying the legal standard to review of a proposed Reliability Standard, the Commission will consider the general factors above. The ERO should explain in its application for approval of a proposed Reliability Standard how well the proposal meets these factors and explain how the Reliability Standard balances conflicting factors, if any. the Commission may

> consider any other factors it deems appropriate for determining if the proposed Reliability Standard is just and reasonable, not unduly discriminatory or preferential, and in the public interest. The ERO applicant may, if it chooses, propose other such general factors in its ERO application and may propose additional specific factors for consideration with a particular proposed Reliability Standard.

Exhibit D presents an overview of the issues raised in consideration of the proposed standard that demonstrates how industry comments, as well as directives from Order No. 693, are addressed in this standard development project.

VII. Violation Risk Factors and Violation Severity Levels

The proposed Reliability Standard includes VRFs and VSLs that are specific to individual Requirements. The ranges of penalties for violations of standards are based on the applicable VRFs and VSLs and will be administered based on the Sanctions Table and supporting penalty determination process described in Commission-approved NERC Sanction Guidelines, which is Appendix 4B in NERC's Rules of Procedure. The assignment of VRFs and VSLs included consideration of the NERC guidelines. Consistent with NERC's August 10, 2009 informational filing,[34] assignments of VRFs and VSLs were made at the main requirement level of the proposed standard.

Each primary requirement is assigned a VRF and a set of one or more VSLs. These elements support the determination of an initial value range for the Base Penalty Amount regarding violations of requirements in FERC-approved Reliability Standards, as defined in the ERO Sanction Guidelines. **Exhibit C** demonstrates the analysis of the chosen VRFs and VSLs in accordance with the VRF and VSL guidelines.

[34] *Informational Filing of the North American Electric Reliability Corporation Regarding the Assignment of Violation Risk Factors and Violation Severity Levels*, Docket Nos. RM08-11-000, RR08-4-000, RR07-9-000, and RR07-10-000 (August, 10, 2009).

VIII. SUMMARY OF THE RELIABILITY STANDARD DEVELOPMENT PROCEEDINGS

a. Reliability Standards Development Procedure

NERC develops Reliability Standards in accordance with Section 300 (Reliability Standards Development) of its Rules of Procedure and the NERC *Standard Processes Manual*[35] which is incorporated into the Rules of Procedure as Appendix 3A. In its ERO Certification Order,[36] FERC found that NERC's proposed rules provide for reasonable notice and opportunity for public comment, due process, openness, and a balance of interests in developing Reliability Standards and thus satisfies certain of the criteria for approving Reliability Standards.[37]

The development process is open to any person or entity with a legitimate interest in the reliability of the bulk power system. NERC considers the comments of all stakeholders and a vote of stakeholders and the NERC Board of Trustees is required to approve a proposed Reliability Standard before its submission to the Commission.

The proposed Reliability Standard set out in **Exhibit A** was approved by the NERC Board of Trustees on August 4, 2011.

b. Progress in Improving Proposed Reliability Standards

NERC continues to develop new and revised Reliability Standards that address the issues NERC identified in its initial filing of proposed Reliability Standards on April 4, 2006, the concerns noted in the Commission Staff Report issued on May 11, 2006 and the directives the Commission has included in multiple subsequent orders pertaining to NERC's Reliability

---

[35] As stated in Footnote 33, *supra*, this project predates the Standard Processes Manual. The SDT utilized the then-effective standard development processes prior to the implementation of the *Standard Processes Manual* in September 2010.

[36] *Order Certifying North American Electric Reliability Corporation as the Electric Reliability Organization and Ordering Compliance Filing*, 116 FERC ¶ 61,062 (2006).

[37] Order No. 672 at PP 268, 270.

Standards.[38] NERC has incorporated these activities into its *Reliability Standards Development Plan: 2011-2013*,[39] submitted to FERC on April 5, 2011.

c. Development History

On April 2, 2002, NERC received, and the Standards Committee accepted, a standards authorization request ("SAR") proposing to establish a standard for assessing and planning the transmission systems in North America. The SAR was posted for two industry comment opportunities and then approved by the Standards Committee for standard development on November 18, 2005. The project was delayed in starting, but work resumed in late 2006. Due to the amount of time between the acceptance of the SAR and the start of work, a supplemental SAR was drafted to incorporate changes in thinking on planning needs during the delay. The supplemental SAR was posted once for industry comment and was accepted by the Standards Committee on April 10, 2007 as *Project 2006-02: Assess Transmission Future Needs and Develop Transmission Plans*.

The assigned SDT posted the draft standard for a 45-day industry comment period from September 12, 2007 to October 26, 2007. In response, 80 sets of comments were received from representatives of 80 organizations representing 233 individuals and 9 of the 10 industry segments. Comments primarily addressed the proposed definitions, sensitivity studies, Corrective Action Plans, modeling data, and performance issues.

The SDT revised the draft standard accordingly and re-posted for industry comment from August 14, 2008 to September 29, 2008. This time, 80 sets of comments were received from 100

[38] *Mandatory Reliability Standards for the Bulk-Power System*, 118 FERC ¶ 61,218, FERC Stats. & Regs. ¶ 31,242 (2007) ("Order No. 693"), *order on reh'g, Mandatory Reliability Standards for the Bulk-Power System*, 120 FERC ¶ 61,053 ("Order No. 693-A") (2007).
[39] *North American Electric Reliability Corporation Reliability Standards Development Plan 2011-2013 Informational Filing Pursuant to Section 310 of the NERC Rules of Procedure*, Docket Nos. RM05-17-000, RM05-25-000, and RM06-16-000 (April 5, 2011).

organizations representing 150 individuals and 9 of the 10 industry segments. The comments received focused on the revised definitions, maintenance of system models; items to be included in Planning Assessments and studies; merger of the steady state and stability performance tables; measures; VRFs; VSLs; and the implementation plan.

The SDT again revised the draft standard to accommodate industry concerns and posted the revised draft standard for comments between May 26, 2009 and July 9, 2009. There were 85 sets of comments from 85 organizations representing 170 individuals and 9 of the 10 industry segments. Comments dealt with revised definitions, clarity of requirements text, criteria for formal documentation of criteria for acceptable system steady state voltage limits, post-Contingency voltage deviations, transient voltage response, and revisions to the implementation plan.

NERC posted the fourth draft of the standard from September 16, 2009 through October 16, 2009. There were 67 sets of comments from 85 companies representing 180 individuals and all of the ten Industry Segments. In response to these stakeholder comments, the SDT modified one definition, and made some small clarifying modifications to the requirements, measures, and compliance elements. The SDT did not believe that the changes were substantive and requested approval from the Standards Committee to move to the ballot process.

d. Issues Raised during the Development Process including Minority Issues

During the development process, the SDT considered the following comments, issues, and concerns. The minority issues are issues raised by commenters during the development process that the SDT chose not to address in the manner that a minority of commenters preferred.

- Some commenters wanted two separate performance tables – one for steady state and one for stability. This would have resulted in a great deal of repeated text and would have created confusion at times as to where to go for

guidance. In addition, it may have created a maintenance problem. The SDT decided to incorporate all of the necessary requirements into one cohesive, comprehensive Reliability Standard with one encompassing performance table.

- The currently enforceable Reliability Standards are unclear as to what data the planner should utilize in their assessments and studies. The SDT addressed this problem by establishing a definitive starting point; requiring that simulations mirror actual conditions and mandating that data from the previous Corrective Action Plans be incorporated into subsequent year's studies.
- The SDT had to answer questions such as: "what year(s) needed to be studied?" and "do studies need to be run for every year in the planning horizon?" The SDT determined that assessments must be completed every year but only specific years in the Planning Horizon need to be studied. Due to the cyclical nature of the assessments, once this proposed Reliability Standard is approved and implemented it will result in a portfolio of studies covering the different years in the planning horizon. Additionally, the SDT defined the circumstances when an entity could utilize past studies in its assessment.
- The SDT believed that Systems needed to be stressed in the studies in order to ensure that proper planning takes place. This led to the inclusion of mandatory sensitivity studies as part of the planning process. This will force planners to stress their Systems beyond levels typically seen in existing

studies and could point to potential problem areas that may have previously remained undetected.

- A need exists to ensure that Wide Area coordination is taking place in the assessments and studies. The SDT was concerned that planning may be taking place in a vacuum without sufficient understanding of what takes place in neighbors Systems. To address this concern, the SDT crafted several requirements starting with studying contingencies in adjacent Systems and finishing by requiring the distribution of Planning Assessments to affected entities.
- The SDT needed to incorporate the Order No. 693 directive barring the loss of non-consequential load for single contingencies.[40] Through the various industry comment periods, the SDT created the new performance criteria and detailed the process in footnotes 9 and 12.
- The SDT wanted to heighten System performance by crafting more stringent performance criteria for certain parts of the System. The SDT accomplished this by creating a dividing line at the 300 kV level. Anything above 300 kV is considered to be the backbone of the interconnected transmission System and it was therefore determined by the SDT that more stringent criteria was warranted at that level.

Minority Issues

- Interchange should not be modeled because it is an economic issue and not involved in reliability.

  Response:

[40] Order No. 693 at P 1794.

The SDT countered that the proposed TPL-001-2 standard requires inclusion of known commitments for interchange and is not for economic purposes, but rather planning to meet obligations.

- Dynamic behavior of Load should not be required in the model, claiming that software was not developed enough to be accurate.

  Response:

  The SDT believes that the correct modeling of the characteristics of Load is an important aspect of having an accurate model. The requirement to represent the dynamic behavior of the Load is necessary to ensure BES reliability.

- Distribution of Planning Assessments should not be required, as it creates a large workload for the entities involved.

  Response:

  The standard only requires distribution of the Planning Assessment, which should not require a large amount of work; posting the Planning Assessment could meet the requirement to distribute.

- TPL-001-2 should not move forward until footnote 'b' is resolved with FERC.

  Response:

  Any changes in response to FERC actions can easily be folded back into TPL-001-2. The improvements to System planning associated with approval of the new standard should not be delayed.

e. Initial Ballot

NERC conducted an initial ballot from February 19, 2010 through March 1, 2010. With a 91.38 percent quorum participating in the ballot, the proposed Reliability Standard achieved a weighted segment vote of 35.36 percent. There were 168 negative ballots submitted for the initial ballot, and 103 of those ballots included a comment, which created a need for a recirculation ballot. However, due to the massive number of negative votes and changes required to accommodate the voter's concerns, the SDT decided to re- post the standard in order to properly vet the changes made to the proposed standard.

There were five main themes to the comments supplied with the initial balloting:

1. Loss of Non-Consequential Load: A large number of commenters felt that the SDT was not allowing for Non-Consequential Load Loss in as many situations as the old standard.
2. Description of the Table 1 P5 event (Fault plus Protection System failure to operate): NERC received many comments regarding the use of the defined term, Protection System, in the event description. These commenters stated that fully redundant protection systems would be required on all BES equipment to meet the performance requirements for P5, which is not required by the existing standards. The SDT clarified that its intent was not to require fully redundant protection systems on all BES equipment in revised language for P5.
3. Relay and Load modeling: Comments expressed the opinion that the proposed Reliability Standard would require the addition of detailed relay models and detailed dynamic load models into the planning models. These commenters

expressed the opinion that these additions would create large volumes of additional work and extend the computation time for very little reliability benefit. The commenters further stated that the dynamic load models are not developed enough to require their use in Reliability Standards. . (This is addressed in the Minority Issues section VIII.b above.)

4. Spare equipment strategy: Several commenters believed that a spare equipment strategy does not belong in the planning standard.
5. Implementation timeframe: Many requests were made to extend the implementation timeframe from 60 to 84 months.

f. Balloting and Approval

The SDT addressed all of the ballot comments[41] and made several changes to the proposed standard as a result. The SDT posted its Consideration of Comments reports to the initial ballot comments as part of a posting from August 3, 2010 through September 2, 2010. Comments were received from 77 different people from approximately 69 companies representing six of the ten Industry Segments. Based on stakeholder comments, the SDT modified one definition, and made clarifying changes to requirements, measures, and compliance elements. The SDT did not believe that the changes were substantive and requested approval from the Standards Committee to again move to the ballot process.

NERC posted the proposed standard as part of a concurrent posting/balloting period from April 18, 2011 through May 31, 2011. With a 92.07 percent quorum participating in the ballot, the proposed Reliability Standard achieved an affirmative weighted segment vote of 73.99 percent. There were 72 negative ballots with comments submitted for the initial ballot, which

[41] *See* Exhibit D for consideration of comments and Exhibit F for the complete development history.

created the need for a recirculation ballot. NERC conducted the recirculation ballot from July 13, 2011 through July 24, 2011. With a 94.33 percent quorum participating in the ballot, the proposed Reliability Standard achieved a weighted segment approval vote of 75.37 percent. The proposed Reliability Standard achieved the required two-thirds weighted segment vote and at least a 75 percent quorum of the ballot pool.

The NERC Board of Trustees approved the proposed standard during its August 4, 2011 meeting.

IX. CONCLUSION

For the reasons stated above, NERC respectfully requests that the Commission approve one proposed revised Reliability Standard:TPL-001-2 — Transmission System Planning Performance Requirements, the associated Violation Risk Factors ("VRFs") and Violation Severity Levels ("VSLs"), and the implementation plan which establishes the schedule for implementing the proposed Reliability Standard. NERC is also requesting the retirement of four existing Reliability Standards: (1) TPL-001-1 — System Performance Under Normal (No Contingency) Conditions (Category A), (2) TPL-002-1b — System Performance Following Loss of a Single BES Element (Category B), (3) TPL-003-1a — System Performance Following Loss of Two or More Bulk Electric System Elements (Category C), and (4) TPL-004-1 — System Performance Following Extreme Events Resulting in the Loss of Two or More Bulk Electric System Elements (Category D). Additionally, NERC is requesting to withdraw two standards TPL-005-0 — Regional and Interregional Self-Assessment Reliability Reports, and TPL-006-0.1 – Data From the Regional Reliability Organization Needed to Assess Reliability which were never approved by the Commission.

Respectfully submitted,

/s/ Andrew M. Dressel

Gerald W. Cauley
President and Chief Executive Officer
North American Electric Reliability Corporation
3353 Peachtree Road NE
Suite 600, North Tower
Atlanta, GA 30326-1001

David N. Cook
Senior Vice President and General Counsel
North American Electric Reliability Corporation
1120 G Street N.W., Suite 990
Washington, D.C. 20005-3801
david.cook@nerc.net

Holly A. Hawkins
Assistant General Counsel for Standards and Critical Infrastructure Protection

Andrew M. Dressel
Attorney
North American Electric Reliability Corporation
1120 G Street, N.W.
Suite 990
Washington, D.C. 20005-3801
(202) 393-3998
(202) 393-3955 – facsimile
holly.hawkins@nerc.net
andrew.dressel@nerc.net

CERTIFICATE OF SERVICE

I hereby certify that I have served a copy of the foregoing document upon all parties listed on the official service list compiled by the Secretary in this proceeding.

Dated at Washington, D.C. this 19th day of October, 2011.

/s/ Andrew M. Dressel
Andrew M. Dressel

Attorney for North American Electric Reliability Corporation

Exhibit A

Reliability Standard Proposed for Approval

A. Introduction

1. **Title:** **Transmission System Planning Performance Requirements**

2. **Number:** **TPL-001-2**

3. **Purpose:** Establish Transmission system planning performance requirements within the planning horizon to develop a Bulk Electric System (BES) that will operate reliably over a broad spectrum of System conditions and following a wide range of probable Contingencies.

4. **Applicability:**

   4.1. Functional Entity

   4.1.1. Planning Coordinator.

   4.1.2. Transmission Planner.

5. **Effective Date:** Requirements R1 and R7 as well as the definitions shall become effective on the first day of the first calendar quarter, 12 months after applicable regulatory approval. In those jurisdictions where no regulatory approval is required, Requirements R1 and R7 become effective on the first day of the first calendar quarter, 12 months after Board of Trustees adoption.

   Except as indicated below, Requirements R2 through R6 and Requirement R8 shall become effective on the first day of the first calendar quarter, 24 months after applicable regulatory approval. In those jurisdictions where no regulatory approval is required, all requirements, except as noted below, go into effect on the first day of the first calendar quarter, 24 months after Board of Trustees adoption.

   For 84 calendar months beginning the first day of the first calendar quarter following applicable regulatory approval, or in those jurisdictions where no regulatory approval is required on the first day of the first calendar quarter 84 months after Board of Trustees adoption, Corrective Action Plans applying to the following categories of Contingencies and events identified in TPL-001-2, Table 1 are allowed to include Non-Consequential Load Loss and curtailment of Firm Transmission Service (in accordance with Requirement R2, Part 2.7.3.) that would not otherwise be permitted by the requirements of TPL-001-2:

   - P1-2 (for controlled interruption of electric supply to local network customers connected to or supplied by the Faulted element)
   - P1-3 (for controlled interruption of electric supply to local network customers connected to or supplied by the Faulted element)
   - P2-1
   - P2-2 (above 300 kV)
   - P2-3 (above 300 kV)
   - P3-1 through P3-5
   - P4-1 through P4-5 (above 300 kV)
   - P5 (above 300 kV)

B. Requirements

R1. Each Transmission Planner and Planning Coordinator shall maintain System models within its respective area for performing the studies needed to complete its Planning Assessment. The models shall use data consistent with that provided in accordance with the MOD-010 and MOD-012 standards, supplemented by other sources as needed, including items represented in the Corrective Action Plan, and shall represent projected System conditions. This establishes

Category P0 as the normal System condition in Table 1. *[Violation Risk Factor: Medium] [Time Horizon: Long-term Planning]*

1.1. System models shall represent:

1.1.1. Existing Facilities

1.1.2. Known outage(s) of generation or Transmission Facility(ies) with a duration of at least six months.

1.1.3. New planned Facilities and changes to existing Facilities

1.1.4. Real and reactive Load forecasts

1.1.5. Known commitments for Firm Transmission Service and Interchange

1.1.6. Resources (supply or demand side) required for Load

R2. Each Transmission Planner and Planning Coordinator shall prepare an annual Planning Assessment of its portion of the BES. This Planning Assessment shall use current or qualified past studies (as indicated in Requirement R2, Part 2.6), document assumptions, and document summarized results of the steady state analyses, short circuit analyses, and Stability analyses. *[Violation Risk Factor: High] [Time Horizon: Long-term Planning]*

2.1. For the Planning Assessment, the Near-Term Transmission Planning Horizon portion of the steady state analysis shall be assessed annually and be supported by current annual studies or qualified past studies as indicated in Requirement R2, Part 2.6. Qualifying studies need to include the following conditions:

2.1.1. System peak Load for either Year One or year two, and for year five.

2.1.2. System Off-Peak Load for one of the five years.

2.1.3. P1 events in Table 1, with known outages modeled as in Requirement R1, Part 1.1.2, under those System peak or Off-Peak conditions when known outages are scheduled.

2.1.4. For each of the studies described in Requirement R2, Parts 2.1.1 and 2.1.2, sensitivity case(s) shall be utilized to demonstrate the impact of changes to the basic assumptions used in the model. To accomplish this, the sensitivity analysis in the Planning Assessment must vary one or more of the following conditions by a sufficient amount to stress the System within a range of credible conditions that demonstrate a measurable change in System response :

- Real and reactive forecasted Load.
- Expected transfers.
- Expected in service dates of new or modified Transmission Facilities.
- Reactive resource capability.
- Generation additions, retirements, or other dispatch scenarios.
- Controllable Loads and Demand Side Management.
- Duration or timing of known Transmission outages.

2.1.5. When an entity's spare equipment strategy could result in the unavailability of major Transmission equipment that has a lead time of one year or more (such as a transformer), the impact of this possible unavailability on System performance shall be studied. The studies shall be performed for the P0, P1,

and P2 categories identified in Table 1 with the conditions that the System is expected to experience during the possible unavailability of the long lead time equipment.

2.2. For the Planning Assessment, the Long-Term Transmission Planning Horizon portion of the steady state analysis shall be assessed annually and be supported by the following annual current study, supplemented with qualified past studies as indicated in Requirement R2, Part 2.6:

2.2.1. A current study assessing expected System peak Load conditions for one of the years in the Long-Term Transmission Planning Horizon and the rationale for why that year was selected.

2.3. The short circuit analysis portion of the Planning Assessment shall be conducted annually addressing the Near-Term Transmission Planning Horizon and can be supported by current or past studies as qualified in Requirement R2, Part 2.6. The analysis shall be used to determine whether circuit breakers have interrupting capability for Faults that they will be expected to interrupt using the System short circuit model with any planned generation and Transmission Facilities in service which could impact the study area.

2.4. For the Planning Assessment, the Near-Term Transmission Planning Horizon portion of the Stability analysis shall be assessed annually and be supported by current or past studies as qualified in Requirement R2, Part2.6. The following studies are required:

2.4.1. System peak Load for one of the five years. System peak Load levels shall include a Load model which represents the expected dynamic behavior of Loads that could impact the study area, considering the behavior of induction motor Loads. An aggregate System Load model which represents the overall dynamic behavior of the Load is acceptable.

2.4.2. System Off-Peak Load for one of the five years.

2.4.3. For each of the studies described in Requirement R2, Parts 2.4.1 and 2.4.2, sensitivity case(s) shall be utilized to demonstrate the impact of changes to the basic assumptions used in the model. To accomplish this, the sensitivity analysis in the Planning Assessment must vary one or more of the following conditions by a sufficient amount to stress the System within a range of credible conditions that demonstrate a measurable change in performance:

- Load level, Load forecast, or dynamic Load model assumptions.
- Expected transfers.
- Expected in service dates of new or modified Transmission Facilities.
- Reactive resource capability.
- Generation additions, retirements, or other dispatch scenarios.

2.5. For the Planning Assessment, the Long-Term Transmission Planning Horizon portion of the Stability analysis shall be assessed to address the impact of proposed material generation additions or changes in that timeframe and be supported by current or past studies as qualified in Requirement R2, Part2.6 and shall include documentation to support the technical rationale for determining material changes.

2.6. Past studies may be used to support the Planning Assessment if they meet the following requirements:

2.6.1. For steady state, short circuit, or Stability analysis: the study shall be five calendar years old or less, unless a technical rationale can be provided to demonstrate that the results of an older study are still valid.

2.6.2. For steady state, short circuit, or Stability analysis: no material changes have occurred to the System represented in the study. Documentation to support the technical rationale for determining material changes shall be included.

2.7. For planning events shown in Table 1, when the analysis indicates an inability of the System to meet the performance requirements in Table 1, the Planning Assessment shall include Corrective Action Plan(s) addressing how the performance requirements will be met. Revisions to the Corrective Action Plan(s) are allowed in subsequent Planning Assessments but the planned System shall continue to meet the performance requirements in Table 1. Corrective Action Plan(s) do not need to be developed solely to meet the performance requirements for a single sensitivity case analyzed in accordance with Requirements R2, Parts 2.1.4 and 2.4.3. The Corrective Action Plan(s) shall:

2.7.1. List System deficiencies and the associated actions needed to achieve required System performance. Examples of such actions include:

- Installation, modification, retirement, or removal of Transmission and generation Facilities and any associated equipment.
- Installation, modification, or removal of Protection Systems or Special Protection Systems
- Installation or modification of automatic generation tripping as a response to a single or multiple Contingency to mitigate Stability performance violations.
- Installation or modification of manual and automatic generation runback/tripping as a response to a single or multiple Contingency to mitigate steady state performance violations.
- Use of Operating Procedures specifying how long they will be needed as part of the Corrective Action Plan.
- Use of rate applications, DSM, new technologies, or other initiatives.

2.7.2. Include actions to resolve performance deficiencies identified in multiple sensitivity studies or provide a rationale for why actions were not necessary.

2.7.3. If situations arise that are beyond the control of the Transmission Planner or Planning Coordinator that prevent the implementation of a Corrective Action Plan in the required timeframe, then the Transmission Planner or Planning Coordinator is permitted to utilize Non-Consequential Load Loss and curtailment of Firm Transmission Service to correct the situation that would normally not be permitted in Table 1, provided that the Transmission Planner or Planning Coordinator documents that they are taking actions to resolve the situation. The Transmission Planner or Planning Coordinator shall document the situation causing the problem, alternatives evaluated, and the use of Non-Consequential Load Loss or curtailment of Firm Transmission Service.

2.7.4. Be reviewed in subsequent annual Planning Assessments for continued validity and implementation status of identified System Facilities and Operating Procedures.

2.8. For short circuit analysis, if the short circuit current interrupting duty on circuit breakers determined in Requirement R2, Part 2.3 exceeds their Equipment Rating, the Planning Assessment shall include a Corrective Action Plan to address the Equipment Rating violations. The Corrective Action Plan shall:

2.8.1. List System deficiencies and the associated actions needed to achieve required System performance.

2.8.2. Be reviewed in subsequent annual Planning Assessments for continued validity and implementation status of identified System Facilities and Operating Procedures.

R3. For the steady state portion of the Planning Assessment, each Transmission Planner and Planning Coordinator shall perform studies for the Near-Term and Long-Term Transmission Planning Horizons in Requirement R2, Parts 2.1, and 2.2. The studies shall be based on computer simulation models using data provided in Requirement R1. *[Violation Risk Factor: Medium] [Time Horizon: Long-term Planning]*

3.1. Studies shall be performed for planning events to determine whether the BES meets the performance requirements in Table 1 based on the Contingency list created in Requirement R3, Part 3.4.

3.2. Studies shall be performed to assess the impact of the extreme events which are identified by the list created in Requirement R3, Part 3.5.

3.3. Contingency analyses for Requirement R3, Parts 3.1 & 3.2 shall:

3.3.1. Simulate the removal of all elements that the Protection System and other automatic controls are expected to disconnect for each Contingency without operator intervention. The analyses shall include the impact of subsequent:

3.3.1.1. Tripping of generators where simulations show generator bus voltages or high side of the generation step up (GSU) voltages are less than known or assumed minimum generator steady state or ride through voltage limitations. Include in the assessment any assumptions made.

3.3.1.2. Tripping of Transmission elements where relay loadability limits are exceeded.

3.3.2. Simulate the expected automatic operation of existing and planned devices designed to provide steady state control of electrical system quantities when such devices impact the study area. These devices may include equipment such as phase-shifting transformers, load tap changing transformers, and switched capacitors and inductors.

3.4. Those planning events in Table 1, that are expected to produce more severe System impacts on its portion of the BES, shall be identified and a list of those Contingencies to be evaluated for System performance in Requirement R3, Part 3.1 created. The rationale for those Contingencies selected for evaluation shall be available as supporting information.

3.4.1. The Planning Coordinator and Transmission Planner shall coordinate with adjacent Planning Coordinators and Transmission Planners to ensure that

Contingencies on adjacent Systems which may impact their Systems are included in the Contingency list.

3.5. Those extreme events in Table 1 that are expected to produce more severe System impacts shall be identified and a list created of those events to be evaluated in Requirement R3, Part 3.2. The rationale for those Contingencies selected for evaluation shall be available as supporting information. If the analysis concludes there is Cascading caused by the occurrence of extreme events, an evaluation of possible actions designed to reduce the likelihood or mitigate the consequences and adverse impacts of the event(s) shall be conducted.

R4. For the Stability portion of the Planning Assessment, as described in Requirement R2, Parts 2.4 and 2.5, each Transmission Planner and Planning Coordinator shall perform the Contingency analyses listed in Table 1. The studies shall be based on computer simulation models using data provided in Requirement R1. *[Violation Risk Factor: Medium] [Time Horizon: Long-term Planning]*

4.1. Studies shall be performed for planning events to determine whether the BES meets the performance requirements in Table 1 based on the Contingency list created in Requirement R4, Part 4.4.

4.1.1. For planning event P1: No generating unit shall pull out of synchronism. A generator being disconnected from the System by fault clearing action or by a Special Protection System is not considered pulling out of synchronism.

4.1.2. For planning events P2 through P7: When a generator pulls out of synchronism in the simulations, the resulting apparent impedance swings shall not result in the tripping of any Transmission system elements other than the generating unit and its directly connected Facilities.

4.1.3. For planning events P1 through P7: Power oscillations shall exhibit acceptable damping as established by the Planning Coordinator and Transmission Planner.

4.2. Studies shall be performed to assess the impact of the extreme events which are identified by the list created in Requirement R4, Part 4.5.

4.3. Contingency analyses for Requirement R4, Parts 4.1 and 4.2 shall :

4.3.1. Simulate the removal of all elements that the Protection System and other automatic controls are expected to disconnect for each Contingency without operator intervention. The analyses shall include the impact of subsequent:

4.3.1.1. Successful high speed (less than one second) reclosing and unsuccessful high speed reclosing into a Fault where high speed reclosing is utilized.

4.3.1.2. Tripping of generators where simulations show generator bus voltages or high side of the GSU voltages are less than known or assumed generator low voltage ride through capability. Include in the assessment any assumptions made.

4.3.1.3. Tripping of Transmission lines and transformers where transient swings cause Protection System operation based on generic or actual relay models.

4.3.2. Simulate the expected automatic operation of existing and planned devices designed to provide dynamic control of electrical system quantities when

such devices impact the study area. These devices may include equipment such as generation exciter control and power system stabilizers, static var compensators, power flow controllers, and DC Transmission controllers.

4.4. Those planning events in Table 1 that are expected to produce more severe System impacts on its portion of the BES, shall be identified, and a list created of those Contingencies to be evaluated in Requirement R4, Part 4.1. The rationale for those Contingencies selected for evaluation shall be available as supporting information.

4.4.1. Each Planning Coordinator and Transmission Planner shall coordinate with adjacent Planning Coordinators and Transmission Planners to ensure that Contingencies on adjacent Systems which may impact their Systems are included in the Contingency list.

4.5. Those extreme events in Table 1 that are expected to produce more severe System impacts shall be identified and a list created of those events to be evaluated in Requirement R4, Part 4.2. The rationale for those Contingencies selected for evaluation shall be available as supporting information. If the analysis concludes there is Cascading caused by the occurrence of extreme events, an evaluation of possible actions designed to reduce the likelihood or mitigate the consequences of the event(s) shall be conducted.

R5. Each Transmission Planner and Planning Coordinator shall have criteria for acceptable System steady state voltage limits, post-Contingency voltage deviations, and the transient voltage response for its System. For transient voltage response, the criteria shall at a minimum, specify a low voltage level and a maximum length of time that transient voltages may remain below that level. *[Violation Risk Factor: Medium] [Time Horizon: Long-term Planning]*

R6. Each Transmission Planner and Planning Coordinator shall define and document, within their Planning Assessment, the criteria or methodology used in the analysis to identify System instability for conditions such as Cascading, voltage instability, or uncontrolled islanding. *[Violation Risk Factor: Lower] [Time Horizon: Long-term Planning]*

R7. Each Planning Coordinator, in conjunction with each of its Transmission Planners, shall determine and identify each entity's individual and joint responsibilities for performing the required studies for the Planning Assessment. *[Violation Risk Factor: Lower] [Time Horizon: Long-term Planning]*

R8. Each Planning Coordinator and Transmission Planner shall distribute its Planning Assessment results to adjacent Planning Coordinators and adjacent Transmission Planners within 90 calendar days of completing its Planning Assessment, and to any functional entity that has a reliability related need and submits a written request for the information within 30 days of such a request. *[Violation Risk Factor: Medium] [Time Horizon: Long-term Planning]*

8.1. If a recipient of the Planning Assessment results provides documented comments on the results, the respective Planning Coordinator or Transmission Planner shall provide a documented response to that recipient within 90 calendar days of receipt of those comments.

Table 1 – Steady State & Stability Performance Planning Events

Steady State & Stability:

a. The System shall remain stable. Cascading and uncontrolled islanding shall not occur.
b. Consequential Load Loss as well as generation loss is acceptable as a consequence of any event excluding P0.
c. Simulate the removal of all elements that Protection Systems and other controls are expected to automatically disconnect for each event.
d. Simulate Normal Clearing unless otherwise specified.
e. Planned System adjustments such as Transmission configuration changes and re-dispatch of generation are allowed if such adjustments are executable within the time duration applicable to the Facility Ratings.

Steady State Only:

f. Applicable Facility Ratings shall not be exceeded.
g. System steady state voltages and post-Contingency voltage deviations shall be within acceptable limits as established by the Planning Coordinator and the Transmission Planner.
h. Planning event P0 is applicable to steady state only.
i. The response of voltage sensitive Load that is disconnected from the System by end-user equipment associated with an event shall not be used to meet steady state performance requirements.

Stability Only:

j. Transient voltage response shall be within acceptable limits established by the Planning Coordinator and the Transmission Planner.

Category	Initial Condition	Event [1]	Fault Type [2]	BES Level [3]	Interruption of Firm Transmission Service Allowed [4]	Non-Consequential Load Loss Allowed
P0 No Contingency	Normal System	None	N/A	EHV, HV	No	No
P1 Single Contingency	Normal System	Loss of one of the following: 1. Generator 2. Transmission Circuit 3. Transformer [5] 4. Shunt Device [6]	3Ø	EHV, HV	No[9]	No[12]
		5. Single Pole of a DC line	SLG			
P2 Single Contingency	Normal System	1. Opening of a line section w/o a fault [7]	N/A	EHV, HV	No[9]	No[12]
		2. Bus Section Fault	SLG	EHV	No[9]	No
				HV	Yes	Yes
		3. Internal Breaker Fault [8] (non-Bus-tie Breaker)	SLG	EHV	No[9]	No
				HV	Yes	Yes
		4. Internal Breaker Fault (Bus-tie Breaker) [8]	SLG	EHV, HV	Yes	Yes

Category	Initial Condition	Event [1]	Fault Type [2]	BES Level [3]	Interruption of Firm Transmission Service Allowed [4]	Non-Consequential Load Loss Allowed
P3 Multiple Contingency	Loss of generator unit followed by System adjustments[9]	Loss of one of the following: 1. Generator 2. Transmission Circuit 3. Transformer [5] 4. Shunt Device [6]	3Ø	EHV, HV	No[9]	No[12]
		5. Single pole of a DC line	SLG			
P4 Multiple Contingency *(Fault plus stuck breaker[10])*	Normal System	Loss of multiple elements caused by a stuck breaker [10](non-Bus-tie Breaker) attempting to clear a Fault on one of the following: 1. Generator 2. Transmission Circuit 3. Transformer [5] 4. Shunt Device [6] 5. Bus Section	SLG	EHV	No[9]	No
				HV	Yes	Yes
		6. Loss of multiple elements caused by a stuck breaker[10] (Bus-tie Breaker) attempting to clear a Fault on the associated bus	SLG	EHV, HV	Yes	Yes
P5 Multiple Contingency *(Fault plus relay failure to operate)*	Normal System	Delayed Fault Clearing due to the failure of a non-redundant relay[13] protecting the Faulted element to operate as designed, for one of the following: 1. Generator 2. Transmission Circuit 3. Transformer [5] 4. Shunt Device [6] 5. Bus Section	SLG	EHV	No[9]	No
				HV	Yes	Yes
P6 Multiple Contingency *(Two overlapping singles)*	Loss of one of the following followed by System adjustments.[9] 1. Transmission Circuit 2. Transformer [5] 3. Shunt Device[6] 4. Single pole of a DC line	Loss of one of the following: 1. Transmission Circuit 2. Transformer [5] 3. Shunt Device [6]	3Ø	EHV, HV	Yes	Yes
		4. Single pole of a DC line	SLG	EHV, HV	Yes	Yes

Category	Initial Condition	Event [1]	Fault Type [2]	BES Level [3]	Interruption of Firm Transmission Service Allowed [4]	Non-Consequential Load Loss Allowed
P7 Multiple Contingency *(Common Structure)*	Normal System	The loss of: 1. Any two adjacent (vertically or horizontally) circuits on common structure [11] 2. Loss of a bipolar DC line	SLG	EHV, HV	Yes	Yes

Table 1 – Steady State & Stability Performance Extreme Events

Steady State & Stability

For all extreme events evaluated:

a. Simulate the removal of all elements that Protection Systems and automatic controls are expected to disconnect for each Contingency.

b. Simulate Normal Clearing unless otherwise specified.

Steady State

1. Loss of a single generator, Transmission Circuit, single pole of a DC Line, shunt device, or transformer forced out of service followed by another single generator, Transmission Circuit, single pole of a different DC Line, shunt device, or transformer forced out of service prior to System adjustments.
2. Local area events affecting the Transmission System such as:
   a. Loss of a tower line with three or more circuits.[11]
   b. Loss of all Transmission lines on a common Right-of-Way[11].
   c. Loss of a switching station or substation (loss of one voltage level plus transformers).
   d. Loss of all generating units at a generating station.
   e. Loss of a large Load or major Load center.
3. Wide area events affecting the Transmission System based on System topology such as:
   a. Loss of two generating stations resulting from conditions such as:
      i. Loss of a large gas pipeline into a region or multiple regions that have significant gas-fired generation.
      ii. Loss of the use of a large body of water as the cooling source for generation.
      iii. Wildfires.
      iv. Severe weather, e.g., hurricanes, tornadoes, etc.
      v. A successful cyber attack.
      vi. Shutdown of a nuclear power plant(s) and related facilities for a day or more for common causes such as problems with similarly designed plants.
   b. Other events based upon operating experience that may result in wide area disturbances.

Stability

1. With an initial condition of a single generator, Transmission circuit, single pole of a DC line, shunt device, or transformer forced out of service, apply a 3Ø fault on another single generator, Transmission circuit, single pole of a different DC line, shunt device, or transformer prior to System adjustments.
2. Local or wide area events affecting the Transmission System such as:
   a. 3Ø fault on generator with stuck breaker[10] or a relay failure[13] resulting in Delayed Fault Clearing.
   b. 3Ø fault on Transmission circuit with stuck breaker[10] or a relay failure[13] resulting in Delayed Fault Clearing.
   c. 3Ø fault on transformer with stuck breaker[10] or a relay failure[13] resulting in Delayed Fault Clearing.
   d. 3Ø fault on bus section with stuck breaker[10] or a relay failure[13] resulting in Delayed Fault Clearing.
   e. 3Ø internal breaker fault.
   f. Other events based upon operating experience, such as consideration of initiating events that experience suggests may result in wide area disturbances

Table 1 – Steady State & Stability Performance Footnotes (Planning Events and Extreme Events)
1. If the event analyzed involves BES elements at multiple System voltage levels, the lowest System voltage level of the element(s) removed for the analyzed event determines the stated performance criteria regarding allowances for interruptions of Firm Transmission Service and Non-Consequential Load Loss.
2. Unless specified otherwise, simulate Normal Clearing of faults. Single line to ground (SLG) or three-phase (3Ø) are the fault types that must be evaluated in Stability simulations for the event described. A 3Ø or a double line to ground fault study indicating the criteria are being met is sufficient evidence that a SLG condition would also meet the criteria.
3. Bulk Electric System (BES) level references include extra-high voltage (EHV) Facilities defined as greater than 300kV and high voltage (HV) Facilities defined as the 300kV and lower voltage Systems. The designation of EHV and HV is used to distinguish between stated performance criteria allowances for interruption of Firm Transmission Service and Non-Consequential Load Loss.
4. Curtailment of Conditional Firm Transmission Service is allowed when the conditions and/or events being studied formed the basis for the Conditional Firm Transmission Service.
5. For non-generator step up transformer outage events, the reference voltage, as used in footnote 1, applies to the low-side winding (excluding tertiary windings). For generator and Generator Step Up transformer outage events, the reference voltage applies to the BES connected voltage (high-side of the Generator Step Up transformer). Requirements which are applicable to transformers also apply to variable frequency transformers and phase shifting transformers.
6. Requirements which are applicable to shunt devices also apply to FACTS devices that are connected to ground.
7. Opening one end of a line section without a fault on a normally networked Transmission circuit such that the line is possibly serving Load radial from a single source point.
8. An internal breaker fault means a breaker failing internally, thus creating a System fault which must be cleared by protection on both sides of the breaker.
9. An objective of the planning process should be to minimize the likelihood and magnitude of interruption of Firm Transmission Service following Contingency events. Curtailment of Firm Transmission Service is allowed both as a System adjustment (as identified in the column entitled 'Initial Condition') and a corrective action when achieved through the appropriate re-dispatch of resources obligated to re-dispatch, where it can be demonstrated that Facilities, internal and external to the Transmission Planner's planning region, remain within applicable Facility Ratings and the re-dispatch does not result in any Non-Consequential Load Loss. Where limited options for re-dispatch exist, sensitivities associated with the availability of those resources should be considered.
10. A stuck breaker means that for a gang-operated breaker, all three phases of the breaker have remained closed. For an independent pole operated (IPO) or an independent pole tripping (IPT) breaker, only one pole is assumed to remain closed. A stuck breaker results in Delayed Fault Clearing.
11. Excludes circuits that share a common structure (Planning event P7, Extreme event steady state 2a) or common Right-of-Way (Extreme event, steady state 2b) for 1 mile or less.
12. An objective of the planning process should be to minimize the likelihood and magnitude of Non-Consequential Load Loss following Contingency events. However, in limited circumstances Non-Consequential Load Loss may be needed to address BES performance requirements. When Non-Consequential Load Loss is utilized within the planning process to address BES performance requirements, such interruption is limited to circumstances where the Non-Consequential Load Loss is documented, including alternatives evaluated; and where the utilization of Non-Consequential Load Loss is subject to review in an open and transparent stakeholder process that includes addressing stakeholder comments.
13. Applies to the following relay functions or types: pilot (#85), distance (#21), differential (#87), current (#50, 51, and 67), voltage (#27 & 59), directional (#32, & 67), and tripping (#86, & 94).

C. Measures

M1. Each Transmission Planner and Planning Coordinator shall provide evidence, in electronic or hard copy format, that it is maintaining System models within their respective area, using data consistent with MOD-010 and MOD-012, including items represented in the Corrective Action Plan, representing projected System conditions, and that the models represent the required information in accordance with Requirement R1.

M2. Each Transmission Planner and Planning Coordinator shall provide dated evidence, such as electronic or hard copies of its annual Planning Assessment, that it has prepared an annual Planning Assessment of its portion of the BES in accordance with Requirement R2.

M3. Each Transmission Planner and Planning Coordinator shall provide dated evidence, such as electronic or hard copies of the studies utilized in preparing the Planning Assessment, in accordance with Requirement R3.

M4. Each Transmission Planner and Planning Coordinator shall provide dated evidence, such as electronic or hard copies of the studies utilized in preparing the Planning Assessment in accordance with Requirement R4.

M5. Each Transmission Planner and Planning Coordinator shall provide dated evidence such as electronic or hard copies of the documentation specifying the criteria for acceptable System steady state voltage limits, post-Contingency voltage deviations, and the transient voltage response for its System in accordance with Requirement R5.

M6. Each Transmission Planner and Planning Coordinator shall provide dated evidence, such as electronic or hard copies of documentation specifying the criteria or methodology used in the analysis to identify System instability for conditions such as Cascading, voltage instability, or uncontrolled islanding that was utilized in preparing the Planning Assessment in accordance with Requirement R6.

M7. Each Planning Coordinator, in conjunction with each of its Transmission Planners, shall provide dated documentation on roles and responsibilities, such as meeting minutes, agreements, and e-mail correspondence that identifies that agreement has been reached on individual and joint responsibilities for performing the required studies and Assessments in accordance with Requirement R7.

M8. Each Planning Coordinator and Transmission Planner shall provide evidence, such as email notices, documentation of updated web pages, postal receipts showing recipient and date; or a demonstration of a public posting, that it has distributed its Planning Assessment results to adjacent Planning Coordinators and adjacent Transmission Planners within 90 days of having completed its Planning Assessment, and to any functional entity who has indicated a reliability need within 30 days of a written request and that the Planning Coordinator or Transmission Planner has provided a documented response to comments received on Planning Assessment results within 90 calendar days of receipt of those comments in accordance with Requirement R8.

D. Compliance

1. Compliance Monitoring Process

1.1 Compliance Enforcement Authority

Regional Entity

1.2 Compliance Monitoring Period and Reset Timeframe

Not applicable.

1.3 Compliance Monitoring and Enforcement Processes:

Compliance Audits

Self-Certifications

Spot Checking

Compliance Violation Investigations

Self-Reporting

Complaints

1.4 Data Retention

The Transmission Planner and Planning Coordinator shall each retain data or evidence to show compliance as identified unless directed by its Compliance Enforcement Authority to retain specific evidence for a longer period of time as part of an investigation:

- The models utilized in the current in-force Planning Assessment and one previous Planning Assessment in accordance with Requirement R1 and Measure M1.
- The Planning Assessments performed since the last compliance audit in accordance with Requirement R2 and Measure M2.
- The studies performed in support of its Planning Assessments since the last compliance audit in accordance with Requirement R3 and Measure M3.
- The studies performed in support of its Planning Assessments since the last compliance audit in accordance with Requirement R4 and Measure M4.
- The documentation specifying the criteria for acceptable System steady state voltage limits, post-Contingency voltage deviations, and transient voltage response since the last compliance audit in accordance with Requirement R5 and Measure M5.
- The documentation specifying the criteria or methodology utilized in the analysis to identify System instability for conditions such as Cascading, voltage instability, or uncontrolled islanding in support of its Planning Assessments since the last compliance audit in accordance with Requirement R6 and Measure M6.
- The current, in force documentation for the agreement(s) on roles and responsibilities, as well as documentation for the agreements in force since the last compliance audit, in accordance with Requirement R7 and Measure M7.

The Planning Coordinator shall retain data or evidence to show compliance as identified unless directed by its Compliance Enforcement Authority to retain specific evidence for a longer period of time as part of an investigation:

- Three calendar years of the notifications employed in accordance with Requirement R8 and Measure M8.

If a Transmission Planner or Planning Coordinator is found non-compliant, it shall keep information related to the non-compliance until found compliant or the time periods specified above, whichever is longer.

1.5 Additional Compliance Information

None

2. Violation Severity Levels

	Lower VSL	Moderate VSL	High VSL	Severe VSL
R1	The responsible entity's System model failed to represent one of the Requirement R1, Parts 1.1.1 through 1.1.6.	The responsible entity's System model failed to represent two of the Requirement R1, Parts 1.1.1 through 1.1.6.	The responsible entity's System model failed to represent three of the Requirement R1, Parts 1.1.1 through 1.1.6.	The responsible entity's System model failed to represent four or more of the Requirement R1, Parts 1.1.1 through 1.1.6. OR The responsible entity's System model did not represent projected System conditions as described in Requirement R1. OR The responsible entity's System model did not use data consistent with that provided in accordance with the MOD-010 and MOD-012 standards and other sources, including items represented in the Corrective Action Plan.
R2	The responsible entity failed to comply with Requirement R2, Part 2.6.	The responsible entity failed to comply with Requirement R2, Part 2.3 or Part 2.8.	The responsible entity failed to comply with one of the following Parts of Requirement R2: Part 2.1, Part 2.2, Part 2.4, Part 2.5, or Part 2.7.	The responsible entity failed to comply with two or more of the following Parts of Requirement R2: Part 2.1, Part 2.2, Part 2.4, or Part 2.7. OR The responsible entity does not have a completed annual Planning Assessment.
R3	The responsible entity did not identify planning events as described in Requirement R3, Part 3.4 or extreme events as described in Requirement R3, Part 3.5.	The responsible entity did not perform studies as specified in Requirement R3, Part 3.1 to determine that the BES meets the performance requirements for one of the categories (P2 through P7) in Table 1.	The responsible entity did not perform studies as specified in Requirement R3, Part 3.1 to determine that the BES meets the performance requirements for two of the categories (P2 through P7) in	The responsible entity did not perform studies as specified in Requirement R3, Part 3.1 to determine that the BES meets the performance requirements for three or more of the categories (P2 through P7) in Table 1.

	Lower VSL	Moderate VSL	High VSL	Severe VSL
		OR The responsible entity did not perform studies as specified in Requirement R3, Part 3.2 to assess the impact of extreme events.	Table 1. OR The responsible entity did not perform Contingency analysis as described in Requirement R3, Part 3.3.	OR The responsible entity did not perform studies to determine that the BES meets the performance requirements for the P0 or P1 categories in Table 1. OR The responsible entity did not base its studies on computer simulation models using data provided in Requirement R1.
R4	The responsible entity did not identify planning events as described in Requirement R4, Part 4.4 or extreme events as described in Requirement R4, Part 4.5.	The responsible entity did not perform studies as specified in Requirement R4, Part 4.1 to determine that the BES meets the performance requirements for one of the categories (P1 through P7) in Table 1. OR The responsible entity did not perform studies as specified in Requirement R4, Part 4.2 to assess the impact of extreme events.	The responsible entity did not perform studies as specified in Requirement R4, Part 4.1 to determine that the BES meets the performance requirements for two of the categories (P1 through P7) in Table 1. OR The responsible entity did not perform Contingency analysis as described in Requirement R4, Part 4.3.	The responsible entity did not perform studies as specified in Requirement R4, Part 4.1 to determine that the BES meets the performance requirements for three or more of the categories (P1 through P7) in Table 1. OR The responsible entity did not base its studies on computer simulation models using data provided in Requirement R1.
R5	N/A	N/A	N/A	The responsible entity does not have criteria for acceptable System steady state voltage limits, post-Contingency voltage deviations, or the transient voltage response for its System.
R6	N/A	N/A	N/A	The responsible entity failed to define and document the criteria or methodology for System instability used within its analysis as described in Requirement R6.

	Lower VSL	Moderate VSL	High VSL	Severe VSL
R7	N/A	N/A	N/A	The Planning Coordinator, in conjunction with each of its Transmission Planners, failed to determine and identify individual or joint responsibilities for performing required studies.
R8	The responsible entity distributed its Planning Assessment results to adjacent Planning Coordinators and adjacent Transmission Planners but it was more than 90 days but less than or equal to 120 days following its completion. OR, The responsible entity distributed its Planning Assessment results to functional entities having a reliability related need who requested the Planning Assessment in writing but it was more than 30 days but less than or equal to 40 days following the request.	The responsible entity distributed its Planning Assessment results to adjacent Planning Coordinators and adjacent Transmission Planners but it was more than 120 days but less than or equal to 130 days following its completion. OR, The responsible entity distributed its Planning Assessment results to functional entities having a reliability related need who requested the Planning Assessment in writing but it was more than 40 days but less than or equal to 50 days following the request.	The responsible entity distributed its Planning Assessment results to adjacent Planning Coordinators and adjacent Transmission Planners but it was more than 130 days but less than or equal to 140 days following its completion. OR, The responsible entity distributed its Planning Assessment results to functional entities having a reliability related need who requested the Planning Assessment in writing but it was more than 50 days but less than or equal to 60 days following the request.	The responsible entity distributed its Planning Assessment results to adjacent Planning Coordinators and adjacent Transmission Planners but it was more than 140 days following its completion. OR The responsible entity did not distribute its Planning Assessment results to adjacent Planning Coordinators and adjacent Transmission Planners. OR The responsible entity distributed its Planning Assessment results to functional entities having a reliability related need who requested the Planning Assessment in writing but it was more than 60 days following the request. OR The responsible entity did not distribute its Planning Assessment results to functional entities having a reliability related need who requested the Planning Assessment in writing.

E. Regional Variances

None.

Version History

Version	Date	Action	Change Tracking
0	April 1, 2005	Effective Date	New
0	February 8, 2005	BOT Approval	Revised
0	June 3, 2005	Fixed reference in M1 to read TPL-001-0 R2.1 and TPL-001-0 R2.2	Errata
0	July 24, 2007	Corrected reference in M1. to read TPL-001-0 R1 and TPL-001-0 R2.	Errata
0.1	October 29, 2008	BOT adopted errata changes; updated version number to “0.1”	Errata
0.1	May 13, 2009	FERC Approved – Updated Effective Date and Footer	Revised
1	Approved by Board of Trustees February 17, 2011	Revised footnote ‘b’ pursuant to FERC Order RM06-16-009	Revised (Project 2010-11)
2	August 4, 2011	Revision of TPL-001-1; includes merging and upgrading requirements of TPL-001-0, TPL-002-0, TPL-003-0, and TPL-004-0 into one, single, comprehensive, coordinated standard: TPL-001-2; and retirement of TPL-005-0 and TPL-006-0.	Project 2006-02 – complete revision
2	August 4, 2011	Adopted by Board of Trustees	

Exhibit B

Implementation Plan for Reliability Standard TPL-001-2

Implementation Plan for TPL-001-2

Prerequisite Approvals

There are no other Reliability Standards or Standard Authorization Requests (SARs), in progress or approved, that must be implemented before this standard can be implemented.

TPL-001-2 — Transmission System Planning Performance Requirements

In revising the TPL standards, the SDT is assuming that planners will receive valid data from the MOD standards link described in TPL-001-2, Requirement R1. Furthermore, there is a tacit assumption that future revisions of the MOD standards will include steps to validate MOD based data.

Revision to Sections of Approved Standards and Definitions

There are multiple new definitions in the proposed standard.

Bus-tie Breaker: A circuit breaker that is positioned to connect two individual substation bus configurations.

Consequential Load Loss: All Load that is no longer served by the Transmission system as a result of Transmission Facilities being removed from service by a Protection System operation designed to isolate the fault.

Long-Term Transmission Planning Horizon: Transmission planning period that covers years six through ten or beyond when required to accommodate any known longer lead time projects that may take longer than ten years to complete.

Non-Consequential Load Loss: Non-Interruptible Load loss that does not include: (1) Consequential Load Loss, (2) the response of voltage sensitive Load, or (3) Load that is disconnected from the System by end-user equipment.

Planning Assessment: Documented evaluation of future Transmission System performance and Corrective Action Plans to remedy identified deficiencies.

Compliance with Standards

Standard	Functions That Must Comply With the Associated Requirements	
TPL-001-2 — Transmission System Planning Performance Requirements	Transmission Planner	Planning Coordinator
	X	X

Effective Dates

The effective date is the date entities are expected to meet the performance identified in this standard.

Note – The changes shown below were done solely to make the effective date language used in the Implementation Plan consistent with that shown in the proposed standard effective date section. No changes were made to the content or context of the dates, durations, or requirements.

Requirements R1 and R7 as well as the definitions shall become effective on the first day of the first calendar quarter, 12 months after applicable regulatory approval. In those jurisdictions where no regulatory approval is required, Requirements R1 and R7 become effective on the first day of the first calendar quarter, 12 months after Board of Trustees adoption.

Except as indicated below, Requirements R2 through R6 and Requirement R8 shall become effective on the first day of the first calendar quarter 24 months after applicable regulatory approval. In those jurisdictions where no regulatory approval is required, all requirements, except as noted below, go into effect on the first day of the first calendar quarter, 24 months after Board of Trustees adoption.

For 84 calendar months beginning the first day of the first calendar quarter following applicable regulatory approval, or in those jurisdictions where no regulatory approval is required on the first day of the first calendar quarter 84 months after Board of Trustees adoption, Corrective Action Plans applying to the following categories of Contingencies and events identified in TPL-001-2, Table 1 are allowed to include Non-Consequential Load Loss and curtailment of Firm Transmission Service (in accordance with Requirement R2, Part 2.7.3.) that would not otherwise be permitted by the requirements of TPL-001-2:

- P1-2 (for controlled interruption of electric supply to local network customers connected to or supplied by the Faulted element)
- P1-3 (for controlled interruption of electric supply to local network customers connected to or supplied by the Faulted element)
- P2-1
- P2-2 (above 300 kV)
- P2-3 (above 300 kV)
- P3-1 through P3-5
- P4-1 through P4-5 (above 300 kV)
- P5 (above 300 kV)

TPL-001-1, TPL-002-1b, TPL-003-1a, and TPL-004-1 are being retired at midnight the day before TPL-001-2 becomes effective as they are replaced in their entirety by TPL-001-2. TPL-005-0 and TPL-006-0.1 are being retired at midnight the day before TPL-001-2 becomes effective because their requirements are adequately covered by the revised TPL-001-2 and NERC's Rules of Procedure, Section 800. However, during this 24-month period, all aspects of TPL-001-0 through TPL-006-0 shall remain in effect for compliance monitoring. This 24 month period is to allow entities to develop, perform and/or validate new and/or modified studies, methodologies, assessments, procedures, etc. necessary to implement and meet the TPL-001-2 requirements. The specified effective dates are expected to allow sufficient time for proper assessment of the available options necessary to create a viable Corrective Action Plan that is compliant with the new Standard.

> R1. This Requirement is related to maintaining System models and the data needed to do so. This requirement shall become effective on the first day of the first calendar quarter, 12 months after applicable regulatory approval. In those jurisdictions where no regulatory approval is required, this requirement goes into effect on the first day of the first calendar quarter, 12 months after Board of Trustees adoption.

R7. This Requirement identifies an obligation to determine individual and joint responsibilities for performing studies needed to do the Planning Assessment. This requirement shall become effective on the first day of the first calendar quarter, 12 months after applicable regulatory approval. In those jurisdictions where no regulatory approval is required, this requirement goes into effect on the first day of the first calendar quarter, 12 months after Board of Trustees adoption.

TPL-001-2 'raises the bar' in several areas where performance requirements have been changed in the new Standard versus those in existing TPL-001-1, TPL-002-1b, TPL-003-1a and TPL-004-1 because loss of Non-Consequential Load or interruption of firm transfers is no longer allowed for certain events, whereas the existing Standards were interpreted by many to allow such actions. As shown in Table 1 of TPL-001-2, the performance requirements associated with the following events represent "raising the bar":

- P1-2 (for controlled interruption of electric supply to local network customers connected to or supplied by the Faulted element)
- P1-3 (for controlled interruption of electric supply to local network customers connected to or supplied by the Faulted element)
- P2-1
- P2-2 (above 300 kV)
- P2-3 (above 300 kV)
- P3-1 through P3-5
- P4-1 through P4-5 (above 300 kV)
- P5 (above 300 kV)

This "raising the bar" is beyond the control of the Transmission Planner and Planning Coordinator and may have significant budget, siting, permitting, and construction impacts on many Transmission Owners. To provide stakeholders with sufficient time to implement changes, a timeframe coincident with the end of the Near-Term Transmission Planning Horizon has been provided

Any entity which cannot eliminate the need to trip Non-Consequential Load or curtail Firm Transmission Service for these performance elements by that date shall submit a mitigation plan to its Regional Entity outlining the steps it will take to correct the problem. If the entities follow the established ERO procedure for mitigation, it is the intent of the SDT that no penalties will be assessed.

Exhibit C

Violation Risk Factors and Violation Severity Levels Analysis for TPL-001-2

Violation Risk Factor Analysis for Proposed TPL-001-2

This chart provides the analysis the SDT used to determine the appropriate Violation Risk Factor ("VRF") for each Requirement of the proposed TPL-001-2 — Transmission System Planning Performance Requirements Reliability Standard utilizing the FERC-approved VRF Guidelines.[1]

VRF for Proposed TPL-001-2, Requirement R1: Medium

R#	Guideline 2 - Consistency within a Reliability Standard.	Guideline 3 - Consistency among Reliability Standards.	Guideline 4 - Consistency with NERC's Definition of the Violation Risk Factor Level	Guideline 5 - Treatment of Requirements that Co-mingle More Than One Obligation
R1.	The requirement has no sub-requirements; only one VRF was assigned so there is no conflict.	Requirements R1.3.5, R1.3.7, R1.3.8, and R1.3.9 to the currently-effective TPL-001-0.1 have been assigned a Medium VRF and are similar in purpose and effect to TPL-001-2 Requirement R1. The requirements are viewed as similar because they refer to models that include firm transfers, existing and planned facilities, reactive power requirements, and refer to the P0 condition. A Medium VRF for Requirement R1 is consistent with past FERC guidance.	Failure to maintain System models in a planning time frame could, under emergency, abnormal, or restorative conditions anticipated by the preparations, directly and adversely affect the electrical state or capability of the BES.	Proposed TPL-001-2, Requirement R1 contains only one objective, therefore only one VRF was assigned.

[1] *Order on Violation Risk Factors*, 119 FERC ¶ 61,145 (2007), order on reh'g and compliance filing, 120 FERC ¶ 61,145 (2007).

VRF for Proposed TPL-001-2, Requirement R2: High

R#	Guideline 2 - Consistency within a Reliability Standard.	Guideline 3 - Consistency among Reliability Standards.	Guideline 4 - Consistency with NERC's Definition of the Violation Risk Factor Level	Guideline 5 - Treatment of Requirements that Co-mingle More Than One Obligation
R2.	The requirement has no sub-requirements; only one VRF was assigned so there is no conflict.	A similar requirement (Requirement R1) in approved TPL-002-0a was assigned a High VRF. The requirements are viewed as similar because they both address the validity of the Planning Assessment.	Failure to perform Planning Assessments in the appropriate planning time frame could, under emergency, abnormal, or restorative conditions anticipated by the preparations, directly and adversely affect the electrical state or capability of the BES.	Proposed TPL-001-2, Requirement R2 contains only one objective, therefore only one VRF was assigned.

VRF for Proposed TPL-001-2, Requirement R3:

R#	Guideline 2 - Consistency within a Reliability Standard.	Guideline 3 - Consistency among Reliability Standards.	Guideline 4 - Consistency with NERC's Definition of the Violation Risk Factor Level	Guideline 5 - Treatment of Requirements that Co-mingle More Than One Obligation
R3.	The requirement has no sub-requirements; only one VRF was assigned so there is no conflict	A similar requirement (Requirement R1.3.7) in approved TPL-001-0.1 was assigned a Medium VRF. The requirements are viewed as similar since they refer to performing studies to demonstrate performance.	Failure to perform appropriate studies could, under emergency, abnormal, or restorative conditions anticipated by the preparations, directly and adversely affect the electrical state or capability of the bulk electric system.	Proposed TPL-001-2, Requirement R3 contains only one objective, therefore only one VRF was assigned.

VRF for Proposed TPL-001-2, Requirement R4: Medium

R#	Guideline 2 - Consistency within a Reliability Standard.	Guideline 3 - Consistency among Reliability Standards.	Guideline 4 - Consistency with NERC's Definition of the Violation Risk Factor Level	Guideline 5 - Treatment of Requirements that Co-mingle More Than One Obligation
R4.	The requirement has no sub-requirements; only one VRF was assigned so there is no conflict.	Proposed TPL-001-2, Requirement R4 is a new requirement but is essentially the Stability equivalent to proposed TPL-001-2, Requirement R3 (see above) which was assigned a Medium VRF.	Failure to perform appropriate studies could, under emergency, abnormal, or restorative conditions anticipated by the preparations, directly and adversely affect the electrical state or capability of the BES.	Proposed TPL-001-2, Requirement R4 has only one objective, therefore only one VRF was assigned.

VRF for Proposed TPL-001-2, Requirement R5: Medium

R#	Guideline 2 - Consistency within a Reliability Standard.	Guideline 3 - Consistency among Reliability Standards.	Guideline 4 - Consistency with NERC's Definition of the Violation Risk Factor Level	Guideline 5 - Treatment of Requirements that Co-mingle More Than One Obligation
R5.	The requirement has no sub-requirements; only one VRF was assigned so there is no conflict.	Proposed TPL-001-2, Requirement R5 is a new requirement, for which there are no comparable requirements.	Failure to have established criteria for certain System conditions in the planning time horizons could, under emergency, abnormal, or restorative conditions anticipated by the preparations, directly and adversely affect the electrical state or capability of the BES.	Proposed TPL-001-2, Requirement R5 contains only one objective. Therefore only one VRF was assigned.

VRF for Proposed TPL-001-2, Requirement R6: Low

R#	Guideline 2 - Consistency within a Reliability Standard.	Guideline 3 - Consistency among Reliability Standards.	Guideline 4 - Consistency with NERC's Definition of the Violation Risk Factor Level	Guideline 5 - Treatment of Requirements that Co-mingle More Than One Obligation
R6.	The requirement has no sub-requirements; only one VRF was assigned so there is no conflict.	Proposed TPL-001-2, Requirement R6 is a new requirement, for which there are no comparable requirements.	Failure to have established criteria for determining System instability is an administrative requirement affecting a planning time frame. Violations of this requirement would not, under the emergency, abnormal, or restorative conditions anticipated by the preparations, be expected to adversely affect the electrical state or capability of the BES.	Proposed TPL-001-2, Requirement R6 contains only one objective. Therefore only one VRF was assigned to the requirement. Therefore, this requirement is assigned a Low VRF.

VRF for Proposed TPL-001-2, Requirement R7: Low

R#	Guideline 2 - Consistency within a Reliability Standard.	Guideline 3 - Consistency among Reliability Standards.	Guideline 4 - Consistency with NERC's Definition of the Violation Risk Factor Level	Guideline 5 - Treatment of Requirements that Co-mingle More Than One Obligation
R7.	The requirement has no sub-requirements; only one VRF was assigned so there is no conflict.	Proposed TPL-001-2, Requirement R7 is a new requirement, for which there are no comparable requirements to compare VRFs.	Failure to have established individual and joint planning responsibilities is an administrative requirement affecting a planning time frame. Violations of this requirement would not, under the emergency, abnormal, or restorative conditions anticipated by the preparations, be expected to adversely affect the electrical state or capability of the BES.	Proposed TPL-001-2, Requirement R7 addresses a single objective and has a single VRF.

VRF for Proposed TPL-001-2, Requirement R8: Medium

R#	Guideline 2 - Consistency within a Reliability Standard.	Guideline 3 - Consistency among Reliability Standards.	Guideline 4 - Consistency with NERC's Definition of the Violation Risk Factor Level	Guideline 5 - Treatment of Requirements that Co-mingle More Than One Obligation
R8.	The requirement has no sub-requirements; only one VRF was assigned so there is no conflict.	Proposed TPL-001-2, Requirement R8 is a new requirement, so there are no comparable requirements for which to compare VRFs.	Failure to distribute the Planning Assessment is a requirement that, while administrative in nature, has definite impacts in terms of the importance of obtaining input into the planning assessment from other parties. Violations of this requirement could, under the emergency, abnormal, or restorative conditions anticipated by the preparations, be expected to adversely affect the electrical state or capability of the bulk electric system.	Proposed TPL-001-2, Requirement R8 addresses a single objective and has a single VRF.

Note: *The team did not address Guideline 1, "Consistency with the Conclusions of the Final Blackout Report" directly because of a conflict between Guidelines 1 and 4. Whereas Guideline 1 identifies a list of topics that encompass nearly all topics within NERC's Reliability Standards and implies that these requirements should be assigned a "High" VRF, Guideline 4 directs assignment of VRFs based on the impact of a specific requirement to the reliability of the system. The SDT believes that Guideline 4 is reflective of the intent of VRFs in the first instance and therefore concentrated its approach on the reliability impact of the requirements.*

The SDT applied the following NERC criteria when proposing VRFs for the requirements in proposed TPL-001-2:

High Risk Requirement

A requirement that, if violated, could directly cause or contribute to bulk electric system instability, separation, or a cascading sequence of failures, or could place the bulk electric system at an unacceptable risk of instability, separation, or cascading failures; or, a requirement in a planning time frame that, if violated, could, under emergency, abnormal, or restorative conditions anticipated by the preparations, directly cause or contribute to bulk electric system instability, separation, or a cascading sequence of failures, or could place the bulk electric system at an unacceptable risk of instability, separation, or cascading failures, or could hinder restoration to a normal condition.

Medium Risk Requirement

A requirement that, if violated, could directly affect the electrical state or the capability of the bulk electric system, or the ability to effectively monitor and control the bulk electric system. However, violation of a medium risk requirement is unlikely to lead to bulk electric system instability, separation, or cascading failures; or, a requirement in a planning time frame that, if violated, could, under emergency, abnormal, or restorative conditions anticipated by the preparations, directly and adversely affect the electrical state or capability of the bulk electric system, or the ability to effectively monitor, control, or restore the bulk electric system. However, violation of a medium risk requirement is unlikely, under emergency, abnormal, or

restoration conditions anticipated by the preparations, to lead to bulk electric system instability, separation, or cascading failures, nor to hinder restoration to a normal condition.

Lower Risk Requirement

A requirement that is administrative in nature and a requirement that, if violated, would not be expected to adversely affect the electrical state or capability of the bulk electric system, or the ability to effectively monitor and control the bulk electric system; or, a requirement that is administrative in nature and a requirement in a planning time frame that, if violated, would not, under the emergency, abnormal, or restorative conditions anticipated by the preparations, be expected to adversely affect the electrical state or capability of the bulk electric system, or the ability to effectively monitor, control, or restore the bulk electric system. A planning requirement that is administrative in nature.

Violation Severity Level Analysis for Proposed TPL-001-2

This chart provides the analysis the SDT used to determine the appropriate Violation Severity Level ("VSL") for each Requirement of the proposed TPL-001-2 — Transmission System Planning Performance Requirements Reliability Standard utilizing the FERC-approved VSL Guidelines.[1]

VSLs for Proposed TPL-001-2, Requirement R1:

R#	Compliance with NERC's VSL Guidelines	Guideline 1 Violation Severity Level Assignments Should Not Have the Unintended Consequence of Lowering the Current Level of Compliance	Guideline 2 Violation Severity Level Assignments Should Ensure Uniformity and Consistency in the Determination of Penalties Guideline 2a: The Single Violation Severity Level Assignment Category for "Binary" Requirements Is Not Consistent Guideline 2b: Violation Severity Level Assignments that Contain Ambiguous Language	Guideline 3 Violation Severity Level Assignment Should Be Consistent with the Corresponding Requirement	Guideline 4 Violation Severity Level Assignment Should Be Based on A Single Violation, Not on A Cumulative Number of Violations
R1.	Meets NERC's VSL guidelines – There is an incremental aspect to the violation and the	The most comparable VSL for a similar requirement is for the approved TPL-001-0.1. That VSL is also based on a single violation and is binary. Thus, the	The proposed VSL does not use any ambiguous terminology, thereby supporting uniformity and consistency in the determination of similar	The proposed VSL uses the same terminology as used in the associated requirement, and is, therefore, consistent with the requirement.	The VSL is based on a single violation and not cumulative violations.

[1] *Order On Violation Severity Levels Proposed By The Electric Reliability Organization,* 123 FERC ¶ 61,284 (2008).

R#	Compliance with NERC's VSL Guidelines	Guideline 1 Violation Severity Level Assignments Should Not Have the Unintended Consequence of Lowering the Current Level of Compliance	Guideline 2 Violation Severity Level Assignments Should Ensure Uniformity and Consistency in the Determination of Penalties Guideline 2a: The Single Violation Severity Level Assignment Category for "Binary" Requirements Is Not Consistent Guideline 2b: Violation Severity Level Assignments that Contain Ambiguous Language	Guideline 3 Violation Severity Level Assignment Should Be Consistent with the Corresponding Requirement	Guideline 4 Violation Severity Level Assignment Should Be Based on A Single Violation, Not on A Cumulative Number of Violations
	VSLs follow the guidelines for incremental violations.	VSLs in the proposed standard do not lower the level of compliance currently required by setting VSLs that are less punitive than those already proposed.	penalties for similar violations.		

VSLs for Proposed TPL-001-2, Requirement R2:

R#	Compliance with NERC's VSL Guidelines	Guideline 1 Violation Severity Level Assignments Should Not Have the Unintended Consequence of Lowering the Current Level of Compliance	Guideline 2 Violation Severity Level Assignments Should Ensure Uniformity and Consistency in the Determination of Penalties Guideline 2a: The Single Violation Severity Level Assignment Category for "Binary" Requirements Is Not Consistent Guideline 2b: Violation Severity Level Assignments that Contain Ambiguous Language	Guideline 3 Violation Severity Level Assignment Should Be Consistent with the Corresponding Requirement	Guideline 4 Violation Severity Level Assignment Should Be Based on A Single Violation, Not on A Cumulative Number of Violations
R2.	Meets NERC's VSL guidelines - There is an incremental aspect to the violation and the VSLs follow the guidelines for incremental violations.	The most comparable VSL for a similar requirement is for the approved TPL-002-0a, Requirement R1. That VSL is also incremental. Thus, the VSLs in the proposed standard do not lower the level of compliance currently required by setting VSLs that are less punitive than those already proposed.	The proposed VSL does not use any ambiguous terminology, thereby supporting uniformity and consistency in the determination of similar penalties for similar violations.	The proposed VSL uses the same terminology as used in the associated requirement, and is, therefore, consistent with the requirement.	The VSL is based on a single violation and not cumulative violations.

VSLs for Proposed TPL-001-2, Requirement R3:

R#	Compliance with NERC's VSL Guidelines	Guideline 1 Violation Severity Level Assignments Should Not Have the Unintended Consequence of Lowering the Current Level of Compliance	Guideline 2 Violation Severity Level Assignments Should Ensure Uniformity and Consistency in the Determination of Penalties Guideline 2a: The Single Violation Severity Level Assignment Category for "Binary" Requirements Is Not Consistent Guideline 2b: Violation Severity Level Assignments that Contain Ambiguous Language	Guideline 3 Violation Severity Level Assignment Should Be Consistent with the Corresponding Requirement	Guideline 4 Violation Severity Level Assignment Should Be Based on A Single Violation, Not on A Cumulative Number of Violations
R3.	Meets NERC's VSL guidelines – There is an incremental aspect to the violation and the VSLs follow the guidelines for incremental violations.	There is a similar requirement in the approved TPL-001-0.1, Requirement R1.3.7. The VSL for that requirement is binary while this requirement adopts an incremental approach. This is justified by the increased number of tasks described in the new requirement and how an entity would go about fulfilling those tasks. Thus, the VSLs	The proposed VSLs do not use any ambiguous terminology, thereby supporting uniformity and consistency in the determination of similar penalties for similar violations.	The proposed VSLs use the same terminology as used in the associated requirement, and are, therefore, consistent with the requirement.	The VSLs are based on a single violation and not cumulative violations.

R#	Compliance with NERC's VSL Guidelines	Guideline 1 Violation Severity Level Assignments Should Not Have the Unintended Consequence of Lowering the Current Level of Compliance	Guideline 2 Violation Severity Level Assignments Should Ensure Uniformity and Consistency in the Determination of Penalties Guideline 2a: The Single Violation Severity Level Assignment Category for "Binary" Requirements Is Not Consistent Guideline 2b: Violation Severity Level Assignments that Contain Ambiguous Language	Guideline 3 Violation Severity Level Assignment Should Be Consistent with the Corresponding Requirement	Guideline 4 Violation Severity Level Assignment Should Be Based on A Single Violation, Not on A Cumulative Number of Violations
		in the proposed standard do not lower the level of compliance currently required by setting VSLs that are less punitive than those already proposed.			

VSLs for Proposed TPL-001-2, Requirement R4:

R#	Compliance with NERC's VSL Guidelines	Guideline 1 Violation Severity Level Assignments Should Not Have the Unintended Consequence of Lowering the Current Level of Compliance	Guideline 2 Violation Severity Level Assignments Should Ensure Uniformity and Consistency in the Determination of Penalties Guideline 2a: The Single Violation Severity Level Assignment Category for "Binary" Requirements Is Not Consistent Guideline 2b: Violation Severity Level Assignments that Contain Ambiguous Language	Guideline 3 Violation Severity Level Assignment Should Be Consistent with the Corresponding Requirement	Guideline 4 Violation Severity Level Assignment Should Be Based on A Single Violation, Not on A Cumulative Number of Violations
R4.	Meets NERC's VSL guidelines - There is an incremental aspect to the violation and the VSLs follow the guidelines for incremental violations.	This requirement parallels Requirement R3 where Requirement R3 is for steady-state and this requirement is for Stability. The VSLs for this requirement mirror those for Requirement R3.	The proposed VSL does not use any ambiguous terminology, thereby supporting uniformity and consistency in the determination of similar penalties for similar violations.	The proposed VSL uses the same terminology as used in the associated requirement, and is, therefore, consistent with the requirement.	The VSL is based on a single violation and not cumulative violations.

VSLs for Proposed TPL-001-2, Requirement R5:

R#	Compliance with NERC's VSL Guidelines	Guideline 1 Violation Severity Level Assignments Should Not Have the Unintended Consequence of Lowering the Current Level of Compliance	Guideline 2 Violation Severity Level Assignments Should Ensure Uniformity and Consistency in the Determination of Penalties Guideline 2a: The Single Violation Severity Level Assignment Category for "Binary" Requirements Is Not Consistent Guideline 2b: Violation Severity Level Assignments that Contain Ambiguous Language	Guideline 3 Violation Severity Level Assignment Should Be Consistent with the Corresponding Requirement	Guideline 4 Violation Severity Level Assignment Should Be Based on A Single Violation, Not on A Cumulative Number of Violations
R5.	Meets NERC's VSL guidelines - Severe: Missing most or all of the significant elements (or a significant percentage) of the required performance.	The proposed requirement is new and there are no comparable VSLs.	The proposed VSLs do not use any ambiguous terminology, thereby supporting uniformity and consistency in the determination of similar penalties for similar violations.	The proposed VSLs use the same terminology as used in the associated requirement, and are, therefore, consistent with the requirement.	The VSLs are based on a single violation and not cumulative violations.

VSLs for Proposed TPL-001-2, Requirement R6:

R#	Compliance with NERC's Revised VSL Guidelines	Guideline 1 Violation Severity Level Assignments Should Not Have the Unintended Consequence of Lowering the Current Level of Compliance	Guideline 2 Violation Severity Level Assignments Should Ensure Uniformity and Consistency in the Determination of Penalties Guideline 2a: The Single Violation Severity Level Assignment Category for "Binary" Requirements Is Not Consistent Guideline 2b: Violation Severity Level Assignments that Contain Ambiguous Language	Guideline 3 Violation Severity Level Assignment Should Be Consistent with the Corresponding Requirement	Guideline 4 Violation Severity Level Assignment Should Be Based on A Single Violation, Not on A Cumulative Number of Violations
R6.	Meets NERC's VSL guidelines - Severe: Missing most or all of the significant elements (or a significant percentage) of the required performance.	The proposed requirement is new and there are no comparable VSLs.	The proposed VSLs do not use any ambiguous terminology, thereby supporting uniformity and consistency in the determination of similar penalties for similar violations.	The proposed VSLs use the same terminology as used in the associated requirement, and are, therefore, consistent with the requirement.	The VSLs are based on a single violation and not cumulative violations.

VSLs for Proposed TPL-001-2, Requirement R7:

R#	Compliance with NERC's VSL Guidelines	Guideline 1 Violation Severity Level Assignments Should Not Have the Unintended Consequence of Lowering the Current Level of Compliance	Guideline 2 Violation Severity Level Assignments Should Ensure Uniformity and Consistency in the Determination of Penalties Guideline 2a: The Single Violation Severity Level Assignment Category for "Binary" Requirements Is Not Consistent Guideline 2b: Violation Severity Level Assignments that Contain Ambiguous Language	Guideline 3 Violation Severity Level Assignment Should Be Consistent with the Corresponding Requirement	Guideline 4 Violation Severity Level Assignment Should Be Based on A Single Violation, Not on A Cumulative Number of Violations
R7.	Meets NERC's VSL guidelines - Severe: Missing most or all of the significant elements (or a significant percentage) of the required performance.	The proposed requirement is new and there are no comparable VSLs.	The proposed VSL does not use any ambiguous terminology, thereby supporting uniformity and consistency in the determination of similar penalties for similar violations.	The proposed VSL uses the same terminology as used in the associated requirement, and is, therefore, consistent with the requirement.	The VSL is based on a single violation and not cumulative violations.

VSLs for Proposed TPL-001-2, Requirement R8:

R#	Compliance with NERC's VSL Guidelines	Guideline 1 Violation Severity Level Assignments Should Not Have the Unintended Consequence of Lowering the Current Level of Compliance	Guideline 2 Violation Severity Level Assignments Should Ensure Uniformity and Consistency in the Determination of Penalties Guideline 2a: The Single Violation Severity Level Assignment Category for "Binary" Requirements Is Not Consistent Guideline 2b: Violation Severity Level Assignments that Contain Ambiguous Language	Guideline 3 Violation Severity Level Assignment Should Be Consistent with the Corresponding Requirement	Guideline 4 Violation Severity Level Assignment Should Be Based on A Single Violation, Not on A Cumulative Number of Violations
R8.	Meets NERC's VSL guidelines. There is an incremental aspect to the violation and the VSLs follow the guidelines for incremental violations.	The proposed requirement is new and there are no comparable VSLs.	The proposed VSL does not use any ambiguous terminology, thereby supporting uniformity and consistency in the determination of similar penalties for similar violations.	The proposed VSL uses the same terminology as used in the associated requirement, and is, therefore, consistent with the requirement.	The VSL is based on a single violation and not cumulative violations.

The SDT based its assignment of VSLs on the following NERC criteria:

Lower	Moderate	High	Severe
Missing a minor element (or a small percentage) of the required performance The performance or product measured has significant value as it almost meets the full intent of the requirement.	Missing at least one significant element (or a moderate percentage) of the required performance. The performance or product measured still has significant value in meeting the intent of the requirement.	Missing more than one significant element (or is missing a high percentage) of the required performance or is missing a single vital component. The performance or product has limited value in meeting the intent of the requirement.	Missing most or all of the significant elements (or a significant percentage) of the required performance. The performance measured does not meet the intent of the requirement or the product delivered cannot be used in meeting the intent of the requirement.

FERC's VSL guidelines are presented below, followed by an analysis of whether the VSLs proposed for each requirement in proposed TPL-001-2 meets the FERC Guidelines for assessing VSLs:

Guideline 1: Violation Severity Level Assignments Should Not Have the Unintended Consequence of Lowering the Current Level of Compliance

> Compare the VSLs to any prior levels of non-compliance and avoid significant changes that may encourage a lower level of compliance than was required when levels of non-compliance were used.

Guideline 2: Violation Severity Level Assignments Should Ensure Uniformity and Consistency in the Determination of Penalties

> A violation of a "binary" type requirement must be a "Severe" VSL. Do not use ambiguous terms such as "minor" and "significant" to describe noncompliant performance.

Guideline 3: Violation Severity Level Assignment Should Be Consistent with the Corresponding Requirement

VSLs should not expand on what is required in the requirement.

Guideline 4: Violation Severity Level Assignment Should Be Based on a Single Violation, Not on A Cumulative Number of Violations

Unless otherwise stated in the requirement, each instance of non-compliance with a requirement is a separate violation. Section 4 of the Sanction Guidelines states that assessing penalties on a per violation per day basis is the “default” for penalty calculations.

Exhibit D

Consideration of Comments

Project 2006-02
Assess Transmission Future Needs and Develop Transmission Plans

Related Files

Status:
The NERC Board of Trustees adopted the TPL-001-2 standard on August 4, 2011. The Implementation Plan for TPL-001-2 will retire TPL-001-1, TPL-002-1b, TPL-003-1a, and TPL-004-1 at midnight the day before TPL-001-2 becomes effective as they are replaced in their entirety by TPL-001-2 (subject to regulatory approval). The Implementation Plan also calls for retiring TPL-005-0 and TPL-006-0.1 at that time (subject to regulatory approval) because the Requirements are either covered by the revised TPL-001-2 or by Section 800 of NERC's Rules of Procedure.

Purpose / Industry Need:
The revisions to the following standards would improve technical clarity and address concerns identified by stakeholders and FERC:

- TPL-001 — System Performance under Normal Conditions
- TPL-002 — System Performance Following Loss of a Single BES Element
- TPL-003 — System Performance Following Loss of Two or More BES Elements
- TPL-004 — System Performance Following Extreme BES Events
- TPL-005 — Regional and Interregional Self-Assessment Reliability Reports
- TPL-006 — Data from the Regional Reliability Organization Needed to Assess Reliability

The final SAR is to establish a standard for assessing and planning the transmission systems in North America. The transmission system must be assessed and planned to ensure that it performs its intended functions in providing reliable delivery of power for the future needs of customers.

Draft	Action	Dates	Results	Consideration of Comments
Draft 8 TPL-001-2 Clean | Redline to last posting **Implementation Plan** Clean | Redline New Definitions for Approval VRFs and VSLs for	Recirculation Ballot>> Info>>	7/13/11 - 7/22/11 (closed)	Summary>> Full Record>> Ballot Comments>>	

Draft	Action	Dates	Results	Consideration of Comments
Draft 8 TPL-001-2 Clean | Redline to last posting **Implementation Plan** Clean | Redline New Definitions for Approval VRFs and VSLs for TPL-001-2 **Supporting Materials:** TPL-001-1 TPL-002-1b TPL-003-1a TPL-004-1 TPL-005-0 TPL-006-0.1	Recirculation Ballot>> Info>>	7/13/11 - 7/22/11 (closed)	Summary>> Full Record>> Ballot Comments>>	
Draft 7 TPL-001-2 — Transmission System Planning Performance Requirements Clean | Redline to last posting | TPL-001-2 Redline to last balloted Implementation Plan **Supporting Materials:** Comment Form TPL-001-1 TPL-002-1b TPL-003-1a TPL-004-1 TPL-005-0 TPL-006-0.1	Join ballot pool>>	4/18/11 - 5/18/11 (closed)	Summary>> Full Record>> Non-Binding Results>>	Consideration of Comments**(10)**
	Successive Ballot and Non-Binding Poll>> Info>>	5/18/11 - 5/31/11 (closed)		
	30-day Formal Comment Period Submit Comments>> Info>>	4/18/11 - 5/31/11 (closed)	Comments Received>>	

Draft 6 TPL-001-2 — Transmission System Planning Performance Requirements Clean | Redline to last posting	Info>>			
Draft 5 TPL-001-2 — Transmission System Planning Performance Requirements Clean | Redline Implementation Plan Clean | Redline **Supporting Materials:** Comment Form (Word)	30-day Informal Comment Period Submit Comments>>| Info>>	08/03/10 - 09/02/10	Comments Received>>	Consideration of Comments**(9)**
TPL-001-1 — Transmission System Planning Performance Requirements Clean | Redline Implementation Plan Clean | Redline **Supporting Materials:** Issues Database VRF and VSL Documentation	Initial Ballot Vote>> | Info>>	02/19/10 - 03/01/10 (closed)	Summary>> Full Record>>	Consideration of Comments**(8)**
	Pre-ballot Review Join>> | Info>>	01/20/10 - 02/19/10 (closed)		
Draft 4 TPL-001-1 —	Comment Period	09/16/09 - 10/16/09 (closed)	Comments Received>>	Consideration of Comments**(7)**

Transmission System Planning Performance Requirements Clean | Redline to last posting **Supporting Materials:** Comment Form (Word) Implementation Plan Clean **|** Redline	Info>> Submit Comments>>			
Draft 3 TPL-001-1 — Transmission System Planning Performance Requirements Clean | Redline to last posting **Supporting Materials:** Comment Form (Word) Implementation Plan	Comment Period Info>> Submit Comments>>	05/26/09 - 07/09/09 (closed)	Comments Received>>	Consideration of Comments**(6)**
Draft 2 TPL-001-1 — Transmission System Planning Performance Requirements Clean | Redline to last posting **Supporting Materials:** Comment Form (Word)	Comment Period Info>> Submit Comments>>	08/14/08 - 9/29/08 (closed)	Comments Received>>	Consideration of Comments**(5)**
Industry WebEx and Conference Call to Provide Overview of First Draft of TPL-001-1 — Transmission System Planning Performance Requirements		October 10, 2007		

Info>>				
Draft 1 TPL-001-1 — Transmission System Planning Performance Requirements Clean	Comment Period Info>> Submit Comments>>	09/12/07 - 10/26/07 (closed)	Comments Received>>	Response to Comments**(4)**
ATFN Supplemental SAR Supplemental SAR Version 2 Redline to 1st Posting				
ATFN Supplemental SAR Supplemental SAR Version 1	Comment Period Info>> Submit Comments>>	02/15/07 - 03/16/07 (closed)	Comments Received>>	Consideration of Comments**(3)**
Final SAR				
Assess Transmission Future Needs SAR Drafting Team Draft SAR Version 3	Submit Nomination>>	November 18, 2005 (closed)		
Draft SAR Version 2		05/05/04 - 06/05/04 (closed)	Comments Received>>	Consideration of Comments**(2)**
Draft SAR Version 1		04/02/02 - 05/03/02 (closed)	Comments Received>>	Consideration of Comments**(1)**

Assess Transmission Future Needs and Develop Transmission Plans SAR

Consideration of Industry Comments on SAR Version 1
(SAR Originally Posted for Comment 4/02/02 – 5/03/02)

Background:

Version 1 of the **"Assess Transmission Future Needs and Develop Transmission Plans"** SAR was an abbreviated SAR, which included an "Industry Need" statement and a brief description of the proposed standard, but did not include a detailed description. The purpose of this first posting was to collect feedback from the industry on the following questions:

- Is there a reliability-related need for this SAR?

If there is such a need, how should the scope of the SAR be changed?
- The scope of the SAR is fine as is
- The scope of the SAR should be reduced to eliminate……
- The scope of the SAR should be expanded to include…..

In January 2004, the Standards Authorization Committee (SAC) appointed a Drafting Team (DT) to address industry answers and comments to the questions posed. The DT was also charged with refining the SAR and drafting a detailed description of the proposed standard in preparation for the 2nd posting of the SAR.

This document contains the DT responses to the first set of comments on the original SAR. Because almost 2 years have elapsed since the comments were collected, some have become dated and no longer apply to the present situation. Thus, the DT has not addressed each and every comment, but rather only those that are still timely and represent a general consensus from industry.

Please note that the original comments from industry respondents are shown as underlined text, while the SAR DT responses are shown in yellow highlight.

Question: *"Is there a Reliability-Related Need for this SAR?*

Development of this SAR is not needed or is premature.
Industry comments were overwhelmingly in favor of a standard on transmission assessment and planning, so the SAR DT feels we should proceed with the preparation of a final SAR to be posted for industry comment.

Question: *"Scope of this SAR Should be Reduced to Eliminate ……."*

Standard should not go beyond assessment & planning of the bulk transmission system.
We agree. The DT feels that this SAR as presently written does not go beyond assessment and planning of the bulk transmission system.

Standard should not apply to intrastate systems.
These standards are being drafted to apply to ALL North American bulk electric systems.

Market solutions are outside NERC's scope with respect to development of reliability policies.
Agreed. The present SAR does not require transmission plans to facilitate market operation -- instead, the emphasis is on ensuring reliability.

Definition of "what" core reliability standards are needed is encouraged. However, "how" they are achieved and implemented should not be included at this time, until there is clarity on SMD & RTO formation, and NERC/NAESB interface is defined.
We agree. Industry responses to postings of other SARs and standards indicate that it is widely felt that NERC standards should concentrate on "what" the requirements are, not "how" to achieve them.

SAR should only address creation of Planning Standards. Plan Development is a compliance issue.
The Standard will not tell people "how" to achieve the solutions, but only require that they have a Plan. This is in accordance with the Functional Model, which requires that each Planning Authority have a documented Plan to address inadequacies identified in a transmission needs assessment.

SAR should only define the reliability requirements, not specific solutions.
Agreed.

Eliminate the function relating to "assessing" transmission performance. Only "plan" future transmission expansion.
Assessment of the transmission system is needed to identify anticipated deficiencies that proper planning will correct. Thus, the SAR DT feels that both "assessment" and "planning" are essential components of this SAR.

Standard should only apply to the long-term planning function. Should be a parallel standard for operational planning.
We agree. The standard will only address long term planning, which is defined in the Functional Model as 1 year and beyond.

Standard must not become a mandate for all to use the same load flow model.
Agreed.

Question: *"Scope of this SAR Should be Expanded to Include ……."*

Scope should be expanded to include generation as well.
The SAR DT understands this requirement to "include" generation to mean developing transmission plans that include (as inputs to the transmission adequacy assessment) resources, adequacy plans and load forecasts of LSE's . According to the Functional Model, the Planning Authority must develop an integrated plan from both Transmission Planners and Resource Planners. We agree generation should be included; however, we do not believe that there should be a single standard that integrates resource adequacy planning and transmission adequacy planning. This standard should address only transmission adequacy planning. Separate RA standards may be developed, applicable to different entities; e.g., transmission standards for TOs, resource standards for LSEs .

NERC should guard against establishing a one-dimensional standard that fails to take into account all dimensions that guide the planning process.
Agreed.

SAR should include a requirement to plan the system so that it can be operated within operating limits .
The SAR DT believes that complying with a properly-designed planning standard will result in a system that can be operated within operating limits.

Scope should include planning associated with IPPs
See our response to the comment above that the "scope should be expanded to include generation as well".

NERC should ensure that the standards defined include a definition of how the planning model is created.
The SAR DT has attempted to address this issue in the proposed SAR.

Standard should be specific and measurable and define what "normal", "extreme", and "abnormal" system conditions are.
Agreed. The DT has deleted these terms from the SAR and instead has included a requirement that the standard use the contingency events identified in Table 1 of existing Planning Standard I.A.

Minimum set of criteria for assessing acceptability of plans is needed.
The SAR DT believes the proposed SAR establishes minimum system performance standards, but does not direct how to meet those standards. For a Plan to be acceptable, anticipated system performance under the Plan must meet the minimum criteria established by the standard.

May be a need for multiple expansion plans because of timing of generator projects that are dictated by commercial rather than system adequacy considerations.
The SAR DT does not envision that the standard will address commercial or market issues. However, the standard will require documentation and disclosure of generation assumptions used to develop the Transmission Plan.

Must define what minimum need is. Some regulatory backstop is needed if expansion plans are deemed insufficient to meet needs.
The DT feels that the SAR as written will result in a standard that defines the minimum need.

SAR should identify who has obligation to implement transmission plans.
The Functional Model identifies which functions have the responsibility to implement transmission plans. The SAR DT (in the Comment Form posted with Version 2 of the SAR) has asked for industry guidance on the monitoring of implementation plans.

Must use a reasonable planning horizon (less than or equal to 5 years).
The DT believes that the SAR as written will result in a standard that requires the use of a reasonable planning horizon.

Provision for interim use of Remedial Action Plans (RAP) & Special Protection Schemes (SPS) is needed.
The SAR DT feels that the standard will neither require nor preclude the use of RAP or SPS for either interim or permanent use to meet the reliability criteria contained in the standard.

Regional differences should be recognized.
Agreed. The SAR DT has asked for industry input to identify such differences. See the Comment Form posted with the SAR – V2.

Requirement to provide assessment at all demand levels should be added.
The SAR DT has developed language to consider the variability of load in the development of the standard.

Responsibility for assessing and defining adequate operating reserves and reactive support should be added.
The SAR DT believes operating reserves is an operational issue that should be addressed by operating standards. However, voltage support and reactive power will be addressed in this standard.

Planning criteria should be expanded to include maintainability of system.
The SAR DT has asked for industry input on this issue. Refer to the Comment Form posted with the SAR – V2.

When studies indicate that the system may not meet performance requirements, plans should be developed to address the situation and studies should demonstrate that implemented plans meet requirements.
We agree.

Core standard for reliability should be specific & measurable.
Agreed.

"Miscellaneous Comments"

Technical specifications should ensure that they do not prohibit worthwhile commercial negotiations or commercial activity.
Agreed.

Must have coordination with operating procedures and protocols of RTOs.
The standard will be applicable to all functional responsibilities included in the Functional Model.

Must be close coordination with NAESB and RTOs to meet both reliability objectives and commercial needs.
The standard will define reliability criteria without precluding or dictating viable commercial solutions.

Measuring for compliance is extremely difficult. It is also difficult to determine if events will result in "cascading outages".
We believe the standard will clarify and explicitly state the requirements for compliance. Agreed that a clearer definition of "cascading outages" is needed, and the definition is being developed.

SAR will not accomplish its intent without credible models from which to do analysis.
Agreed.

SAR seems large – divide it up?
The SAR does cover a large scope, but the DT feels that dividing the SAR and standard is premature at this point.

Scope of SAR is poorly written. It does not convey transmission planning responsibilities.
Scope is being revised to add more details and become clearer.

Separate SAR should be established for implementation of SPS. Develop plans to address operational issues for interconnected grids where SPS is needed to mitigate against system deficiencies.
There is a separate SAR that addresses Protection Systems. To the extent that SPS affects transmission assessment and planning, some aspects of SPS may be addressed in this SAR.

SAR does not set standard, but tries to assign responsibility for setting standard.
As envisioned, this SAR will address BOTH the standard and the responsibility.

END OF INDUSTRY COMMENTS/DT RESPONSES FOR SAR – V1

CONTENTS

Background 2
Format of this Document 2
Question 1(a): Do you believe that the events in Table I of existing Planning Standard I.A are classified correctly? 3
Question 1(b): If your answer to the above question is No, how would you re-classify the events? 5
Question 1(c): Which approach do you favor?: (1) Keep the same categories and re-classify certain events as Category D, (2) Create a new category between C & D, (3) Keep the same categories and allow for good cause exceptions. 8
Question 2: Do you believe the standard should require reporting on *implementing* the transmission plans? 13
Question 3: If your answer to *Question 2* is Yes, how would you propose accounting for changes in a Transmission Plan? 16
Question 4: Should the requirement to consider planned outages in addition to each contingency remain part of this Planning Standard? 18
Question 5: Are you aware of any Regional or Interconnection differences in requirements for assessing and planning transmission systems in North America? 23
Question 6: Do you have any other comments on the SAR (V2)? 26
GENERAL COMMENTS ON THE SAR (VERSION 2) 27
COMMENTS ON SCOPE OF STANDARD 29
COMMENTS ON THE PLANNING HORIZON 30
COMMENTS ON USE OF OPERATING PROCEDURES 32
COMMENTS ON TRANSITION BETWEEN PLANNING & OPERATING STANDARDS 33
COMMENTS ON FUNCTIONS TO WHICH THE STANDARD APPLIES 34
COMMENTS ON APPLICABLE PORTIONS OF EXISTING STANDARD 35
COMMENTS ON SYSTEM MODELS 37
COMMENTS ON RESOURCE PLANNING 40
COMMENT ON USE OF GENERATION OR LOAD AS SOLUTIONS 42
COMMENT ON SAR FORMATTING 43
COMMENT ON DEMAND LEVELS FOR MODELING 44
COMMENTS ON DEFINITION OF TERMS 45
COMMENTS ON VARIABILITY OF GENERATION & LOAD 47
COMMENTS ON PROBABILISTIC PLANNING METHODS 48
COMMENTS ON PLANNED OUTAGES 52
COMMENTS ON APPLICABLE RATINGS 54
COMMENT ON SHORT CIRCUIT CURRENT 57
COMMENTS ON OTHER AREAS THAT SHOULD BE ADDED OR CLARIFIED 58
Industry Commenter Key 60

Note: Questions refer to the 6 questions posed to industry on the SAR Comment Form, posted with SAR Version 2. Some of the question statements listed in this Table of Contents have been abbreviated or paraphrased from their original form. Question statements are shown in their entirety in the body of this document.

BACKGROUND

The Standard 500 **S**tandard **A**uthorization **R**equest **(SAR)**, "Assess Transmission Future Needs and Develop Transmission Plans", was posted for a second public comment period from May 5 through June 5, 2004. The SAR Drafting Team (DT) asked industry participants to provide feedback on the revisions made to the SAR through a special Comment Form posted with the SAR (Version 2).

The SAR (Version 2) Comment Form posed 6 questions, some of which were multi-part. There was a total of 28 sets of comments returned, with 121 individuals responding. The industry comments can be viewed in their original format at:

ftp://www.nerc.com/pub/sys/all_updl/standards/sar/TRNS_NDS_&_PLNS_DT_01_02_Comments.pdf

The Standard 500: "Assess Transmission Future Needs and Develop Transmission Plans" SAR Drafting Team met and considered each of the sets of responses to the questions posed with the SAR (Version 2) Comment Form. The questions were aimed at gathering feedback on the changes made (or proposed to be made) to the SAR.

In consideration of these industry comments, the SAR DT drafted a third version of the SAR for consideration by the Standards Authorization Committee (SAC). The SAR (Version 3), if accepted by the SAC, will serve as specifications for a Standards Drafting Team to draft the new Standard 500. The Standards Drafting Team will have access to all industry comments made on the SAR (Version 2), and well as the SAR DT's consideration of these comments.

FORMAT OF THIS DOCUMENT

In this document, comments from industry participants are shown under each question, along with the SAR Drafting Team's summary of results and consideration of the comments, provided in blue text immediately under each question.

In most cases, a single response has been provided to show how the comments were considered. In some cases, the SAR DT provided a short note to indicate how a unique comment was considered.

At the end of this document there is an Industry Commenter Key listing each entity, industry segment (e.g., Transmission Owner, Generator, ISO, etc.) and the individual names of those responding via the SAR Comment Form.

If you feel that your comment has been overlooked, please let us know immediately. Our goal is to give EVERY comment serious consideration in this process! If you feel there has been an error or omission, you can contact John Twitchell in the NERC office. John can be reached at 609-452-8060 or at John.Twitchell@nerc.net. Or you can contact this SAR's DT's Facilitator, Margaret Stambach at 518-384-1062 or at mr.stambach@ieee.org.

QUESTION 1(A): DO YOU BELIEVE THAT THE EVENTS IN TABLE I OF EXISTING PLANNING STANDARD I.A ARE CLASSIFIED CORRECTLY?

Question in its entirety:

1. Some members of the SAR drafting team believe that certain Category C events, as defined in Table 1 of existing Planning Standard I.A, are much less likely to occur than other events in Category C. It is felt that certain specific Cat. C events could be re-classified as Cat. D upon showing a low probability of occurrence (and low consequence) of these events.

(a). Do you believe that the events in Categories B, C & D are classified correctly? Comments?

SUMMARY:

YES (entities)	21	NO (entities)	5
YES (individuals)	76	NO (individuals)	42
	NO definitive answer	1 (1 entity, 1 individual) - AEP	

Consideration by the SAR DT:

The SAR DT is recommending a review of existing Table I, including the likelihood, duration and impact of events, as well as the definition of applicable ratings (A/R). This review may result in a re-classification of Table I events for the new Standard. The review may also result in other changes, such as addition or deletion of categories, events or performance requirements, use of probabilistic planning methods, or re-naming of categories based on event probability ranges.

Entities responding YES to Question 1(a) – the events in Table I are classified correctly:

AES, AESO, ALLEGHENY, ATC, CWLP, DUKE, ENTERGY, ERCOT, IMO, ISONE, ISO/RTO, KCPL, MAAC/Horakh, MAAC/Kuras, NPCC, NYSRC, R.Snow, SCGEM, SERC, SOUTHERNCO, SPP, TVA, WESTAR (21 entities, 76 individuals).

SOME ENTITIES RESPONDING YES TO QUESTION 1 (a) [THE EVENTS ARE CLASSIFIED CORRECTLY] HAD THE FOLLOWING ADDITIONAL COMMENTS:	
AESO:	Generally the B and C events are classified correctly. However, there is a need to reconsider the grouping of the D events on some consistent basis (e.g. such as using outage frequency as a determinant). There should also be some means to include double-circuit lines and buses as B events if their probability of outage is comparable to that of other category B contingencies.
ENTERGY, SERC, SOUTHERNCO, SCGEM:	Entities listed believe that Category C events are more likely to occur than Category D events and should require higher performance expectations.
MAAC/Horakh	Categories B, C and D should be renamed as follows – Category B – High Probability Contingency Event

	Category C – Medium Probability Contingency Event Category D – Low Probability Contingency Event The difference in the categories should NOT be stated in terms of how many elements are out of service, but rather should be stated in terms of the PROBABILITY of the initiating event that occurs. The difference in the categories is in the "stress" the system is allowed to experience and in the "fix" required. For B, a high probability event, stress should be low and the only fix allowed is system reinforcement. For D, a low probability event, severe system stress is allowed, and system reinforcement is not mandated. C is somewhere in between, a medium probability, with medium system stress permitted, and some loss of load and/or curtailment of transfers allowed in lieu of system reinforcement. Table I can then be simplified by removing the column labeled "Elements Out of Service", because it is unnecessary and not relative. Actually, the columns labeled "Thermal Limits", "Voltage Limits", "System Stable" and "Cascading Outages" can be eliminated too, because they are the same for each Category A, B and C (but notes for each column should be retained).
MAAC/Kuras:	I believe that an in depth investigation of the probability of each possible contingency occurring be investigated by NERC to determine each contingency's relative probability and those results used to re-rank the contingency list, if necessary.
R.Snow:	Without a rigorous Probabilistic Risk Analysis, moving any of these events to a category D event is bad practice. All of the events have occurred at one time or another, especially circuit breaker and bus faults. Moving them to a category D essentially removes them from requiring action to mitigate/solve the impact on reliability.
WESTAR**:**	"Loss of single component without a fault" should become Category B5 and be included in the listing of items in category C3 *{See similar comments: SPP comment under Question 4, Choice (2) and KCPL comment under Question 4, Choice (3)}.*

QUESTION 1(B): IF YOUR ANSWER TO THE ABOVE QUESTION IS NO, HOW WOULD YOU RE-CLASSIFY THE EVENTS?

Question in its entirety:

1. Some members of the SAR drafting team believe that certain Category C events, as defined in Table 1 of existing Planning Standard I.A, are much less likely to occur than other events in Category C. It is felt that certain specific Cat. C events could be re-classified as Cat. D upon showing a low probability of occurrence (and low consequence) of these events.

(a). Do you believe that the events in Categories B, C & D are classified correctly?

(b). If your answer to (a) is No, how would you re-classify the events? If you have data to support your answer, please provide contact information for the individual responsible for the data.

SUMMARY: 5 entities (42 individuals) answered NO to Question 1(a) and therefore responded to Question 1(b).

Also included in this section are two miscellaneous comments on whether events are classified correctly: one comment from AEP, who had no definitive answer to Question 1(a), and one comment from MAPP, who answered NO to Question 1(a).

Consideration by the SAR DT:

The SAR DT is recommending a review of existing Table I, including the likelihood, duration and impact of events, as well as the definition of applicable ratings (A/R). This review may result in a re-classification of Table I events for the new Standard. The review may also result in other changes, such as addition or deletion of categories, events or performance requirements, use of probabilistic planning methods, or re-naming of categories based on event probability ranges.

Entities responding NO to Question 1(a) – the events in Table I are NOT classified correctly:

AMEREN, BPA, MAPP, MEC and WECC (WECC-1 plus WECC-2). (5 entities, 42 individuals)

ENTITIES RESPONDING TO QUESTION 1(b) [i.e., ENTITIES RESPONDING NO TO QUESTION 1(a) - THE EVENTS ARE NOT CLASSIFIED CORRECTLY]	
Ameren	All category C outages that have a direct impact on serving load because of the system configuration (straight bus or tapped load) should be reclassified, including C-1, C-2, C-5, and C-9 to provide more latitude. For category C events, we should be more concerned that the system holds together and not that the local load may be at risk for these multiple contingency events.
BPA	Outage categories C1, C2 and C9 do not appear to be classified correctly as verified by the attached *outage probability data.* There is consistency between the categories except that C1, C2 and C9 outages have a much lower probability of occurrence than the other Category C outages. ***{See Attached Companion Document: Excel File – "BPAdata". Or contact: Marv Landauer, (503) 230-4105, mjlandauer@bpa.gov}***
MAPP & MEC	MAPP and MEC would reclassify certain low probability events such as Category C1 events, C2 events, certain Category C3 events (two transformers, transmission circuit plus a transformer, two transmission circuits, DC line plus a transformer, DC line plus a transmission circuit, and two DC lines), C6 events, C7 events, C8 events, and C9 events to either a new

	category between C and D with performance characteristics between that of the present Categories C and D or to Category D. *[MEC supports creating a new category between C & D].* MAPP and MEC would require that the interconnected transmission system be planned, designed, and constructed to protect for instability, cascading, and uncontrolled separation for the low probability events in the new sub-category. Regions should develop procedures for determining that systems are properly protected for instability, cascading and uncontrolled separation. MAPP & MEC believe the attached *outage probability data* supports this new reclassification by demonstrating that the events that MAPP & MEC recommend for reclassification are the low probability Category C events. ***{See Attached Companion Document: Word File – "MAPP-MECdata". Or contact: Tom Mielnik, (563) 333-8129, tcmielnik@midamerican.com}***
MEC	MidAmerican Energy believes the interconnected transmission system should be planned, designed, and constructed to withstand high probability events and to withstand low probability events with significant negative consequences. MidAmerican believes it is a waste of the ratepayers' money to plan, design, and construct the interconnected transmission system for low probability events without significant negative consequences.
WECC-1 & WECC-2	The Categories should be based on the probability of occurrence of the initiating events. A review of Table I (Standard I.A) shows that the contingencies in the same Categories seem to have very different probabilities of occurrence.
WECC-1	Category D needs to be split into two categories, the more probable Category D events should not be allowed to cascade. For example, the new "No Cascading" category should include: Loss of 2 units at a plant Loss of adjacent lines in a right of way Loss of multiple bus sections as a result of failure or delayed clearing of a bus tie or bus sectionalizing breaker. There is no defined performance level for 3 phase fault, stuck breaker, and loss of one line. For support of this position, see the NERC/WECC Planning Standards
WECC-2	A new category should be defined between Category C and Category D. The more probable Category D events and the less probable Category C events should be placed in this new category and not be allowed to cascade. This WECC group supports moving C.2 and C.9 to a new Category between the current C and D Categories. WECC Planning Standards do not support reclassification of C.3.

MISCELLANEOUS COMMENTS ON WHETHER EVENTS ARE CLASSIFIED CORRECTLY	
AEP	Need to see outage probability data in order to answer definitively. Based on good data, the probabilities of existing C and D events could be estimated. The events could then be grouped into higher probability events

	(Category C) and lower probability events (Category D). AEP would be able to provide some outage data to support this analysis. ***{Contact Ali Al-Fayez, Manager – Transmission Asset Performance (614 552-1649)}***
MAPP:	The definition of applicable ratings needs to be clarified. The SAR DT should also indicate if it is feasible to have different applicable ratings for different categories of events. The SAR DT should review the history of the original classification. This review should include all classes. If outage statistics are used to classify events, how many years of data are appropriate? If the data window is too small, the results will be skewed. Moreover, is it appropriate to use outage data for all these categories of events? Outage data over a long period of time may provide insight into equipment performance, but is it appropriate to reflect weather related contingency events – the data may not reflect the effect of a once in a 100 year storm? **Consideration by the SAR DT:** *The SAR DT is recommending that the new Standard clarify ambiguities in performance requirements, specifically cascading outages and A/R. We are also recommending the new Standard clarify that different ratings may be applicable to different categories of events, and perhaps to different types of events within a category (specified by entities in accordance with STD 600).*

QUESTION 1(C): WHICH APPROACH DO YOU FAVOR?: (1) KEEP THE SAME CATEGORIES AND RE-CLASSIFY CERTAIN EVENTS AS CATEGORY D, (2) CREATE A NEW CATEGORY BETWEEN C & D, (3) KEEP THE SAME CATEGORIES AND ALLOW FOR GOOD CAUSE EXCEPTIONS.

Question in its entirety:

1. Some members of the SAR drafting team believe that certain Category C events, as defined in Table 1 of existing Planning Standard I.A, are much less likely to occur than other events in Category C. It is felt that certain specific Cat. C events could be re-classified as Cat. D upon showing a low probability of occurrence (and low consequence) of these events.

(c). Which of the following approaches do you favor regarding Table 1 of existing Planning standard I.A?
(1) Keep the same categories as now exist and re-classify the low probability (and low consequence) events as Category D events. Please explain your choice.
(2) Create a new category between C and D with performance characteristics between that of the present categories C and D. Please explain your choice.
(3) Keep the same categories as now exist, but allow for "good cause exceptions" upon showing a low probability of occurrence (and low consequence) of specific Category C events. Please explain your choice.

SUMMARY:

Entities supporting Choice (1)	4 (9 individuals)
Entities supporting Choice (2)	7 (46 individuals)
Entities supporting Choice (3)	6 (24 individuals)
Entities supporting NONE of the choices	11 (44 individuals)

Consideration by the SAR DT:

The SAR DT is recommending a review of existing Table I, including the likelihood, duration and impact of events, as well as the definition of applicable ratings (A/R). This review may result in a re-classification of Table I events for the new Standard. The review may also result in other changes, such as addition or deletion of categories, events or performance requirements, use of probabilistic planning methods, or re-naming of categories based on event probability ranges.

Since there was no clear consensus on how to address re-classification of events, the SAR DT feels that a thorough review of existing Table I will assure that events are properly classified for the new Standard.

Entities supporting Choice (1) – keep same categories and re-classify certain events as Cat. D

AEP, AMEREN, CWLP, MAPP (4 entities, 9 individuals)

ENTITIES SUPPORTING CHOICE (1) – KEEP SAME CATEGORIES AND RE-CLASSIFY CERTAIN EVENTS AS CATEGORY D	
AEP	Four categories are sufficient and generally understood by the industry. Specific changes that are supported by outage probabilities can be made, as appropriate, by moving Category C tests to Category D.
AMEREN	Reclassify C-1,C-2, and C-9 to category D (less probable events). C-3 (line and a generator combination) should be reclassified as category B event (more probable than other C-3 events. Also, why is a loss of a tower line with two circuits category C (C-5) while loss of a tower line with 3 circuits is category D (D-6), though a probability of loss of a tower line may be the same ? We may want to be consistent in categorizing the event – loss of a multi-circuit tower line.
CWLP	(No explanation given.)
MAPP	If the events are low probability, then some should be considered for moving to C or D.
MISCELLANEOUS COMMENT ON CHOICE (1) – KEEP SAME CATEGORIES & RE-CLASSIFY CERTAIN EVENTS AS CATEGORY D	
MEC	MidAmerican does NOT support this choice, since MEC believes that reclassifying less likely Category C events as Category D events will result in planners ignoring low-probability contingencies that result in significant consequences: cascading, uncontrolled separation, and instability.

Entities supporting Choice (2) – create new category between C & D.

AESO, BPA, CWLP, MAAC/Kuras, MAPP, MEC, WECC (WECC-1 plus WECC-2). (7 entities, 46 individuals)

ENTITIES SUPPORTING CHOICE (2) – CREATE A NEW CATEGORY BETWEEN C & D	
AESO	There are D contingencies that are probable although rare (e.g. loss of multiple circuits on separate tower lines on a common right-of-way). These contingencies may result in loss of load or generation but should not allow cascading. Other D contingencies such as loss of all lines on a multi-line corridor or the loss of a complete station would be difficult to contain. These events should be treated differently than the former.
BPA	The C2 (with respect to a bus section breaker failure) and the C9 outages should be in this new category. Although these outages have extremely low probability, they should not cause cascading. This is especially true of C2, which is a single contingency failure of a bus section breaker. Therefore we favor adding a new category between Level C and D (or moving these two outages to Level D) with performance requirements of no cascading and system stable but with no requirement to be within applicable ratings. ***[See similar comment from WECC-2 under Question 5, Regional Differences]***

CWLP	Multiple contingencies have lower and varying probabilities of occurrence.
MAAC/Kuras	This is the best choice of the ones mentioned here but see my comment in 1.(a) above for another approach. This approach allows for some levels of performance between C and D such as restricting the performance to "no cascading or system instability" for some C and maybe even D events.
MAPP & MEC	Improvements should be planned for those Category C events that are high probability events regardless of the consequences. Planners should also review all Category C events for instability, cascading, and uncontrolled separation. Improvements should be planned for those Category C events (both high probability and low probability events) which have significant consequences, that is, that result in instability, cascading, and uncontrolled separation.
MEC	The approach that results in the most appropriate transmission system design is the one recommended by MEC. It is MEC's belief that the intent of the drafting team that originally developed the existing NERC Planning Standards was to require the NERC member to plan to protect for instability, cascading, and uncontrolled separation for Category C events.
WECC-1 & WECC-2	A "No Cascading" performance requirement is needed for this new category. There are Category C events, which have a very low probability of occurrence. Such events, even if they occurred, should not lead to cascading, even though local facility ratings or voltage limits may be exceeded. Very often, the solution for such low probability contingencies would be to install a relay system to interrupt load or generation. The probability of relay misoperation to prevent potential problems resulting from the contingency may be higher than the probability of the contingency itself. Thus the impact on the users of the grid may not be significantly reduced. Nevertheless, the system reliability would be better served if we can add a category for such low probability contingencies (which would not result in cascading), and the risk of which is acceptable.

Entities supporting Choice (3) – keep same categories and allow for good cause exceptions.

ATC, BPA, DUKE, KCPL, SPP, TVA, WESTAR. (6 entities, 24 individuals).

{Note: BPA not counted in this choice. BPA counted in Choice (2) "New Category", since that is their preferred choice}

ENTITIES SUPPORTING CHOICE (3) – KEEP SAME CATEGORIES AND ALLOW FOR GOOD CAUSE EXCEPTIONS	
ATC	The outages listed in the existing categories are reasonable but, because we don't know all the specific details about a certain part of the system, there should be some mechanism to consider exceptions.
BPA	Although this is not our preferred choice, allowing the use of "good cause exceptions" (which we assume is the same as probabilistic methods which could move contingencies to a lower performance level although this is inconsistent with other statements in the SAR) to verify exceptions to the present categories would also be acceptable. For the C2 example, showing that these events statistically occur every 1200-1300 years and would not cause cascading problems on the system should provide enough evidence that a lower performance level is appropriate.

DUKE	Allow the flexibility for reasonable exceptions to the general categories based on frequency of occurrence. This may mean the possibility of a particular contingency moving up or down in category. This allowance permits appropriate exercise of engineering judgment in the planning process.
KCPL	KCPL supports the recommendation that the Standard should allow for the development and use of probabilistic planning methods in reliability assessment. However, KCP&L does not support any reclassification of the existing Categories. The probability of occurrence of some contingencies may, in actuality, be very low. However, this should not diminish the importance of their assessment in the Category that they are currently found.
SPP	SPP would like to see a definition of "good cause exceptions" at a minimum. SPP encourages the development of probabilistic techniques to assess reliability but caution needs to be exercised prior to implementation to ensure support from all stakeholders.
TVA	This "good cause exception" approach allows documentation of an assessment of low consequence to substitute for the expenditure of an unwarranted solution, but maintains the integrity of the event probability assessment. Since others may have different ideas of what is low probability, this approach would be best with sufficient justification of low probability.
WESTAR	Once an analysis has been performed, a subsequent "assessment" can easily dismiss low consequence events. However, low probability with high consequence should not be granted an exception. The initial premise of the Planning Standards did not contemplate probabilistic or Monte Carlo analysis. "Good Cause Exception" must be carefully defined before entities are allowed to shield high consequence events regardless of probability of occurrence.
MISCELLANEOUS COMMENTS ON CHOICE (3) - KEEP SAME CATEGORIES & ALLOW FOR GOOD CAUSE EXCEPTIONS	
AEP	"Good cause exceptions" can always be considered, but this approach should not be institutionalized.
MAPP & MEC	MAPP & MEC believe that allowing for "good cause exceptions" is not the preferable approach. We believe that the events listed by MAPP & MEC for reclassification are much less likely than the other Category C events generally throughout NERC. This means that these events should be reclassified in general throughout NERC and not just in certain "good cause exceptions". (Although, it should be noted that MAPP & MEC do support Regional Differences where appropriate.) Besides, there are issues associated with the development and utilization of a process for approving "good cause exceptions".
NYSRC	In accordance with the NERC process for developing reliability standards, an entity may include a Regional Difference as part of the NERC standard if there is such a condition. Therefore, there is no need for the standard to include "good cause exceptions".

Entities supporting NONE of the 3 choices:

ENTERGY, ERCOT, IMO, ISONE, ISO/RTO, MAAC/Horakh, NPCC, NYSRC, SCGEM, SERC, SOUTHERNCO, (11 entities, 44 individuals).

ENTITIES SUPPORTING NONE OF THE CHOICES - NO CHANGES TO CATEGORIES/EVENTS	
ENTERGY, SCGEM, SERC, SOUTHERNCO	Since the events are currently categorized correctly, above Questions 1 (b) and 1 (c) are not applicable. Entities listed agree that low consequence Category C events should be considered compliant. However, as we interpret Table I, a Category C event that results in low consequences (e.g. no cascading) is already considered compliant since entities can drop load or curtail firm transfers to return to applicable thermal or voltage ratings.
ERCOT, IMO, ISONE, ISO/RTO, NPCC, NYSRC	Any of the above three choices would weaken the present NERC standards. All entities listed take the position that there should be No Changes to Categories B, C, and D as they now exist in the present Planning Standards.
MAAC/Horakh	NONE OF THE ABOVE. Keep the three categories, but rename them as in 1.a. above. Adding an additional category would introduce too much confusion in planning the system. Assuming that the contingencies in B, C and D are already in their correct probability categories, no changes need to be made. If someone could prove that a contingency in B is Low Probability the same as the contingencies in D, that contingency could be moved.

QUESTION 2: DO YOU BELIEVE THE STANDARD SHOULD REQUIRE REPORTING ON *IMPLEMENTING* THE TRANSMISSION PLANS?

Question in its entirety:

2. Do you believe the standard should include requirements for reporting on the progress or status of *implementing* the plans developed in accordance with this standard?

SUMMARY:

YES (entities)	13	NO (entities)	13
YES (individuals)	60	NO (individuals)	53
	NO definitive answer	1 (1 entity, 7 individuals) - MAPP	

Consideration by the SAR DT:

There was no clear consensus on whether reporting on the progress or status of implementing the plans should be included in the Standard. This SAR Drafting Team is recommending that the new Standard address requirements for reporting (perhaps to the Regions) on the progress or status of implementing the plans, but such requirements should not impose undue burdens upon transmission entities.

Any such reporting requirements shall be consistent with the Resource & Transmission Adequacy's RTATF Recommendation #2: "Among other items, the new Reliability Standards should clearly define the key elements of an acceptable mitigation plan to achieve compliance with the standard(s) and a general process to ensure implementation of the mitigation plan".

Entities responding YES to Question 2 – the standard SHOULD require implementation reporting.

AEP, AMEREN, BPA, IMO, ISONE, ISO/RTO, ERCOT, KCPL, MAAC/Horakh, MAAC/Kuras, NPCC, NYSRC, R.Snow, SPP, WESTAR (13 entities, 60 individuals)

SOME ENTITIES RESPONDING YES TO QUESTION 2 [THE STANDARD SHOULD REQUIRE IMPLEMENTATION REPORTING] HAD THE FOLLOWING ADDITIONAL COMMENTS:	
AEP	The reporting requirements should not be burdensome, but they are needed to ensure a minimum level of accountability.
AMEREN	The reporting requirement should not be onerous.
BPA	A plan without a requirement to update progress on implementing the plan has little value. This is essential for an effective standard. This should not be an extensive reporting procedure and could easily be met during the subsequent compliance report.
KCPL	KCP&L supports a requirement for reporting the status of implementing the mitigation plans. On a regional basis, mitigation plans should be reported by the Transmission Planner, as a minimum, on an annual basis through the regional model building process and assessed through the regional

	assessment studies performed by the Regional Reliability Coordinator.
MAAC/Kuras	It's one thing to develop plans and another to follow through on them. PJM can offer suggestions on how this tracking could be accomplished.
R.Snow	Developing plans without a follow up program is a waste of time and money. One of the most telling comments from the August Blackout report was that a number of the items were the same as in other blackouts.
SPP	SPP supports this reporting requirement, but notes that this burden should not be imposed more frequently than annually.
WESTAR	Having a "plan" that is not implemented is of no value.

Entities responding NO to Question 2 – the standard SHOULD NOT require implementation reporting.

AES, AESO, ALLEGHENY, ATC, CWLP, DUKE, ENTERGY, MEC, SCGEM, SERC, SOUTHERNCO, TVA, WECC-1, WECC-2 (13 entities, 53 individuals)

SOME ENTITIES RESPONDING NO TO QUESTION 2 [THE STANDARD <u>SHOULD NOT</u> REQUIRE IMPLEMENTATION REPORTING] HAD THE FOLLOWING ADDITIONAL COMMENTS:	
AES	AES does not favor an implementation report. However, major facility additions, delayed additions, or deletions that effect the reliability of the system could be included as part of the regional form 715 base case yearly filings and listed as changes from last year's cases. This would allow older cases to easily be updated and used.
AESO	It is not clear to whom the reporting would go to and how it would be used. Normally, reporting would be required for the regulatory process in the affected jurisdiction. The scope of that reporting would not be limited to reliability only but also other aspects of the transmission plan (e.g. customer connections, efficiency improvements, etc).
ATC	While an entity should be implementing plans to maintain or improve the reliability required by the standards, having to report on the implementation could become quite complicated. Plans are often changing to meet changing system conditions, sometimes so much so that what seemed reasonable to do last year is replaced by entirely new plans.
MEC	MidAmerican Energy believes that this standard should not include requirements for reporting on the progress or status of implementing the plans developed in accordance with this standard. There are too many conditions beyond the control of the NERC member for this to be a part of a standard requiring compliance review. Complex environmental, regulatory, and political issues prevent many transmission facilities from being constructed or being constructed in a scheduled manner. The Not-In-My-Back-Yard philosophy has hit even the rural areas so that there is no part of the NERC area where a NERC member can confidently predict completion of transmission system improvements in plans. Further, conditions can change even during a year to such an extent that compliance review for implementation from one year to the next is problematic. Further, regulatory oversight provides for appropriate review of plan implementation anyway. MidAmerican urges that the SAR drafting team not pursue this well-meaning but problematic approach.

SCGEM, SOUTHERNCO	Too burdensome for the perceived benefits.
TVA	This reporting would constitute a logistical burden counterproductive to the total planning effort.
WECC-1 & WECC-2	Since many of the transmission plans are dependent upon factors such as, resource plans, local load projections, new technology, permitting, to name a few, it would not be meaningful to report on the status of implementation of a transmission plan. In any case, if a potential transmission problem is not solved, it will show up again in subsequent years, so there will be pressure to solve it. This continuous "certification" would ensure that any potential transmission problem, once identified, would not be left unsolved even without NERC requiring status reports on implementation.

MISCELLANEOUS COMMENT ON WHETHER THE STANDARD SHOULD REQUIRE IMPLEMENTATION REPORTING (Neither Yes/No Box Checked)	
MAPP	Requirements for reporting on the progress or status of implementing the plans should be left to the regions and appropriate regulatory bodies. The MAPP Regional Transmission Committee currently has a regional planning process for compliance for implementing transmission plans.

QUESTION 3: IF YOUR ANSWER TO *QUESTION 2* IS YES, HOW WOULD YOU PROPOSE ACCOUNTING FOR CHANGES IN A TRANSMISSION PLAN?

Question in its entirety:

3. If your answer to Question 2 is Yes, given that transmission plans change over time as modeling assumptions, systems and plans change, how would you propose accounting for changes in a Transmission Plan?

SUMMARY: 13 entities (60 individuals) answered YES to Question 2 and therefore responded to Question 3.

Consideration by the SAR DT:

There was no clear consensus on whether reporting on the progress or status of implementing the plans should be included in the Standard. This SAR Drafting Team is recommending that the new Standard address requirements for reporting (perhaps to the Regions) on the progress or status of implementing the plans, but such requirements should not impose undue burdens upon transmission entities.

Any such reporting requirements shall be consistent with the Resource & Transmission Adequacy's RTATF Recommendation #2: "Among other items, the new Reliability Standards should clearly define the key elements of an acceptable mitigation plan to achieve compliance with the standard(s) and a general process to ensure implementation of the mitigation plan".

Entities responding YES to Question 2 (The standard SHOULD require implementation reporting) and therefore responding to Question 3 (How would you account for changes in a Transmission Plan?).

AEP, AMEREN, BPA, ERCOT, IMO, ISONE, ISO/RTO, KCPL, MAAC/Horakh, MAAC/Kuras, NPCC, NYSRC, R.Snow, SPP, WESTAR (13 entities, 60 individuals)

ENTITIES RESPONDING TO QUESTION 3 – HOW WOULD YOU PROPOSE ACCOUNTING FOR CHANGES IN A TRANSMISSION PLAN? [i.e., ENTITIES RESPONDING YES TO QUESTION 2 - THE STANDARD SHOULD REQUIRE IMPLEMENTATION REPORTING]:	
AEP	A simple narrative explanation should be provided that explains what factors have eliminated the need for the transmission modification/addition or changed its timing. In cases where a modified solution has been developed, the Transmission Planner should demonstrate the effectiveness of the modified approach and compare to the original approach.
AMEREN	Provide the following: (i) Annual update with a short note to document changes. (ii) Smaller projects (cap bank addition, change of terminal equipment like switches, wavetrap, or CT) may be combined as a group in such reporting to avoid providing a long list of updates.
BPA	Once a transmission plan is identified in a compliance report, progress on that project should be reported in subsequent compliance reports. If system conditions change, this should be described along with the consequences to the proposed plans. If project need goes away, the project can be canceled.

	However, if the project need still exists and the responsible entity has not implemented a plan to correct the deficiency, it should be listed as non-compliant. Legitimate problems with regulatory and siting issues should be acceptable reasons for project delay.
ERCOT, IMO, ISONE, ISO/RTO, NPCC	All entities listed favor periodic transmission reviews to address changes in plans. In the northeast, the NPCC Annual Transmission Reviews address this and in addition NPCC keeps a "Major Projects List" to "track" BPS additions and modifications and includes transmission, generation and other major equipment identified as a BPS element. The entities suggest that the resultant NERC standard not be overly prescriptive in requirements for reporting progress/status on the standard and flexibility be afforded to allow various documentation and processes already in place to achieve compliance. They suggest it be done annually.
KCPL	Any out-of-cycle changes to the mitigation plan should be reported to the Reliability Coordinator and re-evaluated on an as-needed basis. Coordinated planning between other regions and entities will be critical.
MAAC/Horakh	Reporting should be on a "delay" basis. Known delays to the plan should be reported, along with the reason for the delay and use of alternate solutions.
MAAC/Kuras	A plan is a plan at that point in time. Plans change. Periodic checks of implementation of plans can uncover these plan changes that should be allowed.
NYSRC	Updated transmission plans should be reported along with compliance assessments as required.
R. Snow	When there is a significant change in the assumptions, the plan needs to be re-studied and revised as appropriate. The SAR must require such re-studies. Any plan is only as good as its assumptions. Whenever there is a significant change in the assumptions, the plan needs to be revised to account for the change. Having a plan that assumes there will be specific generation projects is worthless when those specific projects are changed, canceled or if other generation retires.
SPP	Although SPP is implementing a 2 year planning cycle, project updates are collected on an annual basis. To ensure compliance with reliability criteria, mitigation reviews are also provided on an annual basis consistent with the annual model building process. Updates due to new "out of cycle" projects or significant scope/timing changes associated with major projects in the approved regional expansion plan and its assessments are evaluated on an as-needed basis. Coordinated planning and model building using consistent definitions with neighboring regions/entities will be critical. Efforts should be undertaken to put data collection, modeling building and transmission assessment processes for neighboring regions/entities on the same cycles.
WESTAR	In the annual process to update power flow models, there are necessarily changes to the load forecast, use of the interconnected network, and financial constraints which must be taken into account. Reporting to the Regional Reliability Organization should include a discussion of substantive changes and reasons behind them. There should not be a judgment made by the RRO that the explanation is "adequate" so long as the explanation is made. The changes are critical information that must be taken into account when evaluating transmission service requests. Reporting should not be more frequent than the model-building cycle.

QUESTION 4: SHOULD THE REQUIREMENT TO CONSIDER PLANNED OUTAGES IN ADDITION TO EACH CONTINGENCY REMAIN PART OF THIS PLANNING STANDARD?

Question in its entirety:

4. Existing Planning Standard I.A requires: *"The systems must be capable of meeting Category C requirements while accommodating the planned (including maintenance) outage of any bulk electric equipment (including protection systems or their components) at those demand levels for which planned (including maintenance) outages are performed".*

The SAR drafting team believes that it is impractical to exhaustively test for every contingency described in each category plus every conceivable planned outage. Should the requirement to consider planned outages in addition to each Category A through D contingency remain part of this planning standard?
(1) Yes, consider planned outages in all Categories A through D.
(2) Yes, consider planned outages in some Categories only – Please specify which Categories.
(3) No, do not consider planned outages in addition to each contingency in any Category.

SUMMARY:

Entities supporting Choice (1)	6 (16 individuals)
Entities supporting Choice (2)	15 (76 individuals)
Entities supporting Choice (3)	8 (27 individuals)

Miscellaneous Comment (No choice selected) – 1 entity (2 individuals) - Seminole

Consideration by the SAR DT:

The SAR Drafting Team believes there is confusion surrounding the planned outage requirement in Table I of the existing standard. The SAR DT is recommending that the new Planning Standard clarify the issue of how a planned outage should be used in a planning assessment.

The new Standard should specify whether the planned outage requirement should be retained for Categories B and C. If retained, the requirement should be clarified in such a way that it can be practically implemented. In particular, the Transmission Planner should not be required to exhaustively test their systems for every conceivable planned (including maintenance) outage in addition to every conceivable Category B and C contingency.

The new Standard should clarify that the planned outage requirement does not apply to Categories A and D.

Entities supporting Choice (1) – consider planned outages in ALL Categories A through D.

ERCOT, ISO/RTO, NYSRC, MAAC/Kuras, TVA (half of group), WESTAR (6 entities, 16 individuals)

ENTITIES SUPPORTING CHOICE (1) – CONSIDER PLANNED OUTAGES IN ALL CATEGORIES A THROUGH D	
ERCOT, ISO/RTO, NYSRC	Again, the existing standards should not be weakened.

MAAC/Kuras	Contingencies don't only happen when all lines are in service. Outages should be modeled during all types of contingency evaluation. This may be a fairly daunting task but this evaluation will help the system operators be prepared for the reality of operating the system in a less than ideal state. Possible ways to select lines to outage may be to look at lines with high unscheduled outage rates, lines close to sources of contamination, lines through areas that have historically had vegetation contact problems, and especially lines that when outaged can cause operating problems.
TVA	**{Half of group}.** Everyone in the group agreed that planned outages should be considered, but the group didn't agree on which categories to apply. About half believed they should be applied to all categories while the other half believed only A and B categories should have planned outages studied for the one year and beyond horizon.
WESTAR	The notion of including maintenance outages is to ensure that system restorations correctly evaluate single elements that would be removed in groups under a breaker-to-breaker outage analysis. The intent should not be to have any single element out for maintenance AND withstand the next contingency and should be stated as such.

Entities supporting Choice (2) – consider planned outages in SOME Categories only.

AEP, AESO, ALLEGHENY, CWLP, ENTERGY, IMO, ISONE, MAAC/Horakh, NPCC, R. Snow, SCGEM, SERC, SOUTHERNCO, SPP, TVA (half of group), WECC (WECC-1 plus WECC-2). (15 entities, 76 individuals)

ENTITIES SUPPORTING CHOICE (2) – CONSIDER PLANNED OUTAGES IN <u>SOME</u> CATEGORIES.	
AEP	**{B, C & D only}.** For Categories where planned maintenance is considered, it should only be necessary to test the most significant planned outages, not all possible planned outages.
AESO	**{A, B & C only}.** There is a need to clarify what constitutes the "normal" condition when a facility (transmission or generation) is on a long duration planned outage (is it a day, a week, etc). The A to C contingency categories can then be applied to the "normal" condition as defined. The testing requirement could perhaps be stated in a way that leaves it to the judgment of the Planning Authority as to the critical combinations of outages that need to be tested.
ALLEGHENY	**{A & B only}.** Allegheny Power feels that it is practical to consider planned outages in categories A and B.
CWLP	**{B and some C}.** No further comments.
ENTERGY	**{B & C only}.** It is not necessary to include planned maintenance outages in addition to Category A (no contingencies) because Category A plus planned outages equals Category B (single contingency). Therefore inclusion of maintenance outages in Category A is superfluous. The current standards do not require planned outages with Category A for that very reason. Maintenance outages should be considered for only Category B and C contingencies. Category D recognizes that cascading will occur in conjunction with the contingencies, so adding on more planned outages seems unnecessary,

	especially since Category D outages are very low probability events.
IMO, ISONE, NPCC	**{A, B & C only}.** We reiterate that the existing standards should not be weakened and request that the SAR be clarified to remove ambiguity regarding what is meant by "considering" a planned outage. Planned outages at present are considered however this is deemed an Operational Planning issue and is conducted so as to set Operational Limits for those conditions on a pre-contingency basis to allow for N-1 conditions. This particular SAR will ultimately result in a "planning" Reliability Standard. The wording, as it has been phrased, infers that the system must be planned, designed and built to N-2 standards (i.e. a line out for maintenance on top of a circuit element outage). Treatment of planned outages should be considered to some extent and the listed entities suggest the drafting team receive direction from the SAC regarding planned outages. The listed entities suggest that planned outages should be considered only in categories in A through C.
MAAC/Horakh	**{A & B only}.** Consider planned outages in Categories A & B only, since these categories are high probability and therefore could easily occur during a planned outage.
R.Snow	**{A, B & C only}.** Categories A through C should be considered. Category D does not require action so the analysis with outages does not add anything. Most planning software allows the sue of scripts to run multiple analysis without intervention. The state of modern computers is such that the added testing is not significant. Also, for most systems, this type of analysis is performed to define which load levels and generation dispatch would allow the maintenance (the problem in reverse).
SCGEM, SOUTHERNCO	**{A & B only}.** The requirement to consider planned outages in addition to each Category A and B contingency should remain part of this planning standard. We agree with the SAR drafting team that exhaustive testing for every contingency described and every load level in each category is not practical.
SERC	**{A & B only}.** The SERC PSS agrees that the requirement to consider planned outages in addition to each Category A and B contingency remain part of this planning standard. The SERC PSS could not reach consensus on the requirement to consider planned outages in addition to each Category C and D contingency. However, the SERC PSS does agree that exhaustive testing for every contingency described in each category is not required. The I.A compliance templates state that they must *"Be performed and evaluated only for those Category [B, C, and D] contingencies that would produce the more severe system results or impacts."*
SPP	**{B & C only}.** C.3. needs to be modified to address N-1-1 concerns. Category B (B1, B2, B3 or B4, including loss of an element without a fault) or in the alternative create Category B5 to Loss of an element without a fault. The latter is preferred. *[See similar comments - KCPL comment under Question 4 Choice (3) below, and Westar comment under Question 1(a) above]* Planned outages are typically not evaluated more than one year in advance and are not scheduled during peak load conditions. However, the existing Planning Standard 1.A is problematic in that it requires the system to be designed to accommodate planned outages during peak load conditions.
TVA	**{A & B only – half of group}.** Everyone in the group agreed that planned

	outages should be considered, but the group didn't agree on which categories to apply. About half believed they should be applied to all categories while the other half believed only A and B categories should have planned outages studied for the one year and beyond horizon.
WECC-1 & WECC-2	**{A, B & C (except C-3)}.** All contingencies where a single point of failure could cause facilities to be lost should be tested for compliance with the standards even under planned maintenance conditions. However, it should never be necessary to exhaustively test every possible combination of outages. Those contingencies that are clearly not critical outages should not have to be simulated.

Entities supporting Choice (3) – do NOT consider planned outages in addition to each contingency in any Category.

AES, AMEREN, ATC, BPA, DUKE, KCPL, MAPP, MEC (8 entities, 27 individuals)

ENTITIES SUPPORTING CHOICE (3) – DO NOT CONSIDER PLANNED OUTAGES IN ADDITION TO EACH CONTINGENCY IN ANY CATEGORY.	
AES	I would modify C-3 since it has the same effect as or similar to a C-3 event to include (line out followed by a category B event).
AMEREN	Is the issue planning the system or granting the outage? Local load may be exposed for granting a maintenance/construction outage, but the system should not be at risk. If the system is planned with category C requirements, in most cases it should meet category A and B requirements during a planned outage. To meet requirements of categories A and B during planned outage should be adequate. Planned outages for maintenance or construction are generally managed in the operating horizon, and are granted only during specific load levels (off-peak), generation patterns, and interchange patterns when the transmission system is not expected to be fully utilized. We agree that clarification should be provided on how this information should be used in an assessment. However, as the scope of planning assessments is for the planning horizon of one year or more (SAR-4, paragraph 2) and not the operating horizon, we do not believe that the requirement for planning for maintenance outages should be included in planning assessments.
ATC	Planning the system should consider the need for planned outages but should not require the capability to plan outages at peak system loads.
BPA	This requirement should be addressed in operational planning studies (less than one year). This standard is not appropriate for Transmission Planning studies except possibly as a tool to measure or compare the robustness or availability of transmission plans. This is not an item that should require any compliance action.
DUKE	The first priority should be to clarify the requirements of the I.A table. Utilities/ regions are interpreting the table differently. What was the original basis for the contingency categories and required response in the table? Clarify whether the original intent was to perform thermal, voltage and stability screens for all categories and the frequency at which the screenings were intended to performed. It is impractical to expect all screenings of all categories on a frequent basis. It may be appropriate to state that the table is for general guidance and that

	transmission owners may determine frequency at which studies should be performed based on load growth, system loading and significance of changes to the system.
KCPL	Planned outages are typically short-term (less than 1 year) and should be considered in the operating horizon. A planned outage is typically allowed during system load conditions when they will have minimal impact on the system. KCPL would prefer to clarify the existing Category B contingency that states "Loss of an element without a fault" be listed as the B5 contingency on the Table. Then, in Category C under Contingency 3, the revised wording should read "3. Category B (B1, B2, B3, B4, or B5) contingency, manual system adjustments, followed by another Category B (B1, B2, B3, B4, or B5) contingency. This will allow for the first contingency to include a planned outage (B5 without a fault) as well as a contingency with one of the fault conditions described in B1, B2, B3, and B4. {*See similar comments - Westar comment under Question 1(a) and SPP comment under Question 4, Choice (2).*}
MAPP & MECC	Planned Outages can be scheduled and analyzed in advance in the operating horizon (less than one year). Therefore, it should not be necessary to require that "systems must be capable of meeting Category C requirements while accommodating the planned outage of any bulk electric equipment..." Planned outages should be studied in advance by the requesting control area and be reviewed by the governing Reliability Coordinator to determine if overloads could occur. If studies show that overloads could occur, the planned outage should be deferred or operating guides prepared which would be used in the event a contingency does occur.
MEC	There is no need to plan or build facilities to meet Planning Standard 1.A when Planned Outages can be accommodated within the frame work of existing guidelines and procedures. Studies conducted for the operating horizon are not the subject of this standard.

MISCELLANEOUS COMMENT ON CONSIDERING PLANNED OUTAGES – (No Choice Selected)	
SEMINOLE	Many grid operations difficulties occur when a line is scheduled out for maintenance. If this SAR is going to address required N-2 planning assessments, then it must be clear and specific regarding the conditions when N-2 assessments are appropriate and the specific criteria for N-2 assessments.

QUESTION 5: ARE YOU AWARE OF ANY REGIONAL OR INTERCONNECTION DIFFERENCES IN REQUIREMENTS FOR ASSESSING AND PLANNING TRANSMISSION SYSTEMS IN NORTH AMERICA?

Question in its entirety:

5. Are you aware of any Regional or Interconnection differences in the requirements for assessing and planning transmission systems in North America? If so, please list and explain.

SUMMARY: 10 entities (68 individuals) responded to this question and gave examples of Regional/Interconnection differences.

Consideration by the SAR DT:

The SAR Drafting Team considered each comment individually, as shown in the table below.

Entities responding to Question 5 – are you aware of any Regional/Interconnection differences?

BPA, CWLP, KCPL, NYSRC, SCGEM, SEMINOLE, SOUTHERNCO, SPP, R, Snow, WECC (WECC-1 plus WECC-2), WESTAR. (10 entities, 68 individuals)

ENTITIES RESPONDING TO QUESTION (5) – ARE YOU AWARE OF ANY REGONAL/INTERCONNECTION DIFFERENCES?	
BPA	Although WECC has several requirements in its standards that are more stringent than the existing NERC criteria, it also has two standards that are less stringent (C2 and C9). Depending on the resolution of question #1 above, C2 and C9 may be a regional difference. WECC has a formal Probabilistic Planning process that allows adjustment of performance levels of contingencies in either direction. As this SAR states that the existing NERC Table I is the minimum criteria for probabilistic methods, this will be a regional difference for WECC. This is discussed more in our comments on the SAR document. **Consideration by the SAR DT** *The present SAR no longer states that existing Table I is the minimum criteria for probabilistic methods, only that Table I should be used as a starting point for a review of the existing standard. Thus, probabilistic planning could allow for adjustment of performance requirements in either direction.* *The SAR DT is recommending that the review of the existing standard include the likelihood, duration and impact of events, as well as the definition of applicable ratings (A/R). This review may result in a re-classification of Table I events for the new Standard. The review may also result in other changes, such as addition or deletion of categories, events or performance requirements, use of probabilistic planning methods, or re-naming of categories based on event probability ranges.* *Since there was no clear consensus on how to address re-classification of events, the SAR DT feels that a thorough review of existing Table I will assure that events are properly classified for the new Standard.* *If differences in the classification of events or performance requirements remain after the draft Standard is posted, please provide your specific*

	comments at that time
CWLP	WECC has asked the NERC PC for waivers for some of the Category C requirements. **Consideration by the SAR DT** *See the SAR DT response to WECC-1 & WECC-2 in this table.*
KCPL	KCPL is aware of neighboring regional council differences in classification of Category B and C contingencies between SPP and MAPP. **Consideration by the SAR DT** *The SAR DT is recommending a review of existing Table I, which may result in a re-classification of Table I events for the new Standard. The review may also result in other changes, such as addition or deletion of categories, events or performance requirements, use of probabilistic planning methods, or re-naming of categories based on event probability ranges.* *Since there was no clear consensus on how to address re-classification of events, the SAR DT feels that a thorough review of existing Table I will assure that events are properly classified for the new Standard.* *If differences in the classification of Category B and C contingencies remain after the draft Standard is posted, please provide your specific comments at that time.*
NYSRC	It is the NYSRC's position that (1) NERC specifies minimum standards, (2) a Region may establish more stringent standards for its members separate from the NERC standards, and (3) it is unnecessary to include these more stringent standards within the framework of the NERC standards. **Consideration by the SAR DT** *The SAR DT agrees with this position.*
SCGEM, SOUTHERNCO	Not aware of any at this time. However, Regional Differences could develop and each request for a Regional Difference should be considered individually. **Consideration by the SAR DT** *The SAR DT agrees with this position.*
SEMINOLE	In Florida, with the state requirements for the siting of facilities, the planning horizon should be adjusted from 5 YRS to 8 YRS. The 5 YR horizon is too short for some major transmission line projects and/or studies of transmission interconnections/upgrades for base load central station generating facilities. **Consideration by the SAR DT** *The present SAR provides for a planning horizon of 5 years or more.*
SPP	SPP is aware of differences between SPP and the neighboring regions of ERCOT, MAPP and WECC. **Consideration by the SAR DT** *If differences remain after the draft Standard is posted, please provide your specific comments at that time.*
R. Snow	Each region has their own requirements.

	Consideration by the SAR DT *Each Region has the right to request Regional differences for approval as part of the Standard.*
WECC-1 & WECC-2	The existing NERC Standard C-9 (and C-2 for bus sectionalizing breakers) as it applies to WECC should be modified so that thermal limit and voltage limit violations are allowed for bus sectionalizing breaker failures. This is because bus sectionalizing breaker failure is a relatively low probability event. Use of a bus sectionalizing breaker should be encouraged because it reduces the impact of a disturbance to a portion of the load only. Without the proposed modification there is no incentive to use the sectionalizing breaker. However, under no conditions should system instability or cascading outages be allowed for bus sectionalizing breaker failures. **Consideration by the SAR DT** *The SAR DT is recommending a review of existing Table I, including the likelihood, duration and impact of events, as well as the definition of applicable ratings (A/R). This review may result in a re-classification of Table I events for the new Standard. The review may also result in other changes, such as addition or deletion of categories, events or performance requirements, use of probabilistic planning methods, or re-naming of categories based on event probability ranges.* *Since there was no clear consensus on how to address re-classification of events, the SAR DT feels that a thorough review of existing Table I will assure that events are properly classified for the new Standard.* *If differences in the classification of events or performance requirements remain after the draft Standard is posted, please provide your specific comments at that time.*
WESTAR	Yes. MAPP categorizes some contingencies differently. **Consideration by the SAR DT** *The SAR DT is recommending a review of existing Table I, which may result in a re-classification of Table I events for the new Standard. The review may also result in other changes, such as addition or deletion of categories, events or performance requirements, use of probabilistic planning methods, or re-naming of categories based on event probability ranges.* *Since there was no clear consensus on how to address re-classification of events, the SAR DT feels that a thorough review of existing Table I will assure that events are properly classified for the new Standard.* *If differences in the categorization of events remain after the draft Standard is posted, please provide your specific comments at that time.*

QUESTION 6: DO YOU HAVE ANY OTHER COMMENTS ON THE SAR (V2)?

Question in its entirety:

6. Do you have any other comments on Version 2 of the SAR? Please list and explain.

SUMMARY: Most of the 28 entities (121 individuals) responded to this question and provided additional comments on the SAR (Version 2).

Consideration by the SAR DT:

The SAR Drafting Team considered each comment individually, as shown in the tables below.

The additional comments were divided into the following headings:

- *General – Is there a need for this SAR? How will this SAR fit in with the new Version 0 Standards? Will the existing standards be weakened?*
- *Scope of Standard*
- *Planning Horizon*
- *Use of Operating Procedures*
- *Transition Between Operating & Planning Standards*
- *Functions to Which the Standard Applies*
- *Applicable Portions of Existing Standards*
- *System Models*
- *Resource Planning*
- *Use of Generation or Load as Solutions*
- *Formatting of the SAR*
- *Demand Levels for Modeling*
- *Definition of Terms*
- *Variability of Load & Generation*
- *Probabilistic Planning Methods*
- *Planned Outages*
- *Applicable Ratings*
- *Short Circuit Current*
- *Other Areas that Should be Added or Clarified*

GENERAL COMMENTS ON THE SAR (VERSION 2)

ATC	The SAR drafting team seems to have its arms around the issues and seems ready to proceed to Standard development. **Consideration by the SAR DT** *The SAR DT agrees with this position and appreciates the vote of confidence.* On p. 3 of the SAR, Market Interface Principles, Question 5 stating that the Standard will not require public disclosure of commercially sensitive information: Depending on the level of public exposure of the load flow and stability models, generation cost data and stability parameter data may be deemed by some entities as confidential market information. **Consideration by the SAR DT** *This SAR does not establish the level of public exposure of data. The Standard Drafting Team will determine these requirements. Please submit your comments at the time of the draft Standard posting.*
IMO, ISONE, NPCC	The entities listed believe that the relationship between the concept of the Version 0 Standards and all the developing Version 1 Standards needs to be consistent. The reliability attributes of the Version 0 standards must be "carried through and into" the Version 1 Standards and there needs to be coordination to ensure this occurs. **Consideration by the SAR DT** *There will certainly be changes between V0 and the developing V1 Standards (V1 will be a revision of V0) but these changes must be approved by the industry, thus assuring carry-through and acceptance of reliability attributes.*
IMO, ISONE, NPCC, NYSRC	It is the opinion of NYSRC, ISONE, IMO, and the Northeast Power Coordinating Council's CP9 working group participating members that the existing NERC criteria should not be weakened, including the NERC Planning Standards listed in the SAR as the starting point to be used in drafting a new standard. Our comments support our position that the existing Planning Standards should not be weakened. **Consideration by the SAR DT** *The majority of industry comments have indicated that this SAR is needed to consider content changes in existing Standards. There will be changes between the Version 0 standards (existing standards with formatting changes) and the developing Version 1 standards (V1 will be a revision of V0), but these changes must be approved by the Industry.* *All parties will have an opportunity to participate in the Standard drafting process, including commenting on the draft Standard. Concerns that changes made may weaken the Standard should be brought up at that time.*
NYSRC	<u>With the advent of the Version 0 standards, we believe that there is no longer a need for this SAR.</u> The comments in the "Consideration of Industry Comments" paper indicate that comments received in 2002 on SAR Version 1 were in favor of a standard on transmission assessment and planning, which was the SAR DT's reason for preparing this SAR. However, the Version 0

	standards development process will now provide a transmission planning standard, without requiring the preparation of this new SAR. Despite this position, if the DT does get sufficient support to go forward with a new standard, NYSRC has additional comments, as shown below. **Consideration by the SAR DT** *Version 0 Standards are intended to re-format the existing Standards without changing content, using Functional Model terminology. The majority of industry comments have indicated that this SAR is indeed required to consider content changes in existing Standards.* The relationship with the Version 0 standards should be recognized in the SAR, including the mechanism of how this "Version 1" standard would replace Version 0. **Consideration by the SAR DT** *Version 0 Standards are intended to re-format existing Standards without changing content, using Functional Model terminology. The present SAR uses these existing approved Standards as a starting point to consider content changes for a new Planning Standard. There will be changes between V0 and the developing V1 standards (V1 will be a revision of V0), but these changes must be approved by the Industry.*
SPP	Implementation of this SAR needs to be coordinated with the activities of the Version 0 Standards Drafting Team. **Consideration by the SAR DT** *See our response to NYSRC above.*
WESTAR	How will this SAR integrate with Version 0 Standards? **Consideration by the SAR DT** *Version 0 Standards are intended to re-format the existing Standards without changing content, using Functional Model terminology. The present SAR uses these existing approved Standards as a starting point to consider content changes for a new Planning Standard.*

COMMENTS ON SCOPE OF STANDARD

AESO	The SAR drafting team should clarify through rules, tests, definitions, etc. the portion of an entity's transmission system that shall be planned under the full NERC Standard and what portion may be exempted. **Consideration by the SAR DT** *All NERC Standards apply to the bulk electric power system.* *The SAR DT felt that the definition of "bulk transmission" is an issue too large to be handled by one DT alone, and should be defined at a higher level. Accordingly, the SAR DT referred this issue to the NERC Director of Standards.*
IMO, ISO/RTO	This standard should make it abundantly clear that it applies to both internal and external systems, that is the system under study and adjacent systems, or the entire interconnection if appropriate. **Consideration by the SAR DT** *The SAR DT agrees with this position. If the commenter believes the Standard does not sufficiently address this issue, we encourage the commenter to provide specific language to address this concern when a draft Standard is posted.*
SEMINOLE	The SAR should require joint transmission planning - at a minimum, joint transmission planning should be required between transmission service providers and their network service customers. **Consideration by the SAR DT** *Based on industry feedback to the first posting (V1) of the SAR, this present SAR indicates the Standard will identify reliability performance requirements, but not specify <u>how</u> to achieve such requirements. Joint planning is one way to achieve the reliability requirements, and is neither precluded nor required by this SAR.*

COMMENTS ON THE PLANNING HORIZON

ALLEGHENY	This paragraph and the next **(the 2nd & 3rd paragraphs of posted SAR-Version 2)** are unclear and appear to be conflicting. This first paragraphs specifies that the "scope of such assessments and plans is for a planning horizon of one year or more". The next paragraph specifies, "Assessments should cover a planning horizon of at least 5 years". This appears to be a conflict. It may be that the term "planning horizon" is being used differently in these two paragraphs. It is unclear to us what is the intention of the first of these two paragraphs. **Consideration by the SAR DT** *As a result of your comment, the present SAR has been clarified to indicate that the planning period starts at one year and extends to 5 years or more.*
NYSRC	**From SAR Version 2:** "……..The planning horizon must be long enough to permit timely implementation of viable solutions to remedy the potential inadequacies found. Assessments should cover a planning horizon of at least 5 years. The horizon may be longer than 5 years, based on regulatory or legislative requirements, or on the judgment of the Transmission Planner or Planning Authority……" In paragraph above, 2nd sentence, insert "and plans" after "Assessments". The last sentence is not needed. A Region or other entity may have more stringent requirements than NERC – therefore, such a statement is not needed. **Consideration by the SAR DT** *The SAR DT agrees and accepts your first comment for inclusion in the revised SAR. The SAR DT decided to retain the last sentence in the referenced paragraph to clarify the requirement about the planning horizon.*
R. Snow	While some of the information about generation additions and load growth are considered reliable for five (5) years, a long-term study of approximately ten (10) years is necessary to identify global issues such as import limitations to a region that would require projects that have traditionally taken more than five (5) years. Suggest the following wording: *"Assessments shall cover a detailed planning horizon consistent with available information but no less than five (5) years. The five year horizon shall include load growth, new internal and external firm generation, generation retirements/failures, uncontrollable loop flows, reliance on external generation (identify both firm and market), topology changes, and firm transactions. A longer term study using a variety of scenarios that are expected to cover the most likely long term activity, shall be conducted to identify projects that take longer than five years to implement."* **Consideration by the SAR DT** *The SAR DT considered your alternative wording to be overly prescriptive. However, in the present SAR, the wording has been changed to clarify that the planning horizon extends to 5 years or more.*
SEMINOLE	In Florida, with the state requirements for the siting of facilities, the planning horizon should be adjusted from 5 YRS to 8 YRS. The 5 YR horizon is too short for some major transmission line projects and/or studies of transmission interconnections/upgrades for base load central station generating facilities. **Consideration by the SAR DT** *In the present SAR, the wording has been changed to clarify that the planning*

	horizon extends to 5 years or more.

COMMENTS ON USE OF OPERATING PROCEDURES

AMEREN	" …there is no intent to exclude appropriate operating procedures…". What is "appropriate"? Could generation redispatch be an appropriate operating procedure? If yes, what level of redispatch is appropriate? The standard should include a definition of "appropriateness" of operating procedures so that they are developed and applied on a uniform and consistent basis. **Consideration by the SAR DT** *The SAR DT believes it to be problematic to produce an exhaustive list of all appropriate operating procedures. Furthermore, industry feedback to the first posting (V1) of the SAR indicated a strong industry preference for the Standard not to specify how to achieve the reliability requirements. However, if you believe the draft Standard, when posted, does not sufficiently address this issue, please submit your comments at that time.*
MAPP	MAPP is concerned that the SAR does not limit manual or automatic readjustments for certain lower probability or low consequence events. MAPP urges that the SAR drafting team add additional provisions to require the drafting team to consider which manual and automatic readjustments are allowed and when in meeting the criteria that is included in the standards. **Consideration by the SAR DT** *See the SAR DT response to AMEREN, above.*
R. Snow	***From SAR Version 2:*** "……..While the planning horizon is intended to provide for facility additions, there is no intent to exclude appropriate operating procedures from the transmission plan……..." Replace this sentence with "The planning horizon is intended to provide for facility additions. Operating procedures shall not be used as a substitute for good system design and shall only be applicable during maintenance outages and while facilities are being constructed." *[The original language would allow what was identified as the root cause of the Italian blackout. Namely, an operating procedure that had to be executed within 15 minutes. The operator had to call another area and ask them to perform an operating procedure. The procedure was underway but did not happen fast enough to avoid the next line trip. Operating procedures should never be a long term substitute for constructing facilities needed to assure reliability.]* **Consideration by the SAR DT** *Industry feedback to the first posting (V1) of the SAR indicated a strong industry preference for the Standard not to specify how to achieve the reliability requirements. Therefore, the SAR DT did not accept your suggestion. However, when the draft Standard is posted, feel free to submit your comments at that time.*

COMMENTS ON TRANSITION BETWEEN PLANNING & OPERATING STANDARDS

BPA	*Transition to Operating Standards:* The Planning Standards include multi-layered requirements for different types of outages, i.e., Level B single contingencies, Level C and D multiple contingencies. Compliance with these requirements is to be defined and monitored via the new Reliability Standards. However, once the system moves into the Operational timeframe (one year or less), Policy 2 presently requires meeting N-1 contingencies only with no requirements for Levels C and D. The transition between planning and operations needs further exploration. **Consideration by the SAR DT** *As a result of your comment and others, the present SAR has been revised to require that the new Standard consider the transition between operating and planning standards. In particular, the new Planning Standard will be coordinated with other standards, such as Standard 600, "Determine Facility Ratings, Operating Limits and Transfer Capabilities", which also applies to operations.*
MAPP & MEC	MAPP & MEC are concerned that the SAR does not provide for the coordination of the requirements of the planning standards in NERC Standard 500, "Assess Transmission Future Needs and Develop Transmission Plans", with the NERC Operating Standards provided in NERC Standard 600, "Determine Facility Ratings, Operating Limits, and Transfer Capabilities." The criteria that are proposed as a starting point for 500 in this SAR (events from Categories A through D) differ from the criteria that are included in the latest draft of NERC Standard 600 (Categories A and B). If these approaches are continued, then studies run for the operating horizon will differ significantly from studies run for the planning horizon. These differences in studies will carry over to the calculation of quantities used to offer transmission service, that is, Total Transfer Capacity and Available Transmission Capacity. If NERC does not coordinate these two standards, there will be a discontinuity in TTC and ATCs when the Planning Horizon begins and the Operating Horizon ends or from one day less than one year to one year. MAPP & MEC urge the SAR drafting team to consider this discontinuity and coordinate the SAR for 500 with the Standard that is being written for 600. If a discontinuity between criteria is allowed to continue in the SAR for Standard 500, the SAR drafting team should have a clear explanation for all market participants as to the reason for the discontinuity and how that should be dealt with by the elements of the NERC Functional Model. **Consideration by the SAR DT** *See the SAR DT's response to BPA above.*

COMMENTS ON FUNCTIONS TO WHICH THE STANDARD APPLIES

AMEREN	**From SAR Version 2:** "…….The Standard shall identify reliability requirements, but shall not specify how to achieve such requirements. These requirements shall apply to Transmission Planners and to Planning Authorities……..." Should the requirements be applied to Transmission Owners also? **Consideration by the SAR DT** *Yes. After reviewing your comment, we deleted the last sentence of the referenced paragraph, since page 2 of the SAR already lists TO as a function to which the Standard applies.*
R. Snow	The standards should apply to Transmission Owners, Transmission Operators, Transmission Planners, anyone who is connecting facilities to the transmission system, control areas, and reliability coordinators. ***Consideration by the SAR DT*** *After reviewing your comment, we deleted the last sentence of the referenced paragraph. On SAR page 2 is a list of functions to which the Standard applies. The functions listed are: RA, PA, TP, TO, LSE. This list is consistent with the Functional Model.*

COMMENTS ON APPLICABLE PORTIONS OF EXISTING STANDARD

NYSRC	***From SAR Version 2:*** "……The applicable portions of the following existing NERC Planning Standards will be used as the starting point in drafting these requirements: • I.A Transmission Systems • I.B Reliability Assessment • I.D Voltage Support & Reactive Power • II.A System Data • II.D Actual and Forecast Demands……." Define "applicable portion". List the specific standards and measurements that are intended to be used as the starting point. ***Consideration by the SAR DT*** *The SAR DT believes this level of specificity is not needed in a SAR. If this concern is not addressed in the posted draft Standard, please feel free to submit your comments at that time.*
R. Snow	***From SAR Version 2:*** "……The applicable portions of the following existing NERC Planning Standards will be used as the starting point in drafting these requirements: • I.A Transmission Systems • I.B Reliability Assessment • I.D Voltage Support & Reactive Power • II.A System Data • II.D Actual and Forecast Demands……." Add the following after the bullets. *"In addition to the above, the standard shall provide requirements on methodology of forecasting and normalizing load. This would include methods of determining the normalized load over a large geographic area with different weather patterns and norms. The "normalized" load should not be the load associated with the median weather over a summer or winter period but the load level that will provide sufficient reliability to supply all firm load obligations. Each region shall provide a definition as to what is sufficient reliability. The definition shall clearly define the risk that is being assumed in terms similar to the LOLE for lack of generation. In addition to the above two risk variables, a methodology shall be identified to quantify the risk of not being able to deliver the difference between the local load and generation. This is essentially the ability of the transmission system to respond to different generation dispatch patterns."* ***Consideration by the SAR DT*** *The SAR DT believes this level of specificity is not needed in a SAR. If these concerns are not addressed in the posted draft Standard, please feel free to submit your comments at that time.*
SCGEM	It would also be beneficial to the generation sector if the SDT for this new Planning Standard could summarize the differences between the existing Planning Standards I.A, I.B, I.D, II.A, and II.D and the new Planning Standard as it is being developed. This would gauge the potential impact to the plants. The main concerns have been 1) how to address regional differences (primarily related to Category C events), 2) how to differentiate Table I's application to the Planning world versus the Operations world, and 3) how to state the requirements more clearly. ***Consideration by the SAR DT*** *Since the revised Standard has not yet been drafted, the summary you*

	requested cannot be provided at this time. This summary comparison will be addressed in the Implementation Document that accompanies the new Standard.
SEMINOLE	The SAR should define specific planning voltage criteria for consistency between transmission owners/providers. Voltage Criteria should be specifically defined for normal condition and N-1 conditions and can be specified differently for: • Bulk power - non-load serving buses • Meshed/Looped - load serving buses • Radial - load serving buses ***Consideration by the SAR DT*** *The SAR DT believes this level of specificity is not needed in a SAR. If this concern is not addressed in the posted draft Standard, please feel free to submit your comments at that time.*

COMMENTS ON SYSTEM MODELS

AESO	We believe that the assumptions made for the amount, type and location of future supply are important considerations in assessing the future needs of transmission systems. The SAR drafting team should consider this forecast requirement in developing this Standard. Similarly, there is difficulty in separating planning for reliability and planning for overall system efficiency and economy, and the Standard must be clear on this differentiation. ***Consideration by the SAR DT*** *The SAR DT believes the present SAR addresses most of these concerns. With regard to your last concern, the SAR DT believes there is not always a clear differentiation between reliability, efficiency & economy considerations. However, NERC standards primarily focus on reliability and do not directly address efficiency & economy considerations. If you have specific suggestions after the draft Standard is posted, please comment at that time.*
AMEREN	We believe that for planning of robust transmission systems, the Standard should include (1) some incremental transfer capability requirement in addition to what is "projected" or modeled in the base case, (2) a combination of a line and a generator outage should be included in category B. ***Consideration by the SAR DT*** *With regard to (1) the SAR requires each Planning Authority and Transmission Planner to document the methodology for incorporating planned generation assets in the model. In response to your comment, the present SAR has been revised to specify that the methodology for incorporating planned generation assets (including transfers) must be documented. However, the SAR DT believes any specific incremental transfer capability requirement in the new Standard would be overly prescriptive.* *With regard to (2), the Standard Drafting Team will be reviewing the likelihood, duration and impact of events, as well as performance requirements of the existing Table I Categories. If this issue is still a concern when the draft Standard is posted, please submit your comments at that time.*
AMEREN	Why document and disclose methodologies limited to planned generation only? What about planned transmission and interchange? Is it because there is more uncertainty for speculative generation than transmission? What about differences in modeling details required for different type of analyses, such as thermal or voltage, regional or local? It is our experience that more detailed representation (lower voltage facilities) is required for voltage analysis than thermal analysis. Perhaps the standard should state that additional detail may need to be added to the model to adequately represent the system for specific studies. ***Consideration by the SAR DT*** *In response to your comment, the present SAR has been revised to require documentation of modeling assumptions, including generation modeling assumptions. The SAR DT highlighted generation assumptions because the SAR DT believes such assumptions are particularly important. Furthermore, given unbundling of generation resources from transmission in some areas, we believe there is considerable additional uncertainty in these assumptions,*

	both with regard to new generating units and dispatch of new and existing units.
ATC	New standard needs to consider the difficulties, particularly for stand-alone transmission companies, in obtaining resource information so models can balance load and resources. ***Consideration by the SAR DT*** *The present SAR does indicate that the Standard shall require that system models be developed, maintained and shared in a manner consistent with the Functional Model. The SAR also states that the Standard shall consider a requirement for LSEs to provide forecast resource data for input to the models. If the commenter has specific suggestions to further address this concern, please provide specific suggestions when the draft Standard is posted.*
KCPL	In regards to developing accurate regional models, all known firm transmission service, including rollover provisions for all firm transmission service, should be included in the base case models. ***Consideration by the SAR DT*** *The SAR DT believes this provision does not need to be in the SAR for the new Standard. Rollover provisions for firm transmission service is a FERC tariff issue that does not apply to entities outside of FERC's jurisdiction. Therefore, the SAR DT believes this provision would be overly prescriptive.*
MAPP	MAPP is concerned that there is no reference in the SAR to the need to handle firm contracts that may roll-over in the futures. Plans developed for the transmission system must recognize that the transmission system must have sufficient capacity to handle roll-overs. MAPP urges the SAR drafting team to include an appropriate description of the requirement for the plans with regard to roll-overs. ***Consideration by the SAR DT*** *The SAR DT believes this provision does not need to be in the SAR for the new Standard. Rollover provisions for firm transmission service is a FERC tariff issue that does not apply to entities outside of FERC's jurisdiction. Therefore, the SAR DT believes this provision would be overly prescriptive.*
R. Snow	**From SAR Version 2:** "…….The Standard shall require that system models be developed, maintained and shared in a manner consistent with the Functional Model. Included will be requirements that each Planning Authority and Transmission Planner document and disclose the methodology used for incorporating planned generation assets in the model, as well as how such generation is dispatched. While methodologies and assumptions must be documented, the Standard will not prescribe specific tools to be used in the performance assessment of the planned systems……." Replace the last sentence with *"while the standard will not prescribe specific tools, it shall identify methodologies to validate and procedures to operate the tools so that the identified outcomes from the analysis are not dependent on the tool or the way the tool was used or initialized."* ***Consideration by the SAR DT*** *Industry feedback to the first posting (V1) of the SAR indicated a strong industry preference for the Standard not to specify how to achieve the*

	reliability requirements. Therefore, the SAR DT did not accept your suggestion.
SCGEM, SOUTHERNCO	In relation to the methodology being used for incorporating planned generation assets in the model and how generation is dispatched: the type of each generating unit, the primary fuel type for each generating unit, and a dispatch order of the generating units should be required. In addition, a general description of the dispatch methodology used for the system should also be required. However, no cost information should be required. ***Consideration by the SAR DT*** *The SAR DT believes the referenced language addresses this concern by requiring system model sharing and documentation of generation modeling assumptions. The SAR DT agrees with the commenter that cost data should not be required because it would violate Market Interface Principle 5 (see SAR p. 3) which prohibits requiring the public disclosure of commercially-sensitive information.*
SEMINOLE	It is recommended that these models be "region-wide" system models that are developed utilizing a documented, consistent, region-wide criteria. ***Consideration by the SAR DT*** *The SAR DT believes this provision would be overly prescriptive.*

COMMENTS ON RESOURCE PLANNING

DUKE	Resource planning cannot be excluded from the standard. Guidance should be provided on incorporation of resource data from all LSE's and how resource deficiencies in outyear models should be handled (e.g. model fictitious generation with no reactive capability to ensure sufficient reactive resources are planned for if power is purchased from off system in the future). The increasingly frequent changes in resource designations are causing greater uncertainty in performance of planning for reliable system operation. ***Consideration by the SAR DT*** *The SAR DT agrees that generation resource modeling is an important data requirement for transmission assessment and planning. However, the SAR distinguishes resource information as an input to transmission planning studies from a requirement to assess and ensure the adequacy of generation resources (i.e., resource planning).* *The SAR DT believes it is an open issue as to what level of specificity the Standard should require for model building. If this issue is still a concern when the draft Standard is posted, please submit your comments at that time.* *Note: Whether to check the Resource Planning box on page. 2 of the SAR (as a function to which the Standard applies) has been deferred to the NERC Director of Standards.*
ENTERGY, SCGEM, SERC, SOUTHERNCO	Entities agree the Standard should not address resource planning. However, the Standard should include requirements for the LSEs to provide forecast resource data required to develop power flow models as required in the current II.D Standards. Accordingly, this new Standard should also apply to LSEs. (Thus, entities believe the "LSE" box on p.2 of SAR should be checked as an applicable function). ***Consideration by the SAR DT*** *The SAR DT believes commenters have raised a valid point. The SAR DT believes it is an open issue as to what level of specificity the Standard should require for model building. Therefore, the present SAR has been revised to indicate that the Standard shall consider a requirement for the Load Serving Entities to provide forecast resource data.* *Note: LSE box on page 2 of the SAR has also been checked.*
ENTERGY	In addition, the Standard should require the Transmission Planner to document and describe the methodology used to plan the transmission system around the generation dispatch assumptions used by the Transmission Planner to meet the LSE load when and if the LSE provided resources do not equal the LSE provided load. ***Consideration by the SAR DT*** *The SAR DT believes it is an open issue as to what level of specificity the Standard should require for model building. If this issue is still a concern when the draft Standard is posted, please submit your comments at that time.*
IMO, ISONE, NPCC	The entities listed recognize that Resource Planning is not covered in the proposed Standard because it is considered as being handled by market

	mechanisms that are/will be in place or perhaps addressed in a separate standard. Therefore, we assume that the generation and load information required to perform the planning studies are provided as described in section II.A of the existing Planning Standards. If not, sections II.B, II.E and III of the existing Planning Standards should also be used as the starting point in drafting of the reliability requirements. ***Consideration by the SAR DT*** *The SAR DT believes it is an open issue as to what level of specificity the Standard should require for model building. If this issue is still a concern when the draft Standard is posted, please submit your comments at that time.*
NYSRC	We agree that a transmission planning standard should not include Resource Planning requirements. However, the NYSRC strongly believes that NERC should develop a separate Resource Planning Standard. ***Consideration by the SAR DT*** *The Resource and Transmission Adequacy Task Force (RTATF) proposed and NERC accepted that a Resource Adequacy SAR should be developed.*
WECC-2	In order to develop any meaningful standard, the resource part of the power system should be addressed by including standards for the modeling of existing resources, planned retirement of resources, and planned resources in the next 5 to 10 years time frame. This information will be necessary in order to assess whether future systems can or can not meet the reliability standards. ***Consideration by the SAR DT*** *The SAR DT believes the present SAR as written addresses this concern. Specifically, the SAR requires the documentation and sharing of system models, including the methodology of incorporating planned generation assets in the model as well as how such generation is dispatched.*

COMMENT ON USE OF GENERATION OR LOAD AS SOLUTIONS

AMEREN	If generation is considered in lieu of transmission reinforcement, the system must be able to withstand the loss of that generation plus another single contingency. The reason for this is that generation can be on or off due to economic and other factors after its installation, while transmission is almost always "on". ***Consideration by the SAR DT*** *The SAR DT agrees with this position. The loss of a generating unit plus another single contingency is already an event against which transmission systems must be tested in the existing Standards, and the present SAR provides for the new Standard to use the existing Standards as a starting point. If this issue is still a concern when the draft Standard is posted, please submit your comments at that time.*

COMMENT ON SAR FORMATTING

ALLEGHENY	***From SAR Version 2:*** "……..While the Standard should start from and closely align with the existing Planning Standards I.A, .B, .D, II.A,.D, the system conditions to be studied or assessed may need to be better defined or clarified. For example, the Standard should clarify that the requirement to assess the performance at **all** demand levels does not mean that a multitude of transmission models need to be created for every possible demand level, only that a representative sample covering critical operating conditions needs to be modeled in accordance with regionally-defined criteria……..." This paragraph starting "While the Standard should start from…" has a problem with it's second sentence. The sentence "For example…" does not really apply to the first sentence. We recommend that this paragraph be changed as follows: *"While the Standard should start from and closely align with the existing Planning Standards I.A, .B, .D, II.A,.D, the system conditions to be studied or assessed may need to be better defined or clarified.* *Examples of areas that should be considered for clarification in the Standard include:* *The Standard should clarify that the requirement to assess the performance at ALL demand levels does not mean that a multitude of transmission models need to be created for every possible demand level, only that a representative sample covering critical operating conditions needs to be modeled in accordance with regionally-defined criteria.* *The Standard should provide a clearer definition of "cascading outages".** *And so on".* ***Consideration by the SAR DT*** *In response to your comment, we have revised the SAR to reflect the new formatting.*

COMMENT ON DEMAND LEVELS FOR MODELING

SEMINOLE	***From SAR Version 2:*** "……For example, the Standard should clarify that the requirement to assess the performance at **all** demand levels does not mean that a multitude of transmission models need to be created for every possible demand level, only that a representative sample covering critical operating conditions needs to be modeled in accordance with regionally-defined criteria……..." Regarding " … a representative sample covering critical operating conditions …" It is recommended that this standard include specific requirements; such as, at what load levels and how many different load levels is intended by this part of the SAR. A suggestion would be 100% and 80%, and perhaps the 60% load level. ***Consideration by the SAR DT*** *The SAR DT considered your suggestions for specific load levels to be overly prescriptive.*

COMMENTS ON DEFINITION OF TERMS

AMEREN	In addition to the definition of "cascading outages" , clarification is needed for identification of a cascading state. For example, we are not sure that assumption of some percent overload, say 125% of emergency rating, is a good proxy for cascading. ***Consideration by the SAR DT*** *The SAR DT agrees that a clearer definition of cascading outages (including what constitutes a cascading state) must be provided in the new Standard, and be fully coordinated with the definition in other new Standards. The present SAR has been revised accordingly.*
ERCOT, IMO, ISONE, ISO/RTO, NPCC	All entities listed suggest that the definition for Cascading Outage be fully coordinated with the STDs 200 and 600. ***Consideration by the SAR DT*** *The SAR DT agrees with this position. The SAR DT believes a clearer definition of cascading outages must be provided in the new Standard, and be fully coordinated with the definition in other new Standards. The SAR has been revised accordingly.*
IMO, ISONE, NPCC	NPCC has submitted a suggested definition of "cascading outage" in the comments for the last posting of STD 200, which is endorsed by the other entities listed: *Cascading Outage- "The uncontrolled successive loss of Bulk Electric System elements that propagate beyond a defined area (Balancing Area's) boundaries.""* ***Consideration by the SAR DT*** *The SAR DT agrees that a clearer definition of cascading outages must be provided in the new Standard, and be fully coordinated with the definition in other new Standards. Your specific suggestion is inconsistent with the definition in the latest version of STD 600. Please provide additional comments and suggestions when the draft Standard is posted.*
IMO, ISONE, NPCC	NPCC would also like to submit a proposed definition of Bulk Power System, as follows, and would like it to be considered as a "building block" for the NERC BES (Bulk Electric System) definition. The definition is endorsed by the other listed entities: *Bulk Power System-BPS-(or BES in NERC documents) — "The interconnected electrical systems within northeastern North America comprising generation and transmission facilities on which faults or disturbances can have a significant adverse impact outside of the local area. In this context, local areas are determined by the Council members."* ***Consideration by the SAR DT*** *The SAR DT feels that the definition of "bulk transmission" is an issue too large to be handled by one Drafting Team alone, and should be defined at a higher level. Accordingly, the SAR DT referred this issue to the NERC Director of Standards.*
NYSRC	***From SAR Version 2:*** "…….The Standard should provide a clearer definition of "cascading

	outages"……". Replace "provide" with "consider". ***Consideration by the SAR DT*** *The SAR DT retained the word "provide", since we believe a clearer definition of cascading outages must be provided in the new Standard, and be fully coordinated with the definition used in other developing Standards.* *The present SAR has been revised to require that definitions be coordinated and consistent with other Standards being drafted by NERC.*
SERC	The SERC PSS agrees that the Standard should provide a clearer definition of "cascading outages." In addition the SERC PSS recommends that the Standard provide a clearer definition of what is meant by "system stable." ***Consideration by the SAR DT*** *The SAR DT agrees, and the SAR has been revised to recommend that the new Standard provide a clearer definition of "system stable".*
SCGEM, SOUTHERNCO	In general, the NERC Standards need to have a common definition across the board for any definition used in a Standard. For example, the definition for "Cascading Outages" needs to be coordinated with the Standards Drafting Team (SDT) for the "Determine Facility Ratings, Operating Limits, and Transfer Capability" standard (STD 600). ***Consideration by the SAR DT*** *The SAR DT agrees with this position. The SAR DT believes a clearer definition of cascading outages must be provided in the new Standard, and be fully coordinated with the definition in other new Standards. The SAR has been revised accordingly.*
SCGEM, SOUTHERNCO	Southern agrees that the Standard should provide a clearer definition of "cascading outages." We suggest that the following be considered: *Cascading — "The uncontrolled successive loss of system elements triggered by contingencies which results in widespread electric service interruption 1) that drops 1000 MW of load or more or 2) that crosses control area boundaries."* In addition, Southern recommends that the Standard provide a clearer definition of what is meant by "system stable." We suggest that the following be considered: *System stable — "For Category A and B simulations, system stable means that no generating units pull out of synchronism. For Category C events, system stable means that if units pull out of synchronism, 1) the resulting impedance swings are not out into the transmission system and 2) the total amount of generation lost because of out-of-step tripping does not exceed the control area operating reserve level."* ***Consideration by the SAR DT*** *The SAR DT will pass these suggested definitions along to the Standard Drafting Team for consideration.*

COMMENTS ON VARIABILITY OF GENERATION & LOAD

IMO, ISO/RTO	Seasonal and weather related variability should be considered in studies. ***Consideration by the SAR DT*** *The SAR DT agrees with this position. We believe the present SAR as written takes into account seasonal and weather-related variations.*
MAPP	MAPP is concerned that there is no provision for recognizing the variability of generation in the SAR. MAPP asks the SAR drafting team to add another bullet to the SAR which states, "The Standard should take into account the variability of generation due to factors such as weather and time of day." ***Consideration by the SAR DT*** *The SAR DT agrees with this position. We have not added a bullet to the SAR, but rather have revised the existing bullet to take your suggestion into account.*

COMMENTS ON PROBABILISTIC PLANNING METHODS

AESO	The basis of probabilistic planning, in our view, is to make planning decisions based on the metrics, such frequency, duration and impact, derived from probabilistic assessments. This is usually difficult to do in planning the bulk portion of the transmission system, since outage events are rare but their impact is significant (like multiplying infinity and zero). The categorization of contingencies in Table 1 using outage frequency as a determinant is a step in applying probabilistic techniques in this Standard but it is not probabilistic planning in its true sense. The SAR development team should clarify what it intends with regard to "the use of probabilistic planning methods". ***Consideration by the SAR DT*** *In response to your comment, the SAR DT has revised the present SAR to clarify our intent with regard to probabilistic planning methods.*
AMEREN	**From SAR Version 2:** "……..The Standard should allow for the development and use of probabilistic planning methods. The minimum requirements of probabilistic methods are the contingencies as described in Table 1 of existing Planning Standard I.A.. There should be NERC approval of acceptable levels of risk……..." The second sentence about "The minimum requirements of probabilistic methods …. Does this mean that probability should be assigned to at least all of the contingencies included in Table I.A.? AMEREN believes that defining acceptable levels of risk will be a major undertaking. Isn't the level of risk dependent upon the entity and/or perception? Using a deterministic methodology in the planning horizon for single contingency provides a margin to handle many multiple unplanned facility outages or unforeseen system conditions in the operating horizon. ***Consideration by the SAR DT*** *The SAR DT is recommending the continued use of deterministic criteria in the Standard, but is also recommending probabilistic planning methods as an alternative or augmentation to the deterministic criteria. The SAR DT believes probabilistic planning methods are another way of defining acceptable levels of risk. For example, the existing deterministic criteria considers all line outages to be the same level of risk, but a probabilistic method may differentiate transmission line outages by length of line. The SAR DT has revised the present SAR to clarify this point in response to your comment.*
ATC	**From SAR Version 2:** "……..The Standard should allow for the development and use of probabilistic planning methods. The minimum requirements of probabilistic methods are the contingencies as described in Table 1 of existing Planning Standard I.A.. There should be NERC approval of acceptable levels of risk……..." This may also go back to question 1 in the Comment Form, but the statement, "There should be NERC approval of acceptable levels of risk" needs to be better defined. For example does this mean that a utility can't decide to increase the operating temperature of a line conductor without NERC approval? ***Consideration by the SAR DT*** *The SAR DT agrees that the sentence concerning NERC approval was unclear. The SAR DT has removed the referenced sentence and added*

	wording to clarify our intent regarding the "use of probabilistic planning methods".
BPA	The handling of probabilistic criteria in the SAR seems quite convoluted, i.e. it can only be used to *increase* performance levels AND has to be approved by NERC. This is not the way probabilistic planning should work. WECC presently has a process (Seven Step Reliability Performance Evaluation) to allow changes in performance requirements (both up and down) for specific outages based on rigorous analysis and monitoring actual performance. It is mostly applicable to requirements beyond the NERC criteria (such as outages of adjacent circuits on separate towers). Use of these methods should be allowed with approval of affected regions. This process should allow for movement below Table 1, i.e. moving Category C outage to Category D. One way to resolve this would be to replace the word "minimum" in the SAR to "starting". ***Consideration by the SAR DT*** *In response to your comment, the SAR DT has added wording to clarify our intent regarding the "use of probabilistic planning methods". Specifically, there is no longer reference to "minimum criteria", but rather a recommendation that the existing Standards be used as a "starting point", allowing movement above or below existing Table I. The reference to NERC approval has also been removed.*
NYSRC	Is the probabilistic method referred to here considered a replacement for the NERC Criteria or a supplement to NERC Criteria? NERC should not allow such a method as a substitute for NERC criteria. I am not aware that NERC has completed an analysis to evaluate and compare the level of reliability of probabilistic criteria with NERC criteria. Such an evaluation would be needed. ***Consideration by the SAR DT*** *The SAR DT is recommending the continued use of deterministic criteria in the Standard, but is also recommending probabilistic planning methods as an alternative or augmentation to the deterministic criteria. The SAR DT has revised the present SAR to clarify this point in response to your comment.*
R. Snow	**From SAR Version 2:** "……..The Standard should allow for the development and use of probabilistic planning methods. The minimum requirements of probabilistic methods are the contingencies as described in Table 1 of existing Planning Standard I.A.. There should be NERC approval of acceptable levels of risk……." Add a sentence after the first sentence *"The probabilistic methodology shall not ignore specific cases that would result in significant load dump or cascading outages. Each region shall identify how to resolve such outages." The last sentence "Acceptable levels of risk in terms of maximum consequential and programmatic load dump and maximum durations for the outages shall be defined."* ***Consideration by the SAR DT*** *The SAR DT believes this level of specificity is not needed in a SAR. However, the SAR DT appreciates your comment, and has revised the present SAR to clarify the potential application of probabilistic planning methods. If this issue is still a concern when the Standard is posted, feel free to submit your comments at that time.*

WECC-1	It appears to us that as written, the standard that flows from this SAR can only allow the probabilistic planning methods to make the standard more, not less, stringent than the existing Standard IA. This is not the way probabilistic planning methods should work. This statement also does not make sense when you read the next sentence, "There should be NERC approval of acceptable levels of risk." If the standard can only be more stringent, then there is no need for NERC to approve the level of risk, or even the probability of occurrence of the contingency. One way to resolve this issue would be to change the word "minimum" to "starting". ***Consideration by the SAR DT*** *In response to your comment, the SAR DT has added wording to clarify our intent regarding the "use of probabilistic planning methods". Specifically, there is no longer reference to "minimum criteria", but rather a recommendation that the existing Standards be used as a "starting point", allowing movement above or below existing Table I. The reference to NERC approval has also been removed.*
WECC-2	The Standard should also allow for the use of Probabilistic Criteria. In WECC, Probabilistic Planning refers to the application of fixed planning standards to a given problem to determine the probable or expected load not served. Probabilistic Criteria is used to refer to adjusting the performance category based on the probability of the event for a specific facility. The performance category can move up or down depending on actual or planned performance. Therefore, Table 1 would be the starting point for making probabilistic criteria adjustments. Probabilistic adjusted criteria would be the basis for Probabilistic Planning. ***Consideration by the SAR DT*** *See the SAR DT's response to WECC-1 and BPA above.*
WECC-1 & WECC-2	The NERC Planning Standards should follow what WECC is doing with regard to listing disturbances as a guide, but say that other disturbances with the same probability should be included. List the probability ranges (outages per year), Category B: >= 0.33, Category C: 0.33 to 0.033; Category D1 (no cascading): 0.033 to .0033, Category D2: < .0033. The standard should allow for changes in the required performance for given disturbances if a probability in another range has been established for a given disturbance. NERC should require that the Regional Councils specify voltage dip and minimum frequency standards similar to WECC (i.e., the voltage dip and minimum frequency should be within Applicable Ratings). We are not proposing that NERC set fixed values for these standards that would be the same throughout the ten NERC Regions. NERC should not set the standards. WECC recommends that the approval of acceptable levels of risk be at the regional level. ***Consideration by the SAR DT*** *In response to your comment, the SAR DT has added wording to clarify our intent regarding the "use of probabilistic planning methods".*

	The SAR DT believes the existing Standard allows Regions to apply voltage dip and voltage stability Regional requirements under the "voltage limits" section of Table I. The SAR DT believes that frequency standards are outside the scope of Transmission Planning for most Regions, and has not included frequency standards in the NERC SAR. This does not preclude Regions where frequency standards have transmission adequacy implications from developing their own standards.

COMMENTS ON PLANNED OUTAGES

AMEREN	We do not believe that the requirement for planning for maintenance outages should be included in planning assessments. See AMEREN's response/comments to Question 4 in this document. ***Consideration by the SAR DT*** *In reviewing industry responses, there was no clear consensus on the issue of including planned outages in planning assessments. See the SAR DT's response to MAPP below. We believe the revised wording in the present SAR adequately addresses these concerns.*
MAPP	MAPP urges the SAR drafting team to add words under this bullet to more clearly explain the SAR drafting team's position with regard to prior planned outages. ***Consideration by the SAR DT*** *The SAR DT believes there is confusion surrounding the planned outage requirement in the existing standard. The SAR DT is recommending that the new Standard specify whether to retain this requirement for Categories B and C. If retained, the Standard should clarify the requirement in such a way that the requirement can be practically implemented.* *In particular, the SAR DT has revised the present SAR to clarify that transmission entities are not required to exhaustively test their systems for every conceivable planned (including maintenance) outage in addition to every conceivable Category B and C contingency. The SAR DT has also revised the SAR to delete the planned outage requirement for Categories A and D.*
MEC	MEC urges the SAR drafting team to add the following words to this bullet to more clearly explain the SAR drafting team's position with regard to planned outages: *"In particular, it is incorrect to have a requirement to exhaustively test for every contingency described in each category plus every conceivable planned outage.* *Planned Outages can be scheduled and analyzed in advance in the operating horizon (less than one year). Therefore, it should not be necessary to require that "systems must be capable of meeting Category C requirements while accommodating the planned outage of any bulk electric equipment..." Planned outages should be studied in advance by the requesting control area and be reviewed by the governing Reliability Coordinator to determine if overloads could occur. If studies show that overloads could occur, the planned outage should be deferred or operating guides prepared which would be used in the event a contingency does occur.* *There is no need to plan or build facilities to meet Planning Standard 1.A when Planned Outages can be accommodated within the frame work of existing guidelines and procedures. Studies conducted for the operating horizon are not the subject of this standard.* *Therefore, the SAR drafting team directs the standard drafting team to delete the requirement for the prior planned outage from the standard given that known planned outages must be included in studies that are conducted during the operating horizon which are not the subject of this standard but which are required in accordance with NERC Standard 200, "Operate Within Interconnection Reliability Operating Limits Standard" and NERC Standard 600, "Determine Facility Ratings, Operating Limits, and Transfer Capabilities".*

	Note: The above suggested wording is similar to the MAPP/MEC comment for Question 4, and the SAR DT is offering a similar consideration: ***Consideration by the SAR DT*** *See the SAR DT's response to MAPP above. We believe the revised wording in the present SAR adequately addresses these concerns.*
SEMINOLE	Many grid operations difficulties occur when a line is scheduled out for maintenance. If this SAR is going to address required N-2 planning assessments, then it must be clear and specific regarding the conditions when N-2 assessments are appropriate and the specific criteria for N-2 assessments. ***Consideration by the SAR DT*** *See the SAR DT's response to MAPP above. We believe the revised wording in the present SAR adequately addresses these concerns*

COMMENTS ON APPLICABLE RATINGS

ALLEGHENY	**From SAR- Version 2:** "……..Performance requirements for Category C events shall be re-evaluated. For example, for certain Category C events, such as #2, #3 and #9 events, consider removing references to "Applicable Ratings" to clarify that the performance requirement is "No Cascading Outages are Allowed"……". This bullet does not appear necessary. "No Cascading Outages" is already part of Table I for these events. Removing "Applicable Ratings" would not add to the clarity. ***Consideration by the SAR DT*** *The wording in the present SAR was revised to remove the referenced language.* *The SAR DT is recommending that the Standard DT conduct a review to determine whether the events in existing Table I are classified correctly. In conducting its review of the likelihood of events and acceptable performance requirements, the Standard DT should clarify ambiguities in performance requirements, specifically cascading outages and Applicable Ratings (A/R).* *For example, the Standard should clarify tests used for considering cascading, such as divergent power flow, overload limits post contingency, voltage magnitudes, etc. The Standard should also clarify that different ratings may be applicable to different categories of events and perhaps to different types of events with a category (specified by entities in accordance with STD 600).*
AMEREN	We agree that some of the contingency categories should be reviewed. See AMEREN's comment for Question 1 (c) in this document – approach (1): keep same categories but re-classify certain events as Category D. ***Consideration by the SAR DT*** *See the SAR DT's global consideration of your Question 1(c) comment.*
BPA	Applicable Ratings: There is a need to tighten up the methodology for Applicable Ratings to ensure that compliance with this standard is measurable. We assume that this will take place in the Determine Facility Ratings Standard although we are concerned about how this is progressing. ***Consideration by the SAR DT*** *The SAR DT is recommending that Applicable Ratings (A/R) be clarified by the Standard DT and the Standard DT will evaluate your comment at that time.*
IMO, ISONE, NPCC	We are not in favor of removing references to "Applicable Ratings". Despite the fact that the performance requirement would be "No Cascading Outages are Allowed", the "Applicable Ratings" should always be respected. ***Consideration by the SAR DT*** *The SAR DT is recommending that Applicable Ratings (A/R) be clarified by the Standard DT and the Standard DT will evaluate your comment at that time.*

MAPP	MAPP urges the SAR drafting team to clarify the meaning of the term "Applicable Ratings" and determine if it is possible to have different A/Rs for different categories. ***Consideration by the SAR DT*** *The SAR DT is recommending that Applicable Ratings (A/R) be clarified by the Standard DT and the Standard DT will evaluate your comment at that time.*
MEC	**From SAR- Version 2:** "……..Performance requirements for Category C events shall be re-evaluated. For example, for certain Category C events, such as #2, #3 and #9 events, consider removing references to "Applicable Ratings" to clarify that the performance requirement is "No Cascading Outages are Allowed"……". MEC urges the SAR drafting team to add Category C#1, #6, #7 and #8 events to the bullet above, to clarify the performance requirement for certain Category C events. ***Consideration by the SAR DT*** *The wording concerning A/R has been revised in the present SAR.* *There was no clear consensus from industry that the events in Categories B, C and D in Table I should be or should not be re-classified. The SAR DT is recommending that the Standard DT conduct a review to evaluate whether the events are classified correctly.* *All parties will have an opportunity to participate in the Standard drafting process, including commenting on the draft Standard. Specific concerns should be brought up at that time.*
MEC	MEC urges the SAR drafting team to direct the Standard Drafting Team to remove references to "Applicable Ratings" from all events listed (see MEC comment above), since information is readily available which demonstrates that the listed events are much less likely than other Category C events. ***Consideration by the SAR DT*** *The SAR DT is recommending that Applicable Ratings (A/R) be clarified by the Standard DT and the Standard DT will evaluate your comment at that time.*
MEC	MEC urges the SAR drafting team to include the following statement in the SAR: "The Standard should clarify how breaker failure events (Category C2, C6, C7, C8, and C9 events) are to be considered given that operating a breaker with disconnects open or eliminating a breaker are technically acceptable mitigation schemes for such events. Such mitigation schemes actually result in less reliable system designs and system operating configurations. Thus including Applicable Ratings in the Standard for these lower probability breaker failure events can send the wrong reliability signals to NERC members." This statement reflects another reason why breaker failure events should be reclassified such that Applicable Ratings is no longer considered a requirement for these low probability events. ***Consideration by the SAR DT*** *See the SAR DT's consideration of MEC's first comment above.*

MEC	MEC urges the SAR drafting team to consider NOT reclassifying any of the Category C events to Category D but instead deleting the Applicable Rating requirements from the lower probability Category C events. MEC believes that the performance requirements for lower probability Category C events should be to protect for cascading, instability, and uncontrolled separation. It is MEC's belief that this was the intent of the drafting team that originally developed the existing NERC Planning Standards. ***Consideration by the SAR DT*** *See the SAR DT's consideration of MEC's first comment above.*
NYSRC	**From SAR- Version 2:** "……..Performance requirements for Category C events shall be re-evaluated. For example, for certain Category C events, such as #2, #3 and #9 events, consider removing references to "Applicable Ratings" to clarify that the performance requirement is "No Cascading Outages are Allowed"……". The above bullet should be removed. This would be a weakening of the criteria. ***Consideration by the SAR DT*** *There was no clear consensus from industry that the events in Categories B, C and D in Table I should be or should not be re-classified. The SAR DT is recommending that the Standard DT conduct a review to evaluate whether the events are classified correctly.* *All parties will have an opportunity to participate in the Standard drafting process, including commenting on the draft Standard. Concerns that changes made may weaken the Standard should be brought up at that time.*
R. Snow	Clarify that the "applicable ratings" for multiple events should be consistent with supplying firm load and firm transactions until the outages are repaired or switching mitigates the overloads. For example, one applicable rating would be the short time rating of equipment that was stressed when a transformer failed. However, there must be a method of supplying the load pocket for the duration to repair/replace the transformer that does not involve long term rotating blackouts. Just achieving "no cascading outages" is not sufficient. ***Consideration by the SAR DT*** *The SAR DT is recommending that Applicable Ratings (A/R) be clarified by the Standard DT and the Standard DT will evaluate your comment at that time.*

COMMENT ON SHORT CIRCUIT CURRENT

AMEREN	We assume that short circuit current refers to fault duty or interrupting current. ***Consideration by the SAR DT*** *Fault duty and interrupting current refer to the ratings of transmission facilities. The short circuit current is compared to these ratings.*

COMMENTS ON OTHER AREAS THAT SHOULD BE ADDED OR CLARIFIED

AESO	There should be a clear distinction between the appropriate use and application of RAS (or SPS) and "safety nets". ***Consideration by the SAR DT*** *Based on industry comments on the first posting (V1) of the SAR, there was a strong preference not to specify how to achieve reliability performance requirements. Therefore, the SAR does not specifically address these issues/distinctions.*
AMEREN	The "projected level of transfers" defined in the Standard – what does this include? Should it include/consider all transmission reservations including roll-over-rights? ***Consideration by the SAR DT*** *The present SAR has been revised to specify that system models must be developed and shared, including documenting the methodology for incorporating planned generation assets (including transfers) in the model. The projected levels of transfers are determined by each Transmission Planner, and these may include rollover provisions as appropriate.* *Note: See KCPL & MAPP comments under the "System Models" table in this document, and the SAR DT's consideration of those comments.*
MAPP	MAPP asks that the SAR drafting team add a bullet to the SAR that requires that the Standard drafting team consider the development of reactive power margin and transfer power margin standards which expand beyond existing NERC Standard I.D. ***Consideration by the SAR DT*** *The NERC Planning Committee is reviewing Regional reactive power and voltage control practices. Their findings may need to be incorporated into the new Planning Standard (STD 500) when this review is completed. Standard 600 addresses system operating limits and transfer capability. Whereas this SAR DT did not attempt to duplicate these efforts, the present SAR does not preclude the Standard Drafting Team from further refining reactive power margins and/or power transfer margins.* *In the present SAR, a bullet has been added that the Standard address requirements on reactive planning, with specific reference to steady state and transient voltage stability criteria.*
MAPP	MAPP notes that Standard 600, "Determine Facility Ratings, Operating Limits, and Transfer Capabilities" has been drafted to do away with the references to Categories A through D. The criteria are just listed in the standard. MAPP asks that the SAR drafting team require that the standard drafting team for Standard 500 also eliminate the category references to be consistent with the Standard 600 approach. ***Consideration by the SAR DT*** *This SAR 500 DT does not believe that Standard 500 necessarily has to have*

	the same format as Standard 600. However, we have revised the present Standard 500 SAR to provide for coordination between the two Standards.
MAPP & MEC	In general, MAPP and MEC support the six bullets that the SAR drafting team has provided on page SAR-5 (of SAR-Version 2) with the amendments and additions described above in our comments. These bullets add needed details to the SAR. ***Consideration by the SAR DT*** *The present SAR has been revised to reflect appropriate details.*
R. Snow	New section: The subject of assuring that generation is deliverable to the load should be added. This should not be vague but should be defined by a specific set of tests and the expected range of results. In doing these tests, reliance on capacity assigned to other regions should be limited to amounts identified and accepted by adjacent regions. For example, if a region is assuming it will have net purchases from adjacent regions, the other regions must show a net sale. ***Consideration by the SAR DT*** *The NERC Planning Committee is tackling this deliverability issue, as identified by the Resource and Transmission Adequacy Task Force (RTATF). This new Transmission Planning Standard (STD 500) may need to be revised in the future to reflect integration with Resource Adequacy Standards.*

INDUSTRY COMMENTER KEY

TOTAL ENTITIES COMMENTING; 28

TOTAL INDIVIDUALS COMMENTING 121

AEP: AEP Service Corp, Raj Rana

AES: Allegheny Energy Supply (Generator), Ken Githens

AESO: Alberta Electric System Operator (ISO), Neil Brausen, group chair. Includes:

Neil Brausen, Jeff Billinton, Bob Chow

ALLEGHENY: Allegheny Power (Transmission Owner), William J. Smith

AMEREN: Ameren (Transmission Owner), Kirit Shah

ATC: American Transmission Company (Transmission Owner), Peter Burke (on behalf of ATC's David Smith).

BPA: Bonneville Power Administration (Transmission Owner), Marv Landauer, group chair. Includes:

Paul Arnold, Rebecca Berdahl, Mark Bond, Gordon Comegys, Angela DeClerk, Don Gold, Kyle Kohne, Mike Kreipe, Chuck Matthews, Bill Mittlestadt, James Murphy, Melvin Rodrigues, Mike Viles, Paul Ferron

CWLP: City Water, Light & Power (Illinois- Generator), Karl Kohlrus

DUKE: Duke Energy (Transmission Owner), Thomas Pruitt, Robert W. Pierce

ENTERGY: Entergy Services, Inc (Transmission Owner), Ed Davis

ERCOT: Electric Reliability Council of Texas, Bill Bojorquez

IMO: Independent Electricity Market Operator; Khaqan Khan

ISONE: ISO New England, Kathleen Goodman

ISO/RTO: ISO/RTO Council Standards Review Committee, Karl Tammar (NYISO), group chair. Includes:

AESO, Dale McMaster
CAISO, Ed Riley
ERCOT, Sam Jones
IMO, Don Tench
ISO-NE, Peter Brandien
MISO, Bill Phillips
NYISO, Karl Tammar
PJM, Bruce Balmat
SPP, Carl Monroe

KCPL: Kansas City Power & Light (Transmission Owner), Jim Useldinger

MAAC/Horakh: Mid-Atlantic Area Council, John Horakh
MAAC/Kuras: Mid-Atlantic Area Council, Mark J. Kuras

MAPP: Mid-Continent Area Power Pool, Tom Mielnik (MEC), group chair. Includes:

MidAmerican Energy Company (MEC), Tom Mielnik, Dennis Kimm
Great River Energy (GRE), Delyn Helm
MH, David Jacobson
XEL, Dean Schiro
Otter Tail Power (OTP), Jason Weiers
Western Area Power Administration, Steve Sanders

MEC: MidAmerican Energy Company (Load Serving Entity), Tom Mielnik

NPCC: Northeast Power Coordinating Council, Guy Zito (NPCC), group chair. Includes:

TransEnergie (Quebec), Roger Champagne
New York Power Authority, Ralph Rufrano
Hydro One Networks (Ontario), David Kiguel
Nova Scotia Power, David Little
ISO New England, Kathleen Goodman, Dan Stosick
US National Grid, Peter Lebro
New York ISO, James Practico
Niagara Mohawk, Larry Eng
Independent Electricity Market Operator, Ontario, Khaquan Khan
New York State Reliability Council, Alan Adamson
NPCC, Guy Zito, John Mosier, Briam Hogue (satff)

NYSRC: New York State Reliability Council, Alan Adamson

R.Snow: Robert Snow, Individual Commenter (Small Electricity User).

SCGEM: Southern Company Generation & Energy Marketing (Brokers, Aggregators, Marketers), Roman Carter, group chair. Includes:

Roman Carter, Joel Dison, Lucius Burris, Tony Reed, Lloyd Barnes, Clifford Shepard.

SEMINOLE: Seminole Electric Coop.(TDU), K. Bachor & S. Wallace

SERC: Southeastern Electric Reliability Council, Bob Jones (Southern Company Services), group chair. Includes:

Alabama Electric Coop., Darrell Pace
Duke Power, Brian Moss
Entergy Services, Kham Vongkhamchanh
South Carolina Electric & Gas, Clay Young
South Carolina Public Service Authority, Arthur Brown
Southern Company Services, Bob Jones
Tennessee Valley Authority, Byron Stewart
SERC Staff, Pat Huntley

SOUTHERNCO: Southern Company Services, Inc. (Transmission Owner), Marc Butts, group chair. Includes:

Rod Hardiman,, Jonathan Gildewell, Bobby Jones, Marc Butts
Bill Pope – Gulf Power (Load Serving Entity)

SPP: Southwest Power Pool – Transmission Working Group, Ronnie Frizzell, group chair. Includes:

Arkansas Electric Coop Corp., Ronnie Frizzell
Sunflower Electric Power Coop., Norman Williams
Westar Energy, Donald Taylor
Kansas City Power & Light, Jim Useldinger
Southwestern Public Service, John Fulton
American Electric Power, Matt McGee
Empire District Electric, Sam McGarrah
Western Farmers Electric Coop., Mitch Williams
ETEC, John Chiles
Entergy, Mak Nagle
Associated Electric Coop., Inc., Jim Kistner
Southwest Power Pool, Alex Lau
Oklahoma Gas & Electric, Phil Crissup
City Utilities of Springfield, MO, Howard Conus
Aquila Networks, Alan Myers
Southwestern Power Administration, David Sargent

TVA: Tennesse Valley Authority (Government Entity). Includes:

David Till, David Marler, Brenda Eberhart, Darrin Church, Byron Stewart, William Tiller

WECC-1: Western Electricity Coordinating Council, Peter Mackin (TANC), group chair. Includes:

Arizona Public Service, Peter Krzykos
Pacific Gas & Electric, Chifong Thomas
Transmission Agency of Northern California (TANC), Peter Mackin
Basin Electric Power Coop, Matthew Stoltz
Western Area Power Administration, Bob Easton
Salt River Project, Charles Russell
Puget Sound Energy, Joe Seabrook

WECC-2: Western Electricity Coordinating Council, Ben Morris (PG&E), group chair. Includes:

Arizona Public Service, Baj Agrawal
British Columbia Transmission Corp., Phil Park
California ISO, Jeff Miller
Idaho Power, Ron Schellberg
Nevada Power, Rahn Sorensen
Pacific Gas & Electric, Ben Morris, Rick Padilla, Chifong Thomas
Sacramento Municipal Utility District, Dilip Mahendra
Salt River Project, Brian Keel
Southern California Edison, Dana Cabbell, Mohan Kondragunta
Snohomish County PUD, John Martinsen

WESTAR: Westar Energy, Inc. (Transmission Owner), Donald Taylor

Consideration of Comments on 1st Posting of SAR to Supplement the Assess Transmission Future Needs SAR

The Supplemental Assess Transmission Future Needs SAR Drafting Team thanks all commenters who submitted comments on the Supplemental Assess Transmission Future Needs SAR. This SAR was posted for a 30-day public comment period from February 15 through March 16, 2007. The requesters asked stakeholders to provide feedback on the standard through a special standard Comment Form. There were 16 sets of comments, including comments from 42 different people associated with more than 37 companies or organizations representing 8 of the 10 Industry Segments as shown in the table on the following pages.

Based on the comments received, the drafting team is recommending that the Standards Committee approve the Supplemental SAR to be moved forward to the standards drafting stage of the process.

In this "Consideration of Comments" document stakeholder comments have been organized so that it is easy to see the responses associated with each question. All comments received on the standards can be viewed in their original format at:

http://www.nerc.com/~filez/standards/Assess-Transmission-Future-Needs.html

If you feel that your comment has been overlooked, please let us know immediately. Our goal is to give every comment serious consideration in this process! If you feel there has been an error or omission, you can contact the Director of Standards, Gerry Adamski, at 609-452-8060 or at gerry.adamski@nerc.net. In addition, there is a NERC Reliability Standards Appeals Process.[1]

No changes were made to the SAR based on received comments. The only changes that were made to the SAR at this time were to add references and appropriate supporting material to address the FERC Order 693 and to update the attachment to reflect the latest version of the Standard Review Guidelines.

[1] The appeals process is in the Reliability Standards Development Procedures: http://www.nerc.com/standards/newstandardsprocess.html.

The Industry Segments are:

1 — Transmission Owners
2 — RTOs, ISOs
3 — Load-serving Entities
4 — Transmission-dependent Utilities
5 — Electric Generators
6 — Electricity Brokers, Aggregators, and Marketers
7 — Large Electricity End Users
8 — Small Electricity End Users
9 — Federal, State, Provincial Regulatory or other Government Entities
10 – Regional Reliability Organizations, Regional Entities

Commenter		Organization	Industry Segment									
			1	2	3	4	5	6	7	8	9	10
1.	James H. Sorrels, Jr.	AEP	✓				✓	✓				
2.	Anita Lee (G1)	AESO		✓								
3.	Ken Goldsmith (G3)	ALT										✓
4.	Dave Rudolph (G3)	BEPC										✓
5.	Brent Kingsford (G1)	CAISO		✓								
6.	Ed Thompson (G2)	ConEdison										✓
7.	Steve Myers (G1) (I)	ERCOT		✓								
8.	Eric Mortenson	Exelon										
9.	Dick Pursley (G3)	GRE										✓
10.	Roger Champagne	HQT	✓									
11.	Ron Falsetti (G1) (G2) (I)	IESO		✓								
12.	Kathleen Goodman (G2) (I)	ISO-NE										✓
13.	Matt Goldberg (G1)	ISO-NE		✓								
14.	Brian Thumm	ITC Transmission	✓									
15.	Jim Cyrulewski	JDRJC Associates								✓		
16.	Michael Gammon	KCPL	✓									
17.	Eric Ruskamp (G3)	LES										✓
18.	Robert Coish, Chair (G3)	Manitoba Hydro										✓
19.	Ron Mazur	Manitoba Hydro	✓		✓		✓	✓				
20.	David Rudolph (G3)	MidAmerican										✓
21.	Jason Marshall	MISO		✓								
22.	Terry Bilke (G3)	MISO										✓
23.	William Phillips (G1)	MISO		✓								
24.	Carol Gerou (G3)	MP										✓
25.	Mike Brytowski (G3)	MRO										✓

Commenter		Organization	Industry Segment									
			1	2	3	4	5	6	7	8	9	10
26.	Randy Macdonald (G2)	New Brunswick System Opeartor		✓								✓
27.	Murale Gopinathan (G2)	Northeast Utilities										✓
28.	Guy V. Zito (G2)	NPCC										✓
29.	Al Boesch (G3)	NPPD										✓
30.	Greg Campoli (G2)	NY ISO										✓
31.	Mike Calamino (G1) (I)	NYISO		✓								
32.	Ralph Rufrano (G2)	NYPA										✓
33.	Al Adamson (G2)	NYSRC										✓
34.	Mark Ringhausen	Old Dominion Electric Coop.				✓						
35.	Todd Gosnell (G3)	OPPD										✓
36.	Alicia Daugherty (G1)	PJM		✓								
37.	Linda Brown	San Diego Gas and Electric	✓									
38.	Charles Yeung (G1)	SPP		✓								
39.	Roger Champagne (G2)	TransEnergie HydroQuebec										✓
40.	Jim Haigh (G3)	WAPA										✓
41.	Neal Balu (G3)	WPSR										✓
42.	Pam Oreschnik (G3)	XCEL										✓

Legend:

- G1 - IRC Standards Review Committee
- G2 – NPCC CP9 Working Group
- G3 – MRO
- I – Individual comments were submitted in addition to comments submitted as part of a group

Index to Questions, Comments, and Responses

1. Do you believe that there is a reliability-related need to provide additional detail, including specific issues for consideration, to the requirements in this set of standards as proposed in this supplemental SAR? 5

2. Do you agree with the expanded scope of the proposed project as set forth in this supplemental SAR? 8

3. Do you think that there are any additional revisions that should be incorporated into this set of standards, beyond those that have already been identified in the April 30, 2006 version of the original SAR and this supplemental SAR?.....12

1. **Do you believe that there is a reliability-related need to provide additional detail, including specific issues for consideration, to the requirements in this set of standards as proposed in this supplemental SAR?**

Summary Consideration: All respondents agreed with the statement. The affirmative responses that included comments mainly dealt with procedural issues as opposed to content. The SAR DT believes that we have answered those concerns in the provided responses and that no additional changes to the SAR are required.

Question #1			
Commenter	**Yes**	**No**	**Comment**
Exelon	☑		I believe that most of the additional information contained in the draft 'supplemental' SAR is valuable and will assist the SDT in addressing the various stakeholder concerns. I am concerned with conflicting information addressed below. I am not familiar with the concept of a supplemental SAR and am not sure if there are going to be two SARs now, or if this new effort supercedes the existing SAR. This is especially a concern when there appear to be differences between them regarding functional applicabilities and principles, as well as the expansion of scope. I understand the Standards Development Procedure to require the original SAR to be modified, when it states, "If the standard drafting team determines it is necessary to expand the scope of the standard ot to modify the scope in a way that is no longer consistent with the scope defined in the SAR, then the drafting team may initiate or recommend another requestor initiate a new SAR (Step 1) to develop the expanded or modified scope. At no time will a drafting team develop a standard that is not within the scope ot the SAR that was authorized for development."
Response: The SDT recognized that the scope of the original SAR needed to be broadened to encompass changes in the industry since the approval of the original SAR. We decided to use the concept of a supplement rather than completely re-writing the original SAR. These are not intended to be two distinct SARs. The Supplemental SAR is intended to be a true supplement to the original SAR in every sense of the word.			
ODEC	☑		The planning of the transmission system is critical to the reliability of the transmission system. Additional details provided to all stakeholders are crucial to ensure that transmission is built in a timley manner to protect the relability of the system. Also, by making the process and information available to all stakeholders, you ensure that everyone's interest is heard in the process and not just the large transmission owner/operators, but all users of the transmission system. The assumptions used in the evaluation process must be vetted by all stakeholders as they are the critical drivers on what transmission is needed and when it is needed.
Response: Stakeholders will receive their opportunity to vet the assumptions used in the evaluation process during comment			

Question #1			
Commenter	**Yes**	**No**	**Comment**
and balloting of the standards.			
ERCOT	☑		I recommend that you clarify that these lists of items in Appendix B are topics to consider, not topics that must be included. Also, I recommend that any standards requirements that are evident as Good Utility Practice or procedural in nature be retired as requirements, but retained in the form of reference documents, operating guidelines, or some other similar form that will be available to any industry participant that wishes to use them.
Response: The following excerpt is from point #3 of the Supplemental SAR Purpose Statement – "…***consider*** the items mentioned in the Technical Issues Lists prepared by the NERC staff…" (emphasis added). The intent was always to consider the issues and not to make them necessarily mandatory changes. The comment on good utility practice and procedural requirements will be passed on to the SDT. Please note that Appendix B as it was included in the Supplemental SAR was prepared prior to the final FERC Order. Directions included with that Order must be specifically addressed in the standards drafting process.			
MISO	☑		As the standards are written now, all of the requirements apply to both the Transmission Planner and Planning Authority. The NERC Functional Model Version 3 replaced the Planning Authority with the Planning Coordinator . The standards should reflect this change as well as the division of responsibilities between Transmission Planner and Planning Coordinator in the functional model. Additionally, they should seek to clarify the relationship between Transmission Planner and Planning Coordinator. How many transmission planners can their be per Planning Coordinator. Can there be overlapping Planning Coordinators?
Response: Functional Model v3 will be used as the reference. Your comment and questions will be passed on to the SDT.			
ITC Transmission	☑		The original SAR did a good job of capturing many of the reliability improvements necessary to the TPL Standards. Now that additional information is available from the various stakeholder groups and drafting teams, it is clear that additional reliability-related improvements to the Standards can be made. It is not clear how to quantify the additional improvement the supplemental SAR will make to the existing Standard Drafting effort, but certainly there are additional reliability improvements to be made to each of the subject Standards.
Response: Agreed.			
Manitoba Hydro	☑		Manitoba Hydro believes the planning standards should ensure that complete and consistent assessments are conducted by the responsible entities.
Response: Agreed.			
AEP	☑		

Question #1			
Commenter	**Yes**	**No**	**Comment**
HQT	☑		
IESO	☑		
ISO New England	☑		
KCPL	☑		
MRO	☑		
NPCC CP9 Working Group	☑		
NYISO	☑		
San Diego Gas & Electric	☑		
IRC Standards Review Committee	☑		

2. Do you agree with the expanded scope of the proposed project as set forth in this supplemental SAR? (The scope includes all the items noted on the "Standard Review Forms" attached to the SAR as well as other improvements to the standards that meet the consensus of stakeholders, consistent with establishing high-quality, enforceable, and technically sufficient bulk power system reliability standards. Please consider these items as non-mandatory and only for consideration by the drafting team.)

Summary Consideration: The majority of respondents agreed to the proposition. The negative opinions ranged from procedural matters to items that dealt with providing the SDT with sufficient flexibility to do their job or issues that are more appropriately addressed at the standards drafting stage. In particular, there was concern that some of the applicable entities checked on the supplementary SAR were not appropriate. The SAR DT felt that the Transmission Owner & Generator Owner might potentially provide data that could come into play for some of the requirements in TPL-005 & 006. The SAR DT wanted to provide maximum flexibility to the SDT so these entities as well as the Reliability Coordinator were included. However they are only for consideration and not mandatory. The SAR DT believes that we have addressed these concerns in the responses provided and that no additional changes to the SAR are required.

Question #2			
Commenter	**Yes**	**No**	**Comment**
Exelon		☑	The approved SAR is of type 'New Standard' while the supplemental SAR type is not, but rather, 'Revision to existing Standards' as well as, 'Withdraw of existing Standard (possible)'. Regarding the Reliability Function Applicabilities, the supplemental SAR does not include the Reliability Authority or the Planning Authority which were included in the approved SAR, and the supplemental SAR includes the Resource Planner and Generation Owner functions, which are not included in the approved SAR. I believe that the Planning Authority needs to be addressed in terms of the FERC NOPR discussion, summarized on pages B3 and B4 of the supplemental SAR. The supplemental SAR includes item 7 in the Applicable Reliability Principles, while the approved SAR does not. If there are going to be two SARs then I believe that the supplemental SAR should include the previously approved SAR in the 'Related SARs' section on page 7. The concise summaries of the Version 0 Industry comments are appreciated, but these should be made more clear in that these will probably become key to any actual changes to planning contingencies. For example, it is not clear what, 'Address deliverability of generation to load' means. Also, does, 'Don't include generation runback or redispatch'

Question #2			
Commenter	**Yes**	**No**	**Comment**
			mean that this shouldn't be addressed or that the standard should be worded to specifically not include them. Other terms such as, 'Don't include planning outage', and 'single terminals are not included' should also be more thoroughly described.
Response: The SDT recognized that the scope of the original SAR needed to be broadened to encompass changes in the industry since the approval of the original SAR. We decided to use the concept of a supplement rather than completely re-writing the original SAR. These are not intended to be two distinct SARs. The Supplemental SAR is intended to be a true supplement to the original SAR in every sense of the word. The full text of all comments referenced in the Supplemental SAR Appendix B has been made available to the SDT so that there should be no confusion as to the intent or meaning of the comment.			
ODEC		☑	These are transmission planning standards and as such, should only apply to TPs, not RP, TO and GO entities. Certainly, information must be provided from the TOs and GOs on their facilities to be able to run the planning studies, but the MOd standards should cover this obligation. And RC are operating entities and not planning entities.
Response: The SAR DT felt that the TO & GO might potentially provide data that could come into play for some of the requirements in TPL-005 & 006. The SAR DT wanted to provide maximum flexibility to the SDT so these entities as well as the RC were included. However they are only for consideration and not mandatory. Your comments will be passed on to the SDT.			
ISO New England		☑	We do not support a long-term planning standards applying to RCs. The NERC functional model is very clear that RCs are operational entities. Is the intent to replace RRO with RC for the fill-in-the-blank standards? That would be an inappropriate solution. A more appropriate solution would be to consider replacing the RRO with the planning coordinator. We also do not understand how a transmission planning standard could apply to the additional functional entities: Transmission Owner and Generator Owner.
Response: The SAR DT felt that the TO & GO might potentially provide data that could come into play for some of the requirements in TPL-005 & 006. The SAR DT wanted to provide maximum flexibility to the SDT so these entities as well as the RC were included. However they are only for consideration and not mandatory. Your comments will be passed on to the SDT.			
MISO		☑	We do not support a long-term planning standards applying to RCs. The NERC functional model is very clear that RCs are operational entities. Is the intent to replace RRO with RC for the fill-in-the-blank standards? That would be an inappropriate solution. A more appropriate solution would be to consider replacing the RRO with the planning coordinator.
Response: The SAR DT felt that the TO & GO might potentially provide data that could come into play for some of the			

Question #2			
Commenter	**Yes**	**No**	**Comment**
requirements in TPL-005 & 006. The SAR DT wanted to provide maximum flexibility to the SDT so these entities as well as the RC were included. However they are only for consideration and not mandatory. Your comments will be passed on to the SDT.			
NYISO		☑	It is unclear as to what obligations the RC, TO, and GO would have in a long-term planning standard. The NERC functional model is very clear that RCs are operational entities. The RC, TO, GO ,should not have a direct obligation in the process, but should be a resource for input into the process.
Response: The SAR DT felt that the TO & GO might potentially provide data that could come into play for some of the requirements in TPL-005 & 006. The SAR DT wanted to provide maximum flexibility to the SDT so these entities as well as the RC were included. However they are only for consideration and not mandatory. Your comments will be passed on to the SDT.			
IRC Standards Review Committee		☑	We do not support a long-term planning standards applying to RCs. The NERC functional model is very clear that RCs are operational entities. Is the intent to replace RRO with RC for the fill-in-the-blank standards? That would be an inappropriate solution. A more appropriate solution would be to consider replacing the RRO with the planning coordinator. We also do not understand how a transmission planning standard could apply to the additional functional entities: Transmission Owner and Generator Owner.
Response: The SAR DT felt that the TO & GO might potentially provide data that could come into play for some of the requirements in TPL-005 & 006. The SAR DT wanted to provide maximum flexibility to the SDT so these entities as well as the RC were included. However they are only for consideration and not mandatory. Your comments will be passed on to the SDT.			
ITC Transmission		☑	Standard Drafting Teams should not be responding so heavily to comments made by FERC in a NOPR. The NOPR is just that … "Proposed." There may be additional changes required as a result of the final Rule. The final Rule may even negate some of the proposed changes made in the NOPR. If the drafting team thinks that FERC hit on a good idea for improvement, then it would be appropriate for inclusion in the Standard, but simply to make changes to a Standard because an idea surfaced in a Proposed Rule is premature.
Response: The following excerpt is from point #3 of the Supplemental SAR Purpose Statement – "…*consider* the items mentioned in the Technical Issues Lists prepared by the NERC staff…" (emphasis added). The intent was always to consider the issues and not to make them necessarily mandatory changes. Directions included with the FERC Final Order must be specifically addressed in the standards drafting process.			
AEP	☑		Considering the current scope, the Std DT should be encouraged to consider a major re-write of TPL-001 thru TPL-006, possibly including a restructuring into a single standard

Question #2			
Commenter	**Yes**	**No**	**Comment**
			rather than the present multiple standards.
Response: We agree with the general concept and the SDT will be provided with this option**.**			
Manitoba Hydro	☑		Manitoba Hydro agrees in principle with the expanded scope, but believes that this scope should be a part of the Standards Development Procedures manual so all stakeholders have a voice in the requirements in Appendix A. We have some concern that the SAR gives the drafting team the power to add additional improvements beyond the SAR as this provides an opportunity for SDT members to forward specific owner agendas.
Response: The material in Appendix A is excerpted from the Reliability Standards Development Work Plan 2007 – 2009 that was reviewed and approved by the Standards Committee. As stated, it represents general guidelines and not mandatory changes for the revision of existing standards. Stakeholders will receive their opportunity to vet the assumptions used in the evaluation process during comment and balloting of the standards**.**			
ERCOT	☑		Please also see my response to Question #1.
Response: Please see the response to your comment on question #1.			
HQT	☑		
IESO	☑		
KCPL	☑		
MRO	☑		
NPCC CP9 Working Group	☑		
San Diego Gas & Electric	☑		

3. Do you think that there are any additional revisions that should be incorporated into this set of standards, beyond those that have already been identified in the April 30, 2006 version of the original SAR and this supplemental SAR?

Summary Consideration: Only two respondents suggested revisions. In both cases the comments are more appropriately addressed at the standards drafting stage. The SAR DT believes that we have satisfactorily addressed the expressed concerns with the provided responses and that no additional changes to the SAR are required.

Question #3			
Commenter	**Yes**	**No**	**Comment**
Manitoba Hydro	☑		The SAR should considering adding a requirements to the standards to mandate tests for robustness by doing sensitivity to critical system paramenters such as load growth rate, load power factor, etc., to provide insight into the margin between the operating point and unacceptable performance. There should also be a specific requirement to assess reactive power adequacy, voltage stability and system damping.
Response: The SAR DT is aware of the interest in these items. The scope of both the original and supplemental SARs allows these items to be incorporated in the standards drafting process. We will pass your comments on to the SDT.			
San Diego Gas & Electric	☑		SDG&E believes that there are additional revisions that need to be incorporated into this set of standards. The Supplemental SAR dated January 17, 2007, has an Appendix B that summarizes issues to be resolved in this new set of standards. Those issues are a collection of comments from FERC NOPR, FERC Staff Report, Industrial comments on version 0, Phase III/IV, etc. In order to develop a set of reliability standards for transmission planners, SDG&E believes there are a few more issues to be addressed and/or clarified in this set of standards. 1. Critical System Conditions These "Critical System Conditions" are referring to system conditions to be studied for the transmission planning. Typically, entities deem several system conditions as critical on the basis of accumulative institutional knowledge. However, in recent FERC NOPR, FERC directs industry to conduct sensitivity studies to identify these critical system conditions and document the sensitivity studies. The sensitivity factors in FERC's direction include load power factors, generation

Question #3			
Commenter	**Yes**	**No**	**Comment**
			retirements, generation dispatch, transaction patterns, controllable loads, demand side management, transmission outages. As those will result in extensive scope of study, we would like to see this set of standards clearly answer following questions: a. How often do we required to perform such sensitivity studies to identify critical system conditions? b. Do we check those sensitivity factors one by one to find the worst, or do we define the worst combination as the critical? Or c. Do we continue to leave the "critical system conditions" determination to study performer's discretion? 2. Contingencies In Appendix B of the latest Supplementary SAR for TPL standards, comments and modification requests were summarized. Contingencies for planning studies is one of critical elements. This can be split into three issues and SDG&E provides following comments for each of them: a. Study all contingencies One of the comments suggests to study "all contingencies". Clearly, "All contingencies" need to be clarified. The additional workload incurred due to the dismissal of planners' accumulative institutional knowledge may be unreasonable. b. Study non-common mode contingencies The issue regarding reasonable workload also applies to the "non-common mode" contingencies. The non-common mode refers to combination of unrelated elements, say one 230 kV line in CFE (Mexico) and other 230 kV line in Alberta, Canada, as one contingency. This too needs clarification. c. Study event-based contingencies Evaluating the impact of "event-based" contingencies makes sense. However, translating an event, such as an earthquake, into a list of elements to be taken out for power flow and stability computer simulation, will need clear guidelines. 3. "Identification of options for reducing the probability or impacts of extreme events that cause cascading" This is a direct quote of FERC's directed modification in its NOPR.

Question #3			
Commenter	**Yes**	**No**	**Comment**
			a. If the impacts only need to be identified with conceptual methods, how do we maintain "consistency" among entities? b. If FERC intends to request the entities to identify the probability/impacts with quantitative methods, then there is a long list of issues to be addressed before a transmission planner could in reality perform such an analysis: • How to define "cascading" in system simulation analysis. • Reasonable and feasible probabilistic variables need to be defined. For instance, in addition to the equipment failure as probabilistic variable, other probabilistic variables need to be considered to meet FERC's direction, such as hurricanes, fires, earthquakes, lightening, flooding, landslides and even an airplane falling into a critical substation, and so on. • Regional efforts need to be taken to develop a probabilistic methodology and probabilistic database that can be applied uniformly so entities can be treated equally. • Regional efforts need to be taken to guide selection and/or development of probabilistic analysis software tools. Such tools have to be ready for transmission planners to use and derive quantified solutions.
Response: The following excerpt is from point #3 of the Supplemental SAR Purpose Statement – "…***consider*** the items mentioned in the Technical Issues Lists prepared by the NERC staff…" (emphasis added). The intent was always to consider the issues and not to make them necessarily mandatory changes. Directions included with the FERC Final Order must be specifically addressed in the standards drafting process. The Supplemental SAR was intended to be a true supplement to the original SAR in every sense of the word. The SAR DT is aware of the interest in these items. The scope of both the original and supplemental SARs allows these items to be incorporated in the standards drafting process. We will pass your comments on to the SDT. We refer the commenter to the NERC web site for previous meeting notes and comments concerning related issues.			
ODEC		☑	This should be more than enough to try to get into these transmission planning standards.
Response: Most stakeholders who commented seemed to agree with you.			
MISO		☑	
MRO		☑	
NPCC CP9 Working Group		☑	
NYISO		☑	

Question #3			
Commenter	**Yes**	**No**	**Comment**
IRC Standards Review Committee		☑	
AEP		☑	
ERCOT		☑	
HQT		☑	
IESO		☑	
ISO New England		☑	
ITC Transmission		☑	
KCPL		☑	

Consideration of Comments — 1st Draft of TPL-001-1 — Transmission System Planning Performance Requirements

The Assess Transmission Future Needs Standards Drafting Team thanks all commenters who submitted comments on the first draft of the standard. This standard was posted for a 30-day public comment period from September 12, 2007 through October 26, 2007. The drafting team asked stakeholders to provide feedback on the standard through a special Standard Comment Form. There were more than 80 sets of comments, including comments from 236 different people from more than 80 companies representing 9 of the 10 Industry Segments as shown in the table on the following pages.

Based on the comments received, the drafting team is recommending a second posting of the revised standard.

Definitions and the following requirements have been changed due to industry comment as specifically cited in the responses:

Definitions

- Base Case - the SDT removed "Base Case" as a defined term.
- Bus-tie Breaker – the SDT added a definition.
- Consequential Load Loss – the SDT reworded the definition to better clarify that this is Load loss that occurs when the source to that Load is lost or Load that is lost due to the Load's transient response to the event being studied and to eliminate confusion regarding references to concepts such as fault clearing action, mis-operation, or radial Load.
- Extreme Events – the SDT revised the definition to clarify that Extreme Events have a "lower probability of occurrence than Planning Events."
- Long-Term Transmission Planning Horizon - the SDT revised the definition to clarify when the horizon may extend beyond ten years
- Non-Consequential Load Loss - the SDT revised the definition to improve its clarity and to specify that this is non-interruptible load
- Planning Assessment - the SDT revised the definition to be more succinct, to eliminate the description of the possible range of assumptions, and to clarify that the assessment is an evaluation of Transmission System performance (not needs) and Corrective Action Plans associated with identified deficiencies.
- Planning Coordinator – the SDT added the definition from the Functional Model.
- Plant Stability Study - the SDT replaced the word, "plant" with the term, "generating unit," and modified the wording to improve its clarity.
- System Stability Study - the SDT revised the definition to add further clarity
- Year One - the SDT modified the definition to clarify that Year One is the first year that requires assessment, not study, and to clarify that the planning window begins 12 to 18 months from the completion of the previous assessment.

Sensitivity Studies

The need to conduct sensitivity studies was a directive in FERC Order 693 paragraphs 1694,1704, and 1706. The revised standard provides guidance on what needs to be included in sensitivity studies while not being totally prescriptive.

- Requirement R2.1.3 and Requirement R2.4.3 have been modified to require documentation of why the listed sensitivities were or were not selected for specific studies.
- Requirement R2.1.4 and Requirement R2.4.4 have been added to specifically state that the entity may consider additional sensitivities that are appropriate for its own system.
- Requirement R2.4.3 was modified to stipulate that the entity shall provide rational for why sensitivity on the list were or were not included in the sensitivity studies and that the entity may consider additional sensitivities that are appropriate for its own System.
- Requirement R.2.4.3.2 (related to stability analysis) was changed to use the same phrase as used in R.2.1.3.2 (related to steady state analysis) "Modification of expected transfers"
- Requirement R.2.4.3.4 (related to stability analysis) was changed to use the same phrase as used in R.2.1.3.4 (related to steady state analysis) "Variability and outages of reactive resources."
- A new requirement, now numbered as Requirement R2.7.2, has been added to clarify that the sensitivity studies do not in themselves establish the need for a corrective action but the entity must explain how the sensitivities affected the Corrective Action Plan.

Corrective Action Plans

Requirements for corrective action plans have been modified to clarify that these do not need to be developed solely to meet performance requirements for sensitivities and to eliminate subrequirements that distinguished between “committed” and “proposed” projects. The standard now refers to “actions” needed to achieve required System performance without trying to distinguish between “committed” and “proposed” projects. The following adjustments were made to the list of elements that must be included in Corrective Action Plans:

- Sub-requirement R2.7.1 was modified to clarify that there are many options that can be used to achieve required system performance when studies show system deficiencies, including DSM.
- Sub-requirement R2.7.2 to perform re-test has been removed. The purpose of the Corrective Action Plan is to list the actions that are needed to meet performance requirements. The studies, current, and/or past as appropriate, as well as the extent of the size of the study area, are performed to support compliance and demonstrate that the requirements are met. The standard assumes that the actions were developed and verified using the current and past studies that were used to uncover deficiencies and confirm adherence to the performance requirements.
- Sub-requirement R2.7.3 to document the criteria for determining committed and proposed projects and to identify each project as either committed or proposed has been deleted.
- Sub-requirement R2.7.4 that included language restricting the removal of committed projects has been deleted.

- A new Sub-requirement R2.7.2 has been added that requires a description of the consideration of sensitivity studies was applied to the actions needed to achieve system performance

Performance Requirements

- The SDT modified the performance requirements relative to Non-Consequential Loss of Load and revised Tables 1 & 2 to add greater detail and provide for more situations where it is acceptable to lose Non-Consequential Load.
- The second draft proposes that no Non-Consequential Load may be tripped for the loss of a 300 kV (or higher) bus section for a first contingency event.
- The second draft proposes permitting the loss of Non-Consequential Load to meet the Transmission performance requirements for events where there are two independent overlapping single Contingencies involving two non-generation Transmission Facilities operated at a voltage level above 300 kV. (See Performance Table Planning Event P6.)
- The second draft proposes allowing load shedding as an acceptable system adjustment action for the entire BES following the loss of the second Transmission outage.
- Moved P2-3 into the P1 category as loss of a single pole of a dc line is similar to loss of a generator or transmission circuit.
- Clarified the distinction between Generating Unit Stability Study and System Stability Study by adding a definition of Generating Unit Stability Study and modifying the definition of System Stability Study – and making modifications to R2.5.
- Removed Extreme Event #9 from Stability Analyses for Extreme Events (3-phase fault and loss of all generating units at a station). The events which remove all of a generating unit from the System occur over a longer period of time which is more applicable in the steady state analyses. These are Extreme Events which are relevant for steady state but not for Stability analyses.
- Modified R2.4.1 to recognize the difficulty of obtaining accurate dynamic Load models including induction motors.
- Modified Requirement R 3.6 (now R3.5) of the steady state portion of the Planning Assessment to specify the conditions under which manual and automatic generation runback and tripping can be used to meet single and multiple Contingency performance requirements and to make it clear that all Facilities must always remain within applicable thermal and voltage ratings.

Generation Run Back and Tripping

- Added R3.5.2 and R3.5.3 to clarify that manual or automatic generation run-back is allowed as a response to single and multiple Contingencies as long as all Facilities shall be operating within their Facility Ratings and as long as a sustainable, stable, operating condition is maintained.
- Modified Requirement R 3.5 to specify the conditions under which automatic (or manual) generation runback can be used to meet single (or multiple) contingency performance requirements and to make it clear that all facilities must always remain within applicable thermal and voltage ratings.
- Modified R3.5 to allow the use of SPS/RAS for single or multiple Contingencies with limitations described in Requirements R3.5.1 through R3.5.3.

Modeling

- A new requirement was added (to replace R1.4) to perform the tests outlined in the performance requirements table and demonstrate that thermal and voltage limits are met, however, all manual and/or automatic actions are allowed (within time constrained ratings) including curtailing firm transfers and controlled shedding of Non-Consequential firm Load.

- In addition, both performance tables have been changed.

Some other major changes included:

- Created a new requirement concerning short circuit analysis.
- Created a requirement to document proxies for instability, cascading outages and uncontrolled islanding.
- Changed requirements to clarify the actions allowed to prepare for the next Contingency.
- Changed requirements to clarify that Facility Ratings may be different for, and a function of, different durations

In this "Consideration of Comments" document stakeholder comments have been organized so that it is easier to see the responses associated with each question. All comments received on the standards can be viewed in their original format at:

http://www.nerc.com/~filez/standards/Assess-Transmission-Future-Needs.html

If you feel that your comment has been overlooked, please let us know immediately. Our goal is to give every comment serious consideration in this process! If you feel there has been an error or omission, you can contact the Director of Standards, Gerry Adamski, at 609-452-8060 or at gerry.adamski@nerc.net. In addition, there is a NERC Reliability Standards Appeals Process.[1]

[1] The appeals process is in the Reliability Standards Development Procedures: http://www.nerc.com/standards/newstandardsprocess.html.

The Industry Segments are:

1 — Transmission Owners
2 — RTOs, ISOs
3 — Load-serving Entities
4 — Transmission-dependent Utilities
5 — Electric Generators
6 — Electricity Brokers, Aggregators, and Marketers
7 — Large Electricity End Users
8 — Small Electricity End Users
9 — Federal, State, Provincial Regulatory or other Government Entities
10 – Regional Reliability Organizations, Regional Entities

Commenter		Organization	Industry Segment									
			1	2	3	4	5	6	7	8	9	10
1.	William Quaintance	ABB Grid Systems Consulting										
2.	John Bussman	AECI	✓									
3.	Anita Lee	AESO		✓								
4.	Darrell Pace (G11)	Alabama Electric Coooperative	✓									
5.	Wesley O. Davis	Alcoa Power Generating, Inc.	✓		✓		✓		✓			
6.	William J. Smith	Allegheny Power	✓									
7.	Ken Goldsmith (G9)	ALTW										
8.	Rick Foster (G12)	Ameren										
9.	John Sullivan (G11)	Ameren	✓									
10.	Curtis Stepanek (G14)	Ameren	✓									
11.	Eugene Warnecke (G14)	Ameren	✓									
12.	John E. Sullivan	Ameren Services	✓									
13.	Thad K. Ness (G2)	American Electric Power	✓		✓		✓	✓				
14.	Takis Laios (G2)	American Electric Power	✓									
15.	Jon Riley (G2)	American Electric Power	✓									
16.	Rob O'Keefe (G2)	American Electric Power	✓									
17.	Navin Bhatt (G2)	American Electric Power	✓									
18.	Scott Rainbolt (G2)	American Electric Power	✓									
19.	Omar Hellalat (G2)	American Electric Power	✓									
20.	Roger Bentz (G2)	American Electric Power	✓									
21.	Vance Beauregard (G2)	American Electric Power	✓									
22.	Phil Cox (G2)	American Electric Power					✓	✓				
23.	E. Nick Henery (G4)	APPA			✓	✓						
24.	Allen Mosher (G4)	APPA			✓	✓						
25.	Baj Agrawal	Arizona Public Service Co.	✓		✓		✓					

Commenter		Organization	Industry Segment									
			1	2	3	4	5	6	7	8	9	10
26.	Jason Shaver	ATC	✓									
27.	Phil Park	BCTC		✓								
28.	Dave Rudolph (G9)	BEPC										
29.	Chris Bradley (G14)	Big Rivers Electric Corporation	✓									
30.	Chuck Matthews (G3)	BPA Transmission	✓									
31.	Berhanu Tesema (G3)	BPA Transmission	✓									
32.	Kendall Rydell (G3)	BPA Transmission	✓									
33.	Kyle Kohne (G3)	BPA Transmission	✓									
34.	Melvin Rodrigues (G3)	BPA Transmission	✓									
35.	David Albers	Brazos Electric Cooperative	✓									
36.	Charles Cumpton	California ISO		✓								
37.	Paul Rocha (see attachment)	CenterPoint Energy	✓									
38.	David M Conroy (see attachment)	Central Maine Power Company	✓									
39.	Gary Brinkworth (G7)	City of Tallahassee	✓									
40.	Jeff Knottek	City Utilities/Springfield	✓		✓							
41.	Karl Kohlrus (G8)	City Water, Light & Power (IL)					✓					
42.	Karl E. Kohlrus	City Water, Light and Power			✓	✓	✓					
43.	Edwin Thompson (G10)	ConEd										
44.	Michael Gildea (G10)	Constellation Energy										
45.	Blake Williams	CPS Energy	✓									
46.	John K. Loftis, Jr. (G1)	Dominion VA Power	✓									
47.	Kirit Doshi (G1)	Dominion VA Power	✓									
48.	Graig Crider (G1)	Dominion VA Power	✓									
49.	Solomon Yirga (G1)	Dominion VA Power	✓									
50.	Nelson Burks (G1)	Dominion VA Power	✓									
51.	Ashwani Vaswani (G1)	Dominion VA Power	✓									
52.	Mehdi Shakibafar (G1)	Dominion VA Power	✓									
53.	Abdur Masood (G1)	Dominion VA Power	✓									
54.	Thanh Nguyen (G1)	Dominion VA Power	✓									
55.	Ed Broasdale (G1)	Dominion VA Power	✓									

Commenter		Organization	Industry Segment									
			1	2	3	4	5	6	7	8	9	10
56.	Al MacDonald (G1)	Dominion VA Power	✓									
57.	William Bigdely (G1)	Dominion VA Power	✓									
58.	Ronnie Bailey (G1)	Dominion VA Power	✓									
59.	Greg Rowland	Duke Energy	✓		✓							
60.	Anthony Williams (G12)	Duke Energy Carolinas										
61.	Brian D. Moss (G14)	Duke Energy Carolinas	✓									
62.	Keith Yocum	E ON US										
63.	Larry Rodriguez	Entegra Power					✓	✓				
64.	Sujit Mandal (G12)	Entergy										
65.	Charles Long (G11)	Entergy	✓									
66.	Kham Vongkhamchanh (G14)	Entergy	✓									
67.	Charles W. Long	Entergy Services, Inc.	✓		✓		✓					
68.	Doug Powell	Entergy Services, Inc.	✓		✓		✓					
69.	H. Steven Myers	ERCOT ISO		✓								
70.	Eric Mortenson	Exelon	✓		✓							
71.	Doug Hohlbaugh (G5)	FirstEnergy Corporation	✓		✓		✓	✓				
72.	John Stephens (G5)	FirstEnergy Corporation	✓		✓		✓	✓				
73.	Dave Folk (G5)	FirstEnergy Corporation	✓		✓		✓	✓				
74.	Sam Ciccone (G5)	FirstEnergy Corporation	✓		✓		✓	✓				
75.	W. R. Schoneck (G7)	Florida Power & Light Company			✓							
76.	C. Martin Mennes (G7)	Florida Power & Light Company	✓									
77.	Robert A. Birch (G7)	Florida Power & Light Company					✓					
78.	John W. Shaffer (G7)	Florida Power & Light Company			✓							
79.	A. L. Barredo (G7)	Florida Power & Light Company			✓							
80.	Hector Sanchez (G6)	Florida Power and Light	✓		✓		✓					
81.	Marty Mennes (G6)	Florida Power and Light	✓		✓		✓					
82.	W. R. Schoneck (G6)	Florida Power and Light	✓		✓		✓					
83.	R. A. Birch (G6)	Florida Power and Light	✓		✓		✓					
84.	A. L. Barredo (G6)	Florida Power and Light	✓		✓		✓					
85.	C. Candelaria (G6)	Florida Power and Light	✓		✓		✓					
86.	J. W. Shaffer (G6)	Florida Power and Light	✓		✓		✓					

Commenter		Organization	Industry Segment									
			1	2	3	4	5	6	7	8	9	10
87.	Fred McNeill (G7)	Florida Reliability Coordinating Council										✓
88.	Vicente Ordax (G7)	FRCC										✓
89.	Earl Fair (G7)	Gainesville Regional Utilities	✓									
90.	Angela Battle	Georgia Transmission Corp	✓									
91.	Ken Wofford (G14)	Georgia Transmission Corp.	✓									
92.	David Kiguel (G10)	Hydro One Networks										
93.	Roger Champagne (G10)	HydroQuebec TransEnergie										
94.	Sylvain Clermont (G10)	HydroQuebec TransEnergie										
95.	Roger Champagne	Hydro-Québec TransÉnergie	✓									
96.	Ron Falsetti	IESO		✓								
97.	Kathleen Goodman (G10)	ISO New England										
98.	Brian F. Thumm	ITC Holdings										
99.	Jim Cyrulewski (G8)	JDRJC Associates								✓		
100.	Donald Gilbert (G7)	JEA					✓					
101.	Ted E. Hobson (G7)	JEA	✓									
102.	Gary Baker (G7)	JEA			✓							
103.	Don Gilbert	JEA	✓		✓		✓					
104.	Harold G. Wyble	Kansas City Power and Light	✓									
105.	Tim Wu	LADWP	✓		✓		✓					
106.	Scotty Touchette	Lafayette Utilities System	✓		✓		✓					
107.	Paul Elwing (G7)	Lakeland Electric					✓					
108.	Richard Gilbert (G7)	Lakeland Electric			✓							
109.	Larry E. Watt (G7)	Lakeland Electric	✓									
110.	Paul Shipps (G7)	Lakeland Electric						✓				
111.	Sergio Garza	LCRA TSC	✓									
112.	Eric Ruskamp (G9)	LES										
113.	Donald Nelson (G10)	MA Dept of Public Utilities										
114.	Joseph DePoorter (G8)	Madison Gas & Electric				✓						
115.	Ron Mazur	Manitoba Hydro	✓		✓		✓	✓				
116.	Jerry Tang (G14)	MEAG	✓									
117.	David Weekley (G11)	MEAG Power	✓									

Commenter		Organization	Industry Segment									
			1	2	3	4	5	6	7	8	9	10
118.	Robert Coish (G9)	MHEB										
119.	David Jacobson (G9)	MHEB										
120.	Ron Mazur (G9)	MHEB										
121.	Allen McKee (G11)	Midwest ISO (MISO)		✓								
122.	Allen McKee (G8)	Midwest ISO, Inc.		✓								
123.	Carol Gerou (G9)	Minnesota Power										
124.	Terry Bilke (G9)	MISO										
125.	Tom Mielnik (G9)	MRO		✓								
126.	Michael Brytowski (G9)	MRO										
127.	Jerry Tang	Municipal Electric Authority of Georgia	✓									
128.	Lewis Ross	Muscatine Power and Water	✓		✓		✓			✓		
129.	Carol Sedewitz	National Grid	✓									
130.	Denise Roeder (G14)	NC Municipal Power Agency #1			✓							
131.	James R. Manning	NCEMC			✓	✓	✓					
132.	Robert S. Beadle	NCEMC			✓	✓	✓					
133.	Denise Roeder	NCMPA			✓							
134.	Bob Cummings	NERC Transmission Issues Subc.										
135.	Randy MacDonald (G10)	New Brunswick System Operator										
136.	Kathleen Goodman	New England ISO		✓								
137.	Walter A. Pfuntner	New York ISO		✓								
138.	Greg Campoli (G10)	New York ISO										
139.	Ralph Rufrano (G10)	New York Power Authority										
140.	Al Adamson (G10)	New York State Reliability Council										
141.	Michael Ranalli (G10)	Ngrid US										
142.	Reza Rizvi (G10)	Northeast Power Coordinating Council										
143.	Rick White	Northeast Utilities	✓									
144.	Murale Gopinathan (G10)	Northeast Utilities										
145.	John Leland	Northwestern Energy	✓									
146.	Guy V. Zito (G10)	NPCC										✓
147.	Gregory Sullivan	Nstar Electric and Gas Corp.	✓		✓							
148.	John P. Mayhan	OPPD	✓		✓			✓				
149.	Keith Mutters (G7)	Orlando Utilities Commission			✓							

Commenter		Organization	Industry Segment									
			1	2	3	4	5	6	7	8	9	10
150.	Ganesh Velummylum (G17)	PJM (ISO/RTO)		✓								
151.	John Collins	Platte River Power Authority	✓									
152.	Mark Byrd	Progress Energy Carolinas	✓		✓		✓	✓				
153.	John O'Connor (G12)	Progress Energy Carolinas										
154.	Phil Creech (G14)	Progress Energy Carolinas	✓									
155.	Lee Schuster (G7)	Progress Energy Florida			✓							
156.	Bart White (G7)	Progress Energy Florida			✓							
157.	Bart White	Progress Energy Florida, Inc.	✓		✓		✓	✓				
158.	Jeffrey Mitchell	ReliabilityFirst Corp.										✓
159.	Mark Kuras (G17)	RFC		✓								
160.	Mahendra Patel (G17)	RFC		✓								
161.	Paul McGlynn (G17)	RFC		✓								
162.	Mohamed Osman (G17)	RFC		✓								
163.	Chuck Liebold (G17)	RFC		✓								
164.	Leanne Harrison (G17)	RFC		✓								
165.	Susan McGill (G17)	RFC		✓								
166.	Terry Blackwell (G13)	Santee Cooper	✓		✓		✓	✓				
167.	James Peterson (G13)	Santee Cooper	✓									
168.	Shawn T. Abrams (G13)	Santee Cooper	✓									
169.	Vicky Budreau (G13)	Santee Cooper	✓									
170.	Art Brown (G13)	Santee Cooper	✓									
171.	William Gaither (G13)	Santee Cooper	✓									
172.	Glenn Stephens (G13)	Santee Cooper	✓									
173.	Rene' Free (G13)	Santee Cooper	✓									
174.	Frank Caston (G13)	Santee Cooper	✓									
175.	Rick Thornton (G13)	Santee Cooper	✓									
176.	James M. Jackson (G13)	Santee Cooper	✓									
177.	Wayne Guttormson	SASK Power	✓		✓		✓	✓				

Commenter		Organization	Industry Segment									
			1	2	3	4	5	6	7	8	9	10
178.	Al McMeekin (G14)	SC Electric & Gas Company	✓									
179.	Clay Young (G14)	SC Electric & Gas Company			✓							
180.	Phil Kleckley (G11)	SC Electric and Gas			✓							
181.	Scott Inglebritson	Seattle City Light	✓		✓	✓	✓					
182.	Sharma Kolluri (G12)	SERC EC DRS	✓									
183.	Travis Sykes (G11)	SERC EC PSS	✓									
184.	Pat Huntley (G11)	SERC Reliability Corp										✓
185.	Carter Edge (G14)	SERC Reliability Corporation										✓
186.	Maria Haney (G14)	SERC Reliability Corporation										✓
187.	Jim Peterson (G14)	SERC RRS OPS	✓									
188.	Philip R. Kleckley	South Carolina Electric & Gas	✓		✓		✓					
189.	John Ciza (G15)	Southern Company - Generation	✓									
190.	Tom Higgins (G15)	Southern Company - Generation					✓					
191.	Terry Crawley (G15)	Southern Company - Generation					✓					
192.	Roman Carter (G15)	Southern Company - Generation	✓									
193.	Marc Butts (G15)	Southern Company - Transmission	✓									
194.	J. T. Wood (G15)	Southern Company - Transmission	✓									
195.	Jim Viikinsalo (G15)	Southern Company - Transmission	✓									
196.	Keith Calhoun (G15)	Southern Company - Transmission	✓									
197.	Shih-Min Hsu (G15)	Southern Company - Transmission	✓									
198.	Tom Sims (G15)	Southern Company - Transmission	✓									
199.	Gary Gorham (G15)	Southern Company - Transmission	✓									
200.	Dave Slovensky (G15)	Southern Company - Transmission	✓									
201.	Jeremy Bennett (G15)	Southern Company - Transmission	✓									
202.	Bob Jones (G15)	Southern Company - Transmission	✓									
203.	Bill Botters (G15)	Southern Company - Transmission	✓									
204.	Mike Bartlett (G15)	Southern Company - Transmission	✓									
205.	Maryanne Mujica (G15)	Southern Company - Transmission	✓									
206.	Lee Taylor (G15)	Southern Company -	✓									

Commenter		Organization	Industry Segment									
			1	2	3	4	5	6	7	8	9	10
		Transmission										
207.	Perry Stowe (G15)	Southern Company - Transmission	✓									
208.	Rod Hardiman (G15)	Southern Company - Transmission	✓									
209.	Doug McLaughlin (G15)	Southern Company - Transmission	✓									
210.	Randy Castello (G15)	Southern Company - Transmission	✓									
211.	Chuck Chakravarthi (G15)	Southern Company - Transmission	✓									
212.	Roger Green (G15)	Southern Company - Transmission					✓					
213.	Bob Jones (G11)	Southern Company Services	✓									
214.	Jim Busbin (G15)	Southern Company Services, Inc.	✓									
215.	Bob Jones (G12)	Southern Company Services, Inc. - Trans										
216.	Lee Taylor (G12)	Southern Company Services, Inc. - Trans										
217.	Rod Hardiman (G14)	Southern Company Services, Inc. - Trans	✓									
218.	Doug McLaughlin (G14)	Southern Company Services, Inc. - Trans	✓									
219.	Jonathan Sykes	SRP	✓									
220.	Ronald L. Donahey	Tampa Electric Company			✓							
221.	Thomas J. Szelistowski (G7)	Tampa Electric Company	✓									
222.	Scott Helyer	Tenaska, Inc.					✓					
223.	Tom Cain (G12)	Tennessee Valley Authority										
224.	Ian Grant (G14)	Tennessee Valley Authority	✓									
225.	Marjorie Parsons (G14)	Tennessee Valley Authority	✓									
226.	Michael Clements (G14)	Tennessee Valley Authority	✓									
227.	David Till	Tennessee Valley Authority	✓									
228.	Biju Gopi (G10)	The IESO, Ontario										
229.	Alex Boutsioulis	The United Illuminating Company	✓									
230.	Mark Graham	Tri-State G&T										
231.	Gary Trent	Tucson Electric Power Company	✓									
232.	Jim Haigh (G9)	WAPA										
233.	Steve Rueckert (G16)	WECC Committees and Subgroups										✓
234.	Christopher Plante	Wisconsin Public Service Corp			✓	✓	✓					

Commenter		Organization	Industry Segment									
			1	2	3	4	5	6	7	8	9	10
235	Neal Balu (G9)	WPS			✓		✓	✓				
236	Pam Oreschnick (G9)	XCEL										

I – Indicates that individual comments were submitted in addition to comments submitted as part of a group
G1 – Dominion Virginia Power
G2 – American Electric Power
G3 – BPA Transmission
G4 – American Public Power Association
G5 – FirstEnergy Corporation
G6 – Florida Power & Light Company
G7 – FRCC
G8 – Midwest ISO, Inc. (MISO)
G9 – Midwest Reliability Organization (MRO)
G10 – NPCC RCG
G11 – SERC EC PSS
G12 – SERC EC DRS
G13 – Santee Cooper
G14 – SERC RRS OPS
G15 – Southern Company Services, Inc.
G16 – WECC Committees and Subgroups
G17 – PJM (ISO/RTO)

Index to Questions, Comments, and Responses

A) New Definitions 18

1) Q1. Base Case: Computer representation of the projected initial or starting Transmission System conditions for a specific point in time. Each base case reflects the forecasted Load at each bus (or node) on the interconnected Transmission System, the transmission facilities which deliver the generation and reactive resources to the connected Load, and the generation dispatch including firm transaction obligations assumed to supply the connected Load. The models also reflect facility ratings in accordance with FAC-008 & FAC-009. 18
2) Q2. Consequential Load Loss: Load that is no longer served because it is directly connected to an element(s) that is removed from service due to fault clearing action or mis-operation. 23
3) Q3. Extreme Events: Events which are more severe than Planning Events and have a low probability of occurrence. 36
4) Q4. Long-Term Transmission Planning Horizon: Transmission planning period that covers years six through ten or beyond. 41
5) Q5. Near-Term Transmission Planning Horizon: Transmission planning period that covers years one through five. 44
6) Q6. Non-Consequential Load Loss: Load loss other than Consequential Load Loss. For example, Load loss that occurs through manual (operator initiated) or automatic operations such as under-voltage Load shedding, under-frequency Load shedding, or Special Protection Systems. 47
7) Q7. Planning Assessment: Documented evaluation of future Bulk Electric System needs by the use of performance studies that cover a range of assumptions regarding system conditions, time frames, future plans including capital reinforcements and operating procedures and other factors, such as asset conditions and age. 54
8) Q8. Planning Events: Events which require Transmission system performance requirements to be met. 61
9) Q9. Plant Stability Study: Study of an individual plant's Stability for various Contingencies in the vicinity of the plant; concerned with the effect on the System of the generating units' loss of synchronism and the damping of the generating units' power oscillations. 65
10) Q10. System Stability Study: Study of the System or portions of the System to ensure that angular Stability is maintained, inter-area power oscillations are damped, and voltages during the dynamic simulation stay within acceptable performance limits. 73
11) Q11. Year One: The first year that a Transmission Planner is responsible for studying. This is further defined as the planning window that begins the next calendar year from the time the Transmission Planner submits their annual studies. Analysis conducted for time horizons within the calendar year from the study publication are assumed to be conducted under the auspices of Operations Planning. 77

B) Sensitivity Studies 82

12) Q12. Should the standard provide more specific direction regarding the number of sensitivity cases that need to be developed? 83
13) Q13. Should the standard specify the required changes, such as changes in expected transfers, load forecasts, generation patterns, etc., from the study case to be considered a "reasonably stressed" case? 92
14) Q14. The SDT proposes to require the use of sensitivity studies for Near-Term Transmission System Planning Horizon stability analysis. Do you concur with the use of sensitivity analysis in dynamic studies? 104
15) Q15. The draft TPL standard does not require the use of sensitivity studies for the Long-Term Transmission System Planning Horizon (year six and beyond) studies. Do you concur with this approach or should there be some level of sensitivity analysis required for the long-term period? 112

C) Corrective Action Plans 118

16) Q16. Requirement R2.7.1: Such Corrective Action Plans shall "Identify System deficiencies and the associated actions needed to achieve required System performance including Transmission and generation improvements, DSM, new technologies, or Operating Procedures including the duration of Interim Operating Procedures". System deficiencies may be corrected using an integrated plan, i.e., an optimal mix of Transmission, generation, DSM and Operating Procedures. Should DSM be considered in conjunction with other measures in developing Corrective Action Plans? If yes, please comment on how the impact of DSM should be included. 118
17) Q17. Requirement R2.7.2: Such Corrective Action Plans shall "Be added to study cases and the cases re-tested to show that the System with planned additions meets the performance requirements in the tables". Should new studies, including the facilities comprising the Corrective Action Plan, be performed to assess System normal performance and Contingency response for conditions that previously resulted in the System deficiencies (without the planned additions) and also demonstrate that the changes would not result in inadvertent negative impacts on the System. If you "agree", please comment on how a study area should be determined. 127
18) Q18. Requirement R2.7.3: The standard calls for a differentiation between committed and proposed projects. Do you agree that they should be treated separately? If not, please state why not. 137
19) Q19. Requirement R2.7.4: For such Corrective Action Plans "Committed projects shall not be removed without documentation to show that the revised plan meets the performance requirements". Do you agree or disagree with this requirement? If you disagree, please explain why. 144
D) Performance Requirements 151
Do you agree that Non-Consequential Loss of Load should not be permitted for the following events? If you disagree, please provide a reason for your disagreement. 152
20) Q20. P2-1: Loss of bus section (SLG for stability) above 300 kV 152
21) Q21. P5-1: For facilities above 300 kV, loss of a Transmission circuit followed by System adjustment[1] followed by loss of another Transmission circuit 161
22) Q22. P5-2: For facilities above 300 kV, loss of a Transmission circuit followed by System adjustment followed by loss of a transformer with low side voltage rating above 300 kV 167
23) Q23. P5-3: For facilities above 300 kV, loss of a transformer with low side voltage rating above 300 kV followed by System adjustment followed by loss of another transformer 175
The proposed standard is based on an assumption that performance requirements for non-bus tie EHV breakers should be distinguished from other breakers. Do you agree that Non-Consequential Loss of Load should not be permitted for this event? 182
24) Q24. Loss of non-bus tie breaker (above 300 kV) due to internal fault 182
The proposed standard is based on an assumption that performance requirements for non-bus tie EHV breakers should be distinguished from other breakers and that performance requirements for EHV facilities should be more stringent than for lower voltage facilities. Do you agree that Non-Consequential Loss of Load should not be permitted for this event? 190
25) Q25. P3-1: Loss of (SLG for stability) either a generator, a Transmission circuit, a transformer, or a bus and a stuck non-bus tie breaker (above 300 kV) 190
The proposed standard is based on an assumption that the following events are relatively high probability events and, therefore, Non-Consequential Loss of Load should not be permitted. Do you agree? If you disagree, please provide a reason for your disagreement. 197
26) Q26. P4-1: Loss of a Generator followed by System adjustment followed by loss of another Generator 197
27) Q27. P4-2: Loss of a generator followed by a System adjustment followed by the loss of a monopolar DC line 205

28) Q28. P4-3: Loss of a generator followed by System adjustment followed by loss of a Transmission circuit 210
29) Q29. P4-4: Loss of a generator followed by System adjustment followed by loss of a transformer 215
The performance requirement for the following event may be considered less stringent than the existing TPL Standards — P2-3: Loss of a single pole of a DC line. Interruption of firm transactions (without Loss of firm Load) if the transaction is dependent on the faulted DC line is now allowed for this initiating event/Contingency. 219
30) Q30. Do you agree that interruption of any firm transfers that are dependent on the outaged DC line that is taken out of service should be permitted? 219
E) Stability 223
31) Q31. The proposed standard is based on an assumption that steady state analysis and stability analysis are different from each other and that therefore, two tables of Contingencies and performance requirements were needed. It is also based on an assumption that stability study requirements should be clearly separated from the steady state study requirements. Do you agree with the action taken in separating stability analysis from steady state analysis? If not, please explain. 223
32) Q32. The SDT has added requirements for plant stability studies and has drawn a distinction in these studies from System stability studies. Do you agree with this approach? If not, please explain. 228
33) Q33. The existing TPL-004-0 standard has a requirement to consider the Loss of all generating units at a plant, but it was not clear whether this requirement should apply to stability studies. The SDT did not include this requirement in the stability table, because it is hard to envision a condition when all units would trip simultaneously within the timeframe of a stability simulation. Do you think this condition should be required in stability analysis of Extreme Events? If not, please explain. 235
34) Q34. There are an increasing number of events with slow voltage recovery after faults on the Transmission System. The dynamic behavior of induction motor loads is a major factor in this phenomenon. The proposed standard therefore requires that the load model for stability studies of peak Load conditions include the dynamic effects of induction motors. Do you agree with this requirement? If not, please explain? 241
35) Q35. What type of manual or automatic adjustments of generators should be allowed for single and multiple Contingencies? 247
F) Generation Runback and Tripping 252
36) Q36. The proposed standard allows generation runback after the disturbance that causes a single Contingency (or due to a single Contingency outage) to move the Interconnected Transmission System from an emergency state (within emergency ratings) to a normal state (within normal ratings), assuming that the disturbance does not result in instability? Do you agree? If not, please explain. 252
37) Q37. Since emergency ratings are thermal ratings, should this standard allow an automatic generation runback scheme (that is initiated immediately after the disturbance causing the single Contingency) to prevent thermal overloads (assuming that the disturbance does not result in instability)? If yes, what are the conditions that must be met in order to allow such a runback scheme to meet the System performance criteria for single Contingencies? Please explain the reason for your answer. 258
38) Q38. Do you agree that RAS or SPS may be allowed for single Contingencies? If not, please explain. 263
39) Q39. Please describe the limitations that you believe should be placed on the use of RAS or SPS for single Contingency events. 268
40) 40. When RAS or SPS are allowed, what conditions should be met when these systems are used in system adjustments to meet performance requirements? 275
G) General Questions 281
41) Q41. If you are aware of any regional variances that would be required as a result of these standards, please identify them here. 281

42) Q42. If you are aware of any conflicts between the proposed standards and any regulatory function, rule order, tariff, rate schedule, legislative requirement or agreement, please identify them here.
43) Q43. Do you have any other questions or concerns with the proposed standard that have not been addressed? If yes, please explain.

A) New Definitions

Many of the concerns about the existing TPL standards come from the fact that a number of generally understood concepts are embedded in undefined terms, tables, and footnotes. To clarify some of these concerns, the standard drafting team is proposing new definitions. Please indicate whether you agree with the following proposed definitions and provide proposed changes to the definitions if you disagree:

1) **Q1. Base Case: Computer representation of the projected initial or starting Transmission System conditions for a specific point in time. Each base case reflects the forecasted Load at each bus (or node) on the interconnected Transmission System, the transmission facilities which deliver the generation and reactive resources to the connected Load, and the generation dispatch including firm transaction obligations assumed to supply the connected Load. The models also reflect facility ratings in accordance with FAC-008 & FAC-009.**

Summary Response: After reviewing the comments to this proposed definition and the use of the term "base case" in the standard, the SDT determined that "Base Case" does not need to be a defined term.

Organization	Q1. **Comment**	Agree.	Don't agree.
AECC	Neutral. This is a little wordy but I don't have a better answer.		
ABB	Agree but delete "or node". It is unnecessary.	X	
AEP	Consider replacing"computer" with "model".	X	
ATC	We agree with the definition given in the draft standard date Sep-12, 2007. The last sentence is not consistent with the definition given in the draft standard.		X
CenterPoint CPS Energy	Firm transaction obligations are not used throughout all regions in NERC. Change "including firm transaction obligations" to "including firm transaction obligations where applicable."		X
E ON US	Why define a term that is used only once in the document (R.2.1.2.1) and is, by definition, applicable to a[ny] specific point in time.		X
FPL & FRCC	"Computer" is not appropriate. Replace with "Data model" or "Database model". The last sentence is not clear as to what type of ratings (i.e., normal, short-term emergency, long-term emergency, etc.). Suggest removing sentence completely or rewording as follows: "... in accordance with the documented methodologies required by FAC-008 for each Transmission Owner and Generator Owner."		X
Georgia Transm. Corp	The base case is also a representation of firm transactions through a BES, generation resources, and models reactive components.		X
LADWP	A basecase is a representation of the interconnected power system network at a given instant of time which correctly models an expected network topology in sufficient details (transmission lines, shunt and series compensations, transformers, breakers, phase-shifting transformers, etc.) , the forecasted loads, and a dispatch of connected generations that would achieve load-generation balance to allow a numerical solution without violation of any reliability standards. The resultant flows on the transmission lines are dictated by the Kirchhoff's laws, not laws of commerce, and therefore, cannot		X

Organization	Q1. **Comment**	Agree.	Don't agree.
	be interpreted as either firm or non-firm commercial transactions. A basecase is just a starting point from which transmission planners can make use of to further stress the portion of the systems that are of interests, to properly evaluate the robustness and reliability of the system and to determine line (non-thermal) ratings or network expansions, as needed.		
Northwestern Energy	NWE recommends the words "and may include non-firm transactions" after the words "firm transaction obligations".	X	
NERC TIS	The definition should differentiate between powerflow and dynamics base cases.	X	
LCRA	Should read "Computer model representation of…"	X	
PJM	Also FAC-010.	X	X
Santee Cooper	Delete the phrase "and reactive resources." It is redundant.	X	
SERC RRS OPS	Delete the phrase "and reactive resources."	X	
RFC	To add clarity, the terms "power flow" and "dyanamic" should be included in the definition above. It seems that the defintion may be more detailed than needed without these two terms.		X
Southern Transmission	As stated the definition does not appear to allow for equivalenced system representation since it refers to "each bus on the interconnected Transmission System". The words "as represented in the model" should be added after "interconnected Transmission System" or another sentence should be added stating that equivalenced system representation is acceptable. A definition of a dynamics base case should also be considered.		X
Response: Definition of "base case" has been deleted. Therefore concern is no longer applicable.			
City Water Light and Power	This should not be a defined term in the Glossary, instead there should be a Standard that provides the industry with the requirements for completing a Base Case Study.		X
Response: Definition of "base case" has been deleted, as suggested. However, the SDT believes this standard contains requirements for planning reliable transmission systems, including performing appropriate studies.			
APPA	This should not be a defined term in the Glossary, instead there should be a Standard written that provides the industry with the requirements for completing a Base Case Study. This is the first step in completing the Transmission Studies required in TPL-001. There is no guarantee that the rules used by the transmission planners for the base case studies are done in a reliable manner. The Standard needs to be expanded to insure oversight by the compliance monitors to ensure that the base case is sound from a reliability perspective. Also, both reliability and transparency require that the results of the base case study along with the assumptions used to develop the study must be shared with responsible entities within contiguous areas of the BES, not just with contiguous Planning Coordinators and Transmission Planners. To insure consistent results, the Standard should require that a properly conducted Base Case Study be based on agreed rules for conducting such studies within each		X

Organization	Q1. **Comment**	Agree.	Don't agree.
	interconnection and use of consistent data/assumptions by other entities in the region; otherwise, the results of each PC's and TP's planning horizon studies and the operation planning studies will be brought into question.		
Response: Definition of "base case" has been deleted, as suggested. However, the SDT believes this standard contains requirements for planning reliable transmission systems, including performing appropriate studies. The remainder of APPA's comments is not responsive to Q1 and will be addressed in response to Q43.			
Central Maine Power HQTE National Grid New England ISO NU NPCC RCWS NSTAR United Illuminating	There are a few undefined terms in this definition: "Transmission System" and "interconnected Transmission System". The definition needs to specifically identify what should be modeled and in a manner consistent with other NERC definitions. The definition refers to Facility ratings rather than the general reference to FAC-008 & FAC-009		X
Response: Definition of "base case" has been deleted. However, "Transmission System" is not intended as a new term. "Transmission" and "System" are defined in the NERC Glossary of Terms.			
City Utilities/Springfield	The manner in which the forecasted bus load is determined needs to be defined with clear and consistent assumptions and methodologies such that the results of transmission studies are reasonably valid throughout the entire planning horizon.		X
Response: The SDT believes the additional requirements are too prescriptive for this standard but, if appropriate, may be further detailed in MOD standards, which could be further modified through submittal of a SAR if necessary.			
WECC BPA TSGT TEP	A Base Case can only represent the amount of transactions required to serve connected load modeled in the case (local load?). A Path Rating case (developed to represent maximum transfers on a path) would not be considered a base case under this definition. WECC develops base cases to study high power transfers under stressed conditions. Such high power transfers necessarily include both firm and non-firm transaction obligations. Therefore, a base case that represents firm transactions to support "connected load" only, cannot be used to support studies of maximum possible power transfer and is of limited value in WECC. We agree that the above definition is one definition of a base case, but we feel that it can not be the only definition or the limiting definition. We suggest that wording be included that reflects the concept of modeling forecasted or above forecasted load levels if desired, and both firm and non-firm transactions if necessary to model anticipated maximum transfers and represent stressed system conditions as well. The definition should refer to the base case as a Computer Simulation Model of the power system, not a Computer Representation of the transmission system, since it is used within a computer program and represents load and generation in addition to	X	X

Organization	Q1. **Comment**	Agree.	Don't agree.
	transmission. References to "the generation dispatch and firm transaction obligations to supply the connected load" should be removed. A base case is a starting case for any condition that needs to be studied, not just a firm transactions case. Firm obligations across the transmission system are many times independent of a specific load service obligation.		
Response: Definition of "base case" has been deleted. However, the SDT believes some of these issues, particularly relating to the need to study variations from base case conditions, are addressed by Requirement 2.1.3.			
Ameren	Yes, we agree that the "base case" is a power flow model and is the starting point of the analysis. What we are concerned with are the assumptions that go into the development of the "base case". The season, time of day, load level, generation dispatch assumptions, facilities in service, and interchange assumptions (all based on best available data) are just a small subset of the issues that need to be addressed in the development of the base case. We have concerns that so-called "stressed cases" proposed in the standard for compliance testing may in reality be contingency cases, from which additional compliance performance testing would be required.	X	
Response: Definition of "base case" has been deleted. Furthermore, the term "stressed cases" is no longer used in the revised draft.			
ITC	Firm obligations may possibly include obligations beyond "firm transactions" which most likely means grandfathered transactions and TSRs as you have written it. The planning base cases should have sufficient margins to cover uncertainties as well as "firm transactions". The ATCTDT has "drafts" in place which require that TRM and CBM be included in transmission planning studies for both the near-term and long-term planning horizons. While they are drafts at this stage, consideration should be given to including their requirements in your drafts.	X	
Response: Definition of "base case" has been deleted. The SDT appreciates your comments on TRM and CBM; however, these issues will be covered by a separate drafting team.			
Allegheny Power		X	
New York ISO		X	
NCEMC		X	
Manitoba Hydro		X	
MEAG Power		X	
MISO		X	
SaskPower		X	
Seattle City Light		X	
SERC EC DRS		X	
SERC EC PSS		X	
MRO		X	
Muscatine P&W		X	

Organization	Q1. **Comment**	Agree.	Don't agree.
AECI	No comment.	X	
Brazos Electric	No comment.	X	
Dominion	No comment.	X	
ERCOT ISO	It is a fair description for an initial base case.	X	
IESO	The proposed definition fairly reflects the starting point system model used for planning and operations studies.	X	
Duke Energy		X	
KCPL		X	
LUS		X	
Entegra		X	
Entergy		X	
Exelon		X	
FirstEnergy		X	
Progress–Carolinas		X	
Progress–Florida		X	
SCANA		X	
Tenaska		X	
TVA		X	
BCTC		X	
CAISO	It is a fair description for an initial base case.	X	
WPSC		X	
Response:	Thank you. Please see the Summary Response.		

2) Q2. Consequential Load Loss: Load that is no longer served because it is directly connected to an element(s) that is removed from service due to fault clearing action or mis-operation.

Summary Response: The SDT reworded the definition to better clarify that Consequential Load Loss is Load loss that occurs when the source to that Load is lost or Load that is lost due to the Load's transient response to the event being studied. Also the SDT revised this definition as follows to eliminate confusion regarding references to concepts such as fault clearing action, mis-operation, or radial Load:

Consequential Load Loss: Load that is no longer ~~served because it is directly connected to an element(s) that is removed from service due to fault clearing action or mis-operation~~ connected to a source as a result of the event being studied or which is lost as a result of the load's response to the transient conditions of the event (other than through the action of UVLS or UFLS schemes). Although Load which is lost as a result of the Load's response to the transient conditions of the event is considered Consequential Load Loss and is permitted when Consequential Load Loss is allowed, Transmission planning entities are not allowed to rely upon the expectation of such Load loss to meet steady state performance requirements.

Commenter	Q2. **Comment**	Agree.	Don't agree.
ABB	See Q6. Also, from your definition above, a better term would be "directly-connected load loss". This is clear and to the point.		X
Response: The SDT revised this definition to include Load that is no longer connected to a source as a result of the event being studied. **Consequential Load Loss:** Load that is no longer ~~served because it is directly connected to an element(s) that is removed from service due to fault clearing action or mis-operation~~ connected to a source as a result of the event being studied or which is lost as a result of the Load's response to the transient conditions of the event (other than through the action of UVLS or UFLS schemes). Although Load which is lost as a result of the Load's response to the transient conditions of the event is considered Consequential Load Loss and is permitted when Consequential Load Loss is allowed, Transmission planning entities are not allowed to rely upon the expectation of such Load loss to meet steady state performance requirements.			
AECC	My primary concern with TPL-001-1 is that the problems with footnote B of Table 1 in the current TPL standards have merely been given a different dress and makeup and are now being passed off in the definitions of Consequential Load Loss and Non-Consequential Load Loss. I hope this is not the intent and that my concern is a matter of education. None the less, my first impression leads me to the interpretation above. I will attempt to explain. My concern is based in the methodology used to conduct studies and as a result how the consequential and non-consequential definitions will apply. Specifically the use of a breaker to breaker (BtB) contingency methodology verses an element by element (EtE) methodology. By EtE an element is defined as any switchable device either manual or automatic.		X

Commenter	Q2. **Comment**	Agree.	Don't agree.
	BtB may be useful and may have a place in some system analysis but it only gives a very limited view of the impacts and does not take into account the corresponding operational actions that will take place as a result of a fault event. BtB also does not provide for impacts that might occur during system reconfiguration due to maintenance. EtE provides a much more comprehensive evaluation of the impacts that might be seen on a system and in my opinion is a best practice as opposed to BtB. My concern was raised when during the drafting teams webex on October 11, I heard comments made by the drafting team that "the system should be studied as it is operated". If this comment was intended to mean that events should be studied beyond their initial response then fine otherwise the comment should be clarified. Without clarification, statements like this can be interrupted to mean and only reinforce the mentality that BtB or other inadequate study methods are adequate and can continue to be used. What has all this to do with consequential vs. non-consequesntial load loss? I am getting there. If BtB analysis is permissiable then I disagree with the definitions of consequential and non-consequential load loss. Here is why: It is understandable that a load being normally served (prior to an event) by a radial (meaning one source) will be lost if an event occurs that removes the source. This to me is consequential load. On the other hand, if a load is being served from a transmission line with sources and breakers at both ends (networked) and the line experiences a fault, how is the load on the faulted line classified? Before you jump to an answer, let me explain why I asked. If a fault occurs on a section of the line then obviously both breakers should operate to clear the fault and the load would be removed from the system. This is what is mimicked in breaker to breaker analysis. The problem is that breaker to breaker analysis stops there and some may argue that this is adequate and that the load lost is consequential. I beg to differ. In reality the transmission line will be sectionalized to restore service to the load and isolate the faulted portion of the line. A new steady state condition results one or two radials replacing the faulted transmission line. The impacts of which would be captured if EtE analysis occurs. Because the load is served after the event it should not be classified as consequential. The load being served by resulting radials would not be classified as consequential until the next fault event occurred. Because the system can be sectionalized by switchable devices to establish the new steady state is one reason why switchable devices need to be added to the definition of element.		

Commenter	Q2. **Comment**	Agree.	Don't agree.
	It can be expected from the examples above that the resulting radial(s) serving the load may create greater impacts on the system than the original networked line. The load in this case is not consequential. This is what happens in actual operations, this is what needs to be studied, and the standard needs to ensure that the BES maintains the ability to adequately serve the load following such an event. Having the capability to serve load following the isolation of a faulted section of line is one of the reasons why the networked system was developed in the first place. Another example of radial configuration of networked lines occurs during maintenance. A section of line is taken out of service and ALL load is still served. In this case the load is not consequential because no fault has occurred and again the impacts may be greater than the original networked line. Again these impacts can only be determined by studying the system on an EtE basis. Today's world often forgets that serving load is the reason the BES exist. The BES therefore should be capable of adequately serving the load not only under normal operating conditions and the most common contingency conditions but also under the resulting steady state configuration following a contingency. The BES should be planned in a manner that addresses these contingencies and not in a manner that just seeks to do enough to be able to report compliance. In conclusion, I offer the following recommendations: #1: The definition of Element in the NERC Glossary should be modified to: 1. Include switchable devices either manual or automatic. 2. Clearly define what constitutes an element Suggested modification: Element = Any switchable electrical device (either automatic or manual) with terminals that may be connected to other electrical devices such as a generator, transformer, circuit breaker, bus section, or transmission line. An element may be comprised of one or more elements. The last sentence was struck because you can't define something using the term you are trying to define. #2: The definition of consequential load loss needs further clarification. Consider replacing "due to fault clearing action or misopertion" with "as a result of new steady state conditions following a Planning or Extreme Event."		

Commenter	Q2. **Comment**	Agree.	Don't agree.
	#3: The definition of Planning Events should not be limited to the initial event such as breaker opening for a fault but should include any and all actions taken to sectionalize so that at the end of a Planning Event you have a system that is in steady state and serving as much load as possible. Suggestion: Planning Events = Events which remove one or more Elements and require Transmission system performance requirements to be met. This definition includes the initial event and any after event actions that result in the system returning to a steady state condition and preventing as serving as much Consequential load as possible. #4: The standard should include the expectation that the BES will be studied at some level (at least n-1) using EtE methodology.		
Response: One of the drivers for developing the definitions for Consequential Load and the use of some entities of BtB methodology referred to in your comments were concerns expressed in interviews by NERC TIS and FERC.. The interviews revealed that some planners were running simulations of single contingency by removing "elements" modeled in the simulation, e.g. impedance data from one bus number to another. This removed "element" did not even necessarily represent a real life switchable system element and this is reflected in requirements R3.2 and R4.2 of the Standard. The concept of Consequential Load was needed to clarify that under certain circumstances the standard allows for load to be dropped following the first contingency. As you indicated the planner must consider how the system can be switched and reconfigured to the point that loadings can be returned to within acceptable limits. The SDT has revised the definition to provide more clarity.			
PJM	Need to tighten definition example- load that trips in sympathy with fault (motor trips as a direct result but not in protection zone)	X	X
Response: The SDT revised the definition to better clarify what constitutes Consequential Load Loss in response to various comments.			
ATC	Voltage sensitive load loss (not due to operator action or UVLS) in response to a disturbance should constitute consequential load loss. Loss (drop) of voltage sensitive load must be included in this definition --- it is not non-consequential loss of load.		X
Response: The SDT revised this definition to include Load that is lost as a result of the Load's response to the transient conditions of the event. **Consequential Load Loss:** Load that is no longer ~~served because it is directly connected to an element(s) that is removed from service due to fault clearing action or mis-operation~~ connected to a source as a result of the event being studied or which is lost as a result of the load's response to the transient conditions of the event (other than through the action of UVLS or UFLS schemes). Although Load which is lost as a result of the Load's response to the transient conditions of the event is considered Consequential Load Loss and is permitted when			

Commenter	Q2. **Comment**	Agree.	Don't agree.
Consequential Load Loss is allowed, Transmission planning entities are not allowed to rely upon the expectation of such Load loss to meet steady state performance requirements.			
E ON US	I agree with the definiton except for "or mis-operation". The requirements do not, and should not, include mis-operation of protection schemes. We would never finish a study of all potential mis-operations.		X
Response: The SDT revised this definition to exclude any information that could be confusing, including the mention of misoperations. **Consequential Load Loss:** Load that is no longer ~~served because it is directly connected to an element(s) that is removed from service due to fault clearing action or mis-operation~~ connected to a source as a result of the event being studied or which is lost as a result of the load's response to the transient conditions of the event (other than through the action of UVLS or UFLS schemes). Although Load which is lost as a result of the Load's response to the transient conditions of the event is considered Consequential Load Loss and is permitted when Consequential Load Loss is allowed, Transmission planning entities are not allowed to rely upon the expectation of such Load loss to meet steady state performance requirements.			
BCTC	For the reasons discussed below, we do not agree with the proposed definition. To address our concerns and address the FERC staff concern regarding ambiguity, the proposed definition could be made acceptable to us by modifying it as follows: Load that is no longer served because it either (a) was supplied (wholly or partly) by an element(s) of a radial system or local network that was removed from service due to fault clearing action, was disconnected by controlled interruption to avoid overload of remaining elements of a radial system or local network, or protection or SPS/RAS mis-operation or (b) has dropped out or been tripped during a transient stability period, including an automatic reclosing period, due to a fault on the radial system or local network, including on branches not directly supplying the load. We also offer the following alternative: Resultant loss or controlled interruption of customers supplied by a radial system or local network, due to a fault on or loss of a facility in the radial system or local network. The definition proposed by the SDT removes the second sentence of footnote (b), as directed by FERC, and replaces the first sentence of footnote (b) with a new definition. We agree with the removal of the second sentence of footnote (b). However, we have a concern with this definition replacing the first sentence of footnote (b). We believe that the existing first sentence is a more appropriate definition of consequential load loss and that the proposed definition is more stringent and will have unacceptable impacts on reliability and/or add transmission costs that cannot be justified.		X

Commenter	Q2. **Comment**	Agree.	Don't agree.
	The coining of the term "Consequential Load Loss" has been a significant improvement in terminology compared to our reference to footnote (b). However, FERC only used this phase descriptively and did not order NERC to reconsider what would be acceptable consequential load loss (i.e. revise the first sentence of footnote (b)). The definition appears to be based on an interpretation of the new term rather than defining what this term was coined to describe. Order 693 requires that footnote (b) be clarified to not allow loss of firm load or firm transfers - i.e. delete the second sentence. Order 693 then refers to the remaining first sentence as consequential load loss. Order 693 does not address issues regarding whether this should further be restricted to only radial lines, not permitting load loss for outages on local networks. Nothing in the NOPR or the staff paper implies otherwise. The staff paper discusses potential ambiguity regarding which single contingencies load interruption is permitted for. The definition attempts to address this by referring to "directly connected" load. However, this is now ambiguous as "directly connected" might be interpreted to mean only the facility that the load is physically connected to and excluding any upstream facility. BCTC submits that the upstream facilities need to include both radial facilities and local networks. NERC has stated that looped configurations are key for reliable operation. We consider looped configurations and local networks to be the same thing. The proposed definition will make it more difficult to transition from a radial supply to a looped configuration. For radial loads connected by a single radial line, when the load exceeds the line capacity, the transmission owner has alternatives of upgrading the line, adding a second circuit, or converting to a local network by providing a loop from another supply. With the addition of a second circuit or conversion to local network, controlled load interruption may be necessary for loss of one circuit to avoid overload of the second line. Without the option of controlled load interruption, these alternatives will not provide N-1 capability for all loads they supply without addition of a third circuit. This will lead to a economic preference to upgrading of the existing circuit to meet criteria, thereby perpetuating the single radial line configuration. Other alternatives could include splitting the load between the lines or operating with one line out of service so that a single contingency does not overload the facilities remaining in service. However, the addition of a second circuit with controlled load interruption will provide a more reliable load serve than any of these		

Commenter	Q2. **Comment**	Agree.	Don't agree.
	alternatives, because under N-1 more load will remain continuously on line. We expect that the proposed definition will provide greater assurance that existing local networks with N-1 capability will continue to have N-1 capability. However, we have concluded that the definition will introduce an additional unacceptable barrier to transition from N-0 to N-1 supply and that this barrier is not acceptable. We believe that this barrier would be a more significant issue for improving the reliability of supply to all customers than the current situation of permitting some controlled load interruption on local networks. Another issue that arises if local networks are excluded is load response during transient periods. Customers can connect voltage sensitive loads, such as large motors, on long weak systems. During the transient stability period, voltages can dip to below the ride through capability of the load. The fault need not be on the circuit directly supplying the customer, but may be downstream or on another branch facility. Automatic reclosing is often employed to shorten restoration times, but with the consequence of worsening the transient period. Customers have options to install different types of motors, motor controls, local voltage support to mitigate impacts of transient voltage swings, or simply restart motors following the disturbance. If transmission systems are required to ensure no loss of load during transient stability periods for external faults, a first course of action may be to remove automatic reclosing, which will reduce reliability. Alternatively, customer load connections may be denied or additional transmission circuits may be required, which can be costly compared to the customer load options.		
City Water Light and Power	This could be load lost which is on a radial line or load served by facilites which do not have fault-interrupting breakers.	X	
Duke Energy	It is unclear what is meant by "mis-operation". The SDT also needs to address load lost during the transient time frame (e.g. load dropout due to low voltages as a result of a fault) that may not be directly connected to the element removed from service.		X
Entegra	Further examination is needed to determine how to correctly treat loads served downstream from the faulted element, but not directly connected.		X
Georgia Transm. Corp	This definition implies that load that is lost past the directly connected load is allowed. Therefore the definition should be changed to include radially connected load and load that is radialized as a result of a contingency or mis-operation.		X
LADWP	The existing standards do not allow load loss for N-1 contingency unless the load is a radial load of the outage element. This new definition appears an attempt to weaken the requirement by broadening it to anything "directly connected" to an element that is removed from service. While it may be argued that probably only radially connected loads fit this definition, this new definition will lead to more creative		X

Commenter	Q2. **Comment**	Agree.	Don't agree.
	interpretation of the word "consequential" and leads all of us down unintended consequence. A radial load is a very specific and clearly defined technical term and should not be changed to a new term that is less precise.		
MRO	The MRO could not agree on the correct definition.		X
Santee Cooper	The term "mis-operation" introduces ambiguity into the definition, and should be deleted. The definition needs further clarification for consequential and non-consequential loads. For example, loads served downstream from the faulted element but not directly connected should also be considered to be consequential loads. A better name for this would be "direct load loss".		X
FirstEnergy	We suggest that the team remove "or misoperation" from the definition. This could suggest that an overtrip of protection equipment could result in consequential load loss.		X
NCEMC SERC EC PSS	The term "mis-operation" introduces ambiguity into the definition, and should be deleted. The definition needs further clarification for consequential and non-consequential loads. For example, loads served downstream from the faulted element but not directly connected should also be considered to be consequential loads.		X
NERC TIS	MISOPERATION has to be qualified as being a misoperaiton on the system element that trips.	X	
RFC	Should the above definition contain a statement that the load is not intentionally lost, since non-consequential load loss is intentional?		X
SERC EC DRS	Add the following to the end of the definition: "or unintentional load lost as a direct result of the event (e.g. load dropout due to low voltages as a result of a fault)."		X
Southern Transmission	This definition only relates to load that is "directly connected" to the specific element being removed. It does not allow for any load that may be or becomes radially connected through another branch that is not part of the facility removed. It does not make sense to not allow the loss of load that is actually electrically radial to the facility being outaged. The definition may work better as "Load that is no longer served because it is directly connected to or radially served through an element(s) that is removed from service due to fault clearing action." The word "mis-operation" is not needed in this definition because none of the contingency events use this term.		X
BPA	Support comments submitted by WECC. The definition needs to consider loads that are tripped sympathetically that may not be directly connected to the element that is removed from service for fault clearing.	X	X
WECC TSGT TEP	Agree with the definition in concept. However, the wording makes the definition seem unrealistic. There are many examples where a certain amount of voltage sensitive load or motor drives sensitive to angle changes are dropped due to normally cleared electrical faults on the transmission system. These loads are not directly connected to the element being removed from service. This type of sympathetic loss of load is	X	X

Commenter	Q2. **Comment**	Agree.	Don't agree.
	unique to the individual customer load. The design of these loads is not under the control of the utilities when it comes to ability to ride through normally cleared faults. We suggest that this definition be modified to include the loss of sensitive load that is not directly connected to the element being removed. We propose the following the definition : Load that is no longer served because it is directly connected to an element(s) that is removed from service due to fault clearing action or mis-operation, and because of sympathetic tripping associated with normal clearing or mis-operation. Load that is lost because it trips due to low voltages experienced during and immediately following the fault (4-6 cycles?) is also considered consequential load loss. We believe this additional recognition is needed because load lost due to low fault voltages is unavoidable and should not result in a standard violation.		
Response: The SDT reworded the definition to better clarify that Consequential Load Loss is Load loss that occurs when the source to that Load is lost or Load that is lost due to the Load's transient response to event being studied. **Consequential Load Loss:** Load that is no longer ~~served because it is directly connected to an element(s) that is removed from service due to fault clearing action or mis-operation~~ connected to a source as a result of the event being studied or which is lost as a result of the load's response to the transient conditions of the event (other than through the action of UVLS or UFLS schemes). Although Load which is lost as a result of the Load's response to the transient conditions of the event is considered Consequential Load Loss and is permitted when Consequential Load Loss is allowed, Transmission planning entities are not allowed to rely upon the expectation of such Load loss to meet steady state performance requirements.		
AEP	Consider replacing "Consequential" with better wording (no specific suggestion to offer at this time).	X	
Ameren	A better name for this would be "direct load loss". The definition should include load served by the faulted element but not directly connected to the faulted element.	X	
SERC RRS OPS	The term "mis-operation" introduces ambiguity into the definition, and should be deleted. The definition needs further clarification for consequential and non-consequential loads. For example, loads served downstream from the faulted element but not directly connected should also be considered to be consequential loads. A better name for this would be "Planned Load Loss."		X
Entergy	Delete "mis-operation". For purposes of planning, all consequential load loss should reflect intended fault clearing actions and not unintended fault clearing actions (i.e., mis-operations). Include load loss due to UVLS & SPS in consequential load loss category. Consider using the terms in the existing standard; "Planned Load Loss" and "Unplanned Load Loss" in lieu of Consequential and Non-consequential as they may be		X

Commenter	Q2. **Comment**	Agree.	Don't agree.
	easier to define with each Transmission Owner/Planning Authority responsible for defining the terms considering the impact on the Bulk Electric System. If the terms remain as proposed, the definition needs further clarification for consequential and non-consequential loads. For example, loads entirely dependent on the faulted element but not directly connected should also be defined to be consequential loads.		
HQTE	``directly-connected`` load loss would be more clear	X	X
ITC	Suggest a change in terminology to "direct".	X	
MEAG Power	MEAG believes that deleting the term "mis-operation" as some may have suggested, would significantly narrow the definition of Consequential Load Loss, which in turn would unreasonably increase the amount of load that is Non-Consequential. The Non-consequential load loss, which is not allowed in P1-P5. For example, if mis-operation is deleted from the definition and we consider a relay mis-operation where a breaker fails to clear a fault, then any additional load interrupted by the back-up to the failed breaker/relay is Non-Consequential Load (and the standard appears to be violated since only a single transmission circuit was faulted and Non-Consequential Load was lost).	X	
MISO	Midwest ISO suggests this definition be changed to "Direct Load Loss", as "Consequential Load Loss" may include elements that are not directly connected to the faulted element.		X
SCANA	"Consequential Load Loss" should be termed "Intentional or Planned Load Loss". Not only should direct connected load loss be included, but loads served by or downstream from the faulted element, that is not directly connected to the faulted element, should also be included.		X
Tenaska	Using consequential and non-consequential seem to be misleading. Perhaps using "direct" and "indirect". Also, mis-operation needs some more explanation and to why it should be included here.		X
TVA	We recommend that the terms consequential and non-consequential be changed to direct and indirect. Also, the term should be better defined. We recommend that the definition be "loads that have been de-energized by fault-clearing action or loads that are lost even though the system performance remains within acceptable limits."		X

Response: The SDT reworded the definition to better clarify that Consequential Load Loss is Load loss that occurs when the source to that Load is lost or Load that is lost due to the Load's transient response to the event being studied. The SDT is concerned that the use of alternative terms might be confusing. Among other things, the terms used in the proposed standard are consistent with terms used by FERC.

Consequential Load Loss: Load that is no longer ~~served because it is directly connected to an element(s) that is removed from service due to fault clearing action or mis-operation~~ connected to a source as a result of the event being studied or which is lost as a result of the load's

Commenter	Q2. **Comment**	Agree.	Don't agree.
response to the transient conditions of the event (other than through the action of UVLS or UFLS schemes). Although Load which is lost as a result of the Load's response to the transient conditions of the event is considered Consequential Load Loss and is permitted when Consequential Load Loss is allowed, Transmission planning entities are not allowed to rely upon the expectation of such Load loss to meet steady state performance requirements**.**			
FPL FRCC	Need to clarify what constitues an element (e.g., breaker-to-breaker, line segment to line segment, transformer or capacitor bank)		X
Response: "Element" has been removed.			
SaskPower	What is meant by directly connected? Local area network load is allowed to be shed in Saskatchewan. The Saskatchewan Regulatory Jurisdiction has no plans to change this unless there is technical evidence to justify the increase in reliability.		X
Response: The SDT reworded the definition to better clarify that Consequential Load Loss is Load loss that occurs when the source to that Load is lost or Load that is lost due to the Load's transient response to the event being studied.. Without knowing under what conditions network Load can be shed in Saskatchewan, the SDT does not know whether the proposed standard would cause a change in Saskatchewan's practices or reliability. **Consequential Load Loss:** Load that is no longer ~~served because it is directly connected to an element(s) that is removed from service due to fault clearing action or mis-operation~~ connected to a source as a result of the event being studied or which is lost as a result of the load's response to the transient conditions of the event (other than through the action of UVLS or UFLS schemes). Although Load which is lost as a result of the Load's response to the transient conditions of the event is considered Consequential Load Loss and is permitted when Consequential Load Loss is allowed, Transmission planning entities are not allowed to rely upon the expectation of such Load loss to meet steady state performance requirements**.**			
Manitoba Hydro	If load losses due to stuck breaker and back-up breaker operations (which would frequently result in the loss of two or more network transmission elements) are not going to be qualified as "Consequential", where should they be placed? MH cannot visualize them as "Non-Consequential", as defined in Q6. Either another "load" category must be developed for these loads, or they should remain as "Consequential". In addition, Consequential Load Loss should include the concept of local area load loss to cover a scenario of islanding with a UFLS in the island, or a small network served at the end of a radial line.Can the SDT comment on why this Local Area defined in the existing TPL stds has been removed?	X	
Response: The SDT reworded the definition to better clarify that Consequential Load Loss is Load loss that occurs when the source to that Load is lost or Load that is lost due to the Load's transient response to the event being studied. However, Load losses associated with a stuck breaker would be considered consequential if they were the result of the initiating event. UFLS activation should not occur on a single Contingency event and would not be considered consequential. A radial Load is directly connected since it has no other source post event and would be consequential. **Consequential Load Loss:** Load that is no longer ~~served because it is directly connected to an element(s) that is removed from service due~~			

Commenter	Q2. **Comment**	Agree.	Don't agree.
~~to fault clearing action or mis-operation~~ connected to a source as a result of the event being studied or which is lost as a result of the load's response to the transient conditions of the event (other than through the action of UVLS or UFLS schemes). Although Load which is lost as a result of the Load's response to the transient conditions of the event is considered Consequential Load Loss and is permitted when Consequential Load Loss is allowed, Transmission planning entities are not allowed to rely upon the expectation of such Load loss to meet steady state performance requirements**.**			
APPA	This definition will help define what cascading outage is. There is confusion in the industry and FERC as to "what is a cascading outage." The planning process needs to address this confusion and define exactly what a cascading outage consists. Some want a cascading outage to be when loads beyond the primary or secondary protection equipment are dropped.	X	
Response: The SDT agrees that additional clarification is needed regarding cascading outages. FERC is currently working on modifying this definition. However, the definition of cascading outages is a separate issue from the definition of Consequential Load Loss.			
ERCOT ISO	Agree with the definition.	X	
Northwestern Energy		X	
CAISO	Agree with the definition	X	
CenterPoint		X	
Central Maine Power		X	
City Utilities/Springfield		X	
CPS Energy		X	
Allegheny Power		X	
Exelon		X	
Brazos Electric		X	
LCRA		X	
IESO	This is the same understanding of the IESO.	X	
KCPL		X	
LUS		X	
Muscatine P&W		X	
National Grid		X	
New England ISO		X	
New York ISO		X	
NU		X	
NPCC RCWS		X	
Nstar		X	
Progress–Carolinas		X	
Progress–Florida		X	
Seattle City Light		X	
Dominion		X	

Commenter	Q2. **Comment**	Agree.	Don't agree.
United Illuminating		X	
WPSC		X	
Response: Thank you. Please see the Summary Response.			

3) Q3. Extreme Events: Events which are more severe than Planning Events and have a low probability of occurrence.

Summary Response: Industry comments were mixed, with some commenters agreeing with the proposed definition and others disagreeing. Among the disagreeing commenters, several noted that a more accurate characterization of Extreme Events would be that Extreme Events have a "lower probability of occurrence than Planning Events" because even Planning Events have a low probability of occurrence. Based on the comments, the SDT revised this definition as follows:

Extreme Events: Events which are more severe and have a lower probability of occurrence than Planning Events ~~and have a low probability of occurrence~~.

Commenter	Q3. **Comment**	Agree.	Don't agree.
Ameren	Most planning events have a low probability of occurrence. It appears that the SDT is trying to make a distinction that these Extreme Events would have a lower probability of occurrence than planning events. Consideration should be given to adding the performance requirements with the definition.		X
ITC	R3.4 implies that "Extreme Events" will be studied as per the table. The definition seems functionally correct as applied to the standard but somewhat confusing. The existing wording implies that a mitigation plan should be developed if studies show that "Extreme Events" might cause cascading. If the mitigation plan is a true requirement, saying it is not a planning event can be confusing. "Extreme Events are more severe than Planning Events, have a low probability of occurrence and only require___?????_____ in the event of cascade."	X	
WPSC	By definition, Extreme Events are not Planning Events. However, only the definition Planning Events has a requirement to meeting performance requirements. I believe Extreme Events also have performance requirements under R3.4 and its definition should reflect this.		X
Response: The SDT revised this definition in response to various comments. However, the SDT disagrees that performance requirements should be included in the definition as is proposed in the comment. **Extreme Events**: Events which are more severe and have a lower probability of occurrence than Planning Events ~~and have a low probability of occurrence~~.			
ATC Central Maine Power	Suggest "Events which are more severe and have a lower probability of occurrence than the Planning Events"		X
AECC	This is too vague. The old Table 1 did a better job of defining Extreme Events.		X
City Water Light and Power	More needs to be added here, especially to define the phrase "low probability of occurrence". Does this refer to N-1, N-2, N-3 etc.? We have a 300 foot long interconnection line between two substations. In this case even N-1 has a low probability of occurrence. This N-1 event has a much lower probability of occurrence than an N-2 event which involves generator outages. We also have an N-1 SPS event		X

Commenter	Q3. **Comment**	Agree.	Don't agree.
	which hasn't occurred in 25 years.		
E ON US	I disagree with the phrase "and have a low probability of occurance". All the Planning Events, except possibly a generator outage (P1.1), have a low probability of occurance.		X
ERCOT ISO CAISO	Add specificity in this definition. Suggest the following wording: Outage of two or more elements from service with lower probability of occurrence than Planning Events.		X
BCTC	Alternative wording proposed: Events which have a low probability of occurrence and are typically more severe than Planning Events. Explanation: The primary consideration is the probability of occurrence. We do not exclude events simply because they are more severe.		X
Entegra	The statement would be clearer if "low" were changed to "lower".		X
MEAG Power NCEMC Santee Cooper SERC EC DRS SERC EC PSS SERC RRS OPS TVA	A number of the non-Extreme Events also have a low probability. Recommend change the word to "lower." The definition for "Extreme Events" should reference Table 1.		X
MISO	Extreme Events are clearly described on Table 1. Change definition from "low probability of occurrence to "lower probability of occurrence".		X
MRO	Low probability of occurrence should be in reference to something to be more meaningful. The MRO suggests that the definition be changed to state "lower probability of occurrence than Planning Events."		X
Entergy	Revise to, "Events which are beyond the normal scope of Planning Events and have a lower probability of occurrence."		X
KCPL	Suggest changing "low" to "lower".	X	
LCRA	Define "low probability of occurrence"	X	
National Grid New England ISO Sask Power United Illuminating	Modify to "Events which are more severe,but have a lower probability of occurrence, than Planning Events".		X
FPL FRCC HQTE IESO	Suggest reword as follows: "Events which are more severe and have a lower probability of occurrence than planning events."		X

Commenter	Q3. **Comment**	Agree.	Don't agree.
Manitoba Hydro NYISO NU NPCC RCWS NSTAR			
PJM	Agree with concept but need better definition	X	X
Southern Transmission	Recommend modifying the definition to read: "Events which are more severe than Planning events that are evaluated as required by TPL-001-1 Tables 1 and 2, in part, to identify potential Cascading Outages.		X
Tenaska	I think most people understand, but in this new world we need to put some more specificity around the words "low probability".		X
Response: The SDT revised this definition in response to various comments. **Extreme Events**: Events which are more severe and have a lower probability of occurrence than Planning Events ~~and have a low probability of occurrence~~			
APPA	The definition is needed; however, this term is dependent on a clear definition of Planning Events, which does not exist.		X
Response: The SDT revised the definition of Planning Events in response to comments received for Q8 with the intent of adding more clarity to this definition. **Planning Events:** Events ~~which~~ that require Transmission system performance requirements to be met.			
Georgia Transm. Corp	All events on the BES have a low probability of occurrence. Extreme Events are those events that have a high consequence to the BES if they were to occur.		X
Response: The SDT revised this definition in response to various comments. Specifically, in response to the recommendation of several commenters, the SDT revised the definition of Extreme Events to indicate these events have a lower probability of occurrence than Planning Events. However, the consequence is determined by simulating these lower probability events. Therefore, the SDT believes it would be inappropriate to define the consequence. **Extreme Events**: Events which are more severe and have a lower probability of occurrence than Planning Events ~~and have a low probability of occurrence~~			
LADWP	Extreme Events for transmission planning should be defined as anything more than N-2. The proposed definition is subjective and not precise. There are examples in this standard as to how this definition can be mis-construed, e.g., cyber attack, wild-fire, hurricanes, etc. These are Extreme Events that belong in emergency planning, not transmission planning.		X
Response: The SDT revised this definition in response to various comments. Specifically, in response to the recommendation of several commenters, the SDT revised the definition of Extreme Events to indicate these events have a lower probability of occurrence than Planning Events. The SDT also modified the standard to clarify Extreme Events.			

Commenter	Q3. **Comment**	Agree.	Don't agree.
Extreme Events: Events which are more severe and have a lower probability of occurrence than Planning Events ~~and have a low probability of occurrence~~			
NERC TIS	The use of the term Extreme should be limited to those events that are truly extreme. A single line-to-ground fault with delayed clearing (for whatever reason) may require remote clearing of the fault, and trips multiple system elements, without time between elements being outaged. Such events are far too common occurrences to call them extreme.		X
Response: The SDT revised this definition in response to various comments. The SDT also modified the performance tables in response to various comments. **Extreme Events**: Events which are more severe and have a lower probability of occurrence than Planning Events ~~and have a low probability of occurrence~~			
WECC BPA TSGT TEP	Please add the phrase "two or more elements out of service" to the definition from the previous definition in Table I.	X	X
Response: The SDT revised this definition in response to various comments. However, the SDT believes the suggested phrase would be imprecise for the standard as currently drafted because some Extreme Events do not necessarily involve "two or more elements out of service". For example, one type of "extreme event" is loss of a large Load or major Load center, which might possibly occur without two or more elements out of service. **Extreme Events**: Events which are more severe and have a lower probability of occurrence than Planning Events ~~and have a low probability of occurrence~~			
Dominion	To make this "crisp", it is suggested that this definition be extended as "Events which …..occurrence. The Transmission system performance requirements do not apply to Extreme Events".	X	
Response: The SDT revised this definition in response to various comments. However, the SDT is concerned that the language proposed in this comment may cause confusion because requirement R3.4 applies to Extreme Events. **Extreme Events**: Events which are more severe and have a lower probability of occurrence than Planning Events ~~and have a low probability of occurrence~~			
FirstEnergy	The definition is OK, but we question its use in the standard. Many of the items listed as Extreme Events are not considered events. For example, high river temperature is not really an event, it is a condition. The resulting event might be the shut-down of multiple generators.	X	
Response: The SDT revised this definition in response to various comments. The SDT also modified the standard to clarify Extreme Events. **Extreme Events**: Events which are more severe and have a lower probability of occurrence than Planning Events ~~and have a low probability~~			

Commenter	Q3. **Comment**	Agree.	Don't agree.
~~of occurrence~~			
ABB		X	
Allegheny Power		X	
AEP		X	
Brazos Electric		X	
CenterPoint		X	
City Utilities/Springfield		X	
CPS Energy		X	
Exelon		X	
Duke Energy		X	
LUS		X	
Muscatine P&W		X	
Northwestern Energy		X	
Progress–Carolinas		X	
Progress–Florida		X	
RFC		X	
SCANA		X	
Seattle City Light		X	
AECI	However this could be very subjective.	X	
Response: Thank you. Please see the Summary Response.			

4) Q4. Long-Term Transmission Planning Horizon: Transmission planning period that covers years six through ten or beyond.

Summary Response: Most commenters agreed with the proposed definition, but a few commenters raised issues about the use of the term "beyond". Therefore, the SDT revised the definition as follows to clarify when the horizon may extend beyond ten years:

Long-Term Transmission Planning Horizon: Transmission planning period that covers years six through ten or beyond when required to accommodate any known longer lead time projects that may take longer than ten years to complete.

Commenter	Q4. **Comment**	Agree.	Don't agree.
Central Maine Power NU NSTAR United Illuminating	"A Planning Assessment period that covers years six through ten", is sufficient for the standard." Suggest changing the name to Long-Term Planning Assessment.		X
Response: The SDT believes the term "or beyond" after "years Six through Ten" is necessary for the proposed standard as currently drafted to agree with Requirement R2.2.1, which requires a planning horizon beyond ten years if necessary. Moreover, the use of the phrase "planning horizon" in this definition is intended to indicate the period of time applicable to the assessment.			
FRCC	The definition does not have a reference year when the counting starts. Add the following to the end of the sentence: "… from the current study year."		X
Response: The SDT concurs that a reference year when the counting starts is necessary. The SDT proposed Year One as the reference year when the counting starts.			
AECC	With the time it takes to get transmission planned, approved and built the 10 year time frame is too short. Six to ten year studies are fine but longer term studies need to be performed occasionally. If the requirement remains vague and says 6 to 10 years then what will happen is only 6 year studies. Coupled with the 1 to 5 years in the Near Term Horizon then you potentially set up a situation where you could have a 5 and a 6 year study done. This defeats the purpose of what the intent of the defintion should be. I suggest that 1, 2, 5, 10, 15 year studies be required.		X
Response: The SDT believes the definition should clarify the intent that assessments will cover ten years and may extend beyond ten years if necessary (see Requirement R2.2.1). This definition was revised for additional clarity. **Long-Term Transmission Planning Horizon:** Transmission planning period that covers years six through ten or beyond when required to accommodate any known longer lead time projects that may take longer than ten years to complete.			
LADWP	The objection is not so much about the definition as about what comes after the definition. This standard proposed to include operating and market studies (calling them sensitivities) in the "near-term" planning studies. It appears that the SDT believes this would be easier to justify if the sensitivities is limited to near-term and		X

Commenter	Q4. **Comment**	Agree.	Don't agree.
	not long-term, hence the motivation for breaking the planning horizon. But this is misguided; operating studies belongs in operating standards. They should be addressed appropriately in the TOP for operating scenarios and Market related studies should be addressed in MOD, for example. There are no benefits to include these in transmission planning studies and therefore no need to break up the planning horizon.		
Response: The SDT disagrees and believes sensitivity studies should be performed in the planning horizon. Furthermore, the requirement for sensitivity studies is responsive to FERC Order 693.			
National Grid New England ISO	"Transmission planning period that covers years six through ten", is sufficient for the standard."		X
SRP	Reword to: Transmission planning period that covers years six or beyond.	X	
Response: The SDT believes the definition should clarify the intent that assessments will cover ten years and may extend beyond ten years if necessary (see Requirement R2.2.1). This definition has been revised for additional clarity. **Long-Term Transmission Planning Horizon:** Transmission planning period that covers years six through ten or beyond when required to accommodate any known longer lead time projects that may take longer than ten years to complete.			
ABB		X	
ATC		X	
Brazos Electric		X	
City Water Light and Power		X	
Dominion		X	
E ON US		X	
ERCOT ISO		X	
Northwestern Energy		X	
AECI		X	
Allegheny Power		X	
AEP		X	
APPA	This definition is needed to eliminate the confusion that exists in the industry.	X	
BPA		X	
BCTC		X	
CAISO	Agree with the definition	X	
CenterPoint		X	
City Utilities/Springfield		X	
CPS Energy		X	
Duke Energy		X	
Entegra		X	
Entergy		X	
Exelon		X	

Commenter	Q4. **Comment**	Agree.	Don't agree.
FirstEnergy		X	
FPL		X	
Georgia Transm. Corp		X	
HQTE		X	
IESO	Consistent with the IESO's understanding.	X	
ITC		X	
KCPL		X	
LUS		X	
LCRA		X	
Manitoba Hydro		X	
MEAG Power		X	
MISO		X	
MRO		X	
Muscatine P&W		X	
NERC TIS		X	
New York ISO		X	
NCEMC		X	
NPCC RCWS		X	
Progress–Carolinas		X	
Progress–Florida		X	
RFC		X	
Santee Cooper		X	
SaskPower		X	
Seattle City Light		X	
SERC EC DRS		X	
SERC EC PSS		X	
SERC RRS OPS		X	
SCANA		X	
Southern Transmission	No Additional Comments.	X	
Tenaska		X	
TVA		X	
TSGT		X	
TEP		X	
WECC		X	
Response: Thank you. Please see the Summary Response.			

5) Q5. Near-Term Transmission Planning Horizon: Transmission planning period that covers years one through five.

Summary Response: The majority of the commenters agreed with the proposed definition; therefore, the SDT did not modify the definition.

Commenter	Q5. **Comment**	Agree.	Don't agree.
AECC	I agree with the definition but I don't think studies should necessarily be required for all of the years 1 through 5. Years 1 and 2 probably need to be required because of they are sometimes used as the basis for the development of seasonal models and studies used in the opertional horizon in many Open Access Tariffs.	X	
Response: The minimum requirements for the near term are identified under Requirement R2.1. Past studies can also be included as identified in Requirement R2.6.			
Ameren Santee Cooper SERC RRS OPS	It is suggested that another definition be added for "operations planning horizon".		
Response: The reference to Operations Planning in Q11 was erroneous. The term "operations planning horizon" is not defined because it is not used in the standard.			
LADWP	See my comment above; the only part about the definition that I would retain is to require each of the first five years in a typical ten-year plan be studied instead of just picking one or two years out of the first five years.		X
Response: LADWP's comment does not appear to be directed solely at Q5. In addition, the SDT disagrees with the proposed modification of the requirement.			
Central Maine Power	Suggest changing the name to Near-Term Planning Assessment, and introduce the description the same was as above.	X	
New England ISO NU NSTAR United Illuminating	Suggest changing the name to Near-Term Planning Assessment.	X	
Response: The use of the phrase "planning horizon" in this definition is intended to indicate the period of time applicable to the assessment.			
ABB		X	
ATC		X	
Brazos Electric		X	
City Water Light and Power		X	
Dominion		X	
E ON US		X	
ERCOT ISO	Agree with definition.	X	
Northwestern Energy		X	
AECI		X	
AESO		X	

Commenter	Q5. **Comment**	Agree.	Don't agree.
Allegheny Power		X	
AEP		X	
APPA	This definition is needed to eliminate the confusion that exists in the industry.	X	
BPA		X	
BCTC		X	
CAISO	Agree with the definition	X	
CenterPoint		X	
City Utilities/Springfield		X	
CPS Energy		X	
Duke Energy		X	
Entegra		X	
Entergy		X	
Exelon		X	
FirstEnergy		X	
FPL		X	
FRCC		X	
Georgia Transm. Corp		X	
HQTE		X	
IESO	Same as above.	X	
ITC		X	
KCPL		X	
LUS		X	
LCRA		X	
Manitoba Hydro		X	
MEAG Power		X	
MISO		X	
MRO		X	
Muscatine P&W		X	
National Grid		X	
NERC TIS		X	
New York ISO		X	
NCEMC		X	
NPCC RCWS		X	
Progress–Carolinas		X	
Progress–Florida		X	
RFC		X	
SaskPower		X	

Commenter	Q5. **Comment**	Agree.	Don't agree.
Seattle City Light		X	
SERC EC DRS		X	
SERC EC PSS		X	
SCANA		X	
Southern Transmission	No Additional Comments.	X	
Tenaska		X	
TVA		X	
TSGT		X	
TEP		X	
WECC		X	
Response: Thank you.			

6) **Q6. Non-Consequential Load Loss: Load loss other than Consequential Load Loss. For example, Load loss that occurs through manual (operator initiated) or automatic operations such as under-voltage Load shedding, under-frequency Load shedding, or Special Protection Systems.**

Summary Response: Based on comments, the SDT revised this definition to specify that this is non-interruptible load as follows to add further clarity:

Non-Consequential Load Loss: ~~Load loss other than Consequential Load Loss. For example, Load loss that occurs through manual (operator initiated) or automatic operations such as under-voltage Load shedding, under-frequency Load shedding, or Special Protection Systems.~~ Non-Interruptible Load loss other than Consequential Load Loss. For example, non-Interruptible Load loss that occurs through manual (operator initiated) or automatic operations such as under-voltage Load shedding, under-frequency Load shedding, or Special Protection Systems would be considered Non-Consequential Load Loss.

Commenter	Q6. **Comment**	Agree.	Don't agree.
AECC	See my comments on Consequential Load Loss. The definition is too vague to just say "load loss other than Consequential Load Loss". The defintion should be clear and examples should not be used to make the definition. This is a bad habit that NERC has which leads the industry to establish status quo based on the examples and not the definition itself. It sounds like Consequential Load Loss is being tied to short circuit fault events and Non-Consequential Load Loss is being tied to events other than short circuit fault events. Remember that undervoltage, underfrequency and SPS are still triggered by "faults". If that is the intent then say it. Don't put forth a vague definition and then try to justify its meaning by an example.		X
IESO	Suggest to either stop at "automatic operations" or to include other examples since the list is not exhaustive, for example: load that drops out due to unacceptable voltage levels (not tripped intentionally by UVLS.		X
New York ISO	Suggest that examples not be listed or a more exhaustive list be developed.		X
Response: See responses to Q2. The SDT revised the definitions of Consequential Load Loss and Non-Consequential Load Loss in response to various comments. However, the SDT believes that the examples add clarity, even if not exhaustive. **Non-Consequential Load Loss:** ~~Load loss other than Consequential Load Loss. For example, Load loss that occurs through manual (operator initiated) or automatic operations such as under-voltage Load shedding, under-frequency Load shedding, or Special Protection Systems.~~ Non-Interruptible Load loss other than Consequential Load Loss. For example, non-Interruptible Load loss that occurs through manual (operator initiated) or automatic operations such as under-voltage Load shedding, under-frequency Load shedding, or Special Protection Systems would be considered Non-Consequential Load Loss.			
PJM	Non-Consequential Load Loss should not include load loss due to manual, UVLS and UFLS.	X	X
Response: The SDT believes that Load loss that occurs from manual action, UVLS, or UFLS is not a direct consequence of the event being studied and is in fact the type of distinction the SDT intended to make. The SDT believes that Consequential Load Loss is Load loss that			

Commenter	Q6. **Comment**	Agree.	Don't agree.
occurs when the source to that Load is lost or Load that is lost due to the Load's response to a transient condition of the event being studied. All other Load that is lost is non-consequential.			
ABB	Most people will think of inconsequential, which often means irrelevant, unimportant, or insignificant. But what you are trying to define is the opposite: load loss that is significant, important, and needs to be prevented. Also, whatever you call it, your examples (UVLS, UFLS, SPS) should be expanded to include unintentional and uncontrolled load loss due to low voltage, high current, impedance relays, etc.		X
Ameren Santee Cooper	A better name for this would be "indirect load loss".		
Georgia Transm. Corp HQTE	Suggest a change in title to Indirect Load Loss		X
MISO	Midwest ISO suggests this definition be changed to "Indirect Load Loss", as "Non-Consequential Load Loss" may be confusing regarding the cause-and-effect relationship between a faulted element and subsequent loss of load.		X
SERC RRS OPS	A better name for this would be "Unplanned Load Loss". Load loss that occurs from UFLS, UVLS, load shedding or SPS should be moved to Planned Load Loss. Unplanned load loss would be all other load loss other than planned.		X
TVA	See comment for Q2. We recommend that this term is defined as "load loss other than consequential load loss".		X
ITC	May want to change the terminology as some may interpret this to mean load that is not important and can routinely be shed for any contingency. Suggest 'direct load loss' and 'indirect load loss'. Potential Definition: Load that is not intended to be lost for normal fault clearing or during mis-operation but could be lost either by design, such as under frequency relaying, SPS or backup breaker clearing, or thru manual operator action.	X	
Response: See responses to Q2. The SDT revised this definition in response to various comments. However, the SDT is concerned that the use of alternative terms might be confusing. Among other things, the terms used in the proposed standard are consistent with terms used by FERC. Moreover, in response to SERC's comment, the SDT believes that Load loss that occurs from UFLS, UVLS, Load shedding or SPS is not a direct consequence of the event being studied and is in fact the type of distinction the SDT intended to make. **Non-Consequential Load Loss:** ~~Load loss other than Consequential Load Loss. For example, Load loss that occurs through manual (operator initiated) or automatic operations such as under-voltage Load shedding, under-frequency Load shedding, or Special Protection Systems.~~ Non-Interruptible Load loss other than Consequential Load Loss. For example, non-Interruptible Load loss that occurs through manual (operator initiated) or automatic operations such as under-voltage Load shedding, under-frequency Load shedding, or Special Protection Systems would be considered Non-Consequential Load Loss.			
ATC	Reference to SPS must be excluded from this definition. We recommend that the SDT address what System Elements and/or Load may be tripped by an SPS for each Planning Event in the performance table after N-1-1 scenarios for P3-P5 events.		X

Commenter	Q6. **Comment**	Agree.	Don't agree.
FirstEnergy	We suggest eliminating the reference to Special Protection Systems (SPS). Some SPSs could result in tripping of load in association with a fault. By specifically listing SPSs here, it could imply that if that situation occurs, it would not be considered consequential load drop.		X
Response: The SDT believes that Load loss that occurs from an SPS is not a direct consequence of the event being studied and is in fact the type of distinction the SDT intended to make. FERC has determined that any Load loss that is not directly connected to the faulted element is actually Non-Consequential Load Loss.			
City Water Light and Power APPA	This definition should go beyond just saying "Load loss other than Consequential Load Loss." Recommend adding the following: " . . . including Load Loss that occurs through planned manual (Transmission Operator, Distribution Provider, and so-on) operation or planned automatic operation of load shedding equipment such as under-frequency Load shedding devices or Special Protection Systems."		X
Response: See responses to Q2. The SDT revised this definition in response to various comments. **Non-Consequential Load Loss:** ~~Load loss other than Consequential Load Loss. For example, Load loss that occurs through manual (operator initiated) or automatic operations such as under-voltage Load shedding, under-frequency Load shedding, or Special Protection Systems.~~ Non-Interruptible Load loss other than Consequential Load Loss. For example, non-Interruptible Load loss that occurs through manual (operator initiated) or automatic operations such as under-voltage Load shedding, under-frequency Load shedding, or Special Protection Systems would be considered Non-Consequential Load Loss.			
CAISO	Add Remedial Action Schemes (RAS) after "Systems"		X
ERCOT ISO	Add Remedial Action Schemes (RAS) after "Systems" Amend sentence beginning "For example, Load loss that "directly" occurs…		X
Response: The NERC Glossary of Terms clarifies that the terms "Special Protection System" and "Remedial Action Scheme" can be used interchangeably.			
BCTC	See comments on Consequential Load Loss. Propose the following definition to clarify situations for which NCLL is acceptable: Load loss other than Consequential Load Loss to avoid cascading, voltage stability, or blackout of the BES. For example, load loss that occurs through manual (operator initiated) or automatic operations such as under-voltage load shedding, under-frequency load shedding, or SPS/RAS.		X
SCANA	This term is not needed. See comments on "Consequential Load Loss/Intentional Load Loss".		X
Response: See responses to Q2. The SDT revised this definition in response to various comments. However, the SDT is concerned that the use of alternative terms might be confusing. Among other things, the terms used in the proposed standard are consistent with terms used by FERC. **Non-Consequential Load Loss:** ~~Load loss other than Consequential Load Loss. For example, Load loss that occurs through manual~~			

Commenter	Q6. **Comment**	Agree.	Don't agree.
~~(operator initiated) or automatic operations such as under-voltage Load shedding, under-frequency Load shedding, or Special Protection Systems.~~ Non-Interruptible Load loss other than Consequential Load Loss. For example, non-Interruptible Load loss that occurs through manual (operator initiated) or automatic operations such as under-voltage Load shedding, under-frequency Load shedding, or Special Protection Systems would be considered Non-Consequential Load Loss.			
Entergy	We recommend to treat load losses due to UVLS & SPS as examples of consequential load loss (refer to question 2).		X
Response: The SDT believes that Load loss that occurs from an SPS or UVLS is not a direct consequence of the event being studied and is in fact the type of distinction the SDT intended to make. FERC has determined that any Load loss that is not directly connected to the faulted element is actually Non-Consequential Load Loss			
FPL FRCC	Reword as follows: "Firm load loss other than Consequential Load Loss. For example, Load loss that occurs through manual (operator initiated) or automatic operations such as under-voltage Load shedding, under-frequency Load shedding, or Special Protection Systems, excluding curtailments, DSM, and voltage reduction."		X
Response: The SDT revised this definition in response to various comments. However, the SDT ddisagrees with curtailments, DSM, and voltage reduction as these are real-time operating actions that must be taken pre-Contingency and are unrelated to Consequential Load Loss and Non-Consequential Load Loss. **Non-Consequential Load Loss:** ~~Load loss other than Consequential Load Loss. For example, Load loss that occurs through manual (operator initiated) or automatic operations such as under-voltage Load shedding, under-frequency Load shedding, or Special Protection Systems.~~ Non-Interruptible Load loss other than Consequential Load Loss. For example, non-Interruptible Load loss that occurs through manual (operator initiated) or automatic operations such as under-voltage Load shedding, under-frequency Load shedding, or Special Protection Systems would be considered Non-Consequential Load Loss.			
LADWP	See my comment on the Consequential load loss. Why introduce two new and less precise definitions to replace one existing clearly defined definition? Radial load is precise and clearly defined to transmission planners.		X
Response: See responses to Q2. The SDT revised the definitions of Consequential Load Loss and Non-Consequential Load Loss in response to various comments. However, radial Load is not sufficiently precise and is itself confusing if left as the sole explanation. **Non-Consequential Load Loss:** ~~Load loss other than Consequential Load Loss. For example, Load loss that occurs through manual (operator initiated) or automatic operations such as under-voltage Load shedding, under-frequency Load shedding, or Special Protection Systems.~~ Non-Interruptible Load loss other than Consequential Load Loss. For example, non-Interruptible Load loss that occurs through manual (operator initiated) or automatic operations such as under-voltage Load shedding, under-frequency Load shedding, or Special Protection Systems would be considered Non-Consequential Load Loss.			
Tenaska	See Q2 answer.		X
Response: Please refer to the SDT reply to Q2 comments.			
TSGT	same as WECC group comments		X
BPA	Support comments submitted by WECC.		X
WECC	Please add "or Remedial Action schemes" to the end of the definition. FERC Order		X

Commenter	Q6. **Comment**	Agree.	Don't agree.
TEP	693, paragraph 1773 states (6)"clarifies footnote (b) to Table 1 to allow no firm load or firm transactions to be interrupted except for consequential load loss." There needs to be a distinction made between Interruptible Load and Firm Demand.		
Response: The SDT revised this definition in response to various comments. However, the NERC Glossary of Terms clarifies that the terms "Special Protection System" and "Remedial Action Scheme" can be used interchangeably. **Non-Consequential Load Loss:** ~~Load loss other than Consequential Load Loss. For example, Load loss that occurs through manual (operator initiated) or automatic operations such as under-voltage Load shedding, under-frequency Load shedding, or Special Protection Systems.~~ Non-Interruptible Load loss other than Consequential Load Loss. For example, non-Interruptible Load loss that occurs through manual (operator initiated) or automatic operations such as under-voltage Load shedding, under-frequency Load shedding, or Special Protection Systems would be considered Non-Consequential Load Loss.			
SaskPower			X
Response: The SDT revised this definition in response to various comments. **Non-Consequential Load Loss:** ~~Load loss other than Consequential Load Loss. For example, Load loss that occurs through manual (operator initiated) or automatic operations such as under-voltage Load shedding, under-frequency Load shedding, or Special Protection Systems.~~ Non-Interruptible Load loss other than Consequential Load Loss. For example, non-Interruptible Load loss that occurs through manual (operator initiated) or automatic operations such as under-voltage Load shedding, under-frequency Load shedding, or Special Protection Systems would be considered Non-Consequential Load Loss.			
Northwestern Energy	Include the words "not directly connected" before period of first sentence; and what does "load loss" mean?	X	X
Response: See responses to Q2. The SDT revised this definition in response to various comments. However, the SDT is concerned that the use of alternative terms might be confusing. Moreover, the SDT believes the term "Load loss" is largely self-explanatory and is further clarified by the examples provided in the definition. **Non-Consequential Load Loss:** ~~Load loss other than Consequential Load Loss. For example, Load loss that occurs through manual (operator initiated) or automatic operations such as under-voltage Load shedding, under-frequency Load shedding, or Special Protection Systems.~~ Non-Interruptible Load loss other than Consequential Load Loss. For example, non-Interruptible Load loss that occurs through manual (operator initiated) or automatic operations such as under-voltage Load shedding, under-frequency Load shedding, or Special Protection Systems would be considered Non-Consequential Load Loss.			
AEP	Consider replacing "Non-Consequential" with better wording (no specific suggestion to offer at this time).	X	
RFC	Recommend adding that this load loss is "intentional".	X	
Response: See responses to Q2. The SDT revised this definition in response to various comments. However, the SDT is concerned that the use of alternative terms might be confusing. **Non-Consequential Load Loss:** ~~Load loss other than Consequential Load Loss. For example, Load loss that occurs through manual (operator initiated) or automatic operations such as under-voltage Load shedding, under-frequency Load shedding, or Special Protection~~			

Commenter	Q6. **Comment**	Agree.	Don't agree.
~~Systems.~~ Non-Interruptible Load loss other than Consequential Load Loss. For example, non-Interruptible Load loss that occurs through manual (operator initiated) or automatic operations such as under-voltage Load shedding, under-frequency Load shedding, or Special Protection Systems would be considered Non-Consequential Load Loss.			
AECI		X	
Allegheny Power		X	
Brazos Electric		X	
CenterPoint		X	
Central Maine Power		X	
City Utilities/Springfield		X	
CPS Energy		X	
Duke Energy		X	
Entegra		X	
Exelon		X	
Dominion		X	
E ON US		X	
KCPL		X	
LUS		X	
LCRA		X	
Manitoba Hydro		X	
MEAG Power		X	
MRO		X	
Muscatine P&W		X	
National Grid		X	
New England ISO		X	
NCEMC		X	
NCMPA		X	
NU		X	
NPCC RCWS		X	
Nstar		X	
Progress–Carolinas		X	
Progress–Florida		X	
Seattle City Light		X	
SERC EC DRS		X	
SERC EC PSS		X	
Southern Transmission	Agree assuming the change in Q2 is made.	X	
United Illuminating		X	
WPSC		X	

Commenter	Q6. **Comment**	Agree.	Don't agree.
Response: Thank you. Please see the Summary Response.			

7) **Q7. Planning Assessment: Documented evaluation of future Bulk Electric System needs by the use of performance studies that cover a range of assumptions regarding system conditions, time frames, future plans including capital reinforcements and operating procedures and other factors, such as asset conditions and age.**

Summary Response: Based on the comments, the SDT revised this definition to be more succinct and eliminate the description of the possible range of assumptions. The definition was also modified to clarify that the assessment is an evaluation of Transmission System performance (not needs) and Corrective Action Plans associated with identified deficiencies.

Planning Assessment: Documented evaluation of future Transmission System performance and Corrective Action Plans to remedy identified deficiencies. ~~Bulk Electric System needs by the use of performance studies that cover a range of assumptions regarding system conditions, time frames, future plans including capital reinforcements and operating procedures and other factors, such as asset conditions and age.~~

Commenter	Q7. **Comment**	Agree.	Don't agree.
AECC	Planning assessments shouldn't be limited to the future. Sometimes an assessment needs to be made to benchmark and validate models. Strike: future		X
Response: The SDT revised this definition in response to various comments. However, the purpose of the standard is to assess future transmission needs. Other standards are related to benchmarking and validating models. **Planning Assessment:** Documented evaluation of future Transmission System performance and Corrective Action Plans to remedy identified deficiencies. ~~Bulk Electric System needs by the use of performance studies that cover a range of assumptions regarding system conditions, time frames, future plans including capital reinforcements and operating procedures and other factors, such as asset conditions and age.~~			
City Water Light and Power	This definition is too vague. A Planning Assessment should cover the Near-Term or Long-Term Planning Horizon and include Base Case and Contingency Analysis according to NERC Standards.		X
Response: Based on the comments, the SDT revised this definition to be more succinct. Other requirements explain the horizon and conditions required to be studied and should not be included in the definition. **Planning Assessment:** Documented evaluation of future Transmission System performance and Corrective Action Plans to remedy identified deficiencies. ~~Bulk Electric System needs by the use of performance studies that cover a range of assumptions regarding system conditions, time frames, future plans including capital reinforcements and operating procedures and other factors, such as asset conditions and age.~~			
APPA	This is too general. Just about any kind of review will qualify as a Planning Assessment. Suggested definition: "Documented evaluation of future Bulk Electric System needs by the use of performance studies such as NERC Steady State Transmission Studies or Plant Stability Studies conducted in accordance with the NERC Reliability Standards."		X
BCTC	Need to insert the word "supported", as below, and further refine, to clarify that the Planning Assessment is not just studies, but includes evaluation of contingencies to be run, sensitivities to consider, etc.		X

Commenter	Q7. **Comment**	Agree.	Don't agree.
	Documented evaluation of future BES needs, measures to mitigate adverse reliability impacts, and assessments of residual impacts, supported by the use of performance studies ….		
City Utilities/Springfield	Definition should be more clearly defined. Documented evaluation of future Bulk Electric System needs based on the performance requirements as defined for NERC Steady State Transmission Studies or Plant Stability Studies conducted in accordance with the NERC Reliability Standards or more restrictive local area criteria.		
Tenaska	May be best to stop the definition after the word assumptions and cover the details as part of the requirements in the standard itself.		X
Response: Based on the comments, the SDT revised this definition to be more succinct and eliminate the description of the possible range of assumptions. The definition was also modified to clarify that the assessment is an evaluation of Transmission System performance (not needs) and Corrective Action Plans associated with identified deficiencies. **Planning Assessment:** Documented evaluation of future Transmission System performance and Corrective Action Plans to remedy identified deficiencies. ~~Bulk Electric System needs by the use of performance studies that cover a range of assumptions regarding system conditions, time frames, future plans including capital reinforcements and operating procedures and other factors, such as asset conditions and age.~~			
Central Maine Power HQTE National Grid New England ISO NU NPCC RCS NSTAR United Illuminating	Eliminate "capital" from the definition. It is not defined or consistently applicable to the standard. Reference to vague "other factors, such as asset conditions and age" should be removed from this standard; there are no consistent definitions or industry standards on which to base this requirement, nor does it appear to be a necessary addition to the standard.		X
Entergy	Remove "and other factors, such as asset conditions and age" from definition. The terms "age" and "condition" are subjective and the age of equipment, if it is well maintained, has little impact on reliability.		X
Exelon	'Other factors' such as condition and age should not be required, but may be utilized if these factors are an integral component of the study.		X
FPL FRCC	Last part of the last sentence should be removed "… and other factors, such as asset conditions and age" does not make sense for planning studies. Equipment condition and age are maintenance issues not transmission planning issues.		X
Georgia Transm. Corp	Asset conditions and age should not be included in the definition. Equipment replacement, in general, is dependent on performance, not age.		X
LADWP	The assessment of asset conditions and age of equipment belongs in maintenance practices, not a transmission planning issue. Similarly, Operating procedures is an operating matter, not planning studies. They have their own standards that could and		X

Commenter	Q7. **Comment**	Agree.	Don't agree.
	should address any issue the SDT may have in mind. Using transmission planning as a catch-all is a wrong headed approach.		
MEAG Power	Bulk Electric System deficiencies rather than needs should be evaluated. We do not agree that the planning assessment should include asset conditions and age. This is a preventive maintenace issue. The age of equipment, if it is well maintained, has little impact on reliability.		X
NCEMC	Generally, we agree but would request NERC to clarify accounting for asset conditions and age within planning assessments. Wouldn't these already be taken into account in the FAC-008 & FAC-009 ratings?	X	
Progress–Carolinas	Planning assessments should not include asset conditions and age.	X	X
Santee Cooper SERC EC PSS SERC RRS OPS	Bulk Electric System deficiencies rather than needs should be evaluated. We do not agree that the planning assessment should include asset conditions and age. The age of equipment, if it is well maintained, has little impact on reliability. The term "and other factors" should be better defined or deleted.		X
SaskPower	What is the intent "and other factors, such as asset condition and age"? Seems to broad and outside the scope of NERC. Remove it.		X
SERC EC DRS	Delete the word "needs" and the phrase "such as asset conditions and age." We do not agree that the planning assessment should include asset conditions and age. The age of equipment, if it is well maintained, has little impact on reliability.		X
Southern Transmission	The term "needs" should be replaced by a term that more aptly describes what is being evaluated. The definition should be ended after the word "assumptions." We do not agree that the planning assessment should include asset conditions and age. The age of equipment, if it is well maintained, has little impact on reliability.		X
TVA	Use of the word "deficiencies" instead of "needs" provides better consistency throughout the standard. We do not agree that the planning assessment should directly include asset conditions and age. Asset condition should be part of the ratings process. The age of equipment, if it is well maintained, has little impact on reliability.		X
Ameren	We do not agree that the planning assessment should include asset conditions and age. The age of equipment, if it is well maintained, has little impact on reliability. If NERC wants a standard to deal with age and maintenance of equipment, then it should develop a separate standard for asset management and not overburden TPL-001-1 with such issues.		X
ATC	We do not agree that "asset conditions and age" belongs in this definition. Furthermore, these factors are not addressed in any requirement.		X
E ON US	I agree that Asset Managers need to consider asset condition and age in their spare equipment and replacement strategies but the impact of these factors is beyond the scope of a deterministic Planning Assessment.		X
Entegra	Should also include validation of reactive power supplies.		X

Commenter	Q7. **Comment**	Agree.	Don't agree.
Response: Based on the comments, the SDT revised this definition to be more succinct and eliminate the description of the possible range of assumptions. **Planning Assessment:** Documented evaluation of future Transmission System performance and Corrective Action Plans to remedy identified deficiencies. ~~Bulk Electric System needs by the use of performance studies that cover a range of assumptions regarding system conditions, time frames, future plans including capital reinforcements and operating procedures and other factors, such as asset conditions and age.~~			
FirstEnergy	We suggest replacing "performance studies" with "past or present studies or information".		X
Response: The requirements define the studies that qualify for use in assessments and are not part of the definition.			
LCRA	"Documented evaluation of future Bulk Electric System performance conducted through performance studies…"		
Response: Based on the comments, the SDT revised this definition to be more succinct and eliminate the description of the possible range of assumptions. The definition was also modified to clarify that the assessment is an evaluation of Transmission System performance (not needs) and Corrective Action Plans associated with identified deficiencies. The requirements define the studies that qualify for use in assessments and are not part of the definition. **Planning Assessment:** Documented evaluation of future Transmission System performance and Corrective Action Plans to remedy identified deficiencies. ~~Bulk Electric System needs by the use of performance studies that cover a range of assumptions regarding system conditions, time frames, future plans including capital reinforcements and operating procedures and other factors, such as asset conditions and age.~~			
MRO	This definition is too general. It could be interpreted that the performance studies include resource planning rather than transmission system planning, as well as, asset management. Asset management issues should be beyond the scope of this transmission planning standard. Asset management is an engineering discipline that would require a separate standard or standards and is still a developing activity, for example, there is no industry-wide practice for studying aging issues of transmission equipment while there are industry-wide practices for steady-state, stability, and short circuit modeling and planning of transmission systems. The MRO suggests that the word transmission be added to the definition when referring to needs, performance, and reinforcements and that references to asset management be deleted. Here is a proposed definition "Documented evalution of future Bulk Electric System TRANSMISSION needs by the use of TRANSMISSION SYSTEM performance studies that cover a range of assumptions regarding TRANSMISSION system conditions, time frames, future plans including TRANSMISSION IMPROVEMENTS and operating procedures and other factors." The words in all caps were added or inserted to replace the Drafting Team's original words.		X
Dominion	Suggest to change "…by the use of performance studies that cover……" to "…by the use of past or current performance studies that cover……".	X	X
Northwestern Energy	Insert before performance studies the words "current or past that is known to be	X	X

Commenter	Q7. **Comment**	Agree.	Don't agree.
	valid".		
WECC BPA TEP TSGT	As identified by the modifications above, we believe the definition should be changed to read, "Documented evaluation of future Bulk Electric System needs by the use of performance studies (steady state and dynamic) that cover a range of reasonable or expected assumptions regarding system conditions, applicable time frames, and future plans; including capital reinforcements and operating procedures, SPS/RAS, and other factors (such as asset conditions and age)."	X	X
Response: Based on the comments, the SDT revised this definition to be more succinct and eliminate the description of the possible range of assumptions. The definition was also modified to clarify that the assessment is an evaluation of Transmission System performance (not needs) and Corrective Action Plans associated with identified deficiencies. The requirements define the studies that qualify for use in assessments and are not part of the definition. **Planning Assessment:** Documented evaluation of future Transmission System performance and Corrective Action Plans to remedy identified deficiencies. ~~Bulk Electric System needs by the use of performance studies that cover a range of assumptions regarding system conditions, time frames, future plans including capital reinforcements and operating procedures and other factors, such as asset conditions and age.~~			
New York ISO	The word "Documented" is unnecessary. Suggest simplifying the definition to: Evaluation of future BPS needs to meet forecast demand under the assumed system conditions for the time frame studied.		X
Response: Documentation is required as proof that evaluation was performed and guidance is provided as to the content of the documentation.			
RFC	Recommend adding power flow and dynamic analyses to this definition. Short circuit analyses should not be included.		
Response: Based on the comments, the SDT revised this definition to be more succinct and eliminate the description of the possible range of assumptions. Requirements define the studies that must be performed. **Planning Assessment:** Documented evaluation of future Transmission System performance and Corrective Action Plans to remedy identified deficiencies. ~~Bulk Electric System needs by the use of performance studies that cover a range of assumptions regarding system conditions, time frames, future plans including capital reinforcements and operating procedures and other factors, such as asset conditions and age.~~			
SCANA	Bulk Electric System deficiencies rather than needs should be evaluated.		X
Response: The definition was modified to clarify that the assessment is an evaluation of Transmission System performance (not needs) and Corrective Action Plans associated with identified deficiencies.			
IESO	The definition covers too much detail on the "how" part, and the "documented" qualifier doesn't seem to be required. Suggest to change it to: Evaluation of future Bulk Electric System needs to meet forecast demand under the assumed system conditions for the time frame studied.	X	X
Response: Based on the comments, the SDT revised this definition to be more succinct and eliminate the description of the possible range of assumptions. The definition was also modified to clarify that the assessment is an evaluation of Transmission System performance (not needs) and Corrective Action Plans associated with identified deficiencies. The requirements define the studies that qualify for use in			

Commenter	Q7. **Comment**	Agree.	Don't agree.
assessments and are not part of the definition. Documentation is required as proof that evaluation was performed and guidance is provided as to the content of the documentation. **Planning Assessment:** Documented evaluation of future Transmission System performance and Corrective Action Plans to remedy identified deficiencies. ~~Bulk Electric System needs by the use of performance studies that cover a range of assumptions regarding system conditions, time frames, future plans including capital reinforcements and operating procedures and other factors, such as asset conditions and age.~~			
Brazos Electric	Some discussion of what 'documented' means is needed each time it is mentioned. Is this some form of written report at all times or are 'saved' cases with contingency analysis sufficient at certain times or is it just a means to show that an 'assessment' was performed in some fashion.	X	
Response: Documentation is required as proof that evaluation was performed and guidance is provided as to the content of the documentation. Documentation requirements are contained in the standard itself. For example, Requirement R2.7.3 requires documentation of the criteria for determining committed and proposed projects. More clarity may be provided through the subsequent development of compliance measures and auditor worksheets.			
Duke Energy	We have a concern with what will be considered acceptable documentation, particularly as it relates to asset conditions and age. Delete the word "needs" and the phrase "such as asset conditions and age". When measures are developed it should be made clear what will constitute an acceptable Planning Assessment.	X	
Response: The SDT revised this definition in response to various comments. Documentation requirements are contained in the standard itself. For example, Requirement R2.7.3 requires documentation of the criteria for determining committed and proposed projects. More clarity may be provided through the subsequent development of compliance measures and auditor worksheets. **Planning Assessment:** Documented evaluation of future Transmission System performance and Corrective Action Plans to remedy identified deficiencies. ~~Bulk Electric System needs by the use of performance studies that cover a range of assumptions regarding system conditions, time frames, future plans including capital reinforcements and operating procedures and other factors, such as asset conditions and age.~~			
ABB		X	
AECI		X	
Allegheny Power		X	
AEP		X	
CenterPoint		X	
CPS Energy		X	
ERCOT ISO CAISO	Agree with the definition.	X	
ITC		X	
KCPL		X	
LUS		X	
Manitoba Hydro	A planning assessment should include performance studies.	X	

Commenter	Q7. **Comment**	Agree.	Don't agree.
MISO		X	
Muscatine P&W		X	
NERC TIS		X	
Progress–Florida		X	
Seattle City Light		X	
Response: Thank you. Please see the Summary Response.			

8) Q8. Planning Events: Events which require Transmission system performance requirements to be met.

Summary Response: The majority of the commenters agreed with the proposed definition; therefore, the SDT did not modify the definition.

Commenter	Q8. **Comment**	Agree.	Don't agree.
AECC	The definition is too vague and does not go far enough to distinguish it from something like and operational event, which only addresses the intial system response and does carry through to the resulting system following the event and subsequent steps that may be taken. Suggest: Planning Events = Events which remove one or more Elements and require Transmission system performance requirements to be met. This definition includes the initial event and any after event actions that result in the system returning to a steady state condition and preventing as serving as much Consequential load as possible.		
Ameren	Consideration should be given to adding the performance requirements in the definition.		X
ATC			X
APPA	What are "performance requirements?" This is too general a statement to be of value for writing specific standards.		X
City Water Light and Power	This statement is too general. Performance Requirements are not defined.		X
City Utilities/Springfield	Minimum performance requirements need to be clearly defined.		X
Georgia Transm. Corp	Performance requirements should be added to the definition.		X
E ON US	Recommend: Events to be simulated is studies (listed in Tables 1 and 2 of TPL-001) which must be documented with Corrective Action Plans when performance requirements of TPL-001 are not met.		X
ERCOT ISO	Needs clarity. Suggest the following wording: Outage of power system elements such as shown in Tables 1 and 2 that need to be considered and simulated to assess Transmission System Performance.		X
CAISO	Needs clarity. Suggest the following wording: Outage of power system elements such as shown in Tables 1 and 2 that need to be considered and simulated to assess Transmission System Performance		X
Central Maine Power HQTE National Grid New England ISO NU NPCC RCWS NSTAR United Illuminating	Propose, "Events for which Transmission performance requirements must be met".		X

Commenter	Q8. **Comment**	Agree.	Don't agree.
LADWP	The term Event has such a broad connotation that it can be misused by layperson. In fact, it is already misused in this standard as evidenced by including events such as cyber attacks, hurricans, tonados, etc as transmission planning events. These events belongs in "emergency" planning, not transmission planning.		X
Southern Transmission	Change to, "Events that are simulated or assessed to test the transmission system to ensure that performance requirements are met as defined in TPL-001-1 Tables 1 and 2."		X
MEAG Power NCEMC Santee Cooper SERC EC PSS SERC RRS OPS	Change to: "Events that are simulated or assessed to test the transmission system to ensure that performance requirements are met."		X
SCANA	Prefer alternate language, "Events for which Transmission system performance requirements must be met."		X
Response: The majority of the commenters agreed with the proposed definition; therefore, the SDT did not modify the definition.			
FirstEnergy	We ask that the SDT reword the definition to include reference to the planning events in Table 1 and 2 of this standard. This definition should be specific to this standard and not be included in the NERC glossary.		X
Response: The majority of the commenters agreed with the proposed definition; therefore, the SDT did not modify the definition. Moreover, the SDT believes the definition should be included in the NERC Glossary of Terms to provide common industry terminology.			
IESO NYISO	Linking it to Transmission system performance requirements presents "loop around" argument. Suggest to change it to: Events which need to be considered and simulated in planning assessments to evaluate Transmission system performance.		X
Response: The majority of the commenters agreed with the proposed definition; therefore, the SDT did not modify the definition. Moreover, the proposed revision would not suffice because Extreme Events must also be considered and simulated in planning assessments.			
Manitoba Hydro	The definition of a planned event should relate to the probablity of occurance. Table shows single contingency planned events and multiple contingency planned events. Why has the SDT gone away from the existing categories of events which sorted the events into categories with different levels probability.		X
Response: The majority of the commenters agreed with the proposed definition; therefore, the SDT did not modify the definition. In response to this specific comment, Planning events were considered to have sufficiently high probability of occurrence as to require planned corrective actions - hence the term Planning Event. However, Planning Events have still been sorted into categories with different performance requirements corresponding to different levels of probability and consequence.			
RFC	I don't believe that this is really the definition of "planning events". This defintion should describe generally what the planning events are, not that they must meet performance requirements.		X
Response: The majority of the commenters agreed with the proposed definition; therefore, the SDT did not modify the definition. The SDT believes that a general description of what the planning events are includes the fact that these are the types of events for which performance			

Commenter	Q8. **Comment**	Agree.	Don't agree.
requirements must be met.			
Seattle City Light	List specific types of failures or direct us to a specific table which describes planning events.		X
Response: The majority of the commenters agreed with the proposed definition; therefore, the SDT did not modify the definition. The SDT believes a definition should be established that does not reference a particular part of the standard.			
ABB	Agree but adjust language. You are saying "require requirements to be met". Duh. Even if you took out one of them and said "requirements must be met", this is also redundant. The definition of "requirement" is that it is required. How about "Events for which there are strict transmission performance standards that must be met." This may also be slightly redundant, but not as much as the original.	X	
Response: The majority of the commenters agreed with the proposed definition; therefore, the SDT did not modify the definition. We believe the language, with respect to the use of require and requirements, is correct, and the suggested language does not offer substantive improvement.			
Northwestern Energy		X	
AECI		X	
Allegheny Power		X	
AEP		X	
BPA		X	
BCTC		X	
Brazos Electric		X	
CenterPoint		X	
CPS Energy		X	
Duke Energy		X	
Entegra		X	
Entergy		X	
Exelon		X	
CPS Energy		X	
FPL		X	
FRCC		X	
Dominion		X	
ITC		X	
KCPL		X	
LCRA		X	
LUS		X	
MISO		X	
MRO		X	
Muscatine P&W		X	

Commenter	Q8. **Comment**	Agree.	Don't agree.
NERC TIS		X	
Progress–Carolinas		X	
Progress–Florida		X	
SaskPower		X	
SERC EC DRS		X	
Tenaska		X	
TVA		X	
TSGT		X	
TEP		X	
WECC		X	
Response: Thank you.			

9) Q9. Plant Stability Study: Study of an individual plant's Stability for various Contingencies in the vicinity of the plant; concerned with the effect on the System of the generating units' loss of synchronism and the damping of the generating units' power oscillations.

Summary Response: Based on the responses to Q32 the SDT believes the majority of comments have been addressed. Please refer to responses to Q32 and the revised definition for additional clarification. The SDT revised this definition as follows to further clarify intent:

Generating Unit Stability Study: Study that focuses on an individual generating unit's or electrically closely-coupled generating units' Stability for various Contingencies on the Transmission Facilities connected to that generating unit(s) point(s) of interconnection or one bus away from that point. This study is concerned with the loss of synchronism and the lack of damping of the generating units' power oscillations.

~~**Plant Stability Study**: Study of an individual plant's Stability for various Contingencies in the vicinity of the plant; concerned with the effect on the System of the generating units' loss of synchronism and the damping of the generating units' power oscillations.~~

Commenter	Q9. **Comment**	Agree.	Don't agree.
ABB	I don't see any reason to differentiate between "Plant Stability" and "System Stability". These are not commonly separated. A better differentiation would be between generator (or angular) stability and load (or voltage) stability. These are usually independently studied and independently occurring.		X
Ameren	It seems that the SDT is trying to divide the stability issues between plant (local) and system. As the system load representation and its damping characteristics affect both plant and system stability, it is difficult to separate plant versus system stability studies. The focus of the studies may be only slightly different, depending on the location, type, and duration of the fault conditions assumed.		X
Central Maine Power NPCC RCWS	A Plant Stability Study should be a part of a System Stability Study. How should and why would they be differentiated? The analysis and performance constraints are the same in both cases; it's just a matter of whether one or more generating units are involved.		X
FirstEnergy	We believe that this definition is not needed. The Plant Stability Study is similar to the System Stability Study.		X
FPL FRCC	There should be no distinction between Plant Stability and System Stability. All stability studies must meet the Performance Requirements for Planning Events in Table 2 - Stability Performance. If there were different Performance Requirements then the distinction would be warranted.		X
HQTE National Grid New England ISO NU	A Plant Stability Study should be a part of a System Stability Study. How should and why would they be differentiated? The analysis and performance constraints are the same in both cases; it's just a matter of whether one or more generating units are involved.		X

Commenter	Q9. **Comment**	Agree.	Don't agree.
NSTAR United Illuminating			
BPA	Support comments submitted by WECC. Plant Stability is a subset of System Stability.		X
WECC	Plant Stability seems to be a subset of System Stability. Introducing a new term can cause confusion.		X
Progress–Carolinas	Don't need to differentiate between plant and system. These are not usually separated. It would be better to separate angular stability and voltage stability. They are studied independently.		X
Tenaska	Not convinced that this study needs to be differentiated from a System Stability Study.		X
TEP	Plant Stability seems to be a subset of System Stability. Introducing a new term can cause confusion.		X

Response: The SDT revised this definition in response to various comments. The SDT believes that it is important to maintain the distinction between Plant and System Stability studies. Based on the responses to Q32 the SDT believes the majority of comments have been addressed. Please refer to responses to Q32 and the revised definition for additional clarification.

Generating Unit Stability Study: Study that focuses on an individual generating unit's or electrically closely-coupled generating units' Stability for various Contingencies on the Transmission Facilities connected to that generating unit(s) point(s) of interconnection or one bus away from that point. This study is concerned with the loss of synchronism and the lack of damping of the generating units' power oscillations.

~~Plant Stability Study: **Study of an individual plant's Stability for various Contingencies in the vicinity of the plant; concerned with the effect on the System of the generating units' loss of synchronism and the damping of the generating units' power oscillations.**~~

ATC	Suggest eliminating the sentence after the semi-colon -- the defined term Stability implies what is addressed in the second sentence and is also noted as a performance requirement in footnote 1.a.i to the Stability Performance Table. We also suggest that reference to "in the vicinity" be replaced by "that affect the plant Stability".		X
Santee Cooper SERC RRS OPS	The definition should end at the semi-colon. The remaining part of the definition should be moved to the definition of "System Stability Study."		X

Response: The SDT revised this definition in response to various comments, although much of the sentence after the semi-colon has been retained for clarity regarding generating unit performance. Based on the responses to Q32 the SDT believes the majority of comments have been addressed. Please refer to responses to Q32 and the revised definition for additional clarification.

Generating Unit Stability Study: Study that focuses on an individual generating unit's or electrically closely-coupled generating units' Stability for various Contingencies on the Transmission Facilities connected to that generating unit(s) point(s) of interconnection or one bus away from that point. This study is concerned with the loss of synchronism and the lack of damping of the generating units' power oscillations.

Commenter	Q9. **Comment**	Agree.	Don't agree.
~~**Plant Stability Study:** Study of an individual plant's Stability for various Contingencies in the vicinity of the plant; concerned with the effect on the System of the generating units' loss of synchronism and the damping of the generating units' power oscillations.~~			
City Water Light and Power	Insert "Generating" prior to "Plant" for clarity.		X
APPA	Insert "electric generating" prior to "plant" for clarity. It is unclear as to the intent of this statement. The Standard should require the Transmission Planner to consider contingencies in the vicinity of a particular electric generation plant. However, the ultimate goal of the "Stability Study" is to determine the stability of the BES and not just the "electric generation plant." It is recommended that this be rewritten to make clear the intent of this statement.		X
WPSC	This definition mixes the use of the word "plant" and "generator" which have two different meanings. Suggest re-naming as Generator Stability Study and allow the study of multiple generators at a single site as a plant. The use of "generator" vs. "plant" should also be consistent throughout the standard.		X
Response: The term "plant" has been deleted and the term "generating unit" is being used in the description of the type of study required. The new definition is for a "Generating Unit Stability Study". The SDT made these changes in response to various comments. Please refer to responses to Q32 and the revised definition for additional clarification. **Generating Unit Stability Study**: Study that focuses on an individual generating unit's or electrically closely-coupled generating units' Stability for various Contingencies on the Transmission Facilities connected to that generating unit(s) point(s) of interconnection or one bus away from that point. This study is concerned with the loss of synchronism and the lack of damping of the generating units' power oscillations.			
~~**Plant Stability Study:** Study of an individual plant's Stability for various Contingencies in the vicinity of the plant; concerned with the effect on the System of the generating units' loss of synchronism and the damping of the generating units' power oscillations.~~			
ERCOT ISO CAISO	Definition is not clear. Suggest the following wording: Study of an individual generating plant's capability to remain in synchronism and exhibit damping of the generating units' power oscillations for various contingencies in the vicinity of the plant.		X
IESO	Suggest to replace "Contingencies" with "Planning events", and change the definition as follows: Study of an individual generating plant's capability to remain in synchronism and exhibit damping of the generating units' power oscillation for various Planning events. Note that "in the vicinity of the plant" is removed to not restrict simulations of events only in the vicinity of the plants as experience has shown that an event remote from the plant could also subject the plant to lose synchronism and/or oscillate without		X

Commenter	Q9. **Comment**	Agree.	Don't agree.
	acceptable damping.		
New York ISO	"Contingencies" should be replaced with "Planning Events". "in the vicinity of the plant" is too restrictive. Suggest: Study of an individual generating plant's capability to remain in synchronism with damping power oscillation for various Planning Events.		X
Response: The SDT revised this definition in response to various comments. The new definition further clarifies the SDT's intent regarding the "vicinity" that must be considered, although additional buses further away can be studied if desired. Please refer to responses to Q32 and the revised definition for additional clarification. **Generating Unit Stability Study**: Study that focuses on an individual generating unit's or electrically closely-coupled generating units' Stability for various Contingencies on the Transmission Facilities connected to that generating unit(s) point(s) of interconnection or one bus away from that point. This study is concerned with the loss of synchronism and the lack of damping of the generating units' power oscillations. ~~**Plant Stability Study:** Study of an individual plant's Stability for various Contingencies in the vicinity of the plant; concerned with the effect on the System of the generating units' loss of synchronism and the damping of the generating units' power oscillations.~~			
Northwestern Energy	System stability studies covers this definition.		X
Response: The SDT believes that it is important to maintain the distinction between Plant and System Stability studies. The SDT revised this definition in response to various comments. Based on the responses to Q32 the SDT believes the majority of comments have been addressed. Please refer to responses to Q32 and the revised definition for additional clarification. **Generating Unit Stability Study**: Study that focuses on an individual generating unit's or electrically closely-coupled generating units' Stability for various Contingencies on the Transmission Facilities connected to that generating unit(s) point(s) of interconnection or one bus away from that point. This study is concerned with the loss of synchronism and the lack of damping of the generating units' power oscillations. ~~**Plant Stability Study:** Study of an individual plant's Stability for various Contingencies in the vicinity of the plant; concerned with the effect on the System of the generating units' loss of synchronism and the damping of the generating units' power oscillations.~~			
Duke Energy	Delete the term "the effect on the System of." The reference to "System" causes confusion with the term "System Stability Study.		X
Entergy	Delete the term "the effect on the System of." The reference to "System" causes confusion with the term "System Stability Study." Section R4.6 should identify the Generator Owner as the applicable party for doing the Plant Stability Studies.		X
Response: The reference to the "system" has been deleted from the new definition. SDT revised this definition in response to various comments. Based on the responses to Q32 the SDT believes the majority of comments have been addressed. However, the SDT disagrees			

Commenter	Q9. **Comment**	Agree.	Don't agree.
that the Generator Owner is the applicable party responsible for performing Generating Unit Stability Studies for the purpose of assessing and planning the transmission system, as contemplated by this standard. Please refer to responses to Q32 and the revised definition for additional clarification. **Generating Unit Stability Study**: Study that focuses on an individual generating unit's or electrically closely-coupled generating units' Stability for various Contingencies on the Transmission Facilities connected to that generating unit(s) point(s) of interconnection or one bus away from that point. This study is concerned with the loss of synchronism and the lack of damping of the generating units' power oscillations. ~~**Plant Stability Study:** Study of an individual plant's Stability for various Contingencies in the vicinity of the plant; concerned with the effect on the System of the generating units' loss of synchronism and the damping of the generating units' power oscillations.~~			
Exelon	Wording should be changed to allow for engineering judgment to determine which contingencies are applied. There may be instances where contingencies outside of the immediate vicinity of the plant may be significant to its stability. Suggest replacing the word 'System' with 'Transmission System'.		X
NERC TIS	Should not be limited to contingencies in the vicinity of the plant. Remove the terms "in the vicinity of the plant." Engineering judgement can then be used without having to define "vicinity." Plant instability can be caused by system events many (sometimes hundreds of) miles away. Plants were shaken off line in British Columbia due to the tripping of units in Arizona in June 2004.		X
Seattle City Light	"…in the vicinity of the plant…" needs to be more specific. How far away must we study?	X	X
Response: The SDT revised this definition in response to various comments. The new definition further clarifies the SDT's intent regarding the "vicinity" that must be considered, although additional buses further away can be studied if desired. Based on the responses to Q32 the SDT believes the majority of comments have been addressed. Please refer to responses to Q32 and the revised definition for additional clarification. **Generating Unit Stability Study**: Study that focuses on an individual generating unit's or electrically closely-coupled generating units' Stability for various Contingencies on the Transmission Facilities connected to that generating unit(s) point(s) of interconnection or one bus away from that point. This study is concerned with the loss of synchronism and the lack of damping of the generating units' power oscillations. ~~**Plant Stability Study:** Study of an individual plant's Stability for various Contingencies in the vicinity of the plant; concerned with the effect on the System of the generating units' loss of synchronism and the damping of the generating units' power oscillations.~~			
LADWP	When performing transient stablity studies using either PSSE or PSLF, loss of synchronism and oscillation damping are automatically part of the performance evaluation; it is not a separate study and should not be classifed as a separate study. In the context of transmission planning, unless someone on the SDT use programs		X

Commenter	Q9. **Comment**	Agree.	Don't agree.
	that do not have transient stability package similar to PSSE and PSLF, or has a completely different understanding on the meaning of loss of synchronism and/or damping, there is no need to introduce two new terms to explain a very well understood and established single term known as "transient stability" .		

Response: The SDT believes that it is important to retain the terms to maintain clarity. The SDT revised this definition in response to various comments. However, few if any other commenters expressed concerns about verbiage relating to loss of synchronism and damping of power oscillations. Therefore, this verbiage remained relatively unchanged. Based on the responses to Q32 the SDT believes the majority of comments have been addressed. Please refer to responses to Q32 and the revised definition for additional clarification.

Generating Unit Stability Study: Study that focuses on an individual generating unit's or electrically closely-coupled generating units' Stability for various Contingencies on the Transmission Facilities connected to that generating unit(s) point(s) of interconnection or one bus away from that point. This study is concerned with the loss of synchronism and the lack of damping of the generating units' power oscillations.

~~**Plant Stability Study:** Study of an individual plant's Stability for various Contingencies in the vicinity of the plant; concerned with the effect on the System of the generating units' loss of synchronism and the damping of the generating units' power oscillations.~~

SERC EC DRS	Delete the term "the effect on the System of." The reference to "System" causes confusion with the term "System Stability Study."		X

Response: The SDT revised the definition in response to various comments to eliminate the reference to the "system". Based on the responses to Q32 the SDT believes the majority of comments have been addressed. Please refer to responses to Q32 and the revised definition for additional clarification.

Generating Unit Stability Study: Study that focuses on an individual generating unit's or electrically closely-coupled generating units' Stability for various Contingencies on the Transmission Facilities connected to that generating unit(s) point(s) of interconnection or one bus away from that point. This study is concerned with the loss of synchronism and the lack of damping of the generating units' power oscillations.

~~**Plant Stability Study:** Study of an individual plant's Stability for various Contingencies in the vicinity of the plant; concerned with the effect on the System of the generating units' loss of synchronism and the damping of the generating units' power oscillations.~~

TSGT	Plant stability should be called Station stability. The term "plant" is reserved for aggregates such as total coal plant or total peaking plant, meaning all generating units in that category.		X

Response: The SDT revised the definition to be more general with respect to closely-coupled generating units. Please refer to responses to Q32 and the revised definition for additional clarification.

Generating Unit Stability Study: Study that focuses on an individual generating unit's or electrically closely-coupled generating units' Stability for various Contingencies on the Transmission Facilities connected to that generating unit(s) point(s) of interconnection or one bus away from that point. This study is concerned with the loss of synchronism and the lack of damping of the generating units' power

Commenter	Q9. **Comment**	Agree.	Don't agree.
oscillations. ~~**Plant Stability Study:** Study of an individual plant's Stability for various Contingencies in the vicinity of the plant; concerned with the effect on the System of the generating units' loss of synchronism and the damping of the generating units' power oscillations.~~			
KCPL	Suggest adding "Bulk Electric" before "System".	X	
Manitoba Hydro MISO MRO	The words "Bulk Electric" should be added before "System".		X
MEAG Power SERC EC PSS	Change " the System" to "local area of the Bulk Electric System." It also need a definition for "plant."	X	
Response: The SDT revised the definition in response to various comments and clarified that the study focuses on an individual generating unit's or electrically closely-coupled generating units' Stability. Please refer to responses to Q32 and the revised definition for additional clarification. **Generating Unit Stability Study**: Study that focuses on an individual generating unit's or electrically closely-coupled generating units' Stability for various Contingencies on the Transmission Facilities connected to that generating unit(s) point(s) of interconnection or one bus away from that point. This study is concerned with the loss of synchronism and the lack of damping of the generating units' power oscillations. ~~**Plant Stability Study:** Study of an individual plant's Stability for various Contingencies in the vicinity of the plant; concerned with the effect on the System of the generating units' loss of synchronism and the damping of the generating units' power oscillations.~~			
AECI		X	
Allegheny Power		X	
AEP		X	
BCTC		X	
Brazos Electric		X	
CenterPoint		X	
City Utilities/Springfield		X	
CPS Energy		X	
Entegra		X	
Georgia Transm. Corp		X	
ITC		X	
LCRA		X	
LUS		X	
Muscatine P&W		X	
NCEMC		X	
Progress–Florida		X	

Commenter	Q9. **Comment**	Agree.	Don't agree.
SCANA		X	
Southern Transmission	No Additional Comments.	X	
TVA		X	
Response: Thank you. Please see the Summary Response.			

10) Q10. System Stability Study: Study of the System or portions of the System to ensure that angular Stability is maintained, inter-area power oscillations are damped, and voltages during the dynamic simulation stay within acceptable performance limits.

Summary Response: Based on the comments, the SDT revised this definition as follows to add further clarity:

System Stability Study: ~~Study of the System or portions of the System to ensure that angular Stability is maintained, inter-area power oscillations are damped, and voltages during the dynamic simulation stay within acceptable performance limits.~~ Study that focuses on portions of the System, which may include many generating units, to determine whether angular Stability is maintained, inter-area power oscillations are damped, and voltages during the dynamic simulation stay within acceptable performance limits.

Commenter	Q10. **Comment**	Agree.	Don't agree.
Ameren	See comments above in the response to Q9. Specific inclusion of voltage (load) stability seems to be missing from the definition. Also, angular stability is mentioned only as part of the definition for System Stability Study and not Plant Stability Study. It would seem that this item would be part of both types of study.		X
PJM	Does "inter-area oscillations are damped" imply that you also have to do frequency domain analysis? (Because some industry experts would claim that without small signal analysis you cannot ensure that inter-area oscillations are damped.)	X	X
Response: The SDT revised this definition in response to various comments. Based on the responses to Q32 the SDT believes the majority of comments have been addressed. Please refer to responses to Q32 and the revised definition for additional clarification. **System Stability Study:** ~~Study of the System or portions of the System to ensure that angular Stability is maintained, inter-area power oscillations are damped, and voltages during the dynamic simulation stay within acceptable performance limits.~~ Study that focuses on portions of the System, which may include many generating units, to determine whether angular Stability is maintained, inter-area power oscillations are damped, and voltages during the dynamic simulation stay within acceptable performance limits.			
ABB	See Q9.		X
Santee Cooper	see Q9 above.		X
SERC RRS OPS	see Q9 above.		X
Response: See response for Q9.			
ATC	Truncate the definition to "……ensure that Stability is maintained." Note that we suggest that "angular" be deleted so that the definition is comprehensive and it includes both voltage and angular stability. Suggest moving the performance attributes in the definition (after the comma) as footnotes to the Stability Performance Table.		X
Response: The SDT believes that it is important to retain the terms to maintain clarity. Please refer to responses to Q32 and the revised definition for additional clarification.			
ERCOT ISO	This definition is for a stable system. Study is performed to determine whether system		X

Commenter	Q10. **Comment**	Agree.	Don't agree.
CAISO IESO	is stable or not. Suggest the following wording: Study of the system or portions of the system to assess the system's performance in terms of angular stability, power oscillations and voltage limits during dynamic simulation.		
New York ISO	The study is an assessment. Suggest: Study of the System or portions of the System to assess the System's performance in the domain of angular stability, inter-area oscillations and voltage profile during dynamic simulation.		X
Response: The SDT revised this definition to reflect that the study is for portions of the system. The applicable portions of the System still must be studied and the wording was modified to describe that the study determines whether the System remains stable, not that it ensures stability is maintained. Please refer to responses to Q32 and the revised definition for additional clarification. **System Stability Study:** ~~Study of the System or portions of the System to ensure that angular Stability is maintained, inter-area power oscillations are damped, and voltages during the dynamic simulation stay within acceptable performance limits.~~ Study that focuses on portions of the System, which may include many generating units, to determine whether angular Stability is maintained, inter-area power oscillations are damped, and voltages during the dynamic simulation stay within acceptable performance limits.			
Central Maine Power HQTE National Grid New England ISO NU NPCC RCWS NSTAR United Illuminating	See comment on Q9; proposed modification, "Study of the System or portions of the System to determine whether plant and system angular Stability is maintained, power oscillations are damped, and voltages during the dynamic simulation stay within acceptable perfomance limits.		X
Progress–Carolinas	Don't need to differentiate between plant and system. These are not usually separated. It would be better to separate angular stability and voltage stability. They are studied independently.		X
Response: The SDT believes that it is important to maintain the distinction between Generating Unit (formerly Plant) and System Stability studies. Please refer to responses to Q32 and the revised definition for additional clarification.			
FPL FRCC	Dynamic voltage ratings do not add value and are only an approximation for modeling limitations. The definition should not address performance and should only seek to define the term. Reword as follows: "Study of the System or portions of the System to assess angular Stability and inter-area power oscillations."		X
Response: The SDT believes that it is important to retain the information explaining the purpose of the study. Please refer to responses to Q32 and the revised definition for additional clarification.			
LADWP	This comment should be taken together with the comment on Plant stability and I would recommend not to create new terms and go back to use well established engineering terms like Transient Stability Study which covers synchronism, damping,		X

Commenter	Q10. Comment	Agree.	Don't agree.
	voltage limits, angular stability, etc. There are many text books that could be used to support this.		
Response: The SDT believes that it is important to retain the terms to maintain clarity. Please refer to responses to Q32 and the revised definition for additional clarification.			
Exelon	Suggest replacing 'System' with 'Transmission System'.	X	
KCPL	Suggest adding "Bulk Electric" before "System".	X	
Manitoba Hydro MISO MRO	The words "Bulk Electric" should be added before both occurances of "System".		X
SERC EC PSS	Change "System" to "Bulk Electric System."	X	
MEAG Power	Change "System or portions of the system" to "Bulk Electric System's components associated with the Transmission Planer."	X	
Response: The SDT believes the reference to the "System" correctly describes the scope of the study. Please refer to responses to Q32 and the revised definition for additional clarification.			
APPA	This is a very clear definition that can be used in Standards. The author did a good job of using defined terms in this definition.		
Northwestern Energy		X	
AECI		X	
Allegheny Power		X	
AEP		X	
BPA		X	
BCTC		X	
Brazos Electric		X	
CenterPoint		X	
City Utilities/Springfield		X	
CPS Energy		X	
Duke Energy		X	
Entegra		X	
Entergy		X	
Dominion		X	
FirstEnergy		X	
Georgia Transm. Corp		X	
ITC		X	
LCRA		X	
LUS		X	
Muscatine P&W		X	
NCEMC		X	

Commenter	Q10. **Comment**	Agree.	Don't agree.
NERC TIS		X	
Progress–Florida		X	
Seattle City Light		X	
SERC EC DRS		X	
SCANA		X	
Southern Transmission	No Additional Comments.	X	
Tenaska	A generator's loss of synchronism and oscillation issues will be seen in this study.	X	
TVA		X	
TSGT		X	
TEP		X	
WECC		X	
Response: Thank you. Please see the Summary Response.			

11) Q11. Year One: The first year that a Transmission Planner is responsible for studying. This is further defined as the planning window that begins the next calendar year from the time the Transmission Planner submits their annual studies. Analysis conducted for time horizons within the calendar year from the study publication are assumed to be conducted under the auspices of Operations Planning.

Summary Response: Based on the comments, the SDT modified the definition to clarify that Year One is the first year that requires assessment, not study; and that the planning window begins 12 to 18 months from the completion of the previous assessment. The change reflects the variability in the timing of assessments among different Transmission Planners.

Year One: The first year that a Transmission Planner is responsible for ~~studying~~ assessing. This is further defined as the planning window that begins ~~the next calendar year from the time the Transmission Planner submits their annual studies~~ 12-18 months from the completion of the previous annual Planning Assessment.

Commenter	Q11. **Comment**	Agree.	Don't agree.
ABB	Agree but delete "annual". Unnecessarily restrictive. Aren't there non-annual studies for which the definition of "year one" is important?	X	
E ON US	"studies" should be replaced with "Planning Assessment", the Planning Assessment is the documentation (of past and current studies) submitted for review. Note: the definition in Q11 does not match TPL-001.		X
WPSC	Suggest replacing the words "annual studies" with "Planning Assessment".		X
ATC	The definition here is not consistent with what is in the posted standard (the last sentence is extra) -- we agree with the definition in the posted standard.		X
Entergy	The last sentence in the above definition was not included in the definition listed in the draft standard. Consider deleting the last sentence or providing additional examples.		X
FPL	The last sentence of this definition is not included in the Standard. Reword as follows: "The first year that a Transmission Planner is responsible for studying. This is further defined as the planning window that begins the next calendar year from the time the Transmission Planner performs their annual studies and submits the results to the RRO."		X
FRCC	The last sentence of this definition is not included in the Standard and should be deleted.		X
MEAG Power Santee Cooper SERC EC PSS SERC RRS OPS Southern Transmission TVA	The last sentence in the above definition was not included in the definition listed in the draft standard, nor should it be.	X	
Response: In the course of reviewing comments, the SDT realized that the definition of Year One in the draft standard varied from the definition of Year One in Q11 of the comment form. The SDT revised this definition in response to various comments.			

Commenter	Q11. **Comment**	Agree.	Don't agree.
Year One: The first year that a Transmission Planner is responsible for ~~studying~~ assessing. This is further defined as the planning window that begins ~~the next calendar year from the time the Transmission Planner submits their annual studies~~ 12-18 months from the completion of the previous annual Planning Assessment.			
AECC	Year One should be the first year following the current year. The first sentence defines year one just fine. Lose the last two sentences. Completely disagree with the last sentence. Studies are not necessarily conducted on calender year basis and the study publication is irrelevant. This is a planning standard and not an opertions standard. Operational vs planning are driven by the horizon time frame and not a study publication date.		X
ERCOT ISO CAISO	Suggest a shorter definition: Planning window beginning next calendar year.		X
Central Maine Power	Modify to, "The first year that a Tranmission Planner is responsible for studying. This is further defined as the planning window that begins the next calendar year from the time the Transmission Planner completes its annual studies."		X
Duke Energy	Need to provide an example to clarify what this means.		X
FirstEnergy	Although we agree with the concept, the definition is confusing. We suggest simplifying the definition to "The first 12 month period that begins one year and one day from the completion of the study."		X
Georgia Transm. Corp	The first sentence in not necessary. A Planner may use the base case to further assess a problem in the current year. The definition should begin with "The next planning year following current annual studies".		X
HQTE National Grid New England ISO NU NPCC RCWS NSTAR United Illuminating	Modify to, "The first year that a Tranmission Planner is responsible for studying. This is further defined as the planning window that begins the next calendar year from the time the Transmission Planner completes and communicates its annual studies."	X	X
NCEMC	This definition could use further clarification to eliminate inconsistencies in how it may be interpreted. Operations planning horizons may typically be 13 to 18 months from the current date due to the reality that transmission upgrades to address operational performance issues may not be able to be implemented inside this period. Some may assume a 24-36 month operations planning window. Based on this assumption, Year 1 could start anywhere from 13 months from the current date to as much as 37 months from the current date.		X
Brazos Electric	Planners do not 'submit' their studies to ERCOT for evaluation or other. Certain projects are submitted to the group for review and comment but not all studies are	X	

Commenter	Q11. **Comment**	Agree.	Don't agree.
	submitted as normal pratice in all cases. It may be better to use 'create their base cases' or simply 'performs their annual studies' instead of 'submit their annual studies'		
Response: The SDT revised this definition in response to various comments. **Year One:** The first year that a Transmission Planner is responsible for ~~studying~~ assessing. This is further defined as the planning window that begins ~~the next calendar year from the time the Transmission Planner submits their annual studies~~ 12-18 months from the completion of the previous annual Planning Assessment.			
APPA	There is a term in the Glossary that is "Operation Plan;" however, there is not a term defining Operations Planning. It is recommended that the SDT drop the last sentence and define the term Operations Planning for the Glossary. Change "their" to "its."		X
BCTC	One problem with this definition is that it assumes that the Transmission Planner submits annual studies. We need definitions for Operating Horizon and Planning Horizon. Then: Year One: The first year of the Planning Horizon.		X
IESO	Not sure why we need this definition. The standard can simply be worded such that a Transmission Planner is responsible for assessing system needs for time frame beyond the current year. Introducing Operations Planning creates confusion as it is unclear whether this term describes a function or an entity in the context of the proposed definition. Further, the sentence "Analysis conducted for time horizon within the current year from the study publication are assumed to be conducted under the auspices of Operations Planning" is (a) confusing time frame wise, (b) invites debates on the role and responsibility for a term that is not defined in NERC standard or the Functional Model, and (c) is perceived to be prescriptive in organizational setup/responsibility allocation (e.g. why can't a transmission planner conduct operational planning studies?).		X
Response: In the course of reviewing comments, the SDT realized that the definition of Year One in the draft standard varied from the definition of Year One in Question 11 of the comment form. The term "Operations Planning" was used in Q11 but not in the draft standard. Therefore, the SDT revised the definition of Year One in response to various comments but will not introduce a definition for Operations Planning. **Year One:** The first year that a Transmission Planner is responsible for ~~studying~~ assessing. This is further defined as the planning window that begins ~~the next calendar year from the time the Transmission Planner submits their annual studies~~ 12-18 months from the completion of the previous annual Planning Assessment.			
ITC	Adding a statement specifying that this is at least ??? number of months into the future may be prudent.		
Response: The SDT revised this definition in response to various comments. However, in the course of considering this definition and reviewing comments, the SDT believes that the start of Year One will not be a fixed point in time for all Transmission Planners. For example, see NCEMC's comment.			

Commenter	Q11. **Comment**	Agree.	Don't agree.
Year One: The first year that a Transmission Planner is responsible for ~~studying~~ assessing. This is further defined as the planning window that begins ~~the next calendar year from the time the Transmission Planner submits their annual studies~~ 12-18 months from the completion of the previous annual Planning Assessment.			
Seattle City Light	Base cases are developed and studied for seasons, not calendar years. Can the Year One reference be changed to "the year beginning at the next Winter season" instead of the specific "…next calendar year"?	X	X
Response: The SDT revised this definition in response to various comments. However, the SDT has members from a wide variety of NERC regions. In the course of discussing how to define Year One, the team found that practices vary across different regions. For example, many southern regions concentrate on summer peak seasons while others, such as Seattle City Light, may concentrate on winter seasons. The modified definition is intended to accommodate such regional variation. **Year One:** The first year that a Transmission Planner is responsible for ~~studying~~ assessing. This is further defined as the planning window that begins ~~the next calendar year from the time the Transmission Planner submits their annual studies~~ 12-18 months from the completion of the previous annual Planning Assessment.			
Northwestern Energy		X	
AECI		X	
Allegheny Power		X	
AEP		X	
Ameren		X	
BPA		X	
CenterPoint		X	
City Utilities/Springfield		X	
CPS Energy		X	
Dominion		X	
Entegra		X	
Exelon		X	
KCPL		X	
LUS		X	
LADWP	very good clarification!	X	
LCRA		X	
Manitoba Hydro		X	
MISO		X	
MRO		X	
Muscatine P&W		X	
NERC TIS		X	
New York ISO		X	

Commenter	Q11. **Comment**	Agree.	Don't agree.
Progress–Carolinas		X	
Progress–Florida		X	
RFC		X	
SaskPower		X	
SERC EC DRS		X	
SCANA		X	
Tenaska		X	
TSGT		X	
TEP		X	
WECC		X	
Response: Thank you**.** Please see the Summary Response.			

B) Sensitivity Studies

The draft planning standard includes the requirement, as specified in FERC Order 693, that planning decisions be based on a portfolio of analyses. In section 12.a.ii "Sensitivity studies and critical system conditions" FERC provided direction to consider a full range of variables considered to be significant that need to be assessed and documentation provided that explains the rationale for the selection of variables assessed.

In addition to the firm obligation scenario, the portfolio of analyses should be supplemented to include information from sensitivity analysis. The sensitivity analysis should be developed using additional cases that simulate reasonably stressed system conditions. The standard drafting team has included several parameters that can be varied to create the requisite sensitivity case(s). The draft standards specify that the sensitivities reflect one or more of the following conditions and that documentation be provided explaining the rationale for selecting the sensitivity(ies) employed. The parameters that should be varied include:

- Higher or lower Load forecasts from the Base Case with variability of Load/demand and Load power factors due to season, weather, or time of day.
- Modification of expected transfers.
- Unavailability of long lead time facilities.
- Variability and outages of Reactive Resources.
- Generation additions, retirements, or other dispatch scenarios.
- Decreased effectiveness of controllable Loads and Demand Side Management.
- Modification of planned Transmission outages

To help focus industry discussion, please respond to the questions below:

12) Q12. Should the standard provide more specific direction regarding the number of sensitivity cases that need to be developed?

Summary Response: The SDT believes that there is a need to perform sensitivity studies and to set a minimum level of sensitivities to be considered. To achieve that, the SDT is providing some guidance on what could be included in the sensitivity studies without being too prescriptive. Requirement R2.1.3 and Requirement R2.4.3 have been modified to require documentation of why the listed sensitivities were or were not selected for specific studies. Requirement R2.1.4 and Requirement R2.4.4 have been added to specifically state that the entity may consider additional sensitivities that are appropriate for its own system.

The following requirements were changed due to industry comments:

R2.1.3. For each of the studies described in Requirement R2.1.1 and Requirement R2.1.2, sensitivity case(s) that stress the System with sensitivities that reflect one or more of the following conditions shall be run and documentation ~~with~~ of the technical rationale for ~~the selected sensitivity(ies)~~ why each of the conditions was or was not selected shall be supplied:
R2.1.4. In addition to those sensitivities mentioned in Requirement R2.1.3, any other sensitivities, as deemed appropriate by the Transmission Planner or Planning Coordinator for their individual systems, shall be run and documentation of the technical rationale for why each was selected shall be supplied.

R2.4.3. For each of the studies described in Requirement R2.4.1 and Requirement R2.4.2, ~~S~~sensitivity case(s) that stress the System to reflect one or more of the following conditions shall be run ~~with documentation provided explaining the rationale for the selected sensitivity(ies)~~ and documentation of the technical rationale for why each of the conditions was or was not selected shall be supplied:
R2.4.4. In addition to those sensitivities mentioned in Requirement R2.4.3, any other sensitivity, as deemed appropriate by the Transmission Planner or Planning Coordinator for their individual systems, shall be run and documentation of the technical rationale for why each was selected shall be supplied.

R2.7.2. ~~Be added to study cases and the cases re-tested to show that the System with planned additions meets the performance requirements in the tables~~ Contain a description of how and why the consideration of the sensitivities selected in accordance with Requirements R2.1.3, R2.1.4, R2.4.3, and R2.4.4 in the Planning Assessment did or did not result in a modification or expansion of the list of actions developed in accordance with Requirement R2.7.1.

Question 12			
Commenter	**Yes**	**No**	**Comment**
ABB		☑	No. However, as long as we're talking about it, NERC should set a standard for the definition of the "peak load" to be planned for. Some utilities use the 50% probability peak load. Some use 90%. A big difference that will result in a big difference in how they are prepared for the peak load days. The sensitivity section is not sufficient to address this. Also, outages of reactive resources should be (and are) in the list of contingencies, not sensitivities.
Response: The standard does not prescribe what percentage of Load needs to be studied. The peak Load to be planned for is defined by the individual entity. The consideration of a higher or lower probability of peak Load is only one of the sensitivity conditions listed in R2.1.3.			

Question 12			
Commenter	**Yes**	**No**	**Comment**
R2.1.3. For each of the studies described in Requirement R2.1.1 and Requirement R2.1.2, sensitivity case(s) that stress the System with sensitivities that reflect one or more of the following conditions shall be run and documentation ~~with~~ of the technical rationale for ~~the selected sensitivity(ies)~~ why each of the conditions was or was not selected shall be supplied:			
Ameren		☑	For the purposes of compliance, we believe that the existing requirement R1 in Standard TPL-001-0 adequately defines the sensitivities that need to be covered in a valid assessment, and no additional clarification is necessary. Deterministic tests of a limited number of system conditions require the application of engineering judgment to evaluate the complex multi-variable problems involved in planning analyses. We all agree that performing contingency analyses on a single snapshot of expected system conditions is not adequate to plan the transmission system, but planning is not a cookbook exercise, and neither is an engineering assessment of planning activities demonstrating required system performance. Further, we believe that a test of incremental transfer capability determined from some of the sensitivity cases needs to be added to the standard and would go a long way to address how much margin exists in the transmission system to handle the unknown or previously undefined variables.
Response: The SDT believes that there is a need to perform sensitivity studies and to set a minimum level of sensitivities to be considered. To achieve that, the SDT is providing some guidance on what could be included in the sensitivity studies without being too prescriptive. R2.1.3 and R2.4.3 have been modified to require documentation of why the listed sensitivities were or were not selected for specific studies. R2.1.4 and R2.4.4 have been added to specifically state that the entity may consider additional sensitivities that are appropriate for its own system. Further the standard is not intended to address how much margin exists in the Transmission System to handle the unknown or previously undefined variables, but to provide base line performance requirements. The entity can provide as much margin as it feels is appropriate. R2.1.3. For each of the studies described in Requirement R2.1.1 and Requirement R2.1.2, sensitivity case(s) that stress the System with sensitivities that reflect one or more of the following conditions shall be run and documentation ~~with~~ of the technical rationale for ~~the selected sensitivity(ies)~~ why each of the conditions was or was not selected shall be supplied: R2.1.4. In addition to those sensitivities mentioned in Requirement R2.1.3, any other sensitivities, as deemed appropriate by the Transmission Planner or Planning Coordinator for their individual systems, shall be run and documentation of the technical rationale for why each was selected shall be supplied. R2.4.3. For each of the studies described in Requirement R2.4.1 and Requirement R2.4.2, ~~S~~sensitivity case(s) that stress the System to reflect one or more of the following conditions shall be run ~~with documentation provided explaining the rationale for the selected sensitivity(ies)~~ and documentation of the technical rationale for why each of the conditions was or was not selected shall be supplied: R2.4.4. In addition to those sensitivities mentioned in Requirement R2.4.3, any other sensitivity, as deemed appropriate by the Transmission Planner or Planning Coordinator for their individual systems, shall be run and documentation of the technical rationale for why each was selected shall be supplied.			
AEP	☑		Consider requiring a minimum of two sensitivity cases.
Allegheny Power		☑	Scenario analysis should be based on the unique aspect of the particular Transmission zone. Transmission Planners should work to select the best scenarios related to the specific system and adequately describe the selection process.

Question 12			
Commenter	**Yes**	**No**	**Comment**
APPA		☑	The term Base Case should not be used in this manner. The conditions of the Base Case Study should not be in a Standard to insure that all instability cases are covered.
City Water Light and Power	☑		The term Base Case should not be used in this manner. The conditions of the Base Case Study should be in a Standard to insure that all sensitivity cases are covered.
BCTC	☑	☑	The number of sensitivity cases should be tied to the number of resource plans and range of possible load growth forecast.
Brazos Electric		☑	More descretion should be allowed by the TO or planner in deciding the number of cases.
CenterPoint		☑	The number and type of sensitivity studies should be left to the judgement of Transmission Planners. Having too many prescriptive requirements results in concentrating on meeting the requirements rather than on formulating the most effective and efficient improvements.
CPS Energy		☑	The number of sensitivity studies should be at the discretion of Transmission Planners.
Dominion		☑	Transmission Planning engineers have good engineering judgment and need to have some flexibility in selecting the variables that need to be studied.
Duke Energy		☑	The entity performing the studies has the best system specific knowledge to select the appropriate sensitivities that needs to be evaluated. When Measures are developed, they should provide planners with the flexibility to perform appropriate sensitivity studies.
Entergy		☑	The appropriate studies that should be done by each applicable entity is highly dependent on the transmission system being studied. Being too prescriptive may cause irrelevant studies to be completed while diverting resources and attention from sensitivity studes that the entity most familiar with the transmission system believes could result in more meaningful analysis. The Committee should not lose sight of the importance of good engineering judgment exercised by those most familiar with the characteristics of the particular system. While appropriate sensitivity analyses are beneficial in evaluating system performance, it should be clearly stated that projects and/or mitigation plans are left to the discretion of the Transmission Planners.
ERCOT ISO CAISO		☑	The TP or PA is the best to determine the number and type of sensitivities that are more applicable to their system.
FirstEnergy		☑	We suggest that the SDT reword the standard to allow the Transmission Owner additional latitude as to which stress conditions to study. We suggest modifying R2.4.3 to indicate sensitivities "such as those listed below" be studied. That way the standard would be providing examples but would not dictate specific sensitivity studies that should be performed.
FPL		☑	Not all Regions' sensitivity concerns are the same.
FRCC		☑	Not all Regions' concerns are the same and therefore each Region should determine which sensitivities are appropriate.
Georgia Transm.		☑	Sensitivity analyses should not be prescribed. In one system there may be various sensitivites based on region, generation location, number of long range projects, etc. The Planner should provide a summary of the critical sensitivities and documentation supporting their definitionis.

Question 12			
Commenter	**Yes**	**No**	**Comment**
IESO		☑	We do not support introducing sensitivity testing as requirements in the standard, let alone specifying the number of sensitivity cases that need to be developed. In general, there are two interpretations of sensitivity testing - the type to assist in scoping out planning studies and the type to test the stretched capability of the proposed plans. In the first case, sensitivity testing is conducted to assist in identifying restricting parameters/phenomena, critical faults, and scoping out the conditions that need to be assessed, etc. As such, the scenarios to be included in sensitivity testing vary from one Transmission Planner to another depending on local needs and system characteristics, and even from one study to another for the same area to be assessed. The scope of sensitivity testing is therefore difficult to pin down. In the second case, while variations such as percentage of forecast peak demand can be picked as a common parameter for sensitivity testing, the follow-on actions, or inactions, after obtaining the test results would be at the sole discretion of the Transmission Planner unless they are specifically addressed by reliability standards. Requiring a Transmission Planner to conduct sensitivity testing, and even to require it to study a specific number of cases case may put a Transmission Planner in a quandary. For example, if sensitivity testing for a case with 5% higher than forecast peak load shows that the system needs a new 500 kV line in a certain area, should the Transmission Planner propose the new line? If so, what are the reliability and economic justifications when it is clearly demonstrated that the line is needed only if the load for that studied time frame turns out to be 5% higher than forecast? If the answer is yes (to propose adding the line), then why don't we simply require that all planning studies assume a condition that is more conservative than that forecast, and stipulate these conditions in the standard accordingly? If not, will the Transmission Planner be criticized for not taking proactive action to manage the potential risk? Similarly, a Transmission Planner is faced with a much wider study scope if it is required to study the condition assuming one or more major transmission facility is unavailable due to forced outages. These scenarios are more aptly addressed in operations planning or near operations time frame when transmission facility and other system conditions become more predictable. Studies conducted well in advance of real time already rely on many enabling assumptions. Introducing a requirement for sensitivity testing and with specific number of test cases would render the study task difficult to manage, and may put the Transmission Planner in a quandary dealing with the test results. If the standard should require a Transmission Planner to study up to one transmission facility out of service, then this requirement should be clearly stipulated.
ITC	☑		The standard should provide a minimum number of sensitivity cases that should be developed and should include at least a higher load forecast (90/10 vs. 50/50) and a higher generator unavailiablity (LOLE - 1 in 10).
KCPL		☑	N-1 and N-2 analyses should identify any additional sensitivity cases that need to be studied. This

Question 12			
Commenter	**Yes**	**No**	**Comment**
			standard should not specify the number and type of sensitivities to be studied.
LADWP		☑	the FERC orders are market focused, not reliability focused; to the extent that these orders require sensitivity studies as outlined in this proposed standards, they belongs in operating studies and real time market studies, not transmission planning studies which are to meet reliability based criteria.
Manitoba Hydro		☑	Sensitivity analysis that could be considered will vary from region to region or subregion to subregion.
MEAG Power		☑	The entity performing the studies should be allowed to determine the appropriate number of cases that need to be evaluated. Different utilities have different input assumptions, therefore the selection of sensitivities to study are different. For example, some utility needs to study the water availability for its hydro units, while other utility needs to evalauate the sensitivity of gas availability.
MISO		☑	Requirements 2.1.3 and 2.4.3 call for sensitivity cases that stress the system, with documentation as to the rationale for why a particular sensitivity was selected. Midwest ISO believes that the standard must balance clarity and specificity with flexibility and discretion. If the standard is too prescriptive in the system conditions to be evaluated, sensitivity studies that reflect critical system conditions that experience dictates are appropriate for a given system could be construed as being outside of the standards. Such a determination could make the regulatory approvals of facilties needed for reliability purposes difficult or impossible to obtain. Midwest ISO believes hat the language in the existing standard TPL-001-0, R1.3.2, which states that "PA and TP assessments shall cover critical system conditions and study years as deemed appropriate by the responsible entity" provides the proper balance of these issues.
Muscatine P&W			Leave it open so it can be driven by local issues including those not in the standards. i.e. Running near term criteria on the long term horizon, additional contingencies beyond currently required, etc. as appropriate for the area.
New York ISO		☑	NYISO does not support the introduction of sensitivity testing in the Planning Standards as a requirement. Sensitivity testing should be dictated by the local needs and system characteristics. The nature of planning studies incorporates assumptions that would make sensitivity analysis difficult to interpret.
NCEMC		☑	There should be a stakeholder process for all entities (all Load-Serving Entities and Transmission Customers) involved or impacted within the defined area to provide input to determine which sensitivity cases are to be performed and the appropriate number of cases that need to be evaluated. Not every sensitivity case should be required for every system.
Northwestern Energy		☑	The current list is too prescriptive as many may not apply to a specific TP, yet they would be required to study it.
Progress–Carolinas		☑	This should be system specific.
ReliabilityFirst	☑		A minimum of at least one or two that contain certain scenarios chosen from the list should be required.

Question 12			
Commenter	**Yes**	**No**	**Comment**
Santee Cooper		☑	These factors vary between areas and regions. In addition the TP should be allowed to assess an alternate sensitivity if they can document that it is more appropriate,
SERC EC DRS		☑	The entity performing the studies has the best system specific knowledge to select the appropriate sensitivities that needs to be evaluated.
SERC EC PSS		☑	The entity performing the studies should be allowed to determine the appropriate number of cases that need to be evaluated.
SERC RRS OPS		☑	These factors vary between areas and regions. In addition the TP should be allowed to assess an alternate sensitivity if they can document that it is more appropriate,
SCE&G		☑	The standard may offer guidance but the entity performing the sensitivity studies should be able to determine the number of cases required.
Southern Transm.		☑	This should not be a "one shoe fits all" exercise. It appears that at least one of these items listed is required even though they may not be the most appropriate ones for all entities. There should be the ability to perform other sensitivity analysis instead of these as long as the "rationale" is provided for the choice. The entity should be allowed to determine the appropriate sensitivity cases.
Tenaska	☑		The question may be misleading as number of sensitivity cases is not the issue. Enough studies should be conducted to appropriately define the boundaries of how the system will perform. The standard identifies various issues that may be used as sensitivity cases, but the list may or may not be all inclusive. The team should ask the industry whether any other sensitivities should be included in the standard.
TVA		☑	The entity performing the studies should be allowed to determine the appropriate number of cases that need to be evaluated.
TEP		☑	The TP or PA is the most familiar with the system and so would be the best to determine the sensitivities that are more applicable to their particular system. The Standard should not be overly prescriptive. The Standard can make suggestions or list potential sensitivities but let the TP or PA determine those variables to study and the reasonable range of the sensitivities.
WPS			Sensitivity cases do not consider/mention new transmission facilities additions. Although the Transmission Planner should have the ability to determine appropriate sensitivities, system performance based on the delay of new transmission facilities should be considered (may be covered under R2.1.3.3 but could be more explicit).

Response: The SDT believes that there is a need to perform sensitivity studies and to set a minimum level of sensitivities to be considered. To achieve that, the SDT is providing some guidance on what could be included in the sensitivity studies without being too prescriptive. R2.1.3 and R2.4.3 have been modified to require documentation of why the listed sensitivities were or were not selected for specific studies. R2.1.4 and R2.4.4 have been added to specifically state that the entity may consider additional sensitivities that are appropriate for its own system.

R2.1.3. For each of the studies described in Requirement R2.1.1 and Requirement R2.1.2, sensitivity case(s) that stress the System with sensitivities that reflect one or more of the following conditions shall be run and documentation ~~with~~ of the technical rationale for ~~the selected sensitivity(ies)~~ why each of the conditions was or was not selected shall be supplied:

R2.1.4. In addition to those sensitivities mentioned in Requirement R2.1.3, any other sensitivities, as deemed appropriate by the Transmission

Question 12			
Commenter	**Yes**	**No**	**Comment**
Planner or Planning Coordinator for their individual systems, shall be run and documentation of the technical rationale for why each was selected shall be supplied. R2.4.3. For each of the studies described in Requirement R2.4.1 and Requirement R2.4.2, ~~S~~sensitivity case(s) that stress the System to reflect one or more of the following conditions shall be run ~~with documentation provided explaining the rationale for the selected sensitivity(ies)~~ and documentation of the technical rationale for why each of the conditions was or was not selected shall be supplied: R2.4.4. In addition to those sensitivities mentioned in Requirement R2.4.3, any other sensitivity, as deemed appropriate by the Transmission Planner or Planning Coordinator for their individual systems, shall be run and documentation of the technical rationale for why each was selected shall be supplied.			
E ON US	☑		The proposed requirements P2, P3 and P4 significantly increase system performance. I agree with the requirements but I do not think it is appropropriate to layer extreme load, extreme transfers and other sensitivities on top of these. The analsysis of any Senistivities should be under the umbrella of Extreme Events or limited to meeting the P1 requirements.
HQTE NPCC RCS		☑	The standard is unclear whether or not it mandates the requirement to develop action plans in accordance with consequences of problems highlighted as a result of one of the sensitivity case study. Suggest modification to, "…sensitivity testing that stresses the System shall be considered, and documentation with the rationale for the sensitivity testing shall be supplied. The sensitivity case(s) may include one or more of the following conditions:"
JEA		☑	Transmission Planners when developing system improvement options should identify their system specific sensitivity cases that best assesses the robustness of the options under consideration. Project evaluation is not addressed in the NERC standards and performing sensitivity assessments that only lead to operational remedies consistent with the standards, are best performed within the operational horizon where information and assumptions are more certain than within the planning horizon.
PJM	☑	☑	At the least, it should provide a measure that indicates that you meet the requirement. Need to modify 2.4.3 to specify what if any performance requirement needs to be met.
Central Maine Power National Grid New England ISO NU NSTAR United Illuminating		☑	The standard is unclear whether or not it mandates the requirement to develop action plans for problems highlighted as a result of one of the sensitivities. Suggest modification to, "…sensitivity testing that stresses the System shall be considered, and documentation with the rationale for the sensitivity testing shall be supplied. The sensitivity case(s) may include one or more of the following conditions:" 2.1.3.3 should refer only to planned facilities that may be delayed. 2.1.3.4 - "variability" is too vague for a standard; the standard needs to be more specific as to the intent. 2.1.3.7 should be consistent with 1.4. These comments also apply to 2.4.3.
Response: The standard requires that deficiencies identified from the results of the current studies need to be addressed via Corrective			

Question 12			
Commenter	**Yes**	**No**	**Comment**
Actions Plan while leaving it to the entity's discretion to decide which deficiencies, if any, identified through sensitivity studies should be addressed by the Corrective Action Plan. Requirement R2.7.2 has been modified to make it clear that the entity must explain changes, if any, to the Corrective Action Plans as a result of considering the sensitivity studies. In addition, the SDT believes that there is a need to perform sensitivity studies and to set a minimum level of sensitivities to be considered. To achieve that, the SDT is providing some guidance on what could be included in the sensitivity studies without being too prescriptive. R2.1.3 and R2.4.3 have been modified to require documentation of why the listed sensitivities were or were not selected for specific studies. R2.1.4 and R2.4.4 have been added to specifically state that the entity may consider additional sensitivities that are appropriate for its own system. R2.1.3. For each of the studies described in Requirement R2.1.1 and Requirement R2.1.2, sensitivity case(s) that stress the System with sensitivities that reflect one or more of the following conditions shall be run and documentation ~~with~~ of the technical rationale for ~~the selected sensitivity(ies)~~ why each of the conditions was or was not selected shall be supplied: R2.1.4. In addition to those sensitivities mentioned in Requirement R2.1.3, any other sensitivities, as deemed appropriate by the Transmission Planner or Planning Coordinator for their individual systems, shall be run and documentation of the technical rationale for why each was selected shall be supplied. R2.4.3. For each of the studies described in Requirement R2.4.1 and Requirement R2.4.2, ~~S~~sensitivity case(s) that stress the System to reflect one or more of the following conditions shall be run ~~with documentation provided explaining the rationale for the selected sensitivity(ies)~~ and documentation of the technical rationale for why each of the conditions was or was not selected shall be supplied: R2.4.4. In addition to those sensitivities mentioned in Requirement R2.4.3, any other sensitivity, as deemed appropriate by the Transmission Planner or Planning Coordinator for their individual systems, shall be run and documentation of the technical rationale for why each was selected shall be supplied. R2.**7.2.** ~~Be added to study cases and the cases re-tested to show that the System with planned additions meets the performance requirements in the tables~~ Contain a description of how and why the consideration of the sensitivities selected in accordance with Requirements R2.1.3, R2.1.4, R2.4.3, and R2.4.4 in the Planning Assessment did or did not result in a modification or expansion of the list of actions developed in accordance with Requirement R2.7.1.			
MRO		☑	The Drafting Team has provided the appropriate level of detail by indicating that one or more of the following conditions are to be used. However, the MRO notes that R.2.1.3.1 should be changed to match R.2.4.3.1, that is, R.2.1.3. 1 should be changed to state "Variations in Load model assumptions."
Response: The SDT disagrees. The wording in Requirement R.2.4.3.1 is stability related and refers to device characteristics such as motor load as mentioned in Requirement R2.4.1. The wording in Requirement R.2.1.3. 1 refers to "demand" load for steady statae studies.			
Seattle City		☑	Sensitivity studies should be performed at a level higher than LSE or BA. It seems more appropriate for a RC or RRO to determine regional contingencies.
Response: Requirement R2 in the standard states that Planning Assessments, including the sensitivity studies, should be performed by the TP or PC.			
WECC BPA		☑	The TP or PA is the most familiar with the system and so would be the best to determine the sensitivities that are more applicable to their particular system. The Standard should not be overly

Question 12			
Commenter	**Yes**	**No**	**Comment**
TSGT			prescriptive. The Standard can make suggestions or list potential sensitivities but let the TP or PA determine those variables to study and the reasonable range of the sensitivities.
Response: Requirement R2 in the standard states that Planning Assessments, including the sensitivity studies, should be performed by the TP or PC. The SDT believes that there is a need to perform sensitivity studies and to set a minimum level of sensitivities to be considered. To achieve that, the SDT is providing some guidance on what could be included in the sensitivity studies without being too prescriptive. Requirement R2.1.3 and Requirement R2.4.3 have been modified to require documentation of why the listed sensitivities were or were not selected for specific studies. Requirement R2.1.4 and Requirement R2.4.4 have been added to specifically state that the entity may consider additional sensitivities that are appropriate for its own system. R2.1.3. For each of the studies described in Requirement R2.1.1 and Requirement R2.1.2, sensitivity case(s) that stress the System with sensitivities that reflect one or more of the following conditions shall be run and documentation ~~with~~ of the technical rationale for ~~the selected sensitivity(ies)~~ why each of the conditions was or was not selected shall be supplied: R2.1.4. In addition to those sensitivities mentioned in Requirement R2.1.3, any other sensitivities, as deemed appropriate by the Transmission Planner or Planning Coordinator for their individual systems, shall be run and documentation of the technical rationale for why each was selected shall be supplied. R2.4.3. For each of the studies described in Requirement R2.4.1 and Requirement R2.4.2, ~~S~~sensitivity case(s) that stress the System to reflect one or more of the following conditions shall be run ~~with documentation provided explaining the rationale for the selected sensitivity(ies)~~ and documentation of the technical rationale for why each of the conditions was or was not selected shall be supplied: R2.4.4. In addition to those sensitivities mentioned in Requirement R2.4.3, any other sensitivity, as deemed appropriate by the Transmission Planner or Planning Coordinator for their individual systems, shall be run and documentation of the technical rationale for why each was selected shall be supplied.			
AECC		☑	
AECI		☑	
Exelon		☑	
LCRA		☑	
NERC TIS		☑	
Progress–Florida		☑	
SaskPower		☑	
ATC	☑		
City Utilities/Springfield	☑		
Response: Thank you. Please see the Summary Response.			

13) Q13. Should the standard specify the required changes, such as changes in expected transfers, load forecasts, generation patterns, etc., from the study case to be considered a "reasonably stressed" case?

Summary Response: The SDT is providing some guidance on what needs to be included in sensitivity studies while not being totally prescriptive. R2.1.3 and R2.4.3 have been modified to require documentation of why the listed sensitivities were or were not selected for specific studies. R2.1.4 and R2.4.4 have been added to specifically state that the entity may consider additional sensitivities that are appropriate for its own system. In either case the entity must document the technical rationale for why each was selected. The documentation as well as the studies for the sensitivity(ies) selected will be required to demonstrate compliance.

In addition a new requirement, now numbered as Requirement R2.7.2, has been added to clarify that the sensitivity studies do not in themselves establish the need for a corrective action but the entity must explain how the sensitivities affected the Corrective Action Plan.

Note: The words "reasonably stressed" are only used in the question and do not reference any particular requirement in the standard; therefore, no definition is required.

The following requirements were changed due to industry comments:

R2.1.3. For each of the studies described in Requirement R2.1.1 and Requirement R2.1.2, sensitivity case(s) that stress the System with sensitivities that reflect one or more of the following conditions shall be run and documentation ~~with~~ of the technical rationale for ~~the selected sensitivity(ies)~~ why each of the conditions was or was not selected shall be supplied:
R2.1.4. In addition to those sensitivities mentioned in Requirement R2.1.3, any other sensitivities, as deemed appropriate by the Transmission Planner or Planning Coordinator for their individual systems, shall be run and documentation of the technical rationale for why each was selected shall be supplied.
R2.4.3. For each of the studies described in Requirement R2.4.1 and Requirement R2.4.2, ~~S~~sensitivity case(s) that stress the System to reflect one or more of the following conditions shall be run ~~with documentation provided explaining the rationale for the selected sensitivity(ies)~~ and documentation of the technical rationale for why each of the conditions was or was not selected shall be supplied:
R2.4.4. In addition to those sensitivities mentioned in Requirement R2.4.3, any other sensitivity, as deemed appropriate by the Transmission Planner or Planning Coordinator for their individual systems, shall be run and documentation of the technical rationale for why each was selected shall be supplied.
R2.7.2. ~~Be added to study cases and the cases re-tested to show that the System with planned additions meets the performance requirements in the tables~~ Contain a description of how and why the consideration of the sensitivities selected in accordance with Requirements R2.1.3, R2.1.4, R2.4.3, and R2.4.4 in the Planning Assessment did or did not result in a modification or expansion of the list of actions developed in accordance with Requirement R2.7.1.

Question 13			
Commenter	**Yes**	**No**	**Comment**
Ameren		☑	There is no need to build a multitude of sensitivity cases to assess the reliability of the system. The sensitivity issues should be handled on an individual system basis by the local transmission planners as applicable to the study system. Conditions that are considered as "stressed" for one area may require all facilities to be in service in another area. Power flow cases utilizing a number of the

Question 13			
Commenter	Yes	No	Comment
			items listed under R2.1.3 or R2.4.3 could be produced for in-house study work, but such work should not be required as part of standards compliance. The standard should not be dictating what types of sensitivities should be investigated or considered for all parts of the transmission system.
AEP		☑	Consider requiring that the most severe sensitivity cases be included in the studies as determined by the entities conducting the studies.
Brazos Electric		☑	Again, descretion should be allowed by the TO when selecting the criteria.
CenterPoint		☑	See comment to Q12.
Dominion		☑	Transmission Planning engineers have good engineering judgment and need to have some flexibility in selecting the variables that need to be studied.
CPS Energy		☑	The type of sensitivty studies should be at the discretion of Transmission Planners.
Duke Energy		☑	The sensitivities are best selected by those most familiar with the specific system.
Entergy		☑	Should be left to Transmission Planners discretion and good engineering judgement. (see response to Q12)
Exelon		☑	The required changes should not be specified because they may not impact a particular transmission system based upon its geographic location within the interconnection. Required changes should be determined by the entity performing the study.
ERCOT ISO CAISO		☑	Let the TP or PA decide the type of stressing needed for a particular case.
FPL FRCC		☑	The Transmission Planner needs the flexibility to define what are considered "reasonably stressed" cases for their respective systems. This would not a be a proper application of a one size fits all definition.
Georgia Transm.		☑	See comment to Q12.
IESO		☑	See comments above. Also, the term "reasonably stressed" is not measurable.
KCPL		☑	Transmission Planner has best knowledge of conditions that create greatest stress on local transmission system.
LADWP		☑	A "reasnably stressed" case in transmission planning is whether or not the transmission system is stressed. To stress a transmission system, the key parameter to monitor are the line flows. Line flows are dictated by network topology and physics of electricity and very much depends on the objectives of each study, i.e., it is case by case. Standard should focus on what criteria shall be complied, not how to comply. This proposed standard is so prescriptive on how to comply that it reads like a tutorial.
MEAG Power		☑	The standard may offer guidance but what constitutes a "reasonably stressed" case will vary from Transmission Planner to Transmission Planner. Therefore, it should be left to the discretion of the entity performing the study.

Question 13			
Commenter	**Yes**	**No**	**Comment**
MISO		☑	This appears to be a case of expecting that "one size fits all" in requiring that certain scenarios be evaluated. Since the goal here is to improve reliability, it makes more sense to have transmission planners identify appropriate sentivities for area under study. The appropriate sensitivity is likely to vary depending on the portion of system being studied.
Muscatine P&W			Leave it open so it can be driven by local issues including those not in the standards. i.e. Running near term criteria on the long term horizon, additional contingencies beyond currently required, etc. as appropriate for the area.
NCEMC		☑	The standard should offer guidance but what constitutes a "reasonably stressed" case should be left to a stakeholder process as noted in Q12 with some discretion of the entity performing the study.
Northwestern Energy		☑	Each TP's stressed conditions vary, making a list that is applicable to all will not achieve the desired purpose.
Progress–Carolinas		☑	This should be system specific.
Santee Cooper		☑	The standard may offer guidance but what constitutes a "reasonably stressed" case should be left to the discretion of the entity performing the study, since they are the best judge of what stresses the system.
SERC EC DRS		☑	The entity performing the studies has the best system specific knowledge to determine what constitutes a reasonable stressed case.
SERC EC PSS		☑	The standard may offer guidance but what constitutes a "reasonably stressed" case should be left to the discretion of the entity performing the study.
SERC RRS OPS		☑	The standard may offer guidance but what constitutes a "reasonably stressed" case should be left to the discretion of the entity performing the study, since they are the best judge of what stresses the system.
SCE&G		☑	The standard may offer guidance but what constitutes a "reasonably stressed" case should be left to the discretion of the entity performing the study.
Southern Transm.		☑	See comment above. [This should not be a "one shoe fits all" exercise. It appears that at least one of these items listed is required even though they may not be the most appropriate ones for all entities. There should be the ability to perform other sensitivity analysis instead of these as long as the "rationale" is provided for the choice. The entity should be allowed to determine the appropriate sensitivity cases.]
TEP		☑	No, as in the response for Question #12. The TP is the best to determine the type of stressing needed for a particular case. This is very evident in the type of cases used for studies in the different parts of the NERC regions.
TVA		☑	The standard may offer guidance but what constitutes a "reasonably stressed" case should be left to the discretion of the entity performing the study.
Response: The SDT is providing some guidance on what needs to be included in sensitivity studies while not being totally prescriptive. R2.1.3 and R2.4.3 have been modified to require documentation of why the listed sensitivities were or were not selected for specific studies. R2.1.4 and R2.4.4 have been added to specifically state that the entity may consider additional sensitivities that are appropriate for its own			

Question 13			
Commenter	**Yes**	**No**	**Comment**
system. In either case the entity must document the technical rationale for why each was selected. The documentation as well as the studies for the sensitivity(ies) selected will be required to demonstrate compliance. Note: The words "reasonably stressed" are only used in the question and do not reference any particular requirement in the standard; therefore, no definition is required. **R2.1.3.** For each of the studies described in Requirement R2.1.1 and Requirement R2.1.2, sensitivity case(s) that stress the System with sensitivities that reflect one or more of the following conditions shall be run and documentation ~~with~~ of the technical rationale for ~~the selected sensitivity(ies)~~ why each of the conditions was or was not selected shall be supplied: **R2.1.4.** In addition to those sensitivities mentioned in Requirement R2.1.3, any other sensitivities, as deemed appropriate by the Transmission Planner or Planning Coordinator for their individual systems, shall be run and documentation of the technical rationale for why each was selected shall be supplied. **R2.4.3.** For each of the studies described in Requirement R2.4.1 and Requirement R2.4.2, ~~S~~sensitivity case(s) that stress the System to reflect one or more of the following conditions shall be run ~~with documentation provided explaining the rationale for the selected sensitivity(ies)~~ and documentation of the technical rationale for why each of the conditions was or was not selected shall be supplied: **R2.4.4.** In addition to those sensitivities mentioned in Requirement R2.4.3, any other sensitivity, as deemed appropriate by the Transmission Planner or Planning Coordinator for their individual systems, shall be run and documentation of the technical rationale for why each was selected shall be supplied. .			
Allegheny Power		☑	Providing examples would be helpful but specifically stating the required thresholds are transmission system dependent. Providing some methodologies to follow may be prudent such as forecast levels like 90/10; 80/20; or 50/50.
BCTC		☑	Should be tied to the data provided under R1.
Response: The SDT is providing some guidance on what needs to be included in sensitivity studies while not being totally prescriptive. R2.1.3 and R2.4.3 have been modified to require documentation of why the listed sensitivities were or were not selected for specific studies. R2.1.4 and R2.4.4 have been added to specifically state that the entity may consider additional sensitivities that are appropriate for its own system. In either case the entity must document the technical rationale for why each was selected. The documentation as well as the studies for the sensitivity(ies) selected will be required to demonstrate compliance. **R2.1.3.** For each of the studies described in Requirement R2.1.1 and Requirement R2.1.2, sensitivity case(s) that stress the System with sensitivities that reflect one or more of the following conditions shall be run and documentation ~~with~~ of the technical rationale for ~~the selected sensitivity(ies)~~ why each of the conditions was or was not selected shall be supplied: **R2.1.4.** In addition to those sensitivities mentioned in Requirement R2.1.3, any other sensitivities, as deemed appropriate by the Transmission Planner or Planning Coordinator for their individual systems, shall be run and documentation of the technical rationale for why each was selected shall be supplied. **R2.4.3.** For each of the studies described in Requirement R2.4.1 and Requirement R2.4.2, ~~S~~sensitivity case(s) that stress the System to reflect one or more of the following conditions shall be run ~~with documentation provided explaining the rationale for the selected~~			

Question 13			
Commenter	**Yes**	**No**	**Comment**
~~sensitivity(ies)~~ and documentation of the technical rationale for why each of the conditions was or was not selected shall be supplied: **R2.4.4.** In addition to those sensitivities mentioned in Requirement R2.4.3, any other sensitivity, as deemed appropriate by the Transmission Planner or Planning Coordinator for their individual systems, shall be run and documentation of the technical rationale for why each was selected shall be supplied.			
Central Maine Power HQTE National Grid New England ISO NU NPCC RCS NSTAR United Illuminating		☑	The standard is unclear whether or not it mandates the requirement to mitigate consequences of problems highlighted as a result of one of the sensitivities. Reasonably stressed conditions are dependent upon the study area under review and the standard is not likely to be able to be crafted to provide sufficent and consistent direction. However, it might be helpful if the standard clarified whether the base case should include any unplanned generator outages or whether, aside from potential sensitivities, unplanned generator outages are considered only through P1, P3 or P4 Contingencies. If the standard addresses unplanned generator outages only through P1, P3 and P4, then it is recommended that a mandatory sensitivity analysis, with required mitigation, include various potential combinations of a reasonable amount of unplanned outages. The combinations should be based on the part of the system that is under study.
Response: A new requirement, now numbered as Requirement R2.7.2, has been added to clarify that the sensitivity studies do not in themselves establish the need for a corrective action but the entity must explain how the sensitivities affected the Corrective Action Plan. Requirement R1.4 of the standard requires that long term planned outages are part of the base studies. The performance table provides for specific contingency conditions. The entity may elect to run additional sensitivity studies for even more unplanned outages as stated in Requirement R2.1.4 and document its rationale for doing so. Note: The words "reasonably stressed" are only used in the question and do not reference any particular requirement in the standard; therefore, no definition is required. **R2.**7.2. ~~Be added to study cases and the cases re-tested to show that the System with planned additions meets the performance requirements in the tables~~ Contain a description of how and why the consideration of the sensitivities selected in accordance with Requirements R2.1.3, R2.1.4, R2.4.3, and R2.4.4 in the Planning Assessment did or did not result in a modification or expansion of the list of actions developed in accordance with Requirement R2.7.1.			
JEA		☑	Transmission Planners when developing system improvement options should identify their system specific "reasonable stressed" cases including opportunities for additional economic margins that best assesses the economic benefits of the options under consideration. Project evaluation is not addressed in the NERC standards and performing assessments on "reasonable stressed" cases that only lead to operational remedies consistent with the standards, are best performed within the operational horizon where information and assumptions are more certain than within the planning horizon.

Question 13			
Commenter	**Yes**	**No**	**Comment**
Response: Reliability Standards set the minimum performance requirements and any margins can be set /established and implemented by the entity. The standard covers reliability performance issues and not market or economic performance issues. The SDT is providing some guidance on what needs to be included in sensitivity studies while not being totally prescriptive. R2.1.3 and R2.4.3 have been modified to require documentation of why the listed sensitivities were or were not selected for specific studies. R2.1.4 and R2.4.4 have been added to specifically state that the entity may consider additional sensitivities that are appropriate for its own system. In either case the entity must document the technical rationale for why each was selected. The documentation as well as the studies for the sensitivity(ies) selected will be required to demonstrate compliance. Note: The words "reasonably stressed" are only used in the question and do not reference any particular requirement in the standard; therefore, no definition is required. **R2.1.3.** For each of the studies described in Requirement R2.1.1 and Requirement R2.1.2, sensitivity case(s) that stress the System with sensitivities that reflect one or more of the following conditions shall be run and documentation ~~with~~ of the technical rationale for ~~the selected sensitivity(ies)~~ why each of the conditions was or was not selected shall be supplied: **R2.1.4.** In addition to those sensitivities mentioned in Requirement R2.1.3, any other sensitivities, as deemed appropriate by the Transmission Planner or Planning Coordinator for their individual systems, shall be run and documentation of the technical rationale for why each was selected shall be supplied. **R2.4.3.** For each of the studies described in Requirement R2.4.1 and Requirement R2.4.2, ~~S~~sensitivity case(s) that stress the System to reflect one or more of the following conditions shall be run ~~with documentation provided explaining the rationale for the selected sensitivity(ies)~~ and documentation of the technical rationale for why each of the conditions was or was not selected shall be supplied: **R2.4.4.** In addition to those sensitivities mentioned in Requirement R2.4.3, any other sensitivity, as deemed appropriate by the Transmission Planner or Planning Coordinator for their individual systems, shall be run and documentation of the technical rationale for why each was selected shall be supplied.			
ITC	☑		"Modification of expected transfers" should include unexpected loopflow caused by 3rd parties where applicable. In addition to the obvious impacts on system margins, loopflows have been identified as a major reason that FTR feasibility is hard to predict. Also, see answer to Q12 above. Some level of flexibility for some of the stressed cases should be left to the individual Planning areas as they would know typical load/stresses seen by their systems that should be studied and solutions identified for problems.
MRO		☑	This is unnecessary micro-management of the planning process. The MRO recommends that the Drafting Team proceed with the high-level requirement as provided with the minor changes recommended by the MRO in other parts of this comment form.
ReliabilityFirst		☑	A list of suggestions is sufficient. The flexibility to use different stresses on different systems is

Question 13			
Commenter	**Yes**	**No**	**Comment**
			needed.
SaskPower		☑	Unnecessary micro-management of the planning process in the Saskatchewan Regulatory Jurisdiction.
WECC BPA TSGT		☑	No, as in the response for Question #12. The TP is the best to determine the type of stressing needed for a particular case. This is very evident in the type of cases used for studies in the different parts of the NERC regions.

Response: The SDT is providing some guidance on what needs to be included in sensitivity studies while not being totally prescriptive. Requirement R2.1.3 and Requirement R2.4.3 have been modified to require documentation of why the listed sensitivities were or were not selected for specific studies. Requirement R2.1.4 and Requirement R2.4.4 have been added to specifically state that the entity may consider additional sensitivities that are appropriate for its own system. In either case the entity must document the technical rationale for why each was selected.

In addition a new requirement, now numbered as R2.7.2, has been added to clarify that the sensitivity studies do not in themselves establish the need for a corrective action but the entity must explain how the sensitivities affected the Corrective Action Plan.

R2.1.3. For each of the studies described in Requirement R2.1.1 and Requirement R2.1.2, sensitivity case(s) that stress the System with sensitivities that reflect one or more of the following conditions shall be run and documentation ~~with~~ of the technical rationale for ~~the selected sensitivity(ies)~~ why each of the conditions was or was not selected shall be supplied:
R2.1.4. In addition to those sensitivities mentioned in Requirement R2.1.3, any other sensitivities, as deemed appropriate by the Transmission Planner or Planning Coordinator for their individual systems, shall be run and documentation of the technical rationale for why each was selected shall be supplied.
R2.4.3. For each of the studies described in Requirement R2.4.1 and Requirement R2.4.2, ~~S~~sensitivity case(s) that stress the System to reflect one or more of the following conditions shall be run ~~with documentation provided explaining the rationale for the selected sensitivity(ies)~~ and documentation of the technical rationale for why each of the conditions was or was not selected shall be supplied:
R2.4.4. In addition to those sensitivities mentioned in Requirement R2.4.3, any other sensitivity, as deemed appropriate by the Transmission Planner or Planning Coordinator for their individual systems, shall be run and documentation of the technical rationale for why each was selected shall be supplied.

New York ISO		☑	See comment to Q12. Additionally, what is the definition of "reasonably stressed"?

Response: The SDT is providing some guidance on what needs to be included in sensitivity studies while not being totally prescriptive. Requirement R2.1.3 and Requirement R2.4.3 have been modified to require documentation of why the listed sensitivities were or were not selected for specific studies. Requirement R2.1.4 and Requirement R2.4.4 have been added to specifically state that the entity may consider additional sensitivities that are appropriate for its own system. In either case the entity must document the technical rationale for why each was selected. The documentation as well as the studies for the sensitivity(ies) selected will be required to demonstrate compliance.

In addition a new requirement, now numbered as Requirement R2.7.2, has been added to clarify that the sensitivity studies do not in themselves establish the need for a Corrective Action but the entity must explain how the sensitivities affected the Corrective Action Plan.

Question 13			
Commenter	**Yes**	**No**	**Comment**
Note: The words "reasonably stressed" are only used in the question and do not reference any particular requirement in the standard; therefore, no definition is required. **R2.1.3.** For each of the studies described in Requirement R2.1.1 and Requirement R2.1.2, sensitivity case(s) that stress the System with sensitivities that reflect one or more of the following conditions shall be run and documentation ~~with~~ of the technical rationale for ~~the selected sensitivity(ies)~~ why each of the conditions was or was not selected shall be supplied: **R2.1.4.** In addition to those sensitivities mentioned in Requirement R2.1.3, any other sensitivities, as deemed appropriate by the Transmission Planner or Planning Coordinator for their individual systems, shall be run and documentation of the technical rationale for why each was selected shall be supplied. **R2.4.3.** For each of the studies described in Requirement R2.4.1 and Requirement R2.4.2, ~~S~~sensitivity case(s) that stress the System to reflect one or more of the following conditions shall be run ~~with documentation provided explaining the rationale for the selected sensitivity(ies)~~ and documentation of the technical rationale for why each of the conditions was or was not selected shall be supplied: **R2.4.4.** In addition to those sensitivities mentioned in Requirement R2.4.3, any other sensitivity, as deemed appropriate by the Transmission Planner or Planning Coordinator for their individual systems, shall be run and documentation of the technical rationale for why each was selected shall be supplied. **R2.7.2.** ~~Be added to study cases and the cases re-tested to show that the System with planned additions meets the performance requirements in the tables~~ Contain a description of how and why the consideration of the sensitivities selected in accordance with Requirements R2.1.3, R2.1.4, R2.4.3, and R2.4.4 in the Planning Assessment did or did not result in a modification or expansion of the list of actions developed in accordance with Requirement R2.7.1.			
WPS		☑	The Transmission Planner should have the ability to determine appropriate sensitivities based on changes to the assumptions within the study. However, those sensitivities should be developed in an open transmission planning process consistent with the transmission planning principles within FERC Order 890.
Response: The SDT agrees. Nothing in the standard precludes an open process. The SDT is providing some guidance on what needs to be included in sensitivity studies while not being totally prescriptive. Requirement R2.1.3 and Requirement R2.4.3 have been modified to require documentation of why the listed sensitivities were or were not selected for specific studies. Requirement R2.1.4 and Requirement R2.4.4 have been added to specifically state that the entity may consider additional sensitivities that are appropriate for its own system. In either case the entity must document the technical rationale for why each was selected. In addition a new requirement, now numbered as Requirement R2.7.2, has been added to clarify that the sensitivity studies do not in themselves establish the need for a Corrective Action but the entity must explain how the sensitivities affected the Corrective Action Plan. **R2.1.3.** For each of the studies described in Requirement R2.1.1 and Requirement R2.1.2, sensitivity case(s) that stress the System with sensitivities that reflect one or more of the following conditions shall be run and documentation ~~with~~ of the technical rationale for ~~the selected sensitivity(ies)~~ why each of the conditions was or was not selected shall be supplied:			

Question 13			
Commenter	**Yes**	**No**	**Comment**
R2.1.4. In addition to those sensitivities mentioned in Requirement R2.1.3, any other sensitivities, as deemed appropriate by the Transmission Planner or Planning Coordinator for their individual systems, shall be run and documentation of the technical rationale for why each was selected shall be supplied. **R2.4.3.** For each of the studies described in Requirement R2.4.1 and Requirement R2.4.2, ~~S~~sensitivity case(s) that stress the System to reflect one or more of the following conditions shall be run ~~with documentation provided explaining the rationale for the selected sensitivity(ies)~~ and documentation of the technical rationale for why each of the conditions was or was not selected shall be supplied: **R2.4.4.** In addition to those sensitivities mentioned in Requirement R2.4.3, any other sensitivity, as deemed appropriate by the Transmission Planner or Planning Coordinator for their individual systems, shall be run and documentation of the technical rationale for why each was selected shall be supplied. R2.**7.2.** ~~Be added to study cases and the cases re-tested to show that the System with planned additions meets the performance requirements in the tables~~ Contain a description of how and why the consideration of the sensitivities selected in accordance with Requirements R2.1.3, R2.1.4, R2.4.3, and R2.4.4 in the Planning Assessment did or did not result in a modification or expansion of the list of actions developed in accordance with Requirement R2.7.1.			
ABB		☑	
AECC		☑	
AECI		☑	
E ON US		☑	
FirstEnergy		☑	
LCRA		☑	
NERC TIS		☑	
Progress–Florida		☑	
Response: Thank you.			
PJM	☑	☑	Again, 'reasonable' is a very subjective term. Refer to comments on question 12
Tenaska	☑		However, what is meant by "reasonably stressed".
Response: Note: The words "reasonably stressed" are only used in the question and do not reference any particular requirement in the standard; therefore, no definition is required.			
APPA	☑		The Standard should indicate a list that says "the list will include but not be limited to:" and then list the minimum necessary to adequately cover the changes in the study.
City Water Power and Light	☑		The Standard should indicate a list which says "the list will include but not be limited to:" then list the minimum changes necessary to adequately cover the changes in the study.
Response: The SDT is providing some guidance on what needs to be included in sensitivity studies while not being totally prescriptive. Requirement R2.1.3 and Requirement R2.4.3 have been modified to require documentation of why the listed sensitivities were or were not selected for specific studies. Requirement R2.1.4 and Requirement R2.4.4 have been added to specifically state that the entity may consider			

Question 13			
Commenter	**Yes**	**No**	**Comment**
additional sensitivities that are appropriate for its own system. In either case the entity must document the technical rationale for why each was selected. **R2.1.3.** For each of the studies described in Requirement R2.1.1 and Requirement R2.1.2, sensitivity case(s) that stress the System with sensitivities that reflect one or more of the following conditions shall be run and documentation ~~with~~ of the technical rationale for ~~the selected sensitivity(ies)~~ why each of the conditions was or was not selected shall be supplied: **R2.1.4.** In addition to those sensitivities mentioned in Requirement R2.1.3, any other sensitivities, as deemed appropriate by the Transmission Planner or Planning Coordinator for their individual systems, shall be run and documentation of the technical rationale for why each was selected shall be supplied. **R2.4.3.** For each of the studies described in Requirement R2.4.1 and Requirement R2.4.2, ~~S~~sensitivity case(s) that stress the System to reflect one or more of the following conditions shall be run ~~with documentation provided explaining the rationale for the selected sensitivity(ies)~~ and documentation of the technical rationale for why each of the conditions was or was not selected shall be supplied: **R2.4.4.** In addition to those sensitivities mentioned in Requirement R2.4.3, any other sensitivity, as deemed appropriate by the Transmission Planner or Planning Coordinator for their individual systems, shall be run and documentation of the technical rationale for why each was selected shall be supplied.			
Manitoba Hydro	☑		R.2.1.3.2: clarify the intent of modification of expected transfers. Does this apply to firm transfers only, or does it also encompass non-firm transfers? Should this encompass simultaneous non-firm transfers? Planning for non-firm falls into an economic study of cost/benefit and not a relibility requirement. R2.1.3.3: There is little value in identifying the impact of unavailability of planned facilities. From a reliability perspective, these facilities are required to meet performance requirements. Near term SOLs and IROLs will insure reliability if the facility is late. R.2.1.3.4: This requirement should be removed and outages of reactive resources should be included in the Table 1 contingencies (assuming the intent is to investigate robustness to voltage instability). R.2.1.3.5: This requirement should be removed as this is covered, or should be, by the facility connection standard(s). R.2.1.3.6: This requirement should be removed as this is covered by requirement R2.1.3.1. There is no need to list "decreased effectiveness of controllable loads or DSM" as this is already covered by sensitivity to forecast load and power factor - this will cause confusion. R.2.1.3.7: Modification of planned Transmission outages should be deleted. The need to assess outages in the planning horizon is questionable, so assessing sensitivity to timing of these outages is of very little value. Furthermore, this standard already covers prior outages in its other requirements.
Response: The SDT is providing some guidance on what needs to be included in sensitivity studies while not being totally prescriptive. Requirement R2.1.3 and Requirement R2.4.3 have been modified to require documentation of why the listed sensitivities were or were not selected for specific studies. Requirement R2.1.4 and Requirement R2.4.4 have been added to specifically state that the entity may consider			

Question 13			
Commenter	Yes	No	Comment

additional sensitivities that are appropriate for its own system. In either case the entity must document the technical rationale for why each was selected.

In addition a new requirement, now numbered as Requirement R2.7.2, has been added to clarify that the sensitivity studies do not in themselves establish the need for a Corrective Action but the entity must explain how the sensitivities affected the Corrective Action Plan.

It is the planning entity's decision to establish and document which transfers under Requirement R2.1.3.2 are more significant to study system responses.

The intent of Requirement R2.1.3.3 is for the planning entity to determine the need for alternative plans in the event that previously planned facilities are not installed on time.

Requirement R2.1.3.4 (variability and outages of reactive resources) provides for more unusual or unexpected combination of situations. The contingencies listed in Table 1 usually consider more specific conditions in that the reactive resources are typically connected to circuits or bus sections which are included in Table 1.

Requirement R2.1.3.5 (generation additions, retirements, or other dispatch scenarios) covers future conditions that might exist (such as location, size, numger of facilities) after known connections are made. The FAC standards only consider the initial conditions for known facilities when an entity is requesting connection to the system. Requirement R2.1.3.5 covers the on-going conditions that exist after that connection is made. In addition the requirement covers dispatch scenarios which are not part of the FAC standards.

Requirement R2.1.3.1 is intended to cover all load before any adjustments. This can vary on its own. Requirement R2.1.3.6 covers only a portion of that load and can vary independent of the load forecast. The standard is not just addressing the "net" load but its components.

Requirement R2.1.3.7 parallels Requirement R2.1.3.3 in that "planned" outage durations may vary. It is the entity's responsibility to determene the actions necessaruy to handle extended outages.

R2.1.3. For each of the studies described in Requirement R2.1.1 and Requirement R2.1.2, sensitivity case(s) that stress the System with sensitivities that reflect one or more of the following conditions shall be run and documentation ~~with~~ of the technical rationale for ~~the selected sensitivity(ies)~~ why each of the conditions was or was not selected shall be supplied:
R2.1.4. In addition to those sensitivities mentioned in Requirement R2.1.3, any other sensitivities, as deemed appropriate by the Transmission Planner or Planning Coordinator for their individual systems, shall be run and documentation of the technical rationale for why each was selected shall be supplied.
R2.4.3. For each of the studies described in Requirement R2.4.1 and Requirement R2.4.2, ~~S~~sensitivity case(s) that stress the System to reflect one or more of the following conditions shall be run ~~with documentation provided explaining the rationale for the selected sensitivity(ies)~~ and documentation of the technical rationale for why each of the conditions was or was not selected shall be supplied:
R2.4.4. In addition to those sensitivities mentioned in Requirement R2.4.3, any other sensitivity, as deemed appropriate by the Transmission Planner or Planning Coordinator for their individual systems, shall be run and documentation of the technical rationale for

Question 13			
Commenter	**Yes**	**No**	**Comment**
why each was selected shall be supplied. **R2.7.2.** ~~Be added to study cases and the cases re-tested to show that the System with planned additions meets the performance requirements in the tables~~ Contain a description of how and why the consideration of the sensitivities selected in accordance with Requirements R2.1.3, R2.1.4, R2.4.3, and R2.4.4 in the Planning Assessment did or did not result in a modification or expansion of the list of actions developed in accordance with Requirement R2.7.1.			
ATC	☑		
City Utilities/Springfield	☑		
Seattle City	☑		
Response: Thank you. Please see the Summary Response.			

14) Q14. The SDT proposes to require the use of sensitivity studies for Near-Term Transmission System Planning Horizon stability analysis. Do you concur with the use of sensitivity analysis in dynamic studies?

Summary Response: The need to conduct sensitivity analysis was a directive in FERC Order 693 paragraphs 1694,1704, and 1706. The commenters generally agree with the concept of considering sensitivities for near-term Stability analysis. The SDT is providing some guidance on what needs to be included in sensitivity studies while not being totally prescriptive. Requirement R2.1.3.1 provides the flexibility to allow the planning entity to decide how a variation in Load on the entity(ies) System should best be studied. Requirement R2.4.3 has been modified to require documentation of the rationale for why each of the listed sensitivities was or was not selected for running studies. Requirement R2.4.4 has been added to specifically state that the entity may consider additional sensitivities that are deemed appropriate for its own System and document the rationale for selecting each of them.

R2.1.3.1. Higher or lower Load than forecast~~s~~ed ~~from the Base Case~~ with variability of Load/demand and Load power factors due to season, weather, or time of day.
R2.4.3. For each of the studies described in Requirement R2.4.1 and Requirement R2.4.2, ~~S~~sensitivity case(s) that stress the System to reflect one or more of the following conditions shall be run ~~with documentation provided explaining the rationale for the selected sensitivity(ies)~~ and documentation of the technical rationale for why each of the conditions was or was not selected shall be supplied:
R2.4.3.2. ~~Expected simultaneous transfers including non-firm~~ Modification of expected transfers**.**
R2.4.3.4. ~~Reactive dispatch of generators and other reactive power devices~~ Variability and outages of reactive resources.
R2.4.4. In addition to those sensitivities mentioned in Requirement R2.4.3, any other sensitivity, as deemed appropriate by the Transmission Planner or Planning Coordinator for their individual systems, shall be run and documentation of the technical rationale for why each was selected shall be supplied.

Question 14			
Commenter	**Yes**	**No**	**Comment**
Ameren		☑	The biggest problem with performing stability analysis is getting the stability cases to match up with the power flow cases, and only a limited number of stability cases are developed each year. Further, for those systems that are planned in excess of the NERC Standards regarding stability (3-L-G or 2-L-G vs. 1-L-G as in the Standard), there are no benefits to performing additional sensitivity studies to demonstrate compliance with this standard.
City Water Power and Light		☑	The requirement for sensitivity studies multiplies the study efforts. It will be burdensome especially when interregional studies are performed. It is better to have quality than quantity.
Dominion		☑	Not all the items listed under "B. Sensitivity Studies" may be applicable to stability analysis and also depends on type of stability analysis (Plant/System; angular/voltage). For instance, in some locations stability margins are wide. In such cases, practical experience has shown that such sensitivity analysis is unnecessary. Therefore, this should be applied as applicable, at the engineering judgment of the planning engineers rather than be required by the Standards. In summary, R2.4.3 should be eliminated entirely.
E ON US		☑	Stability studies are a labor intensive task. Off-peak studies (with max plant gen) is severe enough.
SCE&G		☑	Stability studies examine generator and system responses to specific conditions. Because the exact system conditions can not be determined in advance, the sensitivity analysis may not be very

Question 14			
Commenter	**Yes**	**No**	**Comment**
			useful. In addition, stability studies are more time consuming than conventional power flow studies. A preferred approach is to include pre-existing system conditions that additionally stress the system during the contingencies under study so as to verify that stability is preserved under conditions that go beyond those envisioned for the contingency.
TSGT		☑	Sensitivity studies are most often used to determine operating relationships of a system - sensitivity to generation patterns is deliverability analysis; sensitivity to load growth is margin analysis. Sensitivity analysis should not be required explicitly. The criteria should be stated in terms of load margins, deliverability, and capability to withstand generator or transaction forced outages. The TP can use sensitivity studies or other reasonable methods to assess reliability
TVA	☑		Consideration should be given to the fact that stability studies are more time consuming than conventional power flow studies. A single 20 second stability simulation is computationally equivalent to running 80 steady-state powerflow cases and has significantly larger pre-analysis preparation effort.
FirstEnergy	☑		Although we concur with the use of sensitivity analysis in dynamic studies, the standard should not dictate the specific sensitivities studies to be performed.
LADWP	☑		This standard is mixing operational studies with planning studies. The suggested sensitivities in this proposed standards are what operating studies would and should address. It adds no value to the transmission planning by requiring sensitivities in transmission planning just for the sake of it. In addition, performing operating studies more than one year ahead, generally, is quite useless as a general requirement.
Manitoba Hydro	☑		R2.4.3.1: This requirement should include variation in load power factor, as this has a significant impact on transient performance. R2.4.3.3: There is little value in identifying the impact of unavailability of planned facilities. From a reliability perspective, these facilities are required to meet performance requirements. Near term SOLs and IROLs will insure reliability if the facility is late. R.2.4.3.4: This requirement should be removed and dispatch of reactive power devices should be included in the Table 2 contingencies (assuming the intent is to investigate robustness to voltage instability). R.2.4.3.5: This requirement should be removed as this is covered, or should be, by the facility connection standard(s).

Response: The need to conduct sensitivity analysis was a directive in FERC Order 693 paragraphs 1694,1704, and 1706. The SDT agrees with you that dynamic analysis is generally more labor intensive than steady state analysis. The SDT is providing some guidance on what needs to be included in sensitivity studies while not being totally prescriptive. The SDT has modified Requirement R2.4.3 to stipulate that the entity shall provide rational for why sensitivity on the list were or were not included in the sensitivity studies and that the entity may consider additional sensitivities that are appropriate for its own System.

R2.4.3. For each of the studies described in Requirement R2.4.1 and Requirement R2.4.2, ~~S~~sensitivity case(s) that stress the System to reflect one or more of the following conditions shall be run ~~with documentation provided explaining the rationale for the selected~~

Question 14			
Commenter	**Yes**	**No**	**Comment**
~~sensitivity(ies)~~ and documentation of the technical rationale for why each of the conditions was or was not selected shall be supplied:			
AEP			We concur with the use of sensitivity studies, but object to the requirement on what sensitivities to include. The flexibility to determine if sensitivity studies are appropriate, and the flexibility to choose what parameters are appropriate to study for sensitivity should be left open. R2.4.3 as written is restrictive to certain sensitivities and should not be.
CenterPoint		☑	The number and type of sensitivity studies should be left to the judgement of Transmission Planners.
CPS Energy		☑	The number and type of sensitivity studies should be at the discretion of Transmission Planners.
Duke Energy	☑	☑	Sensitivity studies can be useful, but they should only be requried for System Stability Studies. Due to the intensive nature of the studies, the planning engineer should have flexibility to determine appropriate sensitivities to analyze.
ERCOT ISO CAISO		☑	Although we concur with the sensitivity analysis,the TP should determine what sensitivities are more appropriate for their system. Sensitivities should not be scripted in the Standard.
ITC	☑		Both peak and off-peak models have been historically used for stability analysis and should continue to be used. The need for additional sensitivity studies should be left to the discreton of the Transmission Planner.
MEAG Power	☑		The entity performing the studies should be allowed to determine the appropriate sensitivity studies that need to be evaluated. An alternate approach is to include pre-existing system conditions that additionally stress the system during the contingencies under study so as to verify that stability is preserved under conditions that go beyond those envisioned for the contingency. Stability studies are more time consuming than conventional power flow studies. A single 20 second stability simulation is computationally equivalent to running 80 steady-state powerflow cases and has significantly larger pre-analysis preparation effort.
MISO		☑	Use of sensitivities should not be required for Stability analysis, but the Standard should rather allow sensitivities at the discretion of the planning engineer. Due to the computationally intensive nature of these studies, a study rotation would be appropriate. For example, one year would be peak base case, next year off-peak case, and following year a sensitivity case. A single 20 second stability simulation is computationally equivalent to running 80 steady-state powerflow cases and has significantly larger pre-analysis preparation effort.
NCEMC	☑		The entity performing the studies should be allowed to determine the appropriate sensitivity studies that need to be evaluated with a stakeholder process for those impacted by these studies as noted above. An alternate approach is to include pre-existing system conditions that additionally stress the system during the contingencies under study so as to verify that stability is preserved under conditions that go beyond those envisioned for the contingency. Stability studies are more time consuming than conventional power flow studies. A single 20 second stability simulation is computationally equivalent to running 80 steady-state powerflow cases and has significantly larger pre-analysis preparation effort.

Question 14			
Commenter	**Yes**	**No**	**Comment**
Northwestern Energy	☑	☑	The TP should have the ability to determine the sensitivity to use.
Santee Cooper	☑		The entity performing the studies should be allowed to determine the appropriate sensitivity studies that need to be evaluated. An alternate approach is to include pre-existing system conditions that additionally stress the system during the contingencies under study so as to verify that stability is preserved under conditions that go beyond those envisioned for the contingency. Stability studies are more time consuming than conventional power flow studies. A single 20 second stability simulation is computationally equivalent to running 80 steady-state powerflow cases and has significantly larger pre-analysis preparation effort.
SERC EC PSS SERC RRS OPS	☑		The entity performing the studies should be allowed to determine the appropriate sensitivity studies that need to be evaluated. An alternate approach is to include pre-existing system conditions that additionally stress the system during the contingencies under study so as to verify that stability is preserved under conditions that go beyond those envisioned for the contingency. Stability studies are more time consuming than conventional power flow studies. A single 20 second stability simulation is computationally equivalent to running 80 steady-state powerflow cases and has significantly larger pre-analysis preparation effort.
AECI		☑	We believe that only the worst case would need to be addressed for stability purposes.
WECC BPA TEP	☑	☑	We concur with the use of sensitivities as long as the TPs are allowed to determine the sensitivities that are the more appropriate for their systems and not have the sensitivities scripted in the Standard.
Muscatine P&W	☑		If reasonable and appropriate and allow for local issues including those not in the standards..
Response: The SDT is providing some guidance on what needs to be included in sensitivity studies while not being totally prescriptive. The SDT has modified Requirement R2.4.3 to stipulate that the entity shall provide rational for why sensitivity on the list were or were not included in the sensitivity studies and that the entity may consider additional sensitivities that are appropriate for its own system. **R2.4.3**. For each of the studies described in Requirement R2.4.1 and Requirement R2.4.2, ~~S~~sensitivity case(s) that stress the System to reflect one or more of the following conditions shall be run ~~with documentation provided explaining the rationale for the selected sensitivity(ies)~~ and documentation of the technical rationale for why each of the conditions was or was not selected shall be supplied**:**			
Entergy		☑	The new requirements for stability studies, including but not limited to the sensitivity studies, will result in a tremendous increase in workload. Because stability studies are so much more time intensive that steady state analysis and because they require personnel with a highly specialized skill set, the number of stability studies required should be increaed only as determined necesssary to evaluate worst-case contingencies. It would seem that the sensitivity analyses as well as many of the multiple contingency analyses could be done for steady state and only worst cases analyzed again by dynamic studies.
FPL FRCC		☑	The standards require near term base case cases to be studied for a broad range of planning and Extreme Events. The sensitivity analysis requirements contained R.2.4.3. will essentially require every dynamic simulation to be run at least twice regardless of whether or not there is any

Question 14			
Commenter	**Yes**	**No**	**Comment**
			engineering insight to be gained. While improved understanding may result from sensitivity analysis of certain key event scenarios, the overall benefits of the sensitivity study requirements contained in section R.2.4.3 do not justify the huge increase in engineering effort to conduct and document these simulations.
Response: The SDT agrees with you that dynamic analysis is generally more labor intensive then steady state analysis. The SDT is providing some guidance on what needs to be included in sensitivity studies while not being totally prescriptive. The SDT has modified Requirement R2.4.3 to stipulate that the entity shall provide rational for why sensitivity on the list were or were not included in the sensitivity studies and that the entity may consider additional sensitivities that are appropriate for its own System. **R2.4.3**. For each of the studies described in Requirement R2.4.1 and Requirement R2.4.2, ~~S~~sensitivity case(s) that stress the System to reflect one or more of the following conditions shall be run ~~with documentation provided explaining the rationale for the selected sensitivity(ies)~~ and documentation of the technical rationale for why each of the conditions was or was not selected shall be supplied**:**			
KCPL		☑	Dynamic studies should be performed when new generation or transformers are added to the system. Should be performed on a periodic basis, not annually.
Response: The SDT is providing some guidance on what needs to be included in sensitivity studies while not being totally prescriptive. The SDT has modified Requirement R2.4.3 to stipulate that the entity shall provide the rational for why sensitivities on the list were or were not included in the sensitivity studies and that the entity may consider additional sensitivities that are appropriate for its own System. The standard allows that the Planning Assessment can be supported by current or past studies. While an assessment is to be done annually, there is no intent to rerun the same studies "annually" unless the standard specifically requires such. Studies you mentioned can be used to support the assessment and be retained as "past" studies as appropriate. **R2.4.3**. For each of the studies described in Requirement R2.4.1 and Requirement R2.4.2, ~~S~~sensitivity case(s) that stress the System to reflect one or more of the following conditions shall be run ~~with documentation provided explaining the rationale for the selected sensitivity(ies)~~ and documentation of the technical rationale for why each of the conditions was or was not selected shall be supplied:			
MRO		☑	The MRO is okay with requiring the sensitivity studies but is concerned with the R.2.4.3.2 requirement as written in that it unnecessarily requires that the sensitivity studies to "simultaneous transfer" to include "non-firm transfers". The MRO recommends that this be changed to match R.2.1.3.2 "Modification of expected TRANSFERS." The MRO also questions the wording of R.2.4.3.4 which provides a more limiting description of the sensitivity to reactive. The MRO recommends that the wording of this requirement be changed to match R.2.1.3.4, "Variability and outages of reactive resources."
Response: Requirements R2.4.3.2 and R2.4.3.4 have both been revised to match with R2.1.3.2 and R2.1.3.4 respectively. **R2.4.3.2**. ~~Expected simultaneous transfers including non-firm~~ Modification of expected transfers. **R2.4.3.4**. ~~Reactive dispatch of generators and other reactive power devices~~ Variability and outages of reactive resources.			
LCRA		☑	

Question 14			
Commenter	**Yes**	**No**	**Comment**
IESO		☑	For similar reasons stated in Q13, above.
New York ISO		☑	See comments to Q12 & Q13.
Response: Thank you.			
PJM	☑	☑	Yes, however, clear direction is needed. Specific wording that defines if you have done enough, and met the compliance requirements.
Response: The need to conduct sensitivity analysis was a directive in FERC order 693 paragraphs 1694,1704, and 1706. The SDT agrees with you that dynamic analysis is generally more labor intensive then steady state analysis. The SDT is providing some guidance on what needs to be included in sensitivity studies while not being totally prescriptive. The SDT have modified Requirement R2.4.3 to stipulate that the entity shall provide rationale for why sensitivities on the list were or were not included in the sensitivity studies and that the entity may consider additional sensitivities that are appropriate for its own System. The standard requires that deficiencies identified from the results of the current studies need to be addressed via Corrective Actions Plan while leaving at the entity 's discretion to decide which deficiencies, if any, identified through sensitivity studies should be addressed by the Corrective Action Plan. **R2.4.3.** For each of the studies described in Requirement R2.4.1 and Requirement R2.4.2, ~~S~~sensitivity case(s) that stress the System to reflect one or more of the following conditions shall be run ~~with documentation provided explaining the rationale for the selected sensitivity(ies)~~ and documentation of the technical rationale for why each of the conditions was or was not selected shall be supplied:			
Central Maine Power HQTE National Grid New England ISO NU NPCC RCS NSTAR United Illuminating	☑		The standard is unclear whether or not it mandates the requirement to mitigate consequences of problems highlighted as a result of one of the sensitivities. Suggest modification to, "…sensitivity testing that stresses the System should be considered. Sensitivity case(s) might include among the following conditions:" 2.4.3 shold mimic 2.1.3 except in regard to load models.
Response: The standard requires that deficiencies identified from the results of the current studies need to be addressed via Corrective Actions Plan while leaving at entity's discretion to decide which deficiencies, if any, identified through sensitivity studies should be addressed by the Corrective Action Plan. The SDT has modified wording of Requirement R2.4.3 to be consistent with Requirement R2.1.3 as you suggested. **R2.4.3**. For each of the studies described in Requirement R2.4.1 and Requirement R2.4.2, ~~S~~sensitivity case(s) that stress the System to reflect one or more of the following conditions shall be run ~~with documentation provided explaining the rationale for the selected sensitivity(ies)~~ and documentation of the technical rationale for why each of the conditions was or was not selected shall be supplied**:**			
SERC EC DRS	☑		Use of sensitivity studies is appropriate only for System Stability Studies.
Response: Thank you**.**			

Question 14			
Commenter	**Yes**	**No**	**Comment**
Southern Transm.	☑		Some sensitivity analysis is reasonable. Other comments: 1. The wording regarding transfer sensitivity for stability analysis should be the same as the wording used in steady state analysis "modification of expected transfers". 2. The list of sensitivities may not be the most appropriate for all entities. There should be the ability to perform other sensitivity analsysis instead of these as long as the "rationale" is provided for the choice.
Response: The SDT has modified the standard so that R2.1.3.2 and R2.4.3.2 are worded consistently. The SDT is providing some guidance on what needs to be included in sensitivity studies while not being totally prescriptive. The SDT has modified requirement R2.4.3 to stipulate that the entity shall provide rational for why sensitivity on the list were or were not included in the sensitivity studies and that the entity may consider additional sensitivities that are appropriate for its own system. **R2.4.3.2**. ~~Expected simultaneous transfers including non-firm~~ Modification of expected transfers.			
ABB	☑		Absolutely.
Allegheny Power	☑		
APPA	☑		This is absolutely necessary; it will help with the operational planning that will be needed next. In addition, it will help to determine the amount of study uncertainty that the Transmission Planner believes will be in the plan. This is very important for the Year One.
ATC	☑		
BCTC	☑		
Brazos Electric	☑		
City Utilities/Springfield	☑		
Entegra	☑		Planners should use appropriate sensitivity cases.
Exelon	☑		
Georgia Transm.	☑		
JEA	☑		
NERC TIS	☑		
Progress–Carolinas	☑		
Progress–Florida	☑		

Question 14			
Commenter	**Yes**	**No**	**Comment**
Seattle City	☑		
Tenaska	☑		
WPS	☑		
Response: Thank you. Please see the Summary Response.			

15) Q15. The draft TPL standard does not require the use of sensitivity studies for the Long-Term Transmission System Planning Horizon (year six and beyond) studies. Do you concur with this approach or should there be some level of sensitivity analysis required for the long-term period?

Summary Response: Commenters generally agreed that sensitivities are not needed in long-term planning horizon studies since the studies are typically based on a number of assumptions regarding future conditions and uncertainties. Sensitivities of uncertain models could result in even more uncertain and probably unrealistic conditions, the use of which may cloud the actual trends. Closer in years tend to be more certain and applying sensitivities is necessary to ensure that unexpected conditions would not significantly affect reliability. The standard does not preclude entities from performing long term sensitivity studies which may even provide some basis for the base models used for analysis.

Question 15			
Commenter	**Yes**	**No**	**Comment**
AECC		☑	In the long range the confidence in some variables such as load growth may become fuzzy. Sensitivity analysis let you gauge the impacts that variences in a particular variable may have. I don't think it should be performed for every study but occasional study to maintain sanity is appropiate.
Response: Because the assumptions for the longer term are fuzzy, the SDT did not feel that it was appropriate to require prescriptive sensitivities since such studies could result in an even more distorted model. The SDT felt that the entity should determine if such sensitivities are appropriate knowing their own unique circumstances			
Northwestern Energy		☑	However, the TP should have the ability to determine the sensitivity to use.
Response: The TP can always perform and use sensitivities in addition to those required in the standard.			
AEP		☑	Consider requiring the same sensitivity analysis that is conducted under the near-term studies.
NERC TIS		☑	Since the long-term planning is completely couched in uncertainty, at least some generalized sensitivities should be required.
NCEMC		☑	Some sensitivity analysis in the long term years should be done (90/10 load with higher than expected transfers and/or delayed baseload generation) so that higher voltage issues are adequately tested to identify long lead time upgrades, in a similar manner as was done to justify the backbone projects that have been identified in the PJM Interconnection. A stakeholder process should be used by the entity performing the study to compile input on impacted LSEs and other Transmission Customers.
Response: Commenters generally agreed that sensitivities are not needed in long-term planning horizon studies since the studies are typically based on a number of assumptions regarding future conditions and uncertainties. The standard does not preclude entities from performing long term sensitivity studies which may even provide some basis for the base models used for analysis.			
BCTC	☑	☑	Long term needs to address sensitivities since it usually takes more than five years to contruct new transmission lines.
ITC	☑		We believe that both near-term and long-term studies should include sensitivity studies. Near-term studies may produce either operating solutions and more limited transmission solutions. It is just as or more important in a standard like this one to also do sensitivity analysis for the 6-10 year and

Question 15			
Commenter	**Yes**	**No**	**Comment**
			beyond period. This is necessary to provide the needed advance notice for long-lead time alternatives to problems which are uncovered. Focusing on the next 5 years limits alternatives that can be implemented. In fact, it makes sense to perform more sensitivity analysis on the longer term as assumptions become less probable the further out into the future you get. If a problem is identified in one snapshot 10 years out it may be less relevant than if it shows up in several varying snapshots 10 years out into the future. The use of sensitivity studies for the 6-10+ year horizon will hopefully have the effect of minimizing the use of band-aid type approaches to identified problems.
Tenaska		☑	Any analysis that is performed needs to include some sort of sensitivity analysis. In fact, the sensitivity analysis may yield more information that is helpful in making decisions today than sensitivities performed on a near term study. A way of conducting a sensitivity analysis for long term studies may be to require long term studies to be performed for several years instead of only the one year that is required in the 6-10 year horizon.
Response: Commenters generally agreed that sensitivities are not needed in long-term planning horizon studies since the studies are typically based on a number of assumptions regarding future conditions and uncertainties. The standard does not preclude entities from performing long term sensitivity studies which may provide some basis for the base models used for analysis nor does it preclude studying multiple years if more critical trends are detected.			
TSGT		☑	It is just as important for long range plans of service to provide acceptable operation as it is for near-term facility plans. To specify different criteria for different time periods seems unreasonable.
Response: Commenters generally agreed that sensitivities are not needed in long-term planning horizon studies since the studies are typically based on a number of assumptions regarding future conditions and uncertainties. This is not the same for the near-term. The SDT feels that the level of uncertainty for the two time period justifies a different approach. In any case, the standard does not preclude entities from performing long term sensitivity studies.			
ERCOT ISO CAISO WECC	☑		Agree. The Standard should state that sensitivity studies are not required but the TP or PA could use sensitivities if desired.
TEP	☑		We agree with this conclusion. The Standard language should state that sensitivities are not required in Long-Term Transmission System Planning Horizon but the TP could use sensitivities if desired.
Response: The SDT feels the standard reflects your comment. The standard does not preclude the entity from using sesitivities if more critical trends are detected.			
Georgia Transm.	☑		The sensitivities should be determined by the Planner. As part of the development of long range projects, sensitivity analyses should be performed.
Response: The SDT feels the standard reflects your comment in that even though the standard does not require sensitivities, it does not preclude the entity from using sesitivities if desired. Commenters generally agreed that sensitivities are not needed in long-term planning horizon studies since the studies are typically based on a number of assumptions regarding future conditions and uncertainties.			
Ameren	☑		There are more unknowns in the longer-term studies than in the near-term studies, which would

Question 15			
Commenter	**Yes**	**No**	**Comment**
			indicate that more sensitivity studies would need to be performed and not less. However, it is more reasonable to suggest that if near-term sensitivity studies show a problem in a particular part of the system, then similar sensitivity studies need to be performed in the longer-term analyses.
IESO	☑		We agree, but this raised a question on why did the SDT introduce a requirement for sensitivity testing for year one to year 5 studies but not the year 6 and beyond studies. Wouldn't the degree of uncertainty be higher in the longer time frame?
Response: Commenters generally agreed that sensitivities are not needed in long-term planning horizon studies since the studies are typically based on a number of assumptions regarding future conditions and uncertainties. Closer in years tend to be more certain and applying sensitivities is necessary to ensure that unexpected conditions would not significantly affect reliability. The standard does not preclude entities from performing long term sensitivity studies which may even provide some basis for the base models used for analysis.			
LADWP	☑		This applies to both long- and near- term, the type of sensitivities proposed here do not belong in transmission planning studies.
Response: The SDT felt that it is necessary for planners to consider certain factors that clearly could impact system responses to contingencies. The standard, sub requirements for R2.1 and R2.4, has been modified to require that the planner document why or why not the listed factors were used in the assessment. In addition the standard does not preclude entities from performing long term sensitivity studies which may provide some basis for the base models used for analysis nor does it preclude studying multiple years if more critical trends are detected.			
Muscatine P&W	☑		Local issues may drive a different approach
Response: The SDT feels the standard reflects your comment in that even though the standard does not require sensitivities, it does not preclude the entity from using sesitivities if desired, such as local issues as you suggest.			
New York ISO	☑		NYISO does not agree with the requirement of sensitivity studies in the near-term or long-term.
Response: Commenters generally agreed that sensitivities are not needed in long-term planning horizon studies since the studies are typically based on a number of assumptions regarding future conditions and uncertainties. Closer in years tend to be more certain and applying sensitivities is necessary to ensure that unexpected conditions would not significantly affect reliability.			
WPS	☑		The standard should require long-term sensitivity studies to the extent that the open transmission planning process within FERC Order 890 identifies the need for the sensitivities.
Response: Commenters generally agreed that sensitivities are not needed in long-term planning horizon studies since the studies are typically based on a number of assumptions regarding future conditions and uncertainties. In addition the SDT feels that such sensitivities were not required by the Order. The standard does not preclude entities from performing long term sensitivity studies which may provide some basis for the base models used for analysis nor does it preclude studying multiple years if more critical trends are detected.			
Brazos Electric	☑		Longer term studies should be performed in the broadest sense, the cases are difficult to create accurately and a greater range of sensitivities do not improve the results.
City Water Power and Light	☑		
Dominion	☑		We concur that no sensitivity studies should be required for the LT planning horizon.
E ON US			I agree with the approach.

Question 15			
Commenter	**Yes**	**No**	**Comment**
AECI	☑		
Allegheny Power	☑		No sensistivity needed for long term assessment.
APPA	☑		The sensitivity study of year 6 and beyond is of little value. The uncertainty (standard deviations) in the input assumptions used to complete the studies for 6 years and longer are so large it would not provide useful answers to make sound decisions regarding the need to build, remove, or improve BES facilities.
ATC	☑		
BPA	☑		
CenterPoint	☑		
Central Maine Power	☑		There is no need for sensitivity analysis.
City Utilities/Springfield	☑		
CPS Energy	☑	☑	We concur with not requiring sensitivity studies for the Long Term Assessment.
Duke Energy	☑		Agreed, sensitivity studies should not be required for the Long-Term.
Entergy	☑		
Exelon	☑		
FirstEnergy	☑		Yes, we concur with this approach and sensitivity analysis should not be required.
FPL	☑		There should be no sensitivity studies/analyses for the Long-Term Transmission System Planning Horizon.
FRCC	☑		
HQTE	☑		There is no need for sensitivity analysis.
JEA	☑		
KCPL	☑		Long term planning horizon has significantly greater uncertainty in future conditions and sensitivity studies are unlikely to contribute to reliability because of this.
LCRA	☑		There are two questions asked and the response is yes to both. In the ERCOT region, load flow cases are not currently availbale for years 6-10 and this limits the long-term study activity that Transmsion Owners and Transmission Planners can acarry out. As currently proposed (R2.2) is appropriate.
Manitoba Hydro	☑		The models for Long-Term Transmission System Planning Horizon typically contain such uncertainty that the base planning is a sensitivity study itself. Sensitivity studies in these years would be a waste of time. The long term analysis should be used to indicate trends such as a reduction in transfer capability, reduction in damping, etc, but not necessarily seek mitigation of such trends.

Question 15			
Commenter	**Yes**	**No**	**Comment**
MEAG Power	☑		We concur with the current approach.
MISO	☑		Long-term planning horizon studies are typically based on a number of assumptions regarding future conditions and uncertainties. While testing various load conditions, generator operation assumptions, and power interchange variables may be useful for modeling expected economic value, such analysis does not contribute to reliability.
MRO	☑		The models for Long-Term Transmission System Planning Horizon typically contain such uncertainy that the base planning is a sensitivity study iteself. The MRO believes that sensitivity studies in these years would be a waste of time.
National Grid	☑		There is no need for sensitivity analysis.
New England ISO	☑		There is no need for sensitivity analysis.
NCMPA			
NU	☑		There is no need for sensitivity analysis.
NPCC RCS	☑		There is no need for sensitivity analysis.
Nstar	☑		There is no need for sensitivity analysis.
PJM	☑	☑	PJM agrees that no sensitivity analysis is required for long term period
Progress–Carolinas	☑		Sensitivities should not be required for Long-Term
Progress–Florida	☑		PEF concurs with the draft standard's approach with regard to Q15 that sensitivities should not be required for years six through ten.
ReliabilityFirst	☑		
Santee Cooper	☑		We concur with the current approach.
SaskPower	☑		
Seattle City	☑		Conditions six years or more in the future are unpredictable and sensitivity studies would provide results of limited usefulness.
SERC EC DRS	☑		We agree that sensitivity studies should not be required for the Long-Term..
SERC EC PSS	☑		We concur with the current approach.
SERC RRS OPS	☑		We concur with the current approach.
SCE&G	☑		
Southern Transm.	☑		Yes, we concur with this approach.
TVA	☑		

Question 15			
Commenter	**Yes**	**No**	**Comment**
United Illuminating	☑		There is no need for sensitivity analysis.
Response: Thank you.			

C) Corrective Action Plans

Requirement R2.7 of the standard states that when analysis shows that the performance requirements in Table 1 and Table 2 are not fully met, a Corrective Action Plan that utilizes all or some of the Transmission System enhancements, generation additions, DSM, new technologies and Operating Procedures shall be included in the Planning Assessment. This Corrective Action Plan should ensure that upon its implementation the identified system deficiencies will be corrected so that the performance requirements in Table 1 and Table 2 will be met. Furthermore, studies included in the Planning Assessment should demonstrate that this is indeed the case.

16) Q16. Requirement R2.7.1: Such Corrective Action Plans shall "Identify System deficiencies and the associated actions needed to achieve required System performance including Transmission and generation improvements, DSM, new technologies, or Operating Procedures including the duration of Interim Operating Procedures". System deficiencies may be corrected using an integrated plan, i.e., an optimal mix of Transmission, generation, DSM and Operating Procedures. Should DSM be considered in conjunction with other measures in developing Corrective Action Plans? If yes, please comment on how the impact of DSM should be included.

Summary Response: DSM refers to reduction in the net Load that could be used to mitigate generation deficiency or Transmission overload. DSM could be invoked pre-Contingency or as a part of automatic or manual System adjustment post-Contingency. The use of DSM is optional and entities do not have to include DSM in the Corrective Action Plan. However, if DSM is included in the Corrective Action Plan, the entity that included it must justify the DSM amount and associated uncertainties. If an entity can show that DSM is effective, the standard does not bar them from using it.

The following requirement was changed due to industry comments:

R2.7.1 - ~~Identify~~ List System deficiencies and the associated actions needed to achieve required System performance. ~~including Transmission and generation improvements, DSM, new technologies, or Operating Procedures including the duration of interim Operating Procedures.~~ Such actions may include installation, modification, retirement, or removal of Transmission and generation Facilities and any associated equipment such as protective or Special Protection Schemes, rate applications, DSM, or other initiatives, new technologies, or Operating Procedures including how long the Operating Procedures will be needed as part of the Corrective Action Plan.

Q16			
Commenter	**Yes**	**No**	**Comment**
AECC		☑	Yes - DSM impact should be included if it is known and can be treated the same a generation as far a dependibility, capability, and its known impacts. No - most DSM on our system is already figured into the load.
Response: The SDT provided DSM as a possible action. The entity may choose to use this option or provide additional actions to improve System response.			
Ameren	☑	☑	If DSM can be implemented in the required operating time, we have no objections to using DSM as the planned mitigation to relieve overloads or low system voltages for multiple contingency conditions, but not as a long-term solution for single contingency conditions. However, from our experience, we believe that developing enough DSM in the required time at specific locations in the

Q16			
Commenter	**Yes**	**No**	**Comment**
			system will be difficult, and that plain load-shedding would be required to supplement the DSM to achieve the desired performance.
BPA	☑	☑	Support comments submitted by WECC. There is a concern with using DSM as a corrective action if it is not directly controlled by the utility and the benefits do not materialize as planned.
Brazos Electric		☑	If DSM is not viable due to market failings, then its inclusion in any CAPs provides an inaccurate soltion to achieve the required system performance.
City Water Power and Light		☑	DSM is not always available and is usually not available without operator action. Therefore, asuming it is alwasys available could give a false sense of security. The system could collapse before DSM is able to be implemented.
Georgia Transm.		☑	DSM should not be a requirement in considering Corrective Action Plans. Because DSM cannot be counted on or controlled, its use as a Corrective Action Plan should not be assumed.
MISO	☑	☑	Yes, DSM should be considered in transmission studies, but should be limited to firmly contracted DSM resources that are demonstrably applicable for transmission capacity mitigation. DSM is better compared to supply-side resources as they are evaluated for reserve margin contribution. No, the challenge in considering DSM, is that Transmission Planners are not aware of DSM potential on the system and it must be communicated to them for consideration.
WECC TEP		☑	It is unclear whether "DSM" in this question refers to reduction in load or increases in distributed resources, or if the resources are directly controllable by the transmission operator. DSM could be used in the mix of solutions that are used to determine the optimal solution for a transmission issue. However, we have concerns about the use of DSM, that is not under the direct control of the Transmission Operator as a stand alone transmission system solution. Please remember the overstated returns from DSM in the last decade that did not materialize. If these overstated values had been used as a transmission system enhancement, then the system would have been compromised with emergency operating solution until the effective transmission enhancements could be realized.
Response: DSM refers to reduction in net Load. The standard does allow for consideration of DSM but other factors may disallow inclusion of DSM in the Corrective Action Plan. The amount and uncertainty of DSM needs to be justified by the entity when it is included in their Correction Action Plan. If an entity can show that DSM is effective, the standard does not bar them from using it.			
E ON US		☑	DSM and generation improvements should be excluded. What is a "generation improvement"? New technologies could apply to anything, does the SDT mean "new Transmission technologies"?
Response: DSM refers to reduction in net Load. The standard does allow for consideration of DSM but other factors may disallow the use of DSM as a corrective action. The amount and uncertainty of DSM needs to be justified by the entity when it is included in their Corrective Action Plan. If an entity can show that DSM is effective, the standard does not bar them from using it. The term "generation improvements" means any change or modification to a generator which results in an increase in generation output and/or reactive support. New technologies include any technology that is not currently in use on the electric power System that helps improve efficiency (i.e., energy storage/production technologies, low sag conductors, solid state interrupters, etc.)			
Northwestern Energy		☑	The word "including" should be "may include", mandating what should be studied is not appropriate.

Q16			
Commenter	**Yes**	**No**	**Comment**
			Also, including DSM in the list presumes the balancing area is deficient in generation, which may not always be the case.
Response: The use of DSM is optional. Requirement R2.7.1 has been modified based on your comments to use "may include" instead of "including". DSM typically has been used to compensate for generation deficiency but it can also be used to reduce transmission loading for special conditions and may provide a justifiable corrective action. The standard does allow for the use of DSM but other factors may disallow the use of DSM as a corrective action. **R2.7.1** - ~~Identify~~ List System deficiencies and the associated actions needed to achieve required System performance. ~~including Transmission and generation improvements, DSM, new technologies, or Operating Procedures including the duration of interim Operating Procedures.~~ Such actions may include installation, modification, retirement, or removal of Transmission and generation Facilities and any associated equipment such as protective or Special Protection Schemes, rate applications, DSM, or other initiatives, new technologies, or Operating Procedures including how long the Operating Procedures will be needed as part of the Corrective Action Plan.			
CenterPoint		☑	CenterPoint Energy is not aware of DSM ever being identified as an effective option to correct a transmission system deficiency. If such an application of DSM was identified and implemented, load growth would quickly negate the DSM impact, and other measures would have to be taken.
Central Maine Power HQTE National Grid New England ISO NU NPCC RCS NSTAR United Illuminating	☑		DSM should be included to the extent that its performance is sufficiently and consistently understood. The standard does not use the term "optimal" Therefore, the Drafting Team appears to be interpreting the Standard to require a vertically-integrated Planner to produce a so-called optimal-mix of resources plan. This would be an incorrect assumption and is not required. In areas with independent planners and competitive wholesale markets, it is sufficent to identify system needs and produce a plan that identifies regulated transmission solutions in the event that market-based resources (such as DSM) do not address those identified needs. Therefore, while DSM can be as effective a resource as generation, per Commission Orders, in areas with ISOs/RTOs and a competitive wholesale market, the NERC Standard cannot prescribe the development so-called optimized (as is suggesgted by the Drafting Team) resource-mix plans, as identified by a central planner.
NERC TIS	☑	☑	Yes, if it can be counted on for relieving transmission constraints. Some DSM contracts do not allow for interruption for anything other than resource adequacy events, or have time-based or economics-based implementation limitations.
New York ISO	☑		NYISO suggests that the impact included in studies should consider past performance of DSM participants.
Response: The standard does allow for consideration of DSM but other factors may disallow the use of DSM as a corrective action. The amount and uncertainty of DSM needs to be justified by the entity when it is included in their Corrective Action Plan.			
CPS Energy		☑	Performance of the DSM is not necessarily controlled by the Transmission Owner and cannot be considered "firm". Therefore, use of DSM should be optional, but not mandated.
Response: The use of DSM is optional. Requirement R2.7.1 has been modified based on your comments to use "may include" instead of "including". If an entity can show that DSM is effective, the standard should not bar them from using it.			

Q16			
Commenter	**Yes**	**No**	**Comment**
R2.7.1 - ~~Identify~~ List System deficiencies and the associated actions needed to achieve required System performance. ~~including Transmission and generation improvements, DSM, new technologies, or Operating Procedures including the duration of interim Operating Procedures.~~ Such actions may include installation, modification, retirement, or removal of Transmission and generation Facilities and any associated equipment such as protective or Special Protection Schemes, rate applications, DSM, or other initiatives, new technologies, or Operating Procedures including how long the Operating Procedures will be needed as part of the Corrective Action Plan.			
FirstEnergy		☑	We do not feel that the standard should specify, limit, or suggest methods for mitigating system performance deficiencies. We suggest rewording R2.7.1 by ending the first sentence after the words "System performance". The items currently described could be moved to a reference document which could include DSM and other mitigation methods.
Response: The use of DSM is optional. Requirement R2.7.1 has been modified based on your comments to use "may include" instead of "including". The SDT feels it is more useful to include examples of what the Corrective Action Plan may include. The list of examples should help minimize questions regarding what is valid as a corrective action. **R2.7.1** - ~~Identify~~ List System deficiencies and the associated actions needed to achieve required System performance. ~~including Transmission and generation improvements, DSM, new technologies, or Operating Procedures including the duration of interim Operating Procedures.~~ Such actions may include installation, modification, retirement, or removal of Transmission and generation Facilities and any associated equipment such as protective or Special Protection Schemes, rate applications, DSM, or other initiatives, new technologies, or Operating Procedures including how long the Operating Procedures will be needed as part of the Corrective Action Plan.			
IESO		☑	No, the amount DSM is, in some established markets, a market-arranged quantity that depends on both the offered price and the discretion of the LSE or load customer at the time such a price signal presents itself. The resultant amount of DSM that can actually be realized when needed is unpredictable. This requirement also brings up a broader issue. Requirement 2 generally applies to Planning Coordinator and Transmission Planner, there is no distinction made as to which sub-requirements apply to which entity. In some markets, the Transmission Planner is responsible for assessing future needs for transmission facility only. It does not have the authority to even suggest a corrective plan that involves generation improvement or DSM. The way R2 and its sub-requirements is written is more suited for an integrated planning process, which may not exist in some places/developed markets.
Response: The use of DSM is optional. Requirement R2.7.1 has been modified based on your comments to use "may include" instead of "including". The standard does allow for consideration of DSM but other factors may disallow inclusion of DSM in the Corrective Action Plan. The amount and uncertainty of DSM needs to be justified by the entity when it is included in their Correction Action Plan. The standard is applicable not only to the Transmission Planner but also to the Planning Coordinator and the Resources Planner. These entities are expected to establish relationships to provide for intergrated analysis and resultant Corrective Action Plan which may include generation, transmission and DSM components. **R2.7.1** - ~~Identify~~ List System deficiencies and the associated actions needed to achieve required System performance. ~~including~~			

Q16			
Commenter	**Yes**	**No**	**Comment**
~~Transmission and generation improvements, DSM, new technologies, or Operating Procedures including the duration of interim Operating Procedures.~~ Such actions may include installation, modification, retirement, or removal of Transmission and generation Facilities and any associated equipment such as protective or Special Protection Schemes, rate applications, DSM, or other initiatives, new technologies, or Operating Procedures including how long the Operating Procedures will be needed as part of the Corrective Action Plan.			
LADWP		☑	We should be very careful about using DSM as Corrective Action for transmission problem. What this would lead to is to have a "built-in" transmission problem which would require DSM as the de facto rolling brown-outs or black-outs. DSM should be part of the resource and load forecasting consideration; transmission planning should design tranmission that can properly serve the forecasted loads with the expected resources; not to "live with" or include transmission contraints that rely on DSM as a solution. If the industry truly wants to use DSM as mitigation for transmission deficiencies, let's do it as a deliberate action, not an unintended consequence. "System deficiencies" may be corrected with an integrated approach as suggested, but "transmission deficiencies" are solved by transmission improvement. The classic example is Path 15 in WSCC/WECC. The transmssion deficiency of PAth15 was well known for many years (like since '80s) and in the "pre-deregulated" dates, the deficiency was indeed managed by an integrated approach when the utility can operate its assets integrally. Then de-regulation happened and the integrated approach became unbundled and impossible resulted in numerous brown-outs and black-outs in California in 2000-01 until a third transmission line is added. Transmission deficiencies, if not mitigated, will significantly affect the accessibility to transmission services, a key concern of ferc 890. As for new technology, just how the SDT proposes to define what constitutes a new technology? And how to measure for compliance against such a requirement? Hopefully, this is just another case of overly prescriptive standard.
Response: DSM refers to reduction in net Load. The standard does allow for consideration of DSM but other factors may disallow the use of DSM as a corrective action. The amount and uncertainty of DSM needs to be justified by the entity when it is included in their correction action plan. New technologies include any technology that is not currently in general use, or is in the development stages, on the electric power system that helps improve efficiency (i.e. energy storage/production technologies, low sag conductors, solid state interrupters, etc.)			
Manitoba Hydro		☑	DSM and generation improvements should be removed from Requirement R2.7.1, as they should not be mandated by a NERC standard are not in the tool box of the transmission planner. DSM may already be in the load forecast and sensitivities to load forecast variations are included in near term planning horizon sensitivity analysis. Additional DSM shouldn't be part of transmission planners mitigation plan. If the corrective plan is too expensive the load serving entity could consider DSM and revise their forecast in the next planning cycle.
MRO		☑	DSM should already be in the load forecast and sensitivities to the load forecast variations are included in the near term planning horizon sensitivity analysis. Additional DSM shouldn't be part of the transmission planner's corrective plan. Additional DSM can be considered in the next planning

Q16			
Commenter	**Yes**	**No**	**Comment**
			cycle.
Response: The use of DSM is optional. Requirement R2.7.1 has been modified based on your comments to use "may include" instead of "including". DSM refers to reduction in net load that could be used to compensate for a generation deficiency or to reduce transmission overloads. If an entity can show that DSM is effective, the standard should not bar them from using it. **R2.7.1** - ~~Identify~~ List System deficiencies and the associated actions needed to achieve required System performance. ~~including Transmission and generation improvements, DSM, new technologies, or Operating Procedures including the duration of interim Operating Procedures.~~ Such actions may include installation, modification, retirement, or removal of Transmission and generation Facilities and any associated equipment such as protective or Special Protection Schemes, rate applications, DSM, or other initiatives, new technologies, or Operating Procedures including how long the Operating Procedures will be needed as part of the Corrective Action Plan.			
Southern Transm.		☑	It should not be a requirement that DSM be considered but DSM should be one of the allowable alternatives. The way the present standard is written, it is unclear whether "all" of the named items (except operating procedures with the "or" statement) are required to be considered or whether only one or more of the items need to be included. It is suggested that the following statement replace the word "including" in line two of R2.7.1: "that may include one or more of the following:". This should clarify that all of the items are not required to be in the action plan for compliance. It also is not clear what the phrase "including the duration of interim Operating Procedure" means. Does this mean how many years you would anticipate using the Operating Procedure or does it mean how long it takes to "repair" the cause of the outage that necessitated the use of the Operating Procedure? Assuming that the meaning is the second one, the requirement to document the "mean time to repair" is new and there does not seem to be a very useful purpose for this requirement. As long as the system performance standards are met and the system is prepared for the next outage, what is the purpose of recording and documenting the length of time that you anticpate it to take to fix the problem? This is variable at best and does not provide useful information.
Response: The use of DSM is optional. Requirement R2.7.1 has been modified based on your comments to use "may include" instead of "including". DSM refers to reduction in net load that could be used to compensate for a generation deficiency or to reduce transmission overloads. If an entity can show that DSM is effective, the standard should not bar them from using it. Your first interpretaion is correct (how many years you expect to use the procedure). **R2.7.1** - ~~Identify~~ List System deficiencies and the associated actions needed to achieve required System performance. ~~including Transmission and generation improvements, DSM, new technologies, or Operating Procedures including the duration of interim Operating Procedures.~~ Such actions may include installation, modification, retirement, or removal of Transmission and generation Facilities and any associated equipment such as protective or Special Protection Schemes, rate applications, DSM, or other initiatives, new technologies, or Operating Procedures including how long the Operating Procedures will be needed as part of the Corrective Action Plan.			
TSGT		☑	DSM should not be considered except as a load forecast variable. Rather, the load forecast probability index should be prescribed (specific probability of exceedance)

Q16			
Commenter	**Yes**	**No**	**Comment**
Response: The use of DSM is optional. If an entity can show that DSM is effective, the standard should not bar them from using it. The use of DSM is optional. Requirement R2.7.1 has been modified based on your comments to use "may include" instead of "including". DSM refers to reduction in net load that could be used to compensate for a generation deficiency or to reduce transmission overloads. **R2.7.1** - ~~Identify~~ List System deficiencies and the associated actions needed to achieve required System performance. ~~including Transmission and generation improvements, DSM, new technologies, or Operating Procedures including the duration of interim Operating Procedures.~~ Such actions may include installation, modification, retirement, or removal of Transmission and generation Facilities and any associated equipment such as protective or Special Protection Schemes, rate applications, DSM, or other initiatives, new technologies, or Operating Procedures including how long the Operating Procedures will be needed as part of the Corrective Action Plan.			
AECI		☑	
LCRA		☑	
SaskPower		☑	
Seattle City		☑	
Response: Thank you for your response.			
AEP	☑		Consider requiring that problem contingencies be simulated on base case that models the lower load level that would result with the DSM implemented.
Response: The standard does allow for consideration of DSM which is effectively the situation you are describing.			
APPA	☑		This is a conditional Yes. The Resource Planner or Transmission Planner must provide assurance that the specific "Demand" reduction that is incorporated into the scenario analyses will actually be reduced through either customer action or direct load shedding by the Balancing Authority. This type of controllable "Demand" does exist, but it is rare that planners and operators actually have such resources in their portfolios to help with System Deficiencies.
Response: The use of DSM is optional. If an entity can show that DSM is effective, the standard should not bar them from using it. The amount and uncertainty of DSM needs to be justified by the entity when it is included in their Corrective Action Plan.			
ITC	☑		DSM alternatives should focus on existing contractual relationships only. DSM is an alternative to "capacity solutions" and you have to give weight to how well you can count on it during capacity emergencies. Will the load be there to cut? How certain are you (contractually) that the load will be shed voluntarily when called upon to do so?
Response: The use of DSM is optional. If an entity can show that DSM is effective, the standard should not bar them from using it. The standard does allow for consideration of DSM but other factors may disallow the use of DSM as a corrective action. The amount and uncertainty of DSM needs to be justified by the entity when it is included in their Corrective Action Plan.			
KCPL	☑		Only for DSM that is contractually "firm" and which can demonstrate mitigation performance (comparable to generation resource) as related to the transmission system.
MEAG Power	☑		DSM should be included if it is a tool made available to the TP for this purpose, but only to the extent that it is available for curtailment by the System Operator and without the option to buy through and remain in service.

Q16			
Commenter	**Yes**	**No**	**Comment**
Response: The use of DSM is optional. The standard does allow for consideration of DSM but other factors may disallow inclusion of DSM in the Corrective Action Plan. If an entity can show that DSM is effective, the standard does not bar them from using it.			
NCEMC	☑		It should be included if it is a tool made available to the TP for this purpose, but only to the extent that it is considered firm.
Santee Cooper	☑		It should be included if it is a tool made available to the TP for this purpose, but only to the extent that it is considered controllable and quantifiable resource.
SERC EC PSS SERC RRS OPS SCE&G	☑		It should be included if it is a tool made available to the TP for this purpose, but only to the extent that it is considered firm.
TVA	☑		It should be included if it is a tool made available to the TP for this purpose, but only to the extent that it is considered firm. However, the standards should not determine which type of fix a utility should use to meet system requirements.
Response: The use of DSM is optional. If an entity can show that DSM is effective, the standard should not bar them from using it.			
ABB	☑		First of all, you are not exactly requiring that DSM be considered or analyzed. You have simply listed it as one of the possible solutions. And you should mention the possibility of "integrated plan" in the standard itself. Since DSM is simply optional, let the planners figure out themselves how to consider DSM.
Allegheny Power	☑		It should be included if there are specific mandated or approved DSM programs in place during the study period.
ATC	☑		
BCTC	☑		DSM should be a load reduction.
CAISO	☑		We agree to include DSM among a mix of solutions to a system problem. However, the difficulty is that DSM is unpredictable when needed. Another issue is how much DSM is actually under the control of the Transmission Operator.
City Utilities/Springfield	☑		Controllable demand that will be available to both the planner and operator must be well defined and readily available when called upon including operating procedures.
Dominion	☑		An appropriate level of DSM should be included in studies.
Duke Energy	☑		DSM should be carefully included based upon consideration of the particular DSM measures available and the uncertainty associated with each.
Entegra	☑		
Entergy	☑		DSM should be considered, but it should be done prudently and in accordance with the contracts that govern the specific DSM program and only in cases where the Transmission Owner has direct load control. Transmission Owners should be allowed to include UVLS and SPS systems as a part of their Corrective Action Plans.
ERCOT ISO	☑		

Q16			
Commenter	**Yes**	**No**	**Comment**
Exelon	☑		DSM should be directly controllable with accurate information as the the magnitude and location. System stability should not be dependent on the operation of DSM.
FPL FRCC	☑		If DSM is included as part of an integrated Corrective Action plan, then the impact of DSM should be included by specifying the location and expected quantity of DSM that will mitigate a system deficiency. The use of DSM, whether exclusively or in conjunction with other measures, is an acceptable operating procedure for use in a Corrective Action Plan, as long as the Transmission Owner demonstrates availability and accuracy of DSM data and its viability as an operating procedure for each applicable scenario.
Muscatine P&W	☑		We do not have DSM but I could see where it could be used to relieve overloads or low voltage.
PJM	☑	☑	Yes- DSM should be modeled consistent with how it is expected to be operated based on contractual/operating relationships.
Progress–Carolinas	☑		State regulatory requirements mandate that we consider DSM alternatives. The DSM contracts would have to adequately support the intended use.
Progress–Florida	☑		The use of DSM, whether exclusively or in conjunction with other measures, is an acceptable operating procedure for use in a Corrective Action Plan, as long as the Transmission Owner demonstrates availability and accuracy of DSM data and its viability as an operating procedure for each applicable scenario.
Tenaska	☑		While DSM may, or may not, be manually operated, it is critical to understand the impacts of DSM and whether different ways of implementing DSM are of value.
WPS	☑		The effect of DSM should be considered in corrective action plans to the extent that DSM can reduce overall load growth and change the timing of new transmission facilities.
Response: Thank you. DSM refers to reduction in net Load. The use of DSM is optional. If an entity can show that DSM is effective, the standard does not bar them from using it. The standard does allow for consideration of DSM but other factors may disallow the use of DSM as a corrective action. The amount and uncertainty of DSM needs to be justified by the entity when it is included in their Corrective Action Plan.			

17) Q17. Requirement R2.7.2: Such Corrective Action Plans shall "Be added to study cases and the cases re-tested to show that the System with planned additions meets the performance requirements in the tables". Should new studies, including the facilities comprising the Corrective Action Plan, be performed to assess System normal performance and Contingency response for conditions that previously resulted in the System deficiencies (without the planned additions) and also demonstrate that the changes would not result in inadvertent negative impacts on the System. If you "agree", please comment on how a study area should be determined.

Summary Response: The specific requirement to perform re-test has been removed. The purpose of the Corrective Action Plan is to list the actions that are needed to meet performance requirements. The studies, current, and/or past as appropriate, as well as the extent of the size of the study area, are performed to support compliance and demonstrate that the requirements are met. The standard assumes that the actions were developed and verified using the current and past studies that were used to uncover deficiencies and confirm adherence to the performance requirements.

The following requirement was deleted due to industry comments:

R2.7.2 ~~Be added to study cases and the cases re-tested to show that the System with planned additions meets the performance requirements in the tables~~

Q17			
Commenter	**Yes**	**No**	**Comment**
AECC		☑	A new study should not be required. The impact of "fix" should be evaluated as part of determining it as a viable solution.
Response: The SDT agrees with your comment and has revised the requirements to agree with your comment. **R2.7.2** ~~Be added to study cases and the cases re-tested to show that the System with planned additions meets the performance requirements in the tables~~			
Ameren		☑	This proposed requirement is unnecessary and a waste of time. Keep in mind this is a planning assessment and not a facilities study. Further, such a requirement implies a distrust of the transmission planners to develop valid corrective action plans to meet the requirements of the TPL standard. For more complex system facility additions, it would be inconceivable that a Transmission Planner or Owner or Planning Coordinator would proceed without performing power flow simulations to determine the efficacy of the system addition. But these studies would be performed over time considering the best available information and latest standards performance requirements. The majority of transmission projects consist of the upgrading of terminal equipment or conductor on one or more branches. The only significant change that such upgrade work would produce in a power flow model would be that the branch ratings would change. It is not necessary to rerun power flow simulations for such cases, as it can be determined by inspection whether the upgrade

Q17			
Commenter	**Yes**	**No**	**Comment**
			work would be sufficient to move the facility rating above the expected normal or contingency flow.
Response: The purpose of the Corrective Action Plan is to list the actions that are needed to meet performance requirements. The studies are performed to support compliance and demonstrate that the requirements are met. The specific requirement to re-test has been removed. **R2.7.2** ~~Be added to study cases and the cases re-tested to show that the System with planned additions meets the performance requirements in the tables~~ The SDT has removed the Requirement R2.7.2 but kept the orignal R2.7.5 requirement, which was re-numbered as Requirement R2.7.3, (subsequent annual assessments report on the status of Corrective Action Plans).			
Dominion		☑	In the normal course of business, a planner out of necessity will need to check to see if the proposed improvements will actually fix the problem. The prospect of making a multi-million dollar mistake is sufficient incentive to insure this study occurs without the additional burden of creating an audit trail to meet a NERC standard. Requirements for what study area should be used and documentation of the process are not necessary. If, per chance, a study is not performed immediately, the next set of studies will show the deficiencies, if any.
Response: The intent is to ensure that for a specific problem the Corrective Action Plan is checked to the extent that the Corrective Action Plan does not cause any additional problems. The SDT has removed the Requirement R2.7.2 but kept the orignal 2.7.5 requirement, which was re-numbered as Requirement R2.7.3, (subsequent annual assessments report on the status of Corrective Action Plans). **R2.7.2** ~~Be added to study cases and the cases re-tested to show that the System with planned additions meets the performance requirements in the tables~~			
E ON US		☑	Re-testing is part of the normal study process of developing the Corrective Action Plan (CAP). Most CAP should be developed in the Long-Term horizon. The next annual study and all subsequent studies provide sufficient review without developing another set of cases and additional testing in the initial assessment.
Response: The intent of the standard is to develop a Corrective Action Plan that will create a system capable of meeting system performance requirements. The intent of the standard is to provide verification at the time the Corrective Action Plan is developed and not wait a year to perform the verification. This is critical to ensure that plans are coordinated between entities. The SDT has removed the Requirement R2.7.2 but kept the orignal 2.7.5 requirement, which was re-numbered as Requirement R2.7.3, (subsequent annual assessments report on the status of Corrective Action Plans). **R2.7.2** ~~Be added to study cases and the cases re-tested to show that the System with planned additions meets the performance requirements in the tables~~			
Brazos Electric	☑		It is difficult to understand what is meant by 'retested'. The evaluation of a CAP includes testing the recommended option to see how it performs and to insure that it does not create other problems. We assume this is what is meant by retested. In our evaluation we insure that it does not negatively impact all other facilities in the BES and if so what extent and if it is managable. We do not always create a separate 'study area' each time for each system improvement.

Q17			
Commenter	**Yes**	**No**	**Comment**
CenterPoint	☑	☑	Many problems identified in future studies and associated transmission improvements are fictitious due to the speculative nature of predicting load and generation growth. Requiring exhaustive studies to determine the full impact of fictitious transmission projects is unnecessarily prescriptive and burdensome, and provides little, if any, value in identifying and solving real transmission problems.
CPS Energy		☑	Should be conducted for Near Term Planning Assessment only with the study area determined at the discretion of the Transmission Planners.
FPL FRCC		☑	Incremental benefits do not justify the magnitude of additional studies. Corrective Action plans should be tested, but not as a new study with all of the Corrective Action Plans included simultaneously. The proposed language is inferior to the existing language (TPL-002-0 R2) and suggest replacing with language from TPL-002-0 R2.
Georgia Transm.		☑	This is the essence of planning. All entities should ensure that Corrective Action Plans address the identified constraints and work within the BES infrastructure. It is not clear what the intent of "new" studies is. Since the evaluation of Corrective Action Plans is part of the planning process, what new studies is this requirement referring to. The determination of the study area should be by the Planner.
LADWP		☑	This is a redundant and unnecessary requirement. How can one come up with a corrective action plan if it has not been demonstrated the plan can mitigate the problem? And if the corrective plan has been able to demonstrate that it can mitigate the problem, why repeat the study again.
Manitoba Hydro	☑		At some point the corrective action plan should be tested to verify the plan meets the performance requirements. The way the standard is written is that the transmission plan should be perfect for the entire planning horizon for all sensitivities tested. Any issues should be immediately addressed. The standard does not allow any time to develop a corrective plan through an open and transparent process. Based on the NERC definition, a Corrective Action Plan is the list of actions and an associated timetable for implementation to remedy a specific problem. A Corrective Action Plan could mean that load forecasts at the station will be verified, facility ratings verified and alternatives to fix the identified problem to be determined before the next Planning Assessment. Standard R2.7 seems to be mixing the idea of a Corrective Action Plan with the original TPL idea of determining corrective plans to achieve required performance. A corrective plan wil be the end goal of a Corrective Action Plan. Furthermore, corrective action plans should not be requierd to address issues raised by sensitivity studies. Corrective action plans are developed to meet base case needs which are based on expected load forecasts, transfers, etc. Sensitivity studies are done to measure the robustness of the base case plan. It should be left up to the Planner to decide if the corrective action plan is adequate based on the likelihood of the scenario studied, even if the sensitivity analysis shows some performance violations.
MISO		☑	Sufficient analysis, including re-testing, must have been performed in creating the Corrective Action Plans. Requiring demonstration by the transmission planner that this is the basis of the Plans is superfluous.

Q17			
Commenter	**Yes**	**No**	**Comment**
MRO		☑	The MRO is concerned with this requirement particularly since the standard indicates that System Assessment shall be conducted each year while studies are not required each year. MRO members typically conduct this exercise at the time that studies are originally conducted with regard to improvements. By requiring a new study with improvements (some of which were justified in past studies) demonstrating that these improvements work essentially results in the Transmission Owner needing to clear a new unfair hurdle for improvements. This results in a requirement which will result in wide-spread non-compliance. The SDT should clarify that this requirement can be met by past studies. The MRO recommends that R2.7.2 be removed because it is redundant since development of the corrective action plan will have included these studies. At some point the corrective action plan should be tested to verify the plan meets the performance requirements. The way the standard is written is that the transmission plan should be perfect for the entire planning horizon for all sensitivities tested. Any issues should be immediately addressed. The standard does not allow any time to develop the corrective plan through an open and transparent process. Based on the Nerc definition, a Corrective Action Plan is the list of actions and an associated timetable for implementation to remedy a specific problem. A Corrective Action Plan could mean that load forecasts at the station will be verified, facility ratings verified and alternatives to fix the identified problem to be determined before the next Planning Assessment. Standard R2.7 seems to be mixing the idea of a Corrective Action Plan with the original TPL idea of determining corrective plans to achieve required performance. A corrective plan wil be the end goal of a Corrective Action Plan.
PJM	☑	☑	Yes – At a minimum the system conditions and / or contingency that identified the system deficiency should be evaluated to determine that it has corrected the issue. The extent of the study area needs to be consistent with the size / complexity of the corrective action plan.
Progress–Florida		☑	Each Corrective Action Plan as stated in the original assessments should be trusted as effective, provided the Transmission Owner can demonstrate with its own internal assessments the effectiveness of each Corrective Action Plan.
Santee Cooper		☑	Re-testing should be required only where the correction may impact network flows. The study area should be determined by the TP. The TP has the most knowledge of how the system responds to changes. The majority of transmission projects consist of the upgrading of terminal equipement or conductor on one or more branches. The only significant change that such upgrade work would change in a powerflow model would be that of the branch (facility) ratings would change. It is not necessary to rerun powerflow simulations for such cases, as it can be determined by inspections whether the upgrade work would be sufficient to move the facility rating above the expected normal or contingency flow. We agree that the Planning process should ensure that corrective actions for a particular defeciency do not lead to other deficiencies. However, the process for ensuring this is not necessarly The

Q17			
Commenter	**Yes**	**No**	**Comment**
			development of new study cases which include facilities comprising the corrective action plan and the suscetesting is not needed.
Southern Transm.	☑	☑	A properly conducted study should determine that the recommended Corrective Action Plan actually solves the problem and does not cause other problems. If not, it is not a Corrective Action Plan. What appears to be intended here is whether the combination of Corrective Action Plans interact with each other and create additional problems. In the conference call Mr. Odom stated that it was not the intent for "all" the corrective plans be put back into the cases and all of the simulations be redone but only look at local area analysis. If that is the case, what is necessary to be in compliance with R2.7.2 and what type of documentation is required? This is very unclear. The study area should be determined by the TP. The TP has the most knowledge of how the system responds to changes
WECC BPA TSGT TEP		☑	No, this is too onerous. We recognize that, when planning the system and developing a Corrective Action Plan, the transmission planner would have added the potential projects individually (or in small groups) into a case to re-test the system performance. Hoever, R2.7.2 seems to require that all potential projects be added back into the case simultaneously for retesting. There could be many different alternative solutions for each potential problem identified in the different study years without having the base solution first determined for a nearer term case. There can be many combinations of potential solutions for cases further into the future that satisfy the condition being studied. For example, a voltage problem can be solved by the addition of capacitors, completing a bus tie, adding a short line, operating procedure, changing generation dispatch, etc. Even assuming that one set of solutions are picked so the verification study can be performed, logistically this demonstration may be too close to the assessment in the following year. Instead of retesting the potential projects in the Corrective Action Plan on the original base case, it may be better to test them in the base cases prepared for following year's study. Any potential problem that is unresolved will show up again in the following year's assessment. Therefore, a separate demonstration using an "older" case may not be an efficient use of the TPs' and PAs' time and resources.
WPS	☑	☑	It is difficult to fully prescribe a methodology to define a "study area". It is most appropriate for the Transmission Planning to develop study areas based on and consistent with the transmission planning principles within Order 890.

Response: The intent of the standard is to develop a corrective action plan that will create a system capable of meeting system performance requirements. The standard assumes that the actions were developed and verified using the current and past studies that were used to uncover deficiencies and confirm adherence to the performance requirements. The SDT has removed Requirement R2.7.2 but kept the orignal 2.7.5 requirement, which was re-numbered as Requirement R2.7.3, (subsequent annual assessments report on the status of Corrective Action Plans).

R2.7.2 ~~Be added to study cases and the cases re-tested to show that the System with planned additions meets the performance~~

Q17			
Commenter	**Yes**	**No**	**Comment**
~~requirements in the tables~~			
ABB	☑	☑	Any area where there might possibly be an impact. I.e., engineering judgement.
Muscatine P&W		☑	Large enough to ensure negative impacts will not occur. This could best be covered in regional studies. (See Q43 Comment #3)
Response: The specific requirement to perform re-test has been removed. The purpose of the Corrective Action Plan is to list the actions that are needed to meet performance requirements. The studies, current and/or past as appropriate as well as the extent of the size of the study area, are performed to support compliance and demonstrate that the requirements are met. **R2.7.2** ~~Be added to study cases and the cases re-tested to show that the System with planned additions meets the performance requirements in the tables~~			
AECI		☑	
SaskPower		☑	
Response: Thank you for your response.			
Alcoa	☑		NERC is revising the Transmission Planning Standards beginning with TPL-001. Alcoa agrees with NERC's approach to revising TPL-001 wherein NERC is consolidating duplicative Standards to promote consistent requirements of the planning process and thus improving reliability. Also, Alcoa agrees that new studies should not result in inadvertent negative impacts on the system especially when such studies have not taken into account the negative impact on an adjacent system. However, Alcoa believes that the current draft of the TPL fails to address FERC Order 890's requirements of an open and transparent Planning Process. Such a process provides Market Participants an equal opportunity for consideration in the Planning Assessments for contingency impact on transmission availability. (See FERC Order 890 ¶¶ 140, 207, 212, 323, 327, 337). Alcoa also believes that the current draft of the TPL fails to address and incorporate FERC Order 890's new requirement that transmission providers coordinate "…ATC calculations with their neighboring systems." For example, while Planning Assessments may indicate no NERC Compliance violations where the Table 1 and Table 2 Requirements are met, Market Participants are harmed and not provided protection from unequal treatment of their circumstance. This problem occurs when an analysis of a contingency event results in no IROL or SOL (all facilities remain within established ratings), but resultant transmission constraints cause reductions of ATC and subsequent market impact. As part of the System Planning Process, this is unacceptable, and, as a minimum, this type of situation must be included as a scenario reviewed in the required sensitivity analysis under the NERC TPL-001-1 Standard. The impact of such practices by large transmission providers on the ATC of smaller transmission

Q17			
Commenter	**Yes**	**No**	**Comment**
			providers can be significant. For instance, small transmission providers similar to Alcoa that operate non base-load resources such as hydropower, peaking units or wind power can easily see their ATC's reduced when sensitivity analyses are not performed under TPL-001-1. Alcoa believes that such sensitivity analyses should be a requirement. Alcoa believes that for consistency with the provisions of Order 890, NERC must re-visit not only the Planning Assessment implications on transmission availability but also couple this review with the revision of the NERC Modeling Data and Assessment Standards (MOD). Alcoa recommends that the MOD and TPL Standards be addressed in similar fashion to: 1) Incorporate the intent of Order 890 requirements of an "Open and transparent Regional Planning Process to provide non-discriminatory planning" for ALL Market Participants 2) Assure that the revised MOD and TPL Standards fully address implications of burdens on the Bulk Electric System (BES) related to transmission availability for contingencies in the Planning Process. FERC Order 890 ¶ 523 - Coordinate planning with interconnected systems. In addition to preparing a system plan for its own control area on an open and nondiscriminatory basis, each Transmission Provider will be required to coordinate with interconnected systems to (1) share system plans to ensure that they are simultaneously feasible and otherwise use consistent assumptions and data and (2) identify system enhancements that could relieve congestion or integrate new resources. (Emphasis added). 3) Sensitivity Analysis should include the potential impact on transmission availability and/or reductions in ATC on adjacent systems. Where ATC on an interface is reduced for a single contingency (N-1 planning, mitigation options must be provided). (This may require a threshold level of ATC reduction where a percentage reduction would be specified as acceptable on the N-1 basis, and a greater reduction than that threshold would be considered a Standard's Violation).
Response: The purpose of this standard is to develop corrective actions that can eliminate system performance deficiencies. The standard does not judge if the action listed is the only or the best action to be taken on an economic or market basis. It is the responsibility of the entity to resolve such issues and conform to FERC Order 890.			
AEP	☑		Consider limiting study area to immediately adjacent systems.
Allegheny Power	☑		Study area should be at least two buses beyond deficiency and plan elements.
BCTC	☑		The Assessment should state how the study area was determined, including input from adjacent Planning Coordinators. WECC has processes for coordination of planning information so that Planning Coordinators are informed of plans in other areas.

Q17			
Commenter	**Yes**	**No**	**Comment**
Entergy	☑		Study area should be determined on a case by case basis by the Transmission Planner. SEAMS agreements and other regional planning coordination activities should provide for adequate cooperation.
Exelon	☑		The study area should be at least the size of the original study area. Some engineering judgment is required to determine the subset of studies. Next year's study would include the full set of screenings for the future additions.
IESO	☑		We feel that having the requirement to retest the conditions which show a performance deficiency, but now with the proposed corrective measures, would suffice. To illustrate or require "how a study area should be determined" would be micro-managing, and the term "a study area" is not defined anywhere in the standard and is subject to different interpretation. For example, does it mean the physical area of study or does it mean the various areas in the study that need to be explored. We are therefore unable to offer any view as to "how a study area should be determined".
ITC	☑		Without further study once a "solution" has been proposed how can one be sure it will work and not create "other" issues? The area of study should be developed using good engineering judgment with input from any neighboring parties that might be impacted.
KCPL	☑		Corrective Action Plans taken by a transmission operator should not burden any of its' directly interconnected transmission operators. Study area should include at least all transmission operators directly interconnected to the transmission operator who took the initial corrective action. It may be appropriate to use the entire RTO/ISO/RRO as study area.
LCRA	☑		The question is not clear regarding "study area"; however, re-testing with corrective action / system improvement(s) in place is a must. The re-test must consider the same simulations that identified the initial deficiency. In addition, in the re-test, the action/ system improvement must be considered as a Planning Event itself (i.e., if the initial test showed a specific contingency causing a deficiency, then a physical connection of the system improvement to the identified contingency should be avoided or minimized - minimize the creation of Extreme Events.). In other words, planning solutions should be long-term and a system "fix" for the present should not result in a system problem in the foreseeable future.
MEAG Power	☑		Re-testing should be required only where the correction may impact network flows. The study area should be determined by the TP. The TP has the most knowledge of how the system responds to changes and should be allowed to choose the study area based on the prudent utility practice.
NCEMC	☑		Re-testing should be required particularly where the correction may impact network flows. The study area should be discussed within a stakeholder process to the TP may compile input from network customers or LSEs that might be affected by the analysis.
Northwestern Energy	☑		R2.7.2 does not refer to "how a study area should be determined". This added statement should be eliminated.
Progress–Carolinas	☑		There are separate regional processes for coordination with neighboring utilities.

Q17			
Commenter	**Yes**	**No**	**Comment**
ReliabilityFirst	☑		The study area should be determined by the Transmission Planner and Planning Coordinator.
Seattle City	☑		Sensitivity studies should be adequate to determine the study area. Starting at the corrective facility, work out bus by bus, determining sensitivity to the facility's loss. Boundaries of the study area would be defined at buses where loss sesitivity is (for example) 1% or less.
SERC EC PSS SERC RRS OPS SCE&G TVA	☑		Re-testing should be required only where the correction may impact network flows. The study area should be determined by the TP. The TP has the most knowledge of how the system responds to changes.
Tenaska	☑		The study area should be the same as in the original study unless the Corrective Action Plans require changes/additions outside of the original study area. If chagnes/additions are made outisde the original area, then the study area must be expanded to include, at a minimum, the area that includes the new changes/additions.
Central Maine Power HQTE National Grid New England ISO NU NPCC RCS NSTAR United Illuminating	☑		The study area should be based upon planning expertise and knowledge of the system, giving due consideration to external impacts.
City Water Power and Light	☑		The system should be retested with new facilities in place to ensure that no new problems arise with the addition of new facilities.
Response: Based on industry comment, the SDT has removed Requirement R2.7.2 but kept the orignal 2.7.5 requirement, which was re-numbered as Requirement R2.7.3, (subsequent annual assessments report on the status of Corrective Action Plans). **R2.7.2** ~~Be added to study cases and the cases re-tested to show that the System with planned additions meets the performance requirements in the tables~~			
FirstEnergy	☑		Although we agree with the concept of retesting, the standard should reference that a re-study is only required in the vicinity or portion of the system affected by new facility additions. Determination of the study area should be left to the Transmission Planner's judgment.
Response: The SDT has removed the specific requirement to perform re-testing with the understanding that the purpose of the Corrective Action Plan is to list the actions that are needed to meet performance requirements. The studies, current and/or past as appropriate as well as the extent of the size of the study area, are performed to support compliance and demonstrate that the requirements are met. The standard assumes that the actions were developed and verified using the current and past studies that were used to uncover deficiencies and confirm adherence to the performance requirements. **R2.7.2** ~~Be added to study cases and the cases re-tested to show that the System with planned additions meets the performance~~			

Q17			
Commenter	**Yes**	**No**	**Comment**
~~requirements in the tables~~			
NERC TIS	☑		All Corrective Action Plans should be tested on an interconnection-wide basis to screen for potential adverse impacts throughout the interconnection, not just the TOs area.
Response: Please see Requirement R8 for the coordination and peer review requirements.			
APPA	☑		This is necessary to insure the planners did not accidentally take the system and the future operation of the system from the frying pan into the fire.
ATC	☑		
City Utilities/Springfield	☑		Corrective action plans must be appropriately modeled in order to verify that implementing the plans results in a BES that will perform based on the applicable NERC Reliability Standards or more restrictive local area criteria.
Duke Energy	☑		New studies should be performed, but the study conditions should be determined based upon the judgment of the planner.
ERCOT ISO CAISO	☑		We agree that the system should be retested with the corrective measures to ensure that the defficiency has been cured and that there are no inadvertant negative impacts. Regarding Study Area, it is not a defined term, and it could vary depending on the size of the project or nature of the disturbance being evaluated.
New York ISO	☑		NYISO Agrees
Response: Thank you but due to the preponderance of industry response to this question, this requirement has been deleted.			

18) Q18. Requirement R2.7.3: The standard calls for a differentiation between committed and proposed projects. Do you agree that they should be treated separately? If not, please state why not.

Summary Response: Based on several comments and consideration by the SDT, the SDT has modified Requirement R2.7.1 and deleted the original Requirement R2.7.2 through Requirement R2.7.4. A new Requirement R2.7.2 has been added. The standard now refers to "actions" needed to achieve required System performance without trying to distinguish between committed and proposed projects. It also lists examples of what is intended by the word "actions".

The following requirements were changed due to industry comments:

R2.7.1. ~~Identify~~ List System deficiencies and the associated actions needed to achieve required System performance. ~~including Transmission and generation improvements, DSM, new technologies, or Operating Procedures including the duration of interim Operating Procedures.~~ Such actions may include installation, modification, retirement, or removal of Transmission and generation Facilities and any associated equipment such as protective or Special Protection Schemes, rate applications, DSM, or other initiatives, new technologies, or Operating Procedures including how long the Operating Procedures will be needed as part of the Corrective Action Plan.
R2.7.2. ~~Be added to study cases and the cases re-tested to show that the System with planned additions meets the performance requirements in the tables~~ Contain a description of how and why the consideration of the sensitivities selected in accordance with Requirements R2.1.3, R2.1.4, R2.4.3, and R2.4.4 in the Planning Assessment did or did not result in a modification or expansion of the list of actions developed in accordance with Requirement R2.7.1.
R2.7.3. ~~Include documentation of the criteria for determining committed and proposed projects, with all projects identified as either, 'committed' or 'proposed.'~~
R2.7.4. ~~Not remove committed projects without documentation to show that the revised plan meets the performance requirements.~~

Q18			
Commenter	**Yes**	**No**	**Comment**
Ameren		☑	We understand that there are differences between committed and proposed projects in an RTO environment where there is cost sharing for facility upgrades. From a NERC Standards compliance perspective, however, we do not see a need to differentiate between proposed and committed projects in the corrective action plan, as long as either properly addresses the required performance issue. We are not sure why there is a need to develop or maintain information on committed projects. This tracking is not needed to meet the existing TPL standards. Compliance requirements should be kept separate from administrative data requests. What is the perceived need to track committed projects that has not been presented here? Is this another example of distrust for transmission owners to build the proper facilities to create a more robust system?
Brazos Electric		☑	What is the difference? We assume committed means you have begun work on the project and can no longer stop. It would seem this would need to be defined more clearly and it is probably different for each project or entity. Why is this differentiation even needed?
Response: The SDT agrees with your comment that from a planning perspective, there is no benefit in trying to distinguish between "committed" and "proposed". Therefore, the SDT has modified Requirement R2.7.1 and deleted the original Requirement R2.7.2 through Requirement R2.7.4 to reflect "actions" needed to achieve required System performance without trying to distinguish between committed and			

Q18			
Commenter	**Yes**	**No**	**Comment**
proposed projects. **R2.7.1.** ~~Identify~~ List System deficiencies and the associated actions needed to achieve required System performance. ~~including Transmission and generation improvements, DSM, new technologies, or Operating Procedures including the duration of interim Operating Procedures.~~ Such actions may include installation, modification, retirement, or removal of Transmission and generation Facilities and any associated equipment such as protective or Special Protection Schemes, rate applications, DSM, or other initiatives, new technologies, or Operating Procedures including how long the Operating Procedures will be needed as part of the Corrective Action Plan. **R2.7.2.** ~~Be added to study cases and the cases re-tested to show that the System with planned additions meets the performance requirements in the tables~~ Contain a description of how and why the consideration of the sensitivities selected in accordance with Requirements R2.1.3, R2.1.4, R2.4.3, and R2.4.4 in the Planning Assessment did or did not result in a modification or expansion of the list of actions developed in accordance with Requirement R2.7.1. **R2.7.3.** ~~Include documentation of the criteria for determining committed and proposed projects, with all projects identified as either, 'committed' or 'proposed.'~~ **R2.7.4.** ~~Not remove committed projects without documentation to show that the revised plan meets the performance requirements.~~			
AECI	☑		However, the question as to what is considered committed versus proposed. There are variuos step in the approval process for our company and we are not sure which approval would be considered committed.
AEP		☑	Consider adding clear definition of "proposed" and "committed" projects (definition may impact response to this question).
Allegheny Power	☑		There needs to be a clear definition developed for committed and proposed projects and those definitions need to be included in the definition section of the standard.
APPA	☑		While it is good to know the difference, it should be made clear in the Standard that if a project is listed as committed, it may be changed the next year to proposed project. Definitions for "committed" and "proposed" are needed to ensure consistent data/assumptions within each region.
BPA		☑	Support comments submitted by WECC. Also, one reason not to differentiate between committed and proposed projects is that regardless of whether a project is committed or not in a future case, the committment to implement a Corrective Action Plan becomes mandatory as time moves closer to the need date due to required system performance.
WECC TSGT TEP		☑	The definition of these terms can be vastly different across all TPs. How would this be effectively monitored for compliance with such different definitions? Also, each TO's criteria to go from a proposed project to a committed project can change over time due to other needs and requirements.
Central Maine Power National Grid New England ISO NU NPCC RCS NSTAR	☑		They should be viewed differently in the Near-Term. However, these should be defined terms.

Q18			
Commenter	**Yes**	**No**	**Comment**
United Illuminating			
City Utilities/Springfield	☑		Definitions of both “committed” and “proposed” are needed.
City Water Power and Light	☑		"Committed" and "proposed" projects need to be defined.
CPS Energy		☑	The treatment of each project should be at the dscretion of the Transmission Planners.
Duke Energy		☑	Even committed projects may not be built due to a variety of circumstances. Either type of project can be deferred or cancelled for a variety of reasons, including circumstances beyond the transmission planner's control.
Entergy	☑		Committed projects should be tested for effectiveness, however, the effectiveness of Proposed projects, as they are subject to change, should not require the same level of documentation as committed projects.
Georgia Transm.	☑		They are inherently treated differently. "Committed" projects are a part of the base assumptions in the base case, while "proposed" projects are evaluated until a point where corporate commitment has been made.
HQTE	☑		They should be viewed differently in the Near-Term.
E ON US		☑	MISO has spent years on trying to make a distinction. If this remains, then "Committed Project" must be defined.
ERCOT ISO CAISO		☑	The definition of "committed" projects varies from TP to TP. Also projects that are proposed today become committed in the planning horizon. Similarly, committed projects drop out due to variety of reasons. In terms of system studies, both committed and proposed projects are modeled and evaluated in the same system. How do we distinguish between the two?
FirstEnergy		☑	Unless there is an industry agreed upon distinction and definition between "committed" and "proposed" projects, we do not agree that they should be introduced in this standard.
FPL FRCC		☑	All projects should be called "Planned" projects. There is no distinction in a model between committed and proposed projects that would treat them differently. They are either in the model or not in the model. This sub-requirement does not follow the major requirement wording in R2.7 ".....Such plans shall:" The intent of Requirements R2.7.3 and R2.7.4 should be combined and added into R2.7.1.1. Rather than adding the addtional requirement to document a criteria, the requirement should be that in the Near-Term Planning Horizon, projects cannot be removed (or modified) without demonstrating that the revised plan meets performance criteria. Suggested wording for R2.7.1.1. “Transmission and generation improvement projects for the Near-Term Transmission Planning Horizon, shall have in-service dates provided (to whom?), and shall not have in-service dates changed, or be removed from planning models, without documentation to show that the revised plan meets performance requirements.”
IESO	☑	☑	Yes, the distinction should be made as committed projects have a higher degree of certainty to be available for the period under study, whereas a proposed project is one that is supported by the

Q18			
Commenter	**Yes**	**No**	**Comment**
			assessment but the commitment to proceed is not yet secured. However, we do not see the need (a) to establish criteria for committed projects and proposed projects, and (b) to distinguish between the criteria between them. If the standard should require a TP to assess both scenarios - with and without proposed projects, then this should be clearly stipulated.
ITC		☑	All projects should naturally become committed projects at some point prior to the need date. The time frame should be dependant on the scale and voltage class of the project.
LADWP		☑	Seems like every company would have its own definition of committed vs propsoed project.
Manitoba Hydro	☑		However, since each planner is allowed to define the criteria, there will be no consistency as to what is included in the base case models.
NCEMC	☑		Projects that are underway (i.e. being built) and are not subject to be potentially delayed and are absolutely needed for reliability should be differentiated between those that are not. Perhaps definitions for each of these terms should be considered for clarification.
NERC TIS	☑	☑	No concensus in TIS after extensive disucussion, but it will be discussed further.
Northwestern Energy		☑	No, there are no clear guidelines on how to make this distinction.
PJM	☑	☑	We agree that there needs to be a differentiation between committed and proposed projects. Proposed projects, particularly generation interconnections and their associated network upgrades need to be identified as a group so that they can be removed from cases if the proposed generation interconnection does not move forward.
Progress–Carolinas		☑	Are projects are proposed until they are completed.
Progress–Florida		☑	This differentiation is meaningless when modeling projects in cases for planning analysis. The standard should instead set criteria for when models can be relied upon for planning purposes such that changes to the future plan will not have an impact on reliability.
Seattle City		☑	Since compliance with performance guidelines is mandated, aren't all projects defined in the corrective action plans "committed" projects? Proposed projects in the context of Requirement 2.7 should only exist in the studies to determine which remedial solution(s) comprise the Corrective Action Plan.
Southern Transm.		☑	This requirement does not appear to have any major benefit, particularly coupled with R2.7.4 discussed in Q19. The standards require that an assessment be done every year and that the system must meet performance requirements or a Corrective Action Plan be developed. Therefore, if a project has been previously specified as a "committed" project, removing it and or replacing it with something else must also meet performance requirements under this standard or a violation occurs. Also, this performance of the system with the "committed" Corrective Action Plan" removed or modified must be documented. Therefore, requirement R2.7.4 is automatically met and is superfluous in the standard and should be removed. There is no benefit from the distinction between a project definition of "committed" and "proposed".
WPS	☑	☑	If the standard makes a differentiation between "committed" and "proposed" projects, definitions for

Q18			
Commenter	**Yes**	**No**	**Comment**
			each, within the standard itself, are necessary. Within the context of R2.7, it is not clear what impact the differentiation between "committed" and "proposed" has on the requirement itself. R2.7 requires Corrective Action Plans to address deficiencies within the performance analysis of the events in Table 1 and Table 2. A fundamental underpinning of R2.7 should be that Corrective Action Plans are developed consistent with the transmission planning principles of Order 890.

Response: The SDT agrees that if the standard is going to include "committed" and "proposed", they will need to be defined. However, the SDT agrees that it will be very difficult to develop definitions of "committed" and "proposed" that are applicable for the entire NERC footprint. Therefore, the SDT has modified Requirement R2.7.1 and deleted the original Requirement R2.7.2 through Requirement R2.7.4 to reflect "actions" needed to achieve required System performance without trying to distinguish between committed and proposed projects.

R2.7.1. ~~Identify~~ List System deficiencies and the associated actions needed to achieve required System performance. ~~including Transmission and generation improvements, DSM, new technologies, or Operating Procedures including the duration of interim Operating Procedures.~~ Such actions may include installation, modification, retirement, or removal of Transmission and generation Facilities and any associated equipment such as protective or Special Protection Schemes, rate applications, DSM, or other initiatives, new technologies, or Operating Procedures including how long the Operating Procedures will be needed as part of the Corrective Action Plan.
R2.7.2. ~~Be added to study cases and the cases re-tested to show that the System with planned additions meets the performance requirements in the tables~~ Contain a description of how and why the consideration of the sensitivities selected in accordance with Requirements R2.1.3, R2.1.4, R2.4.3, and R2.4.4 in the Planning Assessment did or did not result in a modification or expansion of the list of actions developed in accordance with Requirement R2.7.1.
R2.7.3. ~~Include documentation of the criteria for determining committed and proposed projects, with all projects identified as either, 'committed' or 'proposed.'~~
R2.7.4. ~~Not remove committed projects without documentation to show that the revised plan meets the performance requirements.~~

MEAG Power		☑	The goal is to meet the system performance requirements outlined in the standard. Whether a project is proposed or committed is not relevant.
Santee Cooper SERC EC PSS SERC RRS OPS SCE&G		☑	The goal is to meet the system performance requirements outlined in the standard. Whether a project is proposed or committed is irrelevant. R2.7.3 should be deleted.

Response: The SDT agrees with your comment and has modified Requirement R2.7.1 and deleted the original Requirements R2.7.2 through R2.7.4 to reflect "actions" needed to achieve required System performance without trying to distinguish between committed and proposed projects.

R2.7.1. ~~Identify~~ List System deficiencies and the associated actions needed to achieve required System performance. ~~including Transmission and generation improvements, DSM, new technologies, or Operating Procedures including the duration of interim Operating Procedures.~~ Such actions may include installation, modification, retirement, or removal of Transmission and generation Facilities and any associated equipment such as protective or Special Protection Schemes, rate applications, DSM, or other initiatives, new technologies, or Operating Procedures including how long the Operating Procedures will be needed as part of the Corrective Action Plan.

Q18			
Commenter	**Yes**	**No**	**Comment**
R2.7.2. ~~Be added to study cases and the cases re-tested to show that the System with planned additions meets the performance requirements in the tables~~ Contain a description of how and why the consideration of the sensitivities selected in accordance with Requirements R2.1.3, R2.1.4, R2.4.3, and R2.4.4 in the Planning Assessment did or did not result in a modification or expansion of the list of actions developed in accordance with Requirement R2.7.1. **R2.7.3.** ~~Include documentation of the criteria for determining committed and proposed projects, with all projects identified as either, 'committed' or 'proposed.'~~ **R2.7.4**. ~~Not remove committed projects without documentation to show that the revised plan meets the performance requirements.~~			
ABB	☑		Yes, it helps when considering other issues in the same area. You would know whether or not you can count on a project going in.
AECC	☑		not only should a distinction be made but committed projects should be further classified as committed and under construction. There is a difference between a project be committed and actually being built. This difference can be many years. It would also be nice to know projects that are in the conceptual stage. This allow other stakeholders to share their thoughts and collaborate on projects of mutual interest before a project reaches the committed stage. Once a project is committed it is very difficult to make modifications.
ATC	☑		
BCTC	☑		
Dominion	☑		
Entegra	☑		
Exelon	☑		
KCPL	☑		
LCRA	☑		
MISO	☑		
MRO	☑		
Muscatine P&W	☑		
New York ISO	☑		NYISO Agrees
ReliabilityFirst	☑		
SaskPower	☑		
Tenaska	☑		
TVA	☑		

Q18			
Commenter	Yes	No	Comment
Response: Thank you but due to the majority of industry response to this question, the requirements have been changed as indicated in the summary.			

19) Q19. Requirement R2.7.4: For such Corrective Action Plans "Committed projects shall not be removed without documentation to show that the revised plan meets the performance requirements". Do you agree or disagree with this requirement? If you disagree, please explain why.

Summary Response: Commenters generally agreed that "committed" plans are difficult to define and may have a different meaning for many entities. In addition, even considering the generally accepted understanding of what "committed" plans means would still lead to the fact that such plans could change up until the plan is actually implemented. Therefore the SDT has modified Requirement R2.7.1 and deleted the original Requirement R2.7.2 through Requirement R2.7.4 to require only the Corrective Action Plan and goes on to state what is intended by the word "actions".

The following requirements were changed due to industry comments:

R2.7.1. ~~Identify~~ List System deficiencies and the associated actions needed to achieve required System performance. ~~including Transmission and generation improvements, DSM, new technologies, or Operating Procedures including the duration of interim Operating Procedures.~~ Such actions may include installation, modification, retirement, or removal of Transmission and generation Facilities and any associated equipment such as protective or Special Protection Schemes, rate applications, DSM, or other initiatives, new technologies, or Operating Procedures including how long the Operating Procedures will be needed as part of the Corrective Action Plan.
R2.7.2. ~~Be added to study cases and the cases re-tested to show that the System with planned additions meets the performance requirements in the tables~~ Contain a description of how and why the consideration of the sensitivities selected in accordance with Requirements R2.1.3, R2.1.4, R2.4.3, and R2.4.4 in the Planning Assessment did or did not result in a modification or expansion of the list of actions developed in accordance with Requirement R2.7.1.
R2.7.3. ~~Include documentation of the criteria for determining committed and proposed projects, with all projects identified as either, 'committed' or 'proposed.'~~
R2.7.4. ~~Not remove committed projects without documentation to show that the revised plan meets the performance requirements.~~

Q19			
Commenter	**Yes**	**No**	**Comment**
Ameren		☑	As stated above, we are not sure why there is a need to develop or maintain information on committed projects. This tracking is not required in the existing TPL standards. As long as the revised corrective action plan meets the reliability performance requirements, what difference does it make if a committed project is cancelled or changed to a proposed project from a compliance perspective? We need to keep compliance requirements separate from administrative data requests or survey responses.

Response: The SDT agrees with your comment and has modified Requirement R2.7.1 and deleted the original Requirement R2.7.2 through Requirement R2.7.4 to require only the Corrective Action Plan and indicates what is intended by the word "actions". The SDT feels that documenting the assessment and making it available to others will by its very nature provide all the information necessary to understand which plans changed and the basis for the new plans.

R2.7.1. ~~Identify~~ List System deficiencies and the associated actions needed to achieve required System performance. ~~including Transmission and generation improvements, DSM, new technologies, or Operating Procedures including the duration of interim Operating~~

Q19			
Commenter	**Yes**	**No**	**Comment**
~~Procedures.~~ Such actions may include installation, modification, retirement, or removal of Transmission and generation Facilities and any associated equipment such as protective or Special Protection Schemes, rate applications, DSM, or other initiatives, new technologies, or Operating Procedures including how long the Operating Procedures will be needed as part of the Corrective Action Plan. **R2.7.2.** ~~Be added to study cases and the cases re-tested to show that the System with planned additions meets the performance requirements in the tables~~ Contain a description of how and why the consideration of the sensitivities selected in accordance with Requirements R2.1.3, R2.1.4, R2.4.3, and R2.4.4 in the Planning Assessment did or did not result in a modification or expansion of the list of actions developed in accordance with Requirement R2.7.1. **R2.7.3.** ~~Include documentation of the criteria for determining committed and proposed projects, with all projects identified as either, 'committed' or 'proposed.'~~ **R2.7.4.** ~~Not remove committed projects without documentation to show that the revised plan meets the performance requirements.~~			
Brazos Electric		☑	This seems like more documention is needed however if the new CAP analysis will suffice for documentation regarding removal of the 'committed project' then this is acceptable. However, that kind of makes having such a thing as a 'committed project' fairly useless if you can change it. This appears to just be more unnecessary documention.
Dominion		☑	We are of the opinion that committed projects could be removed without documentation. Once a project is removed, the next set of studies will show the deficiencies, if any.
Response: The SDT agrees with your comment that "committed" plans can change. The SDT has modified Requirement R2.7.1 and deleted the original Requirement R2.7.2 through Requirement R2.7.4 to require only the Corrective Action Plan and indicates what is intended by the word "actions". The SDT feels that documenting the assessment and making it available to others will by its very nature provide all the information necessary to understand which plans changed and the basis for the new plans. **R2.7.1.** ~~Identify~~ List System deficiencies and the associated actions needed to achieve required System performance. ~~including Transmission and generation improvements, DSM, new technologies, or Operating Procedures including the duration of interim Operating Procedures.~~ Such actions may include installation, modification, retirement, or removal of Transmission and generation Facilities and any associated equipment such as protective or Special Protection Schemes, rate applications, DSM, or other initiatives, new technologies, or Operating Procedures including how long the Operating Procedures will be needed as part of the Corrective Action Plan. **R2.7.2.** ~~Be added to study cases and the cases re-tested to show that the System with planned additions meets the performance requirements in the tables~~ Contain a description of how and why the consideration of the sensitivities selected in accordance with Requirements R2.1.3, R2.1.4, R2.4.3, and R2.4.4 in the Planning Assessment did or did not result in a modification or expansion of the list of actions developed in accordance with Requirement R2.7.1. **R2.7.3.** ~~Include documentation of the criteria for determining committed and proposed projects, with all projects identified as either, 'committed' or 'proposed.'~~ **R2.7.4.** ~~Not remove committed projects without documentation to show that the revised plan meets the performance requirements.~~			
E ON US		☑	Our planning process includes documentation of the need, acceleration, delay, or elimination of all projects. As worded, I do not need to document the delay of a Committed project.
Northwestern Energy		☑	Same problem as Q18; but it isn't clear what level of documentation is needed.
BPA		☑	See response to Q18.

Q19			
Commenter	**Yes**	**No**	**Comment**
CenterPoint		☑	This is overly prescriptive. Allow each Transmission Planner to determine the best way to handle planned projects.
CPS Energy		☑	The treatment of each project should be at the discretion of the Transmission Planners.
Duke Energy		☑	The annual assessment will show that the revised plan meets performance requirements.
FirstEnergy		☑	Unless there is an industry agreed upon distinction and definition between "committed" and "proposed" projects, we do not agree that they should be introduced in this standard.
Georgia Transm.		☑	See responses to Q17 and Q18.
KCPL		☑	Corrective Action Plans must demonstrate performance based on the expected system configuration. Committed projects can be changed or discontinued before completion.
LADWP		☑	All this does is create more bureaucratic tracking and paper pushing. People probably won't classify anything as committed until concrete has been poured just so not to have to deal with all these paperwork.
Manitoba Hydro		☑	The standard does not allow any time to develop a corrective plan through an open and transparent process. Based on the NERC definition, a Corrective Action Plan is the list of actions and an associated timetable for implementation to remedy a specific problem. A Corrective Action Plan could mean that load forecasts at the station will be verified, facility ratings verified and alternatives to fix the identified problem to be determined before the next Planning Assessment. This standard seems to be mixing the idea of a Corrective Action Plan with the original TPL idea of determining corrective plans to achieve required performance. A corrective plan wil be the end goal of a Corrective Action Plan.
MEAG Power		☑	See response to Q18.
MISO			The current Corrective Action Plan should show the performance of the system with the best information available. These Plans will change year by year as conditions change and new information becomes available. Requiring that Plan projects from previous years may not be modified "without documentation" adds a additional unneeded paperwork.
MRO		☑	The MRO disagrees with this requirement. This is an unnecessary requirement since each year Corrective Action Plans must meet the system performance requirements.
Santee Cooper SERC EC PSS SERC RRC OPS SCE&G		☑	The goal is to meet the system performance requirements outlined in the standard. Whether a project is proposed or committed is irrelevant. R2.7.4 should be deleted.
Southern Transm.		☑	See comments for Q18. [This requirement does not appear to have any major benefit, particularly coupled with R2.7.4 discussed in Q19. The standards require that an assessment be done every year and that the system must meet performance requirements or a Corrective Action Plan be developed. Therefore, if a project has been previously specified as a "committed" project, removing it and or replacing it with something else must also meet performance requirements under this

Q19			
Commenter	**Yes**	**No**	**Comment**
			standard or a violation occurs. Also, this performance of the system with the "committed" Corrective Action Plan" removed or modified must be documented. Therefore, requirement R2.7.4 is automatically met and is superfluous in the standard and should be removed. There is no benefit from the distinction between a project definition of "committed" and "proposed".]
Tenaska		☑	Add after the word "requirements" the following: "without the committed projects."
TSGT		☑	R2.7.4 calls for change monitoring. If documentation of changes is required, just say so. Do not restrict changes.
WECC TEP		☑	The requirement is similar to the question posed in Question 17. What is the documentation that proves this is needed?
SaskPower		☑	
BCTC	☑	☑	We have a larger concern. If a project is Committed and is proceeding with construction, why would a transmission planner not consider this is in planning studies. Showing that a committed project is not needed and removing it from the plans, does not necessarily remove it from the future system. In addition to showing that the revised plan meets the performance requirements, the planner needs to include documentation to show that the Committed project has been cancelled.
IESO	☑	☑	We agree that committed projects should not be removed from the revised plan. But we question the need for this sub-requirement which calls for: "Revisions to the Corrective Action Plans are allowed over time but shall meet the performance requirements.." Committed projects are normally included in the planning studies for which the performance is assessed. Deficiency, if identified, will have a corrective plans developed. We do not understand the need to remove or revise the committed plan in this context.
NERC TIS	☑	☑	Any revision to the Corrective Action Plan should be tested to ensure that the revised plan meets the precribed performance requirements. Documentation of that testing is appropriate.
Central Maine Power HQTE National Grid New England ISO NU NPCC RCS NSTAR United Illuminating	☑		It is unclear as to what the commited project is being removed from. Suggested language "…removed from the plan…".
ERCOT ISO CAISO	☑		We agree that committed projects should not be removed from the revised plan. These are supposed to be included in the planning studies which determine the system performance in the first place. The definition of "committed" projects varies from TP to TP so this would require a standard definition.

Q19			
Commenter	**Yes**	**No**	**Comment**
Seattle City	☑		To agree with the comment in Q18, the requirement should read "Corrective Action Plans shall not be modified without documentation to show that the revised plan meets the performance requirements."

Response: Based on your comment and the comment of others that state that "committed" plans could change up until the plan is exercised, the SDT has modified Requirement R2.7.1 and deleted the original Requirement R2.7.2 through Requirement R2.7.4 to require only the Corrective Action Plan and indicates what is intended by the word "actions". The SDT feels that documenting the assessment and making it available to others will by its very nature provide all the information necessary to understand which plans changed and the basis for the new plans.

R2.7.1. ~~Identify~~ List System deficiencies and the associated actions needed to achieve required System performance. ~~including Transmission and generation improvements, DSM, new technologies, or Operating Procedures including the duration of interim Operating Procedures.~~ Such actions may include installation, modification, retirement, or removal of Transmission and generation Facilities and any associated equipment such as protective or Special Protection Schemes, rate applications, DSM, or other initiatives, new technologies, or Operating Procedures including how long the Operating Procedures will be needed as part of the Corrective Action Plan.
R2.7.2. ~~Be added to study cases and the cases re-tested to show that the System with planned additions meets the performance requirements in the tables~~ Contain a description of how and why the consideration of the sensitivities selected in accordance with Requirements R2.1.3, R2.1.4, R2.4.3, and R2.4.4 in the Planning Assessment did or did not result in a modification or expansion of the list of actions developed in accordance with Requirement R2.7.1.
R2.7.3. ~~Include documentation of the criteria for determining committed and proposed projects, with all projects identified as either, 'committed' or 'proposed.'~~
R2.7.4. ~~Not remove committed projects without documentation to show that the revised plan meets the performance requirements.~~

FPL		☑	All projects should be called "Planned" projects. Additionally, see response to question 18.
FRCC		☑	See response to question 18.

Response: Although the comment suggests referring to all plans as "planned", the comment of others that stated that "committed" plans ("planned" in your case) could change up until the plan is exercised; the SDT has modified Requirement R2.7.1 and deleted the original Requirement R2.7.2 through Requirement R2.7.4 to require only the Corrective Action Plan and indicates what is intended by the word "actions". The SDT feels that documenting the assessment and making it available to others will by its very nature provide all the information necessary to understand which plans changed and the basis for the new plans.

R2.7.1. ~~Identify~~ List System deficiencies and the associated actions needed to achieve required System performance. ~~including Transmission and generation improvements, DSM, new technologies, or Operating Procedures including the duration of interim Operating Procedures.~~ Such actions may include installation, modification, retirement, or removal of Transmission and generation Facilities and any associated equipment such as protective or Special Protection Schemes, rate applications, DSM, or other initiatives, new technologies, or Operating Procedures including how long the Operating Procedures will be needed as part of the Corrective Action Plan.
R2.7.2. ~~Be added to study cases and the cases re-tested to show that the System with planned additions meets the performance requirements in the tables~~ Contain a description of how and why the consideration of the sensitivities selected in accordance with Requirements R2.1.3, R2.1.4, R2.4.3, and R2.4.4 in the Planning Assessment did or did not result in a modification or expansion of the list

Q19			
Commenter	**Yes**	**No**	**Comment**
of actions developed in accordance with Requirement R2.7.1. **R2.7.3.** ~~Include documentation of the criteria for determining committed and proposed projects, with all projects identified as either, 'committed' or 'proposed.'~~ **R2.7.4.** ~~Not remove committed projects without documentation to show that the revised plan meets the performance requirements.~~			
ABB	☑		It's kind of obvious. If you require a solution to begin with, then if that solution is removed, another solution must be planned. However, if the removed project is not directly related to the study or problem at hand, then engineering judgment will be needed as to whether or not to repeat the study.
AECC	☑		It should also show the justification for the revision. This is especially true if transmission service is going to be sold using models that contain committed projects. If a plan is revised I would hope the revision would meet the performance requirements better than the project it replaces.
AECI	☑		
Allegheny Power	☑		
AEP	☑		
APPA	☑		It may be necessary, as a band-aid-type substitute, to replace a committed project with a Remedial Action Scheme (RAS)/Special Protection Systems in lieu of new facilities. Whatever the revised plan, it must be shown to meet the performance requirements.
ATC	☑		
City Water Power and Light	☑		
City Utilities/Springfield	☑		
Entegra	☑		
Entergy	☑		
Exelon	☑		
ITC	☑		We agree.
LCRA	☑		
Muscatine P&W	☑		
New York ISO	☑		NYISO Agrees
NCEMC	☑		
PJM	☑		
Progress–Carolinas	☑		We always should be able to show that we meet performance requirements.

Q19			
Commenter	**Yes**	**No**	**Comment**
Progress–Florida	☑		
TVA	☑		
WPS	☑		As stated in response to Q18, it is unclear why the differentiation between "committed" and "proposed" is actually necessary. The standard must allow flexibility, so that the evolution of a Corrective Action Plan can occur within the context of the transmission planning principles of FERC Order 890.
Response: Thank you but due to the majority of industry response to this question, the requirements have been changed			

D) Performance Requirements

The proposed revised planning standard (TPL-001-1) incorporates a number of changes in requirements as compared to the current planning standards (TPL-001-0 through TPL-004-0), which it is expected to replace. Among other things these changes are intended to clarify the standard, address issues described by FERC, and, in particular, to "raise the bar." Strengthening the planning standards in selected areas is necessary to maintain a reliable Bulk Electric System that is up to the challenges of the 21st Century. In proposing the requirements in this draft, the standard drafting team attempted to balance the value of increased reliability against any potential increase in work and costs to meet the new proposed standard.

The standard drafting team is seeking input from the industry to determine whether a proper balance has been achieved. The areas where material changes are proposed in this draft are enumerated below, and questions are posed by the standard drafting team to obtain industry comment. In formulating your responses, please keep in mind that material changes in the final standard will be accompanied by a transition plan to provide for an orderly implementation of the final standard.

The performance requirements relative to Non-Consequential Loss of Load for the following events enumerated in the two tables can be considered more stringent than the existing TPL standards. Furthermore, the proposed standard is based on an assumption that performance requirements for EHV facilities should be more stringent than for lower voltage facilities.

Do you agree that Non-Consequential Loss of Load should not be permitted for the following events? If you disagree, please provide a reason for your disagreement.

20) Q20. P2-1: Loss of bus section (SLG for stability) above 300 kV

Summary Response: The SDT has considered industry comments and has incorporated changes in the definition of Consequential Load Loss. The SDT has also revised Tables 1 & 2 to add greater detail and provide for more situations where it is acceptable to lose Non-Consequential Load. However, the SDT did not feel that any change needed to be made to this requirement. Note: P2-1 from the original draft is now P2-2 in the revision.

Many of the responders have asked the question why the distinction for bus sections above 300 kV. The SDT has prepared the following response.

The initial draft of the proposed Transmission planning standard held the planning of 300 kV and higher Transmission Systems to a more stringent requirement than the remaining BES. Although not unanimous, the majority of the SDT believed the 300 kV and higher Systems (EHV) generally represent the backbone of many Systems in the various Interconnections and that the more stringent requirements were appropriate when considering N-1-1 Contingencies of two EHV Facilities. Systems operated above 300 kV generally do not directly serve end-use Load customers but rather act as the medium for moving large amounts of power from production to various Load centers where the energy is then delivered by other Transmission or sub-Transmission Systems to end-use customers. It is the desire of NERC and various stakeholders that the backbone of the electric power grid be robust and held to a higher degree of reliability.

When EHV Systems are compromised, the large volumes of power they serve can place a severe amount of stress on parallel EHV or lower voltage paths. For example, if a large EHV transformer experiences a catastrophic failure, not only are other systems Facilities required to carry more Load but the System is also exposed to other N-1 conditions for long periods of time while awaiting a replacement or repair of the failed equipment. Large generation sources are typically connected at EHV levels and maintenance of the EHV transmission lines within the vicinity of large generation plants must often be coordinated during scheduled unit outages, resulting again in multiple Facility outages over extended periods of time.

Therefore, it was the conclusion of the SDT in Draft 1 to propose greater reliability and operational flexibility through more stringent performance requirements when considering certain N-1 and N-1-1 Contingency events of EHV Systems. Throughout the industry, substation arrangements at EHV levels reflect the importance of these systems as the designs often consist of the more flexible and reliable ring-bus, breaker-and–a-half or double bus-double breaker protection schemes as compared to the simpler, lower cost single bus arrangements that are commonly found on lower voltage systems.

The feedback received from the industry was divided related to the SDT's emphasis placed on a higher expectation for the 300 kV and higher systems. Some commenters questioned the importance and the high costs that may be needed to mitigate existing system designs. Others agreed with the SDT's approach and indicated that the impact to their systems would be minimal. Some commenters even questioned why the more stringent approach was not applied to the entire 100 kV and higher systems. The SDT believes the Draft 2 changes are responsive to industry feedback and reflect an appropriate middle ground related to the importance of the EHV Transmission System.

Q20			
Commenter	**Agree**	**Disagree**	**Comment**
ABB			Loss of load is not usually considered by tranmission planners. In power flow studies, they look at flows and voltages versus limits. In stability studies, they are looking for angles, speeds, and voltages that stabilize at good values, possibly with temporary excursions less than some limits. How should all these be converted to a loss of load value? Normally we ensure no loss of load <because> we meet thermal, voltage, and stability requirements. Maybe you are saying that planners should not use load tripping as a solution for these violations?
Response: Tripping of Load can be used as an operating tool to maintain or restore a System to acceptable performance. The standard needs to quantify whether this action is acceptable from a planning perspective and, if so, then it needs to quantify the acceptable situations and limits. This second draft is proposing that no Non-Consequential Load may be tripped for the loss of a 300 kV (or higher) bus section for a first contingency event. (See Table 1)			
LADWP			There is a fundamental fatal flaw in having different reliability requirements using an arbitrary separation of the connected bulk electrical systems into above 300kV and below 300kV. The standard should be re-draft without this separation and comments be solicited at that time. These questions are fundamentally unfair without first settling whether or not it is wise to arbitrary separate the bulk system into two different classes. This is like asking someone "Did you hit your spouse today?"
Response: Draft 2 has been modified for 300 kV and higher systems regarding N-1-1 conditions: Based on industry feedback the SDT has made changes in proposed Draft 2 requirements related to two independent overlapping single Contingencies involving two non-generation Transmission Facilities operated at a voltage level above 300 kV. Draft 2 now permits the loss of Non-Consequential Load to meet the Transmission performance requirements for these types of events. Please refer to performance tables Planning Event P6. It is noted that in Draft 2 the SDT is still requiring more stringent performance requirements of the EHV Transmission for the less probable, but greater risk single Contingency events. Please refer to performance tables Planning Event P2 and note that bus section faults and internal breaker faults (non-bus tie) associated with above 300 kV Facilities are held to a higher performance standard than those operated at 300 kV or below. Please see also summary response.			
Muscatine P&W			See Q43 Comment #5.
Response: See Q43 response.			
Dominion		☑	Usually, this type of outage will not involve non-consequential load loss,

Q20			
Commenter	**Agree**	**Disagree**	**Comment**
			however, there may be specific situations where local non-consequential load loss could be justified. This is consistent with how transmission systems have been designed for many years and approved by State commissions. Transmission Owners need to have some flexibility to balance grid reliability vs. cost to the ratepayer. In some instances, the expense required to eliminate all local non-consequential load loss cannot always be justified if there is no significant improvement in wide area bulk power system reliability. In other words, making the standards more stringent by "raising the bar" is not going to result in a dramatic improvement in system reliability. Even the best designed systems are susceptible to human error. Dominion has at least 5 years of transmission outage data clearly illustrating that any resulting loss of load (both consequential and non-consequential) has had an average duration of only 4-7 customer-minutes per year. Going forward, the emphasis and focus should be on planning and operating the bulk electric system so as to confine any transmission outages to the immediate, local area, and not allow the cascading of outages beyond control area boundaries.
Response: The SDT agrees that typically systems are designed such that Non-Consequential Load won't be lost, which should minimize the exposure to non-compliance for most companies. The SDT agrees that the focus of the standard needs to be on network performance and has added greater detail to Tables 1 & 2 which address the comment. The standard is a planning document; so although the SDT agrees that operating the BES is an important issue, it is not the focus of this standard.			
Northwestern Energy		☑	What is non-consequential load loss? Is losing a motor due to motor contactor action a non-consequential load loss? Also, the transmission system was developed under criteria without this requirement and to correct it would be costly.
Response: Consequential and Non-Consequential Load Loss involves Transmission System actions not customer equipment response to system performance, which in some cases may be within a tolerable system bandwidth, but not within the customer set points. The standard anticipates that the system will be designed to meet the expected Load, which implies that customer tripping of its own Load should not be the focus in planning studies. This has been addressed in the definition of Consequential Load Loss.			
BCTC		☑	Do not agree based on SDT definition for Consequential and Non-Consequential Load Loss. Will agree subject to proposed revisions to definitions of Consequential and Non-Consequential Load loss.
Response: The SDT has considered industry comments and has incorporated changes in the definition of Consequential Load Loss which should address your concerns.			
CAISO		☑	Loss of bus section is Category C for which the current NERC criteria allows controlled loss of load. The NERC system has been designed with this criteria. To create a more stringent standard would require to build hundreds of miles of new transmission lines to bring the existing system to NERC compliance. What are the potential benefits of this stringent criteria? Also, what is the

Q20			
Commenter	**Agree**	**Disagree**	**Comment**
			reasoning behind selecting 300 kV as a cut off level?
Tenaska		☑	May need to consider using 500 kV as some transmission providers serve load off of the 345 kV system which could be triggered by this event.
Response: It is not clear if the comment is referring to Consequential or Non-Consequential Load, but greater detail has been added to Tables 1 & 2, which should address your comment.			
Exelon	☑	☑	We do not agree with disallowing non-consequential load loss for these scenarios for the peak load conditions. These are very low probability contingencies, and some non-consequential load loss should be allowed at peak load. We would agree that it would be reasonable to dis-allow non-consequential load loss for these contingencies at a lower load level, such as 75% of peak load.
MEAG Power		☑	By not allowing non-consequential load loss, utilities will incur significant expenditures to solve a problem with an extremely low probability of occurrence. The benefit will not justify the cost.
FPL FRCC		☑	This loss is currently distinguished from other single contingencies because of its lower probability of occurrence and a more stringent performance requirement than currently exists is not warranted.
MRO		☑	This is a low probability event that could have significant impact on the system which historically have been designed to allow local load dropping including non-consequential load. The SDT should justify that the benefit to customers of this increased reliability justifies the cost of this change to customers. Alternatively, the SDT should define a level (such as 1000 MW) of non-consequential load that is acceptable for such low probability events.
Progress–Florida		☑	This single contingency event has a very low probability of occurrence, and thus a more stringent performance requirement than currently exists is not warranted.
NCEMC	☑		Although this is a relatively low probability event, we do agree that it should be assessed given the widespread effects. It may not justify the need for a network upgrade but at least deserves consideration for an operating or corrective action procedure should the event occur. Also, given this analysis might be new for some TPs, consideration should be given to a transition period after the start of this type of assessment.
Santee Cooper		☑	We do not agree with the concept of non-consequential load loss. To maintain system reliability, the disconnect of any load should be allowed.
SCE&G		☑	SCE&G does not agree with the concept of non-consequential load loss. To maintain system reliability, the disconnect of any load should be allowed. If not allowed, unprecedented new transmission costs will be required. These costs will be for local area improvements and will NOT result in increased

Q20			
Commenter	**Agree**	**Disagree**	**Comment**
			transfer capabilities for markets.
SaskPower		☑	The SDT should justify that the benefit to customers of this increased reliability justifies the cost.
SERC EC DRS SERC EC PSS SERC RRS OPS		☑	By not allowing non-consequential load loss, utilities will incur significant expenditures to solve a problem with an extremely low probability of occurrence. The benefit will not justify the cost.
Southern Transm.		☑	By not allowing non-consequential load loss, utilities will incur significant expenditures. The marginal increase in reliability for this low probability event does not justify the huge costs involved.
Response: To address your concern, the SDT will consider a transition policy as part of the implementation plan to allow for Transmission Owners to respond to requirements that involve raising the bar. The implementation plan will be developed for a subsequent posting. As a first step the SDT has added greater detail to Tables 1 & 2, which provides for more situations where it is acceptable to lose non-consequential load.			
TEP		☑	R1 and R2 address some Load Forecast issues, but are not exhaustive specifications of what Load Forecast range to use in studies. There needs to be some mention of exceedance probability (ExPr) in Load Forecast criteria. For example, we use a forecast with a low ExPr in our studies because we are concerned that, if the system was planned for 50% ExPr (a lower forecast), actual deviation from that forecast might result in load at certain locations exceeding operating margins built into the interconnected transmission system designed to serve only the 50% ExPr forecast load. Load Specifications in R2.4 are ambiguous for the reasons stated above. Maximum study ages in R2.6.1 and R2.6.2 seem arbitrary. The time limit does not seem to add anything to the criteria if no material changes have occurred. If spot checks of the most critical areas indicated no criteria violations, there should be no reason to rerun studies. To correct this problem, we suggest using the term "assessment" rather than "study". For most people, "study" implies detailed modeling and simulation analyses summarized in a report, whereas "assessment" implies a reasonable, systematic evaluation of a system which does not necessarily include detailed analysis for the entire system.
Response: The SDT has made several changes to the referenced sections. The SDT agrees that "assessment" and "study" have different implications and reflected that in this revision.			
WECC BPA TSGT		☑	The Bulk Electric System has been developed without this requirement. Before making the entire NERC system adopt this more stringent Standard, the SDT needs to show or address the benefits of this more stringent requirement with

Q20			
Commenter	**Agree**	**Disagree**	**Comment**
			the cost of adaptation. Compliance with this standard as proposed could require some utilities to add hundreds of miles of new transmission lines or build out hundreds of MW of new load-side generation. Cost of these new facilities would eventually be borne by the end-use customer. A cost benefit balance has been arrived at over many years time between the customers and the regulators. Also, how will existing systems be handled for compliance? Is there a logical reason for the use of the 300kV cut-off level? We believe that this type of load shedding should be allowed for these conditions at any voltage level. In any case, consideration should also be taken on whether the non-consequential load loss is Interruptible load or firm demand.
Response: It is not clear if the comment is referring to consequential or non-consequential load, but greater detail has been added to Tables 1 & 2, which provides for more situations where it is acceptable to lose load and may address part of the comment. The following response is provided to the issue raised relative to the 300 kV cut-off. Draft 2 Changes for 300 kV and higher systems regarding N-1-1 conditions**:** Based on industry feedback the SDT has made changes in proposed Draft 2 requirements related to two independent overlapping single Contingencies involving two non-generation Transmission Facilities operated at a voltage level above 300 kV. Draft 2 now permits the loss of Non-Consequential Load to meet the Transmission performance requirements for these types of events. Please refer to performance tables Planning Event P6. It is noted that in Draft 2 the SDT is still requiring more stringent performance requirements of the EHV Transmission for the less probable, but greater risk single Contingency events. Please refer to performance tables Planning Event P2 and note that bus section faults and internal breaker faults (non-bus tie) associated with above 300 kV facilities are held to a higher performance standard than those operated at 300 kV or below. Please see also summary response.			
WPS		☑	It is not clear why the standard has established 300 kV as the differentiation point between allowing non-consequential load loss and not allowing it. The standard has established different planning requirements for different voltage levels without establishing why the differentiation is necessary. While transmission facilities over 300 kV in some areas of the country may be considered the "backbone", it is not universally applicable; in some areas, 230 kV and even 138 kV represent the "backbone" of the transmission system. The standard should not bisect the transmission system and apply two different planning requirements without clearly establishing why the differentiation is necessary.

Q20			
Commenter	**Agree**	**Disagree**	**Comment**
			Additionally, Table 1 needs to clarify the use of the term "Firm Transfers" and the interruption of "Firm Transfers" as an acceptable response to an event. "Firm transfers" is not a standard transmission service offering under the ProForma OATT. The standard must be consistent with service types defined under the ProForma OATT. Suggest that the phrasse "Firm Transfers" be replaced with "Firm Transmission Service consisting of Point-to-Point and Network Integration Transmission Service"
Response: The following response is provided to the issue raised relative to the 300 kV cut-off. Draft 2 Changes for 300 kV and higher systems regarding N-1-1 conditions**:** Based on industry feedback the SDT has made changes in proposed Draft 2 requirements related to two independent overlapping single Contingencies involving two non-generation Transmission Facilities operated at a voltage level above 300 kV. Draft 2 now permits the loss of Non-Consequential Load to meet the Transmission performance requirements for these types of events. Please refer to performance tables Planning Event P6. It is noted that in Draft 2 the SDT is still requiring more stringent performance requirements of the EHV Transmission for the less probable, but greater risk single Contingency events. Please refer to performance tables Planning Event P2 and note that bus section faults and internal breaker faults (non-bus tie) associated with above 300 kV facilities are held to a higher performance standard than those operated at 300 kV or below. Please see also summary response. With regards to 'Firm Transfers', 'Firm Transmission Service' is now referenced in the Tables.			
Entergy	☑		Table 1 does not specify "SLG"
PJM	☑		Should be a 3 phase fault not a single line to ground fault.
Response: The tables have been revised and Table 2 differentiates between SLG and 3 phase faults.			
HQTE	☑		The term "bus section" needs to be clarified. Some examples should be given showing actual diagram of substation layout.
Response: The SDT discussed the definition of a 'bus section', but elected not to include a definition or examples in the standard.			
ITC	☑		Should also consider no or limited loss of load for facilities 100 kV and above.
Response: ITC may elect to apply the greater than 300 kV requirement to Facilities greater than 100kV for their own use. However, the SDT feels application to the greater than 300 kV is more appropriate for the requirements in this standard.			
Manitoba Hydro	☑		With the caveat that if the loss of load is localized, it is acceptable. Raising the bar will result in a cost increase for owners and users of the transmission system. What evidence does the SDT have to show this is justified.

Q20			
Commenter	**Agree**	**Disagree**	**Comment**
Response: The ATFNSDT has added greater detail to Tables 1 & 2, which provides for more situations where it is acceptable to lose load.			
AECC	☑		neither should consequential load be lost for any n-1 faults on the 300 kv system and higher.
AECI	☑		
Allegheny Power	☑		
AEP	☑		
APPA	☑		Note to APPA members – Please examine closely and give us specific comments on Q20 – Q29. If you disagree we need to know.
ATC	☑		
Ameren	☑		No significant material change identified.
CenterPoint	☑		
Central Maine Power	☑		
City Utilities/Springfield	☑		
CPS Energy	☑		
Duke Energy	☑		
Entegra	☑		
Brazos Electric	☑		
City Water Power and Light	☑		
E ON US	☑		
ERCOT ISO	☑		
FirstEnergy	☑		
Georgia Transm.	☑		No change from current standards.
IESO	☑		We agree, since the loss of a bus is a single contingency. This is a criterion already adopted by the IESO and other members in the NPCC region, for which non-consequential loss of load is not permitted.
ISO/RTO	☑		
KCPL	☑		
LCRA	☑		

Q20			
Commenter	**Agree**	**Disagree**	**Comment**
MISO	☑		No indirect (non-consequential) loss of load for single contingency events, else operator is in SOL pre-contingency without such planning.
National Grid	☑		
NERC TIS	☑		Loss of a bus section is a single contingency. Non-consequential load loss should not be allowed.
New England ISO	☑		
New York ISO	☑		
NU	☑		
NPCC RCS	☑		
Nstar	☑		
PRPA	☑		
Progress–Carolinas	☑		
Seattle City	☑		
SRP	☑		
United Illuminating	☑		
Response: Thank you.			

21) Q21. P5-1: For facilities above 300 kV, loss of a Transmission circuit followed by System adjustment[1] followed by loss of another Transmission circuit

Summary Response: Based on industry feedback, the SDT has made changes in proposed Draft 2 requirements related to two independent overlapping single Contingencies (N-1-1) involving two Transmission Facilities operated at a voltage level above 300 kV. Draft 2 now permits the loss of Non-Consequential Load to meet the Transmission performance requirements for these types of events. Please refer to performance tables Planning Event P6.

It is noted that in Draft 2 the SDT is still requiring more stringent performance requirements of the EHV Transmission for the less probable, but greater risk single Contingency events. Please refer to performance tables Planning Event P2 and note that bus section faults and internal breaker faults (non-bus tie) associated with above 300 kV Facilities are held to a higher performance standard than those operated at 300 kV or below.

Q21			
Commenter	**Agree**	**Disagree**	**Comment**
Muscatine P&W			See Q43 Comment #5.
Response: See responses for Q43.			
Ameren		☑	Load pockets supplied by a single EHV substation with only two supplies would not meet this proposed requirement, whereas the existing TPL-003-0 standard would allow the dropping of load for the multiple outage event. A significant material change to build new facilities would be needed to meet the new requirement.
AEP	☑		Consider adding clear definition of "system adjustments", including the amount of time permited to implement prior to the loss of the second facility.
CenterPoint		☑	The forced outage of two independent lines has a low probability of occurrence and should be considered an improbable event with non-consequential load loss permitted.
Central Maine Power HQTE New England ISO NU NPCC RCS NSTAR United Illuminating		☑	Given the low probability of extended overlapping outages of overhead facilities, systems have been designed assuming that load shedding following the loss of a second transmission line is permissible. Eliminating any allowance for load shedding for this condition may require significant system expansion and cost to to customers. However, it would be reasonable to consider establishing an upper bound to the amount of load that could be shed for these purposes.
E ON US		☑	Outage of two 345 kV circuits can create local area issues that result in loss of load but do not affect the integrity of the BES.
ERCOT ISO CAISO		☑	This event falls under Category C for which controlled loss of load is allowed. Clear net benefits should be demonstrated to justify adapting to a new stringent criteria.
Duke Energy		☑	Allow indirect (Non-Consequential) loss of load for events involving short duration outages, such as typical line outages that do not result in cascading outages.
Entergy		☑	N-1-1 requires an increase in investment that will place an undue cost burden on all customers for low probability events.

Q21			
Commenter	**Agree**	**Disagree**	**Comment**
			See comments to Q43.
Exelon	☑	☑	We do not agree with disallowing non-consequential load loss for these scenarios for the peak load conditions. These are very low probability contingencies, and some non-consequential load loss should be allowed at peak load. We would agree that it would be reasonable to dis-allow non-consequential load loss for these contingencies at a lower load level, such as 75% of peak load.
FirstEnergy		☑	Shedding load could be part of the system adjustment in preparation for the next possible contingency but load drop would not be acceptable for problems caused soley by the first contingency.
FPL FRCC		☑	Systems have been designed such that Multiple Contingency events (N-2) may result in Planned/Controlled Loss of Demand or Curtailed Firm Transfers. Such Non-Consequential Load Loss should be assessed for severity on a risk vs. consequence basis. In addition, by not allowing loss of non-consequential load, the system may remain in a less secure state or condition.
Georgia Transm.		☑	This requirement appears unreasonable for a network system and, particularly, for a series of events. This requirement would be well above current reliability standards. The requirement would also result in higher investment costs for the utilities.
MISO		☑	Allow indirect (Non-Consequential) loss of load for events involving short duration outages, such as typical line outages.
MRO		☑	This is a low probability event that could have significant impact on the system which historically have been designed to allow local load dropping including non-consequential load. The SDT should justify that the benefit to customers of this increased reliability justifies the cost of this change to customers. Alternatively, the SDT should define a level (such as 1000 MW) of non-consequential load that is acceptable for such low probability events.
Progress–Carolinas	☑		It is absolutely necessary, however, to allow interruption of firm transfers as a System adjustment. To do otherwise would cause extremely large expenditures for very low probability independent events.
Progress–Florida		☑	The severity of this event is such that Non-Consequential Loss of Load might be a necessary operating procedure in a Corrective Action Plan as part of System restoration. Furthermore, the greater-than-300 kV Bulk Electric System has been designed such that Multiple Contingency events (N-2) may result in Planned/Controlled Loss of Demand or Curtailed Firm Transfers. Such Non-Consequential Load Loss should be assessed for severity on a risk vs. consequence basis, placing particular importance on confining the event to a single area (i.e., not resulting in a cascading outage). Past assessments as well as actual events have demonstrated that by not allowing loss of non-consequential load, the Bulk Electric System may actually remain in a less secure state or condition, i.e. in more danger of experiencing cascading outages.
Santee Cooper		☑	We do not agree with the concept of non-consequential load loss. To maintain system reliability, the disconnect of any load should be allowed. By not allowing non-consequential load loss,

Q21			
Commenter	**Agree**	**Disagree**	**Comment**
			utilities will incur significant expenditures to solve a problem with an extremely low probability of occurrence. The benefit will not justify the cost.
Seattle City		☑	Loss of two major HV elements can drive our region into undervoltage conditions, forcing us to shed non-consequential load per UVLS standard requirements. Loss of two major HV elements can drive our region into undervoltage conditions, forcing us to shed non-consequential load per UVLS standard requirements.
SERC EC DRS SERC EC PSS SERC RRS OPS SCE&G		☑	By not allowing non-consequential load loss, utilities will incur significant expenditures to solve a problem with an extremely low probability of occurrence. The benefit will not justify the cost.
Southern Transm.		☑	This is a very significant change in the performance requirements in this reliability standard. It involves facilities from 345 kV through 764kV which carry significant amounts of power. These also are facilities that require significant lead time to construct in the Southern Balancing Authority with estimates up to 7-10 years in the state of Georgia. If a performance problem is detected under these new requirements, it could take that long to come into compliance and at a very significant cost if a new major 500kV line is required. These facilities can run as much as $4.0 million a mile or more in urban areas. We understand that a few areas of the country presently have this requirement but most do not. In the areas where the requirement has not been in place, the reliability of the system has been acceptable to the local Public Service Commissions that have governed the service to Retail customers. There has been no evidence presented that there is a need for an increase in reliability, particulary at the extensive time delay and expense possible from this particular requirement. An adoption of this standard without such evidence can only be considered arbitrary and capricious at best. Increased reliability is, in general, a worthy goal where it is cost effective. It may be appropriate to adopt this type of reliability requirement for areas that deem the resulting reliability increase to be cost effective for their customers. But it is inappropriate to "require" everyone else to be forced to live under this arbitrarily developed expansion of reliability requirements.
TVA		☑	By not allowing non-consequential load loss, utilities will incur significant expenditures to construct a transmission solution for some extremely low probability events with low consequence. Each utility should have the flexibility to base action on probability and consequence. Load shed by UVLS or other means should remain an option to maintain reliability if probability is extremely low, but the high consequence of an event determines that a solution is necessary.
Response: The SDT has added greater detail to Tables 1 & 2, which provides for more situations where it is acceptable to lose load.			
Dominion		☑	See comment for Question 20 above.
Response: See response to question 20.			
Northwestern Energy		☑	What is non-consequential load loss? Is losing a motor due to motor contactor action a non-consequential load loss? Also, the transmission system was developed under criteria without this

Q21			
Commenter	**Agree**	**Disagree**	**Comment**
			requirement and to correct it would be costly.
Response: Consequential and Non-Consequential Load Loss involves Transmission System actions not customer equipment response to system performance, which in some cases may be within a tolerable system bandwidth, but not within the customer set points. The standard anticipates that the System will be designed to meet the expected Load, which implies that customer tripping of its own Load should not be a consideration in planning studies. This has been addressed in the definition of Consequential Load Loss.			
BCTC		☑	Do not agree based on SDT definitions. Also do not agree for first outage being a forced outage. Will agree subject to above revisions to definitions of Consequential and Non-Consequential Load loss for the first outage being a planned outage but not a forced outage. To meet this requirement for forced outages, estimate that this change could cost $3 to 5 Billion.
Response: The SDT has considered industry comments and has incorporated changes in the definition of Consequential Load Loss, which should address your concerns.			
CPS Energy		☑	Should be determined at the discretion of the Transmission Planners.
Response: The standard needs to provide some consistency and needs to define the desired level of System reliability, which will provide a level playing field and will provide guidance and support for the Transmission Planners as they deal with external entities.			
MEAG Power		☑	See Q20 above.
Response: See response to question 20.			
SRP		☑	The time to adjust the system needs to be provided (when does a N-1-1 become a N-2?). If the cause of the outage is transient (temporary) the operator needs some time to test and restore the element (could be minutes up to several hours). If the element is lost indefinitly, the operator will need some minimum time to adjust the system. If this time is not available prior to the next N-1 then the standard should allow Non-Consequetial Loss of Load.
Response: The time the operators have will depend on their time dependent ratings that they have to work with. Many users have a 30 minute rating.			
SaskPower		☑	The SDT should justify that the benefit to customers of this increased reliability justifies the cost.
Response: The SDT has added greater detail to Tables 1 & 2, which provides for more situations where it is acceptable to lose load, which should reduce the increased cost exposure.			
Tenaska		☑	See comment in Q20.
Response: See response to question 20.			
WECC BPA TSGT TEP		☑	The Bulk Electric System has been developed without this requirement. Before making the entire NERC system adopt this more stringent Standard, the SDT needs to show or address the benefits of this more stringent requirement with the cost of adaptation. Compliance with this standard as proposed could require some utilities to add hundreds of miles of new transmission lines or build out hundreds of MW of new load-side generation. Cost of these new facilities would eventually be borne by the end-use customer. A cost benefit balance has been arrived at over many years time between the customers and the regulators. Also, how will existing systems be handled for compliance?

Q21			
Commenter	**Agree**	**Disagree**	**Comment**
			Is there a logical reason for the use of the 300kV cut-off level? We believe that this type of load shedding should be allowed for these conditions at any voltage level. In any case, consideration should also be taken on whether the non-consequential load loss is Interruptible load or firm demand.
Response: Draft 2 Changes for 300 kV and higher systems regarding N-1-1 conditions**:** Based on industry feedback the SDT has made changes in proposed Draft 2 requirements related to two independent overlapping single Contingencies involving two non-generation Transmission Facilities operated at a voltage level above 300 kV. Draft 2 now permits the loss of Non-Consequential Load to meet the Transmission performance requirements for these types of events. Please refer to performance tables Planning Event P6. It is noted that in Draft 2 the SDT is still requiring more stringent performance requirements of the EHV Transmission for the less probable, but greater risk single Contingency events. Please refer to performance tables Planning Event P2 and note that bus section faults and internal breaker faults (non-bus tie) associated with above 300 kV facilities are held to a higher performance standard than those operated at 300 kV or below. Please see also summary response. With regards to 'Firm Transfers', 'Firm Transmission Service' is now referenced in the Tables.			
WPS		☑	See response to Q20.
Response: See response to question 20.			
IESO	☑	☑	The sequence of events is too general that under some condition, it contradicts with the loss of 2 circuits on the same tower for which non-consequential loss of load is permitted. If the sequence of events is specified such that the two transmission circuits that can be lost are unrelated, then non-consequential loss of load should generally not be allowed following system adjustments after the loss of the first transmission circuit.
Response: Thank you but due to the majority of industry response to this question, the requirement has been changed.			
ITC	☑		Should also consider no or limited loss of Non-consequential load for facilities 100 kV and above. This should be no loss for load levels where the TO would expect to perform system maintenance.
Response: ITC may elect to apply the greater than 300 kV requirement to facilities greater than 100kV for their own use. However, the ATFNSDT feels application to the greater than 300 kV is more appropriate for the requirements in this standard.			
New York ISO	☑		We are assuming the second circuit is un-related to the first. If that is not the intent then it contracts the loss of multiple related circuits (same tower or protection zone) for which non-consequential load loss is allowed.
NCEMC	☑		We do agree that given the widespread effects of these facilities above 300 kV that these should be subjected to more rigorous assessments.

Q21			
Commenter	**Agree**	**Disagree**	**Comment**
AECC	☑		neither should consequential load be lost for any n-1 faults on the 300 kv system and higher.
AECI	☑		
Allegheny Power	☑		
APPA	☑		
ATC	☑		
Brazos Electric	☑		
City Utilities/Springfield	☑		
City Water Power and Light	☑		
Entegra	☑		
ISO/RTO	☑		
KCPL	☑		
LCRA	☑		
Manitoba Hydro	☑		
National Grid	☑		
NERC TIS	☑		This becomes a differentiation between an event and a contingency - if there is time to adjust the system, it is really two events. Non-consequential load loss based on the first event is hard to fathom. Loss of load following the second event is either consequential to the second event (even if load was isolated by the first event) or non-consequential to the second event.
PJM	☑		
Response: Thank you but due to the majority of industry response to this question, the requirement has been changed			

22) Q22. P5-2: For facilities above 300 kV, loss of a Transmission circuit followed by System adjustment followed by loss of a transformer with low side voltage rating above 300 kV

Summary Response: Draft 2 Changes for 300 kV and higher systems regarding N-1-1 conditions**:**

Based on industry feedback the SDT has made changes in proposed Draft 2 requirements related to two overlapping single Contingencies involving two non-generation Transmission Facilities operated at a voltage level above 300 kV. Draft 2 now permits the loss of Non-Consequential Load to meet the Transmission performance requirements for these types of events. Please refer to performance tables Planning Event P6.

It is noted that in Draft 2 the SDT is still requiring more stringent performance requirements of the EHV Transmission for the less probable, but greater risk single Contingency events. Please refer to performance tables Planning Event P2 and note that bus section faults and internal breaker faults (non-bus tie) associated with above 300 kV facilities are held to a higher performance standard than those operated at 300 kV or below.

Why the distinction for above 300 kV Transmission?

The initial draft of the proposed Transmission planning standard held the planning of 300 kV and higher Transmission Systems to a more stringent requirement than the remaining BES. Although not unanimous, the majority of the SDT felt the 300 kV and higher systems generally represent an extra-high-voltage (EHV) range that is considered the backbone of many systems in the various Interconnections and that the more stringent requirements were appropriate when considering N-1-1 Contingencies of two EHV Facilities. Systems operated at this range generally do not directly serve end-use Load customers but rather act as the medium for moving large amounts of power from production to various Load centers which then deliver the power among other Transmission or sub-Transmission Systems to end use customers. It is the desire of NERC and various stakeholders that the backbone of the electric power grid be robust and held to a higher degree of reliability.

When EHV systems are compromised, the large volumes of power served by them can place a severe amount of stress on parallel EHV or lower voltage paths. For example, if a large EHV transformer experiences a catastrophic failure, not only are other systems Facilities required to carry more load but the system is also exposed to other N-1 conditions for long periods of time while awaiting a replacement or repair of the failed equipment. Large generation sources are typically connected at EHV levels and maintenance of the EHV Transmission lines within the vicinity of larges generation plants must often be coordinated during scheduled unit outages, resulting again in multiple Facility outages over extended periods of time.

Therefore, it was the conclusion of the SDT in Draft 1 to propose greater reliability and operational flexibility through more stringent performance requirements when considering certain N-1 and N-1-1 Contingency events of EHV systems. Throughout the industry substation arrangements at EHV levels reflect the importance of these systems as the designs often consist of the more expensive ring-bus, breaker-and –a-half or double bus-double breaker protection schemes as opposed to the more simplistic and lesser cost single bus arrangements that are commonly found on lower voltage systems.

The feedback received from industry was divided related to SDT's emphasis placed on a higher expectation for the 300 kV and higher systems. Some commenter's questioned the importance and the high costs that may be needed to mitigate existing system designs.

Others agreed with the SDT's approach and indicated that the impact to their systems would be minimal. Some commenter's even questioned why the more stringent approach was not applied to the entire 100kV and higher systems. The SDT believes the Draft 2 changes are responsive to industry feedback and reflect an appropriate middle ground related to the importance of the EHV transmission system.

Q22			
Commenter	**Agree**	**Disagree**	**Comment**
Muscatine P&W			See Q43 Comment #5.
Response: See Q43 response.			
Dominion		☑	See comment for Question 20 above.
MEAG Power		☑	See Q20 above.
Tenaska		☑	See comment in Q20.
TVA		☑	See Q20.
WPS		☑	See response to Q20.
Response: See response to Q20.			
E ON US		☑	Outage of two 345 kV circuit and a transformer can create local area issues that result in loss of load but do not affect the integrity of the BES.
Response: The condition you describe appears to be more stringent then the outage the SDT was asking industry to consider; N-1-1 involving a line and transformers where each are operated at a voltage level above 300 kV. However, based on industry feedback the SDT has made changes in proposed requirements for two overlapping single Contingencies involving two Transmission Facilities operated at a voltage level above 300 kV. We have adjusted our approach to two independent overlapping single Contingencies (N-1-1) involving two non-generator related outages and now permit the loss of Non-Consequential Load to meet the Transmission performance requirements; see Performance Table Planning Event P6. See the above Summary Response area for additional information.			
Northwestern Energy		☑	What is non-consequential load loss? Is losing a motor due to motor contactor action a non-consequential load loss? Also, the transmission system was developed under criteria without this requirement and to correct it would be costly.
Response: Please see the proposed Glossary Definition for Non-Consequential Load. The proposed definition for Consequential Load clarifies that losing a motor due to motor contactor action is considered to be the loss of Consequential Load.			
BCTC		☑	Same comments as for Q21. We do not foresee any cost due to this standard at this time because we do not have any transformers with low side voltage rating above 300 kV.
CAISO		☑	This event also falls under Category C for which the current NERC criteria allows controlled loss of load. Clear net benefits should be demonstrated to justify adapting to a new stringent criteria.
MRO		☑	This is a low probability event that could have significant impact on the system which historically have been designed to allow local load dropping including non-consequential load. The SDT should justify that the benefit to customers of this increased reliability justifies the cost of this

Q22			
Commenter	**Agree**	**Disagree**	**Comment**
			change to customers. Alternatively, the SDT should define a level (such as 1000 MW) of non-consequential load that is acceptable for such low probability events.
Santee Cooper SERC EC DRS SERC EC PSS SERC RRS OPS SCE&G		☑	By not allowing non-consequential load loss, utilities will incur significant expenditures to solve a problem with an extremely low probability of occurrence. The benefit will not justify the cost.
SaskPower		☑	The SDT should justify that the benefit to customers of this increased reliability justifies the cost.
Southern Transm.		☑	See comments for Q21. [This is a very significant change in the performance requirements in this reliability standard. It involves facilities from 345 kV through 764kV which carry significant amounts of power. These also are facilities that require significant lead time to construct in the Southern Balancing Authority with estimates up to 7-10 years in the state of Georgia. If a performance problem is detected under these new requirements, it could take that long to come into compliance and at a very significant cost if a new major 500kV line is required. These facilities can run as much as $4.0 million a mile or more in urban areas. We understand that a few areas of the country presently have this requirement but most do not. In the areas where the requirement has not been in place, the reliability of the system has been acceptable to the local Public Service Commissions that have governed the service to Retail customers. There has been no evidence presented that there is a need for an increase in reliability, particulary at the extensive time delay and expense possible from this particular requirement. An adoption of this standard without such evidence can only be considered arbitrary and capricious at best. Increased reliability is, in general, a worthy goal where it is cost effective. It may be appropriate to adopt this type of reliability requirement for areas that deem the resulting reliability increase to be cost effective for their customers. But it is inappropriate to "require" everyone else to be forced to live under this arbitrarily developed expansion of reliability requirements.]
NCEMC	☑		We do agree that given the widespread effects of these facilities above 300 kV that these should be subjected to more rigorous assessments.
Progress–Carolinas	☑		It is absolutely necessary, however, to allow interruption of firm transfers as a System adjustment. To do otherwise would cause extremely large expenditures for very low probability independent events.
WECC BPA TSGT TEP		☑	The Bulk Electric System has been developed without this requirement. Before making the entire NERC system adopt this more stringent Standard, the SDT needs to show or address the benefits of this more stringent requirement with the cost of adaptation. Compliance with this standard as proposed could require some utilities to add hundreds of miles of new transmission lines or build out hundreds of MW of new load-side generation. Cost of these new facilities would eventually be borne by the end-use customer. A cost benefit balance has been arrived at over many years time between the customers and the regulators. Also, how will existing systems be handled for compliance?

Q22			
Commenter	**Agree**	**Disagree**	**Comment**
			Is there a logical reason for the use of the 300kV cut-off level? We believe that this type of load shedding should be allowed for these conditions at any voltage level. In any case, consideration should also be taken on whether the non-consequential load loss is Interruptible load or firm demand.
Response: Based on industry feedback the SDT has made changes in proposed requirements for two overlapping single Contingencies involving two Transmission Facilities operated at a voltage level above 300 kV. We have adjusted our approach to two independent overlapping single Contingencies (N-1-1) involving two non-generator related outages and now permit the loss of Non-Consequential Load to meet the Transmission performance requirements; see Performance Table Planning Event P6. See the above Summary Response for additional information.			
Central Maine Power United Illuminating		☑	Should also consider the initial loss of a transformer, followed by the loss of a Transmission circuit. This should state a transformer with a "high-side" rating above 300 kV.
Response: The SDT agrees that it previously missed the situation described and have accounted for this sequence of events in our new Planning Event P6. Also, notes have been added to the bottom of the performance table to clarify the EHV transformer versus other BES transformers.			
Duke Energy		☑	Allow indirect (Non-Consequential) loss of load for events involving short duration outages, such as typical line outages that do not result in cascading outages.
Response: The specific outage considered involves a circuit and a transformer. An unplanned EHV transformer outage will likely be a long duration outage that needs to be reviewed with other N-1 events and should require a higher level of expected reliability. However, based on industry feedback the SDT has made changes in proposed requirements for two independent overlapping single Contingencies involving two Transmission Facilities operated at a voltage level above 300 kV. We have adjusted our approach to two independent overlapping single Contingencies (N-1-1) involving two non-generator related outages and now permit the loss of Non-Consequential Load to meet the Transmission performance requirements; see Performance Table Planning Event P6. See the above Summary Response for additional information.			
Entergy		☑	N-1-1 requires an increase in investment that will place an undue cost burden on all customers for low probability events. See comments to Q43.
Response: Your concern related to increased cost is shared with others. Based on industry feedback the SDT has made changes in proposed requirements for two independent overlapping single Contingencies involving two Transmission Facilities operated at a voltage level above 300 kV. We have adjusted our approach to two independent overlapping single Contingencies (N-1-1) involving two non-generator related outages and now permit the loss of Non-Consequential Load to meet the Transmission performance requirements; see Performance Table Planning Event P6. See the above Summary Response for additional information. See response to Q43.			
FirstEnergy		☑	Shedding load could be part of the system adjustment in preparation for the next possible contingency but load drop would not be acceptable for problems caused soley by the first contingency.
Response: The SDT appreciates your support that Non-Consequential Load dropping would not be permissible following the first Contingency event. However, from a planning viewpoint, the SDT also believes that it should not be permissible to drop Load as part of adjusting the System to prepare for the second on the EHV System. The FERC directed this approach in Order 693, see discussion in paragraphs 1782 and			

Q22			
Commenter	**Agree**	**Disagree**	**Comment**
1796. Based on industry feedback the SDT has made changes in proposed requirements for two independent overlapping single Contingencies involving two Transmission Facilities operated at a voltage level above 300 kV. We have adjusted our approach to two independent overlapping single Contingencies (N-1-1) involving two non-generator related outages and now permit the loss of Non-Consequential Load to meet the Transmission performance requirements; see Performance Table Planning Event P6. See the above Summary Response for additional information.			
FPL FRCC		☑	Systems have been designed such that Multiple Contingency events (N-2) may result in Planned/Controlled Loss of Demand or Curtailed Firm Transfers. Such Non-Consequential Load Loss should be assessed for severity on a risk vs. consequence basis. In addition, by not allowing loss of non-consequential load, the system may remain in a less secure state or condition.
Progress–Florida		☑	The severity of this event is such that Non-Consequential Loss of Load might be a necessary operating procedure in a Corrective Action Plan as part of System restoration. Furthermore, the greater-than-300 kV Bulk Electric System has been designed such that Multiple Contingency events (N-2) may result in Planned/Controlled Loss of Demand or Curtailed Firm Transfers. Such Non-Consequential Load Loss should be assessed for severity on a risk vs. consequence basis, placing particular importance on confining the event to a single area (i.e., not resulting in a cascading outage). Past assessments as well as actual events have demonstrated that by not allowing loss of non-consequential load, the Bulk Electric System may actually remain in a less secure state or condition, i.e. in more danger of experiencing cascading outages.
Response: The events considered are not simultaneous N-2, but intended to be N-1-1 with system adjustments allowed in between the outages. Based on industry feedback the SDT has made changes in proposed requirements for two independent overlapping single Contingencies involving two Transmission Facilities operated at a voltage level above 300 kV. We have adjusted our approach to two independent overlapping single Contingencies (N-1-1) involving two non-generator related outages and now permit the loss of Non-Consequential Load to meet the Transmission performance requirements; see Performance Table Planning Event P6. See the above Summary Response for additional information.			
NERC TIS	☑		See Q 21 Comment
New York ISO	☑		Same comment as with Q21.
SRP		☑	Same as Q21.
Seattle City		☑	Same as Q21, loss of elements of this size may initiate UVLS.
Response: See response to Q21.			
Exelon	☑	☑	We do not agree with disallowing non-consequential load loss for these scenarios for the peak load conditions. These are very low probability contingencies, and some non-consequential load

Q22			
Commenter	**Agree**	**Disagree**	**Comment**
			loss should be allowed at peak load. We would agree that it would be reasonable to dis-allow non-consequential load loss for these contingencies at a lower load level, such as 75% of peak load.
Response: Based on industry feedback the SDT has made changes in proposed requirements for two independent overlapping single Contingencies involving two Transmission Facilities operated at a voltage level above 300 kV. We have adjusted our approach to two independent overlapping single Contingencies (N-1-1) involving two non-generator related outages and now permit the loss of Non-Consequential Load to meet the Transmission performance requirements; see Performance Table Planning Event P6. See the above Summary Response for additional information. The lower (non-peak) Load study that you reference is a good suggestion that could be adopted as an internal company criteria for assessing maintenance flexibility.			
IESO	☑	☑	Similar reason as above. In this case, the first transmission may also remove a transformer from service if they are in the same protection zone. The next contingency can be the loss of the companion transformer, without a fault on the transformer itself but not on the transmission circuit. If the transmission circuit and the transformer are unrelated, then we would agree that non-consequential loss of load should not be allowed.
Response: The intent of this event is to cover two unrelated single Contingency Transmission outages that are non-generator outages. They are to be viewed as an N-1, with system adjustments, followed by the second N-1. The standard will require that Contingency events be modeled to reflect actual removal of all elements within the protection zone. Therefore a single (N-1) Contingency could result in multiple Facilities being removed from service. The N-1-1 event should accurately reflect all Facilities that would be removed from service. Based on industry feedback the SDT has made changes in proposed requirements for two independent overlapping single Contingencies involving two Transmission Facilities operated at a voltage level above 300 kV. We have adjusted our approach to two independent overlapping single Contingencies (N-1-1) involving two non-generator related outages and now permit the loss of Non-Consequential Load to meet the Transmission performance requirements; see Performance Table Planning Event P6. See the above Summary Response for additional information.			
ITC	☑		Should also consider no or limited loss of non-consequential load for facilities 100 kV and above. No loss should be allowed for load levels at which the TO would plan to perform maintenance. Also system adjustment should consider time required for adjustment verses the ratings utilized.
Response: Based on industry feedback, the SDT has made adjustments to the expected Transmission System performance to N-1-1 events. The entire BES is treated the same now for these outage scenarios and the loss of Non-Consequential Load is now permitted. Please refer to performance tables, Planning Event P6. See the above Summary Response for additional information.			
AEP	☑		Consider adding clear definition of "system adjustments", including the amount of time permited to implement prior to the loss of the second facility.
Response: Non-Consequential Load Loss is not permitted for the first N-1 event as part of the permissible system adjustments that can be made to return the system to a "new" normal operating state. The time permitted is based on the time dependent emergency Facility Ratings of the affected Transmission equipment. Following the loss of the second Transmission outage, Load shed is considered an allowable system			

Q22			
Commenter	**Agree**	**Disagree**	**Comment**
adjustment action for the entire BES. This is a change in Draft 2 of the TPL-001-1. Please see performance tables, Planning Event P6 for additional information.			
MISO	☑		Do not allow indirect (Non-Consequential) loss of load for events involving long duration outages, such as transformer outages. (Transformer outage could occur first).
Response: While some SDT members agree with your approach, others on the SDT do not as well many of the industry comments to our Draft 1 standard. The standard does require sensitivity studies and unavailability of long lead time Facilities to be included in the sensitivity study area. Additionally, a TO will be required to notify their PC for long-term Transmission outages with consideration to spare equipment strategy. This would result in a new initial study system (N-0) and performance requirements for other Contingencies would be required subsequent to the long-term outage item.			
National Grid New England ISO NU NPCC RCS NSTAR	☑		Should also consider the initial loss of a transformer, followed by the loss of a Transmission circuit. This should state a transformer with a "high-side" rating above 300 kV.
Response: The SDT agrees that it previously missed the situation described and have accounted for this sequence of events in new Planning Event P6. Also, notes have been added to the bottom of the performance table to clarify the EHV transformer versus other BES transformers.			
Progress–Carolinas	☑		It is absolutely necessary, however, to allow interruption of firm transfers as a System adjustment. To do otherwise would cause extremely large expenditures for very low probability independent events.
Response: The SDT has adjusted the tables in the second revision.			
Ameren			No opinion as we do not have any transformers with the low side voltages rated above 300 kV. Transmission owners with transformers meeting this requirement should be consulted to determine if a material change would be required.
ERCOT ISO			We will comment on this at a later date.
Georgia Transm.			Not applicable to our existing system.
AECC	☑		neither should consequential load be lost for any n-1 faults on the 300 kv system and higher.
AECI	☑		
Allegheny Power	☑		
APPA	☑		
ATC	☑		
Brazos Electric	☑		
City Water Power and Light	☑		
City Utilities/Springfield	☑		

Q22			
Commenter	**Agree**	**Disagree**	**Comment**
Entegra	☑		
HQTE	☑		
ISO/RTO	☑		
KCPL	☑		
LCRA	☑		
Manitoba Hydro	☑		
PJM	☑		
Response: Thank you but due to the majority of industry response to this question, the requirement has been changed			

23) Q23. P5-3: For facilities above 300 kV, loss of a transformer with low side voltage rating above 300 kV followed by System adjustment followed by loss of another transformer

Summary Response: Draft 2 Changes for 300 kV and higher systems regarding N-1-1 conditions:

Based on industry feedback the SDT has made changes in proposed Draft 2 requirements related to two independent overlapping single Contingencies involving two non-generation Transmission Facilities operated at a voltage level above 300 kV. Draft 2 now permits the loss of Non-Consequential Load to meet the Transmission performance requirements for these types of events. Please refer to performance tables Planning Event P6.

It is noted that in Draft 2 the SDT is still requiring more stringent performance requirements of the EHV Transmission for the less probable, but greater risk single Contingency events. Please refer to performance tables Planning Event P2 and note that bus section faults and internal breaker faults (non-bus tie) associated with above 300 kV Facilities are held to a higher performance standard than those operated at 300 kV or below.

Why the distinction for above 300 kV Transmission?

The initial draft of the proposed Transmission planning standard held the planning of 300 kV and higher Transmission Systems to a more stringent requirement than the remaining BES. Although not unanimous, the majority of the SDT felt the 300 kV and higher systems generally represent an extra-high-voltage (EHV) range that is considered the backbone of many systems in the various Interconnections and that the more stringent requirements were appropriate when considering N-1-1 Contingencies of two EHV Facilities. Systems operated at this range generally do not directly serve end-use Load customers but rather act as the medium for moving large amounts of power from production to various Load centers which then deliver the power among other Transmission or sub-Transmission systems to end use customers. It is the desire of NERC and various stakeholders that the backbone of the electric power grid be robust and held to a higher degree of reliability.

When EHV systems are compromised, the large volumes of power served by them can place a severe amount of stress on parallel EHV or lower voltage paths. For example, if a large EHV transformer experiences a catastrophic failure, not only are other systems Facilities required to carry more Load but the System is also exposed to other N-1 conditions for long periods of time while awaiting a replacement or repair of the failed equipment. Large generation sources are typically connected at EHV levels and maintenance of the EHV Transmission lines within the vicinity of larges generation plants must often be coordinated during scheduled unit outages, resulting again in multiple Facility outages over extended periods of time.

Therefore, it was the conclusion of the SDT in Draft 1 to propose greater reliability and operational flexibility through more stringent performance requirements when considering certain N-1 and N-1-1 Contingency events of EHV systems. Throughout the industry substation arrangements at EHV levels reflect the importance of these systems as the designs often consist of the more expensive ring-bus, breaker-and–a-half or double bus-double breaker protection schemes as opposed to the more simplistic and lesser cost single bus arrangements that are commonly found on lower voltage systems.

The feedback received from industry was divided related to the SDT's emphasis placed on a higher expectation for the 300 kV and higher systems. Some commenters questioned the importance and the high costs that may be needed to mitigate existing system designs.

Others agreed with the SDT's approach and indicated that the impact to their systems would be minimal. Some commenters even questioned why the more stringent approach was not applied to the entire 100kV and higher systems. The SDT believes the Draft 2 changes are responsive to industry feedback and reflect an appropriate middle ground related to the importance of the EHV Transmission system.

Q23			
Commenter	**Agree**	**Disagree**	**Comment**
Muscatine P&W			See Q43 Comment #5.
Response: See Q43 response.			
NERC TIS			See Q 21 Comment
SRP		☑	Same as Q21.
Seattle City		☑	Same as Q21.
New York ISO	☑		Same comment as with Q21.
Response: See Q21 response.			
Dominion		☑	See comment for Question 20 above.
MEAG Power		☑	See Q20 above.
Tenaska		☑	See comment in Q20.
TVA		☑	See Q20.
WPS		☑	See response to Q20.
Response: See Q20 response.			
E ON US		☑	Outage of two 345 kV transformers can create local area issues that result in loss of load but do not affect the integrity of the BES.
Response: The condition you describe appears to be more stringent then the outage the SDT was asking industry to consider; N-1-1 involving a line and transformers where each are operated at a voltage level above 300 kV. However, based on industry feedback the SDT has made changes in proposed requirements for two independent overlapping single Contingencies involving two Transmission Facilities operated at a voltage level above 300 kV. The SDT has adjusted its approach to two independent overlapping single Contingencies (N-1-1) involving two non-generator related outages and now permit the loss of Non-Consequential Load to meet the Transmission performance requirements; see Performance Table Planning Event P6. See the above Summary Response for additional information.			
Northwestern Energy		☑	What is non-consequential load loss? Is losing a motor due to motor contactor action a non-consequential load loss? Also, the transmission system was developed under criteria without this requirement and to correct it would be costly.
Response: Please see the proposed Glossary Definition for Non-Consequential Load. The proposed definition for Consequential Load clarifies that losing a motor due to motor contactor action is considered to be the loss of Consequential Load.			
BCTC		☑	Same comments as for Q21/22. Furthermore, a double transformer loss forced outage has a very low probability as transformers are very reliable. A more practical approach would be to

Q23			
Commenter	**Agree**	**Disagree**	**Comment**
			use single phase transfomers and provide a spare phase.
CAISO		☑	This event also falls under Category C for which the current NERC criteria allows controlled loss of load. Clear net benefits should be demonstrated to justify adapting to a new stringent criteria.
MRO		☑	This is a low probability event that could have significant impact on the system which historically have been designed to allow local load dropping including non-consequential load. The SDT should justify that the benefit to customers of this increased reliability justifies the cost of this change to customers. Alternatively, the SDT should define a level (such as 1000 MW) of non-consequential load that is acceptable for such low probability events.
Santee Cooper SERC EC DRS SERC EC PSS SERC RRS OPS SCE&G		☑	By not allowing non-consequential load loss, utilities will incur significant expenditures to solve a problem with an extremely low probability of occurrence. The benefit will not justify the cost.
SaskPower		☑	The SDT should justify that the benefit to customers of this increased reliability justifies the cost.
Southern Transm.		☑	See comments for Q21. [This is a very significant change in the performance requirements in this reliability standard. It involves facilities from 345 kV through 764kV which carry significant amounts of power. These also are facilities that require significant lead time to construct in the Southern Balancing Authority with estimates up to 7-10 years in the state of Georgia. If a performance problem is detected under these new requirements, it could take that long to come into compliance and at a very significant cost if a new major 500kV line is required. These facilities can run as much as $4.0 million a mile or more in urban areas. We understand that a few areas of the country presently have this requirement but most do not. In the areas where the requirement has not been in place, the reliability of the system has been acceptable to the local Public Service Commissions that have governed the service to Retail customers. There has been no evidence presented that there is a need for an increase in reliability, particulary at the extensive time delay and expense possible from this particular requirement. An adoption of this standard without such evidence can only be considered arbitrary and capricious at best. Increased reliability is, in general, a worthy goal where it is cost effective. It may be appropriate to adopt this type of reliability requirement for areas that deem the resulting reliability increase to be cost effective for their customers. But it is inappropriate to "require" everyone else to be forced to live under this arbitrarily developed expansion of reliability requirements.]
WECC BPA TSGT TEP		☑	The Bulk Electric System has been developed without this requirement. Before making the entire NERC system adopt this more stringent Standard, the SDT needs to show or address the benefits of this more stringent requirement with the cost of adaptation. Compliance with this standard as proposed could require some utilities to add hundreds of miles of new transmission lines or build out hundreds of MW of new load-side generation. Cost of these new facilities would eventually be borne by the end-use customer. A cost benefit balance has been arrived at over many years time between the customers and the regulators. Also, how will existing systems be handled for

Q23			
Commenter	**Agree**	**Disagree**	**Comment**
			compliance? Is there a logical reason for the use of the 300kV cut-off level? We believe that this type of load shedding should be allowed for these conditions at any voltage level. In any case, consideration should also be taken on whether the non-consequential load loss is Interruptible load or firm demand.
ITC	☑		Should also consider no or limited loss of non-consequential load for facilities 100 kV and above. No loss should be allowed for load levels at which the TO would plan to perform maintenance. Also system adjustment should consider time required for adjust.ment verses the facility ratings utilized.
NCEMC	☑		We do agree that given the widespread effects of these facilities above 300 kV that these should be subjected to more rigorous assessments.
Progress–Carolinas	☑		It is absolutely necessary, however, to allow interruption of firm transfers as a System adjustment. To do otherwise would cause extremely large expenditures for very low probability independent events.
Response: Based on industry feedback the SDT has made changes in proposed requirements for two independent overlapping single Contingencies involving two Transmission Facilities operated at a voltage level above 300 kV. The SDT has adjusted its approach to two independent overlapping single Contingencies (N-1-1) involving two non-generator related outages and now permit the loss of Non-Consequential Load to meet the Transmission performance requirements; see Performance Table Planning Event P6. See the above Summary Response for additional information.			
Duke Energy		☑	Allow indirect (Non-Consequential) loss of load for events involving short duration outages that do not result in cascading outages.
Response: The specific outage considered involves a circuit and a transformer. An unplanned EHV transformer outage will likely be a long duration outage that needs to be reviewed with other N-1 events and should require a higher level of expected reliability. However, based on industry feedback the SDT has made changes in proposed requirements for two independent overlapping single Contingencies involving two Transmission Facilities operated at a voltage level above 300 kV. The SDT has adjusted its approach to two independent overlapping single Contingencies (N-1-1) involving two non-generator related outages and now permit the loss of Non-Consequential Load to meet the Transmission performance requirements; see Performance Table Planning Event P6. See the above Summary Response for additional information.			
Entergy		☑	N-1-1 requires an increase in investment that will place an undue cost burden on all customers for low probability events. See comments to Q43.
Response: Your concern related to increased cost is shared with others. Based on industry feedback the SDT has made changes in proposed requirements for two independent overlapping single Contingencies involving two Transmission Facilities operated at a voltage level above 300 kV. The SDT has adjusted its approach to two independent overlapping single Contingencies (N-1-1) involving two non-generator related outages and now permit the loss of Non-Consequential Load to meet the Transmission performance requirements; see Performance Table Planning Event P6. See the above Summary Response for additional information. See response to Q43.			
FirstEnergy		☑	Shedding load could be part of the system adjustment in preparation for the next possible

Q23			
Commenter	**Agree**	**Disagree**	**Comment**
			contingency but load drop would not be acceptable for problems caused soley by the first contingency.
Response: We appreciate your support that Non-Consequential Load dropping would not be permissible following the first Contingency event. However, from a planning viewpoint, the SDT also believes that it should not be permissible to drop Load as part of adjusting the system to prepare for the second on the EHV system. The FERC directed this approach in Order 693, see discussion in paragraphs 1782 and 1796. Based on industry feedback the SDT has made changes in proposed requirements for two independent overlapping single Contingencies involving two Transmission Facilities operated at a voltage level above 300 kV. The SDT has adjusted its approach to two independent overlapping single Contingencies (N-1-1) involving two non-generator related outages and now permit the loss of Non-Consequential Load to meet the Transmission performance requirements; see Performance Table Planning Event P6. See the above Summary Response for additional information.			
FPL FRCC		☑	Systems have been designed such that Multiple Contingency events (N-2) may result in Planned/Controlled Loss of Demand or Curtailed Firm Transfers. Such Non-Consequential Load Loss should be assessed for severity on a risk vs. consequence basis. In addition, by not allowing loss of non-consequential load, the system may remain in a less secure state or condition.
Progress–Florida		☑	The severity of this event is such that Non-Consequential Loss of Load might be a necessary operating procedure in a Corrective Action Plan as part of System restoration. Furthermore, the greater-than-300 kV Bulk Electric System has been designed such that Multiple Contingency events (N-2) may result in Planned/Controlled Loss of Demand or Curtailed Firm Transfers. Such Non-Consequential Load Loss should be assessed for severity on a risk vs. consequence basis, placing particular importance on confining the event to a single area (i.e., not resulting in a cascading outage). Past assessments as well as actual events have demonstrated that by not allowing loss of non-consequential load, the Bulk Electric System may actually remain in a less secure state or condition, i.e. in more danger of experiencing cascading outages.
Response: The events considered are not simultaneous N-2, but intended to be N-1-1 with system adjustments allowed in between the outages. Based on industry feedback the SDT has made changes in proposed requirements for two independent overlapping single Contingencies involving two Transmission Facilities operated at a voltage level above 300 kV. The SDT has adjusted its approach to two independent overlapping single Contingencies (N-1-1) involving two non-generator related outages and now permit the loss of Non-Consequential Load to meet the Transmission performance requirements; see Performance Table Planning Event P6. See the above Summary Response for additional information.			
Central Maine Power National Grid New England ISO NU NSTAR		☑	This should state a transformer with a "high-side" rating above 300 kV.

Q23			
Commenter	**Agree**	**Disagree**	**Comment**
United Illuminating			
Response: The SDT agrees that it previously missed the situation described and have accounted for this sequence of events in new Planning Event P6. Also, notes have been added to the bottom of the Performance table to clarify the EHV transformer versus other BES transformers.			
Exelon	☑	☑	We do not agree with disallowing non-consequential load loss for these scenarios for the peak load conditions. These are very low probability contingencies, and some non-consequential load loss should be allowed at peak load. We would agree that it would be reasonable to dis-allow non-consequential load loss for these contingencies at a lower load level, such as 75% of peak load.
Response: Based on industry feedback the SDT has made changes in proposed requirements for two independent overlapping single Contingencies involving two Transmission Facilities operated at a voltage level above 300 kV. The SDT has adjusted its approach to two independent overlapping single Contingencies (N-1-1) involving two non-generator related outages and now permit the loss of Non-Consequential Load to meet the Transmission performance requirements; see Performance Table Planning Event P6. See the above Summary Response for additional information. The lower (non-peak) Load study that you reference is a good suggestion that could be adopted as an internal company criterion for assessing maintenance flexibility.			
IESO	☑	☑	Similar reason as above.
Response: The intent of this event is to cover two unrelated single Contingency Transmission outages that are non-generator outages. They are to be viewed as an N-1, with system adjustments, followed by the second N-1. The standard will require that Contingency events be modeled to reflect actual removal of all elements within the protection zone. Therefore a single (N-1) Contingency could result in multiple Facilities being removed from service. The N-1-1 event should accurately reflect all Facilities that would be removed from service. Based on industry feedback the SDT has made changes in proposed requirements for two independent overlapping single Contingencies involving two Transmission Facilities operated at a voltage level above 300 kV. The SDT has adjusted its approach to two independent overlapping single Contingencies (N-1-1) involving two non-generator related outages and now permit the loss of Non-Consequential Load to meet the Transmission performance requirements; see Performance Table Planning Event P6. See the above Summary Response for additional information.			
AEP	☑		Consider adding clear definition of "system adjustments", including the amount of time permited to implement prior to the loss of the second facility.
Response: The time permitted is based on the time dependent emergency Facility Ratings of the affected Transmission equipment. Planned System adjustments are allowed, unless precluded in the Requirements, to keep Facilities within the Facility Ratings, if such adjustments are executable within the time duration applicable to the Facility Ratings.			
MISO	☑		Do not allow indirect (Non-Consequential) loss of load for events involving long duration outages, such as transformer outages.
Response: While some SDT members agree with your approach, others on the SDT do not as well many of the industry comments to our Draft 1 standard. The standard does require sensitivity studies and unavailability of long lead time Facilities to be included in the sensitivity study area. Additionally, a TO will be required to notify their PC for long-term Transmission outages with consideration to spare equipment strategy. This would result in a new initial study system (N-0) and performance requirements for other Contingencies would be required subsequent to the long-term outage item.			

Q23			
Commenter	**Agree**	**Disagree**	**Comment**
Ameren			No opinion as we do not have any transformers with the low side voltages rated above 300 kV. Transmission owners with transformers meeting this requirement should be consulted to determine if a material change would be required.
ERCOT ISO			We will comment on this at a later date.
AECC	☑		neither should consequential load be lost for any n-1 faults on the 300 kv system and higher.
AECI	☑		
Allegheny Power	☑		
APPA	☑		
ATC	☑		
Brazos Electric	☑		
City Water Power and Light	☑		
City Utilities/Springfield	☑		
Entegra	☑		
Georgia Transm.	☑		Not applicable to our existing system.
HQTE	☑		
ISO/RTO	☑		
KCPL	☑		
LCRA	☑		
Manitoba Hydro	☑		
NPCC RCS	☑		
PJM	☑		
Response: Thank you but due to the majority of industry response to this question, the requirement has been changed			

The proposed standard is based on an assumption that performance requirements for non-bus tie EHV breakers should be distinguished from other breakers. Do you agree that Non-Consequential Loss of Load should not be permitted for this event?

24) Q24. Loss of non-bus tie breaker (above 300 kV) due to internal fault

Summary Response: A majority of the commenters indicated that a definition for "bus-tie breaker" as well as clarification of the Tables is needed. Based on the comments from the industry, the drafting team has proposed a definition for bus–tie breakers, incorporated changes to the definition of Consequential Load and added greater detail to Tables 1 & 2, which provides for more situations where it is acceptable to lose Non-Consequential Load. However, the SDT felt that this was one situation where the bar should be raised and no change was made to this event.

Bus-tie Breaker: A circuit breaker that is positioned to connect two individual straight bus substation configurations. (Substation configurations such as ring-bus, breaker-and-a-half, or double bus-double breaker protection schemes do not use bus-tie breakers.)

Consequential Load Loss: Load that is no longer ~~served because it is directly connected to an element(s) that is removed from service due to fault clearing action or mis-operation~~ connected to a source as a result of the event being studied or which is lost as a result of the load's response to the transient conditions of the event (other than through the action of UVLS or UFLS schemes). Although Load which is lost as a result of the Load's response to the transient conditions of the event is considered Consequential Load Loss and is permitted when Consequential Load Loss is allowed, Transmission planning entities are not allowed to rely upon the expectation of such Load loss to meet steady state performance requirements.

Q24			
Commenter	**Agree**	**Disagree**	**Comment**
Manitoba Hydro			Until the SDT should defines a non-bus tie breaker this is impossible to answer.
ERCOT ISO CAISO		☑	Same response as for Q21, and What is the definition of non-bus tie breaker? Doesn't it just refer to line, transformer, and generation breakers?
Response: The SDT has accordingly proposed a definition for bus-tie breaker.			
Muscatine P&W			See Q43 Comment #5.
Response: Please see response to Q43.			
Dominion		☑	See comment for Question 20 above.
MEAG Power		☑	See Q20 above.
TVA		☑	See Q20.
WPS		☑	See response to Q20.
Response: Please see response to Q20.			
E ON US		☑	EHV station configurations are either ring-bus or breaker and one-half. Breaker failure protection isolates two EHV Facilites which may cause local area issues without affecting the BES.

Q24			
Commenter	**Agree**	**Disagree**	**Comment**
Northwestern Energy		☑	Non-consequential load loss should be permitted for this contingency.
Duke Energy		☑	Depends upon the definition of non-bus tie breaker. By not allowing non-consequential load loss, utilities will incur significant expenditures to solve a problem with an extremely low probability of occurrence.
Entergy		☑	N-1-1 requires an increase in investment that will place an undue cost burden on all customers for low probability events. See comments to Q43.
FPL FRCC		☑	This loss is currently distinguished from other single contingencies because of its lower probability of occurrence and a more stringent performance requirement than currently exists is not warranted.
Progress–Florida		☑	This single contingency event has a very low probability of occurrence, and thus a more stringent performance requirement than currently exists is not warranted.
SaskPower		☑	The SDT should justify that the benefit to customers of this increased reliability justifies the cost.
Response: Based on industry feedback the SDT has made changes in Draft 2 on requirements related to two independent overlapping single Contingencies involving two non-generation Transmission Facilities operated at a voltage level above 300 kV. However, it is noted that in Draft 2 the SDT is still requiring more stringent performance requirements of the EHV Transmission for the less probable, but greater risk single Contingency events. Please refer to performance tables Planning Event P2 and note that bus section faults and internal breaker faults (non-bus tie) associated with above 300 kV Facilities are held to a higher performance standard than those operated at 300 kV or below. Although not unanimous, the majority of the SDT felt the 300 kV and higher systems generally represent an extra-high-voltage (EHV) range that is considered the backbone of many systems in the various Interconnections and that the more stringent requirements were appropriate when considering contingencies of two EHV Facilities due to one Event. Systems operated at this range generally do not directly serve end-use Load customers but rather act as the medium for moving large amounts of power from production to various Load centers which then deliver the power among other Transmission or sub-Transmission Systems to end use customers. It is the desire of NERC and various stakeholders that the backbone of the electric power grid be robust and held to a higher degree of reliability. Please see also summary response to Q22.			
BCTC		☑	Do not agree due to definitions of Consequential and Non-Consequential Load Loss. Can agree subject to the proposed revised definitions to address loss of load during the transient stability period. System is already planned to meet this requirement based on the first sentence of footnote (b).
Response: The drafting team has considered industry comments and has incorporated changes in the definition of Consequential Load Loss. **Consequential Load Loss:** Load that is no longer ~~served because it is directly connected to an element(s) that is removed from service due to fault clearing action or mis-operation~~ connected to a source as a result of the event being studied or which is lost as a result of the load's response to the transient conditions of the event (other than through the action of UVLS or UFLS schemes). Although Load which is lost as a result of the Load's response to the transient conditions of the event is considered Consequential Load Loss and is permitted when Consequential Load Loss is allowed, Transmission planning entities are not allowed to rely upon the expectation of such Load loss to meet			

Q24			
Commenter	**Agree**	**Disagree**	**Comment**
steady state performance requirements.			
CenterPoint		☑	The loss of a non-bus tie breaker due to an internal fault has a low probability of occurrence and should be considered an improbable event with non-consequential load loss permitted. However, the loss of any breaker, whether by internal fault, external flashover, or stuck breaker, should not result in a cascading failure.
CPS Energy		☑	Should be determined at the discretion of the Transmission Planners.
PJM	☑		Agree with performance requirement. The proposed standard is based on an assumption that performance requirements for non-bus tie EHV breakers should be distinguished from other breakers and that performance requirements for EHV facilities should be more stringent than for lower voltage facilities. Do you agree that Non-Consequential Loss of Load should not be permitted for this event?
Response: The SDT has added greater detail to Tables 1 & 2, which provides for more situations where it is acceptable to lose Non-Consequential Load.			
Exelon		☑	P6 allows for non-consequential load loss for a bus tie breaker, which has the same probability of failure as a non-bus tie breaker.
Response: In Draft 1, P6 is for loss of Bus-tie Breaker below 300 kV. This initial draft of the proposed Transmission planning standard held the planning of 300 kV and higher Transmission systems to a more stringent requirement than the remaining BES. Although not unanimous, the majority of the SDT felt the 300 kV and higher systems generally represent an extra-high-voltage (EHV) range that is considered the backbone of many systems in the various Interconnections and that the more stringent requirements were appropriate when considering contingencies of two EHV Facilities due to one Event. Systems operated at this range generally do not directly serve end-use Load customers but rather act as the medium for moving large amounts of power from production to various Load centers which then deliver the power among other Transmission or sub-Transmission Systems to end use customers. It is the desire of NERC and various stakeholders that the backbone of the electric power grid be robust and held to a higher degree of reliability. Please see also summary response to Q22.			
Georgia Transm.		☑	The standard needs to clearly define a non-bus tie breaker. It is also not clear whether the focus of the standard is the kV level or the equipment type. A material change to build new facilities would be needed to meet this new requirement.
Response: The drafting team has considered industry comments and has incorporated changes in the definition of Consequential Load Loss. **Consequential Load Loss:** Load that is no longer ~~served because it is directly connected to an element(s) that is removed from service due to fault clearing action or mis-operation~~ connected to a source as a result of the event being studied or which is lost as a result of the load's response to the transient conditions of the event (other than through the action of UVLS or UFLS schemes). Although Load which is lost as a result of the Load's response to the transient conditions of the event is considered Consequential Load Loss and is permitted when Consequential Load Loss is allowed, Transmission planning entities are not allowed to rely upon the expectation of such Load loss to meet steady state performance requirements.			

Q24			
Commenter	**Agree**	**Disagree**	**Comment**
This initial draft of the proposed Transmission planning standard held the planning of 300 kV and higher Transmission systems to a more stringent requirement than the remaining BES. Although not unanimous, the majority of the SDT felt the 300 kV and higher systems generally represent an extra-high-voltage (EHV) range that is considered the backbone of many systems in the various Interconnections and that the more stringent requirements were appropriate when considering contingencies of two EHV Facilities due to one Event. Systems operated at this range generally do not directly serve end-use Load customers but rather act as the medium for moving large amounts of power from production to various Load centers which then deliver the power among other Transmission or sub-Transmission Systems to end use customers. It is the desire of NERC and various stakeholders that the backbone of the electric power grid be robust and held to a higher degree of reliability. Please see also summary response to Q22.			
LADWP		☑	Don't understand why there is such an obsession with bus tie breakers? Is this a common practice in the East? I am not aware of any issue in WECC, let alone at above 300 kV systems.
Response: For straight buses, loss of a Bus-tie Breaker could remove from service multiple bus sections simultaneously resulting in loss of all elements connecting to the impacted bus sections. However, Bus-tie Breakers also have lower probability of outage. The reason for providing performance requirements for Bus-tie Breakers that are different from the performance requirements for non-Bus-tie Breakers is to encourage the installation of Bus-tie Breakers in straight busses.			
MRO		☑	This is a low probability event that could have significant impact on the system which historically have been designed to allow local load dropping including non-consequential load. The SDT should justify that the benefit to customers of this increased reliability justifies the cost of this change to customers. Alternatively, the SDT should define a level of non-consequential load that is acceptable for such low probability events such as 1000 MW.
Response: The SDT will consider interim Operating Procedures to allow for Transmission Owners to respond and guidelines that may allow quantifiable and limited exposure to loss of Non-Consequential Load. This may include, for example, providing for defined exclusions during construction of new Facilties. This initial draft of the proposed Transmission planning standard held the planning of 300 kV and higher Transmission systems to a more stringent requirement than the remaining BES. Although not unanimous, the majority of the SDT felt the 300 kV and higher systems generally represent an extra-high-voltage (EHV) range that is considered the backbone of many systems in the various Interconnections and that the more stringent requirements were appropriate when considering contingencies of two EHV Facilities due to one Event. Systems operated at this range generally do not directly serve end-use Load customers but rather act as the medium for moving large amounts of power from production to various Load centers which then deliver the power among other Transmission or sub-Transmission Systems to end use customers. It is the desire of NERC and various stakeholders that the backbone of the electric power grid be robust and held to a higher degree of reliability. Please see also summary response to Q22.			
Seattle City		☑	Adequacy of HV supply is outside of our control but may have a detrimental effect on our system. We should not be required to supplement the existing high-voltage infrastructure when it is the

Q24			
Commenter	**Agree**	**Disagree**	**Comment**
			responsibility of the transmission owner. If the intent of this requirement is to prevent downstream load loss caused by a fault in the 300kV beloning to the transmission owner, then we agree. We must be able to shed load when our supply is cut.
Response: The treatment of Transmission infrastructure costs is outside the scope of the NERC reliability standards. The SDT will consider interim Operating Procedures to allow for Transmission Owners to respond and guidelines that may allow quantifiable and limited exposure to loss of Non-Consequential Load. This may include, for example, providing for defined exclusions during construction of new facilties.			
Santee Cooper SERC EC DRS SERC EC PSS SERC RRS OPS SCE&G Southern Transm.		☑	By not allowing non-consequential load loss, utilities will incur significant expenditures to solve a problem with an extremely low probability of occurrence. The benefit will not justify the cost. It would be helpful if "bus tie breaker" was defined (e.g. is the middle breaker in a breaker and a half scheme considered a bus tie breaker?).
Response: The SDT will consider interim Operating Procedures to allow for Transmission Owners to respond and guidelines that may allow quantifiable and limited exposure to loss of Non-Consequential Load. This may include, for example, providing for defined exclusions during construction of new facilties. The drafting team has considered industry comments and has incorporated changes in the definition of Consequential Load Loss. **Consequential Load Loss:** Load that is no longer ~~served because it is directly connected to an element(s) that is removed from service due to fault clearing action or mis-operation~~ connected to a source as a result of the event being studied or which is lost as a result of the load's response to the transient conditions of the event (other than through the action of UVLS or UFLS schemes). Although Load which is lost as a result of the Load's response to the transient conditions of the event is considered Consequential Load Loss and is permitted when Consequential Load Loss is allowed, Transmission planning entities are not allowed to rely upon the expectation of such Load loss to meet steady state performance requirements.			
Tenaska		☑	Why should we distinquish between a bustie breaker and a non-bus tie breaker? Also, 300 kV may be too low. This is really an issue that should be driven by the customers.
ABB	☑	☑	When talking about breaker outages, I see no reason to differentiate between "non-bus tie" and "bus tie" breakers. Are bus tie breakers inherently more reliable? If the effect on the system due to a tie breaker outage is very bad, then this should be fixed. All other contingencies seem to be slotted based on probability. Shouldn't breakers? Maybe bus tie breakers are weak points in the transmission system that need to be improved.
Central Maine Power HQTE National Grid New England ISO NU NPCC RCS NSTAR	☑		It is unclear why bus tie breakers are being treated differently than other breakers. They should be treated the same.

Q24			
Commenter	**Agree**	**Disagree**	**Comment**
United Illuminating			
ITC	☑		Loss of non-consequential load should not be permitted, however this should also apply to other breakers across the system including bus tie breakers.
Response: Depending on the bus configuration loss of a Bus-tie Breaker could remove from service multiple bus sections simultaneously resulting in loss of all elements connecting to the impacted bus sections. However, Bus-tie Breakers also have lower probability of outage. The reason for providing performance requirements for Bus-tie Breakers that are different from the performance requirements for non-Bus-tie Breakers is to encourage the installation of Bus-tie Breakers in straight busses.			
WECC BPA TSGT TEP		☑	We disagree that non-consequential loss of load should not be permitted for this contingency event. We believe that planned and controlled interruption of non-consequential load should be permitted for loss of a non-bus tie breaker (above 300 kV). Losing a non-bus tie breaker could result in simultaneous loss of two or more elements, depending on the bus configuration. Allowing planned and controlled disconnection of some load in the areas would not only prevent cascading and instability (which could result in uncontrolled loss of a larger amount of load), but also enables faster load restoration. Losing a breaker due to an internal fault is a low probability event. To meet this requirement as proposed would require severe pre-contingency curtailment of power transfers, that could impact commerce and/or construction of large number of transmission facilities with the attendant environmental impacts and increased cost to customers
Response: The SDT will consider interim Operating Procedures to allow for Transmission Owners to respond and guidelines that may allow quantifiable and limited exposure to loss of Non-Consequential Load. This may include, for example, providing for defined exclusions during construction of new facilties.			
Ameren	☑	☑	This part of the proposed standard language is confusing. From our perspective, the failure of any 300 kV or above non-bus-tie circuit breaker should not result in the non-consequential loss of load. Further, EHV circuit breakers failing as a result of internal faults are extremely rare, bus-ties or not. Also, it is not clear what would be considered a non-bus tie breaker for ring bus and breaker-and-a-half bus configurations. It would seem that performance requirements for EHV bus-tie breakers (and not non-bus-tie breakers) should be distinguished from other breakers.
Response: Depending on the bus configuration loss of a Bus-tie Breaker could remove from service multiple bus sections simultaneously resulting in loss of all elements connecting to the impacted bus sections. However, Bus-tie Breakers also have lower probability of outage. The reason for providing performance requirements for Bus-tie Breakers that are different from the performance requirements for non-Bus-tie Breakers is to encourage the installation of Bus-tie Breakers in straight busses. In response to industry comments, the SDT has accordingly proposed a definition for Bus-tie Breaker. **Bus-tie Breaker:** A circuit breaker that is positioned to connect two individual straight bus substation configurations. (Substation configurations such as ring-bus, breaker-and-a-half, or double bus-double breaker protection schemes do not use bus-tie breakers.)			
AEP	☑		Consider adding clear definition of "bus tie breaker" and "non-bus tie breaker".
Response: In response to industry comments, the SDT has accordingly proposed a definition for Bus-tie Breaker.			

Q24			
Commenter	**Agree**	**Disagree**	**Comment**
Bus-tie Breaker: A circuit breaker that is positioned to connect two individual straight bus substation configurations. (Substation configurations such as ring-bus, breaker-and-a-half, or double bus-double breaker protection schemes do not use bus-tie breakers.)			
FirstEnergy	☑		The tables' use of internal faults and stuck breaker faults is confusing since they have the same result.
Response: The probability of loss of a breaker due to the breaker internal fault would be higher than loss of a Transmission element coupled with a stuck breaker associated with the faulted element. Tables 1 and 2 have been modified to provide greater clarity.			
NERC TIS	☑		By its very nature, the event described is a breaker failure and the fault will typically need to be cleared by the next set of breakers, often remotely. Tripping out to the backup protection breakers typically can cause significant Consequential load loss. That should not be misconstrued as non-consequential load loss. Non-consequential load loss beyond that is unacceptable.
Response: Whether tripping of additional Facilities by backup protection will lead to more Consequential Load Loss will depend on whether any Load is connected directly to such Facilities. In the second draft the SDT has modified the definition of Consequential Load Loss. **Consequential Load Loss:** Load that is no longer ~~served because it is directly connected to an element(s) that is removed from service due to fault clearing action or mis-operation~~ connected to a source as a result of the event being studied or which is lost as a result of the load's response to the transient conditions of the event (other than through the action of UVLS or UFLS schemes). Although Load which is lost as a result of the Load's response to the transient conditions of the event is considered Consequential Load Loss and is permitted when Consequential Load Loss is allowed, Transmission planning entities are not allowed to rely upon the expectation of such Load loss to meet steady state performance requirements.			
AECC	☑		neither should consequential load be lost for any n-1 faults on the 300 kv system and higher.
AECI	☑		
Allegheny Power	☑		
APPA	☑		
ATC	☑		
Brazos Electric	☑		
City Water Power and Light	☑		
City Utilities/Springfield	☑		
IESO	☑		Agree. In general, non-consequential loss of load should not be permitted for any single contingencies.
Entegra	☑		
ISO/RTO	☑		
KCPL	☑		No Non-Consequential loss of load for N-1 event.

Q24			
Commenter	**Agree**	**Disagree**	**Comment**
LCRA	☑		
MISO	☑		No indirect (Non-Consequential) loss of load for outage of single EHV element.
New York ISO	☑		
NCEMC	☑		See response for Q20.
Progress–Carolinas	☑		
Response: Thank you.			

The proposed standard is based on an assumption that performance requirements for non-bus tie EHV breakers should be distinguished from other breakers and that performance requirements for EHV facilities should be more stringent than for lower voltage facilities. Do you agree that Non-Consequential Loss of Load should not be permitted for this event?

25) Q25. P3-1: Loss of (SLG for stability) either a generator, a Transmission circuit, a transformer, or a bus and a stuck non-bus tie breaker (above 300 kV)

Summary Response: A majority of the commenters indicated that a definition for "Bus-tie Breaker" as well as clarification of the Tables is needed. Based on the comments from the industry, the drafting team has proposed a definition for Bus–tie Breakers, incorporated changes to the definition of Consequential Load and added greater detail to Tables 1 & 2, which provides for more situations where it is acceptable to lose Non-Consequential Load. The SDT has re-categorized the table to try to clarify what was meant but no changes have been made to this requirement as a result of industry comments.

Bus-tie Breaker: A circuit breaker that is positioned to connect two individual straight bus substation configurations. (Substation configurations such as ring-bus, breaker-and-a-half, or double bus-double breaker protection schemes do not use bus-tie breakers.)

Consequential Load Loss: Load that is no longer ~~served because it is directly connected to an element(s) that is removed from service due to fault clearing action or mis-operation~~ connected to a source as a result of the event being studied or which is lost as a result of the load's response to the transient conditions of the event (other than through the action of UVLS or UFLS schemes). Although Load which is lost as a result of the Load's response to the transient conditions of the event is considered Consequential Load Loss and is permitted when Consequential Load Loss is allowed, Transmission planning entities are not allowed to rely upon the expectation of such Load loss to meet steady state performance requirements.

Q25			
Commenter	**Agree**	**Disagree**	**Comment**
Muscatine P&W			See Q43 Comment #5.
Response: Please see response to Question 43 #5.			
Ameren		☑	The loss of two or more elements at any EHV substation at time of peak would likely result in loss of non-consequential load. If the intent of the proposed standard is to encourage the development of ring bus or breaker-and-a-half bus arrangements at the EHV level, we would concur where it is physically possible and makes for good engineering practice. However, we must remind the SDT that there are some existing facilities that cannot be converted practically or economically from their present straight bus configuration because of physical limitations. A significant material change, potentially several million dollars per substation, would be required to retrofit facilities, where possible. It would appear that performance requirements for EHV bus-tie breakers (and not non-bus-tie breakers) should be distinguished from other breakers.
Duke Energy		☑	By not allowing non-consequential load loss, utilities will incur significant expenditures to solve a problem with an extremely low probability of occurrence.
Entergy		☑	N-1-1 requires an increase in investment that will place an undue cost burden on all customers

Q25			
Commenter	**Agree**	**Disagree**	**Comment**
			for low probability events. See comments to Q43..
SaskPower		☑	The SDT should justify that the benefit to customers of this increased reliability justifies the cost.
Santee Cooper SERC EC DRS SERC EC PSS SERC RRS OPS SCE&G Southern Transm.		☑	By not allowing non-consequential load loss, utilities will incur significant expenditures to solve a problem with an extremely low probability of occurrence. The benefit will not justify the cost.
Northwestern Energy		☑	Non-consequential load loss should be permitted for this contingency.
Response: Based on industry feedback the SDT has made changes in Draft 2 on requirements related to two independent overlapping single Contingencies involving two non-generation Transmission Facilities operated at a voltage level above 300 kV. However, it is noted that in Draft 2 the SDT is still requiring more stringent performance requirements of the EHV Transmission. Although not unanimous, the majority of the SDT felt the 300 kV and higher systems generally represent an extra-high-voltage (EHV) range that is considered the backbone of many systems in the various Interconnections and that the more stringent requirements were appropriate when considering Contingencies of two EHV facilities due to one Event. Systems operated at this range generally do not directly serve end-use Load customers but rather act as the medium for moving large amounts of power from production to various Load centers which then deliver the power among other Transmission or sub-Transmission Systems to end use customers. It is the desire of NERC and various stakeholders that the backbone of the electric power grid be robust and held to a higher degree of reliability. Please see also summary response to Q22.			
Dominion		☑	See comment for Question 20 above.
MEAG Power		☑	See Q20 above.
TVA		☑	See Q20.
WPS			See response to Q20.
NCEMC	☑		See response for Q20.
Response: Please see response to Q20.			
E ON US		☑	This event needs to be reworded. Does the stuck non-bus tie breaker condition only apply to the bus fault or to all faults? Does (above 300 kV) only apply to the stuck non-bus tie breaker or is this limited to faults on facilities above 300 kV?
Response: The stuck non-Bus tie Breaker condition applies to all faults listed in P3 in Tables 1 and 2. The ATFNSDT has added greater detail to Tables 1 & 2, which provides for more situations where it is acceptable to lose non-consequential firm load.			
ERCOT ISO CAISO		☑	Do not agree for loss of a bus, or loss of a stuck non-bus tie breaker for the reasons as in the response to Q21.
Response: Please see response to Q21.			
BCTC		☑	Do not agree due to definitions of Consequential and Non-Consequential Load Loss. Can agree subject to the proposed revised definitions to address loss of load during the transient stability

Q25			
Commenter	**Agree**	**Disagree**	**Comment**
			period. System is already planned to meet this requirement based on the first sentence of footnote (b).
MISO	☑		With the clarification that direct (Consequential) loss of load is associated with all outage elements: both SLG element and stuck breaker element.
Response: The drafting team has considered industry comments and has incorporated changes in the definition of Consequential Load Loss. **Consequential Load Loss:** Load that is no longer ~~served because it is directly connected to an element(s) that is removed from service due to fault clearing action or mis-operation~~ connected to a source as a result of the event being studied or which is lost as a result of the load's response to the transient conditions of the event (other than through the action of UVLS or UFLS schemes). Although Load which is lost as a result of the Load's response to the transient conditions of the event is considered Consequential Load Loss and is permitted when Consequential Load Loss is allowed, Transmission planning entities are not allowed to rely upon the expectation of such Load loss to meet steady state performance requirements.			
CenterPoint		☑	The loss of either a generator, a Transmission cirucit, a transformer, or a bus and a stuck non-bus tie breaker (above 300 kV) has a low probability of occurrence and should be considered an extreme event with non-consequential load loss permitted.
CPS Energy		☑	Should be determined at the discretion of the Transmission Planners.
FirstEnergy		☑	The wording of P3-1 is unclear. We suggest rewording to say "Fault on a generator, line, transformer, or bus and a stuck breaker when the fault is being cleared". We agree with the concept of not dropping load for an EHV stuck breaker with the exception of the bus fault item. We do not believe that it is very realistic to postulate a bus fault along with a stuck breaker and believe that it is a very low probability event.
Response: The SDT has added greater detail to Tables 1 & 2, which provides for more situations where it is acceptable to lose Non-Consequential Load.			
Central Maine Power HQTE National Grid New England ISO NU NPCC RCS NSTAR United Illuminating		☑	It is unclear why bus tie breakers are being treated differently than other breakers. They should be treated the same.
Response: For straight buses, loss of a Bus-tie Breaker could remove from service multiple bus sections simultaneously resulting in loss of all elements connecting to the impacted bus sections. However, Bus-tie Breakers also have lower probability of outage. The reason for providing performance requirements for Bus-tie Breakers that are different from the performance requirements for non-Bus-tie Breakers so as to encourage the installation of Bus-tie Breakers in straight busses.			
FPL		☑	Systems have been designed such that Multiple Contingency events (N-2) above 300 kV may result in Planned/Controlled Loss of Demand or Curtailed Firm Transfers. Such Non-Consequential Load Loss should be assessed for severity on a risk vs. consequence basis. In

Q25			
Commenter	**Agree**	**Disagree**	**Comment**
			addition, by not allowing loss of non-consequential load, the system may remain in a less secure state or condition. This new category P3-1 is essentially a replacement for Category C5-9 except the only protection element failure to be considered is the failure of a circuit breaker to open. This definition eliminates the need to examine failure of the relay to operate which in many cases has a more serious impact on grid reliability.
FRCC		☑	This new category P3-1 is essentially a replacement for Category C5-9 except the only protection element failure to be considered is the failure of a circuit breaker to open. This definition eliminates the need to examine failure of the relay to operate which in many cases has a more serious impact on grid reliability.
Response: The SDT has added greater detail to Tables 1 & 2, which provides separately for events that involve stuck breakers and protection system failure.			
Georgia Transm.		☑	A material change to build new facilities would be needed to meet this new requirement.
MRO		☑	This is a low probability event that could have significant impact on the system which historically have been designed to allow local load dropping including non-consequential load. The SDT should justify that the benefit to customers of this increased reliability justifies the cost of this change to customers. Alternatively, the SDT should define a level of non-consequential load that is acceptable for such low probability events such as 1000 MW.
WECC BPA TSGT TEP		☑	We disagree that non-consequential loss of load should not be permitted for this contingency event. We believe that planned and controlled interruption of non-consequential load should be permitted for loss of either a generator, a transmission circuit, a transformer, or a bus and a stuck non-bus tie breaker (above 300 kV). This contingency event could result in simultaneous loss of two or more elements, depending on the bus configuration. Allowing planned and controlled disconnection of some load in the areas would not only prevent cascading and instability (which could result in uncontrolled loss of a larger amount of load), but also enables faster load restoration. These contingencies are low-probability events. To meet this requirement as proposed would require severe pre-contingency curtailment of power transfers, that could impact commerce and/or construction of a large number of transmission facilities with the attendant environmental impacts and increased cost to customers.
Response: The SDT has re-categorized the table to try to clarify what was meant but no changes have been made to this requirement as a result of industry comments.			
LADWP		☑	Ditto (24)
Seattle City		☑	As in Q24. Certain combinations in the HV supply system will force us to shed load.
NERC TIS	☑		See comment to Q24.
Response: Please see response to Q24.			
Manitoba Hydro		☑	The SDT seems fixated on loss of load. The existing std for this type of event allowed for loss of load and firm transfer could be adjusted. While MH could rationalize that load should not be

Q25			
Commenter	**Agree**	**Disagree**	**Comment**
			interrupted, we could not agree that firm transfer can not be reduced. This would amount to n-2 planning to maintain a firm transfer that is backed up by reserves. The requirement to maintain firm transfer will cost MH and the industry millions of dollars with no reliability benefit - a show stopper.
Tenaska		☑	This is really an issue that should be driven by the customers.
Exelon	☑	☑	We do not agree with disallowing non-consequential load loss for these scenarios for the peak load conditions. These are very low probability contingencies, and some non-consequential load loss should be allowed at peak load. We would agree that it would be reasonable to dis-allow non-consequential load loss for these contingencies at a lower load level, such as 75% of peak load.
Response: The SDT must address FERC Order 693. FERC has jurisdiction over firm Transmission service. FERC allows the use of "equally or more efficient or effective approach" and Non-Consequential Load is being used as a proxy for firm Transmission service.			
Progress–Carolinas		☑	This is a very low probability multiple contingency and would cost an extreme sum of money to remedy. Need to clarify whether or not the stuck breaker was connected with loss of element.
Response: The SDT has re-categorized the table to try to clarify what was meant but no changes have been made to this requirement as a result of industry comments. The SDT has added greater detail to Tables 1 & 2 to provide more clarity.			
Progress–Florida		☑	The severity of this event is such that Non-Consequential Loss of Load might be a necessary operating procedure in a Corrective Action Plan as part of System restoration. Furthermore, the greater-than-300 kV Bulk Electric System has been designed such that Multiple Contingency events (N-2) may result in Planned/Controlled Loss of Demand or Curtailed Firm Transfers. Such Non-Consequential Load Loss should be assessed for severity on a risk vs. consequence basis, placing particular importance on confining the event to a single area (i.e., not resulting in a cascading outage). Past assessments as well as actual events have demonstrated that by not allowing loss of non-consequential load, the Bulk Electric System may actually remain in a less secure state or condition, i.e. in more danger of experiencing cascading outages. In addition, it should be noted that the technical specifications of this category contain a major oversight. This new Category P3-1 is essentially a replacement for the existing Categories C5-9, except that the only protection element failure being considered is the failure of a circuit breaker to open. This definition eliminates the need to examine failure of the relay to operate, which in many cases has a more serious impact on grid reliability.
Response: The SDT must address FERC Order 693. FERC has jurisdiction over firm Transmission service. FERC allows the use of "equally or more efficient or effective approach" and Non-Consequential Load is being used as a proxy for firm Transmission service. The SDT has added greater detail to Tables 1 & 2, which provides for events that involve stuck breakers and protection system failure.			
ABB	☑	☑	Table 1 P3 is a little hard to read/understand. The second column should start out something like "A stuck breaker following the outage of any 1 of the following:" However, P3 will be completely redundant with P2 because, in power flow analysis, there is no difference between a breaker internal fault and a stuck breaker following an external fault. The final outaged equipment is the

Q25			
Commenter	**Agree**	**Disagree**	**Comment**
			same. This will cause extra unnecessary work.
Response: The SDT has added greater detail to Tables 1 & 2.			
AEP	☑		Consider adding clear definition of "bus tie breaker" and "non-bus tie breaker".
Response: The SDT has accordingly proposed a definition for Bus-tie Breaker. **Bus-tie Breaker:** A circuit breaker that is positioned to connect two individual straight bus substation configurations. (Substation configurations such as ring-bus, breaker-and-a-half, or double bus-double breaker protection schemes do not use bus-tie breakers.)			
ITC	☑		Should also consider no loss of non-consequential load for facilities 100 kV and above and this should also apply to other breakers across the system including bus tie breakers.
Response: The initial draft of the proposed Transmission planning standard held the planning of 300 kV and higher Transmission Systems to a more stringent requirement than the remaining BES. Although not unanimous, the majority of the SDT felt the 300 kV and higher systems generally represent an extra-high-voltage (EHV) range that is considered the backbone of many systems in the various Interconnections and that the more stringent requirements were appropriate when considering single events that can result in Contingencies of two EHV Facilities. Systems operated at this range generally do not directly serve end-use Load customers but rather act as the medium for moving large amounts of power from production to various Load centers which then deliver the power among other Transmission or sub-Transmission systems to end use customers. It is the desire of NERC and various stakeholders that the backbone of the electric power grid be robust and held to a higher degree of reliability. Loss of Facilities below 300 kV is not expected to have the same impact. Please see also summary response to Q22.			
AECC	☑		neither should consequential load be lost for any n-1 faults on the 300 kv system and higher.
AECI	☑		
Allegheny Power	☑		
APPA	☑		
ATC	☑		
Brazos Electric	☑		
City Water Power and Light	☑		
City Utilities/Springfield	☑		
Entegra	☑		
IESO	☑		See reason stated for Q24, above.
ISO/RTO	☑		
KCPL	☑		Must recognize that there may be Consequential loss of load.

Q25			
Commenter	**Agree**	**Disagree**	**Comment**
LCRA	☑		
New York ISO	☑		
PJM	☑		
Response: Thank you.			

The proposed standard is based on an assumption that the following events are relatively high probability events and, therefore, Non-Consequential Loss of Load should not be permitted. Do you agree? If you disagree, please provide a reason for your disagreement.

26) Q26. P4-1: Loss of a Generator followed by System adjustment[2] followed by loss of another Generator

Summary Response: The SDT notes that FERC's direction with regard to Non-Consequential firm Load and the TPL standards is stated in paragraph 1795 of FERC Order No. 693 as follows: "Based on the record before us, we believe that the transmission planning Reliability Standard should not allow an entity to plan for the loss of non-consequential load in the event of a single contingency." Paragraph 1795 also states, "Therefore, the ERO should modify the sentence to indicate that manual system adjustments, except for shedding firm load or curtailment of firm transfers, are permitted after the first contingency to bring the system back to a normal operating state." These statements which indicate that loss of Non-Consequential firm Load and interruption of firm Transmission service should not be permitted for a single Contingency are meant to apply to Facilities covered by reliability standards regardless of voltage, economics, or rate recovery issues.

These events are on higher voltage facilities on the BES. Therefore, the SDT has drafted the standard to not permit loss of Non-Consequential Load or interruption of firm Transmission service for the loss of a generator followed by System adjustment followed by the loss of another generator. The majority of the commenters in response to the first posting of the standard agreed with the SDT's approach in this regard.

Issues of cost recovery are beyond the scope of the standard.

Q26			
Commenter	**Agree**	**Disagree**	**Comment**
Muscatine P&W			See Q43 Comment #5.
Response: Please see Q43 #5 response.			
City Utilities/Springfield			Would like to see more explanation for the these scenarios.
ABB	☑		For Table 1 P4, rewrite it to read "Loss of a generator followed by a System adjustment followed by the loss of any one of the following: 1. Generator 2. Transmission Circuit 3. Transformer 4. A shunt device

[2] System adjustment can be manual or automatic

Q26			
Commenter	**Agree**	**Disagree**	**Comment**
			5. Single pole of DC line." This structure is easier to read and understand. The order should be like this to match P1. Shunt devices should be included. P3 should be structured similarly.
Response: The SDT has changed the performance table and language to clarify the specific scenarios. The SDT will be seeking comments on the new performance table.			
Brazos Electric		☑	Need a definition of generator. The entire train, largest unit at a site or other.
Response: The SDT has made changes to the performance table and language to define what is included in an individual generator outage.			
Northwestern Energy		☑	What is non-consequential load loss? Is losing a motor due to motor contactor action a non-consequential load loss? Also, the transmission system was developed under criteria without this requirement and to correct it would be costly.
Response: The SDT has revised the proposed definition of Consequential Load Loss in the second draft. Per the SDT proposed definition, losing a motor due to motor contactor action is not considered Non-Consequential or Consequential Loss of Load. The SDT has made changes to the definition of Consequential Load Loss to clarify how this incident is to be treated with regard to system performance. **Consequential Load Loss:** Load that is no longer ~~served because it is directly connected to an element(s) that is removed from service due to fault clearing action or mis-operation~~ connected to a source as a result of the event being studied or which is lost as a result of the load's response to the transient conditions of the event (other than through the action of UVLS or UFLS schemes). Although Load which is lost as a result of the Load's response to the transient conditions of the event is considered Consequential Load Loss and is permitted when Consequential Load Loss is allowed, Transmission planning entities are not allowed to rely upon the expectation of such Load loss to meet steady state performance requirements. With regard to the comment on cost, this requirement is consistent with FERC Order No. 693 and the SDT believes this is a more probable event than other events and therefore, the System should be designed per this requirement.			
BCTC		☑	Do not agree due to the definition for Consequential Load Loss. Definition needs to include local networks for this contingency to be acceptable.
Response: See responses to Question 2 and 6.			
CenterPoint		☑	CenterPoint Energy believes the assumption that this is a high probability event is incorrect. Furthermore, an absolute requirement prohibiting non-consequential loss of load has economic and landowner impacts that cannot be ignored.
Response: The majority of commenters in response to the first posting of the draft standard agreed with this approach. With regard to the commenter's second comment, the SDT notes that in Order 693 FERC directs NERC to prohibit loss of Non-Consequential firm Load for a single Contingency and therefore the SDT believes that this is an appropriate requirement for the standard. FERC's direction is meant to apply to BES Facilities covered by reliability standards regardless of land-use, voltage, economics, or rate recovery issues. Issues of land-use, economics, and cost recovery are beyond the scope of the SDT. The majority of commenters in response to the first posting of			

Q26			
Commenter	**Agree**	**Disagree**	**Comment**
the draft standard agreed with this approach. See also the SDT's summary response.			
Central Maine Power New England ISO NU NPCC RCS NSTAR United Illuminating		☑	If the base case or a mandatory sensitivity case already includes unplanned generator outages, some load loss may be reasonable following the subsequent loss of 2 additional generators.
National Grid		☑	If mitigation plans are required that are based on studies that already include unplanned generator outages, then some load loss may be reasonable following the subsequent loss of 2 additional generators.
FPL FRCC		☑	Systems should be planned such that the loss of a generator, followed by System adjustment, followed by the loss of another generator would not result in Non-consequential Load Loss, and equipment ratings would not be exceeded etc. However, the initial state of the system must be clarified in all performance table scenarios (including P4-1).If the Base Case contained known planned outages of generating units, as implied by the requirement R1.4, then the standard performance requirements could be interpreted to require planning for all G-1-1-1 events.
Response: The SDT agrees that the draft standard could reasonably be interpreted that if a major generating outage lasts more than 1 year that the System still needs to be able to meet G-1, System adjustment and then, a 2nd G-1 without the loss of any Non-Consequential Load. This interpretation would require new construction to meet any G-1 + G-1 + G-1, because there would be a violation of the standard if any plant outage occurred and was not available over the peak period during the planning horizon. The SDT believes this is beyond most present planning across NERC. Therefore, the SDT has made a change to the proposed standard to develop a new requirement to replace R1.4 in the modeling section. The new requirement will be to perform the tests outlined in the performance requirements table and demonstrate that thermal and voltage limits are met, however, all manual and/or automatic actions are allowed (within time constrained ratings) including curtailing firm transfers and controlled shedding of Non-Consequential firm Load.			
CPS Energy		☑	Should be determined at the discretion of the Transmission Planners.
Entergy		☑	This would require an increase in investment that will place an undue cost burden on all customers for low probability events. It does not appear that there has been any meaningful balancing of the potential benefits against the significant increase in cost that will be required. See comments to Q43.
LADWP		☑	This is N-2 and load loss should be permitted. As for whether or not this is a high probability event, there should be an objective measure (such as 1 in 5, 1 in 50, or 1 in 100, etc.) as to what constitute high probability, i.e., are there any outage history that would support any of the contention here that these are high probablity events? It is a mistake to arbitrary injecting "subjective" probability into a deterministic based reliability standard unless the industry is ready to move into 100% probabilistic based reliability standards.
Response: The SDT has outage data for representative Facilities which show that the probability of an event involving one generator outage followed by another generator outage is higher than an event involving a single transmission line. The SDT notes that in Order 693 FERC directs NERC to prohibit loss of Non-Consequential firm Load for a single Contingency and therefore the SDT believes that this is an			

Q26			
Commenter	**Agree**	**Disagree**	**Comment**
appropriate requirement for the standard. The majority of commenters in response to the first posting of the draft standard agreed with this approach. See also the SDT's summary response.			
FirstEnergy		☑	Shedding load could be part of the system adjustment in preparation for the next possible contingency but load drop would not be acceptable for problems caused soley by the first contingency.
Response: The SDT notes that in Order 693 FERC directs NERC to prohibit Non-Consequential loss of Load for a single Contingency in the planning horizon whether it is to meet the System performance after the outage or to prepare for the next Contingency and therefore the SDT believes that this is an appropriate requirement for the standard. The majority of commenters in response to the first posting of the draft standard agreed with this approach. See also the SDT's summary response. The SDT notes that when operating the System, the System Operator may have to drop Non-Consequential loss of Load as a last resort to maintain the reliability of the interconnected network. This would typically be for operating situations with more than a single prior outage for the Contingency event.			
Progress–Florida		☑	The severity of this event is such that Non-Consequential Loss of Load might be a necessary operating procedure in a Corrective Action Plan as part of System restoration. Specifically, the sudden loss of a large generator followed soon thereafter by the loss of a second generator would often result in such a large generation-to-load mismatch that Non-Consequential Loss of Load would be inevitable. It is clear, however, that the Bulk Electric System should be planned such that any generator can be maintained (offline) and the system can be operated to the contingency of another generator. This is accomplished in the Security Constrained unit commitment process. However, if the intent of this requirement is that the system should be planned such that there can be no Non-Consequential Load Loss for the loss of a second generator (after System adjustment), then the requirement is too stringent in that the planner would essentially have to plan for 3 generator contingencies. Finally, the probability of an event should not be the primary factor determining whether or not Non-Consequential Loss of Load is permitted, but rather the presence or absence of cascading for the event.
Response: The SDT agrees that the draft standard could reasonably be interpreted that if a major generating outage lasts more than 1 year that the System still needs to be able to meet G-1, System adjustment and then, a 2nd G-1 without the loss of any Non-Consequential Load. This interpretation would require new construction to meet any G-1 + G-1 + G-1, because there would be a violation of the standard if any plant outage occurred and was not available over the peak period during the planning horizon. The SDT believes this is beyond most present planning across NERC. Therefore, the SDT has made a change to the proposed standard to develop a new requirement to replace R1.4 in the modeling section. The new requirement will be to perform the tests outlined in the performance requirements table and demonstrate that thermal and voltage limits are met, however, all manual and/or automatic actions are allowed (within time constrained ratings) including curtailing firm transfers and controlled shedding of Non-Consequential firm Load. The SDT has outage data for representative Facilities which show that the probability of an event involving one generator outage followed by another generator outage is higher than an event involving a single transmission line. The SDT notes that in Order 693 FERC directs NERC to prohibit loss of Non-Consequential firm Load for a single Contingency and therefore the SDT believes that this is an appropriate requirement for the standard. The majority of commenters in response to the first posting of the draft standard agreed with this approach. See also the SDT's summary response.			

Q26			
Commenter	**Agree**	**Disagree**	**Comment**
SRP		☑	The time to adjust the system needs to be provided (when does a N-1-1 become a N-2?). If the cause of the outage is transient (temporary) the operator needs some time to test and restore the element (could be minutes up to several hours). If the element is lost indefinitly, the operator will need some minimum time to adjust the system. If this time is not available prior to the next N-1 then the standard should allow Non-Consequetial Loss of Load. Some distinction needs to be made the amount of generation connected at a single point on the BES. a wind farm might have many small generators connected to the BES with an aggregate total of 300Mw or more. This requirement will should only apply to generating sources that might be connected to the BES through a single transformer (i.e. wind farm) with minimum agregate total of 300 MW (for N-1).
Response: The SDT believes that the time to adjust that is used in planning needs to be consistent with the time periods for which the Facility Ratings are designed. This time to adjust is different for different types of Facilities, as well as, for individual Facilities. The SDT has clarified this point in the standard but does not provide a specific time to be used for planning across NERC. The SDT has made changes to the performance table and language to define what is included in an individual generator outage. Treatment of wind farm in modeling and analysis needs to be addressed in MOD-010 through MOD-013.			
Santee Cooper		☑	The event should be tested for ensuring or maintaining reliability of the BES, however direct load loss should be allowed.
SERC RRS OPS TVA		☑	It is agreed that this event should be tested for maintaining reliability of the BES, however planned load loss should be allowed.
SCE&G		☑	Planned load loss should be allowed.
Response: The SDT agrees that Consequential (direct) Load Loss should be allowed but disagrees that planned loss of Non-Consequential firm Load should be allowed. The standard has been drafted to allow Consequential direct Load Loss for this event but not Non-Consequential Load Loss for this Contingency event. The SDT has outage data for representative facilities which shows that the probability of an event involving one generator outage followed by another generator outage is higher than an event involving a single Transmission line. The SDT notes that in Order 693 FERC directs NERC to prohibit loss of Non-Consequential firm Load for a single Contingency and therefore the SDT believes that this is an appropriate requirement for the standard. The majority of commenters in response to the first posting of the draft standard agreed with this approach. See also the SDT's summary response.			
SaskPower		☑	Local area network load is allowed to be shed in Saskatchewan. The Saskatchewan Regulatory Jurisdiction has no plans to change this unless there is technical evidence to justify the increase in reliability. The SDT should justify that the benefit to customers of this increased reliability justifies the cost.
Response: The SDT is required to address FERC Order 693 and cannot default to lowest common denominator. This issue is beyond the scope of the Standard Drafting Team and needs to be addressed at the NERC level. However, an Entity can request an "Entity Variance" in accordance with the NERC Reliability Standards Development Procedure (Page 27).			
Tenaska	☑		This is really an issue that should be driven by the customers
Response: FERC Order No. 693 and the Energy Policy Act of 2005 has driven changes embodied by this question.			

Q26			
Commenter	**Agree**	**Disagree**	**Comment**
HQTE	☑		Load curtailment may need to be implemented during system adjustment to ensure reliability for the next contingency and may be reasonable following the subsequent loss of 2 additional generators.
Response: FERC Order 693 indicates that only Consequential Load Loss should be allowed while Non-Consequential Load loss should not. See also the SDT's summary response.			
IESO	☑		The loss of a generator is different from the loss of a transmission facility. The former usually does not result in changes to the system topology nor system operating limits. While loss of 2 generators may result in resource deficiency, the decision to shed load would only be made when operating reserve cannot be replenished after the first contingency, and when the second contingency would result in violation of any SOLs or IROLs or BAL standards for which adjustment cannot be made within the required time line.
Response: The SDT agrees with the comment, although that is not the reason for the proposed changes. FERC Order 693 indicates that only consequential load loss should be allowed while non-consequential load loss should not. See also the SDT's summary response.			
ITC	☑		Also use of system adjustment should consider time required to complete adjustment.
Response: The SDT agrees and has proposed changes to the tables to clarify.			
Manitoba Hydro	☑		With the caveat that firm transfer is included in the adjustment, otherwise there is a huge cost with minimal reliability benefit. A further comment is what rationale was applied by the SDT to come up with these combinations of events? is there a statistical basis? the viable combinations of multiple contingency events should be left to the experience of the transmission planner.
Response: FERC Order 693 indicates that firm transfers are not to be curtailed either to meet the System performance for a single Contingency or to prepare for the next Contingency. This is the basis for not allowing firm transfer. See also the SDT's summary response and Order 693, Paragraph 1796 for additional FERC clarification with regard to prohibiting curtailment of firm transfers after a single Contingency. The combinations of events were chosen drawing on the experience of members of the SDT. If there are any additional events that should be added to the tables, please provide specific suggestions during the next comment period.			
NCEMC	☑		In the case of generating capacity replacement, some guidance as to allowable system adjustments might be needed for clarification. Is calling on contingency reserves from a Reserve Sharing Group immediately prior to internal redispatch of available resources OK? What about Network Customer generation not at maximum output but available for redispatch ? What about transmission reconfiguration, cutting firm purchases (pro-rata or in entirety) acceptable?
Response: The SDT agrees with the comment and the SDT has proposed changes to clarify what System adjustments are allowed.			
WPS	☑		It is inappropriate to rely on Non-consequential loss of load as an ultimate Corrective Action Plan for this event. However, non-consequential load loss can provide interim relief until such time as the Corrective Action Plan is actually constructed and in-service.
Response: The SDT agrees with this comment and has proposed an interim relief provision for the standard.			
Ameren	☑		The outage of any two generators should not result in any non-consequential loss of load.

Q26			
Commenter	**Agree**	**Disagree**	**Comment**
AECC	☑		neither should consequential load be lost. The system should operate to all performance criteria for loss of any one generator station (all units).
AECI	☑		
Allegheny Power	☑		
AEP	☑		
APPA	☑		
ATC	☑		
APS			
BPA	☑		
City Water Power and Light	☑		
Dominion	☑		Dominion agrees with these proposed standards as they are relatively higher probability events and reflect very closely to the Company's internal planning criteria.
Duke Energy	☑		
Entegra	☑		
E ON US	☑		
ERCOT ISO CAISO	☑		Non consequential loss of load should not be permitted for this type of event. Loss of a generator has higher probability and longer duration than many other contingencies. Overlapping outage of a second element while one generator is already out of service and system adjusted would likewise have higher probability than other multiple contingency events.
Exelon	☑		
Georgia Transm.	☑		
ISO/RTO	☑		
KCPL	☑		
LCRA	☑		
MEAG Power	☑		
MISO	☑		
MRO	☑		
NERC TIS	☑		

Q26			
Commenter	**Agree**	**Disagree**	**Comment**
New York ISO	☑		
PJM	☑		
Progress–Carolinas	☑		
Seattle City	☑		
SERC EC DRS	☑		
SERC EC PSS	☑		
Southern Transm.	☑		These are relatively higher probability events and the increase in performance requirements is justified.
WECC TSGT TEP	☑		We agree that Non-Consequential Loss of Load should not be permitted. Loss of a generator has higher probability and longer duration than other contingency events. Overlapping outage of a second element while one generator is already out of service and system adjusted would likewise have higher probability than other multiple contingency events.
Response: Thank you.			

27) Q27. P4-2: Loss of a generator followed by a System adjustment followed by the loss of a monopolar DC line

Summary Response: The SDT notes that FERC's direction with regard to Non-Consequential firm Load and the TPL standards is stated in paragraph 1795 of FERC Order No. 693 as follows: "Based on the record before us, we believe that the transmission planning Reliability Standard should not allow an entity to plan for the loss of non-consequential load in the event of a single contingency." Paragraph 1795 also states, "Therefore, the ERO should modify the sentence to indicate that manual system adjustments, except for shedding firm load or curtailment of firm transfers, are permitted after the first contingency to bring the system back to a normal operating state." These statements which indicate that loss of Non-Consequential firm Load and interruption of firm Transmission service should not be permitted for a single Contingency are meant to apply to Facilities covered by reliability standards regardless of voltage, economics, or rate recovery issues.

These events are on higher voltage facilities on the BES. The probability of the outage of one generator followed by the outage of another generator is higher than the probability of a single Transmission line outage. Therefore, the SDT has drafted the standard to not permit loss of Non-Consequential Load or interruption of firm Transmission service for the loss of a generator followed by System adjustment followed by the loss of another generator. The majority of the commenters in response to the first posting of the standard agreed with the SDT's approach in this regard.

Issues of cost recovery are beyond the scope of the standard.

Q27			
Commenter	**Agree**	**Disagree**	**Comment**
Muscatine P&W			See Q43 Comment #5.
Response: Please see response to Q43 #5.			
Northwestern Energy		☑	What is non-consequential load loss? Is losing a motor due to motor contactor action a non-consequential load loss? Also, the transmission system was developed under criteria without this requirement and to correct it would be costly.
BCTC		☑	Similar to Q26.
Central Maine Power New England ISO NU NSTAR United Illuminating		☑	If the base case or a mandatory sensitivity case already includes unplanned generator outages, some load loss may be reasonable following the subsequent loss of an additional generators and a monopolar DC line
National Grid		☑	If mitigation plans are required that are based on studies that already include unplanned generator outages, then some load loss may be reasonable following the subsequent loss of an additional generator and a monopolar DC line
FirstEnergy		☑	Shedding load could be part of the system adjustment in preparation for the next possible contingency but load drop would not be acceptable for problems caused soley by the first contingency.
FPL FRCC		☑	Systems should be planned such that the loss of a generator, followed by System adjustment, followed by the loss of another generator would not result in Non-consequential Load Loss, and

Q27			
Commenter	**Agree**	**Disagree**	**Comment**
			equipment ratings would not be exceeded etc. However, the initial state of the system must be clarified in all performance table scenarios (including P4-1).If the Base Case contained known planned outages of generating units, as implied by the requirement R1.4, then the standard performance requirements could be interpreted to require planning for all G-1-1-1 events.
LADWP		☑	Ditto (26)
SRP		☑	Same as Q26.
Santee Cooper SERC RRS OPS		☑	Same comment as question #26.
SaskPower		☑	Local area network load is allowed to be shed in Saskatchewan. The Saskatchewan Regulatory Jurisdiction has no plans to change this unless there is technical evidence to justify the increase in reliability. The SDT should justify that the benefit to customers of this increased reliability justifies the cost.
HQTE	☑		Load curtailment may need to be implemented during system adjustment to ensure reliability for the next contingency and may be reasonable following the subsequent loss of an additional generator and a monopolar DC line
IESO	☑		Same reason as above except in this case, the loss of a monopolar dc line could interrupt import. Again, it is a resource issue, not a transmission reliability issue.
ITC	☑		Also use of system adjustment should consider time required to complete adjustment.
Manitoba Hydro	☑		With the caveat that firm transfer is included in the adjustment, otherwise there is a hugh cost with minimal reliability benefit.
Tenaska	☑		This is really an issue that should be driven by the customers
Response: Please see response to #26.			
CenterPoint		☑	CenterPoint Energy believes the assumption that this is a high probability event is incorrect. Furthermore, an absolute requirement prohibiting non-consequential loss of load has economic and landowner impacts that cannot be ignored.
Response: The SDT disagrees with the commenter's first statement. The SDT has outage data for representative Facilities which show that the probability of an event involving one generator outage followed by a DC line is within an order of magnitude of an event involving a single Transmission line. With regard to the commenter's second comment, the SDT notes that in Order 693 FERC directs NERC to prohibit loss of Non-Consequential firm Load for a single Contingency and therefore the SDT believes that this is an appropriate requirement for the standard. FERC's direction is meant to apply to BES Facilities covered by reliability standards regardless of land-use, voltage, economics, or rate recovery issues. Issues of land-use, economics, and cost recovery are not to be addressed by the SDT as being beyond the scope of the SDT. The majority of commenters in response to the first posting of the draft standard agreed with this approach. See also the SDT's summary response.			
Entergy		☑	This would require an increase in investment that will place an undue cost burden on all customers for low probability events. It does not appear that there has been any meaningful balancing of the potential benefits agains the significant increase in cost that will be required.

Q27			
Commenter	**Agree**	**Disagree**	**Comment**
			See comments to Q43.
Response: The SDT has outage data for representative Facilities which show that the probability of an event involving one generator outage followed by a DC line is within an order of magnitude of an event involving a single Transmission line. With regard to the commenter's second comment, the SDT notes that in Order 693 FERC directs NERC to prohibit loss of Non-Consequential firm Load for a single Contingency and therefore the SDT believes that this is an appropriate requirement for the standard. FERC's direction is meant to apply to BES Facilities covered by reliability standards regardless of land-use, voltage, economics, or rate recovery issues. Issues of land-use, economics, and cost recovery are not to be addressed by the SDT as being beyond the scope of the SDT. The majority of commenters in response to the first posting of the draft standard agreed with this approach. See also the SDT's summary response.			
Progress–Florida		☑	The severity of this event is such that Non-Consequential Loss of Load might be a necessary operating procedure in a Corrective Action Plan as part of System restoration, provided that the Non-Consequential Loss of Load is confined to a single control area (i.e., not resulting in a cascading outage). Furthermore, the frequency of an event should not be the primary factor determining whether or not Non-Consequential Loss of Load is permitted, but rather the presence or absence of cascading for the event. Existing Category C requirements are adequate for this type of event.
Response: The SDT agrees that the draft standard could reasonably be interpreted that if a major generating outage lasts more than 1 year that the System still needs to be able to meet G-1, System adjustment and then, a 2nd G-1 without the loss of any Non-Consequential Load. This interpretation would require new construction to meet any G-1 + G-1 + G-1, because there would be a violation of the standard if any plant outage occurred and was not available over the peak period during the planning horizon. The SDT believes this is beyond most present planning across NERC. Therefore, the SDT has made a change to the proposed standard to develop a new requirement to replace R1.4 in the modeling section. The new requirement will be to perform the tests outlined in the performance requirements table and demonstrate that thermal and voltage limits are met, however, all manual and/or automatic actions are allowed (within time constrained ratings) including curtailing firm transfers and controlled shedding of Non-Consequential firm Load. The SDT has outage data for representative Facilities which show that the probability of an event involving one generator outage followed by a DC line is within an order of magnitude of an event involving a single Transmission line. With regard to the commenter's second comment, the SDT notes that in Order 693 FERC directs NERC to prohibit loss of Non-Consequential firm Load for a single Contingency and therefore the SDT believes that this is an appropriate requirement for the standard. FERC's direction is meant to apply to BES Facilities covered by reliability standards regardless of land-use, voltage, economics, or rate recovery issues. Issues of land-use, economics, and cost recovery are not to be addressed by the SDT as being beyond the scope of the SDT. The majority of commenters in response to the first posting of the draft standard agreed with this approach. See also the SDT's summary response.			
SCE&G		☑	Planned load loss should be allowed.
TVA		☑	It is agreed that this event should be tested for maintaining reliability of the BES, however planned load loss should be allowed.
Response: The SDT agrees that Consequential (direct) Load Loss should be allowed but disagrees that planned loss of Non-Consequential firm Load should be allowed. The standard has been drafted to allow Consequential direct Load Loss for this event but not Non-Consequential Load Loss for this Contingency event. The SDT has outage data for representative Facilities which show that the probability of an event involving one generator outage followed by a DC line outage is within an order of magnitude than an event involving a single Transmission line. The SDT notes that in Order 693 FERC directs NERC to prohibit loss of Non-Consequential firm Load for a single Contingency and			

Q27			
Commenter	**Agree**	**Disagree**	**Comment**
therefore the SDT believes that this is an appropriate requirement for the standard. The majority of commenters in response to the first posting of the draft standard agreed with this approach. See also the SDT's summary response.			
MRO	☑		The monopolar DC line words should be revised to "a single pole of a DC line".
Response: The SDT agrees and has made appropriate changes to the tables.			
NPCC RCS	☑		Load curtailment may need to be implemented during system adjustment to ensure reliability for the next contingency and may be reasonable following the subsequent loss of an additional generator and a monopolar DC line
Response: See summary response.			
ABB	☑		
Ameren	☑		The outage of a generator and any other element should not result in any non-consequential loss of load.
AECC	☑		neither should consequential load be lost. The system should operate to all performance criteria for loss of any one generator station (all units).
AECI	☑		AECI
Allegheny Power	☑		Allegheny Power
AEP	☑		AEP
APPA	☑		APPA
ATC	☑		ATC
BPA	☑		BPA
Brazos Electric	☑		
City Water Power and Light	☑		
Dominion	☑		Although we do not have any DC lines, Dominion agrees with these proposed standards as they are relatively higher probability events and reflect very closely to the Company's internal planning criteria.
Duke Energy	☑		
Entegra	☑		
ERCOT ISO CAISO	☑		Agree that non consequential loss of load should not be permitted due to higher probability of generator outage.
Exelon	☑		
Georgia Transm.	☑		

Q27			
Commenter	**Agree**	**Disagree**	**Comment**
ISO/RTO	☑		
KCPL	☑		
LCRA	☑		
MEAG Power	☑		
MISO	☑		
NERC TIS	☑		
New York ISO	☑		
PJM	☑		
Progress–Carolinas	☑		
Seattle City	☑		
SERC EC DRS	☑		
SERC EC PSS	☑		
Southern Transm.	☑		See comment for Q26 [These are relatively higher probability events and the increase in performance requirements is justified.
WECC TSGT TEP	☑		We agree that Non-Consequential Loss of Load should not be permitted. Loss of a generator has higher probability and longer duration than other contingency events. Overlapping outage of a second element while one generator is already out of service and system adjusted would likewise have higher probability than other multiple contingency events.
WPS	☑		See response to Q26.
Response: Thank you.			

28) Q28. P4-3: Loss of a generator followed by System adjustment followed by loss of a Transmission circuit

Summary Response: The SDT notes that FERC's direction with regard to Non-Consequential firm Load and the TPL standards is provided in paragraph 1795 of FERC Order No. 693 which indicates that loss of Non-Consequential firm Load and interruption of firm Transmission service should not be permitted for a single Contingency regardless of voltage, economics, or rate recovery issues. Also see summary response to question 26.

These events are on higher voltage facilities on the BES. The probability of the outage of one generator followed by the loss of a Transmission line is within an order of magnitude of a single Transmission line outage. Therefore, the SDT has drafted the standard to not permit loss of Non-Consequential firm Load or interruption of firm Transmission service for the loss of a generator followed by System adjustment followed by the loss of a Transmission line. Issues of land-use, economics, and cost recovery are beyond the scope of the standard.

The majority of the commenters in response to the first posting of the standard agreed with the SDT's approach in this regard.

Q28			
Commenter	**Agree**	**Disagree**	**Comment**
Muscatine P&W			See Q43 Comment #5.
Response: Please see response to Q43 #5.			
Brazos Electric		☑	Need definition of system adjustment.
Response: The SDT agrees that system adjustment needed to be clarified. The SDT has made clarifying changes to the tables.			
Northwestern Energy		☑	What is non-consequential load loss? Is losing a motor due to motor contactor action a non-consequential load loss? Also, the transmission system was developed under criteria without this requirement and to correct it would be costly.
BCTC		☑	Similar to Q26.
Central Maine Power New England ISO NU NSTAR United Illuminating		☑	If the base case or a mandatory sensitivity case already includes unplanned generator outages, some load loss may be reasonable following the subsequent loss of an additional generators and a Transmission circuit
National Grid		☑	If mitigation plans are required that are based on studies that already include unplanned generator outages, then some load loss may be reasonable following the subsequent loss of an additional generator and a Transmission circuit
FirstEnergy		☑	Shedding load could be part of the system adjustment in preparation for the next possible contingency but load drop would not be acceptable for problems caused soley by the first contingency.
FPL FRCC		☑	Systems should be planned such that the loss of a generator, followed by System adjustment, followed by the loss of another generator would not result in Non-consequential Load Loss, and equipment ratings would not be exceeded etc. However, the initial state of the system must be

Q28			
Commenter	**Agree**	**Disagree**	**Comment**
			clarified in all performance table scenarios (including P4-1).If the Base Case contained known planned outages of generating units, as implied by the requirement R1.4, then the standard performance requirements could be interpreted to require planning for all G-1-1-1 events.
LADWP		☑	Ditto (26)
SRP		☑	Same as Q26.
SaskPower		☑	Local area network load is allowed to be shed in Saskatchewan. The Saskatchewan Regulatory Jurisdiction has no plans to change this unless there is technical evidence to justify the increase in reliability. The SDT should justify that the benefit to customers of this increased reliability justifies the cost.
HQTE	☑		Load curtailment may need to be implemented during system adjustment to ensure reliability for the next contingency and may be reasonable following the subsequent loss of an additional generator and a Transmission circuit.
IESO	☑		Similar reason as above. In this case, while the second contingency is the loss of a transmission circuit, the first contingency (loss of a generator) has not changed the system topology. Hence, the system condition after having been adjusted following the first contingency should in essence be similar to the all transmission facilities in service condition for which the non-consequential loss of load performance for single contingencies is expected.
ITC	☑		Also use of system adjustment should consider time required to complete adjustment. Ability for generation adjustment should include the time required for unit startup if applicable.
Manitoba Hydro	☑		With the caveat that firm transfer is included in the adjustment, otherwise there is a hugh cost with minimal reliability benefit.
Tenaska	☑		This is really an issue that should be driven by the customers
Response: See response to #26.			
CenterPoint		☑	CenterPoint Energy believes the assumption that this is a high probability event is incorrect. Furthermore, an absolute requirement prohibiting non-consequential loss of load has economic and landowner impacts that cannot be ignored.
Response: The SDT disagrees with the commenter's first statement. The SDT has outage data for representative Facilities which show that the probability of an event involving one generator outage followed by a Transmission line is within an order of magnitude of an event involving a single Transmission line. With regard to the commenter's second comment, see the summary response with regard to FERC Order No. 693.			
CPS Energy		☑	Should be determined at the discretion of the Transmission Planners.
Entergy		☑	This would require an increase in investment that will place an undue cost burden on all customers for low probability events. It does not appear that there has been any meaningful balancing of the potential benefits against the significant increase in cost that will be required. See comments to Q43.
Response: The SDT has outage data for representative Facilities which show that the probability of an event involving one generator outage			

Q28			
Commenter	**Agree**	**Disagree**	**Comment**
followed by a Transmission line is within an order of magnitude of an event involving a single Transmission line. With regard to the commenter's second comment, see the summary response with regard to FERC Order No. 693.			
JEA		☑	I do agree that long term plans should be implemented with the goal to eliminate non-consequential load shedding as a response to this failure mode. However, it may be more beneficial for investing in system improvements to reach this state of robustness where there may be a few years or seasons of potential exposure for utilizing non-consequential load shedding. This should be prudent utility practice as long as post-contingency response is executed within the time frame allowed by the facility emergency ratings and load shedding is limited to TP's contracted or tariff loads.
Response: SDT agrees that sufficient time must be provided for transition and will provide for that in the implementation plan for the standard. With regard to other comments, see summary response.			
Progress–Florida		☑	The severity of this event is such that Non-Consequential Loss of Load might be a necessary operating procedure in a Corrective Action Plan as part of System restoration, provided that the Non-Consequential Loss of Load is confined to a single control area (i.e., not resulting in a cascading outage). Furthermore, the frequency of an event should not be the primary factor determining whether or not Non-Consequential Loss of Load is permitted, but rather the presence or absence of cascading for the event. Existing Category C requirements are adequate for this type of event.
Response: The SDT agrees that the draft standard could reasonably be interpreted that if a major generating outage lasts more than 1 year that the System still needs to be able to meet G-1, System adjustment and then, a 2nd G-1 without the loss of any Non-Consequential Load. This interpretation would require new construction to meet any G-1 + G-1 + G-1, because there would be a violation of the standard if any plant outage occurred and was not available over the peak period during the planning horizon. The SDT believes this is beyond most present planning across NERC. Therefore, the SDT has made a change to the proposed standard to develop a new requirement to replace R1.4 in the modeling section. The new requirement will be to perform the tests outlined in the performance requirements table and demonstrate that thermal and voltage limits are met, however, all manual and/or automatic actions are allowed (within time constrained ratings) including curtailing firm transfers and controlled shedding of Non-Consequential firm Load. The SDT has outage data for representative Facilities which show that the probability of an event involving one generator outage followed by a Transmission line is within an order of magnitude of an event involving a single Transmission line. With regard to the commenter's second comment, see the summary response with regard to FERC Order No. 693.			
Santee Cooper SERC RRS OPS		☑	Same comment as question #26.
SCE&G		☑	Planned load loss should be allowed.
TVA		☑	It is agreed that this event should be tested for maintaining reliability of the BES, however planned load loss should be allowed.
Response: The SDT agrees that Consequential (direct) Load Loss should be allowed but disagrees that planned loss of Non-Consequential firm Load should be allowed. The standard has been drafted to allow Consequential direct Load Loss for this event but not Non-Consequential Load Loss for this Contingency event. The SDT has outage data for representative Facilities which show that the probability of an event			

Q28			
Commenter	**Agree**	**Disagree**	**Comment**
involving one generator outage followed by a DC line outage is within an order of magnitude than an event involving a single Transmission line. Also, see the summary response with regard to FERC Order No. 693.			
IESO	☑		Similar reason as above. In this case, while the second contingency is the loss of a transmission circuit, the first contingency (loss of a generator) has not changed the system topology. Hence, the system condition after having been adjusted following the first contingency should in essence be similar to the all transmission facilities in service condition for which the non-consequential loss of load performance for single contingencies is expected.
ITC	☑		Also use of system adjustment should consider time required to complete adjustment. Ability for generation adjustment should include the time required for unit startup if applicable.
Manitoba Hydro	☑		With the caveat that firm transfer is included in the adjustment, otherwise there is a hugh cost with minimal reliability benefit.
NPCC RCS	☑		Load curtailment may need to be implemented during system adjustment to ensure reliability for the next contingency and may be reasonable following the subsequent loss of an additional generator and a Transmission circuit
Response: Please see response to Q27.			
ABB	☑		
Ameren	☑		The outage of a generator and any other element should not result in any non-consequential loss of load.
AECC	☑		neither should consequential load be lost. The system should operate to all performance criteria for loss of any one generator station (all units).
AECI	☑		
Allegheny Power	☑		
AEP	☑		
APPA	☑		
ATC	☑		
BPA	☑		
CAISO	☑		Same reason as in Q26.
City Water Power and Light	☑		
Dominion	☑		Dominion agrees with these proposed standards as they are relatively higher probability events and reflect very closely to the Company's internal planning criteria.
Duke Energy	☑		
Entegra	☑		

Q28			
Commenter	**Agree**	**Disagree**	**Comment**
E ON US	☑		
ERCOT ISO	☑		Same reason as in Q26.
Exelon	☑		
Georgia Transm.	☑		
ISO/RTO	☑		
KCPL	☑		
LCRA	☑		
MEAG Power	☑		
MISO	☑		
MRO	☑		
NERC TIS	☑		
New York ISO	☑		
NCEMC	☑		See reply to Q26.
PJM	☑		
Progress–Carolinas	☑		
Seattle City	☑		
SERC EC DRS	☑		
SERC EC PSS	☑		
Southern Transm.	☑		See comment for Q26 [These are relatively higher probability events and the increase in performance requirements is justified.
WECC TSGT TEP	☑		We agree that Non-Consequential Loss of Load should not be permitted. Loss of a generator has higher probability and longer duration than other contingency events. Overlapping outage of a second element while one generator is already out of service and system adjusted would likewise have higher probability than other multiple contingency events.
WPS	☑		See response to Q26.
Response: Thank you.			

29) Q29. P4-4: Loss of a generator followed by System adjustment followed by loss of a transformer

Summary Response: The SDT notes that FERC's direction with regard to Non-Consequential firm Load and the TPL standards is provided in paragraph 1795 of FERC Order No. 693 which indicates that loss of Non-Consequential firm Load and interruption of firm Transmission service should not be permitted for a single Contingency regardless of voltage, economics, or rate recovery issues. See summary response to Q26.

These events are on higher voltage facilities on the BES. The probability of the outage of one generator followed by the loss of a transformer is within an order of magnitude of a single Transmission line outage. Therefore, the SDT has drafted the standard to not permit loss of Non-Consequential firm Load or interruption of firm Transmission service for the loss of a generator followed by System adjustment followed by the loss of a transformer. The majority of the commenters in response to the first posting of the standard agreed with the SDT's approach in this regard.

Q29			
Commenter	**Agree**	**Disagree**	**Comment**
Muscatine P&W			See Q43 Comment #5.
Response: Please see response to Q43 #5.			
Brazos Electric		☑	See above.
Northwestern Energy		☑	What is non-consequential load loss? Is losing a motor due to motor contactor action a non-consequential load loss? Also, the transmission system was developed under criteria without this requirement and to correct it would be costly.
BCTC		☑	Similar to Q26.
Central Maine Power New England ISO NU NSTAR United Illuminating		☑	If the base case or a mandatory sensitivity case already includes unplanned generator outages, some load loss may be reasonable following the subsequent loss of an additional generators and a transformer
National Grid		☑	If mitigation plans are required that are based on studies that already include unplanned generator outages, then some load loss may be reasonable following the subsequent loss of an additional generator and a transformer
FirstEnergy		☑	Shedding load could be part of the system adjustment in preparation for the next possible contingency but load drop would not be acceptable for problems caused soley by the first contingency.
FPL FRCC		☑	Systems should be planned such that the loss of a generator, followed by System adjustment, followed by the loss of another generator would not result in Non-consequential Load Loss, and equipment ratings would not be exceeded etc. However, the initial state of the system must be clarified in all performance table scenarios (including P4-1).If the Base Case contained known planned outages of generating units, as implied by the requirement R1.4, then the standard performance requirements could be interpreted to require planning for all G-1-1-1 events.

Q29			
Commenter	**Agree**	**Disagree**	**Comment**
JEA		☑	See comment on P4-3.
LADWP		☑	Ditto (26)
SRP		☑	Same as Q26.
Santee Cooper SERC RRS OPS		☑	Same comment as question #26.
HQTE	☑		Load curtailment may need to be implemented during system adjustment to ensure reliability for the next contingency and may be reasonable following the subsequent loss of an additional generator and a transformer.
IESO	☑		Similar reason as above.
ITC	☑		Also use of system adjustment should consider time required to complete adjustment. Ability for generation adjustment should include the time required for unit startup if applicable.
Manitoba Hydro	☑		With the caveat that firm transfer is included in the adjustment, otherwise there is a hugh cost with minimal reliability benefit.
Tenaska	☑		This is really an issue that should be driven by the customers
Response: Please see response to Q26.			
CenterPoint		☑	CenterPoint Energy believes the assumption that this is a high probability event is incorrect. Furthermore, an absolute requirement prohibiting non-consequential loss of load has economic and landowner impacts that cannot be ignored.
Response: The SDT disagrees with the commenter's first statement. The SDT has outage data for representative Facilities which show that the probability of an event involving one generator outage followed by a transformer is within an order of magnitude of an event involving a single Transmission line. With regard to the commenter's second comment, see summary response.			
CPS Energy		☑	Should be determined at the discretion of the Transmission Planners.
Entergy		☑	This would require an increase in investment that will place an undue cost burden on all customers for low probability events. It does not appear that there has been any meaningful blancing of the potential benefits against the significant increase in cost that will be required See comments to Q43.
Response: The SDT has outage data for representative Facilities which show that the probability of an event involving one generator outage followed by a transformer is within an order of magnitude of an event involving a single Transmission line. With regard to the commenter's second comment, see summary response			
Progress–Florida		☑	The severity of this event is such that Non-Consequential Loss of Load might be a necessary operating procedure in a Corrective Action Plan as part of System restoration, provided that the Non-Consequential Loss of Load is confined to a single control area (i.e., not resulting in a cascading outage). Furthermore, the frequency of an event should not be the primary factor determining whether or not Non-Consequential Loss of Load is permitted, but rather the presence or absence of cascading for the event. Existing Category C requirements are adequate for this

Q29			
Commenter	**Agree**	**Disagree**	**Comment**
			type of event.
NPCC RCS	☑		Load curtailment may need to be implemented during system adjustment to ensure reliability for the next contingency and may be reasonable following the subsequent loss of an additional generator and a transformer
Response: Please see response to Q27.			
SCE&G		☑	Planned load loss should be allowed.
TVA		☑	It is agreed that this event should be tested for maintaining reliability of the BES, however planned load loss should be allowed.
Response: The SDT agrees that Consequential (direct) Load Loss should be allowed but disagrees that planned loss of Non-Consequential firm Load should be allowed. The standard has been drafted to allow Consequential direct Load Loss for this event but not Non-Consequential Load Loss for this Contingency event. The SDT has outage data for representative Facilities which show that the probability of an event involving one generator outage followed by a DC line outage is within an order of magnitude than an event involving a single Transmission line. Also, see the summary response with regard to FERC Order No. 693.			
Duke Energy	☑		Table in TPL-001-1 doesn't include the last part of P4-4 (low side voltage rating above 300 kV). We assume the inclusion of 300kV here in the comment form is in error.
Response: The SDT notes that the original comment form was in error as described in your comment. The SDT noticed the error and revised the comment form and reposted it to correct the error.			
MISO	☑		Note - No voltage limit for generator and transformer per Table 1, P4-4
KCPL	☑		Need voltage limit in Table 1.
Response: The SDT disagrees because voltage limits differ from system to system.			
ABB	☑		
Ameren	☑		The outage of a generator and any other element should not result in any non-consequential loss of load.
AECC	☑		neither should consequential load be lost. The system should operate to all performance criteria for loss of any one generator station (all units).
AECI	☑		
Allegheny Power	☑		
AEP	☑		
APPA	☑		
ATC	☑		
BPA	☑		
City Water Power and Light	☑		

Q29			
Commenter	**Agree**	**Disagree**	**Comment**
Dominion	☑		Dominion agrees with these proposed standards as they are relatively higher probability events and reflect very closely to the Company's internal planning criteria.
E ON US	☑		
Entegra	☑		
ERCOT ISO CAISO	☑		Same reason as in Q26.
Exelon	☑		
Georgia Transm.	☑		
ISO/RTO	☑		
LCRA	☑		
MEAG Power	☑		
MRO	☑		
NERC TIS	☑		
New York ISO	☑		
NCEMC	☑		See reply to Q26.
PJM	☑		
Progress–Carolinas	☑		
Seattle City	☑		
SERC EC DRS	☑		
SERC EC PSS	☑		
Southern Transm.	☑		See comment for Q26 [These are relatively higher probability events and the increase in performance requirements is justified.
WECC TSGT TEP	☑		We agree that Non-Consequential Loss of Load should not be permitted. Loss of a generator has higher probability and longer duration than other contingency events. Overlapping outage of a second element while one generator is already out of service and system adjusted would likewise have higher probability than other multiple contingency events.
WPS	☑		See response to Q26.
Response: Thank you.			

The performance requirement for the following event may be considered less stringent than the existing TPL Standards — P2-3: Loss of a single pole of a DC line. Interruption of firm transactions (without Loss of firm Load) if the transaction is dependent on the faulted DC line is now allowed for this initiating event/Contingency.

30) Q30. Do you agree that interruption of any firm transfers that are dependent on the outaged DC line that is taken out of service should be permitted?

Summary Response: Some commenters that agreed with curtailing firm transfers that are dependent on a DC line when the DC line is outaged indicated that such curtailment should apply to AC lines as well. Also, some of these parties indicated concern that other transfers such as interruptible transfers should be also allowed. The SDT did not make a change in response to these comments because many of the transfers over DC lines are automatically curtailed when the DC line is outaged and because the ability to interrupt other transfers such as non-firm transfers are already provided for in the standard.

Q30			
Commenter	**Agree**	**Disagree**	**Comment**
Muscatine P&W			See Q43 Comment #5.
Response: The SDT does not see how Muscatine Power and Water's Comment #5 to Q43 relates to this question. The SDT does not make any change to the standard with regard to Q30 as a result of this comment.			
Ameren		☑	If the system cannot withstand the outage of the single element (AC or DC) without curtailment of the transfer, then the transaction should not be considered as firm.
AECC		☑	
BCTC		☑	Disagree with this unless AC lines are treated the same. There should be no distinction between AC and DC lines.
Duke Energy		☑	DC and AC line contingencies should have the same requirements.
Entergy	☑	☑	Why are only DC lines exempt for this requirement? Consider exemptions for AC transmission elements as well.
FPL		☑	The proposed standard does not distinguish between asynchronous DC ties and the more common parallel connected DC tie. With an asynchronous DC tie, the transfer is lost with the tie. With a parallel DC tie, the transfer will be shifted to the parallel AC system, therefore, AC lines should have the same performance criteria as DC lines.
FRCC		☑	DC and AC lines should not be treated differently. System response is similar for the loss of an AC line versus the loss of a parallel connected DC tie. For the loss of a parallel DC tie the transfer is shifted to the parallel AC system in the same manner as a loss of an AC line. The decision in selecting DC vs. AC in transmission lines has traditionally been based on the break-even cost and performance of the two alternatives. The lower performance requirement may wrongly influence decisions on project alternatives in favor of DC facilities with less stringent requirements. Therefore, AC lines should have the same performance criteria as DC lines.
Progress–Carolinas		☑	DC and AC lines should be treated comparably.

Q30			
Commenter	**Agree**	**Disagree**	**Comment**
Santee Cooper		☑	AC and DC contingency events should be treated the same.
SaskPower	☑		Why is this concept not applied to AC tie-lines between systems, whether single or multiple? In Saskatchewan's case there is very little difference.
SERC EC DRS		☑	DC and AC contingency events should be treated the same.
SERC RRS OPS		☑	DC and AC contingency events should be treated the same. The question is somewhat obscure.
SCE&G		☑	General there should be no difference between AC and DC; however, the answer to this question depends on the contractual arrangements associated with the transfer.
Southern Transm.		☑	Why should the reliability level for a transaction on a DC line be different from a transaction over AC? Also, when the transfer over DC is removed, the load it was serving still has to be picked up in the AC network because load cannot be dropped. Therefore, this places a burden on the AC network to serve additional load. If you allow transfers over DC to be interrupted, you should also allow the interruption of transfers over AC for the same events.
LADWP		☑	If the transfer is on a line experiencing outage, then the transfer is interrupted. Whether or not the transfer is firm is immaterial. Whether or not it is on the dc or ac line is also immaterial.
Central Maine Power HQTE National Grid New England ISO NU NPCC RCS NSTAR United Illuminating	☑		This should also apply to firm transfers via single or double ac facilities as well. In either case, the transfer could be linked to dedicated facilities.
ITC	☑		However, the owners of the firm transfers may not agree. If they don't, a system impact study needs to be part of the assessment IF THE OWNERS OF THE FIRM TRANSFERS DO NOT AGREE. It must be clear to the original TSR requester that this was truly conditional on the DC line being in service. If it was granted without telling them this, then the interruption of firm transfers should NOT be permitted.
TVA	☑		There are also conditions where this interruption should be allowed for a single AC tie line.
Response: The SDT did not make a change in response to your comment because many of the transfers over DC lines are automatically curtailed when the DC line is outaged.			
IESO		☑	Whether or not interruption of firm transfers should be allowed is more a business arrangement issue than a transmission reliability issue. Usually, delivery over a DC line, either as an import or access to internal or external resources, is factored into the resource integration plan to support meeting demand and energy transfers. The commitment for firm transfers may be made on the reliance of this delivery. However, the contingent loss of any resources including import is assessed in determining the amount and terms of firm transfers to a third part. This is a business

Q30			
Commenter	**Agree**	**Disagree**	**Comment**
			and resource allocation issue, not a transmission reliability issue.
Response: While it is true that there are business issues associated with the subject of this question, the SDT disagrees with the commenter with regard to the relevance for reliability. How firm transfers will be treated in the standard will have significant impact on Transmission System reliability across NERC. The SDT has not directly made any changes to the standard as a result of this comment but has considered this comment in deciding how to proceed with firm transfers in the standard.			
Progress–Florida		☑	The proposed standard does not distinguish between asynchronous DC ties and the more common parallel connected DC tie. With an asynchronous DC tie, the transfer is lost with the tie. With a parallel DC tie, the transfer will be shifted to the parallel AC system and should have the same performance requirements.
Response: The SDT deleted the reference to asynchronous DC ties in the tables.			
WECC BPA TSGT TEP	☑	☑	We agree with the question asked. In addition, transactions that can be interrupted due to the loss of a DC line should not be limited to the firm transactions, that are dependent on the DC line. It should also include interruptible transactions and other transactions made available through negotiated agreements on both AC and DC lines.
Response: The SDT did not make a change in response to your comment because many of the transfers over DC lines are automatically curtailed when the DC line is outaged and because the ability to interrupt other transfers such as non-firm transfers are already provided for in the standard**.**			
Manitoba Hydro	☑		MH agrees that reduction of firm transfer to readjust the system after a contingency should be allowed for all events. The requirement to maintain firm transfer is a more stringent requirement that in the existing standard. The need to maintain firm transfer amounts to N-2 planning with no reliability benefit. Reduction in firm transfer is not equivalent to loss of load as the transfer is backed up by reserves. MH could not accept a standard mandating that firm transfer can not be interrupted. MH also recommends P2-3 be moved into the P1 bucket as loss of a single pole of a dc line is similar to loss of a generator or transmission circuit.
Response: The SDT does not agree with your first comment on the need to allow reduction of firm transfer for all events since changes have been made to the standard to comply with FERC Order No. 693 which does not allow curtailment of firm transfer or dropping Non-Consequential Load for single Contingencies. The SDT agrees with your second comment and has made the change in the tables.			
MRO	☑		The MRO questions why interruptions of firm transfers are not allowed in other cases since load dropping is allowed for these cases.
Response: The SDT did not make a change in response to your comment because the ability to interrupt other transactions, such as interruptibles, is already provided for in the standard.			
ABB	☑		Yes, this is the purpose of HVDC. It carries the power your want, no more, no less. Both the good and bad of parallel flows are avoided.
Brazos Electric	☑		

Q30			
Commenter	**Agree**	**Disagree**	**Comment**
City Water Power and Light	☑		
Dominion			Not applicable since Dominion has no DC lines.
E ON US			No opinion, we do not operate DC.
ERCOT ISO CAISO	☑		In addition, the interruptible and other negotiated transactions should also be allowed.
Northwestern Energy	☑		
AECI	☑		
Allegheny Power	☑		
AEP	☑		
APPA	☑		
Exelon	☑		
FirstEnergy	☑		
ISO/RTO	☑		
KCPL	☑		"Firm" capacity dependent on DC line is similar reliability as a generator.
MISO	☑		The key word in this question is "dependent". Transfer is "firm" if DC line is in service.
NERC TIS			TIS will discuss this in further review of the standards development.
New York ISO	☑		NYISO agrees from a reliability aspect.
NCEMC	☑		Not applicable.
PJM	☑		
Seattle City	☑		Otherwise, we need reserve transfer capacity equal to the total of the firm transfers, which is not very cost effective!
Tenaska	☑		
WPS	☑		
Response: Thank you.			

E) Stability

31) Q31. The proposed standard is based on an assumption that steady state analysis and stability analysis are different from each other and that therefore, two tables of Contingencies and performance requirements were needed. It is also based on an assumption that stability study requirements should be clearly separated from the steady state study requirements. Do you agree with the action taken in separating stability analysis from steady state analysis? If not, please explain.

Summary Response: Some respondents thought that the Contingencies are the same for steady state and Stability or should be made the same with only one table. Some respondents thought that having two tables was confusing while others thought it improved clarity. The large majority agreed that separating Stability from steady state was the appropriate approach. The SDT will continue to have Stability and steady state analysis separate with two tables.

Q31			
Commenter	**Yes**	**No**	**Comment**
Ameren		☑	We understand the need to clarify the different requirements in the steady- state vs. the stability analyses. However, for each contingency category we expect to see both the steady-state requirements and the corresponding stability requirements in the same table. We believe that it would be better to recombine the steady-state and stability tables and present the information in a landscape format.
Response: The Contingencies are different in the extreme category. Therefore, it will be less clear to have only one table which includes both. The SDT decided to keep two tables.			
BCTC		☑	Disagree with the assumption that steady state and stability analysis are different and should be separated. There are only minor differences between the tables and the reasons are not apparent. The separate tables appear to be unnecessary and is confusing, especially the same contingency numbering for both tables. Any contingency that must be studied in the stability period should also be considered in the post transient steady state period. Request that the SDT provide an explanation of their assumption.
FPL		☑	The separation of steady state and dynamic response analysis requirements into two tables (with different contingencies) is inferior to the analysis requirements outlined in Table 1 of the existing TPL Standard. The structure of Table 1 reinforces the requirement for grid stability and maintaining the grid within applicable limits for Category B and C contingencies. Dynamic simulations of Category B and C contingencies that demonstrate grid stability should be followed up with post transient power flow analysis to assess voltage and thermal limits.
FRCC		☑	There are two points of view for this question. One view is that having the performance requirement for steady state and dynamics on two separate tables is a good idea. It makes it easier to identify the performance requirements for steady state and dynamics. The other view is that separation of these requirements into two tables is not necessary because the existing tables are clear and FERC Order 693 only required the footnotes to be clarified not to redevelop the tables. The structure of existing Table 1 reinforces the requirement for grid stability and maintaining the grid within

Q31			
Commenter	**Yes**	**No**	**Comment**
			applicable limits.
HQTE		☑	The contingency studied are the same and as a result should be combined into one table. Only the performance might be different. We understand the need to clarify the different requirements in the steady state vs. the stability analyses. However, for each contingency category we expect to see both the steady-state requirements and the corresponding stability requirements in the same table. We believe that it would be better to recombine the steady-state and stability tables and present the information in a landscape format.
LADWP			There is no vote needed here because even under the current standards, the performance requirements for steady state and stability are clearly separated. So what is being added?
IESO	☑	☑	We agree that the performance requirements for steady state analysis differ from those for stability analysis, but not the contingency requirements. While the specification of, for example, a line to ground fault on a single facility does not mean much to a steady state analysis, and in fact the loss of a single facility is all that it matters, the system is subject to the same type of contingency regardless of the type of analysis to be performed and hence the same contingency needs to be tested in both steady-state and dynamic simulations.
Response: The SDT decided to separate steady state from Stability because the models used in the two analyses are different and the Contingencies required are different. Therefore, the SDT decided to keep two tables.			
FirstEnergy		☑	While we agree that steady-state and stability are different situations, in general we believe that the tables are confusing, overly worded, and should be combined. The initiating events are the same regardless of steady-state or stability so there should be no reason not to combine the tables as was done in the previous standards.
Response: The initiating events are different in the extreme category. Therefore, it will be less clear to have only one table. The SDT decided to keep two tables.			
New England ISO		☑	Only the difference between steady-state and stability analysis should be the performance requirements. The list of contingencies should be identical regardless of the type of analysis.
NPCC RCS		☑	The contingency studied are the same and as a result should be combined into one table.
Manitoba Hydro	☑		Yes but the definition of contingencies in table 1 and table 2 should be identical.
Progress–Florida		☑	The separation of steady state and dynamic response analysis requirements into two tables (with different contingencies) is unnecessary, and is inferior to the analysis requirements outlined in Table 1 of the existing TPL Standard. The structure of the existing Table 1 reinforces the requirement for grid stability and maintaining the grid within applicable limits for Category B and C contingencies. Dynamic simulations of Category B and C contingencies that demonstrate grid stability should be followed up with post transient power flow analysis to assess voltage and thermal limits.
Tenaska		☑	The same set of contingency tests need to be applied to in both steady state and stability studies. The performance levels may need to be characterized a little differently, but at the end of the day we

Q31			
Commenter	**Yes**	**No**	**Comment**
			are trying maintain a reliable system for the same initiating event both in a stability timeframe and a steady state timeframe.
Response: The SDT believes that some contingencies are only appropriate for steady state analysis and not for stability. The SDT believes that two tables are clearer than having only one.			
BPA	☑	☑	Support comments sent by WECC. There is a link between transient stability and steady state performance for a given event since they model serial time frames for the event.
WECC TSGT TEP	☑	☑	We agree with the question asked. In addition, because of the time sequence from the start of the fault, through fault clearing and transient dynamic period, the post-transient period to the steady state post-contingency period, there needs to be clear links between the performance requirements in the transient dynamic time period and the steady state time period. For example, if generator dropping or controlled load interruption is allowed in the transient dynamic period, it should also be allowed in the steady state time period that follows. Otherwise, it would put the Transmission Planners and the Planning Authorities in an untenable situation because, once a generator or load is dropped in the first few cycles after the disturbance; it cannot be required to be on line in the minutes that immediately follow.
Response: The SDT agrees that there should be a clear link between performance requirements in the transient period and the steady state period. We believe the standard as written provides this.			
ERCOT ISO	☑		Agree that the two analyses should be treated separately. It is not clearly defined what is steady state and what is stability. For example, are Voltage Stability (PV analysis) studies steady state or stability? Also what are the differences between System Stability and Plant Stability? Are stability studies only required for the near term planning horizon?
Response: Generally, most parties did not express confusion over the issues that are raised by this question. The SDT believes the general industry understanding is as follows: • Voltage Stability (PV analysis) is considered to be a steady state study. • Generating Unit Stability focuses on an individual generating unit or electrically closely-coupled generating units at maximum power and is concerned with Contingencies on the Transmission Facilities connected to that generating unit(s) point(s) of Interconnection or one bus away from that point. System Stability studies focus on portions of the System, which may include many generating units possibly at maximum power with Contingencies in that area of the System. System studies would also include Contingencies in large Load areas (using Load models with induction motors properly represented) which could result in fast voltage collapse. • System Stability studies are only required in the Near-Term Planning Horizon. Generating Unit Stability studies could be required for the Long-Term Planning Horizon if the commercial operation date of the plant is in the long term.			
ITC	☑		We agree but consideration should be given to the amount of work needed by entities to meet these requirements. Full scale annual stability studies may not be needed. If possible, criteria should be developed as to when stability studies need to be repeated (if at all) and to what level (i.e. every bus on the system or just the generator busses or somewhere in between).
Response: Full scale annual Stability studies are not necessarily required by the standard. Allowance is made for the use of past studies in the current year assessment.			

Q31			
Commenter	**Yes**	**No**	**Comment**
ABB	☑		Yes, I like this. You can maintain them to be as similar as possible, while still containing the requisite differences.
AECC	☑		
AECI	☑		
Allegheny Power	☑		
AEP	☑		
APPA	☑		
ATC	☑		
Brazos Electric	☑		
City Water Power and Light	☑		
CAISO	☑		Agree that the two analysis should be treated separately.
CenterPoint	☑		Separating the stability requirements into a second table improved the clarity.
Central Maine Power	☑		
CPS Energy	☑		
Duke Energy	☑		
Entergy	☑		This approach clarifies the types of stability studies/simulations to be performed. The performance criteria/guidelines are more explicit under the proposed Standard.
Exelon	☑		
Dominion	☑		
E ON US	☑		
Georgia Transm.	☑		
ISO/RTO	☑		
KCPL	☑		
LCRA	☑		
MEAG Power	☑		
MISO	☑		

Q31			
Commenter	**Yes**	**No**	**Comment**
MRO	☑		The MRO commends the SDT in separating the two tables. The single table for both types of studies has generated confusion in the industry.
Muscatine P&W	☑		
National Grid	☑		
NERC TIS	☑		Although there are many similarities, separation of the testing requirements makes the standard far more understandable.
New York ISO	☑		
NCEMC	☑		
NU	☑		
Nstar	☑		
PJM	☑		
Progress–Carolinas	☑		
ReliabilityFirst	☑		
Santee Cooper	☑		
SaskPower	☑		
Seattle City	☑		
SERC EC DRS	☑		
SERC EC PSS	☑		
SERC RRS OPS	☑		
SCE&G	☑		
Southern Transm.	☑		
TVA	☑		
United Illuminating	☑		
WPS	☑		
Northwestern Energy	☑		
Response: Thank you.			

32) Q32. The SDT has added requirements for plant stability studies and has drawn a distinction in these studies from System stability studies. Do you agree with this approach? If not, please explain.

Summary Response: The respondents were divided on this question. Most of the negative opinions expressed a view that there is no material distinction between plant and System Stability, with some indicating that the analysis and requirements are the same for both types of studies. Others also suggested that plant Stability is simply a subset of System Stability. In response to these comments, the SDT modified the standard to clarify the distinction between Generating Unit and System Stability.

The following items were changed due to industry comments:

Generating Unit Stability Study: Study that focuses on an individual generating unit's or electrically closely-coupled generating units' Stability for various Contingencies on the Transmission Facilities connected to that generating unit(s) point(s) of interconnection or one bus away from that point. This study is concerned with the loss of synchronism and the lack of damping of the generating units' power oscillations.

~~**Plant Stability Study**: Study of an individual plant's Stability for various Contingencies in the vicinity of the plant; concerned with the effect on the System of the generating units' loss of synchronism and the damping of the generating units' power oscillations.~~

System Stability Study: ~~Study of the System or portions of the System to ensure that angular Stability is maintained, inter-area power oscillations are damped, and voltages during the dynamic simulation stay within acceptable performance limits.~~ Study that focuses on portions of the System, which may include many generating units, to determine whether angular Stability is maintained, inter-area power oscillations are damped, and voltages during the dynamic simulation stay within acceptable performance limits.

R2.5. The ~~plant~~ Generating Unit Stability analysis portion of the Planning Assessment shall be analyzed consistent with Requirement ~~R4.6~~ R5.6 with studies for the year when the following changes that could affect Stability margins occur:

Q32			
Commenter	**Yes**	**No**	**Comment**
ABB		☑	I don't see any reason to differentiate between "Plant Stability" and "System Stability". These are not commonly separated, and this distinction is not standard in the industry. You should not be inventing a distinction that doesn't exist. A better differentiation would be between generator (or angular) stability and load (or voltage) stability. These are usually independently studied and independently occurring.
CenterPoint		☑	CenterPoint Energy does not see the distinction between system stability and plant stability studies as defined in the draft standard. Meeting the performance requirements set in R4.5 should suffice for all stability studies. The requirements in R4.6 seem overly prescriptive and could potentially result in numerous studies being required that would have very little positive effect on transmission systems throughout the country.
FirstEnergy		☑	We do not see the difference between plant stability and system stability. Both are based on anuglar stability of machines connected to the system and therefore, they should be treated the same.

Q32			
Commenter	**Yes**	**No**	**Comment**
Progress–Carolinas		☑	Don't need to differentiate between plant and system. These are not usually separated. It would be better to separate angular stability and voltage stability. They are studied independently.
Tenaska		☑	It is not clear that there is any difference between the two studies.

Response: See summary response. To make the distinction clearer, the SDT has modified the definitions as well as R 2.5. The SDT also believes that specificity in R 2.5 will reduce the burden of performing the Stability studies necessary to ensure a reliable BES.

Generating Unit Stability Study: Study that focuses on an individual generating unit's or electrically closely-coupled generating units' Stability for various Contingencies on the Transmission Facilities connected to that generating unit(s) point(s) of interconnection or one bus away from that point. This study is concerned with the loss of synchronism and the lack of damping of the generating units' power oscillations.

~~**Plant Stability Study**: Study of an individual plant's Stability for various Contingencies in the vicinity of the plant; concerned with the effect on the System of the generating units' loss of synchronism and the damping of the generating units' power oscillations.~~

System Stability Study: ~~Study of the System or portions of the System to ensure that angular Stability is maintained, inter-area power oscillations are damped, and voltages during the dynamic simulation stay within acceptable performance limits.~~ Study that focuses on portions of the System, which may include many generating units, to determine whether angular Stability is maintained, inter-area power oscillations are damped, and voltages during the dynamic simulation stay within acceptable performance limits.

R2.5. The ~~plant~~ Generating Unit Stability analysis portion of the Planning Assessment shall be analyzed consistent with Requirement ~~R4.6~~ R5.6 with studies for the year when the following changes that could affect Stability margins occur:

CAISO		☑	Plant stability studies are a subset of system stability studies in which loss of a generator is already evaluated to meet performance requirements. In specific situations, sensitivity analysis can be done as deemed appropriate by the TP to address a particular system problem.
Central Maine Power HQTE New England ISO NU NPCC RCS NSTAR United Illuminating		☑	A Plant Stability Study should be a part of a System Stability Study. How should and why would they be differentiated? The analysis and performance constraints are the same in both cases; it's just a matter of whether one or more generating units are involved.
National Grid		☑	As defined in R2.5, a Plant Stability Study should be a part of a System Stability Study. The analysis and performance constraints are the same in both cases; it's just a matter of whether one or more generating units are involved.
Northwestern Energy		☑	Plant stability is an artificial distinction and is a subset of transient stability.
LADWP		☑	See my comment on the definition of Plant Stability. Unless the standard drafting team has something completely different from the common understanding of loss of synchronism and so on,

Q32			
Commenter	**Yes**	**No**	**Comment**
			transient stability covers both the so called Plant Stability and System Stability Studies.
Response: The SDT agrees that Generating Unit Stability studies can be viewed as a subset of System Stability studies. The requirements specific to Generating Unit Stability (Requirements R 2.5 and R 4.6 (now R 5.6)) reflect that view. The SDT believes that the specific focus on Generating Unit Stability in Requirement R 2.5 will reduce the burden of performing the Stability studies necessary to ensure a reliable BES.			
FPL FRCC		☑	There should be no such distinction. All stability studies must meet the Performance Requirements for Planning Events in Table 2 - Stability Performance. If there were different Performance Requirements then the distinction may be warranted. However system stability studies should be sufficient and not warrant additional work.
Progress–Florida		☑	There should be no such distinction. All stability studies must meet the Performance Requirements for "Planning Events in Table 2 - Stability Performance". If there were different Performance Requirements then the distinction may be warranted. If the format for "Planning Events in Table 2 - Stability Performance" remains in its existing state, however, system stability studies are sufficient and performing studies under the guise of Plant Stability would constitute additional work with no incremental benefit.
Response: See summary response concerning the distinction between Generating Unit and System Stability as described in Requirements R 2.4 and R 2.5 as well as Requirements R 4.5 and R 4.6 (now Requirements R 5.5 and R 5.6). To make the distinction clearer, the SDT has modified the definitions as well as Requirements R 2.5. The SDT also believes that specificity in Requirements R 2.5 will reduce the burden of performing the stability studies necessary to ensure a reliable BES. In addition, the required Contingencies for Generating Unit Stability studies are different than the Contingencies for System Stability studies. **Generating Unit Stability Study**: Study that focuses on an individual generating unit's or electrically closely-coupled generating units' Stability for various Contingencies on the Transmission Facilities connected to that generating unit(s) point(s) of interconnection or one bus away from that point. This study is concerned with the loss of synchronism and the lack of damping of the generating units' power oscillations. ~~**Plant Stability Study**: Study of an individual plant's Stability for various Contingencies in the vicinity of the plant; concerned with the effect on the System of the generating units' loss of synchronism and the damping of the generating units' power oscillations.~~ **System Stability Study**: ~~Study of the System or portions of the System to ensure that angular Stability is maintained, inter-area power oscillations are damped, and voltages during the dynamic simulation stay within acceptable performance limits.~~ Study that focuses on portions of the System, which may include many generating units, to determine whether angular Stability is maintained, inter-area power oscillations are damped, and voltages during the dynamic simulation stay within acceptable performance limits. **R2.5**. The ~~plant~~ Generating Unit Stability analysis portion of the Planning Assessment shall be analyzed consistent with Requirement ~~R4.6~~ R5.6 with studies for the year when the following changes that could affect Stability margins occur:			
Dominion		☑	More clarification is needed to distinguish the difference in studies performed for plant stability vs. system stability. For example, is a system study mainly a study of inter-area (i.e. - small signal) oscillations?

Q32			
Commenter	**Yes**	**No**	**Comment**
Response: To make the distinction clearer, the SDT has modified the definitions as well as Requirement R 2.5. **Generating Unit Stability Study**: Study that focuses on an individual generating unit's or electrically closely-coupled generating units' Stability for various Contingencies on the Transmission Facilities connected to that generating unit(s) point(s) of interconnection or one bus away from that point. This study is concerned with the loss of synchronism and the lack of damping of the generating units' power oscillations. ~~**Plant Stability Study**: Study of an individual plant's Stability for various Contingencies in the vicinity of the plant; concerned with the effect on the System of the generating units' loss of synchronism and the damping of the generating units' power oscillations.~~ **System Stability Study**: ~~Study of the System or portions of the System to ensure that angular Stability is maintained, inter-area power oscillations are damped, and voltages during the dynamic simulation stay within acceptable performance limits.~~ Study that focuses on portions of the System, which may include many generating units, to determine whether angular Stability is maintained, inter-area power oscillations are damped, and voltages during the dynamic simulation stay within acceptable performance limits. **R2.5**. The ~~plant~~ Generating Unit Stability analysis portion of the Planning Assessment shall be analyzed consistent with Requirement ~~R4.6~~ R5.6 with studies for the year when the following changes that could affect Stability margins occur:			
BCTC		☑	Plant stability is a Generator Interconnection study, addressed by FAC-001. By including this requirement in TPL, costs may be transferred. TPL-001 need not distinguish between system stability and plant stability. For Planning Assessments, these are the same thing. Plant stability arises when doing generator interconnection.
Response: The SDT has considered your comments and believes that FAC-001, as currently written does not ensure that Generating Unit Stability studies are performed or that specific performance requirements are met. The SDT also believes that the distinction between Generating Unit and System Stability as described in Requirements R 2.4 and R 2.5 as well as Requirements R 4.5 and R 4.6 (now R 5.5 and R 5.6) is warranted. The SDT believes that specificity in Requirement R 2.5 will reduce the burden of performing the Stability studies necessary to ensure a reliable BES.			
Manitoba Hydro		☑	The need to assess Plant Stability should be removed from this standard. The generator connection standard and the proforma tariff interconnection process ensure the plant stability meets performance requirements. Furthermore, the System Assessment provides an overall assessment of the integrated system performance, which includes the impact of the plant. The requirement for plant stability studies appears to be redundant and would be a waste of assessment resources.
Response: The SDT has considered your comments and believes that neither FAC-001, as currently written, nor the pro forma tariff, ensures that Generating Unit Stability studies are performed or that specific performance requirements are met. Furthermore, not all entities within North America are subject to FERC's OATT.			
MRO		☑	The MRO sees the need for plant stability study requirements somewhere in NERC standards although adding this requirement into this study requires a rehash of the plant stability studies that are conducted throughout ten years or more in an annual assessment. This seems to be an unnecessary duplication. The MRO recommends that this requirement be deleted from this standard and that the

Q32			
Commenter	**Yes**	**No**	**Comment**
			SDT recommend to the NERC SAC that this requirement be covered by the appropriate future SAR.
Response: The SDT believes that the draft requirements do not lead to duplicative studies. If the studies that you reference meet the requirements of TPL-001-1, those studies would in fact satisfy the requirements and additional studies would not be necessary. Furthermore, we believe Requirement R2.5 will reduce the number of studies required because it only requires restudy for generator additions or material changes to the System near the generator.			
WECC BPA TSGT TEP		☑	It appears that Plant Stability Study is a subset of System Stability Study. R4.6.2 states these shall be performed for changes in real power output of a generating unit by more than 10%. Then it states they shall be performed for planning events. R4.5 already covers any contingencies that are an issue and the system already needs to meet some level of performance for loss of the generator. It seems that a change in generation would already be analyzed from a system standpoint as stated in R2.4.3. It appears that material changes to existing generators should be reflected in modeling requirements elsewhere.
Response: The SDT agrees that Generating Unit Stability studies can be viewed as a subset of System Stability studies. The requirements specific to Generating Unit Stability (Requirements R 2.5 and R 4.6 (now R 5.6)) reflect that view. The SDT believes that the specific focus on Generating Unit stability in Requirement R 2.5 will reduce the burden of performing the Stability studies necessary to ensure a reliable BES. To be clear, the 10 % change in generation capability (captured in Requirement R 5.6.2) is what drives the need for a revised study.			
CPS Energy		☑	
Response: Thank you.			
IESO	☑	☑	We agree that both plant stability and system stability have to be studied and that both must exhibit acceptable performance to deem a testing acceptable. The performance requirements for the two could be different, but not the contingency set that must be tested.
Response: The SDT believes that extreme event Contingencies are not required for Generating Unit stability studies.			
Ameren	☑		We appreciate the SDT concern for performing repeated plant stability studies without any change in plant/machine characteristics. However, as the system load representation and its damping characteristics affect both plant and system stability, it is difficult to separate plant versus system stability studies. On some systems in which load and generation are tightly coupled, the focus of plant or system stability studies may differ only slightly with the location and duration of applied fault events. As such, the scope and manner of conducting System Stability study work under Requirement R2.4. for such portions of the interconnected system is not clear. Differences between Plant Stability Studies and System Stability Studies need to be made more clear.
Response: The SDT recognizes that the specific studies required to satisfy the Generating Unit and System Stability requirements will be System specific. In that regard, for some Systems there may be little or no distinction and a single set of studies could satisfy all Stability requirements.			
City Water Power and Light	☑		Yes but the distinction is not clear in the definitions. A Plant Stability Study would typically be done as part of the Generator Interconnection Request and have all units in the area at maximum output. Is the System Stability Study done on the Base Case or is generation maximized within some area(s)?

Q32			
Commenter	**Yes**	**No**	**Comment**
Response: To make the distinction clearer, the SDT has modified the definitions as well as Requirement R 2.5 Also, as indicated in Requirement R 2.4, the System Stability studies should be run using base cases (peak and off-peak) as well as various sensitivity cases (Requirement R2.4.3). **Generating Unit Stability Study**: Study that focuses on an individual generating unit's or electrically closely-coupled generating units' Stability for various Contingencies on the Transmission Facilities connected to that generating unit(s) point(s) of interconnection or one bus away from that point. This study is concerned with the loss of synchronism and the lack of damping of the generating units' power oscillations. ~~**Plant Stability Study**: Study of an individual plant's Stability for various Contingencies in the vicinity of the plant; concerned with the effect on the System of the generating units' loss of synchronism and the damping of the generating units' power oscillations.~~ **System Stability Study**: ~~Study of the System or portions of the System to ensure that angular Stability is maintained, inter-area power oscillations are damped, and voltages during the dynamic simulation stay within acceptable performance limits.~~ Study that focuses on portions of the System, which may include many generating units, to determine whether angular Stability is maintained, inter-area power oscillations are damped, and voltages during the dynamic simulation stay within acceptable performance limits. **R2.5**. The ~~plant~~ Generating Unit Stability analysis portion of the Planning Assessment shall be analyzed consistent with Requirement ~~R4.6~~ R5.6 with studies for the year when the following changes that could affect Stability margins occur:			
New York ISO	☑		NYISO agrees with the concept of splitting plant and system stability studies, but only in the area of performance requirements. The studied contingencies should be identical.
Response: The SDT believes that the selection of study Contingencies is System specific. Although it is not required, for some Systems it may be appropriate to use the same Contingency set for Generating Unit and System Stability studies.			
AECI	☑		
Allegheny Power	☑		
AEP	☑		
APPA	☑		This has been needed for some time.
ATC	☑		
Brazos Electric	☑		
E ON US	☑		
ERCOT ISO	☑		Agree with this additional analysis.
Duke Energy	☑		
Entergy	☑		See response to Q9

Q32			
Commenter	**Yes**	**No**	**Comment**
Exelon	☑		
Georgia Transm.	☑		
ISO/RTO	☑		
ITC	☑		See response to Q31.
KCPL	☑		
LCRA	☑		
MEAG Power	☑		
MISO	☑		
Muscatine P&W	☑		
NERC TIS	☑		Planning Coordinators should study plant stability at the time of interconnection, and it should be reviewed for significant system or plant modifications that may impact the plant's stability.
NCEMC	☑		
PJM	☑		
ReliabilityFirst	☑		
Santee Cooper	☑		
Seattle City	☑		
SERC EC DRS	☑		
SERC EC PSS	☑		
SERC RRS OPS	☑		
SCE&G	☑		
Southern Transm.	☑		
TVA	☑		
WPS	☑		
Response: Thank you. Please see the Summary Response.			

33) Q33. The existing TPL-004-0 standard has a requirement to consider the Loss of all generating units at a plant, but it was not clear whether this requirement should apply to stability studies. The SDT did not include this requirement in the stability table, because it is hard to envision a condition when all units would trip simultaneously within the timeframe of a stability simulation. Do you think this condition should be required in stability analysis of Extreme Events? If not, please explain.

Summary Response: The majority of commenter's agree with excluding the loss of all generating units at a plant in the Stability analysis of Extreme Events. The SDT agrees with not including this condition in Table 2. Nevertheless any TP or PC could study this Contingency if they believe such a study is warranted.

Q33			
Commenter	**Yes**	**No**	**Comment**
ABB		☑	No. Good idea. A whole plant may be out because of a shortage of cooling water, but this is an orderly shutdown, not a sudden event. It is only appropriate for steady-state.
Brazos Electric		☑	
Dominion		☑	It is unlikely that all units at a plant would trip simultaneously within a short time frame (20 second or so) for which stability simulations are performed.
E ON US		☑	I agree with the SDT's conclusion.
AECI		☑	Agree with the statement above as to the time frame regarding stability.
CenterPoint		☑	CenterPoint Energy agrees with the SDT's assessment.
Central Maine Power HQTE National Grid New England ISO NU NPCC RCS NSTAR United Illuminating		☑	Difficult to envision how such an event would occur.
CPS Energy		☑	
Duke Energy		☑	We agree with the basis laid out (in the question) by the SDT.
FirstEnergy		☑	We do not believe that this condition should be required to be tested using stability analysis of Extreme Events. This is due to the fact that these events should be required to be studied using steady state analysis, and stability analysis results would not add value.
Georgia Transm.		☑	
ITC		☑	If it is not probable, then why study it. Realistic probabilities need to be established and defined for study.

Q33			
Commenter	**Yes**	**No**	**Comment**
KCPL		☑	Agree it is difficult to develop scenario where all units trip simultaneously in stability timeframe.
Muscatine P&W		☑	Unless there is a reasonable reason to expect all the units to trip.
Progress–Carolinas		☑	
Progress–Florida		☑	Analysis of this condition should not be required in stability analysis of Extreme Events due to the fact that no stability simulation (e.g., SLG or 3-phase faults) can be conceived for the Bulk Electric System that would result in simultaneous tripping of all units at a plant.
SERC EC DRS		☑	This question conflicts with Table 2 Extreme Event 9. However, we feel it is not necessary to simulate loss of all units at a station because simultaneous loss of all units is unlikely.
SERC RRS OPS		☑	It is not necessary to simulate loss of all units at a station. The Transmission Planner or Planning Authority should have the discretion to consider the appropriate number of units to be tripped based on station design, relay design, etc.
Southern Transm.		☑	
Response: Thank you.			
BCTC		☑	Stability should be treated the same as steady state. If there is a common mode event that could cause the loss of all generating units at a plant, all relevant simulations should be done. If a common mode contingency of all units at a generating plant is not relevant for stability, then it is not relevant as an extreme event for steady state either. However, operation with all units at a plant off line may be relevant as a sensitivity case for Planning Events. The Transmission Planner needs some lattitude to determine what needs to be considered under Extreme Events and the standards should not be overly prescriptive.
Response: The SDT disagrees with this point of view. There are Extreme Events which are relevant for steady state but not for Stability analyses.			
Entergy		☑	This question conflicts with Table 2 item 9. However, we feel it is not necessary to simulate loss of all units at a station. The Transmission Planner or Planning Authority should have the discretion to consider the appropriate number of units to be tripped based on station design, relay design, etc. Since there is no specific question related to R3.4 that requires an evaluation be conducted of implementing a change designed to reduce or mitigate the likelihood of such consequences. More specific direction should be provided in this regard.
LADWP		☑	Loss of a plant as an extreme contingency has been on the book forever and it has never been interpreted as exempted from stability simulation (at least not in WECC) if this scenario is chosen as an extreme event. However, there is no mandatory requirement that loss of all generating units at a plant must be studies for every generating plant. If the design of a generating plant, such as use of redundancy, separate control console/rooms, etc., are such that all unit tripping simultaneously is unlikely, then it should not be required to be studied just because all the units are inside the fence.
Response: The SDT agrees that the removal of the Requirement to consider the loss of all generating units at a plant in Stability analysis,			

Q33			
Commenter	**Yes**	**No**	**Comment**
from the Extreme Events of Table 2 does not preclude the Planner from performing this study. The language in R3.4. allows the TP or PC to evaluate the risks versus the costs of implementing mitigation or a reduction of the possibility of that Contingency.			
FPL FRCC		☑	The question does not match what is included the Extreme Events section of Table 2. Loss of all generating units at a plant should be considered in the Steady State Performance - Extreme Events but not in the Stability Performance - Extreme Events because of the very low probability of the event occurring within the timeframe of the Stability simulation. Therefore, the performance requirement number 9 for Extreme Events in Table 2 - Stability Performance should be deleted.
Response: The SDT agrees and has removed the Contingency from Table 2.			
MEAG Power NCEMC SERC EC PSS SCE&G		☑	Generator protection is designed to trip only those units required. In addition, it is the magnitude of generation tripped rather than the number of units tripped that is of the greatest significance to the stability of the grid.
Response: The SDT agrees that the magnitude of the generation being tripped is significant and should be studied when applicable. The SDT agrees that the removal of the Requirement to consider the loss of all generating units at a plant in Stability analysis from the Extreme Events of Table 2 does not preclude the Transmission Planner or Planning Coordinator from performing this study.			
New York ISO		☑	Examples of loss of entire generation station: Complete loss of right-of-way exiting facility, simultaneous relay operations due to common cause or mode.
Response: Your examples may be applicable to a site in your area and if you desire, you can continue to study steady state and Stability but the removal of this note from the Table does not stop the TP or PC from performing the stability studies if desired.			
Santee Cooper		☑	The transmission planner should have discretion to consider the appropriate number of units to be tripped based on the station design, and/or relay design.
Response: The SDT agrees that the removal of the Requirement, to consider the loss of all generating units at a plant in Stability analysis, from the Extreme Events of Table 2 does not preclude the Transmission Planner or Planning Coordinator from performing this study.			
SaskPower		☑	What is the purpose of requiring this event or any other extreme event to be studied? We see little benefit in this. In the Saskatchewan context we accept the risk and consequences for Extreme Events as there is usually very little justification for the increase in reliability versus the economic cost. Saskatchewan plans and designs its system to fail safe in those events and restores the system thereafter.
Response: The SDT agrees with your comment and that is the reason Question 33 was asked of the industry.			
Tenaska		☑	Only on a case by case basis where a common mode/single point of failure can be identified that results in the loss of an entire plant.
Response: The SDT agrees with your statement.			
TVA		☑	This question conflicts with Table 2 Extreme Event #9.
Response: The SDT agrees that this is in conflict with Table #2 Extreme Event #9 and that is why the SDT has now removed it from the Table.			
WECC		☑	We agree with the SDT that simultaneous 3-phase fault on all generating units in a plant is

Q33			
Commenter	**Yes**	**No**	**Comment**
BPA TSGT TEP			improbable and effort should be better spent studying more probable events. In any case, this Extreme Event is to be considered in the Steady State Table, and stability cases can be run if it is shown to be needed in the power flow study results. We are, however, confused by this question. This question states that the SDT did not include the requirement to consider loss of all generators at a plant in the stability, yet the Extreme Event in the stability table shows in No. 9, "3Ø fault with loss of all generating units at a station".
Response: The SDT agrees with your comment and apologizes for the confusion from the wording of the Question. The Contingency has been removed from the Table.			
Northwestern Energy	☑	☑	If such a standard is constructed, it should be based on a common mode of failure mechanism.
Response: The SDT agrees in removing this from the Table #2. However, the Standard language does not preclude a Transmission Planner or Planning Coordinator from studying this, if applicable. The Standard will allow the TP or PC to perform the study without it being a Requirement.			
AEP	☑		Extreme Event #9 in Table 2 has 3-phase fault and loss of all generating units at a station. Was this left in by mistake? This type of scenario could conceivably lead to low interconnection frequency or cascading due to consequent transmission overloading or low voltage, and could be studied by dynamic simulation. There have been a number of just such generation loss events as this in the past.
Response: The SDT did not leave the 3-phase fault in by mistake; it was intentional and follows with the other Requirements in the Table. Rather, Question 33 was phrased incorrectly in stating that this requirement had been removed from the Table. However, by not having this listed in the Requirements does not preclude the Transmission Planner or Planning Coordinator from studying this condition if applicable to their system.			
APPA	☑		This is a conditional Yes. If the plant design was such that a fault at the plant could remove all units, then all units should be considered. However, if the plant design is such that the likelihood of all plants going down at one time is improbable, then the SDT's approach is very reliable.
Response: The proposed removal of note #9 in the Table will not preclude Transmission Planners or Planning Coordinators from studying this condition if applicable.			
IESO	☑		Consistent with our comments provided under Q31, while the performance requirements may be different, there should be no distinction made to the type of contingencies that need to be applied to steady state testing and stability testing. An entire generating station may be lost due to various possible reasons: lost of right of way of transmission lines emanating from the generating station; generic protective relaying problems which cause all relays to operate due to a common cause or common mode event.
Manitoba Hydro	☑		Isn't 2.d such an event? In a breaker-and-1/3 or 1/2 generating station, if one station bus is off-line for maintenance, faulting the other bus will kill the station, or at least cause a major disruption with individual generators connected to other stations by separated lines. That is certainly worthy of consideration as a feasible "extreme" event Further, the same low likeihood argument could be applied for the majority of Extreme Events in Table 2.The emphasis should be on what the response is for Extreme Events rather than the likelihood of the event.

Q33			
Commenter	**Yes**	**No**	**Comment**
Response: The SDT and the majority of the industry do not think that this should be required in Stability analysis for Extreme Events. The events which remove all of a generating unit from the System occur over a longer period of time which is more applicable in the steady state analyses. These are Extreme Events which are relevant for steady state but not for Stability analyses.			
MRO	☑		In a breaker-and-1/3 or breaker-and-1/2 generating station, if one station bus is off-line for maintenance, faulting the other bus will kill the station, or at least cause major disruption with individual generators connected to other stations by separated lines or AC separated DC converter transformers via isolated station bays. That is certainly worthy of consideration as a feasible "extreme" event.
Response: The SDT and the majority of the industry do not think that this should be required in Stability analysis for Extreme Events. The events which occur to remove all of a plant from the system occur over a longer preiod of time which is more applicable in the steady state analyses.			
NERC TIS	☑		Simultaneous loss of the entire generating stations have occurred on 4 occasions in the last 3 years, with simultaneous losses ranging from 1,100 MW to over 3,700 MW. It is important to understand the stability implications to the system and other plants.
Response: The SDT and the majority of the Industry do not think that this should be required in Stability analysis for Extreme Events. The SDT does not believe these events would result in the loss of all generation in a Stability timeframe.			
PJM	☑		Yes, but should model the true clearing times of each individual unit. Also the standard should clearly state that system reinforcement should not be required for this Extreme Events.
Response: The SDT and the majority of the industry do not think that this should be required in Stability analysis. However, by not having it listed in the Requirements does not preclude a Transmission Planner or Planning Coordinator from studying this particular condition. Also, refer to the language of current standard Requirement R5.5.4 which addresses the reinforcement logic.			
Allegheny Power	☑		
Ameren	☑		A good test of the robustness of the interconnected system is its ability to handle import plus heavy inrush conditions, such as might occur with loss of a large plant. While the probability of such random events would be very low, the possibility still exists that intentional sabotage could result in such an event.
ATC	☑		
Response: The loss of a large gas pipeline into a region is not the same as a 3 phase fault at the generator bus location. If the gas line were ruptured, the units would be shut down over a period of minutes, not in a stability time frame. The E3.a in Table 1 is for steady state analysis.			
City Water Power and Light	☑		If there is any single contingency event that could take out an entire plant, it should be studied.
ERCOT ISO CAISO	☑		It will be consistent with the performance requirements under Steady State conditions. Also, loss of entire generating station is possible for a variety of reasons such as, loss of all lines emanating from the station, loss of the gas pipeline feeding the plant, etc.
Response: The loss of a large pipeline would not result in the sudden shutdown of all units within a stability timeframe. The shutdown occurs over tens of minutes.			

Q33			
Commenter	**Yes**	**No**	**Comment**
AECC	☑		It should also be considered in steady state analysis.
Exelon	☑		
ISO/RTO	☑		
LCRA	☑		
MISO	☑		
Seattle City	☑		
WPS	☑		
Response: Thank you.			

34) Q34. There are an increasing number of events with slow voltage recovery after faults on the Transmission System. The dynamic behavior of induction motor loads is a major factor in this phenomenon. The proposed standard therefore requires that the load model for stability studies of peak Load conditions include the dynamic effects of induction motors. Do you agree with this requirement? If not, please explain?

Summary Response: There is consensus that slow voltage recovery is an observed phenomenon that requires study and potential corrective action. However, nearly all responders noted the difficulty of obtaining accurate dynamic Load models. Based on the responses, the study of this phenomenon is in its relative infancy. Most responders are looking for guidelines for these studies whether they answered 'yes' or 'no'. The Transmission Issues Subcommittee (TIS) is forming a working group (TIS WG) to write a technical white paper on this issue. The SDT has recommended that this group include guidelines for load models in their white paper.

Based on industry comments, the SDT believes that this is such an important issue that a Requirement should be in place. As such Requirement R2.4.1 was changed. It will be up to those performing the studies to document their dynamic Load models.

R2.4.1. System peak Load for one of the five years. For peak System Load levels, ~~the~~ a Load model shall ~~include the dynamic effects~~ be used which appropriately represents the dynamic behavior of Loads, including consideration of the behavior of induction motor Loads.

Q34			
Commenter	**Yes**	**No**	**Comment**
E ON US		☑	I agree that this is an issue but I do not have sufficient data to accurately simulate the condition. This is also complicated by dynamic behavior of distribution capacitors which are not modeled.
SERC RRS OPS		☑	There is a lack of data to support the amount and characteristics of the detailed induction load models in many areas. Transmission planners should be able to use the latest information and techniques.
SCE&G		☑	There should be an attempt to represent the dynamic behavior of induction motor loads in the generic system load representations. However, the state of induction motor load modeling is not adequate to permit discrete induction motor load models.
AEP		☑	The statements of fact in the question may be true for some study areas, but not necessarily for all. Requiring this type of load representation when it might not be appropriate to the study is excessively burdensome. This is a judgment better left to those conducting the studies. The percentage of load to be so represented, the extent of the study area over which to apply induction machine representations, and the specific modeling parameters are all judgments just as important as whether or not to include this type of representation. There is a limit as to how far a standard can replace engineering judgment and that limit is reached here.
CenterPoint		☑	CenterPoint Energy includes the dynamic effects of induction motor loads in stability studies. However, this requirement is overly prescriptive since some utilities may not need to include the dynamic effects of induction motors and should not be required to do so.
Central Maine Power National Grid New England ISO		☑	This requirement is too specific and limited. Induction motors are only one component of a complex load model. Complex load models are not always necessary, nor are they always the most conservative, depending on the analysis that is being conducted. Where complex load models are

Q34			
Commenter	**Yes**	**No**	**Comment**
NU NPCC RCS NSTAR United Illuminating			required, they should be considered; this may involve use of complex motor and lighting loads or polynomial load representations with or without frequency dependence. This question also suggests the need for an industry standard regarding transient voltage recovery.
Duke Energy		☑	In general, it is a good practice for System Stability studies of seasonal load conditions to include the effects of induction motors. However, there is currently a lack of data to support the amount and characteristics of detailed induction load models in many areas. Prior to making this a requirement, the industry needs guidance as to how this data should be developed, shared and maintained for near-term and long-term models. A long term transition period is required to incorporate motor models into dynamics studies.
Entergy		☑	In general this is a good practice. Dynamic studies of seasonal load conditions should include the effects of induction motors, and particularly in areas where traditional load models have indicated a problem. Unfortunately, there is a lack of data to support the amount and characteristics of the detailed induction load models in many areas. In addition to the consideration of the dynamic effects of induction motor loads, the effects of static capacitor banks installed at distribution voltage levels would need to be considered as well. Prior to making this a requirement in the reliability standards, the industry needs guidance as to how this data should be developed and maintained for models in future years. This should be a business practice and thus removed from the standard. While we agree that each entity should appropriately model their loads, it would seem appropriate for the MMWG to address the issues of induction motor load modeling. Note that meeting such a requirement would necessitate a significant increase in the dynamic data needed to represent the system. Maintenance of such load model data would require significant resources. Load characteristics valid for a near term model might not be valid for future years.
FPL FRCC		☑	The issue of delayed voltage recovery is a special phenomenon that can occur in some large urban areas under peak conditions. The modeling of the delayed voltage recovery response is considerably more complex than simply representing induction motor effects. The scope of the delayed voltage recovery issue is extremely limited and its effect on the grid is generally self correcting due to automatic disconnection of the affected air conditioners. While improvements in the accuracy of load models used for the study of grid dynamic response are desirable, this area is not suitable for compliance enforcement. Requirements for specific types of load models are not appropriate in the TPL standard.
KCPL		☑	Transmission operators are required to maintain reactive reserve requirements.
MEAG Power NCEMC SERC EC DRS SERC EC PSS TVA		☑	Dynamic studies of seasonal load conditions should include the effects of induction motors, and particularly in areas where traditional load models have indicated a problem. Unfortunately, there is a lack of data to support the amount and characteristics of the detailed induction load models in many areas. In addition to the consideration of the dynamic effects of induction motor loads, the effects of static capacitor banks installed at distribution voltage levels would need to be considered as

Q34			
Commenter	**Yes**	**No**	**Comment**
			well. Prior to making this a requirement in the reliability standards, the industry needs guidance as to how this data should be developed and maintained for models in future years. Note that meeting such a requirement would necessitate a significant increase in the dynamic data needed to represent the system. Maintenance of such load model data would require significant resources. Load characteristics valid for a near term model might not be valid for future years. Also, summer peak load, winter peak load, and off-peak load characteristics would differ.
Muscatine P&W			We have not seen this on our system based on the review of digital fault recorders (DFR). The difficulty with including induction motors is getting reasonable data from customers about their motors so they can be adequately modeled. (We did ask our consultant to include motor effect in our coordination study since the motors could act as a weak source.)
PJM		☑	No. This is good in theory but is impractical to implement with the large interconnected systems that span large geographical areas.
Progress–Florida		☑	Requiring detailed modeling of every induction motor on the Bulk Electric System for stability analysis is onerous. Specifically, obtaining a complete set of data for existing induction motors would be infeasible, as would tracking future installations of induction motors. The benefits of such an effort are significantly outweighed by the logistical difficulties. To address the technical merits, the modeling of the delayed voltage recovery response that has been observed in some large urban areas during periods of high air conditioning usage is considerably more complex than can be addressed by simply representing induction motor effects. The scope of the delayed voltage recovery issue is extremely limited and its effect on the grid is generally self correcting due to automatic disconnection of the affected air conditioners. Requirements for specific types of load models are not appropriate in the TPL standard.
Santee Cooper		☑	The characteristics of detailed induction load are generally lacking to properly model induction loads. Load modeling should be left to the judgment of the TP.
Response: See the summary response, The SDT has recommended that the TIS WG writing the white paper on this phenomenon review your suggestions and comments.			
CPS Energy		☑	
Response: See summary response.			
AECC		☑	if someone want to study the effect of large motor load then fine but it should not be a requirement of a standard
Response: The SDT has received comments regarding the technical merits to include such behavior when appropriate. The SDT feels that proposing this requirement could potentially result in System studies that indicate System response that would meet the performance requirements when in fact the response may fall short.			
Ameren	☑	☑	Dynamic studies of peak load conditions should include the effects of induction motors, and particularly in areas where traditional load models have indicated a problem. Unfortunately, there is a lack of data to support the amount and characteristics of the detailed induction load models in

Q34			
Commenter	**Yes**	**No**	**Comment**
			many areas. In addition to the consideration of the dynamic effects of induction motor loads, the effects of static capacitor banks installed at both distribution and transmission voltage levels would need to be considered as well. The industry would be looking to NERC for some guidance as to how this data should be developed and maintained for models in future years. Note that meeting such a requirement would necessitate a significant increase in the dynamic data needed to represent the system. Also, maintenance of such load model data would need to be considered. Load characteristics valid for a near term model might not be valid for future years. Also, summer peak load, winter peak load, and off-peak load characteristics would differ.
Dominion	☑	☑	The dynamic effects of induction motor load at peak load conditions should be studied only on a limited/selected basis and should not be required for the entire system as a routine study practice. The following are examples where such an effort might be warranted: (a) where slow voltage recovery has been actually observed in the field following a fault clearance (b) where steady state analysis (P-V & Q-V curves) indicates a possible voltage collapse scenario for stressed system conditions (c) for a non-convergent (or very difficult to solve) power-flow case for stressed system conditions while solving for a contingency scenario.
Exelon	☑	☑	This is more pertinent to longer term voltage stability, so the load model should be developed and available for these types of studies.
WECC TSGT TEP BPA	☑	☑	The requirement to include motor load should be extended to other load level periods and not be limited to peak load period only. However, to capture slow voltage recover phenomena, especially in areas of high penetration of refrigerated air conditioning load (e.g. 50% to 60%), would require modeling down to the distribution system voltage level and explicitly representing shunt capacitors and various induction motor types (e.g. equivalents for single phase motors). If the requirement is not extended, dynamic simulations will likely differ significantly from observed system events. We recommend a phase-in period so that the requirement for use of load models should only include regionally accepted load models for which data are available. This requirement can be extended or modified as the Region in which the entities reside adopts new load modeling guidelines.
Brazos Electric	☑		However, acquiring load data may be difficult if not impossible and would require increased manpower. A more reasonable approach is to vary the load data to see the effects instead of wasting effort on load surveys.
City Water Power and Light	☑		However, low voltage often causes motors and air conditioner compressors to trip, significantly reducing peak loads.
ERCOT ISO CAISO	☑		The requirement to include motor load should be extended to other load levels as appropriate.
FirstEnergy	☑		We agree with this concept but believe that enforcing it would be very difficult. There are no standards on modeling induction motor load, be it type of models, percentage of load that is motor

Q34			
Commenter	**Yes**	**No**	**Comment**
			load, or percentage of large vs small motors.
HQTE	☑		This requirement is too specific and limited. Induction motors are only one component of a complex load model. Complex load models are not always necessary, nor are they always the most conservative, depending on the analysis that is being conducted. Where complex load models are required, they should be considered; this may involve use of complex motor and lighting loads or polynomial load representations with or without frequency dependence. This question also suggests the need for an industry standard regarding transient voltage recovery.
IESO	☑		Dynamic testing should assess response of moving equipment including induction motor loads.
ITC	☑		However this will require the Load Serving Entities provide specific data for each bus on the system which may not be in the direct control of the entity performing the studies. The standard should be written with this understanding in mind. Failure of a LSE to provide such data should not cause a penalty to be imposed on a Transmission Provider.
LADWP	☑		This is a qualified yes to the extent that accurate induction motor models are available and the overall load modeling (non-induction motor loads) allow such analysis. Otherwise, focusing only on induction motors would not provide added information than what is being performed today. The current WECC requirement concerning induction motor modeling should be deemed adequate to meet this requirement.
Manitoba Hydro	☑		R2.4.1 should be clarified to limit a requirement for detailed modeling (for example, dynamic effects of induction motors loads) to local areas where the planner expects a local emerging voltage recovery issue.
MISO	☑		Yes, we agree that appropriate induction motor loads should be modeled. No, it is not be practical to model all induction motor loads. There needs to be size and location considerations. Data is not readily available today.
MRO	☑		The MRO agrees that R2.4.1 should provide for the inclusion of dynamic behavior of induction motor loads, however, recommends that there should be a limitation on only requiring such behavior where significant such as large motor loads over a certain MW amount. As written, it could be interpreted that the Transmission Planner is non-compliant if all induction motors are not represented.
Progress–Carolinas	☑		This needs to be done but we currently don't have sufficient data and tools to properly perform the analysis. More interconnection-wide testing and data collection needs to be performed. We will need to transition into these studies over time.
ABB	☑		Yes, but the impact on the models and studies is unknown. Some testing needs to be done with full Eastern and Western Interconnection models to see how they handle motor models at every load. I've performed numerous studies where loads in an entire utility or state have been converted to a large % of motors, and the effect can be shocking. The programs (PSS/E and PSLF) may completely bog down if this is done for a whole interconnection. Many stability problems will be found. We definitely need to transition to this, but with care.
Northwestern Energy	☑		

Q34			
Commenter	**Yes**	**No**	**Comment**
AECI	☑		However, getting all the modeling data is not easy and may take some time.
Allegheny Power	☑		
APPA	☑		The SDT is correct to include the effects of induction motors in simulating the loads. Voltage issues are and will continue to become more critical in the operation of the BES as time goes by. It will be a big help to planners and operators to know the impacts of such loads.
ATC	☑		
BCTC	☑		
Georgia Transm.	☑		
ISO/RTO	☑		
LCRA	☑		
NERC TIS	☑		If such known phenomena are not properly modeled, how can the resultant study results be expected to be correct and a proper prediction of future system behavior. The modeling shortcomings of the Western Interconnection prior to the August 1996 western blackout showed no potential stability problems for the events that occurred; the system proved otherwise.
New York ISO	☑		
SaskPower	☑		
Seattle City	☑		
Southern Transm.	☑		
WPS	☑		
Response: See the summary response, The SDT has recommended that the TIS WG writing the white paper on this phenomenon review your suggestions and comments.			

35) Q35. What type of manual or automatic adjustments of generators should be allowed for single and multiple Contingencies?

Summary Response: Most responders said or implied that all adjustments should be allowed for both single and multiple Contingencies. Some respondents further clarify their response by adding the adjustments must be achieved within a specific timeframe such as meeting performance requirements or the ability to keep the generator on-line. A small number of responders replied that no adjustments should be allowed for single Contingencies but then agreed that adjustments may be allowed for multiple Contingencies.

The SDT has modified Requirement R 3.6 (now R3.5) of the steady state portion of the Planning Assessment to specify the conditions under which manual and automatic generation runback and tripping can be used to meet single and multiple Contingency performance requirements and to make it clear that all Facilities must always remain within applicable thermal and voltage ratings.

R3.5. Manual and automatic generation run-back/tripping is allowed as a response to a single ~~and~~ or multiple Contingenc~~ies~~y ~~as long as Facility Ratings are not exceeded.~~if the following conditions are met:

Q35	
Commenter	**Comment**
ABB	For multiple, only automatic schemes. For single, only automatic schemes if the loss of MW is shown to be acceptable.
Ameren	No adjustment of firm (network resource) generation should be allowed for the long-term mitigation of a single contingency. Allowing post-contingency shifts of firm generation as a long-term mitigation of a single contingency event is short-sighted and would not produce a robust system that is required to handle more than single contingency events. Redispatch of firm generation may be required in the near-term as an interim operating guide or procedure until the limiting transmission element can be uprated or other system reinforcement is in place. Generation redispatch should also be allowed to prepare for the next single contingency. For responding to multiple contingencies, redispatch of firm generation should be allowed in the mitigation plan provided that the redispatch can be accomplished in the required operating time and the contingency overloads are not overly severe (indicating possible cascading). Firm generation should also be tripped to quickly mitigate contingencies involving multiple generation outlet transmission circuits. Non-firm (energy only) generation can be tripped or redispatched for any contingency event as needed to keep facility loadings within ratings.
City Water Power and Light	Dispatching quick start units such as combustion turbines or diesels, Contingency Reserve Sharing Group response, redispatch, adjust reactive resources as necessary.
Dominion	For a single contingency, no generation adjustment should be allowed. For multiple transmission element contingencies, generation reduction (automatic or manual runback) may be allowed. Unit trip should only be allowed if a unit becomes unstable.
E ON US	single – none
ERCOT ISO CAISO	Manual such as tripping the generators, automatic such as AVR, excitation systems, stabilizer, and governor adjustments. From a Planning perspective, you would not want to allow for manual tripping in the time frame of a stability study.

Q35	
Commenter	**Comment**
BCTC	No restrictions on adjustments that are practical and can be achieved within the timeframe required.
Northwestern Energy	All adjustments should be allowed as long as they are realistic and achievable in the time frame required and consistent with other study parameters. Also, if a RAS (or special protection system) is the adjustment and if cascading could result from the event, then redundancy should be required.
MEAG Power NCEMC SERC EC PSS SCE&G	Adjustments that should be allowed are those that can be performed in time to prevent the system from failing to meet performance requirements. These adjustments may include automatic voltage regulator action, governor action, generator runback, and generator tripping.
AECI	Whatever the generator is capable of.
Allegheny Power	Should not be limited.
AEP	The existing TPL standards imply that generator tripping is not permissible in connection with Category B events in that footnote b does not mention it, whereas it is mentioned in connection with Category C events in footnote c. Generation is a system resource and should be protected against the more common single contingency transmission events. We agree with the status quo on this issue being maintained in the new standard, with the provision for regional variance in R3.6. The provision for manual and automatic runback in R3.5 is okay. We also agree with manual adjustments remaining acceptable in response to any contingencies in the new standard consistent with C3 in existing TPL-003.
Central Maine Power HQTE National Grid New England ISO NU NPCC PCS NSTAR United Illuminating	Manual or automatic adjustments should be permissible to allow redispatch to return the system to below normal/load cycle based ratings; however, the system should not exceed applicable emergency ratings prior to the adjustment. Manual system adjustment should be allowed in between the multiple Contingencies described in P5, provided that the adjustment can be made between contingencies using short-term reserves (10-30 minute).
Duke Energy	This question is not clear. Manual and automatic adjustments should be allowed for single and multiple contingencies as long as Performance Requirements are met.
Exelon	Generator MW and Mvar output adjustments should be allowed, both manual and automatic.
FirstEnergy	As long as thermal, voltage, and stability requirements are met, either automatic or manual runback of the unit should be allowed. Tripping of the unit should be allowed also if the particular unit(s) can be restarted within some relatively short time - say one hour. With this requirement, it appears that only CTs and hydro units would be allowed to be tripped.
FPL FRCC	Manual and automatic adjustment (increase or decrease) of Var output and manual and automatic tripping or reduction of overall MW output of generators should be allowed.
Georgia Transm.	Special Protection Schemes should be allowed for single and multiple contingencies.
IESO	Automatic adjustments should include AVR, excitation system, stabilizer and governor, all of which have pre-determined settings. These adjustments should be allowed for any type of contingencies. Manual adjustments that should or can be made other than removal of the generating units from service could include manual switching of

Q35	
Commenter	**Comment**
	transmission and adjustment to Phase Angle Regulators for so long that these actions are documented as applicable operating procedures.
ITC	There should be no change in generation for single contingencies. An approved SPS in those areas that use them might be an exception however system damage for failure to operate should not be allowed beyond the station with the SPS. Also, loss of load should not be allowed for failure to operate. An automated adjustment for multiple contingencies is not unrealistic.
KCPL	Generation redispatch should not be allowed for N-1 events. Generation redispatch is appropriate for multiple contingencies. Appropriate SPS and generation runback schemes should be allowed, where the system is designed with those schemes.
LADWP	Whatever is needed to bring the system into balance.
Manitoba Hydro	1) Reducing or increasing generation while keeping the units on-line or by bringing additional units on line. The amount of generation change should be limited to that amount that can be accomplished within the allowed readjustment period. Due consideration should be given to start up time and ramp rates of the units. 2) Generator tripping should be added to requirement R3.5 in addition to runback. Generator tripping is used extensively in regions where remote generation is delivered via long transmission. 3) Adjustment of firm transfer must be allowed for single and multiple contingency events. MH could not accept the revised standard that removed this existing requirement.
MISO	Generation redispatch should not be performed for single contingencies. Generation redispatch is appropriate for multiple contingencies. Appropriate SPS and generation runback schemes should be allowed, where the system is designed with those schemes.
MRO	Here are the adjustments that the MRO believes the MRO systems are presently designed to meet and what an MRO Augmentation Drafting Team is proposing to require its members to follow for Category B and C events: 1. Generation adjustments - Reducing or increasing generation while keeping the units on-line or by bringing additional units on line. The amount of generation change is limited to that amount that can be accomplished within the allowed readjustment period. Due consideration shall be given to start up time and ramp rates of the units. 2. Generation rejection to the extent possible within the allowed readjustment period. Generation rejection shall not exceed the normal operating reserve of the generation reserve sharing pool to which the MRO Member belongs or of the MRO Member itself if the MRO Member self-provides generation reserves.
Muscatine P&W	Whatever the local entity sees as appropriate and is reasonable versus the cost of fixing the problem. (See Q43 Comment #3)
NERC TIS	If system adjustments are allowed between events in steady state analysis, manual and automatic adjustments should both be allowed. However, in stability analysis, only automatic adjustments capabilities that are actually in place should be used.
New York ISO	Automatic: Pre-determined ranges of AVR, excitation system, stabilizer and governor. Manual: switching and PAR adjustments covered by applicable operating procedures.
PJM	Adjustments should be allowed consistent the time periods being studied.
Progress–Carolinas	Both manual and automatic adjustments should be allowed.

Q35	
Commenter	**Comment**
Progress–Florida	Provided events are confined to a single area (i.e., no cascading outages), manual and automatic adjustment (increase or decrease) of Var output and manual and automatic tripping or reduction of overall output of generators should be allowed
Santee Cooper SERC RRS OPS TVA	Any adjustments should be allowed that protects the reliability of the BES.
SaskPower	The amount of generation change should be limited to the amount that can be accomplished within the allowed readjustment period. Due consideration should be given to start up time and ramp rates of the units. Generation rejection should not exceed the normal operating reserve.
Seattle City	Any adjustment required to respond to a contingency should be allowed, unless it adversely impacts the regional system.
SERC EC DRS	Manual and automatic adjustments should be allowed for single and multiple contingencies as long as performance requirements are met.
SERC EC PSS SCE&G	Adjustments that should be allowed are those that can be performed in time to prevent the system from failing to meet performance requirements. These adjustments may include automatic voltage regulator action, governor action, generator runback, and generator tripping.
Southern Transm.	Automatic generator tripping should be allowed for single contingency events and for multiple contingency events.
Tenaska	Any adjustment(manual, automatic, runback, tripping) should be allowed as long as the performance requirements are achieved as described in standard after the adjustments have been made.
WECC BPA TSGT TEP	All adjustments should be allowed as long as they are realistic and achievable in the time frame required and consistent with other study parameters. For example, automatic adjustments would be required for correction of a stability problem, but manual adjustment should be allowed for correction of a thermal problem if there is no instability problem.
AECC	any that are realistic, can be accomplished in the appropriate timeframe and are within the capability of the units
Response: Based on the majority of industry responses, the SDT has modified Requirement R 3.6 (now R 3.5) to specify conditions under which manual and automatic generation runback and tripping can be used to meet single and multiple Contingency performance requirements for the steady state portion of the Planning Assessment. **R3.5**. Manual and automatic generation run-back/tripping is allowed as a response to a single ~~and~~ or multiple Contingenc~~ies~~y ~~as long as Facility Ratings are not exceeded.~~if the following conditions are met:	
APPA	I do not understand the question. Is this dealing with voltage adjustment or power adjustment?
Response: Generation runback deals with a machine's power adjustment.	
Entergy	This question is not clear and more explanation should be provided, such as, whether the adjustments are pre or post contingency, whether the contingency involves faults etc. Does this question pertain to plant or system stability?
Response: Adjustments are post-Contingency. Based on the majority of industry responses, the SDT has modified Requirement R 3.6 (now R 3.5) to specify conditions under which manual and automatic generation runback and tripping can be used to meet single and multiple Contingency performance requirements for the steady state portion of the Planning Assessment.	

Q35	
Commenter	**Comment**
R3.5. Manual and automatic generation run-back/tripping is allowed as a response to a single ~~and~~ or multiple Contingenc~~ies~~y ~~as long as Facility Ratings are not exceeded.~~if the following conditions are met:	

F) Generation Runback and Tripping

The SDT has discussed the automatic and manual readjustments of generators that should be permissible for single contingencies and multiple contingencies. The existing TPL-001-0 through TPL-004-0 standards through footnote (a) of Table I could include emergency ratings applicable for short durations as required to permit operating steps necessary to maintain system control. The footnote is silent about allowable generation adjustments in response to the Category B events. However, it does indicate that system adjustments are permitted to prepare for the next Contingency. These system adjustments could include manual or automatic adjustments involving generation.

The SDT has learned that many transmission owners use System Protection Systems (SPS) or Remedial Action Schemes (RAS) to trip generation for single and multiple Contingency outage events to prevent overloads, low voltage, and instability in the Interconnected Transmission network for N-1 and N-2 events. In some cases, the RAS are used to prepare for the next Contingency; but in some cases, the RAS are used to simultaneously avoid exceeding emergency ratings.

36) Q36. The proposed standard allows generation runback after the disturbance that causes a single Contingency (or due to a single Contingency outage) to move the Interconnected Transmission System from an emergency state (within emergency ratings) to a normal state (within normal ratings), assuming that the disturbance does not result in instability? Do you agree? If not, please explain.

Summary Response: The overwhelming majority of respondents believe that generator runback should be allowed for single Contingencies. One respondent thought that runback of firm generation should only be allowed as an interim Operating Procedure until System reinforcements are installed. Another thought that a generator that must reduce output for N-1 is not "firm" generation capacity. Another cautioned that runback may not be fast enough to avoid voltage instability. The draft standard will continue to allow manual or automatic generation run-back as a response to single and multiple Contingencies as long as all Facilities shall be operating within their Facility Ratings and as long as a sustainable, stable, operating condition is maintained.

The following requirements have been added due to industry comments:

R3.5.2. Such action would not violate safety, equipment, regulatory or statutory requirements.
R3.5.3. A sustainable, stable, operating condition is maintained.

Q36			
Commenter	**Yes**	**No**	**Comment**
Ameren		☑	The runback of firm generation should only be allowed as a valid interim operating procedure until a system reinforcement would be installed to uprate or unload the limiting facility. The use of the runback scheme should not be allowed as the long-term solution to a single contingency event. As mentioned above in the response to Q35, non-firm (energy only) generation should be tripped or redispatched for any contingency event as needed to keep facility loadings within ratings.
Response: The SDT and the majority of the industry do not agree that generation runback should be used only as a temporary solution.			
Dominion		☑	For a single contingency, no generation adjustment should be allowed. For multiple transmission element contingencies, generation reduction (automatic or manual runback) may be allowed. Unit

Q36			
Commenter	**Yes**	**No**	**Comment**
			trip should only be allowed if a unit becomes unstable.
Response: The SDT and the majority of the industry agree that the use of generation runback should be allowed for single Contingencies.			
AECC		☑	Generation runback should only be permitted if there are no impacts to area interchange and firm transactions are not altered.
Response: The allowable impact to firm transactions is specified in the performance tables. The use of generation runback is only allowed if the performance requirements are met.			
E ON US		☑	I do not agree that the system has to be returned to a "normal state" after a single contingency. The system can continue to be operated in the "emergency state" as long as the next contingency does not cause flows above emergency ratings.
Response: The SDT agrees that the System can be operated in an emergency state as long as the next Contingency does not cause flows above emergency ratings. However, this does not preclude the use of runback to get flows back within normal ratings.			
BCTC		☑	We do not accept R3.5, which does not limit runback to contingencies based on thermal limits, only that Facility Ratings are not exceeded. If an SOL is based on voltage stability (which is often studied in the post disturbance steady state), Facility Ratings may not be exceeded but runback may not be fast enough to avoid voltage instability. Furthermore, runback for single contingencies should be subject to any conditions that might apply to generator tripping for single contingencies. See response to Question 39.
Response: Requirement R3.5 now has two additional qualifiers on the use of generator runback other than Facilities must be within Facility Ratings: **R3.5.2**. Such action would not violate safety, equipment, regulatory or statutory requirements. **R3.5.3**. A sustainable, stable, operating condition is maintained.			
KCPL		☑	All generators must have "firm" transmission outlet capacity for their nameplate rating. This means delivery of full output under N-1 conditions. A generator that must reduce output for N-1 is not "firm" generation capacity.
Response: The SDT believes that if an n-1 Contingency results in flows within emergency ratings, then the generator has firm Transmission outlet capacity even if it must be backed down to get the System back within normal ratings.			
MISO	☑	☑	Yes, where the transmission system is designed with these schemes. No, in general when there is no designed SPS or runback for the generator.
Response: The SDT believes that runback should be allowed both for existing schemes and for new schemes.			
ABB	☑		Every single event will eventually require preparing for the next event. But we cannot plan for every next event. Only specific single and multiple contingencies should be planned for, all flows must be within an established rating of some kind (continuous, 12-hour, 4-hour, 15-min, whatever), and the idea of the "next event" should not be included in a planning standard. Now maybe there should be a limit as to how short the time of a rating can be in Planning. For example, planning to a 15-min rating is a bad idea. That rating can be used by operators in emergencies, but planners need to do something better. A minimum should be set (e.g. 1 hour

Q36			
Commenter	**Yes**	**No**	**Comment**
			rating). I guess if a company wants to use a 15-min rating and then AUTOMATICALLY transition to a 1-hour or 12-hour rating with runback or something else, that is reasonable.
Response: The SDT considered minimum time duration for the emergency ratings used in planning. However, the SDT decided this would be too restrictive.			
AEP	☑		Question: Why would a runback scheme be needed to move from an emergency state to a normal state when that could be accomplished by regular redispatch?
Response: If regular redispatch can adjust the System following a single Contingency in preparation for the next Contingency in the time frame required by emergency ratings, then no automatic runback is needed.			
APPA	☑		However, it should be pointed out that RAS are band-aid solutions to building needed BES infrastructure. Experience has shown that an interconnection can have so many RAS that one RAS will counter another RAS designed for another problem in the interconnection. This problem requires additional study by a NERC task force.
Response: The SDT and the majority of the industry do not agree that automatic generation runback (by use of an RAS) should be used only as a temporary (or band-aid) solution.			
Central Maine Power HQTE National Grid New England ISO NU NPCC RCS NSTAR United Illuminating	☑		Generation runback should be permissible to allow redispatch to return the system to below normal/load cycle based ratings; however, the system should not exceed applicable emergency ratings prior to the adjustment
Response: The SDT agrees.			
Exelon	☑		An automated run-back scheme should be allowed but not required for these scenarios - an operator should be able to manually adjust unit output.
Response: If an operator can adjust the system following a single contingency in preparation for the next contingency in the time frame required by emergency ratings, then no automatic runback is needed.			
FirstEnergy	☑		As long as thermal, voltage, and stability requirements are met, either automatic or manual runback of the unit should be allowed. Tripping of the unit should be allowed also if the particular unit(s) can be restarted within some relatively short time - say one hour. With this requirement, it appears that only CTs and hydro units would be allowed to be tripped.
Response: The SDT agrees that automatic or manual runback should be allowed. We do not agree that only CTs and hydro units could be tripped by SPS.			
Manitoba Hydro	☑		Generator tripping should be added in addition to runback. Generator tripping is used extensively in regions where remote generation is delivered via long transmission There will be a large cost penalty to construct transmisison to remote generation if generator tripping is not allowed. Since the amount of tripping is covered by operating eserves, there is no impact on reliability. Generator tripping should be an option for the planner in the standard as opposed to a regional difference or the need to

Q36			
Commenter	**Yes**	**No**	**Comment**
			install an SPS.
Response: The SDT agrees that generator tripping should be allowed for single and multiple Contingencies (See R 3.5)			
New York ISO	☑		What is the difference between a SPS and RAS? Would not one term be sufficient? SPSs should not be considered a permanent solution. They should only be used as a stop gap before a permanent solution can be implemented.
Response: SPS and RAS are synonymous terms. The SDT and the majority of the industry do not agree that SPS should be used only as a temporary solution.			
ERCOT ISO	☑		Agree
Northwestern Energy	☑		
AECI	☑		
Allegheny Power	☑		
ATC	☑		
BPA	☑		
Brazos Electric	☑		
CAISO	☑		Agree
CenterPoint	☑		
City Water Power and Light	☑		
City Utilities/Springfield	☑		
CPS Energy	☑		
Duke Energy	☑		We see this as an acceptable form of manual or automatic redispatch, which should be allowed as a cost beneficial way of operating the system in a reliable manner, as long as it can be accomplished within the time frame before emergency ratings are exceeded.
Entegra	☑		As long as the system would be within normal ratings after runback.
Entergy	☑		
FPL	☑		
FRCC	☑		
Georgia Transm.	☑		
IESO	☑		Generation rejection and runback are not uncommon to be employed as special protection systems (SPS) to achieve a stable state and/or reduce transmission loading to within pre-determined levels.

Q36			
Commenter	**Yes**	**No**	**Comment**
			SPSs, when employed, are designed to operate in order to meet performance requirements following specific contingencies or when specific system conditions are present. As such, when a contingency occurs or when the conditions should arise for which the SPS (in this case, generation runback) is designed to operate, such actions should be simulated.
ISO/RTO	☑		
ITC	☑		
LADWP	☑		Generator runback is allowed under the current standards, why single this out? Hopefully this is not a sign of equating generator runback with generator tripping as the title of this section might suggested. Generator runback is not and should not be classified as an SPS! It is critical to keep as many units on line as possible post contingency. In many instances, use of generator runback would avoid the need to trip a unit if that was the only way to reduce the generations to return to load-generation balances.
MEAG Power	☑		
MRO	☑		
Muscatine P&W	☑		
NERC TIS	☑		This is simply a recognition that the system operators will take action to return the system to a stable and secure operating posture following an event.
NCEMC	☑		
PJM	☑		
Progress–Carolinas	☑		
Progress–Florida	☑		
SRP	☑		
Santee Cooper	☑		
SaskPower	☑		
Seattle City	☑		
SERC EC DRS	☑		
SERC EC PSS	☑		
SERC RRS OPS	☑		
SCE&G	☑		

Q36			
Commenter	**Yes**	**No**	**Comment**
Southern Transm.	☑		
Tenaska	☑		
TVA	☑		
TSGT	☑		
TEP	☑		
WECC	☑		
WPS	☑		
Response: Thank you. Please see the Summary Response.			

37) Q37. Since emergency ratings are thermal ratings, should this standard allow an automatic generation runback scheme (that is initiated immediately after the disturbance causing the single Contingency) to prevent thermal overloads (assuming that the disturbance does not result in instability)? If yes, what are the conditions that must be met in order to allow such a runback scheme to meet the System performance criteria for single Contingencies? Please explain the reason for your answer.

Summary Response: Respondents appeared to overwhelmingly favor allowance of automatic generation runback to prevent thermal overloads. However, as some respondents indicated the question was not clear and a number indicated that Requirement R 3.5 could be made clearer. Many respondents suggested various conditions be added to the requirements. The SDT has modified Requirement R 3.5 to specify the conditions under which automatic (or manual) generation runback can be used to meet single (or multiple) contingency performance requirements and to make it clear that all facilities must always remain within applicable thermal and voltage ratings.

The following requirement was changed due to industry comments:

R3.5. Manual and automatic generation run-back/tripping is allowed as a response to a single ~~and~~ or multiple Contingenc~~ies~~y ~~as long as Facility Ratings are not exceeded.~~if the following conditions are met:

Q37			
Commenter	**Yes**	**No**	**Comment**
Dominion		☑	For a single contingency, no generation adjustment should be allowed. For multiple transmission element contingencies, generation reduction (automatic or manual runback) may be allowed. Unit trip should only be allowed if a unit becomes unstable.
Duke Energy		☑	Runback should not be used if the disturbance caused you to exceed emergency ratings (i.e. thermal overload).
Ameren		☑	No generation runbacks should be allowed as long-term solutions for single contingency conditions.
Entergy	☑	☑	The question is not clear. Generation runback schemes are acceptable as long as emergency ratings are not violated. Runbacks should not be used to restore an element to within emergency ratings.
MISO	☑	☑	No, this should be the exception, not the rule. Yes, there are mine mouth plants with DC outlet lines, which must be runback if the DC line trips. There are also generators which used to serve large on site loads. The large loads are gone (plants retired) and generator outlet is limited. There are also some generators which have known contingent outlet limits and the generators are OK with runback, if the contingency occurs.
AECI	☑		We do not have the capability to have automatic runback at this time. However if an entity does have the capability to perform automatic runback than it should be allowed to prevent overloads. That would be the purpose.
Progress–Florida	☑		Provided events are confined to a single area (i.e., no cascading outages), automatic runback of generators should be allowed.
SERC EC DRS		☑	The question is not clear. Generation runback schemes are acceptable as long as emergency ratings are not violated. Runback schemes should not be used to restore an element to within emergency ratings.

Q37			
Commenter	**Yes**	**No**	**Comment**
Response: Industry comments strongly support allowing for the use of generator runback for single Contingencies. Generation runback will be permitted for all Contingencies, and the SDT has modified the standard language accordingly (See Requirement R 3.5). **R3.5**. Manual and automatic generation run-back/tripping is allowed as a response to a single ~~and~~ or multiple Contingenc~~ies~~y ~~as long as Facility Ratings are not exceeded.~~if the following conditions are met:			
ITC		☑	We believe that the BES should be able to operate for N-1 events without reliance on operating schemes. Assuming that some areas allow this, there should be criteria to evaluate the consequences of 2nd contingencies occurring during the runback. In addition, short-time ratings need to be confirmed which limit the time for runback. The system is at risk until the runback is completed and this risk must be evaluated and REQUIRED in the planning assessment.
Response: Industry comments strongly support allowing for the use of generator runback to prevent thermal overloads. The SDT has modified the standard language to clarify this view, including the requirement to remain within Facility Ratings during the course of the runback.			
KCPL		☑	All generators must have "firm" transmission outlet capacity.
Response: Industry comments strongly support allowing for the use of generator runback to prevent thermal overloads. The SDT has modified the standard language to clarify this view.			
ABB	☑	☑	No. Following a single contingency, all flows must be within some kind of established rating. After that, runback can be used to get under a longer-term rating. For multiple contingencies, some type of cross-tripping is OK, but runback is too slow and unreliable.
AECC		☑	Implementing an automatic runback scheme will only mask the impacts of the event. You want to know what happens when an event occurs not set up some psuedo fix that takes place before you know what the problem is.
Response: Industry comments strongly support allowing for the use of generator runback for single contingencies. The SDT has modified the standard language accordingly.			
BCTC	☑	☑	See our response to Question 36. In addition, since this runback is effectively a RAS/SPS with respect to protecting the transmission system from cascading, it must meet all the reliability requirements of a RAS.
Response: The SDT agrees that an automatic generation runback scheme is an SPS, and it must meet the applicable reliability requirements.			
PJM	☑	☑	Yes. At a minimum the emergency rating needs to be coordinated with the SPS timing.
Brazos Electric	☑		Can be including in a RAP or SPS with a long term CAP.
City Water Power and Light	☑		Coordination with neighboring systems is essential when considering generation redispatch.
ERCOT ISO CAISO	☑		1. Run back of generation should not result in tripping of firm load, 2. Power flow should be within the applicable ratings, 3. Frequency should be within the allowable limits
WECC	☑		Yes. Agree. Conditions for generation run back for N-1: 1) Run back of generation cannot result in

Q37			
Commenter	**Yes**	**No**	**Comment**
BPA TSGT TEP			tripping of firm load, 2) power flow should be within the time-limited equipment ratings, 3) frequency should be within allowable limits.
Northwestern Energy	☑		Yes, (1) if the failure of the runback scheme results in cascading, then it should not be allowed; (2) the power flow should be within the time-limited equipment ratings; and (3) the frequency should be within allowable limits.
Allegheny Power	☑		This could be permitted provided the run back will allow for the ability to prepare for the next operational contingency and not affect load.
AEP	☑		Ensure that the scheme is enabled to automatically runback for the problem conditions.
APPA	☑		Care must be taken to insure runbacks of one event will not cancel the effects of other runback plans in the same interconnections.
Central Maine Power HQTE National Grid NU NPCC RCS New England ISO NSTAR United Illuminating	☑		However, this should only be allowed where failure of an automatic runback that is not functionally redundant would not have significant adverse impact on the Bulk Electric System.
Exelon	☑		Run-back schemes should be allowed for certain single contingencies that can result in unit outlet constraints. Not all emergency ratings are thermal - some are relay or stability limits. In these instances, generator run-back should not be allowed.
FirstEnergy	☑		Yes, only if the Transmission Owner has documented short term ratings that would not be exceeded during the runback.
FPL FRCC	☑		At a minimum the emergency ratings should allow sufficient time for the runback scheme to operate reliably
Georgia Transm.	☑		Generation curtailment should allow the system to operate within the facility capabilities and should not put the generator at risk of violating its NERC requirements during curtailment.
IESO	☑		Please see our response to Q36 for the rationale for allowing the runback scheme to operate. The conditions that need to be met in order to allow the scheme to operate depends specifically on what that SPS (runback scheme) is designed for. Some schemes are designed to operate upon detecting the opening of specific transmission lines, others are designed to operate upon detection of circuit loading reaching a particular threshold. There is no universal rule as to the conditions that must be met for a runback scheme to operate. The use of runback scheme is similar to using special operating procedure, such as cross tripping, operator instructions to open a circuit, etc. There might be design requirements to ensure the scheme meet certain performance criteria. However, these should be covered in the standards for special protection system. In TPL-001, the requirement would be to include simulation of the runback scheme operation only as the conditions that would prompt the

Q37			
Commenter	**Yes**	**No**	**Comment**
			scheme to operate occur, and a requirement to include SPS misoperation, i.e., failure to operate and operate when not initiated, as a contingency.
Manitoba Hydro	☑		I see no problem in using a runback scheme to prevent thermal overloads. Most emergency ratings are based on 30 minute values to allow for operator action. An automatic runback could be accomplished in 5-15 minutes depending on the ramp rate of the generator. The runback scheme may allow higher emergency ratings depending on the rating methodology. At no point would emergency ratings be exceeded and at the end, loading would be within normal values.
MEAG Power NCEMC SERC EC PSS SCE&G TVA	☑		The generator runback scheme should complete its action within the time allowed by the emergency ratings of elements that exceed their normal thermal ratings.
NERC TIS	☑		This is simply a recognition that the system operators will take action to return the system to a stable and secure operating posture following an event. This is also common practice in generator protection/controls for generators with multiple GSUs for loss of one of the GSUs.
New York ISO	☑		Testing scenarios will have to be developed on a case by case basis depending on the design of the SPS. There is not universal rule that can be made for these unique cases.
Progress–Carolinas	☑		If the rating is a 2 hour rating then the adjustment should be complete within 2 hours.
SRP	☑		The loss of transmission line (N-1) may require Gen drop to prevent instability or violation. Studies will need to be performed that study the congestion of generation and transmission corridors and loss of various elements.
Santee Cooper	☑		Generator runback schemes should be able to be implemented before emergency thermal rating time limits are exceeded.
SaskPower	☑		Several generation run back or generation rejection schemes are used in Saskatchewan to restore facility loading to with normal ratings. The costs of not using these schemes would involve substantial increased investments and environmental impacts unacceptable in the Saskatchewan Regulatory Jurisdiction. Conditions are determined on a case by case basis. However, the generation runback or generation rejection scheme should not exceed the normal operating reserve.
Seattle City	☑		Runback should be allowed to prevent a possible cascading outage which might result from the thermal overload, but only to that level needed to protect the equipment, to address the contingency, or to prepare for the next contingency. If the runback level is lower than the normal rating, it should be shown that this runback will not harm the stability of the system.
Southern Transm.	☑		Yes, as long as no emergency ratings are violated.
Tenaska	☑		So long as the performance requirements are met then this is not an issue.
Response: The SDT agrees with your comments.			
MRO	☑		Generally, the historical MRO practices and requirements have been to require that following a single

Q37			
Commenter	**Yes**	**No**	**Comment**
			contingency the loading of facilities are to be maintained within emergency ratings. Adjustments are allowed to move the system from conditions within emergency ratings to conditions within normal ratings. However, in a limited number of cases, the use of Special Protection Systems are used to initiate fast generation run back, generation rejection, or automatic tripping of a remote transmission facility to get below a longer term emergency rating (30 minutes or longer.) In some cases, these involve parts of the network where remote generation is connected to load where the costs of not using the SPS would involve substantial increased investments and environmental impacts. Requirement 3.5 needs more clarification. What rating should not be exceeded?
Response: The SDT agrees with your comment and has modified the language of R 3.5 for clarity. **R3.5**. Manual and automatic generation run-back/tripping is allowed as a response to a single ~~and~~ or multiple Contingenc~~ies~~y ~~as long as Facility Ratings are not exceeded.~~if the following conditions are met:			
LADWP	☑		It was never disallowed under the current standards.
Response: The SDT believes that the current standards are silent on the use of SPS such as automatic generation runback. The standard language has been modified to explicitly identify the conditions under which an SPS may be used (See Requirement R 3.5). **R3.5**. Manual and automatic generation run-back/tripping is allowed as a response to a single ~~and~~ or multiple Contingenc~~ies~~y ~~as long as Facility Ratings are not exceeded.~~if the following conditions are met:			
WPS	☑		The use of RAS or SPS should not constitute a long-term Corrective Action Plan to address deficiencies. The use of RAS and SPS should be limited to that period of time necessary to place facilities in-service to address the deficiency.
Response: Industry comments do not support the use of runback only as an interim measure. Accordingly, the current draft standard language does not impose such a limitation on the use of SPS.			
ATC	☑		
CenterPoint	☑		
CPS Energy	☑		
ISO/RTO	☑		
Muscatine P&W	☑		Reasonable and workable.
SERC RRS OPS	☑		
Response: Thank you. Please see the Summary Response.			

The standard drafting team has considered that RAS or SPS may be allowable under certain situations for single Contingencies, but proposes that their use should be limited.

38) Q38. Do you agree that RAS or SPS may be allowed for single Contingencies? If not, please explain.

Summary Response: From the survey of industry responses regarding automatic readjustment of generation using SPS/RAS, the industry agrees that SPS/RAS may be allowed for single Contingencies. As a result, the SDT has modified the language in the standard such that it will allow the use of SPS/RAS for single or multiple Contingencies.

The following requirements have been changed due to industry comments:

R3.5. Manual and automatic generation run-back/tripping is allowed as a response to a single ~~and~~ or multiple Contingenc~~ies~~y ~~as long as Facility Ratings are not exceeded.~~if the following conditions are met:
R3.5.1. All Facilities shall be operating within their Facility Ratings.
R3.5.2. Such action would not violate safety, equipment, regulatory or statutory requirements.
R3.5.3. A sustainable, stable, operating condition is maintained

Q38			
Commenter	**Yes**	**No**	**Comment**
ABB		☑	It makes the system too complex and less reliable. Single contingencies need to be handled without any fancy controls.
KCPL		☑	Tripping generation for single contingency other than GSU failure or fault is unacceptable.
LCRA		☑	Only until plans are implemented to address a single contingency-identified deficiency. In general, plans should always be developed to exit SPS or RAS when economically feasible
Central Maine Power National Grid New England ISO NSTAR United Illuminating	☑		Only allowed where the failure of an SPS that is not functionally redundant would not have significant adverse impact on the Bulk Electric System.
NU	☑		It is not recommended that an SPS be used in this situation, that over time, the proliferation of SPSs may degrade system reliability and unduly complicate system operations. If allowed an SPS should only be used where the failure of the SPS that is not functionally redundant would not have significant adverse impact on the Bulk Electric System.
NPCC RCS	☑		A SPS may be used to provide protection for infrequent contingencies, or for temporary conditions that may exist such as project delays, unusual combinations of system demand and equipment outages or availability, or specific equipment maintenance outages. An SPS may also be applied to preserve system integrity in the event of severe facility outages and extreme contingencies. The decision to employ an SPS shall take into account the complexity of the scheme and the consequences of correct or incorrect operation as well as its benefits.

Q38			
Commenter	**Yes**	**No**	**Comment**
SCE&G	☑		A RAS or SPS should be allowed for single contingencies if its failure or misoperation can be compensated for during the time allowed by the emergency ratings of the elements that exceed their normal thermal ratings.
Response: The Industry response to this question has prompted the SDT to change the language to allow SPS/RAS for single or multiple Contingencies. The standard language now lists qualifiers of the use of SPS/RAS, listed in Requirements R3.5.1, R3.5.2 and R3.5.3. **R3.5**. Manual and automatic generation run-back/tripping is allowed as a response to a single ~~and~~ or multiple Contingenc~~ies~~y ~~as long as Facility Ratings are not exceeded.~~if the following conditions are met: **R3.5.1**. All Facilities shall be operating within their Facility Ratings. **R3.5.2**. Such action would not violate safety, equipment, regulatory or statutory requirements. **R3.5.3**. A sustainable, stable, operating condition is maintained			
City Water Power and Light		☑	SPS use should be limited and SPSs should be of a temporary nature. A mitigation plan with a timeframe for implementation should accompany all SPSs and RASs.
ITC		☑	We wouldn't agree to this without knowing what you mean by limited use. RAS or SPS as a common practice does not "raise the bar" in planning standard. An RAS or SPS should be allowable as a temporary measure to allow one to meet the standard and two to protect the components of the BES. When used in this capacity, a plan should be being either developed or implemented such that the RAS or SPS can be removed from service.
Response: The overall Industry response prompted the SDT to not include the qualifier about temporary use of SPS/RAS.			
CPS Energy		☑	
Response: See summary response.			
AECC		☑	this question is not clear. are you asking if the SPS/RAS be studied as a contingency or if the SPS/RAS is a viable solution for impacts caused by a contintgency. In either case SPS/RAS impacts and effectiveness needs to be evaluated. Especially if they are used as a mitigation for contingency impacts. It should be knownif the SPS/RAS is effective for the model being studied and if not another mitigation should be determined
Response: The SDT is attempting to explicitly state under what conditions a SPS/RAS can be used to mitigate undesirable System response to single Contingency events. The current standards are silent on this issue.			
Ameren	☑		Yes, but only as interim operating procedures until the limiting facilities can be uprated or unloaded. SPS or RAS should be allowed to trip non-firm (energy only) generation to keep facility loadings within ratings.
Response: The overall response from the Industry prompted the SDT to change the language in the Standard to allow SPS/RAS for all single and multiple contingencies with the qualifiers of Requirements R3.5.1, R3.5.2 and R3.5.3. The Standard does not differentiate performance for different generation types. **R3.5.** Manual and automatic generation run-back/tripping is allowed as a response to a single ~~and~~ or multiple Contingenc~~ies~~y ~~as long as Facility Ratings are not exceeded.~~if the following conditions are met:			

Q38			
Commenter	**Yes**	**No**	**Comment**
R3.5.1. All Facilities shall be operating within their Facility Ratings. **R3.5.2**. Such action would not violate safety, equipment, regulatory or statutory requirements. **R3.5.3.** A sustainable, stable, operating condition is maintained			
Progress–Florida	☑		This requirement is addressed in PRC-005 and these requirements should not be addressed again in this Standard. However, the use of RAS or SPS should be allowed as necessary for any single contingency event, provided that such use does not result in cascading outages. It should be noted that the performance requirements for SPS are appropriately stated in standards PRC-012-0 and PRC-015-0. Revision of the existing TPL standards will require updating of the contingency references in PRC-012-0.
Response: The conditions for the use and application of SPS/RAS are addressed in the TPL Standards. The SDT does not agree that the PRC Standards addresses the use of SPS/RAS.			
Southern Transm.	☑		RAS and SPS should be defined such that they may only be used for low probability events.
Response: The overall response from the Industry prompted the SDT to change the language in the Standard to allow SPS/RAS for all single and multiple contingencies with the qualifiers of Requirements R3.5.1, R3.5.2, and R3.5.3. There are no qualifications of the use of SPS/RAS based on the probability of the contingency. **R3.5**. Manual and automatic generation run-back/tripping is allowed as a response to a single ~~and~~ or multiple Contingenci~~es~~y ~~as long as Facility Ratings are not exceeded.~~if the following conditions are met: **R3.5.1**. All Facilities shall be operating within their Facility Ratings. **R3.5.2**. Such action would not violate safety, equipment, regulatory or statutory requirements. **R3.5.3**. A sustainable, stable, operating condition is maintained			
IESO	☑		SPS and RAS should be allowed for single contingencies. However, a more fundamental requirement is that the SPS (and RAS) should generally be regarded as a stop gap measure before planned transmission expansion or reinforcement becomes available. SPS should in general not be used as a substitute for transmission facilities.
New York ISO	☑		As stated previously SPSs should only be a temporary solution used to protect elements prior to a permanent solution implementation.
WPS	☑		The use of RAS or SPS should not constitute a long-term Corrective Action Plan to address deficiencies. The use of RAS and SPS should be limited to that period of time necessary to implement expansion of facilities to address the deficiency.
Response: The overall Industry response prompted the SDT to allow the use of SPS/RAS as a permanent Corrective Action measure and not just as a temporary measure.			
Brazos Electric	☑		
Dominion	☑		
ERCOT ISO	☑		Agree

Q38			
Commenter	**Yes**	**No**	**Comment**
Northwestern Energy	☑		
AECI	☑		
Allegheny Power	☑		
AEP	☑		As long as they are automatic.
APPA	☑		As the SDT has said under certain situations.
ATC	☑		
APS			
BPA	☑		
BCTC	☑		
CAISO	☑		Agree
CenterPoint	☑		
Duke Energy	☑		RAS and SPS are economical solutions that planners ought to be able to use.
Entergy	☑		RAS or SPS may be allowed for single contingencies when they aid in meeting System Performance requirements. RAS and SPS should not be used to restore an element to within emergency ratings.
Exelon	☑		
FirstEnergy	☑		As long as thermal, voltage, and stability requirements are met, RAS or SPS should be allowed provided it does not shed load for a single contingency event.
FPL FRCC	☑		The performance requirements for SPS are appropriately stated in standards PRC-012-0 and PRC-015-0. If the proposed TPL standard is adopted the contingency references in PRC-012-0 would need to be updated.
Georgia Transm.	☑		
HQTE	☑		A SPS may be used to provide protection for infrequent contingencies, or for temporary conditions that may exist such as project delays, unusual combinations of system demand and equipment outages or availability, or specific equipment maintenance outages. An SPS may also be applied to preserve system integrity in the event of severe facility outages and extreme contingencies. The decision to employ an SPS shall take into account the complexity of the scheme and the consequences of correct or incorrect operation as well as its benefits.
ISO/RTO	☑		
Manitoba Hydro	☑		MH sees no reason to limit the application of SPSs. The SPS is a viable planning option that allows large savings in cost in stability limited system where there is no need to increase thermal capability.
MEAG Power	☑		

Q38			
Commenter	**Yes**	**No**	**Comment**
MISO	☑		
MRO	☑		
Muscatine P&W	☑		
NERC TIS	☑		
NCEMC	☑		
PJM	☑		
Progress–Carolinas	☑		
SRP	☑		As long as Non-Consequential Loss of Load is not a solution for single contingencies (N-1).
Santee Cooper	☑		
SaskPower	☑		
Seattle City	☑		
SERC EC DRS	☑		
SERC EC PSS	☑		
SERC RRS OPS	☑		
Tenaska	☑		
TVA	☑		TVA does not allow generator tripping for a single contingency. However, we recognize that there are certain instances for which this makes practical and economic sense.
TSGT	☑		
TEP	☑		
WECC	☑		
Response: Thank you. Please see the Summary Response.			

39) Q39. Please describe the limitations that you believe should be placed on the use of RAS or SPS for single Contingency events.

Summary Response: Requirement R3.5 has been written such that it allows RAS or SPS for single or multiply Contingencies with limitations described in Requirements R3.5.1 through R3.5.3. Requirement R3.5.2 allows for "regulatory or statutory requirements" that may prohibit or limit the use of RAS or SPS.

In addition, most responders said, or implied, that the failure of SPS/RAS schemes should be studied. Most said that the failure of the schemes should not cause cascade, with some suggesting that there shouldn't be any Non-Consequential Load Loss. The SDT believes that failure of SPS should not be used to establish requirements in the TPL-001-1 standard. Instead, this standard sets requirements when SPS can be used, and relies on the relevant PRC standards to set the requirements for studies and designs to implement the SPS. In response to those that commented regarding existing RRO standards becoming more stringent than the resulting North American standards, there are provisions to allow for regions to have and implement more restrictive standards.

Q39	
Commenter	**Comment**
ABB	They could be used in the short term until a permanent fix is available. Limit to <5 years.
Ameren	SPS and RAS should be used only as interim operating procedures to mitigate single contingency events until the limiting facilities can be uprated or unloaded. SPS and RAS should be allowed to trip non-firm (energy only) generation as needed to keep facility loadings within ratings.
Northwestern Energy	RAS or SPS should not be allowed for non three phase single line faults. If cascading could result from the failure of the RAS to operate properly, then redundancy should be required.
HQTE	See response to Q38.
ITC	Temporary in nature.
KCPL	RAS/SPS should not limit generation output for N-1 conditions.
LCRA	Short-term with exit plans; Loss of significant generation or load resulting from SPS /RAS action.
Manitoba Hydro	An automatic runback should be accomplished in 5-15 minutes depending on the ramp rate of the generator. The runback scheme may allow higher emergency ratings depending on the rating methodology. At no point would emergency ratings be exceeded and at the end, loading would be within normal values. Generator tripping should be allowed. Generator tripping is used extensively in regions where remote generation is delivered via long transmission. MH sees no reason to limit the application of SPSs. The SPS is a viable planning option that allows large savings in cost in stability limited system where there is no need to increase thermal capability.
MRO	The MRO believes the MRO systems are presently designed to meet system performance, in some cases, with the use of SPS to initiate fast generation runback, generation rejection, and automatic tripping of a remote transmission facility for a single contingency event. The fast generation runback or generation rejection should not exceed the normal operating reserve of the generation reserve sharing pool to which the planner belongs or of the planner itself if the planner self-provides generation reserves.

Q39	
Commenter	**Comment**
New York ISO	Must be temporary, approved by the NYSRC, tested annually with evidence of preventive maintenance submitted annually.
NPCC RCS	See response to Q38.
Southern Transm.	Generator tripping or runback and reconfiguration should be allowed for lower probability single contingency events such as bus faults; we suggest that SPS not be used for events that are more likely to occur.
WPS	The use of RAS or SPS should not constitute a long-term Corrective Action Plan to address deficiencies. The use of RAS and SPS should be limited to that period of time necessary to implement expansion of facilities to address the deficiency.
Response: Your suggestion was seriously considered but restrictions were limited to those sub-requirements of Requirement R3.5.	
Brazos Electric City Water Power and Light	Taken directly from the ERCOT operating Guides for RAPs and SPSs: Any RAP must meet the following requirements: a. Coordinated and approved with the owners and operators of facilities included in the RAP. b. Use is limited to the time required to construct replacement Transmission Facilities. However, the RAP will remain in effect, if replacement Transmission Facilities have been determined by the Control Area Authority to be impractical. c. Complies with all applicable ERCOT and NERC requirements. d. ERCOT develops and posts a methodology to include the RAP in the Total Transfer Capability (TTC) calculations, if appropriate. e. Clearly defines and documents operator actions. f. Includes the option for the transmission operator to override the procedures if the RAP will not improve system reliability. g. Operators must be trained in RAP implementation. For SPSs 13. Special Protection Systems (SPS) are protective relay systems designed to detect abnormal ERCOT System conditions and take pre-planned corrective action (other than the isolation of faulted elements) to provide acceptable ERCOT System performance. SPS actions include among others, changes in demand, generation, or system configuration to maintain system stability, acceptable voltages, or acceptable Facility loadings. An SPS does not include underfrequency or undervoltage load shedding. A Type 1 SPS is any SPS that has wide-area impact and specifically includes any SPS that a) is designed to alter generation output or otherwise constrain generation or imports over DC Ties, or b) is designed to open 345 kV transmission lines or other lines that interconnect TDSPs and impact transfer limits. Any SPS that has only local-area impact and involves only the Facilities of the owner-TDSP is a Type 2 SPS. The determination of whether an SPS is Type 1 or Type 2 will be made by ERCOT upon receipt of a description of the SPS from the SPS owner. Any SPS, whether Type 1 or Type 2, shall meet all requirements of NERC Standards relating to SPSs, and shall additionally meet the following ERCOT requirements: • The SPS owner shall coordinate design and implementation of the SPS with the owners and operators of Facilities included in the SPS, including but not limited to Generation Resources and HVDC ties. • The SPS shall be automatically armed when appropriate. • The SPS shall not operate unnecessarily. To avoid unnecessary SPS operation, the SPS owner may provide a

Q39	
Commenter	**Comment**
	real-time status indication to the owner of any Generation Resource controlled by the SPS to show when the flow on one or more of the SPS's monitored facilities exceeds 90% of the flow necessary to arm the SPS. The cost necessary to provide such status indication shall be allocated as agreed by the SPS owner and the Generation Resource owner. • The status indication of any automatic or manual arming of the SPS shall be provided as SCADA alarm inputs to the owners of any facility(ies) controlled by the SPS.. • When a Transmission Operator (TO) removes a SPS from service, the TO shall immediately notify ERCOT operations. ERCOT shall modify its reliability constraints to recognize the unavailability of the SPS and notify the Market. When a SPS is returned to service, the TO shall immediately notify ERCOT operations. ERCOT shall modify its reliability constraints to recognize the availability of the SPS. 14. The owner(s) of an existing, modified, or proposed SPS shall submit documentation of the SPS to ERCOT for review and compilation into an ERCOT SPS database. The documentation shall detail the design, operation, functional testing, and coordination of the SPS with other protection and control systems. • ERCOT shall conduct a review of each proposed SPS and each proposed modification to an existing SPS. Additionally, it shall conduct a review of each existing SPS every five years, or sooner as required by changes in system conditions. Each review shall proceed according to a process and timetable documented in ERCOT Procedures and posted on the ERCOT website. • For a proposed Type 1 SPS, the review must be completed before the SPS is placed in service, unless ERCOT specifically determines that exemption of the proposed SPS from the review completion requirement is warranted. The timing of placing the SPS into service must be coordinated with and approved by ERCOT. The implementation schedule must be confirmed through submission of a Service Request to ERCOT. • For a proposed Type 2 SPS, the SPS may be placed into service before completion of the ERCOT review, with advanced prior notice to ERCOT in the form of a Service Request. The timing of placing the SPS into service must be coordinated with and approved by ERCOT. Existing SPSs that have already undergone at least one review shall remain in service during any subsequent review, and proposed modifications to existing SPSs may be implemented, upon notice to ERCOT, and approval of ERCOT before completion of the required ERCOT review. • The process and schedule for placing an SPS into service must be consistent with documented ERCOT Procedures. The schedule must be coordinated among ERCOT and the owners of any facility(ies) controlled by the SPS, and shall provide sufficient time to perform any necessary testing prior to its being placed in service. • An ERCOT SPS review shall verify that the SPS complies with ERCOT and NERC criteria and guides. The review shall evaluate and document the consequences of failure of a single component of the SPS, which would result in failure of the SPS to operate when required. The review shall also evaluate and document the consequences of misoperation, incorrect operation, or unintended operation of an SPS, when considered by itself, and without any other system contingency. If deficiencies are identified, a plan to correct the deficiencies shall be developed and implemented. The current review results shall be kept on file and supplied to NERC on request within thirty (30) days. • As part of the ERCOT review and unless judged to be unnecessary by ERCOT, the appropriate ROS working groups such as the Steady State Working Group, the Dynamics Working Group, and/or the System Protection Working Group shall review the SPS and report any comments, questions, or issues to ERCOT for resolution. ERCOT may work

Q39	
Commenter	**Comment**
	with the owner(s) of facilities controlled by the SPS as necessary to address all issues. • ERCOT shall develop a methodology to include the SPS in the Commercially Significant Constraint (CSC) limit calculations, if appropriate. • ERCOT's review shall provide an opportunity for and include consideration of comments submitted by Market Participants affected by the SPS. 15. SPS owners shall notify ERCOT of all SPS operations. Documentation of SPS failures or misoperations shall be provided to ERCOT using the Relay Misoperation Report located in Section 6 of these Operating Guides. ERCOT shall conduct an analysis of all SPS operations, misoperations, and failures. If deficiencies are identified, a plan to correct the deficiencies shall be developed and implemented. 16. For each SPS, the owner shall either identify a preferred exit strategy or explain why no exit strategy is needed to ERCOT. This shall take place according to a timetable documented in ERCOT Procedures and posted on the ERCOT website. Once an exit strategy is complete and a SPS is no longer needed, the owner of an existing SPS shall notify ERCOT, using a Service Request, whenever the SPS is to be permanently disabled, and shall do so according to a timetable coordinated with and approved by ERCOT and the owners of all facilities controlled by the SPS
Response: The SDT anticipates that ERCOT will be able to maintain the existing requirements that you suggest. Requirement R3.5.2 allows for "regulatory or statutory requirements" which may limit RAS or SPS.	
Dominion	For single contingency events, a SPS scheme should not result in loss of load.
Response: Non-Consequential Load Loss is not allowed for single Contingency events.	
ERCOT ISO CAISO	RAS or SPS should generally be regarded as a stop gap measure before transmission expansion or reinforcement becomes available. It should not be used as a substitute for transmission facilities.
Response: Your suggestion was seriously considered but restrictions were limited to those sub-requirements of Requirement R3.5. The SDT anticipates that ERCOT will be able to maintain the existing requirements that you suggest. Requirement R3.5.2 allows for "regulatory or statutory requirements" which may limit RAS or SPS.	
Allegheny Power	The use of these system should be limited and not used as a preferred solution and also be approved by a stringent review process through the RTO & RE.
AEP	Should be allowed as long as they have been approved by the applicable Regional Reliability Organization.
APPA	See Question 36.
BCTC	RAS should be permitted when the system performance conforms with the performance requirements laid out in the tables. Generator tripping should be permitted for single contingency events. R3.6 proposes to limit generator tripping for single contingencies except for certain conditions which are not listed. Without knowing what these conditions might be, we find ourselves speculating on what might be proposed. On the 10 October 2007 conference call, it was suggested that there are concerns regarding generator reserves and loss of reactive capability. We have some observations regarding these concerns. With respect to reserves, some concerns would also apply to runback, since units on runback could not also be on AGC and could not be reallocated to AGC until the transmission contingency is returned to service. There was also a concern regarding tripping of steam units and the delay in bringing them back on line. This is a resource adequacy issue that should be addressed with the customer, not a transmission reliability issue. Regarding the loss of reactive capability, this would be addressed by

Q39	
Commenter	**Comment**
	the post mitigation plan studies to demonstrate that the reactive reserves meet the requirements, whatever they are determined to be. We would generally expect that the reduction in MW transfers would reduce the need for reactive support, so the new condition might not require the reactive support. Nevertheless, the post mitigation studies will address this. Therefore, we conclude that these concerns are not applicable to transmission planning standards. BCTC plans and operates a transmission system that interconnects generation comprised of about 90% hydroelectric. Often the extreme generation patterns for which we consider generator tripping occur for a limited time period during the year at off peak. These would be during high runoff and/or light local load periods. For these conditions, there is typically plenty of other generation that can be used as reserves for generator tripping. BCTC currently strives to avoid use of RAS for N-1, especially on the 500 kV transmission system. However, for example, if avoiding generator tripping were to trigger the need for hundreds of km of 500 kV transmission line for an off peak operating condition or a low capacity factor or intermittent resource, we would likely consider RAS, especially for transmission radial to the generator. In the lower voltage systems we often have consequential loss of small generators and consider generator tripping for radial lines and local networks. In most cases, this generator loss is addressed through sensitivity studies and discussions with generator owners and transmission customers with respect to the costs they are willing to incur and what is required by Resource Planners to meet their planning criteria. Operating reserves requirements are also a consideration. Any loss of generation due to tripping or ramping that is less than the amount lost due to consequential loss should be acceptable without question. In summary, we would be prepared to review and comment on a proposal from the SDT on limitations on generator tripping. BCTC suggests that the SDT list the limitations rather than the permitted conditions and that these limitations should also apply to generator ramping.
Georgia Transm. SERC EC DRS	None.
Muscatine P&W	As long as they work and are reasonable - none. (See Q43 Comment #3)
MISO	The use of SPS/RAS may be the appropriate transmission system design. If it is economic to mitigate the SPS, then upgrades should be made.
Response: See the summary response.	
Central Maine Power National Grid New England ISO NU NSTAR United Illuminating	Only allowed where SPS failure would not have significant adverse impact on the Bulk Electric System; non-Consequential loss of load should be allowed up to an amount potentially specified in the standard.
Response: See the summary response. As to your suggestion on Non-Consequential Loss of Load, it is prohibited for single Contingencies and is not prohibited for multiple Contingencies.	
Duke Energy	You should not have any wide area cascading if the RAS or SPS fails to operate as expected, or operates when it shouldn't.

Q39	
Commenter	**Comment**
Response: See the summary response: PRC standards address SPS failure.	
Entergy	RAS or SPS may be allowed for single contingencies when they aid in meeting System Performance requirements. RAS and SPS should not be used to restore an element to within emergency ratings.
Response: See the summary response. Requirement R3.5.1 restricts RAS/SPS such that facility ratings must be honored at all times.	
FirstEnergy	As long as thermal, voltage, and stability requirements are met, RAS or SPS should be allowed provided it does not shed load for a single contingency event.
Response: See the summary response. Non-Consequential Load Loss is not permitted for single Contingency events.	
FPL FRCC	The performance requirements for SPS are appropriately stated in standards PRC-012-0 and PRC-015-0. If the proposed TPL standard is adopted the contingency references in PRC-012-0 would need to be updated.
Response: See Requirement R3.5. There are no longer any limitations on the use of SPS as long as they meet this criteria.	
IESO	Please see comments provided under Q38, above, regarding the use of SPS not as a substitute for transmission facilities. In addition, there should be requirements to simulate failure of SPS operation as a contingency in addition to the initiating single contingency. In cases where an SPS is intended to achieve acceptable stability performance which can affect interconnection reliability, the SPS should be classified as BES impactive and as such, redundancy may be required. When redundancy is provided, simulation of SPS failing to operate may be waived.
Response: Your suggestions were considered but the only limitations to RAS/SPS are those listed as sub-requirements of Requirement R3.5. PRC standards address SPS failure.	
MEAG Power NCEMC SERC EC PSS SERC RRS OPS SCE&G TVA	RAS or SPS should meet the same criteria as any protection system.
Response: See summary response as regards to planning standards. The PRC standards for SPS will be maintained as you have suggested.	
Progress–Florida	The use of RAS or SPS should be allowed as necessary for any single contingency event, provided that such use does not result in cascading outages. It should be noted that the performance requirements for SPS are appropriately stated in standards PRC-012-0 and PRC-015-0. Revision of the existing TPL standards will require updating of the contingency references in PRC-012-0.
Response: The SDT agrees that the PRC standards address performance and may need to be updated.	
ReliabilityFirst	The requirements for the use of SPS and RAS should be contained in a separate standard. That standard should dictate when the RAS and SPS can be used. The planning studies would then simulate those conditions.
Response: This was considered but the consensus was to keep requirements in TPL-001-1. RAS/SPS is allowed as per Requirement R3.5 and its sub-requirements.	
SRP	Non-Consequential Loss of Load should not be allowed for single contingencies (N-1) and the system must remain stable with no violations.
Response: The SDT agrees and Non-Consequential Load Loss is not permitted.	
Santee Cooper	There should be no stability impacts, and system security must be maintained. RAS or SPS should meet the same criteria as any protection system.

Q39	
Commenter	**Comment**
Response: See the summary response. The PRC standards address protection system criteria.	
SaskPower	Delegate this issue to the Planning Coordinators.
Response: See the summary response. The PC is just one of many applicable functional entities.	
Seattle City	All RAS or SPS schemes should be evaluated to determine the impact on the interconnected system. Actions that derate transfer paths should not be allowed unless essential to protecting equipment or anticipating the next contingency.
Response: See the summary response. The SDT expects that all SPS/RAS will still be subject to the regional scrutiny that you have suggested.	
AECC	See comment to Q38.
Response: See response to Q38.	
Tenaska	The system, following the use of an RAS or SPS in response to a single contingency, shall meet the performance requirements.
Response: The standard allows for RAS/SPS as per Requirement R3.5 but these types of corrective actions are expected to meet the performance requirements as per the tables.	
WECC BPA TSGT TEP	Based on the interpretation of the above question, we are providing two responses to this question. The first responds to the limitations placed on RAS, regardless of what action the RAS initiates. The second response specifically addresses RAS that trips generation. Response 1: RAS should be allowed for single contingency events. Any sort of RAS should be permitted, but there should be a review of the RAS. If the local entities agree to the RAS, it should be allowed. This addresses cost vs. benefit balance. Entities affected should be the ones that determine the best solution for their situation. Response 2: Generation tripping can be used for single contingency if such application can be demonstrated through transmission planning studies that: • The generation tripping is planned and controlled ("planned and controlled" means a pre-planned action(s) based on predetermined system conditions that take corrective measure(s) to maintain acceptable system performance). • The generation tripping does not result in non-consequential load loss. • System frequency should be within allowable limits. • System voltage dip and deviation should be within allowable limits. • The generator owner(s) agrees to the tripping as planned.
Response: Requirement R3.5 allows for the use of SPS and RAS and Requirement R3.5.2 would allow for the kinds of review that you're suggesting.	

40) 40. When RAS or SPS are allowed, what conditions should be met when these systems are used in system adjustments to meet performance requirements?

Summary Response: There was a wide variety of responses that described the conditions that should be met when an RAS or SPS is applied but the majority of the responses can be characterized as follows:

- Requirements for SPS are outlined in the PRC standards
- Maintain System Stability
- Prevent cascading
- Prevent loss of load
- Should be used as a short-term mitigation solution

Other suggestions include:

- Non-Consequential Loss of Load should not be allowed for single Contingencies (N-1)
- Allow to prepare for next Contingency
- If an SPS is used to solve a single Contingency problem, then full redundancy should be required.
- Generator tripping or runback and reconfiguration should be allowed for lower probability single Contingency events such as bus faults.
- SPS not be used for events that are more likely to occur.
- Should not constitute a long-term Corrective Action Plan to address deficiencies.

The SDT has modified Requirement R3.6 (now Requirement R3.5) to specify the conditions under which manual and automatic generation runback and tripping can be used to meet single and multiple Contingency performance requirements and to make it clear that all Facilities must always remain within applicable thermal and voltage ratings.

The following requirements have been changed due to industry comments:

R3.5. Manual and automatic generation run-back/tripping is allowed as a response to a single ~~and~~ or multiple Contingenc~~ies~~y ~~as long as Facility Ratings are not exceeded.~~if the following conditions are met:

R3.5.1. All Facilities shall be operating within their Facility Ratings.

R3.5.2. Such action would not violate safety, equipment, regulatory or statutory requirements.

R3.5.3. A sustainable, stable, operating condition is maintained.

Q40	
Commenter	**Comment**
Ameren	RAS and SPS should be allowed only as an interim operating procedure to mitigate single contingency conditions or to mitigate multiple contingency events on a long-term basis. The RAS or SPS must be effective in mitigating the contingencies and can be implemented within the required operating time.
Response: Industry comments do not support the use of runback only as an interim measure. The current draft standard language does not	

Q40	
Commenter	**Comment**
impose such a limitation on the use of SPS.	
Brazos Electric	See above.
BCTC	See Q39. Also, WECC RAS Reliability requirements must be met for new systems.
Central Maine Power HQTE National Grid New England ISO NU NPCC RCS NSTAR United Illuminating	System must remain stable with acceptable voltages and all equipment within applicable emergency limits.
Duke Energy	See response to Q36 and Q37 above. No additional conditions beyond meeting the performance requirements.
Entergy	Following a contingency, power flows on lines should be within their emergency ratings, voltages should be at adequate levels and system should be stable.
FirstEnergy	As long as thermal, voltage, and stability requirements are met, RAS or SPS should be allowed provided it does not shed load for a single contingency event, and only if the Transmission Owner has documented short term ratings that would not be exceeded during the runback.
JEA	RAS/SPS should not limit generation output for N-1 conditions.
Manitoba Hydro	1) Reducing or increasing generation while keeping the units on-line or by bringing additional units on line. The amount of generation change should be limited to that amount that can be accomplished within the allowed readjustment period. Due consideration should be given to start up time and ramp rates of the units. 2) Generator tripping should be added to requirement R3.5 in addition to runback. Generator tripping is used extensively in regions where remote generation is delivered via long transmission. 3) Capacitor and reactor switching - The number of capacitors and reactors, which may be switched, should be limited to those which could be switched during the allowed readjustment period. 4) Adjustment of load tap changers (LTCs) to the extent possible within the allowed readjustment period. 5) Adjustment of phase shifters to the extent possible within the allowed readjustment period. 6) An increase or decrease to the flow on HVDC facilities to the extent possible within the allowed readjustment period. 7) Transmission reconfiguration - Automatic tripping of transmission lines or transformers to the extent possible within the allowed readjustment period. 8) Automatic tripping of interruptible load or curtailment of or redispatching of Firm Transmission Service to the extent possible within the allowed readjustment period.
MISO	SPS may be used if it maintains similar level of system reliability and security as transmission upgrades.
MRO	SPS are often used in the MRO area to avoid unnecessary expenditures and environmental impacts. SPS are sometimes used to prevent instability. The SPS may initiate fast generation run back, automatic generation rejection, or automatic tripping of a facility for a remote event. The MRO notes that the scheme must be automatic, fast acting, consistent with short term equipment ratings. The MRO notes the following general conditions for adjustments, that

Q40	
Commenter	**Comment**
	perhaps would be useful in designing performance requirements for allowable system adjustments in addition to the description in Question 39: 1. Generation adjustments - Reducing or increasing generation while keeping the units on-line or by bringing additional units on line. The amount of generation change is limited to that amount that can be accomplished within the allowed readjustment period. Due consideration shall be given to start up time and ramp rates of the units. 2. Capacitor and reactor switching - The number of capacitors and reactors, which may be switched, is limited to those which could be switched during the allowed readjustment period. This includes those capacitors and reactors that would be switched by automatic controls within the same period. 3. Adjustment of load tap changers (LTCs) to the extent possible within the allowed readjustment period. This includes both LTCs which would automatically adjust and those under operator control which could be adjusted within the readjustment period. 4. Adjustment of phase shifters to the extent possible within the allowed readjustment period. 5. An increase or decrease to the flow on HVDC facilities to the extent possible within the allowed readjustment period. 6. Transmission reconfiguration - Automatic tripping of transmission lines or transformers to the extent possible within the allowed readjustment period. 7. Automatic tripping of interruptible load or curtailment of or pre-determined redispatching of Firm Transmission Service to the extent possible within the allowed readjustment period.
Muscatine P&W	Reasonable and workable. (See Q43 Comment #3)
NERC TIS	No special conditions required as long as the RAS or SPS are tested to meet the performance requirements.
Seattle City	Actions should be intended to address contingency, prevent damage, or prepare for next contingency.
SERC EC DRS	No additional conditions except meeting performance requirements.
Southern Transm.	If an SPS is used to solve a single contingency problem, then full redundancy should be required. Generator tripping or runback and reconfiguration should be allowed for lower probability single contingency events such as bus faults; we suggest that SPS not be used for events that are more likely to occur.
Tenaska	The system, following the use of an RAS or SPS in response to a single contingency, shall meet the performance requirements.
WECC BPA TSGT TEP	System adjustment involves operator intervention that would be beyond the time frame of RAS operation. Therefore, if a unit is already dropped during RAS or SPS action, it should be assumed to be off-line during system adjustment period.

Response: Based on the majority of industry responses, the SDT has modified Requirement R3.6 (now Requirement R3.5) to specify conditions under which manual and automatic generation runback and tripping can be used to meet single and multiple Contingency performance requirements for the steady state portion of the Planning Assessment.

R3.5. Manual and automatic generation run-back/tripping is allowed as a response to a single ~~and~~ or multiple Contingenc~~ies~~y ~~as long as Facility Ratings are not exceeded.~~if the following conditions are met:

Q40	
Commenter	**Comment**
R3.5.1. All Facilities shall be operating within their Facility Ratings. **R3.5.2.** Such action would not violate safety, equipment, regulatory or statutory requirements. **R3.5.3**. A sustainable, stable, operating condition is maintained.	
City Water Power and Light	Maintain system stability, prevent loss of load and prevent cascading outages.
Response: The SDT agrees with your comment and has modified Requirement R3.6 (now Requirement R3.5) to specify conditions under which manual and automatic generation runback and tripping can be used to meet single and multiple contingency performance requirements. **R3.5.** Manual and automatic generation run-back/tripping is allowed as a response to a single ~~and~~ or multiple Contingenc~~ies~~y ~~as long as Facility Ratings are not exceeded.~~if the following conditions are met: **R3.5.1.** All Facilities shall be operating within their Facility Ratings. **R3.5.2.** Such action would not violate safety, equipment, regulatory or statutory requirements. **R3.5.3**. A sustainable, stable, operating condition is maintained.	
ERCOT ISO CAISO	1. RAS or SPS must be simple and manageable. 2. Number of contingencies triggering a RAS or SPS should be very limited (4 allowed by CAISO). 3. RAS or SPS should generally monitor only local facilities that are either directly connected to the plant or one bus away.
Response: The SDT agrees with your comment in (1) and believes this is covered in the requirements of the PRC standards. Based on the majority of industry responses, the SDT has modified Requirement R3.6 (now Requirement R3.5) to specify conditions under which manual and automatic generation runback and tripping can be used to meet single and multiple Contingency performance requirements for the steady state portion of the Planning Assessment. Applying additional requirements needs to be done as a regional difference. **R3.5.** Manual and automatic generation run-back/tripping is allowed as a response to a single ~~and~~ or multiple Contingenc~~ies~~y ~~as long as Facility Ratings are not exceeded.~~if the following conditions are met: **R3.5.1.** All Facilities shall be operating within their Facility Ratings. **R3.5.2.** Such action would not violate safety, equipment, regulatory or statutory requirements. **R3.5.3**. A sustainable, stable, operating condition is maintained.	
Northwestern Energy	RAS or SPS should meet performance requirements including reserve requirements.
Allegheny Power	The system should remain stable, reliable, allow for operational preparation for the next contingency and failure of the RAS/SPS should not lead to a cascading event.
AEP	They include redundancy and their failure does not result in cascading.
APPA	Maintain system stability and prevent the loss of load.
SRP	Non-Consequential Loss of Load should not be allowed for single contingencies (N-1) and the system must remain

Q40	
Commenter	**Comment**
	stable with no violations.
Response: The SDT agrees.	
FPL FRCC	The performance requirements for SPS are appropriately stated in standards PRC-012-0 and PRC-015-0. If the proposed TPL standard is adopted the contingency references in PRC-012-0 would need to be updated.
Progress–Florida	The use of RAS or SPS should be allowed as necessary for any single contingency event, provided that such use does not result in cascading outages. It should be noted that the performance requirements for SPS are appropriately stated in standards PRC-012-0 and PRC-015-0. Revision of the existing TPL standards will require updating of the contingency references in PRC-012-0.
Georgia Transm.	PRC Standards
MEAG Power NCEMC SERC EC PSS TVA	The conditions required by SPS standards (PRC).
Santee Cooper	There should be no stability impacts, and system security must be maintained. The requirements are outlined in PRC-015,016, and 017.
SERC RRS OPS	The requirements are outlined in PRC-015, 016, and 017.
SCE&G	The conditions required by SPS Reliability Standards.
Response: The SDT has considered your comments and concludes that the PRC standards describe the performance requirements for SPS but do not specify how the SPS requirements are applied to the Planning Assessment	
IESO	As indicated in the comments provided under Q38 and Q39, the conditions to simulate operation of the RAS and SPS would depend on the conditions they are designed to protect. We do not believe such conditions can be generalized.
ITC	This should be limited to the time until a physical solution is possible (i.e., a temporary solution).
WPS	The use of RAS or SPS should not constitute a long-term Corrective Action Plan to address deficiencies. The use of RAS and SPS should be limited to that period of time necessary to implement expansion of facilities to address the deficiency.
Response: Industry comments do not support the use of runback only as an interim measure. The current draft standard language does not impose such a limitation on the use of SPS.	
LCRA	Systems must have a balance between security and dependability. System must be reviewed annually or as system conditions change.
New York ISO	This would be dependent on the characteristics of each unique protection scheme.
Response: The SDT agrees with your comment and believes this is covered in the requirements of the PRC standards.	
Progress–Florida	The use of RAS or SPS should be allowed as necessary for any single contingency event, provided that such use does not result in cascading outages. It should be noted that the performance requirements for SPS are appropriately stated in standards PRC-012-0 and PRC-015-0. Revision of the existing TPL standards will require updating of the contingency references in PRC-012-0.
Response: Please see Requirement R3.5. The use of SPS is allowed for generation tripping or runback as long as the criteria is met	
AECC	See response to Q38.
Response: See response to Q38.	

Q40	
Commenter	**Comment**
SaskPower	Delegate this issue to the Planning Coordinators.
Response: The SDT believes that it should be a coordinated effort between the Planning Coordinator and the Transmission Planner.	

G) General Questions

41) Q41. If you are aware of any regional variances that would be required as a result of these standards, please identify them here.

Summary Response: Few comments were received indicating that regional variances would be required although some pointed out that variances may be required depending on the final version of the standard. The standard has been modified with respect to the issue of generation tripping and that should reduce or eliminate the stated level of concern and may make a regional variance unnecessary.

The following requirement was changed due to industry comments:

R3.5. Manual and automatic generation run-back/tripping is allowed as a response to a single ~~and~~ or multiple Contingenc~~iesy~~ ~~as long as Facility Ratings are not exceeded.~~if the following conditions are met:

Q41			
Commenter	**Yes**	**No**	**Comment**
ABB		☑	
Brazos Electric		☑	
Dominion		☑	
E ON US		☑	
AECI		☑	
Allegheny Power		☑	
AEP		☑	
CenterPoint		☑	
CPS Energy		☑	
Duke Energy		☑	
Entegra			
Entergy		☑	
FirstEnergy		☑	
FPL FRCC		☑	No, if the comments to the above questions are incorporated. The FRCC system is a peninsular system having only one interface with the rest of the interconnected NERC system, and has historically demonstrated exceptionally high reliability with no events in recent history cascading beyond the FRCC system. The adequacy of the existing TPL standards as they apply to the FRCC System have been extensively documented.

Q41			
Commenter	**Yes**	**No**	**Comment**
Georgia Transm.		☑	
IESO		☑	
ITC		☑	Variances should not be a reason to change the standard (lower the bar).
KCPL		☑	
MISO		☑	
National Grid		☑	We're not aware of any at this time. However, future modifications of the standard may highlight a need for regional variances.
New York ISO		☑	
PJM		☑	
Progress–Florida		☑	No, but PEF reserves the right to apply for variances based on the completed version of this or any other standard.
Santee Cooper		☑	
SERC EC DRS		☑	
SERC RRS OPS		☑	
SCE&G		☑	
Southern Transm.		☑	
Tenaska		☑	
TVA		☑	
WPS		☑	
Central Maine Power New England ISO NU NSTAR United Illuminating	☑	☑	Unsure due to ambiguities in the standard. Depending upon the final standard, New England may need exceptions for existing facilities or allowance for a transition period to develop a compliance plan.
HQTE NPCC RCS	☑	☑	Until section R3.6.1 is finalized, we will be unable to determine whether a regional variance is required.
Response: Few comments were received indicating that regional variances would be required although some pointed out that variances may be required depending on the final version of the standard.			
Manitoba Hydro	☑	☑	MH does not like the idea of a long transition period. Either NERC adopts the concept of generation rejection or the MRO will need to submit a regional variation. I much prefer the planned loss of generation via an SPS rather than via out-of-step tripping as proposed in the Table 2. In certain

Q41			
Commenter	**Yes**	**No**	**Comment**
			areas of the MRO that are stability limited because of long lines to bring generation at the energy source (such as mine mouth plants, hydro plants, etc.) to the load, generation rejection is used to return from an emergency state to a normal state. If generation rejection is not allowed in these cases, extraordinary cost and extraordinary negative environmental impacts will result. As an example, removing one SPS will require new 500 kV transmission between Winnipeg and Minneapolis at a cost of $1 billion to MRO utilities.
BCTC	☑		WECC may require a regional difference for generator tripping depending on the conditions imposed in R3.6.1. Other regional variances would not necessarily be in the context of regional difference as defined in the Standards Manual, but rather exceptions for long weak systems for which it is not economic to meet criteria applicable to tightly interconnected systems.
ERCOT ISO CAISO	☑		ISO relies upon tripping of generators to meet single contingency performance requirements. ISO also relies upon planned and controlled load shedding for the proposed Planning Events P4 and P5.
LADWP	☑		Too many to be listed with the separation above and below 300kV being the worst one that will undermine the overall reliability of the electric system in North America. Another major omission in this proposed standard is the complete lack of recognition of the importance of post-transient requirements. Mixing commercial (firm or non-firm transactions, etc.) and reliability in transmission planning criteria would be in conflicts with WECC rules and practices.
MRO	☑		If the SDT proceeds with an approach that does not allow generation rejection for contingencies, the MRO will need to submit a regional difference. In certain areas of the MRO that are stability limited because of long lines to bring generation at the energy source (such as mine mouth plants, hydro plants, etc.) to the load, generation rejection is used to return from an emergency state to a normal state. If generation rejection is not allowed in these cases, extraordinary cost and extraordinary negative environmental impacts will result. As an example, if one particular SPS is removed, new 500 kV transmission will be required between Winnipeg and Minneapolis at a cost of $1billion to the customers of MRO utilities.
NERC TIS	☑		There may be some in the application of RAS or SPS for N-1 contingencies.
Northwestern Energy	☑		WECC allows N-1 generator tripping, and the transmission systems have been designed around this criteria. Moving away from this criteria is not necessary, and for critical N-1 events, redundancy is in place.
WECC BPA TSGT TEP	☑		Yes. WECC allows tripping of generators to meet single contingency performance requirements. WECC also allows planned and controlled load shedding for the proposed Planning Events P2-1, P2-2, P3, P4 and P5, although we agree with the proposed requirements for P4 due to the higher probability of occurrence. If the standard does not allow for non-consequential load shedding of 300 kV and above for P5 scenarios, WECC will develop a regional variance".
Response: The standard has been modified with respect to the issue of generation tripping that should reduce the stated level of concern and may make a regional variance unnecessary.			

Q41			
Commenter	**Yes**	**No**	**Comment**
R3.5. Manual and automatic generation run-back/tripping is allowed as a response to a single ~~and~~ or multiple Contingenc~~iesy~~ ~~as long as Facility Ratings are not exceeded.~~if the following conditions are met**:**			
LCRA	☑		See ERCOT Planning Criteria. Also, through the regional coordinators, NERC recently conducted a survey of transmission planners/owners regarding use of more stringent criteria used in their own systems. The std. drafting team should include a review of the survey results and incorporate into this NERC std as necessary.
Response: The SDT will review the survey.			
MEAG Power	☑		Facilities rating methodology are different from region to region and company to company.
Response: Ratings methodologies are not covered in this standard.			
AECC	☑		I am more concerned about the regions performing studies consistently than identifying regional variences. My company sits stradle the Southwest Power Pool and SERC. There are considerable difference between the two when it comes to study criteria, assumptions, and how studies are performed. These differences have led to situations where it is near impossible to get models and perform studies near the seams that produce results in which you can have confidence and are comparable. The Southwest Power Pool and its members do a very good job of analyzing and evaluating their region. SPP has criteria that specifically requires EtE analysis and the process used to develop their Transmission Expansion Plan contains treatment of SPS/RAS schemes as mitigations.
Response: The SDT recognizes the regional differences that can exist. However, resolution of all regional variances is outside the scope of the SDT.			
APPA	☑		The WECC will probably have a couple.
ATC	☑		
City Water Power and Light	☑		
ISO/RTO	☑		
PRPA	☑		
Progress–Carolinas	☑		
Response: Thank you.			

42) Q42. If you are aware of any conflicts between the proposed standards and any regulatory function, rule order, tariff, rate schedule, legislative requirement or agreement, please identify them here.

Summary Response: Few comments were received indicating conflicts between the proposed standard and any regulatory function, rule order, tariff, rate schedule, legislative requirement or agreement. A few potential issues were identified in areas of the standard that have been modified in the second posting. These areas will need to be re-assessed based on the specific revisions made.

The following requirements were changed due to industry comment:

R3.5. Manual and automatic generation run-back/tripping is allowed as a response to a single ~~and~~ or multiple Contingenc~~iesy~~ ~~as long as Facility Ratings are not exceeded.~~if the following conditions are met:

R9. Each Distribution Provider shall provide its respective Planning Coordinator with modeling information for real and reactive load forecast data for each year of the Transmission planning horizon at Transmission nodes based on expected or historical System performance including the expected mix of industrial, commercial, and residential Loads, within ninety days of a request for such information.

R10. Each Transmission Planner shall provide its respective Planning Coordinator with modeling information for Firm Transmission Service data, Interchange Schedules and resources required to supply Load for each of its Balancing Authorities for each year of the Transmission planning horizon, within ninety days of a request for such information.

R11. Each Transmission Owner shall provide its respective Planning Coordinator with modeling information for known planned outages and long-term outages for Transmission equipment for each year of the Transmission planning horizon with consideration given to spare equipment strategy, within ninety days of a request for such information.

R12. Each Generator Owner shall provide its respective Planning Coordinator with modeling information for known planned outages and long-term outages for generation equipment for each year of the Transmission planning horizon, within ninety days of a request for such information.

R13. Each Resource Planner shall provide its respective Planning Coordinator with the modeling information for new planned facilities for each year of the Transmission planning horizon including but not limited to generators, Reactive Power devices, and new technologies, within ninety days of a request for such information.

R14. Each Transmission Planner shall provide its respective Planning Coordinator with modeling information for new planned facilities for each year of the Transmission planning horizon including but not limited to Transmission Lines, circuit breakers, Reactive Power devices, Protection System equipment and control devices, and new technologies, within ninety days of a request for such information.

Q42			
Commenter	**Yes**	**No**	**Comment**
ABB		☑	

Q42			
Commenter	**Yes**	**No**	**Comment**
AECC		☑	
Ameren		☑	The proposed standard, as well as the existing standards, makes no distinction between firm (network resource) and non-firm (energy only) generation. The standard should clearly state that the standard does not apply to non-firm generation.
City Water Power and Light		☑	
E ON US		☑	
ERCOT ISO		☑	Not aware of any.
AECI		☑	
Allegheny Power		☑	
AEP		☑	
APPA		☑	
BCTC		☑	
CAISO		☑	Not aware of any
Central Maine Power		☑	
CPS Energy		☑	
Duke Energy		☑	
FirstEnergy		☑	
FPL		☑	
FRCC		☑	
Georgia Transm.		☑	
HQTE		☑	
IESO		☑	
ITC		☑	
Manitoba Hydro		☑	
MISO		☑	
MRO		☑	

Q42			
Commenter	**Yes**	**No**	**Comment**
National Grid		☑	
New England ISO		☑	
New York ISO		☑	
NU		☑	
NPCC RCS		☑	
Nstar		☑	
PJM		☑	
Progress–Carolinas		☑	
Progress–Florida		☑	
SERC EC DRS		☑	
SERC RRS OPS		☑	Not currently aware of any.
SCE&G		☑	
Southern Transm.		☑	
Tenaska		☑	
United Illuminating		☑	
Santee Cooper		☑	The proposed standard as well as the existing standards, makes no distinction between firm (network resource) and non-firm (energy only) generation. The standards should clearly state that the standard does not apply to non-firm generation.
WPS		☑	
Response: Thank You. The SDT is not aware that the proposed requirements conflict with the tariff provisions of firm versus non-firm Transmission and no specific conflict was provided in the comments.			
WECC BPA TSGT TEP	☑		1) FERC Order 693, Paragraph 1825 regarding TPL-003, Category C – The Commission directed the ERO to modify footnote (c) to Table 1 to clarify the term "controlled load interruption" rather than eliminate its applicability to this performance requirement. 2) FAC-010-1, R2.3 – "…planned or controlled interruption…" This conflicts with "No" for non-consequential load loss allowed in draft TPL.
Response: The SDT believes the draft standard does not conflict with FERC Order 693. Paragraph 1794 specifically prohibits loss of Non-Consequential Load for a single Contingency. The SDT has modified the standard for consistency with FAC-010-1, R2.3. Alternatively, to the extent a conflict still exists, FAC-010-1 would need to be revised to comply with the FERC Order.			
CenterPoint	☑		FPA section 215(i)(2) "does not authorize the ERO or the Commission to order the construction of additional generation or transmission capacity or to set and enforce compliance with standards for

Q42			
Commenter	**Yes**	**No**	**Comment**
			adequacy or safety of electric facilities or services." However, adherence to TPL-001-1 as currently drafted, will require, de facto, the construction of additional transmission facilities. CenterPoint Energy believes this standard goes far beyond the legislative intent of mandatory reliability standards and will result in construction of transmission capacity in order to remain compliant.
Dominion	☑		Current planning criteria are approved by State commissions. It is unlikely that the commissions would agree that rate payers should incur the significant cost increases required to meet more stringent planning criteria (i.e. - "raising the bar") when the corresponding improvements in transmission system reliability cannot be quantified.
Response: The SDT's understanding is that the ERO believes it has the authority to set performance requirements for reliability.			
KCPL	☑		In the past, Missouri Public Service Commission Staff have required KCPL to demonstrate that generators have "firm" transmission outlet capacity.
Response: The SDT does not believe that the proposed requirements conflict with the stated MO PSC requirement.			
NCEMC	☑		Modeling data requirements in R1 applicable to many entities may be either redundant with the MOD submittals or may be conflict for entities that are required to submit this data to Transmission Providers to comply with deadlines in their Tarffs. In addition, data submitted by entities named may be confidential so this issue will have to be addressed among those submitting and receiving needed data.
Response: The SDT believes some additional modeling requirements not presently contained in the MOD standards are necessary for Transmission planning purposes. The SDT has revised these requirements based on industry comments to eliminate redundancy with existing MOD standards with the intent that these requirements will be removed from the TPL standard when they are incorporated into the MOD standards at a later date. The SDT agrees that there may be situations where confidentiality issues will have to be addressed. **R9.** Each Distribution Provider shall provide its respective Planning Coordinator with modeling information for real and reactive load forecast data for each year of the Transmission planning horizon at Transmission nodes based on expected or historical System performance including the expected mix of industrial, commercial, and residential Loads, within ninety days of a request for such information. **R10.** Each Transmission Planner shall provide its respective Planning Coordinator with modeling information for Firm Transmission Service data, Interchange Schedules and resources required to supply Load for each of its Balancing Authorities for each year of the Transmission planning horizon, within ninety days of a request for such information. **R11.** Each Transmission Owner shall provide its respective Planning Coordinator with modeling information for known planned outages and long-term outages for Transmission equipment for each year of the Transmission planning horizon with consideration given to spare equipment strategy, within ninety days of a request for such information. **R12.** Each Generator Owner shall provide its respective Planning Coordinator with modeling information for known planned outages and long-term outages for generation equipment for each year of the Transmission planning horizon, within ninety days of a request for such information.			

Q42			
Commenter	**Yes**	**No**	**Comment**
R13. Each Resource Planner shall provide its respective Planning Coordinator with the modeling information for new planned facilities for each year of the Transmission planning horizon including but not limited to generators, Reactive Power devices, and new technologies, within ninety days of a request for such information. **R14.** Each Transmission Planner shall provide its respective Planning Coordinator with modeling information for new planned facilities for each year of the Transmission planning horizon including but not limited to Transmission Lines, circuit breakers, Reactive Power devices, Protection System equipment and control devices, and new technologies, within ninety days of a request for such information.			
Northwestern Energy	☑		Eliminating the N-1 RAS in the West could cause problems for utilities in the West with local jurisdictional cost recovery.
Response: The standard has been modified with respect to the issue of application of RAS/SPS that should reduce the stated level of concern and remove any conflict. **R3.5.** Manual and automatic generation run-back/tripping is allowed as a response to a single ~~and~~ or multiple Contingenc~~iesy~~ ~~as long as Facility Ratings are not exceeded.~~if the following conditions are met**:**			
ATC	☑		
ISO/RTO	☑		
Response: The SDT believes the referenced requirement is necessary to ensure an appropriate balance between reliability requirements and right-of-way considerations.			

43) Q43. Do you have any other questions or concerns with the proposed standard that have not been addressed? If yes, please explain.

Summary Response: Several of the commenters reinforced or embellished the comments they submitted in prior questions. Although the SDT has provided responses to all comments submitted as part of this question, more detailed responses and summaries are provided in the prior questions.

However, several comments were received that were different from other prior comments. The SDT has made many changes to requirements based on comments submitted just for Question #43. Some of the major changes are:

1. Created a new requirement concerning short circuit analysis
2. Created a requirement to document proxies for instability, cascading outages and uncontrolled islanding
3. Changed requirements to clarify the actions allowed to prepare for the next Contingency
4. Changed requirements to clarify that Facility Ratings may be different for, and a function of, different durations
5. Added a definition for Bus-tie Breaker.

Other less significant changes were made by the SDT based on the remaining few comments. These are detailed in the responses to the individual comments below.

The following requirements were changed as a result of industry comments:

Bus-tie Breaker: A circuit breaker that is positioned to connect two individual straight bus substation configurations. (Substation configurations such as ring-bus, breaker-and-a-half, or double bus-double breaker protection schemes do not use bus-tie breakers.)

Consequential Load Loss: Load that is no longer ~~served because it is directly connected to an element(s) that is removed from service due to fault clearing action or mis-operation~~ connected to a source as a result of the event being studied or which is lost as a result of the load's response to the transient conditions of the event (other than through the action of UVLS or UFLS schemes). Although Load which is lost as a result of the Load's response to the transient conditions of the event is considered Consequential Load Loss and is permitted when Consequential Load Loss is allowed, Transmission planning entities are not allowed to rely upon the expectation of such Load loss to meet steady state performance requirements.

Non-Consequential Load Loss: ~~Load loss other than Consequential Load Loss. For example, Load loss that occurs through manual (operator initiated) or automatic operations such as under-voltage Load shedding, under-frequency Load shedding, or Special Protection Systems.~~ Non-Interruptible Load loss other than Consequential Load Loss. For example, non-Interruptible Load loss that occurs through manual (operator initiated) or automatic operations such as under-voltage Load shedding, under-frequency Load shedding, or Special Protection Systems would be considered Non-Consequential Load Loss.

R1. ~~Each Resource Planner, Transmission Planner, Transmission Owner, Generator Owner, and Load-Serving Entity shall each provide its respective Planning Coordinator with the following modeling information required for System performance studies upon request (within 30 calendar days) :~~ Each Transmission Planner and Planning Coordinator shall maintain System models for performing the studies needed to

complete their Planning Assessment. The models shall use data provided in Requirements R9 through R14, the MOD-010 and MOD-012 standards, and other data sources.

R2.1. ~~The steady state portion of~~ The Near-Term Transmission Planning Horizon ~~Planning Assessment~~ portion of the steady state analysis shall ~~address all five years of the assessment period~~ be assessed annually and be supported at a minimum by the following annual current studies, supplemented with qualified past studies as ~~shown~~ indicated in Requirement R2.6:

R2.1.3. For each of the studies described in Requirement R2.1.1 and Requirement R2.1.2, sensitivity case(s) that stress the System with sensitivities that reflect one or more of the following conditions shall be run and documentation ~~with~~ of the technical rationale for ~~the selected sensitivity(ies)~~ why each of the conditions was or was not selected shall be supplied:

R2.1.4. In addition to those sensitivities mentioned in Requirement R2.1.3, any other sensitivities, as deemed appropriate by the Transmission Planner or Planning Coordinator for their individual systems, shall be run and documentation of the technical rationale for why each was selected shall be supplied.

R2.3. The short circuit analysis portion of the Planning Assessment shall be conducted annually and supported by current or past studies.

R2.4 The ~~System Stability portion of the~~ Near-Term Transmission Planning Horizon portion of the Stability analysis ~~Planning Assessment~~ shall be assessed annually ~~address all five years of the assessment period,~~ and be supported by current or past studies. The following studies are required ~~annually~~:

R2.4.1. System peak Load for one of the five years. For peak System Load levels, ~~the~~a Load model shall ~~include the dynamic effects~~ be used which appropriately represents the dynamic behavior of Loads, including consideration of the behavior of induction motor Loads.

R2.4.3. For each of the studies described in Requirement R2.4.1 and Requirement R2.4.2, ~~S~~sensitivity case(s) that stress the System to reflect one or more of the following conditions shall be run ~~with documentation provided explaining the rationale for the selected sensitivity(ies)~~ and documentation of the technical rationale for why each of the conditions was or was not selected shall be supplied:

R2.4.4. In addition to those sensitivities mentioned in Requirement R2.4.3, any other sensitivity, as deemed appropriate by the Transmission Planner or Planning Coordinator for their individual systems, shall be run and documentation of the technical rationale for why each was selected shall be supplied.

R2.5. The ~~plant~~Generating Unit Stability analysis portion of the Planning Assessment shall be analyzed consistent with Requirement ~~R4.6~~ R5.6 with studies for the year when the following changes that could affect stability margins occur:

R2.5.1. New generator(s) are added or generation modifications are made such as ~~increasing~~changes in generation capability or replacing the exciter ~~or addition of a power System stabilizer~~

R2.5.2. Material Transmission System changes ~~in the electrical vicinity of existing generation are made~~ are made at or near the point of Interconnection of existing Generation such as the ~~addition or~~ removal of a Transmission Line ~~at or near the point of Interconnection~~ or the addition of a new substation in one of the Transmission Lines connected to the plant.

R2.6. Past studies may be used to support the Planning Assessment if they meet the following requirements:

R2.6.1. For steady state, short circuit, or System Stability analysis: ~~if the study is less than three years old and no material changes have occurred to the System in the intervening period. Material changes include topology changes, generation additions/removals, and market structure changes~~ the study shall be five calendar years old or less.

R2.6.2. For steady state, short circuit ~~analysis~~, Generating Plant Stability, or System Stability analysis: ~~if the study is less than five years old and no material changes have occurred to the System in the intervening period.~~ the study shall not include any material changes, such as, generation or Transmission additions/removals, or topology changes that have occurred in the intervening period and would impact the study area.

R2.6.3. ~~For plant and System Stability analysis: until material changes in the System make the study no longer valid. Material changes in the system include the addition of a Transmission Line or a generator.~~

R2.7 - For Planning Events shown in Table 1 – Steady State Performance and Table 2 – Stability Performance, when the analysis indicates an inability of the System to meet the performance requirements in the tables, the Planning Assessment shall include Corrective Action Plans addressing how the performance requirements will be met. Revisions to the Corrective Action Plans are allowed ~~over time~~ in subsequent assessments but the System shall continue to meet the performance requirements in the tables. ~~Such plans shall:~~ Corrective Action Plans do not need to be developed solely to meet the performance requirements for sensitivities.

R2.7.1. ~~Identify~~ List System deficiencies and the associated actions needed to achieve required System performance. ~~including Transmission and generation improvements, DSM, new technologies, or Operating Procedures including the duration of interim Operating Procedures.~~ Such actions may include installation, modification, retirement, or removal of Transmission and generation Facilities and any associated equipment such as protective or Special Protection Schemes, rate applications, DSM, or other initiatives, new technologies, or Operating Procedures including how long the Operating Procedures will be needed as part of the Corrective Action Plan.

R2.7.2. ~~Be added to study cases and the cases re-tested to show that the System with planned additions meets the performance requirements in the tables~~ Contain a description of how and why the consideration of the sensitivities selected in accordance with Requirements R2.1.3, R2.1.4, R2.4.3, and R2.4.4 in the Planning Assessment did or did not result in a modification or expansion of the list of actions developed in accordance with Requirement R2.7.1.

R3.3.2.2. Following single Contingency events, ~~System adjustments other than shedding of firm Load or curtailment of firm transfers are permitted to meet performance requirements provided these adjustments can be accomplished within the time period allowed by the applicable time limited ratings.~~ Transmission configuration changes and redispatch of generation are allowed provided that all Facilities shall be operating within their Facility Ratings and within their thermal and voltage limits.

R3.5. Manual and automatic generation run-back/tripping is allowed as a response to a single ~~and~~ or multiple Contingenc~~ies~~y ~~as long as Facility Ratings are not exceeded.~~if the following conditions are met:

R3.5.1. All Facilities shall be operating within their Facility Ratings.

R3.5.2. Such action would not violate safety, equipment, regulatory or statutory requirements.

R3.5.3. A sustainable, stable, operating condition is maintained.

R5.2. Contingency analyses shall simulate the removal of all elements including those that System protection and other automatic controls are ~~is~~ expected to disconnect for each Contingency without operator intervention.

R5.5.2 Performance shall meet the requirements for Planning Events in Table 2 – Stability Performance.

R5.5.3. Automatic generation tripping is allowed to mitigate Stability violations if the following conditions are met:

R6. For the short circuit portion of the Planning Assessment, as described in Requirement R2.3, each Transmission Planner and Planning Coordinator shall assess the short-circuit capability of its equipment under normal conditions and following any single Contingency condition that would result in greater circuit breaker interrupting duties.

R8. Each Planning Coordinator shall coordinate the distribution of Planning Assessment results among ~~affected entities~~ neighboring systems, coordinating analysis of these results through an open and transparent peer review process such as described in FERC Order 890.

R9. Each Distribution Provider shall provide its respective Planning Coordinator with modeling information for real and reactive load forecast data for each year of the Transmission planning horizon at Transmission nodes based on expected or historical System performance including the expected mix of industrial, commercial, and residential Loads, within ninety days of a request for such information.

R10. Each Transmission Planner shall provide its respective Planning Coordinator with modeling information for Firm Transmission Service data, Interchange Schedules and resources required to supply Load for each of its Balancing Authorities for each year of the Transmission planning horizon, within ninety days of a request for such information.

R11. Each Transmission Owner shall provide its respective Planning Coordinator with modeling information for known planned outages and long-term outages for Transmission equipment for each year of the Transmission planning horizon with consideration given to spare equipment strategy, within ninety days of a request for such information.

R12. Each Generator Owner shall provide its respective Planning Coordinator with modeling information for known planned outages and long-term outages for generation equipment for each year of the Transmission planning horizon, within ninety days of a request for such information.

R13. Each Resource Planner shall provide its respective Planning Coordinator with the modeling information for new planned facilities for each year of the Transmission planning horizon including but not limited to generators, Reactive Power devices, and new technologies, within ninety days of a request for such information.

R14. Each Transmission Planner shall provide its respective Planning Coordinator with modeling information for new planned facilities for each year of the Transmission planning horizon including but not limited to Transmission Lines, circuit breakers, Reactive Power devices, Protection System equipment and control devices, and new technologies, within ninety days of a request for such information.

Q43			
Commenter	**Yes**	**No**	**Comment**
ABB	☑		1. In Table 2 P3, more clarification is needed for "above 300 kV". For generators, does that mean those whose POI is >300kV? For transformers, is it the secondary voltage? Also, is the footnote referencing correct? "A transformer with low side rating above 300 kV" is confusing for transformers with 3 windings. What's the low-side rating of a 500/345/13.8 kV transformer? You should say "a secondary voltage rating above 300 kV" and define "secondary voltage rating" as the second highest voltage rating. This is standard nomenclature. Also, I assume you know that there aren't very many of these. The possibilities are 765/500, 500/345, and 765/345. The first two are uncommon, and the 3rd is only common in AEP and HQ. 2. In P3, does the 300 kV limit apply to the transmission circuits as well? It is hard to tell. 3. In R1, you say "Each … shall each …" Delete the second "each", which is redundant. Also delete "required for system performance studies". These words are not part of the requirement. They are part of the justification for the requirement. 4. Table 1, Extreme Event Descriptions, 3d and 3f are almost identical. 5. Table 1, P9-1, rewrite as "… (excluding circuits that share common structures for one mile or less)". P9-1 uses "structure" whereas Extreme 2a uses "tower". Make consistent. 6. P9-2 monopolar is already covered under P4-2. 7. For all of the multiple contingencies with System Adjustment in the middle, group them together something like this (for those with the same requirements): "Outage of any one of the following: 1.

Q43			
Commenter	**Yes**	**No**	**Comment**
			2. 3. 4. followed by System Adjustments followed by outage of any one of the following: a. b. c. d." This is easier to understand than separately writing each possible combination of 2. 8. Overall, the structures of the Tables needs to be made clearer and more consistent. But the ideas are good. 9. The transition is going to be critical for some of the standards that may require significantly more study work and significant capital investments in transmission infrastructure.

Response: 1. The SDT has added a footnote reference to the BES Elements Out of Service column to provide clarity on this issue. The note excludes tertiary windings.
2. The 300 kV threshold also applies to transmission circuits. The SDT has added greater detail to Tables 1 & 2.
3. The SDT has modified Requirement R1 (first draft) as Requirements R9 – R14 and the comment is addressed in the re-write.

R9. Each Distribution Provider shall provide its respective Planning Coordinator with modeling information for real and reactive load forecast data for each year of the Transmission planning horizon at Transmission nodes based on expected or historical System performance including the expected mix of industrial, commercial, and residential Loads, within ninety days of a request for such information.

R10. Each Transmission Planner shall provide its respective Planning Coordinator with modeling information for Firm Transmission Service data, Interchange Schedules and resources required to supply Load for each of its Balancing Authorities for each year of the Transmission planning horizon, within ninety days of a request for such information.

R11. Each Transmission Owner shall provide its respective Planning Coordinator with modeling information for known planned outages and long-term outages for Transmission equipment for each year of the Transmission planning horizon with consideration given to spare equipment strategy, within ninety days of a request for such information.

R12. Each Generator Owner shall provide its respective Planning Coordinator with modeling information for known planned outages and long-term outages for generation equipment for each year of the Transmission planning horizon, within ninety days of a request for such information.

Q43			
Commenter	**Yes**	**No**	**Comment**
R13. Each Resource Planner shall provide its respective Planning Coordinator with the modeling information for new planned facilities for each year of the Transmission planning horizon including but not limited to generators, Reactive Power devices, and new technologies, within ninety days of a request for such information. **R14.** Each Transmission Planner shall provide its respective Planning Coordinator with modeling information for new planned facilities for each year of the Transmission planning horizon including but not limited to Transmission Lines, circuit breakers, Reactive Power devices, Protection System equipment and control devices, and new technologies, within ninety days of a request for such information. 4. The Extreme Event descriptions have been revised in Tables 1 and 2 to clear up this wording. 5. P9-1 (P7-1 in second draft) is intended to include all structures in a tower line. Extreme Event 2a refers to a tower line. So they are consistent. 6. The SDT has revised Tables 1 and 2 so that this only shows up in one place now, P7. 7. The SDT has revised the tables as requested. 8. The SDT has revised Tables 1 and 2 as requested. 9 - This will be addressed later in the Implementation Plan.			
AECC	☑		I am not sure what is meant by "not the least common denominator" in the background section. One long time goal of NERC has been to raise the bar and not settle for the status quo which I support. If by this phrase the drafting team is looking to minimize loopholes, remove waffle factor, and eliminate some of the innovative interpretations of requirements then I am in agreement. However, if the drafting team is thinking that the least common denominator is a level of system study that should be performed and that studies should only be performed at some higher level then I disagree and consider this attitude as contradictory to the long term goal of raising the bar. If NERC is serious about reliability then we must get this standard right. Planning is where reliability starts. If reliability is not planned for adequately and built into the system it can not be expected that the future holds much promise for a reliable system. Reliability will not happen on its own. Industry best practices should take precedence over attempts to water down the standards in order to maintain status quo. Do any of the requirements under R1 conflict or repeat any of the requirements set for in any of the other NERC standards, especially some of the MOD and FAC standards? if so R1 should be modified, sections deleted, or reference the appropriate standard. I would like to thank the drafting team for taking on such a formitable task.
Response: The SDT felt that none of the current requirements should be weakened. The SDT felt that it is necessary to develop more stringent requirements where appropriate but not be limited by the fact that companies may need to reinforce their Systems to meet the new requirements.			

Q43			
Commenter	**Yes**	**No**	**Comment**
The SDT believes some additional modeling requirements not presently contained in the MOD standards are necessary for Transmission planning purposes. The SDT has revised these requirements based on industry comments to eliminate redundancy with existing MOD standards with the intent that these requirements will be removed from the TPL standard when they are incorporated into the MOD standards at a later date.			
Ameren	☑		1. Much of the language under R1 appears to be redundant with model data requirements as listed in Reliability Standard MOD-010 and MOD-011. Such information would typically be used to produce an annual series of powerflow cases. Instead of supplying such information in a piecemeal manner to the Planning Coordinator as a separate annual effort, the Planning Coordinator should make use of the most recent set of powerflow models. This requirement, as written, could cause a needless duplication of work effort. 2. It is not clear what is meant by 'stressed System conditions' in Requirement R1.2. Does this mean higher than predicted load, lower than expected reactive resources, or other meaning? It is also not clear what is covered by 'load models' in the same requirement. 3. It is not clear how expected transfers are to be modified in Requirement R2.1.3.2. Possibilities include higher or lower in the same transfer direction, turn transfer directions around so that importers become exporters, the inclusion of non-firm transfers that can be cut, or change import/export directions. There should be some basis for the sensitivity change. 4. It is not clear how planned transmission outages are to be modified in Requirement R2.1.3.7. Possibilities include modification of the outage duration, or modifications involving more or less facilities. Since outages are scheduled in the operations planning horizon, based on the best information available at the time of the outage request, it is questionable whether they should not be included in standards that apply to planning in years 1-5 or year 6-10 and beyond. 5. Requirement R2.2.1. should be deleted. Uncertainties involved with studies looking at system conditions out to ten years in the future would preclude the need to extend a Planning Assessment beyond the ten year period. Any corrective actions needed to resolve problems found during study of long-term system conditions could be noted in the Planning Assessment without the need to extend beyond ten years. 6. In Requirement R2.3, the scope of the study work involving the short circuit portion of the Planning Assessment is not clear. It is not clear whether the study work should be based on three-phase faults only, three-phase and single-phase faults, or whether classical representation or more a more detailed representation should be utilized. 7. We assume that Requirement R2.4.3.5 would require only known generation additions,

Q43			
Commenter	**Yes**	**No**	**Comment**
			retirements, or other dispatch scenarios, and that those performing the planning scenarios would not speculate on unkown generation additions and retirements. 8. A market structure change in Requirement R2.6.1 would not constitute a material change in an area with an abundance of low cost base load generation that was always on before the market change and would still be on after the market change. 9. Under Requirement R2.6.3., Plant and System Stability analyses are considered valid until material changes in the System invalidate previous study work. Here, material changes in the system include addition of a transmission line or generator. Addition of a transmission line or generator would only have an impact on stability of generators near the new facility installation. This is not clear from the wording of the standard, which would appear to require restudy of all generators if a transmission line or generator is added anywhere on the system. 10. What would be the duration of interim operating procedures in Requirement R2.7? 11. Requirement R.2.7.1.1. states that a project initiation date should be included in the Corrective Action Plan for each project, as well as an in-service date. A project initiation date may be of use to the particular project design engineering staff, but is of little use in planning the system. Keep in mind that this is a Planning Assessment and not a data request. 12. The wording of Requirements R3.2 and R4.2 appear to require taking all transmission elements as contingencies, plus modeling contingencies which would remove all elements automatically via System protection equipment. Based on comments from the SDT, the inclusion of all single elements in the set of contingencies to be considered is not intended as part of these requirements. Please verify this in writing. 13. The wording of Requirement R3.2.1., dealing with generator minimum voltage limitations, is vague with respect to what is required. It is not clear who would determine the minimum steady-state voltage limitations for all generators, and for what conditions. Note that it may be difficult to obtain some information from IPP generating facilities. 14. Requirement R3.2.2. appears redundant with requirement R1.2.1 of FAC-008-1, which deals with Facility Ratings. Relay load limits are one component already considered in establishing facility ratings. 15. Requirement R3.3.2.1., which deals with the amount and duration of Consequential Load loss, cannot be addressed adequately. Because an outage might be caused by a transitory event with

Q43			
Commenter	**Yes**	**No**	**Comment**
			quick restoration of the outaged facility, or be caused by extensive damage requiring lengthy repairs, there would be no single value for expected duration for any given outage event in the planning horizon. Therefore, this requirement should be removed from TPL-001-1. 16. Requirement R3.3.2.2, describing permissible actions following single contingency events to meet performance requrirements, should be removed from TPL-001-1. System adjustments following single contingencies should not be permitted to meet system performance requirements. For similar reasons, Requirement R3.5, describing generator adjustments permissible as responses to single and multiple contingencies, should be modified to remove the reference to single contingencies. 17. What additional single contingencies would there be that should be considered in Requirement R3.3.3? 18. Consequential generation loss needs to be considered in Requirement R3.6 for those generators directly connected (through transformation) to transmission lines. 19. Interconnection requirements establish that generators must have low-voltage ride through capability. It is not clear how is the transmission planner performing the studies would be able to consider this capability in Requirement R4.3. 20. In Requirement R6, there is no longer a requirement to send the Planning Assessment and Corrective Plan to the regional entities, but to the Reliability Coordinators instead. Why has this change been made? RTOs should not be involved in assessing compliance. 21. In reference to Table 1, bullet point #3, it is not clear how voltage instability, cascading outages, or uncontrolled islanding would be determined under steady state conditions. 22. Under Table 1, P1, cutting of firm transfers is not permitted as a response to a single contingency. However, it is not clear whether, in preparation for a subsequent contingency, reduction in firm transfers would be permitted. Reduction in firm transfers should be permissible in this instance. 23. In Table 1, for contingency categories P5 and P8, how would loss of a transmission circuit above 300 kV followed by loss of a transmission circuit below 300 kV be handled? 24. Under the Extreme Event Description section of Table 1, note that item 3e. is a duplicate of item 3c. One of these can be deleted. Also, for items 3d. and 3f. the notation regarding early shutdown of nuclear facilities for tornadoes is not realistic. The current state of the art of weather prediction

Q43			
Commenter	**Yes**	**No**	**Comment**
			does not permit adequate forecasting of tornadoes a day or more ahead of time which might be a cause for concern for a particular nuclear facility. 25. With respect to Table 2, contingency types P5 and P8, it would seem that events should include the same items as shown for contingency type P4. 26. In Table 2, for contingency types P1, P3, P4, P5, P8, and P9, clarification is needed as to whether distribution transformers (138-69 kV or 138-34.5 kV, for example) would be included in the events, or whether the transformers mentioned would be restricted to transmission transformers. 27. For the various stability scenarios, note that Consequential Load Loss would be a function of how System protection equipment is set up for particular scenarios. Delayed clearing time/Zone 2 clearing times could result in load dropped that would not have been dropped for events cleared in primary clearing time. 28. In Table 2, Note 1 ii., is it the intent of the drafting team to require dynamic model representation of relaying equipment? General comments: 29. We are not sure that a wholesale replacement of the existing standards TPL-001-0 through TPL-004-0 is required. We agree that additional clarification is needed for some items, and particularly for the study assumptions that go into the development of models to be used for the performance testing, but we do not agree that the proposed replacement standard provides that necessary clarification. Further, we believe that the replacement standard relies too much on the accompanying tables. More text needs to be included in the standard regarding the system performance requirements. 30. There is a lot of subjectivity involved in developing the study assumptions that need to be considered in the sensitivity models for study. How can we be sure that one or more of the sensitivity requirements in R2.1.3 stated for consideration are of the same level of importance by both auditors and those performing the studies? We are interested to see what the measures for all the requirements of the standard will be when they are developed. 31. Additional planning standard requirements for the EHV system to meet all N-2 conditions without dropping some load will require significant material changes, where feasible. We do not believe that the significant additional costs required for compliance would produce tangible benefits and a corresponding significant improvement in system reliability. What is the justification for the separate

Q43			
Commenter	**Yes**	**No**	**Comment**
			treatment for the EHV (>300 kV) facilities? One obvious effect of such requirements is to create a bias against any straight bus configuration for facilities above 300 kV. As stated in response to Question 25, there are existing facilities which cannot be converted from their present configuration. For those facilities which could be upgraded, an implementation period of several years would be needed to meet such requirements. 32. Meeting the requirements of this standard should not be a full time job. There are many more planning activities that need to be performed other than simulation testing to demonstrate compliance. The existing TPL standards require a significant manpower effort to perform the required studies and develop the planning assessment and corrective action plan. We are concerned that the replacement standard, as proposed, will create an even greater burden on the transmission owners without a commensurate benefit to the system reliability. 33. It is not within NERC's or ERO's scope of responsibility to address load loss. The focus of the standard should be on the system capabilities and not how much local load is dropped for a substation outage in a defined service area. A few reports showing the resultant bus voltages and facility loadings on a percentage basis for all single and a the more severe multiple contingency events, including operator or automatic mitigation procedures, should be adequate to demonstrate compliance.

Response: 1. The SDT believes some additional modeling requirements not presently contained in the MOD standards are necessary for Transmission planning purposes. The SDT has revised these requirements based on industry comments to eliminate redundancy with existing MOD standards with the intent that these requirements will be removed from the TPL standard when they are incorporated into the MOD standards at a later date.
2. The SDT agrees with your concerns and has revised this requirement (now Requirement R9). The terms "stressed System conditions" and "load models" have been removed.

R9. Each Distribution Provider shall provide its respective Planning Coordinator with modeling information for real and reactive load forecast data for each year of the Transmission planning horizon at Transmission nodes based on expected or historical System performance including the expected mix of industrial, commercial, and residential Loads, within ninety days of a request for such information.

3. The SDT is providing some guidance under Requirement R2.1.3 on what needs to be included in sensitivity studies while not being totally prescriptive. Requirement R2.1.3 has been modified to require documentation of why the listed sensitivities were or were not selected for specific studies. It is the entity's decision to establish and document which transfers are more significant to study System responses. The sensitivity studies do not in themselves establish the need for a plan, only the areas of the System for which the analysis is needed.

R2.1.3. For each of the studies described in Requirement R2.1.1 and Requirement R2.1.2, sensitivity case(s) that stress the System with sensitivities that reflect one or more of the following conditions shall be run and documentation ~~with~~ of the technical rationale for ~~the selected sensitivity(ies)~~ why each of the conditions was or was not selected shall be supplied:

Q43			
Commenter	**Yes**	**No**	**Comment**
			4. The SDT is providing some guidance under Requirement R2.1.3 on what needs to be included in sensitivity studies while not being totally prescriptive. Requirement R2.1.3 has been modified to require documentation of why the listed sensitivities were or were not selected for specific studies. It is the entity's decision to establish and document if there are any "planned" outages such as a multi-year Transmission right-of-way rebuilds where outage durations may vary. It is the entity's responsibility to determene the actions necessary to handle extended outages and which are more significant to study System responses. 5. The SDT felt that this wording was appropriate based on comments by FERC in their orders concerning long lead time projects. 6. R2.3 - The studies should be based on the individual TO's practices which are assumed to be in agreement with good utility practice. An annual assessment of the results of these studies is required. 7. The SDT is providing some guidance on what needs to be included in sensitivity studies while not being totally prescriptive. Requirement R2.4.3 has been modified to require documentation of why the listed sensitivities were or were not selected for specific studies. Requirement R2.4.4 has been added to specifically state that the entity may consider additional sensitivities that are appropriate for its own system. In either case the entity must document the reason for running or not running cases for the items listed. The documentation as well as the studies for the sensitivity(ies) selected will be required to demonstrate compliance. It is the entity's decision to establish and document if it needs to consider future additions and retirements. It is the entity's responsibility to determene the actions necessary to handle such items and which are more significant to study System responses. **R2.4.3**. For each of the studies described in Requirement R2.4.1 and Requirement R2.4.2, ~~S~~sensitivity case(s) that stress the System to reflect one or more of the following conditions shall be run ~~with documentation provided explaining the rationale for the selected sensitivity(ies)~~ and documentation of the technical rationale for why each of the conditions was or was not selected shall be supplied: **R2.4.4**. In addition to those sensitivities mentioned in Requirement R2.4.3, any other sensitivity, as deemed appropriate by the Transmission Planner or Planning Coordinator for their individual systems, shall be run and documentation of the technical rationale for why each was selected shall be supplied. 8. The SDT removed market changes from the requirement (see Requirement R2.6.2) **R2.6.2**. For steady state, short circuit, Generating Plant Stability, or System Stability analysis: the study shall not include any material changes, such as, generation or Transmission additions/removals, or topology changes that have occurred in the intervening period and would impact the study area. 9. The SDT added wording to Requirement R2.6.2 to clarify this concern. 10. The "interim Operating Procedure" was deleted in response to Industry requests for more clarification as being an unnecessary modification of the more general term "Operating Procedure" that is already a defined term in the NERC Glossary.

Q43			
Commenter	Yes	No	Comment
			11. Requirement R8 (old Requirement R6)which focuses on the distribution of the Planning Assessment results to affected entities was specifically added to allow some level of peer review and provide some level of confidence that the proposed plan could in fact be completed to meet the reliability objective. Requirement R2.7.1.1 is complementary to Requirement R8 (old Requirement R6). Initiation dates are only required in the near term since longer term plans tend to move in time and only have general scheduling associated with them. The SDT believes that initiation dates are required for near-term Corrective Action Plans to give an indication that the Corrective Action Plans can be implemented in time. 12. In Requirement R3.2 and Requirement R4.2, the SDT revised the event descriptions to provide clarity on simulations in response to FERC Order 693. For example, Requirement R3.2 would require modeling breaker-to-breaker outages rather than modeling bus-to-bus outages in a study. 13. Generator high and low voltage limits are part of the constraints and are considered part of Facility Ratings in FAC-008. FAC-009 provides that the information be provided by the Generator Owner. 14. R3.2.2 - While FAC-008-1 generally addresses this issue, the SDT felt that the relay loadability issue needed to be specifically addressed to ensure its impact was not inadvertently ommitted from Contingency analysis. 15. R3.3.2.1 - FERC required documentation of Consequential Load loss in Order 693, paragraph 1795, (not Non-Consequential) and duration should be based on best judgment for the common cause of the event. 16. R3.3.2.2 has been changed to clarify the concern. **R3.3.2.2** – Following single Contingency events, ~~System adjustments other than shedding of firm Load or curtailment of firm transfers are permitted to meet performance requirements provided these adjustments can be accomplished within the time period allowed by the applicable time limited ratings.~~ Transmission configuration changes and redispatch of generation are allowed provided that all Facilities shall be operating within their Facility Ratings and within their thermal and voltage limits. 17. The requirement refers to everything over and above single Contingencies. 18. Requirement R3.6 was completely re-written in Requirement R3.5. **R3.5** Manual and automatic generation run-back/tripping is allowed as a response to a single ~~and~~ or multiple Contingenc~~ies~~y ~~as long as Facility Ratings are not exceeded.~~if the following conditions are met: 19. The SDT feels that planning studies should be of sufficient scope to cover this situation. 20. R6 (first draft) - does not specify any action by the Reliability Coordinator - the Planning Coordinator coordinates distribution. This action

Q43			
Commenter	Yes	No	Comment
does not involve assessing compliance but involves peer review and coordination of analysis. 21. In the steady state time frame, voltage instability can occur typically during high power transfer and/or peak demand periods. Voltage instability can be assessed using a long-term Stability program. However, it can also be assessed using a power flow program that simulates governor action. There are a number of IEEE papers (e.g., G. Morison, B. Gao, and P. Kundur, "Voltage stability analysis using static and dynamic approaches," IEEE Transactions on Power Systems, vol. 8, no. 3, pp. 1159 – 1171, August 1993) that can provide suggestions on the methodology. Cascading outages and uncontrolled islanding can also occur, for example, when the Transmission Facilities Load beyond the corresponding relay trip settings. This could cause uncontrolled tripping of Transmission Facilities beyond those required to clear the fault. Even though these events are rare, the Transmission Planner should be aware of their possibility when performing studies. 22. The SDT has replaced the term "firm transfer" with "firm transmission service" in Tables 1 and 2. 23. Loss of a Transmission circuit above 300 kV followed by loss of a Transmission circuit below 300 kV would be treated the same as loss of Facilities below 300 kV. 24. The SDT has revised Tables 1 and 2. Items 3d and 3f are meant to capture shutting down of a nuclear power plant as a result, not in anticipation, of events such as tornadoes. 25. Table 2 has been revised so that the elements are now the same. 26. See footnote 2 and 3 in Table 2 for clarification. 27. The SDT agrees. The Load lost as a result of the event specified can be different for different Contingency scenarios (i.e., normal versus delayed clearing). 28. This should already be in your models. 29. TPL-001-1 is based on the existing TPL standards and is not a wholesale replacement but an aggregate of TPL-001 through -004, but does contain new elements and clarifying language. FERC Order 693 asked the SDT to consider combining the 4 standards. Please provide any comments on specific elements needing additional clarification in future responses in the standard development process. 30. Measures will be added later in the process. 31. The SDT felt that it was appropriate to raise the bar on situations that would impact the reliability and performance of the System and considered above 300 kV as the backbone of the System and thus needs to be extremely reliable and was an appropriate place for raising of the bar. Implementation Plan will be supplied with a later draft.			

Q43			
Commenter	**Yes**	**No**	**Comment**
32. Resources and expenditures versus adequate level of reliability are being given due consideration throughout the process and will ultimately be determined by the industry through the ballot process. 33. FERC has jurisdiction over firm Transmission service. FERC allows the use of "equally or more efficient or effective approach" and firm Load is being used as a proxy for firm Transmission service.			
Brazos Electric	☑		1. In R1.1.1. it appears the data that is being requested requires some amount of survey to determine the mix. This data would require a great deal of manpower and provide little more benefit than simply varying the data for comparison. However it does say in R1 upon request so does this allow the Planning Coordinator the descretion as needed on this type data? 2. R1.2, What is 'supporting rationale' and 'validated' mean? What are "stressed" System conditions? It appears (from 2.1.3) that stressed means various sensitivities. 3. R1.4, define 'long-term', generation outages are considered confidential information in ERCOT and thus are not available to all TOs, see next comment 4. R1.5 somewhere (perhaps in R1) the language should include "its respective portions of the data" or something to that effect meaning that a TO should not be held accountable for a GOs data. R1 appears to read that each entity shall provide the requested data. This seems to be intuitive BUT there are GOs that feel the data responsibility for the entire system belongs to the TOs and this leads to delays in getting accurate information if its uncertain as to who provides what data. 5. In R2 the language indicates the TP and PC shall each perform studies. There should be some clarity here. Also, it indicates that each shall assess "its portion of the BES". This needs to be clarified as well, obviously contingencies on other portions of the BES may cause issues within different portions. again, what constitutes documentation? 6. R2.1 it appears from the wording (shall "address" all five years) that the planning assessment must be done on all five years but 2.1.1 appears to state only 2 years are required. Please clarify. 7. R2.1.3 this seems to indicate that the studies mentioned in 2.1.1 and 2.1.2 should be "stressed" by the conditions listed below or just by one of them. We assume this means using only one is acceptable with proper documentation. Is that correct? Further, the sensitivities are ambiguous. How does one justify higher load levels or even know what they are without input from other TOs or the PC? How does one even guess at the other variables? what is meant by 'long lead time facility'? IF this only means for a TOs "portion of the BES" then it makes more sense but are these even valuable considering the wide range of data. The only variable that can be adjusted with any accuracy is the generation and ERCOT maintains the confidential data in this area. We assume R2.1 to mean you

Q43			
Commenter	**Yes**	**No**	**Comment**
			need to assess two peak summer cases, one off peak and then look at varying generation patterns on those cases. This appears to be the latitude given. Is this correct? 8. R2.2.1 are generation additions considered a "project"? If this means that a case must be created and assessed by all TOs for a known generation addition that is 12 years out, then this will lead to unnecessary studies. We assume this to mean, in the case of a generation addition, that the connecting TO should make an assessment once the PC considers this new addition to be valid for study. Is that correct? 9. R2.3 what is meant by "past studies" and how long must these be kept? Or is this at the TOs discretion? 10. R2.3.1 how does one know if the changes will result in increased fault currents until studies are done? This implies that studies SHALL be done for just about ANY change to the BES. There must be discretion allowed here. The word "shall" does not afford any discretion. 11. R2.4 the same comments for R2.1. apply here concerning years of study and defining 'stressed'. Additionally this type study seems to provide better results when done for the BES which would require input from all TOs thus a study based only on "its portion of the BES" would not have as much value unless you are referring to generation additions and localized studies. 12. R2.5.1 does not allow any discretion, for any and all all modifications, additions, etc…a study shall be performed. This is not needed in all cases. 13. R2.5.2 Wording such as "material changes" and "vicinity" are ambiguous terms without discretion being allowed the planner. Voltage level Line changes, amount of generation, something needs to be added to clarify. 14. R2.6.1 again, what are material changes? Topology changes and generation changes happen monthly, weekly. Are studies to be invalidated for each 'material change'? 15. R2.6.3 who determines if the study is no longer valid? The TO, PC or the agreement of both? 16. R2.7.1 what is a 'project initiation date' and why is this needed? 17. R2.7.2 Projects are added to cases after an analysis has been performed to see if the project is an acceptable alternative. In that analysis the project is 'retested' to see if it is effective. This is assume to be acceptable for the definition of 'retesting'.

Q43			
Commenter	**Yes**	**No**	**Comment**
			18. R2.7.3 unsure what 'committed' means regarding projects nor understand the need to have this documented anywhere. 19. R3.2.2 what is 'relay loadability' and where would you note how it is supposed to be treated? 20. R3.3.1 how is this different than R3.1? 21. R3.3.2.1 why is there a need to know how much non-consequential load loss exists for each contingency and how can one predict the length of time this will last? 22. R3.3.2.2 Do we need to document the 'system adjustment' for each contingency? 23. R3.3.3 what is a severe impact and what is one that is less severe? 24. R3.4 what is the difference to 3.3.3? The definition given in the NERC Glossary from May of 2007 of Cascading Outage is still vague, it appears to allow the TP or PC the discretion to determine it based on studies. Is this the intent? 25. R3.5 what is the time limit for run-back? 26. R4.4 how can TPs identify what generation upgrades are needed (protection and control modifications)? 27. R4.5.2 whats the difference between this and 4.5.1? 28. R4.6 the generation levels could be too low for the studies to be useful, perhaps voltage levels should also be added or allow for TP/PC discretion. 29. R4.6.3 seems to allow some TP discretion in deciding which planning events are more severe but how does one know that without studies? 30. R5 this seems to have no direction for either party. 31. R6 is ambiguous Table 1 32. terms such as voltage instability, cascading outage and uncontrolled islanding should be defined

Q43			
Commenter	**Yes**	**No**	**Comment**
			or allowed to be defined by the PC. If consequential load loss is allowed for all cases then why even mention it? Isn't this like saying if the line trips, it will be out of service? why would one want to document this amount, perhaps for some sort of ranking? Planning events 33. what is a 'system adjustment'? if this means to manually redispatch the BES for each condition then these studies shown under P4 will take so long to complete that they will be invalid by the time they are done. In ERCOT, the economics of redispatch are not known to the TP thus this is done by the PC. an automatic computer simulated redispatch will possibly not have the same results. Define 'generator' for is this a single unit, the whole train, the largest unit or other? 34. For P6 events and above, if consequential load loss and non consequential are allowed, they why study these events? Do TPs plan and build transmission to eliminate the overloads for these events or just study them so that the results are known? Studying every possible event or combination does not make the studies better or provide a higher insight to areas of concern. A number of the combinations have a low probability of occuring and performing the studies and analizing the results will be a manpower burden and provide no better clarity on needs of the system. Table 2 35. The number of events to consider seems excessive although this is not our area of expertise. If each of these is to be run for each 'material change' in the BES then this list is excessive without more leeway or guidance provided.

Response: 1. The SDT believes that models must reflect the expected Load mix of industrial, commercial and residential Loads to appropriately reflect the behavior of the System.

2. The SDT agrees with your concerns and has revised this requirement (now Requirement R9). The terms "stressed System conditions", "validated", and "supporting rationale" have been removed.

3. The SDT has revised this requirement based on industry comments to clarify intent and to be responsive to FERC Order 693, paragraph 1725. Further, it is not the intent of the standard to require consideration of confidential information that is not available.

4. The standard has been revised to identify specific entities responsible for providing the required information.
5. The extent of coordination between the TP and PC can vary depending on many factors such as whether you are part of an ISO/RTO, vertically integrated Investor Owned Utility, or Transmission only company. The Functional Model envisions that planning entities will not only need to use overlapping models to simulate how the System will respond to Contingencies, but they will also be layered to provide for more locally focused studies as well as more global studies. Planning Coordinators need input from the planners doing the local studies to complete their overall studies. Planners need to coordinate their activities and sort out which entity will be detailing its studies to what extent. Documentation of entity studies needs to demonstrate that the System response to Contingencies and any Corrective Action Plan has been screened so as to meet the performance requirements stated in the standard, such as not exceeding applicable voltages and ratings.

Q43			
Commenter	**Yes**	**No**	**Comment**
6. Requirement R2 states that the "Planning Assessment shall use current or past studies …." The Planning Assessment is to cover the five year period but the entity is only required to run a limited number of studies. It is the responsibility of the entity to determine if past studies can demonstrate that the performance requirements are met. If past studies in conjunction with the required studies do not demonstrate that the system can meet the performance needed, the entity will need to run additional current studies that demonstrate it can meet the requirements. Requirement R2.1.1 is in reference to Requirement R2.1 which states that the Planning Assessment "be supported at a minimum by the following annual current studies, supplemented with qualified past studies as indicated in Requirement R2.6:" To further clarify, the SDT has deleted the "all five years" language. 7. The SDT is providing some guidance on what needs to be included in sensitivity studies while not being totally prescriptive. Requirement R2.1.3 has been modified to require documentation of why the listed sensitivities were or were not selected for specific studies. Requirement R2.1.4 has been added to specifically state that the entity may consider additional sensitivities that are appropriate for its own System. In either case the entity must document the reason for running or not running cases for the items listed. The documentation as well as the studies for the sensitivity(ies) selected will be required to demonstrate compliance. It is the entity's decision to establish and document which senstiviyies are more significant to study System responses. The sensitivity studies do not in themselves establish the need for a plan, only the areas of the system for which the analysis is needed. **R2.1.3.** For each of the studies described in Requirement R2.1.1 and Requirement R2.1.2, sensitivity case(s) that stress the System with sensitivities that reflect one or more of the following conditions shall be run and documentation ~~with~~ of the technical rationale for ~~the selected sensitivity(ies)~~ why each of the conditions was or was not selected shall be supplied: **R2.1.4**. In addition to those sensitivities mentioned in Requirement R2.1.3, any other sensitivities, as deemed appropriate by the Transmission Planner or Planning Coordinator for their individual systems, shall be run and documentation of the technical rationale for why each was selected shall be supplied. 8. Known generation additions are considered a project and must be studied if the lead times are longer than 10 years. 9. R2.3 - See Requirement R.2.6.2 where this is defined. 10. The SDT has revised the wording of R2.3 to try to clarify that short circuit analysis must be conducted annually but that past studies as defined in Requirement R2.6.2 may be used as appropriate. R2.3 The short circuit analysis portion of the Planning Assessment shall be conducted annually and supported by current or past s 11. Requirement R2.4 has been re-worded to clarify this situation. **R2.4** The ~~System Stability portion of the~~ Near-Term Transmission Planning Horizon portion of the Stability analysis ~~Planning Assessment~~ shall be assessed annually ~~address all five years of the assessment period,~~ and be supported by current or past studies. The following studies are required ~~annually~~:			

Q43			
Commenter	Yes	No	Comment
			12. See Requirement R5.6.2 which provides the bounds you are looking for. 13. and 14. This wording is intentional to allow the planner some discretion. 15. The SDT has revised Requirement R2.6.3 as the new requirement R2.6.2 to clarify this concern. **R2.6.2** For steady state, short circuit ~~analysis~~, Generating Plant Stability, or System Stability analysis: ~~if the study is less than five years old and no material changes have occurred to the System in the intervening period.~~ the study shall not include any material changes, such as, generation or Transmission additions/removals, or topology changes that have occurred in the intervening period and would impact the study area. 16. Requirement R8 (old requirement R6) which focuses on the distribution of the Planning Assessment results among affected entities was specifically added to allow some level of peer review and provide some level of confidence that the proposed plan could in fact be completed to meet the reliability objective. Requirement R2.7.1.1 is complementary to Requirement R8 (old requirement R6). Initiation dates are only required in the near term since longer term plans tend to move in time and only have general scheduling associated with them. Typically the date would indicate when significant resources will begin to be employed This covers any project proposed for the near term. The SDT believes that initiation dates are required for near-term Corrective Action Plans to give an indication that the Corrective Action Plans can be implemented in time. 17. The specific requirement to perform re-test has been removed. The purpose of the Corrective Action Plan is to list the actions that are needed to meet performance requirements. The studies, current and/or past as appropriate as well as the extent of the size of the study area, are performed to support compliance and demonstrate that the requirements are met. 18. Based on several comments and consideration by the SDT, the SDT has modified Requirement R2.7.1 and deleted Requirements R2.7.2 through R2.7.4. The standard now refers to "actions" needed to achieve required System performance without trying to distinguish between committed and proposed projects. It also lists examples of what is intended by the word "actions". **R2.7.1**. ~~Identify~~ List System deficiencies and the associated actions needed to achieve required System performance. ~~including Transmission and generation improvements, DSM, new technologies, or Operating Procedures including the duration of interim Operating Procedures.~~ Such actions may include installation, modification, retirement, or removal of Transmission and generation Facilities and any associated equipment such as protective or Special Protection Schemes, rate applications, DSM, or other initiatives, new technologies, or Operating Procedures including how long the Operating Procedures will be needed as part of the Corrective Action Plan. 19. R3.2.2 - The SDT used the term "relay loadability" to describe the maximum Transmission line loading on a specific circuit that is permitted before line relays might see the Load current as a fault and trip the circuit. In those cases where the relay loadability limit is lower than the circuits thermal or Stability rating, the relay loadability limit should be applied as the benchmark for meeting the performance requirements.

Q43			
Commenter	Yes	No	Comment
			20. Requirement R3.1 requires studies to be performed. Requirement R3.3.1 requires that the results meet the requirements of the standard. 21. R3.3.2.1 - FERC required documentation of Consequential Load loss in Order 693, paragraph 1795, (not Non-Consequential) and duration should be based on best judgment for the common cause of the event. 22. Yes. 23. The intent is to allow the Transmission Planner flexibility for deciding which multiple Contingency Planning Events are run during its annual studies. The standard leaves the classification of "severity" to the engineering judgement of the Transmission Planner based on experience of the System, past study results, input from operations staff, etc. The Transmission Planner will need to explain why others would be known to be less severe. For example a N-1-1 involving two non-related and distant Facilities could be excluded by the TP if desired. 24. Requirement R3.4 covers Extreme Events, Requirement R3.3.3 covers Planning Events. The SDT did not propose a new definition for cascading outage or cascading. 25. The use of the defined term 'Facility Ratings' dictates the time limit. 26. The outcome of the assessment should identify the actions required. 27. In new Requirement R5.5.2, clarification has been provided to differentiate the events. **R5.5.2**. Performance shall meet the requirements for Planning Events in Table 2 – Stability Performance. 28. Those values are based on Large Generator Interconnection Procedures as approved by FERC. 29. It does allow some discretion but good engineering judgement is assumed and you must document your rationale. 30. This requirement assumes that the two parties will react in a professional manner to resolve any differences. 31. The new Requirement R8 clarifies this. **R8**. Each Planning Coordinator shall coordinate the distribution of Planning Assessment results among ~~affected entities~~ neighboring systems, coordinating analysis of these results through an open and transparent peer review process such as described in FERC Order 890. 32. In general, new definitions are proposed along with the proposed standard, and will be included in the Glossary of Terms upon approval of

Q43			
Commenter	**Yes**	**No**	**Comment**
the standard. Definitions for Cascading and Stability are included in the NERC Glossary. Further uncontrolled islanding, while not defined, is a common term that is well understood. The SDT does not propose to improve the definitions for Cascading and Stability or propose a new definition for cascading outages and uncontrolled islanding. There are a number of IEEE papers (e.g., P. Kundur, J. Paserba, V. Ajjarapu, G. Anderson, A. Bose, C. Canizares, N. Hatziargyriou, D. Hill, A. Stankovic, C. Taylor, T. V. Custem, V. Vittal, "Definition and Classification of Power System Stability", IEEE Transactions on Power Systems, vol. 19, no. 2, pp. 1387 – 1401, May 2004) that provide descriptions for voltage instability. The requirement concerning Consequential Load is to address FERC Order 693, which directs that the ERO, among other things, to clarify footnote (b) in regard to Load loss following a single Contingency, specifying the amount and duration of Consequential Load Loss and System adjustments that are permitted after the first Contingency to return the System to a normal operating state. 33. The term "System adjustment" is used in the existing TPL Standards, and is intended to have the same meaning in the proposed TPL standard, and includes both manual and automatic actions. 34. For P6 and more severe Events, loss of Consequential and Non-Consequential Load is allowed. The events will still need to be studied to ensure that System reliability and security is maintained and that any outage would not result in unacceptable System performance, such as, cascading, instability and uncontrolled separation. 35. The SDT understands the potential work load increases. Requirement R3.3.3 requires evaluation of only those Planning Events (involving multiple Contingencies) that are expected to produce more severe System impacts.			
City Water Power and Light	☑		The Standards are a great start in getting a set of requirements in place that will provide a planning methodology that will be transparent to the Functional entities in the interconnections and will produce results that will permit reliable planning and operations of the BES. The SDY should remove all Requirements that are subjective and can't be measured. The assumptions the Transmission Planners and Planning Coordinators use to conduct the studies should be posted.
Response: The SDT has endeavored to draft Requirements that are objective and measurable. Since this comment did not include specific Requirements that the commenter proposes should be deleted, the comment relating to removal of subjective, unmeasurable Requirements is unactionable. The SDT believes the comment relating to posting assumptions implies that the standard should not have study assumption Requirements but should only require that assumptions be posted. The SDT is unclear where assumptions would be "posted" but in any event if study assumption Requirements were removed, then the SDT believes there would be little or no value in having study assumptions "posted".			
Dominion	☑		GENERAL COMMENTS: (1) Making the standards more stringent by "raising the bar" is not going to result in a dramatic improvement in system reliability. Even the best designed systems are susceptible to human error. Dominion has at least 5 years of transmission outage data clearly illustrating that any resulting loss of load (both consequential and non-consequential) has had an average duration of only 4-7 customer-minutes per year. Going forward, the emphasis and focus should be on planning and

Q43			
Commenter	**Yes**	**No**	**Comment**
			operating the bulk electric system so as to confine any transmission outages to the immediate, local area, and not allow the cascading of outages beyond control area boundaries. (2) Although we are unable to put specific numbers on the impact of "raising the bar "with respect to non-consequential load loss, it will be enormous. Increased staffing levels may be required, and we would likely incur significant increased transmission maintenance and construction costs. It is likely that State commissions everywhere (not just Virginia) would agree that rate payers should not incur the significant cost increases required to meet more stringent planning criteria (i.e. - "raising the bar") when the corresponding improvements in transmission system reliability cannot be quantified. SPECIFIC COMMENTS PERTAINING TO REFERENCED SECTIONS OF THE STANDARD: (1) The last block in Category C of Table 1 of the existing standards deals with protection system failure. We interpreted this as, among other things, having a fault beyond the first-zone coverage of the primary protection scheme with the carrier equipment failure resulting in a second-zone trip of the faulted line (even though only one element will be lost). The second-zone trip time is generally in the range of 30-35 cycles. This may be critical from the stability aspect. The proposed Table 2 of TPL-001-1 is silent about this. Is there a reason why this requirement was left out? (2) The requirement R4.6.2 may cause some confusion due to the last part "….whichever is greater". It is suggested that the entire wording for this requirement be replaced as listed below to avoid any misunderstanding. "Shall be performed for changes in the real power output of a generating unit if either of the following applies: (a) the increase is more than 10 % of the existing capacity (regardless of the amount of MW increase) (b) the increase is more than 20 MW (regardless of the % increase). Something to think about regarding a cut-off limit of 10% or 20 MW: We had a unit with 800 MW existing capacity and the request was to increase it by 15 MW making the total new capacity of 815 MW. The requested increase was less than 10% of the existing capacity and also less than 20 MW, meaning the plant stability study is not required. However, we found that the increase of 15 MW made the plant unstable and we had to come up with a solution (and we did). This example warrants to include something like…. "However, in cases where a stability margin is known (or estimated) to be slim, stability study should be performed regardless of the % or MW

Q43			
Commenter	**Yes**	**No**	**Comment**
			amount of increase (this leads to defining "Stability Margin"). (3) Table I, bullet 3 states that "Voltage Instability, cascading outages and uncontrolled islanding shall not occur." There is no definition for "voltage instability" anywhere in the proposed standard. (4) R.3.3.2.1. states "Consequential Load loss (expected maximum demand and expected duration) following a single Contingency shall be identified in the Planning Assessment." This requirement creates significant unnecessary work without adding any value to system reliability. (5) Extreme Event Description 3.d. states: "Shutdown of a nuclear power plant(s) and other facilities a day or more prior to a hurricane, tornado or wildfire, or for other common causes." It would appear that day ahead planning for a tornado is not possible, or applicable, for inclusion in this listing.
Response: Specific 1. The SDT agrees with your concern and is working on a solution for a future draft. 2. The wording was lifted from FERC and has not been changed. 3. There are a number of IEEE papers (e.g., P. Kundur, J. Paserba, V. Ajjarapu, G. Anderson, A. Bose, C. Canizares, N. Hatziargyriou, D. Hill, A. Stankovic, C. Taylor, T. V. Custem, V. Vittal, "Definition and Classification of Power System Stability", IEEE Transactions on Power Systems, vol. 19, no. 2, pp. 1387 – 1401, May 2004) that provide descriptions of voltage instability. 4. FERC required documentation of Consequential Load loss in Order 693, paragraph 1795, (not Non-consequential) and duration should be based on best judgment for the common cause of the event. 5. Extreme Events notes have been changed to address this concern.			
E ON US	☑		1. R1.4 "including protective relays with consideration given to spare equipment strategy" I do not understand the intent of this phrase or what it adds to the requirement. 2. R2.6.1 "and market structure changes" What is this, does it require a definition? 3. R2.7.1.1 What is the project initiation date; the date approval is sought, received, materials are ordered, construction begins? Many projects are upgrades or replacements that this will be meaningless. Don't you really only want multiyear projects? 4. R2.7.2 The initial study process will incorporate testing. This will require the creation of additional cases and additonal testing prior to the Planning Assessment submittal. Most projects should be identified during the Long Range time frame. Inclusion of the project in the next years base cases and subsequent testing should be adequate. 5. R2.7.3 Define a "Committed Project". MISO has spent years on this. 6. R2.7.4 Changes in timing of all projects should be documented in the Planning Assessment. Why would you document Committed Projects that are removed but not any delays or accelerations?

Q43			
Commenter	**Yes**	**No**	**Comment**
			7. R3 Sensitivity studies (if retained) should have less stringent performance requirements than the other cases required by R2.1. 8. R3.3.2.1 Unless this is limited to above 300 kV, many hours will be spent for naught. The lower voltage systems often have tapped loads that will trip with the line. The time required to restore will vary on the fault location, and time for switching, sometimes remote and sometimes manual. I do not see the need for or the benefit of this requirement. Please explain. 9. P3 Event is poorly worded, see response to Q25. 10. P6.1 above 300 kV, below 300 kV or all? The tables need to be reviewed to make sure that the voltage applicability is clearly stated. 11. P9.6 Why is this a requirement? It should be much less severe than any of the prior requirements. 12. Extreme Event 9 (3ph fault with loss of all generating units at a station) is in conflict with Q33 which says it was not included). Am I missing something? 13. Other, it appears that we are not required to study the outage of a transmission line or transformer followed by the outage of a generator. Was this overlooked, or did I miss it? Would system adjustment be allowed?

Response: 1. The SDT has revised this requirement based on industry comments to clarify intent and to be responsive to FERC Order 693, paragraph 1725.
2. R2.6.1 - The change must be "material" as stated in the standard meaning it must have an impact on the study results or may only make some results invalid and not relevant.
3. Requirement R8 (old requirement R6) which focuses on the distribution of the Planning Assessment results among affected entities was specifically added to allow some level of peer review and provide some level of confidence that the proposed plan could in fact be completed to meet the reliability objective. Requirement R2.7.1.1 is complementary to Requirement R8 (old requirement R6). Initiation dates are only required in the near term since longer term plans tend to move in time and only have general scheduling associated with them. Typically the date would indicate when significant resources will begin to be employed. This covers any project proposed for the near term. The SDT believes that initiation dates are required for near-term Corrective Action Plans to give an indication that the Corrective Action Plans can be implemented in time
4. Based on several comments and consideration by the SDT, the SDT has modified Requirement R2.7.1 and deleted Requirements R2.7.2 through R2.7.4. The standard now refers to "actions" needed to achieve required System performance without trying to distinguish between committed and proposed projects. It also lists examples of what is intended by the word "actions".

Q43			
Commenter	**Yes**	**No**	**Comment**
R2.7.1. ~~Identify~~ List System deficiencies and the associated actions needed to achieve required System performance. ~~including Transmission and generation improvements, DSM, new technologies, or Operating Procedures including the duration of interim Operating Procedures.~~ Such actions may include installation, modification, retirement, or removal of Transmission and generation Facilities and any associated equipment such as protective or Special Protection Schemes, rate applications, DSM, or other initiatives, new technologies, or Operating Procedures including how long the Operating Procedures will be needed as part of the Corrective Action Plan. 5. Based on several comments and consideration by the SDT, the SDT has modified Requirement R2.7.1 and deleted Requirements R2.7.2 through R2.7.4. The standard now refers to "actions" needed to achieve required System performance without trying to distinguish between committed and proposed projects. It also lists examples of what is intended by the word "actions". 6. Based on several comments and consideration by the SDT, the SDT has modified Requirement R2.7.1 and deleted Requirements R2.7.2 through R2.7.4. The standard now refers to "actions" needed to achieve required System performance without trying to distinguish between committed and proposed projects. It also lists examples of what is intended by the word "actions". 7. The SDT is providing some guidance under Requirement R2.1.3 on what needs to be included in sensitivity studies while not being totally prescriptive. Requirement R2.1.3 has been modified to require documentation of why the listed sensitivities were or were not selected for specific studies. It is the entity's decision to establish and document which transfers are more significant to study system responses. The sensitivity studies do not in themselves establish the need for a plan, only the areas of the system for which the analysis is needed. **R2.1.3**. For each of the studies described in Requirement R2.1.1 and Requirement R2.1.2, sensitivity case(s) that stress the System with sensitivities that reflect one or more of the following conditions shall be run and documentation ~~with~~ of the technical rationale for ~~the selected sensitivity(ies)~~ why each of the conditions was or was not selected shall be supplied: 8. R3.3.2.1 - FERC required documentation of Consequential Load loss in Order 693, paragraph 1795, (not Non-Consequential) and duration should be based on best judgment for the common cause of the event. 9. Please see response to comments on Q25. 10. The SDT has revised Tables 1 and 2 to provide more clarity. 11. P9.6 was to address FERC directive in Order 693 to consider spare equipment strategy. The SDT has revised Tables 1 and 2 to remove P9.6 and included this consideration in R11 of the second draft of the standard to address this issue. 12. In Q33 the SDT posted a question to the industry to request guidance on whether simultaneous tripping of all generating units in a power plant should be included in the Extreme Events in Table 2 (on Stability Studies). 13. Tables 1 and 2 have been revised to address your comments. P3 is meant to cover the combination of overlapping outages regardless of the sequence in which the outages occur.			
ERCOT ISO	☑		1. R1.1.1 - Are percentage of load that is industrial, commercial, and residential needed? 2. R1.2 - The wording is confusing. If the power factor is based on historical measured values, does it have to be during contingency (stressed)? 3. R1.5 - "Planned Facilities defined in accordance with the documented criteria of the Planning Coordinator" - what is meant by this?

Q43			
Commenter	**Yes**	**No**	**Comment**
			4. R2.1.1, R2.1.2, R2.1.3.1 - are all studies to be run using all the contingencies defined in Table 1 - Steady State Performance? 5. R2.6.1, R2.6.2, R2.6.3 - past studies will never be able to be used if the addition of a transmission line makes them invalid! 6. R3.2.1 - What is meant by "minimum steady state voltage limitations of all generators"? 7. R3.2.2 - Relay "loadability"?? What is meant by this? Sounds unreasonable for steady state studies as facility rating should reflect limitations of relay equipments such as CT"s. 8. General comment: If this proposed standard is approved, since it contains requirements that are more restrictive than current standards, there will need to be a transition period to allow transmission to be built to allow systems to meet the new requirements.

Response: 1. The SDT believes that models must reflect the expected Load mix of industrial, commercial and residential Loads to correctly reflect the behavior of the System.
2. The SDT has revised this requirement based on industry comments to clarify intent.
3. The referenced verbiage has been deleted from the revised standard
4. Regarding Requirements R2.1.1 and R2.1.2, Requirement R2 states that the "Planning Assessment shall use current or past studies …." The Planning Assessment is to cover the five year period but the entity is only required to run a limited number of studies. It is the responsibility of the entity to determine if past studies can demonstrate that the performance requirements are met. If past studies in conjunction with the required studies do not demonstrate that the System can meet the performance needed, the entity will need to run additional current studies that demonstrate it can meet the requirements.
Regarding Requirement R2.1.3.1, the SDT is providing some guidance under Requirement R2.1.3 on what needs to be included in sensitivity studies while not being totally prescriptive. Requirement R2.1.3 has been modified to require documentation of why the listed sensitivities were or were not selected for specific studies. It is the entity's decision to establish and document which transfers are more significant to study System responses. The sensitivity studies do not in themselves establish the need for a plan, only the areas of the system the analysis is needed.

R2.1.3. For each of the studies described in Requirement R2.1.1 and Requirement R2.1.2, sensitivity case(s) that stress the System with sensitivities that reflect one or more of the following conditions shall be run and documentation ~~with~~ of the technical rationale for ~~the selected sensitivity(ies)~~ why each of the conditions was or was not selected shall be supplied:

5. R2.6.1, R2.6.2, R2.6.3 - The change must be "material" as stated in the standard meaning it must have an impact on the study results or may only make some results invalid and not relevant.
6. R3.2.1 - Generator high and low voltage limits are part of the constraints and are considered part of Facility Ratings in FAC-008. FAC-009 provides that the information be provided by the Generator Owner.

Q43			
Commenter	**Yes**	**No**	**Comment**
7. R3.2.2 - The SDT used the term "relay loadability" to describe the maximum Transmission line loading on a specific circuit that is permitted before line relays might see the Load current as a fault and trip the circuit. In those cases where the relay loadability limit is lower than the circuit's thermal or stability rating, the relay loadability limit should be applied as the benchmark for meeting the performance requirements. The SDT believes that equipment ratings, such as CT ratings, should also be reflected, but not necessarily as part of the "relay loadability" limit. 8. The SDT agrees and that will be addressed in the future			
AECI	☑		1. Based on the p1 to P9 events one would have to model a breaker to breaker instead of bus to bus. This would be a large undertaking and it seems that it would be more conservative to have a bus to bus model. 2. Question on P4 - does this apply to all generators on a system or is there a MW limit to the size of the generator. 3. P5 Does this mean running N-2 for the 300 KV for all seven cases that would be required. This could take a large amount of computer run time. 4. We are stating that this change to the standard is not warranted. However, if all these changes are implemented what used to take approximately 1 month to assess will now take approximately 4 months and we are not that big of a system. I assume that the time and manpower to perform all the contingencies has been considered.
Response: 1. The SDT revised the event descriptions to provide clarity on simulations in response to FERC Order 693. Depending on the configuration, modeling bus-to-bus outages in a study is not necessarily more conservative than modeling breaker-to-breaker outages. The SDT understands the potential increases in work load. The draft standard allows the use of past studies to meet the current year assessment and study requirements. 2. The intent is that the standard would apply to all Facilities (including generators) that are represented in the transmission planning simulation. 3. Requirement R3.3.3 requires evaluation of only those Planning Events (involving multiple Contingencies) that are expected to produce more severe System impacts. 4. The SDT understands the potential increases in work load. The draft standard allows the use of past studies to meet the current year assessment and study requirements.			
Allegheny Power	☑		General Comments: 1). We believe the 300 kV cutoff should not be used. It should be based on the definition of a Backbone Facility. The 300 kV and above standards should only apply to backbone facilities that are used to provide overall energy transfer and ties to other systems and not facilities that provide load serving purposes. Backbone facilites should be specifically defined and accepted as Backbone facilities through RTO and RE review and acceptance.

Q43			
Commenter	**Yes**	**No**	**Comment**
			2). Planning Scenarios should be forced to include a market based scenario under the Planning Authority obligation which should include long range market projections for generation dispatch, significant energy price changes due to environmental issues or fuels, and market impact of large transmission reinforcements. 3). It should be noted in the process that additional planning resource additions (maybe as much as 30%) will be required to met these new study requirements since they are much more expansive than the existing requirements. 4). These standards could require substantial (millions) upgrades to the system to meet the proposed changes. These are primarily due to the 300 kV and above standard revisions and the non-consequential load drop criteria adjustments.
Response: 1. The initial draft of the proposed Transmission planning standard held the planning of 300 kV and higher Transmission Systems to a more stringent requirement than the remaining BES. Although not unanimous, the majority of the SDT believed that the 300 kV and higher Systems generally represent an extra-high-voltage (EHV) range that is considered the backbone of many Systems in the various Interconnections and that the more stringent requirements were appropriate when considering Contingencies of two EHV Facilities due to one Event. Systems operated at these voltage levels generally do not directly serve end-use Load customers but rather act as the medium for moving large amounts of power from production to various Load centers the energy is delivered by the other Transmission or sub-Transmission Systems to end use customers. It is the desire of NERC and various stakeholders that the backbone of the electric power grid be robust and held to a higher degree of reliability. **2.** Marketing and economics are beyond the scope of the SDT. This is a reliability based standard. 3. Resources and expenditures versus adequate level of reliability are being given due consideration throughout the process and will ultimately be determined by the industry through the ballot process. 4. Resources and expenditures versus adequate level of reliability are being given due consideration throughout the process and will ultimately be determined by the industry through the ballot process.			
AEP	☑		(1) Consider clarifying system performance requirements that would be applicable during (a) the first two minutes after the system disturbance when slow-acting automatic system adjustments (such as the operation of motor-operated-air-break switches that are relayed to sectionalize the faulted segment of a multi-terminal circuit; the changing of taps on tap-changing-under-load transformers; the switching of capacitor banks; etc.) would not allowed to be considered, (b) the next three minutes (two to five minutes after the system disturbance) when these slow-acting automatic system adjustments would be allowed to be considered, (c) the next twenty-five minutes (five to thirty minutes after the system disturbance) when manual system adjustments would be allowed to be considered, and (d) the time period beyond thirty minutes after the system disturbance when no system adjustments of any kind would be allowed to be considered. (2) Consider clarifying which functional entity is expected to provide what information specified in this standard, especially in requirement 1.

Q43			
Commenter	**Yes**	**No**	**Comment**
			(3) Consider clarifying the need for functional entities to provide competitive sensitive information such as planned outages. (4)The system stability study documentation requirements R2.4 and R4.5 do not specify a level on the scope of studies or indicate the extent of coverage across a system required for acceptability. A reasonable scope of such studies might include studies of a system nature in association with dynamic devices, or voltage collapse or cascading scenarios, but what else would be required? Or, how much more stability study documentation beyond what is necessary to comply with TPL-001 through 004 would be required? Specific comments regarding R2.4 are as follows: what does "address" all five years mean? How much of the system do you need to study (for example, do you need to apply faults at every bus)? Again, you wouldn't know how much studying needs to be done before this requirement is satisfied. In R2.4.1 and R2.4.2, depending upon the study at hand, some other load condition such as shoulder peak may be more appropriate. Why should you be required to do peak and off-peak cases in such an instance? In R2.4.3 you are forced into doing at least one of the sensitivity studies listed (i.e., "to reflect one or more of the following conditions..."). Is this intentional? Depending upon the study at hand, none of these may be worthwhile doing, and there may be some other parameter that would be better looked at for sensitivity purposes. Existing TPL-001 through 004, Table 1, Category C3 requires any combination of generator, transmission line, transformer, or HVDC pole block in succession. The new standard excludes several of these combinations from being required in P4, P5, P8 and P9. Is this an intentional exclusion? If so, why? The standard should state explicitly that existing generation does not need to be studied unless R2.5.1 or R2.5.2 apply.
Response: 1. NERC Standards are to specify the requirements, which must be met and not "how" they are met. The System adjustments that can take place during various time periods are different in different systems, and should be based on agreements and coordinated among the entities performing the studies. 2. The SDT does not believe it is necessary to be so prescriptive but only requires that accurate data be provided in order to build accurate models. 3. Commercially sensitive and confidential information is covered by existing rules and regulations and can't be altered by the SDT. 4. Address means that you must cover all 5 years in the assessment. Good engineering judgement must be applied. The requirements are minimal and one can always do additional studies. Yes, this is intentional but good engineering judgement may imply that you need to do more than one sensitivity. The SDT has interpreted C3 as described in the tables. The SDT feels that the conditions are properly identified.			
APPA	☑		The Standards are a great start in getting a set of requirements in place that will provide a planning methodology that will be transparent to the Functional entities in the interconnections and will produce results that will permit reliable planning and operations of the BES. 1. Requirement 5 is a start at attempting to share the results of the planning studies with the correct entities. However, because this is such an important part of reliable planning, this requirement

Q43			
Commenter	**Yes**	**No**	**Comment**
			should be rewritten to be much more definitive and comprehensive. It is recommended the SDT review the FAC-014 Standard where this Standard deals with who is to receive the methodology for calculating SOLs. The SDT needs to insure that the Transmission Planners and Planning Coordinators share their Near-Term Planning Horizon Studies with the Transmission Operators (Operation Planners) and the appropriate Regional Entity Planning Committees and Operating Committees. 2. It is also recommended that the SDT remove all Requirements that are subjective and cannot be measured. For example, who must the Transmission Planner share information with? Requirement R5.2 states that information must be shared with Transmission Planners of neighboring impacted areas. A Compliance Monitor cannot determine if a neighbor is being impacted. In fact, from an enforcement perspective, if the involved parties must go before a Judge, who will determine if someone is impacted or not? 3. In addition, the assumptions the Transmission Planners and Planning Coordinators use to conduct the Studies are not required to be shared or posted. As an example, in some parts of the BES Transmission Planners and Planning Coordinators use Flowgate Methodology to study the BES, while others use Rated System Paths, and still others use Area Interchange (Network Methodology). 4. This standard needs to be modified to respond to several requests from Order 890 and Order 693. These Orders request that through the Standards, information be made available, posted, and shared with the appropriate reliability functions. This information includes the results of Planning Horizon Studies, Operating Horizon Studies, and eventually the determination of Available Transfer Capabilities. This information also includes, but is not necessarily limited to: how do the planners treat the "counter flows" in their studies, what are the generation and transmission planned outage schedules used in the planning studies, how are Network Loads and Network Facilities treated in planning studies; and how do the planners treat Grandfathered Transmission and Grandfathered Power and Energy Contracts in the planning studies?
Response: 1. The SDT assumes that this is actually referring to Requirement R6. This requirement has been re-written as Requirement R8 and ties back to FERC Order 890 for distribution. **R8**. Each Planning Coordinator shall coordinate the distribution of Planning Assessment results among ~~affected entities~~ neighboring systems, coordinating analysis of these results through an open and transparent peer review process such as described in FERC Order 890. 2. The SDT has attempted to not add subjective requirements. However, as measures are developed in a subsequent release, the SDT will review all requirements for subjectivity. 3. Documentation is required in your assement to decribe that you have met the requirements. 4. Information will be shared as required in various orders and regulations as shown in the new Requirement R8 for example.			
ATC	☑		Following are additional comments on the proposed standard.

Q43			
Commenter	**Yes**	**No**	**Comment**
			1. R1 Each sub-requirement (R1.1 to R1.5) should specify which Functional Entity (of those listed in R1) is responsible for providing the modeling data. For example, while logically it appears that R1.1 is applicable to the LSE only, it may be argued that parts of it may be applicable to the Transmission Planner also. 2. R1.1.3 We do not agree with identifying the DSM load reduction "consistent with operational requirements" for the purpose of modeling Load in planning studies. This is because DSM is typically employed either for Capacity deficiencies, but not for operations needs. 3. R1.3 "Firm transfers/Interchange Schedules and….." Should say either firm transfers or interchange schedules but not both since they are not equivalent. If the intent here is to model each Balancing Authority's Firm resources and Firm "commitments" needed to supply the Firm Load, then we suggest using the term Firm Commitments defined as the Native Load plus Firm Transmission Service plus LTTRs. 4. Firm Transfer -- Either define this term or use the existing NERC Glossary term Firm Transmission Service instead. Alternatively, use the term Firm Commitments defined as the Native Load plus Firm Transmission Service and LTTRs. Further, in Table 1, the "Interruption of Firm Transfer Allowed" performance requirement should be clarified/reworded to indicate if firm transfer was intended to comprise both firm point-to-point and network transmission service. If so, then curtailment of firm point-to-point transmission service should be permitted for all events P1-P4. Alternatively, the performance requirement could be changed to "Generation Redispatch Allowed". Given the future Day 3 MISO market structure, standards that refer to Generation Redispatch must include Demand Response. 5. R1.4 We believe that each Reliability Coordinator (RC) already receives the planned outage information from all TOs and GOs and maintains it in the Outage Scheduler. Can the Planning Coordinator obtain this information from the RC's operating in its footprint? 6. R1.5 The Transmission Planner is also very likely to have a documented criteria for planned (committed? see R2.7.3) facilities, so this requirement should say TP/PC instead of only PC. What standard will require the TP to have criteria? There should be a separate requirement that applies to the Generator Owner and includes specifics, such as reporting contemplated additions, modifications, and retirements. 7. R2.1.3.1 It is not clear what additional "variability of Load/demand and Load power factors due

Q43			
Commenter	**Yes**	**No**	**Comment**
			to season, weather, or time of day" over and above what is modeled in the seasonal base case is expected here. For example, what additional load variability can be studied in a summer peak base case which already represents the system snapshot of a hot (weather) summer (season) mid-afternoon (time of day) loading condition? 8. R2.5.2 Please provide more examples of what would comprise "material changes" that trigger a plant stability study (besides the addition/removal of transmission line). Would it be better to say electrical proxmity (to capture the concept of electrically "close" instead of electrical vicinity? 9. R2.6.1 to R2.6.3 Should all "material changes" trigger a new study? Shouldn't a new study be done only for those changes that are expected to have an adverse impact on system performance? For example, adding a transmission line outlet at a generating station will rarely have an adverse impact on plant stability. Suggest that these requirements specify the need for a new study to support the planning assessment only when changes "that have an adverse material impact on system performance" have occured. 10. R2.7.1.1 It is unclear what is the need/benefit of including a the project initiation date; the project in-service date should be enough in a corrective action plan. Suggest deletion of project initiation date from the requirement. 11. R2.7.3 What is the difference between "committed projects" referred here versus the "planned facilities" referred to in R1.5? Please explain distinction between committed, planned and proposed projects/facilties. 12. R2.7.4 "Not remove committed projects……" Note that a committed project may not get cancelled but can very likely be deferred --- how should deferred projects be handled? 13. R.3 Per this requirement, the BES should be analyzed for normal (N-0) performance. However, Table 1 does not include the corresponding performance requirements. Further, R3.1 refers to studies for evaluating performance requirements in Table 1. Shouldn't Table 1 include normal system performance requirements? 14. System Adjustment -- What automatic/manual actions comprise this term? It will be helpful if the standard explicitly states which post-event system adjustments are acceptable/permitted to meet performance requirements for single contingency events (P1, P2 or P6) versus which pre-event system adjustments (specifically load shedding) are allowed/permitted to prepare for the next contingency (after the N-1 contingency has occurred) in multiple contingency events (P3-P5, P7-P9). This distinction does not appear to be addressed by requirement R3.3.2.2 in the draft

Q43			
Commenter	Yes	No	Comment
			standard. 15. R3.3.2.2 is inconsistent with the Planning Events in Table 1. While the requirement states that shedding firm load and curtailing firm transfers are not permitted for single contingencies, these are allowed for event P6 in Table 1. Further, although the requirement implies that these two types of system adjustments are permitted for multiple contingencies, at least one of them is not allowed for the multiple contingency events P3, P4 and P5 in Table 1. 16. System Adjustment Duration -- What is the allowable time for completion of system adjustment? Requirement R3.3.2.2 states that it is the time period allowed by the Transmission Owner's applicable time-limited (emergency) equipment rating. However, R3.3.2.2 is only applicable to single contingency events -- that is, events P1, P2, P6 in Table 1. Shouldn't this concept of allowable system adjustment duration apply uniformly to all Planning Events P1-P9 in Table 1? 17. R3.5 allows generation runback for single and multiple contingencies -- that is, for ALL planning events P1-P9. It appears that this requirement lends itself to be included as another bullet item in the Performance Requirements at the top of Table 1. In fact, why not define what comprises System Adjustment (see comment above) and then tabulate the system adjustments that are (not) permitted for each planning event within Table 1? 18. System Stability studies: The standard must clearly define what types of stability analyses fall under this umbrella term. While it is generally understood that this includes angular stability analysis, which is the only one that is explicitly mentioned in the Table 2 footnotes, the standard does not indicate whether dynamic voltage stability analysis or small-signal stability analysis are also expected to be done as part of system stability studies. 19. Requirement R2 and its sub-requirements are intended to address all aspects of Planning Assessment. However, it is unclear which requirement(s) in the draft standard cover the scope of R1.3.12 in the existing TPL-002 and TPL-003 standards, which requires "Include the planned (including maintenance) outages of any bulk electric equipment at those demand levels for which planned (including maintenance) outages are performed. Further, we are unsure if the direction provided in FERC Order 693 paragraphs 1724 and 1786 with respect to planned (maintenance) outages have been adequately and clearly addressed in the draft standard. Can the SDT point us to the specific requirements that address the above issues? 20. We recommend that the SDT give consideration to acknowledging or addressing the directives in FERC Order 890 for performing transmission system loss analysis and economic assessments --

Q43			
Commenter	**Yes**	**No**	**Comment**
			can they be considered within the scope of reliability assessments? EDITORIAL COMMENTS 21. R4.5.1 and R4.5.2 -- It appears that the intent of these sub-requirements within R4.5 for System Stability study is very similar to the intent of R3.3.3 and R3.4 for Steady State studies. If so, then why have different heirarchical numbering for the latter case? Suggest changing R3.3.3 and R3.4 to sub-requirements R3.4.1 and R3.4.2 respectively within R3.4 for Steady State study. Table 1 22. Event P3 -- The performance requirement in column 3 "Interruption of firm transfer allowed" should be simply "NO" (outaged dc line performance is not applicable). 23. Event P5.3 -- Clarify if the "loss of another transformer" is intended to be the loss of a transformer with low-side voltage >300kV or *any* transformer in the BES. 24. Event P9.1 -- Is the one mile intended to be one *contiguous* mile? If so, recommend inserting the qualifier "contiguous" to claridy the intent. 25. Event P9.6 -- The contingency description is very confusing regarding the role of spare transfomer. Is spare transformer part of the system adjustment? Please reword to clarify the intent. 26. Extreme Event Descriptions -- Items 3e and 3f are repetitions of items 3c and 3d. Delete any one pair. Item 3h is too vague --- either provide more specificity or delete it. Table 2 27. Extreme Events - Evaluation Requirements -- Inclusion of item 9 (3-ph fault with loss of all generating units at a station) in the table is inconsistent with Q.33. 28. Having both bullets at the beginning of the table and footnotes at the end of the table, which deal with similar subject matter, tends to be confusing and should be addressed. 29. The different types of Stability analysis (steady state voltage stability, dynamic voltage stability, dynamic generator unit angular stability, and dynamic inter-area power oscillation stability) be clearly and concisely stated in one location and the perfomance requirements for each type of stability should be more clearly stated in appropriate locations.

Response: 1. The standard has been revised (see Requirements R9 through R13) to identify specific entities responsible for providing the required information.

R9. Each Distribution Provider shall provide its respective Planning Coordinator with modeling information for real and reactive load forecast data for each year of the Transmission planning horizon at Transmission nodes based on expected or historical System performance including

Q43			
Commenter	Yes	No	Comment
the expected mix of industrial, commercial, and residential Loads, within ninety days of a request for such information. **R10**. Each Transmission Planner shall provide its respective Planning Coordinator with modeling information for Firm Transmission Service data, Interchange Schedules and resources required to supply Load for each of its Balancing Authorities for each year of the Transmission planning horizon, within ninety days of a request for such information. **R11**. Each Transmission Owner shall provide its respective Planning Coordinator with modeling information for known planned outages and long-term outages for Transmission equipment for each year of the Transmission planning horizon with consideration given to spare equipment strategy, within ninety days of a request for such information. **R12**. Each Generator Owner shall provide its respective Planning Coordinator with modeling information for known planned outages and long-term outages for generation equipment for each year of the Transmission planning horizon, within ninety days of a request for such information. **R13**. Each Resource Planner shall provide its respective Planning Coordinator with the modeling information for new planned facilities for each year of the Transmission planning horizon including but not limited to generators, Reactive Power devices, and new technologies, within ninety days of a request for such information 2. The SDT has determined that DSM is included in MOD and is no longer explicitly included here. 3. The SDT understands your concern and has modified the requirement (now Requirement R10) to clarify intent. The intent is to include modeling information for firm Transmission service data, Interchange Schedules, and resources required to serve Load. 4. The SDT agrees with your comment concerning the ambiguity of the term "Firm Transfer". The revised requirement (now Requirement R10) and revised Table 1 use the existing NERC Glossary Term Firm Transmission Service, as you suggested. However, the SDT does not agree that curtailment of Firm Transmission Service should be permitted for events P1-P4. 5. Few commenters raised this concern, so the SDT is uncertain whether the necessary information could be obtained from the RC in all regions. The ultimate source of the information is the TO and the GO. In the revised standard, this requirement has been separated into two requirements to clarify the intent for transmission equipment planned outages and long-term outages (Requirement R11) and generation equipment planned outages and long-term outages (Requirement R12). If the TO and GO provide the necessary information to the RC in a given region, it is possible that the TO and GO could arrange for the RC to provide the information to the PC to demonstrate compliance with the requirements or, alternatively, send the information to both the PC and RC. 6. The SDT has modified the standard based on various comments. The phrase "in accordance with the documented criteria of the Planning Coordinator" has been deleted. This requirement has been further revised and separated into two requirements applicable to the Resource Planner and Transmission Planner, respectively. 7. The SDT is providing some guidance on what needs to be included in sensitivity studies while not being totally prescriptive. Requirement R2.1.3 has been modified to require documentation of why the listed sensitivities were or were not selected for specific studies. Requirement R2.1.4 has been added to specifically state that the entity may consider additional sensitivities that are appropriate for its own system. In either case the entity must document the reason for running or not running cases for the items listed. The documentation as well as the studies for the sensitivity(ies) selected will be required to demonstrate compliance. It is the entity's decision to establish and document which senstivities are more significant to study System responses. The sensitivity studies do not in themselves establish the need for a plan, only the areas of the System for which the analysis is needed. For example an entity's base case Load level may be modeled as a 50/50 Load level which represents what the entity considers normal peak weather conditions. A sensitivity to that may be a 90/10 Load level case which represents extreme weather conditions.			

Q43			
Commenter	Yes	No	Comment
			R2.1.3. For each of the studies described in Requirement R2.1.1 and Requirement R2.1.2, sensitivity case(s) that stress the System with sensitivities that reflect one or more of the following conditions shall be run and documentation ~~with~~ of the technical rationale for ~~the selected sensitivity(ies)~~ why each of the conditions was or was not selected shall be supplied: **R2.1.4**. In addition to those sensitivities mentioned in Requirement R2.1.3, any other sensitivities, as deemed appropriate by the Transmission Planner or Planning Coordinator for their individual systems, shall be run and documentation of the technical rationale for why each was selected shall be supplied. 8. Requirement R2.5.2 was changed for clarification. **R2.5.2** Material Transmission System changes ~~in the electrical vicinity of existing generation are made~~ are made at or near the point of Interconnection of existing Generation such as the ~~addition or~~ removal of a Transmission Line ~~at or near the point of Interconnection~~ or the addition of a new substation in one of the Transmission Lines connected to the plant. 9. R2.6.1 – R2.6.3 – Requirement R2.6.2 was changed for clarification. **R2.6.2** For steady state, short circuit ~~analysis~~, Generating Plant Stability, or System Stability analysis: ~~if the study is less than five years old and no material changes have occurred to the System in the intervening period.~~ the study shall not include any material changes, such as, generation or Transmission additions/removals, or topology changes that have occurred in the intervening period and would impact the study area. 10. Requirement R8 (old requirement R6) which focuses on the distribution of the Planning Assessment results among affected entities was specifically added to allow some level of peer review and provide some level of confidence that the proposed plan could in fact be completed to meet the reliability objective. Requirement R2.7.1.1 is complementary to Requirement R8 (old requirement R6). Initiation dates are only required in the near term since longer term plans tend to move in time and only have general scheduling associated with them. Typically the date would indicate when significant resources will begin to be employed. This covers any project proposed for the near term. The SDT believes that initiation dates are required for near-term Corrective Action Plans to give an indication that the Corrective Action Plans can be implemented in time. 11. Based on several comments and consideration by the SDT, the SDT has modified Requirement R2.7.1 and deleted Requirements R2.7.2 through R2.7.4. The standard now refers to "actions" needed to achieve required System performance without trying to distinguish between committed and proposed projects. It also lists examples of what is intended by the word "actions". **R2.7.1.** ~~Identify~~ List System deficiencies and the associated actions needed to achieve required System performance. ~~including Transmission and generation improvements, DSM, new technologies, or Operating Procedures including the duration of interim Operating Procedures.~~ Such actions may include installation, modification, retirement, or removal of Transmission and generation Facilities and any associated equipment such as protective or Special Protection Schemes, rate applications, DSM, or other initiatives, new technologies, or Operating Procedures including how long the Operating Procedures will be needed as part of the Corrective Action Plan.

Q43			
Commenter	**Yes**	**No**	**Comment**
12. Based on several comments and consideration by the SDT, the SDT has modified Requirement R2.7.1 and Requirements deleted R2.7.2 through R2.7.4. The standard now refers to "actions" needed to achieve required System performance without trying to distinguish between committed and proposed projects. It also lists examples of what is intended by the word "actions". 13. The SDT has revised Table 1 to include N-0. 14. The term "System adjustment" is used in the existing TPL Standards, and is intended to have the same meaning in the proposed TPL standard, and includes both manual and automatic actions. 15. The SDT has made extensive changes to the tables to address these concerns. 16. and 17. The use of the defined term 'Facility Ratings' includes time elements which accommodate your concern. 18. You must perform any Stability analysis that is required to meet the performance requirements. 19. Requirement R11 contains this language. 20. The scope of the SAR and standard being prepared is only related to reliability assessments. 21. The SDT attempted to make Steady State and Stability identical but this was not always possible. 22. The SDT believes that the reference to the outaged DC line is appropriate. 23, 24, 26, and 27. P5.3 is intended to be the loss of a second transformer with low-side voltage >300 kV. P9.6 was to address the FERC directive in Order 693 to consider spare equipment strategy. In Q33 the SDT posted a question to the industry to request guidance on whether simultaneous tripping of all generating units in a power plant should be included the Extreme Events in Table 2 (on Stability Studies). The SDT has revised Tables 1 and 2 and included this consideration in Requirement R11 of the second draft of the standard to address this issue. Tables 1 and 2 have also been revised to address your comments on P3 and P9.1, the repeated Extreme Event Items 3c – 3f and Item 3h. For P9.1 (P7.1 in the second draft), the SDT did not change the table to include "contiguous" for the 1 mile (or less) exclusion because the standard does not limit the number of instances where two circuits can share a common tower only that each exclusion applies to a length of one mile or less. 25. The SDT agrees and has eliminated that requirement. 28. Editorial change made to alleviate confusion. 29. You must perform any Stability analysis that is required to meet the performance requirements.			
APS	☑		R 2.5.1 and R 4.6 require plant stability studies for all generators greater than 20 MVA for changes in excitation system or PSS addition. Generally plant stability is a problem only for large plants with large generators. Changes in the excitation system of a small generator or PSS addition does not significantly impact the plant stability. In fact, in most cases it improves the plant stability. When an excitation system or a PSS is commissioned in the field, part of the commissioning tests ensure that turbine-generator is stable and that the performance of the excitation system and PSS are acceptable. If an excitation system change or PSS addition is causing a plant stability problem in simulation, it is generally a data issue and can be best handled in MOD standards. Requiring stability studies to be redone does not in any way contribute to the system reliability. There are hundreds of old generators in the US which are going through excitation system retrofits in a given year. Requiring a stability study for each change would add additional study burden without any value to the system. This is unnecessary work with little consequence on the system performance or reliability.

Q43			
Commenter	**Yes**	**No**	**Comment**
			Note: We have additional comments on these standards but they have been covered by comments from WECC. We fully support all of those comments.
Response: Those values are based on Large Generator Interconnection Procedures as approved by FERC. Unit controls are an integral part of the power system and must be analyzed when changes are made.			
BPA	☑		Support comments sent by WECC. In addition,BPA has the following comments: 1. R2.3.1 - The way the requirement is written sounds like the short circuit study should be run after changes are made to the BES. The study needs to be done sufficiently in advance to allow for needed equipment replacements as a result of the study. Also, "current" in the first senetence should be changed because it is confusing whether it refers to "present" or "amps". 2. There needs to be better definition what is meant by "bus tie breaker". It is assumed this includes both bus tie breakers between a main and auxiliary bus, as well as bus sectionalizing breakers between two main bus sections. 3. In general the table seems unnecessarily complex. It would appear to make more sense to group events by performance as done in the previous Table 1. Also, in general the resulting events for the element contingencies in the table should be compared and like events grouped together since they would be are modeled the same and show the same performance in powerflow studies. 5. P9.1 - It is recommended to exclude multiple circuits sharing a common structure for no more than three miles, rather than one mile. Our analysis shows river crossing systems can be up to three miles and it is impractical to plan for common corridor outages of up to this distance. 6. Planning event P9.6 is the same as P8.3 with the only difference being the restoration time. 7. Regarding extreme event descriptions: - Item 3.a is not a Transmission Planning, but is relevent for Resource Adequacy. - Item 3.b is an operational issue not relevent to Transmission Planning. Successful cyber attack would need to be defined. Also, how would the consequences of a successful cyber attack be predicted? - Regarding item 3.c, generation capabilities should already be modeled in base cases within the planning horizon. - Items 3.d through 3.f are not relevent to Transmission Planning. These are Resource Adequacy issues within a short term operational horizon. - Items 3.e and 3.f appear redundant to items 3.c and 3.d. - Item 3.g is not really a planning issue. The system should be designed to meet required

Q43			
Commenter	**Yes**	**No**	**Comment**
			performance for selected contingencies regardless of age or maintenance pratices. - In general, the Extreme Events layed out in the previous Table 1 is a much more practical approach to planning the transmission system.
Response: 1. Requirement R2.3.1 has been deleted. In Requirement R2.3, the wording has been revised to be clear that an annual assessment is required and what studies may be used. Requirement R2.6 provides further detail about which past short circuit studies may be used. Requirement R4 explains the conditions that the studies should analyze. 2. The SDT has included a proposed definition of a Bus-tie Breaker in the second draft. **Bus-tie Breaker:** A circuit breaker that is positioned to connect two individual straight bus substation configurations. (Substation configurations such as ring-bus, breaker-and-a-half, or double bus-double breaker protection schemes do not use bus-tie breakers.) 3. Tables 1 and 2 have been revised to provide greater clarity. 5. The SDT notes that distances greater than a mile present comparability issues with regard to other situations such as bay crossings, harbor crossings, and other longer spans. The SDT has not revised the requirement as a result in the interest of maintaining comparability without opening the waiver up to other situations. 6. The SDT has deleted P9.6. 7. With regard the Items 3.e and 3.f appearing to be redundant to items 3.c and 3.d., the SDT agrees and has made the appropriate changes to the standard. With regard to the other comments about the Extreme Events, the SDT notes that in Order No. 693, paragraph 1834, the FERC gave examples of Extreme Events that the FERC would expect to see in the revised standard. These examples are consistent with the items that the SDT included in the standard as examples of Extreme Events to be considered. For example paragraph 1834 include "(1) loss of a large gas pipeline into a region or multiple regions that have significant gas-fired Generation; (2) a successful cyber attack; (3) regulation that restricts or eliminates the use of a river or lake or other body of water as the cooling source for generation; (4) tornado or wildfire, or other event and (5) the loss of older transmission lines, which may not be constructed to meet an entity's present radial ice loading requirements…" In paragraph 1834, the FERC directs NERC to expand the list of events with examples such as those described in the paragraph. The SDT believes that the Extreme Event items that the commenter has raised concerns about are consistent with the list of examples provided in paragraph 1834. Further, the SDT notes that while the commenter is correct that some of these events have traditionally been treated as deliverability issues, nonetheless they will dramatically impact the reliability of the interconnected network and are logical Extreme Events for which the probability and consequences should be evaluated when considering ways to make the Transmission System more robust with Operating Procedures and/or System improvements that are reasonable in cost in comparison to the probability and consequences of the Extreme Event. The SDT did not change the standard with regard to these comments.			
BCTC	☑		1. We have some questions of clarification for the Standards Drafting Team, that may resolve some of our concerns. (i) Is it the intention of NERC that the more stringent performance requirements in this standard would be applicable for determining System Operating Limits before Transmission Owners are able to implement Corrective Action Plans? The BCTC system is part of the western interconnection and BCTC is a member of WECC. WECC members apply a principle that Planning Standards are also applicable for determining System Operating Limits. If the answer to this

Q43			
Commenter	**Yes**	**No**	**Comment**
			question is "no", then BCTC may be able to support some aspects of raising the bar, with the understanding that SOLs would be determined based on the performance standards that the system is planned to. (ii) Has the Standards Drafting Team considered how Transmission Planners will address discrepancies between Corrective Action Plans for this standard and the reality of what can be constructed due to regulatory approvals, siting problems, financing issues, etc.? For example, is it the intention that Transmission Planners should continue to study Corrective Action Plans to meet an N-1-1 Planning Event (e.g. P5-1) without generator tripping when the practical situation is that we may be fortunate to be able to build to meet N-1 with some generator tripping? We are concerned that if we cannot meet the performance requirement for P5-1 due to delay or denial, continuing to assess Corrective Action Plans to meet P5-1 does not provide much useful information compared to planning to meet a doable target. Item 2 below provides a proposal to address this. 2. There is always the possibility that a regulator may deny funding for a Corrective Action Plan or approve funding for a Corrective Action Plan that does not fully meet the performance standards, a siting process may delay or block a Corrective Action Plan, or some other process may frustrate the ability follow through with a Corrective Action Plan to meet NERC performance standards. To avoid the need for a Transmission Planner to continue to study Corrective Action Plans that cannot be implemented, we suggest adding the following Requirement R2.7.6: The Planning Assessment is not required to include a Corrective Action Plan and address the subsequent requirements (of R2.7) in cases that (a) an applicable regulatory agency has ordered that a Corrective Action Plan is not to proceed or that an alternative Corrective Action Plan that does not meet the performance standards is to be implement or (b) the Transmission Planner has documented evidence indicating that such an outcome is likely to occur. Other Requirements for Five and Ten year Assessments may also be exempted depending on the regulatory order. The Planning Assessment will include evidence of the order. 3. R3.3.3, R3.4, R4.5.1, R4.5.2 - A rationale for the selected contingencies should be sufficient. It should not be necessary to explain why the remaining contingencies would produce a less severe result. 4. Table 2, P1 should include shunt devices. 5. A definition or reference to a definition for Firm Load and Firm Transfers is required. The present situation is that these terms are "defined" as those loads and transfers that can be supplied while meeting Category B requirements. In other words, the standards define the terms. The commercial uses of firm and non-firm may not be applicable and they actually mean non-recallable and recallable service, not directly related to system performance, but incorporating aspects of

Q43			
Commenter	**Yes**	**No**	**Comment**
			reservation times. 6. Extreme Events of Tables 1 and 2 should not be subject to the same study requirements as Planning Events. Table 1 Extreme Events need not be studied for both the Near Term and Long Term Horizon (ref. R3.4, R3, R2.1 and R2.2) and for all five years of the Near-Term Horizon (ref R3.4, R3, R2.1). Table 2 Extreme Events should not be required for all five years of the Near-Term Transmission Planning Horizon (ref. R4 and R2.4). When conditions warrant, only a single assessment representing a selected reasonable planning horizon should be required, and an update required only when past studies are no longer representative. We are concerned that many of the proposed Table 1 Extreme Events (Item 3. a, c, d, e, f) are resource adequacy issues (we also observe that c and e appear to be identical). Transmission Planning Assessments of these events should be initiated at the request of Resource Planners. It should not be necessary for Transmission Planners to initiate and maintain current studies of these Extreme Events. We suggest that Extreme Events be removed from R3 and R4 and addressed in a separate Requirement. 7. The Purpose of this standard should be restated as: Establish requirements for Planning Assessments, including Corrective Action Plans, to be conducted over range of forecast conditions based on system planning performance requirements. Explanation: This revised wording more accurately describes the content of the standard. The Requirements of this standard are to perform Studies and Assessments. The performance tables are referenced by the Requirements and are supporting to the Requirements, but are not a "capital R" Requirement.

Response: 1. NERC, in its response to FERC's NOPR on the FAC-010, FAC-011, and FAC-014 standards, committed to revising the FAC and ATC standards when there is consensus on the TPL standards.
The intent of the Corrective Action Plan is to establish a doable set of actions that are to meet the performance requirements. Senstivitiy studies have been specifially added to the standard to allow the planner to assess the impact of corrective actions being delayed. It is the entity's responsibility to assess these impacts and adjust the next set of actions planned to meet performance. The standard also requires that the assessment cover more than the ten year period if the entity deems it necessary to accommodate any long range projects that may take years to complete due to ROW acquisition, hearings, etc. In addition, generation tripping for single Contingencies has been added back into the standard and the N-1-1 performance requirement has been revised to allow generator tripping and Non-Consequential Load dropping.
2. The SDT does not believe that it is necessary to add the words concerning regulatory delays or denials. The intent of the Corrective Action Plan is to establish a plausible set of actions that, when implemented, achieve the performance requirements. Senstivitiy studies have been specifially added to the standard to allow the planner to assess the impact of modification to or delay of a corrective action plan.
It is the entity's responsibility to assess the impacts of a modification or implemetation delay and adjust the next set of corrective actions or modify the proposed plan to meet the performance requirement as prescribed in the standard.
The standard also requires that the assessment cover more than the ten year period if the entity deems it necessary to accommodate any long range projects that may take years to complete due to ROW acquisition, hearings, etc.
3. The SDT believes that it is necessary as part of a complete documentation set explaining why and what was done.

Q43			
Commenter	**Yes**	**No**	**Comment**
4. This was added as requested. 5. In reviewing this comment, the SDT noted that Firm Demand and Interruptible Load are defined in the NERC Glossary. The SDT believes Load that is not Interruptible Load as defined in the NERC Glossary best fits the intention of the requirements pertaining to Firm Load in the TPL standard. Therefore, the SDT modified the references to Firm Load to refer instead to non-Interruptible Load in the TPL standard. With this change, Firm Load does not need to be defined in this standard. 6. The SDT agrees with the comment that Extreme Events should not be subject to the same study requirements as Planning Events; however, the SDT proposes to resolve the issue by clarifying the study requirements in the table and the text without removing the Extreme Events from Requirements R3 and R4 and addressing Extreme Events in a separate Requirement. With regard to the comments about resource adequacy issues, as noted in the BPA 7 answer, these events that have been traditionally considered resource adequacy issues are included as Extreme Events to be consistent with FERC Order No. 693 and because such events could dramatically impact the reliability of the interconnected network. As a result, the Transmission Planner/Planning Coordinator should investigate these Extreme Events regardless of whether the Resource Planner considers them to be an issue or not. In this way, the Transmission Planner/Planning Coordinater considers ways to make the Transmission System more robust with Operating Procedures and/or System improvements that are reasonable in cost in comparison to the probability and consequences of the Extreme Event. The SDT did not change the standard with regard to these comments. 7. Since most commenters did not express concern with the Purpose language, the SDT felt that no change was necessary.			
CAISO	☑		1. First, and as a general matter, the TPL-001 standard needs to accurately reflect the roles of PA'S and TP'S in areas with organized competitive markets and where the PA'S and TP'S are not vertically integrated utilities. In those areas, the TPL standard should recognize that compliance with the standard is achieved through the publication of a Plan that identifies system needs – and leaves open to the marketplace the specific mix of resources that investors construct to meet those needs. As a result, the Plan need not be, and should not be, prescriptive as to the resource mix that must be achieved. It is important for plans to be equally open to generation, demand response and transmission and not be presecriptive to the actual resource mix. Further, not all organized competitive markets have a mechanism in place to develop an integrated resource and transmission plan to meet future needs. Some markets conduct forecast assessment, thereby providing signals to market participants to make investment decisions. 2. Similarly, reflecting the divested nature of the industry in areas operated by ISOs and RTOs, the modeling standards should be reviewed to make sure that asset owners (e.g., generator owners and transmission owners) are required to give information in the level of detail and granularity that will allow PA's and TP's to develop plans and models consistent with these standards. 3. As highlighted in question 16, DSM should be considered an acceptable solution to system needs. However, DSM is generally considered in meeting resource requirements rather than as one of means to relieve transmission constraints. In planning studies, loads that are identified as DSM type (contracted or potential) are modeled as firm loads for reliability assessment. We would therefore seek the SDT's suggestion on how specifically DSM should be explicitly modeled or used to aid in

Q43			
Commenter	**Yes**	**No**	**Comment**
			achieving transmission reliability in the planning horizon. Further, the drafting team must consider whether DSM providers are covered in the Compliance Registry and how the NERC Standards should obligate them to provide the requisite information to PA'ss and TP's so that they are fully taken into account. 4. Finally, the standards need to be improved to better distinguish the responsibility of Planning Authorities versus Transmission Planners. Currently, the Standard refers to both entities as carrying out the requirements. This appears to be reundant.
Response: 1. The SDT believe that the standard is not prescriptive in the way described in the comments. 2. Comment is beyond the scope of the standard under development and should be addressed through proposed changes to the appropriate MOD standards. 3. The use of DSM is optional. Requirement R2.7.1 has been modified based on comments received to use "may include" instead of "including". The standard does allow for consideration of DSM but other factors may disallow inclusion of DSM in the Corrective Action Plan. The amount and uncertainty of DSM needs to be justified by the entity which includes it in its Correction Action Plan. **R2.7.1**. ~~Identify~~ List System deficiencies and the associated actions needed to achieve required System performance. ~~including Transmission and generation improvements, DSM, new technologies, or Operating Procedures including the duration of interim Operating Procedures.~~ Such actions may include installation, modification, retirement, or removal of Transmission and generation Facilities and any associated equipment such as protective or Special Protection Schemes, rate applications, DSM, or other initiatives, new technologies, or Operating Procedures including how long the Operating Procedures will be needed as part of the Corrective Action Plan. The standard is applicable not only to the Transmission Planner but also to the Planning Coordinator and the Resources Planner. These entities are expected to establish relationships to provide for intergrated analysis and resultant Corrective Action Plan which may include generation, transmission and DSM components. 4. Requirement R2 specifies that each entity is responsible for "its" portion of the BES. Even so there will likely be overlap and joint responsibility in some instances as identified in Requirement R5.			
CenterPoint	☑		1. TPL-001-1 focuses solely on reliability to the exclusion of economic cost/benefits, prudent avoidance, and landowner impacts, which have been the hallmarks of good utility practice that have governed transmission planning and construction for decades. FPA section 215(i)(2) "does not authorize the ERO or the Commission to order the construction of additional generation or transmission capacity or to set and enforce compliance with standards for adequacy or safety of electric facilities or services." However, adherence to TPL-001-1 as currently drafted, will require, de facto, the construction of additional transmission facilities. CenterPoint Energy believes this standard excludes proven, historical good utility practice to reach far beyond what is intended by the FPA. TPL-001-1 contains an excessive number of requirements (over 50). The SDT should consider the removal or modification of the following unnecessary, redundant or overly prescriptive

Q43			
Commenter	**Yes**	**No**	**Comment**
			requirements: 2. R1.1. This is a modeling requirement and should be incorporated into the modeling (MOD) standards. Remove or modify this requirement to eliminate any redundancy with existing modeling standards. If certain subrequirements of R1.1 of TPL-001 are not currently requirements in a MOD standard, it should be questioned, then, whether or not these specific subrequirements are actually needed in ANY standard. 3. R2.1.3 and R2.4.3 should be removed because they introduce new, vague requirements. 4. R2.2. Analysis beyond five years has little value due to the speculative nature of predicting load and generation growth. Furthermore, ERCOT does not annually create Long-Term Planning Horizon cases because ERCOT does not believe it is necessary. This requirement should be removed. 5. R2.5 and R4.6. These requirements are overly prescriptive and unnecessary for the reasons stated in the response to Q32. They should be removed. 6. R2.7.1 through 2.7.5. Requiring Corrective Action Plans that address how performance requirements will be met is reasonable; however, these standard requirements are overly prescriptive and unnecessary. R2.7.1 through R2.7.5 would result in the development, documentation and explanation of fictitious solutions to fictitious problems. They should be removed. 7. R3.3.2.1. The requirement to identify consequential load loss for single contingencies in the Planning Assessment is unnecessary and burdensome and should be removed. 8. R5. The roles of the Transmission Planner and Planning Coordinator are already addressed in the approved NERC definitions and further described in the approved NERC Reliability Functional Model. This requirement is unnecessary and should be removed. 9. Table 1 and Table 2 - P4, P5, P8, and P9. Including all combinations of two components (generator, Transmission circuit, transformer, monopolar DC line) with generation adjustments is impractical and overly burdensome. For multiple contingencies, CenterPoint Energy recommends including only two-circuit tower lines and the two components (generator, Transmission circuit, transformer, monopolar DC line) that would be cleared by a breaker failure (i.e., stuck breaker).
Response: 1. The SDT's understanding is that the ERO has the authority to set performance requirements for reliability. 2. The SDT believes some additional modeling requirements not presently contained in the MOD standards are necessary for Transmission planning purposes. The SDT has revised these requirements based on industry comments to eliminate redundancy with existing MOD			

Q43			
Commenter	Yes	No	Comment
			standards with the intent that these requirements will be removed from the TPL standard when they are incorporated into the MOD standards at a later date. 3. The SDT feels it is appropriate to set a minimum level of sensitivity cases to be looked at. The SDT is providing some guidance on what needs to be included in sensitivity studies while not being totally prescriptive. The SDT has modified Requirements R2.1.3 and R2.4.3 to clearly stipulate that the entity shall provide rational for why sensitivities on the list were or were not included in the sensitivity studies and that the entity may consider additional sensitivities that are appropriate for its own system. The Standard requires that deficiencies identified from the results of the current studies need to be addressed via Corrective Actions Plans while leaving it at the entity's discretion to decide which deficiencies, if any, identified through sensitivity studies should be addressed by the Corrective Action Plan. **R2.1.3**. For each of the studies described in Requirement R2.1.1 and Requirement R2.1.2, sensitivity case(s) that stress the System with sensitivities that reflect one or more of the following conditions shall be run and documentation ~~with~~ of the technical rationale for ~~the selected sensitivity(ies)~~ why each of the conditions was or was not selected shall be supplied: **R2.4.3**. For each of the studies described in Requirement R2.4.1 and Requirement R2.4.2, ~~S~~sensitivity case(s) that stress the System to reflect one or more of the following conditions shall be run ~~with documentation provided explaining the rationale for the selected sensitivity(ies)~~ and documentation of the technical rationale for why each of the conditions was or was not selected shall be supplied: 4. The SDT feels that this requirement is appropriate based on its understanding of planning practices throughout North America. This is also mentioned in FERC Order 693. 5. See response to Q32. 6. After careful consideration, the SDT agrees that if the Corrective Action Plan is going to include "committed" and "proposed" projects, they will need to be defined. However, the SDT agrees that it will be very difficult to develop definitions of "committed" and "proposed" that are applicable for the entire NERC footprint. Therefore, the SDT has modified Requirement R2.7.1 and deleted the original Requirements R2.7.2 through R2.7.4 to reflect "actions" needed to achieve required System performance without trying to distinguish between committed and proposed projects. **R2.7.1**. ~~Identify~~ List System deficiencies and the associated actions needed to achieve required System performance. ~~including Transmission and generation improvements, DSM, new technologies, or Operating Procedures including the duration of interim Operating Procedures.~~ Such actions may include installation, modification, retirement, or removal of Transmission and generation Facilities and any associated equipment such as protective or Special Protection Schemes, rate applications, DSM, or other initiatives, new technologies, or Operating Procedures including how long the Operating Procedures will be needed as part of the Corrective Action Plan. 7. FERC required documentation of Consequential Load loss in Order 693, paragraph 1795, (not Non-Consequential) and duration should be based on best judgment for the common cause of the event. 8. The Functional Model is intended as a guide and aid in drafting reliability standards. Nothing stated in the Functional Model is enforceable in and of itself. Only requirements in approved reliability standards, which may mirror the Functional Model assuming that industry consensus is received on the subject matter, are enforceable.

Q43			
Commenter	**Yes**	**No**	**Comment**
9. The analyses of the combinations of two components are required by the existing TPL standards. The SDT understands the concerns in the potential increase in work load. Requirement R3.3.3 requires evaluation of only those Planning Events (involving multiple Contingencies) that are expected to produce more severe System impacts.			
HQTE	☑		1. We think that the proposed fusion of previous TPL-001 to TPL-004 and the addition of more specific contingencies involves too much change at once. It would have been better to make specific change to each individual standards. That way, it would have been more practical to evaluate the impact of the proposed changes. 2. A major concept before evaluating the impact of a standard is to know on what system it will be applied to. In the tables, the notion of a voltage treshold (>300 kV) is introduced. It is our interpretation that the standard as drafted applies only to BPS elements part of that treshold (>300 kV) and not every ">300 kV" element. The SDT should indicate if they have the same interpretation as ours. 3. We reiterate our comment that it would be preferable to have only one table that would include both steady state and stability contingencies with their respective expected performance. 4. There might be some protection standards that would need to be developped/clarified before some proposed changes in this standard. 5. The SDT has made an effort to define Base Case, yet has not used the term in the standard. At a minimum, Base Case should be referred to in sections 2.1.1, 2.1.2 In addition to the comments from Central Maine Power.
Response: 1. Much of the wording and underlying concepts are the same for the four standards today – the major difference being that each refers to normal, single, multiple or extreme Contingencies. All four use the same table. Merging them into one standard has simply eliminated much of the duplication and brought together the smaller portions of each standard that were different. Past experience has shown that since the four are so closely related that a change in one has a tendency to reflect a change in another – merging the four together helps keep all the changes and relationships in a single point of view. Commenters in general have supported the concept of merging the four standards together. In addition, Paragraph 1692 of Order 693 "directs the ERO to consider integrating Reliability Standards TPL-001-0 through TPL-004-0 into a single Reliability Standard through the Reliability Standards development process". In addition this Order, in conjuction with Order 890, enurmerate attributes of planning standards that the FERC feels should be incorporated into the consolidated standard. SDT believes that the first draft of the standard is consistent with Orders 693 and 890 without being unduley burdensome. 2. As proposed, the standard is intended to apply to all BES (not BPS) Facilities, but for some events the performance requirements are different for Facilities above and below 300 kV. When EHV Systems are compromised, the large volumes of power served by them can place a severe amount of stress on parallel EHV or lower voltage paths. For example, if a large EHV transformer experiences a catastrophic failure			

Q43			
Commenter	**Yes**	**No**	**Comment**
not only are other System Facilities required to carry more Load but the System is also exposed to other N-1 conditions for long periods of time while awaiting a replacement or repair of the failed equipment. Large generation sources are typically connected at EHV levels and maintenance of the EHV transmission lines within the vicinity of large generation plants must often be coordinated during scheduled unit outages, resulting again in multiple Facility outages over extended periods of time. 3. The majority of commenters support the development of the two tables as opposed to the single table in the existing TPL standards. Further, the SDT believes that the two tables provide the ability to clarify issues associated with Stability performance and evaluation requirements versus steady-state performance and evaluation requirements. Based on industry feedback, the SDT has completely reformatted the performance tables in Draft 2 of the TPL-001-1 standard. The new format more closely mimics the existing approved TPL standard Table 1, with enhancements we feel the industry will find valuable. 4. Since the SDT is considering specific references to items such as SPS, the SDT will need to address any direct effect on other standards. The SDT encourages the commenter to provide comments on any specific instances where such a clarification or change may be needed. In addition there is a standard under development that will be addressing integration of all Protective Systems. That team will be coordinating with the TPL team. 5. Base Case has been deleted as suggested.			
NPCC RCS	☑		The SDT has made an effort to define Base Case, yet has not used the term in the standard. At a minimum, Base Case should be referred to in sections 2.1.1, 2.1.2 In addition to the comments by Central Maine Power.
Response: After reviewing the comments to this proposed definition and the use of the term "base case" in the standard, the SDT determined that "Base Case" does not need to be a defined term.			
Central Maine Power National Grid New England ISO NU NSTAR United Illuminating	☑		1. There should be a "P0" standard that applies to system performance without any contingencies. 2. Standard should be clear that stabiltiy analysis is not required for Long-Term Planning Assessment. 3. R.1.1 Load forecasts should be addressed in MOD standards, not TPL. 4. R 1.4 This should only refer to known long-term outages, not planned outages. Delete "including protective relays"; this is addressed through other provisions. 5. R.2.1 Shorten "Near-Term Transmission Planning Horizon Planning Assessment" to "Near-Term Planning Assessment". 6. R 2.2 Shorten "Long-Term Transmission Planning Horizon Planning Assessment" to "Long-Term Planning Assessment". 7. R2.1, 2.2, 2.3 & 2.4 – The initial paragraph should have identical language regarding 'annual', and 'current or past' aspects.

Q43			
Commenter	Yes	No	Comment
			8. R2.1.1 There should not be a requirement to look at years one and two; a 5 year study should be sufficient. If there has been an ongoing 5 year study, there should be no major unexpected problems occurring in years 1 and 2. Studies of earlier years should only be required if an unanticipated event occurred that had not been considered in prior studies. The TPL should not address shorter term "Operating Studies" or operating issues. 9. R 2.2.1 Modify to "If any known projects have a lead time that is longer than ten years, the Planning Assessment shall be extended accordingly." 10. R 2.6 Steady-state, short circuit, and stability analysis should be required no more than every 5 years unless there is a significant change the system. 11. R 2.6.1 Remove reference to "market structure changes". The purpose of it's inclusion is unclear. 12. R 2.7.1.1 Project initiation date should be deleted. If it is retainted, it needs to be defined. 13. R 2.7.3 Committed and Proposed projects should be defined. 14. R 3.2.1/R 4.3 - What is the intent of this requirement? There should probably be an MOD associated with Generator Owner requirement to provide related generator protection/ limiter data or other plant information. 15. R 3.4/R 4.5.2 Remove the requirement to implement changes to reduce or mitigate the likelihood of such consequences of Extreme Events. This may not be reasonable or achieveable. 16. R 3.2 Sectionalizing schemes shall be considered when reflecting the post-contingent system. 17. R 3.2.2 - Propose deleting this. Line ratings should already take relay loadability into account. 18. R 3.3.2.1 - Proposed deleting "expected duration". This would be dependent upon the damage to the element due to the iniating event and other factors. 19. R 3.3.2.2 - The requirements of this section do not match P6. 20. R 3.3.3 - Change introductory language to read "Those multiple Contingencies that are…"

Q43			
Commenter	**Yes**	**No**	**Comment**
			21. R 3.5 - Generation tripping should be allowed as well as generation run-back. In addition, all performance requirements shall be met, rather than just meeting facility rating requirements. Suggested lanague "Manual and automatic generation run-back and/or generation tripping is allowed as a response to single and multiple Contingencies as long as the performance requirements of this standard are met." If these changes are accepted, R 3.6 can be deleted. 22. R 4 and R 4.1 - The language should be made similar to R 3 and R 3.1. 23. Suggest bringing language similar R4.4 into the R 3, the steady state section. 24. R 4.2 - High speed automatic reclosing schemes shall be considered. 25. R 6.3 - Change to read "Planning Coordinators of neighboring impacted areas". 26. Table 1 3 b and c Extreme Event descriptions are vague concepts that cannot be practically simulated. 3 d and e are not reasonable or practically useful to simulate. 27. Table 1, P8 - Language needs to be clarifed as to how the 300 kV threshold is to be treated for transformers. Is this for the high side, low side, or both sides? P5 is much clearer. 28. Table 2 - Clarification needs to be made that the faults being simulated are permanent faults. This can be addressed under the "Performance Requirements" portion at the beginning of the table, or modify each fault description. 29. Table 2 P9. Recommend that this be changed to require that faults should be on different phases of each of two adjacent transmission circuits on a multiple circuit transmission tower 30. Table 1, P9(6) and Table 2 P9 - It is unclear as to what is meant by "A spare transformer inserted to replace an outaged transformer followed by System adjustments". Unclear as to what is to be tested. 31. General comment - Transmission System is used throughout the document and is an undefined term The New England Transmission Owners and ISO New England transmission planners met several times to discuss the proposed standard and develop consensus comments based on our experience. The preceding comments are what was developed.

Q43			
Commenter	**Yes**	**No**	**Comment**
			Attached to the e-mail sending these comments is the September 12 Draft 1 TPL-001-1 Reliability Standard in Word format, red-lined with changes to the posted standard which are intended to reflect all of the comments above. This document was maintained by Central Maine Power Company during the course of the New England transmission planner discussions, and any variance (though none are expected) in not intended. It is expected that this red-lined TPL document will be helpful to the ATFN SDT in reviewing our comments.

Response: 1. The SDT concurs for the steady state performance requirements and has added a P0 Planning Event at the top of Table 1 to address the N-0 (existing Category A) condition. However, "normal System" is already included as part of the description of the initial System conditions associated with the fault for the stability study. Therefore, it is not necessary to include P0 in Table 2.
2. The SDT agrees. The requirement only specifies Near-Term.
3. The SDT believes some additional modeling requirements not presently contained in the MOD standards are necessary for Transmission planning purposes. The SDT has revised these requirements based on industry comments to eliminate redundancy with existing MOD standards with the intent that these requirements will be removed from the TPL standard when they are incorporated into the MOD standards at a later date.
4. The SDT has revised this requirement based on industry comments to clarify intent and to be responsive to FERC Order 693, paragraph 1725.
5. The intent of the suggestion was adopted.
6. The intent of the suggestion was adopted.
7. Identical language was not used; the same words were used in a different order and context. Requirement R2 and the following four sub-requirements each address a slightly different aspect of what studies are to be run. Requirement R2 only mentions current and past in general terms since more specifics are provided in the sub-requirements. Requirement R2.1 makes reference to "annual current" studies to emphasize the fact that the Requirements R2.1.1 and R2.1.2 require specific studies be run each and every calendar year. Requirements R2.2 is consistent with Requirement R2.1.1 in that it requires a specific run each and every calendar year. Requirement R2.3 does not require specific run every year but allows for current or past to support the Assessment; this is also true for Requirement R2.4.
8. Requirement R2.1.1 requires you to study years one "or" two and five. The SDT feels that requirement to run a peak load study for two of the years in the Near-Term Horizon is a minimum required for an adequate Planning Assessment. The SDT felt that the Year One or two study should provide operations with the best information to transition to the Operating Horizon. The year five planning study is the first near term study from the long term set. Five years is a short time if unexpected new facilities are required. Areas with faster growth should appreciate the extra studies.
Requirement R2 includes a statement which states that "Planning Assessment shall use current or past studies." Requirement R2.1 allows for the Planning Assessment to be "…supplemented with qualified past studies…" If you have past studies which are applicable, the standard allows for such.
9. The SDT believes that the present draft language captures the same concept.
10. The SDT agrees with your recommendation and has revised Requirement R.2.6.1 to show a five year shelf-life.

R2.6.1. For steady state, short circuit, or System Stability analysis: ~~if the study is less than three years old and no material changes have occurred to the System in the intervening period. Material changes include topology changes, generation additions/removals, and market~~

Q43			
Commenter	Yes	No	Comment
~~structure changes~~ the study shall be five calendar years old or less. 11. The SDT concern was that such structure changes could potentially affect dispatch scenarios, or even transfers being modeled – both of which are sensitivities. 12. Requirement R8 (old Requirement R6) which focuses on the distribution of the Planning Assessment results among affected entities was specifically added to allow some level of peer review and provide some level of confidence that the proposed plan could in fact be completed to meet the reliability objective. Requirement R2.7.1.1 is complementary to Requirement R8 (old Requirement R6) Initiation dates are only required in the near term since longer term plans tend to move in time and only have general scheduling associated with them. Typically the date would indicate when significant resources will begin to be employed. This covers any project proposed for the near term. The SDT continues to believe that providing the expected project intiation date of System improvements provides useful information to neighboring entities. The SDT believes that initiation dates are required for near-term corrective action plans to give an indication that the corrective action plans can be implemented in time. 13. After careful consideration, the SDT agrees that if the standard is going to include "committed" and "proposed", they will need to be defined. However, the SDT agrees that it will be very difficult to develop definitions of "committed" and "proposed" that are applicable for the entire continent. Therefore, based on several comments and consideration by the SDT, the SDT has modified Requirement R2.7.1 and deleted Requirements R2.7.2 through R2.7.4. The standard now refers to "actions" needed to achieve required System performance without trying to distinguish between "committed" and "proposed" projects. It also lists examples of what is intended by the word "actions". **R2.7.1**. ~~Identify~~ List System deficiencies and the associated actions needed to achieve required System performance. ~~including Transmission and generation improvements, DSM, new technologies, or Operating Procedures including the duration of interim Operating Procedures.~~ Such actions may include installation, modification, retirement, or removal of Transmission and generation Facilities and any associated equipment such as protective or Special Protection Schemes, rate applications, DSM, or other initiatives, new technologies, or Operating Procedures including how long the Operating Procedures will be needed as part of the Corrective Action Plan. R6.2.2 - Whereas the SDT agrees that the suggested re-phrasing has merit, the proposed rephrasing is potentially problematic because "Long-Term Planning Assessment" is not a defined term. 14. The intent is that what is modelled is true to real-life expectations. Changes to MOD are not within scope. 15. The SDT feels that this is an appropriate requirement based on understanding of existing practice within North America. 16. That was the intent of this requirement. 17. The SDT has received numerous comments in support of these requirements. Requirement R3.2.2 is included to provide clarity on simulations in response to FERC Order 693. Relay Loadability is included to be clear that this factor must be taken into account in the planning studies. The SDT has not made changes in response to this comment. 18. The requirement concerning Consequential Load is to address FERC Order 693, which directs the ERO, among other things, to clarify footnote (b) in regard to Load loss following a single Contingency, specifying the amount and duration of Consequential Load Loss and System adjustments that are permitted after the first Contingency to return the System to a normal operating state. 19. Requirement R3.3.2.2 was changed to correct this discrepancy.			

Q43			
Commenter	**Yes**	**No**	**Comment**
R3.3.2.2 Following single Contingency events, ~~System adjustments other than shedding of firm Load or curtailment of firm transfers are permitted to meet performance requirements provided these adjustments can be accomplished within the time period allowed by the applicable time limited ratings.~~ Transmission configuration changes and redispatch of generation are allowed provided that all Facilities shall be operating within their Facility Ratings and within their thermal and voltage limits. 20. The reference to Table 1 will need to be included because Requirement R3.3.3 applies only to Steady State performance to distinguish this requirement from those in Requirements R4.5.1 and R4.5.2, which apply to Stability Performance. 21. The SDT agrees and has changed Requirement R3.5 **R3.5** Manual and automatic generation run-back/tripping is allowed as a response to a single ~~and~~ or multiple Contingenc~~ies~~y ~~as long as Facility Ratings are not exceeded.~~if the following conditions are met: **R3.5.1**. All Facilities shall be operating within their Facility Ratings. **R3.5.2**. Such action would not violate safety, equipment, regulatory or statutory requirements. **R3.5.3**. A sustainable, stable, operating condition is maintained 22. The SDT attempted to make this language similar to the extent possible. 23. The SDT believes that Requirement R2.7 covers this matter for Steady State but will discuss this matter further for subsequent drafts. 24. The intent of this requirement is to model the system as it would be operated and high speed reclosing would therefore be included. 25. The SDT believes that your comment has already been addressed by the words "affected entities" (now directly adjacent Transmission Planner) in Requirement R8 (old Requirement R6). Impacted is difficult to measure. In addition, the purpose of the "peer review" is to help ensure that a Corrective Action Plan is inclusive and some potentially impacted areas are not overlooked. 26. As noted in the BPA 7 answer, these events are included as Extreme Events to be consistent with FERC Order No. 693 and because such events could dramatically impact the reliability of the interconnected network. 27. The SDT agrees that the language for P8 needs to be clarified with regard to the 300 kV threshold. As a result, the SDT has made changes to the standard to clarify the 300 kV threshold. 28. The SDT agrees and has changed the standard to clarify that the faults being simulated are permanent faults. 29. The SDT has made the recommended change in P7. 30. This item was deleted. 31. Transmission is a defined term in the NERC Glossary as is System.			
City Utilities/Springfield	☑		Requirement R3.2: Contingency analyses representing only the removal of elements that System protection is expected to automatically disconnect which includes Consequential Load Loss is a reduction in reliability. Excluding the contingency analyses between all elements including those with manually operated switches will result in lowering existing reliability standards and ultimately limit the load restoration capabilities of the BES. Minimum performance standards should be adhered to for all applicable contingencies including outages of elements that may be switched both automatically and manually taking into account controlled load curtailment that is allowed. Requirement R3.3.2.1: The expected duration of Consequential Load Loss was noted to be required in a Planning Assessment following a single Contingency without any indication as to the assumed

Q43			
Commenter	**Yes**	**No**	**Comment**
			cause of the outage. The basis for such estimations of time needs to be defined such that these assessments are developed on a consistent basis.
Response: 1. One of the drivers for assessing the System performance based on removing all elements that System Protection is expected to disconnect (breaker-to-breaker) upon clearing the fault is to address concerns expressed in interviews by NERC TIS and FERC. The premise is that the assessment must examine all phases after a fault occurs. This includes the initial response of the System immediately after the fault clears, as well as after any existing or planned switching actions, such as the ones to which the commenter refers. 2. The proposed TPL-001-1 standard does not place limits on the amount of Consequential Load Loss or the outage duration. In Requirement R.3.3.2.1 the Consequential Load loss (expected maximum demand and expected duration) following a single Contingency shall be identified in the Planning Assessment. The SDT believes it is necessary to obtain this data to evaluate the future need for and establish a basis to define maximum amounts of Consequential Load Loss that would be allowed.			
CPS Energy	☑		1. R1.1. This is a modeling requirement and should be incorporated into the modeling (MOD) standards. Remove or modify this requirement to eliminate any redundancy with existing modeling standards. If certain subrequirements of R1.1 of TPL-001 are not currently requirements in a MOD standard, it should be questioned, then, whether or not these specific subrequirements are actually needed in ANY standard. 2. R2.2. ERCOT does not study the Long-Term Planning Horizon because ERCOT does not believe it is necessary. Remove or modify to state "as applicable by region." 3. R2.7.1.1 Duration of projects vary between Transmission Owners and statement of the project initiation date has no value to reliability. 4. R3.3.2 Relay loadability is considered as an MLSE component to the circuit rating as identified in MOD-008 and MOD-009. 5. R3.3.2.1. The requirement to identify consequential load loss for single contingencies in the Planning Assessment is unnecessary and burdensome and should be removed. 6. R3.6 Automatic generation tripping should be allowed for radial-connected wind resources. 7. Table 1 - P6.1, P6.3, and P6.4 These events are triggered by a single credible event and should not allow for loss of Non-Consequential Load. 8. Table 1 - P9.1 Loss of double-circuit tower lines are triggered by a single credible event and should not allow for loss of Non-Consequential Load. 9. Table 1 and Table 2 - P4, P5, P8, and P9. Including all combinations of two components (generator, Transmission circuit, transformer) with generation adjustments is impractical and overly

Q43			
Commenter	**Yes**	**No**	**Comment**
			burdensome. For multiple contingencies, include only double-circuit tower lines and the two components (generator, Transmission circuit, transformer) that would be cleared by breaker failure.

Response: 1. The SDT believes some additional modeling requirements not presently contained in the MOD standards are necessary for Transmission planning purposes. The SDT has revised these requirements based on industry comments to eliminate redundancy with existing MOD standards with the intent that these requirements will be removed from the TPL standard when they are incorporated into the MOD standards at a later date.
2. The SDT believes that the purpose of the long term horizon is to uncover any unexpected trends that might appear after the first five years. Although planning may not be performed as stated in the draft standard, the standard does provide a level of confidence that unusual or unexpected trends or events could always affect the current planning process and allows for planners to propose potentially long term economic solutions that could not be envisioned in the shorter term.
3. Requirement R8 (old Requirement R6) which focuses on the distribution of the Planning Assessment results among affected entities was specifically added to allow some level of peer review and provide some level of confidence that the proposed plan could in fact be completed to meet the reliability objective. Requirement R2.7.1.1 is complementary to Requirement R8 (old Requirement R6) Initiation dates are only required in the near term since longer term plans tend to move in time and only have general scheduling associated with them. Typically the date would indicate when significant resources will begin to be employed. This covers any project proposed for the near term. The SDT continues to believe that providing the expected project intiation date of System improvements provides useful information to neighboring entities. The SDT believes that initiation dates are required for near-term corrective action plans to give an indication that the corrective action plans can be implemented in time.
4. The SDT has received numerous comments in support of these requirements. Requirement R3.2.2 is included to provide clarity on simulations in response to FERC Order 693. Relay Loadability is included to be clear that this factor must be taken into account in the planning studies. The SDT has not made changes in response to this comment.
5. The requirement concerning Consequential Load is to address FERC Order 693, which directs the ERO, among other things, to clarify footnote (b) in regard to Load loss following a single Contingency, specifying the amount and duration of Consequential Load Loss and System adjustments that are permitted after the first Contingency to return the System to a normal operating state.
6. The SDT has made a change to allow for tripping under certain conditions.

R3.5. Manual and automatic generation run-back/tripping is allowed as a response to a single ~~and~~ or multiple Contingenc~~ies~~y ~~as long as Facility Ratings are not exceeded.~~if the following conditions are met:
R3.5.1. All Facilities shall be operating within their Facility Ratings.
R3.5.2. Such action would not violate safety, equipment, regulatory or statutory requirements.
R3.5.3. A sustainable, stable, operating condition is maintained.

7. These events are on lower voltage facilities on the BES. The probability of the outage of one breaker or a bus section is much lower than the probability of a single Transmission line outage. Therefore, the SDT has drafted the standard to permit loss of Non-consequential firm Load or interruption of firm Transmission service for the loss of a lower voltage breaker or lower voltage bus section. The majority of the commenters in response to the first posting of the standard agreed with the SDT's approach in this regard.
8. This event is a lower probability event, for example the probability of the outage of one common tower event is much lower than the probability of a single Transmission line outage. Therefore, the SDT has drafted the standard to permit loss of Non-Consequential firm Load

Q43			
Commenter	**Yes**	**No**	**Comment**
or interruption of firm Transmission service for the loss of a common tower event. The majority of the commenters in response to the first posting of the standard agreed with the SDT's approach in this regard. 9. The analyses of the combinations of two components are required by the existing TPL standards. The SDT understands the concerns in the potential increase in work load. Requirement R3.3.3 requires evaluation of only those Planning Events (involving multiple Contingencies) that are expected to produce more severe System impacts.			
Entergy	☑		1. Significant Increase in Study Activity Workload on Transmission Planners The increase in both steady state and dynamic studies required to ensure compliance with the proposed standards will result in increased costs and staff additions. The more specific format and additional requirements of the "Corrective Action Plan" require the TP to provide a significant amount of documentation for each deficiency identified by the studies. Also, R3.2 requires that the studies simulate the protection scheme for all events. The current software tools cannot automate these studies for bus faults and breaker failure events, requiring each scenario to be studied manually. Additionally, experienced staff capable of performing analyses as described in the proposed standard have become increasingly difficult to find and retain and the talent pool of people with these skills has recently become depleted to alarming levels. 2. Implementation Plan Given the intent of the proposed standard to encourage large scale investment in the EHV system, full implementation will take years, perhaps decades. Acquirement of right-of-way for new EHV lines has become increasingly difficult in recent years and increasingly expensive due to the environmental and social issues associated with new Transmission. Legal, regulatory, and other difficult issues often take several years to navigate, even for 115kV lines. The Implementation Plan timeframe, if set too short, would be unduly burdensome on Transmission Owners, extraordinarily expensive, and possibly unachievable. The proposed implementation plan should include provisions for those cases where viable solutions simply can not be implemented in time due to circumstances beyond the control of Transmission owners. We recommend a minimum of 15 years for the transition. 3. Design and Construction Constraints Even if right-of-way and other legal and regulatory hurdles are cleared, and the capital funding for such a tremendous level of investment was not an issue, the other resources required to actually construct the projects are equally difficult and costly to secure. Raw material prices on commodities like copper and steel have skyrocketed in recent years. Additionally, the skilled labor and Engineering resources are constrained with labor rates almost keeping up with other resource costs. Overall project costs have more than doubled over the last 7-10 years. Recent press releases concerning new generation being planned and then scrapped due to the rapid escalation of project costs are public evidence of this. The inflationary mark-up is impossible to estimate but much less will be built with the same capital investment than is currently envisioned due to the competition for both human and material resources.

Q43			
Commenter	**Yes**	**No**	**Comment**
			4. Cost-Benefit Analysis It will be extremely expensive, requiring unprecedented levels of capital investment in Transmission facilities, to become compliant with a proposed standard without any evidence that such increased requirements are justified. Before the standard comes to official vote, it would be prudent for a cost-benefit analysis to be performed to determine if the reliability improvements justify the huge expenditures certain under the proposed standard. A clear understanding of the reliability benefits and economic costs to customers is critical prior to final action on the proposed standard. While tightening standards will result in a more secure system, overbuilding the system at a significant cost to withstand more severe but less likely contingencies may not be in the public interest. Additionally, it is unclear whether the propose standard is in conflict with section 215 of the Energy Policy Act of 2005. 5. System Adjustment Clarification The term "System Adjustment" as outlined in the tables should be better defined. The use of generation for redispatch may have nuances which preclude or otherwise limit their use for studies. Perhaps some clearer guidelines on what is allowed such as committing units, de-committing units, firm and non-firm use, etc. would facilitate transparency and coordination between Transmission Planners. 6. Transmission Service Evaluation Another concern is that the proposed standard appears to be inconsistent with the current requirements for evaluating firm transmission service, generally based on an N-1 standard. To the extent this standard is adopted as proposed, the new standard would also need to be incorporated into the standards against which new transmission service is granted.

Response: 1. Much of the work that the commenter sites as additional is something that is required by the current approved standards. For example, Requirement R3.2 requires that the planner not just "outage" each power flow model element but reflect outage conditions that truly exists in the real world, e.g., a fault on a three terminal circuit should be modeled as three power flow elements being removed from the case to reflect actual operation. The concepts of "re-testing" and "committed" projects have been removed from the Corrective Action Plan so that only the value added concept of listing the actions necessary to achieve the desired level of system performance remains. Although sensitivity cases are now specifically required, they were considered by many utilities to determine the level of risk that remained after the addition of the proposed reinforcement projects.
2. The SDT understands that there are extended transitionary issues associated with responsible entities becoming compliant with the new standard. The SDT plans to draft an extended implementation plan to accommodate such issues. The plan will be provided for the third posting of the standard.
3. The SDT is unsure of the intent of the comment. While it is becoming increasingly difficult to build new Facilities, the fact is not in itself a valid reason for not complying with the performance requirements of this standard. The responsible entity is required to annually assess the compliance with the performance requirements and to have a Corrective Action Plan when the assessment indicates an inability to meet the

Q43			
Commenter	**Yes**	**No**	**Comment**
performance requirements. A Corrective Action Plan does not necessarily result in building new Facilities. If it is impossible to correct the failure then a mitigation plan should be submitted for approval. 4. The SDT shares your concern on the benefits and cost to meet the proposed increase in some requirements. The SDT and a large number of commenters felt that the proposed changes in requirements were reasonable and will help improve reliability. The SDT is including in the next draft, a schedule for compliance in the Implementation Plan which should give some time for entities to become compliant with the new requirements. The TPL standard is not a standard "to build"; it is a standard to plan for System reliability. The individual entities have the option of deciding how best to meet the growing load and associated reliability needs. 5. The Transmission performance tables have been modified to bring clarity to the Contingencies required for performance studies and when Non-Consequential Load Loss is permitted to meet requirements. The use of manual or automatic System adjustments to revise System topology as well as generation redispatch is always permitted so long as the actions can be performed while adhering to Facility Ratings. 6. The provisions for an entity to grant Transmission service in the US is part of the entity's OATT and is beyond the scope of this standard.			
Exelon	☑		1. There should be more specific requirements for the long-range studies. The P requirements should be run on the long range case but corrective action plans need only be proposed and not committed. 2. R3.3.2.1 appears to require consequential load loss identification including peak demand and duration. however there is no requirement addressing the use of this information. Why is this required? 3. R3.3.3 should be clarified. It is our interpretation that not each of the P contingencies be studied if sufficient rationale is provided to determine the most critical. It would seem that each of the planning category events would need to be addressed. 4. What is the expectation regarding sensitivity analysis in R2.1.3 and R.2.4.3 if there are no performance requirements defined? 5. It should be clear in the performance tables that the 'event column' contingencies are logically 'or' events.
Response: 1. The performance requirements apply to both the "near-term" and the "long-term"assessments. Compliance with the performance requirements should be documented through assessments and a Corrective Action Plan. The SDT has modified the requirements in the new draft to remove the phrase "committed projects." 2. The requirement concerning Consequential Load is to address FERC Order 693, which directs the ERO, among other things, to clarify footnote (b) in regard to Load loss following a single Contingency, specifying the amount and duration of Consequential Load Loss and System adjustments that are permitted after the first Contingency to return the System to a normal operating state. 3. Requirement R3.3.3 requires evaluation of only those Planning Events (involving multiple Contingencies) that are expected to produce more severe System impacts. Requirement R3.3.3 also requires that the rationale for the Contingencies selected for evaluation shall be available as supporting information and shall include an explanation of why the remaining Contingencies would produce less severe System results. 4. The SDT is providing some guidance on what needs to be included in sensitivity studies while not being totally prescriptive. Requirements			

Q43			
Commenter	**Yes**	**No**	**Comment**
R2.1.3 and R2.4.3 have been modified to require documentation of why the listed sensitivities were or were not selected for specific studies. Requirements R2.1.4 and R2.4.4 have been added to specifically state that the entity may consider additional sensitivities that are appropriate for its own System. The sensitivity studies do not in themselves establish the need for a plan, only the areas of the System for which the analysis is needed. **R2.1.3.** For each of the studies described in Requirement R2.1.1 and Requirement R2.1.2, sensitivity case(s) that stress the System with sensitivities that reflect one or more of the following conditions shall be run and documentation ~~with~~ of the technical rationale for ~~the selected sensitivity(ies)~~ why each of the conditions was or was not selected shall be supplied: **R2.1.4**. In addition to those sensitivities mentioned in Requirement R2.1.3, any other sensitivities, as deemed appropriate by the Transmission Planner or Planning Coordinator for their individual systems, shall be run and documentation of the technical rationale for why each was selected shall be supplied. **R2.4.3**. For each of the studies described in Requirement R2.4.1 and Requirement R2.4.2, ~~S~~sensitivity case(s) that stress the System to reflect one or more of the following conditions shall be run ~~with documentation provided explaining the rationale for the selected sensitivity(ies)~~ and documentation of the technical rationale for why each of the conditions was or was not selected shall be supplied: **R2.4.4.** In addition to those sensitivities mentioned in Requirement R2.4.3, any other sensitivity, as deemed appropriate by the Transmission Planner or Planning Coordinator for their individual systems, shall be run and documentation of the technical rationale for why each was selected shall be supplied. 5. The SDT has made changes to clarify the table.			
FirstEnergy	☑		1. - R1. Load flow model submittal is redundant with various MOD standards and should not be required by this standard. To the extent any new requirements are introduced, we suggest that existing MOD standards be revised or new MOD standards be created as needed. 2. - R2 Organization of this requirement could be improved by grouping by Near Term and Long Term and then by steady state, short circuit, and stability requirements. 3. - R2.1 Too many annual studies are being required by this standard for the Near Term. We suggest limiting the current study year requirement be limited to one Near Term study. As written, it appears that this requirement forces a study for each of the 5 years, however the requirement should to be able to assess the entire 5 year period but not study each year. 4. - R2.1.1: As written, 2 studies are needed to meet this Near Term assessment requirement. It should be left up to the TO to determine the appropriate year in the short and long term periods. It's particularly odd given the fact that the TO could select year six for the Long Term study which would end up giving him back to back year 5 and 6 studies. The requirement should be to study one year in

Q43			
Commenter	**Yes**	**No**	**Comment**
			the 1 to 5 and one year in the 6 to 10 year periods. 5. - R2.2: This wording is very confusing. We are assuming that it means that you must continuously have to have a study that is less than one year old for the year 6 to 10 period. If so, wording needs to be clarified. 6. - R2.4.1: The idea of modeling induction motor loads is good in concept, be we question the practicality for an auditor to enforce. To date, a definitive way to model induction motor load does not exist. For example, what is the right mix for percent of load to be motor load or percent of large vs small induction motors. 7. - R2.6.1: Unless "material change" is specifically defined, the requirement is ambiquous and difficult to enforce consistently. What constitutes a "topology" change? 8. - R2.6.2: Same comment as R2.6.1 above, material change needs to be defined. 9. - R2.6.3. Same comment as R2.6.1 above, material change needs to be defined. 10. - R.2.7.1.1: We don't think it is reasonable nor necessary for the TO to provide an initiation date. No one should care when it was initiated as long as it is in service by the time it is needed. 11. - R2.7.1.2. Requiring an in-service year for the long-term may not be feasible for the initial study assessment. Based on the number of issues that could occur in the long-term horizon it may take a TP another 6 months to a year of more detailed area studies study to find the optimal solution(s) to resolve multiple system deficiences. In the long-term, only a list of SOLs problems along with year problem is initially anticipated should be required. 12. - R3.2.1: We suggest the following rewording "R3.2.1. Studies shall include the minimum steady state voltage limitations for all generators, and generators shall be simulated to trip for voltage below the minimum steady state limitation." 13. - R3.2.2: This is unnecessary in this standard. This is already addressed in the FAC standards dealing with equipment rating. Additionally, the proposed PRC-023 relay loadability standard addresses this concern. Alternatively, reword the requirement to say "if a relay is expected to trip because of an overload then the resulting facility shall be simulated in addition to the initiating event". 14. - R3.3.3. How do you know which events beyond single contingencies result in producing "more

Q43			
Commenter	**Yes**	**No**	**Comment**
			severe" impacts without running all? Either you test or you don't. We suggest some type of cyclical expectation for testing each of the less probable Planning Events, i.e. every three years each must be covered etc.the most critical 15. - R3.4 Same comment as R3.3.3, you need to test each to understand which produces the most severe impact. We suggest some type of cyclical expectation for testing each of the Extreme Events. The frequency of testing should be less often that the items covered in R3.3.3. It appears the only expectation is to consider some type of change to reduce or mitigate potential Cascade for Extreme Events. It should be clearly written that there in no mandatory expectation to remove the Cascade risk that may be associated with an Extreme Event. 16. - R4.5.1. Same comment as R3.3.3 (Steady-State) applies for this Stability requirement. 17. - R4.5.2. Same comment as R3.4 (Steady-State) applies for this Stability requirement. 18. - R4.6.1. We agree with the requirement but the SDT should assure consistency with data submittal requirements in the MOD standards. PERFORMANCE TABLES - General 19. In general, we feel the tables are overly complicated and difficult to follow. We suggest the SDT give consideration to merging the proposed tables back together to a single performance table. We also question why the team chose to leave the NERC A, B, C, D concept. The concept of Planning Events could reflect that NERC A, B & C categories must be met for Planning Events and that Category D are Extreme Events. Drastic deviation from the historical NERC performance classifications will require significant re-write of existing TP planning criteria documentation. 20. 300kV Level - It is confusing how the 300kV level requirements are placed within the tables. We suggest separate columns for performance requirements for 300kV and higher and below 300kV. This way, the same Planning Event could easily be reference on the same line and the expectations for each system level could be more readily determined. TABLE 1 - Steady-State Performance Table 21. We suggest that the "Initial Condition" column that is included in Table 2 - Stability Performance Table - also be added to Table 1. This would allow each to have the same look and feel, and would cut down on the lengthy wording such as: "Loss of a generator followed by System adjustment followed by loss of a generator" 22. Bullet 1 - "Equipment Ratings should not be exceeded." It is not clear which equipment rating

Q43			
Commenter	**Yes**	**No**	**Comment**
			would be the applicable rating. 23. Bullet 3 - "Voltage instability, cascading outages and uncontrolled islanding shall not occur". These terms require a definition to ensure consistent interpretation and application from an auditor. 24. It is not clear why stuck breaker items are distinguished from an internal breaker fault. Each will create the same resulting system condition. 25. Why are non-bus tie breakers treated separate from other breakers? 26: P2: Why is a stuck breaker listed as a single contingency? 27. P8: What about a transformer followed by a line outage? Why not just simply list the components and say any combination of the two. 28. P9: "Loss of a transformer followed by a System adjustment with a spare transformer available followed by the loss of another transformer." It is not clear why this is needed? Wouldn't the spare be a possible mitigation of the initial contingency? Extreme Event Descriptions: 29) For item 1, it's understood that for the N-2 items listed, the "extreme" aspect is that the second event occurs without system adjustment. However, we question whether a two generators simultaneously out should be considered an extreme condition. 30) We agree with the items listed in item 2 as they line-up well with the prior category D events from the existing TPL standards performance table. 31) Many of the classifications listed in item 3 are subjective and can not be tested. We propose that these items should not be requirements. TABLE 2 - Stability Performance Table 32. With regard to Table 2, much of the proposed testing required for stability are not necessary from a reliability standpoint. Some test items are included that are not, at least in the eastern interconnection, going to impact stability any worse than the relatively simpler requirements of the present standards. By testing single phase local faults in conjunction with a stuck breaker and remote faults with back up clearing for each line emanating from a power plant, you'll cover 99% of your stability issues. Also, this table does not adress relay scheme failures (back up clearing) that were

Q43			
Commenter	**Yes**	**No**	**Comment**
			covered in the present standard and which can have a significant impact on the stability of a unit/system. 33. Under the "Event Column", it is inconvenient to need to look back and forth on the table to reference other events, the items should be written in full text. For example, under P4 it is indicated that the "Initial Condition" is a single generator out and the "Event Column" indicates apply "P1.2 Contingency, P1.3 Contingency, etc." These items should be written out so that the user of the Table does not need to flip back and forth to see what the referenced contingencies entail. 34. Regarding P1, why require dynamic analysis for an unexpected loss of the listed equipment without a fault? The fault iniated outage will always be worse. 35. As stated above for Table 1, It is not clear why stuck breaker items are distinguished from an internal breaker fault. Each will create the same resulting system condition. 36. P5, P8, P9: The analysis suggested to run these multiple contingencies in dynamics would be extremely time consuming and produce little value. We suggest that the steady-state anlysis be used to screen those contingencies which show the potential to cause system cascade and then run dynamic analysis on those items. 37. As stated for Table 1 above, "Loss of a transformer followed by a System adjustment with a spare transformer available followed by the loss of another transformer." It is not clear why this is needed? Wouldn't the spare be a possible mitigation of the initial contingency? 38. In the Notes section shown under Table 2, for item "ii", we are not sure this could be accomplished as our relay models are not reflected in our data set used for dynamics simulation analysis. Two separate and unique software tools house the data and we believe this to be common among most companies.

Response: 1. The SDT believes some additional modeling requirements not presently contained in the MOD standards are necessary for Transmission planning purposes. The SDT has revised these requirements based on industry comments to eliminate redundancy with existing MOD standards with the intent that these requirements will be removed from the TPL standard when they are incorporated into the MOD standards at a later date.
2. Changing the order or sequence of the specific requirements has been discussed by the SDT but the decision was to retain the current sequence to avoid more confusion among the commenters. The benefit of changing the sequence did not outweigh the benefit of continuity at this point. The commenter is welcome to make a specific proposal for change in the next round of comments.
3. Requirement R2.1 does not require a study for each of the five years. The Planning Assessment shall cover the five year period. Requirements R2.1.1, R2.1.2, and R2.1.3 cover peak loading, off-peak loading, and sensitivities. The SDT feels that the requirement to run a peak load study for two of the years in the Near-Term Horizon is a minimum required for an adequate Planning Assessment. The SDT felt that

Q43			
Commenter	Yes	No	Comment
in Requirement R2.1.1 the Year One or two study should provide operations with the best information to transition to the operating horizon. The year five planning study is the first near term study from the long term set. Five years is a short time if unexpected new facilities are required. Requirement R2 includes a statement which states that "Planning Assessment shall use current or past studies." R2.1 allows for the Planning Assessment to be "…supplemented with qualified past studies…" If you have past studies which are applicable, the standard allows for such. 4. The SDT feels that the requirement to run a peak load study for two of the years in the Near-Term Horizon is a minimum required for an adequate Planning Assessment. The SDT felt that in Requirement R2.1.1 the Year One or two study should provide operations with the best information to transition to the operating horizon. The year five planning study is the first near term study from the long term set. Five years is a short time if unexpected new facilities are required. Requirement R2 includes a statement which states that "Planning Assessment shall use current or past studies." R2.1 allows for the Planning Assessment to be "…supplemented with qualified past studies…" If you have past studies which are applicable, the standard allows for such. 5. The intent of Requirement R2.2 is to study one year in the five year period each year. The timing of annual planning studies may mean that the most recent study is slightly over one year old in some years. Over time, the entity should have a portfolio of studies for the long term period as the basis to confirm the assessment of the period. 6. The SDT has softened the wording of Requirement R2.4.1 to address this issue. **R2.4.1**. System peak Load for one of the five years. For peak System Load levels, ~~the~~a Load model shall ~~include the dynamic effects~~ be used which appropriately represents the dynamic behavior of Loads, including consideration of the behavior of induction motor Loads. 7, 8, and 9. The SDT agrees this is difficult and has modified the requirement to add some clarity. Most of the studies now have a backstop age of five years where they are no longer useable. **R2.6.** Past studies may be used to support the Planning Assessment if they meet the following requirements: **R2.6.1**. For steady state, short circuit, or System Stability analysis: ~~if the study is less than three years old and no material changes have occurred to the System in the intervening period. Material changes include topology changes, generation additions/removals, and market structure changes~~ the study shall be five calendar years old or less. **R2.6.2**. For steady state, short circuit ~~analysis~~, Generating Plant Stability, or System Stability analysis: ~~if the study is less than five years old and no material changes have occurred to the System in the intervening period.~~ the study shall not include any material changes, such as, generation or Transmission additions/removals, or topology changes that have occurred in the intervening period and would impact the study area. **R2.6.3**. ~~For plant and System Stability analysis: until material changes in the System make the study no longer valid. Material changes in the system include the addition of a Transmission Line or a generator.~~ 10. Requirement R8 (old Requirement R6) which focuses on the distribution of the Planning Assessment results among affected entities was specifically added to allow some level of peer review and provide some level of confidence that the proposed plan could in fact be completed to meet the reliability objective. Requirement R2.7.1.1 is complementary to Requirement R8 (old Requirement R6) Initiation dates are only required in the near term since longer term plans tend to move in time and only have general scheduling associated with them. Typically the date would indicate when significant resources will begin to be employed. This covers any project proposed for the near term. The SDT			

Q43			
Commenter	Yes	No	Comment
			continues to believe that providing the expected project intiation date of System improvements provides useful information to neighboring entities. The SDT believes that initiation dates are required for near-term corrective action plans to give an indication that the corrective action plans can be implemented in time. 11. Requirement R8 (old Requirement R6) which focuses on the distribution of the Planning Assessment results among affected entities was specifically added to allow some level of peer review and provide some level of confidence that the proposed plan could in fact be completed to meet the reliability objective. Requirement R2.7.1.1 is complementary to Requirement R8 (old Requirement R6) Initiation dates are only required in the near term since longer term plans tend to move in time and only have general scheduling associated with them. Typically the date would indicate when significant resources will begin to be employed. This covers any project proposed for the near term. The SDT continues to believe that by providing the expected project intiation date of System improvements provides useful information to neighboring entities. The SDT believes that initiation dates are required for near-term corrective action plans to give an indication that the corrective action plans can be implemented in time. 12. Requirement R3.2.1 was meant to allow the Planning Coordinator and the Transmission Planner the discretion on the treatment of the generators that may exceed their maximum or minimum voltage limits. 13. The SDT has received numerous comments in support of these requirements. Requirement R3.2.2 is included to provide clarity on simulations in response to FERC Order 693. Relay Loadability is included to be clear that this factor must be taken into account in the planning studies. In addition, Requirement R.3.2.2 only requires the studies to consider relay loadability and identify how loadability is treated in the steady state simulation, not to study relay loadibility. The SDT has not made changes in response to this comment. 14, 15, 16, and 17. The SDT believes it is appropriate for the Transmission Provider/Planning Coordinator to decide how to determine the events that result in the "more severe" impacts. The SDT believes that the standard as written is clear and does not indicate a "mandatory expectation to remove the Cascade risk" for Extreme Events. For example, Requirement R3.3.1 indicates that performance criteria shall be met only for System normal conditions and for Planning Events in Table 1. Requirement R3.3.1 does not include the requirement that the performance criteria be met for Extreme Events. 18. The SDT has added requirements R9 through R13. **R9.** Each Distribution Provider shall provide its respective Planning Coordinator with modeling information for real and reactive load forecast data for each year of the Transmission planning horizon at Transmission nodes based on expected or historical System performance including the expected mix of industrial, commercial, and residential Loads, within ninety days of a request for such information. **R10**. Each Transmission Planner shall provide its respective Planning Coordinator with modeling information for Firm Transmission Service data, Interchange Schedules and resources required to supply Load for each of its Balancing Authorities for each year of the Transmission planning horizon, within ninety days of a request for such information. **R11**. Each Transmission Owner shall provide its respective Planning Coordinator with modeling information for known planned outages and long-term outages for Transmission equipment for each year of the Transmission planning horizon with consideration given to spare equipment strategy, within ninety days of a request for such information. **R12**. Each Generator Owner shall provide its respective Planning Coordinator with modeling information for known planned outages and long-term outages for generation equipment for each year of the Transmission planning horizon, within ninety days of a request for such information. **R13**. Each Resource Planner shall provide its respective Planning Coordinator with the modeling information for new planned facilities for each

Q43			
Commenter	Yes	No	Comment
year of the Transmission planning horizon including but not limited to generators, Reactive Power devices, and new technologies, within ninety days of a request for such information 19 and 20. The majority of commenters support the development of the two tables as opposed to the single table in the existing TPL standards. Further, the SDT believes that the two tables provide the ability to clarify issues associated with Stability performance and evaluation requirements versus steady-state performance and evaluation requirements. These issues were expressed by commenters during the development of the SAR that initiated the re-write of the TPL standards. By the same token, comments were expressed during the development of the SAR about the need to consider significantly changing the classification of outages to these categories and even to consider eliminating the categories. The SDT took the approach of eliminating the categories in order to concentrate on defining the performance requirements individually for each event as appropriate. The SDT does not see a need at this time to revert to the previous classifications. The SDT has made changes to the tables to clarify the performance and evaluation requirements as the SDT agrees with the commenter that further clarification from the standard issued in the first comment period was required. The SDT agrees with the commenter concerning the need for clarification of the 300 kV performance requirements and, as a result, made changes to the standard intended to accomplish this purpose. 21. The SDT has implemented the suggestion to add an initial condition column to Table 1. 22. The SDT notes that Equipment Ratings are covered in the FAC standards and are set by the Transmission Owner. The SDT does not see the need to add any further requirements with regard to Equipment Ratings. 23. Definitions for cascading and stability are included in the NERC Glossary. Further uncontrolled islanding, while not defined, is a common term that is well understood. The SDT does not propose to improve the definitions for Cascading and Stability or propose a new definition for cascading outages and uncontrolled islanding. The SDT believes that while it may be helpful to either develop a voltage instability definition or else specify performance requirements for voltage instability, there are not generally accepted performance requirements for voltage instability across NERC making it difficult for the SDT to write a voltage instability performance requirement at this time. For example, it has been found that an acceptable margin for voltage Stability varies bus to bus and therefore, is not suitable for a general instability requirement on a PV curve or alternative. There are a number of IEEE papers (e.g., P. Kundur, J. Paserba, V. Ajjarapu, G. Anderson, A. Bose, C. Canizares, N. Hatziargyriou, D. Hill, A. Stankovic, C. Taylor, T. V. Custem, V. Vittal, "Definition and Classification of Power System Stability", IEEE Transactions on Power Systems, vol. 19, no. 2, pp. 1387 – 1401, May 2004) that provide descriptions of voltage instability. It is important to understand what events are being modeled even when conducting steady state studies so as to ensure that studies are being conducted recognizing the FERC indicated in paragraph 1707 of Order No. 693 that planning assessment "faithfully duplicate what will happen in the actual power system and not a generic listing of outages." As a result, the SDT is not proposing to make changes to the standard in response to this comment. 24. The SDT feels that the resulting conditions are not the same. Stuck breaker is described in the notes in the tables. An internal fault is a single Contingency but a stuck breaker is not. 25. The reason for separate treatment of Non-Bus-tie Breaker and Bus-tie Breaker is that there are different System consequences for the 2. 26. The SDT agrees that a stuck breaker is not a single Contingency. It requires a fault-initiated Contingency followed by the failure of the breaker or the System Protection to operate properly. As a result, the stuck breaker is a lower probability Contingency. The SDT has changed the identification of the outage in the table. 27. The SDT agrees with this suggestion and has made the change to the table. 28. P9.6 was an attempt to include outages involving long lead time equipment considering spare equipment strategies in the table as			

Q43			
Commenter	**Yes**	**No**	**Comment**
directed by the FERC in Order No. 693. The SDT has deleted P9.6 and included this consideration in Requirement R11 of the second draft of the standard to address this issue. 29. Whether two generators out without System adjustment in between is an event which severely stresses the System would depend on the individual System under study; the SDT believes it is appropriate to not include this as a Planning Event and therefore has not revised the table as suggested. 30. Thanks for the support. 31. With regard to the comments about the Extreme Events in Item 3, the SDT notes that in Order No. 693, paragraph 1834, the FERC gave examples of Extreme Events and Item 3 is consistent with paragraph 1834 in the FERC order. See the response to BPA 7 for more details. Further, the SDT notes that these events dramatically impact the reliability of the interconnected network and are logical extreme events for which the probability and consequences should be evaluated when considering ways to make the transmission system more robust with operating procedures and/or system improvements that are reasonable in cost in comparison to the probability and consequences of the extreme event. The SDT did not change the standard with regard to these comments about Extreme Events in Item 3. 32. The SDT believes that all Stability requirements are necessary for reliability based on an understanding of current practices within North America. Protection systems will be addressed in subsequent versions. 33. The SDT has completely re-formatted the tables due to industry comments. 34. The SDT agrees and has made the change to the table. 35. The SDT feels that the resulting conditions are not the same. Stuck breaker is described in the notes in the tables. An internal fault is a single Contingency but a stuck breaker is not. 36. The SDT believes that Requirement R5.5.1 provides the distinction you are looking for. 37. Spare terminology has been deleted. 38. The intent of the note is the system must meet performance and that the loss of any generator is not greater than your Contingency reserve. You can simulate relay models using other techniques.			
FPL	☑		1. General Comment: NERC Standards TPL 001-0 through TPL 004-0 are approved standards that only required modifications pursuant to FERC Order 693. In this proposed draft standard TPL 001-1 the Standard Drafting Team (SDT) has far exceeded the recommendations suggested by FERC in that Order as well as created unnecessary confusion. FPL believes that the SDT's decision to combine NERC Standards TPL 001-0 through TPL 004-0 into one standard was not a specific requirement by FERC Order 693 and may not have been a good decision by the STD, therefore it should be reconsidered after reviewing all of the comments. At a minimun, the team should somehow clearly demonstrate changes in the standard's wording and required performance levels as compared to the existing standards. The new proposed draft of TPL-001 creates unnecessary confusion and interpretation of new ambiguous language, which is inconsistant with the stated objectives, instead of providing clarity to the standards. As an example of how to provide additional clarity, the existing standards have unnecessary redundancy in the tables, for example, it would have been nice to clean up (clarify) the tables such that the table for TPL-001 would only contain the performance criteria for Category A, with footnotes only applicable to that category, clarified as directed by FERC in Order 693. Similarly, TPL-002 would only contain performance criteria for Category B, and so on.

Q43			
Commenter	**Yes**	**No**	**Comment**
			2. In addition to combining the standards, the SDT has significantly changed contingency specifications and required performance levels. In many cases the changes represent a very significant increase in required performance standards that will require unjustified major capital expenditures and/or reductions in ATC. This also could have an adverse impact on commercial transactions. In other cases, the performance criteria are not clearly defined, such as the timing between multiple contingencies, and the level of readiness of the system after Planning Events. The benefits from the additional performance requirements have not been identified in the proposed standard. Is there a planned phased in approachto move from the existing standard to the new proposed standards. If so, what is it? 3. Finally, the SDT has chosen to eliminate the footnotes in the current standards, contrary to the direction of FERC in Order 693 to "clarify" the footnotes. The purpose of the footnotes is to further explain terms in the tables, provide guidance in interpreting the expected performance criteria, and specify any exceptions to the criteria. Footnotes also serve the purpose of keeping the standard concise by eliminating repetitiveness. Specific comments on the Draft Standard Performance Criteria 4. The performance requirements table should clearly define what the initial state of the system is assumed to be before any Planning Events, and what the state of the system is assumed to be after the Planning Event. For example, P1 (single contingency) events: assuming that the system is to be compliant, the state of the system prior to the event must be "secure" such that the event could occur and there is no interruption of firm transfer or loss of load, Equipment Ratings are not exceeded, System steady state voltages and post-transient voltage deviation are within acceptable limits. However, the system is not as it was before the event. The system could be described as "normal" but perhaps not "secure". If the requirement is that the system must also be "secure" after the event, then the standard must clarify what is allowed for "system adjustments" after the first Planning event to prepare for the next. FERC Order 693 directed the ERO to modify the second sentence of footnote (b) to clarify that manual system adjustments other than shedding of firm load or curtailment of firm transfers are permitted to return the system to a normal operating state after the first contingency. However, in order to bring the system to a secure state, as is necessary for the second contingency of a category C3 or C5 event, footnote (c) allows curtailment of firm transfers, and FERC Order 693 only required footnote (c) to be clarify the term "controlled load interruption", leaving the curtailment language intact. The implication of this interpretation is critical to peninsular Florida. The Category B loss of one 500 kV line from Florida to Georgia is sustainable, such that the system is "normal" after the event. However, in order to be prepared for the next contingency, (the loss of the second 500 kV line), firm transfers must be curtailed. (Interruption of Firm Transfer) Without the ability to curtail firm transfers, a "super-firm" priority of service is created,

Q43			
Commenter	**Yes**	**No**	**Comment**
			which is unjustified. Comments on New Performance Tables: 5. The draft TPL standard represents a major change in the Table 1 contingency definitions and required performance levels. 6. Table 1 Contingencies C1 and C2 are being moved to the single contingency category. While C1 and C2 represent single element outages, their probability of occurrence is much lower than the other Category B contingencies and they do not belong in the single contingency performance requirements group. 7. Footnote (b) which permits, as a limited exception in unique circumstances with a sound rational basis, some localized load reduction for single contingencies, has been removed. This is a very significant change for some utilities. Footnote (c) which permits load shedding and curtailment of firm transfers has been removed from C1, C2 and most of C3. This is a very significant increase in required performance level that is not justified. 8. The "applicable rating" for loading and voltages in Table 1 has been removed so that essentially, the same ratings and voltage restrictions apply to both B and C contingencies. Some utilities plan to a normal rating for single contingencies but will allow a higher short term rating for Category C events. This practice will apparently be disallowed. 9. Several new Category D "Extreme Events" have been added which greatly expand the scope and complexity of Category D studies. These are (1) any two unrelated single element outages and (3) wide area events a. through h. These represent a major increase in the scope of Category D studies and probably a doubling of required SWG studies. The fault with protection element failure categories D1 through D4 have been substantially changed to eliminate analysis of relay failure contingencies. The philosophy contained in the existing TPL-004 standard is that faults with a protection failure should be evaluated whether that failure is a circuit breaker, relay or CT; the proposed standard restricts the analysis to breaker failure. 300 kV Threshold Performance Level 10. The TPL-001-1 draft sets a threshold of higher performance to facilities above 300 kV than previously established in the existing standard. We do not agree that such a threshold is necessary or warranted nor have they been justified. Requirements which are more stringent for these facilities may wrongly influence decisions on project alternatives in favor of facilities with less stringent requirements.

Q43			
Commenter	**Yes**	**No**	**Comment**
			DC Line Performance Requirement 11. The TPL-001-1 draft sets a lower performance requirement for the loss of a single pole of a DC line than in the existing standard by allowing interruption of firm transfer if the transfer is deemed to be dependent on the outaged line. Firm transfers are also dependent upon AC lines. The proposed standard does not distinguish between asynchronous DC ties and the more common parallel connected DC tie. With an asynchronous DC tie, the transfer is lost with the tie. With a parallel DC tie, the transfer will be shifted to the parallel AC system and should have the same performance requirements. We do not agree that such an exception for DC lines is necessary or warranted. The decision in selecting DC vs. AC in transmission lines has traditionally been based on the break-even cost and performance of the two alternatives. The lower performance requirement may wrongly influence decisions on project alternatives in favor of DC facilities with less stringent requirements. Distinction Between Committed and Proposed Projects: 12. Models cannot discern the difference between a "committed" project, and a "proposed" project in a performance analysis. The standard should instead set criteria for when models can be relied upon for planning purposes such that changes to the future plan will not have an impact on reliability. The intent of Requirements R2.7.3 and R2.7.4 should be combined and added into R2.7.1.1. Rather than adding the additional requirement to document a criteria, the requirement should be that in the Near-Term Planning Horizon, projects cannot be removed (or modified) without demonstrating that the revised plan meets performance criteria. In addition, the requirement in R2.7.1.1 to supply a "project initiation date" is ambiguous. What will constitute "project initiation" …construction start date? …Engineering complete date? …Land procurement date? Funds allocated date (budgeted)? Suggested wording for R2.7.1.1. "Transmission and generation improvement projects for the Near-Term Transmission Planning Horizon, shall have in-service dates provided, and shall not have in-service dates changed, or be removed from planning models, without documentation to show that the revised plan meets performance requirements." In addition to the concerns mentioned above, how are delays in meeting project in-service dates, which are not in the direct control of the Transmission Owner, caused by siting and Right of Way difficulties (public outcry, exercising eminent domain, court process, etc) addressed? The standard needs to have provisions to recognize these types of issues allowing a Transmission Owner to be compliant as long as he is using due diligence to overcome these types of delays. Analysis of Relay Protection Failures: 13. This draft of the TPL standard ignores studies required for analysis of relay protection failures. There is a widespread misconception that studying breaker failure scenarios covers for relay protection failures. This is a false assumption. Typical delayed clearing for a stuck breaker is in the order of 8 to 20 cycles. This is accomplished by the local relay system sensing the stuck breaker and tripping the adjacent elements. However in the case of a protective relay failure the fault must

Q43			
Commenter	**Yes**	**No**	**Comment**
			usually be cleared remotely by tripping all lines connected to the station. Typical delays for a relay failure can easily be greater than 30 cycles. Where as breaker failure action just trips a couple of adjoining elements and leaves the rest of the station intact. A typical example of this difference is to assume a bus fault. For breaker failure, all bus breakers except the stuck one would trip. The breaker failure relay scheme then would time out and trip the adjoining breaker and the remote end of the adjoining line would trip. This could all happen in less than 20 cycles. Now consider a bus fault with the differential relay failed. The local relays don't sense the fault because they have failed, nor does the local breaker failure scheme activate because no local detection has occurred. The only way to clear this fault is to trip all lines from the remote terminals. This may take 30 cycles or more. With breaker failure, the bus and one line trips in about 20 cycles. With relay failure, all lines trip remotely isolating the substation in about 30 cycles. Both scenarios must be studied with relay failure being the worse case. Generally, different solutions are required to address relay failure verses breaker failure. Load Modeling Requirements: 14. The proposed TPL Standard contains numerous references to load modeling. The goal of improving and verifying the load model is worthwhile but is not appropriate for the TPL standards. Assessment of load model accuracy is best accomplished through detailed analysis of grid disturbance events. The main difficulties in accomplishing this are (1) grid events that significant reduce transmission voltages throughout a load area are infrequently occurring and (2) the process of Recreating the event through simulation studies is extremely complex and time consuming. While these efforts should be encouraged they should remain a RRO prerogative. 15. R1.1.1 Use of expected Load mix based on the actual or expected aggregate mix of industrial, commercial, and residential Loads. – This requirement is not justified as the load model may be developed through disturbance analysis rather than load type synthesis by customer class. Some LSE's may have great difficulties in creating load forecasts based on customer class. Load forecasting requirements are adequately addressed in the existing MOD standards and do not belong in the proposed TPL standard. 16. R1.2. Load models with supporting rationale that include power factor data that may be based on historical System performance, validated by measurement during stressed System conditions, or documented Transmission planning area requirements. This requirement is not appropriate fot the TPL standarsds. 17. R2.4.1. System peak Load for one of the five years. For peak System Load levels, the Load model shall include the dynamic effects of induction motor Loads.

Q43			
Commenter	**Yes**	**No**	**Comment**
			18. Specific types of load models should not be required in this standard. 19. Short Circuit Requirements: The new TPL standard also contains numerous references to short circuit analysis, which are new requirements that expand the TPL standards, but without specific testing or performance criteria. Evidence that short circuit studies have been performed is currently required in the existing FAC-002-0 Standard. Since the primary concern is the appropriate sizing of equipment and the prevention of equipment damage as opposed to overall grid reliability, we do not see the need for a set of requirements within the proposed TPL standard for short circuit studies. 20. Given the aforementioned issues, we believe the proposed TPL standard is inferior to the existing Board approved TPL Standards, creates unnecessary confusion, and will require many iterations of industry comment and revision. As an intermediate approach, we would strongly urge the Standard Drafting Team that the existing TPL standards be modified to respond to FERC Order 693 directives, clarify any ambiguities, and not pursue the proposed new standard any further. This would bring a much needed part of the Reliability Standards into the framework of mandatory enforcement and provide guidance on this longer term effort to improve the TPL standards.

Response: 1. The SDT must not only consider directives made in the FERC Orders, but it must also consider the direction given in the two associated SARs. Much of the wording and format in the current standards is repetitive. They all share the same performance table. Historically many have commented that because of the duplication in wording and format that the four should be merged together so that consistency would follow. It would also be easier to find and see the differences for each level of contingency. The SDT will continue to minimize repetitive language, simplify tables, minimize the number of notes, etc.
Commenters in general have supported the concept of merging the four standards together. In addition, Paragraph 1692 of order 693 "directs the ERO to consider integrating Reliability Standards TPL-001-0 through TPL-004-0 into a single Reliability Standard through the Reliability Standards development process". In addition, this order, in conjuction with 890, enurmerates attributes of planning standards that the FERC feels should be incorporated into the consolidated standard. SDT believes that the first draft of the standard is consistent with orders 693 and 890 without being unduly burdensome.
2. The SDT understands that there are extended transition issues associated with responsible entities becoming compliant with the new standard. The SDT plans to draft an implementation plan to accommodate such issues. The plan will be included in the third posting of the standard.
3. The requirement concerning Consequential Load Loss is to address FERC Order 693, which directs the ERO, among other things, to clarify footnote (b) in regard to Load loss following a single Contingency, specifying the amount and duration of Consequential Load Loss and System adjustments that are permitted after the first Contingency to return the System to a normal operating state. In regard to your comment regarding the general use of footnotes, the SDT agrees that notes can add clarity and we have included footnotes where useful in the newly formatted tables.
4. The SDT agrees with the comment that the initial conditions must be clarified in Table 1. Therefore, the SDT has made changes to add an initial condition column to Table 1. The SDT agrees that the System must remain secure after an event and therefore has clarified the standard by adding words to cover this requirement.
Further, the SDT agrees that the overlapping single Contingencies in C3 or the multiple circuit tower Contingency of C5 in the existing TPL

Q43			
Commenter	Yes	No	Comment
			standards are much lower probability but given that the performance requirements are only raised on these events for facilities above 300 kV, the SDT does not believe that the proposed changes are unreasonable especially since the changes are consistent with FERC Order No. 693. Please see the SDT responses to Question 22 for more details. 5. The SDT agrees with the comment and believes that this is consistent with FERC Order No. 693. 6. The SDT agrees that C1 and C2 in the existing TPL standards are much lower probability but given that the performance requirements are only raised on C1 and C2 events for facilities above 300 kV, the SDT does not believe that the proposed changes are unreasonable especially since the changes are consistent with FERC Order No. 693. Please see the SDT responses to Question 22 for more details. 7. The SDT has added greater detail to Tables 1 & 2, which provides for more situations where it is acceptable to lose Load. 8. The SDT has referenced Facility Ratings in general terms in Requirements R3.3.2.3 and R3.6.1 to provide flexibility with time based ratings. 9. The SDT has reviewed and revised Extreme Events in Tables 1 & 2. 10. The initial draft of the proposed Transmission planning standard held the planning of 300 kV and higher Transmission Systems to a more stringent requirement than the remaining BES. Although not unanimous, the majority of the SDT felt the 300 kV and higher Systems generally represent an extra-high-voltage (EHV) range that is considered the backbone of many systems in the various Interconnections and that the more stringent requirements were appropriate when considering N-1-1 Contingencies of two EHV Facilities. Systems operated at this range generally do not directly serve end-use Load customers but rather act as the medium for moving large amounts of power from production to various Load centers which then deliver the power among other Transmission or sub-Transmission Systems to end use customers. It is the desire of NERC and various stakeholders that the backbone of the electric power grid be robust and held to a higher degree of reliability. When EHV Systems are compromised, the large volumes of power served by them can place a severe amount of stress on parallel EHV or lower voltage paths. For example, if a large EHV transformer experiences a catastrophic failure not only are other System Facilities required to carry more Load but the System is also exposed to other N-1 conditions for long periods of time while awaiting a replacement or repair of the failed equipment. Large generation sources are typically connected at EHV levels and maintenance of the EHV Transmission lines within the vicinity of larges generation plants must often be coordinated during scheduled unit outages, resulting again in multiple Facility outages over extended periods of time. Therefore, it was the conclusion of the SDT in Draft 1 to propose greater reliability and operational flexibility through more stringent performance requirements when considering certain N-1 and N-1-1 Contingency events of EHV Systems. Throughout the industry substation arrangements at EHV levels reflect the importance of these Systems as the designs often consist of the more expensive ring-bus, breaker-and –a-half or double bus-double breaker protection schemes as opposed to the more simplistic and lesser cost single bus arrangements that are commonly found on lower voltage systems. The feedback received from industry was divided related to the SDT's emphasis placed on a higher expectation for the 300 kV and higher Systems. Some commenter's questioned the importance and the high costs that may be needed to mitigate existing System designs. Others agreed with the SDT's approach and indicated that the impact to their Systems would be minimal. Some commenters even questioned why the more stringent approach was not applied to the entire 100 kV and higher Systems. The SDT believes the Draft 2 changes are responsive to industry feedback and reflect an appropriate middle ground related to the importance of the EHV Transmission System. 11. As a controllable element, a DC terminal can carry more load than it might otherwise based on an impedance split in an all AC System. With most DC providing asynchronous DC ties, the SDT has elected to allow interruption of service. 12. Based on several comments and consideration by the SDT, the SDT has modified Requirement R2.7.1 and deleted Requirements R2.7.2

Q43			
Commenter	**Yes**	**No**	**Comment**
through R2.7.4. The standard now refers to "actions" needed to achieve required System performance without trying to distinguish between committed and proposed projects. It also lists examples of what is intended by the word "actions". The SDT continues to believe that by providing the expected project intiation date of System improvements provides useful information to neighboring entities however the region defines "initiation". **R2.7.1**. ~~Identify~~ List System deficiencies and the associated actions needed to achieve required System performance. ~~including Transmission and generation improvements, DSM, new technologies, or Operating Procedures including the duration of interim Operating Procedures.~~ Such actions may include installation, modification, retirement, or removal of Transmission and generation Facilities and any associated equipment such as protective or Special Protection Schemes, rate applications, DSM, or other initiatives, new technologies, or Operating Procedures including how long the Operating Procedures will be needed as part of the Corrective Action Plan. 13. Protection system failures are being studied and will be covered in a future version. 14. The SDT believes some additional modeling requirements not presently contained in the MOD standards are necessary for transmission planning purposes. The SDT has revised these requirements based on industry comments to eliminate redundancy with existing MOD standards with the intent that these requirements will be removed from the TPL standard when they are incorporated into the MOD standards at a later date. 15. The SDT believes that models must reflect the expected Load mix of industrial, commercial and residential Loads to correctly reflect the behavior of the System. 16. The SDT has revised this requirement based on industry comments to clarify the intent that Load data be based on expected or historical System performance. The SDT believes some additional modeling requirements not presently contained in the MOD standards are necessary for Transmission planning purposes. The SDT has revised these requirements based on industry comments to eliminate redundancy with existing MOD standards with the intent that these requirements will be removed from the TPL standard when they are incorporated into the MOD standards at a later date. 17 & 18. The SDT believes that the dynamic effects of induction motors must be considered. The standard does not specify the details of how to model induction motors. Therefore, the SDT believes the standard includes the necessary requirement without being overly prescriptive. 19. Your reference to FAC-002 only addresses the study of a specific request for Interconnection. The TPL draft addresses on-going System changes and increases in available fault current due to the additions of circuits and resources, as listed in the Corrective Action Plan. Short circuit studies help determine appropriate equipment sizing and setting of protective relays. Such studies will help provide for a complete Corrective Action Plan, i.e., the installation of a transformer to resolve a System performance deficiency may require the installation of additional circuit breakers. FERC also noted the need to include this analysis to cover such conditions. 20. The SDT believes that the present course of drafting the four standards as one standard with a revised table of "Contingencies" is the best solution to addressing all FERC directives, following the SARs, considering past comments and providing a single standard outlining the fundamental planning analysis.			
FRCC	☑		General Comment: 1. The SDT has significantly changed contingency specifications and required performance levels. In many cases the changes represent a very significant increase in required performance standards that will require unnecessary major capital expenditures and/or reductions in ATC which will have an

Q43			
Commenter	**Yes**	**No**	**Comment**
			adverse impact on commerce. Neither of these outcomes is desirable. Specific comments on the Draft Standard Performance Criteria 2. The performance requirements table should clearly define what the initial state of the system is assumed to be before any Planning Events, and what the state of the system is assumed to be after the Planning Event. For example, P1 (single contingency) events: assuming that the system is to be compliant, the state of the system prior to the event must be "secure" such that the event could occur and there is no interruption of firm transfer or loss of load, Equipment Ratings are not exceeded, System steady state voltages and post-transient voltage deviation are within acceptable limits. However, the system is not as it was before the event. The system could be described as "normal" but perhaps not "secure". If the requirement is that the system must also be "secure" after the event, then the standard must clarify what is allowed for "system adjustments" after the first Planning event to prepare for the next. FERC Order 693 directed the ERO to modify the second sentence of footnote (b) to clarify that manual system adjustments other than shedding of firm load or curtailment of firm transfers are permitted to return the system to a normal operating state after the first contingency. However, in order to bring the system to a secure state, as is necessary for the second contingency of a category C3 or C5 event, footnote (c) allows curtailment of firm transfers, and FERC Order 693 only required footnote (c) to be clarify the term "controlled load interruption", leaving the curtailment language intact. The implication of this interpretation is critical to peninsular Florida. The Category B loss of one 500 kV line from Florida to Georgia is sustainable, such that the system is "normal" after the event. However, in order to be prepared for the next contingency, (the loss of the second 500 kV line), firm transfers must be curtailed. (Interruption of Firm Transfer) Without the ability to curtail firm transfers, a "super-firm" priority of transmission service is created for non-native load customers. Comments on New Performance Tables: The draft TPL standard represents a major change in the Table 1 contingency definitions and required performance levels. 3. Table 1 Contingencies C1 and C2 are being moved to the single contingency category. While C1 and C2 represent single element outages, their probability of occurrence is much lower than the other Category B contingencies and they do not belong in the single contingency performance requirements group. 4. Footnote (b) which permits, as a limited exception in unique circumstances with a sound rational basis, some localized load reduction for single contingencies, has been removed. This is a

Q43			
Commenter	**Yes**	**No**	**Comment**
			very significant change for some utilities and this limited exception should be maintained. Footnote (b) was worked on extensive and achieved industry consensus at one time defining the maximum amount of load that could be shed at 100 MW. Footnote (c) which permits load shedding and curtailment of firm transfers has been removed from C1, C2 and most of C3. This is a very significant increase in required performance level that is not justified. 5. It is not clear what is meant by the phrase "Equipment Ratings" found in the performance requirements of Table 1. Utilities have different equipment ratings such as normal, long term, short term and emergency ratings. It is not clear that these type of ratings will be permitted in the proposed standard. 6. Several new Category D "extreme events" have been added which greatly expand the scope and complexity of Category D studies. These are (1) any two unrelated single element outages and (3) wide area events a. through h. These represent a major increase in the scope of Category D studies and probably a doubling of required stability studies. Analysis of Relay Protection Failures: 7. The fault with protection element failures have been substantially changed to eliminate analysis of relay failure contingencies. The philosophy contained in the existing standards is that faults with a protection failure should be evaluated whether that failure is a circuit breaker, relay or CT; the proposed standard does not require the analysis of any protection failure. This draft of the TPL standard ignores studies required for analysis of relay protection failures. There is a widespread misconception that studying breaker failure scenarios covers for relay protection failures. This is a false assumption. Typical delayed clearing for a stuck breaker is in the order of 8 to 20 cycles. This is accomplished by the local relay system sensing the stuck breaker and tripping the adjacent elements. However in the case of a protective relay failure the fault must usually be cleared remotely by tripping all lines connected to the station. Typical delays for a relay failure can easily be greater than 30 cycles. Where as breaker failure action just trips a couple of adjoining elements and leaves the rest of the station intact. A typical example of this difference is to assume a bus fault. For breaker failure, all bus breakers except the stuck one would trip. The breaker failure relay scheme then would time out and trip the adjoining breaker and the remote end of the adjoining line would trip. This could all happen in less than 20 cycles. Now consider a bus fault with the differential relay failed. The local relays don't sense the fault because they have failed, nor does the local breaker failure scheme activate because no local detection has occurred. The only way to clear this fault is to trip all lines from the remote terminals. This may take 30 cycles or more. With breaker failure, the bus and one line trips in about 20 cycles. With relay failure, all lines trip remotely isolating the substation in about 30 cycles. Both scenarios must be studied with relay failure being the worse case. Generally, different solutions are required to

Q43			
Commenter	**Yes**	**No**	**Comment**
			address relay failure verses breaker failure. 300 kV Threshold Performance Level 8. The TPL-001-1 draft sets a threshold of higher performance to facilities above 300 kV than previously established in the existing standard. We do not agree that such a threshold is necessary or warranted. Requirements which are more stringent for these facilities may wrongly influence decisions on project alternatives in favor of facilities with less stringent requirements. Load Modeling Requirements: 9. The proposed TPL Standard contains numerous references to load modeling. These modeling requirements should be addressed in the MOD Standards. The goal of improving and verifying the load model is worthwhile but is not appropriate for the TPL standards. Assessment of load model accuracy is best accomplished through detailed analysis of grid disturbance events. The main difficulties in accomplishing this are (1) grid events that significant reduce transmission voltages throughout a load area are infrequently occurring and (2) the process of Recreating the event through simulation studies is extremely complex and time consuming. While these efforts should be encouraged they should remain a RRO prerogative. * R1.1.1 Use of expected Load mix based on the actual or expected aggregate mix of industrial, commercial, and residential Loads. – This requirement is not justified as the load model may be developed through disturbance analysis rather than load type synthesis by customer class. Some LSE's may have great difficulties in creating load forecasts based on customer class. Load forecasting requirements are adequately addressed in the existing MOD standards and do not belong in the proposed TPL standard. * R1.2. Load models with supporting rationale that include power factor data that may be based on historical System performance, validated by measurement during stressed System conditions, or documented Transmission planning area requirements. This requirement is not appropriate for the TPL standards. 10. * R2.4.1. System peak Load for one of the five years. For peak System Load levels, the Load model shall include the dynamic effects of induction motor Loads. Prescribing specific types of load models in this standard is not appropriate because system topology and load make up may be unique from area to area. 11. Short Circuit Requirements: The new TPL standard also contains numerous references to short circuit analysis, which are new requirements that expand the TPL standards, but without specific testing or performance criteria. These performance criteria are better suited in the FAC

Q43			
Commenter	**Yes**	**No**	**Comment**
			Standards since evidence that short circuit studies have been performed is currently required in the existing FAC-002-0 Standard. Since the primary concern is the appropriate sizing of equipment and the prevention of equipment damage as opposed to overall grid reliability, we do not see the need for a set of requirements within the proposed TPL standard for short circuit studies. 12. Table 2 Angular Stability Notes: The requirement of generation loss not exceeding BA spinning reserve requirement (1.a.ii.) is an unjustified increase in required performance level from the existing TPL Standard which require the grid response to be stable and within applicable ratings. The portion of the notes requiring generator out-of-step protection are inappropriate and unwarranted. First, the simulation result may show the generator being tripped by backup distance or loss of field protection which may be acceptable to the generator owner. Second, the requirement for impedance swings not causing other transmission elements to trip is inappropriate and in conflict with manufacturer recommendations and prevailing practice for generator out of step protection. Most generator out of step relays are set to trip on the "way out" so as to limit phase angle difference across the opening contacts. With this practice, one can not prevent transmission line tripping due to zone 1 pickup without installing out of step blocking should the swing impedance passes through zone 1 relay. Out of step blocking of zone 1 relays is a bad idea as it opens the door to prolonged asynchronous connection of generators. 13. Circuit Breaker Contingencies: The proposed TPL standard separates circuit breaker related contingencies based on the intended use of the circuit breaker. If the circuit breaker is used to connect busses together (i.e. bus tie breaker) a lower level of performance is required than for other uses and configurations. The existing TPL standards have the contingency events and required level of performance appropriately ordered based on the probability of occurrence. We are not aware of different failure rates for bus ties breakers as opposed to the general circuit breaker population. The proposed standard requires an unjustified higher level of performance for non bus tie breakers and would encourage the use of low cost switching station arrangements such as single breaker/single bus which are less reliable. 14. Need to clarify the performance requirements that apply to sensitivity studies. These requirements should not be the same. 15. A.3. - Suggest replacing the word "probable" with "credible" for consistency with the white paper from the Operating Limit Definitions Task Force. 16. R2.1 - It is not clear how the requirement to address all 5 years can be accomplished when the annual studies do not require all 5 years to be studied. Is the planner expected to study the

Q43			
Commenter	**Yes**	**No**	**Comment**
			other years also, but that the required set of cases does not link to each of the 5 years? 17. R2.2.1 - This requirement creates compliance concerns. Therefore, it is suggested that the SDT clarify that the Long Term Assessment is not required beyond 10 years. 18. R2.7.3 - The term "proposed" may not be a good choice here ... especially since that's not a term used in other reliability assessments .... should another term be chosen or perhaps this definition could be matched up with work being done now on classification of resources for RAS. Steady State Performance Table: 19. P1 - If the transmission line outaged is the facility defined by contract as being the only contract path for the firm transfer, then the firm transfer will be interrupted. P1 should be clarified that this is acceptable. 20. P3 - Are these elements meant to be combined into a multiple contingency or considered separately (since they are listed with commas)? Or is this meant to be one of the 3 elements listed first AND the stuck breaker? Not clear the way this is worded. Or maybe the structure needs to be different in the sentence (like bullets for the first 3 that would make the "and" stick out more). 21. NERC Standards TPL 001-0 through TPL 004-0 are approved standards that only required modifications pursuant to FERC Order 693. In this proposed draft standard TPL 001-1 the Standard Drafting Team (SDT) has far exceeded the recommendations suggested by FERC in that Order. The proposed draft standard is a large change in the magnitude of the performance requirements from the exiting TPL Standards. The SDT needs to consider how this proposed standard will be implemented in this new mandatory compliance environment and ensure that reasonable compliance measures can be developed from the proposed standard.

Response: 1. The SDT recognizes that it has it has raised the bar on performance in some areas. The SDT realizes that this will have an impact and is working on an Implementation Plan that will address some of the concerns. This is a performance based reliability standard and does not and should not consider economics. FERC Order 693 clearly states the FERC position on Non-Consequential Load loss. The SDT has made numerous changes to the tables in an attempt to provide further clarity as to what needs to be done to achieve performance.
2. An Initial Conditions column has been added to the tables.
3. The SDT studied available data and practices and determined that these Contingencies do belong in the single Contingency performance group.
4. Local Load pockets are recognized as a problem and the SDT will address them in a future revision.
5. Equipment Ratings is a defined term in the NERC Glossary.
6. The SDT was responding to FERC Order 693 in the details for Extreme Events.

Q43			
Commenter	**Yes**	**No**	**Comment**
7. The SDT is still working on the Protection System elements of the standard and will provide more detail in a future revision. 8. The SDT feels that 300 kV and above represents the backbone of the BES and as such warrants more stringent criteria. 9. The SDT feels that the current MOD standards do not cover all of the modeling requirements for a planner. Therefore, the specific areas found lacking are described in the TPL standard. Once the MOD standards are revised appropriately, these requirements can be deleted from TPL. The SDT has re-written these requirements and they are now numbered Requirement R9 through R13. 10. The SDT feels that the Load model used in the study should represent actual conditions as accurately as possible. It has been shown during the reconstruction of the events of the August 14, 2003 blackout in the Northeast that the Load model was critical. One of the recommendations involved developing better Load models. 11. Short circuit studies are required as part of the Interconnection process. The TPL draft addresses on-going System changes and increases in available fault current due to the additions of circuits and resources, as listed in the Corrective Action Plan. Short circuit studies help determine appropriate equipment sizing and setting of protective relays. Such studies will help provide for a complete Corrective Action Plan, i.e., the installation of a transformer to resolve a System performance deficiency may require the installation of additional circuit breakers. FERC also noted the need to include this analysis to cover such conditions. 12. The note on spinning reserve has been corrected. The existing standard does not define what it means for the grid response to be stable. The SDT has attempted to do that with the footnote you referenced. The SDT believes that an excessive amount of generation pulling out of synchronism and tripping is not a stable grid response. Therefore, we have limited the amount which can trip to the amount of the Contingency reserve of the Balancing Authority. If a generator pulls out of synchronism, the SDT believes there should be some means to trip the generator from the grid. Otherwise, the generator could be damaged and the quality of power on the grid suffers. The footnote has been modified to require that the generator must have "out-of-step protection or some other means to trip the generator". The requirement for impedance swings to not cause the tripping of other Transmission elements is most appropriate. A stable response of the grid would not include losing additional Transmission elements. Out of step blocking on lines is not allowed as a solution. The requirement is for the impedance swing not to pass through relay characteristics which would result in tripping Transmission elements. This requires the system to be improved so that the impedance swings do not go out on the Transmission System. 13. Based on the available outage data, the SDT has decided that bus tie breakers are less likely to be exposed to stuck breaker opportunities 14. The SDT is providing some guidance on what needs to be included in sensitivity studies while not being totally prescriptive. Requirements R2.1.3 and R2.4.3 have been modified to require documentation of why the listed sensitivities were or were not selected for specific studies. Requirements R2.1.4 and R2.4.4 have been added to specifically state that the entity may consider additional sensitivities that are appropriate for its own System. The sensitivity studies do not in themselves establish the need for a plan, only the areas of the System the analysis is needed. **R2.1.3.** For each of the studies described in Requirement R2.1.1 and Requirement R2.1.2, sensitivity case(s) that stress the System with sensitivities that reflect one or more of the following conditions shall be run and documentation ~~with~~ of the technical rationale for ~~the selected sensitivity(ies)~~ why each of the conditions was or was not selected shall be supplied: **R2.1.4**. In addition to those sensitivities mentioned in Requirement R2.1.3, any other sensitivities, as deemed appropriate by the Transmission Planner or Planning Coordinator for their individual systems, shall be run and documentation of the technical rationale for why each was selected shall be supplied.			

Q43			
Commenter	**Yes**	**No**	**Comment**
R2.4.3. For each of the studies described in Requirement R2.4.1 and Requirement R2.4.2, ~~S~~sensitivity case(s) that stress the System to reflect one or more of the following conditions shall be run ~~with documentation provided explaining the rationale for the selected sensitivity(ies)~~ and documentation of the technical rationale for why each of the conditions was or was not selected shall be supplied: R2.4.4**.** In addition to those sensitivities mentioned in Requirement R2.4.3, any other sensitivity, as deemed appropriate by the Transmission Planner or Planning Coordinator for their individual systems, shall be run and documentation of the technical rationale for why each was selected shall be supplied. 15. The SDT feels that 'probable' is a better choice of words here and the majority of commenters have supported the SDT decision on how the purpose is stated 16. The SDT believes that a planner will be able to aggregate current and past studies in a portfolio or archive that will fulfill the requirement. 17. The SDT believes that the requirement as written is clear that studies longer than 10 years are only required if the known lead time of critical projects is longer than 10 years. The standard as written does not mandate a study longer than 10 years out but recognizes that a 15 year out study conducted to adress anticipated long lead time projects can be used to fufill the requirement of "Long-Term Planning Horizon". Paragraph 1692 of order 693 "directs the ERO to consider integrating Reliability Standards TPL-001-0 through TPL-004-0 into a single Reliability Standard through the Reliability Standards development process". In addition this order, in conjuction with 890, enumerates attributes of planning standards that the FERC feels should be incorporated into the consolidated standard. SDT believes that the first draft of the standard is consistent with orders 693 and 890 without being unduly burdensome. The SDT is cognizant that reasonal compliance measures and an achievable implemetation plan need to be developed as part of the standard development process. 18. The indicated language has been deleted from the second revision. 19. P1 - If service to Load by contract can be interrupted for defined conditions, then the SDT does not view this as firm. 20. The SDT has re-formatted the tables to clear up any confusion on this item. 21. The SDT followed the suggestion of FERC in Order 693 to consolidate the 4 standards into 1 if possible.			
Georgia Transm.	☑		R1.4: The planning assessment is to identify the needs of the BES. A spare equipment strategy should support the needs of the BES, not vice versa. Long-term outages need to be defined. R2.2.1 Not clear on the purpose of this requirement. Is the concern that the Planner perform a ten year analysis even when the in - service years are outside of the current ten-year planning horizon? The extension period should be defined. R3.2 Current models do not have the capability of performing the assessments necessary to meet this requirement.
Response: 1. The SDT has revised this requirement based on industry comments to clarify intent and to be responsive to FERC Order 693, paragraph 1725. 2. The SDT believes that the requirement as written is clear that studies longer than 10 years are only required if the known lead time of critical projects is longer than 10 years. The standard as written does not mandate a study longer than 10 years out but recognizes that a 15 year out study conducted to adress anticipated long lead time projects can be used to fufill the requirement of "Long-Term Planning Horizon".			

Q43			
Commenter	**Yes**	**No**	**Comment**
3. The SDT feels strongly that the assessment should be based on study of the System as it is expected to perform. The requirement that "Contingency analyses shall simulate the removal of all elements including those that System protection is expected to disconnect for each Contingency without operator intervention" is consistent with that philosophy. A Contingency modeling methodology that reflects how real Systems would operate will need to be constructed if it doesn't already exist.			
IESO	☑		(1) Pertaining to Q1 to Q11: we do not see the need to define this many terms for this standard. Many of the terms are easily understood and have been used in transmission planning for years that the majority of planners in the industry know what they mean. For example: base case, extreme contingencies (these are in fact listed in the table), planning assessment, planning event, etc. Furthermore, the terms plant stability and system stability are also well understood to mean "machine synchronism" and "system oscillation/damping". Among the proposed definitions, only the following terms need to be defined to add clarity: a. Consequential (and non-consequential) loss of load b. Long-term vs near-term (suggest to change it to short-term) planning horizons (2) We do not see the need to use the term RAS (Remedial Action Scheme). The term SPS (Special Protection System) is common used in the industry to generally mean any protection scheme that is designed to initiate actions to control flows, voltage, generation runback or high speed rejection, switching of shunt devices, cross-tripping in response to some pre-determined parameters such as loss of a circuit or some threshold voltage or line flow level. Introducing the term RAS would be confusing to suggest that they do not equate to or are not a part of the SPS. (3) We interpret the requirement stipulated in R1.1.1 is intended to enable more accurate simulations of load response - both in steady state and dynamic analyses. However, we do not support having this level of granularity (eg: industrial, commercial, residential etc.) stipulated in a planning assessment standard as similar requirements already exist in several MOD standards that deal with forecasted load and modeling. We suggest the mix of load detailed requirements be addressed in the latter set of standards. Similarly, R1.2 is best addressed in the MOD standards. Specific to R1.2, we do not agree with the requirement to provide supporting rationale that include power factor data based on historical System performance, validated by measurement during stressed System conditions, or documented Transmission planning area requirements. Load forecast data already provides projected mix of real and reactive demands and type of load. (4) R1.4 and R2.1.3 require outages be considered in the planning process. We suggest the SDT clearly stipulate that only known planned long term outages (with a minimum duration to be defined) need to be considered. This suggests is made on the basis that:

Q43			
Commenter	**Yes**	**No**	**Comment**
			- Only known outages should be modeled. The need to model unknown outages would render study scope to be too wide to manage - Only planned outages should be modeled for the same reason. - Only known planned outages > a certain period should be modeled since it would be unrealistic and unmanageable to model and propose planning solutions to system constraints that appear to last less than, say, 2 weeks. As a general practice, many planners apply a 4 week period as the minimum for inclusion in planning assessment. Without narrowing the scope, planning assessment will be an enormous task and difficult to manage.
Response: 1. The SDT deleted the Base Case definition in response to various comments. However, few if any other commenters suggested deleting the other terms proposed in this comment and several suggestions were received from various commenters to include additional definitions. Furthermore, various comments indicated lack of a consensus understanding of the Stability terms, prompting the SDT to retain and clarify the initially proposed definitions. 2. RAS and SPS are interchangeable terms as per the NERC Glossary. 3. The SDT believes that models must reflect the expected Load mix of industrial, commercial and residential Loads to correctly reflect the behavior of the System. The SDT believes some additional modeling requirements not presently contained in the MOD standards are necessary for Transmission planning purposes. The SDT has revised these requirements based on industry comments to eliminate redundancy with existing MOD standards with the intent that these requirements will be removed from the TPL standard when they are incorporated into the MOD standards at a later date. 4. The SDT intent was for the planner to model known planned outages. Sensitivities may be needed to confirm how much affect the duration of the known outage may have on the assessment. Requirement R1.4 which applies to the whole standard calls for "Known planned outages…"			
ISO/RTO	☑		
Response: Thank you.			
ITC	☑		1. A modeling issue that we would like to see standardized is the modeling of generation resources when the load exceeds or is very near the installed reserve level (low generation reserve margin). This would occur in future years when new resources are unknown or not announced yet. It is a concern of ours because we are an independent transmission company and are not always apprised of new resources. We also have a concern with some models which "assume" where new generation would be located or fake generation has been added to meet the load requirements. This can produce distorted transmission assessments because the generation location assumption is not firm. We would prefer to see generation scaling, or an assumption that the power will be imported or a combination of scaling and imports. Assuming 100% generator availability is also not a good assumption just to balance load and generation. Other modeling issues:

Q43			
Commenter	**Yes**	**No**	**Comment**
			2. Should not rely on a single generator being dispatched (redispatched) to solve a problem. 2. Using a single generator for redispatch should not be an acceptable corrective action (i.e. rely on a generator that might not be there or may take an extended period to start up). 3. Sensitivities for both the planning horizons should consider load forecast error and variability. You shouldn't just stick with one assumption, such as a 50/50 probability of occurrence. The system needs to be able to operate to loads exceeding 50/50 probability of occurance. 4. We would also like to see additional requirements be put on "corrective action" solutions to reliability violations resulting from planning assessments. Any corrective action should be restudied to insure that it does not cause other reliability problems for system conditions other than those for which the corrective action is intended to resolve. For example, if redispatch under a transmission outage condition is acceptable, it should not cause any additional reliability violations for the next contingency.
Response: 1. NERC Standards are to specify the requirements, which must be met and not "how" they are met. Whether a single generator can be used in a Corrective Action Plan would depend on whether the resultant Transmission System can meet the other requirements of NERC Reliability Standards. Therefore, when a single generator is used in a Corrective Action Plan, the System must also demonstrate that it can meet System performance requirements for loss of that generator. 2. NERC Standards are to specify the requirements, which must be met and not "how" they are met. Whether a single generator can be used in a Corrective Action Plan would depend on whether the resultant Transmission System can meet the other requirements of NERC Reliability Standards. Therefore, when a single generator is used in a Corrective Action Plan, the System must also demonstrate that it can meet System performance requirements for loss of that generator. If the generator is not yet on line, then additional sensitivity studies should be performed to cover the assumption that it may not be available. 3. The SDT is providing some guidance on what needs to be included in sensitivity studies while not being totally prescriptive. Due to the nature of future analysis, the SDT did not draft specific language to mandate Load growth be a sensitivity analysis for future assessments. Industry feedback is that future assessments already include a variation in projected Load growth. The standard does not preclude any entity from performing studies for any planning horizon that envolve a wide range of sensitivities. The specific requirement to perform re-test has been removed. 4. The SDT believes that as part of obtaining the appropriate corrective action, the solution is tested as part of the study to make sure it meets the performance requirements.			
JEA	☑		In reference to the use of Non-consequential load shedding under single contingency events: I do agree that long term plans should be implemented with the goal to eliminate non-consequential load shedding as a response to this failure mode. However, it may be more beneficial for investing in system improvements to reach this state of robustness where there may be a few years (or seasons) of potential exposure for utilizing non-consequential load shedding. This should be prudent utility practice as long as post-contingency response is executed within the time frame allowed by the

Q43			
Commenter	**Yes**	**No**	**Comment**
			facility emergency ratings and load shedding is limited to Transmission Provider's contracted or tarrif loads. For example, adding or upgrading transmission facilities into a load area where future generation additions are planned to be in-service within the short term horizon (mitigating thermal or voltage violations assessed under P1 and P4-1 through P4-4) would not be the best investment for the overall economic benefit of the bulk electric system.
Response: Draft 2 Changes for 300 kV and higher systems regarding N-1-1 conditions: Based on industry feedback the SDT has made changes in proposed Draft 2 requirements related to independent overlapping single Contingencies involving two non-generation Transmission Facilities operated at a voltage level above 300 kV. Draft 2 now permits the loss of Non-Consequential Load to meet the Transmission performance requirements for these types of events. Please refer to performance tables Planning Event P6. It is noted that in Draft 2 the SDT is still requiring more stringent performance requirements of the EHV Transmission for the less probable, but greater risk single Contingency events. Please refer to performance tables Planning Event P2 and note that bus section faults and internal breaker faults (non-Bus Tie) associated with above 300 kV Facilities are held to a higher performance standard than those operated at 300 kV or below.			
KCPL	☑		It is redundant to require provision of modeling data in this Standard. This is covered in Standards MOD 10, 12, 16-25.
Response: The SDT believes some additional modeling requirements not presently contained in the MOD standards are necessary for Transmission planning purposes. The SDT has revised these requirements based on industry comments to eliminate redundancy with existing MOD standards with the intent that these requirements will be removed from the TPL standard when they are incorporated into the MOD standards at a later date.			
LUS	☑		The Planning Authority/Transmission Planner should use valid acceptable assessments to plan their systems to operate and supply customer demand and Firm Transmission Service. If the Planning Authority/Transmission Planner determines other methods (such as operational guides) to resolve system overloads for "N-1 Contingency", the operational guides should be limited to only native network facilities that are in direct control and ownership of the Planning Authority/Transmission Planner. Operational guides should be considered only as short term solution to resolve the overloads and shall be used in all studies and approval for transmission service requests. If the operational guide do not completely resolve the overload or restricts access to transmission service, then the Planning Authority/Transmission Planner shall determine facilities to be constructed to resolve the overloaded or restricted facility.
Response: NERC Standards are to specify the requirements, which must be met and not "how" they are met. The draft standard does not preclude the use of operating solutions.			
LADWP	☑		This proposed standard is very tutorial in nature and far too prescriptive for a standard. A standard should be about what are the criteria and measurables, not about how to meet the criteria. This propsoed standard should also recognized that it is just a part of many standards being formulated by NERC, know its boundary as transmission planning standard, and not try to be an all

Q43			
Commenter	**Yes**	**No**	**Comment**
			encompassing standard for every facit of the power system. Do what we do best as transmission planner and not try to take over others like marketer, operator, generators, etc.
Response: The goal of the SDT is to provide more information but not be too prescriptive.			
LCRA	☑		1. The NERC PC and OC are currently working on a definiton that defines "adequate levels of reliability". The SDT should take this definition into consideration and ensure it is applied in the proposed NERC Std. revision. Along the same lines, if this has not been done yet, the SDT needs to consider the NERC "Reliability Criteria and Operating Limits Concepts" white paper and incorporate applicable elemetns of that white paper to the propsoed NERC Std. revision accordingly. It would not make sense for these (the propsoed NERC std. and the noted white paper to be inconsistent or at opposite ends in terms of what is expected of a reliability-based planned transmission system). other editorial comments: 2. R1. Delete one of the "each" 3. R1. Should state that data submittals should be "in accordance with regional procedures or process". This will eliminate the region getting data in all sorts of formats. 4. Table 1 - the allowance of loosing "consequential load" should be evaluated based on options to provide temporary emergency back-up support as well as size of load, for example. Structure failures can take an extended period of time to restore and can have significant impacts on a raial load that does not have remote or distribution back-up support. This performance requirment of transmisssion radial-supplied loads should be left to regions or to transmission owners/planners for their own areas based on specific area needs (type and size of load, back-up availbailiyt, etc.). 5. Table 1 - How does NERC define a "transmission circuit"? Does it include a sinlge transmission line as well as a double circuit transmission line? 6. Other than the probability of occurrence, what is the difference between a structure failure of a single circuit and a structure failure on a double circuit configuration? Why is a double circuit not considered a single contingency?
Response: 1. The SDT has reviewed the definition of adequate level of reliability and has included it in its deliberations. The SDT has reviewed the "Reliability Concepts" white paper and find that the document is largely consistent with the current standard as written by the SDT. One notable difference is that the white paper seems to indicate that the Transmission System is designed and operated so that cusomers should only be interrupted that are directly connected to the outaged element for events including Transmission line or transformer faults, breaker or switch failures, or generator trips. (See page 11 of the white paper.) If the SDT were to use this approach then SDT should not allow Non-Consequential Load Loss for P6.1 and P6.3, even though these breakers are below 300 kV.			

Q43			
Commenter	**Yes**	**No**	**Comment**
As indicated in the responses to other comments, the SDT has taken the position that the probability of the outage of one breaker is much lower than the probability of a single Transmission line outage. Therefore, the SDT has drafted the standard to permit loss of Non-Consequential firm Load or interruption of firm Transmission service for the loss of a lower voltage breaker. (The SDT does not permit the loss of Non-Consequential firm Load or interruption of firm Transmisssion service for the loss of a breaker above 300 kV.) The majority of the commenters in response to the first posting of the standard agreed with the SDT's approach in this regard. 2. Editorial change was made. 3. The SDT has revised this requirement based on industry comments to specify only that modeling data must be exchanged and allows entities to develop their own formats. It is beyond the scope of the standard to specify the process for data exchange. 4. The standard allows for loss of Consequential Load and does not address restoration requirements. 5. and 6. The Tables treat circuits differently if they share a common tower and they define the maximum length that a double circuit can still be treated as independent circuits as one mile.			
Manitoba Hydro	☑		1. MH would prefer that many of the categories in the existing Table 1 be retained. The SDT has resort the contingency buckets with no explanation as to how this was done. can the SDT provide statistical outage date to justify the changes. MH is not convinced the SDT has addressed the few confusioning issues in Table 1. 2. R1: MH does not believe R1 is required in this standard. The modelling standards should cover the requirement of the data owners to provide data to the PC. Further this data needs to be provided to the TP as well. 3. R1.4: requires planned outage data to be provided to planners. I do not believe this is a requirement for planning. It is not economic to add facilities to accommodate future planned outages. Secondly, the Table 1 multiple contingencies already mandate that planners consider the impacts of an outage with system adjustment followed by testing for the next contingency. 4. R1.5: requires the PC to define "planned facilities" which should be included in the model. This will lead to inconsistency in what is modelled, as experience has shown that there will be a wide range of assumptions in the definition. This standard should offer a definition for stakeholder debate. The SDT should clarify what is intended by including Protection System Equipment and control devices. 5. R2.1: It is not necessary to assess all five years of the near term planning horizon – year one, three and five will be more than sufficient. What is the reliability benefit driving the SDT to mandate each of the first five years be assessed? 6. R2.1.2 and R2.4.2 -- It is important to assess off peak loads with high simultaneous transfers as this is the period where extensive economic interchange occurs, and transient stability issues arise as less uneconomic peak units are off, leaving the load to be supplied by remote generation with reduced local reactive supply, voltage and damping control.

Q43			
Commenter	**Yes**	**No**	**Comment**
			7. R2.2: The long term assessment should also include an off peak case with simultaneous transfers to provide some indication if the system performance is expected to degrade. 8. R2.3: The short circuit study is a design issue that would more appropriately covered by a FAC standard. MH recommends it be removed from the Planning standard. 9. R2.6.1: Why would a past study be invalidated if there is a change in market structure? It would seem that the operation of any market would have to respect reliability criteria. 10. R.3.3.2.2: Curtailment of firm transfers is allowed as a system adjustment in the existing standard. This ability must be retained in the new standard. Curtailment of a firm transaction is not equivalent to curtailment of load, but is more comparable to runback/tripping of generators. Both are events that can be backed up by contingency reserves and do not result in consequential load loss. Disallowing firm transfer curtailment will result in numerous violations of the performance requirements and result in a requirement to build millions of dollars of transmission. MH can not accept a standard which mandates that firm transfers can not be curtialed following a contingency. 11. R3.3.3: If rationale for the contingencies selected for evaluation is available then this rationale will state why the selected contingencies are expected to be the most severe. The requirement does not need to state "and shall include an explanation of why the remaining Contingencies would produce less severe System resuts".This is redundant. 12. R3.4 and R4.5.2: Evaluating a change designed to mitigate the consequences of an exteme event can require significant work. Since there is no requirement to implement corrective plans for Extreme Events, what is the purpose of this evaluation? 13. R3.5: Generator tripping should be added in addition to runback. Generator tripping is used extensively in regions where remote generation is delivered via long transmission. 14. R6: Requires distribution of results and “coordinating analysis of these results through an open and transparent process”. Can the SDT clarify what the intent is? As written, it implies the PC/TP just shares assessment results with neighbours. There should be a requirement to conduct joint assessments on inter-regional transfer capability. The assessments should also be provided to the Regional Entities/NERC. Table 1 -Steady State Performance

Q43			
Commenter	**Yes**	**No**	**Comment**
			15. MH requests the SDT to provide rationale for how the planning events where resorted from the existing Table 1 Categories to the proposed Planned events. 16. Performance Requirements: As this is a steady state table, how does one assess if voltage instability, cascading outages or islanding occurs? "Simulate Normal Clearing unless otherwise specified." should be deleted from this Steady State Performance table. 17. This table should have an Initial Condition column as well as an Event column, as in Table 2. The wording of event descriptions in Table 1 should follow the wording of similar event descriptions in Table 2. 18. Event: What is a non-bus tie breaker? Is this any breaker that is not a bus tie breaker? 19. Interruption of Firm Transfer Allowed: Interruption of firm transfer should be allowed following a single contingency – this is a change from the existing standard where system adjustment after a Cat B event could include reduction of firm transfer. Similar to generation tripping/runback, the loss of a firm transaction does not result in Consequential load loss as it is backed up by contingency reserve. 20. P6-2: What is the justification for classifing a bipolar DC line loss as a single contingency? The existing standard classifies this event as a Cat C multiple contingency event. 21. P6-3: Why is a breaker internal fault classified as a single contingency? One would assume such a fault would be cleared by backup protection resulting in the loss of multiple elements. 22. P9-1: Is there any justification for the selection of one mile? Would the fact that there is line shielding be justification for increasing this length? A more reasonable selection could be 5% of the length of the longer of the two circuits. 23. P9-2: A monopolar DC line loss may be covered in P4-2 (and no non-consequential load loss is allowed). Does loss of a monopolar DC line refer to loss of a single pole of a bipolar line or a bipolar dc line? Can the PC/TP choose between the loss of a monopolar DC line and the loss of a bipolar DC line? 24. P9-3, P9-4 and P9-5: When the DC line loss is bipolar, the event should be moved to the extreme event category. Does loss of a monopolar DC line refer to loss of a single pole of a bipolar line or a bipolar dc line? Can the PC/TP choose between the loss of a monopolar DC line and the loss of a bipolar DC line?

Q43			
Commenter	Yes	No	Comment
			25. Exteme Events Evaluation Requirements 3: This should be removed as this is the Steady State Performance table. 26. Extreme Event Descriptions: How did the SDT determine what events should be classified as Extreme Events? Was statistical data analyzed? 27. Extreme Event 1: In the existing TPL standards, the simultaneous loss of two elements was considered a Cat C multiple element event. What is the SDT rational for the change? 28. Extreme Event 2c: Why is the loss of a single large load an Extreme Event? 29. Extreme Event 3f: This is a repeat of Extreme Event 3d. 30. Extreme Event 3g: What is the rationale for distinguishing between old vs. new design for the loss of multiple lines due to icing? Is the SDT implying that new lines must be desined to prevent multiple line loss due to icing? Table 2 - Stability Performance Table 31. Performance Requirements: The MRO adds 1/2 to 1 cycle to the Normal Clearing time during simluations as an additional safety margin. The SDT should consider enforcing this practice. 32. Event: What is a non-bus tie breaker? Is this any breaker that is not a bus tie breaker? 33. P1: There should be a P1-4 event for a shunt device (ie. "4. A shunt device (including FACTS devices)"). 34. P6-2: What is the justification for classifing a bipolar DC line loss as a single contingency? The existing standard classifies this event as a Cat C multiple contingency event. 35. P6-3: Why is a breaker internal fault classified as a single contingency? One would assume such a fault would be cleared by backup protection resulting in the loss of multiple elements. 36. P9-1: Is there any justification for the selection of one mile? Would the fact that there is line shielding be justification for increasing this length? A more reasonable selection could be 5% of the length of the longer of the two circuits. 37. P9-3: This contingency should be classified as an Extreme Event since statistically, the outage

Q43			
Commenter	**Yes**	**No**	**Comment**
			duration of a dc circuit (assume you mean a bipole) is less than 2 hours for MH bipoles, so the probability of a second outage is very low. . 38. P9-6: Isn't this the same as P1-3? If the outaged tranformer is replaced by a spare transformer, this restores the system to a normal state prior to the event ("Apply a P1.3 Contingency."). What is the point? 39. Note 1.a.i.: Planning Event P3.2 does not exist. 40. Note 1.a.ii: This definition of angular stability should be deleted and the definition in Note 1.a.i. should apply to all Planning Events. The system should not be considered to be angular stable when generators are pulling out of synchronism. 41. Note 1.a.iii.: This standard should define a minimum damping factor and allow the PC/TP to have a more restrictive damping requirement if they choose to.

Response: 1. The SDT looked at available historical, statistical data and used that data for guidance in re-ordering the table.
2. The SDT believes some additional modeling requirements not presently contained in the MOD standards are necessary for Transmission planning purposes. The SDT has revised these requirements based on industry comments to eliminate redundancy with existing MOD standards with the intent that these requirements will be removed from the TPL standard when they are incorporated into the MOD standards at a later date.
3. Planned outages that are long-term need to be provided to the planners in order for them to appropriately represent the topology of the system. This does not imply that one must build in order to accommodate a planned outage and to be responsive to FERC Order 693, paragraph 1725.
4. The referenced verbiage has been deleted from the revised standard.
5. Assessement does not mean that studies have to be run for each of the years, only for Year One or two and five for peak load and for any one of the 5 years for off-peak load. If no changes occurred between the years the assessment will be very simple. However, if the required Corrective Action Plan is delayed, or there is a long planned or forced outage to a major generation or Transmision Facility, or it is believed that some of the sensitivities may have to be addressed, etc., there may be a need to assess each of the years.
6. Agree if that is the case for your System. Each entity is responsible for demonstrating the appropriateness of the assumptions used in the current studies. To some entities this case may be their base case and others it may be a sensitivity case.
7. Requirement R2.2 requires as a minimum a peak load study for one of the 5 years in the Long-term horizon. This does not preclude any entity from running more studies, including for off-peak load conditions.
8. Actions listed in the Corrective Action Plan will more often than not result in higher fault, requiring the installation of even more additional equipment to accommodate the higher fault duty. This requirements ensures that the "entire" effect of the corrective action is captured in the plan. In addition by considering the "entire" effect of a proposed corrective action the entity may find it more economically to propose another action. Therefore, the SDT feels that this should be part of the Planning Assesment.
9. R2.6.1 - The SDT has revised R2.6.1 to delete the reference to market structure.

Q43			
Commenter	**Yes**	**No**	**Comment**
R2.6.1. For steady state, short circuit, or System Stability analysis: ~~if the study is less than three years old and no material changes have occurred to the System in the intervening period. Material changes include topology changes, generation additions/removals, and market structure changes~~ the study shall be five calendar years old or less. 10. Curtailment of firm transfers is allowed for some specific Contingencies in compliance with FERC Order 693. 11. R3.3.3 - The SDT recognizes some may consider these words redundant. However, it should be noted that many commenters have asked for the SDT to add words to make other requirements perfectly clear. Since these words do not hurt the requirement and may help some to better understand the requirement, the SDT has not deleted these words. 12. As noted in Requirements R3.4 and R5.7.6, there is an expectation that facilities are designed to reduce or mitigate the likelihood of Extreme Event situations that expose the System to cascading events. 13. This has been added. **R3.5** Manual and automatic generation run-back/tripping is allowed as a response to a single ~~and~~ or multiple Contingenc~~ies~~y ~~as long as Facility Ratings are not exceeded.~~if the following conditions are met: 14. R6 - By meeting this requirement for "coordinating analysis of these results through an open and transparent process", the SDT meant a stakeholder process that was set up to meet the requirements of FERC Order No. 890 with regard to an Attachment K filing of a Transmission Provider's Transmission Planning Process. The SDT has made a change to clarify this requirement (see R8 in draft 2). **R8**. Each Planning Coordinator shall coordinate the distribution of Planning Assessment results among ~~affected entities~~ neighboring systems, coordinating analysis of these results through an open and transparent peer review process such as described in FERC Order 890. 15. The SDT reviewed each planning event considering the likelihood of the event, the potential outcome of the event and the directives from FERC concerning loss of Non-Consequential Load and determined the expected performance for each event. Then, the SDT re-ordered the events and grouped them by the type of outage and the expected outcomes. Performance requirements: 16. The SDT has reviewed and revised Tables 1 & 2. In the steady state time frame, voltage instability can occur typically during high power transfer and/or peak demand periods. Voltage instability can be assessed using a long-term Stability program. However, it can also be assessed using a power flow program that simulates governor action. There are a number of IEEE papers (e.g., G. Morison, B. Gao, and P. Kundur, "Voltage stability analysis using static and dynamic approaches," IEEE Transactions on Power Systems, vol. 8, no. 3, pp. 1159 – 1171, August 1993) that can provide suggestions on the methodology. Cascading outages and uncontrolled islanding can also occur, for example, when the Transmission Facilities load beyond the corresponding relay trip settings. This could cause uncontrolled tripping of Transmission Facilities beyond those required to clear the fault. Even though these events are rare, the Transmission Planner should be aware of their possibility when performing studies. The SDT did not change Table 1 to remove "Normal Clearing" because depending on the bus configuration, delayed clearing would result in removing more Facilities from service than normal clearing in the steady state post-Contingency period. 17. The SDT has revised Tables 1 & 2 accordingly.			

Q43			
Commenter	Yes	No	Comment
18. The SDT has accordingly proposed a definition for Bus-tie Breaker. **Bus-tie Breaker:** A circuit breaker that is positioned to connect two individual straight bus substation configurations. (Substation configurations such as ring-bus, breaker-and-a-half, or double bus-double breaker protection schemes do not use bus-tie breakers.) 19. The SDT has reviewed and revised Tables 1 & 2. "Firm Transfer" has been replaced with "Firm Transmission Service". 20. P6.2 - The SDT has reviewed and revised Tables 1 & 2. 21. P6.3 - It is true that multiple elements are impacted, but it is still a single Contingency event. 22. P9.1 - The one mile allows for some measurable physical constraints to building separate lines in all locations, but limits the exposure to a fixed length, which is universally applicable. A percentage doesn't provide the same limitation and consistency. 23. It refers to the loss of a monopolar DC line or one pole of a bipolar DC line. 24. P9.3, P9.4, and P9.5 - The SDT feels that the loss of a bipolar DC line is a multiple Contingency Planning Event. The tables have been revised to provide clarity. 25. Extreme Events 3 - The SDT has revised Extreme Events in Tables 1 & 2 and to comply with FERC Order 693. 26. Extreme Event Descriptions - The analysis of Extreme Events is an effort to assess potential impact of plausible but unlikely events. The selection of events is deterministic, not probabilistic. The SDT also notes that in Order No. 693, paragraph 1834, the FERC gave examples of Extreme Events that the FERC would expect to see in the revised standard. These examples are consistent with the items that the SDT included in the standard as examples of Extreme Events to be considered. For example, paragraph 1834 includes "(1) loss of a large gas pipeline into a region or multiple regions that have significant gas-fired Generation; (2) a successful cyber attack; (3) regulation that restricts or eliminates the use of a river or lake or other body of water as the cooling source for generation; (4) tornado or wildfire, or other event and (5) the loss of older transmission lines, which may not be constructed to meet an entity's present radial ice loading requirements…" In paragraph 1834, the FERC directs NERC to expand the list of events with examples such as those described in the paragraph. 27. Extreme Event 1 - In the existing Table 1 the non-simultaneous loss of two unrelated elements with System adjustment in between is in Category C3, the simultaneous loss of two circuits on a common structure is in Category C5. In the proposed standard Table 1, Extreme Event 1 covers loss of two unrelated elements with no System adjustment in between. If the reference is to a single Contingency, then the focus should be on the Contingency rather than the number of elements affected by the Contingency. 28. Extreme Event 2c - Event 2c is the loss of a station. Event 2e is the loss of Load. The loss of a single large Load or major Load center assumes that multiple events need to occur to realize this level of impact. 29. Extreme Event 3f - The SDT has reviewed and revised Tables 1 & 2. 30. Extreme Event 3g - The issue reflects the exposure during a period where an entity is taking older lines out of service to rebuild them to newer design standards. 31. The SDT has reviewed this requirement and has determined that at this time this is not appropriate for a North American standard. 32. The SDT has provided a definition of a Bus-tie Breaker. 33. Shunt devices have been added to the table. 34. This is now listed as a multiple Contingency (P7). 35. The table has been re-done to emphasize that you need to study events and not just single pieces of equipment. 36. One mile was based on the SDT's review and understanding of existing conditions. 37. The SDT has revised the table (P6) to make it clear that this is for a single pole.			

Q43			
Commenter	**Yes**	**No**	**Comment**
38. The language referring to a spare transformer has been deleted form the table. 39. Editorial error has been corrected. 40. The SDT has reviewed the definition of angular Stability and feels that it is appropriate. 41. The SDT has reviewed this requirement and has determined that at this time this is not appropriate for a North American standard.			
MEAG Power	☑		To the extent that the new standard is more stringent, additional time should be allowed to implement the corrective action plan, with fines suspended until reasonable time has passed to allow implementation. I.E., If the solution is 20 miles of new 500 kV T/L, then allowing fines to the short-term horizon is unreasonable – building 20 miles of 500 kV T/L is not possible in 2 or 3 years.
Response: The SDT understands that there are extended transitionary issues associated with responsible entities becoming compliant with the new standard. The SDT plans to draft an extended implementation plan to accommodate such issues. The plan will be provided for the third posting of the standard.			
MISO	☑		The Midwest ISO appreciates the opportunity to offer the following recommendations: 1. Requirements for providing modeling data in R1. are redundant with the exising requirements of MOD-010-0, MOD-012-0, and MOD-016-0 through MOD-025-1. Adding these requirements to the TPL Standard is unnecessary and may create confusion. 2. The Standard does not address the return of direct (consequential) load loss following a contingent event. How long of an outage event acceptable?
Response: 1. The SDT believes some additional modeling requirements not presently contained in the MOD standards are necessary for Transmission planning purposes. The SDT has revised these requirements based on industry comments to eliminate redundancy with existing MOD standards with the intent that these requirements will be removed from the TPL standard when they are incorporated into the MOD standards at a later date. 2. The proposed TPL-001-1 standard does not place a limit on the amount of Consequential Load Loss or the outage duration. In Requirement R3.3.2.1 the Consequential Load loss (expected maximum demand and expected duration) following a single Contingency shall be identified in the Planning Assessment. The SDT believes it is first necessary to obtain data on these items to allow comparison of similar sized Systems and it drives transparancey to expected outcomes.			
MRO	☑		The MRO commends the SDT on the difficult task of rewriting some of the most important NERC standards: the TPL standards. The MRO has a number of comments and suggestions. 1. Load modeling data in R1.1 and R1.2 do not belong in the TPL standards. It should be provided for in the MOD standards which provide the numerous load model data requirements. At a minimum, R1.2 should be revised to only require documentation of stressed system conditions. It is unnecessary and micro management to provide for "measurement during stressed System conditions". Further, it is unusual standards drafting to provide for a measurement of load in an assessment standard. 2. R1.4 should be revised to separate "known planned outages" from the rest of the requirement in

Q43			
Commenter	**Yes**	**No**	**Comment**
			separate sentences. This is because the reference to spare equipment outages does not have any bearing on the "known planned outages" requirement. Further the consideration of spare equipment strategy is not explained enough to understand what is required here. Further it is not clear as to what equipment must have consideration of spare equipment. The MRO recommends that R1.4 be rewritten as follows: "Known planned outages. Long-term forced outages for transformers with low-side voltages of 100 kV and above and generator step-up transformers should be identified where lack of spare transformers could result in outages of the transformers over the annual peak demand hour." 3. It is unreasonable for R1.5 to provide that planned facilities that are included in System Assessments include circuit breakers, and protection system equipment. These two items should be dropped from R1.5 since these are engineering details that are typically not available at the time that the System Assessment is made. 4. R.2.1.1 - The system peak load study requirements for studies for two of the near-term period seems to be excessive. The MRO recommends that only one year in the near-term period be required. 5. R2.6 should be deleted. The MRO believes that R2.1 and R2.4 are sufficient in describing when current studies are required. R2.6 will result in unnecessary restudy of the system. Alternatively, if R2.6 is kept, then the requirement should be a performance requirement, that as long as material changes do not require restudy then restudy is not required. The Transmission Planner and Planning Coordinator could be required to document why restudy is not required. Material changes should be expanded to refer to only those "significant" transmission line additions or generator additions. 6. R2.71 should be revised to delete "including the duration of interim Operating Procedures" or else the SDT should explain what is meant by this with additional information about what interim Operating Procedures are. 7. R2.7.1.1. should be revised to delete the requirement for project initiation date. This information is not typically available at the time of performing a System Assessment since this is detailed engineering information not pertinent to planning. 8. R2.7.5 should be deleted. The MRO believes the such detailed review of the status of the installation of projects to be beyond the scope of the TPL standard. Since NERC has no authority to require the installation of facilities, how does NERC have authority to require a review of the status of such facilities?

Q43			
Commenter	**Yes**	**No**	**Comment**
			9. R3.2.1 and R3.2.2 seem unnecessary details that are micro-management of the planning process. Both requirements could be met by the transmission planner and planning coordinator with general statements of little value. Also, relay loadability is included in facility ratings and does not need to be covered in TPL. 10. In Table 1, "a shunt device (including FACTS devices)" is too general. Arresters and potential devices for metering and relaying are shunt devices. This should be changed to a specific listing such as: transmission capacitors (100 kV and above), transmission reactors (100 kV and above), …" and whatever other devices that the SDT intends to be included here. 11. In Table 1, Single pole of DC line should be moved to P1. 12. In both tables, "monopolar DC line" should be replaced with a "single pole of a DC line". 13. The revised tables are confusing in descriptions of various outages particularly since the interconnected transmission system has been planned for the past decade using the previous Table I. The SDT should limit its changes to Table I to a limited number of changes that have been known to cause issues in the past rather than raising the bar in a number of cases. 14. The Extreme Event descriptions in Table 1 should be revised to provide definitions of local area and wide area. 3 d. (3f.) and 3 c. (3 e.) are duplicates and should be combined. Wide area events as listed are such unusual events, which are difficult to analyze or model. The requirement should provide that the number of these wide area events to be studied is limited to a minimum of one. 15. The MRO does not believe that contingency reserve is necessarily synonymous with spinning reserve. The SDT should clarify note ii to Table 2. 16. The SDT should clarify the wording in the tables to better explain the events which are either above or below 300 kV. For example, in P5 change 1. IS IT "A Transmission circuit followed by a System adjustment above 300 kV followed by the loss of another Transmission circuit above 300 kV." or is it "A Transmission circuit followed by another Transmission circuit resulting in impacts on 300 kV facilities"? P5 3. should be revised to say, "A transformer with a low side voltage rating above 300 kV followed by a System adjustment followed by the loss of another transformer with low side voltage rating above 300 kV." or is it "A transformer followed by the loss of another transformer resulting in impacts on 300 kV facilities."

Q43			
Commenter	**Yes**	**No**	**Comment**
			17. R2.1.3 - R2.1.3 reguires sensitivity studies that involve many potential scenarios that would be difficult to create in a Planning Assessment. Planners can not model the unknown and to assume the unknown may be a difficult task to complete. Instead of "shall be run and", the language should be "shall be considered based on current knowledge of system including" 18. Extreme Events description for common right-of-way should be defined. Does this include line crossing points? Suggest exclusion for corridors one mile or less similar to P9.1. 19. The language description of the even should be substantially the same between Table 1 and Table 2. Table 2 format is a bit cleaner with initial condition and event separated. Table 1 should follow this format. 20. The loss of a shunt device (e.g. SVC) should be added to Table 2 (P1.4). 21. Note 1ai. to Table 2 refers to event P3.2 which doesn't exist in the Table 2. 22. Note 1aii. to Table 2 allows generating units to "cascade trip" for certain events that were this would not be allowed in the existing TPL standards. The MRO recommends that the more of the events be listed in 1ai. so as to at least maintain reliability. 23. Note 1aiii talks about acceptable damping. NERC should have a standard requiring development and documentation of damping criteria by the planning coordinator. 24. P9 should be changed from referring to a monopolar or bipolar dc line to a single pole of a DC line. THE FOLLOWING ARE RON MAZUR'S COMMENTS. 25. The MRO does not believe R1 is required in this standard. The modelling standards should cover the requirement of the data owners to provide data to the PC. Further this data needs to be provided to the TP as well. 26. R1.4: requires planned outage data to be provided to planners. The MRO does not believe this is a requirement for planning. It is not economic to add facilities to accommodate future planned outages. Secondly, the Table 1 multiple contingencies already mandate that planners consider the

Q43			
Commenter	**Yes**	**No**	**Comment**
			impacts of an outage with system adjustment followed by testing for the next contingency. 27. R1.5: requires the PC to define "planned facilities" which should be included in the model. This will lead to inconsistency what is modelled, as experience has shown that there will be a wide range of assumptions in the definition. This standard should offer a definition for stakeholder debate. The SDT should clarify what is intended by including Protection System Equipment and control devices. 28. R2: The SDT should define the elements of an acceptable assessment in more detail. 29. The MRO recommends that the need to assess Plant Stability be removed from this standard. The generator connection standard and the proforma tariff interconnection process ensure the plant stability meets performance requirements. The System Assessment provides an overall assessment of the integrated system performance, which includes the impact of the plant. This requirement appears to be redundant. 30. R2.1: It is important to assess off peak loads with high simultaneous transfers as this is the period where extensive economic interchange occurs, and transient stability issues arise as less uneconomic peak units are off, leaving the load to be supplied by remote generation with reduced local reactive supply, voltage and damping control. 31. R2.1.3: The requirement for sensitivity cases is excellent. The SDT should consider: R.2.1.3.1: separate real MW load variation and Power Factor variation R.2.1.3.2: clarify the intent of modification of expected transfers. Does this apply to firm transfers only, or does it also encompass non-firm transfers. ..R.2.1.3.4: Instead of a sensitivity, the reactive devices should be included in the Table 1 &2 contingencies. If the intent is to investigate robustness to voltage instability, the SDT should clarify. R.2.1.3.5: Generation additions/retirements should be removed as this is covered, or should be, by the interconnection standards. The SDT should clarify.the need for generation additions/retirement. 32. R2.2: The long term assessment should also include an off peak case with simultaneous transfers to provide some indication if the system performance is expected to degrade. 33. R2.3: The short circuit study is not a reliability assessment issue but a design issue that is more appropriately covered by a Facility Rating Standard. The time required to conduct and report on this analysis in an assessment is better spent on more contingency or sensitivity analysis. 34..R2.4: Similar to the comment on R2.1,. It is important to assess off peak loads with high simultaneous transfers as this is the period where extensive economic interchange occurs, and

Q43			
Commenter	**Yes**	**No**	**Comment**
			transient stability issues arise as less uneconomic peak units are off, leaving the load to be supplied by remote generation with reduced local reactive supply, voltage and damping control. 35. R2.4.1: Should be clarified to limit the detailed modeling to local areas where the planner expects an emerging voltage recovery issue due to unusually high concentration of induction motor load. This is a local issue, and a bulk system reliability issue that is imposed system wide. The MRO believes this should be moved to the sensitivity case requirements R2.4.3. 36. R2.4.3: Sensitivity Case requirements should mirror the steady state comments, subject to the suggestion provided above for R2.1.3. That is: ..R.2.4.3.1: should also include power factor variation (actually a separate requirement) as in the stability world, the dynamic modelling of load has a significant influence in meeting transient performance requirements. R.2.4.3.2: I agree it should simultaneous non-firm transfers. This should be applied to the steady state sensitivity as well (see R.2.1.3.2). ..R.2.4.3.3: delete ..R.2.4.3.4: Needs to be clarified. See R.2.1.3.4. . R.2.4.3.5: see R.2.1.3.5 37. R2.5: Plant stability analysis should be deleted. 38. R2.6.1: Nowhere else in the standard is there a requirement to assess reliability impacts of market structure changes, so why would a study become invalidated if there is a change in market structure. It would seem to me that the operation of any market would have to respect the reliability criteria. 39. R2.7: Corrective Action Plans: Is the intent that corrective action plans also address issues raised by the sensitivity studies. The MRO argument would be that it should not be mandated. The plans are developed to meet base case needs which are based on expected load forecasts, transfers, etc. Sensitivity studies are done to measure the robustness of the base case plan. It should be left up to the Planner to decide if the plan is adequate based on the likelihood of the scenario studied, even if the sensitivity analysis shows some performance violations. 40 Also, if rationale is provided for contingencies selected as they are expected to be most severe, then by default those not selected are less severe. Why is there a requirement to explain why you did not select a contingency. 41. R3.4: Requires extra analysis compared to TPL-004-0. Developing mitigation for Extreme Events

Q43			
Commenter	**Yes**	**No**	**Comment**
			can require significant work. Since there is no requirement to implement corrective plans for Extreme Events, what is the purpose? 42. R3.5: Generator tripping should be added in addition to runback. Generator tripping is used extensively in regions where remote generation is delivered via long transmission. Generator tripping should be an available option for the planner to use as opposed to requiring justification as a regional difference. 43. R4: The requirement to assess Plant stability is redundant as this is assessed as part of the generator interconnection. It should be deleted. 44. R4.5.2: The MRO disagrees on the need to define mitigation for Extreme Events. 45. R4.6: Should be deleted. 46. R6: Requires distribution of results and "coordinating analysis of these results through an open and transparent process". Can the SDT clarify what the intent is? As written, it implies the PC/TP just shares assessment results with neighbours. The MRO believes there should be a requirement to conduct joint assessments on inter-regional transfer capability. 47. Table 1 Performance Requirements: • As this is a steady state table, how does one assess if voltage instability, cascading outages or islanding occurs? • Generator tripping for single contingencies should be added to the allowable actions. • How did the SDT classify which event was single contingency vs. multiple contingency vs. extreme? Was statistical data analysed? • What is a non-bus tie breaker? Is this any breaker that is not a bus tie breaker? • Event P2-3 should be relocated to the P1 event category. • What is the SDT rationale for defining bus faults >300 k as single contingency events? Is there any statistical dat to warrant this extra requirement? Now a Cat C? Since little load is served off >300 kV it may be a moot point. • P6 single contingency: What is the justification for classify P6-2, a bipolar dc loss as a single contingency? The existing standard classifies this event as a Cat C multiple contingency event? • P6-3: Why is a breaker fault classified as a single contingency? One would assume such a fault would be cleared by backup protection resulting in the loss of multiple elements? • P9-1; Is there any justification for selection of one mile? Can it be two miles? More? Why not no more than 5% of line length? Would the fact that there is line shielding be justification for

Q43			
Commenter	**Yes**	**No**	**Comment**
			increased length? 48. Extreme Events • Event 3.g: what is the rationale for distinguishing between old vs. new design for the loss of multiple lines due to icing? Is the SDT implying that new lines must be designed to prevent multiple line loss due to icing? 49. Table 2 Stability Performance • MRO Comments on Table one for the same contingencies should also be applied here. 50. P6-2 should be a multiple contingency, as it is in the existing TPL standards. 51. P9-3: should be an extreme event. 52. P9-6: Please clarify the requirement to indicate that it relates to long lead times. 53. The definition for Angular Stability should be modified to allow planned tripping of a generator following a line trip. Why are generators allowed to pull out of synchronism for other planning events? This is cascading. The SDT should clarify if they are refering to local or regional damping modes in 1.a.iii.

Response: 1. The SDT believes some additional modeling requirements not presently contained in the MOD standards are necessary for Transmission planning purposes. The SDT has revised these requirements based on industry comments to eliminate redundancy with existing MOD standards with the intent that these requirements will be removed from the TPL standard when they are incorporated into the MOD standards at a later date.
2. The SDT has revised this requirement based on industry comments to clarify the intent that *known* planned outages and long-term outages for Transmission equipment, including the impact of spare equipment strategy, be considered, and to be responsive to FERC Order 693, paragraph 1725.
3. The SDT does not agree. The SDT believes circuit breakers and protective equipment should be considered when developing criteria since these can affect System performance.
4. The SDT feels that requirement to run a peak load study for two of the years in the Near-Term Horizon is a minimum required for an adequate Planning Assessment. The SDT felt that the Year One or two study should provide operations with the best information to transition to the operating horizon. The year five planning study is the first near term study from the long term set. Five years is a short time if unexpected new facilities are required.
5. R2.6 - The SDT has revised this requirement in response to the numerous comments received.

R2.6.1. For steady state, short circuit, or System Stability analysis: ~~if the study is less than three years old and no material changes have occurred to the System in the intervening period. Material changes include topology changes, generation additions/removals, and market~~

Q43			
Commenter	Yes	No	Comment
~~structure changes~~ the study shall be five calendar years old or less. **R2.6.2**. For steady state, short circuit ~~analysis~~, Generating Plant Stability, or System Stability analysis: ~~if the study is less than five years old and no material changes have occurred to the System in the intervening period.~~ the study shall not include any material changes, such as, generation or Transmission additions/removals, or topology changes that have occurred in the intervening period and would impact the study area. **R2.6.3**. ~~For plant and System Stability analysis: until material changes in the System make the study no longer valid. Material changes in the system include the addition of a Transmission Line or a generator.~~ 6. Interim Operating Procedure is required to ensure that the all the performance requriements in Table 1 and Table 2 are met. It could include SPSs, pre-Contingency interruption of non-firm Loads, uneconomic generation dispatch, etc. The SDT recgnizes that this is a temporary measure until a permanent solution is put in place and that is why its duration is required. 7. Requirement R8 (old Requirement R6) which focuses on the distribution of the Planning Assessment results among affected entities was specifically added to allow some level of peer review and provide some level of confidence that the proposed plan could in fact be completed to meet the reliability objective. Requirement R2.7.1.1 is complementary to Requirement R8 (old Requirement R6) Initiation dates are only required in the near term since longer term plans tend to move in time and only have general scheduling associated with them. Typically the date would indicate when significant resources will begin to be employed. This covers any project proposed for the near term. The SDT continues to believe that by providing the expected project intiation date of System improvements provides useful information to neighboring entities. The SDT believes that initiation dates are required for near-term corrective action plans to give an indication that the corrective action plans can be implemented in time. 8. The standard requires that the identified future deficiencies be addressed by the Corrective Action Plan. The standard does not prescribe what this plan should be but entities have to demonstrate that the Corrective Action Plan or its alternatives will in fact be implemented in time to address the identified deficiencies. If the parts or all of the Corrective Action Plan turns out to be unrealistic due to something like a regulatory order, you still need to meet the performance requirements and a revised or new Corrective Action Plan that meets the performance requirements will need to be developed. The determination of when to update the Corrective Action Plan is based on good engineering judgment. 9. R3.2.1 & R3.2.2 - The SDT has received numerous comments in support of these requirements. Requirements R3.2.1 and R3.2.2 are included to provide clarity on simulations in response to FERC Order 693. Relay Loadability is included to provide the connection between facility ratings and planning studies. The SDT has not made changes in response to this comment. 10. The SDT has revised the table references to shunt Contingency events and removed the paranthetical reference to FACTS devices. The SDT believes it is more appropriate to leave the event more general based on the difficulty of maintaining an up to date reference to emerging technologies. 11. The SDT concurs with your observation. We have made several changes to the performance table organization based on industry input. The single pole DC outage is now reflected as a P1 Planning Event. 12. The SDT concurs with your feedback and the suggested change has been made in Tables 1 and 2. 13. The SDT has completely reformatted the performance tables in Draft 2 of the TPL-001-1 standard. The new format more closely mimics the existing approved TPL standard Table 1, with enhancements the SDT feels the industry will find valuable. The SDT has responded to industry comments regarding higher performance requirements for Facilities above 300 kV and has adjusted requirements for N-1-1 non-generator outages to permit Non-Consequential Load shed post-Contingency following the second event. The SDT has retained a higher			

Q43			
Commenter	Yes	No	Comment
expectation for certain N-1 Contingencies occuring on the EHV System. See the Summary Considerations in Q20 through Q23 for additional information. The SDT believes that this approach is consistent with FERC Order 693. 14. The SDT has revised the Extreme Event references and has removed the duplications you reference. The reference to local and wide area events has been retained as we did not receive a significant amount of comments opposing its use and it seems to be generally understood that local are extreme Contingencies eminating from a single location (substation, plant or ROW), whereas the wide area tend to cover a much larger landscape due to a natural disaster or cyber attack. The TP is given flexibility in which Extreme Events it wishes to cover, see Requirement R3.4. 15. The SDT agrees and has revised the note accordingly. 16. The SDT has completely reformatted the performance tables in Draft 2 of the TPL-001-1 standard based on feedback from the industry and input from SDT members. The new format more closely mimics the existing approved TPL standard Table 1, with enhancements the SDT feels the industry will find valuable. The SDT believes the new format will more closely meet your needs. 17. The SDT is providing some guidance on what needs to be included in sensitivity studies while not being totally prescriptive. Requirements R2.1.3 and R2.4.3 have been modified to require documentation of why the listed sensitivities were or were not selected for specific studies. Requirements R2.1.4 and R2.4.4 have been added to specifically state that the entity may consider additional sensitivities that are appropriate for its own system. The sensitivity studies do not in themselves establish the need for a plan, only the areas of the system for which the analysis is needed. **R2.1.3.** For each of the studies described in Requirement R2.1.1 and Requirement R2.1.2, sensitivity case(s) that stress the System with sensitivities that reflect one or more of the following conditions shall be run and documentation ~~with~~ of the technical rationale for ~~the selected sensitivity(ies)~~ why each of the conditions was or was not selected shall be supplied: **R2.1.4**. In addition to those sensitivities mentioned in Requirement R2.1.3, any other sensitivities, as deemed appropriate by the Transmission Planner or Planning Coordinator for their individual systems, shall be run and documentation of the technical rationale for why each was selected shall be supplied. **R2.4.3**. For each of the studies described in Requirement R2.4.1 and Requirement R2.4.2, ~~S~~sensitivity case(s) that stress the System to reflect one or more of the following conditions shall be run ~~with documentation provided explaining the rationale for the selected sensitivity(ies)~~ and documentation of the technical rationale for why each of the conditions was or was not selected shall be supplied: **R2.4.4**. In addition to those sensitivities mentioned in Requirement R2.4.3, any other sensitivity, as deemed appropriate by the Transmission Planner or Planning Coordinator for their individual systems, shall be run and documentation of the technical rationale for why each was selected shall be supplied. P5.3 - The table format has been revised for clarity. We have added notes at the end of each table to clarify when a transformer is considered EHV (above 300 kV) or a BES transformer below the EHV level. 18. Tables 1 and 2 have been revised to bring greater clarity. 19. The SDT revised the performance Tables 1 and 2 for clarity based on industry feedback. The SDT has included the initial condition column in each and the events correlate one to one in both tables.			

Q43			
Commenter	Yes	No	Comment
20. The single Contingency loss of a shunt device is now included as Planning Event P1.4 in Tables 1 and 2. 21. The SDT has corrected the problem in Table 2. 22. The SDT believes that we are not reducing the reliability of the System as compared to the existing standards. 23. The SDT has reviewed this requirement and has determined that at this time this is not appropriate for a North American standard. 24. Tables 1 and 2 have been revised to include a variety of new improvements. The reference to monopolar is now "single pole of a DC line". The SDT has however retained a bipolar DC line outage; see Planning Event P7.2. 25. The SDT believes some additional modeling requirements not presently contained in the MOD standards are necessary for Transmission planning purposes. The SDT has revised these requirements based on industry comments to eliminate redundancy with existing MOD standards with the intent that these requirements will be removed from the TPL standard when they are incorporated into the MOD standards at a later date. 26. The SDT has revised this requirement based on industry comments to clarify the intent that *known* planned outages and long-term outages for Transmission equipment, including the impact of spare equipment strategy, be considered, and to be responsive to FERC Order 693, paragraph 1725. 27. The requirement for the PC to define planned Facilities has been deleted from the revised standard. The SDT did not receive many requests for additional clarification of Protection System equipment and control devices and therefore did not revise the standard to address this concern. 28. The SDT has modified the assessment language dealing with steady state analysis in Requirement R2.1 to better define those requirements along with adding Requirement R2.1.4 to allow any additional sensitivities to be run that may be deemed necessary. In addition, Requirement R2.2 has been revised to specifically address steady state analysis: Requirements R2.4 and R2.5 have had many changes to better address the Stability portion of the assessment, Requirement R2.6 better details what past studies may be used in the Planning Assessment, and Requirement R2.7 better addresses Corrective Action Plans and System deficiencies. The SDT believes that all these changes result in better defined portions of the Planning Assessment. **R2.1**. ~~The steady state portion of~~ The Near-Term Transmission Planning Horizon ~~Planning Assessment~~ portion of the steady state analysis shall ~~address all five years of the assessment period~~ be assessed annually and be supported at a minimum by the following annual current studies, supplemented with qualified past studies as ~~shown~~ indicated in Requirement R2.6: **R2.1.4**. In addition to those sensitivities mentioned in Requirement R2.1.3, any other sensitivities, as deemed appropriate by the Transmission Planner or Planning Coordinator for their individual systems, shall be run and documentation of the technical rationale for why each was selected shall be supplied. **R2.7**. For Planning Events shown in Table 1 – Steady State Performance and Table 2 – Stability Performance, when the analysis indicates an inability of the System to meet the performance requirements in the tables, the Planning Assessment shall include Corrective Action Plans addressing how the performance requirements will be met. Revisions to the Corrective Action Plans are allowed ~~over time~~ in subsequent assessments but the System shall continue to meet the performance requirements in the tables. ~~Such plans shall:~~ Corrective Action Plans do not need to be developed solely to meet the performance requirements for sensitivities. The Corrective Action Plan shall: 29. The SDT has reviewed the need for Plant Stability and has concluded that it is appropriate to include it in this standard. It also felt that			

Q43			
Commenter	Yes	No	Comment
			this was responsive to FERC Order 693. 30. Requirement R2.2 requires as a minimum a peak load study for one of the 5 years in the Near-Term Horizon. This does not preclude any entity from running more studies, including for off-peak load conditions. 31. The standard is providing some guidance on what needs to be included in sensitivity studies without being totally prescriptive. In response to some comments, the standard was modified to clarify the language to state that at least one of the sensitivities listed in Requirements R2.1.3 and R2.4.3 should be studied and reasons be given for not studying the other ones. Furthermore, the standard also allows for entities to study sensitivity not included on the list that are more appropriate for their respective systems. 32. R2.2 - The Draft 2 version remains unchanged in regard to your comment. There was no overwhelming response from industry that compelled the SDT to make the change proposed. The standard requires off-peak analysis for near-term. In the long-term Requirement R2.2 states "…at a minimum, a current System peak Load study is required annually." This requirement is to capture long lead-time events for peak-Load periods. The peak system is typically the more troublesome period for most planners as Loads are higher and Facility Ratings are lower. Your concern is valid that in the off-peak, transfers across a system can be elevated and it is expected that if a particular System is subject to heavy transfers that a prudent Transmission planner would cover such situations based on their own identified need through sensitivity studies. Howver, such off-peak anlysis is not mandated by the standard for the Long-Term Planning Horizon. 33. R2.3 - The SDT respectfully disagrees and believes that the requirement for short circuit analysis is an improvement and covers a gap in the existing Transmission planning standards. It is essesntial that as System changes are introduced that increase the strength of the System and result in increase short-circuit fault currents, that the Transmission planner not simply look at steady-state Facility Ratings but also consider the short-circuit as well. Having steady-state, short-circuit and Stability in a single cohesive standard ensures that the Transmission planning engineer is evaluating all aspects of proposed changes to the System. 34. R2.4 - The Draft 2 version remains unchanged in regard to your comment. There was no overwhelming response from industry that compelled the SDT to make the change proposed. The standard requires off-peak analysis for near-term. In the long-term Requirement R2.2 states "…at a minimum, a current System peak Load study is required annually." This requirement is to capture long lead-time events for peak-Load periods. The peak system is typically the more troublesome period for most planners as Loads are higher and Facility Ratings are lower. Your concern is valid that in the off-peak, transfers across a system can be elevated and it is expected that if a particular System is subject to heavy transfers that a prudent Transmission planner would cover such situations based on their own identified need through sensitivity studies. Howver, such off-peak anlysis is not mandated by the standard for the Long-Term Planning Horizon. 35. The SDT feels that the Load model used in the study should represent actual conditions as accurately as possible. It has been shown during the reconstruction of the events of the August 14, 2003 blackout in the Northeast that the Load model was critical. One of the recommendations involved developing better Load models. 36. To the degree possible, the SDT has revised the standard to better align steady state and stability sensitivity lists. 37. The SDT has reviewed the need for Plant Stability and has concluded that it is appropriate to include it in this standard. It also felt that this was responsive to FERC Order 693. 38. R2.6.1 - The SDT agrees with your view and references to market structure changes have been removed in Draft 2. 39. Agree. Addressing or not addressing deficiencies discovered as a result of runing sensitivity studies is at the discretion of individual entities. The language of the standard was be modified to clarify this. 40. In developing a rationale why a selected Contingency is the most severe will require some sort of comparison to other Contingencies. In doing so the explanation required in the standard is already addressed. 41. The SDT feels that the current TPL-004 provides limited value to improve System reliability. Performing studies and not even considering

Q43			
Commenter	Yes	No	Comment
possible corrective actions (as is the case with the current standard), may result in over looking relatively inexpensive corrective actions which could significantly help improve reliability. It is appropriate to add another requirement to help improve reliability System development. The purpose of the requirement is to assess the risk of cascading outages or a catastrophic event, develop corrective actions and actually implement such actions if it is reasonable, for example installing a SPS. This is also consistent with Paragraph 1833 in FERC Order 693, which directs NERC to modify TPL-004-0 to identify options for reducing the probability or impacts of extreme events that cause cascading. 42. This has been added. **R3.5** Manual and automatic generation run-back/tripping is allowed as a response to a single ~~and~~ or multiple Contingenc~~ies~~y ~~as long as Facility Ratings are not exceeded.~~if the following conditions are met: 43. The SDT has reviewed the need for Plant Stability and has concluded that it is appropriate to include it in this standard. It also felt that this was responsive to FERC Order 693. 44. The SDT has reviewed this requirement and has determined that at this time this is appropriate for a North American standard. 45. The SDT has reviewed the need for Plant Stability and has concluded that it is appropriate to include it in this standard. It also felt that this was responsive to FERC Order 693. 46. R6 - By meeting the requirement for "coordinating analysis of these results through an open and transparent process", the SDT meant a stakeholder process that was set up to meet the requirements of FERC Order No. 890 with regard to an Attachment K filing of a Transmission Provider's Transmission Planning Process. The SDT has made a change to clarify this requirement. (see R8 in draft 2) **R8**. Each Planning Coordinator shall coordinate the distribution of Planning Assessment results among ~~affected entities~~ neighboring systems, coordinating analysis of these results through an open and transparent peer review process such as described in FERC Order 890. 47. Performance requirements: The Draft 2 version includes a new Requirement (R6) which indicates that each TP must define and document proxies used in simulation studies to identify System instability for conditions such as cascading outages. voltage instability, or uncontrolled islanding. In the steady state time frame, voltage instability can occur typically during high power transfer and/or peak demand periods. Voltage instability can be assessed using a long-term Stability program. However, it can also be assessed using a power flow program that simulates governor action. There are a number of IEEE papers (e.g., G. Morison, B. Gao, and P. Kundur, "Voltage stability analysis using static and dynamic approaches," IEEE Transactions on Power Systems, vol. 8, no. 3, pp. 1159 – 1171, August 1993) that can provide suggestions on the methodology. Cascading outages and uncontrolled islanding can also occur in the steady state time frame, for example, when the Transmission Facilities load beyond the corresponding relay trip settings. This could cause uncontrolled tripping of Transmission Facilities beyond those required to clear the fault. Even though these events are rare, the Transmission Planner should be aware of their possibility when performing studies. **R6**. For the short circuit portion of the Planning Assessment, as described in Requirement R2.3, each Transmission Planner and Planning Coordinator shall assess the short-circuit capability of its equipment under normal conditions and following any single Contingency condition that would result in greater circuit breaker interrupting duties.			

Q43			
Commenter	Yes	No	Comment
The SDT agreed to make this change, Requirement R3.5 of the second draft of the standard now allows genration tripping for single Contingencies. **R3.5**. Manual and automatic generation run-back/tripping is allowed as a response to a single ~~and~~ or multiple Contingenci~~esy~~ ~~as long as Facility Ratings are not exceeded.~~if the following conditions are met: To address the directive from FERC in Order 693, the SDT classifies Contingencies by events instead of by the number of Transmission elements lost. One event, for example loss of a breaker, can remove from service upon fault clearing all elements connecting to the breaker. Statistical data available from regional databases were analyzed in developing the draft standard. A Bus-tie Breaker is often used in straight bus substation layouts to sectionalize an otherwise long continuous bus into smaller sections. The SDT has proposed a definition of a Bus-tie Breaker in the second draft. **Bus-tie Breaker:** A circuit breaker that is positioned to connect two individual straight bus substation configurations. (Substation configurations such as ring-bus, breaker-and-a-half, or double bus-double breaker protection schemes do not use bus-tie breakers.) Tables 1 and 2 have been revised and Event P2-3 has is now shown as Planning Event P1.5, and loss of a bipolar DC line has been reclassified as a multiple Contingency event. The SDT recognizes that bus section faults can and often do trip multiple Transmission Facilities. The Planning Event P2 defines single Contingency events that are somewhat lower probability than those in P1 but often result in higher consequence impacts due to loss of multiple Transmission elements for the single electrical fault. In more reliable station designs (ring, breaker and a half,etc) this type of condition is minimized. The new TPL Draft 2 continues to emphasize a higher expectation of performance for bus section faults and other P2 events on the Transmission System above 300 kV. See Summary Response for questions Q20 through Q23 for more details on the team's rationale for continuing to seek this level of reliability improvement. The SDT concurs with your view and has made the change. A bipolar dc loss is no longer a single Contingency Planning Event. You are correct in describing the outcome – multiple Facility outages. However, the SDT is describing an internal fault of a breaker, not a stuck breaker condition. Therefore the SDT is treating these as a single Contingency event. The SDT agrees that these are lower probability events than the "typical single Contingency" events but they pose greater risks. The SDT has separated the single Contingencies as P1 and P2 based on their probabilities of occurrence. Also, allowable responses to the P2 events differ from those for the P1 events. It is noted that stuck breaker events are treated separately as P4 Planning Events. The choice of one mile was based on a review of various regional practices. 48. The reference to this item has been removed and more general weather conditions resulting in extreme Contingency conditions are assessed in the Extreme Events area. 49. See comments for Table 1.			

Q43			
Commenter	**Yes**	**No**	**Comment**
50. The SDT agrees and has revised the table accordingly. 51. The SDT has reviewed this requirement and has determined that at this time this is appropriate for a North American standard. 52. The SDT has removed the terminology referring to spare transformers. 53. The SDT has reviewed the issue and revised Requirement R5.5.3 to provide clarification. **R5.5.3**. Automatic generation tripping is allowed to mitigate Stability violations if the following conditions are met:			
Muscatine P&W	☑		Muscatine Power & Water (MPW) is a municipal utility with approximately 33 miles of 161 kV lines (2 lines) and 33 miles of 69 kV lines with three – 161/69 kV substations and seven – 69/13.8 kV substations. The service territory is approximately 24 square miles. Our last system peak was 149.9 MW on July 29, 1999 with a more recent peak of 146.9 MW on July 17, 2006 with generating capacity of approximately 253 MW from four units. The main problem we have is keeping up with the standards changes with our limited resources. We would suggest: 1. It was good to see the definitions section. We would also suggest including all acronyms including those in common use. Acronyms have become so common and they are now being reused to mean different things to different groups that for new people, multitasking individuals, or those not dedicated to a specific standard acronyms add confusion. Where possible, we would suggest using existing terms and, if appropriate, preferably already defined or have them defined in IEEE standard #100 dictionary. 2. Can you address adequate documentation? I'm not looking for detail formats or requirements but more minimum requirements and suggested layout etc. One of the problems I have during audits is how much documentation to provide without going over board. More is not good considering time requirements. Our goal is to make it easy for us and the auditors. We met the standard but have we proved it. Being a small utility with little impact on the bulk system how much should we provide? 3. In our region the MAPP Design Review Subcommittee (DRS) and in some cases the Subregional Planning Groups (SPGs) review new and proposed changes to facilities. In many cases they would have to approve any RAS or SPS and thus provide a peer review/reasonable and workable check. 4. R.2.6.1 - Being a small utility we are concerned about the planning study must be less than 3 years old. We budget for studies every three years but adjust that based on whether material changes have occurred to the system. Our last cycle was 6 years only because our load hasn't been growing and we still haven't hit our peak of 1999. Since we are dependent on consultants, we also have a concern for how long it can take for them to complete the study. Since we are small the bigger customer gets the attention. We do use the same criteria for near and long term planning horizons. We also participate in MAPP and ITWG studies for the annual and bulk system review and

Q43			
Commenter	**Yes**	**No**	**Comment**
			since our issues in studies are more local rather than the bulk transmission system. How should/could the sensitivity studies be covered for us at the regional level? 5. 300 kV and above questions: MPW is a small utility that doesn't have any facilities above 161 kV or any DC lines. I can see requiring more stringent performance for EHV and possibly lower voltage facilities in some cases, however, whether to allow the loss of Non-Consequential load should be left to local entities to decide since the cost of the "corrective action" could exceed the cost of the load loss and put undo burden on the customers. Depending on the type of load the customer may not want/be willing to pay for the extra reliability. If ordered, how will the cost be recovered? The cost should be recovered by the users not just the local customers. Thanks for the opportunity to comment!
Response: 1. The proposed definitions in the draft standard will be incorporated into the Glossary of Terms when the standard is approved. We believe it is better to have the terms listed in the NERC Glossary of Terms rather than pointing to the IEEE standard since the NERC Glossary is more readily available for use in the reliability standards environment. We have reduced the number of definitions in Draft 2 to try and have a more pointed impact where a definitional term is most needed. 2. Your concern is a compliance matter and not directly related to the reliability requirements. Although not yet available in Draft 2, the SDT will be adding compliance measures in a future draft. If the measures do not clearly address your concern please raise a more specific question related to the appropriate requirements/measures. 3. Thank you for your comment. 4. R2.6.1 - The SDT has revised R2.6.1 to allow the use of past studies that are 5 calendar years old or less. **R2.6.1**. For steady state, short circuit, or System Stability analysis: ~~if the study is less than three years old and no material changes have occurred to the System in the intervening period. Material changes include topology changes, generation additions/removals, and market structure changes~~ the study shall be five calendar years old or less. 5. The SDT has added greater detail to Tables 1 & 2, which provides for more situations where it is acceptable to lose Load. With regards to the loss of Load, the standards don't address cost recovery.			
NERC TIS	☑		1. In definition of "CONSEQUENTIAL LOAD," misoperations need to be defined better or removed, i.e. inadvertent tripping of elements due to protection system failure, including inadvertent SPS operation, may cause loss of load NOT connected to the element tripped off. In context of the definition, it appears that the misoperation should be on the protection system for the element that is tripped. {PARTLY COVERED} 2. Even when post-contingency voltage remains within prescribed limits, some voltage-sensitive customer load could still be dropped off due to their inherent sensitivity to allowed changes in voltage. Should such cases be considered as dropping non-consequential load or are the performance requirements met as long as post-contingency voltage stays within the prescribed limits? Such load losses can rarely be predicted by steady state analysis unless the

Q43			
Commenter	**Yes**	**No**	**Comment**
			loads and their distinct characteristics are explicitly modeled, but may be detectible in dynamic analysis since it is often the first swing voltage excursion that trips such loads. 3. Assuming the standard is passed, especially if the bar is raised, there should be some reasonable implementation period specified to allow entities that do not meet the standard's requirements presently and time to implement changes to become compliant. 4. Why is there a 300 kV threshold? Is there evidence that increasing the redundancy of the high voltage network will provide the largest reliability benefits? 5. Need to specifically define when it is OK to use "permanent" SPSs to meet performance requirements following the first contingency, i.e. separating a balance island should be OK. It is OK to utilize temporary SPS while the permanent corrective measure is being put in place. 6. Need to define, perhaps in the list of definitions, what is the "bus-tie breaker." Differentiation of center breakers in breaker-and-one-half schemes is a crucial item not to be subject to interpretation and possible confusion. 7. Need to clarify that "stuck breaker", regardless of whether cause by protection system failure, breaker failure to operate, or a slow breaker, is de-facto delayed clearance and causes additional contingency (ies). 8. Firm Transfer Cell for P3 does not make sense. 9. Need to strengthen the notion, in the bullets at the top of Table 1, that the assessment should also cover n-0 or "normal state (seems to be adequately covered in the body of the standard, but does not jump out from the Table 1 bullets at the head of the table.) 10. Include SHUNT DEVICES in P3–P9 planning contingencies. The same comment is applicable for stability table. 11. Need to clearly specify what documentation would be required to fulfill the standard's requirements for assessing extreme contingencies. 12. Replace "all" in the Extreme Events subheading with a more appropriate term. 13. Replace "all" in the table for Extreme Events for both Steady State and Stability tables with a more appropriate term to manage documentation requirements. 14. Use different designations for planned and extreme events in steady state and stability tables, e.g. PS and ES for steady state and PD and ED for stability (D for dynamic). 15. Throughout the tables, do not refer to "internal" breaker faults but use breaker fault instead. Faults can occur internal to the breaker, flashed bushings, or a fault (on or within) a free-

Q43			
Commenter	**Yes**	**No**	**Comment**
			standing CT associated with the breaker. 16. Modify bullet 5 in the Stability Table to include SPS failures to read: "Simulate the removal of all elements that Protection Systems, SPS or RAS systems, and controls are expected to disconnect for each Contingency." If an SPS or RAS is expected to operate for a contingency, it must be modeled as such for that contingency study. 17. In R1.2 need to add "for the period analyzed" and defined what "stressed" conditions means. 18. In R 2.1.3.7 need to insert "long-term" in front of "transmission outages." There is also a need to clarify/describe/define what long-term transmission outage is. 19. There are concerns, particularly for NON-vertically integrated TPs, about need of including Plant Stability requirements. 20. Define what "material" change is in R2.5.2. 21. Presumably the standard will be stamped with a CEII designation 22. Additional granularity should be included showing the correlation between Requirements and their applicability to any of the Functional Model Entities cited in the Standard. 23. Obligations to study and share results of the following should be clear in the TPL Standards: • Analysis of impacts on your system for contingencies outside of your system footprint. • Analysis of impacts on other systems for contingencies within your system. The owners of the other systems should be notified of your findings and joint analysis should be done if warranted. • Powerflow and stability analysis of contingencies that have interconnection-wide impacts. This may best be accomplished through modifications to existing standard TPL-005.

Response: 1. The SDT revised this definition in response to various comments.

Consequential Load Loss: Load that is no longer ~~served because it is directly connected to an element(s) that is removed from service due to fault clearing action or mis-operation~~ connected to a source as a result of the event being studied or which is lost as a result of the load's response to the transient conditions of the event (other than through the action of UVLS or UFLS schemes). Although Load which is lost as a result of the Load's response to the transient conditions of the event is considered Consequential Load Loss and is permitted when Consequential Load Loss is allowed, Transmission planning entities are not allowed to rely upon the expectation of such Load loss to meet

Q43			
Commenter	Yes	No	Comment
steady state performance requirements. 2. The SDT revised this definition in response to various comments. The SDT believes the revised definition addresses the concern expressed in this comment. **Non-Consequential Load Loss:** ~~Load loss other than Consequential Load Loss. For example, Load loss that occurs through manual (operator initiated) or automatic operations such as under-voltage Load shedding, under-frequency Load shedding, or Special Protection Systems.~~ Non-Interruptible Load loss other than Consequential Load Loss. For example, non-Interruptible Load loss that occurs through manual (operator initiated) or automatic operations such as under-voltage Load shedding, under-frequency Load shedding, or Special Protection Systems would be considered Non-Consequential Load Loss. 3. The SDT is sensitive to need for an implementation policy to allow for Transmission Owners to respond to requirements that involve raising the bar, but an implementation plan was not developed for this posting. The SDT anticipates developing an implementation plan in response to the next posting. 4. The initial draft of the proposed Transmission planning standard held the planning of 300 kV and higher Transmission systems to a more stringent requirement than the remaining BES. Although not unanimous, the majority of the SDT felt the 300 kV and higher Systems generally represent an extra-high-voltage (EHV) range that is considered the backbone of many systems in the various Interconnections and that the more stringent requirements were appropriate when considering N-1-1 Contingencies of two EHV Facilities. Systems operated at this range generally do not directly serve end-use Load customers but rather act as the medium for moving large amounts of power from production to various Load centers which then deliver the power among other Transmission or sub-Transmission Systems to end use customers. It is the desire of NERC and various stakeholders that the backbone of the electric power grid be robust and held to a higher degree of reliability. When EHV Systems are compromised, the large volumes of power served by them can place a severe amount of stress on parallel EHV or lower voltage paths. For example, if large EHV transformers experiences a catastrophic failure, not only are other System Facilities required to carry more Load but the System is also exposed to other N-1 conditions for long periods of time while awaiting a replacement or repair of the failed equipment. Large generation sources are typically connected at EHV levels and maintenance of the EHV Transmission lines within the vicinity of larges generation plants must often be coordinated during scheduled unit outages, resulting again in multiple Facility outages over extended periods of time. Therefore, it was the conclusion of the SDT in Draft 1 to propose greater reliability and operational flexibility through more stringent performance requirements when considering certain N-1 and N-1-1 Contingency events of EHV Systems. Throughout the industry substation arrangements at EHV levels reflect the importance of these Systems as the designs often consist of the more expensive ring-bus, breaker-and –a-half or double bus-double breaker protection schemes as opposed to the more simplistic and lesser cost single bus arrangements that are commonly found on lower voltage Systems. The feedback received from industry was divided related to the SDT's emphasis placed on a higher expectation for the 300 kV and higher Systems. Some commenter's questioned the importance and the high costs that may be needed to mitigate existing System designs. Others agreed with the SDT's approach and indicated that the impact to their Systems would be minimal. Some commenter's even questioned why the more stringent approach was not applied to the entire 100kV and higher Systems. The SDT believes the Draft 2 changes are responsive to industry feedback and reflect an appropriate middle ground related to the importance of the EHV Transmission System.			

Q43			
Commenter	Yes	No	Comment
5. The SDT has revised requirements to include changes related to the allowable use of SPSs related to N-1 events. See new Requirement R3.5 of the Draft 2 TPL-001 standard which indicates SPSs are permitted for automatic generation runback or tripping following a single contingency event. **R3.5**. Manual and automatic generation run-back/tripping is allowed as a response to a single ~~and~~ or multiple Contingenc~~iesy~~ ~~as long as Facility Ratings are not exceeded.~~if the following conditions are met: 6. The SDT has proposed a definition for bus-tie breaker in the second draft. **Bus-tie Breaker:** A circuit breaker that is positioned to connect two individual straight bus substation configurations. (Substation configurations such as ring-bus, breaker-and-a-half, or double bus-double breaker protection schemes do not use bus-tie breakers.) 7. Tables 1 and 2 have been revised to provide greater clarity. The SDT has accounted for both stuck breaker and Protection System failures as two unique Planning Events. See performance table requirements for Planning Events P4 and P5. 8. The SDT concurs and changes have been made to the performance Tables 1 and 2. The SDT has completely reformatted the performance tables in Draft 2 of the TPL-001-1 standard. The new format more closely mimics the existing approved TPL standard Table 1, with enhancements we feel the industry will find valuable. 9. The SDT concurs and has added a P0 Planning Event at the top of Table 1 to address the N-0 (existing Category A) condition. 10. The SDT has modified the tables to include shunt devices where appropriate. 11. Changes were made to simplify and clarify Extreme Event expectations. Please refer to both performance tables and Requirements R3.4 (steady-state) and R5.5.4 (Stability). 12. The statement has been revised to say "For all Extreme Events considered". 13. The statement has been revised to say "For all Extreme Events considered". 14. The Planning Events for steady-state and Stability now correlate one-for-one, so the SDT does not feel a need to distinguish each uniquely. The Extreme Events are not presently listed in a tabular format with the formality of the Planning Events. This is somewhat intentional to draw greater emphasis and focus to the Planning Events. If you feel changes are needed in our presentation of the Extreme Events within the performance tables, the SDT would be open to a suggested format from TIS. 15. Tables 1 and 2 have been revised to explain "internal breaker fault" (see Note 5 in Table 1 and Note 4 in Table 2). With this change the term "internal breaker fault" was retained. 16. The SDT believes that SPS/RAS is included in Protection Systems as defined in the NERC Glossary. 17. The SDT has revised the data and modeling requirements based on industry comments to clarify intent. **R9.** Each Distribution Provider shall provide its respective Planning Coordinator with modeling information for real and reactive load forecast data for each year of the Transmission planning horizon at Transmission nodes based on expected or historical System performance including the expected mix of industrial, commercial, and residential Loads, within ninety days of a request for such information. **R10**. Each Transmission Planner shall provide its respective Planning Coordinator with modeling information for Firm Transmission Service data, Interchange Schedules and resources required to supply Load for each of its Balancing Authorities for each year of the Transmission			

Q43			
Commenter	**Yes**	**No**	**Comment**
planning horizon, within ninety days of a request for such information. **R11.** Each Transmission Owner shall provide its respective Planning Coordinator with modeling information for known planned outages and long-term outages for Transmission equipment for each year of the Transmission planning horizon with consideration given to spare equipment strategy, within ninety days of a request for such information. **R12**. Each Generator Owner shall provide its respective Planning Coordinator with modeling information for known planned outages and long-term outages for generation equipment for each year of the Transmission planning horizon, within ninety days of a request for such information. **R13**. Each Resource Planner shall provide its respective Planning Coordinator with the modeling information for new planned facilities for each year of the Transmission planning horizon including but not limited to generators, Reactive Power devices, and new technologies, within ninety days of a request for such information 18. Since this requirement is relating to sensitivity, it is up to the entity to determine if it is appropriate to reduce the length of or increase the length of the "planned outage" that it has considered in its base case studies. 19. The SDT has reviewed the need for Plant Stability and has concluded that it is appropriate to include it in this standard. It also felt that this was responsive to FERC Order 693. 20. The SDT has changed the wording to provide clarity. **R2.5.2**. Material Transmission System changes ~~in the electrical vicinity of existing generation are made~~ are made at or near the point of Interconnection of existing Generation such as the ~~addition or~~ removal of a Transmission Line ~~at or near the point of Interconnection~~ or the addition of a new substation in one of the Transmission Lines connected to the plant. 21. The Standard is public information. Individual reports may need to be reviewed by the individual entity to ensure compliance with CEII. 22. References to entities have been added. 23. R6 requires "coordinating analysis of these results through an open and transparent process". By this requirement the SDT meant a stakeholder process that was set up to meet the requirements of FERC Order No. 890 with regard to an Attachment K filing of a Transmission Provider's Transmission Planning Process. The SDT has made a change to clarify this requirement (see R8 in draft 2). **R8**. Each Planning Coordinator shall coordinate the distribution of Planning Assessment results among ~~affected entities~~ neighboring systems, coordinating analysis of these results through an open and transparent peer review process such as described in FERC Order 890.			
NCEMC	☑		1. Planning Coordinator: The definition of Planning Coordinator should be kept within this document rather than relying on the NERC Functional Model as we believe that this entity has an important role in insuring coordination of transmission and resource plans. Coordination: 2. During the teleconference, one issue brought up was the matter of external contingencies being

Q43			
Commenter	**Yes**	**No**	**Comment**
			tested as a part of a TP's analysis. The reply was that this issue will be addressed outside this draft standard (TPL-005 and TPL-006) or would be accounted for in the coordination efforts among Transmission Planners. NCEMC is of the opinion that Requirements R5 and R6 need further details to insure adequate anlysis between and among Transmission Planners having varying local planning criteria so that Seams Issues are addressed that are not currently being address in regional and inter-regional studies. To the extent possible, timing of studies should be required to insure coordination between regional and inter-regional groups. Significant Increase in Study Activity Workload on Transmission Planners: 3. The increase in both steady state and dynamic studies required to ensure compliance with the proposed standards will result in increased costs and staff additions. The addition of the "Corrective Action Plan" requires the TP to provide a significant amount of documentation for each deficiency identified by the studies. Also, R3.2 requires that the studies simulate the protection scheme for all events. The current software tools cannot automate these studies for bus faults and breaker failure events, requiring each scenario to be studied manually. Additionally, experienced staff capable of performing analyses as described in the proposed standard have become increasingly difficult to find and retain and the talent pool of people with these skills has recently become depleted to alarming levels. Implementation Plan: 4. Given the intent of the proposed standard to encourage large scale investment in the EHV system, full implementation will take years, perhaps decades. Acquirement of right-of-way for new EHV lines has become increasingly difficult in recent years and inreasingly expensive. Legal, regulatory, and other difficult issues often take several years to navigate, even for 115kV lines. The Implementation Plan timeframe, if set too short, would be unduly burdensome on Transmission Owners forcing them to be less dicretionary with funds than would be prudent. The proposed implementation plan should include provisions for those cases where viable solutions simply can not be implemented in time due to circumstances beyond the control of Transmission owners. A reasonable period for transition is order. Design and Construction Constraints: 5. Even if right-of-way and other legal and regulatory hurdles are cleared, and the capital funding for such a tremendous level of investment was not an issue, the other resources required to actually construct the projects are equally difficult and costly to secure. Raw material prices on comodities like copper and steel have skyrocketed in recent years. Additionally, the skilled labor and Engineering resources are constrained with labor rates almost keeping up with other resource costs. Overall project costs have more than doubled over the last 7-10 years. Recent press releases concerning new generation being planned and then scrapped due to the rapid escalation of project

Q43			
Commenter	**Yes**	**No**	**Comment**
			costs are public evidence of this. The inflationary mark-up is impossible to estimate but much less will be built with the same capital investment than is currently envisioned. Cost-Benefit Analysis: 6. The proposed standard will be exceedingly expensive to become compliant with unprecedented levels of capital investment in Transmission facilities. Before the standard comes to official vote, it would be prudent for a cost-benefit analysis to be performed to determine if the reliability improvements truly justify the huge expenditures certain under the proposed standard. Additionally, as many jurisdictional rate structures share the cost of such investments between retail and wholesale customers, cost-benefit analyses should be completed for both retail and wholesale customers. System Adjustment Clarification: 7. It has already been noted earlier but deserves repeating here: The term "System Adjustment" as outlined in the tables should be better defined. The use of generation for redispatch may have nuances which preclude or otherwise limit their use for studies. Perhaps some clearer guidelines on what is allowed would facilitate transparency and coordination between Transmission Planners. Transmission Service Evaluation: 8. A major concern is that the proposed standard appears to be disjointed from the requirements for selling firm Transmission Service. The increase in reliability gained from the proposed standard would, in some regions, quickly be eroded by new firm sales if those sales are based on the historical N-1 ATC requirements. The proposed standard must be applied to long-term firm transmission service requests if Transmission reliability is to be truly enhanced. If the standard is not applied to Transmission Service evaluation, reliability levels for the different classes of firm customers will diverge. Stakeholder Process: 9. As a Transmission-Dependent Utility and Network Customer within 3 different Balancing Autorities with one being a Regional Transmission Organization, NCEMC cannot stress enough the need for a Stakeholder Process for coordination Transmission Planning that may impact Load-Serving Entities and other entities involved. It is critical to address reliability needs of all taking transmission service today and in years to come.
Response: 1. The SDT modified the definition and the definition will be approved with the standard and added to the Glossary of Terms Used in Reliability Standards. 2. R5 (R7 in second draft) requires the determination of the entities responsible for the portion of the studies. R6 (R8 in second draft) requires "coordinating analysis of these results through an open and transparent process". By this requirement the SDT meant a stakeholder process that was set up to meet the requirements of FERC Order No. 890 with regard to an Attachment K filing of a Transmission Provider's			

Q43			
Commenter	**Yes**	**No**	**Comment**
Transmission Planning Process. In addition, NERC Standards are to specify the requirements, which must be met and not "how" they are met. The SDT has made a change to clarify this requirement (see R8 in draft 2). **R8**. Each Planning Coordinator shall coordinate the distribution of Planning Assessment results among ~~affected entities~~ neighboring systems, coordinating analysis of these results through an open and transparent peer review process such as described in FERC Order 890. 3. The SDT understands the potential increases in work load. The draft standard allows the use of past studies to meet the current year assessment and study requirements. Requirement R3.2 does not require study of the protective scheme for all events, only that "Contingency analyses shall simulate the removal of all elements including those that System protection is expected to disconnect for each Contingency without operator intervention". For example, the requirement is that the outage simulation should be from breaker to breaker. In addition, Requirement R.3.2.2 only requires the studies consider relay loadability and identify how loadability is treated in the steady state simulation, not to study relay loadibility. 4. The SDT understands that there are extended transitionary issues associated with responsible entities becoming compliant with the new standard. The SDT plans to draft an extended implementation plan to accommodate such issues. The plan will be provided for the third posting of the standard. 5. The SDT understands that there are extended transitionary issues associated with responsible entities becoming compliant with the new standard. The SDT plans to draft an extended implementation plan to accommodate such issues. The plan will be provided for the third posting of the standard. 6. Cost issues are outside the scope of NERC reliability standards. 7. The Transmission performance tables have been modified to bring clarity to the Contingencies required for performance studies and when Non-Consequential Load Loss is permitted to meet requirements. The use of manual or automatic System adjustments to revise System topology as well as generation redispatch is always permitted so long as the actions can be performed while adhering to Facility Ratings. 8. Any requests for long-term Transmission service need to be studied in accordance with peformance requirements. 9. This draft standard addresses the requirement for coordination of studies in an open and transparent process (see Requirement R8 in draft 2).			
NCMPA	☑		Much of the language in R1 is redundant, because the MOD standards already address what data are required for modeling purposes. Including data requirements here, as well as in the MOD standards, will introduce the possibility of inconsistencies between the two as well as unnecessary duplication of work for entities providing the data. If any changes need to be made to what data are collected or to whom it is provided, those changes should be made in the MOD standards, not by adding data requirements to this standard. As for most every standard written, some consideration should be given to the cost of meeting the more stringent requirements proposed for this standard. While it might be possible to make incremental improvements in reliability, it may not be cost-effective, particularly given the low probability of some of the events addressed in the standard. Before stakeholders are asked to vote on this standard, a cost-benefit analysis should be performed to provide what would be an otherwise missing, but very important piece, of information about whether the costs of complying with the

Q43			
Commenter	**Yes**	**No**	**Comment**
			requirements of this standard are justified based on the reliability improvements that would be achieved.
Response: 1. The SDT believes some additional modeling requirements not presently contained in the MOD standards are necessary for Transmission planning purposes. The SDT has revised these requirements based on industry comments to eliminate redundancy with existing MOD standards with the intent that these requirements will be removed from the TPL standard when they are incorporated into the MOD standards at a later date. 2. The treatment of Transmission infrastructure costs is outside the scope of the NERC reliability standards.			
OPPD	☑		The terms Bus Tie Breaker and Non-Bus Tie Breaker used in Tables 1 and 2 are not well defined. To prevent misinterpretation of the standard, include diagrams that point out examples of bus tie breakers and non-bus tie breakers for each of the following bus schemes: 1) Single bus 2) Ring bus 3) Breaker and a half 4) Double bus double breaker.
Response: The SDT has proposed a definition for Bus-tie Breaker in the second draft. **Bus-tie Breaker:** A circuit breaker that is positioned to connect two individual straight bus substation configurations. (Substation configurations such as ring-bus, breaker-and-a-half, or double bus-double breaker protection schemes do not use bus-tie breakers.)			
PJM	☑		1. Delayed clearing due to primary relay system communication failure 2. Bus Contingencies should not be included for sensitivity/stressed case 3. Sensitivity case should not be included for long term study 4. Need to clearly define number of studies required for Load Flow/Stability and what performance criteria must be met. • Peak Case • Off Peak • Sensitivity 5. Need to allow SPS operation after a first contingency, system readjustment and a "second " first contingency. 6. SPSs can include generation tripping
Response: 1. The SDT does not understand the question and therefore can't respond. 2. Bus Contingencies are just one type of sensitivity that could be included but is not mandated. 3. Sensitivities are not required for long-term. 4. The SDT believes that the number of studies is clearly defined. 5 and 6. The SDT agrees that SPS can include generation tripping. The SDT has modified the requirements to allow SPS for single and multiple Contingencies (See Requirement R 3.5). **R3.5**. Manual and automatic generation run-back/tripping is allowed as a response to a single ~~and~~ or multiple Contingenc~~ies~~y ~~as long as Facility Ratings are not exceeded.~~if the following conditions are met:			

Q43			
Commenter	**Yes**	**No**	**Comment**
PRPA	☑		1) P5 and P8 in Tables 1 and 2 – If you keep the "300 kV bar" for distinction between P5 and P8, then please make an exception for P5 to be "Yes" on Non-Consequential Load Loss where load pockets (a.k.a. local load-serving areas) are concerned because "system adjustments" might not be possible to avoid the need for Non-Consequential Load Loss after the loss of another line into the load pocket. Example - A city, which is a type of load pocket, is served by three transmission lines. If one of the lines into the city is removed from service for maintenance, "system adjustments" within the city might not be possible to prevent steady-state voltages from dropping below an acceptable limit after loss of a second line into the city. If during such an "N-1Line-N1Line" Planning Event the city voltages become extremely low, then shedding of some of the city's load should be allowed, i.e. Non-Consequential Load Loss, for all voltages 100 kV and above. In this example, when one line into the city is removed from service, the TOP could either arm an SPS or RAS for automatic load shedding, or alert the operators to possible implementation of an Operating Procedure for manual load shedding. The city, along with its TO and other authorities, may decide by their own wishes to "raise the bar" and add facilities to maintain acceptable voltages for the worst "N-1Line-1Line" affecting only its local area. However, a facility addition type of solution, driven by a "No" for Non-Consequential Load Loss in P5, should not be mandated. "Controlled interruption of electric supply to customers (load shedding)" should be allowed for all voltages 100 kV and above as Footnote (c) in TPL-003 allows. Consistent with this request to allow load shedding for this type of disturbance for all voltages 100 kV and above, FERC Order No. 693 in Paragraph 1825 regarding TPL-003 for Category C disturbances (including "N-1Line-1Line") does not ask for "controlled load interruption" to be eliminated, but rather FERC directed the ERO to modify footnote (c) to Table 1 to clarify the term "controlled load interruption". And please note FAC-010-1, R2.5 – "Planned or controlled interruption…(load shedding)…" for TPL-003 conflicts with "No" for Non-Consequential Load Loss in P5 of Draft TPL. 2) Proposed revision to R3.5 – "Manual and automatic generation runback and generator tripping are allowed as a response to single and multiple contingencies as long as Facility Ratings are not exceeded and the result of the generator action, such as location and ramp-up speed of the AGC unit(s) responding to the generation trip or runback, loss of reactive resource, impact on reserves, and restart time of tripped unit(s), meets the performance requirements." Planning and Operations need flexibility to coordinate with the requirements of Engineering who established the Facility Ratings. It should not matter which method of generation redispatch is employed if all impacts of tripping vs. running back a generator are properly considered and performance requirements are met. The time period for a particular Emergency Rating might require

Q43			
Commenter	**Yes**	**No**	**Comment**
			faster generation redispatch than a runback or set of runbacks are capable of providing. Therefore, it may be necessary to trip one 100 MW unit rather than runback several units for a total of 100 MW. No need for R3.6 with above revision to R3.5.
Response: 1. The SDT has completely reformatted the performance tables in Draft 2 of the TPL-001-1 standard. The new format more closely mimics the existing approved TPL standard Table 1, with enhancements we feel the industry will find valuable. The SDT has responded to industry comments regarding higher performance requirements for facilities above 300 kV and have adjusted requirements for N-1-1 non-generator outages to permit Non-Consequential Load shed post-Contingency following the second event. We have retained a higher expectation for certain N-1 Contingencies occuring on the EHV System. See the Summary Response in Q20 through Q23 for additional information. 2. The SDT agrees that SPS can include generation tripping. The SDT has modified the requirements to allow SPS for single and multiple Contingencies (See Requirement R 3.5). **R3.5**. Manual and automatic generation run-back/tripping is allowed as a response to a single ~~and~~ or multiple Contingenc~~ies~~y ~~as long as Facility Ratings are not exceeded.~~if the following conditions are met:			
Progress–Carolinas	☑		1. In R4.6 and other locations, the generator exemption of 20 MW should be increased to 75 MVA. 2. Need to define bus-tie breaker. Is center breaker in a breaker and a half scheme a bus-tie breaker? 3. Need to continue to allow interruptions to firm transfers. This is essentially allowing redispatch and is an economically sensible solution to low probability high impact multiple contingencies. 4. Need to clarify if the "stuck breaker" is associated with the first event in multiple event contingencies or does one have to choose a breaker not involved with the first event. Note that a breaker cannot be "stuck" if there is no demand to trip. Therefore, a stuck breaker that is not adjacent to the first event will not have a demand to trip. 5. Need to distinguish what the difference is between a "stuck breaker" and a "[loss of breaker due to] internal fault". The specific meaning could make the difference in the clearing time selected for stability studies (normal clearing time versus delayed clearing time). 6. In the Table 2 (for stability) the last bullet under Planning events says to "simulate normal clearing times unless otherwise specified". Does this mean that "stuck breaker" events should be simulated with normal clearing times? Note that in the real world, internally faulted breakers may clear in either normal or delayed clearing time, depending on the relaying and CT configuration.
Response: 1. The limits cited are consistent with the registry criteria, Large Generator Interconnection Procedures, and FERC Orders. 2. No, a center breaker in a breaker and a half scheme is not considered a Bus-tie Breaker. The SDT has proposed a definition for Bus-tie			

Q43			
Commenter	**Yes**	**No**	**Comment**
Breaker in the second draft. **Bus-tie Breaker:** A circuit breaker that is positioned to connect two individual straight bus substation configurations. (Substation configurations such as ring-bus, breaker-and-a-half, or double bus-double breaker protection schemes do not use bus-tie breakers.) 1. Tables 1 and 2 have been revised to replace "firm transfer" with "firm Transmission service". 2. The SDT agrees and appreciates the feedback. The SDT has re-worked the tables, and believes the wording used for stuck breaker will satisfy your concern. Please see Planning Event P4 in each performance table. 3. Tables 1 and 2 have been revised to provide clarity. Please see Planning Events P2.1 and P2.3. 6. The sentence "simulate normal clearing times unless otherwise specified" refers to the events sepcified in the Tables. A stuck breaker would have clearing time that is "otherwise specified". The intent is to simulate "real world" events using the clearing times appropriate for the specific fault and breaker/Protective System configuration.			
Progress–Florida	☑		General Comments 1. NERC Standards TPL 001-0 through TPL 004-0 are approved standards that only required modifications pursuant to FERC Order 693. In this proposed draft standard TPL 001-1, the Standard Drafting Team (SDT) has far exceeded the recommendations suggested by FERC in the Order and has created unnecessary confusion. We disagree with the SDT's decision to combine NERC Standards TPL 001-0 through TPL 004-0 into one standard. Some changes to the existing TPL Standards may be warranted. One particular improvement would be clarifying the tables such that the table for TPL-001, for example, would only contain the performance criteria for Category A, with footnotes only applicable to that category, clarified as directed by FERC in Order 693. Similarly, TPL-002 would only contain performance criteria for Category B, and so on. In addition to combining the standards, the SDT has significantly changed contingency specifications and required performance levels. In many cases the changes represent a very significant increase in required performance standards that will result in the following: a) major capital expenditures, some of which will be of a magnitude unprecedented for the Bulk Electric System. Many of these projects would be constructed to mitigate one single low-probability event. The ratepayers, upon discovery of this necessity and realization that these significant expenditures will be passed on to them in their rates, will certainly object to these efforts and will question the wisdom of NERC's mandating change on such a massive scale without the knowledge or input of the public. The SDT stated in its continent-wide conference call on October 10, 2007 that the intent of many of the objectives contained in the proposed TPL-001-1 was to "raise the bar" for electric utilities. We would like to know specifically what this means. The phrase "raise the bar" is vague and overused in North American vernacular in general, and it is particularly irresponsible to use such vagaries when proposing standards which will result in unaffordable upgrades to the North

Q43			
Commenter	**Yes**	**No**	**Comment**
			American Bulk Electric System. b) reductions in ATC. To be compliant with the more stringent requirements of TPL-001-1, Transmission Operators would in many cases be forced to reduce ATC in order to decrease transmission flows to a point at which corrective actions may be taken without the result of cascading. This is diametrically in opposition to one of the key objectives of deregulation and comparable treatment for all entities engaged in transactions on the Bulk Electric System. c) Reduced Reliability. The elimination of footnote (b) will result in many outage scenarios for which loss of Non Consequential Load is presently unavoidable, but subsequently prohibited. For some scenarios, Transmission Owners may seek to avoid the excessive cost of a project by simply removing breakers from substations, thereby increasing the range of the initial breaker-to-breaker operation and essentially converting the disallowed Non Consequential Load to Consequential Load. This is obviously an undesirable option and in opposition to fundamental principles of reliability, but might be rendered necessary due to the increased requirements of TPL-001-1. d) Inability to react to issues of non-compliance. The dynamic nature of planning analysis is such that, from one annual planning cycle to the next, the constantly changing load and generation forecasts invariably result in emerging transmission projects unforeseen in previous cycles. With the increased stringency of TPL-001-1, reacting to these emerging needs in time to demonstrate compliance will be impossible, and thus non-compliance is seen as an inevitability. To further clarify, the major transmission projects that TPL-001-1 would necessitate would be of a magnitude such that extensive engineering, land acquisition and involvement with regulatory and governmental agencies would be required, which could result in project lead times of 10 years or more. Not only would a lengthy transition period be needed for TPL-001-1, but upon the Standard's effective date the ability to implement all future projects would need to be given special consideration in light of these challenges. In other cases, the performance criteria are not clearly defined, such as the timing between multiple contingencies, and the level of readiness of the system before and after Planning Events. Finally, the SDT has chosen to eliminate the footnotes in the current standards, contrary to the direction of FERC in Order 693 to "clarify" the footnotes. The purpose of the footnotes is to further explain terms in the tables, provide guidance in interpreting the expected performance criteria, and specify any exceptions to the criteria. Footnotes also serve the purpose of keeping the standard concise by eliminating repetitiveness.

Q43			
Commenter	**Yes**	**No**	**Comment**
			Specific comments on the Draft Standard Performance Criteria 2. The performance requirements table should clearly define what the initial state of the system is assumed to be before any Planning Events, and what the state of the system is assumed to be after the Planning Event. For example, P1 (single contingency) events: assuming that the system is to be compliant, the state of the system prior to the event must be "secure" such that the event could occur and there is no interruption of firm transfer or loss of load, Equipment Ratings are not exceeded, System steady state voltages and post-transient voltage deviation are within acceptable limits. However, the system is not as it was before the event. The system could be described as "normal" but perhaps not "secure". If the requirement is that the system must also be "secure" after the event, then the standard must clarify what is allowed for "system adjustments" after the first Planning event to prepare for the next. FERC Order 693 directed the ERO to modify the second sentence of footnote (b) to clarify that manual system adjustments other than shedding of firm load or curtailment of firm transfers are permitted to return the system to a normal operating state after the first contingency. However, in order to bring the system to a secure state, as is necessary for the second contingency of a category C3 or C5 event, footnote (c) allows curtailment of firm transfers, and FERC Order 693 only required footnote (c) to be clarify the term "controlled load interruption", leaving the curtailment language intact. The implication of this interpretation is critical to peninsular Florida. The Category B loss of one 500 kV line from Florida to Georgia is sustainable, such that the system is "normal" after the event. However, in order to be prepared for the next contingency, (the loss of the second 500 kV line), firm transfers must be curtailed (Interruption of Firm Transfer). Without the ability to curtail firm transfers, a "super-firm" priority of transmission service is created for non-native load customers, and thus comparable treatment no longer exists. Comments on New Performance Tables: The draft TPL standard represents a major change in the Table 1 contingency definitions and required performance levels. 3. Table 1 Contingencies C1 and C2 are being moved to the single contingency category. While C1 and C2 represent single element outages, their probability of occurrence is much lower than the other Category B contingencies and they do not belong in the single contingency performance requirements group. 4. Footnote (b) which permits, as a limited exception in unique circumstances with a sound rational basis, some localized load reduction for single contingencies, has been removed. This is a very significant change for some utilities. Footnote (c) which permits load shedding and curtailment of

Q43			
Commenter	**Yes**	**No**	**Comment**
			firm transfers has been removed from C1, C2 and most of C3. This is a very significant increase in required performance level that is not justified. 5. The "applicable rating" for loading and voltages in Table 1 has been removed so that essentially, the same ratings and voltage restrictions apply to both B and C contingencies. Some utilities plan to a normal rating for single contingencies but will allow a higher short term rating for Category C events. This practice appears to be either disallowed or inadequately described in TPL-001-1. Transmission Owners should allowed to base ratings on manufacturer specifications or other reasonable criteria using sound engineering judgment. 6. Several new Category D "Extreme Events" have been added which greatly expand the scope and complexity of Category D studies. These are (1) any two unrelated single element outages and (2) wide area events a. through h. These represent a major increase in the scope of Category D studies and probably a doubling of required SWG studies. It should be note that the existing Categories D1 through D4 have been substantially changed to eliminate analysis of relay failure contingencies. The philosophy contained in the existing TPL-004 standard is that faults with a protection failure should be evaluated whether that failure is a circuit breaker, relay or CT; the proposed standard restricts the analysis to breaker failure. 300 kV Threshold Performance Level 7. The TPL-001-1 draft sets a threshold of higher performance to facilities above 300 kV than previously established in the existing standard. We do not agree that such a threshold is necessary or warranted. Requirements which are more stringent for these facilities may wrongly influence decisions on project alternatives in favor of facilities with less stringent requirements. Additionally, facilities above 300 kV naturally tend to transport larger amounts of power. The loss of single or multiple facilities above 300 kV generally results in an immediate generation-to-load mismatch too great to avoid either curtailment of firm transactions or loss of Non Consequential Load, or both. Singling out facilities above 300 kV for more stringent requirements is therefore clearly unreasonable. DC Line Performance Requirement 8. The TPL-001-1 draft sets a lower performance requirement for the loss of a single pole of a DC line than in the existing standard by allowing interruption of firm transfer if the transfer is deemed to be dependent on the outaged line. Firm transfers are also dependent upon AC lines. The proposed standard does not distinguish between asynchronous DC ties and the more common parallel connected DC tie. With an asynchronous DC tie, the transfer is lost with the tie. With a parallel DC tie, the transfer will be shifted to the parallel AC system and should have the same performance requirements. We do not agree that such an exception for DC lines is necessary or warranted. The decision in selecting DC vs. AC in transmission lines has traditionally been based on the break-even

Q43			
Commenter	**Yes**	**No**	**Comment**
			cost and performance of the two alternatives. The lower performance requirement may wrongly influence decisions on project alternatives in favor of DC facilities with less stringent requirements. Distinction Between Committed and Proposed Projects: 9. Models cannot discern the difference between a "committed" project, and a "proposed" project in a performance analysis. The standard should instead set criteria for when models can be relied upon for planning purposes such that changes to the future plan will not have an impact on reliability. The intent of Requirements R2.7.3 and R2.7.4 should be combined and added into R2.7.1.1. Rather than adding the additional requirement to document a criteria, the requirement should be that in the Near-Term Planning Horizon, projects cannot be removed (or modified) without demonstrating that the revised plan meets performance criteria. In addition, the requirement in R2.7.1.1 to supply a "project initiation date" is ambiguous. What will constitute "project initiation" …construction start date? …Engineering complete date? …Land procurement date? Funds allocated date (budgeted)? Suggested wording for R2.7.1.1. "Transmission and generation improvement projects for the Near-Term Transmission Planning Horizon, shall have in-service dates provided, and shall not have in-service dates changed, or be removed from planning models, without documentation to show that the revised plan meets performance requirements." Load Modeling Requirements: 10. The proposed TPL Standard contains numerous references to load modeling. The goal of improving and verifying the load model is worthwhile but is not appropriate for the TPL standards. Assessment of load model accuracy is best accomplished through detailed analysis of grid disturbance events. The main difficulties in accomplishing this are (1) grid events that significant reduce transmission voltages throughout a load area are infrequently occurring and (2) the process of recreating the event through simulation studies is extremely complex and time consuming. While these efforts should be encouraged they should remain a RRO prerogative. A few concerns not previously addressed by comments to Questions 1-42 include the following: R1.1.1 Use of expected Load mix - based on the actual or expected aggregate mix of industrial, commercial, and residential Loads. – This requirement is not justified as the load model may be developed through disturbance analysis rather than load type synthesis by customer class. Some Load Serving Entities may have great difficulty in creating load forecasts based on customer class. Load forecasting requirements are adequately addressed in the existing MOD standards and do not belong in the proposed TPL standard. R1.2. Load models with supporting rationale - that include power factor data that may be based on historical System performance, validated by measurement during stressed System conditions, or

Q43			
Commenter	**Yes**	**No**	**Comment**
			documented Transmission planning area requirements. This requirement is not appropriate for the TPL standards. 11. R.3.3.2.1. Consequential Load loss (expected maximum demand and expected duration) following a single Contingency shall be identified in the Planning Assessment. – this Requirement in its present wording could be construed to mean that the precise amount of load between breakers should be specified and reevaluated with every assessment. This would unnecessary and burdensome, and we therefore seek clarification of this Requirement or its removal altogether. 12. Requirements for studies using Sensitivity cases: R2.4.3 appears to place equal importance on base cases and sensitivity cases with regard to the need to implement projects or Corrective Action Plans. Terms in TPL-001-1 using forms of the word "sensitivity" need to be clearly defined by the SDT. Additionally, the SDT needs to clarify its intent regarding required action based on results from sensitivity studies. We do not agree that results from sensitivity studies should be given equal standing with results from base scenarios, and we would particularly object to any insinuation that projects would need to be implemented to mitigate violations seen in a sensitivity involving speculative non-firm transfers. 13. Short Circuit Requirements: The new TPL standard also contains numerous references to short circuit analysis, which are new requirements that expand the TPL standards, but without specific testing or performance criteria. Evidence that short circuit studies have been performed is currently required in the existing FAC-002-0 Standard. Since the primary concern is the appropriate sizing of equipment and the prevention of equipment damage as opposed to overall grid reliability, we do not see the need for a set of requirements within the proposed TPL standard for short circuit studies. FRCC Specifics: One final specific issue concerns the topography and performance history of the Bulk Electric System in our particular region (FRCC). The FRCC system is a peninsular system having only one interface with the rest of the interconnected NERC system, and has historically demonstrated exceptionally high reliability with no events in recent history cascading beyond the FRCC system. While other areas of the NERC system may require some increased stringency in the TPL standards, PE feels that the adequacy of the existing TPL standards as they apply to the FRCC System has been extensively documented. Conclusion In conclusion, we believe that TPL-001-1 is unnecessary and burdensome. In particular, the

Q43			
Commenter	**Yes**	**No**	**Comment**
			elimination of footnote (b) will deny Transmission Owners and Transmission Operators the right to curtail Non Consequential Load in order to restore the Bulk Electric System. This elimination has absolutely nothing to do with the reliability of the Bulk Electric System; rather, it places the reduction of Customer Minutes of Interruption (CMI) ahead of reliability. Essentially, the emphasis of TPL-001-1 is inappropriately placed on the reliability of distribution feeders rather than the reliability of the Bulk Electric System. The fundamental objective of the existing TPL Standards has been to protect the reliability of the Bulk Electric System, and we believe all future TPL Standards should do the same. Given the aforementioned issues, we believe the proposed TPL standard is inferior to the existing Board approved TPL Standards, creates unnecessary confusion, and will require many iterations of industry comment and revision. As an intermediate approach, we would strongly urge the Standard Drafting Team that the existing TPL standards be modified to respond to FERC Order 693 directives, clarify any ambiguities, and that the proposed new standard not be pursued any further.

Response: 1. The SDT followed the suggestion of FERC in Order 693 to consolidate the 4 standards into 1 if possible. The SDT recognizes that it has it has raised the bar on performance in some areas and has done that due to criticisms and suggestions from various parties. The SDT realizes that this will have an impact and is working on an Implementation Plan that will address some of the concerns. This is a performance based reliability standard and does not and should not consider economics. The SDT has made numerous changes to the tables in an attempt to provide further clarity as to what needs to be done to achieve performance.
2. An Initial Conditions column has been added to the tables. The SDT has also changes several requirements in the tables to allow for more instances of where Load can be dropped.
3. The SDT studied available data and practices and determined that these Contingencies do belong in the single Contingency performance group.
4. Local Load pockets are recognized as a problem and the SDT will address them in a future revision.
5. The use of the defined term Facility Ratings was intentional to answer problems such as described here.
6. The SDT was responding to FERC Order 693 in the details for Extreme Events.
7. The SDT feels that 300 kV and above represents the backbone of the BES and as such warrants more stringent criteria.
8. This is the only comment received on this issue so no changes were made to the second revision of the standard. However, the SDT will continue to review the performance table in subsequent revisions.
9. This verbiage has been removed from the standard.
10. The SDT feels that the current MOD standards do not cover all of the modeling requirements for a planner. Therefore, the specific areas found lacking are described in the TPL standard. Once the MOD standards are revised appropriately, these requirements can be deleted from TPL. The SDT has re-written these requirements and they are now numbered Requirement R9 through R13.
11. R3.3.2.1 - FERC required documentation of Consequential Load loss in Order 693, paragraph 1795, (not Non-Consequential) and duration should be based on best judgment for the common cause of the event.
12. Addressing or not addressing deficiencies discovered as a result of runing sensitivity studies is at the discretion of individual entities. The language of the standard has been changed to require that the entity document why or why not the results of the sensitivities have affected the Corrective Action Plan.

Q43			
Commenter	**Yes**	**No**	**Comment**
13. Short circuit studies are required as part of the Interconnection process. The TPL draft addresses on-going System changes and increases in available fault current due to the additions of circuits and resources, as listed in the Corrective Action Plan. Short circuit studies help determine appropriate equipment sizing and setting of protective relays. Such studies will help provide for a complete Corrective Action Plan, i.e., the installation of a transformer to resolve a System performance deficiency may require the installation of additional circuit breakers. FERC also noted the need to include this analysis to cover such conditions. The SDT has thoroughly considered the comments of all reponders. We believe that the revised draft of TPL-001-1 places the proper focus on BES reliability and the BES' mission to serve all firm Load under an appropriate range of Contingency events. Furthermore, the SDT believes that the current draft does in fact respond to the FERC Order 693 directives.			
ReliabilityFirst	☑		The requirement for short circuit studies (mentioned in R2 and included in all of R2.3) should be removed from this standard. Relay and protection engineers use a different type of software (Aspen and CAPE) for different reasons (to calculate phase and ground faults and perform relay coordination studies). Those types of studies should not be included in this standard and are totally separate from performing power flow and dynamics studies.
Response: The SDT believes that it is appropriate to include an assessment of the results of short circuit studies in the assessment of the reliability of the Transmission system. The standard does not specify requirements related to software or specific requirements of the studies.			
SRP	☑		The SDT should be commended for very good work at identifying many different issues of the TPL standards. However, TPL-001-1 should take into account the consequences of a Security-Based or Dependability-Based Misoperation (and failure) of the Protection System. 1) A Security-Based Misoperation of the Protection System may remove additional elements of the BES and could be listed in the table under "multiple contingency". 2) A Dependability-Based Misoperation (or Failure) of a non-redundant Protection System could cause long time delays in clearing faults and clear a large area of BES around the faulted Element. This type of failure may not provide local tripping or breaker failure initiation and remote Protection Systems would need to operate to isolate the fault or disturbance. Often the operation of the remote Protection Systems would cause long time delays in isolating faults and disturbances. a) The BES should be studied and those elements need to be identified where Dependability-Based Misoperations (or failures) would prevent meeting the performance requirements of Table 1 (Steady State) or Table 2 (Stability). This type of Misoperation (or Failure) will have to be included in the Tables. For example, some parts of the BES may be able to survive long time delayed clearing of faults caused by Dependability-Based Protection System Misoperations (or failures) and still meet the performance requirements of the tables. But other parts of the BES may experience cascading outages for this same scenario. One solution to minimize the consequences of Dependability-Based Misoperations (or failures) is to install redundant Protection Systems. The redundant Protection Systems would reduce the possibility of a single Dependability-Based Misoperation (or failure) from

Q43			
Commenter	**Yes**	**No**	**Comment**
			affecting the isolation of faults and disturbances. In addition, the TPL-001 standard will need definitions of Security-Based Misoperation and Dependability-Based Misoperation. The following definitions are used for PRC-004-WECC-1: Security-Based Misoperation: The incorrect operation of a Protection System or RAS for faults or disturbances outside the intended zone of protection. Security is a component of reliability and is the measure of a device's certainty not to operate falsely. Dependability-Based Misoperation: Any of the following ▪ The absence of a Protection System or RAS operation when intended ▪ A Protection System or RAS equipment failure is alarmed or indicated to operating personnel. ▪ A Protection System or RAS equipment failure is discovered. Dependability is a component of reliability and is the measure of a device's certainty to operate when required.
Response: To date, the SDT has done the following: Tables 1 and 2 have been revised. A Contingency involving the failure in the Protection System has been added as P5 in Tables 1 and 2. Also 2a-2d were added in the Table 2 Extreme Events. The SDT is continuing discussion on Protection System issues and will be making additional changes as appropriate in future versions.			
Santee Cooper	☑		1. Transmission Planners are currently able to maintain adequate levels of reliability using the existing TPL-001 thru TPL-004 standards. While incremental improvements can be made, it is not evident that prescribing more stringent planning requirements will result in significant reliability improvements. 2. Table 1 in the column titled "Interruption of Firm Transfer Allowed," does it pertain to point-to-point only, or does it also apply to network loads? Please explain how this provision is consistent with the requirement to re-dispatch to address system constraints. 3. There are no explicit performance requirements for normal system performance. 4. Requirement R1.1.2 refers to "normal weather patterns as agreed to by the Planning Coordinator(s) and the Transmission Planner(s)…" The standard and the ERAG MMWG need to be made consistent. 5. Requirement R2.3 There are no performance requirements for Short Circuit Studies. 6. Requirement R2.7.1.1 specifies a "project initiation date". This information is not needed for system reliability purposes.

Q43			
Commenter	**Yes**	**No**	**Comment**
			7. Requirement R3.2. There should be some flexibility for simulation of planning events. For certain areas of the BES, the resulting configuration after operator intervention could be more severe than the removal of all elements. For example, the operation of a transmission line with one end open may be more severe than opening both ends of the line. This respresents actual operation in order to restore service to stations on the line. 8. Requirement R3.3.2.1 requires an evaluation for "Consequential Load loss (expected maximum demand and expected duration). Load loss is not an ERO responsibility. 9.Requirement R3.3.2.2 does not permit the "shedding of firm Load or curtailment of firm transfers". This is not an ERO responsibility. 10. Requirement R3.6 states "Manual and automatic generation tripping is allowed for multiple Contingencies and for single Contingencies only in situations that meet all of the following conditions: TBD. Generators should be allowed to trip for single and multiple contingencies as long as Facility Ratings are not exceeded. In addition, generators should be allowed to trip for any condition that imperils the generator. System performance should be the criteria, not generator operating state. 11. Requirement R4.2 states "Contingency analyses shall simulate the removal of all elements including those that the System protection is expected to disconnect for each Contingency without operator intervention." Delete "including those". 12. Requirement R4.6.1 states that Plant Stability studies "Shall be performed for individual generating units 20 MW or greater…" Does this mean that studies must be performed for all units? Many plants have "sister units" that are essentially the same. This requirement seems to be excessive. 13. The R1 requirements should be deleted from this standard and should remain on the MOD standards. (MOD-010, MOD-012, and MOD-018) 14. Requirement R4.6.2 states that Plant Stability studies "Shall be performed for changes in the real power output of a generating unit by more than 10% of the existing capability or more than 20 MW whichever is greater." The meaning of this wording is unclear. 15. Requirement R4.6.3 states that Plant Stability studies "Shall be performed and evaluated for those Planning Events that would produce more severe System impacts and the rationale for the Contingencies selected for evaluation shall be available as supporting information and shall include an explanation of why the remaining Contingencies would produce less severe System results. The

Q43			
Commenter	**Yes**	**No**	**Comment**
			identified Contingencies, at a minimum, shall be evaluated." The use of "evaluation/evaluated is unclear. Is an evaluation the same as performing a study? If not, what does it mean to select a contingency for evaluation? 16. The standard needs to define or describe the difference between a "bus" and a "bus section". 17. Table I, P3, P7.2, P9.6 and Table 2, P7 need some punctuation for clarification. Table I, P9.6 and Table 2, P9, why study replacing an outaged transformer with a spare? 18. The use of the terms "bus", "non-tie bus", and "bus section" are not clear. In P7-2 what is meant by the phrase or a bus and a stuck non-bus tie breaker ? Does this imply a bus or a bus section? How would you model this?

Response: 1. The SDT believes that more stringent planning ("raising the bar") is appropriate in some areas of the standard and will improve reliability.
2. The term "firm transfer" in Tables 1 and 2 has been replaced with "firm Transmission service".
3. Table 1 has been revised to include normal System performance requirements.
4. This requirement has been eliminated in response to various industry comments.
5. Short circuit duty is a Facilitiy Rating, and Facility Ratings shall not be exceeded.
6. The SDT agrees that this information is not required to meet reliability standards. It was specifically added as an additional piece of information in the Planning Assessment to allow some level of peer review within the NERC community and provide some level of confidence that the proposed plan could in fact be completed to meet the reliability objective. Initiation dates are only required in the near term since longer term plans tend to move in time and only have general scheduling associated with them.
7. R3.2 - The SDT has added a line end open condition in P2.
8. R3.3.2.1 - FERC has jurisdiction over firm Transmission service. FERC allows the use of "equally or more efficient or effective approach" and firm Load is being used as a proxy for firm Transmission service.
9. This requirement is consistent with FERC Order 693.
10. The SDT agrees that SPS can include generation tripping. The SDT has modified the requirements to allow SPS for single and multiple Contingencies (See Requirement R 3.5).

R3.5. Manual and automatic generation run-back/tripping is allowed as a response to a single ~~and~~ or multiple Contingenc~~ies~~y ~~as long as Facility Ratings are not exceeded.~~if the following conditions are met:

11. The SDT feels that the wording is equivalent.
12. The answer is yes it does.
13. The SDT believes some additional modeling requirements not presently contained in the MOD standards are necessary for Transmission planning purposes. The SDT has revised these requirements based on industry comments to eliminate redundancy with existing MOD standards with the intent that these requirements will be removed from the TPL standard when they are incorporated into the MOD standards at a later date.

Q43			
Commenter	**Yes**	**No**	**Comment**
14. The SDT feels that the wording is clear as stated. 15. Evaluation is based on good professional judgment and knowledge of the System. It is not the same as a study. 16. "Bus section" is in the existing TPL standards; the SDT is not proposing to change its meaning. The SDT considered but has decided not to include a definition for "bus section". 17. Tables 1 and 2 have been revised. P9.6 has been deleted and replaced with a reference in Requirement R11 in the second draft. **R11**. Each Transmission Owner shall provide its respective Planning Coordinator with modeling information for known planned outages and long-term outages for Transmission equipment for each year of the Transmission planning horizon with consideration given to spare equipment strategy, within ninety days of a request for such information. 18. The SDT has included a definition for Bus-tie Breaker. The SDT has clarified the event description for P7-2 (now P-4 in the second draft). **Bus-tie Breaker:** A circuit breaker that is positioned to connect two individual straight bus substation configurations. (Substation configurations such as ring-bus, breaker-and-a-half, or double bus-double breaker protection schemes do not use bus-tie breakers.)			
SaskPower	☑		Saskatchewan commends the SDT for taking on this difficult and important task. We wish you good fortune. 1. Local area network load is allowed to be shed in Saskatchewan for single contingencies, and the interruption of firm transfers are allowed over our DC tie and AC tie-lines. The Saskatchewan Regulatory Jurisdiction has no plans to change this unless there is technical evidence to justify the increase in reliability versus the cost. 2. Also for P9-1, is there any justification for the selection of one mile? If there is none the development of exemption criterion should be delegated to the Planning Coordinator. It is not what Saskatchewan has used in designing its system, and it is going to involve a significant capital outlay for Saskatchewan with questionable reliability benefits. Saskatchewan will not support the default value of 1 mile unless there is a technical study (including reliability benefit versus cost) to support it as opposed to any other distance.
Response: 1. The SDT is required to address FERC Order 693 and cannot default to lowest common denominator. This issue is beyond the scope of the SDT and needs to be addressed at the NERC level. However, an Entity can request an "Entity Variance" in accordance with the NERC Reliability Standards Development Procedure (Page 27). **2.** The one mile allows for some measurable physical constraints to building separate lines in all locations, but limits the exposure to a fixed length, which is universally applicable. SaskPower can request an "Entity Variance" in accordance with the NERC Reliability Standards Development Procedure (Page 27).			
Seattle City	☑		The additional studies required by this proposed standards are going to put a burden on our utility. We do not have the additional human resources available to perform so much additional work. Also, the stipulation that no "non-consequential load" loss may occur will put a financial burden on our utility. We have always planned assuming that we would able to be shed residential load in case of

Q43			
Commenter	**Yes**	**No**	**Comment**
			an emergency caused by a N-2 event or regional outage beyond our control.
Response: The SDT believes that more stringent planning ("raising the bar") is appropriate in some areas of the standard and will improve reliability.			
SERC EC DRS	☑		1.In the Stability Performance Table, under contingency P8 with a line out add a generator contingency. and with a transformer out add a generator and a line contingency. 2. In the Stability table change the Extreme Events numbering to E1, E2, etc. 3. In R4.6 and other locations, the generator exemption of 20 MW should be increased to 75 MVA.
Response: 1. The transformer – line combination has been added. The SDT does not feel that the other cited events are a legitimate combination. If you have specific data to indicate otherwise, please provide it. 2. The SDT made changes to the format of Extreme Events. 3. This is consistent with FERC Order 693, the Large generator Interconnection procedures, and the registry criteria.			
SERC EC PSS	☑		Significant Increase in Study Activity Workload on Transmission Planners: 1. The increase in both steady state and dynamic studies required to ensure compliance with the proposed standards will result in increased costs and staff additions. The addition of the "Corrective Action Plan" requires the TP to provide a significant amount of documentation for each deficiency identified by the studies. Also, R3.2 requires that the studies simulate the protection scheme for all events. The current software tools cannot automate these studies for bus faults and breaker failure events, requiring each scenario to be studied manually. Additionally, experienced staff capable of performing analyses as described in the proposed standard have become increasingly difficult to find and retain and the talent pool of people with these skills has recently become depleted to alarming levels. Implementation Plan: 2. Given the intent of the proposed standard to encourage large scale investment in the EHV system, full implementation will take years, perhaps decades. Acquirement of right-of-way for new EHV lines has become increasingly difficult in recent years and inreasingly expensive. Legal, regulatory, and other difficult issues often take several years to navigate, even for 115kV lines. The Implementation Plan timeframe, if set too short, would be unduly burdensome on Transmission Owners forcing them to be less dicretionary with funds than would be prudent. The proposed implementation plan should include provisions for those cases where viable solutions simply can not be implemented in time due to circumstances beyond the control of Transmission owners. We recommend a minimum of 15 years for the transition. Design and Construction Constraints: 3. Even if right-of-way and other legal and regulatory hurdles are cleared, and the capital funding for such a tremendous level of investment was not an issue, the other resources required to actually

Q43			
Commenter	**Yes**	**No**	**Comment**
			construct the projects are equally difficult and costly to secure. Raw material prices on comodities like copper and steel have skyrocketed in recent years. Additionally, the skilled labor and Engineering resources are constrained with labor rates almost keeping up with other resource costs. Overall project costs have more than doubled over the last 7-10 years. Recent press releases concerning new generation being planned and then scrapped due to the rapid escalation of project costs are public evidence of this. The inflationary mark-up is impossible to estimate but much less will be built with the same capital investment than is currently envisioned. Cost-Benefit Analysis: 4. The proposed standard will be exceedingly expensive to become compliant with unprecedented levels of capital investment in Transmission facilities. Before the standard comes to official vote, it would be prudent for a cost-benefit analysis to be performed to determine if the reliability improvements truly justify the huge expenditures certain under the proposed standard. Additionally, as many jurisdictional rate structures share the cost of such investments between retail and wholesale customers, cost-benefit analyses should be completed for both retail and wholesale customers. System Adjustment Clarification: 5. The term "System Adjustment" as outlined in the tables should be better defined. The use of generation for redispatch may have nuances which preclude or otherwise limit their use for studies. Perhaps some clearer guidelines on what is allowed would facilitate transparency and coordination between Transmission Planners. Transmission Service Evaluation: 6. A major concern is that the proposed standard appears to be disjointed from the requirements for selling firm Transmission Service. The increase in reliability gained from the proposed standard would, in some regions, quickly be eroded by new firm sales if those sales are based on the historical N-1 ATC requirements. The proposed standard must be applied to long-term firm transmission service requests if Transmission reliability is to be truly enhanced. If the standard is not applied to Transmission Service evaluation, reliability levels for the different classes of firm customers will diverge.
Response: 1. The SDT understands the potential increases in work load. The draft standard allows the use of past studies to meet the current year assessment and study requirements. Requirement R3.2 does not require study of the protective scheme for all events, only that "Contingency analyses shall simulate the removal of all elements including those that System protection is expected to disconnect for each Contingency without operator intervention". For example, the requirement is that the outage simulation should be from breaker to breaker. In addition, Requirement R.3.2.2 only requires the studies consider relay loadability and identify how loadability is treated in the steady state simulation, not to study relay loadibility. 2. The SDT understands that there are extended transitionary issues associated with responsible entities becoming compliant with the new			

Q43			
Commenter	**Yes**	**No**	**Comment**
standard. The SDT plans to draft an extended implementation plan to accommodate such issues. The plan will be provided for the third posting of the standard. 3. The SDT understands that there are extended transitionary issues associated with responsible entities becoming compliant with the new standard. The SDT plans to draft an extended implementation plan to accommodate such issues. The plan will be provided for the third posting of the standard. Cost issues are outside the scope of NERC reliability standards. 4. The treatment of Transmission infrastructure costs is outside the scope of the NERC reliability standards. 5. The Transmission performance tables have been modified to bring clarity to the Contingencies required for performance studies and when Non-Consequential Load Loss is permitted to meet requirements. The use of manual or automatic System adjustments to revise System topology as well as generation redispatch is always permitted so long as the actions can be performed while adhering to Facility Ratings. 6. The SDT plans to draft an implementation plan. This implementation plan will address, among other issues, the other standards, which will need to be brought into alignment with this standard. The plan will be provided for the third posting of the standard.			
SERC RRS OPS	☑		Cost-Benefit Analysis: 1. Transmission Providers are currently able to maintain adequate levels of reliability using existing standards. While incremental improvements can be made, it is not evident that prescribing more stringent planning requirements will necessarily result in significant reliability improvements. 2. The proposed standard will be exceedingly expensive to become compliant with unprecedented levels of capital investment in Transmission facilities. Before the standard comes to official vote, it would be prudent for a cost-benefit analysis to be performed to determine if the reliability improvements truly justify the huge expenditures under the proposed standard. 3. In Table 1 in the column titled "Interruption of Firm Transfer Allowed," does it pertain to point-to-point only, or does it also apply to network loads? Please explain how this provision is consistient with the requirement to re-dispatch to address system constraints. 4. The terms "Consequential Load Loss" and "Non-consequential Load Loss" should be deleted and Table 1 should be modified to discuss "Planned Load Loss" and "Unplanned Load Loss". It should not matter if the load is directly connected to the failed facility or downstream and served by the failed facility. If the plan to protect the interconnected grid is to disconnect those loads using a manual process or an automatic scheme, then it should be allowed. 5. The R1 requirements should be deleted from this standard and should remain in the MOD standards.
Response: 1. The SDT believes that more stringent planning ("raising the bar") is appropriate in some areas of the standard and will improve reliability. 2. Any changes in the new draft Standard have been carefully weighed and discussed by the SDT. The SDT does not believe that a formal cost benefit analysis is required. However, if you have cost data which you would be willing to supply to the SDT, we will take it under			

Q43			
Commenter	**Yes**	**No**	**Comment**
consideration. 3. Tables 1 and 2 have been revised to replace the term "firm transfer" with "firm Transmission service". 4. The SDT feels that the terms are being used consistent with FERC Order 693. 5. The SDT believes some additional modeling requirements not presently contained in the MOD standards are necessary for transmission planning purposes. The SDT has revised these requirements based on industry comments to eliminate redundancy with existing MOD standards with the intent that these requirements will be removed from the TPL standard when they are incorporated into the MOD standards at a later date.			
SCE&G	☑		General Comment. 1. Cost/Benefit analyses should be conducted on each change in a standard or new standard. 2. Requirement 7.2 will require a 2 bus outage test on the SCE&G transmission system. Most of our busses are straight busses and a stuck line-terminal breaker will result in a clearing of the connected bus (and all facilities connected to that bus). Our read of this requirement is that we must design the system to accommodate a stuck breaker event (outaging all connected facilities) while a different bus (and all of its connected facilities) is already outaged. This is a significant leap in the required performance of our system and will result in tremendous unwarranted costs and years of new local area transmission construction. 3. Requirement R1.1.2 refers to "normal weather patterns as agreed to by the Planning Coordinator(s) and the Transmission Planner(s)…" The ERAG MMWG considers normal weather to be such that the weather affected load to be that which has a 50% probability of, plus or minus. The standard and the ERAG MMWG need to be made consistent. 4. Requirement R2.7.1.1 specifies a "project initiation date". This information is not needed for system reliability purposes. 5. Requirement R3.3.2.1 requires an evaluation for "Consequential Load loss (expected maximum demand and expected duration). Load loss is not an ERO responsibility. 6. Requirement R3.3.2.2 does not permit the "shedding of firm Load or curtailment of firm transfers". This is not an ERO responsibility. 7. Requirement R3.6 states "Manual and automatic generation tripping is allowed for multiple Contingencies and for single Contingencies only in situations that meet all of the following conditions: TBD. Generators should be allowed to trip for single and multiple contingencies as long as Facility Ratings are not exceeded. In addition, generators should be allowed to trip for any condition that imperils the generator. System performance should be the criteria, not generator operating state.

Q43			
Commenter	**Yes**	**No**	**Comment**
			8. Requirement R4.2 states "Contingency analyses shall simulate the removal of all elements including those that the System protection is expected to disconnect for each Contingency without operator intervention." Delete "including those". 9. Requirement 4.6.1 states that Plant Stability studies "Shall be performed for individual generating units 20 MW or greater…" Does this mean that studies must be performed for all units? Many plants have "sister units" that are essentially the same. This requirement seems to be excessive. 10. Requirement 4.6.2 states that Plant Stability studies "Shall be performed for changes in the real power output of a generating unit by more than 10% of the existing capability or more than 20 MW whichever is greater." The meaning of this wording is unclear. 11. Requirement 4.6.3 states that Plant Stability studies "Shall be performed and evaluated for those Planning Events that would produce more severe System impacts and the rationale for the Contingencies selected for evaluation shall be available as supporting information and shall include an explanation of why the remaining Contingencies would produce less severe System results. The identified Contingencies, at a minimum, shall be evaluated." The use of "evaluation/evaluated is unclear. Is an evaluation the same as performing a study? If not, what does it mean to select a contingency for evaluation? 12. The standard needs to define or describe the difference between a "bus" and a "bus section" and ensure that the use of these terms in the standard are as intended. 13. Table I, P3, P7.2, P9.6 and Table 2, P7 need some punctuation for clarification. 14. Table I, P9.6 and Table 2, P9, why study replacing an outaged transformer with a spare?

Response: 1. Any changes in the new draft Standard have been carefully weighed and discussed by the SDT. The SDT does not believe that a formal cost benefit analysis is required. However, if you have cost data which you would be willing to supply to the SDT, we will take it under consideration.
2. The SDT feels that this requirement is appropriate for a North American standard. The eventual Implementation Plan will address the timeframe for compliance.
3. This requirement has been eliminated in response to various industry comments.
4. The SDT agrees that this information is not required to meet reliability standards. It was specifically added as an additional piece of information in the Planning Assessment to allow some level of peer review within the NERC community and provide some level of confidence that the proposed plan could in fact be completed to meet the reliability objective. Initiation dates are only required in the near term since longer term plans tend to move in time and only have general scheduling associated with them.
5. The SDT disagrees. FERC Order 693, Paragraph 1794 specifically prohibits loss of Non-Consequential Load for a single Contingency. Furthermore, FERC required documentation of Consequential Load loss in Order 693, paragraph 1795.
6. R3.3.2.2 - R3.3.2.2 has been revised and the phrase "shedding of firm Load or curtailment of firm transfers" has been deleted.

Q43			
Commenter	**Yes**	**No**	**Comment**
R3.3.2.2. Following single Contingency events, ~~System adjustments other than shedding of firm Load or curtailment of firm transfers are permitted to meet performance requirements provided these adjustments can be accomplished within the time period allowed by the applicable time limited ratings.~~ Transmission configuration changes and redispatch of generation are allowed provided that all Facilities shall be operating within their Facility Ratings and within their thermal and voltage limits. 7. The SDT agrees that generation tripping can be included. The SDT has modified the requirements (See Requirement R 3.5). **R3.5**. Manual and automatic generation run-back/tripping is allowed as a response to a single ~~and~~ or multiple Contingenc~~ies~~y ~~as long as Facility Ratings are not exceeded.~~if the following conditions are met: 8. The SDT feels that the wording is equivalent and no changes are necessary. 9. and 10. This is consistent with FERC Order 693, the Large generator Interconnection procedures, and the registry criteria. 11. Evaluation is based on good professional judgment and knowledge of the System. It is not the same as a study. 12. The SDT considered but decided against adding a definition because the term "Bus Section" is in the existing TPL Standards and its meaning is generally understood. 13. Tables 1 and 2 have been revised. 14. P9.6 has been deleted and replaced with a reference in Requirement R11 in the second draft. **R11**. Each Transmission Owner shall provide its respective Planning Coordinator with modeling information for known planned outages and long-term outages for Transmission equipment for each year of the Transmission planning horizon with consideration given to spare equipment strategy, within ninety days of a request for such information.			
Southern Transm.	☑		REQUIREMENTS: 1. The standard is not clear on whether corrective action plans are required for performance failures during the sensitivity analysis required for both steady-state and stability studies. In the phone conference John Odom stated that it was not the intent of the Drafting team to require that facililities be constructed for these conditions. The standard should be made clear on this point. 2. The Load Forecast section (R1.1) is new and is a duplicate of the requirements in the MOD standards and is unclear as written. Having similar requirements in multiple standards creates the possiblility of conflicting requirements for the industry. If there are different requirements necessary, the MOD standards should be modified and not introduce a new section to the TPL standards. 3. R1.1.1 is unclear in what is intended by the "actual or expected aggregate mix of industrial, commercial, and residential load". Does the word "aggregrate" mean that the split between customer classes should be at the Balancing Authority level or at each load bus represented in the model. In many cases this could place a requirement for substantial load research on the the industry which may take a substantial amount of time and expense to accomplish. The use of the phrase "actual or

Q43			
Commenter	**Yes**	**No**	**Comment**
			expected" indicates an expectation that it be based on research and not general industry averages as may be more practical in some cases. 4. The wording in section R1.2 is very unclear. Is the intent to allow for three different methods for obtaining power factor models, i.e. historical system performance, validated by measurements during stressed System conditions, or documented Transmission planning area requirements? The other understanding is that the historical System performance is only measured during stressed System conditions. If this is the intent, what is the definition of stressed system conditions that is intended? Is this just heavy loadings, such as peak times, or is it during sytem disturbances? This is not clear. We suggest that the following words be used instead: "Load models validated by measurement during load levels typically studied or documented Transmission planning area requirements." 5. Requirement R1.4 should be qualified as only the outages within the Planning Horizon. There is no need to include protective relays because outages of relays in the Planning Horizon would not be known. We suggest the following words: "Known planned outages within the Planning Horizon and long-term outages greater than one year within the Planning Horizon for Transmission and generation equipment with consideration given to spare equipment strategy." 6. R1.5: If this places a requirement on the PC to define what constitutes "planned facilities", then this should be explicitly stated as a requirement. 7. R2.1 allows Assessments to be supplemented with "qualified" past studies which are defined in R2.6. R2.6.1 specifies these to be less than three years old for steady-state analysis and certain changes could not have occurred in the "System". There should be some qualification to the definition of "System" to include "the vicinity" of the area under evaluation. We would surmise that there always be some change in topology in the Eastern Interconnect which would preclude the use of past studies. Note that the "in the vicinity of" wording is used with the plant stability studies already. Also, is the intent with the "less than" to eliminate the use of studies three years old? Similar comments can be made for R2.6.2 and R 2.6.3. 8. R2.1 The wording/structure is confusing. The "Planning Assessment shall address all five years", but this does not require all five years be studied. It appears that the minimum study requirements would be two peak studies (years 1 or 2 & 5), one off peak study (any year), and one senstitivity case for each. Is this a correct reading? 9. In R.2.1.3.1 it is unclear what is intended. The study can be for higher or lower load "forecasts" with a different load power factor due to season, weather, or time of day. If you are looking at different seasons, weather, or time of day you will have a different load forecast. Is the intent to

Q43			
Commenter	**Yes**	**No**	**Comment**
			require the studies to model different seasons or times of day that will generate different power factors or is it to focus on higher or lower loads, i.e. is it a load forecast exercise or a power factor exercise? Can we look at Spring conditions and have it qualify for this requirement even though the loads are consistent with my Base Case load forecast? 10. Requirement R2.1.3.3 lists "unavailability of long lead time facilities" as one of the sensitivity(ies) that should be evaluated. It is unclear whether this refers to the construction of projects with long lead times or for replacement of failed equipment that have long lead times for obtaining replacements. One of the drafting team members suggested it was the latter understanding that was intended. We suggest that the language be changed to "Delayed restoration to service of failed facilities with long lead times for repair". This may clarify the intent of the requirement. 11. R2.1.3.7 should be modified to read "Modification of planned long term Transmission outages." 12. R2.3.1 Does "current study" refer to an updated study or is this referring to some type of short-circuit analysis? It appears that analysis is required only every five years unless changes in the BES occur. Is this a correct reading? 13. R2.4: Need to clarify that "address all five years of the assessment period" does not necessarily require that each year must be studied individually. A study of one year could cover all 5 years if it is the worst case. 14. R2.4.3.2 Is the purpose of including non-firm transfers to identify generation limits? Please clarify that the intent is not to require constraints associated with non-firm transfers to be addressed. 15. R2.5.2: The addition of a transmission line always helps plant stability. Therefore, this should not be included as a change requiring a new study. 16. R2.7.1.1 requires that the action plan include a project initiation date as well as the in-service date. The project "initiation date" is not defined and can be interpreted as being when you thought up the project, when you started spending money on design, or when you actually started construction. As long as you have the in-service date when the project is needed, we do not see any major benefit from recording and documenting an "initiation" date. The length of time that it requires to complete a project is extremely variable based on many conditions so we're not sure what benefit, if any, will be gained by recording and documenting the initiation date. It may be impossible for someone not familiar with the legal, regulatory, etc. requirements in a given area to judge whether the timing is appropriate or not. This requirement should be eliminated.

Q43			
Commenter	**Yes**	**No**	**Comment**
			17. R2.7.5 calls for the review of the implementation status of facilities. This imposes a large documentation requirement which has no benefit in reliability. We suggest making this requirement on an "as requested" basis. 18. Requirements 3.2 and 4.2: Delete the words "including those" so that it reads "the removal of all elements that System protection is expected...". As currently written, it sounds like you are going to remove more elements than the protection will remove. 19. R3.2 requires that the contingency analysis shall simulate the removal of all elements including those that System protection is expected to disconnect for each contingency without operator intervention. At present most steady state analysis uses single "element" contingency with element defined as transmission lines or transformers as defined in the Power Flow cases. In a significant number of cases these individual "lines" are part of a larger "protection control group" (PCG). that would remove multiple elements encompased by the breakers in the PCG The present load flow tools (PSS/E) do not have features that will allow this type of analysis in an automated manner. To facilitate this change in required analysis, program modification will be needed or additional programs written. For an example with a line from bus A to B and then B to C with breakers at A and C and load at B, the outage of either A to B or B to C with load service remaining at Bus B may produce a more stringent condition than removing A to B to C. It appears that the new requirement is requiring the A to B to C analysis instead of the more stringent A to B or B to C. 20. Requirement R3.2.1 is unclear. Generators generally have both a high and a low voltage limitation on the terminal voltage related to station service reqirements. Most load flow representations for generators tend to hold the voltage on the high side of the GSU instead of the low side. Is this requirement attempting to say that the voltage limitations on the generator terminals must be considered or is it something else? This should be made clear in the requirement. 21. R3.3.2.1 requires that the amount of "consequential Load loss following a single Contingency shall be identified and the anticipated duration be recorded". This is an arbitrary requirement that will require significant time and effort to document and will provide no useful information from a planning perspective. Also the inclusion of an "expected" duration is more arbitrary than the actual amount of load. The time required to restore the facilities is a pure guess at best since it will vary substantially based on circumstances and conditions. Since we are also required to remove all elements that the protection control group (PCG) will open instead of just a single "power flow model" line, some of the load may be restored during switching action for tapped loads and some may not. This creates an additonal confusion of what is required to be recorded in terms of duration and load reduction. We see no benefit from identifying and documenting either the amount of consequential

Q43			
Commenter	**Yes**	**No**	**Comment**
			load lost or the estimated duration that would justify the time and effort required. 22. R3.3.2.2 This states that curtailments of firm transfers are not permissible following single contingency events to meet the performance criteria. Please clarify whether "firm transfers" refers to firm point to point service only, or if firm network service is also included. Said another way, is the curtailment of a network resource permissible following single contingency events to meet the performance criteria? If not, please clarify how redispatch service as required by Order 890 should be considered. If curtailment of a network resource is permited, please clarify why curtailment of PTP would be held to a higher standard. Also, please clarify whether R3.3.2.2 applies to P6. Lastly, please clarify how Conditional Firm Service (CFS) as required by Order 890 should be considered in meeting R3.3.2.2. CFS allows the curtailment of "firm" PTP transfers. This appears to be in conflict with the performance criteria. 23. Requirement R3.6 is not clear. It could be interpreted as generator tripping allowed for multiple contingencies only for the situations that meet the "to be determined" conditions. Generator tripping should always be allowed for multiple contingencies. 24. R4.5 and R4.6: We suggest dropping the words "For the" in each of these. 25. R4.6.1: Plant stability studies should not be required for generating units as small as 20 MW. The threshhold should be 100 MW or greater. 26. R4.6.3: The last sentence "The identified Contingencies, at a minimum, shall be evaluated" is redundant because the requirement already says "shall be performed and evaluated" The last sentence should therefore be deleted. TABLE 1 - STEADY STATE PERFORMANCE: 27. In Table 1 in the column titled "Interruption of Firm Transfer Allowed," does it pertain to point-to-point only, or does it also apply to network loads? Please explain how this provision is consistient with the requirement to re-dispatch to address system constraints. 28. Steady state table, extreme event description, section 3: Items d and f are operating issues and therefore should not be included in the table. Also, items c and d are identical. Items d and f are identical. 29. Steady state table: Add the requirement to study n-0 to the table so it will be complete. Call it P0.

Q43			
Commenter	Yes	No	Comment
			30. Steady state table and stability table: Change the heading which now says "For all Planning Events" to say "The following performance requirements must be met for the Planning events evaluated in addition to the requirements given in the columns" 31. Steady state table: For the event in P3, it is not clear what the "above 300 kV" applies to. Is it only the transformer? Or it it also the transmission circuit and generator? Also, the third column mentions DC when there is no DC in the event. 32. The event description in P3 is confusing. Please consider rewording in the 1,2,3 format of the other event descriptions. The term "non-bus tie breaker" is confusing. Please consider using "breaker (excluding bus ties)". Also, above 300 kV, most construction is either ring bus or breaker and a half. Please considered deleting the bus outage contingency. Lastly, please clarify how redispatch and CFS should be considered in the context of P3 and P4, in which the curtailment of firm transfers is not permissible to meet the performance criteria. 33. Steady state table: For transformers below 300 kV, P9.6 is no different from P8.3. We suggest adding the clarification of "above 300 kV" for P9.6. 34. Steady state table Extreme Event: 3.b "A successful cyber attack" needs to be clarified. What should the contingency be? 3.g Add the words "As applicable" to the beginning. 3.h This should be changed to "Other events as deemed appropriate by the PC based upon operating experience". Otherwise there will be no end to the contingencies that must be studied. 35. Several events in the tables use the term "internal fault" for a breaker. The SDT needs to explain what is intended by this term. 36. Steady State Performance Requirement, Table 1, Performance Levels P1-P4, should allow for the interruption of firm transfers if the transfer is dependent upon on the outaged equipment (whether AC or DC) to provide an electrical path specified in the transfer. Therefore, the current verbiage used for the outage of a DC Line should be applied to all levels and state, “Yes, if transfer is dependent on the outaged equipment to provide an electrical path for service” 37. Steady state and stability tables: in the Extreme Events section heading, the word "all" implies that all events must be evaluated when this is not the intent. Either make the heading "For Extreme Events" or make it "For all Extreme Events evaluated".

Q43			
Commenter	**Yes**	**No**	**Comment**
			TABLE 2 - STABILITY PERFORMANCE TABLE: 38. Stability table, note 1.a.i: P3.2 should be P2.3. 39. Several events in the tables use the term "internal fault" for a breaker. The SDT needs to explain what is intended by this term. 40. In event P7.2, does the "below 300 kV" apply to the generator, transmission circuit, transformer, and bus as well as to the stuck breaker? Or does it apply only to the stuck breaker? 41. The event description in P3 is confusing. Please consider rewording in the 1,2,3 format of the other event descriptions. The term "non-bus tie breaker" is confusing. Please consider using "breaker (excluding bus ties)". Also, above 300 kV, most construction is either ring bus or breaker and a half. Please considered deleting the bus outage contingency. Lastly, please clarify how redispatch and CFS should be considered in the context of P3 and P4, in which the curtailment of firm transfers is not permissible to meet the performance criteria. 42. Steady state table and stability table: Change the heading which now says "For all Planning Events" to say "The following performance requirements must be met for the Planning events evaluated in addition to the requirements given in the columns" 43. Steady state and stability tables: in the Extreme Events section heading, the word "all" implies that all events must be evaluated when this is not the intent. Either make the heading "For Extreme Events" or make it "For all Extreme Events evaluated". 44. Stability table, footnote 1.a.ii. After "out-of-step protection", add the words "or some other means to trip the generator for this condition". GENERAL: 45. The overall level of documentation required by this standard is excessive.
Response: 1. The SDT is providing some guidance under Requirement R2.1.3 on what needs to be included in sensitivity studies while not being totally prescriptive. Requirement R2.1.3 has been modified to require documentation of why the listed sensitivities were or were not selected for specific studies. It is the entity's decision to establish and document which transfers are more significant to study System responses. Requirement R 2.7.2 has been added to require a description of how and why the list of actions was modified and/or expanded as a result of the inclusion of the sensitivities selected. The SDT fells that the standards are clear that the sensitivity studies do not in themselves establish the need for a plan, only the areas of the System for which the analysis is needed.			

Q43			
Commenter	Yes	No	Comment
R2.1.3. For each of the studies described in Requirement R2.1.1 and Requirement R2.1.2, sensitivity case(s) that stress the System with sensitivities that reflect one or more of the following conditions shall be run and documentation ~~with~~ of the technical rationale for ~~the selected sensitivity(ies)~~ why each of the conditions was or was not selected shall be supplied: **R2.7.2**. ~~Be added to study cases and the cases re-tested to show that the System with planned additions meets the performance requirements in the tables~~ Contain a description of how and why the consideration of the sensitivities selected in accordance with Requirements R2.1.3, R2.1.4, R2.4.3, and R2.4.4 in the Planning Assessment did or did not result in a modification or expansion of the list of actions developed in accordance with Requirement R2.7.1. 2. The SDT believes some additional modeling requirements not presently contained in the MOD standards are necessary for Transmission planning purposes. The SDT has revised these requirements based on industry comments to eliminate redundancy with existing MOD standards with the intent that these requirements will be removed from the TPL standard when they are incorporated into the MOD standards at a later date. 3. The terms "actual" and "aggregate" have been deleted. However, the SDT believes the term "expected" allows for flexibility in determining the necessary modeling information. 4. The SDT's initial attempt was to allow any of the three methods listed for obtaining power factor models. The SDT has removed Requirement R1.2 from the draft and replaced it with a new Requirement R9 in the revised draft to have the Distribution Provider provide real and reactive Load forecast data based on expected or historical system performance. **R9.** Each Distribution Provider shall provide its respective Planning Coordinator with modeling information for real and reactive load forecast data for each year of the Transmission planning horizon at Transmission nodes based on expected or historical System performance including the expected mix of industrial, commercial, and residential Loads, within ninety days of a request for such information. 5. The SDT has revised this requirement based on industry comments to delete the reference to "protective relays" and to clarify the intent that *known* planned outages and long-term outages for Transmission equipment, including the impact of spare equipment strategy, be considered, and to be responsive to FERC Order 693, paragraph 1725. 6. The referenced verbiage has been deleted from the revised standard. 7. The intent of the requirements was to put an upper bound on the shelf life of the study and bracket the applicability of the study such that, if changes were made that may effect results of the previous studies, they shouldn't be used. The SDT agrees with your comment and clarified the wording in Requirements R 2.6.1, 2.6.2, and 2.6.3. **R2.6.1**. For steady state, short circuit, or System Stability analysis: ~~if the study is less than three years old and no material changes have occurred to the System in the intervening period. Material changes include topology changes, generation additions/removals, and market structure changes~~ the study shall be five calendar years old or less. **R2.6.2**. For steady state, short circuit ~~analysis~~, Generating Plant Stability, or System Stability analysis: ~~if the study is less than five years old and no material changes have occurred to the System in the intervening period.~~ the study shall not include any material changes, such as, generation or Transmission additions/removals, or topology changes that have occurred in the intervening period and would impact the study			

Q43			
Commenter	Yes	No	Comment
area. **R2.6.3**. ~~For plant and System Stability analysis: until material changes in the System make the study no longer valid. Material changes in the system include the addition of a Transmission Line or a generator~~ 8. You are correct. The standard does not require that all 5 years be studied. The standard only requires that the assessment address the five year period. Section 2 provides guidance as to the minimum number of current studies required to produce a meaningful assessment without being totally prescriptive. It is the responsibility of the entity to determine if past studies, in conjunction current studies, sufficiently demonstrate that the performance requirements are met. If past studies in conjunction with the required current studies are not sufficient to demonstrate that the system can meet the performance needed, the entity will need to run additional current studies that demonstrate it can meet the requirements. 9. The SDT is providing some guidance on what needs to be included in sensitivity studies while not being totally prescriptive. Requirement R2.1.3.1 provides the flexibility to allow the planning entity to decide how a variation in load on the entity(ies) system should best be studied. Requirement R2.4.3 has been modified to require documentation of why the listed sensitivities were or were not selected for specific studies. Requirement R2.4.4 has been added to specifically state that the entity may consider additional sensitivities that are appropriate for its own System. In either case the entity must document the reason for running or not running cases for the items listed. The documentation as well as the studies for the sensitivity(ies) selected will be required to demonstrate compliance. It is the entity's decision to establish and document if it needs to consider future additions and retirements. It is the entity's responsibility to determine the actions necessary to handle such items and which are more significant to study system responses. **R2.4.3**. For each of the studies described in Requirement R2.4.1 and Requirement R2.4.2, ~~S~~sensitivity case(s) that stress the System to reflect one or more of the following conditions shall be run ~~with documentation provided explaining the rationale for the selected sensitivity(ies)~~ and documentation of the technical rationale for why each of the conditions was or was not selected shall be supplied: **R2.4.4**. In addition to those sensitivities mentioned in Requirement R2.4.3, any other sensitivity, as deemed appropriate by the Transmission Planner or Planning Coordinator for their individual systems, shall be run and documentation of the technical rationale for why each was selected shall be supplied. 10. The SDT is providing guidance regarding the sensitivity studies while not being totally prescriptive. Requirement R2.1.3.3 provides the flexibility to allow the planning entity(ies) to elect the type of long lead time project that should be included in the analysis. It can be either a long lead time from replacement for failed equipment or a long lead time associated with constructing a new facility. Requirement R2.4.3 has been modified to require documentation of why the listed sensitivities were or were not selected for specific studies. Requirement R2.4.4 has been added to specifically state that the entity may consider additional sensitivities that are appropriate for its own System. In either case the entity must document the reason for running or not running cases for the items listed. The documentation as well as the studies for the sensitivity(ies) selected will be required to demonstrate compliance. It is the entity's decision to establish and document if it needs to consider future additions and retirements. It is the entity's responsibility to determene the actions necessary to handle such items and which are more significant to study system responses. 11. Since this requirement is relating to sensitivity, it is up to the entity to determine if it is appropriate to reduce the length of or increase			

Q43			
Commenter	Yes	No	Comment
the length of the "planned outage" that it has considered in its base case studies. 12. In the standard, "current study" is intended to refer to an updated study (i.e., as opposed to a "past study"). The SDT received comments that "current" study could be misconstrued in reference to short circuit "current" (amperes) versus the intended meaning. The SDT revised the standard in an attempt to clarify the intent. A current study will need to be performed as part of the annual Assessment if there are changes warranting one. Until such time as a BES change occurs, studies have to be refreshed at least every five years. 13. The use of the terms "shall address" is trying to convey that message, the requirements detail the studies needed. 14. R2.4.3.2 - Non-firm transfers are included in Requirement R2.4.3.2 to be investigated as sensitivity. The second draft of the proposed standard clarifies in Requirement R2.7 that the corrective actions do not need to be developed solely to meet the performance requirements for sensitivities. **R2.7** - For Planning Events shown in Table 1 – Steady State Performance and Table 2 – Stability Performance, when the analysis indicates an inability of the System to meet the performance requirements in the tables, the Planning Assessment shall include Corrective Action Plans addressing how the performance requirements will be met. Revisions to the Corrective Action Plans are allowed ~~over time~~ in subsequent assessments but the System shall continue to meet the performance requirements in the tables. ~~Such plans shall:~~ Corrective Action Plans do not need to be developed solely to meet the performance requirements for sensitivities. 15. The language was changed to reflect this comment. **R2.5.2**. Material Transmission System changes ~~in the electrical vicinity of existing generation are made~~ are made at or near the point of Interconnection of existing Generation such as the ~~addition or~~ removal of a Transmission Line ~~at or near the point of Interconnection~~ or the addition of a new substation in one of the Transmission Lines connected to the plant. 16. Requirement R8 (old Requirement R6) which focuses on the distribution of the Planning Assessment results among affected entities was specifically added to allow some level of peer review and provide some level of confidence that the proposed plan could in fact be completed to meet the reliability objective. Requirement R2.7.1.1 is complementary to Requirement R8 (old Requirement R6). Initiation dates are only required in the near term since longer term plans tend to move in time and only have general scheduling associated with them. Typically the date would indicate when significant resources will begin to be employed. This covers any project proposed for the near term. The SDT continues to believe that by providing the expected project intiation date of System improvements provides useful information to neighboring entities. The SDT believes that initiation dates are required for near-term corrective action plans to give an indication that the corrective action plans can be implemented in time. 17. The SDT does not percieve this as an onerous report requirement. The intent is that a list of proposed upgrades be reviewed and modified on a periodic basis. The intent of making the information available is to notify parties that may be impacted by a particular project of a change in the implementation of the project. 18. Based on industry comments, the language referenced in this comment was retained but modified in revised Requirement R5.2 to clarify intent. **R5.2**. Contingency analyses shall simulate the removal of all elements including those that System protection and other automatic controls are ~~is~~ expected to disconnect for each Contingency without operator intervention.			

Q43			
Commenter	Yes	No	Comment
			19. There may also be the case where the outage of A to C overloads a parallel circuit whereas having the C to B line is service does not overload the parallel circuit. The outage of the A to C line by automatic interruption is the more realistic outage because of the interrupting devices on the ends of the line. Both conditions are now covered in Table 1 and Table 2. 20. Most commenters did not express confusion over this requirement, so it was not modified. Requirement R3.2.1 is intended to address all voltage limitations applicable to generators, which could include nuclear plant operating voltage limits, generator terminal voltage limitations, and station service voltage limitations, for example. 21. R3.3.2.1 - The requirement concerning Consequential Load is to address FERC Order 693, which directs the ERO, among other things, to clarify footnote (b) in regard to Load loss following a single Contingency, specifying the amount and duration of Consequential Load Loss and System adjustments that are permitted after the first Contingency to return the System to a normal operating state. 22. The SDT has revised this requirement accordingly. The SDT does not feel that this standard distinguishes between PTP and network service. P6 has been revised and now shows as P2 in the revised table and shows a separation for performance above and below 300 kV. The SDT is still studying CFS and results will be shown in future revisions. **R3.3.2.2**. Following single Contingency events, ~~System adjustments other than shedding of firm Load or curtailment of firm transfers are permitted to meet performance requirements provided these adjustments can be accomplished within the time period allowed by the applicable time limited ratings.~~ Transmission configuration changes and redispatch of generation are allowed provided that all Facilities shall be operating within their Facility Ratings and within their thermal and voltage limits. 23. The SDT has modified the requirements for single and multiple Contingencies (See Requirement R 3.5). **R3.5**. Manual and automatic generation run-back/tripping is allowed as a response to a single ~~and~~ or multiple Contingenci~~es~~y ~~as long as Facility Ratings are not exceeded.~~if the following conditions are met: 24. The SDT feels the wording is equivalent and no change was made. 25. This is consistent with FERC Order 693, the Large generator Interconnection procedures, and the registry criteria. 26. The SDT has made this correction. 27. Tables 1 and 2 have been revised to replace the term "firm transfer" with "firm Transmission service". 28. The SDT revised the Extreme Events accordingly. 29. Table 1 has been revised to include N-0. 30. The SDT made a change to the heading. 31. A footnote reference has been added for clarity. 32. Tables 1 and 2 have been revised to provide clarity. The term "Firm Transfer" has been replaced with "Firm Transmission Service". In addition, the SDT has proposed a definition for Bus-tie Breaker in the second draft. **Bus-tie Breaker:** A circuit breaker that is positioned to connect two individual straight bus substation configurations. (Substation configurations such as ring-bus, breaker-and-a-half, or double bus-double breaker protection schemes do not use bus-tie breakers.)

Q43			
Commenter	**Yes**	**No**	**Comment**
33. Tables 1 and 2 have been revised. P9.6 has been deleted and replaced with a reference in Requirement R11 in the second draft. **R11**. Each Transmission Owner shall provide its respective Planning Coordinator with modeling information for known planned outages and long-term outages for Transmission equipment for each year of the Transmission planning horizon with consideration given to spare equipment strategy, within ninety days of a request for such information. 34. Tables 1 and 2 have been revised. The SDT cannot add "as applicable" to a standard because this term will make the standard unenforceable. The SDT notes that Requirements R3.4 and R4.5.2 allow for identifying and evaluating only those Extreme Events that are expected to produce more severe System impacts. 35. Breaker internal fault is a term used in the existing TPL standard. The SDT has added clarifying footnote number 5 in Table 1 and footnote number 4 to Table 2. 36. The SDT has revised Tables 1 and 2 to replace the term "Firm Transfer" with "Firm Transmission Service". 37. The SDT has made this change. 38. The SDT corrected the note. 39. This is explained in Table 1 - Note 5. 40. 300 kV applies to the equipment being studied and as defined for transformers and generators in Table 1 – Note 3. 41. The tables have been re-formatted for clarity. The SDT considers the term Non-Bus-tie Breaker as common nomenclature and has provided a definition of Bus-tie Breaker for clarity. The SDT feels that this requirement must remain to cover those situations where ring busses are not employed. CFS is still being studied by the SDT and will be handled in future revisions. 42. The SDT has changed the heading. 43. The SDT has made this change. 44. The SDT has made this change. 45. The SDT expects that increased documentation will improve coordinated Planning Assessments among the Planning Coordinator and the Transmission Planners.			
Tenaska	☑		The proposed standard contains a number of areas that need further definition, more explanation, or more specificity. 1. For example, requirement R1 should be rewritten as follows to make it clear who has responsibility for each requirement AND sub-requirement as the standard as written could be read to imply that Transimssion Owners and Generation Owners have to supply a load forecast to the Planning Coordinator: R1. Each Resource Planner, Transmission Planner, Transmission Owner, Generator Owner, and Load-Serving Entity shall each provide, as specified below, its respective Planning Coordinator with the following modeling information required for System performance studies upon request (within 30 calendar days) : [Violation Risk Factor: TBD] [Time Horizon: TBD] R1.1. Each Load Serving Entity shall provide the Planning Coordinator load forecasts adhering, at a

Q43			
Commenter	**Yes**	**No**	**Comment**
			minimum, to the following criteria: R1.1.1. Use of expected Load mix based on the actual or expected aggregate mix of industrial, commercial, and residential Loads. R1.1.2. Based on normal weather patterns as agreed to by the Planning Coordinator(s) and the Transmission Planner(s) for the area(s) of their responsibility. R1.1.3. Identification of Demand Side Management (DSM) Load reductions consistent with operational requirements. R1.2. Each Load Serving Entity shall provide the Planning Coordinator load models with supporting rationale that include power factor data based on historical System performance, validated by measurement during stressed System conditions, or documented Transmission planning area requirements. R1.3. Each Load-Serving Entity shall provide the Planning Coordinator the Firm transfers/Interchange Schedules and resources required to supply Load for each Balancing Authority. R1.4. Each Transmission Owner and Generation Owner shall provide the Planning Coordinator with known planned outages and long-term outages for Transmission and Generation equipment including protective relays with consideration given to spare equipment strategy. R1.5. Each Transmission Owner, Generation Owner, Resource Planner, and Transmission Planner shall provide known planned Facilities defined in accordance with the documented criteria of the Planning Coordinator, including but not limited to: Transmission Lines, generators, circuit breakers, Reactive Power devices, Protection System equipment and control devices, and new technologies. The above is an example and I apologize for the poor pagination. However, the drafting team should look at each requirement/sub-requirement and specify precisely to which entity the requirement/sub-requirement applies. Other comments/concerns/questions with the proposed standard: 2. Does requirement R2 mean that you could have two assessments: one performed by the Transmission Planner and one performed by the Planning Coordinator? This could result in two assessments of the same facilities which may or may not be desired. 3. In Requirement 2.5.1, what is meant by increasing generation? Is there a minimum amount of increased generation or is it any increase? 4. In Requirements 2.5.2, 2.6.1, 2.6.2, and 2.6.3, what is meant by "material"? This needs more

Q43			
Commenter	**Yes**	**No**	**Comment**
			definition wherever the word "material" is used throughout the standard. 5. In Requirements 2.6.1, 2.6.2, and 2.6.3, the word System and system are both used. Whose System or system needs to be defined. Does that include neighboring system(s)? 6. In Requirement 2.7.3, "committed" and "proposed" need to be defined. 7. In Requirement 2.7.5, what needs to happen as a result of such review? Is something supposed to happen in the Corrective Action Plans depending on the implementation status of identified System Facilities and Operating Procedures? 8. In R3, what is "normal" performance (n-0)? Should this be a defined term? 9. In R3.2.1 and 3.2.2, why are these issues covered in a TPL standard as it seems to be more applicable to the Facility Ratings standards or the MOD10, 11, 12, and 13 standards? The TPL standard should probably reference these other standards for issues associated with ratings. 10. In R3.3.2, the reference to "single contingency" should reference the category (P1, P@, P#, etc.) in Table 1. 11. In R3.3.2.2, the term "firm transfers" needs to be defined. 12. In R3.3.3 and R3.4, reference is made to "expected to produce more servere System impacts." How does somebody determine what Extreme Events that are "expected to produce more servere System impacts?"

Response: 1. The standard has been revised to identify specific entities responsible for providing the required information.
2. The SDT expects that the Transmission Planner is coordinating assessments with the Planning Coordinator
3. The term is 'increasing generation capability', e.g., if your generator is rated at 100 MW today and 110 MW tomorrow, the 10 MW differential is the increased generation capability. The minimum is defined in Requirement R5.6.
4. Requirements R2.5 and R2.6 have been modified to address this concern. The SDT expects that the Transmission Planner and Planning Coordinator would exercise good engineering judgement when determining the need to perform a new study.

R2.5. The ~~plant~~Generating Unit Stability analysis portion of the Planning Assessment shall be analyzed consistent with Requirement ~~R4.6~~ R5.6 with studies for the year when the following changes that could affect stability margins occur:
R2.5.1. New generator(s) are added or generation modifications are made such as ~~increasing~~changes in generation capability or replacing the exciter ~~or addition of a power System stabilizer~~.
R2.5.2. Material Transmission System changes ~~in the electrical vicinity of existing generation are made~~ are made at or near the point of Interconnection of existing Generation such as the ~~addition or~~ removal of a Transmission Line ~~at or near the point of Interconnection~~ or the

Q43			
Commenter	Yes	No	Comment

addition of a new substation in one of the Transmission Lines connected to the plant.

R2.6. Past studies may be used to support the Planning Assessment if they meet the following requirements:
R2.6.1. For steady state, short circuit, or System Stability analysis: ~~if the study is less than three years old and no material changes have occurred to the System in the intervening period. Material changes include topology changes, generation additions/removals, and market structure changes~~ the study shall be five calendar years old or less.
R2.6.2. For steady state, short circuit ~~analysis~~, Generating Plant Stability, or System Stability analysis: ~~if the study is less than five years old and no material changes have occurred to the System in the intervening period.~~ the study shall not include any material changes, such as, generation or Transmission additions/removals, or topology changes that have occurred in the intervening period and would impact the study area.
R2.6.3. ~~For plant and System Stability analysis: until material changes in the System make the study no longer valid. Material changes in the system include the addition of a Transmission Line or a generator.~~

5. R2.6.1, 2.6.2, 2.6.3 – Requirements R2.6.1, R2.6.2, and R2.6.3 have been revised to clarify intent.

R2.6.1. For steady state, short circuit, or System Stability analysis: ~~if the study is less than three years old and no material changes have occurred to the System in the intervening period. Material changes include topology changes, generation additions/removals, and market structure changes~~ the study shall be five calendar years old or less.
R2.6.2. For steady state, short circuit ~~analysis~~, Generating Plant Stability, or System Stability analysis: ~~if the study is less than five years old and no material changes have occurred to the System in the intervening period.~~ the study shall not include any material changes, such as, generation or Transmission additions/removals, or topology changes that have occurred in the intervening period and would impact the study area.
R2.6.3. ~~For plant and System Stability analysis: until material changes in the System make the study no longer valid. Material changes in the system include the addition of a Transmission Line or a generator.~~

6. Based on several comments and consideration by the SDT, the SDT has modified Requirement R2.7.1 and deleted Requirements R2.7.2 through R2.7.4. The standard now refers to "actions" needed to achieve required System performance without trying to distinguish between committed and proposed projects. It also lists examples of what is intended by the word "actions".

R2.7.1. ~~Identify~~ List System deficiencies and the associated actions needed to achieve required System performance. ~~including Transmission and generation improvements, DSM, new technologies, or Operating Procedures including the duration of interim Operating Procedures.~~ Such actions may include installation, modification, retirement, or removal of Transmission and generation Facilities and any associated equipment such as protective or Special Protection Schemes, rate applications, DSM, or other initiatives, new technologies, or Operating Procedures including how long the Operating Procedures will be needed as part of the Corrective Action Plan.

7. The intent is that a list of proposed upgrades be reviewed and modified on a periodic basis. The intent of making the information available is to notify parties that may be impacted by a particular project of a change in the implementation of the project.
8. Normal performance (n-0) describes the performance of the BES with no Contingencies. No other commenter expressed confusion. The

Q43			
Commenter	**Yes**	**No**	**Comment**
SDT does not believe a defined term is necessary. 9. Most commenters did not express concern regarding inclusion of these requirements in the proposed standard, so they were retained. The two requirements referenced relate to evaluation of Contingencies and are not addressed by the MOD or FAC standards. These requirements are intended to simulate the removal of Facilities that System protection is expected to disconnect for each Contingency without operator intervention in the steady state portion of the Planning Assessment. 10. R3.3.2.2 - Tables 1 and 2 have been modified to reflect your suggestion. 11. R3.3.2.2 – Requirement R3.3.2.2 has been revised and the term "firm transfers" has been deleted. **R3.3.2.2**. Following single Contingency events, ~~System adjustments other than shedding of firm Load or curtailment of firm transfers are permitted to meet performance requirements provided these adjustments can be accomplished within the time period allowed by the applicable time limited ratings.~~ Transmission configuration changes and redispatch of generation are allowed provided that all Facilities shall be operating within their Facility Ratings and within their thermal and voltage limits. 12. R3.3.3 & R3.4 - The proposed standard allows the PC and TP to use engineering judgment and experience.			
TVA	☑		1. Requirement R1 does not belong in this standard. These requirements are covered by MOD standards. 2. Spare equipment strategy should be covered as a sensitivity study, but not included in the base case. 3. R2.1.1 should not be so prescriptive as to which years of 1-5 are studied. 4. The wording for R2.1.3 and R2.4.3 should be consistent. 5. Consideration should be given to the specific phases which are faulted in the simultaneous faults for P9 of the stability table. The results can be much different if the simultaneous faults occur on the same phase or different phases. 6. More guidance should be given for the term "Interruption of Firm Transfer Allowed" in Table 1. Firm transfer is not defined in the NERC glossary. The type of transmission service should be outlined here. 7. R2.7.1.1 - The project initiation date is not relevant in a reliability standard. 8. Extreme Event Descriptions 2. a. and b. should include mileage threshholds. 3. e. The term "large load" is vague and should be clarified. d. and f. are duplicates.

Q43			
Commenter	**Yes**	**No**	**Comment**
			c. and e. are duplicates. 9. Minimum generator voltage data required for R3.2.1 will be require extensive and costly generator testing and analysis to provide data necessary for transmission system studies. 10. R3.3.2.1 is an operational issue rather than a planning issue. 11. The addition of the "Corrective Action Plan" requires the TP to provide a significant amount of documentation for each deficiency identified by the studies. 12. Also, R3.2 requires that the studies simulate the protection scheme for all events. The current software tools cannot automate these studies for bus faults and breaker failure events, requiring each scenario to be studied manually. 13. The planning event designations are confusing because both the steady-state and stability tables have events P1-P9. A different designation should be used for one of the tables. 14. In R4.6 and other locations, the individual generator exemption of 20 MW should be increased to 75 MVA.

Response: 1. The SDT feels that some modeling requirements are not currently handled in the current MOD standards and has included them here until the MOD standards are revised.
2. The SDT assumed that all entities have a spare policy today. The studies are to be performed on that basis. Duration of Contingencies considered in the studies will be based on this policy as will be the applicable equipment ratings. If the entity feels that the policy may or can change, the entity may elect to add this change as a sensitivity study.
3. The SDT is providing guidance regarding the studies that could be incorporated in an assessment while not being totally prescriptive. The standard does not require that all 5 years be studied. The standard requires the assessment addresses the five year period. Section 2 provides guidance as to the minimum number of current studies required to produce a meaningful assessment without being totally prescriptive. It is the responsibility of the entity to determine if past studies, in conjunction current studies, sufficiently demonstrate that the performance requirements are met. If past studies in conjunction with the required current studies are not sufficient to demonstrate that the System can meet the performance needed, the entity will need to run additional current studies that demonstrate it can meet the requirements.
4. The SDT is providing some guidance on what needs to be included in sensitivity studies while not being totally prescriptive. The wording in Requirement R2.1.3 describes sensitivities for the steady state horizon while Requirement R2.4.3 describes the sensitivities for dynamic analysis. The wording in these requirements is different but parrallel. To increase the consistency Requirement R2.4.3 has been modified to require documentation of why the listed sensitivities were or were not selected for specific studies.

R2.4.3. For each of the studies described in Requirement R2.4.1 and Requirement R2.4.2, ~~S~~sensitivity case(s) that stress the System to reflect one or more of the following conditions shall be run ~~with documentation provided explaining the rationale for the selected~~

Q43			
Commenter	**Yes**	**No**	**Comment**
~~sensitivity(ies)~~ and documentation of the technical rationale for why each of the conditions was or was not selected shall be supplied: 5. The SDT agrees that the results can be different. However, the SDT feels that in most instances, the person performing the study will select a three phase fault which is the most severe case and easiest to simulate. 6. The SDT has revised Tables 1 and 2 to replace the term "Firm Transfer" with "Firm Transmission Service". 7. The SDT agrees that this information is not required to meet reliability standards. It was specifically added as an additional piece of information in the Planning Assessment to allow some level of peer review and provide some level of confidence that the proposed plan could in fact be completed to meet the reliability objective. Initiation dates are only required in the near term since longer term plans tend to move in time and only have general scheduling associated with them. 8. The SDT believes that there should not be a threshold as you are trying to understand the robustness of the System. Large is left to the discretion and good professional judgment of the evaluator. Note 3 has been re-written for clarity and to delete duplications. 9. The requirement is intended to provide for the simulation of generator tripping in response to low system voltages that would cause auxiliary system motors to trip in the steady state portion of the Planning Assessment. 10. The requirement concerning Consequential Load is to address FERC Order 693, which directs that the ERO, among other things, to clarify footnote (b) in regard to Load loss following a single Contingency, specifying the amount and duration of Consequential Load Loss and System adjustments that are permitted after the first Contingency to return the System to a normal operating state. 11. The SDT does not percieve this as an onerous report requirement. The intent is that a list of proposed upgrades be reviewed and modified on a periodic basis. The intent of making the information available is to notify parties that may be impacted by a particular project of a change in the implementation of the project. 12. The SDT agrees that most automated Contingency analysis tools do not do this unless you actually modeled the bus in detail. However, we expect that "engineering judgment", based on intimate knowledge of the System, will be exercised by the planner to distinguish between what studies are important and those that aren't. The requirement is not intended to cover all possible scenarios. 13. The SDT discussed this suggestion and decided to retain the current designations. 14. This is consistent with FERC Order 693, the Large generator Interconnection procedures, and the registry criteria.			
TSGT	☑		1. R1 and R2 address some Load Forecast issues, but are not exhaustive specifications of what Load Forecast range to use in studies. There needs to be some mention of exceedance probability (ExPr) in Load Forecast criteria. For example, we use a forecast with a low ExPr in our studies because we are concerned that, if the system was planned for 50% ExPr (a lower forecast), actual deviation from that forecast might result in load at certain locations exceeding operating margins built into the interconnected transmission system designed to serve only the 50% ExPr forecast load. 2. Load Specifications in R2.4 are ambiguous for the reasons stated above. 3. Maximum study ages in R2.6.1 and R2.6.2 seem arbitrary. The time limit does not seem to add anything to the criteria if no material changes have occurred. If spot checks of the most critical areas indicated no criteria violations, there should be no reason to rerun studies. To correct this problem, we suggest using the term "assessment" rather than "study". For most people, "study" implies detailed modeling and simulation analyses summarized in a report, whereas "assessment" implies a

Q43			
Commenter	**Yes**	**No**	**Comment**
			reasonable, systematic evaluation of a system which does not necessarily include detailed analysis for the entire system.
Response: 1 & 2. Requirement R1 has been modified to make TPL-001-1 comport with existing modeling standards and to require documentation when modification of data provided in these standards is necessary for the planning studies addressed in TPL-001-1. Requirement R2.1.3.1 addresses your concern about Load forecast issues and allows for sensitivity studies of the variability of forecasts based on a number of factors. **R1**. ~~Each Resource Planner, Transmission Planner, Transmission Owner, Generator Owner, and Load-Serving Entity shall each provide its respective Planning Coordinator with the following modeling information required for System performance studies upon request (within 30 calendar days) :~~ Each Transmission Planner and Planning Coordinator shall maintain System models for performing the studies needed to complete their Planning Assessment. The models shall use data provided in Requirements R9 through R14, the MOD-010 and MOD-012 standards, and other data sources. 3. The SDT set the age limit on studies to 5 years based on the fact that relatively "small" changes can accumulate with time to the extent that study results might be affected. Requirement R2.6.2 sets reasonable criteria on what System changes might materially affect existing study results, and the SDT does not consider the criteria to be arbitrary. The term "study" was deemed more appropriate as used here than "assessment".			
AESO	☑		The Alberta Electric System Operator (AESO) supports the comments from WECC with the exception of Question #19 where the AESO agrees with the proposed requirement R2.7.4 by the SDT.
Response: The SDT has modified the standard to require only the Corrective Action Plan and indicates what is meant by the word plans. The SDT feels that the assessment and making it available to others will by its very nature provide all the information necessary to understand which plans changed and the basis for the new plans.			
WECC TEP	☑		1. R1.3 requires the provision of firm transfer/Interchange Schedules and resources required to supply load for each Balancing Authority. It may not be possible to have reasonably accurate information on firm transfers and Interchange Schedules for years into the future. Within WECC, we develop base cases that represent reasonably stressed conditions that model power flows stressing various paths. Therefore, within WECC, we design the system to operate at levels that can support all sorts of commerce, including the effects of loop flow, and firm and non-firm contracts, in addition to other possibilities. It would be difficult to develop information from this mixture that includes only firm transactions for such future base cases. In addition, WECC does not allow operations at levels not previously studied. Therefore, an exercise to determine firm transaction/schedules would produce information that will be of little value to support reliability in WECC. 2. R2.7.1.2 requires identification of system deficiencies and accociated corrective action for the Long Term Transmission Planning Horizon. This requirement needs to tie to the lead times to implement the corrective action(s). For example, if a 500 kV transmission line is needed to correct a deficiency that surfaces in the tenth year, then this requirement is reasonable. However, if the deficiency is on a low voltage system, that can be resolved with short lead-time projects (such as

Q43			
Commenter	**Yes**	**No**	**Comment**
			installing a small capacitor bank) then this requirement would seem to be too prescriptive. 3. R1.5 requires providing modeling information as part of R1 on a number of transmission planned facilities, including circuit breakers. Since circuit breakers are part of a transmission line, we are not sure how a circuit breaker would be modeled separately, as required. 4. R3.2.1 requires that "studies shall consider the minimum steady state voltage limitations of all generators". Since generators (as well as other facilities) have both high and low voltage limits, the standard should require consideration of both high and low voltage limits. 5. In R.3.2.2, please provide a reference for relay loadability. 6. R.3.3.2.1. requires that Consequential Load loss (expected maximum demand and expected duration) following a single contingency shall be identified in the Planning Assessment. We suggest deleting this requirement. By definition, consequential load loss following a contingency can not be avoided and should not be considered an impact on the operation of the BES. It should be part of local service reliability between an entity and its local regulatory agency or contractual relationship between individual parties and not in a NERC Standard governing the operation of a BES. 7. Proposed revision to R3.5 – "Manual and automatic generation runback and generator tripping are allowed as a response to single and multiple contingencies as long as Facility Ratings are not exceeded and the result of the generator action, such as loss of reactive resource, impact on reserves, and restart time of tripped unit(s), meets the performance requirements in the tables." Example for the need for flexibility in the selection of generation runback and/or tripping to meet the requirements of R3.5 – The time period for a particular Emergency Rating might require faster generation redispatch than a runback or set of runbacks are capable of providing. Therefore, it may be necessary to trip one 100 MW unit rather than runback several units for a total of 100 MW. Planning and Operations need flexibility to coordinate with the requirements of Engineering who established the Facility Ratings. No need for R3.6 with above revision to R3.5. 8. Performance standard "P5" (Q.21- 23) does not allow for the use of load shedding (safety nets) required by some utilities to protect against cascading outages if a transmission line is already out of service and a forced outage of another major element occurs. "System adjustments" might not be possible in a load pocket or local load-serving area to prevent "non-consequential load loss" after loss of a second transmission line to the load-serving area. The use of load shedding for such rare

Q43			
Commenter	**Yes**	**No**	**Comment**
			events is an established practice and least cost alternative that does not unreasonably compromise reliability of the WECC system. It is also an acceptable and necessary tradeoff from over burdening customers with additional expensive transmission lines and permitting risk in the West where remote generation resources have historically required power to be carried over long distances. The tradeoffs between economics (building hundreds of miles of new transmission lines or build out hundreds of MW of new load-side generation versus load shedding schemes) and the impact of these rare events should be under the purview of local and state jurisdictions, as long as impacts do not result in cascading events outside of the affected jurisdiction. As long as interconnected reliability or neighboring system operation is not negatively impacted, customer interruption size and frequency should be left to the Transmission Providers discretion and to the jurisdiction of state regulators. The amount of load to be shed and its frequency is primarily an issue for state jurisdiction because it is a matter of the cost/benefit associated with customer service regardless of the voltage level problem. In general, incidences of non-consequential loss of customer load events related to contingencies on the back-bone transmission system are rare when compared to other causes of customer outages. Assuming interruptions to customer service are significant, the state regulators and other related constituents will ultimately be responsible for approving any transmission line facilities or generation additions needed to assure reliability. Implementing an immediate change to this current established practice is not rational or technically feasible due to the long and arduous regulatory and permitting processes that are required to construct new transmission facilities or new load-side generation. Implementation of the standard as written would take many years. At a minimum, even if it is determined that Congress's intent was to create stricter standards, a phase-in period must be included to allow utilities time to obtain necessary permits, regulatory approval and cost recovery to meet the stricter standards.

Response: 1. The SDT understands your concern. The SDT only anticipates that known firm transfers and schedules be included in the base cases. Non-firm transfers may be included in the sensitivity studies as detailed in Requirement R2.1.3. Requirement R1.3 in the first draft of TPL-001-1 is now shown as Requirement R10 in the revised draft.

R10. Each Transmission Planner shall provide its respective Planning Coordinator with modeling information for Firm Transmission Service data, Interchange Schedules and resources required to supply Load for each of its Balancing Authorities for each year of the Transmission planning horizon, within ninety days of a request for such information.

2. Based on several comments and consideration by the SDT, the SDT has modified Requirement R2.7.1 and deleted Requirements R2.7.2 through R2.7.4. The standard now refers to "actions" needed to achieve required System performance without trying to distinguish between committed and proposed projects. It also lists examples of what is intended by the word "actions".

R2.7.1. ~~Identify~~ List System deficiencies and the associated actions needed to achieve required System performance. ~~including Transmission~~

Q43			
Commenter	Yes	No	Comment
~~and generation improvements, DSM, new technologies, or Operating Procedures including the duration of interim Operating Procedures.~~ Such actions may include installation, modification, retirement, or removal of Transmission and generation Facilities and any associated equipment such as protective or Special Protection Schemes, rate applications, DSM, or other initiatives, new technologies, or Operating Procedures including how long the Operating Procedures will be needed as part of the Corrective Action Plan. 3. The SDT agrees that circuit breakers are generally not modeled separately in planning simulations. However, the addition or removal of a circuit breaker could modify network topology as modeled for planning simulations, which this requirement attempts to capture. 4. Voltage limits are included in the tables to cover both high and low voltage limits. However, the minimum limits in Requirement R3.2.1 are, generally, the more critical concern for system performance scenarios and this requirement was included by team consensus. 5. NERC document "Relay Loadability Exceptions, Determination and Application of Practical Relaying Loadability Ratings ", is contained on this ftp site: ftp://ftp.nerc.com/pub/sys/all_updl/pc/spctf/ExceptionsV1.pdf. Other information may also be obtained from: http://www.nerc.com/~filez/spctf.html 6. R3.3.2.1 - The requirement concerning Consequential Load is to address FERC Order 693, which directs the ERO, among other things, to clarify footnote (b) in regard to Load loss following a single Contingency, specifying the amount and duration of Consequential Load Loss and System adjustments that are permitted after the first Contingency to return the System to a normal operating state. 7. The SDT has modified the requirements to allow for single and multiple Contingencies tripping (See Requirement R 3.5). **R3.5**. Manual and automatic generation run-back/tripping is allowed as a response to a single ~~and~~ or multiple Contingenc~~ies~~y ~~as long as Facility Ratings are not exceeded.~~if the following conditions are met: 8. The initial draft of the proposed Transmission planning standard held the planning of 300 kV and higher Transmission Systems to a more stringent requirement than the remaining BES. Although not unanimous, the majority of the SDT believed the 300 kV and higher Systems generally represent an extra-high-voltage (EHV) range that is considered the backbone of many Systems in the various Interconnections and that the more stringent requirements were appropriate when considering N-1-1 Contingencies of two EHV Facilities. Systems operated at this range generally do not directly serve end-use Load customers but rather act as the medium for moving large amounts of power from production to various Load centers which then deliver the power among other Transmission or sub-Transmission Systems to end use customers. It is the desire of NERC and various stakeholders that the backbone of the electric power grid be robust and held to a higher degree of reliability. When EHV Systems are compromised, the large volumes of power served by them can place a severe amount of stress on parallel EHV or lower voltage paths. For example, if a large EHV transformer experiences a catastrophic failure not only are other System Facilities required to carry more Load but the System is also exposed to other N-1 conditions for long periods of time while awaiting a replacement or repair of the failed equipment. Large generation sources are typically connected at EHV levels and maintenance of the EHV Transmission lines within the vicinity of larges generation plants must often be coordinated during scheduled unit outages, resulting again in multiple Facility outages over extended periods of time. Therefore, it was the conclusion of the SDT in Draft 1 to propose greater reliability and operational flexibility through more stringent performance requirements when considering certain N-1 and N-1-1 Contingency events of EHV Systems. Throughout the industry substation arrangements at EHV levels reflect the importance of these Systems as the designs often consist of the more expensive ring-bus, breaker-and –a-half or double bus-double breaker protection schemes as opposed to the more simplistic and lesser cost single bus arrangements that are			

Q43			
Commenter	**Yes**	**No**	**Comment**
commonly found on lower voltage Systems. The feedback received from industry was divided related to the SDT's emphasis placed on a higher expectation for the 300 kV and higher Systems. Some commenter's questioned the importance and the high costs that may be needed to mitigate existing System designs. Others agreed with the SDT's approach and indicated that the impact to their Systems would be minimal. Some commenter's even questioned why the more stringent approach was not applied to the entire 100kV and higher Systems. The SDT believes the Draft 2 changes are responsive to industry feedback and reflect an appropriate middle ground related to the importance of the EHV Transmission System. The SDT plans to draft an implementation plan. This implementation plan will address, among other issues, the other standards, which will need to be brought into alignment with this standard. The plan will be provided for the third posting of the standard.			
WPS	☑		Within R1.1.2, the Planning Coordinator and the Transmission Planner is required to define what constitutes "normal weather patterns" for the purpose of establishing load forecasts. However, the PC and/or TP are not the appropriate entities to establish "normal weather patterns"; the LSEs, who actually develop load forecasts and have the expertise, are the appropriate entities to establish normal weather patterns. Additionally, this requirement should consider requiring the 50/50 probability load forecast from the LSEs.
Response: This requirement has been eliminated in response to various industry comments.			
Duke Energy		☑	
Northwestern Energy		☑	
New York ISO		☑	
Response: Thank you.			

Comments for 2nd Draft of Standard TPL-001-1 — Assess Transmission Future Needs (Project 2006-02)

The Assess Transmission Future Needs Standards Drafting Team thanks all commenters who submitted comments on the 2nd draft of reliability standard TPL-00101 — System Performance under Normal Conditions. The proposed standard was posted for a 45-day public comment period from August 14, 2008 through September 29, 2008. The stakeholders were asked to provide feedback on the proposed metrics through a special electronic Standard Comment Form. There were more than 80 sets of comments, including comments from more than 150 different people from more than 100 companies representing 8 of the 10 Industry Segments as shown in the table on the following pages.

http://www.nerc.com/filez/standards/Assess-Transmission-Future-Needs.html

Due to the large number of comments received and the addition of VRF, Time Horizons, Measures, Data Retention requirements, and VSL, the SDT recommends an additional posting for this standard.

Due to industry comments, the following definitions have been changed: Bus-tie Breaker, Consequential Load Loss, Non-Consequential Load Loss, and Year One.

Due to industry comments, the following definitions have been deleted: Generating Unit Stability Study, Planning Coordinator, and System Stability Study.

Due to industry comments, the following definitions have been added: Load Reduction and Supplemental Load Loss.

Due to industry comments, the following requirements have been changed: R1, R1.1, R1.1.1, R1.1.2, R1.1.3, R1.1.4, R1.1.5, R1.1.6, R2, R2.1, R2.1.3, R2.1.3.4, R2.1.5, R2.2, R2.3, R2.4.1, R2.4.3, R2.6.1, R2.6.2, R2.6.2.1, R2.6.2, R2.7, R2.7.1, R2.7.1, R2.8, R2.8.1, R2.8.2, R2.9, R2.10, R3, R3.1, R3.2, R3.3, R3.3.1, R3.3.2, R3.3.3, R3.3.4, R3.5, R3.6, R5, R5.1, R5.2, R5.3, R5.3.2, R5.5, R5.6, R6, and R8.

Due to industry comments, the following requirements have been deleted: R2.1.4, R2.4.4, R2.5, R2.5.1, R2.5.2, R2.7.4, R3.4, R3.7, R4, R5.4, R5.5.1, R5.5.2, R5.5.3, R5.5.3.1, R5.5.3.2, R5.5.3.3, R5.7, R9, R10, R11, R12, R13, and R14.

Due to industry comments, the following table notes have been changed: Header note ‘b’, ‘e’, ‘i’, Footnotes 1.a.ii, 3, 5, 10 and 12.

The two table concept has been replaced by a single table with necessary corresponding changes to the notes and footnotes as appropriate. In addition, a typo in Extreme Event 2b was corrected due to an industry comment.

If you feel that your comment has been overlooked, please let us know immediately. Our goal is to give every comment serious consideration in this process! If you feel there has been an error or omission, you can contact the Vice President and Director of Standards,

Gerry Adamski, at 609-452-8060 or at gerry.adamski@nerc.net. In addition, there is a NERC Reliability Standards Appeals Process.[1]

[1] The appeals process is in the Reliability Standards Development Procedures: http://www.nerc.com/standards/newstandardsprocess.html.

Index to Questions, Comments, and Responses:

1. The SDT has modified the definitions and requirements associated with System Stability and Generating Unit Stability (formerly Plant Stability) in response to industry comments. Do you concur with the modified definitions for stability and, if not, please state why and/or suggest specific changes. 12

2. Do you concur with the modified Requirements R2.4, R2.5, R5.4, and R5.5? If not, please state why and/or suggest specific changes. 41

3. The SDT has modified the definitions of Consequential and Non-Consequential Load Loss in response to industry comments. Do you concur with the modified definitions of Consequential and Non-Consequential Load Loss? If not, please state why and/or suggest specific changes. 103

4. The SDT has modified Requirement R3.5 and eliminated Requirement R3.6 from the first draft to clarify that manual and automatic generation run-back (redispatch) and tripping is allowed as a Corrective Action Plan as long as the conditions in Requirements R3.5.1, R3.5.2 and R3.5.3 are met. Do you agree that generation run-back and tripping (manual and automatic) should be limited by these conditions? If not, please explain why you disagree with the proposed requirements. 144

5. The SDT has modified the modeling requirements. Some commenters expressed concern that the modeling requirements contained in Requirement R1 of the first draft of TPL-001-1 were either duplicative of the requirements in the MOD standards, or to the extent new modeling requirements were proposed, that the appropriate venue for such modeling requirements would be the MOD standards. The SDT believes that additional modeling requirements not presently contained in the MOD standards are necessary for Transmission Planning purposes. The SDT has incorporated these additional requirements with the intent that they will be removed from the TPL standard when they are incorporated into the MOD standards at a later date. The SDT has also modified proposed modeling requirements contained in Requirement R1 of the first draft of TPL-001-1 based on industry comments and moved these requirements to Requirements R9 through R14 in the second draft for ease of removal later on. Furthermore, in response to industry comments, the SDT has separated the modeling requirements into individual requirements for each responsible entity. Do you concur with the modifications reflected in Requirements R9 – R14? If not, please state why and/or suggest specific changes.. 160

6. The SDT has modified the requirements relating to short circuit analysis Do you concur with the modifications reflected in Requirements R2.3 and R4. If not, please state why and/or suggest specific changes. 189

7. The SDT has reformatted the Steady State and Stability Performance Tables. Do you concur with the modified format? If not, please state why and/or suggest specific changes. 206

8. A new definition for "Bus-Tie Breaker" was added to clarify the type of substation design and breaker position that qualify as a Bus-tie Breaker. Do you agree with the proposed definition? If not, please explain.....258

9. Some commenters questioned why a Bus-tie Breaker would have a different performance requirement than a non-Bus-tie Breaker, stating that all breakers have the same probability for failure. It may be true that generally the probability for failure of any given breaker would not vary substantially among similar types of breakers, but the Bus-tie Breaker reduces exposure and consequences of bus faults. The different performance expectations in Tables 1 and 2 are based on promoting a higher level of reliability for the Transmission Systems operated above 300 kV. It is recognized by

the SDT that a straight bus design has some undesirable exposure to bus faults, but that Bus-tie Breakers can be utilized to improve reliability for bus faults and problems associated with exit breakers. As a result, the risk of an internal breaker fault was deemed to be significantly less than the benefit that is gained by reducing the exposure to a total bus failure. Therefore, provisions were built into the performance requirements that would not discourage their use. Do you agree that non-Bus-tie Breakers rated above 300 kV should have more stringent performance requirements than Bus-tie Breakers? If not, please explain why and/or suggest specific changes. . 267

10. The SDT made modifications in this second draft to the requirements relating to sensitivity cases. Do you concur with the modifications reflected in Requirements R2.1.3 and 2.1.4? If not, please state why and/or suggest specific changes. 285

11. In response to industry comments, the SDT modified Table 1 requirements for Planning Event P6. Planning Event P6 involves independent overlapping single contingencies (n-1-1) involving two Transmission Facilities excluding generators. This Planning Event generally correlates to P5 of the first draft and now includes shunt devices. The P6 event was also revised to permit loss of Non-Consequential Load to meet performance requirements for Systems above 300 kV. Do you concur with the modifications? If not, please state why and/or suggest specific changes. 320

12. Comments from some entities received from the posting of the 1st draft standard indicated that significant additional costs will be required to meet the proposed requirements and performance tables. Commenters also indicated that it would take several years to install the additional facilities needed to meet the change in requirements. The SDT has attempted to adjust and clarify the proposed requirements and performance in light of these initial comments; however, the SDT needs more specific information on these concerns so that it can put the proposed requirements in perspective and make more adjustments as appropriate. Questions 12, 13 & 14 address these concerns. 341

13. Documentation: 355

14. System Reinforcement: One time cost, capital investment, to expand your system reinforcement program (due to lead times associated with different types of facilities, this will probably be an accumulated cost over several years). How many years do you estimate that it will take to complete this initial expanded system reinforcement program: 361

15. (A) Do you generally support the revised standard? (B) Are you unsure whether you generally support the revised standard? or (C) Do you definitely not support the revised standard? Please check the appropriate box below. If your response is either (B) or (C), please explain your single biggest concern with the revised standard, including which specific requirement or set of requirements causes you the most concern and why. 370

The Industry Segments are:

1 — Transmission Owners
2 — RTOs, ISOs
3 — Load-serving Entities
4 — Transmission-dependent Utilities
5 — Electric Generators
6 — Electricity Brokers, Aggregators, and Marketers
7 — Large Electricity End Users
8 — Small Electricity End Users
9 — Federal, State, Provincial Regulatory or other Government Entities
10 — Regional Reliability Organizations, Regional Entities

Commenter		Organization	Industry Segment									
			1	2	3	4	5	6	7	8	9	10
1.	Thad Ness	AEP	x		x		x	x				
2.	Anita Lee	Alberta Electric System Operator		x								
3.	John E. Sullivan	Ameren	x		x		x	x				
4.	Jason Shaver	American Transmission Company	x									
5.	Baj Agrawaal	Arizona Public Service Co.	x									
6.	Ronnie Frizzell	Arkansas Electric Coop. Corp.				x						
7.	James C. Armke	Austin Energy	x				x					
8.	Phil Park	BCTC		x								
9.	Eric Egge	Black Hills Corporation	x									
10.	J. David Carpenter	Brazos Electric Power Cooperative, Inc.	x		x		x					
11.	Paul Rocha	CenterPoint Energy and CPS Energy	x									

Additional Member	Additional Organization	Region	Segment Selection
1.	Glenn Pressler	City of San Antonio City Public Service (CPS Energy)	ERCOT	1

12.	David M. Conroy	Central Maine Power Company	x									

Commenter		Organization	Industry Segment									
			1	2	3	4	5	6	7	8	9	10
13.	Gary S. Brinkworth, P.E.	City of Tallahassee, FL	x		x		x					
14.	Karl Kohlrus	City Water, Light & Power - Springfield, Illinois	x		x		x					
15.	Marv Landauer	ColumbiaGrid										
16.	John Blazekovich (Exelon Corporation)	Compliance Elements Development Resource Pool (CEDRP)										
17.	John Loftis (Dominion Virginia Power)	Dominion - Electric Transmission Planning	x									

Additional Member	Additional Organization	Region	Segment Selection
1.	John Loftis	SERC	1
2.	Ronnie Bailey	SERC	1
3.	Peter Nedwick	SERC	1
4.	William Bigdely	SERC	1
5.	Mark Gill	SERC	1
6.	Larry Carter	SERC	1
7.	Mehdi Shakibafar	SERC	1
8.	Kirit Doshi	SERC	1
9.	Craig Crider	SERC	1
10.	Solomon Yirga	SERC	1
11.	Matthew Gardner	SERC	1

18.	Greg Rowland	Duke Energy	x		x		x	x				
19.	Keith Yocum - Manger, Transmission Strategy & Planning	E.ON U.S. Transmission Planning	x									
20.	Dennis Malone	El Paso Electric Company	x		x		x					
21.	Charles W. Long	Entergy Services, Inc.	x									
22.	Jay Teixeira (ERCOT)	ERCOT System Planning		x								

Additional Member	Additional Organization	Region	Segment Selection
1.	John Schmall	ERCOT ERCOT	2

23.	Eric Mortenson	Exelon Transmission Planning	x		x							
24.	Sam Ciccone	FirstEnergy Corp.	x		x	x	x	x				

Additional Member	Additional Organization	Region	Segment

Commenter	Organization	Industry Segment									
		1	2	3	4	5	6	7	8	9	10
		Selection									
1. John Stephens FE RFC 1											
2. Doug Hohlbaugh FE RFC 1, 3, 4, 5, 6											
3. Don Morrison FE RFC 1											
4. Art Buanno FE RFC 1											
25. Hector J. Sanchez	Florida Power and Light	x		x		x					
Additional Member / Additional Organization / Region / Segment Selection											
1. Bob Schoneck FRCC 1											
2. Kiko Barredo FRCC 1											
3. John W. Shaffer FRCC 1											
4. Carlos Candelaria FRCC 1											
26. Richard Becker (FRCC)	Florida Reliability Coordinating Council, Inc										x
Additional Member / Additional Organization / Region / Segment Selection											
1. Ballard Keith Mutters Orlando Utilities Commission FRCC 3											
2. Rodney Hawkins Lee County Electric Cooperative FRCC 1											
3. Roger Allen Westphal Gainesville Regional Utilities FRCC 3											
4. Luther E. Fair Gainesville Regional Utilities FRCC 1											
5. Ted E. Hobson JEA FRCC 1											
6. Garry Baker JEA FRCC 3											
7. Donald Gilbert JEA FRCC 5											
8. W. R. Schoneck Florida Power & Light Co. FRCC 3											
9. Hector Sanchez Florida Power & Light Co. FRCC 1											
10. John Shaffer Florida Power & Light Co. FRCC 5											
11. Kiko Barredo Florida Power & Light Co. FRCC 1											
12. Ronald L. Donahey Tampa Electric Co. FRCC 3											
13. Gary S. Brinkworth City of Tallahassee FRCC 1											
14. Larry E Watt Lakeland Electric FRCC 1											
15. Bart B White Florida Power Corporation FRCC 1											
27. Earl Fair	Gainesville Regional Utilities	x		x		x					
28. Roger Champagne	Hydro-Québec TransÉnergie (HQT)	x									
29. Milorad Papic	Idaho Power Company										
30. Dan Rochester	IESO		x								

Commenter		Organization	Industry Segment									
			1	2	3	4	5	6	7	8	9	10
31.	Kathleen Goodman	ISO New England Inc.		x								
32.	Raymond Kershaw (ITC Holdings)	ITC Holdings: ITC, METC, ITC Midwest	x									
33.	Don Gilbert	JEA					x					
34.	Gary Newell (Thompson Coburn LLP -- Counsel to Lafayette Utilities System)	Lafayette Utilities System	x		x		x					
35.	Mace Hunter	Lakeland Electric	x		x		x					
36.	Larry Watt	Lakeland Electric	x									
37.	Sergio Garza	LCRA TSC	x									
38.	Tim Wu	Los Angeles Department of Water and Power	x		x		x					
39.	Kris Manchur	Manitoba Hydro	x		x		x	x				
40.	Tom Mielnik	MidAmerican Energy Company	x		x		x	x				
41.	Marie Knox	Midwest ISO										
42.	Spencer Tacke	Modesto Irrigation District	x		x		x	x				
43.	Tom Mielnik (MEC)	MRO NERC Standards Review Subcommittee	x		x		x	x				

Additional Member	Additional Organization	Region	Segment Selection
1.	Neal Balu	WPS	MRO	3, 4, 5, 6
2.	Terry Bilke	MISO	MRO	2
3.	Carol Gerou	MP	MRO	1, 3, 5, 6
4.	Jim Haigh	WAPA	MRO	1, 6
5.	Charles Lawrence	ATC	MRO	1
6.	Ken Goldsmith	ALTW	MRO	4
7.	Pam Sordet	XCEL	MRO	1, 3, 5, 6
8.	Dave Rudolph	BEPC	MRO	1, 3, 5, 6
9.	Eric Ruskamp	LES	MRO	1, 3, 5, 6
10.	Joseph Knight	GRE	MRO	1, 3, 5, 6
11.	Joe DePoorter	MGE	MRO	3, 4, 5, 6
12.	Larry Brusseau	MRO	MRO	10

Commenter		Organization	Industry Segment									
			1	2	3	4	5	6	7	8	9	10
13.	Michael Brytowski	MRO MRO 10										
44.	Carol Sedewitz	National Grid	x									
45.	Andrew Wilcox	NB Power Transmission	x			x						
46.	Patrick Brown (PJM Interconnection, L.L.C.	NERC and Regional Coordination		x								
47.	Gregory Campoli	New York Independent System Operator		x								
48.	James Manning	North Carolina Electric Membership Corp			x	x	x	x				

Additional Member	Additional Organization	Region	Segment Selection
1.	Bob Beadle	NCEMC SERC	3, 4, 5, 6

49.	Rick White	Northeast Utilities	x									
50.	Guy Zito (NPCC)	NPCC										x

Additional Member	Additional Organization	Region	Segment Selection
1.	David Kiguel	Hydro One Networks Inc.	NPCC 1
2.	Ralph Rufrano	New York Power Authority	NPCC 5
3.	Dan Rochester	Independent Electricity System Operator	NPCC 2
4.	Rick White	Northeast Utilities	NPCC 1
5.	Lee Pedowicz	NPCC	NPCC 10
6.	Gerry Dunbar	NPCC	10
7.	Brian Hogue	NPCC	10
8.	Alan Adamson	New York State Reliability Council	NPCC 10
9.	Donald E. Nelson	Massachusetts Dept. of Public Utilities	NPCC 9
10.	Kathleen Goodman	ISO - New England	NPCC 2
11.	Gregory Campoli	New York Independent System Operator	NPCC 2
12.	Chris De Graffenried	Consolidated Edison Co. of New York, Inc.	NPCC 1
13.	Brian Gooder	Ontario Power Generation Incorporated	NPCC 5

51.	Steven Masse	NSTAR Electric	x		x							
52.	John P. Mayhan	Omaha Public Power District	x		x		x	x				
53.	Greg Ward / Darryl Curtis	Oncor Electric Delivery	x									
54.	Matthew J Muldoon	OPUC									x	
55.	Aaron Staley	Orlando Utilities Commission	x		x		x	x				

Commenter		Organization	Industry Segment									
			1	2	3	4	5	6	7	8	9	10
56.	Chifong Thomas	Pacific Gas and Electric Co.	x									
57.	Sandra Shaffer	PacifiCorp	x									
58.	John Collins	Platte River Power Authority	x		x			x				
59.	John Cummings	PPL EnergyPlus					x	x				
60.	Mark Byrd	Progress Energy Carolinas	x		x		x					
61.	Bart White	Progress Energy Florida, Inc.	x		x							
62.	Tom Duane	Public Service Company of New Mexico	x		x							
63.	Joe Seabrook	Puget Sound Energy, Inc.	x		x							
64.	Herb Schrayshuen (SERC Reliability Corporation)	SERC Dynamics Review Subcommittee										x
65.	Herbert Schrayshuen (SERC Reliability Corporation)	SERC Reliability Review Subcommittee and Planning Standards Subcommittee										x
66.	Jessica Rice	Sierra Pacific Power Company/Nevada Power Company	x									
67.	Dilip Mahendra	SMUD	x		x		x	x				
68.	Dana Cabbell	Southern California Edison	x	x								
69.	Roman Carter	Southern Company Transmission	x									

Additional Member	Additional Organization	Region	Segment Selection
1.	JT Wood	SOCO Transmission	SERC	1
2.	Jim Busbin	SOCO Transmission	SERC	1
3.	Shih-Min Hsu	SOCO Transmission	SERC	1
4.	Rod Hardiman	SOCO Transmission	SERC	1
5.	Randy Cobb	SOCO Transmission	SERC	1
6.	Chase Battaglio	SOCO Transmission	SERC	1
7.	Bill Botters	SOCO Transmission	SERC	1
8.	Tom Sims	SOCO Transmission	SERC	1
9.	Chuck Chakravarthi	SOCO Transmission	SERC	1
10.	Gary Gorham	SOCO Transmission	SERC	1
11.	Chris Wilson	SOCO Transmission	SERC	1

Commenter		Organization	Industry Segment									
			1	2	3	4	5	6	7	8	9	10
12. Terry Coggins, SOCO Transmission, SERC, 1 13. Bob Jones, SOCO Transmission, SERC, 1 14. Raymond Vice, SOCO Transmission, SERC, 1												
70.	Brian K. Keel	SRP	x									
71.	Tacoma Power	Tacoma Power	x									
72.	Scott Helyer	Tenaska, Inc.	x									
73.	Dave Larsen	Transmission Agency of Northern California	x									
74.	Denise Koehn (BPA)	Transmission Reliability Program	x		x		x	x				
Additional Member, Additional Organization, Region, Segment Selection 1. Chuck Matthews, Transmission Planning, WECC, 1 2. Berhanu Tesema, Transmission Planning, WECC, 1 3. Kendall Rydell, Transmission Planning, WECC, 1												
75.	Andy Leoni	Tri-State G&T	x									
76.	Mark Graham	Tri-State Generation and Transmission Association, Inc.	x									
77.	Gary Trent	Tucson Electric Power Company	x		x		x					
78.	B. David Till (TVA)	TVA System Planning	x									
79.	Karl Bryan	US Army Corps of Engineers, Northwestern Division					x					
80.	Jay Seitz	US Bureau of Reclamation					x					

1. **The SDT has modified the definitions and requirements associated with System Stability and Generating Unit Stability (formerly Plant Stability) in response to industry comments. Do you concur with the modified definitions for stability and, if not, please state why and/or suggest specific changes.**

Summary Consideration:

By a significant majority (about 2/3), the industry did not agree with the two definitions as modified in the second draft. Most of those disagreeing still express a fundamental disagreement with the approach of separating plant Stability from System Stability. Essentially many argue that plant Stability is simply a subset of System Stability, and the standard requirements could be simplified by focusing on Stability performance in a generic way. In this way Stability performance could be viewed in the context of individual units (generating unit Stability) or groups of units (System Stability). Some of these same commenters also argue that generating unit Stability is already covered by FAC–001 and -002 and, therefore, should be dropped from the TPL-001-1 standard; otherwise double jeopardy could apply. Many of these same commenters also suggested that if separation of generating unit Stability is retained in the final draft, then certain refinements of the requirements language should be made.

Others who voted 'No', as well as some who generally support the language of the current draft, recommended a variety of changes to the definitions and requirements for further clarity.

Only some 20+ percent of the commenters supported the current draft Stability definitions without reservation.

The SDT agrees with the Industry's majority view that generating unit Stability and System Stability need not and should not be treated as distinct issues. Consequently, the two new Stability terms have been removed from the third draft, and this revised draft references the already approved term "Stability." Furthermore, as indicated by the SDT's response to commenters, the Stability related requirements have been modified to create a single generic set of requirements that no longer distinguishes between generating unit and System Stability.

In summary, due to these and other industry comments in response to this question, the SDT has changed the following definition and requirements:

Consequential Load Loss: ~~Load that is no longer connected to a source as a result of the event being studied or which is lost as a result of the load's response to the transient conditions of the event (other than through the action of UVLS or UFLS schemes). Although Load which is lost as a result of the Load's response to the transient conditions of the event is considered Consequential Load Loss and is permitted when Consequential Load Loss is allowed, Transmission planning entities are not allowed to rely upon the expectation of such Load loss to meet steady state performance requirements.~~ All Load that is no longer served by any Transmission Facilities as a result of the Facilities being removed from service by a planned Protection System operation to isolate fault conditions.

R2. Each Transmission Planner and Planning Coordinator shall ~~conduct and document the results of~~ prepare ~~its~~an annual Planning Assessment of its portion of the BES. This Planning Assessment shall use current or past studies, document assumptions, document results, and shall cover steady state analyses, short circuit analyses, and Stability analyses ~~including both System and Generating Unit Stability~~.

R2.1 The Near-Term Transmission Planning Horizon portion of the steady state analysis shall be assessed annually and be supported ~~at a minimum~~ by the following annual current studies, supplemented with qualified past studies as indicated in Requirement R2.6:

R2.2 For the Long-Term Transmission Planning Horizon portion of the steady state analysis, ~~at a minimum,~~ a current System peak Load study is required annually for one of the years in the assessment period to support the annual Planning Assessment.

R2.6.1 (now 2.5.1) For steady state, short circuit, or ~~System~~ Stability analysis: the study shall be five calendar years old or less.

R2.6.2 (now 2.5.2) For steady state, short circuit, ~~Generating Plant Stability,~~ or ~~System~~ Stability analysis: the ~~study~~ present System model shall not include any material changes, such as, generation or Transmission additions/removals, or topology changes that have occurred in the intervening period and would impact the study area. Material generation changes could include:

R3.3.1 (now 3.3.2) For all generators, studies shall consider the minimum steady state voltage limitations ~~of all generators~~ and identify how the generators are ~~treated~~ analyzed in the steady state simulation.

R5. For the Stability portion of the Planning Assessment, as described in Requirement R2.4 ~~and Requirement R2.5~~, each Transmission Planner and Planning Coordinator shall perform the Contingency analyses listed in Table ~~2~~1 ~~– Stability Performance~~. The studies shall be based on computer simulations using models utilizing data provided in Requirement R1. ~~The studies shall be based on computer simulations using models utilizing data provided in Requirements R9 through R14, the MOD-010 and MOD-012 standards, and other data sources, to include known planned and long term outages of Transmission or generation equipment. The studies shall cover both System Stability and Generating Unit Stability. The following requirements apply to both System Stability and Generating Unit Stability studies unless otherwise noted.~~

R6. Each Transmission Planner and Planning Coordinator shall define and document, within their Planning Assessment, ~~the~~any proxies used in ~~simulation studies~~ the analysis to identify System instability for conditions such as cascading outages, voltage instability, or uncontrolled islanding.

The wording of sub-requirements R5.6.1 and R5.6.2 was modified and relocated to become bullets under Requirement R2.5.2.

- The addition/deletion/change of individual generating unit capability of 20 MW or greater.
- An aggregated addition/deletion/change to a group of generating units directly connected through their step-up transformer(s) to the BES which total 20 MW or greater.

The definitions of Generating Unit Stability Study and System Stability Study as well as the following sub-requirements were deleted: R2.5, R2.5.1, R2.5.2, and R5.5.

Organization	Question 1:	Question 1 Comments:
NPCC	No	There should be no difference between System and Generating Unit Stability studies. Each requires discretion regarding which events need to be tested. The consequences are potentially similar: either the instability of one or more generators. Extreme Events should be considered for any stability analysis, again, recognizing that discretion needs to be applied when selecting or dismissing particular contingencies. Therefore, the definition of Generating Unit Stability Study should be stricken from the standard.
Los Angeles	No	Changing the name does not change the fact that this is wrong. The stability criteria in the standards are all measured on

Organization	Question 1:	Question 1 Comments:
Department of Water and Power		the high-side, i.e., the system side. So when a stability simulation is performed, if there is any problems, whether it be loss of synchronism, out-of-step, damping, inter-area oscillations, etc, they will all appear on the same run and there is no distinctions between system stability or unit stability. To separate the two implies there is a difference and requires two different simulations is either confusing at best or imply ignorance of the physics. Maybe the drafting team is concerned with the proper modeling of the generator in a stability simulation. There may be practice to "lump" similar units in a plant as one "unit" or the dynamic characteristics of a unit were not explicitly or correctly modeled; in such instances, the behavior of individual unit cannot be observed. But if that is the case, the entire stability simulation is incorrect to begin with anyway, even on the system side. To properly deal with unit modeling, the standard should prohibit lumping of units and require all dynamic data (including governor controls, exciters, stabilizers, etc.) are included in the simulation model.
National Grid	No	There should be no difference between System and Generating Unit Stability studies. Each requires discretion regarding which events need to be tested. The consequences are potentially similar: either the instability of one of more generators. Extreme Events should be considered for any stability analysis, again, recognizing that discretion needs to be applied when selecting or dismissing particular contingencies. If no distinction is made between System and Generating Unit Stability studies is made, then the definition of Generating Unit Stability Study should be stricken from the standard.
PacifiCorp	Yes and No	We generally concur with the changes for the Requirements associated with the Generating Unit and System Stability, however, Generating unit stability studies are typically performed at the time of interconnection. Even though stability studies have been done as new generating unit(s) were interconnected or at the time changes occurred, such studies have not been done for the entire fleet of generating units at the same time. For very old units, stability study documentation may no longer exist, even though no potential stability problems have been identified when stability studies were run for interconnecting other newer units. Will every TP have to benchmark their generating unit stability study for its entire fleet with the acceptance of this Standard? In other words, will every TP has to recreate documentation for all its older units? We would appreciate that the SDT more clearly define the terms in R2.5.2, “material Transmission System change” and “at or near the point of Interconnection” to invoke a study with examples.
Hydro-Québec TransEnergie (HQT)	No	There should be no difference between System and Generating Unit Stability studies. Each requires discretion regarding which events need to be tested. The consequences are potentially similar: either the instability of one of more generators. Extreme Events should be considered for any stability analysis, again, recognizing that discretion needs to be applied when selecting or dismissing particular contingencies. Therefore, the definition of Generating Unit Stability Study should be stricken from the standard.
CenterPoint Energy and CPS Energy	No	Most industry commenters from the previous draft advised against making a distinction between system and generating unit stability, which are not commonly accepted industry terms. We (CenterPoint Energy and CPS Energy) remain unconvinced that the distinction is needed. If most industry commenters concur after this second draft, we believe the

Organization	Question 1:	Question 1 Comments:
		SDT should listen.
Austin Energy	No	There is no need to separate system stability studies and generating unit stability studies. Requirement R5.4 should be written to include generating unit stability analysis.
Tri-State Generation and Transmission Association, Inc.	No	Starting from this version, we think it would be clearer to not distinguish between generator and system stability studies, but rather list both as requirements for Stability Studies. Generating unit analyses would include tests of models such as generator exciters, and System Stability studies would model such things as bus faults.
Brazos Electric Power Cooperative, Inc.	No	We do not see the need to have 2 separate requirement sections nor definitions for both System and Generating stability studies. The section for stability studies should simply suggest when these studies should be performed, when new generation is added, conditions for that, etc? Confusion continues to come from the ambiguous use of language such as 'Material Transmission System changes' or 'changes in generation capability'. Of note in 2.5.2, requiring stability studies for the addition of a new substation in a transmission line connected to a generator is completely unnecessary most of the time but the wording in 2.5 does not appear to allow flexibility. Discretion should be provided to the TP.A first course of action would be to bring the related stability criteria under one section. It seems like 5.6 can be combined under a requirements section for stability studies.
Northeast Utilities	No	Northeast Utilities has participated with ISO-NE and NPCC and supports the comments filed by those organizations.
North Carolina Electric Membership Corp	Yes and No	We think we understand the direction that the SDT is heading but needs to be clearer. Angular stability for a single unit is the focus of Generating Unit Stability where as System Stability involves multiple generating machines or plants, and may also encompass voltage stability of loads which should be addressed separately in our opinion since different tools are used for this assessment.
ERCOT System Planning	No	Most industry commenters from the previous draft advised against making a distinction between system and generating unit stability, which are not commonly accepted industry terms. The only difference between the two seems to be location of contingencies tested. ERCOT suggests removing specific requirements for Generating Unit stability, as System Stability covers everything.
Central Maine Power Company	No	There should be no difference between System and Generating Unit Stability studies. Each requires discretion regarding which events need to be tested. The consequences are potentially similar: either the instability of one of more generators. Extreme Events should be considered for any stability analysis, again, recognizing that discretion needs to be applied when selecting or dismissing particular contingencies. Therefore, the definition of Generating Unit Stability Study should

Organization	Question 1:	Question 1 Comments:
		be stricken from the standard.
NSTAR Electric	No	There should be no difference between System and Generating Unit Stability studies. Each requires discretion regarding which events need to be tested. The consequences are potentially similar: either the instability of one of more generators. Extreme Events should be considered for any stability analysis, again, recognizing that discretion needs to be applied when selecting or dismissing particular contingencies. If no distinction is made between System and Generating Unit Stability studies is made, then the definition of Generating Unit Stability Study should be stricken from the standard.
New York Independent System Operator	No	There should be no difference between System and Generating Unit Stability studies. Each requires discretion regarding which events need to be tested. The consequences are potentially similar: either the instability of one of more generators. Extreme Events should be considered for any stability analysis, again, recognizing that discretion needs to be applied when selecting or dismissing particular contingencies. Therefore, the definition of Generating Unit Stability Study should be stricken from the standard.
ISO New England Inc.	No	There should be no difference between System and Generating Unit Stability studies. Each requires discretion regarding which events need to be tested. The consequences are potentially similar: either the instability of one of more generators. Extreme Events should be considered for any stability analysis, again, recognizing that discretion needs to be applied when selecting or dismissing particular contingencies. If no distinction is made between System and Generating Unit Stability studies is made, then the definition of Generating Unit Stability Study should be stricken from the standard.
Entergy Services, Inc.	Yes and No	Entergy agrees with the intent. However, there will be some confusion because the industry standard terms for stability are omitted. It should be clear that the System Stability Study is a wide area view/assessment of both angular and voltage stability. In contrast, the Generating Unit Stability Study is focused on a specific unit or plant and the immediate area. Typically, this study looks at angular stability. The confusion may be exacerbated by the exclusion of a definition for voltage (or load) stability in the notes on page 31. There is a discussion of angular stability, but voltage stability is conspicuously missing. An improvement for the System Stability Study definition is to clarify that it is a study that focuses on the impact to the system itself and covers an area larger than one Generating Plant, covering a large geographical area. See specific proposal below: System Stability Study - Study that focuses on how contingencies impact a larger portion of the System than a Generating Unit Study. These studies would examine issues such as angular Stability, inter-area power oscillation, and dynamic voltages.
BPA Transmission	No	Generating Unit Stability is adequately addressed by the System Stability studies and does not need to be evaluated separately. Footnote 5.a.i in the notes following the Performance Requirements Tables, already specifies the

Organization	Question 1:	Question 1 Comments:
Reliability Program		requirements to meet. Therefore, we recommend removing the section on Generating Unit Stability Studies from standard TPL-001-1. The focus of this standard should be on "System Stability" which encompasses all generating units.

Response: The SDT agrees and has modified the definitions and Requirements accordingly.

R2. Each Transmission Planner and Planning Coordinator shall ~~conduct and document the results of~~ prepare ~~its~~an annual Planning Assessment of its portion of the BES. This Planning Assessment shall use current or past studies, document assumptions, document results, and shall cover steady state analyses, short circuit analyses, and Stability analyses ~~including both System and Generating Unit Stability~~.

R2.6.1 (now 2.5.1) For steady state, short circuit, or ~~System~~ Stability analysis: the study shall be five calendar years old or less.

R2.6.2 (now 2.5.2) For steady state, short circuit, ~~Generating Plant Stability,~~ or ~~System~~ Stability analysis: the ~~study~~ present System model shall not include any material changes, such as, generation or Transmission additions/removals, or topology changes that have occurred in the intervening period and would impact the study area. Material generation changes could include:

R5. For the Stability portion of the Planning Assessment, as described in Requirement R2.4 ~~and Requirement R2.5~~, each Transmission Planner and Planning Coordinator shall perform the Contingency analyses listed in Table ~~2~~1 ~~– Stability Performance~~. The studies shall be based on computer simulations using models utilizing data provided in Requirement R1. ~~The studies shall be based on computer simulations using models utilizing data provided in Requirements R9 through R14, the MOD-010 and MOD-012 standards, and other data sources, to include known planned and long term outages of Transmission or generation equipment. The studies shall cover both System Stability and Generating Unit Stability. The following requirements apply to both System Stability and Generating Unit Stability studies unless otherwise noted.~~

The wording of sub-requirements R5.6.1 and R5.6.2 was modified and relocated to become bullets under Requirement R2.5.2.

The addition/deletion/change of individual generating unit capability of 20 MW or greater.

An aggregated addition/deletion/change to a group of generating units directly connected through their step-up transformer(s) to the BES which total 20 MW or greater.

The definitions of Generating Unit Stability Study and System Stability Study as well as the following sub-requirements were deleted: R2.5, R2.5.1, R2.5.2, and R5.5

Progress Energy Carolinas	No	The System Stability Study definition could be improved by clarifying that it is a study that focuses on the impact of contingencies to the system itself and covers a larger geographical area than one Generating Plant. A specific proposal is as follows. System Stability Study - Study that focuses on how contingencies impact a larger portion of the System than a Generating Unit Study. These studies would examine issues such as angular stability, inter-area power oscillations, and dynamic voltages.

Organization	Question 1:	Question 1 Comments:
Ameren	No	Agree with the revised definition of Generating Unit Stability Study. Propose new definition for System Stability Study, as follows - "Study that focuses on portions of the System, including the impact of contingencies on multiple generating units in an area. These studies would examine issues such as angular Stability, inter-area oscillation, and voltages during dynamic simulations."
SERC Dynamics Review Subcommittee	No	An improvement for the System Stability Study definition is to clarify that it is a study that focuses on the impact to the system itself and covers an area larger than one Generating Plant, covering a large geographical area. See specific proposal below: System Stability Study - Study that focuses on how contingencies impact a larger portion of the System than a Generating Unit Study. These studies would examine issues such as angular Stability, inter-area power oscillation, and dynamic voltages.
Southern Company Transmission	No	We suggest the following for the System Stability Study definition: Study that focuses on large portions of the System (which may include many generating units) and how contingencies affect that larger area to determine whether angular Stability is maintained, inter-area power oscillations are damped, and voltages during the dynamic simulation stay within acceptable performance limits.
American Transmission Company	No	Generating Unit Stability Study definition - We suggest deleting the text, "on the Transmission Facilities connected to that generating unit(s) point(s) of interconnection or one bus away from that point.", because certain Generation Facility contingencies should be considered and key Transmission Facility contingencies can be more than one bus away from the interconnection point. System Stability Study definition - We suggest this alternate wording: "Study that focuses on portions of the System, which may include many generating units with various Contingencies. This study is concerned with loss of synchronism, lack of damping of inter-area power oscillations, and voltages during the dynamic simulation." We suggest this wording because the definition of a study should not give the criteria, but rather the general elements of the study.
SERC Reliability Review Subcommittee and Planning Standards Subcommittee	No	There is an inconsistency between the defined terms “Generating Unit Stability Study” and “System Stability Study” and the usage within the standard. The requirements refer to these terms by omitting the word “study” .An improvement for the System Stability Study definition is to clarify that it is a study that focuses on the impact to the system itself and covers an area larger than one Generating Plant, covering a large geographical area. See specific proposal below: System Stability Study - Study that focuses on how contingencies impact a larger portion of the System than a Generating Unit Study. These studies would examine issues such as angular Stability, inter-area power oscillation, and dynamic voltages.?

Organization	Question 1:	Question 1 Comments:
Response: The SDT appreciates your suggested improvements. However, a majority of the Industry believes that there should be no distinction between System Stability and Generating Unit Stability.		
Platte River Power Authority	Yes and No	"Generator Unit Stability Study" assessments are applicable to FAC-001 and FAC-002. If specific requirements for a "Generator Unit Stability Study" are to be added to a standard, then those requirements belong in either a Revised FAC-001 or a Revised FAC-002 and not in a TPL standard. The "System Stability Study" assessments which are appropriate for TPL standards will capture both the performance of the system and the performance of specific generators at the various demand and stressed sensitivity levels studied.
BCTC	No	BCTC agrees with many other commenters, ABB, Ameren, Central Maine Power, NPCC RCWS, FirstEnergy, WECC, HQTE, Tenaska, FPL, FRCC, National Grid, New England ISO, NU, NStar, United Illuminating, BPA, Progress-Carolinas, TEP, and Northwestern Energy that there is no significant distinction between generator and system stability. These entities have significant experience with stability studies. Therefore, we cannot accept a simple statement from the SDT that it believes it is important to maintain this distinction without any explanation. We believe that the Generating Unit Stability Studies portion is attempting to introduce interconnection stability studies into the TPL standards. Interconnection stability studies are adequate addressed by open access tariffs and FAC-001. This should not be duplicated in TPL.
Manitoba Hydro	No	Manitoba Hydro does not believe there is a need to distinguish between System Stability Study and Generating Unit Stability Study. Both these studies as defined require that synchronous operation of generators is maintained (i.e. angular stability) and damping is acceptable (i.e. small signal stability). The stability assessment would cover the issues being requested in the Generating Unit stability Study. We suggest the definition for System Stability Study - A study that determines whether angular stability is maintained, inter-area power oscillations are acceptably damped, and transient voltage swings remain within acceptable limits. Further, contrary to the SDT interpretation in the response to our first posting comments, Manitoba Hydro believes the Generating Unit Stability Study is a duplication of what is required in FAC-002-0 as the FAC requirements mandate system performance required by the NERC Reliability Standards. Manitoba Hydro continues to believe this additional study is redundant. Should the SDT decide to retain the Generating Unit stability study, then Manitoba Hydro recommends that, consistent with the wording in other requirements of this assessment section, it would be more appropriate to require that "Generating Unit Stability be assessed using current or qualifying past studies." This would allow use of current interconnection studies mandated by FAC-002-0 to be used to comply with the Generating Unit Study requirement. Currently, the wording in R2.5 requires that Generating unit stability be analyzed with studies for the conditions in R2.5.1 and/or R2.5.2.
Transmission Agency of	No	We believe that there is no significant distinction between Generating Unit Stability and System Stability other than the objective and focus of the study. Therefore, we cannot accept a simple statement from the SDT that it believes it is

Organization	Question 1:	Question 1 Comments:
Northern California		important to maintain this distinction without more explanation. If a distinction is maintained, then Generating Unit Stability Study should be and is already covered in FAC-001-0 and FAC-002-0. As defined, Generating Unit Stability Study ?focuses on an individual generating unit's or electrically closely-coupled generating units' Stability for various Contingencies on the Transmission Facilities connected to that generating unit(s) point(s) of interconnection or one bus away from that point. However, the Purpose of the proposed TPL-001-1 is to “develop a Bulk Electric System that will operate reliably over a broad spectrum of System conditions and following a wide range of probable Contingencies”. If a Generating Unit becomes unstable, the unit can be disconnected from the BES without impacting system stability. Therefore, we believe that the Generating Unit Stability Studies portion is attempting to introduce interconnection stability studies into the TPL standards. Interconnection stability studies are adequately addressed by FAC-001 and does not need to be specifically called out in TPL-001-1. In addition, Generating unit stability studies are typically performed at the time of interconnection. Even though Generating Unit Stability Studies have been done as new generating unit(s) were interconnected or at the time changes occurred, such studies have not been done for the entire fleet of Generating Units at the same time. For very old units, stability study documentation may no longer exist, even though no potential stability problems have been identified when stability studies were run for interconnecting other newer units or for the System. If the requirement for Generating Unit Stability Study is retained in this proposed TPL-001-1, R2.5 needs to be clarified to say “only when” the changes in R2.5.1 and R2.5.2 are made that the Generating Unit Stability Study needs to be done. There also needs to be language about how to treat generators that are existing prior to this Standard taking effect. We would also appreciate if the SDT would more clearly define with examples the terms in R2.5.2, “material Transmission System change” and “at or near the point of Interconnection” to invoke a study.
OPUC	Yes and No	We cannot evaluate the need to distinguish generating unit stability and system stability without greater explanation inclusive of examples. We also need clarification of the intended interactions of this proposed standard with of FAC-001 and 2 to avoid duplication of efforts. Finally, if FAC-001 will cover generating unit or interconnection stability R 2.5 should clearly address existing older generators.
Pacific Gas and Electric Co.	No	We believe that there is no significant distinction between Generating Unit Stability and System Stability other than the objective and focus of the study. Therefore, we cannot accept a simple statement from the SDT that it believes it is important to maintain this distinction without more explanation. If a distinction is maintained, then Generating Unit Stability Study should be and is already covered in FAC-001-0 and FAC-002-0. As defined, Generating Unit Stability Study ?focuses on an individual generating unit's or electrically closely-coupled generating units' Stability for various Contingencies on the Transmission Facilities connected to that generating unit(s) point(s) of interconnection or one bus away from that point. However, the Purpose of the proposed TPL-001-1 is to "develop a Bulk Electric System that will operate reliably over a broad spectrum of System conditions and following a wide range of probable Contingencies". If a Generating Unit becomes unstable, the unit can be disconnected from the BES without impacting system stability. Therefore, we believe that the Generating Unit Stability Studies portion is attempting to introduce interconnection stability studies into the TPL standards. Interconnection stability studies are adequately addressed by FAC-001 and does not

Organization	Question 1:	Question 1 Comments:
		need to be specifically called out in TPL-001-1. In addition, Generating unit stability studies are typically performed at the time of interconnection. Even though Generating Unit Stability Studies have been done as new generating unit(s) were interconnected or at the time changes occurred, such studies have not been done for the entire fleet of Generating Units at the same time. For very old units, stability study documentation may no longer exist, even though no potential stability problems have been identified when stability studies were run for interconnecting other newer units or for the System. If the requirement for Generating Unit Stability Study is retained in this proposed TPL-001-1, R2.5 needs to be clarified to say “only when” the changes in R2.5.1 and R2.5.2 are made that the Generating Unit Stability Study needs to be done. There also needs to be language about how to treat generators that are existing prior to this Standard taking effect. We would also appreciate if the SDT would more clearly define with examples the terms in R2.5.2, “material Transmission System change” and “at or near the point of Interconnection” to invoke a study.
Public Service Company of New Mexico	No	We believe that there is no significant distinction between Generating Unit Stability and System Stability other than the objective and focus of the study. Therefore, we cannot accept a simple statement from the SDT that it believes it is important to maintain this distinction without more explanation. If a distinction is maintained, then Generating Unit Stability Study should be and is already covered in FAC-001-0 and FAC-002-0. As defined, Generating Unit Stability Study ?focuses on an individual generating unit's or electrically closely-coupled generating units' Stability for various Contingencies on the Transmission Facilities connected to that generating unit(s) point(s) of interconnection or one bus away from that point. However, the Purpose of the proposed TPL-001-1 is to "develop a Bulk Electric System that will operate reliably over a broad spectrum of System conditions and following a wide range of probable Contingencies". If a Generating Unit becomes unstable, the unit can be disconnected from the BES without impacting system stability. Therefore, we believe that the Generating Unit Stability Studies portion is attempting to introduce interconnection stability studies into the TPL standards. Interconnection stability studies are adequately addressed by FAC-001 and does not need to be specifically called out in TPL-001-1. In addition, Generating unit stability studies are typically performed at the time of interconnection. Even though Generating Unit Stability Studies have been done as new generating unit(s) were interconnected or at the time changes occurred, such studies have not been done for the entire fleet of Generating Units at the same time. For very old units, stability study documentation may no longer exist, even though no potential stability problems have been identified when stability studies were run for interconnecting other newer units or for the System. If the requirement for Generating Unit Stability Study is retained in this proposed TPL-001-1, R2.5 needs to be clarified to say “only when” the changes in R2.5.1 and R2.5.2 are made that the Generating Unit Stability Study needs to be done. There also needs to be language about how to treat generators that are existing prior to this Standard taking effect. We would also appreciate if the SDT would more clearly define with examples the terms in R2.5.2, “material Transmission System change” and “at or near the point of Interconnection” to invoke a study.
Puget Sound Energy, Inc.	No	We believe that there is no significant distinction between Generating Unit Stability and System Stability other than the objective and focus of the study. Therefore, we cannot accept a simple statement from the SDT that it believes it is important to maintain this distinction without more explanation. If a distinction is maintained, then Generating Unit

Organization	Question 1:	Question 1 Comments:
		Stability Study should be and is already covered in FAC-001-0 and FAC-002-0. As defined, Generating Unit Stability Study ?focuses on an individual generating unit's or electrically closely-coupled generating units' Stability for various Contingencies on the Transmission Facilities connected to that generating unit(s) point(s) of interconnection or one bus away from that point. However, the Purpose of the proposed TPL-001-1 is to "develop a Bulk Electric System that will operate reliably over a broad spectrum of System conditions and following a wide range of probable Contingencies". If a Generating Unit becomes unstable, the unit can be disconnected from the BES without impacting system stability. Therefore, we believe that the Generating Unit Stability Studies portion is attempting to introduce interconnection stability studies into the TPL standards. Interconnection stability studies are adequately addressed by FAC-001 and does not need to be specifically called out in TPL-001-1. In addition, Generating unit stability studies are typically performed at the time of interconnection. Even though Generating Unit Stability Studies have been done as new generating unit(s) were interconnected or at the time changes occurred, such studies have not been done for the entire fleet of Generating Units at the same time. For very old units, stability study documentation may no longer exist, even though no potential stability problems have been identified when stability studies were run for interconnecting other newer units or for the System. If the requirement for Generating Unit Stability Study is retained in this proposed TPL-001-1, R2.5 needs to be clarified to say “only when” the changes in R2.5.1 and R2.5.2 are made that the Generating Unit Stability Study needs to be done. There also needs to be language about how to treat generators that are existing prior to this Standard taking effect. We would also appreciate if the SDT would more clearly define with examples the terms in R2.5.2, “material Transmission System change” and “at or near the point of Interconnection” to invoke a study.
Idaho Power Company	No	We believe that there is no significant distinction between Generating Unit Stability and System Stability other than the objective and focus of the study. Therefore, we cannot accept a simple statement from the SDT that it believes it is important to maintain this distinction without more explanation. If a distinction is maintained, then Generating Unit Stability Study should be and is already covered in FAC-001-0 and FAC-002-0. As defined, Generating Unit Stability Study ?focuses on an individual generating unit's or electrically closely-coupled generating units' Stability for various Contingencies on the Transmission Facilities connected to that generating unit(s) point(s) of interconnection or one bus away from that point. However, the Purpose of the proposed TPL-001-1 is to “develop a Bulk Electric System that will operate reliably over a broad spectrum of System conditions and following a wide range of probable Contingencies”. If a Generating Unit becomes unstable, the unit can be disconnected from the BES without impacting system stability. Therefore, we believe that the Generating Unit Stability Studies portion is attempting to introduce interconnection stability studies into the TPL standards. Interconnection stability studies are adequate addressed by FAC-001 and does not need to be specifically called out in TPL-001-1. In addition, Generating unit stability studies are typically performed at the time of interconnection. Even though Generating Unit Stability Studies have been done as new generating unit(s) were interconnected or at the time changes occurred, such studies have not been done for the entire fleet of Generating Units at the same time. For very old units, stability study documentation may no longer exist, even though no potential stability problems have been identified when stability studies were run for interconnecting other newer units or for the System. If the requirement for Generating Unit Stability Study is retained in this proposed TPL-001-1, R2.5 needs to be clarified to

Organization	Question 1:	Question 1 Comments:
		say “only when” the changes in R2.5.1 and R2.5.2 are made that the Generating Unit Stability Study needs to be done. There also needs to be language about how to treat generators that are existing prior to this Standard taking effect. We would also appreciate if the SDT would more clearly define with examples the terms in R2.5.2, “material Transmission System change” and “at or near the point of Interconnection” to invoke a study.
SMUD	No	We believe that there is no significant distinction between Generating Unit Stability and System Stability other than the objective and focus of the study. Therefore, we cannot accept a simple statement from the SDT that it believes it is important to maintain this distinction without more explanation. If a distinction is maintained, then Generating Unit Stability Study should be and is already covered in FAC-001-0 and FAC-002-0. As defined, Generating Unit Stability Study focuses on an individual generating units or electrically closely-coupled generating units' Stability for various Contingencies on the Transmission Facilities connected to that generating unit(s) point(s) of interconnection or one bus away from that point. However, the Purpose of the proposed TPL-001-1 is to “develop a Bulk Electric System that will operate reliably over a broad spectrum of System conditions and following a wide range of probable Contingencies”. If a Generating Unit becomes unstable, the unit can be disconnected from the BES without impacting system stability. Therefore, we believe that the Generating Unit Stability Studies portion is attempting to introduce interconnection stability studies into the TPL standards. Interconnection stability studies are adequately addressed by FAC-001 and does not need to be specifically called out in TPL-001-1. In addition, Generating unit stability studies are typically performed at the time of interconnection. Even though Generating Unit Stability Studies have been done as new generating unit(s) were interconnected or at the time changes occurred, such studies have not been done for the entire fleet of Generating Units at the same time. For very old units, stability study documentation may no longer exist, even though no potential stability problems have been identified when stability studies were run for interconnecting other newer units or for the System. If the requirement for Generating Unit Stability Study is retained in this proposed TPL-001-1, R2.5 needs to be clarified to say “only when” the changes in R2.5.1 and R2.5.2 are made that the Generating Unit Stability Study needs to be done. There also needs to be language about how to treat generators that are existing prior to this Standard taking effect. We would also appreciate if the SDT would more clearly define with examples the terms in R2.5.2, “material Transmission System change” and “at or near the point of Interconnection” to invoke a study.
Sierra Pacific Power Company / Nevada Power Company	No	We believe that there is no significant distinction between Generating Unit Stability and System Stability other than the objective and focus of the study. Therefore, we cannot accept a simple statement from the SDT that it believes it is important to maintain this distinction without more explanation. If a distinction is maintained, then Generating Unit Stability Study should be and is already covered in FAC-001-0 and FAC-002-0. As defined, Generating Unit Stability Study focuses on an individual generating units or electrically closely-coupled generating units' Stability for various Contingencies on the Transmission Facilities connected to that generating unit(s) point(s) of interconnection or one bus away from that point. However, the Purpose of the proposed TPL-001-1 is to develop a Bulk Electric System that will operate reliably over a broad spectrum of System conditions and following a wide range of probable Contingencies? If a Generating Unit becomes unstable, the unit can be disconnected from the BES without impacting system stability.

Organization	Question 1:	Question 1 Comments:
		Therefore, we believe that the Generating Unit Stability Studies portion is attempting to introduce interconnection stability studies into the TPL standards. Interconnection stability studies are adequate addressed by FAC-001 and does not need to be specifically called out in TPL-001-1. In addition, Generating unit stability studies are typically performed at the time of interconnection. Even though Generating Unit Stability Studies have been done as new generating unit(s) were interconnected or at the time changes occurred, such studies have not been done for the entire fleet of Generating Units at the same time. For very old units, stability study documentation may no longer exist, even though no potential stability problems have been identified when stability studies were run for interconnecting other newer units or for the System. If the requirement for Generating Unit Stability Study is retained in this proposed TPL-001-1, R2.5 needs to be clarified to say “only when” the changes in R2.5.1 and R2.5.2 are made that the Generating Unit Stability Study needs to be done. There also needs to be language about how to treat generators that are existing prior to this Standard taking effect. We would also appreciate if the SDT would more clearly define with examples the terms in R2.5.2, “material Transmission System change” and “at or near the point of Interconnection” to invoke a study.
Black Hills Corporation	No	We believe that there is no significant distinction between Generating Unit Stability and System Stability other than the objective and focus of the study. Therefore, we cannot accept a simple statement from the SDT that it believes it is important to maintain this distinction without more explanation. If a distinction is maintained, then Generating Unit Stability Study should be and is already covered in FAC-001-0 and FAC-002-0. As defined, Generating Unit Stability Study ?focuses on an individual generating unit's or electrically closely-coupled generating units' Stability for various Contingencies on the Transmission Facilities connected to that generating unit(s) point(s) of interconnection or one bus away from that point. However, the Purpose of the proposed TPL-001-1 is to "develop a Bulk Electric System that will operate reliably over a broad spectrum of System conditions and following a wide range of probable Contingencies". If a Generating Unit becomes unstable, the unit can be disconnected from the BES without impacting system stability. Therefore, we believe that the Generating Unit Stability Studies portion is attempting to introduce interconnection stability studies into the TPL standards. Interconnection stability studies are adequately addressed by FAC-001 and does not need to be specifically called out in TPL-001-1. In addition, Generating unit stability studies are typically performed at the time of interconnection. Even though Generating Unit Stability Studies have been done as new generating unit(s) were interconnected or at the time changes occurred, such studies have not been done for the entire fleet of Generating Units at the same time. For very old units, stability study documentation may no longer exist, even though no potential stability problems have been identified when stability studies were run for interconnecting other newer units or for the System. If the requirement for Generating Unit Stability Study is retained in this proposed TPL-001-1, R2.5 needs to be clarified to say “only when” the changes in R2.5.1 and R2.5.2 are made that the Generating Unit Stability Study needs to be done. There also needs to be language about how to treat generators that are existing prior to this Standard taking effect. We would also appreciate if the SDT would more clearly define with examples the terms in R2.5.2, “material Transmission System change” and “at or near the point of Interconnection” to invoke a study.
SRP	No	We believe that there is no significant distinction between Generating Unit Stability and System Stability other than the

Organization	Question 1:	Question 1 Comments:
		objective and focus of the study. Therefore, we cannot accept a simple statement from the SDT that it believes it is important to maintain this distinction without more explanation. If a distinction is maintained, then Generating Unit Stability Study should be and is already covered in FAC-001-0 and FAC-002-0. As defined, Generating Unit Stability Study focuses on an individual generating units or electrically closely-coupled generating units' Stability for various Contingencies on the Transmission Facilities connected to that generating unit(s) point(s) of interconnection or one bus away from that point. However, the Purpose of the proposed TPL-001-1 is to develop a Bulk Electric System that will operate reliably over a broad spectrum of System conditions and following a wide range of probable Contingencies?. If a Generating Unit becomes unstable, the unit can be disconnected from the BES without impacting system stability. Therefore, we believe that the Generating Unit Stability Studies portion is attempting to introduce interconnection stability studies into the TPL standards. Interconnection stability studies are adequately addressed by FAC-001 and does not need to be specifically called out in TPL-001-1. In addition, Generating unit stability studies are typically performed at the time of interconnection. Even though Generating Unit Stability Studies have been done as new generating unit(s) were interconnected or at the time changes occurred, such studies have not been done for the entire fleet of Generating Units at the same time. For very old units, stability study documentation may no longer exist, even though no potential stability problems have been identified when stability studies were run for interconnecting other newer units or for the System. If the requirement for Generating Unit Stability Study is retained in this proposed TPL-001-1, R2.5 needs to be clarified to say “only when” the changes in R2.5.1 and R2.5.2 are made that the Generating Unit Stability Study needs to be done. There also needs to be language about how to treat generators that are existing prior to this Standard taking effect. We would also appreciate if the SDT would more clearly define with examples the terms in R2.5.2, “material Transmission System change” and “at or near the point of Interconnection” to invoke a study.
Tucson Electric Power Company	No	We believe that there is no significant distinction between Generating Unit Stability and System Stability other than the objective and focus of the study. Therefore, we cannot accept a simple statement from the SDT that it believes it is important to maintain this distinction without more explanation. If a distinction is maintained, then Generating Unit Stability Study should be and is already covered in FAC-001-0 and FAC-002-0. As defined, Generating Unit Stability Study ?focuses on an individual generating unit's or electrically closely-coupled generating units' Stability for various Contingencies on the Transmission Facilities connected to that generating unit(s) point(s) of interconnection or one bus away from that point. However, the Purpose of the proposed TPL-001-1 is to ?develop a Bulk Electric System that will operate reliably over a broad spectrum of System conditions and following a wide range of probable Contingencies?. If a Generating Unit becomes unstable, the unit can be disconnected from the BES without impacting system stability. Therefore, we believe that the Generating Unit Stability Studies portion is attempting to introduce interconnection stability studies into the TPL standards. Interconnection stability studies are adequately addressed by FAC-001 and does not need to be specifically called out in TPL-001-1. In addition, Generating unit stability studies are typically performed at the time of interconnection. Even though Generating Unit Stability Studies have been done as new generating unit(s) were interconnected or at the time changes occurred, such studies have not been done for the entire fleet of Generating Units at the same time. For very old units, stability study documentation may no longer exist, even though no potential stability

Organization	Question 1:	Question 1 Comments:
		problems have been identified when stability studies were run for interconnecting other newer units or for the System. If the requirement for Generating Unit Stability Study is retained in this proposed TPL-001-1, R2.5 needs to be clarified to say “only when” the changes in R2.5.1 and R2.5.2 are made that the Generating Unit Stability Study needs to be done. There also needs to be language about how to treat generators that are existing prior to this Standard taking effect. We would also appreciate if the SDT would more clearly define with examples the terms in R2.5.2, “material Transmission System change” and “at or near the point of Interconnection” to invoke a study.
Modesto Irrigation District	No	Comments: We believe that there is no significant distinction between Generating Unit Stability and System Stability other than the objective and focus of the study. Therefore, we cannot accept a simple statement from the SDT that it believes it is important to maintain this distinction without more explanation. If a distinction is maintained, then Generating Unit Stability Study should be and is already covered in FAC-001-0 and FAC-002-0. As defined, Generating Unit Stability Study focuses on an individual generating units or electrically closely-coupled generating units' Stability for various Contingencies on the Transmission Facilities connected to that generating unit(s) point(s) of interconnection or one bus away from that point. However, the Purpose of the proposed TPL-001-1 is to “develop a Bulk Electric System that will operate reliably over a broad spectrum of System conditions and following a wide range of probable Contingencies”. If a Generating Unit becomes unstable, the unit can be disconnected from the BES without impacting system stability. Therefore, we believe that the Generating Unit Stability Studies portion is attempting to introduce interconnection stability studies into the TPL standards. Interconnection stability studies are adequately addressed by FAC-001 and does not need to be specifically called out in TPL-001-1.In addition, Generating unit stability studies are typically performed at the time of interconnection. Even though Generating Unit Stability Studies have been done as new generating unit(s) were interconnected or at the time changes occurred, such studies have not been done for the entire fleet of Generating Units at the same time. For very old units, stability study documentation may no longer exist, even though no potential stability problems have been identified when stability studies were run for interconnecting other newer units or for the System. If the requirement for Generating Unit Stability Study is retained in this proposed TPL-001-1, R2.5 needs to be clarified to say “only when” the changes in R2.5.1 and R2.5.2 are made that the Generating Unit Stability Study needs to be done. There also needs to be language about how to treat generators that are existing prior to this Standard taking effect. We would also appreciate if the SDT would more clearly define with examples the terms in R2.5.2, “material Transmission System change” and “at or near the point of Interconnection” to invoke a study.
Tri-State G&T	No	We believe that there is no significant distinction between Generating Unit Stability and System Stability other than the objective and focus of the study. Therefore, we cannot accept a simple statement from the SDT that it believes it is important to maintain this distinction without more explanation. If a distinction is maintained, then Generating Unit Stability Study should be and is already covered in FAC-001-0 and FAC-002-0. As defined, Generating Unit Stability Study ?focuses on an individual generating unit's or electrically closely-coupled generating units' Stability for various Contingencies on the Transmission Facilities connected to that generating unit(s) point(s) of interconnection or one bus away from that point. However, the Purpose of the proposed TPL-001-1 is to ?develop a Bulk Electric System that will

Organization	Question 1:	Question 1 Comments:
		operate reliably over a broad spectrum of System conditions and following a wide range of probable Contingencies?. If a Generating Unit becomes unstable, the unit can be disconnected from the BES without impacting system stability. Therefore, we believe that the Generating Unit Stability Studies portion is attempting to introduce interconnection stability studies into the TPL standards. Interconnection stability studies are adequately addressed by FAC-001 and does not need to be specifically called out in TPL-001-1. In addition, Generating unit stability studies are typically performed at the time of interconnection. Even though Generating Unit Stability Studies have been done as new generating unit(s) were interconnected or at the time changes occurred, such studies have not been done for the entire fleet of Generating Units at the same time. For very old units, stability study documentation may no longer exist, even though no potential stability problems have been identified when stability studies were run for interconnecting other newer units or for the System. If the requirement for Generating Unit Stability Study is retained in this proposed TPL-001-1, R2.5 needs to be clarified to say “only when” the changes in R2.5.1 and R2.5.2 are made that the Generating Unit Stability Study needs to be done. There also needs to be language about how to treat generators that are existing prior to this Standard taking effect. We would also appreciate if the SDT would more clearly define with examples the terms in R2.5.2, “material Transmission System change” and “at or near the point of Interconnection” to invoke a study.
Southern California Edison	No	We believe that there is no significant distinction between Generating Unit Stability and System Stability other than the objective and focus of the study. Therefore, we cannot accept a simple statement from the SDT that it believes it is important to maintain this distinction without more explanation. If a distinction is maintained, then Generating Unit Stability Study should be and is already covered in FAC-001-0 and FAC-002-0. As defined, Generating Unit Stability Study ?focuses on an individual generating unit's or electrically closely-coupled generating units' Stability for various Contingencies on the Transmission Facilities connected to that generating unit(s) point(s) of interconnection or one bus away from that point. However, the Purpose of the proposed TPL-001-1 is to ?develop a Bulk Electric System that will operate reliably over a broad spectrum of System conditions and following a wide range of probable Contingencies?. If a Generating Unit becomes unstable, the unit can be disconnected from the BES without impacting system stability. Therefore, we believe that the Generating Unit Stability Studies portion is attempting to introduce interconnection stability studies into the TPL standards. Interconnection stability studies are adequately addressed by FAC-001 and does not need to be specifically called out in TPL-001-1. In addition, Generating unit stability studies are typically performed at the time of interconnection. Even though Generating Unit Stability Studies have been done as new generating unit(s) were interconnected or at the time changes occurred, such studies have not been done for the entire fleet of Generating Units at the same time. For very old units, stability study documentation may no longer exist, even though no potential stability problems have been identified when stability studies were run for interconnecting other newer units or for the System. If the requirement for Generating Unit Stability Study is retained in this proposed TPL-001-1, R2.5 needs to be clarified to say “only when” the changes in R2.5.1 and R2.5.2 are made that the Generating Unit Stability Study needs to be done. There also needs to be language about how to treat generators that are existing prior to this Standard taking effect. We would also appreciate if the SDT would more clearly define with examples the terms in R2.5.2, “material Transmission System change” and “at or near the point of Interconnection? to invoke a study.

Organization	Question 1:	Question 1 Comments:
Alberta Electric System Operator	No	We believe that there is no significant distinction between Generating Unit Stability and System Stability other than the objective and focus of the study. Therefore, we cannot accept a simple statement from the SDT that it believes it is important to maintain this distinction without more explanation. If a distinction is maintained, then Generating Unit Stability Study should be and is already covered in FAC-001-0 and FAC-002-0. As defined, Generating Unit Stability Study ?focuses on an individual generating unit's or electrically closely-coupled generating units' Stability for various Contingencies on the Transmission Facilities connected to that generating unit(s) point(s) of interconnection or one bus away from that point. However, the Purpose of the proposed TPL-001-1 is to ?develop a Bulk Electric System that will operate reliably over a broad spectrum of System conditions and following a wide range of probable Contingencies?. If a Generating Unit becomes unstable, the unit can be disconnected from the BES without impacting system stability. Therefore, we believe that the Generating Unit Stability Studies portion is attempting to introduce interconnection stability studies into the TPL standards. Interconnection stability studies are adequately addressed by FAC-001 and does not need to be specifically called out in TPL-001-1. In addition, Generating unit stability studies are typically performed at the time of interconnection. Even though Generating Unit Stability Studies have been done as new generating unit(s) were interconnected or at the time changes occurred, such studies have not been done for the entire fleet of Generating Units at the same time. For very old units, stability study documentation may no longer exist, even though no potential stability problems have been identified when stability studies were run for interconnecting other newer units or for the System. If the requirement for Generating Unit Stability Study is retained in this proposed TPL-001-1, R2.5 needs to be clarified to say “only when” the changes in R2.5.1 and R2.5.2 are made that the Generating Unit Stability Study needs to be done. There also needs to be language about how to treat generators that are existing prior to this Standard taking effect. We would also appreciate if the SDT would more clearly define with examples the terms in R2.5.2, “material Transmission System change” and “at or near the point of Interconnection” to invoke a study.
US Bureau of Reclamation	No	Comments: We believe that there is no significant distinction between Generating Unit Stability and System Stability other than the objective and focus of the study. Therefore, we cannot accept a simple statement from the SDT that it believes it is important to maintain this distinction without more explanation. If a distinction is maintained, then Generating Unit Stability Study should be and is already covered in FAC-001-0 and FAC-002-0. As defined, Generating Unit Stability Study ?focuses on an individual generating unit's or electrically closely-coupled generating units' Stability for various Contingencies on the Transmission Facilities connected to that generating unit(s) point(s) of interconnection or one bus away from that point. However, the Purpose of the proposed TPL-001-1 is to ?develop a Bulk Electric System that will operate reliably over a broad spectrum of System conditions and following a wide range of probable Contingencies?. If a Generating Unit becomes unstable, the unit can be disconnected from the BES without impacting system stability. Therefore, we believe that the Generating Unit Stability Studies portion is attempting to introduce interconnection stability studies into the TPL standards. Interconnection stability studies are adequately addressed by FAC-001 and does not need to be specifically called out in TPL-001-1.In addition, Generating unit stability studies are typically performed at the time of interconnection. Even though Generating Unit Stability Studies have been done as new generating unit(s) were interconnected or at the time changes occurred, such studies have not been done for the entire fleet of Generating Units

Organization	Question 1:	Question 1 Comments:
		at the same time. For very old units, stability study documentation may no longer exist, even though no potential stability problems have been identified when stability studies were run for interconnecting other newer units or for the System. If the requirement for Generating Unit Stability Study is retained in this proposed TPL-001-1, R2.5 needs to be clarified to say "only when" the changes in R2.5.1 and R2.5.2 are made that the Generating Unit Stability Study needs to be done. There also needs to be language about how to treat generators that are existing prior to this Standard taking effect. We would also appreciate if the SDT would more clearly define with examples the terms in R2.5.2, "material Transmission System change" and "at or near the point of Interconnection" to invoke a study.

Response: The SDT disagrees with your view that generating unit Stability assessments should be covered in FAC-001 or FAC-002. The SDT recognizes that such studies are performed for new generator interconnection, following the requirements of the appropriate FAC Standards. However, the TPL-001-1 Standard is intended to ensure on-going assessments of generating unit Stability so as to capture any significant performance changes over the course of time. Nevertheless, the SDT has eliminated the distinction between generating unit Stability and System Stability by modifying the definitions and Requirements as shown.

R2. Each Transmission Planner and Planning Coordinator shall ~~conduct and document the results of~~ prepare ~~its~~an annual Planning Assessment of its portion of the BES. This Planning Assessment shall use current or past studies, document assumptions, document results, and shall cover steady state analyses, short circuit analyses, and Stability analyses ~~including both System and Generating Unit Stability~~.

R2.6.1 (now 2.5.1) For steady state, short circuit, or ~~System~~ Stability analysis: the study shall be five calendar years old or less.

R2.6.2 (now 2.5.2) For steady state, short circuit, ~~Generating Plant Stability,~~ or ~~System~~ Stability analysis: the ~~study~~ present System model shall not include any material changes, such as, generation or Transmission additions/removals, or topology changes that have occurred in the intervening period and would impact the study area. Material generation changes could include:

R5. For the Stability portion of the Planning Assessment, as described in Requirement R2.4 ~~and Requirement R2.5~~, each Transmission Planner and Planning Coordinator shall perform the Contingency analyses listed in Table ~~2~~1 ~~– Stability Performance~~. The studies shall be based on computer simulations using models utilizing data provided in Requirement R1. ~~The studies shall be based on computer simulations using models utilizing data provided in Requirements R9 through R14, the MOD-010 and MOD-012 standards, and other data sources, to include known planned and long term outages of Transmission or generation equipment. The studies shall cover both System Stability and Generating Unit Stability. The following requirements apply to both System Stability and Generating Unit Stability studies unless otherwise noted.~~

The wording of sub-requirements R5.6.1 and R5.6.2 was modified and relocated to become bullets under Requirement R2.5.2.

The addition/deletion/change of individual generating unit capability of 20 MW or greater.

An aggregated addition/deletion/change to a group of generating units directly connected through their step-up transformer(s) to the BES which total 20 MW or greater.

The definitions of Generating Unit Stability Study and System Stability Study as well as the following sub-requirements were deleted: R2.5, R2.5.1, R2.5.2, and

Organization	Question 1:	Question 1 Comments:
R5.5.		
Gainesville Regional Utilities	No	Our small system does not have the present resources to deal with the large increase in stability type studies that this section seems to be requesting. Our system changes very little if at all from year to year. The ranking of the regional facilities where priority is given for stability study to the top 100 fault current buses shows that we do not have even a bus listed until position 611. We suggest that R2.4.1 should allow for only doing buses that have a ranking impact on the regional BES or no more that every 7 years for those systems without changes or are so small that their total separation or lost of their largest or almost total generation is not an issue for the RC. Stability should not have to be analyzed annually for small, unchanging systems.
Response: Where material changes do not occur as you describe for your System, studies would not have to be run any more frequently than once every five years, as described in Requirement R2.6 (now R2.5).		
ITC Holdings: ITC, METC, ITC Midwest	Yes and No	Requirement R 5.4.4: Consider changing the last sentence to the following: "If the Extreme Events analysis concludes there are widespread cascading outages, an evaluation of implementing a change designed to reduce or mitigate the likelihood of such consequences shall be conducted."
Response: The wording suggested is basically identical to what is already there. The SDT does not feel that this change provides any clarity or alters the context of the present text. Also, widespread is an ambiguous term and not measurable. No change made.		
Progress Energy Florida, Inc.	No	Progress Energy Florida, Inc. (PEF) does not believe that Stability Analysis should be or can be successfully divided into the proposed two distinct concepts of System Stability and Generating Unit Stability. Most textbooks dealing with the matter of Stability Analysis divide the issue into two parts, steady state and transient, and then subdivide the transient part into power angle stability and voltage stability. PEF has been unable to find any engineering treatise that argues for dividing transient Stability Analysis into System Stability and Generating Unit Stability. NERC's present definition of Stability, "The ability of an electric system to maintain a state of equilibrium during normal and abnormal conditions or disturbances", succinctly and correctly addresses the fact that stability issues regarding plants cannot be extricated from analysis of the rest of the system. PEF feels that this existing definition is accurate and not in need of clarification or improvement. To cite an example, if under the auspices of Generating Unit Stability, a transmission line trips, or if a load shedding scheme is activated, does the event then get defined as a System Stability event (or both)? It should be noted that the SDT attempted to both improve and clarify the definition of Stability in Note 5 of Table 2. The SDT's wording in Table 2 Note 5, while not containing any inappropriate or inaccurate information, has two fundamental flaws: a) it unnecessarily replaces the existing definition and b) it does not contain any language tying in the new definitions of System Stability and Generating Unit Stability. Furthermore, given that both of the new definitions are held to the exact same requirements, those found in Table 2, PEF can see no tangible benefit to two definitions, and therefore recommends removal of the new definitions of System Stability and Generating Unit Stability, and a return to the existing

Organization	Question 1:	Question 1 Comments:
		definition of Stability. Stability analyses that are taking place under the present definition and under the existing TPL Standards are more than adequate to demonstrate reliability of the BES, and PEF feels that the introduction of two new definitions would only serve to cause confusion and discussion regarding unmerited additional analyses.

Response: The SDT agrees and has modified the definitions and Requirements accordingly. Furthermore, with these changes, the SDT believes that Note 5 of Table 2 has value to the Industry as a clarification of the existing Stability definition and should no longer be viewed as a replacement definition.

R2. Each Transmission Planner and Planning Coordinator shall ~~conduct and document the results of~~ prepare ~~its~~an annual Planning Assessment of its portion of the BES. This Planning Assessment shall use current or past studies, document assumptions, document results, and shall cover steady state analyses, short circuit analyses, and Stability analyses ~~including both System and Generating Unit Stability~~.

R2.6.1 (now 2.5.1) For steady state, short circuit, or ~~System~~ Stability analysis: the study shall be five calendar years old or less.

R2.6.2 (now 2.5.2) For steady state, short circuit, ~~Generating Plant Stability,~~ or ~~System~~ Stability analysis: the ~~study~~ present System model shall not include any material changes, such as, generation or Transmission additions/removals, or topology changes that have occurred in the intervening period and would impact the study area. Material generation changes could include:

R5. For the Stability portion of the Planning Assessment, as described in Requirement R2.4 ~~and Requirement R2.5~~, each Transmission Planner and Planning Coordinator shall perform the Contingency analyses listed in Table ~~2~~1 ~~– Stability Performance~~. The studies shall be based on computer simulations using models utilizing data provided in Requirement R1. ~~The studies shall be based on computer simulations using models utilizing data provided in Requirements R9 through R14, the MOD-010 and MOD-012 standards, and other data sources, to include known planned and long term outages of Transmission or generation equipment. The studies shall cover both System Stability and Generating Unit Stability. The following requirements apply to both System Stability and Generating Unit Stability studies unless otherwise noted.~~

The wording of sub-requirements R5.6.1 and R5.6.2 was modified and relocated to become bullets under Requirement R2.5.2.

The addition/deletion/change of individual generating unit capability of 20 MW or greater.

An aggregated addition/deletion/change to a group of generating units directly connected through their step-up transformer(s) to the BES which total 20 MW or greater.

The definitions of Generating Unit Stability Study and System Stability Study as well as the following sub-requirements were deleted: R2.5, R2.5.1, R2.5.2, and R5.5

Lafayette Utilities System	No	Lafayette Utilities System (Lafayette) does not dispute the need for stability studies, especially in connection with significant system topology changes. We are concerned, however, by the possibility of inconsistencies between the results of interconnection studies conducted for new generating units pursuant to the Large Generator Interconnection Procedures prescribed by FERC and Generating Unit Stability Studies conducted as part of the TPL-001 planning assessment. For example, if a TPL-001 stability analysis indicates the need for more costly or extensive transmission upgrades that were indicated in an earlier LGIP interconnection study, the generation developer could be placed in an

Organization	Question 1:	Question 1 Comments:
		untenable situation: it would have proceeded with its project based on the assumption of responsibility for LGIP-indicated upgrades, but then could face demands for the funding of additional upgrades pursuant to the TPL-001 stability analysis. Improved integration between the two sets of stability studies appears warranted, in order to avoid placing generation developers in this position.
Response: The SDT understands your concerns; however, we believe that TPL-001-1 will not create an untenable position for generation developers following the LGIP. Studies to interconnect the generator in accordance with the LGIP will identify those Facilities to be incorporated in the Interconnection Agreement. Future studies carried out in compliance with TPL-001-1 will ensure on-going System reliability, and any Facility upgrades required for that purpose will be the responsibility of the Transmission Owner, not the generation developer.		
Arizona Public Service Co.	Yes and No	We generally concur with the changes for the Requirements associated with the Generating Unit and System Stability, however, Generating unit stability studies are typically performed at the time of interconnection. Even though stability studies have been done as new generating unit(s) were interconnected or at the time changes occurred, such studies have not been done for the entire fleet of generating units at the same time. For very old units, stability study documentation may no longer exist, even though no potential stability problems have been identified when stability studies were run for interconnecting other newer units. Will every TP have to benchmark their generating unit stability study for its entire fleet with the acceptance of this Standard? In other words, will every TP has to recreate documentation for all its older units?? We would appreciate that the SDT more clearly define the terms in R2.5.2, "material Transmission System change" and "at or near the point of Interconnection" to invoke a study with examples.
ColumbiaGrid	Yes and No	We generally concur with the changes for the Requirements associated with the Generating Unit and System Stability, however, Generating unit stability studies are typically performed at the time of interconnection. Even though stability studies have been done as new generating unit(s) were interconnected or at the time changes occurred, such studies have not been done for the entire fleet of generating units at the same time. For very old units, stability study documentation may no longer exist, even though no potential stability problems have been identified when stability studies were run for interconnecting other newer units. Will every TP have to benchmark their generating unit stability study for its entire fleet with the acceptance of this Standard? In other words, will every TP has to recreate documentation for all its older units?? We would appreciate that the SDT more clearly define the terms in R2.5.2, "material Transmission System change" and "at or near the point of Interconnection" to invoke a study with examples.
Response: The SDT believes that the modified definitions and Requirements in the third draft address your concerns. **R2**. Each Transmission Planner and Planning Coordinator shall ~~conduct and document the results of~~ prepare ~~its~~an annual Planning Assessment of its portion of the BES. This Planning Assessment shall use current or past studies, document assumptions, document results, and shall cover steady state analyses, short circuit analyses, and Stability analyses ~~including both System and Generating Unit Stability~~		

Organization	Question 1:	Question 1 Comments:
R2.6.1 (now R2.5.1) For steady state, short circuit, or ~~System~~ Stability analysis: the study shall be five calendar years old or less. **R2.6.2** (now R2.5.2) For steady state, short circuit, ~~Generating Plant Stability,~~ or ~~System~~ Stability analysis: the ~~study~~ present System model shall not include any material changes, such as, generation or Transmission additions/removals, or topology changes that have occurred in the intervening period and would impact the study area. Material generation changes could include: **R5**. For the Stability portion of the Planning Assessment, as described in Requirement R2.4 ~~and Requirement R2.5~~, each Transmission Planner and Planning Coordinator shall perform the Contingency analyses listed in Table ~~2~~1 ~~– Stability Performance~~. The studies shall be based on computer simulations using models utilizing data provided in Requirement R1. ~~The studies shall be based on computer simulations using models utilizing data provided in Requirements R9 through R14, the MOD-010 and MOD-012 standards, and other data sources, to include known planned and long term outages of Transmission or generation equipment. The studies shall cover both System Stability and Generating Unit Stability. The following requirements apply to both System Stability and Generating Unit Stability studies unless otherwise noted.~~ The wording of sub-requirements R5.6.1 and R5.6.2 was modified and relocated to become bullets under Requirement R2.5.2. The addition/deletion/change of individual generating unit capability of 20 MW or greater. An aggregated addition/deletion/change to a group of generating units directly connected through their step-up transformer(s) to the BES which total 20 MW or greater. The definitions of Generating Unit Stability Study and System Stability Study as well as the following sub-requirements were deleted: R2.5, R2.5.1, R2.5.2, and R5.5 Specifically, as to your question regarding "benchmarking," the revised requirements would not necessitate studies of each individual generating unit or generating plant.		
Florida Power and Light	No	This draft did not modify the existing NERC definition of Stability. Footnote 5 of the Tables describes the expected acceptable performance of a System that is stable, but the terms "System Stability" and "Generating Unit Stability" are not defined, except as studies. All stability studies must meet the Performance Requirements for Planning Events in Table 2 - Stability Performance. If there were different Performance Requirements then the distinction may be warranted. However system stability studies should be sufficient and not warrant additional work. R6 requires Transmission Planners to define proxies used to identify instability. Presumably the "proxies" would be used as a checklist for assessment of stability; however, not all stability limitations can be simplified as a proxy in the load flow. Proxies should only be used as indicative of a potential stability issue, not "to identify System instability", or replace stability studies, since a stability study to identify the issue was initially required to define the proxy. The requirement should be reworded to state "R6. If proxies are used in simulation studies to identify System instability for conditions such as cascading outages, voltage instability, or uncontrolled islanding, then each Transmission Planner and Planning Coordinator shall define the proxies used in the simulation studies."

Organization	Question 1:	Question 1 Comments:
Orlando Utilities Commission	No	I support the comments from Florida Power & Light regarding System Stability vs. Generating unit studies and proxies.

Response: The SDT agrees and has modified the definitions and Requirements accordingly. Furthermore, the SDT has also modified the wording of R6 to address your concern.

R2. Each Transmission Planner and Planning Coordinator shall ~~conduct and document the results of~~ prepare ~~its~~an annual Planning Assessment of its portion of the BES. This Planning Assessment shall use current or past studies, document assumptions, document results, and shall cover steady state analyses, short circuit analyses, and Stability analyses ~~including both System and Generating Unit Stability~~.

R2.6.1 (now R2.5.1) For steady state, short circuit, or ~~System~~ Stability analysis: the study shall be five calendar years old or less.

R2.6.2 (now R2.5.2) For steady state, short circuit, ~~Generating Plant Stability,~~ or ~~System~~ Stability analysis: the ~~study~~ present System model shall not include any material changes, such as, generation or Transmission additions/removals, or topology changes that have occurred in the intervening period and would impact the study area. Material generation changes could include:

R5. For the Stability portion of the Planning Assessment, as described in Requirement R2.4 ~~and Requirement R2.5~~, each Transmission Planner and Planning Coordinator shall perform the Contingency analyses listed in Table ~~2~~1 ~~– Stability Performance~~. The studies shall be based on computer simulations using models utilizing data provided in Requirement R1. ~~The studies shall be based on computer simulations using models utilizing data provided in Requirements R9 through R14, the MOD-010 and MOD-012 standards, and other data sources, to include known planned and long term outages of Transmission or generation equipment. The studies shall cover both System Stability and Generating Unit Stability. The following requirements apply to both System Stability and Generating Unit Stability studies unless otherwise noted.~~

The wording of sub-requirements R5.6.1 and R5.6.2 was modified and relocated to become bullets under Requirement R2.5.2.

The addition/deletion/change of individual generating unit capability of 20 MW or greater.

An aggregated addition/deletion/change to a group of generating units directly connected through their step-up transformer(s) to the BES which total 20 MW or greater.

The definitions of Generating Unit Stability Study and System Stability Study as well as the following sub-requirements were deleted: R2.5, R2.5.1, R2.5.2, and R5.5.

R6. Each Transmission Planner and Planning Coordinator shall define and document, within their Planning Assessment, ~~the~~any proxies used in ~~simulation studies~~ the analysis to identify System instability for conditions such as cascading outages, voltage instability, or uncontrolled islanding.

Exelon Transmission	Yes and No	The definitions of System Stability and Generating Unit Stability are clear. We agree that there is value in performing small signal analysis but we are concerned about the availability of software and expertise required to execute the

Organization	Question 1:	Question 1 Comments:
Planning		analysis.R5.3 is ambiguous, as it is not clear what the requirement to consider the voltage ride through capability of all generators entail. Ride through could involve the unit or station having the capability to ride through without tripping or the unit could trip but the system remain stable. General Observations R3.2.1 should be reworded so as not to be misinterpreted that GOs are prescribing their 'required' voltage levels. R2.6.2 should be Unit not Plant with regard to stability studies. R2.7.1 and elsewhere - The NERC Glossary specifies that SPSs are 'Special Protection Systems' (not 'schemes'). R5.2 Wording should be changed from '...disconnect for each contingency..' to '..isolate the disturbance... .' R5.5.1 There are too many studies required. The 20 MW threshold for unit studies may be too low. There should be a mechanism to provide a proxy for smaller units on 138 or possible 230 kV systems that can't affect system stability rather than to automatically require a study every 5 years. R2.1 and 2.2 should have the words 'at a minimum' removed with regards to describing which studies are required annually. The requirement to supply a 'project initiation date' for near-term Corrective Action Plans should be removed. If it remains, it should be clarified (Project identification date, construction start date, PUC certification date, executive approval date, etc?)

Response: The intent of Requirement R5.3 is to ensure that the generating unit models realistically replicate the behavior of the generator in response to a low voltage condition encountered during the simulation.

The requirement on voltage ride through has been changed to provide clarity (now R4.3.2).

R3.2.1 (now R3.3.2) For all generators, studies shall consider the minimum steady state voltage limitations ~~of all generators~~ and identify how the generators are ~~treated~~ analyzed in the steady state simulation.

The SDT has deleted the distinction between Unit/Plant and System Stability based on other comments.

The SDT agrees that SPS means “Special Protection Systems” and the third draft uses this terminology consistently.

The SDT disagrees with your suggested rewording of Requirement R5.2 because the concept that the requirement is addressing relates to the resultant topology of the system after the fault is cleared and not the removal of the disturbance.

In response to your comment on Requirement R5.5.1, the SDT believes that all of the studies needed to satisfy this requirement are essential to maintain reliability. The SDT has thoroughly debated the 20 MW generating unit threshold and continues to believe that this is the appropriate value.

In Requirements R2.1 and R2.2, the SDT has removed the words “at a minimum” as you have suggested.

Organization	Question 1:	Question 1 Comments:
R2.1 The Near-Term Transmission Planning Horizon portion of the steady state analysis shall be assessed annually and be supported ~~at a minimum~~ by the following annual current studies, supplemented with qualified past studies as indicated in Requirement R2.6: **R2.2** For the Long-Term Transmission Planning Horizon portion of the steady state analysis, ~~at a minimum,~~ a current System peak Load study is required annually for one of the years in the assessment period to support the annual Planning Assessment. In response to your comment on "project initiation date," the SDT considered your suggestion; however, the SDT believes that the current language is satisfactory, and few comments were received suggesting need for a modification.		
MidAmerican Energy Company	Yes and No	MidAmerican Energy Company (MEC) believes the definitions are improved. However, MEC suggests that the SDT clarify what stability analyses are required such as angular and voltage stability for which time frames such as the transient and steady state time frames and for what planning horizons such as the Near-Term and Long-Term planning horizons.
MRO NERC Standards Review Subcommittee	No	The MRO believes the definitions are improved. However, the MRO suggests that the SDT clarify what stability analysis are required such as angular and voltage stability for which time frames such as the transient and steady state time frames and for what planning horizons such as the Near-Term and Long-Term planning horizons. Generating Unit Stability Study definition - The MRO suggests deleting the text, "on the Transmission Facilities connected to that generating unit(s) point(s) of interconnection or one bus away from that point.", because certain Generation Facility contingencies should be considered and key Transmission Facility contingencies can be more than one bus away from the interconnection point. System Stability Study definition - The MRO suggests this alternate wording: "Study that focuses on portions of the System, which may include many generating units with various Contingencies. This study is concerned with loss of synchronism, lack of damping of inter-area power oscillations, and voltages during the dynamic simulation." We suggest this wording because the definition of a study should not give the criteria, but rather the general elements of the study.
Response: The SDT believes that your comments requesting clarifications have been addressed through the changes made as shown. **R2**. Each Transmission Planner and Planning Coordinator shall ~~conduct and document the results of~~ prepare ~~its~~an annual Planning Assessment of its portion of the BES. This Planning Assessment shall use current or past studies, document assumptions, document results, and shall cover steady state analyses, short circuit analyses, and Stability analyses ~~including both System and Generating Unit Stability~~. **R2.6.1** (now R2.5.1) For steady state, short circuit, or ~~System~~ Stability analysis: the study shall be five calendar years old or less. **R2.6.2** (now R2.5.2) For steady state, short circuit, ~~Generating Plant Stability,~~ or ~~System~~ Stability analysis: the ~~study~~ present System model shall not include any material changes, such as, generation or Transmission additions/removals, or topology changes that have occurred in the intervening period and would impact the study area. Material generation changes could include: **R5**. For the Stability portion of the Planning Assessment, as described in Requirement R2.4 ~~and Requirement R2.5~~, each Transmission Planner and Planning		

Organization	Question 1:	Question 1 Comments:
Coordinator shall perform the Contingency analyses listed in Table ~~2~~1 ~~– Stability Performance~~. The studies shall be based on computer simulations using models utilizing data provided in Requirement R1. ~~The studies shall be based on computer simulations using models utilizing data provided in Requirements R9 through R14, the MOD-010 and MOD-012 standards, and other data sources, to include known planned and long term outages of Transmission or generation equipment. The studies shall cover both System Stability and Generating Unit Stability. The following requirements apply to both System Stability and Generating Unit Stability studies unless otherwise noted.~~ The wording of sub-requirements R5.6.1 and R5.6.2 was modified and relocated to become bullets under Requirement R2.5.2. The addition/deletion/change of individual generating unit capability of 20 MW or greater. An aggregated addition/deletion/change to a group of generating units directly connected through their step-up transformer(s) to the BES which total 20 MW or greater. The definitions of Generating Unit Stability Study and System Stability Study as well as the following sub-requirements were deleted: R2.5, R2.5.1, R2.5.2, and R5.5		
Arkansas Electric Coop. Corp.	Yes and No	There are situations where one bus away may not be far enough. While one bus may cover most situations the standard shouldn't limit the study to just one bus away. Suggested language change: Transmission Facilities connected to that generating unit(s) point(s) of interconnection, one bus away from the electrically closely-coupled units.
Response: The definition for Generating Unit Stability Study has been deleted so the offending phrase is no longer in this standard.		
NERC and Regional Coordination (PJM)	No	In the definition of Consequential Load Loss - Revise Transmission Planning Entities to Transmission Planners; or otherwise clearly identifying the entities that are meant to be addressed by the term "Transmission Planning Entities. "Revise "which" to "that" as indicated by the text below that is in quotes and Upper Case: Load that is no longer served because it is directly connected to an element(s) that is removed from service due to fault clearing action or mis-operation connected to a source as a result of the event being studied or "THAT" is lost as a result of the load's response to the transient conditions of the event (other than through the action of UVLS or UFLS schemes). Although Load "THAT" is lost as a result of the Load's response to the transient conditions of the event is considered Consequential Load Loss and is permitted when Consequential Load Loss is allowed, [Transmission planning entities] TRANSMISSION PLANNERS are not allowed to rely upon the expectation of such Load loss to meet steady state performance requirements. Regarding the definition of Planning Event -The given words do not define the term. For example is an event meant to be an forced outage condition; or is meant to be any set of state conditions. If an event can be anything, then the term is not a definition. Planning Coordinator -Explicitly state that this definition will be deleted when the functional model definition for this entity is approved May consider deleting the term because it is not unique to this standard. The term is already defined in the Functional Model.R1.1 ? Data changes are routine in such studies and need to better quantify when technical justification is required.

Organization	Question 1:	Question 1 Comments:
Response: The definition of Consequential Load Loss has been changed in an attempt to clear up issues such as you addressed**.** **Consequential Load Loss:** ~~Load that is no longer connected to a source as a result of the event being studied or which is lost as a result of the load's response to the transient conditions of the event (other than through the action of UVLS or UFLS schemes). Although Load which is lost as a result of the Load's response to the transient conditions of the event is considered Consequential Load Loss and is permitted when Consequential Load Loss is allowed, Transmission planning entities are not allowed to rely upon the expectation of such Load loss to meet steady state performance requirements.~~ All Load that is no longer served by any Transmission Facilities as a result of the Facilities being removed from service by a planned Protection System operation to isolate fault conditions.		
IESO	No	(i) Generating Unit Stability Study: We do not agree with the phrase "…or one bus away from that point." This limits the scope of the testing to only the next bus. At times, contingencies that remove critical transmission facilities several buses away from a generating plant may affect generating unit stability performance. We suggest to reword this phrase to "..or in the nearby vicinity that can have an adverse reliability impact on the generating units' stability performance."(ii) Long-Term Transmission Planning Horizon: A nit-picking suggestion to change the first "longer" to "long".(iii) Planning Coordinator: We not see the need to repeat a definition that is already provided in the NERC Glossary of Terms and the Functional Model. There is a plan to implement a wholesale change from Planning Authority to Planning Coordinator. This is expected to occur in the first half of 2009.(iv) System Stability Study: Since voltage performance is included in this assessment, we suggest to add to the phrase "?which may include many generating units AND GROUPS OF TRANSMISSION FACILITIES..".(v) Year One: The second part of the definition is confusing. By "12-18 months from the completion of the previous annual Planning Assessment." does it mean 12-18 months from the "complete date" of the previous assessment, or from the "end of the previous assessment period"? For example, a previous assessment was completed on April 30, 2008 that covers a 12 month period from May 1, 2008 to April 30, 2009. Does year one for the subsequent assessment start from May 1, 2009 or May 1, 2010? In view of the confusion, having only the first sentence would suffice. In fact, there is only one reference made in the requirement (R2.1.1). Qualifying "year one" can easily be made in that requirement without having to have a defined term. Adding defined terms without a good cause adds to the maintenance task for the glossary of terms. Further, it begs the question on why "year two" and "year five" referenced in that same requirement are not defined.
Response: With regard to your comments (i) and (iv), **t**he SDT agrees and has modified the definitions and Requirements accordingly. **R2**. Each Transmission Planner and Planning Coordinator shall ~~conduct and document the results of~~ prepare ~~its~~an annual Planning Assessment of its portion of the BES. This Planning Assessment shall use current or past studies, document assumptions, document results, and shall cover steady state analyses, short circuit analyses, and Stability analyses ~~including both System and Generating Unit Stability~~. **R2.6.1** (now R2.5.1) For steady state, short circuit, or ~~System~~ Stability analysis: the study shall be five calendar years old or less.		

Organization	Question 1:	Question 1 Comments:
R2.6.2 (now R2.5.2) For steady state, short circuit, ~~Generating Plant Stability,~~ or ~~System~~ Stability analysis: the ~~study~~ present System model shall not include any material changes, such as, generation or Transmission additions/removals, or topology changes that have occurred in the intervening period and would impact the study area. Material generation changes could include: **R5**. For the Stability portion of the Planning Assessment, as described in Requirement R2.4 ~~and Requirement R2.5~~, each Transmission Planner and Planning Coordinator shall perform the Contingency analyses listed in Table ~~2~~1 ~~– Stability Performance~~. The studies shall be based on computer simulations using models utilizing data provided in Requirement R1. ~~The studies shall be based on computer simulations using models utilizing data provided in Requirements R9 through R14, the MOD-010 and MOD-012 standards, and other data sources, to include known planned and long term outages of Transmission or generation equipment. The studies shall cover both System Stability and Generating Unit Stability. The following requirements apply to both System Stability and Generating Unit Stability studies unless otherwise noted.~~ The wording of sub-requirements R5.6.1 and R5.6.2 was modified and relocated to become bullets under Requirement R2.5.2. The addition/deletion/change of individual generating unit capability of 20 MW or greater. An aggregated addition/deletion/change to a group of generating units directly connected through their step-up transformer(s) to the BES which total 20 MW or greater. The definitions of Generating Unit Stability Study and System Stability Study as well as the following sub-requirements were deleted: R2.5, R2.5.1, R2.5.2, and R5.5. (ii) Thank you for your suggestion. The SDT sees no material difference in the suggested change and has decided to leave the definition unchanged. (iii) As you note, NERC is transitioning from the use of the term Planning Authority to the term Planning Coordinator. Since the new terminology has not been officially adopted yet in the Functional Model, it must be defined in this standard revision. (v) The definition is intended to be flexible to accommodate different practices and schedules. The key points are: 1) an assessment must be done each year and completed any time during the year, 2) the first year of the assessment period should be beyond the period examined to address operational planning issues, and 3) the time to complete the assessment could vary and take up to 18 months. In your example, if you have chosen Year One to be May 1, 2008 to April 30, 2009, then Year One for the subsequent assessment would begin May 1, 2009.		
Dominion - Electric Transmission Planning	Yes	
TVA System Planning	Yes	
City Water, Light & Power -	Yes	

Organization	Question 1:	Question 1 Comments:
Springfield, Illinois		
Tenaska, Inc.	Yes	
US Army Corps of Engineers, Northwestern Division	Yes	
JEA	Yes	
Midwest ISO	Yes	
AEP	Yes	
Lakeland Electric	Yes	
LCRA TSC	Yes	
E.ON U.S. Transmission Planning	Yes	
Duke Energy	Yes	
Oncor Electric Delivery	Yes	NA
FirstEnergy Corp.	Yes	
Response: Thank you for your response.		

2. Do you concur with the modified Requirements R2.4, R2.5, R5.4, and R5.5? If not, please state why and/or suggest specific changes.

Summary Consideration:

In response to industry comments, the SDT decided that generating unit Stability and System Stability need not and should not be treated as distinct issues. The Stability related requirements have been modified to create a single generic set of requirements that no longer distinguishes between generating unit and System Stability. This should address any potential conflict between this standard and the FAC standards.

Requirement R2.4.1 has been modified to clarify that a detailed dynamic Load model is not required at each bus. An aggregate System Load model which represents the overall dynamic behavior of the Load is acceptable. Because of this clarification, the SDT believes that a 24 month implementation period for this requirement is sufficient.

Requirement R2.4.3 has been modified to remove the need for stating the technical rationale for why or why not a particular sensitivity was selected. Requirement R2.4.4 was deleted because it was essentially a voluntary requirement. The specific wording for each of the sensitivities to be considered has been changed and should be clearer as to what is needed. The TP is allowed to use its judgment as to how the variations of the sensitivity parameters should be made.

The requirement to include "known planned and long term outages of Transmission or generation equipment" has been removed from Requirement R5. This is covered in the revised Requirement R1.1.1.

Stability studies will continue to be required for smaller entities. Smaller entities have the option of not registering as a TP to avoid compliance concerns. Furthermore, it would be difficult to establish criteria for exempting “smaller entities.”

The definitions for Generating Unit Stability Study and System Stability Study have been deleted and the following requirements have been added or changed due to industry comments:

R1.1.1 Planned outages of generation and Transmission Facilities, if specifically known.

R2.1.3 For each of the studies described in Requirements R2.1.1 and ~~Requirement~~ R2.1.2, sensitivity case(s) that are intended to stress the System with ~~sensitivities~~ variations ~~that reflect~~ in one or more of the following conditions not already included in the studies shall be ~~run and documentation of the technical rationale for why each of the conditions was or was not selected shall be supplied~~ included in the Assessment:

R2.1.4 When an entity’s spare equipment strategy could result in the unavailability of major Transmission equipment that has a lead time of one year or more (such as a transformer), an analysis of the impact on System performance shall be assessed. The analysis shall reflect the Contingencies identified in Table 1 during the conditions that the System is expected to experience due to the unavailability of the long lead time equipment.

R2.4.1 System peak Load for one of the five years. For peak System Load levels, a Load model shall be used which appropriately represents the dynamic behavior of Loads, including consideration of the behavior of induction motor Loads. An aggregate system Load model which represents the overall dynamic behavior of the Load is acceptable.

R2.4.3 For each of the studies described in Requirements R2.4.1 and ~~Requirement~~ R2.4.2, ~~s~~ensitivity case(s) that are intended to stress the System with variations ~~to reflect~~ in one or more of the following conditions not already included in the studies shall be ~~run and documentation of the technical rationale for why each of the conditions was or was not selected shall be supplied~~ included in the Assessment:

- ~~Variations in~~ Load model assumptions
- ~~Modification of e~~Expected transfers
- ~~Unavailability of long lead time Facilities~~ Timing of the installation of new or modified Facilities.
- ~~Variability and outages of r~~Reactive resource~~s~~ capability.

R2.6.2 (now R2.5.2) For steady state, short circuit, ~~Generating Plant Stability,~~ or ~~System~~ Stability analysis: the ~~study~~ present System model shall not include any material changes, such as, generation or Transmission additions/removals, or topology changes that have occurred in the intervening period and would impact the study area. Material generation changes could include:

- The addition/deletion/change of individual generating unit capability of 20 MW or greater.
- An aggregated addition/deletion/change to a group of generating units directly connected through their step-up transformer(s) to the BES which total 20 MW or greater.

R3 For the steady state portion of the Planning Assessment, each Transmission Planner and Planning Coordinator shall perform analysis for the Near-Term and Long-Term Transmission Planning Horizon studies in Requirement R2.1 and Requirement R2.2. ~~The studies shall be based on computer power flow simulations that analyze BES normal performance (n-0) and System response to c~~Contingencies ~~in Table 1 – Steady State Performance.~~ The studies shall be based on computer simulations using models utilizing data provided in Requirement R1.

R3.4 (now R3.5) Those Extreme Events in Table 1 ~~– Steady State Performance~~ that are expected to produce more severe System impacts shall be identified~~,~~ and a list of those events to be evaluated for System performance in Requirement R3.2 created~~,~~. ~~and t~~The rationale for the Contingencies selected for evaluation shall be available as supporting information and shall ~~includ~~include~~e~~ an explanation of why the remaining Contingencies would produce less severe System results. If the ~~Extreme Events~~ analysis concludes there are cascading outages caused by the occurrence of Extreme Events, an evaluation of ~~implementing a change~~ possible actions designed to reduce ~~or mitigate~~ the likelihood or mitigate ~~of such~~the consequences and adverse impacts of the event(s) shall be conducted.

R5. For the Stability portion of the Planning Assessment, as described in Requirement R2.4 ~~and Requirement R2.5~~, each Transmission Planner and Planning Coordinator shall perform the Contingency analyses listed in Table ~~2~~1 ~~– Stability Performance~~. The studies shall be based on computer simulations using models utilizing data provided in Requirement R1. ~~The studies shall be based on computer simulations using models utilizing data provided in Requirements R9 through R14, the MOD-010 and MOD-012 standards, and other data sources, to include known planned and long term outages of Transmission or generation equipment. The studies shall cover both System Stability and Generating Unit Stability. The following requirements apply to both System Stability and Generating Unit Stability studies unless otherwise noted~~

R5.2 (now R4.3 and R4.3.1) Contingency analyses shall: ~~s~~Simulate the removal of all elements ~~including those~~ that the Protection System ~~protection~~ and other automatic controls are expected to disconnect for each Contingency without operator intervention.

R5.4.4 (now R4.5) ~~At a minimum, t~~Those Extreme Events in Table ~~2~~1 ~~– Stability Performance~~ that ~~would~~are expected to produce more severe System impacts shall be identified and a list of those events to be~~,~~ evaluated for System performance in Requirement R5.2 created~~,~~. ~~and t~~The rationale for the Contingencies selected for evaluation shall be available as supporting information and shall include~~e~~ an explanation of why the remaining Contingencies would produce less severe System results. If the ~~Extreme Events~~ analysis concludes there are cascading outages caused by the occurrence of Extreme Events, an evaluation of ~~implementing a change~~ possible actions designed to reduce ~~or mitigate~~ the likelihood or mitigate ~~of such~~the consequences of the event(s) shall be conducted.

The following requirements were deleted due to industry comment:

R2.4.4 ~~In addition to those sensitivities mentioned in Requirement R2.4.3, any other sensitivity, as deemed appropriate by the Transmission Planner or Planning Coordinator for their individual systems, shall be run and the Planning Assessment shall include documentation of the technical rationale for why each was selected shall be supplied.~~

R2.5 ~~The Generating Unit Stability analysis portion of the Planning Assessment shall be analyzed consistent with Requirement R5.5 with studies for the year when the following changes that could affect stability margins occur:~~

R2.5.1 ~~New generator(s) are added or generation modifications are made such as changes in generation capability or replacing the exciter.~~

R2.5.2 ~~Material Transmission System changes are made at or near the point of Interconnection of existing Generation such as the removal of a Transmission Line or the addition of a new substation in one of the Transmission Lines connected to the plant.~~

R5.4.3 ~~Automatic generation tripping is allowed to mitigate Stability violations if the following conditions are met:~~

R5.4.3.1 ~~All Facilities shall be operating within their Facility Ratings~~

R5.4.3.2 ~~Such action would not violate safety, equipment, regulatory or statutory requirements~~

R5.4.3.3 ~~A sustainable, stable, operating condition is maintained~~

R5.5 ~~For the Generating Unit Stability studies:~~

R5.5.1 ~~Shall be performed for individual generating units 20 MW or greater directly connected through a step-up transformer to the BES and for generating units at the same location which total 75 MW or greater, directly connected through their step-up transformer(s) to the BES.~~

R5.5.2 ~~Shall be performed for changes in the real power output of a generating unit by more than 10% of the existing capability or more than 20 MW whichever is greater.~~

R5.5.3 ~~Shall be performed and evaluated for those Planning Events that would produce more severe System impacts and the rationale for the Contingencies selected for evaluation shall be available as supporting information and shall include an explanation of why the remaining Contingencies would produce less severe System results.~~

R5.5.4 ~~Shall meet Performance requirements for Planning Events in Table 2 – Stability Performance~~

Organization	Question 2:	Question 2 Comments:
Dominion - Electric Transmission Planning	No	Comments are subdivided according to different sections as listed below: R2.4.1: In principal, we agree that the dynamic behavior of loads, including consideration of the behavior of induction motor loads, should be represented. However, it is not easy to get the data on such loads. Most customers, including industrial ones, have no information/knowledge regarding their load characteristics. Also, the software tools currently in use do not accommodate the modeling of certain material effects (for example the load reduction due to thermal trips on large HVAC compressor motors). Additionally, if the entire case is populated with such detail dynamic load data, the case could not be solved. A lot of research would be required. A phase-in period of several years should be considered in order to accomplish the fundamental objective of dynamic load modeling. Please refer to Item 4 of Question 15 for further thoughts on modeling requirements. R2.4.3: It is acceptable to perform studies that include various sensitivity factors, but to document all rationales why they were chosen or not chosen for each study performed is burdensome. R2.5.1: Reduction in generation does not decrease stability margins. Therefore, the previous version's "increasing in generation" should be kept instead of changing it to "changes in generation." R5.4.3: This requirement allows automatic generation tripping to mitigate Stability violations (subject to meeting three listed conditions there in). Automatic generator trips should not be allowed for N-1 contingency studies (beginning with system normal and evaluating for the very first contingency) should the full output of the generating unit be classified as a capacity resource. Allowing a capacity resource generator to trip for N-1 contingency could result in reduced system reliability.

Response: Requirement R2.4.1 has been modified to clarify that a detailed dynamic Load model is not required at each bus. An aggregate System Load model which represents the overall dynamic behavior of the Load is acceptable. Because of this clarification, the SDT believes that a 24 month implementation period for this requirement is sufficient. This will be covered in the Implementation Plan which will be posted along with the third draft of the standard.

R2.4.1 System peak Load for one of the five years. For peak System Load levels, a Load model shall be used which appropriately represents the dynamic behavior of Loads, including consideration of the behavior of induction motor Loads. An aggregate system Load model which represents the overall dynamic behavior of the Load is acceptable.

R2.4.3: The SDT agrees and has modified the language of Requirement R2.4.3 to not require the rationale for why a sensitivity was chosen or not.

R2.4.3 For each of the studies described in Requirements R2.4.1 and ~~Requirement~~ R2.4.2, ~~s~~ensitivity case(s) that are intended to stress the System with variations ~~to reflect~~ in one or more of the following conditions not already included in the studies shall be ~~run and documentation of the technical rationale for why each of the conditions was or was not selected shall be supplied~~ included in the Assessment:

Organization	Question 2:	Question 2 Comments:
R2.5.1: The SDT has removed the distinction between System Stability and generating unit Stability. Requirement R2.5.1 has been deleted. R5.4.3: This requirement has been deleted.		
NPCC	No	a. A MOD standard should be developed to address the assembly of dynamic load models, rather than specifying modeling in paragraph 2.4.1 (dynamic behavior of loads). Paragraph 2.4.1 should instead read, "System Peak Load for one of the five years." b. In paragraph R.2.4.3.4, what does "variability" mean? c. Add a new requirement "R5.4.3.4 Automatic generator tripping shall not have an Adverse Reliability Impact on overall system reliability." d. Remove Heading R5.5 and make generator unit stability a section of overall stability requirements. e. Modify R5.5.1 to become R5.4.5, with the following, "Shall be performed for the addition of an individual generating unit or generating units at the same interconnection point of 20 MW or greater that are directly connected to the BES." There may be little difference between the stability performance of a single 20 MW unit and an aggregation of units totaling 20 MW at the same BES interconnection point f. Strike R5.5.3 and R5.5.4, as they become redundant to R5.4.1
Hydro-Québec TransEnergie (HQT)	No	a. A MOD standard should be developed to address the assembly of dynamic load models, rather than specifying modeling in paragraph 2.4.1 (dynamic behavior of loads). Paragraph 2.4.1 should instead read, "System Peak Load for one of the five years." b. In paragraph R.2.4.3.4, what does "variability" mean? c. Add a new requirement, "R5.4.3.4 Automatic generator tripping shall not have an significant adverse impact on overall system reliability." d. Remove Heading R5.5 and make generator unit stability a section of overall stability requirements. e. Modify R5.5.1 to become R5.4.5, with the following, "Shall be performed for the addition of an individual generating unit or generating units at the same interconnection point 20 MW or greater that are directly connected to the BES." There may be little difference between the stability performance of a single 20 MW unit and an aggregation of units totaling 20 MW at the same BES interconnection point f. Strike R5.5.3 and R5.5.4, as they become redundant to R5.4.1
New York	No	a. A MOD standard should be developed to address the assembly of dynamic load models, rather than specifying

Organization	Question 2:	Question 2 Comments:
Independent System Operator		modeling in paragraph 2.4.1 (dynamic behavior of loads). Paragraph 2.4.1 should instead read, "System Peak Load for one of the five years." b. In paragraph R.2.4.3.4, what does "variability" mean? c. Add a new requirement, "R5.4.3.4 Automatic generator tripping shall not have an significant adverse impact on overall system reliability." d. Remove Heading R5.5 and make generator unit stability a section of overall stability requirements. e. Modify R5.5.1 to become R5.4.5, with the following, "Shall be performed for the addition of an individual generating unit or generating units at the same interconnection point 20 MW or greater that are directly connected to the BES." There may be little difference between the stability performance of a single 20 MW unit and an aggregation of units totaling 20 MW at the same BES interconnection point. f. ---- g. Strike R5.5.3 and R5.5.4, as they become redundant to R5.4.1

Response: a: The SDT disagrees and believes it is appropriate to require this in the TPL standard. Requirement R2.4.1 has been modified to clarify that an aggregate system Load model which represents the overall dynamic behavior of the Load is acceptable. It is not necessary to have a dynamic Load model which is specific to each bus.

R2.4.1 System peak Load for one of the five years. For peak System Load levels, a Load model shall be used which appropriately represents the dynamic behavior of Loads, including consideration of the behavior of induction motor Loads. An aggregate system Load model which represents the overall dynamic behavior of the Load is acceptable.

b: The specific wording for Requirement R2.4.3.4 has been changed to variations in "reactive resource capability". The sub-requirement is now also part of a bulleted list. This could mean a degradation of the capability of a reactive resource. The TP is allowed to use its judgment as to how the variations of the sensitivity parameters should be made.

~~Variability and outages of r~~Reactive resource~~s~~ capability.

c: The SDT has decided to remove Requirement R5.4.3 because the sub-requirements are already implicitly covered by the standard. Your suggested sub-requirement is also already implicitly covered by the standard.

d: In response to industry comments, the SDT has removed the distinction in the standard between System Stability and generating unit Stability.

e: The SDT agrees that there is little distinction between a single unit of a specific MW and an aggregation of the same number of MW. The requirement for study has been changed to 20 MW for a single generator or for an aggregate of generators. This requirement is now located at Requirement R2.5.2.

Organization	Question 2:	Question 2 Comments:
R2.5.2 For steady state, short circuit, ~~Generating Plant Stability,~~ or ~~System~~ Stability analysis: the ~~study~~ present System model shall not include any material changes, such as, generation or Transmission additions/removals, or topology changes that have occurred in the intervening period and would impact the study area. Material generation changes could include: The addition/deletion/change of individual generating unit capability of 20 MW or greater. An aggregated addition/deletion/change to a group of generating units directly connected through their step-up transformer(s) to the BES which total 20 MW or greater. **f**: Generating unit Stability and System Stability have been combined.		
Northeast Utilities	No	Northeast Utilities has participated with ISO-NE and NPCC and supports the comments filed by those organizations.
ISO New England Inc.	No	a. A MOD standard should be developed to address the assembly of dynamic load models, rather than specifying modeling in paragraph 2.4.1 (dynamic behavior of loads, including consideration of the behavior of induction motor Loads). Paragraph 2.4.1 should instead read, "System Peak Load for one of the five years." The remainder of the paragraph should be deleted. b. In paragraph R.2.4.3.4, what does "variability" mean? Is variability more of a concern than an outage? Suggest changing paragraph R.2.4.3.4 to simple say "Outages of Reactive Resources" c. Add a new requirement, "R5.4.3.4 Automatic generator tripping shall not have an significant adverse impact on overall system reliability." d. Remove Heading R5.5 and make generator unit stability for a new facility a section of overall stability requirements. e. Modify R5.5.1 to become R5.4.5, with the following, "Shall be performed for the addition of an individual generating unit or generating units at the same interconnection point 20 MW or greater that are directly connected to the BES." There may be little difference between the stability performance of a single 20 MW unit and an aggregation of units totaling 20 MW at the same BES interconnection point. f. If planning assessment studies all generators or stations above 20 MW, as suggested by R5.5.1, then this provision is unnecessary and R5.5.2 should be deleted. g. If the output of a generating station does not change by more than 20MW, then no new study is required and, it should be acceptable to rely on past stability assessments. This is not clear in R5.5.1. h. With respect to section R5 - The concept of planned and long-term outages should be addressed uniformly for the general Planning Assessment. It should not be specific to the Stability Assessment. i. Planned and long-term outages are two fundamentally different concepts and should be treated separately.

Organization	Question 2:	Question 2 Comments:
		Planned and Long-Term outages should be defined. Define how planning events in Tables 1 and 2 are associated with each type of outage. Define length of a "Long Term" outage. Planned outages should be addressed in the operating horizon unless otherwise defined in the planning horizon. j. The provisions of Section R.5.3 should be included in a MOD standard and applied to a requirement to provide information regarding all direct and indirect protective and control actions that could result in the inadvertent trip of the generator. Such a provision should include " other equipment (e.g. HVDC, SVC's, Statcoms)", and identify how these devices are treated in the simulation. k. Strike R5.5.3 and R5.5.4, as they become redundant to R5.4.1
National Grid	No	a. A MOD standard should be developed to address the assembly of dynamic load models, rather than specifying modeling in paragraph 2.4.1 (dynamic behavior of loads, including consideration of the behavior of induction motor Loads). Paragraph 2.4.1 should instead read, "System Peak Load for one of the five years." The remainder of the paragraph should be deleted. b. In paragraph R.2.4.3.4, what does "variability" mean? Is variability more of a concern than an outage? Suggest changing paragraph R.2.4.3.4 to simple say "Outages of Reactive Resources" c. Add a new requirement, "R5.4.3.4 Automatic generator tripping shall not have an significant adverse impact on overall system reliability." d. Remove Heading R5.5 and make generator unit stability for a new facility a section of overall stability requirements. e. Modify R5.5.1 to become R5.4.5, with the following, "Shall be performed for the addition of an individual generating unit or generating units at the same interconnection point 20 MW or greater that are directly connected to the BES." There may be little difference between the stability performance of a single 20 MW unit and an aggregation of units totaling 20 MW at the same BES interconnection point. f. If planning assessment studies all generators or stations above 20 MW, as suggested by R5.5.1, then this provision is unnecessary and R5.5.2 should be deleted. g. If the output of a generating station does not change by more than 20MW, then no new study is required and, it should be acceptable to rely on past stability assessments. This is not clear in R5.5.1. h. With respect to section R5 - The concept of planned and long-term outages should be addressed uniformly for the general Planning Assessment. It should not be specific to the Stability Assessment. i. Planned and long-term outages are two fundamentally different concepts and should be treated separately. Planned and Long-Term outages should be defined. Define how planning events in Tables 1 and 2 are associated with each type of outage. Define length of a "Long Term" outage. Planned outages should be addressed in the

Organization	Question 2:	Question 2 Comments:
		operating horizon unless otherwise defined in the planning horizon. j. The provisions of Section R.5.3 should be included in a MOD standard and applied to a requirement to provide information regarding all direct and indirect protective and control actions that could result in the inadvertent trip of the generator. Such a provision should include " other equipment (e.g. HVDC, SVC's, Statcoms)", and identify how these devices are treated in the simulation. k. Strike R5.5.3 and R5.5.4, as they become redundant to R5.4.1
Central Maine Power Company	No	a. A MOD standard should be developed to address the assembly of dynamic load models, rather than specifying modeling in paragraph 2.4.1 (dynamic behavior of loads, including consideration of the behavior of induction motor Loads). Paragraph 2.4.1 should instead read, "System Peak Load for one of the five years." The remainder of the paragraph should be deleted. b. In paragraph R.2.4.3.4, what does "variability" mean? Is variability more of a concern than an outage? Suggest changing paragraph R.2.4.3.4 to simple say "Outages of Reactive Resources" c. Add a new requirement, "R5.4.3.4 Automatic generator tripping shall not have an significant adverse impact on overall system reliability." d. Remove Heading R5.5 and make generator unit stability for a new facility a section of overall stability requirements. e. Modify R5.5.1 to become R5.4.5, with the following, "Shall be performed for the addition of an individual generating unit or generating units at the same interconnection point 20 MW or greater that are directly connected to the BES." There may be little difference between the stability performance of a single 20 MW unit and an aggregation of units totaling 20 MW at the same BES interconnection point. f. If planning assessment studies all generators or stations above 20 MW, as suggested by R5.5.1, then this provision is unnecessary and R5.5.2 should be deleted. g. If the output of a generating station does not change by more than 20MW, then no new study is required and, it should be acceptable to rely on past stability assessments. This is not clear in R5.5.1. h. With respect to section R5, the concept of planned and long-term outages should be addressed uniformly for the general Planning Assessment. It should not be specific to the Stability Assessment. i. Planned and long-term outages are two fundamentally different concepts and should be treated separately. Planned and Long-Term outages should be defined. Define how planning events in Tables 1 and 2 are associated with each type of outage. Define length of a "Long Term" outage. Planned outages should be addressed in the operating horizon unless otherwise defined in the planning horizon.

Organization	Question 2:	Question 2 Comments:
		j. The provisions of Section R.5.3 should be included in a MOD standard and applied to a requirement to provide information regarding all direct and indirect protective and control actions that could result in the inadvertent trip of the generator. Such a provision should include "other equipment (e.g. HVDC, SVC's, Statcoms)", and identify how these devices are treated in the simulation. k. Strike R5.5.3 and R5.5.4, as they become redundant to R5.4.1

Response: a: The SDT disagrees and believes it is appropriate to require this in the TPL standard. Requirement R2.4.1 has been modified to clarify that an aggregate system Load model which represents the overall dynamic behavior of the Load is acceptable. It is not necessary to have a dynamic Load model which is specific to each bus.

R2.4.1 System peak Load for one of the five years. For peak System Load levels, a Load model shall be used which appropriately represents the dynamic behavior of Loads, including consideration of the behavior of induction motor Loads. An aggregate system Load model which represents the overall dynamic behavior of the Load is acceptable.

b: The specific wording for Requirement R2.4.3.4 has been changed to variations in "reactive resource capability". The sub-requirement has also been changed to become a part of a bulleted list. This could mean a degradation of the capability of a reactive resource. The TP is allowed to use its judgment as to how the variations of the sensitivity parameters should be made.

~~Variability and outages of r~~Reactive resource~~s~~ capability.

c: The SDT has decided to remove Requirement R5.4.3 because the sub-requirements are already implicitly covered by the standard. Your suggested sub-requirement is also already implicitly covered by the standard.

d: In response to industry comments, the SDT has removed the distinction in the standard between System Stability and generating unit Stability.

e: The SDT agrees that there is little distinction between a single unit of a specific MW and an aggregation of the same number of MW. The requirement for study has been changed to 20 MW for a single generator or for an aggregate of generators. This requirement is now located at Requirement R2.5.2.

R2.5.2 For steady state, short circuit, ~~Generating Plant Stability,~~ or ~~System~~ Stability analysis: the ~~study~~ present System model shall not include any material changes, such as, generation or Transmission additions/removals, or topology changes that have occurred in the intervening period and would impact the study area. Material generation changes could include:

The addition/deletion/change of individual generating unit capability of 20 MW or greater.

An aggregated addition/deletion/change to a group of generating units directly connected through their step-up transformer(s) to the BES which total 20 MW or greater.

f: There are no longer two requirements covering this. The new generator size which requires a study and the change of generator size which requires a study have been combined into Requirement R2.6.2.

Organization	Question 2:	Question 2 Comments:
g: Requirement R5.5.1 has been deleted. h and i: The requirement to include "known planned and long term outages of Transmission or generation equipment" has been removed from Requirement R5. Planned outages are covered in Requirement R1.1.1 for both Stability and Steady State. Long term outages are covered in new Requirement R2.1.4. **R1.1.1** Planned outages of generation and Transmission Facilities, if specifically known. **R2.1.4** When an entity's spare equipment strategy could result in the unavailability of major Transmission equipment that has a lead time of one year or more (such as a transformer), an analysis of the impact on System performance shall be assessed. The analysis shall reflect the Contingencies identified in Table 1 during the conditions that the System is expected to experience due to the unavailability of the long lead time equipment. j: This is the subject of PRC-024 currently under development. But the question of how you treated this in your planning studies belongs in TPL. **k**: Generating unit Stability and System Stability have been combined.		
NSTAR Electric	No	1. A MOD standard should be developed to address the assembly of dynamic load models, rather than specifying modeling in paragraph 2.4.1 (dynamic behavior of loads, including consideration of the behavior of induction motor Loads). Paragraph 2.4.1 should instead read, "System Peak Load for one of the five years." The remainder of the paragraph should be deleted. 2. Change paragraph R.2.4.3.4 to "Outages of Reactive Resources". It is not clear what "variability" means and why it would be more severe than outages. 3. Add a new requirement, "R5.4.3.4 Automatic generator tripping schemes shall not be overly complex or have an significant adverse impact on overall system reliability." 4. Requirements of R5.5 should be rolled into R5.4 and made applicable to all stability studies. 5. Modify R5.5.1 to the following "Shall be performed for an individual generating unit or generating units at the same interconnection point 20 MW or greater that are directly connected to the BES." There may be little difference between the stability performance of a single 20 MW unit and an aggregation of units totaling 20 MW at the same BES interconnection point. 6. Delete R5.5.2. If planning assessment studies all generators or stations above 20 MW, as suggested by R5.5.1, then this provision is unnecessary. If the system has not changed, it should be acceptable to rely on past stability assessments. 7. With respect to section R5, the concept of planned and long-term outages should be addressed uniformly for the general Planning Assessment. It should not be specific to the Stability Assessment.

Organization	Question 2:	Question 2 Comments:
		8. Planned and long-term outages are two fundamentally different concepts and should be treated separately. Planned and Long-Term outages should be defined. Define how planning events in Tables 1 and 2 are associated with each type of outage. Define length of a "Long Term" outage. Planned outages should be addressed in the operating horizon unless otherwise defined in the planning horizion. 9. The provisions of Section R.5.3 should be included in an MOD standard and applied to a requirement to provide information regarding all direct and indirect protective and control actions that could result in the inadvertent trip of the generator. Such a provision should include "…other equipment (e.g. HVDC, SVC's, Statcoms)", and identify how these devices are treated in the simulation.

Response: 1: The SDT disagrees and believes it is appropriate to require this in the TPL standard. Requirement R2.4.1 has been modified to clarify that an aggregate system Load model which represents the overall dynamic behavior of the Load is acceptable. It is not necessary to have a dynamic Load model which is specific to each bus.

R2.4.1 System peak Load for one of the five years. For peak System Load levels, a Load model shall be used which appropriately represents the dynamic behavior of Loads, including consideration of the behavior of induction motor Loads. An aggregate system Load model which represents the overall dynamic behavior of the Load is acceptable.

2: The specific wording for old Requirement R2.4.3.4 has been changed to "reactive resource capability". This could mean a degradation of the capability of a reactive resource. The TP is allowed to use its judgment as to how the variations of the sensitivity parameters should be made.

~~Variability and outages of r~~Reactive resource~~s~~ capability.

3: The SDT has decided to remove Requirement R5.4.3 because the sub-requirements are already implicitly covered by the standard. Your suggested sub-requirement is also already implicitly covered by the standard.

4: In response to industry comments, the SDT has removed the distinction in the standard between System Stability and generating unit Stability.

5: The SDT agrees that there is little distinction between a single unit of a specific MW and an aggregation of the same number of MW. The requirement for study has been changed to 20 MW for a single generator or for an aggregate of generators. This requirement is now located at Requirement R2.5.2.

R2.5.2 For steady state, short circuit, ~~Generating Plant Stability,~~ or ~~System~~ Stability analysis: the ~~study~~ present System model shall not include any material changes, such as, generation or Transmission additions/removals, or topology changes that have occurred in the intervening period and would impact the study area. Material generation changes could include:

The addition/deletion/change of individual generating unit capability of 20 MW or greater.

An aggregated addition/deletion/change to a group of generating units directly connected through their step-up transformer(s) to the BES which total 20 MW or greater.

Organization	Question 2:	Question 2 Comments:
6: There are no longer two requirements covering this. The new generator size which requires a study and the change of generator size which requires a study have been combined into Requirement R2.5.2. 7 and 8: The requirement to include "known planned and long term outages of Transmission or generation equipment" has been removed from R5. Planned outages are covered in Requirement R1.1.1 for both Stability and Steady State. Long term outages are covered in new Requirement R2.1.4. **R1.1.1** Planned outages of generation and Transmission Facilities, if specifically known. **R2.1.4** When an entity's spare equipment strategy could result in the unavailability of major Transmission equipment that has a lead time of one year or more (such as a transformer), an analysis of the impact on System performance shall be assessed. The analysis shall reflect the Contingencies identified in Table 1 during the conditions that the System is expected to experience due to the unavailability of the long lead time equipment. 9: This is the subject of PRC-024 currently under development. But the question of how you treated this in your planning studies belongs in TPL.		
City Water, Light & Power - Springfield, Illinois	No	Near term stability analysis should not need to be performed each year unless there is a significant change to the system or the previous study(ies) showed marginal performance.
Response: The near term Stability analysis does NOT have to be performed every year as long as you have a qualified past study which covers it.		
Progress Energy Carolinas	No	R 2.4.1 Load models that appropriately represent the dynamic behavior of induction motors are currently under development and may not be available for sometime. We believe that modeling the dynamic effects of loads is becoming increasingly necessary to obtain meaningful results. Therefore, it is appropriate that the revised standards address this. However, the present state of the industry is such that effective implementation of this requirement, as currently written, cannot be realistically achieved in the near term. The software tools currently in use do not accommodate the modeling of certain material effects (for example the load reduction due to thermal trips on HVAC compressor motors). Additionally, detailed load information necessary to allow the models which are available to be populated with meaningful data is not typically available or readily obtainable. Without resolving these issues, load model data submitted via the MMWG process will not improve simulation accuracy and could actually reduce the accuracy of results. Therefore, we would recommend R 2.4.1 rewritten to either a) allow a multi-year, phased approach to incorporating dynamic load modeling in simulation dynamic databases or b) provide an effective date for this particular requirement well into the future. This will accomplish the fundamental objective in a more accurate and meaningful manner. At least 48 months should be allowed before this requirement becomes effective. R 2.4.3 The proposed sensitivities create significant amount of additional work for the sole purpose of demonstrating compliance to this standard without any demonstratable benefit towards improving system reliability. While sensitivities should be appropriately considered in studies, this standard should not be overly prescriptive with respect to specific sensitivities or study methodologies. We propose removing the enumerated list of sensitivities starting with

Organization	Question 2:	Question 2 Comments:
		R2.4.3.1 and rewording R2.4.3 as follows: R2.4.3 For each of the studies described in Requirement R2.4.1 and Requirement R2.4.2, sensitivity case(s) that stress the System to reflect one or more conditions such as variations in dynamic Load model assumptions, modification of expected transfers, unavailability of long lead time Facilities, variability and outages of reactive resources, generation additions, retirements, or other dispatch scenarios shall be performed. The rationale for the sensitivity(ies) selected shall be documented. R 2.4.3.1 As stated above, this sub-requirement should be removed. However, if it is to remain, it should be clearly stated whether the Load model refers to system load or the dynamic load model at individual busses.
Response: Requirement R2.4.1 has been modified to clarify that an aggregate System Load model which represents the overall dynamic behavior of the Load is acceptable. It is not necessary to have a dynamic Load model which is specific to each bus. Because of this clarification, the SDT believes that a 24 month implementation period for this requirement is sufficient. This will be covered in the Implementation Plan which will be posted along with the third draft of the standard. Requirement R2.4.3: The SDT believes that running sensitivity cases will give the TP a better understanding of its System and better understanding yields a more reliable System. The SDT believes an enumerated list is more appropriate than the list that you suggest and an enumerated list must have a sub-requirement format. The requirement for sensitivity studies is not overly prescriptive. There is much room for the engineering judgment of the TP. **R2.4.1** System peak Load for one of the five years. For peak System Load levels, a Load model shall be used which appropriately represents the dynamic behavior of Loads, including consideration of the behavior of induction motor Loads. An aggregate system Load model which represents the overall dynamic behavior of the Load is acceptable. **R2.4.3** For each of the studies described in Requirements R2.4.1 and ~~Requirement~~ R2.4.2, sensitivity case(s) that are intended to stress the System with variations ~~to reflect~~ in one or more of the following conditions not already included in the studies shall be ~~run and documentation of the technical rationale for why each of the conditions was or was not selected shall be supplied~~ included in the Assessment: R2.4.3.1: The variations in Load model assumptions are to be applied to the aggregate System Load model which represents the overall dynamic behavior of the Load		
BCTC	No	BCTC's open access tariff requires generator owners to apply for interconnection studies and facility studies to interconnect to our system or to make modifications to their generators as described in R2.5.1, R5.5.1, and R5.5.2. In fact, we may only be aware of the changes indentified in these requirements when generator owners make these applications. The generator owners are required to pay for these studies. Study requirements for generator interconnections are further defined by NERC Standards FAC-001 and FAC-002 (Coordination of Plans for New Facilities). By including these requirements in TPL, BCTC is concerned that generator owners may think that they are no longer required to pay for the studies. Furthermore, the NERC standards would have redundant requirements. If SDT believes that FAC-001 is deficient, it should propose revisions to this standard, not simply add to TPL. Any

Organization	Question 2:	Question 2 Comments:
		studies resulting from new generators or increases in existing generator output should be charged to the owner.
Response: The SDT agrees with the Industry's majority view that generating unit Stability and System Stability need not and should not be treated as distinct issues. The Stability related requirements have been modified to create a single generic set of requirements that no longer distinguishes between generating unit and System Stability. This should address your concern with potential conflicts with the FAC standards.		
Manitoba Hydro	Yes and No	R2.4: Agree with change except:R2.4.1.1: Needs to provide more detail on what is required to be compliant with respect to what is required to "appropriately represent the dynamic behavior of Loads including consideration of the behavior of induction motor Loads". Is the appropriate modeling left to the judgment of the TP/PC, supported by peer review by adjacent planners? Should the TP be required to document why the dynamic modeling is appropriate. The requirement implies a requirement to consider detailed dynamic load modeling at every bus in the model as opposed in areas of high concentration of such load. - needs clarification. R2.4.3: Generally agree, except:R2.4.3.1:Can the SDT clarify if the Variations in load model refer to variations in dynamic load modeling" R2.4.3.4, what is meant by variability of reactive resources? R2.4.4: The use of the words "shall be run" implies that additional scenario(s) are mandatory. Was this the intent of the SDT? R2.5: As stated in Q1 above, Manitoba Hydro continues to believe the Generating Unit Stability Analysis duplicates the FAC-002-0 requirements, creating potential for contradiction/non-compliance of both standards. The SDT should ensure there is no duplication of requirements of the FAC-002-0 standard. R2.5 should allow use of current or qualifying past studies. R2.5.1: Is it the SDTs intent that the TP could rely on the Planning Assessment R2.5 and/or R5.6 to assess the impact of a generator addition or modification. This function should be the subject of an interconnection study conducted in accordance with the FERC tariff (LGIP) or other similar TP interconnection process. R2.5.2: The TP planning process for addition of facilities should be used to verify the impact of changes to the network, including changes near existing generators . A planning assessment is not the appropriate process. Other Comments related to R2:R2: There appears to be no requirement for an assessment of system stability in the long-term planning horizon. Was this the intent of the SDT? R2.1: States the "steady state analysis shall be assessed annually and be supported at a minimum by the following annual current studies: Does the term ?annual current studies? preclude doing an assessment by using only qualified past studies? Please clarify!

Organization	Question 2:	Question 2 Comments:
		R2.1.1 & R2.1.2: NERC/ERAG will likely have to the models developed annually to ensure appropriate models are available. For example, in any given model series produced in past, there may not be a year five. Also, does System off-peak load refer to summer off peak? R2.1.3: While Manitoba Hydro supports the need for scenario assessments, this significantly increase the workload for studies and documentation. The requirement to document why a scenario was not selected will present a problem, since without doing the study, the planner may not have a good justification. The long term objective to improve reliability could be met by requesting only different sensitivity per year, and dropping the need to justify why others were not done. R2.6: Manitoba Hydro suggests that this requirement be converted to a definition of Past Studies. The definition should state that both R2.6.1 and 2.6.2 are necessary to qualify as a past study? R2.7:In the case were a CAP is required to meet the system performance requirements, will the assessment be deemed to be compliant on the assumption that the CAP will be put in place in a timely manner? R2.7.1.1: Can the SDT please clarify project initiation date? What is it? date permitting starts? Date construction starts? Etc R5.4: System Stability. The SDT should clarify if contingencies are to be applied to all elements in the case, or is it left to the judgment of the planner. Since there are numerous combinations of multiple contingencies, it is an impossible task to explain why the ?remaining Contingencies" were not selected. If this is not the intent, can the SDT explain what is required? The requirement should simply allow the planner the discretion to use judgment to select these more severe Contingencies, and the elements they are applied to, with explanation as to why they are expected to be more severe. R5.4.1: Manitoba Hydro agrees that the rationale for Contingencies selected should be provided. However, it is an onerous task, and of little value to provide rationale for the contingencies not selected. R5.4.2: Manitoba Hydro's preference is that the performance requirements should be in the standard body. The approach in Table 2 is inconsistent. R5.4.2 refers to Table 2 for Planning Event performance requirements, however, for the Extreme Events, the Table 2 refers back to R5.4.4. R5.4.3: Manitoba Hydro agrees and commends the SDT for recognizing generator tripping as a viable option for meeting the performance requirements in certain systems. R5.4.3.2: Agree that regulatory and statutory requirements must be met; however, the references to safety violations and equipment requirements are very generic. It is difficult to imagine what type of safety violation may be caused by

Organization	Question 2:	Question 2 Comments:
		a generator trip considering this is a widely used practice in many regions. The SDT should also be more specific as to what is meant by "equipment requirements". The requirement to be within Facility (equipment) Ratings is already covered in R3.5.1. Manitoba Hydro recommends the reference to safety and equipment be removed. R5.4.3.3: can the SDT clarify how they want the planner to determine that "a sustainable operating condition is maintained". Demonstrating stability over a 20 second stability run may be sufficient, or is the SDT looking for longer time frame stability modeling. R5.4.4 The requirement to explain why extreme events were not chosen add extra documentation. The TP has to explain why certain events were chosen, consequently, events not chosen are judged to have less impact. What would the SDT deem an adequate explanation? R5.5: Generating Unit Stability - As stated above, Manitoba Hydro does not agree that assessment of Generating Unit Stability is necessary as it is covered by FAC-002-0. R5.5.1: This requirement implies the Generating Unit Study should consider every unit exceeding 20 MW. Consistent with R2.5, the SDT should clarify that only new generators need be studied. R5.5.3: Given the numerous possible contingencies that could be run if multiple contingencies are considered, it is impossible to explain why the remaining contingencies were not selected. Other Comments related to Requirement R5:R5: The sentence ?The studies shall be based on computer simulations using models using data provided in Requirements R9 to R14 ?..? should apply to both steady state (R3) and stability portions, yet it is only included in R5. R5.1: Essentially repeats the requirement in the first sentence of R5 - suggest deleting. R5.2: Suggest deleting the words ?including those? R5.3: Manitoba Hydro suggests that frequency ride through be added in addition to voltage ride through. The language "how the generators are treated in the simulation" is not crisp. Is the SDT looking for information on how the voltage ride through and frequency ride through are modeled in the study?

Response: R2.4.1 has been modified to clarify that an aggregate system Load model which represents the overall dynamic behavior of the Load is acceptable. It is not necessary to have a dynamic Load model which is specific to each bus. The determination of the aggregate Load model is left to the judgment of the TP/PC.

R2.4.1 System peak Load for one of the five years. For peak System Load levels, a Load model shall be used which appropriately represents the dynamic behavior of Loads, including consideration of the behavior of induction motor Loads. An aggregate system Load model which represents the overall dynamic behavior of the Load is acceptable.

Organization	Question 2:	Question 2 Comments:

R2.4.3.1: The variations in load model assumptions are to be applied to the aggregate system Load model which represents the overall dynamic behavior of the Load.

R2.4.3.4: The specific wording for Requirement R2.4.3.4 has been changed to variations in "reactive resource capability". The sub-requirement has also been changed to become a part of a bulleted list. This could mean a degradation of the capability of a reactive resource. The TP is allowed to use his judgment as to how the variations of the sensitivity parameters should be made.

~~Variability and outages of r~~Reactive resource~~s~~ capability.

R2.4.4: Requirement R2.4.4 has been deleted.

R2.5: The SDT agrees with the Industry's majority view that generating unit Stability and System Stability need not and should not be treated as distinct issues. The Stability related requirements have been modified to create a single generic set of requirements that no longer distinguishes between generating unit and System Stability. This should address your concern with potential conflicts with the FAC standards.

Other Comments related to R2: Yes, no System Stability is required for the Long-term Planning Horizon.

R2.1: Yes, current studies are required for Requirement R2.1. The assessment for steady state cannot be based solely on past studies.

R2.1.1 & R2.1.2: Not necessarily. The intent was that off-peak refers to any Load level other than peak that the TP deems appropriate.

R2.1.3: R2.1.3 and R2.4.3 have been modified to remove the requirement for specifying the technical rationale for why or why not a particular sensitivity was selected.

R2.1.3 For each of the studies described in Requirements R2.1.1 and ~~Requirement~~ R2.1.2, sensitivity case(s) that are intended to stress the System with ~~sensitivities~~ variations ~~that reflect~~ in one or more of the following conditions not already included in the studies shall be ~~run and documentation of the technical rationale for why each of the conditions was or was not selected shall be supplied~~ included in the Assessment:

R2.4.3 For each of the studies described in Requirements R2.4.1 and ~~Requirement~~ R2.4.2, sensitivity case(s) that are intended to stress the System with variations ~~to reflect~~ in one or more of the following conditions not already included in the studies shall be ~~run and documentation of the technical rationale for why each of the conditions was or was not selected shall be supplied~~ included in the Assessment:

R2.6: A formal definition would apply to all NERC standards. The SDT believes this explanation of what qualifies as a past study should only apply to this standard.

R2.7: Not necessarily. While the SDT can't answer as to formal compliance, the intent was that If the corrective action will not be in place at the time it is needed, the PC/TP will not be in compliance unless it can find an acceptable way (perhaps an Operating Procedure) to meet the performance requirement.

R2.7.1.1: This requirement is now Requirement R2.6.2. It is left up to the individual entity to define and document what is meant by the project initiation date. This requirement was intended to represent the same thing as Requirement R2.1 in the existing TPL-002-0.

R5.4 and R5.4.1 (now R3.4): The SDT believes the existing wording does allow the planner the discretion to use judgment to select these more severe Contingencies, and the elements they are applied to, with explanation as to why they are expected to be more severe.

Organization	Question 2:	Question 2 Comments:
R5.4.2: The SDT agrees that this cross-referencing is inconsistent. The reference back to Requirement R5.4.4 has been removed from the Table. R5.4.3: Thank you for your comment. R5.4.3.2 and R5.4.3.3: The SDT agrees and has removed these requirements. R5.4.4: The SDT believes that Transmission Planners know their Systems well enough to select Contingencies for which they suspect cascading or severe problems will result. Since there are an infinite number of possible scenarios to study, judgment is a necessity to limit scope to a reasonable level. The judgment of the TP is assumed to be a sufficient explanation as to why certain Contingencies were chosen. R5.5: The distinction between Generating Unit Stability and System Stability has been removed from the standard. R5.5.3: The requirement has been deleted. R5: Requirement R3 has been modified to be consistent with Requirement R5. **R3** For the steady state portion of the Planning Assessment, each Transmission Planner and Planning Coordinator shall perform analysis for the Near-Term and Long-Term Transmission Planning Horizon studies in Requirement R2.1 and Requirement R2.2. ~~The studies shall be based on computer power flow simulations that analyze BES normal performance (n-0) and System response to c~~Contingencies ~~in Table 1 – Steady State Performance.~~ The studies shall be based on computer simulations using models utilizing data provided in Requirement R1. R5.1: There is a difference between the two. The first sentence of Requirement R5 says to run Contingencies. Requirement R5.1 says to meet performance requirements. R5.2: The SDT agrees and has removed those words from new Requirements R4.3 and 4.3.1: **R5.2 (new R4.3 and R4.3.1)** Contingency analyses shall: ~~s~~Simulate the removal of all elements ~~including those~~ that the Protection System ~~protection~~ and other automatic controls are expected to disconnect for each Contingency without operator intervention. R5.3: The SDT is looking for how generators were treated in the study when there were voltage excursions. Did you trip them or not? What criteria do you use to decide if they should be tripped?		
Los Angeles Department of Water and Power	No	R2.4.3 requires sensitivity on various operating scenarios. These are best required under TOP, not TPL. It is totally useless and a waste of time to look at operating scenarios under planning horizon by planners, whether it be short term or long term. Operating scenarios are absolutely necessary under operating horizons but they need not be repeated and required in TPL when TOP already addressed these. R2.5 See my comment on question 1. This may be a suitable place to require proper modeling of the generator units to replace the existing languages.

Organization	Question 2:	Question 2 Comments:
		R5.4 is fine. R5.5 See my comment on question 1. The language here actually infers the size of a unit that should be modeled individually and not be lumped. But it should be more precise to prohibit any lumping as well as the explicit modeling of all dynamic data of any generator unit meeting the size requirement.
Response: R2.4.3: The SDT does not view the required sensitivity studies as operating studies. These are planning studies intended to investigate conditions that are different from the base case to bracket the range of possible outcomes if conditions vary from expected. R2.5: The SDT agrees with the majority of the Industry, including your comments, that there is no significant distinction between generator and System Stability and has modified the third draft to remove that distinction. R5.4: Thanks for your comment. R5.5: This requirement has been deleted.		
Transmission Agency of Northern California	Yes and No	R2.4 is acceptable. Please consider deleting the conditions identified in R5.4.3.1, R5.4.3.2, and R5.4.3.3. We question the need to specifically call out these requirements in sub requirements of R5.4.3. We believe these conditions should be met for a
Response: R2.4: thanks for your comment. The SDT agrees and has deleted Requirement R5.4.3.		
Pacific Gas and Electric Co.	Yes and No	R2.4 is acceptable. Please consider deleting the conditions identified in R5.4.3.1, R5.4.3.2, and R5.4.3.3. We question the need to specifically call out these requirement in sub requirements of R5.4.3. We believe these conditions should be met for any and all requirements of the standard. It should not be necessary to list acceptable practices, especially if the conditions placed on the practice are general conditions that are addressed elsewhere or are generic. Otherwise, R5.4 is acceptable? We generally agree that Transmission Owners with extensive Transmission Planning Function and Planning Coordinators need to perform and be held accountable for the Requirements in R2.4 and R5.4; however, the SDT

Organization	Question 2:	Question 2 Comments:
		needs to define an organization size level below which these requirements for the associated Transmission Planner may be slightly relaxed. There are numerous Transmission Planners; (e.g., those associated with PUDs, Municipals or REA, etc. where historically dynamic stability has not been a problem), for which performing these type of studies and assessments would be onerous and would not yield reliability benefits for the network. ? The proposed requirements in R2.5 and R5.5 are already covered in FAC-001 and FAC-002 and should not be included again in the proposed TPL-001-1. Otherwise, the NERC standards would have redundant requirements. In addition, Transmission Owner's open access tariffs requires Generator Owners to apply for interconnection to its transmission system or to make modifications to their generators as described in R2.5.1, R5.5.1, and R5.5.2. It is therefore the Generator Owner's responsibility to cause these studies to be done at the time of interconnection or modification, yet R5 seems to place that responsibility only on the Transmission Planner and the Planning Coordinator. The Transmission Planner or the Planning Coordinator would not know of the changes until notified by the Generator Owner. If the SDT believes that FAC-001 is deficient, it should propose revisions to this standard, not simply add to TPL. Requirement R5.5.2 needs to be clarified to state changes or additions to the generating unit that result in an increase in power output. Otherwise, it could be interpreted to apply to existing units with a change in dispatch.
Public Service Company of New Mexico	Yes and No	R2.4 is acceptable. Please consider deleting the conditions identified in R5.4.3.1, R5.4.3.2, and R5.4.3.3. We question the need to specifically call out these requirements in subrequirements of R5.4.3. We believe these conditions should be met for any and all requirements of the standard. It should not be necessary to list acceptable practices, especially if the conditions placed on the practice are general conditions that are addressed elsewhere or are generic. Otherwise, R5.4 is acceptable? We generally agree that Transmission Owners with extensive Transmission Planning Function and Planning Coordinators need to perform and be held accountable for the Requirements in R2.4 and R5.4; however, the SDT needs to define an organization size level below which these requirements for the associated Transmission Planner may be slightly relaxed. There are numerous Transmission Planners; (e.g., those associated with PUDs, Municipals or REA, etc. where historically dynamic stability has not been a problem), for which performing these type of studies and assessments would be onerous and would not yield reliability benefits for the network. ? The proposed requirements in R2.5 and R5.5 are already covered in FAC-001 and FAC-002 and should not be included again in the proposed TPL-001-1. Otherwise, the NERC standards would have redundant requirements. In addition, Transmission Owner's open access tariffs requires Generator Owners to apply for interconnection to its transmission system or to make modifications to their generators as described in R2.5.1, R5.5.1, and R5.5.2. It is therefore the Generator Owner's responsibility to cause these studies to be done at the time of interconnection or

Organization	Question 2:	Question 2 Comments:
		modification, yet R5 seems to place that responsibility only on the Transmission Planner and the Planning Coordinator. The Transmission Planner or the Planning Coordinator would not know of the changes until notified by the Generator Owner. If the SDT believes that FAC-001 is deficient, it should propose revisions to this standard, not simply add to TPL. Requirement R5.5.2 needs to be clarified to state changes or additions to the generating unit that result in an increase in power output. Otherwise, it could be interpreted to apply to existing units with a change in dispatch.
Puget Sound Energy, Inc.	Yes and No	R2.4 is acceptable. Please consider deleting the conditions identified in R5.4.3.1, R5.4.3.2, and R5.4.3.3. We question the need to specifically call out these requirements in sub-requirements of R5.4.3. We believe these conditions should be met for any and all requirements of the standard. It should not be necessary to list acceptable practices, especially if the conditions placed on the practice are general conditions that are addressed elsewhere or are generic. Otherwise, R5.4 is acceptable. The proposed requirements in R2.5 and R5.5 are already covered in FAC-001 and FAC-002 and should not be included again in the proposed TPL-001-1. Otherwise, the NERC standards would have redundant requirements. In addition, Transmission Owner's open access tariffs requires Generator Owners to apply for interconnection to its transmission system or to make modifications to their generators as described in R2.5.1, R5.5.1, and R5.5.2. It is therefore the Generator Owner's responsibility to cause these studies to be done at the time of interconnection or modification, yet R5 seems to place that responsibility only on the Transmission Planner and the Planning Coordinator. The Transmission Planner or the Planning Coordinator would not know of the changes until notified by the Generator Owner. If the SDT believes that FAC-001 is deficient, it should propose revisions to this standard, not simply add to TPL. Requirement R5.5.2 needs to be clarified to state changes or additions to the generating unit that result in an increase in power output. Otherwise, it could be interpreted to apply to existing units with a change in dispatch.
Idaho Power Company	Yes and No	R2.4 is acceptable. Please consider deleting R5.4.3. It should not be necessary to list acceptable practices, especially if the conditions placed on the practice are general conditions that are addressed elsewhere or are generic. Otherwise, R5.4 is acceptable. We generally agree that Transmission Owners with extensive Transmission Planning Function and Planning Coordinators need to perform and be held accountable for the Requirements in R2.4 and R5.4; however, the SDT needs to define an organization size level below which these requirements for the associated Transmission Planner

Organization	Question 2:	Question 2 Comments:
		may be slightly relaxed. There are numerous Transmission Planners; (e.g., those associated with PUDs, Municipals or REA, etc. where historically dynamic stability has not been a problem), for which performing these type of studies and assessments would be onerous and would not yield reliability benefits for the network. ? The proposed requirements in R2.5 and R5.5 are already covered in FAC-001 and FAC-002 and should not be included again in the proposed TPL-001-1. Otherwise, the NERC standards would have redundant requirements. In addition, Transmission Owner's open access tariff requires Generator Owner to apply for interconnection to its transmission system or to make modifications to their generators as described in R2.5.1, R5.5.1, and R5.5.2. It is therefore the Generator Owner's responsibility to cause these studies to be done at the time of interconnection or modification, yet R5 seems to place that responsibility only on the Transmission Planner and the Planning Coordinator. The Transmission Planner or the Planning Coordinator would not know of the changes until notified by the Generator Owner. If the SDT believes that FAC-001 is deficient, it should propose revisions to this standard, not simply add to TPL. Requirement R5.5.2 needs to be clarified to state changes or additions to the generating unit that result in an increase in power output. Otherwise, it could be interpreted to apply to existing units with a change in dispatch.
SMUD	Yes and No	R2.4 is acceptable. Please consider deleting the conditions identified in R5.4.3.1, R5.4.3.2, and R5.4.3.3. We question the need to specifically call out these requirements in subrequirements of R5.4.3. We believe these conditions should be met for any and all requirements of the standard. It should not be necessary to list acceptable practices, especially if the conditions placed on the practice are general conditions that are addressed elsewhere or are generic. Otherwise, R5.4 is acceptable.? The proposed requirements in R2.5 and R5.5 are already covered in FAC-001 and FAC-002 and should not be included again in the proposed TPL-001-1. 'Otherwise, the NERC standards would have redundant requirements. In addition, Transmission Owner's open access tariffs requires Generator Owners to apply for interconnection to its transmission system or to make modifications to their generators as described in R2.5.1, R5.5.1, and R5.5.2. It is therefore the Generator Owner's responsibility to cause these studies to be done at the time of interconnection or modification, yet R5 seems to place that responsibility only on the Transmission Planner and the Planning Coordinator. The Transmission Planner or the Planning Coordinator would not know of the changes until notified by the Generator Owner. If the SDT believes that FAC-001 is deficient, it should propose revisions to this standard, not simply add to TPL. Requirement R5.5.2 needs to be clarified to state changes or additions to the generating unit that result in an increase in power output. Otherwise, it could be interpreted to apply to existing units with a change in dispatch.

Organization	Question 2:	Question 2 Comments:
Sierra Pacific Power Company / Nevada Power Company	Yes and No	R2.4 is acceptable. Please consider deleting R5.4.3. It should not be necessary to list acceptable practices, especially if the conditions placed on the practice are general conditions that are addressed elsewhere or are generic. Otherwise, R5.4 is acceptable. We generally agree that Transmission Owners with extensive Transmission Planning Function and Planning Coordinators need to perform and be held accountable for the Requirements in R2.4 and R5.4; however, the SDT needs to define an organization size level below which these requirements for the associated Transmission Planner may be slightly relaxed. There are numerous Transmission Planners; (e.g., those associated with PUDs, Municipals or REA, etc. where historically dynamic stability has not been a problem), for which performing these type of studies and assessments would be onerous and would not yield reliability benefits for the network. The proposed requirements in R2.5 and R5.5 are already covered in FAC-001 and FAC-002 and should not be included again in the proposed TPL-001-1. Otherwise, the NERC standards would have redundant requirements. In addition, Transmission Owner's open access tariff requires Generator Owner to apply for interconnection to its transmission system or to make modifications to their generators as described in R2.5.1, R5.5.1, and R5.5.2. It is therefore the Generator Owner's responsibility to 'cause these studies to be done at the time of interconnection or modification, yet R5 seems to place that responsibility only on the Transmission Planner and the Planning Coordinator. The Transmission Planner or the Planning Coordinator would not know of the changes until notified by the Generator Owner. If the SDT believes that FAC-001 is deficient, it should propose revisions to this standard, not simply add to TPL. Requirement R5.5.2 needs to be clarified to state changes or additions to the generating unit that result in an increase in power output. Otherwise, it could be interpreted to apply to existing units with a change in dispatch.
Black Hills Corporation	Yes and No	R2.4 is acceptable. Please consider deleting the conditions identified in R5.4.3.1, R5.4.3.2, and R5.4.3.3. We question the need to specifically call out these requirement in subrequirements of R5.4.3. We believe these conditions should be met for any and all requirements of the standard. It should not be necessary to list acceptable practices, especially if the conditions placed on the practice are general conditions that are addressed elsewhere or are generic. Otherwise, R5.4 is acceptable. We generally agree that Transmission Owners with extensive Transmission Planning Function and Planning Coordinators need to perform and be held accountable for the Requirements in R2.4 and R5.4; however, the SDT needs to define an organization size level below which these requirements for the associated Transmission Planner may be slightly relaxed. There are numerous Transmission Planners; (e.g., those associated with PUDs, Municipals or

Organization	Question 2:	Question 2 Comments:
		REA, etc. where historically dynamic stability has not been a problem), for which performing these type of studies and assessments would be onerous and would not yield reliability benefits for the network. The proposed requirements in R2.5 and R5.5 are already covered in FAC-001 and FAC-002 and should not be included again in the proposed TPL-001-1. Otherwise, the NERC standards would have redundant requirements. In addition, Transmission Owner's open access tariffs requires Generator Owners to apply for interconnection to its transmission system or to make modifications to their generators as described in R2.5.1, R5.5.1, and R5.5.2. It is therefore the Generator Owner's responsibility to cause these studies to be done at the time of interconnection or modification, yet R5 seems to place that responsibility only on the Transmission Planner and the Planning Coordinator. The Transmission Planner or the Planning Coordinator would not know of the changes until notified by the Generator Owner. If the SDT believes that FAC-001 is deficient, it should propose revisions to this standard, not simply add to TPL. Requirement R5.5.2 needs to be clarified to state changes or additions to the generating unit that result in an increase in power output. Otherwise, it could be interpreted to apply to existing units with a change in dispatch.
SRP	Yes and No	R2.4 is acceptable. Please consider deleting the conditions identified in R5.4.3.1, R5.4.3.2, and R5.4.3.3. We question the need to specifically call out these requirements in subrequirements of R5.4.3. We believe these conditions should be met for any and all requirements of the standard. It should not be necessary to list acceptable practices, especially if the conditions placed on the practice are general conditions that are addressed elsewhere or are generic. Otherwise, R5.4 is acceptable.? We generally agree that Transmission Owners with extensive Transmission Planning Function and Planning Coordinators need to perform and be held accountable for the Requirements in R2.4 and R5.4; however, the SDT needs to define an organization size level below which these requirements for the associated Transmission Planner may be slightly relaxed. There are numerous Transmission Planners; (e.g., those associated with PUDs, Municipals or REA, etc. where historically dynamic stability has not been a problem), for which performing these type of studies and assessments would be onerous and would not yield reliability benefits for the network. ? The proposed requirements in R2.5 and R5.5 are already covered in FAC-001 and FAC-002 and should not be included again in the proposed TPL-001-1. Otherwise, the NERC standards would have redundant requirements. In addition, Transmission Owner's open access tariffs requires Generator Owners to apply for interconnection to its transmission system or to make modifications to their generators as described in R2.5.1, R5.5.1, and R5.5.2. It is therefore the Generator Owner's responsibility to cause these studies to be done at the time of interconnection or modification, yet R5 seems to place that responsibility only on the Transmission Planner and the Planning Coordinator. The Transmission Planner or the Planning Coordinator would not know of the changes until notified by

Organization	Question 2:	Question 2 Comments:
		the Generator Owner. If the SDT believes that FAC-001 is deficient, it should propose revisions to this standard, not simply add to TPL. Requirement R5.5.2 needs to be clarified to state changes or additions to the generating unit that result in an increase in power output. Otherwise, it could be interpreted to apply to existing units with a change in dispatch.
Tucson Electric Power Company	Yes and No	In general, R2.4 is acceptable but some of the sub-requirements are to prescriptive. We generally agree that Transmission Owners with extensive Transmission Planning Function and Planning Coordinators need to perform and be held accountable for the Requirements in R2.4 and R5.4; however, the SDT needs to define an organization size level below which these requirements for the associated Transmission Planner may be slightly relaxed. There are numerous Transmission Planners; (e.g., those associated with PUDs, Municipals or REA, etc. where historically dynamic stability has not been a problem), for which performing these type of studies and assessments would be onerous and would not yield reliability benefits for the network. Off-peak analysis (R2.4.2) in the Planning Horizon is of limited value for smaller entities. This analysis is best left to the Operating Horizon. Please consider deleting the conditions identified in R5.4.3.1, R5.4.3.2, and R5.4.3.3. We question the need to specifically call out these requirements in subrequirements of R5.4.3. We believe these conditions should be met for any and all requirements of the standard. It should not be necessary to list acceptable practices, especially if the conditions placed on the practice are general conditions that are addressed elsewhere or are generic. Otherwise, R5.4 is acceptable.? The proposed requirements in R2.5 and R5.5 are already covered in FAC-001 and FAC-002 and should not be included again in the proposed TPL-001-1. Otherwise, the NERC standards would have redundant requirements. In addition, Transmission Owner's open access tariffs requires Generator Owners to apply for interconnection to its transmission system or to make modifications to their generators as described in R2.5.1, R5.5.1, and R5.5.2. It is therefore the Generator Owner's responsibility to cause these studies to be done at the time of interconnection or modification, yet R5 seems to place that responsibility only on the Transmission Planner and the Planning Coordinator. The Transmission Planner or the Planning Coordinator would not know of the changes until notified by the Generator Owner. If the SDT believes that FAC-001 is deficient, it should propose revisions to this standard, not simply add to TPL. Requirement R5.5.2 needs to be clarified to state changes or additions to the generating unit that result in an increase in power output. Otherwise, it could be interpreted to apply to existing units with a change in dispatch.
Modesto Irrigation District	Yes and No	Comments: R2.4 is acceptable. Please consider deleting the conditions identified in R5.4.3.1, R5.4.3.2, and R5.4.3.3. We question the need to

Organization	Question 2:	Question 2 Comments:
		specifically call out these requirements in subrequirements of R5.4.3. We believe these conditions should be met for any and all requirements of the standard. It should not be necessary to list acceptable practices, especially if the conditions placed on the practice are general conditions that are addressed elsewhere or are generic. Otherwise, R5.4 is acceptable.? We generally agree that Transmission Owners with extensive Transmission Planning Function and Planning Coordinators need to perform and be held accountable for the Requirements in R2.4 and R5.4; however, the SDT needs to define an organization size level below which these requirements for the associated Transmission Planner may be slightly relaxed. There are numerous Transmission Planners; (e.g., those associated with PUDs, Municipals or REA, etc. where historically dynamic stability has not been a problem), for which performing these type of studies and assessments would be onerous and would not yield reliability benefits for the network.? The proposed requirements in R2.5 and R5.5 are already covered in FAC-001 andFAC-002 and should not be included again in the proposed TPL-001-1. Otherwise, the NERC standards would have redundant requirements. In addition, Transmission Owner's open access tariffs requires Generator Owners to apply for interconnection to its transmission system or to make modifications to their generators as described in R2.5.1, R5.5.1, and R5.5.2. It is therefore the Generator Owner's responsibility to cause these studies to be done at the time of interconnection or modification, yetR5 seems to place that responsibility only on the Transmission Planner and the Planning Coordinator. The Transmission Planner or the Planning Coordinator would not know of the changes until notified by the Generator Owner. If the SDT believes that FAC-001 is deficient, it should propose revisions to this standard, not simply add to TPL. Requirement R5.5.2 needs to be clarified to state changes or additions to the generating unit that result in an increase in power output. Otherwise, it could be interpreted to apply to existing units with a change in dispatch.
Tri-State G&T	Yes and No	R2.4 is acceptable. Please consider deleting the conditions identified in R5.4.3.1, R5.4.3.2, and R5.4.3.3. We question the need to specifically call out these requirements in subrequirements of R5.4.3. We believe these conditions should be met for any and all requirements of the standard. It should not be necessary to list acceptable practices, especially if the conditions placed on the practice are general conditions that are addressed elsewhere or are generic. Otherwise, R5.4 is acceptable.? We generally agree that Transmission Owners with extensive Transmission Planning Function and Planning Coordinators need to perform and be held accountable for the Requirements in R2.4 and R5.4; however, the SDT needs to define an organization size level below which these requirements for the associated Transmission Planner may be slightly relaxed. There are numerous Transmission Planners; (e.g., those associated with PUDs, Municipals or REA, etc. where historically dynamic stability has not been a problem), for which performing these type of studies and

Organization	Question 2:	Question 2 Comments:
		assessments would be onerous and would not yield reliability benefits for the network. ? The proposed requirements in R2.5 and R5.5 are already covered in FAC-001 and FAC-002 and should not be included again in the proposed TPL-001-1. Otherwise, the NERC standards would have redundant requirements. In addition, Transmission Owner's open access tariffs requires Generator Owners to apply for interconnection to its transmission system or to make modifications to their generators as described in R2.5.1, R5.5.1, and R5.5.2. It is therefore the Generator Owner's responsibility to cause these studies to be done at the time of interconnection or modification, yet R5 seems to place that responsibility only on the Transmission Planner and the Planning Coordinator. The Transmission Planner or the Planning Coordinator would not know of the changes until notified by the Generator Owner. If the SDT believes that FAC-001 is deficient, it should propose revisions to this standard, not simply add to TPL. Requirement R5.5.2 needs to be clarified to state changes or additions to the generating unit that result in an increase in power output. Otherwise, it could be interpreted to apply to existing units with a change in dispatch.
ColumbiaGrid	Yes and No	R2.4 is acceptable. Please consider deleting R5.4.3. It should not be necessary to list acceptable practices, especially if the conditions placed on the practice are general conditions that are addressed elsewhere or are generic. Otherwise, R5.4 is acceptable. We generally agree that Transmission Owners with extensive Transmission Planning Function and Planning Coordinators need to perform and be held accountable for the Requirements in R2.4 and R5.4; however, the SDT needs to define an organization size level below which these requirements for the associated Transmission Planner may be slightly relaxed. There are numerous Transmission Planners; (e.g., those associated with PUDs, Municipals or REA, etc. where historically dynamic stability has not been a problem), for which performing these type of studies and assessments would be onerous and would not yield reliability benefits for the network. The proposed requirements in R2.5 and R5.5 are already covered in FAC-001 and FAC-002 and should not be included again in the proposed TPL-001-1. Otherwise, the NERC standards would have redundant requirements. In addition, Transmission Owner's open access tariff requires Generator Owner to apply for interconnection to its transmission system or to make modifications to their generators as described in R2.5.1, R5.5.1, and R5.5.2. It is therefore the Generator Owner's responsibility to cause these studies to be done at the time of interconnection or modification, yet R5 seems to place that responsibility only on the Transmission Planner and the Planning Coordinator. The Transmission Planner or the Planning Coordinator would not know of the changes until notified by the Generator Owner. If the SDT believes that FAC-001 is deficient, it should propose revisions to this standard, not simply add to TPL. Requirement R5.5.2 needs to be clarified to state changes or additions to the generating unit that result in an increase

Organization	Question 2:	Question 2 Comments:
		in power output. Otherwise, it could be interpreted to apply to existing units with a change in dispatch.
Southern California Edison	Yes and No	R2.4 is acceptable. Please consider deleting the conditions identified in R5.4.3.1, R5.4.3.2, and R5.4.3.3. We question the need to specifically call out these requirement in subrequirements of R5.4.3. We believe these conditions should be met for any and all requirements of the standard. It should not be necessary to list acceptable practices, especially if the conditions placed on the practice are general conditions that are addressed elsewhere or are generic. Otherwise, R5.4 is acceptable.? We generally agree that Transmission Owners with extensive Transmission Planning Function and Planning Coordinators need to perform and be held accountable for the Requirements in R2.4 and R5.4; however, the SDT needs to define an organization size level below which these requirements for the associated Transmission Planner may be slightly relaxed. There are numerous Transmission Planners; (e.g., those associated with PUDs, Municipals or REA, etc. where historically dynamic stability has not been a problem), for which performing these type of studies and assessments would be onerous and would not yield reliability benefits for the network. ? The proposed requirements in R2.5 and R5.5 are already covered in FAC-001 and FAC-002 and should not be included again in the proposed TPL-001-1. Otherwise, the NERC standards would have redundant requirements. In addition, Transmission Owner's open access tariffs requires Generator Owners to apply for interconnection to its transmission system or to make modifications to their generators as described in R2.5.1, R5.5.1, and R5.5.2. It is therefore the Generator Owner's responsibility to cause these studies to be done at the time of interconnection or modification, yet R5 seems to place that responsibility only on the Transmission Planner and the Planning Coordinator. The Transmission Planner or the Planning Coordinator would not know of the changes until notified by the Generator Owner. If the SDT believes that FAC-001 is deficient, it should propose revisions to this standard, not simply add to TPL. Requirement R5.5.2 needs to be clarified to state changes or additions to the generating unit that result in an increase in power output. Otherwise, it could be interpreted to apply to existing units with a change in dispatch.
Alberta Electric System Operator	No	R2.4 is acceptable. - Please consider deleting the conditions identified in R5.4.3.1, R5.4.3.2, and R5.4.3.3. We question the need to specifically call out these requirement in subrequirements of R5.4.3. We believe these conditions should be met for any and all requirements of the standard. It should not be necessary to list acceptable practices, especially if the conditions placed on the practice are general conditions that are addressed elsewhere or

Organization	Question 2:	Question 2 Comments:
		are generic. Otherwise, R5.4 is acceptable.- The proposed requirements in R2.5 and R5.5 are already covered in FAC-001 and FAC-002 and should not be included again in the proposed TPL-001-1. Otherwise, the NERC standards would have redundant requirements. In addition, Generator Owners are to apply for interconnection to the transmission system or to make modifications to their generators as described in R2.5.1, R5.5.1, and R5.5.2. It is therefore the Generator Owner's responsibility to cause these studies to be done at the time of interconnection or modification, yet R5 seems to place that responsibility only on the Transmission Planner and the Planning Coordinator. The Transmission Planner or the Planning Coordinator would not know of the changes until notified by the Generator Owner. If the SDT believes that FAC-001 is deficient, it should propose revisions to this standard, not simply add to TPL. – Requirement R5.5.2 needs to be clarified to state changes or additions to the generating unit that result in an increase in power output. Otherwise, it could be interpreted to apply to existing units with a change in dispatch.
US Bureau of Reclamation	No	Comments: R2.4 is acceptable. Please consider deleting the conditions identified in R5.4.3.1, R5.4.3.2, and R5.4.3.3. We question the need to specifically call out these requirement in subrequirements of R5.4.3. We believe these conditions should be met for any and all requirements of the standard. It should not be necessary to list acceptable practices, especially if the conditions placed on the practice are general conditions that are addressed elsewhere or are generic. Otherwise, R5.4 is acceptable.? We generally agree that Transmission Owners with extensive Transmission Planning Function and Planning Coordinators need to perform and be held accountable for the Requirements in R2.4 and R5.4; however, the SDT needs to define an organization size level below which these requirements for the associated Transmission Planner may be slightly relaxed. There are numerous Transmission Planners; (e.g., those associated with PUDs, Municipals or REA, etc. where historically dynamic stability has not been a problem), for which performing these type of studies and assessments would be onerous and would not yield reliability benefits for the network.? The proposed requirements in R2.5 and R5.5 are already covered in FAC-001 andFAC-002 and should not be included again in the proposed TPL-001-1. Otherwise, the NERC standards would have redundant requirements. In addition, Transmission Owner's open access tariffs requires Generator Owners to apply for interconnection to its transmission system or to make modifications to their generators as described in R2.5.1, R5.5.1, and R5.5.2. It is therefore the Generator Owner's responsibility to cause these studies to be done at the time of interconnection or modification, yetR5 seems to place that responsibility only on the Transmission Planner and the Planning Coordinator.

Organization	Question 2:	Question 2 Comments:
		The Transmission Planner or the Planning Coordinator would not know of the changes until notified by the Generator Owner. If the SDT believes that FAC-001 is deficient, it should propose revisions to this standard, not simply add to TPL. Requirement R5.5.2 needs to be clarified to state changes or additions to the generating unit that result in an increase in power output. Otherwise, it could be interpreted to apply to existing units with a change in dispatch.
Response: R5.4.3: This requirement and its sub-requirements have been deleted. R2.4 and R5.4: Stability studies will continue to be required for smaller utilities. Small entities have the option of not registering as a TP to avoid compliance concerns. Furthermore, it would be difficult to establish criteria for exempting "smaller entities". R2.5 and R5.5: The SDT changed the language to reflect that updated Stability studies only need to be performed as specified in Requirements R2.5.2. The addition/deletion/change of individual generating unit capability of 20 MW or greater. An aggregated addition/deletion/change to a group of generating units directly connected through their step-up transformer(s) to the BES which total 20 MW or greater. R5.5.2 This has been clarified with the words "change of individual generating unit capability". This is now covered in Requirement R2.5.2		
Gainesville Regional Utilities	Yes and No	For smaller systems, please see Comment 1. As far as R.2.4.1, if the various loads are basic and not a large industrial type load (very large motors with across the line starting, electric arc furnaces, etc.) then the dynamic behavior of the load should not require special consideration. Using proper power factors for the load should be enough for the transmission system evaluation. Under 2.4.3, as mentioned in Comment 1, evaluating the stressing of the smaller systems through a large amount of sensitivities does not add any reliability to the BES. It only adds much addition work to a limited resource entity. If the neighboring large systems agree that the smaller system can not impact them, this should support that the BES is not affected by any sensitivity that could exist on the smaller system. For R5.5, a threshold should be set to consider only the larger size units within the region. For a smaller system, the stability of a 50-100 MW unit probably would not perturb the interconnected regional BES's.
Response: R2.4.1: Residential air conditioners and other small motors can have a significant impact on dynamic simulations of the System. Using proper power factors for the Load is definitely not enough for dynamic simulations of Systems with large amounts of residential air conditioning. R2.4.3: In Order 693, FERC directed NERC to modify the TPL standard to require that critical System conditions be determined by conducting sensitivity studies. The SDT believes this should apply to any entity regardless of size that is registered as a Transmission Planner.		

Organization	Question 2:	Question 2 Comments:
R5.5: The SDT believes the appropriate size to study is any generator of 20 MW or more.		
JEA	Yes and No	R2.4.1 Do we mean "Appropriate" for overall regional system response/behavior or for individual customer behavior. JEA would agree to an "appropriate" overall regional system response/behavior model with unique individual or sub-regional customer behavior models if determined significant. R2.4.3.1 JEA would agree to a load characteristic sensitivity studies if conducted within the scope of a RRO study. Suggest modifying wording to "Variations in Regional Load model assumptions" R2.4.3.3 Not sure what we mean by Unavailability of long-lead time facilities. Need to add a definition. If the standard is suggesting to treat the unavailability of autotransformers like the unavailability of generators i.e. N-2 assessments with no firm consequential load shedding, then JEA does not agree that the failure rate of autotransformers is on the same level as generators and do not agree this requires a minimum performance standard to maintain grid reliability. In addition, a utility is most likely to be successful in finding a reasonable useful spare autotransformer somewhere in the world to replace the failed unit. R2.5 JEA agrees. R5.4.2 See comments for steady state requirements for Table 1 P5.R5.4.3 JEA does not understand what is meant by Stability violations. Do we mean to say "unstable system conditions"? R5.5 JEA agrees

Response: R2.4.1: The intent is "appropriate for overall System behavior", but not just on a "Regional" basis. Requirement R2.4.1 has been modified to clarify that a detailed dynamic Load model is not required at each bus. An aggregate System Load model which represents the overall dynamic behavior of the Load is acceptable.

R2.4.1 System peak Load for one of the five years. For peak System Load levels, a Load model shall be used which appropriately represents the dynamic behavior of Loads, including consideration of the behavior of induction motor Loads. An aggregate system Load model which represents the overall dynamic behavior of the Load is acceptable.

R2.4.3.1: The SDT believes that this requirement should apply to an individual TP, not on a Regional level.

R2.4.3.3: The requirement for unavailability of long lead time Facilities has been broken into two pieces for better clarity. Old Requirement R2.4.3.3 has been clarified with the words "Timing of the installation of new or modified Facilities". For example, this would include consideration of a new line not being in service by the scheduled date. Also a new requirement, Requirement R2.1.4 has been added to cover unavailability of major Transmission equipment. These modifications should help alleviate your concerns.

~~Unavailability of long lead time Facilities~~ Timing of the installation of new or modified Facilities.

R2.1.4 When an entity's spare equipment strategy could result in the unavailability of major Transmission equipment that has a lead time of one year or more

Organization	Question 2:	Question 2 Comments:
(such as a transformer), an analysis of the impact on System performance shall be assessed. The analysis shall reflect the Contingencies identified in Table 1 during the conditions that the System is expected to experience due to the unavailability of the long lead time equipment. R2.5: Thank you for your comment. R5.4.2: "Stability violations" means that the System did not meet performance requirements for Stability studies. R5.5: Thank you for your comment.		
PacifiCorp	Yes and No	av? We generally agree that utilities or large TPs and PCs need to perform and be held accountable for these Requirements; however, the SDT needs to define a organization size level, below which these requirements for the associated TP may be slightly relaxed. There are numerous TPs; (e.g., those associated with PUDs, Municipals or REA, etc.), for which performing these type of studies and assessments are onerous and do not yield reliability benefits for the network.
Arizona Public Service Co.	Yes and No	We generally agree that utilities or large TPs and PCs need to perform and be held accountable for these Requirements; however, the SDT needs to define a organization size level, below which these requirements for the associated TP may be slightly relaxed. There are numerous TPs; (e.g., those associated with PUDs, Municipals or REA, etc.), for which performing these type of studies and assessments are onerous and do not yield reliability benefits for the network.
Response: Stability studies will continue to be required for smaller entities. Smaller entities have the option of not registering as a TP to avoid compliance concerns. Furthermore, it would be difficult to establish criteria for exempting "smaller entities.		
ITC Holdings: ITC, METC, ITC Midwest	Yes and No	? R 2.4.1 System peak Load for one of the five years. For peak System Load levels, a Load model shall be used which appropriately represents the dynamic behavior of Loads, including consideration of the behavior of induction motor Loads. R 2.4.2 System Off-Peak Load for one of the five years. Is there an inconsistency here in that the requirement for peak system load levels specifies details on what is needed for the load models, but the off-peak does not specify this? We don't believe this is the intent but it creates an appearance that the dynamic behavior of loads is not required for off-peak.? Regarding R2.4 and R2.5 (& R5.4.1): It should be made clear that redoing studies is only necessary when it is not certain as to whether or not a system change will have a negative impact on system stability. An explanation should be sufficient if a study is unnecessary based on technical knowledge.. As to dynamic load models, we agree with a much longer implementation period than the rest of the standard.

Organization	Question 2:	Question 2 Comments:
		We have concerns that an auditor may not agree with our judgment as to what studies should be run or not run (R2.4, R2.5 and particularly in the case of R5.4.1). Additional guidelines, perhaps in the measurements section, would be appreciated.?
Response: R2.4.1 and R2.4.2: The dynamic behavior of induction motor loads has caused problems (e.g., slow voltage recovery) at higher System Load levels. Thus the requirement in the TPL standard is to make sure you properly represent the behavior of induction motor Loads at high Load levels, i.e., peak. It is not as much of a problem at lower Load levels and therefore there is no requirement for off-peak Load levels. Of course, even at off-peak a proper representation of Loads is needed. But for lower system Load levels, standard models are usually sufficient. R2.4 and R2.5: For R2.4 (Stability Studies) current or qualified past studies must be used to show that the five year period has been assessed. This means the TP must be able to demonstrate with engineering judgment that past studies are still valid. Dynamic load models: R2.4.1 has been modified to clarify that a detailed dynamic Load model is not required at each bus. An aggregate System Load model which represents the overall dynamic behavior of the Load is acceptable. Because of this clarification, the SDT believes that a 24 month implementation period for this requirement is sufficient. This will be covered in the Implementation Plan which will be posted along with the third draft of the standard. **R2.4.1** System peak Load for one of the five years. For peak System Load levels, a Load model shall be used which appropriately represents the dynamic behavior of Loads, including consideration of the behavior of induction motor Loads. An aggregate system Load model which represents the overall dynamic behavior of the Load is acceptable. R2.4 and R2.5: The SDT does not believe that additional guidelines are needed. The standard leaves room for appropriate engineering judgment by the TP.		
Progress Energy Florida, Inc.	No	R2.4.4 as worded does not make sense, and could potentially create illogical situations where the Transmission Planner or Planning Coordinator would "offer up" additional sensitivities specific to their systems, for which they might not presently be analyzing and immediately have to self-report non-compliance. As a substitute to the language in R2.4.4, PEF suggests either returning to the language in each existing Standard's R1.3.2, or adding an R2.4.3.6 that states "Other known critical system conditions specific to the system studied by the Transmission Planner or Planning Coordinator. Regarding R5.4 and R5.5, PEF disagrees to the extent that a differentiation has been made between System Stability and Generating Unit Stability (see Question 1 comments). Given that System Stability and Generating Unit Stability are held to precisely the same standards in Table 2, PEF feels that significant modification is required to R5.4 and R5.5, specifically that the two sections need to be consolidated into a single section. Given the complex nature of Stability Analysis, and the fact that Generators are inextricably intertwined with all other components of the BES, the distinction that the SDT is attempting to make with this issue makes no sense from a power systems engineering perspective.
Response: R2.4.4: The SDT agrees and has deleted this requirement.		

Organization	Question 2:	Question 2 Comments:
R5.4 and R5.5: In response to industry comments, the SDT decided that generating unit Stability and System Stability need not and should not be treated as distinct issues. The Stability related requirements have been modified to create a single generic set of requirements that no longer distinguishes between generating unit and System Stability.		
Lafayette Utilities System	Yes and No	Requirement 2.4.1 directs the furnishing of information that would reveal the location of new large inductive loads. Large inductive loads typically are induction motors used in industrial applications. Therefore, a Distribution Provider's forecasts about the expected level of its inductive load could effectively reveal non-public information about the anticipated location of new industrial loads. If a Distribution Provider were required to disclose such information to its Transmission Planner, the confidentiality of information having considerable commercial and competitive significance could be compromised. This would be of particular concern if the Transmission Planner and the Distribution Provider also happen to be competitors for new retail loads.
Lakeland Electric	No	Modeling the dynamic behavior of Loads is difficult at best and merits a discussion or white paper. Recommend requirement 2.4.1 specify the size of induction motor that should be considered and comment on modeling of small induction motor loads such as air conditioning.
Orlando Utilities Commission	No	OUC supports the comments from FPL and Lakeland Electric on this issue.
Response: Requirement R2.4.1 has been modified to clarify that a detailed dynamic load model is not required at each bus. An aggregate system load model which represents the overall dynamic behavior of the Load is acceptable. **R2.4.1** System peak Load for one of the five years. For peak System Load levels, a Load model shall be used which appropriately represents the dynamic behavior of Loads, including consideration of the behavior of induction motor Loads. An aggregate system Load model which represents the overall dynamic behavior of the Load is acceptable.		
Ameren	Yes and No	In R2.4, it is suggested that the word "System" be re-inserted ahead of the word "Stability". It is believed that the sub-requirements of R2.4 are for System studies as opposed to Plant or Generator stability studies. In R2.4.1, agree that the system peak load should be studied for at least one of the five years in the near-term planning horizon. What is the meaning of the term "appropriate", and who decides what dynamic representation of load is "appropriate", and for what conditions? Guidelines for the development of load models used in power flow and dynamic models to represent residential air conditioner induction motor load response including the effects of underground distribution cable and distribution capacitor banks are not available. Why can't the standard load representation be used to meet R2.4.1, and the more detailed load representation,

Organization	Question 2:	Question 2 Comments:
		including dynamic system induction motor load response, be used to meet R2.4.3? In R2.4.2, agree that off-peak load levels should be covered for one of the five years. In R2.4.3, there should not be a requirement to explain why sensitivities were not selected. Further, these items in R2.4.3.1-5 appear to be options and not sub-requirements, and therefore are too prescriptive and inappropriate for inclusion here. The proposed sensitivities appear to over-focus on the particular issues listed and may result in the detriment of overall system reliability. Engineering judgment should be used to develop the sensitivity scenarios, and it should be encouraged that the same scenarios should not be performed every year so that a portfolio of sensitivity scenarios would be developed over time. The standard should not include an enumerated list of required sensitivities. If two sensitivities are required to be performed each year, then the standard should state so, but we believe that more than one sensitivity scenario for each peak and off-peak case is burdensome. We are unsure if R2.4.4 is a requirement or an option. If R2.4.3 were not so prescriptive, the additional sensitivity could be covered under the engineering judgment comment provided above. The prescriptive listing of sensitivities under 2.4.3.1 through 2.4.3.5 should be eliminated. Proposed alternative wording for R2.4.3 which addresses above concerns is as follows:R2.4.3. "For each of the studies described in Requirement R2.4.1 and Requirement R2.4.2, sensitivity case(s) that stress the System to reflect one or more conditions such as variations in dynamic Load model assumptions, modification of expected transfers, variability and outages of reactive resources, generation additions, retirements, or other dispatch scenarios are integral to a thorough assessment of reliability. Document how and why appropriate sensitivities were selected." R2.5 should be reworded as follows. "The Generating Unit Stability portion of the Planning Assessment shall be assessed for the year and conditions when the following changes that could affect stability margins occur:" Agree with most of R5.5. In R5.5.4, a risk/benefit vs. cost analysis should be included in the evaluation of implementing a change to mitigate the likelihood of cascading outages for the extreme events. Agree with R5.6.
Response: R2.4: Adding the word "System" is no longer necessary because the SDT has eliminated the distinction between System Stability and Generating Unit Stability. R2.4.1: The TP and PC decide what is appropriate for their System. R2.4.1: The sensitivity of studying effects of induction motor Loads may not be chosen by the TP. The SDT thinks that studies incorporating the effects of induction motor Loads must be done for peak Load levels.		

Organization	Question 2:	Question 2 Comments:
R2.4.2: Thank you for your comment. R2.4.3: The requirement to explain why or why not sensitivities were selected has been deleted. The sub-requirements have been converted into bullet lists. R2.4.4: Requirement R2.4.4 has been deleted. R2.4.3: The SDT believes an enumerated list is more appropriate than the list that you suggest and as stated above, an enumerated list must have a sub-requirement format. The requirement for sensitivity studies is not overly prescriptive. There is much room for the engineering judgment of the TP. R2.5: In response to industry comments, Generating Unit Stability has been combined with System Stability. Requirement R2.5 on Generating Unit Stability has therefore been deleted. R5.5.4: This requirement has been deleted. R5.6: Thank you for your comment. The separate requirement for Generating Unit Stability Studies has been deleted.		
Florida Power and Light	No	R2.4.4 is inappropriate for a compliance assessment. Essentially R2.4.4 requires the Transmission Planner or Planning Coordinator to deem appropriate and justify inclusion or exclusion of any sensitivity other than the required sensitivities listed in R2.4.3. The only way that a an entity could be found non-compliant is if the entity deems a sensitivity as appropriate, and then inexplicably did not perform the sensitivity, which makes no sense. The requirement seems to put a burden of justifying by "technical rationale" a sensitivity that is deemed appropriate already. R2.4.4 could be eliminated and its intent absorbed in R2.4.3 by changing its wording slightly: "R2.4.3 For each of the studies in Requirement R2.4.1 and Requirement R2.4.2, sensitivity case(s) deemed appropriate by the Transmission Planner or Planning Coordinator that stress the System to reflect conditions including, but not limited to, one or more of the following conditions, shall be run and documentation of the technical rationale for why each of the conditions was or was not selected shall be supplied."
Response: The SDT agrees and has deleted Requirement R2.4.4. Other sensitivities deemed appropriate by the TP or PC can always be run.		
Exelon Transmission Planning	No	R2.4 should be specific as to applicability to generator stability, system stability or both. R2.4.1 requires the use of load models for motors. Detailed load data may not be available and studies would therefore produce questionable results. It is our understanding that the industry has recognized the importance of using better load models and there are multiple ongoing initiatives to improve our ability to do this modeling but these initiatives are not complete. However, the industry's ability to provide accurate models is not sufficient to ensure compliance at this time. The sensitivities for near-term studies in R2.4.3 aren't clearly defined, especially R2.4.3.3, 'Unavailability of Long Lead Time Facilities'. Doesn't the study that determined the original need for these facilities document the consequence of

Organization	Question 2:	Question 2 Comments:
		unavailability? The peer review component of the Planning Assessment has CEII concerns, especially with regard to extreme contingencies and whether or not they involve cascading.

Response: R2.4: In response to industry comments, Generating Unit Stability has been combined with System Stability. Therefore, Requirement R2.4 applies to Stability analysis.

R2.4.1: The intent of R2.4.1 is to have dynamic Load models which are appropriate for overall system behavior, not necessarily on an individual substation basis. The SDT believes that type of model is available. Requirement R2.4.1 has been modified to clarify that a detailed dynamic Load model is not required at each bus. An aggregate system Load model which represents the overall dynamic behavior of the Load is acceptable.

R2.4.1 System peak Load for one of the five years. For peak System Load levels, a Load model shall be used which appropriately represents the dynamic behavior of Loads, including consideration of the behavior of induction motor Loads. An aggregate system Load model which represents the overall dynamic behavior of the Load is acceptable.

R2.4.3 and R2.4.3.3: The sensitivities in Requirement R2.4.3 have been reworded for better clarity. Old Requirement R2.4.3.3 for unavailability of long lead time facilities has been broken into two pieces for better clarity. Old Requirement R2.4.3.3 has been clarified with the words "Timing of the installation of new or modified Facilities". For example, this would include consideration of a new line not being in service by the scheduled date and how you would plan to get around that problem. Also, a new Requirement R2.1.4 has been added to cover unavailability of major Transmission equipment.

~~Unavailability of long lead time Facilities~~ Timing of the installation of new or modified Facilities.

R2.1.4 When an entity's spare equipment strategy could result in the unavailability of major Transmission equipment that has a lead time of one year or more (such as a transformer), an analysis of the impact on System performance shall be assessed. The analysis shall reflect the Contingencies identified in Table 1 during the conditions that the System is expected to experience due to the unavailability of the long lead time equipment.

Peer review comment: The SDT does not believe this to be an issue because the existing standards TPL-001 through TPL-004 already require in Requirement R1.3 a review of assessments by Regional Reliability Organizations.

CenterPoint Energy and CPS Energy	No	We believe the requirements are overly broad and overly prescriptive. We further believe the extent of the "problem" these requirements would address does not justify such overly broad and overly prescriptive requirements. To clarify, we wholeheartedly agree that transmission planners should consider and selectively study potential stability concerns. However, we believe that transmission planners are already considering and selectively studying potential stability concerns. We are not aware of any significant bulk electric reliability problem actually occurring in recent memory due to the failure of transmission planners to perform the assessments and studies this standard proposes to require. Some might argue that instability occurred in the northeast blackout, and we would agree. However, requiring transmission planners to perform all the assessments and all the studies proposed herein would not have prevented instability from occurring in that event. A targeted approach focusing on the specific vulnerabilities of that area of the

Organization	Question 2:	Question 2 Comments:
		network would be far more effective than the scattergun approach proposed here. Furthermore, even if all the stability analyses proposed in this standard were performed and audited, the studies likely would not have revealed the actual underlying reliability concern. In the end, the root cause of the failure was thermal overloading, not stability. Instability eventually occurred when the root cause (thermal overloading) led to a situation where circuits sequentially tripped over the course of an hour or so. Events that occur over the course of an hour are generally outside the scope of stability analyses, so these proposed requirements are off the mark for that event. We recommend deletion of R2.4.3, R2.4.4, R2.5, R5.2, R5.3, R5.4 (or 5.5), and R5.5 (or R5.6). Removing this excess baggage would allow transmission planners to use their judgment to selectively analyze stability concerns germane to their system. We realize such an approach requires a recognition that transmission planners are already doing the appropriate analyses, and we encourage the SDT to be receptive to this premise. To further clarify this last point, some would argue that assuming entities are already doing the right thing belies the underlying premise behind enforceable reliability standards. We believe that acceptance of the need for enforceable reliability standards does not pre-suppose that some or all entities are always doing the wrong thing all the time in all aspects of their business. Nor does acceptance of mandatory reliability standards require acceptance that all aspects of the business are equally likely to produce reliability concerns. We believe most or all entities are already doing some things well such that, in some aspects of the business, there is no evidence that a "problem" actually exists. If the SDT accepts this premise, it would focus its attention on actual problem areas, not imaginary ones. We submit that performing appropriate stability studies is not a "problem" that requires an the overly prescriptive requirements proposed here. Rather than solving an actual problem, these requirements are more likely to detract resources from actual concerns by causing planning resources to be expended documenting and defending to auditors that imaginary concerns do not exist.
Response: The SDT disagrees and believes the Stability requirements are necessary to ensure that appropriate studies are being made.		
MidAmerican Energy Company	No	a. MEC disagrees with the proposed R2.4.1 text. This inclusion of this requirement may be premature at this time for several reasons. There is presently no industry consensus on how the dynamic behavior of loads should be properly represented and analyzed. In addition, it would be a large and difficult effort to identify, collect, and maintain the pertinent information. It is presently difficult to obtain and maintain the percentage of residential, commercial, and industrial load at each transmission interconnection point, much less try to get the proper percentage of the various types of induction motor loads. If this requirement is retained then R2.4.1 should be modified to specify a minimum threshold size where dynamic induction motor load or dynamic load behavior becomes significant such as near mining areas. The SDT should consider a 25 MW size threshold for induction motors and a 100 MW size threshold for industrial complexes where the dynamic loads are inadequately represented by normal power flow dynamic assumptions. b. R2.4 as stated refers to Near-Term Transmission Planning Horizon Stability analysis but there is no requirement in the standard referring to Long-Term Transmission Planning Horizon Stability analysis. The SDT should reword R2.4 so that it is clear that no Long-Term Stability analysis is required by stating that "Stability analysis for the Near-Term

Organization	Question 2:	Question 2 Comments:
		Transmission Planning Horizon shall be assessed annually?.". ? In R2.4.4, we believe this requirement should not be added. Why was it included? It seems superfluous, because any entity can study other sensitivities if they want. Why should TP or PC have to study what the other entity wants to study? Who would be the judge in case of disagreement over the technical rationale?? In R2.5.2, Why was the addition of a new substation included? We would not expect a new substation to negatively impact the system or generating unit stability. We note the R5.5 and R5.6 should really have been updated to refer to 5.4 and R5.5.
Response: a: The intent of Requirement R2.4.1 is to have dynamic Load models which are appropriate for overall system behavior, not necessarily on an individual substation basis. The SDT believes that type of model is available. Requirement R2.4.1 has been modified to clarify that a detailed dynamic Load model is not required at each bus. An aggregate System Load model which represents the overall dynamic behavior of the Load is acceptable. **R2.4.1** System peak Load for one of the five years. For peak System Load levels, a Load model shall be used which appropriately represents the dynamic behavior of Loads, including consideration of the behavior of induction motor Loads. An aggregate system Load model which represents the overall dynamic behavior of the Load is acceptable. b: There is no requirement in the standard for Long-Term Transmission Planning Horizon Stability analysis. The only requirement is for Near-Term Transmission Planning Horizon Stability analysis. The SDT believes this is clear in the standard. R2.4.4: The SDT agrees and has deleted Requirement R2.4.4. R2.5.2: A new substation in a line could change the requirements for relaying on the new shorter line so that the generating unit remains stable. Zone 2 clearing from the generator end of the line may not be fast enough on a shorter line. Requirement R5 has been re-numbered due to deletions and the sub-requirement numbering is now correct.		
SERC Dynamics Review Subcommittee	No	R 2.4.1 Load models that appropriately represent the dynamic behavior of induction motors are under development and may not be available for some time. The implementation plan should take this into account and allow at least 36 months for implementation; otherwise this requirement will not be achievable in the near term. R 2.4.3 One should only explain why sensitivity was performed. In general we believe that breaking these requirements into specific sub-requirements focusing on specific sensitivities is too prescriptive and inappropriate; it will lead to over-focus on these particular issues to the detriment of system reliability. There should be no enumerated list of required sensitivities. Engineering judgment needs to be permitted. R 2.4.3.1 It should be clearly stated whether the load model refers to system load or the dynamic load model at individual busses. We have a specific proposal for R2.4.3 which addresses the above concerns as follows: R2.4.3. For each of the studies described in Requirement R2.4.1 and Requirement R2.4.2, sensitivity case(s) that stress the

Organization	Question 2:	Question 2 Comments:
		System to reflect one or more conditions such as variations in dynamic Load model assumptions, modification of expected transfers, unavailability of long lead time Facilities, variability and outages of reactive resources, generation additions, retirements, or other dispatch scenarios. Document why each sensitivity was selected.
Response: R2.4.1: Requirement R2.4.1 has been modified to clarify that a detailed dynamic Load model is not required at each bus. An aggregate System Load model which represents the overall dynamic behavior of the Load is acceptable. Because of this clarification, the SDT believes that a 24 month implementation period for this requirement is sufficient. This will be covered in the Implementation Plan which will be posted along with the third draft of the standard. **R2.4.1** System peak Load for one of the five years. For peak System Load levels, a Load model shall be used which appropriately represents the dynamic behavior of Loads, including consideration of the behavior of induction motor Loads. An aggregate system Load model which represents the overall dynamic behavior of the Load is acceptable. R2.4.3: The requirement to explain why or why not sensitivities were selected has been deleted. The sub-requirements are now part of a bullet list. For Requirement R2.4.3.1: The variations in Load model assumptions are to be applied to the aggregate System Load model which represents the overall dynamic behavior of the Load		
MRO NERC Standards Review Subcommittee	No	a. The MRO disagrees with the proposed R2.4.1 text. This inclusion of this requirement may be premature at this time for several reasons. There is presently no industry consensus on how the dynamic behavior of loads should be properly represented and analyzed. In addition, it would be a large and difficult effort to identify, collect, and maintain the pertinent information. It is presently difficult to obtain and maintain the percentage of residential, commercial, and industrial load at each transmission interconnection point, much less try to get the proper percentage of the various types of induction motor loads. If this requirement is retained then R2.4.1 should be modified to specify a minimum threshold size where dynamic induction motor load or dynamic load behavior becomes significant such as near mining areas. The SDT should consider a 25 MW size threshold for induction motors and a 100 MW size threshold for industrial complexes where the dynamic loads are inadequately represented by normal power flow dynamic assumptions. b. R2.4 as stated refers to Near-Term Transmission Planning Horizon Stability analysis but there is no requirement in the standard referring to Long-Term Transmission Planning Horizon Stability analysis. The SDT should reword R2.4 so that it is clear that no Long-Term Stability analysis is required by stating that "Stability analysis for the Near-Term Transmission Planning Horizon shall be assessed annually?.". ? The MRO does not accept the R2.4.3.1 text and want some explanation of the what, when, and how to provide the technical rationale for why each condition was or was not used. ? In R2.4.3.1, what is meant by “variations” (e.g. how much variation is enough)? ?

Organization	Question 2:	Question 2 Comments:
		In R2.4.3.2, what is meant by “modification” (e.g. how much modification is enough) and "expected transfers" (e.g. firm or non-firm transfers)? ? In R2.4.3.3, what is meant by “long lead time” (e.g. 1 month, 1 season, 1 year, 2 years, etc.)? The MRO suggests that “long lead time” be stated 18 months or more.? In R2.4.4, we believe this requirement should not be added. Why was it included? It seems superfluous, because any entity can study other sensitivities if they want. Why should TP or PC have to study what the other entity wants to study? Who would be the judge in case of disagreement over the technical rationale?? In R2.5.2, Why was the addition of a new substation included? We would not expect a new substation to negatively impact the system or generating unit stability. The MRO notes that R5.5 and R5.6 should really have been updated to refer to 5.4 and R5.5. In R5.4.3.1, we suggest that the time-limited aspect of Facility Ratings should be included in the Glossary Definition by adding the words "within the applicable time period of the rating" and then it would not need to be clarified in various locations (R3.3.2.2, R3.5.1, R5.4.3.1, Table 1-Note 1, & Table 2-Note 1) throughout the standard.

Response: a: The intent of Requirement R2.4.1 is to have dynamic Load models which are appropriate for overall System behavior, not necessarily on an individual substation basis. The SDT believes that type of model is available. Requirement R2.4.1 has been modified to clarify that a detailed dynamic Load model is not required at each bus. An aggregate System Load model which represents the overall dynamic behavior of the Load is acceptable.

R2.4.1 System peak Load for one of the five years. For peak System Load levels, a Load model shall be used which appropriately represents the dynamic behavior of Loads, including consideration of the behavior of induction motor Loads. An aggregate system Load model which represents the overall dynamic behavior of the Load is acceptable.

b: R2.4: There is no requirement in the standard for Long-Term Transmission Planning Horizon Stability analysis. The only requirement is for Near-Term Transmission Planning Horizon Stability analysis. The SDT believes this is clear in the standard.

R2.4.3: The requirement to explain why or why not sensitivities were selected has been deleted.

R2.4.3.1: The variations in load model assumptions are to be applied to the aggregate system Load model which represents the overall dynamic behavior of the Load. The amount of variation is left to the judgment of the TP and PC.

~~Variations in~~ Load model assumptions

R2.4.3.2: The wording has been changed to variations in expected transfers. The amount of variation is left to the judgment of the TP and PC.

~~Modification of e~~Expected transfers

R2.4.3.3: The requirement for unavailability of long lead time Facilities has been broken into two pieces for better clarity. Old Requirement R2.4.3.3 has been

Organization	Question 2:	Question 2 Comments:
clarified with the words "Timing of the installation of new or modified Facilities". For example, this would include consideration of a new line not being in service by the scheduled date. Also a new Requirement R2.1.5 has been added to cover unavailability of major Transmission equipment. These modifications should help alleviate your concerns. ~~Unavailability of long lead time Facilities~~ Timing of the installation of new or modified Facilities. **R2.1.4** When an entity's spare equipment strategy could result in the unavailability of major Transmission equipment that has a lead time of one year or more (such as a transformer), an analysis of the impact on System performance shall be assessed. The analysis shall reflect the Contingencies identified in Table 1 during the conditions that the System is expected to experience due to the unavailability of the long lead time equipment. R2.4.4: The SDT agrees and has deleted Requirement R2.4.4. R2.5.2: This requirement has been deleted. Requirement R5 has been re-numbered due to deletions and the sub-requirement numbering is now correct. R5.4.3.1: The SDT believes the existing definitions of Facility Rating and Equipment Rating sufficiently cover the time limited aspect of the ratings.		
Austin Energy	No	The routine sensitivity cases requirement contained in R2.4.3 is overly burdensome and unnecessary and should be deleted. Sensitivity analysis should be limited to what may be deemed appropriate by the Transmission Planner or Planning Coordinator. Similarly, R2.5 and R5.5 requirements for Generating Unit Stability should be deleted. Removing these burdensome requirement will allow transmission planners and/or the Planning Coordinator (ISO) to determine the appropriate Generator Unit Stability analysis needed as part of R5.4 System Stability.
Response: R2.4.3: The SDT believes that running sensitivity cases will give the TP a better understanding of its System and better understanding yields a more reliable System. The requirement for sensitivity studies is not overly prescriptive. There is much room for the engineering judgment of the TP. The sub-requirements have been converted into a bullet list. R2.5 and R5.5: The separate System and Generator Unit Stability Requirements have been removed from the Standard and replaced with Requirement R2.4, which addresses all Stability studies. Appropriate levels of generation additions are listed as bullets under Requirement R2.5.2; The addition/deletion/change of individual generating unit capability of 20 MW or greater. An aggregated addition/deletion/change to a group of generating units directly connected through their step-up transformer(s) to the BES which total 20 MW or greater.		
Midwest ISO	No	The language in R2.4 retains the appropriate clarification that while annual assessments are required, these assessments do not necessarily have to be based upon annually performed simulations. This same distinction should be retained for steady-state assessments required under requirement R2.1, not withstanding the fact that steady-state simulations are easier to perform. The principle is the same for both. Requirement R2.4.1 is to open ended in

Organization	Question 2:	Question 2 Comments:
		specifying the years to be studied. Rather, it should parallel requirement R2.1.1 in requiring that at a minimum either year one or two should be evaluated, and additional years at the option of the responsible entity. If the system could go unstable in the next 1-2 years, it is important to know this. Regarding R2.4.3 & R2.4.4, the standards should not require analysis for which corrective action is optional regardless of the conclusion of the analysis. Requirement R2.7 establishes that corrective action to any sensitivities is optional. Therefore, the performance of sensitivities should be at the discretion of the applicable entity. If the SDT believes it is important to recommend that sensitivities be performed then those Requirements addressing sensitivities should state that the performance of the sensitivity is recommended but optional. If you keep sensitivities in the standard then the requirement in R2.4.4 to document why an entity performed sensitivities in addition to the Requirements should be dropped. As long as the entity selected a sensitivity and documented the results of the sensitivity there should be no reason to explain why he tested it. Requirement R2.5.2 is unclear with respect to when generator unit stability needs to be retested following modifications to the transmission system. Nearly all additions to the transmission system will tend to improve generator stability. We suggest this language be modified to say: "Material transmission system changes are made at or near the point of interconnection of existing generation that would tend to degrade stability margins of that generation, such as the removal of a transmission line, or associated with the addition of new generation, or other system changes as determined by the Planning Coordinator or Transmission Planner". R5.4.3.1 & R5.4.3.3 are redundant with the stated requirement to mitigate stability. Under the sub requirement of R5.4.3.2 it may not be possible for the PC/TP to determine whether the safety, equipment, regulatory or statutory requirements are violated without collaboration with the Transmission Owner and/or the Generator Owner. Therefore, if this sub requirement is retained it should be amended to include the following sentence: "Applicable Transmission Owners and/or Generator Owners shall collaborate with the PC/TP in determining whether such action would violate safety, equipment, regulatory or statutory requirements". Subrequirements R5.4.3.X are superfluous; we suggest removing these subrequirements. However, if this requirement is retained it should be amended to include the following sentence: "Automatic generation tripping is allowed to mitigate Stability violations if the performance criteria in Table 2 is met".

Response: R2.4 The Requirement is allowing the TP and PC the option to determine which time frame to study so as not to be as prescriptive as Requirement R 2.1.1.

R2.4.3 & R2.4.4: The language of Requirement R2.4.3 has been changed to clearly state the objective of sensitivity analyses and their applicability.

R2.4.3 For each of the studies described in Requirements R2.4.1 and ~~Requirement~~ R2.4.2, sensitivity case(s) that are intended to stress the System with variations ~~to reflect~~ in one or more of the following conditions not already included in the studies shall be ~~run and documentation of the technical rationale for why each of the conditions was or was not selected shall be supplied~~ included in the Assessment:

Organization	Question 2:	Question 2 Comments:
R2.5.2: This language has been removed from the Standard. R5.4.3.1 & R5.4.3.3: The specific sub-Requirements have been removed from the Standard; they are already implicitly covered in the Standard.		
Tri-State Generation and Transmission Association, Inc.	Yes and No	R2.4.1 "System peak load" needs a definition. Forecast descriptions by the utility should describe probability levels and other specifics.
Response: The SDT has changed this language in Requirement R2.4.3 by allowing the use of sensitivities already considered in the base case. **R2.4.3** For each of the studies described in Requirements R2.4.1 and ~~Requirement~~ R2.4.2, sensitivity case(s) that are intended to stress the System with variations ~~to reflect~~ in one or more of the following conditions not already included in the studies shall be ~~run and documentation of the technical rationale for why each of the conditions was or was not selected shall be supplied~~ included in the Assessment:		
AEP	No	We are concerned about unintended consequences with regard to System Stability studies, specifically, the possibility of generating unnecessary work. We would like the SDT to consider language changes that recognize the following realities. (1) While System Stability studies may be justified as a more detailed look at contingency scenarios whose observed severity in steady-state analysis suggests the need for more in-depth study, they cannot be expected to achieve the same breadth of scope as steady-state analyses. In decoupling System Stability studies from steady-state analysis, the draft standard may unnecessarily tend to force stability study scopes to approach those of steady-state analyses. (2) The characteristic limiting factors of systems are generally known (whether thermally limited, voltage drop limited, or transient or small-signal stability limited) and in many systems the limiting factors are thermal or steady-state voltage, but not stability. The draft standard may end up forcing System Stability studies to be done solely for compliance. It is not that independent System Stability studies are never justified (they are, for example, where inter-area small-signal instability is a known factor), but in many systems, they are not necessary. We observe that as sub-requirements of R2 and R5, R2.5 and R5.5 are the responsibility of the Transmission Planner and Planning Coordinator. Is it the SDT's intention that these entities be responsible for conducting the Generating Unit Stability analysis, irrespective of the ownership of the generating units? Should the Generator Owner be responsible for conducting the Generating Unit Stability analysis?
Response: (1) The SDT agrees that Stability studies are more in-depth; the study requirements for Stability are less than that of Steady State. (2) Not in all areas, there are numerous Systems that are limited by Stability, not just thermal limits. R2 and R5, R2.5 and R5.5: The distinction between Generating Unit Stability and System Stability has been removed.		

Organization	Question 2:	Question 2 Comments:
Southern Company Transmission	No	R 2.4 needs to have the word System inserted in front of the word Stability. R 2.4.3 One should only have to explain why a sensitivity was performed, not why it was not performed. In general we believe that breaking these requirements into specific sub requirements focusing on specific sensitivities is too prescriptive and inappropriate. It will lead to over focus on these particular issues to the detriment of system reliability. There should be no list of sensitivities enumerated as subrequirements. Engineering judgment needs to be permitted. R 2.4.3.1 It should be clearly stated whether the load model refers to system load or the dynamic load model at individual busses A specific proposal for R2.4.3 which addresses the above concerns is provided as follows:R2.4.3. For each of the studies described in Requirement R2.4.1 and Requirement R2.4.2, sensitivity case(s) shall be run and documented that stress the System to reflect one or more conditions such as variations in dynamic Load model assumptions, modification of expected transfers, unavailability of long lead time facilities, variability and outages of reactive resources, generation additions, retirements, or other dispatch scenarios. Document why each sensitivity was selected.
Response: R 2.4: The distinction between Unit and System Stability has been deleted. R 2.4.3 The SDT has changed the language of R2.4.3 to reflect this; to examine one or more sensitivities and the documentation of the technical rationale for why each of the sensitivities was not chosen has been removed. R 2.4.3.1: The language has been changed to allow the Transmission Planner to use their judgment in application of sensitivities. ~~Variations in~~ Load model assumptions R2.4.3 The SDT wanted to keep the sensitivities clear from the rest of the language for base case study requirements. The language of this section has been changed and the use of documentation has been removed. **R2.4.3** For each of the studies described in Requirements R2.4.1 and ~~Requirement~~ R2.4.2, sensitivity case(s) that are intended to stress the System with variations ~~to reflect~~ in one or more of the following conditions not already included in the studies shall be ~~run and documentation of the technical rationale for why each of the conditions was or was not selected shall be supplied~~ included in the Assessment:		
Brazos Electric Power Cooperative, Inc.	No	We do agree with the wording change in 2.4 which uses 'assessed annually'. 2.4.1 and 2.4.2 are ok. 2.4.3 is not agreeable, as it implies or could imply a number of studies are required. Stability studies are not required as often as steady state studies. A new in-line load serving substation can certainly impact the steady state results of an area but would not have the same impact from a steady state perspective. In other words, we feel that running stability studies for a number of small variables does not provide any added benefit and thus stability studies should not be treated the same as steady state studies from a requirement standpoint. More emphasis should continue to be

Organization	Question 2:	Question 2 Comments:
		placed on the steady state analysis. 2.4.3 should be edited to say "Sensitivity cases as deemed appropriate by the TP or PC, that stress the System (or BES) may be run reflecting one or more of the following conditions. Other sensitivities not included below may also be run. Appropriate documentation should be included describing the rationale for the selection of the cases and conditions "delete 2.4.4 as it is taken care of in 2.4.3 2.5 can be deleted as it adds nothing to the stability requirements2.5.1 should be modified to be included under 2.4 as a required study with the caveats from 5.6 brought over defining parameters, or delete 2.5.1 altogether as 5.6 covers the addition of generation.2.5.2 is still fairly ambiguous even with the changes and should be deleted. However if kept it should be modified to remove the last part of the sentence beginning with "or the addition of a new substation?". The addition of a simple in-line substation does not have a material impact on the stability of a near-by plant.2.6.1 and 2.6.2 should be combined to remove the mention of generating plant stability. deleting 5.4 is ok Not sure of the need to add 5.5.2. Isn't that the intent of the whole Standard? 5.5.3 seems to be acceptable.
Response: R2.4: Thanks for your comment. R2.4.3: The SDT has changed this language to clarify the requirement; the use of documentation has been removed from the language. **R2.4.3** For each of the studies described in Requirements R2.4.1 and ~~Requirement~~ R2.4.2, sensitivity case(s) that are intended to stress the System with variations ~~to reflect~~ in one or more of the following conditions not already included in the studies shall be ~~run and documentation of the technical rationale for why each of the conditions was or was not selected shall be supplied~~ included in the Assessment: R2.4.4: This part of the Standard language has been removed. R2.5: This part of the Standard language has been removed and bullets under (new) Requirements R2.5.2 have been added to the language to clarify this position. The addition/deletion/change of individual generating unit capability of 20 MW or greater. An aggregated addition/deletion/change to a group of generating units directly connected through their step-up transformer(s) to the BES which total 20 MW or greater. R5.5.2: This requirement was deleted.		
NERC and Regional	No	PJM concurs with the general direction; however the sensitivity analysis section as written requires explanation of why

Organization	Question 2:	Question 2 Comments:
Coordination		certain sensitivities were not selected. However the sensitivity requirement must be defined. Prove the rationing. R2.4 should state for stability we should use light load rather than system peak which is for steady state analysis. R2.4 should be modified as followsR2.4 should be modified as followsR2.4 The Near-Term Transmission Planning Horizon portion of the Stability analysis requires: Suggest making all sub requirements bullets under R2.4 The words in R2.4 seem to state that the "analysis must be assessed annually" which seems to leave open the option of assessing an old study, whereas R2.2. and R2.3 state a study is required each year, and a study is conducted each year. The words need R2 must be clearer and more consistent. System stability requirements seem to be poorly defined. It appears that there is going to be an expectation that inter-area oscillation and small signal analysis be performed frequently over a variety of conditions. I'm not sure how geared up industry is for this. R2.4.1 is too ambiguous. This sub requirement requires a model that "appropriately represents the dynamic behavior of loads". However, the requirement does not reference how that judgment is made nor who would make the judgment. The sub bullets are vague and again provide no basis for performance or for arbitration. R2.4.4 should be deleted as it will deter TPs and PCs from conducting additional studies. R2.4.4.1-5; Should clearly define words like variation, modification, unavailability of long lead time facility, variability of reactive resources. R2.5 is ambiguous regarding the definition of "affects stability margins". What is the technical performance margin for "affect"? If not defined in the standard then who makes the decision? The TP? the auditor? NERC staff? Do you mean critical clearing time and how much of change for example percentage or cycle.

Response: The SDT has changed this language to reflect that this is to examine one sensitivity or more and the documentation requirement has been removed.

R2.1.3 For each of the studies described in Requirements R2.1.1 and ~~Requirement~~ R2.1.2, sensitivity case(s) that are intended to stress the System with ~~sensitivities~~ variations ~~that reflect~~ in one or more of the following conditions not already included in the studies shall be ~~run and documentation of the technical rationale for why each of the conditions was or was not selected shall be supplied~~ included in the Assessment:

R2.4: The SDT has determined that both Peak and Off-Peak should be studied; another Load case can be evaluated as a sensitivity.

R2.4 does state that an assessment shall be performed each year and the applicability of past studies is listed in Requirement R2.6.

R2.2. and R2.3: The language clearly states that a study is required for one of the years in the assessment period.

The SDT believes that each TP and PC should have discretion to determine the appropriate Stability studies applicable to their System.

Organization	Question 2:	Question 2 Comments:
R2.4.1: The SDT has changed this language to clarify that aggregate Load can be used here as well. This Requirement is to make you properly represent the dynamic behavior of Loads at high System Load levels. **R2.4.1** System peak Load for one of the five years. For peak System Load levels, a Load model shall be used which appropriately represents the dynamic behavior of Loads, including consideration of the behavior of induction motor Loads. An aggregate system Load model which represents the overall dynamic behavior of the Load is acceptable. R2.4.4 The SDT has deleted this section. R2.4.4.1-4 (now R2.4.3): The SDT has changed the language in these sections and made them a bulleted list. ~~Variations in~~ Load model assumptions ~~Modification of e~~Expected transfers ~~Unavailability of long lead time Facilities~~ Timing of the installation of new or modified Facilities. ~~Variability and outages of r~~Reactive resource~~s~~ capability. R2.5 This section of the Standard language has been removed.		
IESO	No	A. R2.4(i) We suggest to remove words such as "consideration of" and "deemed appropriate" since these are not measurable and not enforceable. Further, we continue to disagree with mandating sensitivity testing with descriptive subrequirements. Sensitivity testing (ii) Specific to R2.4.3, we continue to express our disagreement to include sensitivity testing in the requirements. We are disappointed that despite disagreements by the majority of the commenters and their suggestions to leave sensitivity testing to the TPs and PCs discretion, the SDT continues to stipulate detailed requirements for sensitivity testing. The SDT in its summary response to comments indicates that these testing are intended as "?providing some guidance on what could be included in the sensitivity studies without being too prescriptive." If these are indeed intended as guidance rather than enforceable requirements, then they should be provided in a technical document or a reference document that supports the standard, not in the standard itself. B. R2.5 (i) Similar to our comments under Q1 (i), the requirements should not restrict to changes at or near the Interconnection point. Transmission changes several buses removed from the generator's Interconnection point may also affect the stability performance of the generators. Suggest to reword it to "? in the nearby vicinity that can have an adverse reliability impact on the generating units' stability performance".(ii) There seems to be a hole or incomplete scenario in R2.5.2 in the sentence: "removal of a Transmission Line or the addition of a new substation in one of the Transmission Lines connected to the plant." We agree that removal of a transmission line in the vicinity needs to be assessed; we also believe that addition of not just a substation but also any transmission facilities in the vicinity should be assessed. We therefore suggest to reword this to: "removal of a Transmission Line or the addition of new

Organization	Question 2:	Question 2 Comments:
		transmission facilities in the generating plant's nearby vicinity that can have an adverse reliability impact on the generating units' stability performance. C. R3.4 (i) We do not agree with the requirement that: "If the Extreme Events analysis concludes there are cascading outages, an evaluation of implementing a change designed to reduce or mitigate the likelihood of such consequences shall be conducted." Future transmission systems are planned and designed accordingly to Planning Events. It should not be a surprise that applying Extreme Events to the planned transmission system for which it is not designed to withstand such events would show instability and/or cascading outages. The follow on actions should be to evaluate possible actions to contain and minimize the impact of cascading outages, rather than to come up with options or alternative designs to reduce or mitigate the likelihood of such occurrences (since doing so will imply that we design and plan for Extreme Events). We therefore suggest to reword it to: "If the Extreme Events analysis concludes there are cascading outages, an evaluation of possible actions to contain and minimize the impacts of cascading outages.

Response: The SDT examined the use of these terms and still believes that these are the best terms to use here.

The SDT has changed the language of Requirement R2.4.3 to examine one or more sensitivities and the documentation of the technical rationale for why each of the sensitivities not chosen has been removed.

R2.4.3 For each of the studies described in Requirements R2.4.1 and ~~Requirement~~ R2.4.2, sensitivity case(s) that are intended to stress the System with variations ~~to reflect~~ in one or more of the following conditions not already included in the studies shall be ~~run and documentation of the technical rationale for why each of the conditions was or was not selected shall be supplied~~ included in the Assessment:

R2.5: This section of the Standard language has been removed.

R3.4: The SDT has modified this requirement (now Requirement R3.5 and also Requirement R5.5.4 – now Requirement R4.5) to include mitigating the "adverse impacts of the event(s)."

R3.5 Those Extreme Events in Table 1 ~~– Steady State Performance~~ that are expected to produce more severe System impacts shall be identified~~,~~ and a list of those events to be evaluated for System performance in Requirement R3.2 created~~,~~. ~~and t~~The rationale for the Contingencies selected for evaluation shall be available as supporting information and shall ~~includ~~include~~e~~ an explanation of why the remaining Contingencies would produce less severe System results. If the ~~Extreme Events~~ analysis concludes there are cascading outages caused by the occurrence of Extreme Events, an evaluation of ~~implementing a change~~ possible actions designed to reduce ~~or mitigate~~ the likelihood or mitigate ~~of such~~the consequences and adverse impacts of the event(s) shall be conducted.

R4.5 ~~At a minimum, t~~Those Extreme Events in Table ~~2~~1 ~~– Stability Performance~~ that ~~would~~are expected to produce more severe System impacts shall be identified and a list of those events to be~~,~~ evaluated for System performance in Requirement R4.2 created~~,~~. ~~and t~~The rationale for the Contingencies selected for evaluation shall be available as supporting information and shall include~~e~~ an explanation of why the remaining Contingencies would produce less severe System results. If the ~~Extreme Events~~ analysis concludes there are cascading outages caused by the occurrence of Extreme Events, an evaluation of ~~implementing a change~~ possible actions designed to reduce ~~or mitigate~~ the likelihood or mitigate ~~of such~~the consequences of the event(s) shall be conducted

Organization	Question 2:	Question 2 Comments:
North Carolina Electric Membership Corp	No	We assume that 2.4 is supposed to be for "System" Stability. Please confirm.R2.4.1 - Is this for On-Peak? Please confirm. Also the subrequirement that requires a model that "appropriately represents the dynamic behavior of loads" is too ambiguous. The requirement does not reference how that judgment is made nor who would makes the judgment. The sub bullets are vague and provide no basis for performance. It should be clarified. How does the TP/PC model 3rd party loads from LSEs or DPs within its area that it interconnects? Is there an additional requirement to LSE/DPs needed in R9-R14 to collect such characteristics of load data? There is concern with load modeling requirements (use of word “appropriately” in R2.4.1). Does this requirement mandate the use of specific load models for each bus, or would an aggregate load model which represents the system as a whole be sufficient? Does the use of the PSS/E CONL function satisfy the requirements for a load model? The subrequirements of R2.4.3 are much too vague and are subject to various interpretations. These should be more specific as to what should be assessed, e.g. 5% variation in load model. Why aren't the last 2 subrequirements already accounted for within the assessment? R2.5 is ambiguous. What is meant by "affects stability margins"? What is the technical performance margin for "affect"? As defined by whom? The TP/PC? the auditor? Is this a % change or what? R5.4 – OK R5.5 - We are OK with changes made, but we do share a concern with others that the requirement to perform simulations on 20 MW generators (to be consistent with the Registration Criteria) per R5.5.1 may be too much, and we recommend also a 75 MW generator cutoff for required simulations.

Response: R2.4: The terms ‘unit’ and ‘System’ have been removed from the language and Stability has replaced them.

R2.4.1: Yes, this is for peak conditions. Requirement R2.4.2 is listed for Off-Peak Load.

R2.4.1: The SDT has changed this language to clarify that aggregate Load can be used here as well. This Requirement is to make you properly represent the dynamic behavior of Loads at high System Load levels.

R2.4.1 System peak Load for one of the five years. For peak System Load levels, a Load model shall be used which appropriately represents the dynamic behavior of Loads, including consideration of the behavior of induction motor Loads. An aggregate system Load model which represents the overall dynamic behavior of the Load is acceptable.

R2.4.3: This list of sensitivities is not overly prescriptive and allows the use of engineering judgment of the Planner. Language has been changed to provide clarity.

Organization	Question 2:	Question 2 Comments:
~~Variations in~~ Load model assumptions ~~Modification of e~~Expected transfers ~~Unavailability of long lead time Facilities~~ Timing of the installation of new or modified Facilities. ~~Variability and outages of r~~Reactive resource~~s~~ capability. The specific wording for Requirement R2.4.3.4 has been changed to "Reactive resource capability". This could mean a degradation of the capability of a reactive resource. This would not normally be covered in the assessment unless sensitivity studies require it. R.2.4.3.5. Generation additions, retirements, or other dispatch scenarios would not necessarily be studied in the assessment unless there were firm plans to change generation. The purpose of sensitivity studies is to answer "what if" questions which would not otherwise be covered in the assessment. R2.5: This language has been removed from the Standard. R5.5 The requirement for study has been changed to 25MW for a single generator or for an aggregate of generators. This language is now in Requirement R2.5.2. The addition/deletion/change of individual generating unit capability of 20 MW or greater. An aggregated addition/deletion/change to a group of generating units directly connected through their step-up transformer(s) to the BES which total 20 MW or greater.		
E.ON U.S. Transmission Planning	Yes and No	R2.4 The Near-Term Transmission Planning Horizon portion? implies that there are other portions of the [System] Stability analysis. This needs to be reworded to make it clear that there are no other portions. Add the word "System" to make it clear. R5 The data to be included in all models for the Planning Assessment is included in R1. The discussion here is redundant. This should be deleted. R5.4.3.1 Is this the intent? ? Following Single Contingency events, Transmission configuration changes and redispatch of generation can be simulated to return the system to Normal Rating provided that all Facilities shall be operating within their Emergency Rating.
Response: R2.4: The wording used is appropriate; there are no Stability Requirements beyond Near-Term R5: That language has been removed and replaced by language in Requirement R1. **R5** (now R4.) For the Stability portion of the Planning Assessment, as described in Requirement R2.4 ~~and Requirement R2.5~~, each Transmission Planner and Planning Coordinator shall perform the Contingency analyses listed in Table ~~2~~1 ~~– Stability Performance~~. The studies shall be based on computer simulations using models utilizing data provided in Requirement R1. ~~The studies shall be based on computer simulations using models utilizing data provided in~~		

Organization	Question 2:	Question 2 Comments:
~~Requirements R9 through R14, the MOD-010 and MOD-012 standards, and other data sources, to include known planned and long term outages of Transmission or generation equipment. The studies shall cover both System Stability and Generating Unit Stability. The following requirements apply to both System Stability and Generating Unit Stability studies unless otherwise noted~~ R5.4.3.1: This section of the language has been removed but these principles are applicable throughout the Standard.		
ERCOT System Planning	No	ERCOT believes R2.4.3, R2.4.4, R2.5, R5.2, and R5.3 should be deleted and R5.4 and R5.5 should be combined as follows: R2.4.3 should be deleted due to the unacceptable increase of stability runs required to meet the requirement. Considering sensitivities for outages of reactive resources and various dispatches and retirements for at least two different load levels is beyond the capability of most organizations, for both technical and manpower reasons. R2.4.4 is unbounded and not measurable, and should not be included as a requirement. R2.5 and all requirements for Generating Unit Stability analysis should be deleted since there is little or no difference between this and System Stability. R5.2 should be deleted because contingency definition standards should be defined in a modeling standard.R5.3 Voltage ride through capability should be included in the model provided by the generator and should not be necessary as a requirement in the TPL standard. R5.4 and R5.5 could be combined, as there is little or no difference between Generating Unit Stability analysis and System Stability analysis. In this case, R5.5.1 and R5.5.2 would be moved to R5.4 and R5.5.3 would be removed (repeats R.5.4.1).Also, it appears that R5.4.1 is in conflict with R5.4.2 because R5.4.1 says ?identified and evaluated for System Performance? but not have to meet requirements but R5.4.2 says ?meet requirements ? Table 2?. Also, R5.4.2 is repetitious with text of R5.
Response: The SDT has changed the language of R2.4.3 to examine one or more sensitivities and the documentation of the technical rationale for why each of the sensitivities not chosen has been removed. **R2.4.3** For each of the studies described in Requirements R2.4.1 and ~~Requirement~~ R2.4.2, sensitivity case(s) that are intended to stress the System with variations ~~to reflect~~ in one or more of the following conditions not already included in the studies shall be ~~run and documentation of the technical rationale for why each of the conditions was or was not selected shall be supplied~~ included in the Assessment: R2.4.4 and R2.5 were deleted from the language of this draft Standard. R5.2 and R5.3 The SDT did not agree to delete this language; language is needed to be in the Standard describing Contingencies and the use of low voltage ride through in studies. (Note that in the revised standard, Requirements R5.2 and R5.3 have become Requirements R4.3 through R4.3.2.) R5.4 & 5.5: The SDT has removed the distinction between System Stability and generator unit Stability.		

Organization	Question 2:	Question 2 Comments:
American Transmission Company	No	We disagree with the proposed R2.4.1 text. This inclusion of this requirement may be premature at this time for several reasons. There is presently no industry consensus on how the dynamic behavior of loads should be properly represented and analyzed. In addition, it would be a large and difficult effort to identify, collect, and maintain the pertinent information. It is presently difficult to obtain and maintain the percentage of residential, commercial, and industrial load at each transmission interconnection point, much less try to get the proper percentage of the various types of induction motor loads. We do not accept the R2.4.3.1 text and want some explanation of the what, when, and how to provide the technical rationale for why each condition was or was not used. In R2.4.3.1, what is meant by ?variations? (e.g. how much variation is enough)? In R2.4.3.2, what is meant by ?modification? (e.g. how much modification is enough) and "expected transfers" (e.g. firm or non-firm transfers)? In R2.4.3.3, what is meant by ?long lead time? (e.g. 1 month, 1 season, 1 year, 2 years, etc.)? In R2.4.4, we believe this requirement should not be added. Why was it included? It seems superfluous, because any entity can study other sensitivities if they want. Why should TP or PC have to study what the other entity wants to study? Who would be the judge in case of disagreement over the technical rationale? In R2.5.2, Why was the addition of a new substation included? We would not expect a new substation to negatively impact the system or generating unit stability. We note the R5.5 and R5.6 should really have been updated to refer to 5.4 and R5.5. In R5.4.3.1, we suggest that the time-limited aspect of Facility Ratings be included in the Glossary Definition and then it would not need to be clarified in various locations (R3.3.2.2, R3.5.1, R5.4.3.1, Table 1-Note 1, & Table 2-Note 1) throughout the standard.

Response: R2.4.1: The SDT has changed the language of Requirement R2.4.1. The SDT has changed this language to clarify that aggregate Load can be used here as well. This Requirement is to make you properly represent the dynamic behavior of Loads at high System Load levels.

R2.4.1 System peak Load for one of the five years. For peak System Load levels, a Load model shall be used which appropriately represents the dynamic behavior of Loads, including consideration of the behavior of induction motor Loads. An aggregate system Load model which represents the overall dynamic behavior of the Load is acceptable.

R2.4.3.1 The SDT has changed the language of R2.4.3 to examine one or more sensitivities and the documentation of the technical rationale for why each of the sensitivities not chosen has been removed.

R2.4.3 For each of the studies described in Requirements R2.4.1 and ~~Requirement~~ R2.4.2, sensitivity case(s) that are intended to stress the System with variations ~~to reflect~~ in one or more of the following conditions not already included in the studies shall be ~~run and documentation of the technical rationale for why~~

Organization	Question 2:	Question 2 Comments:
~~each of the conditions was or was not selected shall be supplied~~ included in the Assessment: R2.4.3.2, The SDT has changed the language of R2.4.3 to examine one or more sensitivities and the documentation of the technical rationale for why each of the sensitivities not chosen has been removed. R2.4.4 has been removed from the language of this Standard draft. R2.5.2: This language has also been removed from this draft Standard. R5.5 and R5.6: This new version contains renumbering which should address your concerns. R5.4.3.1: This section of the language has been removed but these principles are applicable all throughout the Standard.		
Duke Energy	No	R2.4.1 Load models that appropriately represent the dynamic behavior of induction motors are under development and may not be available for sometime. The implementation plan should take this into account and allow at least 36 months for implementation. This requirement is not immediately achievable. R2.4.3 - Although we agree with the perceived intent of R2.4.3, we believe the wording should be revised to make it very clear that it is not necessary to perform studies to substantiate your technical rationale for choosing not to perform any particular sensitivity study. Documented engineering judgment to support the decision not to perform the particular sensitivity studies should be sufficient. R2.4.3.1 should clearly state whether the load model refers to overall system load or parameters of the dynamic load model at individual busses. Recommend renumbering R2.4.4 to R2.4.3.6, and reword R2.4.3.6 as follows: Any other sensitivity, as deemed appropriate by the Transmission Planner or Planning Coordinator for their individual systems.R2.4 should say "System Stability", not just "Stability".
Response: R2.4.1 has been modified to clarify that a detailed dynamic Load model is not required at each bus. An aggregate System Load model which represents the overall dynamic behavior of the Load is acceptable. Because of this clarification, the SDT believes that a 24 month implementation period for this requirement is sufficient. This will be covered in the Implementation Plan which will be posted along with the third draft of the standard. **R2.4.1** System peak Load for one of the five years. For peak System Load levels, a Load model shall be used which appropriately represents the dynamic behavior of Loads, including consideration of the behavior of induction motor Loads. An aggregate system Load model which represents the overall dynamic behavior of the Load is acceptable. R2.4.3 The SDT has changed the language of R2.4.3 to reflect this, to examine one or more sensitivity and the documentation of the technical rationale for why each of the sensitivities not chosen has been removed. **R2.4.3** For each of the studies described in Requirements R2.4.1 and ~~Requirement~~ R2.4.2, sensitivity case(s) that are intended to stress the System with variations ~~to reflect~~ in one or more of the following conditions not already included in the studies shall be ~~run and documentation of the technical rationale for why~~		

Organization	Question 2:	Question 2 Comments:
~~each of the conditions was or was not selected shall be supplied~~ included in the Assessment: R2.4.3.1 The SDT has changed this language to clarify that aggregate load can be used here as well. This Requirement is to make you properly represent the dynamic behavior of loads at high system load levels. R2.4.4 to R2.4.3.6.The SDT has removed the distinction in the Standard between System Stability and generator unit Stability.		
Florida Reliability Coordinating Council, inc	No	R2.4.4 and R2.4.3 as written can create issues during the compliance assessment. These requirements place the burden of justifying the inclusion / exclusion of the sensitivities on the TP or PC. Thus, only a sensitivity deem appropriate by the TP or PC and not performed can be found non-compliant.R2.4.4 can be eliminated by changing the wording in R2.4.3 to include sensitivities? deemed appropriate by the TP or PC as follows:? For each of the studies described in Requirement R2.4.1 and Requirement R2.4.2, sensitivity case(s) deemed appropriate by the Transmission Planner or Planning Coordinator that stress the System to reflect, but not limited to, one or more of the following conditions shall be run and documentation of the technical rationale for why each of the conditions was or was not selected shall be supplied.?
Response: The SDT has changed the language of Requirement R2.4.3 to examine one or more sensitivities and the documentation of the technical rationale for why each of the sensitivities not chosen has been removed. **R2.4.3** For each of the studies described in Requirements R2.4.1 and ~~Requirement~~ R2.4.2, sensitivity case(s) that are intended to stress the System with variations ~~to reflect~~ in one or more of the following conditions not already included in the studies shall be ~~run and documentation of the technical rationale for why each of the conditions was or was not selected shall be supplied~~ included in the Assessment:		
SERC Reliability Review Subcommittee and Planning Standards Subcommittee	Yes and No	R2.4. No The word “System” was deleted during the re-write and only “Stability” is used. However, the sub-sections appear to be more appropriate to a “System Stability” assessment than for a “Generating Unit Stability” assessment. “Generating Unit Stability” assessments are the subject of Section R2.5 and “System Stability” assessments appear to be the intent of Section R2.4. Why does Requirement 2.4. specify the near-term transmission planning horizon “portion”? We recommend removal of the words “portion of the”. R2.4.1. No Change “Peak System Load” to “System On-Peak Load”. This is the term defined in the “NERC Glossary” and is consistent with the usage of “Off-Peak Load”. This change would be required through out the TPL Standard as well as in other standards. There is concern with load modeling requirements (use of word “appropriately” in R2.4.1). Does this requirement mandate the use of specific load models for each bus, or would an aggregate load model which represents the system as a whole be sufficient? Does the use of the PSS/E CONL function satisfy the requirements for a load model?

Organization	Question 2:	Question 2 Comments:
		R2.4.3 NoIn general we believe that breaking these requirements into specific sub-requirements, focusing on specific sensitivities, is too prescriptive and inappropriate. It will lead to over focus on these particular issues to the detriment of system reliability. The standard should not include an enumerated list of required sensitivities. Engineering judgment needs to be permitted. R2.5 Concur R5.4 Concur R5.5 No There is a concern with R5.5.1 with the requirement to perform simulations on 20 MW generators (to be consistent with the Registration Criteria). We recommend a 75 MW generator cutoff for required simulations.

Response: R2.4: The SDT has removed the distinction between System Stability and generator unit Stability.

R2.4.1 – The SDT does not believe there is any ambiguity in the term "peak System Load" and will continue to use that term.

R2.4.1 The SDT has changed this language to clarify that aggregate Load can be used here as well. This Requirement is to make you properly represent the dynamic behavior of Loads at high System Load levels.

R2.4.1 System peak Load for one of the five years. For peak System Load levels, a Load model shall be used which appropriately represents the dynamic behavior of Loads, including consideration of the behavior of induction motor Loads. An aggregate system Load model which represents the overall dynamic behavior of the Load is acceptable.

R2.4.3 The SDT has changed the language of Requirement R2.4.3 to reflect examining one or more sensitivity and the documentation of the technical rationale for why each of the sensitivities not chosen has been removed.

R2.4.3 For each of the studies described in Requirements R2.4.1 and ~~Requirement~~ R2.4.2, sensitivity case(s) that are intended to stress the System with variations ~~to reflect~~ in one or more of the following conditions not already included in the studies shall be ~~run and documentation of the technical rationale for why each of the conditions was or was not selected shall be supplied~~ included in the Assessment:

R5.5: The SDT agrees that there is little distinction between a single unit of a specific MW and an aggregation of the same number of MW. The requirement for study has been changed to 20 MW for a single generator or for an aggregate of generators. This is now located at Requirement R2.5.2.

The addition/deletion/change of individual generating unit capability of 20 MW or greater.

An aggregated addition/deletion/change to a group of generating units directly connected through their step-up transformer(s) to the BES which total 20 MW or greater.

Oncor Electric Delivery	No	For Requirement R2.4 would prefer to see more clarification on the System Off-Peak stability studies required and their purpose. Define/quantify type of stability issues to be addressed with this type of study. For sub requirement R2.4.3 the level of detail in the load modeling is very subjective and greatly impacts the analysis

Organization	Question 2:	Question 2 Comments:
		and results.
Response: R2.4: Transient Stability is generally worse at lower System Load levels when base load units are still generating near maximum output. All of the Contingencies in the table are to be considered for Off-Peak Load levels R2.4.3 The SDT has changed this language to clarify that aggregate Load can be used here as well. This Requirement is to make you properly represent the dynamic behavior of Loads at high System Load levels. The SDT has changed the language of Requirement R2.4.3 to examine one or more sensitivity and the documentation of the technical rationale for why each of the sensitivities not chosen has been removed. **R2.4.3** For each of the studies described in Requirements R2.4.1 and ~~Requirement~~ R2.4.2, sensitivity case(s) that are intended to stress the System with variations ~~to reflect~~ in one or more of the following conditions not already included in the studies shall be ~~run and documentation of the technical rationale for why each of the conditions was or was not selected shall be supplied~~ included in the Assessment		
FirstEnergy Corp.	No	R2.4.1 ? This requirement should be separated into two requirements as it covers two distinct topics; a) peak load study for one of the near-term years and b) dynamic load modeling. The use of the words "appropriately represents" and "consideration" is too vague and not strong enough for requirement language. Also, the requirement needs to better describe what is needed related to the modeling of induction motor load. What % of the load needs to be represented as motor load for various load classes ? commercial, industrial, residential? An industry white paper is needed to provide direction related to this undertaking. The SDT, when considering their Implementation Plan, will need to allow sufficient time to complete the dynamic load modeling which largely does not exist today. R2.4.3 ? Typo, need to remove strikethrough text on the word sensitivity. R2.4.4 ? Suggest making this a sub-requirement of R2.4.3 and only require documentation as to why each sensitivity case was selected. Documenting why something was not selected does not seem constructive and places an unneeded burden on documentation. It should be expected that over time, a range of sensitivities would be covered as a library of studies is built.
Response: R2.4.1: The SDT has changed this language to clarify that aggregate Load can be used here as well. This Requirement is to make you properly represent the dynamic behavior of Loads at high System Load levels. **R2.4.1** System peak Load for one of the five years. For peak System Load levels, a Load model shall be used which appropriately represents the dynamic behavior of Loads, including consideration of the behavior of induction motor Loads. An aggregate system Load model which represents the overall dynamic behavior of the Load is acceptable R2.4.3 The SDT did not find the typo indicated. R2.4.4 The language of R2.4.4 was deleted from the Standard language.		

Organization	Question 2:	Question 2 Comments:
Entergy Services, Inc.	No	General Comments: The enhanced requirements in this standard will result in an exponential increase in the amount of studies required to become compliant. Some of the changes such as the list of specific sensitivity studies will make it difficult to audit. Standards need to be measurable. As currently written, these requirements are difficult to measure. Furthermore, as indicated in the later questions, there could be significant costs to comply with these revised requirements Specific Comments: In 2.4.1, it would be better to address the "consideration of the behavior of induction motor Loads" in the sensitivity studies bullet, 2.4.3.1.,if this bullet is to be included at all. Furthermore, induction motor modeling is primarily required in areas with high load concentration that could be subject to angular and voltage stability issues. Considerable effort is required to collect information on motors. Therefore, studies to evaluate induction motor effects should be included in the sensitivity analysis section. In 2.4.3, what was the rationale for including only a portion of the sub-bullets included in 2.1.3? Also, in 2.1.3.7, does "Modification of planned Transmission outages" imply changes in dates? It seems unlikely that the cancellation of an outage would have negative impacts. More clarification is needed on what "modification" means in this requirement. R 2.4.3Each transmission provider has its own transmission planning needs and requirements. While it is true there are common elements and considerations that have to be incorporated in every transmission provider's planning process, it is difficult, if not impossible, to prescribe a list of sensitivities that is, or should be, applicable to everyone. Entergy has specific concerns regarding the following sensitivities. R.2.4.3.2 Modification of expected transfers: The use of "expected" transfer levels suggests that one can expect certain transfer patterns beyond what is modeled in base cases as firm. These sensitivities could result in an endless string of "what-if" scenarios where transmission users would attempt to influence these studies to advantage their respective market positions. Any system improvements based on such "expected" use of the system shall not result in discriminatory treatment of transmission users. R.2.4.3.5. Generation additions, retirements, or other dispatch scenarios. Generation additions are addressed by FERC-mandated study criteria. These requests are handled through the generation interconnection and system impact study processes. Generation retirements and other dispatch scenarios can have both positive and negative impacts on reliability. However, assumptions used to pick which resources are changed, and in what way, will likely be difficult to justify. R5.5 There is a concern with R5.5.1 with the requirement to perform simulations on 20 MW generators (to be consistent with the Registration Criteria). We recommend a 75 MW generator cutoff for required simulations.
Response: R2.4.1 The SDT has changed this language to clarify that aggregate Load can be used here as well. This Requirement is to make you properly represent the dynamic behavior of Loads at high System Load levels. **R2.4.1** System peak Load for one of the five years. For peak System Load levels, a Load model shall be used which appropriately represents the dynamic		

Organization	Question 2:	Question 2 Comments:
behavior of Loads, including consideration of the behavior of induction motor Loads. An aggregate system Load model which represents the overall dynamic behavior of the Load is acceptable R2.4.3The SDT has changed the language of Requirement R2.4.3 to examine one or more sensitivity and the documentation of the technical rationale for why each of the sensitivities not chosen has been removed. **R2.4.3** For each of the studies described in Requirements R2.4.1 and ~~Requirement~~ R2.4.2, sensitivity case(s) that are intended to stress the System with variations ~~to reflect~~ in one or more of the following conditions not already included in the studies shall be ~~run and documentation of the technical rationale for why each of the conditions was or was not selected shall be supplied~~ included in the Assessment: ~~Variations in~~ Load model assumptions ~~Modification of e~~Expected transfers ~~Unavailability of long lead time Facilities~~ Timing of the installation of new or modified Facilities. ~~Variability and outages of r~~Reactive resource~~s~~ capability. R2.4.3.5: These are changes to consider as possible sensitivities to give the TP a better understanding of its System. There is no justification of your assumptions required by the Standard. R5.5 The requirement for study has been changed to 20 MW for a single generator or for an aggregate of generators. This is now located at Requirement R2.5.2. The addition/deletion/change of individual generating unit capability of 20 MW or greater. An aggregated addition/deletion/change to a group of generating units directly connected through their step-up transformer(s) to the BES which total 20 MW or greater		
BPA Transmission Reliability Program	No	R2.4.1 references the use of a load model which appropriately represents the dynamic behavior of loads. However, such load models have not been developed yet. We recommend removing that requirement for load models until these models have been developed and approved. R2.5 and R5.5 refer to Generating Unit Stability studies. As stated above under Item 1, Generating Unit Stability is adequately addressed by the System Stability studies and does not need to be evaluated separately. Footnote 5.a.i in the notes following the Performance Requirements Tables, already specifies the requirements to meet. Therefore, we recommend removing the section on Generating Unit Stability Studies from standard TPL-001-1. The focus of this standard should be on "System Stability" which encompasses all generating units .Some of the requirements listed under R5.4 apply more generally than just within this section and are already covered elsewhere in the standards. R5.4.3.1 is already covered in Note 1 of Table 1. R5.4.3.2 is not relevant to Reliability Standards and would already be addressed by the relevant regulations, so it does not belong in this Standard. R5.4.3.3 is already covered in Note 1 of

Organization	Question 2:	Question 2 Comments:
		Table 2. Because these requirements are already covered by other sections of the Standard, they can be removed from R5.4.
Response: R2.4.1 The SDT has changed this language to clarify that aggregate Load can be used here as well. This Requirement is to make you properly represent the dynamic behavior of Loads at high System Load levels. **R2.4.1** System peak Load for one of the five years. For peak System Load levels, a Load model shall be used which appropriately represents the dynamic behavior of Loads, including consideration of the behavior of induction motor Loads. An aggregate system Load model which represents the overall dynamic behavior of the Load is acceptable R2.5 and R5.5: In response to industry comments, the SDT has to remove the distinction in the standard between System Stability and generating unit Stability. R5.4.3.1: The SDT has decided to remove Requirement R5.4.3 because the sub-requirements are already implicitly covered by the standard. Your suggested sub-requirement is also already implicitly covered by the standard.		
PPL EnergyPlus	Yes and No	R2.4.3 and 2.4.4 together with R2.7 are a very good effort to direct TSPs to not let scenarios drive their plans. Rather, the base case should drive the plan. If anything, the language in the standard could be strengthened.
Response: R2.4.4 has been removed from the language. R2.4.3: The SDT has changed the language of Requirement R2.4.3 to one or more sensitivity and the documentation of the technical rationale for why each of the sensitivities not chosen has been removed. **R2.4.3** For each of the studies described in Requirements R2.4.1 and ~~Requirement~~ R2.4.2, sensitivity case(s) that are intended to stress the System with variations ~~to reflect~~ in one or more of the following conditions not already included in the studies shall be ~~run and documentation of the technical rationale for why each of the conditions was or was not selected shall be supplied~~ included in the Assessment: ~~Variations in~~ Load model assumptions ~~Modification of e~~Expected transfers ~~Unavailability of long lead time Facilities~~ Timing of the installation of new or modified Facilities. ~~Variability and outages of r~~Reactive resource~~s~~ capability.		
TVA System Planning	Yes	
Tenaska, Inc.	Yes	

Organization	Question 2:	Question 2 Comments:
US Army Corp of Engineers, Northwestern Division	Yes	
Arkansas Electric Coop. Corp.	Yes	
LCRA TSC	Yes	
Response: Thank you for your response.		

3. The SDT has modified the definitions of Consequential and Non-Consequential Load Loss in response to industry comments. Do you concur with the modified definitions of Consequential and Non-Consequential Load Loss? If not, please state why and/or suggest specific changes.

Summary Consideration:

In response to numerous concerns the following changes were made to the draft standard:

- The definitions of Consequential Load Loss and Non-Consequential Load Loss were modified to be more direct.
- New definitions were added for Load Reduction and Supplemental Load Loss to address issues that were previously included in the Consequential Load Loss definition.
- Changes were made in the notes for Table 1 (item b) to address application of the revised definitions.
- Note 'b' in Table 1 has been revised to associate comments on Load loss to Steady State rather than Stability.
- Footnotes 5 & 10 were added to the Table to differentiate between Firm Transfer Service and Load Loss.
- The SDT didn't feel non-interruptible Load needed to be defined because Interruptible Load is a defined term.
- The requirement (old Requirement R3.3.2.1 – new Requirement R2.9) to specify the amount and duration of Load that may be lost was clarified to be the maximum for any Contingency and the requirement for duration was eliminated.

There is lingering concern in the industry with the following issues:

- The inability to shed firm Load for a first Contingency event
    - o The SDT considered this issue, but did not change the standard because it was specifically prohibited in FERC Order 693, Section 1773.
- The different treatment for Facilities greater than 300 kV versus Facilities less than 300 kV
    - o The SDT considered this issue, but did not change its perspective since the last posting. The following is the response provided in response to the first posting and the SDT has not been convinced that it should change:

"The initial draft of the proposed Transmission planning standard held the planning of 300 kV and higher Transmission Systems to a more stringent requirement than the remaining BES. Although not unanimous, the majority of the SDT believed the 300 kV and higher Systems (EHV) generally represent the backbone of many Systems in the various Interconnections and that the more stringent requirements were appropriate when considering N-1-1 Contingencies of two EHV Facilities. Systems operated above 300 kV generally do not directly serve end-use Load customers but rather act as the medium for moving large amounts of power from production to various Load centers where the energy is then delivered by other Transmission or sub-Transmission Systems to end-

use customers. It is the desire of NERC and various stakeholders that the backbone of the electric power grid be robust and held to a higher degree of reliability.

When EHV Systems are compromised, the large volumes of power they serve can place a severe amount of stress on parallel EHV or lower voltage paths. For example, if a large EHV transformer experiences a catastrophic failure, not only are other systems Facilities required to carry more Load but the System is also exposed to other N-1 conditions for long periods of time while awaiting a replacement or repair of the failed equipment. Large generation sources are typically connected at EHV levels and maintenance of the EHV Transmission lines within the vicinity of large generation plants must often be coordinated during scheduled unit outages, resulting again in multiple Facility outages over extended periods of time.

Therefore, it was the conclusion of the SDT in Draft 1 to propose greater reliability and operational flexibility through more stringent performance requirements when considering certain N-1 and N-1-1 Contingency events of EHV Systems. Throughout the industry, substation arrangements at EHV levels reflect the importance of these systems as the designs often consist of the more flexible and reliable ring-bus, breaker-and–a-half, or double bus-double breaker protection schemes as compared to the simpler, lower cost, single bus arrangements that are commonly found on lower voltage systems.

The feedback received from the industry was divided related to the SDT's emphasis placed on a higher expectation for the 300 kV and higher systems. Some commenters questioned the importance and the high costs that may be needed to mitigate existing system designs. Others agreed with the SDT's approach and indicated that the impact to their systems would be minimal. Some commenters even questioned why the more stringent approach was not applied to the entire 100 kV and higher systems. The SDT believes the Draft 2 changes are responsive to industry feedback and reflect an appropriate middle ground related to the importance of the EHV Transmission System."

There was no change with regards to the definition of Year One. The drafting team felt that if the studies referenced in the comments are duplicative, then the language in the Standard would allow them to use one study for both applications.

The definition for Planning Coordinator was deleted because the term has already been defined and added to the NERC Glossary by another SDT.

With regards to comments on the definitions creating a disincentive to build network Facilities, the Standards do not specify how an entity will comply.

The following changes have been made to the definitions due to industry comment:

Consequential Load Loss: ~~Load that is no longer connected to a source as a result of the event being studied or which is lost as a result of the load's response to the transient conditions of the event (other than through the action of UVLS or UFLS schemes). Although Load which is lost as a result of the Load's response to the transient conditions of the event is considered Consequential Load Loss and is permitted when Consequential Load Loss is allowed, Transmission planning entities are not allowed to rely upon the expectation of such Load loss to meet steady state performance requirements.~~ All Load that is no longer served by any Transmission Facilities as a result of the Facilities being removed from service by a planned Protection System operation to isolate fault conditions.

Load Reduction: Load that is still connected to the System, but is reduced due to lower voltage conditions following a Planning or Extreme Event.

Non-Consequential Load Loss: Non-Interruptible Load loss other than Consequential Load Loss, Supplemental Load Loss, and Load Reduction.~~. For example, non-Interruptible Load loss that occurs through manual (operator initiated) or automatic operations such as under-voltage Load shedding, under-frequency Load shedding, or Special Protection Systems would be considered Non-Consequential Load Loss~~.

Supplemental Load Loss: Load that is disconnected from the network by end-user equipment responding to post-Contingency System conditions.

The following requirement was added due to industry comments:

R2.9 The Planning Assessment shall identify the maximum permissible Non-Consequential Load Loss (megawatt Demand) for those Planning Events where Non-Consequential Load Loss is allowed in Table 1.

The following notes in the Table have been changed due to industry comment: ‘b’, ‘e’, and ‘i’.

Organization	Question 3:	Question 3 Comments:
Dominion - Electric Transmission Planning	No	Non-Consequential Load Loss: In the example provided with the definition of Non-Consequential Load Loss, it indicates that non-interruptible load loss that occurs through manual or automatic operations such as under voltage load shedding (UVLS), under-frequency load shedding (UFLS) or Special Protection Systems (SPS) would be considered Non-Consequential Load Loss. We recommend that the following statement be added to the standard in the definition -- "Interruptible loads such as the pump of a Pumped Storage Plant interrupted by an SPS should not be considered as a Non-Consequential load".
Response: The definition of the Non-Consequential Load Loss is qualified as ‘Non-Interruptible Load”. In your example, the Pumped Hydro load is defined as ‘interruptible’. There is nothing in the standard that associates Interruptible Load with Non-Consequential Load and nothing that prohibits the interruption of Interruptible Load. However, the SDT did change the definition to provide additional clarity. **Non-Consequential Load Loss:** Non-Interruptible Load loss other than Consequential Load Loss, Supplemental Load Loss, and Load Reduction.~~. For example, non-Interruptible Load loss that occurs through manual (operator initiated) or automatic operations such as under-voltage Load shedding, under-frequency Load shedding, or Special Protection Systems would be considered Non-Consequential Load Loss~~.		
NPCC	No	In the Consequential Load Loss definition, the word 'source' needs to be defined or explained further since it is unclear.
Hydro-Québec TransEnergie (HQT)	Yes and No	In the Consequential Load Loss definition, the word 'source' needs to be defined or explained further since it is unclear. It should be indicated that this also applies to " stability performance requirements" (refer to the end of last sentence of the definition).

Organization	Question 3:	Question 3 Comments:
Ameren	Yes and No	The revised definition of Consequential Load Loss needs to be simplified, as follows, "Consequential Load Loss: Load that is no longer served because it has been isolated from its network supply by a planned protection system operation to mitigate fault conditions." Additional clarifications as to when Consequential Load loss is allowed should not be included in the definition, but should instead be included in the Tables 1 and 2.Agree with the revised definition of Non-Consequential Load Loss.
Midwest ISO	No	Under the definition of consequential load, it is not clear who the term "Transmission planning entities" is referring to. Perhaps it should say "entities to which the standard is applicable". The last sentence could be amended to say: "Load that is no longer connected to a source as a result of the event being studied or which is lost as a result of the load's response to the transient conditions of the event (other than through the action of UVLS?..
Brazos Electric Power Cooperative, Inc.	No	Non-consequential is fine. For 'Consequential Load Loss' the entire last part of the definition that begins with "Although Load which is lost?" can be deleted or at least deleted to the part that begins with "Transmission planning entities are not allowed?". We think the last part of the sentence is intuitive.
Northeast Utilities	No	Northeast Utilities has participated with ISO-NE and NPCC and supports the comments filed by those organizations.
American Transmission Company	No	For Consequential Load Loss definition, we suggest that the last sentence be deleted because it is application text, rather than definition text. We accept the Non-Consequential Load Loss definition as written.
Florida Reliability Coordinating Council, inc	No	Propose changing the word ?a? to ?any? in the definition of Consequential Load Loss. Consequential Load Loss: Load that is no longer connected to ?ANY? source as a result ? The second sentence in the definition could be interpreted to disallow voltage dependent load models to meet Steady State Performance requirements. Since many planning events result in steady state voltage significantly lower than nominal, system load would be reduced. This definition would be clarified by differentiating load that is lost (no longer connected to a source) and load that is reduced as a result of reduced system voltage. Although Load which is lost (no longer connected to a source) as a result of the Load's response to the transient conditions of the event is considered Consequential Load Loss and is permitted when Consequential Load loss is allowed, Transmission planning entities are not allowed to rely upon the expectation of such Load Loss to meet steady state performance requirements.
New York Independent System Operator	No	In the Consequential Load Loss definition, the word 'source' needs to be defined or explained further since it is unclear.

Organization	Question 3:	Question 3 Comments:
Response: The definition of 'Consequential Load Loss' has been revised to make it more direct, which has resulted in the elimination of the reference. **Consequential Load Loss:** ~~Load that is no longer connected to a source as a result of the event being studied or which is lost as a result of the load's response to the transient conditions of the event (other than through the action of UVLS or UFLS schemes). Although Load which is lost as a result of the Load's response to the transient conditions of the event is considered Consequential Load Loss and is permitted when Consequential Load Loss is allowed, Transmission planning entities are not allowed to rely upon the expectation of such Load loss to meet steady state performance requirements.~~ All Load that is no longer served by any Transmission Facilities as a result of the Facilities being removed from service by a planned Protection System operation to isolate fault conditions.		
TVA System Planning	Yes	TVA agrees with the modified definitions. However, the definition for "Consequential Load Loss" can still be confusing. Suggest definition of "Load that is deenergized by relay action as a result of the event being studied ?." Additional wording in "Consequential load loss" about transient conditions can be confusing as well - we suggest including this additional information later in the document. For Non-consequential load loss, suggest use of "Firm" instead of "Non - Interruptible" Load Loss.
Response: The definition of 'Consequential Load Loss' has been revised to make it more direct and has eliminated the reference to 'transient'. There are potential associations with the term 'Firm' that the SDT is trying to avoid in this definition and therefore has decided to stay with the reference to Non-interruptible. **Consequential Load Loss:** ~~Load that is no longer connected to a source as a result of the event being studied or which is lost as a result of the load's response to the transient conditions of the event (other than through the action of UVLS or UFLS schemes). Although Load which is lost as a result of the Load's response to the transient conditions of the event is considered Consequential Load Loss and is permitted when Consequential Load Loss is allowed, Transmission planning entities are not allowed to rely upon the expectation of such Load loss to meet steady state performance requirements.~~ All Load that is no longer served by any Transmission Facilities as a result of the Facilities being removed from service by a planned Protection System operation to isolate fault conditions.		
Progress Energy Carolinas	Yes	The definition of Consequential load loss has been appropriately modified to include loss of Load as a result of the Load's response to the transient condition. This recognizes the fact that when subjected to fault voltages of sufficient depth and duration, the resulting Load dynamics will result is loss of Load. Therefore, in order to more accurately replicate real-world behavior through dynamic stability simulation analysis, the proper representation of expected real world loss of load is acceptable. It is also proper that the computation of expected consequential Load loss and duration is not required for stability analysis. Attempts at determining additional Load loss due to load dynamics would not result in any useful information contributing to increased reliability.
Response: New definitions have been created to recognize other forms of acceptable Load loss that might occur in response to an event. The calculation of the potential Load loss for anything other than Consequential Load Loss is not required and the analysis is not expected to include it (see new 'Supplemental Load Loss' definition). However, a calculation of the maximum expected contingent Consequential Load Loss is expected (see Requirement R2.9). Note 'b" in the table has been revised to associate requirements to serve Supplemental Load Loss in Steady State rather than Stability. **Consequential Load Loss:** ~~Load that is no longer connected to a source as a result of the event being studied or which is lost as a result of the load's response~~		

Organization	Question 3:	Question 3 Comments:
~~to the transient conditions of the event (other than through the action of UVLS or UFLS schemes). Although Load which is lost as a result of the Load's response to the transient conditions of the event is considered Consequential Load Loss and is permitted when Consequential Load Loss is allowed, Transmission planning entities are not allowed to rely upon the expectation of such Load loss to meet steady state performance requirements.~~ All Load that is no longer served by any Transmission Facilities as a result of the Facilities being removed from service by a planned Protection System operation to isolate fault conditions. **Load Reduction:** Load that is still connected to the System, but is reduced due to lower voltage conditions following a Planning or Extreme Event. **Non-Consequential Load Loss:** Non-Interruptible Load loss other than Consequential Load Loss, Supplemental Load Loss, and Load Reduction.~~. For example, non-Interruptible Load loss that occurs through manual (operator initiated) or automatic operations such as under-voltage Load shedding, under-frequency Load shedding, or Special Protection Systems would be considered Non-Consequential Load Loss~~. **Supplemental Load Loss:** Load that is disconnected from the network by end-user equipment responding to post-Contingency System conditions. **R2.9** The Planning Assessment shall identify the maximum permissible Non-Consequential Load Loss (megawatt Demand) for those Planning Events where Non-Consequential Load Loss is allowed in Table 1. **Note "b":** Consequential Load Loss, Supplemental Load Loss, Load Reduction, and consequential generation loss ~~is allowed for all events shown.~~are acceptable as a consequence of any Planning or Extreme Event excluding P0. However, Supplemental Load Loss associated with an event shall not be used to meet steady state performance requirements.		
BCTC	No	Our understanding of these definitions and the performance requirements in Tables 1 and 2 is that they may eliminate the existing provision in Footnote (b) that allows loss of firm load for contingencies in local networks. Disconnection of loads on local networks in response to contingencies normally requires RAS/SPS, and the definition of NCLL states that this is NCLL. We are not clear whether our concern is with the definitions of CLL/NCLL, the Tables, or the definition of BES. In the Consideration of Comments on First Draft of TPL-001-1, page 49, response to First Energy, the SDT states "FERC has determined that any Load loss that is not directly connected to the faulted element is actually Non-Consequential Load loss." We found a similar response to WECC on page 449, item 6. While we do not disagree with the statements made by the SDT, that FERC wants clarification of what is CLL, we do not see where FERC has ruled out the use of RAS/SPS for CLL - see BCTC comments on the First Draft at page 28 of the Consideration of Comments. BCTC concurs with SaskPower and Manitoba Hydro that that CLL needs to include the concept of local networks. Another way to address this would be to exempt some local networks in the definition of the Bulk Electric System. In addition, BCTC cannot meet the proposed P1 (A) > 300 kV Steady State Performance of no Non-Consequential Load Loss for part of our 500 kV system. One radial segment of the BCTC 500 kV transmission system, a single circuit 450 km 500 kV transmission system, serves load and interconnects generation. For outages of the 500 kV transmission line, a RAS is used to shed load to match the generation in this island. We have no plans for transmission reinforcements (280 miles of 500 kV transmission line) to remove this RAS. Therefore, we will require some further clarification of the proposed P1 (A) >300 kV requirement of no Non-Consequential Load Loss for this requirement to be suitable for all of our system.
Response: FERC Order 693 Section 1773 does not permit loss of Non-Consequential Load (see reference). There is no provision in the FERC Order to allow		

Organization	Question 3:	Question 3 Comments:
loss of Load with the use of an RAS/SPS or to provide exceptions for local networks. The SDT's interpretation of the Order is that FERC is indicating that other alternatives must be pursued to eliminate this operating scheme. However, the SDT has provided an exception (Requirement R2.6.4) if a situation arises that is beyond the control of the Transmission Planner or Planning Coordinator that prevent the implementation of a Corrective Action Plan in the required timeframe. "1773. The Commission proposed in the NOPR to approve Reliability Standard TPL-002-0 as mandatory and enforceable. In addition, pursuant to section 215(d)(5) of the FPA and § 39.5(f) of our regulations, we proposed to direct NERC to submit a modification to TPL-002-0 that: (1) requires that critical system conditions be determined in the same manner as proposed for TPL-001-0; (2) requires the inclusion of the reliability impact of the entity's existing spare equipment strategy; (3) explicitly requires all generators to ride through the same set of Category B and C contingencies as required for wind generators in Order No. 661; (4) requires documentation of load models used in system studies and supporting rationale for their use; (5) clarifies the phrase "permit operating steps necessary to maintain system control" and (6) clarifies footnote (b) to Table 1 to allow no firm load or firm transactions to be interrupted except for consequential load loss."		
Manitoba Hydro	No	The definition of Consequential Load Loss implies the load lost as a result of "response to the transient condition of the event" need not be load directly connected to the element impacted by the event, but load in the local area. This definition could result in an interpretation that would justify unlimited load loss resulting from say voltage depression in an area impacted by a transient system swing. This opens a loop hole for allowing load loss for many single contingencies as a result of a transient swing causing a voltage dip and motor contactor drop-out as an example. There is a fine line between providing adequate voltage support or operating guides to avoid such load loss. Should a maximum level of load loss be specified? Comments on Other Definitions: Extreme Events: The definition should clarify whether or not Transmission system performance requirements must be met. – Events should be changed to Event - same for Planning Events Planning Coordinator: The Planning Coordinator definition should be left to the functional model. Having the term defined here may cause future confusion. For example, the FMWG has discussed the possible elimination of the PC, based on the realization that it is the Transmission Planner who integrates resources into the transmission plans.
Response: The standard is not designed to address regional performance standards, which should govern relative to acceptable voltage depressions or the magnitude of acceptable loss of Load during Planned Events or in response to Extreme Events. This is the responsibility of the Planning Coordinator and the Transmission Owner, which has been included as notes 'e' and 'i' in Table 1. **Header note 'e'** For all Planning Events, planned System adjustments such as Transmission configuration changes and redispatch of generation are allowed if such adjustments are executable within the time duration applicable to the Facility Ratings. **Header note 'i'**: ~~Dynamic voltages~~Transient voltage response shall be within acceptable limits established by the Planning Coordinator (or Transmission Planner if more restrictive).		

Organization	Question 3:	Question 3 Comments:
The reference has been reviewed and revised as appropriate. When the reference is to all events, such as in the title to Table 1, then 'Events' is correct. When the reference is to a single event, such as in the column header to Table 1, then 'Event' is correct. The definition for Planning Coordinator was deleted because the term has already been defined and added to the NERC Glossary by another SDT.		
Los Angeles Department of Water and Power	No	In general, support the comment from WECC on this question, however, where there are different performance allowed solely based on an arbitrary voltage class separation, it is discriminatory and without any scientific or historical basis.
Response: Many responders have asked the question why the distinction for bus sections above 300 kV. The SDT has prepared the following response. The initial draft of the proposed Transmission planning standard held the planning of 300 kV and higher Transmission Systems to a more stringent requirement than the remaining BES. Although not unanimous, the majority of the SDT believed the 300 kV and higher Systems (EHV) generally represent the backbone of many Systems in the various Interconnections and that the more stringent requirements were appropriate when considering N-1-1 Contingencies of two EHV Facilities. Systems operated above 300 kV generally do not directly serve end-use Load customers but rather act as the medium for moving large amounts of power from production to various Load centers where the energy is then delivered by other Transmission or sub-Transmission Systems to end-use customers. It is the desire of NERC and various stakeholders that the backbone of the electric power grid be robust and held to a higher degree of reliability. When EHV Systems are compromised, the large volumes of power they serve can place a severe amount of stress on parallel EHV or lower voltage paths. For example, if a large EHV transformer experiences a catastrophic failure, not only are other systems Facilities required to carry more Load but the System is also exposed to other N-1 conditions for long periods of time while awaiting a replacement or repair of the failed equipment. Large generation sources are typically connected at EHV levels and maintenance of the EHV Transmission lines within the vicinity of large generation plants must often be coordinated during scheduled unit outages, resulting again in multiple Facility outages over extended periods of time. Therefore, it was the conclusion of the SDT in Draft 1 to propose greater reliability and operational flexibility through more stringent performance requirements when considering certain N-1 and N-1-1 Contingency events of EHV Systems. Throughout the industry, substation arrangements at EHV levels reflect the importance of these systems as the designs often consist of the more flexible and reliable ring-bus, breaker-and–a-half, or double bus-double breaker protection schemes as compared to the simpler, lower cost, single bus arrangements that are commonly found on lower voltage systems. The feedback received from the industry was divided related to the SDT's emphasis placed on a higher expectation for the 300 kV and higher systems. Some commenters questioned the importance and the high costs that may be needed to mitigate existing system designs. Others agreed with the SDT's approach and indicated that the impact to their systems would be minimal. Some commenters even questioned why the more stringent approach was not applied to the entire 100 kV and higher systems. The SDT believes the Draft 2 changes are responsive to industry feedback and reflect an appropriate middle ground related to the importance of the EHV Transmission System.		
Transmission Agency of Northern	No	We generally agree with the definitions by themselves but have concerns about potential unintended consequences. This definition will severely limit the loads that can be classified as ?local Network customers, connected to or supplied by the Faulted element or by the affected area, may occur in certain areas without impacting the overall reliability of the

Organization	Question 3:	Question 3 Comments:
California		interconnected transmission systems? in footnote b of the existing TPL standards. In combination with raising the bar for loss of Facilities with operating voltages 300 kV or higher (P2, P4 and P5 in the Performance Tables), this definition may result in encouraging entities to connect more loads in a radial fashion or avoid loop connection to improve service reliability just to fit in the Consequential Load Loss definition, ??load no longer being connected to a source??. As a result, service reliability to customer would be adversely impacted without commensurate improvement in overall system reliability. In addition, existing design of many such local networks would normally require RAS/SPS to disconnect loads on local networks in response to contingencies. However, the definition of Non-Consequential Load Loss states that using RAS/SPS is Non-Consequential Load Loss. In the Consideration of Comments on the First Draft of TPL-001-1, page 49, response to First Energy, the SDT states "FERC has determined that any Load loss that is not directly connected to the faulted element is actually Non-Consequential Load loss." We found a similar response to WECC on page 449, item 6. While we do not disagree with the statements made by the SDT, that FERC wants clarification of what is Consequential Load Loss, we do not see where FERC has ruled out the use of RAS/SPS for Consequential Load Loss. Consequential Load Loss needs to include the concept of local networks. Another way to address this would be to exempt some local networks in the definition of the Bulk Electric System. The performance of existing systems has been designed to be consistent with the concepts of the quoted sentence above from footnote b of Table 1 of the existing TPL standards. There are many instances where some local network customer curtailments or local area load loss has been allowed by local regulatory authorities as long as the overall reliability of the interconnected system was not impacted. This is a result of tradeoffs with the cost and environmental impacts of providing a higher level of reliability in a local area. An attempt to eliminate the concepts contained in footnote b of the existing TPL standards would invalidate local regulatory decisions, place a large unintended cost burden on existing customers and could potentially create criteria that could not be met anytime soon, if ever, as a result of the long lead time required for system improvements. Any attempt to raise the bar by interpreting the definition of Non-Consequential Load as eliminating the concepts of footnote b is considered unacceptable. The new criteria need to clearly maintain these concepts to prevent a large disconnect with existing design criteria. The last sentence in the Definition of Consequential Load Loss (?Although Load which is lost as a result of the Load's response to the transient conditions of the event is considered Consequential Load Loss and is permitted when Consequential Load Loss is allowed, Transmission planning entities are not allowed to rely upon the expectation of such Load loss to meet steady state performance requirements?) seems more appropriate to be requirements. Therefore, please move this sentence to the Notes Section at the beginning of Table 1 as new Item 7.
Pacific Gas and Electric Co.	No	We generally agree with the definitions by themselves but have concerns about potential unintended consequences. This definition will severely limit the loads that can be classified as ?local Network customers, connected to or supplied by the Faulted element or by the affected area, may occur in certain areas without impacting the overall reliability of the interconnected transmission systems? in footnote b of the existing TPL standards. In combination with raising the bar for loss of Facilities with operating voltages 300 kV or higher (P2, P4 and P5 in the Performance Tables), this definition may result in encouraging entities to connect more loads in a radial fashion or avoid loop connection to improve service reliability just to fit in the Consequential Load Loss definition, ??load no longer being connected to a source??. As a result, service

Organization	Question 3:	Question 3 Comments:
		reliability to customer would be adversity impacted without commensurate improvement in overall system reliability. In addition, existing design of many such local networks would normally require RAS/SPS to disconnect loads on local networks in response to contingencies. However, the definition of Non-Consequential Load Loss states that using RAS/SPS is Non-Consequential Load Loss. In the Consideration of Comments on the First Draft of TPL-001-1, page 49, response to First Energy, the SDT states "FERC has determined that any Load loss that is not directly connected to the faulted element is actually Non-Consequential Load loss." We found a similar response to WECC on page 449, item 6. While we do not disagree with the statements made by the SDT, that FERC wants clarification of what is Consequential Load Loss, we do not see where FERC has ruled out the use of RAS/SPS for Consequential Load Loss. Consequential Load Loss needs to include the concept of local networks. Another way to address this would be to exempt some local networks in the definition of the Bulk Electric System. The performance of existing systems has been designed to be consistent with the concepts of the quoted sentence above from footnote b of Table 1 of the existing TPL standards. There are many instances where some local network customer curtailments or local area load loss has been allowed by local regulatory authorities as long as the overall reliability of the interconnected system was not impacted. This is a result of tradeoffs with the cost and environmental impacts of providing a higher level of reliability in a local area. An attempt to eliminate the concepts contained in footnote b of the existing TPL standards would invalidate local regulatory decisions, place a large unintended cost burden on existing customers and could potentially create criteria that could not be met anytime soon, if ever, as a result of the long lead time required for system improvements. Any attempt to raise the bar by interpreting the definition of Non-Consequential Load as eliminating the concepts of footnote b is considered unacceptable. The new criteria need to clearly maintain these concepts to prevent a large disconnect with existing design criteria. The last sentence in the Definition of Consequential Load Loss (Although Load which is lost as a result of the Load's response to the transient conditions of the event is considered Consequential Load Loss and is permitted when Consequential Load Loss is allowed, Transmission planning entities are not allowed to rely upon the expectation of such Load loss to meet steady state performance requirements?) seems more appropriate to be requirements. Therefore, please move this sentence to the Notes Section at the beginning of Table 1 as new Item 7.
Public Service Company of New Mexico	Yes and No	We generally agree with the definitions by themselves but have concerns about potential unintended consequences. This definition will severely limit the loads that can be classified as ?local Network customers, connected to or supplied by the Faulted element or by the affected area, may occur in certain areas without impacting the overall reliability of the interconnected transmission systems? in footnote b of the existing TPL standards. In combination with raising the bar for loss of Facilities with operating voltages 300 kV or higher (P2, P4 and P5 in the Performance Tables), this definition may result in encouraging entities to connect more loads in a radial fashion or avoid loop connection to improve service reliability just to fit in the Consequential Load Loss definition, ??load no longer being connected to a source??. As a result, service reliability to customer would be adversity impacted without commensurate improvement in overall system reliability. In addition, existing design of many such local networks would normally require RAS/SPS to disconnect loads on local networks in response to contingencies. However, the definition of Non-Consequential Load Loss states that using RAS/SPS is Non-Consequential Load Loss. In the Consideration of Comments on the First Draft of TPL-001-1, page 49,

Organization	Question 3:	Question 3 Comments:
		response to First Energy, the SDT states "FERC has determined that any Load loss that is not directly connected to the faulted element is actually Non-Consequential Load loss." We found a similar response to WECC on page 449, item 6. While we do not disagree with the statements made by the SDT, that FERC wants clarification of what is Consequential Load Loss, we do not see where FERC has ruled out the use of RAS/SPS for Consequential Load Loss. Consequential Load Loss needs to include the concept of local networks. Another way to address this would be to exempt some local networks in the definition of the Bulk Electric System. The performance of existing systems has been designed to be consistent with the concepts of the quoted sentence above from footnote b of Table 1 of the existing TPL standards. There are many instances where some local network customer curtailments or local area load loss has been allowed by local regulatory authorities as long as the overall reliability of the interconnected system was not impacted. This is a result of tradeoffs with the cost and environmental impacts of providing a higher level of reliability in a local area. An attempt to eliminate the concepts contained in footnote b of the existing TPL standards would invalidate local regulatory decisions, place a large unintended cost burden on existing customers and could potentially create criteria that could not be met anytime soon, if ever, as a result of the long lead time required for system improvements. Any attempt to raise the bar by interpreting the definition of Non-Consequential Load as eliminating the concepts of footnote b is considered unacceptable. The new criteria need to clearly maintain these concepts to prevent a large disconnect with existing design criteria. The last sentence in the Definition of Consequential Load Loss (?Although Load which is lost as a result of the Load's response to the transient conditions of the event is considered Consequential Load Loss and is permitted when Consequential Load Loss is allowed, Transmission planning entities are not allowed to rely upon the expectation of such Load loss to meet steady state performance requirements?) seems more appropriate to be requirements. Therefore, please move this sentence to the Notes Section at the beginning of Table 1 as new Item 7.
Puget Sound Energy, Inc.	No	We generally agree with the definitions by themselves but have concerns about potential unintended consequences. This definition will severely limit the loads that can be classified as ?local Network customers, connected to or supplied by the Faulted element or by the affected area, may occur in certain areas without impacting the overall reliability of the interconnected transmission systems? in footnote b of the existing TPL standards. In combination with raising the bar for loss of Facilities with operating voltages 300 kV or higher (P2, P4 and P5 in the Performance Tables), this definition may result in encouraging entities to connect more loads in a radial fashion or avoid loop connection used to improve service reliability just to fit in the Consequential Load Loss definition, ??load no longer being connected to a source??. As a result, service reliability to customer will be degraded without commensurate improvement in overall system reliability. In addition, existing design of many such local networks may use RAS/SPS to disconnect loads on local networks in response to low probability contingencies. However, the definition of Non-Consequential Load Loss states that using RAS/SPS is Non-Consequential Load Loss. In the Consideration of Comments on the First Draft of TPL-001-1, page 49, response to First Energy, the SDT states "FERC has determined that any Load loss that is not directly connected to the faulted element is actually Non-Consequential Load loss." We found a similar response to WECC on page 449, item 6. While we do not disagree with the statements made by the SDT, that FERC wants clarification of what is Consequential Load Loss, we do not see where FERC has ruled out the use of RAS/SPS for Consequential Load Loss. Consequential Load Loss needs to

Organization	Question 3:	Question 3 Comments:
		include the concept of local networks. Another way to address this would be to exempt some local networks in the definition of the Bulk Electric System. There are many instances where some local network customer curtailments or local area load loss has been allowed by local regulatory authorities as long as the overall reliability of the interconnected system was not impacted. This is a result of tradeoffs with the cost and environmental impacts of providing a higher level of reliability in a local area. An attempt to eliminate the concepts contained in footnote b of the existing TPL standards would invalidate local regulatory decisions, place a large unintended cost burden on existing customers and could potentially create criteria that could not be met anytime soon, if ever, as a result of the long lead time required for system improvements. Any attempt to raise the bar by interpreting the definition of Non-Consequential Load as eliminating the concepts of footnote b is considered unacceptable. The new criteria need to clearly maintain these concepts to prevent a large disconnect with existing design criteria. The last sentence in the Definition of Consequential Load Loss (?Although Load which is lost as a result of the Load's response to the transient conditions of the event is considered Consequential Load Loss and is permitted when Consequential Load Loss is allowed, Transmission planning entities are not allowed to rely upon the expectation of such Load loss to meet steady state performance requirements?) seems more appropriate to be requirements. Therefore, please move this sentence to the Notes Section at the beginning of Table 1 as new Item 7.
Idaho Power Company	No	We generally do not disagree with the definitions by themselves but have concerns about potential unintended consequences. This definition will severely limit the loads that can be classified as ?local Network customers, connected to or supplied by the Faulted element or by the affected area, may occur in certain areas without impacting the overall reliability of the interconnected transmission systems? in footnote b of the existing TPL standards. In combination with raising the bar for loss of Facilities with operating voltages 300 kV or higher (P2, P4 and P5 in the Performance Tables), this definition may result in encouraging entities to connect more loads in a radial fashion or avoid loop connection to improve service reliability just to fit in the Consequential Load Loss definition, ??load no longer being connected to a source??. As a result, service reliability to customer would be adversity impacted without commensurate improvement in overall system reliability. In addition, existing design of many such local networks would normally require RAS/SPS to disconnect loads on local networks in response to contingencies. However, the definition of Non-Consequential Load Loss states that using RAS/SPS is Non-Consequential Load Loss. In the Consideration of Comments on First Draft of TPL-001-1, page 49, response to First Energy, the SDT states "FERC has determined that any Load loss that is not directly connected to the faulted element is actually Non-Consequential Load loss." We found a similar response to WECC on page 449, item 6. While we do not disagree with the statements made by the SDT, that FERC wants clarification of what is Consequential Load Loss, we do not see where FERC has ruled out the use of RAS/SPS for Consequential Load Loss. Consequential Load Loss needs to include the concept of local networks. Another way to address this would be to exempt some local networks in the definition of the Bulk Electric System. The performance of existing systems has been designed to be consistent with the concepts of the quoted sentence above from footnote b of Table 1 of the existing TPL standards. There are many instances where some local network customer curtailments or local area load loss has been allowed by local regulatory authorities as long as the overall reliability of the interconnected system was not impacted. This is a result of tradeoffs with the cost and environmental impacts of providing a higher level of reliability in a local area. An attempt to

Organization	Question 3:	Question 3 Comments:
		eliminate the concepts contained in footnote b of the existing TPL standards would invalidate local regulatory decisions, place a large unintended cost burden on existing customers and could potentially create criteria that could not be met anytime soon, if ever, as a result of the long lead time required for system improvements. Any attempt to raise the bar by interpreting the definition of Non-Consequential Load as eliminating the concepts of footnote b is considered unacceptable. The new criteria need to clearly maintain these concepts to prevent a large disconnect with existing design criteria. The last sentence in the Definition of Consequential Load Loss (?Although Load which is lost as a result of the Load's response to the transient conditions of the event is considered Consequential Load Loss and is permitted when Consequential Load Loss is allowed, Transmission planning entities are not allowed to rely upon the expectation of such Load loss to meet steady state performance requirements?) seems more appropriate to be requirements. Therefore, please move this sentence to the Notes Section at the beginning of Table 1 as new Item 7.
SMUD	No	We generally agree with the definitions by themselves but have concerns about potential unintended consequences. This definition will severely limit the loads that can be classified as ?local Network customers, connected to or supplied by the Faulted element or by the affected area, may occur in certain areas without impacting the overall reliability of the interconnected transmission systems? in footnote b of the existing TPL standards. In combination with raising the bar for loss of Facilities with operating voltages 300 kV or higher (P2, P4 and P5 in the Performance Tables), this definition may result in encouraging entities to connect more loads in a radial fashion or avoid loop connection to improve service reliability just to fit in the Consequential Load Loss definition, ??load no longer being connected to a source??. As a result, service reliability to customer would be adversity impacted without commensurate improvement in overall system reliability. In addition, existing design of many such local networks would normally require RAS/SPS to disconnect loads on local networks in response to contingencies. However, the definition of Non-Consequential Load Loss states that using RAS/SPS is Non-Consequential Load Loss. In the Consideration of Comments on the First Draft of TPL-001-1, page 49, response to First Energy, the SDT states "FERC has determined that any Load loss that is not directly connected to the faulted element is actually Non-Consequential Load loss." We found a similar response to WECC on page 449, item 6. While we do not disagree with the statements made by the SDT, that FERC wants clarification of what is Consequential Load Loss, we do not see where FERC has ruled out the use of RAS/SPS for Consequential Load Loss. Consequential Load Loss needs to include the concept of local networks. Another way to address this would be to exempt some local networks in the definition of the Bulk Electric System. The performance of existing systems has been designed to be consistent with the concepts of the quoted sentence above from footnote b of Table 1 of the existing TPL standards. There are many instances where some local network customer curtailments or local area load loss has been allowed by local regulatory authorities as long as the overall reliability of the interconnected system was not impacted. This is a result of tradeoffs with the cost and environmental impacts of providing a higher level of reliability in a local area. An attempt to eliminate the concepts contained in footnote b of the existing TPL standards would invalidate local regulatory decisions, place a large unintended cost burden on existing customers and could potentially create criteria that could not be met anytime soon, if ever, as a result of the long lead time required for system improvements. Any attempt to raise the bar by interpreting the definition of Non-Consequential Load as eliminating the concepts of footnote b is considered unacceptable.

Organization	Question 3:	Question 3 Comments:
		The new criteria need to clearly maintain these concepts to prevent a large disconnect with existing design criteria. The last sentence in the Definition of Consequential Load Loss (?Although Load which is lost as a result of the Load's response to the transient conditions of the event is considered Consequential Load Loss and is permitted when Consequential Load Loss is allowed, Transmission planning entities are not allowed to rely upon the expectation of such Load loss to meet steady state performance requirements?) seems more appropriate to be requirements. Therefore, please move this sentence to the Notes Section at the beginning of Table 1 as new Item 7.
Sierra Pacific Power Company / Nevada Power Company	No	We generally do not disagree with the definitions by themselves but have concerns about potential unintended consequences. This definition will severely limit the loads that can be classified as ?local Network customers, connected to or supplied by the Faulted element or by the affected area, may occur in certain areas without impacting the overall reliability of the interconnected transmission systems? in footnote b of the existing TPL standards. In combination with raising the bar for loss of Facilities with operating voltages 300 kV or higher (P2, P4 and P5 in the Performance Tables), this definition may result in encouraging entities to connect more loads in a radial fashion or avoid loop connection to improve service reliability just to fit in the Consequential Load Loss definition, ??load no longer being connected to a source??. As a result, service reliability to customer would be adversity impacted without commensurate improvement in overall system reliability. In addition, existing design of many such local networks would normally require RAS/SPS to disconnect loads on local networks in response to contingencies. However, the definition of Non-Consequential Load Loss states that using RAS/SPS is Non-Consequential Load Loss. In the Consideration of Comments on First Draft of TPL-001-1, page 49, response to First Energy, the SDT states "FERC has determined that any Load loss that is not directly connected to the faulted element is actually Non-Consequential Load loss." We found a similar response to WECC on page 449, item 6. While we do not disagree with the statements made by the SDT, that FERC wants clarification of what is Consequential Load Loss, we do not see where FERC has ruled out the use of RAS/SPS for Consequential Load Loss. Consequential Load Loss needs to include the concept of local networks. Another way to address this would be to exempt some local networks in the definition of the Bulk Electric System. The performance of existing systems has been designed to be consistent with the concepts of the quoted sentence above from footnote b of Table 1 of the existing TPL standards. There are many instances where some local network customer curtailments or local area load loss has been allowed by local regulatory authorities as long as the overall reliability of the interconnected system was not impacted. This is a result of tradeoffs with the cost and environmental impacts of providing a higher level of reliability in a local area. An attempt to eliminate the concepts contained in footnote b of the existing TPL standards would invalidate local regulatory decisions, place a large unintended cost burden on existing customers and could potentially create criteria that could not be met anytime soon, if ever, as a result of the long lead time required for system improvements. Any attempt to raise the bar by interpreting the definition of Non-Consequential Load as eliminating the concepts of footnote b is considered unacceptable. The new criteria need to clearly maintain these concepts to prevent a large disconnect with existing design criteria. The last sentence in the Definition of Consequential Load Loss (?Although Load which is lost as a result of the Load's response to the transient conditions of the event is considered Consequential Load Loss and is permitted when Consequential Load Loss is allowed, Transmission planning entities are not allowed to rely upon the expectation of such Load loss to meet

Organization	Question 3:	Question 3 Comments:
		steady state performance requirements?) seems more appropriate to be requirements. Therefore, please move this sentence to the Notes Section at the beginning of Table 1 as new Item 7.
Black Hills Corporation	No	We generally agree with the definitions by themselves but have concerns about potential unintended consequences. This definition will severely limit the loads that can be classified as ?local Network customers, connected to or supplied by the Faulted element or by the affected area, may occur in certain areas without impacting the overall reliability of the interconnected transmission systems? in footnote b of the existing TPL standards. In combination with raising the bar for loss of Facilities with operating voltages 300 kV or higher (P2, P4 and P5 in the Performance Tables), this definition may result in encouraging entities to connect more loads in a radial fashion or avoid loop connection to improve service reliability just to fit in the Consequential Load Loss definition, ??load no longer being connected to a source??. As a result, service reliability to customer would be adversity impacted without commensurate improvement in overall system reliability. In addition, existing design of many such local networks would normally require RAS/SPS to disconnect loads on local networks in response to contingencies. However, the definition of Non-Consequential Load Loss states that using RAS/SPS is Non-Consequential Load Loss. In the Consideration of Comments on the First Draft of TPL-001-1, page 49, response to First Energy, the SDT states "FERC has determined that any Load loss that is not directly connected to the faulted element is actually Non-Consequential Load loss." We found a similar response to WECC on page 449, item 6. While we do not disagree with the statements made by the SDT, that FERC wants clarification of what is Consequential Load Loss, we do not see where FERC has ruled out the use of RAS/SPS for Consequential Load Loss. Consequential Load Loss needs to include the concept of local networks. Another way to address this would be to exempt some local networks in the definition of the Bulk Electric System. The performance of existing systems has been designed to be consistent with the concepts of the quoted sentence above from footnote b of Table 1 of the existing TPL standards. There are many instances where some local network customer curtailments or local area load loss has been allowed by local regulatory authorities as long as the overall reliability of the interconnected system was not impacted. This is a result of tradeoffs with the cost and environmental impacts of providing a higher level of reliability in a local area. An attempt to eliminate the concepts contained in footnote b of the existing TPL standards would invalidate local regulatory decisions, place a large unintended cost burden on existing customers and could potentially create criteria that could not be met anytime soon, if ever, as a result of the long lead time required for system improvements. Any attempt to raise the bar by interpreting the definition of Non-Consequential Load as eliminating the concepts of footnote b is considered unacceptable. The new criteria need to clearly maintain these concepts to prevent a large disconnect with existing design criteria. The last sentence in the Definition of Consequential Load Loss (?Although Load which is lost as a result of the Load's response to the transient conditions of the event is considered Consequential Load Loss and is permitted when Consequential Load Loss is allowed, Transmission planning entities are not allowed to rely upon the expectation of such Load loss to meet steady state performance requirements?) seems more appropriate to be requirements. Therefore, please move this sentence to the Notes Section at the beginning of Table 1 as new Item 7.
Arizona Public	Yes and No	We generally agree with the definition but have concerns about a potential unintended consequence. This definition will

Organization	Question 3:	Question 3 Comments:
Service Co.		severely limit the loads that can be classified as ?local Network customers, connected to or supplied by the Faulted element or by the affected area, may occur in certain areas without impacting the overall reliability of the interconnected transmission systems? in footnote b of the existing TPL standards. In combination with raising the bar for loss of Facilities with operating voltages 300 kV or higher (P2, P4 and P5 in the Performance Tables), this definition may result in encouraging entities to connect more loads in a radial fashion or avoid loop connection to improve service reliability just to fit in the Consequential Load Loss definition, ??load no longer being connected to a source??. At a result, service reliability to customer would be adversity impacted without commensurate improvement in overall system reliability.
SRP	No	We generally agree with the definitions by themselves but have concerns about potential unintended consequences. This definition will severely limit the loads that can be classified as ?local Network customers, connected to or supplied by the Faulted element or by the affected area, may occur in certain areas without impacting the overall reliability of the interconnected transmission systems? in footnote b of the existing TPL standards. In combination with raising the bar for loss of Facilities with operating voltages 300 kV or higher (P2, P4 and P5 in the Performance Tables), this definition may result in encouraging entities to connect more loads in a radial fashion or avoid loop connection to improve service reliability just to fit in the Consequential Load Loss definition, ??load no longer being connected to a source??. As a result, service reliability to customer would be adversity impacted without commensurate improvement in overall system reliability. In addition, existing design of many such local networks would normally require RAS/SPS to disconnect loads on local networks in response to contingencies. However, the definition of Non-Consequential Load Loss states that using RAS/SPS is Non-Consequential Load Loss. In the Consideration of Comments on the First Draft of TPL-001-1, page 49, response to First Energy, the SDT states "FERC has determined that any Load loss that is not directly connected to the faulted element is actually Non-Consequential Load loss." We found a similar response to WECC on page 449, item 6. While we do not disagree with the statements made by the SDT, that FERC wants clarification of what is Consequential Load Loss, we do not see where FERC has ruled out the use of RAS/SPS for Consequential Load Loss. Consequential Load Loss needs to include the concept of local networks. Another way to address this would be to exempt some local networks in the definition of the Bulk Electric System. The performance of existing systems has been designed to be consistent with the concepts of the quoted sentence above from footnote b of Table 1 of the existing TPL standards. There are many instances where some local network customer curtailments or local area load loss has been allowed by local regulatory authorities as long as the overall reliability of the interconnected system was not impacted. This is a result of tradeoffs with the cost and environmental impacts of providing a higher level of reliability in a local area. An attempt to eliminate the concepts contained in footnote b of the existing TPL standards would invalidate local regulatory decisions, place a large unintended cost burden on existing customers and could potentially create criteria that could not be met anytime soon, if ever, as a result of the long lead time required for system improvements. Any attempt to raise the bar by interpreting the definition of Non-Consequential Load as eliminating the concepts of footnote b is considered unacceptable. The new criteria need to clearly maintain these concepts to prevent a large disconnect with existing design criteria. The last sentence in the Definition of Consequential Load Loss (?Although Load which is lost as a result of the Load's response to the transient conditions of the event is considered Consequential Load Loss and is permitted when Consequential Load

Organization	Question 3:	Question 3 Comments:
		Loss is allowed, Transmission planning entities are not allowed to rely upon the expectation of such Load loss to meet steady state performance requirements?) seems more appropriate to be requirements. Therefore, please move this sentence to the Notes Section at the beginning of Table 1 as new Item 7.
Tucson Electric Power Company	No	We generally agree with the definitions by themselves but have concerns about potential unintended consequences. This definition will severely limit the loads that can be classified as ?local Network customers, connected to or supplied by the Faulted element or by the affected area, may occur in certain areas without impacting the overall reliability of the interconnected transmission systems? in footnote b of the existing TPL standards. In combination with raising the bar for loss of Facilities with operating voltages 300 kV or higher (P2, P4 and P5 in the Performance Tables), this definition may result in encouraging entities to connect more loads in a radial fashion or avoid loop connection to improve service reliability just to fit in the Consequential Load Loss definition, ??load no longer being connected to a source??. As a result, service reliability to customer would be adversity impacted without commensurate improvement in overall system reliability. In addition, existing design of many such local networks would normally require RAS/SPS to disconnect loads on local networks in response to contingencies. However, the definition of Non-Consequential Load Loss states that using RAS/SPS is Non-Consequential Load Loss. In the Consideration of Comments on the First Draft of TPL-001-1, page 49, response to First Energy, the SDT states "FERC has determined that any Load loss that is not directly connected to the faulted element is actually Non-Consequential Load loss." We found a similar response to WECC on page 449, item 6. While we do not disagree with the statements made by the SDT, that FERC wants clarification of what is Consequential Load Loss, we do not see where FERC has ruled out the use of RAS/SPS for Consequential Load Loss. Consequential Load Loss needs to include the concept of local networks. Another way to address this would be to exempt some local networks in the definition of the Bulk Electric System. The performance of existing systems has been designed to be consistent with the concepts of the quoted sentence above from footnote b of Table 1 of the existing TPL standards. There are many instances where some local network customer curtailments or local area load loss has been allowed by local regulatory authorities as long as the overall reliability of the interconnected system was not impacted. This is a result of tradeoffs with the cost and environmental impacts of providing a higher level of reliability in a local area. An attempt to eliminate the concepts contained in footnote b of the existing TPL standards would invalidate local regulatory decisions, place a large unintended cost burden on existing customers and could potentially create criteria that could not be met anytime soon, if ever, as a result of the long lead time required for system improvements. Any attempt to raise the bar by interpreting the definition of Non-Consequential Load as eliminating the concepts of footnote b is considered unacceptable. The new criteria need to clearly maintain these concepts to prevent a large disconnect with existing design criteria. The last sentence in the Definition of Consequential Load Loss (?Although Load which is lost as a result of the Load's response to the transient conditions of the event is considered Consequential Load Loss and is permitted when Consequential Load Loss is allowed, Transmission planning entities are not allowed to rely upon the expectation of such Load loss to meet steady state performance requirements?) seems more appropriate to be requirements. Therefore, please move this sentence to the Notes Section at the beginning of Table 1 as new Item 7.

Organization	Question 3:	Question 3 Comments:
Modesto Irrigation District		Comments: We generally agree with the definitions by themselves but have concerns about potential unintended consequences. This definition will severely limit the loads that can be classified as ?local Network customers, connected to or supplied by the Faulted element or by the affected area, may occur in certain areas without impacting the overall reliability of the interconnected transmission systems? in footnote b of the existing TPL standards. In combination with raising the bar for loss of Facilities with operating voltages 300 kV or higher (P2, P4 and P5 in the Performance Tables), this definition may result in encouraging entities to connect more loads in a radial fashioner avoid loop connection to improve service reliability just to fit in the Consequential Load Loss definition, ??load no longer being connected to a source??. As a result, service reliability to customer would be adversity impacted without commensurate improvement in overall system reliability. In addition, existing design of many such local networks would normally require AS/SPS to disconnect loads on local networks in response to contingencies. However, the definition of Non-Consequential Load Loss states that using RAS/SPS is Non-Consequential Load Loss. In the Consideration of Comments on the First Draft of TPL-001-1, page 49, response to First Energy, the SDT states "FERC has determined that any Load loss that is not directly connected to the faulted element is actually Non-Consequential Load loss." We found a similar response to WECC on page 449, item 6.While we do not disagree with the statements made by the SDT, that FERC wants clarification of what is Consequential Load Loss, we do not see where FERC has ruled out the use of RAS/SPS for Consequential Load Loss. Consequential Load Loss needs to include the concept of local networks. Another way to address this would be to exempt some local networks in the definition of the Bulk Electric System. The performance of existing systems has been designed to be consistent with the concepts of the quoted sentence above from footnote b of Table 1 of the existing TPL standards. There are many instances where some local network customer curtailments or local area load loss has been allowed by local regulatory authorities as long as the overall reliability of the interconnected system was not impacted. This is a result of tradeoffs with the cost and environmental impacts of providing a higher level of reliability in a local area. An attempt to eliminate the concepts contained in footnote bof the existing TPL standards would invalidate local regulatory decisions, place a large unintended cost burden on existing customers and could potentially create criteria that could not be met anytime soon, if ever, as a result of the long lead time required for system improvements. Any attempt to raise the bar by interpreting the definition of Non-Consequential Load as eliminating the concepts of footnote b is considered unacceptable. The new criteria need to clearly maintain these concepts to prevent a large disconnect with existing design criteria. The last sentence in the Definition of Consequential Load Loss (?Although Load which is lost as a result of the Load's response to the transient conditions of the event is considered Consequential Load Loss and is permitted when Consequential Load Loss disallowed, Transmission planning entities are not allowed to rely upon the expectation of such Load loss to meet steady state performance requirements?) seems more appropriate to be requirements. Therefore, please move this sentence to the Notes Section at the beginning of Table 1 as new Item 7.
Tri-State G&T	No	We generally agree with the definitions by themselves but have concerns about potential unintended consequences. This definition will severely limit the loads that can be classified as ?local Network customers, connected to or supplied by the Faulted element or by the affected area, may occur in certain areas without impacting the overall reliability of the interconnected transmission systems? in footnote b of the existing TPL standards. In combination with raising the bar for

Organization	Question 3:	Question 3 Comments:
		loss of Facilities with operating voltages 300 kV or higher (P2, P4 and P5 in the Performance Tables), this definition may result in encouraging entities to connect more loads in a radial fashion or avoid loop connection to improve service reliability just to fit in the Consequential Load Loss definition, ??load no longer being connected to a source??. As a result, service reliability to customer would be adversity impacted without commensurate improvement in overall system reliability. In addition, existing design of many such local networks would normally require RAS/SPS to disconnect loads on local networks in response to contingencies. However, the definition of Non-Consequential Load Loss states that using RAS/SPS is Non-Consequential Load Loss. In the Consideration of Comments on the First Draft of TPL-001-1, page 49, response to First Energy, the SDT states "FERC has determined that any Load loss that is not directly connected to the faulted element is actually Non-Consequential Load loss." We found a similar response to WECC on page 449, item 6. While we do not disagree with the statements made by the SDT, that FERC wants clarification of what is Consequential Load Loss, we do not see where FERC has ruled out the use of RAS/SPS for Consequential Load Loss. Consequential Load Loss needs to include the concept of local networks. Another way to address this would be to exempt some local networks in the definition of the Bulk Electric System. The performance of existing systems has been designed to be consistent with the concepts of the quoted sentence above from footnote b of Table 1 of the existing TPL standards. There are many instances where some local network customer curtailments or local area load loss has been allowed by local regulatory authorities as long as the overall reliability of the interconnected system was not impacted. This is a result of tradeoffs with the cost and environmental impacts of providing a higher level of reliability in a local area. An attempt to eliminate the concepts contained in footnote b of the existing TPL standards would invalidate local regulatory decisions, place a large unintended cost burden on existing customers and could potentially create criteria that could not be met anytime soon, if ever, as a result of the long lead time required for system improvements. Any attempt to raise the bar by interpreting the definition of Non-Consequential Load as eliminating the concepts of footnote b is considered unacceptable. The new criteria need to clearly maintain these concepts to prevent a large disconnect with existing design criteria. The last sentence in the Definition of Consequential Load Loss (?Although Load which is lost as a result of the Load's response to the transient conditions of the event is considered Consequential Load Loss and is permitted when Consequential Load Loss is allowed, Transmission planning entities are not allowed to rely upon the expectation of such Load loss to meet steady state performance requirements?) seems more appropriate to be requirements. Therefore, please move this sentence to the Notes Section at the beginning of Table 1 as new Item 7.
ColumbiaGrid	No	We generally do not disagree with the definitions by themselves but have concerns about potential unintended consequences. This definition will severely limit the loads that can be classified as ?local Network customers, connected to or supplied by the Faulted element or by the affected area, may occur in certain areas without impacting the overall reliability of the interconnected transmission systems? in footnote b of the existing TPL standards. In combination with raising the bar for loss of Facilities with operating voltages 300 kV or higher (P2, P4 and P5 in the Performance Tables), this definition may result in encouraging entities to connect more loads in a radial fashion or avoid loop connection to improve service reliability just to fit in the Consequential Load Loss definition, ??load no longer being connected to a source??. As a result, service reliability to customer would be adversity impacted without commensurate improvement in

Organization	Question 3:	Question 3 Comments:
		overall system reliability. In addition, existing design of many such local networks would normally require RAS/SPS to disconnect loads on local networks in response to contingencies. However, the definition of Non-Consequential Load Loss states that using RAS/SPS is Non-Consequential Load Loss. In the Consideration of Comments on First Draft of TPL-001-1, page 49, response to First Energy, the SDT states "FERC has determined that any Load loss that is not directly connected to the faulted element is actually Non-Consequential Load loss." We found a similar response to WECC on page 449, item 6. While we do not disagree with the statements made by the SDT, that FERC wants clarification of what is Consequential Load Loss, we do not see where FERC has ruled out the use of RAS/SPS for Consequential Load Loss. Consequential Load Loss needs to include the concept of local networks. Another way to address this would be to exempt some local networks in the definition of the Bulk Electric System. The performance of existing systems has been designed to be consistent with the concepts of the quoted sentence above from footnote b of Table 1 of the existing TPL standards. There are many instances where some local network customer curtailments or local area load loss has been allowed by local regulatory authorities as long as the overall reliability of the interconnected system was not impacted. This is a result of tradeoffs with the cost and environmental impacts of providing a higher level of reliability in a local area. An attempt to eliminate the concepts contained in footnote b of the existing TPL standards would invalidate local regulatory decisions, place a large unintended cost burden on existing customers and could potentially create criteria that could not be met anytime soon, if ever, as a result of the long lead time required for system improvements. Any attempt to raise the bar by interpreting the definition of Non-Consequential Load as eliminating the concepts of footnote b is considered unacceptable. The new criteria need to clearly maintain these concepts to prevent a large disconnect with existing design criteria. The last sentence in the Definition of Consequential Load Loss (?Although Load which is lost as a result of the Load's response to the transient conditions of the event is considered Consequential Load Loss and is permitted when Consequential Load Loss is allowed, Transmission planning entities are not allowed to rely upon the expectation of such Load loss to meet steady state performance requirements?) seems more appropriate to be requirements. Therefore, please move this sentence to the Notes Section at the beginning of Table 1 as new Item 7.
Southern California Edison	No	We generally agree with the definitions by themselves but have concerns about potential unintended consequences. This definition will severely limit the loads that can be classified as ?local Network customers, connected to or supplied by the Faulted element or by the affected area, may occur in certain areas without impacting the overall reliability of the interconnected transmission systems? in footnote b of the existing TPL standards. In combination with raising the bar for loss of Facilities with operating voltages 300 kV or higher (P2, P4 and P5 in the Performance Tables), this definition may result in encouraging entities to connect more loads in a radial fashion or avoid loop connection to improve service reliability just to fit in the Consequential Load Loss definition, ??load no longer being connected to a source??. As a result, service reliability to customer would be adversity impacted without commensurate improvement in overall system reliability. In addition, existing design of many such local networks would normally require RAS/SPS to disconnect loads on local networks in response to contingencies. However, the definition of Non-Consequential Load Loss states that using RAS/SPS is Non-Consequential Load Loss. In the Consideration of Comments on the First Draft of TPL-001-1, page 49, response to First Energy, the SDT states "FERC has determined that any Load loss that is not directly connected to the

Organization	Question 3:	Question 3 Comments:
		faulted element is actually Non-Consequential Load loss." We found a similar response to WECC on page 449, item 6. While we do not disagree with the statements made by the SDT, that FERC wants clarification of what is Consequential Load Loss, we do not see where FERC has ruled out the use of RAS/SPS for Consequential Load Loss. Consequential Load Loss needs to include the concept of local networks. Another way to address this would be to exempt some local networks in the definition of the Bulk Electric System. The performance of existing systems has been designed to be consistent with the concepts of the quoted sentence above from footnote b of Table 1 of the existing TPL standards. There are many instances where some local network customer curtailments or local area load loss has been allowed by local regulatory authorities as long as the overall reliability of the interconnected system was not impacted. This is a result of tradeoffs with the cost and environmental impacts of providing a higher level of reliability in a local area. An attempt to eliminate the concepts contained in footnote b of the existing TPL standards would invalidate local regulatory decisions, place a large unintended cost burden on existing customers and could potentially create criteria that could not be met anytime soon, if ever, as a result of the long lead time required for system improvements. Any attempt to raise the bar by interpreting the definition of Non-Consequential Load as eliminating the concepts of footnote b is considered unacceptable. The new criteria need to clearly maintain these concepts to prevent a large disconnect with existing design criteria. The last sentence in the Definition of Consequential Load Loss (?Although Load which is lost as a result of the Load's response to the transient conditions of the event is considered Consequential Load Loss and is permitted when Consequential Load Loss is allowed, Transmission planning entities are not allowed to rely upon the expectation of such Load loss to meet steady state performance requirements?) seems more appropriate to be requirements. Therefore, please move this sentence to the Notes Section at the beginning of Table 1 as new Item 7.
US Bureau of Reclamation	No	We generally agree with the definitions by themselves but have concerns about potential unintended consequences. This definition will severely limit the loads that can be classified as ?local Network customers, connected to or supplied by the Faulted element or by the affected area, may occur in certain areas without impacting Comment Form for 2nd Draft of Standard TPL-001-1Assess Transmission Future Needs (Project 2006-02)Page 5 of 12the overall reliability of the interconnected transmission systems? in footnote b of the existing TPL standards. In combination with raising the bar for loss of Facilities with operating voltages 300 kV or higher (P2, P4 and P5 in the Performance Tables), this definition may result in encouraging entities to connect more loads in a radial fashion or avoid loop connection to improve service reliability just to fit in the Consequential Load Loss definition, ??load no longer being connected to a source??. As a result, service reliability to customer would be adversity impacted without comments urate improvement in overall system reliability. In addition, existing design of many such local networks would normally require RAS/SPS to disconnect loads on local networks in response to contingencies. However, the definition of Non-Consequential Load Loss states that using RAS/SPS is Non-Consequential Load Loss. In the Consideration of Comments on the First Draft of TPL-001-1, page 49, response to First Energy, the SDT states "FERC has determined that any Load loss that is not directly connected to the faulted element is actually Non-Consequential Load loss." We found a similar response to WECC on page 449, item 6.While we do not disagree with the statements made by the SDT, that FERC wants clarification of what is Consequential Load Loss, we do not see where FERC has ruled out the use of RAS/SPS for Consequential Load Loss. Consequential

Organization	Question 3:	Question 3 Comments:
		Load Loss needs to include the concept of local networks. Another way to address this would be to exempt some local networks in the definition of the Bulk Electric System. The performance of existing systems has been designed to be consistent with the concepts of the quoted sentence above from footnote b of Table 1 of the existing TPL standards. There are many instances where some local network customer curtailments or local area load loss has been allowed by local regulatory authorities as long as the overall reliability of the interconnected system was not impacted. This is a result of tradeoffs with the cost and environmental impacts of providing a higher level of reliability in a local area. An attempt to eliminate the concepts contained in footnote bof the existing TPL standards would invalidate local regulatory decisions, place a large unintended cost burden on existing customers and could potentially create criteria that could not be met anytime soon, if ever, as a result of the long lead time required for system improvements. Any attempt to raise the bar by interpreting the definition of Non-Consequential Load as eliminating the concepts of footnote b is considered unacceptable. The new criteria need to clearly maintain these concepts to prevent a large disconnect with existing design criteria. The last sentence in the Definition of Consequential Load Loss (?Although Load which is lost as a result of the Load's response to the transient conditions of the event is considered Consequential Load Loss and is permitted when Consequential Load Loss is allowed, Transmission planning entities are not allowed to rely upon the expectation of such Load loss to meet steady state performance requirements?) seems more appropriate to be requirements. Therefore, please move this sentence to the Notes Section at the beginning of Table 1 as new Item 7.

Response: With regards to the disincentives of the Consequential Load definition, the Standards do not specify how an entity will comply.

The SDT has made changes to the definitions and has clarified acceptable loss of Load situations. This includes moving the last sentence of the Consequential Load definition to the Table. However, FERC Order 693 Section 1773 does not permit loss of Non-Consequential Load (see reference). There is no provision in the FERC Order to allow loss of Load with the use of an RAS/SPS or to provide exceptions for local networks. Our interpretation of the Order is that FERC is indicating that other alternatives must be pursued to avoid loss of Non-Consequential Load. However, the SDT has provided an exception (Requirement R2.7.4) if a situation arises that is beyond the control of the Transmission Planner or Planning Coordinator that prevent the implementation of a Corrective Action Plan in the required timeframe.

Consequential Load Loss: ~~Load that is no longer connected to a source as a result of the event being studied or which is lost as a result of the load's response to the transient conditions of the event (other than through the action of UVLS or UFLS schemes). Although Load which is lost as a result of the Load's response to the transient conditions of the event is considered Consequential Load Loss and is permitted when Consequential Load Loss is allowed, Transmission planning entities are not allowed to rely upon the expectation of such Load loss to meet steady state performance requirements.~~ All Load that is no longer served by any Transmission Facilities as a result of the Facilities being removed from service by a planned Protection System operation to isolate fault conditions.

Load Reduction: Load that is still connected to the System, but is reduced due to lower voltage conditions following a Planning or Extreme Event.

Non-Consequential Load Loss: Non-Interruptible Load loss other than Consequential Load Loss, Supplemental Load Loss, and Load Reduction.~~. For example, non-Interruptible Load loss that occurs through manual (operator initiated) or automatic operations such as under-voltage Load shedding, under-frequency Load shedding, or Special Protection Systems would be considered Non-Consequential Load Loss~~.

Organization	Question 3:	Question 3 Comments:
Supplemental Load Loss: Load that is disconnected from the network by end-user equipment responding to post-Contingency System conditions. **Note 'b":** Consequential Load Loss, Supplemental Load Loss, Load Reduction, and consequential generation loss ~~is allowed for all events shown.~~are acceptable as a consequence of any Planning or Extreme Event excluding P0. However, Supplemental Load Loss associated with an event shall not be used to meet steady state performance requirements. "1773. The Commission proposed in the NOPR to approve Reliability Standard TPL-002-0 as mandatory and enforceable. In addition, pursuant to section 215(d)(5) of the FPA and § 39.5(f) of our regulations, we proposed to direct NERC to submit a modification to TPL-002-0 that: (1) requires that critical system conditions be determined in the same manner as proposed for TPL-001-0; (2) requires the inclusion of the reliability impact of the entity's existing spare equipment strategy; (3) explicitly requires all generators to ride through the same set of Category B and C contingencies as required for wind generators in Order No. 661; (4) requires documentation of load models used in system studies and supporting rationale for their use; (5) clarifies the phrase "permit operating steps necessary to maintain system control" and (6) clarifies footnote (b) to Table 1 to allow no firm load or firm transactions to be interrupted except for consequential load loss."		
National Grid	No	a. In the Consequential Load Loss definition, the word 'source' needs to be defined or explained further since it is unclear. b. Non-Consequential references non-interruptible load. Non-Interruptible load should be defined. Suggest: "Demand that the end-use customer has not made available to its Load-Serving Entity via contract or agreement for curtailment." c. The Consequential Load definition should specify "Interruptible and Non-Interruptible Load that is no longer connected to a source?" d. The inclusion of "or which is lost as a result of the load's response to the transient conditions of the event (other than through the action of UVLS or UFLS schemes)" confuses the definition of Consequential Load Loss, because of the imbedded exception for steady state performance. It seems that the intent of this provision is to recognize that this type of load loss could occur for either transient or steady state conditions and that Planning Assessments should not be required to remedy this type of situation. However, this does seem to be at odds with the application and stated acceptability of Consequential Load Loss as noted in Table 1. Note: Table 2 has no reference to the treatment of Consequential Load Loss. It may be helpful to address the transient load loss situation in a separate definition. As proposed in the draft, Firm Transmission Service is treated equal to load. In New England and New York, we focus on stressing transfer limits across and within the systems. By so doing, we preserve the internal transfer capabilities by design rather than modeling specific contractual transfers, which may not stress the internal interfaces. The exception is for the inter-Area ties. For inter-Area ties, the import or export capability is comparable to a generating unit, which we believe is acceptable to interrupt. We therefore feel that it should be acceptable to interrupt Firm Transmission Service over inter-Area ties and that Firm Transmission Service shouldn't be treated equally with load. Suggested changes: Change "Consequential Load Loss" to "Consequential Interruption". Change the definition to "Load, Firm Demand, or Firm Transmission Service that is no longer connected ..."Change "Non-Consequential Load Loss" to "Non-Consequential Interruption". Change the definition to "Non-Interruptible Load, Firm Demand, or loss of Firm Transmission Service other than Consequential Interruption that occurs

Organization	Question 3:	Question 3 Comments:
		through manual (operator initiated), automatic operations (such as under-voltage load shedding, under-frequency load shedding, or Special Protection Systems), or uncontrolled loss of a local area which does not significantly impact the Bulk Electric System."
Central Maine Power Company	No	There are a few significant concerns with these definitions: The definitions should be expanded to include interruption of Firm Transmission Service in a manner that is comparable to interruption of load; otherwise, Firm Transmission Service (FTS) is being treated in a manner that is superior to load. (The expansion of the definitions to include FTS would also address stated concerns associated with loss of radial or single facilities over which Firm Transmission arrangements have been made). There are perceived limitations to what constitutes Non-Consequential Load Loss. It must be clear that Non-Consequential load loss allows the cascading loss of a local area that does not adversely impact the BES. It would be impractical and unnecessary to anticipate that every such situation could be or needs to be managed by operator action or automatic control. Non-Interruptible load should be defined as, "Demand that the end-use customer has not made available to its Load-Serving Entity via contract or agreement for curtailment." The Consequential Load definition should specify "Interruptible and Non-Interruptible Load that is no longer connected to a source?" The inclusion of "or which is lost as a result of the load's response to the transient conditions of the event (other than through the action of UVLS or UFLS schemes)" confuses the definition of Consequential Load Loss, because of the imbedded exception for steady state performance. It seems that the intent of this provision is to recognize that this type of load loss could occur for either transient or steady state conditions and that Planning Assessments should not be required to remedy this type of situation. However, this does seem to be at odds with the application and stated acceptability of Consequential Load Loss as noted in Table 1. Note: Table 2 has no reference to the treatment of Consequential Load Loss. It may be helpful to address the transient load loss situation in a separate definition. Recommended Changes: Change "Consequential Load Loss" and definition to "Consequential Interruption - Load, Firm Demand, or Firm Transmission Service that is no longer connected?" Change "Non-Consequential Load Loss" and definition to "Non-Consequential Interruption - Non-Interruptible Load, Firm Demand, or Firm Transmission Service loss other than Consequential Interruption loss that occurs through manual (operator initiated), automatic operations such as under-voltage Load shedding, under-frequency Load shedding, or Special Protection Systems, or uncontrolled loss of a local area which does not significantly impact the BES."
NSTAR Electric	No	There are a few significant concerns with these definitions: The definitions need to be expanded to include interruption of Firm Transmission Service in a manner that is comparable to interruption of load; otherwise, Firm Transmission Service (FTS) is being treated in a manner that is superior to load. The expansion of the definitions to include FTS would also address stated concerns associated with loss of radial or single facilities over which Firm Transmission arrangements have been made. There are perceived limitations to what constitutes Non-Consequential Load Loss. It must be clear that Non-Consequential load loss allows for the cascading loss of a local area that does not adversely impact the BES. It would be impractical and unnecessary to anticipate that every such situation could be or needs to be managed by operator action or automatic control. Non-Interruptible load needs to be defined as," Demand that the end-use customer has not made available to its Load-Serving Entity via contract or agreement for curtailment." The Consequential Load definition should

Organization	Question 3:	Question 3 Comments:
		specify "Interruptible and Non-Interruptible Load that is no longer connected to a source?" The inclusion of "or which is lost as a result of the load's response to the transient conditions of the event (other than through the action of UVLS or UFLS schemes)" confuses the definition of Consequential Load Loss, because of the imbedded exception for steady state performance. It seems that the intent of this provision is to recognize that this type of load loss could occur for either transient or steady state conditions and that Planning Assessments should not be required to remedy this type of situation. However, this does seem to be at odds with the application and stated acceptability of Consequential Load Loss as noted in Table 1. Note: Table 2 has no reference to the treatment of Consequential Load Loss. It may be helpful to address the transient load loss situation in a separate definition. Recommended Changes: Change "Consequential Load Loss" and definition to "Consequential Interruption - Load, Firm Demand, or Firm Transmission Service that is no longer connected?" Change "Non-Consequential Load Loss" and definition to "Non-Consequential Interruption - Non-Interruptible Load, Firm Demand, or Firm Transmission Service loss other than Consequential Interruption loss that occurs through manual (operator initiated), automatic operations such as under-voltage Load shedding, under-frequency Load shedding, or Special Protection Systems, or uncontrolled loss of a local area which does not significantly impact the BES."
ISO New England Inc.	No	There are a few significant concerns with these definitions: The definitions need to be expanded to include interruption of Firm Transmission Service in a manner that is comparable to interruption of load; otherwise, Firm Transmission Service (FTS) is being treated in a manner that is superior to load. (The expansion of the definitions to include FTS would also address stated concerns associated with loss of radial or single facilities over which Firm Transmission arrangements have been made). There are perceived limitations to what constitutes Non-Consequential Load Loss. It must be clear that Non-Consequential load loss allows the cascading loss of a local area that does not adversely impact the BES. It would be impractical and unnecessary to anticipate that every such situation could be or needs to be managed by operator action or automatic control. Non-Interruptible load needs to be defined as," Demand that the end-use customer has not made available to its Load-Serving Entity via contract or agreement for curtailment." The Consequential Load definition should specify "Interruptible and Non-Interruptible Load that is no longer connected to a source?" The inclusion of "or which is lost as a result of the load's response to the transient conditions of the event (other than through the action of UVLS or UFLS schemes)" confuses the definition of Consequential Load Loss, because of the imbedded exception for steady state performance. It seems that the intent of this provision is to recognize that this type of load loss could occur for either transient or steady state conditions and that Planning Assessments should not be required to remedy this type of situation. However, this does seem to be at odds with the application and stated acceptability of Consequential Load Loss as noted in Table 1. Note: Table 2 has no reference to the treatment of Consequential Load Loss. It may be helpful to address the transient load loss situation in a separate definition. Recommended Changes: Change "Consequential Load Loss" and definition to "Consequential Interruption - Load, Firm Demand, or Firm Transmission Service that is no longer connected?" Change "Non-Consequential Load Loss" and definition- "Non-Consequential Interruption - Non-Interruptible Load, Firm Demand, or Firm Transmission Service loss other than Consequential Interruption loss that occurs through manual (operator initiated), automatic operations such as under-voltage Load shedding, under-frequency Load shedding, or Special Protection Systems, or uncontrolled loss of a local area which does not significantly impact the BES."

Organization	Question 3:	Question 3 Comments:
Orlando Utilities Commission	No	The definition refers to "A source" which implies that an area served by several sources that loses access to one source could lose some load since it lost "a source" or "its source". This is a different meaning then the one expressed on the national conference call. As written this definition also implies that the triggering of a UVLS, UFLS or load shedding SPS is not acceptable under the conditions for which non-consequential load loss is not allowed. If the Drafting team's intent is to forbid the use of these devices for certain levels of contingencies then it should be done directly in the standard not hidden in a definition. (While an SPS may or may not include load loss, UVLS and UFLS are effective because of the load loss.)
Response: Definitions have been changed to clarify the definition of Consequential Load Loss. The reference to 'source' has been eliminated. The SDT does not believe that a definition for Non-Interruptible load is necessary because Interruptible Load is defined. Notes have been added to provide conditions and clarifications relative to the interruptions of Firm Transmission Service. The definition of Non-Consequential Load Loss has also been changed to remove the reference to UFLS and UVLS, which are systems used for operations and are not applicable to a planning standard. **Consequential Load Loss:** ~~Load that is no longer connected to a source as a result of the event being studied or which is lost as a result of the load's response to the transient conditions of the event (other than through the action of UVLS or UFLS schemes). Although Load which is lost as a result of the Load's response to the transient conditions of the event is considered Consequential Load Loss and is permitted when Consequential Load Loss is allowed, Transmission planning entities are not allowed to rely upon the expectation of such Load loss to meet steady state performance requirements.~~ All Load that is no longer served by any Transmission Facilities as a result of the Facilities being removed from service by a planned Protection System operation to isolate fault conditions. **Load Reduction:** Load that is still connected to the System, but is reduced due to lower voltage conditions following a Planning or Extreme Event. **Non-Consequential Load Loss:** Non-Interruptible Load loss other than Consequential Load Loss, Supplemental Load Loss, and Load Reduction.~~. For example, non-Interruptible Load loss that occurs through manual (operator initiated) or automatic operations such as under-voltage Load shedding, under-frequency Load shedding, or Special Protection Systems would be considered Non-Consequential Load Loss~~. **Supplemental Load Loss:** Load that is disconnected from the network by end-user equipment responding to post-Contingency System conditions. **Note 'b":** Consequential Load Loss, Supplemental Load Loss, Load Reduction, and consequential generation loss ~~is allowed for all events shown.~~are acceptable as a consequence of any Planning or Extreme Event excluding P0. However, Supplemental Load Loss associated with an event shall not be used to meet steady state performance requirements.		
OPUC	Yes and No	The concept of Consequential Load Loss is generally acceptable. However, the presentation, notes and cross referencing need to be adjusted to avoid confusion.
Response: The SDT has reviewed references for consistency as part of the changes made in response to the comments received in this posting.		
JEA	Yes	Recommend changing "Non-Interruptible Load" to "non-Interruptible Load" (first occurrence of use in the new definition.

Organization	Question 3:	Question 3 Comments:
Response: The first use is at the beginning of a sentence and the SDT feels that the term is correctly capitalized.		
PacifiCorp	Yes and No	? We generally agree with the definition but have concerns about a potential unintended consequence. This definition will severely limit the loads that can be classified as ?local Network customers, connected to or supplied by the Faulted element or by the affected area, may occur in certain areas without impacting the overall reliability of the interconnected transmission systems? in footnote b of the existing TPL standards. In combination with raising the bar for loss of Facilities with operating voltages 300 kV or higher (P2, P4 and P5 in the Performance Tables), this definition may result in encouraging entities to connect more loads in a radial fashion or avoid loop connection to improve service reliability just to fit in the Consequential Load Loss definition, ??load no longer being connected to a source??. At a result, service reliability to customer would be adversity impacted without commensurate improvement in overall system reliability.
Response: With regards to the disincentives of the Consequential Load definition, the Standards do not specify how an entity will comply. However, if Systems are upgraded such that Load is not interrupted for first Contingency events, then there will be improvements to the overall reliability of the System.		
Progress Energy Florida, Inc.	No	The Definitions of ?Consequential Load Loss? and ?Non-Consequential Load Loss?, bring to mind the following concerns: Both Definitions are confusing and unclear as to their intent and meaning, and as presently worded it is PEFs belief that these particular Definitions can be interpreted in ways not intended by the SDT. For example, the definition of Consequential Load Loss contains the phrase "Load that is no longer connected to a source"; presumably this means "Load that is no longer connected to any source", but is not stated as such. PEF would note, however, its disagreement with the definition even with the wording change, given how the definition would be applied. UVLS, UFLS and SPS schemes are excluded from Consequential Load Loss, and thus are not allowed as mitigations for several outage scenarios. The SDT is essentially discouraging Transmission Owners from constructing such schemes, which is counterproductive to reliability, and actually reduces reasonable options left for Transmission Owners to the point that possible outcomes might be a) radializing of systems or b) removing breakers in order to convert load previously deemed Non-Consequential Load into Consequential Load. PEF maintains that where particular outage scenarios dictate the need for UVLS, UFLS and SPS schemes, the right to implement them should be allowed regardless of the category of event, so long as implementation in lieu of a more expensive project will not compromise the reliability of the BES. Whether or not UVLS, UFLS and SPS schemes continue to be categorized as Non-Consequential Load Loss, however, PEF disagrees with the definition given how it would be applied.
Response: With regards to the disincentives of the Consequential Load definition, the Standards do not specify how an entity will comply. The SDT has made changes to the definitions and has clarified acceptable loss of Load situations. This includes moving the last sentence of the Consequential Load definition to the Table. However, FERC Order 693 Section 1773 does not permit loss of Non-Consequential Load (see reference). There is no provision in the FERC Order to allow loss of Load with the use of an RAS/SPS or to provide exceptions for local networks. Our interpretation of the Order is that FERC is indicating that other alternatives must be pursued to avoid loss of Non-Consequential Load. However, the SDT has provided an exception (Requirement R2.6.4) if		

Organization	Question 3:	Question 3 Comments:
a situation arises that is beyond the control of the Transmission Planner or Planning Coordinator that prevent the implementation of a Corrective Action Plan in the required timeframe. “1773. The Commission proposed in the NOPR to approve Reliability Standard TPL-002-0 as mandatory and enforceable. In addition, pursuant to section 215(d)(5) of the FPA and § 39.5(f) of our regulations, we proposed to direct NERC to submit a modification to TPL-002-0 that: (1) requires that critical system conditions be determined in the same manner as proposed for TPL-001-0; (2) requires the inclusion of the reliability impact of the entity’s existing spare equipment strategy; (3) explicitly requires all generators to ride through the same set of Category B and C contingencies as required for wind generators in Order No. 661; (4) requires documentation of load models used in system studies and supporting rationale for their use; (5) clarifies the phrase “permit operating steps necessary to maintain system control” and (6) clarifies footnote (b) to Table 1 to allow no firm load or firm transactions to be interrupted except for consequential load loss.” The definition of Non-Consequential Load Loss has been changed to remove the reference to UFLS and UVLS, which are systems used for operations and are not applicable to a planning standard. **Non-Consequential Load Loss:** Non-Interruptible Load loss other than Consequential Load Loss, Supplemental Load Loss, and Load Reduction.~~. For example, non-Interruptible Load loss that occurs through manual (operator initiated) or automatic operations such as under-voltage Load shedding, under-frequency Load shedding, or Special Protection Systems would be considered Non-Consequential Load Loss~~		
Lafayette Utilities System	No	Non-consequential load loss is described as including non-interruptible load lost that results from manual or automatic operations "such as under-voltage Load shedding, under-frequency Load shedding, or Special Protection Systems ?." It should be clarified that the quoted items are not intended to be exhaustive of the non-manual Load loss situations that would be considered the loss of Non-consequential Load. For instance, some types of industrial applications that are power-quality dependent may be expected to disconnect or shut down in the event of fluctuations in frequency, voltage or current. Foreseeable load interruptions of this nature should be treated as "Non-consequential Load loss" even if the mechanism by which the load disconnects is other than a UFLS, UVLS or SPS system operated by the Distribution Provider.
Response: The definition of ‘Consequential Load Loss’ has been revised to make it more direct. New definitions have also been created to recognize other forms of acceptable Load loss that might occur in response to an event. The definition of Non-Consequential Load Loss has also been changed to remove the reference to UFLS and UVLS, which are systems used for operations and are not applicable to a planning standard. **Consequential Load Loss:** ~~Load that is no longer connected to a source as a result of the event being studied or which is lost as a result of the load’s response to the transient conditions of the event (other than through the action of UVLS or UFLS schemes). Although Load which is lost as a result of the Load’s response to the transient conditions of the event is considered Consequential Load Loss and is permitted when Consequential Load Loss is allowed, Transmission planning entities are not allowed to rely upon the expectation of such Load loss to meet steady state performance requirements.~~ All Load that is no longer served by any Transmission Facilities as a result of the Facilities being removed from service by a planned Protection System operation to isolate fault conditions. **Load Reduction:** Load that is still connected to the System, but is reduced due to lower voltage conditions following a Planning or Extreme Event.		

Organization	Question 3:	Question 3 Comments:
Non-Consequential Load Loss: Non-Interruptible Load loss other than Consequential Load Loss, Supplemental Load Loss, and Load Reduction.~~. For example, non-Interruptible Load loss that occurs through manual (operator initiated) or automatic operations such as under-voltage Load shedding, under-frequency Load shedding, or Special Protection Systems would be considered Non-Consequential Load Loss~~. **Supplemental Load Loss:** Load that is disconnected from the network by end-user equipment responding to post-Contingency System conditions.		
Exelon Transmission Planning	No	UVLS should be allowed for in the definition of non-consequential load shedding in certain lower probability contingencies above 300 kV. The complete disallowance seems to disincentive their use, contrary to the NERC Blackout Recommendation 13c. There is a value in their use for certain voltage stability situations. There does not appear to be any limit (except no cascading) to the amount of acceptable load loss once non-consequential load loss is allowed.
Response: Recommendation 13c appears to be focused on reviewing practices. It does not appear to make a recommendation relative to any of those practices. **"**Recommendation 13c: The Planning Committee, working in conjunction with the regional reliability councils, shall within two years reevaluate the criteria, methods, and practices used for system design, planning, and analysis; and shall report the results and recommendations to the NERC board. This review shall include an evaluation of transmission facility ratings methods and practices, and the sharing of consistent ratings information. Regional reliability councils may consider assembling a regional database that includes the ratings of all Bulk Electric System (100-kV and higher voltage) transmission lines, transformers, phase angle regulators, and phase shifters. This database should be shared with neighboring regions as needed for system planning and analysis. NERC and the regional reliability councils should review the scope, frequency, and coordination of interregional studies, to include the possible need for simultaneous transfer studies. Study criteria will be reviewed, particularly the maximum credible contingency criteria used for system analysis. Each control area will be required to identify, for both the planning and operating time horizons, the planned emergency import capabilities for each major load area." As a result, it is unclear whether the proposed Standard is actually contrary to the recommendation as you suggest. The definition of Non-Consequential Load Loss has also been changed to remove the reference to UFLS and UVLS, which are systems used for operations and are not applicable to a planning standard. **Non-Consequential Load Loss:** Non-Interruptible Load loss other than Consequential Load Loss, Supplemental Load Loss, and Load Reduction.~~. For example, non-Interruptible Load loss that occurs through manual (operator initiated) or automatic operations such as under-voltage Load shedding, under-frequency Load shedding, or Special Protection Systems would be considered Non-Consequential Load Loss~~.		
MidAmerican Energy Company	No	MEC notes that Non-Consequential Load Loss is defined by the SDT to include load dropped by Special Protection Systems while Consequential Load Loss does not exclude load dropped by Special Protection Systems. The SDT should resolve this contradiction between these two definitions by adding an appropriate reference to Special Protection Systems in the Consequential Load Loss.
MRO NERC Standards Review	No	Non-Consequential Load Loss is defined by the SDT to include load dropped by Special Protection Systems while Consequential Load Loss does not exclude load dropped by Special Protection Systems. The SDT should resolve this

Organization	Question 3:	Question 3 Comments:
Subcommittee		contradiction between these two definitions by adding an appropriate reference to Special Protection Systems in the Consequential Load Loss. For Consequential Load Loss definition, The MRO suggests that the last sentence be deleted because it is application text, rather than definition text.
Response: The definition of 'Consequential Load Loss' and 'Non-Consequential Load Loss' have been revised to make them more direct. New definitions have also been created to recognize other forms of acceptable Load loss that might occur in response to an event. **Consequential Load Loss:** ~~Load that is no longer connected to a source as a result of the event being studied or which is lost as a result of the load's response to the transient conditions of the event (other than through the action of UVLS or UFLS schemes). Although Load which is lost as a result of the Load's response to the transient conditions of the event is considered Consequential Load Loss and is permitted when Consequential Load Loss is allowed, Transmission planning entities are not allowed to rely upon the expectation of such Load loss to meet steady state performance requirements.~~ All Load that is no longer served by any Transmission Facilities as a result of the Facilities being removed from service by a planned Protection System operation to isolate fault conditions. **Load Reduction:** Load that is still connected to the System, but is reduced due to lower voltage conditions following a Planning or Extreme Event. **Non-Consequential Load Loss:** Non-Interruptible Load loss other than Consequential Load Loss, Supplemental Load Loss, and Load Reduction.~~. For example, non-Interruptible Load loss that occurs through manual (operator initiated) or automatic operations such as under-voltage Load shedding, under-frequency Load shedding, or Special Protection Systems would be considered Non-Consequential Load Loss~~. **Supplemental Load Loss:** Load that is disconnected from the network by end-user equipment responding to post-Contingency System conditions.		
SERC Dynamics Review Subcommittee	Yes	The modified definitions of Consequential load loss has been appropriately modified to include loss of Load as a result of the Load's response to the transient condition. This recognizes the fact that when subjected to fault voltages of sufficient depth and duration, the resulting Load dynamics will result is loss of Load. Therefore, in order to more accurately replicate real-world behavior through dynamic stability simulation analysis, the proper representation of expected real world loss of load is acceptable. It is also proper that the computation of expected consequential Load loss and duration is not required for single contingency stability analysis. If there is a need, Load loss due to the resulting transmission system configuration would be captured by steady state analysis. Attempts at determining additional Load loss due to load dynamics would not result in any useful information contributing to increased reliability.
Response: In response to other industry comments, the SDT has added a new definition which covers the loss of Load due to Load dynamics - Supplemental Load Loss. It is no longer included as part of Consequential Load Loss. In dynamic studies, Supplemental Load Loss is allowed for any planning or extreme event. The tabulation of Load lost due to a Contingency does not include Supplemental Load Loss.		
Arkansas Electric Coop. Corp.	No	These definitions are still confusing. I offer the following example to explain: If you have a networked transmission line serving several loads, a fault occurs on the line, and the load is dropped because of the line breakers at either end of the line operating. As a result the operator would normally sectionalize the line and isolate the faulted section. This results in the networked line now being two radials and the load is restored. From a planning standpoint the resulting steady state is

Organization	Question 3:	Question 3 Comments:
		the resulting two radials and there should not be any consequential load loss. From an operational standpoint steady state would have occurred at the time of the breakers opening and dropping the load. Operationally the load is consequential load loss. This being a planning standard the standard should require that all the load be served and the transmission line meet the (planning)steady state performance requirements. If the SDT agrees that the resulting radials should be capable of serving all the load and meet the planning steady state performance requirements then I can agree with the definition. If not then I disagree. In the planning environment systems should be studied and assessed based on an switchable element to switchable element basis and not just breaker to breaker. on-Consequential Load Loss - 1. Is it the intent of the SDT that Non-Consequential Load Loss be all firm load other than Consequential Load Loss? If not it should be. Is there a definition of "Non-Interruptible Load"? Didn't see it in the Glossary. 2. additional language should be added stating that the examples given are not inclusive. I have a problem with NERC providing examples in definitions because often the examples are interpreted as the definition itself when in reality their purpose is to clarify.

Response: In your example**,** Consequential Load Loss occurs with the initial event. The standard does not address the size of the Consequential Load or whether alternative sources are required to restore Consequential Load Loss.

Non-Consequential Load is intended to be Firm, which is evident by FERC Order 693 which states:

"1773. The Commission proposed in the NOPR to approve Reliability Standard TPL-002-0 as mandatory and enforceable. In addition, pursuant to section 215(d)(5) of the FPA and § 39.5(f) of our regulations, we proposed to direct NERC to submit a modification to TPL-002-0 that: (1) requires that critical system conditions be determined in the same manner as proposed for TPL-001-0; (2) requires the inclusion of the reliability impact of

the entity's existing spare equipment strategy; (3) explicitly requires all generators to ride through the same set of Category B and C contingencies as required for wind generators in Order No. 661; (4) requires documentation of load models used in system studies and supporting rationale for their use; (5) clarifies the phrase "permit operating steps necessary to maintain system control" and (6) clarifies footnote (b) to Table 1 to allow no firm load or firm transactions to be interrupted except for consequential load loss."

The definition of 'Consequential Load Loss' has been revised to make it more direct. New definitions have also been created to recognize other forms of acceptable Load loss that might occur in response to an event.

Consequential Load Loss: ~~Load that is no longer connected to a source as a result of the event being studied or which is lost as a result of the load's response to the transient conditions of the event (other than through the action of UVLS or UFLS schemes). Although Load which is lost as a result of the Load's response to the transient conditions of the event is considered Consequential Load Loss and is permitted when Consequential Load Loss is allowed, Transmission planning entities are not allowed to rely upon the expectation of such Load loss to meet steady state performance requirements.~~ All Load that is no longer served by any Transmission Facilities as a result of the Facilities being removed from service by a planned Protection System operation to isolate fault conditions.

Organization	Question 3:	Question 3 Comments:
Load Reduction: Load that is still connected to the System, but is reduced due to lower voltage conditions following a Planning or Extreme Event. **Non-Consequential Load Loss:** Non-Interruptible Load loss other than Consequential Load Loss, Supplemental Load Loss, and Load Reduction.~~. For example, non-Interruptible Load loss that occurs through manual (operator initiated) or automatic operations such as under-voltage Load shedding, under-frequency Load shedding, or Special Protection Systems would be considered Non-Consequential Load Loss~~. **Supplemental Load Loss:** Load that is disconnected from the network by end-user equipment responding to post-Contingency System conditions. The SDT didn't feel non-Interruptible Load needed to be defined because Interruptible Load is a defined term		
Tri-State Generation and Transmission Association, Inc.	Yes	We agree with the definitions in concept - that Consequential Load Loss is load which would be unserved following a specific outage event, without any load shedding relay operations. However, there is some ambiguity in how things are defined for N-1-1 contingencies. For example, a firm contract or firm resource would not be automatically curtailed upon the first outage (N-1), but operators may need to curtail the contract or resource schedule to restore the system to acceptable operating limits, or arm relay schemes that would interrupt certain facilities for the second outage (N-1-1). It seems unreasonable that some such operator actions would not be allowed.
Response: The SDT has revised the definitions and tables to provide greater clarification on what can be curtailed. **Consequential Load Loss:** ~~Load that is no longer connected to a source as a result of the event being studied or which is lost as a result of the load's response to the transient conditions of the event (other than through the action of UVLS or UFLS schemes). Although Load which is lost as a result of the Load's response to the transient conditions of the event is considered Consequential Load Loss and is permitted when Consequential Load Loss is allowed, Transmission planning entities are not allowed to rely upon the expectation of such Load loss to meet steady state performance requirements.~~ All Load that is no longer served by any Transmission Facilities as a result of the Facilities being removed from service by a planned Protection System operation to isolate fault conditions. **Load Reduction:** Load that is still connected to the System, but is reduced due to lower voltage conditions following a Planning or Extreme Event. **Non-Consequential Load Loss:** Non-Interruptible Load loss other than Consequential Load Loss, Supplemental Load Loss, and Load Reduction.~~. For example, non-Interruptible Load loss that occurs through manual (operator initiated) or automatic operations such as under-voltage Load shedding, under-frequency Load shedding, or Special Protection Systems would be considered Non-Consequential Load Loss~~. **Supplemental Load Loss:** Load that is disconnected from the network by end-user equipment responding to post-Contingency System conditions. **Note 'b":** Consequential Load Loss, Supplemental Load Loss, Load Reduction, and consequential generation loss ~~is allowed for all events shown.~~are acceptable as a consequence of any Planning or Extreme Event excluding P0. However, Supplemental Load Loss associated with an event shall not be used to meet steady state performance requirements.		
AEP	No	Should clarify that it's load that is no longer connected since the transmission facilities to which it is connected have been outaged as expected by the normal relay response to the event being studied. In other words, the loss of load that is connected to facilities that have cascaded as a result of the event being studied is not consequential load loss (nor is it non-

Organization	Question 3:	Question 3 Comments:
		consequential load loss). See load loss definitions under Attachment D of PJM Manual 14B for additional wording suggestions.
Response: The definition of 'Consequential Load Loss' has been revised to make it more direct, which clarifies that the causal event is a 'fault' that is cleared by 'planned protection system operation'. **Consequential Load Loss:** ~~Load that is no longer connected to a source as a result of the event being studied or which is lost as a result of the load's response to the transient conditions of the event (other than through the action of UVLS or UFLS schemes). Although Load which is lost as a result of the Load's response to the transient conditions of the event is considered Consequential Load Loss and is permitted when Consequential Load Loss is allowed, Transmission planning entities are not allowed to rely upon the expectation of such Load loss to meet steady state performance requirements.~~ All Load that is no longer served by any Transmission Facilities as a result of the Facilities being removed from service by a planned Protection System operation to isolate fault conditions.		
Lakeland Electric	No	Recommend: Consequential: Load that is no longer served because its electrical path to the BES is open as a direct result of system response to the event under study. Load lost due to event induced transients is Consequential load loss; however, the this load must be included in the model during steady-state analysis. Load lost due to UFLS, UVLS, Special Protection Schemes and operator actions are not considered Consequential. Non-Consequential: Load that is no longer served for any reason other than those identified in the definition on Consequential.
Response: The SDT has made changes to the definitions which are conceptually consistent with your suggestion. **Consequential Load Loss:** ~~Load that is no longer connected to a source as a result of the event being studied or which is lost as a result of the load's response to the transient conditions of the event (other than through the action of UVLS or UFLS schemes). Although Load which is lost as a result of the Load's response to the transient conditions of the event is considered Consequential Load Loss and is permitted when Consequential Load Loss is allowed, Transmission planning entities are not allowed to rely upon the expectation of such Load loss to meet steady state performance requirements.~~ All Load that is no longer served by any Transmission Facilities as a result of the Facilities being removed from service by a planned Protection System operation to isolate fault conditions. **Load Reduction:** Load that is still connected to the System, but is reduced due to lower voltage conditions following a Planning or Extreme Event. **Non-Consequential Load Loss:** Non-Interruptible Load loss other than Consequential Load Loss, Supplemental Load Loss, and Load Reduction.~~. For example, non-Interruptible Load loss that occurs through manual (operator initiated) or automatic operations such as under-voltage Load shedding, under-frequency Load shedding, or Special Protection Systems would be considered Non-Consequential Load Loss~~. **Supplemental Load Loss:** Load that is disconnected from the network by end-user equipment responding to post-Contingency System conditions.		
Southern Company Transmission	Yes and No	Yes on the definition. The definition of Consequential Load Loss has been appropriately modified to include loss of load as a result of the load's response to the transient condition. This recognizes the fact that when subjected to fault voltages of sufficient depth and duration, the load undervoltage protection will result in loss of Load. Therefore, in order to more accurately replicate real-world behavior through dynamic stability simulation analysis, the proper representation of expected

Organization	Question 3:	Question 3 Comments:
		real world loss of load is acceptable. No on R3.3.2.1 dealing with Consequential Load. The computation of expected consequential load loss and duration does not result in any useful information contributing to increased reliability. Therefore, this requirement R3.3.2.1 should be dropped. If the computation is not deleted, at least the duration part of it should be dropped. In a Planning analysis, the duration is indeterminate.
Response: New definitions have been created to recognize other forms of acceptable Load loss that might occur in response to an event. The calculation of the potential Load loss for anything other than Consequential Load Loss is not required and the analysis is not expected to include it (see new 'Supplemental Load Loss' definition). However, a calculation of the maximum expected contingent Consequential Load Loss is expected (see Requirement R2.9). Requirement R3.3.2.1 has been rewritten as Requirement R2.9 to more specifically identify what is required and 'duration' has been dropped. **Consequential Load Loss:** ~~Load that is no longer connected to a source as a result of the event being studied or which is lost as a result of the load's response to the transient conditions of the event (other than through the action of UVLS or UFLS schemes). Although Load which is lost as a result of the Load's response to the transient conditions of the event is considered Consequential Load Loss and is permitted when Consequential Load Loss is allowed, Transmission planning entities are not allowed to rely upon the expectation of such Load loss to meet steady state performance requirements.~~ All Load that is no longer served by any Transmission Facilities as a result of the Facilities being removed from service by a planned Protection System operation to isolate fault conditions. **Load Reduction:** Load that is still connected to the System, but is reduced due to lower voltage conditions following a Planning or Extreme Event. **Non-Consequential Load Loss:** Non-Interruptible Load loss other than Consequential Load Loss, Supplemental Load Loss, and Load Reduction.~~. For example, non-Interruptible Load loss that occurs through manual (operator initiated) or automatic operations such as under-voltage Load shedding, under-frequency Load shedding, or Special Protection Systems would be considered Non-Consequential Load Loss~~. **Supplemental Load Loss:** Load that is disconnected from the network by end-user equipment responding to post-Contingency System conditions. **R2.9** The Planning Assessment shall identify the maximum permissible Non-Consequential Load Loss (megawatt Demand) for those Planning Events where Non-Consequential Load Loss is allowed in Table 1.		
North Carolina Electric Membership Corp	No	Although the modified definitions are an improvement over the previous version, addressing the following issues in the Consequential Load Loss definition will further improve clarity:1) Redundancy: The second sentence in the definition says "Although Load which is lost as a result of the Load's response to the transient conditions of the event is considered Consequential Load Loss and is permitted when Consequential Load Loss is allowed,?". It appears that "?and is permitted when Consequential Load Loss is allowed,?" is redundant and may be omitted/deleted -- isn't this *always* permitted for all events, except P0 (normal)? (See head note 4 in Table 1 -- Steady State Performance). 2) Who are the "planning entities"? Suggest replacing with Functional Model terms Transmission Planner and Planning Coordinator. 3) Verbosity: It appears that the intent of the second sentence in the definition can be conveyed more concisely. Consider

Organization	Question 3:	Question 3 Comments:
		changing to "However, relying upon the expected Load loss during transient conditions of the event to meet steady state performance requirements is not allowed." 4) If the verbiage proposed above is found acceptable, we offer a follow-up suggestion. Because the second sentence in the definition essentially characterizes the exception to the allowed Consequential Load Loss during steady state performance evaluation, we suggest moving it out of the definition and appending it within head note 4 in Table 1 -- Steady State Performance. 5) While the Consequential Load Loss definition employs the acronyms UFLS and UVLS, their expanded descriptions have been used in the Non-Consequential Load Loss definition. Suggest that these terms be used consistently in both definitions. Also, why is Special Protection Systems included as an example of what constitutes Non-Consequential Load Loss but is excluded from the list of exceptions to Consequential Load Loss (whereas UVLS and UFLS appear consistently in both)? Perhaps examples of each are needed: Consequential Load Loss examples might be a) tapped load from an outaged networked line from main station breaker to main station breaker of entire line, b) outaged T/T transformer serving radial load that that taps the networked transmission line, c) load served from a radial feeder from a single source. Non-consequential might include a) manual load dump or generator trip to mitigate cascading or uncontrolled load loss or an overload during adverse conditions, b) SPS addressing above, c) UFLS, d) UVLS.
SERC Reliability Review Subcommittee and Planning Standards Subcommittee	No	Comments: Although the modified definitions are a good improvement over the previous version, addressing the following issues in the Consequential Load Loss definition will further improve clarity:1) Redundancy: The second sentence in the definition says "Although Load which is lost as a result of the Load's response to the transient conditions of the event is considered Consequential Load Loss and is permitted when Consequential Load Loss is allowed,?". It appears that "?and is permitted when Consequential Load Loss is allowed,?" is redundant and may be omitted/deleted -- isn't this *always* permitted for all events? (See head note 4 in Table 1 -- Steady State Performance). 2) Who are the "planning entities"? Suggest replacing with Functional Model terms Transmission Planner and Planning Coordinator. 3) Verbosity: It appears that the intent of the second sentence in the definition can be conveyed more concisely. Consider changing to "However, relying upon the expected Load loss during transient conditions of the event to meet steady state performance requirements is not allowed." 4) If the verbiage proposed above is found acceptable, we offer a follow-up suggestion. Because the second sentence in the definition essentially characterizes the exception to the allowed Consequential Load Loss during steady state performance evaluation, we suggest moving it out of the definition and appending it within head note 4 in Table 1 -- Steady State Performance. 5) While the Consequential Load Loss definition employs the acronyms UFLS and UVLS, their expanded descriptions have been used in the Non-Consequential Load Loss definition. Suggest that these terms be used consistently in both

Organization	Question 3:	Question 3 Comments:
		definitions. Also, why is Special Protection Systems included as an example of what constitutes Non-Consequential Load Loss but is excluded from the list of exceptions to Consequential Load Loss (whereas UVLS and UFLS appear consistently in both)?
Response: The SDT has made changes to the definitions and text, which are conceptually consistent with your suggestions. The revised definitions are more direct and eliminate examples. The reference to Planning Entities has been deleted. The definition of Non-Consequential Load Loss has also been changed to remove the reference to UFLS and UVLS, which are systems used for operations and are not applicable to a planning standard. **Consequential Load Loss:** ~~Load that is no longer connected to a source as a result of the event being studied or which is lost as a result of the load's response to the transient conditions of the event (other than through the action of UVLS or UFLS schemes). Although Load which is lost as a result of the Load's response to the transient conditions of the event is considered Consequential Load Loss and is permitted when Consequential Load Loss is allowed, Transmission planning entities are not allowed to rely upon the expectation of such Load loss to meet steady state performance requirements.~~ All Load that is no longer served by any Transmission Facilities as a result of the Facilities being removed from service by a planned Protection System operation to isolate fault conditions. **Load Reduction:** Load that is still connected to the System, but is reduced due to lower voltage conditions following a Planning or Extreme Event. **Non-Consequential Load Loss:** Non-Interruptible Load loss other than Consequential Load Loss, Supplemental Load Loss, and Load Reduction.~~. For example, non-Interruptible Load loss that occurs through manual (operator initiated) or automatic operations such as under-voltage Load shedding, under-frequency Load shedding, or Special Protection Systems would be considered Non-Consequential Load Loss~~. **Supplemental Load Loss:** Load that is disconnected from the network by end-user equipment responding to post-Contingency System conditions.		
ERCOT System Planning	No	ERCOT feels the amount and duration of load loss should be considered in the definition.
Response: Requirement R3.3.2.1 has been rewritten as Requirement R2.9 to more specifically identify what is required. As part of that review, the consensus was that duration is too difficult to accurately prescribe and had no value in a Planning Standard and has been dropped. **R2.9** The Planning Assessment shall identify the maximum permissible Non-Consequential Load Loss (megawatt Demand) for those Planning Events where Non-Consequential Load Loss is allowed in Table 1.		
Alberta Electric System Operator	No	We generally agree with the definitions by themselves but have concerns about regarding application, please refer to response in Q15. The last sentence in the Definition of Consequential Load Loss (?Although Load which is lost as a result of the Load's response to the transient conditions of the event is considered Consequential Load Loss and is permitted when Consequential Load Loss is allowed, Transmission planning entities are not allowed to rely upon the expectation of

Organization	Question 3:	Question 3 Comments:
		such Load loss to meet steady state performance requirements?) seems more appropriate to be requirements. Therefore, recommend moving this sentence to the Notes Section at the beginning of Table 1 as new Item 7.
Response: Definitions have been changed to clarify Consequential Load Loss and the last sentence in the definition has been moved to the tables. **Consequential Load Loss:** ~~Load that is no longer connected to a source as a result of the event being studied or which is lost as a result of the load's response to the transient conditions of the event (other than through the action of UVLS or UFLS schemes). Although Load which is lost as a result of the Load's response to the transient conditions of the event is considered Consequential Load Loss and is permitted when Consequential Load Loss is allowed, Transmission planning entities are not allowed to rely upon the expectation of such Load loss to meet steady state performance requirements.~~ All Load that is no longer served by any Transmission Facilities as a result of the Facilities being removed from service by a planned Protection System operation to isolate fault conditions. **Note 'b":** Consequential Load Loss, Supplemental Load Loss, Load Reduction, and consequential generation loss ~~is allowed for all events shown.~~are acceptable as a consequence of any Planning or Extreme Event excluding P0. However, Supplemental Load Loss associated with an event shall not be used to meet steady state performance requirements.		
FirstEnergy Corp.	No	Regarding the definition of "Consequential Load Loss" we do not agree with the inclusion of Load which is lost as a result of the Load's response to the transient conditions of the event and recommend that the team restrict the definition to account for only load which is directly served by the facilities which were de-energized as a result of the contingency event. To include this within in the definition seems counterproductive to the planning of the transmission system that is required by this reliability standard. Comments on other definitions:1) Planning Coordinator (PC) ? The SDT included a new definition for PC for inclusion in the NERC Glossary of Terms. We agree that this addition better aligns the Glossary with the PC applicable entity which is prevalent in a variety of standards. However, we are curious why the SDT did not indicate a deletion of the Planning Authority (PA) definition and what steps, if any, are being made by NERC to align registry criteria which uses Planning Authority (PA) to the reliability standards use of the PC. 2) Year-One: The definition for Year-One is awkwardly written. We suggest that the definition be adjusted to read "The planning year that begins with the upcoming annual period under study". We believe the attempt to try and delineate between the near-term planning horizon and operational planning horizon is not needed within the TPL standard and that the near-term period should account for the upcoming annual study periods. If not revised, the need for two near-term studies on an annual basis is overly burdensome as many transmission planning organizations perform upcoming annual seasonal assessments for seasonal peak (summer/winter) periods. Requiring an additional two studies near-term does not provide significant benefit. Further reasoning for making the change is the allowance of operating procedures as part of Corrective Action plans. Operating procedures can easily be developed and implemented to mitigate projected performance violations prior to an upcoming seasonal period. 3) BES ? The acronym BES is used throughout the standard but never defined. We suggest this could easily be done in

Organization	Question 3:	Question 3 Comments:
		the purpose statement by simply adding the text "(BES)" after the reference to Bulk Electric System.
Response: Definitions have been changed to clarify Consequential Load Loss. **Consequential Load Loss:** ~~Load that is no longer connected to a source as a result of the event being studied or which is lost as a result of the load's response to the transient conditions of the event (other than through the action of UVLS or UFLS schemes). Although Load which is lost as a result of the Load's response to the transient conditions of the event is considered Consequential Load Loss and is permitted when Consequential Load Loss is allowed, Transmission planning entities are not allowed to rely upon the expectation of such Load loss to meet steady state performance requirements.~~ All Load that is no longer served by any Transmission Facilities as a result of the Facilities being removed from service by a planned Protection System operation to isolate fault conditions. The definition for Planning Coordinator was deleted because the term has already been defined and added to the NERC Glossary by another SDT. The standard does not require that studies are duplicated. If an operating study can be used to demonstrate an assessment for planning purposes, then the operating study would be sufficient. Bulk Electric System will be spelled out in the first reference.		
Entergy Services, Inc.	No	To the extent stakeholders agree with the use of UVLS or other special protection systems to mitigate events and avoid costly infrastructure improvements, the load that is reduced due to the operation of these systems should be capable of being classified as consequential load. In some cases, these systems can enhance grid reliability by removing components that have no significant impact on the BES. The definition of Non-consequential Load Loss includes load dropped by UVLS, UFLS, as well as SPS. However, Consequential Load Loss does not name SPS load loss as an exception, while UVLS and UFLS are named specifically. Shouldn't load lost by SPS action also be included in this exception to reduce confusion? There also seems to be another category missing. Non-consequential load loss could also be a result of "regular" protection systems beyond those directly protecting the faulted equipment. The second part of the Consequential Load loss definition is confusing - "Although Load which is lost as a result of the Load's response to the transient conditions of the event is considered Consequential Load Loss and is permitted when Consequential Load Loss is allowed, Transmission planning entities are not allowed to rely upon the expectation of such Load loss to meet steady state performance requirements." While it Is part of consequential load loss per the definition, planners are not allowed by the standard to plan for it. Therefore, this definition seems to make the Performance Tables incorrect. With this statement we seem to need another term like "Allowable Consequential Load loss."
Response: The SDT has made changes to the definitions and text, which are conceptually consistent with your suggestion. The definition of Non-consequential Load Loss has also been changed to remove the reference to UFLS and UVLS, which are systems used for operations and are not applicable to a planning standard. Examples have been removed from definitions. **Consequential Load Loss:** ~~Load that is no longer connected to a source as a result of the event being studied or which is lost as a result of the load's response to the transient conditions of the event (other than through the action of UVLS or UFLS schemes). Although Load which is lost as a result of the Load's response~~		

Organization	Question 3:	Question 3 Comments:
~~to the transient conditions of the event is considered Consequential Load Loss and is permitted when Consequential Load Loss is allowed, Transmission planning entities are not allowed to rely upon the expectation of such Load loss to meet steady state performance requirements.~~ All Load that is no longer served by any Transmission Facilities as a result of the Facilities being removed from service by a planned Protection System operation to isolate fault conditions. **Load Reduction:** Load that is still connected to the System, but is reduced due to lower voltage conditions following a Planning or Extreme Event. **Non-Consequential Load Loss:** Non-Interruptible Load loss other than Consequential Load Loss, Supplemental Load Loss, and Load Reduction.~~. For example, non-Interruptible Load loss that occurs through manual (operator initiated) or automatic operations such as under-voltage Load shedding, under-frequency Load shedding, or Special Protection Systems would be considered Non-Consequential Load Loss~~. **Supplemental Load Loss:** Load that is disconnected from the network by end-user equipment responding to post-Contingency System conditions.		
BPA Transmission Reliability Program	No	The definition of Consequential Load Loss needs to be modified to include all of the concepts that were contained in footnote b of the existing TPL standards.
Response: "All of the concepts that were contained" are subject to interpretation and there are different interpretations of what the concepts are. Therefore it is not clear what you would like to see. The SDT has continued to revise the definitions in response to the comments received subsequent to the second posting. Notes have been added to provide conditions and clarifications relative to the interruptions of Firm Transmission Service. Hopefully these changes will address your concerns. **Consequential Load Loss:** ~~Load that is no longer connected to a source as a result of the event being studied or which is lost as a result of the load's response to the transient conditions of the event (other than through the action of UVLS or UFLS schemes). Although Load which is lost as a result of the Load's response to the transient conditions of the event is considered Consequential Load Loss and is permitted when Consequential Load Loss is allowed, Transmission planning entities are not allowed to rely upon the expectation of such Load loss to meet steady state performance requirements.~~ All Load that is no longer served by any Transmission Facilities as a result of the Facilities being removed from service by a planned Protection System operation to isolate fault conditions. **Load Reduction:** Load that is still connected to the System, but is reduced due to lower voltage conditions following a Planning or Extreme Event. **Non-Consequential Load Loss:** Non-Interruptible Load loss other than Consequential Load Loss, Supplemental Load Loss, and Load Reduction.~~. For example, non-Interruptible Load loss that occurs through manual (operator initiated) or automatic operations such as under-voltage Load shedding, under-frequency Load shedding, or Special Protection Systems would be considered Non-Consequential Load Loss~~. **Supplemental Load Loss:** Load that is disconnected from the network by end-user equipment responding to post-Contingency System conditions. **Note 'b":** Consequential Load Loss, Supplemental Load Loss, Load Reduction, and consequential generation loss ~~is allowed for all events shown.~~are acceptable as a consequence of any Planning or Extreme Event excluding P0. However, Supplemental Load Loss associated with an event shall not be used to meet steady state performance requirements.		

Organization	Question 3:	Question 3 Comments:
PPL EnergyPlus	Yes	The SDT conference call was helpful to my understanding of non-consequential. As I understand it, non-consequential load loss allows transmission planners to drop load that chooses to be dropped under certain conditions. This is a useful tool as not all loads demand the same quality of service.
Response: Yes, interruption of Interruptible Load is acceptable.		
City Water, Light & Power - Springfield, Illinois	Yes	
Platte River Power Authority	Yes and No	
Tenaska, Inc.	Yes	
Gainesville Regional Utilities	Yes	
US Army Corp of Engineers, Northwestern Division	Yes	
ITC Holdings: ITC, METC, ITC Midwest	Yes	
Florida Power and Light	Yes	None.
Austin Energy	Yes	
LCRA TSC	Yes	

Organization	Question 3:	Question 3 Comments:
NERC and Regional Coordination	Yes	
IESO	Yes	
E.ON U.S. Transmission Planning	Yes	
Duke Energy	Yes	
Oncor Electric Delivery	Yes	NA
Response: Thank you for your response. However, the majority of commenters requested changes to the definitions which can be seen in the summary response above.		

4. **The SDT has modified Requirement R3.5 and eliminated Requirement R3.6 from the first draft to clarify that manual and automatic generation run-back (redispatch) and tripping is allowed as a Corrective Action Plan as long as the conditions in Requirements R3.5.1, R3.5.2 and R3.5.3 are met. Do you agree that generation run-back and tripping (manual and automatic) should be limited by these conditions? If not, please explain why you disagree with the proposed requirements.**

Summary Consideration:

By a nearly unanimous response the industry agrees with the modification to Requirement R3.5 in the latest draft that allows manual and automatic generation run-back and tripping as a response to a single or multiple Contingency. However, in response to the question, only a small percentage of the commenters supported the current modification including the conditions in Requirements R3.5.1, R3.5.2, and R3.5.3 without reservation. A wide variety of changes, additions and clarifications to these conditions were suggested.

The SDT agrees with the industry's majority view that the Sub-requirement conditions for manual and automatic generation run-back or tripping as a response to a single or multiple Contingency and the Sub-requirement conditions for automatic generation tripping as a response to mitigate Stability violations are applicable to all requirements of the TPL Standard and are already stated elsewhere in the Standard or should be eliminated because they are specified in other ways, including national codes such as OSHA and NESC. Consequently, these conditions, specified in Requirements R3.5.1, R3.5.2, and R3.5.3 have been removed from this third draft.

In summary, due to industry comments in response to this question, the SDT changed the following requirements and footnote:

R2.7.1. (now R2.6.1)– added bullet #3: Installation or modification of automatic generation tripping as a response to a single or multiple Contingency to mitigate Stability performance violations.

R2.7.1. (now R2.6.1)– added bullet #4: Installation or modification of manual and automatic generation runback/tripping as a response to a single or multiple Contingency to mitigate Steady State performance violations.

R2.9 The Planning Assessment shall identify the maximum permissible Non-Consequential Load Loss (megawatt Demand) for those Planning Events where Non-Consequential Load Loss is allowed in Table 1.

R3.2 (now R3.3 and R3.3.1) Contingency analyses shall simulate the removal of all elements ~~including those~~ that the Protection System ~~protection is~~ and other automatic controls are expected to disconnect for each contingency without operator intervention.

R3.2.1 (now R3.3.2) For all generators, studies shall consider the minimum steady state voltage limitations ~~of all generators~~ and identify how the generators are ~~treated~~ analyzed in the steady state simulation.

Footnote #10 – Curtailment of firm transmission service, when coupled with the appropriate re-dispatch of resources obligated to re-dispatch, is allowed both as a System adjustment (as identified in the column titled 'Initial System Conditions') and a corrective action, where it can be demonstrated that Facilities remain within applicable Facility Ratings and those adjustments do not result in the shedding of any firm Load.

Where limited options for re-dispatch exist, sensitivities associated with the availability of those resources must be considered. Where Facilities external to the Transmission Planner's planning region are relied upon, Facility Ratings in those regions must be considered.

In addition, the following requirements have been deleted:

R3.5 ~~Manual and automatic generation run-back/tripping is allowed as a response to a single or multiple Contingency if the following conditions are met~~

R3.5.1 ~~All Facilities shall be operating within their Facility Ratings~~

R3.5.2 ~~Such action would not violate safety, equipment, regulatory or statutory requirements~~

R3.5.3 ~~A sustainable, stable, operating condition is maintained~~

R5.4.3 ~~Automatic generation tripping is allowed to mitigate Stability violations if the following conditions are met:~~

R5.4.3.1 ~~All Facilities shall be operating within their Facility Ratings~~

R5.4.3.2 ~~Such action would not violate safety, equipment, regulatory or statutory requirements~~

R5.4.3.3 ~~A sustainable, stable, operating condition is maintained~~

Organization	Question 4:	Question 4 Comments:
Dominion - Electric Transmission Planning	No	We generally agree with the modification, but feel that further clarification needs to be added as follows -- "Neither generation run-back (redispatch) nor tripping should be allowed to address deficiencies identified in single contingency (N-1) studies should the full output of the generation choose to be considered as a capacity resource". Should generation run-back be allowed, then a NERC Reliability Standard should be developed to require generator field testing to prove that generation run-back is a viable solution.
Duke Energy	Yes	Generation run-back and tripping should be allowed and the proposed sub-requirements are appropriate.
Progress Energy Carolinas	Yes	Furthermore, PEC believes that generation run-back and tripping should not be allowed as a CAP for N-1 events with the possible exception of small reductions of generation.

Organization	Question 4:	Question 4 Comments:
BCTC	Yes	We agree that runback/tripping should be permitted for all contingencies. However, we are concerned that listing runback/tripping as an acceptable alternative, at least as currently worded, may encourage use when system reinforcements should be built. BCTC would prefer TPL-001 to be silent on this issue and that R3.5 be deleted. The list of conditions is very generic and should apply to all of TPL-001. If R3.5 is retained, the list of conditions should also require that all generation reserves requirements are met.
ITC Holdings: ITC, METC, ITC Midwest	No	We do not believe that generation runback or tripping should be a CAP for a single contingency. This is particularly true if the generation scheme puts the system one contingency away from another potential condition requiring corrective action, such as load shedding. At a minimum R3.5.3 needs further definition as to what a ?sustainable, stable, operating conditions? is. For example, creating another N-1 scenario is not a sustainable condition. Allowing for SPS is not raising the bar.
AEP	No	Generator tripping should not be regarded the same as generator runback. With tripping, a resource is lost from the system and there is no assurance that it can be restored to service within a reasonable time. Runback allows the resource to stay connected and the original MW level is potentially restorable if the precipitating factors for runback can be resolved. The generator may be valuable for MVAR as well as MW. The existing TPL standards imply that generator tripping is not permissible in connection with Category B events in that Table 1 footnote b does not mention it, whereas it is mentioned in connection with Category C events in footnote c; we agree with this. Generation is a system resource and should be protected against the more common single contingency transmission events. We would like to see the present implied restriction on generator tripping following single contingencies to be maintained and clearly articulated in the new standard, with a provision for regional variance. In contrast to tripping, what the standard has now for manual or automatic runback in R3.5 is okay.
Response: By a nearly unanimous response the Industry favors manual and automatic generation run-back and tripping as a response to a single or multiple Contingency. Therefore, the SDT has modified Sub-requirement R3.5 for Contingency events and relocated it to become Sub-requirement R2.6.1- bullet #4. Likewise, the SDT has modified Sub-requirement R5.4.3 for Stability events and relocated it to become Sub-requirement R2.6.1- bullet #3. **R2.6.1. – bullet #3:** Installation or modification of automatic generation tripping as a response to a single or multiple Contingency to mitigate Stability performance violations. **R2.6.1. – bullet #4:** Installation or modification of manual and automatic generation runback/tripping as a response to a single or multiple Contingency to mitigate Steady State performance violations.		
NPCC	No	We do not feel that R3.5.1, R3.5.2 and R3.5.3 are limiting enough. Add paragraph 3.5.4 "Manual and automatic generator tripping shall not have an Adverse Reliability Impact."
Northeast Utilities	No	Northeast Utilities has participated with ISO-NE and NPCC and supports the comments filed by those organizations.

Organization	Question 4:	Question 4 Comments:
TVA System Planning	Yes	Suggest applicable voltage limits must also be maintained during runback and tripping.
National Grid	No	We do not feel that R3.5.1, R3.5.2 and R3.5.3 are limiting enough. We suggest adding a paragraph which be numbered 3.5.4 and would read "Manual and automatic generator tripping shall not have a significant adverse impact on the system."
Tenaska, Inc.	Yes	R.3.3.2.2 needs some re-wording to clarify that generator runback (re-dispatch) and tripping are allowed.
Gainesville Regional Utilities	No	R3.5.3 is somewhat ambiguous. We need clarification as to whether the system needs to prepare for the next contingency (a secure state) or whether it needs to be maintained in a stable operating condition which is sustainable but not secure.
Hydro-Québec TransEnergie (HQT)	No	We do not feel that R3.5.1, R3.5.2 and R3.5.3 are limiting enough. Add paragraph 3.5.4 "Manual and automatic generator tripping shall not have an Adverse Reliability Impact."
Central Maine Power Company	No	R3.5.1, R3.5.2 and R3.5.3 are not limiting enough. Add paragraph 3.5.4 "Automatic generator tripping shall not impose undue complexity and risk to the operation and reliability of the system."
NSTAR Electric	No	R3.5.1, R3.5.2 and R3.5.3 are not limiting enough. Add paragraph 3.5.4 "Automatic generator tripping schemes shall not be overly complex and risk to the operation and reliability of the system." Complex SPSs or multiple installations of SPSs can have an adverse impact on the ability to reliably operate the system, especially during maintenance outage conditions.
New York Independent System Operator	No	We do not feel that R3.5.1, R3.5.2 and R3.5.3 are limiting enough. Add paragraph 3.5.4 "Manual and automatic generator tripping shall not have an Adverse Reliability Impact."
ISO New England Inc.	No	We do not feel that R3.5.1, R3.5.2 and R3.5.3 are limiting enough. Add paragraph 3.5.4 "Manual and automatic generator tripping shall not have a significant adverse impact on the system."
Response: The SDT appreciates your suggested improvements. However, the SDT has eliminated these conditions in Sub-requirements R3.5.1, R3.5.2 and R3.5.3 for Contingency events as well as similar conditions in Sub-requirements R5.4.3.1, R5.4.3.2 and R5.4.3.3 for Stability events in the third draft. Accordingly, the SDT has modified Sub-requirement R3.5 for Contingency events and relocated it to become Sub-requirement R2.6.1- bullet #4. Likewise, the SDT has		

Organization	Question 4:	Question 4 Comments:
modified Sub-requirement R5.4.3 for Stability events and relocated it to become Sub-requirement R2.6.1 – bullet #3. **R2.6.1. – bullet# 3:** Installation or modification of automatic generation tripping as a response to a single or multiple Contingency to mitigate Stability performance violations. **R2.6.1. – bullet #4:** Installation or modification of manual and automatic generation runback/tripping as a response to a single or multiple Contingency to mitigate Steady State performance violations.		
City Water, Light & Power - Springfield, Illinois	Yes and No	There should be a time limit for manual generation runback.
Response: As stated in Footnote 10 of Table 1, planned System adjustments are allowed, unless precluded in the Requirements, to keep Facilities within the Facility Ratings, if such adjustments are executable within the time duration applicable to the Facility Ratings. **Footnote #10** – Curtailment of firm transmission service, when coupled with the appropriate re-dispatch of resources obligated to re-dispatch, is allowed both as a System adjustment (as identified in the column titled 'Initial System Conditions') and a corrective action, where it can be demonstrated that Facilities remain within applicable Facility Ratings and those adjustments do not result in the shedding of any firm Load. Where limited options for re-dispatch exist, sensitivities associated with the availability of those resources must be considered. Where Facilities external to the Transmission Planner's planning region are relied upon, Facility Ratings in those regions must be considered.		
Manitoba Hydro	Yes	Manitoba Hydro commends the SDT for recognizing that generator run-back and tripping is a valid option in the transmission planner's tool box, not unlike more expensive devices such as FACTs devices. Can the SDT confirm that the conditions in R3.5.1, R3.5.2 and R3.5.3 apply to post generator tripping period. R3.5.2: The references to safety violations and equipment requirements are very generic. It is difficult to imagine what type of safety violation may be caused by a generator trip considering this is a widely used practice in many regions. The SDT should also be more specific as to what is meant by "equipment requirements". The requirement to be within Facility (equipment) Ratings is already covered in R3.5.1. Manitoba Hydro recommends the to "safety, equipment" be deleted from R3.5.2. Other Requirement R3 Comments:R3: In the first sentence, "perform analysis? should be changed to "perform studies? and the word ?studies? after Horizon should be deleted. R3.2: Delete the words ?including those?. R3.2.1: Can the SDT clarify what is required? Is the requirement to ensure the generator undervoltage ride through is not violated? If so, Manitoba Hydro recommends overvoltage ride-through (maximum voltage) should also be added. Also, is ?For all Generators? and ?of all generators? both needed?

Organization	Question 4:	Question 4 Comments:
		R3.3.1: Appears to be a repeat of R3.1.R3.3.2: R3.3.1 requires performance criteria to be met for Planning Events, which includes both single and multiple contingency events. Doesn't R3.3.2 repeat R3.3.1? R3.3.2.1:The requirement to report duration of the Consequential Load Loss would be a wild guess as the duration will relate to the nature of the event, so Manitoba Hydro questions the value. For example, the event is a simple lightning hit on a line, the restoration time is expected to be short, but if the cause of the line loss is a tornado that takes down structures, it could be days. Can the SDT clarify the requirement. R3.3.2.2: Are ?Transmission reconfiguration changes and redispatch of generators? only allowed for single contingencies? Is redispatch allowed if such redispatch results in curtailment of Firm Transmission Service? R3.3.2: It appears that R3.3.2 can be deleted, and its subrequirements placed under R3.3.3: The contingencies that ?are expected to produce more severe System impacts? are very likely multiple contingencies. Since there are numerous combinations of multiple contingencies, it is an impossible task to explain why the ?remaining Contingencies were not selected. If this is not the intent, can the SDT explain what is required? The requirement should simply allow the planner the discretion to use judgment to select these more severe Contingencies, and the elements they are applied to, with explanation as to why they are expected to be more severe.

Response: The SDT has eliminated these conditions in Sub-Requirements R3.5.1, R3.5.2 and R3.5.3 for Contingency events as well as similar conditions in Sub-Requirements R5.4.3.1, R5.4.3.2 and R5.4.3.3 for Stability events in the third draft. Accordingly, the SDT has modified Sub-Requirement R3.5 for Contingency events and relocated to become Sub-Requirement R2.6.1. Likewise, the SDT has modified Sub-Requirement R5.4.3 for Stability events and relocated to become Sub-Requirement R2.6.1.

R3.5.2 – The SDT has modified Sub-requirement R3.5 for Contingency events and relocated it to become Sub-requirement R2.6.1 – bullet #4. Likewise, the SDT has modified Sub-requirement R5.4.3 for Stability events and relocated it to become Sub-requirement R2.6.1 – bullet #3.

R2.6.1. – bullet #3: Installation or modification of automatic generation tripping as a response to a single or multiple Contingency to mitigate Stability performance violations.

R2.6.1. – bullet #4: Installation or modification of manual and automatic generation runback/tripping as a response to a single or multiple Contingency to mitigate Steady State performance violations.

The SDT appreciates your suggested changes to Requirement R3 but after reviewing the suggestion has decided that the original wording is correct.

Your suggested change to Requirement R3.2 (now Requirement R3.3.1) has been adopted.

R3.3.1 Contingency analyses shall simulate the removal of all elements ~~including those~~ that the Protection System ~~protection is~~ and other automatic controls are expected to disconnect for each contingency without operator intervention.

Requirement R3.2.1 (now Requirement R3.3.2) is intended to require realistic representation in simulations of whether a generator will trip due to low voltage; it is not a requirement that the generator be able to ride through a low voltage condition. Your suggested deletion was accepted.

Organization	Question 4:	Question 4 Comments:
R3.3.2 For all generators, studies shall consider the minimum steady state voltage limitations ~~of all generators~~ and identify how the generators are ~~treated~~ analyzed in the steady state simulation. Regarding your comments on old Requirements R3.3.1 and R3.3.2, there is a subtle difference. Requirement R3.3.1 addresses performance criteria, while Requirement R3.3.2 deals with the Contingencies that need to be evaluated and to which the performance criteria should be applied. The requirement to report duration of Consequential Load Loss in R3.3.2.1 (now Requirement R2.9) has been removed from this draft. **R2.9** The Planning Assessment shall identify the maximum permissible Non-Consequential Load Loss (megawatt Demand) for those Planning Events where Non-Consequential Load Loss is allowed in Table 1. Curtailment of Firm Transmission Service is explained in the new footnote #10 in the Table. **Footnote #10** – Curtailment of firm transmission service, when coupled with the appropriate re-dispatch of resources obligated to re-dispatch, is allowed both as a System adjustment (as identified in the column titled 'Initial System Conditions') and a corrective action, where it can be demonstrated that Facilities remain within applicable Facility Ratings and those adjustments do not result in the shedding of any firm Load. Where limited options for re-dispatch exist, sensitivities associated with the availability of those resources must be considered. Where Facilities external to the Transmission Planner's planning region are relied upon, Facility Ratings in those regions must be considered. The SDT has considered your comments regarding the requirement to explain why less severe Contingencies were not selected; however, there were few other comments that raised this concern, and the SDT has retained the original language.		
Los Angeles Department of Water and Power	Yes and No	R3.5.1, 3.5.2, and 3.5.3 are redundant and already covered in other standards or safety codes such as FAC, TOP, OSHA, NRC, NESC, etc. If these kind of "reminder" is required here just to make sure planners do not ignore all the relevant codes, then it could also be argued that an absence of such reminders in other section would mean that these codes do not need to be observed unless they are specifically called out. I think they should all be deleted to avoid such twisted argument but potential loopholes.
Transmission Agency of Northern California	Yes	We agree. However, the conditions listed in R3.5.1, R3.5.2 and R3.5.3 are applicable to the overall TPL Standard. Their specific listing in R3.5 gives the impression that these Requirements are only applied to R3.5 and not to the other Requirements in this Standard. In other words, are there any Requirements in this Standard that R3.5.1, R3.5.2 and R3.5.3 do not apply to? Therefore, we suggest TPL-001-1 be silent on this issue and move R3.5.1 through R3.5.3, (and the equivalent in the stability study R5.4.3.1 through R5.4.3.3) to a Requirement applicable to Assessment studies in general, such as the bullet points in the Performance Tables.
Pacific Gas and Electric Co.	Yes	We agree. However, the conditions listed in R3.5.1, R3.5.2 and R3.5.3 are applicable to the overall TPL Standard. Their specific listing in R3.5 gives the impression that these Requirements are only applied to R3.5 and not to the other Requirements in this Standard. In other words, are there any Requirements in this Standard that R3.5.1, R3.5.2 and R3.5.3 do not apply to? Therefore, we suggest TPL-001-1 be silent on this issue and move R3.5.1 through R3.5.3, (and the equivalent in the stability

Organization	Question 4:	Question 4 Comments:
		study R5.4.3.1 through R5.4.3.3) to a Requirement applicable to Assessment studies in general, such as the bullet points in the Performance Tables.
Public Service Company of New Mexico	Yes	We agree. However, the conditions listed in R3.5.1, R3.5.2 and R3.5.3 are applicable to the overall TPL Standard. Their specific listing in R3.5 gives the impression that these Requirements are only applied to R3.5 and not to the other Requirements in this Standard. In other words, are there any Requirements in this Standard that R3.5.1, R3.5.2 and R3.5.3 do not apply to? Therefore, we suggest TPL-001-1 be silent on this issue and move R3.5.1 through R3.5.3, (and the equivalent in the stability study R5.4.3.1 through R5.4.3.3) to a Requirement applicable to Assessment studies in general, such as the bullet points in the Performance Tables.
JEA	Yes and No	R3.5.1 JEA does not understand what measure will be applied to determine that Facility Ratings were not violated during the generator run-back period.R3.5.2 JEA does not understand what measure will be applied to determine compliance that generator trips and runbacks will not violate safety, equipment, regulatory, or statutory requirements.R3.5.3 JEA does not understand what is meant by the word "Sustainable". Needs a practical definition.
PacifiCorp	Yes and No	? We generally agree, however, the conditions listed in R3.5.1, R3.5.2 and R3.5.3 are applicable to the overall TPL Standard. Their specific listing in R3.5 gives the impression that these Requirements are only applied to R3.5 and not to the other Requirements in this Standard. In other words, are there any Requirements in this Standard that R3.5.1, R3.5.2 and R3.5.3 do not apply to? Therefore, we suggest moving R3.5.1 through R3.5.3, (and the equivalent in the stability study R5.4.3.1 through R5.4.3.3) to a Requirement applicable to Assessment studies in general, such as the bullet points in the Performance Tables.
Puget Sound Energy, Inc.	Yes	We agree. However, the conditions listed in R3.5.1, R3.5.2 and R3.5.3 are applicable to the overall TPL Standard. Their specific listing in R3.5 gives the impression that these Requirements are only applied to R3.5 and not to the other Requirements in this Standard. In other words, are there any Requirements in this Standard that R3.5.1, R3.5.2 and R3.5.3 do not apply to? Therefore, we suggest TPL-001-1 be silent on this issue and move R3.5.1 through R3.5.3, (and the equivalent in the stability study R5.4.3.1 through R5.4.3.3) to a Requirement applicable to Assessment studies in general, such as the bullet points in the Performance Tables.
Idaho Power Company	Yes	We generally agree, however, the conditions listed in R3.5.1, R3.5.2 and R3.5.3 are applicable to the overall TPL Standard. Their specific listing in R3.5 gives the impression that these Requirements are only applied to R3.5 and not to the other Requirements in this Standard. In other words, are there any Requirements in this Standard that R3.5.1, R3.5.2 and R3.5.3 do not apply to? Therefore, we suggest TPL-001-1 be silent on this issue and move R3.5.1 through R3.5.3, (and the equivalent in the stability study R5.4.3.1 through R5.4.3.3) to a Requirement applicable to Assessment studies in general, such as the bullet points in the Performance Tables.

Organization	Question 4:	Question 4 Comments:
SMUD	Yes	We agree. However, the conditions listed in R3.5.1, R3.5.2 and R3.5.3 are applicable to the overall TPL Standard. Their specific listing in R3.5 gives the impression that these Requirements are only applied to R3.5 and not to the other Requirements in this Standard. In other words, are there any Requirements in this Standard that R3.5.1, R3.5.2 and R3.5.3 do not apply to? Therefore, we suggest TPL-001-1 be silent on this issue and move R3.5.1 through R3.5.3, (and the equivalent in the stability study R5.4.3.1 through R5.4.3.3) to a Requirement applicable to Assessment studies in general, such as the bullet points in the Performance Tables. Reference 3.5.1: In cases where an SPS is deployed to reduce thermal overloads such that flows are brought within established facility ratings, but, for a short duration (seconds) until it is fully executed, the facility flows exceed the established rating, is that considered a violation or an acceptable engineering judgment that facilities are judiciously being brought to operate within ratings? Or, should the facility owner ensure establishment of a documented rating even for the short duration of seconds?
Progress Energy Florida, Inc.	No	PEF does not disagree with the conditions described in Requirements R3.5.1, R3.5.2 and R3.5.3 when taken in particular contexts. PEF, however, is compelled to check "no" for this question due to the fact that no specification has been made as to when such CAPs can be applied. PEF feels that the CAPs specified (as well as the curtailment of Firm Transactions and Non-Consequential Load) should be allowed following any N-1 event, and also as system adjustment actions in between the two events of a P6 event. Given that no such specification has been made here, PEF objects to the wording, and suggests that the language be modified to clarify that the application of these CAPs are allowable after N-1 events and in between the two events of Event P6.
Sierra Pacific Power Company / Nevada Power Company	Yes	We generally agree, however, the conditions listed in R3.5.1, R3.5.2 and R3.5.3 are applicable to the overall TPL Standard. Their specific listing in R3.5 gives the impression that these Requirements are only applied to R3.5 and not to the other Requirements in this Standard. In other words, are there any Requirements in this Standard that R3.5.1, R3.5.2 and R3.5.3 do not apply to? Therefore, we suggest TPL-001-1 be silent on this issue and move R3.5.1 through R3.5.3, (and the equivalent in the stability study R5.4.3.1 through R5.4.3.3) to a Requirement applicable to Assessment studies in general, such as the bullet points in the Performance Tables.
Black Hills Corporation	Yes	We agree. However, the conditions listed in R3.5.1, R3.5.2 and R3.5.3 are applicable to the overall TPL Standard. Their specific listing in R3.5 gives the impression that these Requirements are only applied to R3.5 and not to the other Requirements in this Standard. In other words, are there any Requirements in this Standard that R3.5.1, R3.5.2 and R3.5.3 do not apply to? Therefore, we suggest TPL-001-1 be silent on this issue and move R3.5.1 through R3.5.3, (and the equivalent in the stability study R5.4.3.1 through R5.4.3.3) to a Requirement applicable to Assessment studies in general, such as the bullet points in the Performance Tables.
Arizona Public Service Co.	Yes and No	We generally agree, however, the conditions listed in R3.5.1, R3.5.2 and R3.5.3 are applicable to the overall TPL Standard. Their specific listing in R3.5 gives the impression that these Requirements are only applied to R3.5 and not to the other

Organization	Question 4:	Question 4 Comments:
		Requirements in this Standard. In other words, are there any Requirements in this Standard that R3.5.1, R3.5.2 and R3.5.3 do not apply to? Therefore, we suggest moving R3.5.1 through R3.5.3, (and the equivalent in the stability study R5.4.3.1 through R5.4.3.3) to a Requirement applicable to Assessment studies in general, such as the bullet points in the Performance Tables.
Florida Power and Light	No	The sub-requirements of R3.5 are not clear as to whether the conditions apply to before or after generator run-back/tripping and mixes together N-1 and N-2 contingencies. In addition, the phrase "sustainable, stable, operating condition" in R3.5.3. is ambiguous as to whether it means the system is secure (prepared for the next contingency), or the system is maintained in a stable operating condition which is sustainable but not secure.
Exelon Transmission Planning	Yes and No	We agree that manual and automatic generation run-back and tripping should be allowed in these situations. We do not agree with the portion of R3.5.2 that states that non-compliance would result if the action were to violate statutory or regulatory requirements. A local governmental body could impose a restriction that would then trigger NERC compliance issues without independent or sufficient review. Other regulatory entities have their own enforcement mechanisms. It should be clear that SPSs, by definition, are allowed for other purposes than generation runback or tripping (such as system reconfiguration with automated breaker operation).
SRP	Yes	We agree. However, the conditions listed in R3.5.1, R3.5.2 and R3.5.3 are applicable to the overall TPL Standard. Their specific listing in R3.5 gives the impression that these Requirements are only applied to R3.5 and not to the other Requirements in this Standard. In other words, are there any Requirements in this Standard that R3.5.1, R3.5.2 and R3.5.3 do not apply to? Therefore, we suggest TPL-001-1 be silent on this issue and move R3.5.1 through R3.5.3, (and the equivalent in the stability study R5.4.3.1 through R5.4.3.3) to a Requirement applicable to Assessment studies in general, such as the bullet points in the Performance Tables.
Tucson Electric Power Company	Yes	We agree. However, the conditions listed in R3.5.1, R3.5.2 and R3.5.3 are applicable to the overall TPL Standard. Their specific listing in R3.5 gives the impression that these Requirements are only applied to R3.5 and not to the other Requirements in this Standard. In other words, are there any Requirements in this Standard that R3.5.1, R3.5.2 and R3.5.3 do not apply to? Therefore, we suggest TPL-001-1 be silent on this issue and move R3.5.1 through R3.5.3, (and the equivalent in the stability study R5.4.3.1 through R5.4.3.3) to a Requirement applicable to Assessment studies in general, such as the bullet points in the Performance Tables.
SERC Dynamics Review Subcommittee	Yes	Generation run-back and tripping should be allowed and the proposed sub-requirements are appropriate.

Organization	Question 4:	Question 4 Comments:
Modesto Irrigation District	Yes	Comments: We agree. However, the conditions listed in R3.5.1, R3.5.2 and R3.5.3 are applicable to the overall TPL Standard. Their specific listing in R3.5 gives the impression that these Requirements are only applied to R3.5 and not to the other Requirements in this Standard. In other words, are there any Requirements in this Standard that R3.5.1, R3.5.2 and R3.5.3 do not apply to? Therefore, we suggest TPL-001-1 be silent on this issue and move R3.5.1 through R3.5.3, (and the equivalent in the stability study R5.4.3.1 through R5.4.3.3) to a Requirement applicable to Assessment studies in general, such as the bullet points in the Performance Tables.
Midwest ISO	Yes and No	Under the subrequirement of R3.5.2 it may not be possible for the PC/TP to determine whether the safety, equipment, regulatory or statutory requirements are violated without collaboration with the Transmission Owner and/or the Generator Owner. Therefore, if this subrequirement is retained it should be amended to include the following sentence: "Applicable Transmission Owners and/or Generator Owners shall collaborate with the PC/TP in determining whether such action would violate safety, equipment, regulatory or statutory requirements".
Tri-State Generation and Transmission Association, Inc.	Yes	Agree with the described corrective actions, but wonder whether the sub-requirements R3.5.1 - R3.5.3 must be specifically listed.
Tri-State G&T	Yes	We agree. However, the conditions listed in R3.5.1, R3.5.2 and R3.5.3 are applicable to the overall TPL Standard. Their specific listing in R3.5 gives the impression that these Requirements are only applied to R3.5 and not to the other Requirements in this Standard. In other words, are there any Requirements in this Standard that R3.5.1, R3.5.2 and R3.5.3 do not apply to? Therefore, we suggest TPL-001-1 be silent on this issue and move R3.5.1 through R3.5.3, (and the equivalent in the stability study R5.4.3.1 through R5.4.3.3) to a Requirement applicable to Assessment studies in general, such as the bullet points in the Performance Tables.
Southern Company Transmission	No	Generation run-back and tripping should be allowed and most of the proposed sub-requirements are appropriate. However, R3.5.2 is overly broad. We suggest that regulatory and statutory requirements should be deleted from R3.5.2.
NERC and Regional Coordination	No	Delete R3.5.2 as redundant. The limit data provided by the asset owners is expected to ensure that safety, equipment, regulatory and statutory requirements are met. For example to require the PC to ensure that equipment is not at risk would require the PC to make financial decisions that belong to the asset owner (e.g. the owner may be willing to exchange loss of equipment life for short term financial gains).R3.5.3 - the term sustainable, stable condition is not defined. Further the

Organization	Question 4:	Question 4 Comments:
		maintenance of such a state is beyond a PC's capability.
ColumbiaGrid	Yes	We generally agree, however, the conditions listed in R3.5.1, R3.5.2 and R3.5.3 are applicable to the overall TPL Standard. Their specific listing in R3.5 gives the impression that these Requirements are only applied to R3.5 and not to the other Requirements in this Standard. In other words, are there any Requirements in this Standard that R3.5.1, R3.5.2 and R3.5.3 do not apply to? Therefore, we suggest TPL-001-1 be silent on this issue and move R3.5.1 through R3.5.3, (and the equivalent in the stability study R5.4.3.1 through R5.4.3.3) to a Requirement applicable to Assessment studies in general, such as the bullet points in the Performance Tables.
IESO	Yes and No	We agree with the conditions stipulated in R3.5.2 and R3.5.3 but do not agree with R3.5.1. This is one of the performance objectives that the use of manual and/or automatic generation run-back/tripping is intended to achieve, and it is already stipulated in Table 1. Suggest to remove this condition.
Southern California Edison	Yes	We agree. However, the conditions listed in R3.5.1, R3.5.2 and R3.5.3 are applicable to the overall TPL Standard. Their specific listing in R3.5 gives the impression that these Requirements are only applied to R3.5 and not to the other Requirements in this Standard. In other words, are there any Requirements in this Standard that R3.5.1, R3.5.2 and R3.5.3 do not apply to? Therefore, we suggest TPL-001-1 be silent on this issue and move R3.5.1 through R3.5.3, (and the equivalent in the stability study R5.4.3.1 through R5.4.3.3) to a Requirement applicable to Assessment studies in general, such as the bullet points in the Performance Tables.
North Carolina Electric Membership Corp	Yes and No	The generation run-back/trip should not put any load or firm transfer at risk of also being harmed. Maybe this is implied within the conditions required.
ERCOT System Planning	No	The requirement is unclear whether runback is allowed if the conditions are met or if runback is allowed to meet the conditions. What is the need for generation run-back/tripping if all facilities are within their Facility Ratings? Many times the run-back/tripping of units, such as wind farms, is necessary to remove a post-contingency overload associated with these units. The protection scheme includes the run-back/tripping to allow these units to generate at higher levels pre-contingency.
Florida Reliability Coordinating Council, inc	No	R3.5.1 ? This requirement should be clarified to state that all facilities shall operate within their Facility Ratings before, during and after system adjustments including generation adjustments.R3.5.2 ? How can an entity demonstrate that it is not violating this requirement.. The SDT should indicate the type of regulatory and/or statutory requirement that this requirement trying to address (i.e., FERC, EPA, etc.)?. Otherwise, the FRCC recommends removing R3.5.2.R3.5.3 ?The SDT should clarify this requirement to define what is meant by sustainable and stable. Sustainable and stable may not necessarily be the same as

Organization	Question 4:	Question 4 Comments:
		being in a secure condition (ready for the next possible event).
Alberta Electric System Operator	Yes	We agree. However, the conditions listed in R3.5.1, R3.5.2 and R3.5.3 are applicable to the overall TPL Standard. Their specific listing in R3.5 gives the impression that these Requirements are only applied to R3.5 and not to the other Requirements in this Standard. In other words, are there any Requirements in this Standard that R3.5.1, R3.5.2 and R3.5.3 do not apply to? Therefore, we suggest R3.5 and R3.4.3 be silent on this issue and move R3.5.1 through R3.5.3, (and the equivalent in the stability study R5.4.3.1 through R5.4.3.3) to a Requirement applicable to Assessment studies in general, such as the bullet points in the Performance Tables.
Orlando Utilities Commission	No	The requirement R3.5.1 is not clear. If the intent is that following a single or multiple contingency facilities are within their ratings before, during and after the generation adjustment it's should be specified that way. "All facilities shall operate within their facility ratings prior to, during, and after the generation adjustment". Also I am unclear on how I would prove that I am not violating and safety or statutory requirements, that seems to be attempting to prove a negative since it is not specific on which requirements. Maybe ?Not violating any known safety and statutory requirements? if it is necessary to have this part. However since any real statutory and safety requirements have their own enforcement mechanism it is unnecessary to have the NERC auditor monitor these in addition to the existing monitors. I am not sure on the definition of sustainable? Is it a system that requires no further adjustment to be within it's long term ratings? Or is it a system that is prepared for the next event (Secure)?
Entergy Services, Inc.	Yes and No	The intent seems reasonable, but the wording needs work. There needs to be consistent verb usage. All 3 sub-bullets need to use "shall" instead of "would" and "is."
US Bureau of Reclamation	Yes	We agree. However, the conditions listed in R3.5.1, R3.5.2 and R3.5.3 are applicable to the overall TPL Standard. Their specific listing in R3.5 gives the impression that these Requirements are only applied to R3.5 and not to the other Requirements in this Standard. In other words, are there any Requirements in this Standard that R3.5.1, R3.5.2 and R3.5.3 do not apply to? Therefore, we suggest TPL-001-1 be silent on this issue and move R3.5.1 through R3.5.3, (and the equivalent in the stability study R5.4.3.1 through R5.4.3.3) to a Requirement applicable to Assessment studies in general, such as the bullet points in the Performance Tables.
BPA Transmission Reliability Program	No	R3.5 is not a requirement, but an allowed action in order to meet performance criteria. Therefore, the statement about generation run-back/tripping in R3.5 should be moved to become part of the notes in the Performance Tables and not part of the requirements text. The conditions described under R.3.5.1 through R.3.5.3 are covered elsewhere in the standards and should be removed from this section. Since R3.5 and R5.4 contain some similar wording, also see comments relating to R5.4 under Item 2, above.
Response: The SDT agrees and has eliminated these conditions in Sub-requirements R3.5.1, R3.5.2 and R3.5.3 for Contingency events as well as similar conditions in Sub-requirements R5.4.3.1, R5.4.3.2 and R5.4.3.3 for Stability events in the third draft. Accordingly, the SDT has modified Sub-requirement R3.5 for		

Organization	Question 4:	Question 4 Comments:
Contingency events and relocated it to become Sub-requirement R2.6.1 – bullet #4. Likewise, the SDT has modified Sub-requirement R5.4.3 for Stability events and relocated it to become Sub-requirement R2.6.1 – bullet #3. **R2.6.1. – bullet #3:** Installation or modification of automatic generation tripping as a response to a single or multiple Contingency to mitigate Stability performance violations. **R2.6.1. – bullet #4:** Installation or modification of manual and automatic generation runback/tripping as a response to a single or multiple Contingency to mitigate Steady State performance violations.		
Lafayette Utilities System	No	Requirement R.3.5 states that generation run-back is allowed as a response to single or multiple contingencies, as long as certain conditions are met. Lafayette's concern is that the allowance for generation run-back is not limited to generation owned by the Transmission Planner or under the Transmission Planner's direct operational control. For that reason, the language could be interpreted to permit reliance (for planning purposes) on redispatch of generation owned by third-party generation owners that is undertaken in compliance with Reliability Coordinator directives during a Transmission Loading Relief event. During the SDT conference call held on August 26, 2008, the SDT representative stated that the team did not intend that R.3.5 would permit a Transmission Planner to rely on third-party generation redispatch, and that the intent was only to permit reliance on run-back (redispatch) of generation owned by or under the direct control of the Transmission Planner. Lafayette believes the language of R.3.5 needs to be clarified to state in express terms the limitation intended by the SDT. Reliance on third-party redispatch should not be permitted unless a Transmission Planner has entered into a contractual arrangement with the generation owner authorizing such use.
Response: The SDT agrees that if a Transmission Planner does intend to rely upon third party generation as an option to meet this requirement then the Transmission Planner's contractual arrangements between that Generation Owner and the Transmission Operator must be in place. However, the SDT does not believe that this needs to be stated as a Requirement in this Standard.		
Ameren	Yes	R3.5.1 should be modified as "All Facilities shall be operating within their applicable Facility Ratings, including the use of short-time emergency ratings."
E.ON U.S. Transmission Planning	Yes and No	R3.5.1 Is this the intent? ? Following Single Contingency events, Transmission configuration changes and redispatch of generation can be simulated to return the system to Normal Rating provided that all Facilities shall be operating within their Emergency Rating.
Response: As stated in Footnote 10 of Table 1, planned System adjustments are allowed, unless precluded in the Requirements, to keep Facilities within the Facility Ratings, if such adjustments are executable within the time duration applicable to the Facility Ratings. **Footnote #10** – Curtailment of firm transmission service, when coupled with the appropriate re-dispatch of resources obligated to re-dispatch, is allowed both as a System adjustment (as identified in the column titled 'Initial System Conditions') and a corrective action, where it can be demonstrated that Facilities remain within		

Organization	Question 4:	Question 4 Comments:
applicable Facility Ratings and those adjustments do not result in the shedding of any firm Load. Where limited options for re-dispatch exist, sensitivities associated with the availability of those resources must be considered. Where Facilities external to the Transmission Planner's planning region are relied upon, Facility Ratings in those regions must be considered.		
American Transmission Company	No	We generally accept this text, but would like the Facility Rating reference to include the applicable time frame (see response to Question 2.)
Response: As stated in Footnote 1 of Table 1, planned System adjustments are allowed, unless precluded in the Requirements, to keep Facilities within the Facility Ratings, if such adjustments are executable within the time duration applicable to the Facility Ratings.		
PPL EnergyPlus	Yes and No	My concern is that some TSPs over-use RAS and at some point, system improvements must take place. The best approach is a collaborative effort of all stakeholders (esp. operations folks) to prevent abusing RAS. Possibly R3.5 could tie to or be put under an Requirement that involves collaboration with stakeholders.
Response: The SDT has modified Sub-requirement R3.5 for Contingency events and relocated it to become Sub-requirement R2.6.1 – bullet #4. Likewise, the SDT has modified Sub-requirement R5.4.3 for Stability events and relocated it to become Sub-requirement R2.6.1 – bullet #3. Collaboration between the Transmission Planner and the Planning Coordinator is referenced in Requirements R5, R6, and R7. **R2.6.1. – bullet #3:** Installation or modification of automatic generation tripping as a response to a single or multiple Contingency to mitigate Stability performance violations. **R2.6.1. – bullet #4:** Installation or modification of manual and automatic generation runback/tripping as a response to a single or multiple Contingency to mitigate Steady State performance violations.		
OPUC	Yes	
US Army Corp of Engineers, Northwestern Division	Yes	
CenterPoint Energy and CPS Energy	Yes	

Organization	Question 4:	Question 4 Comments:
MidAmerican Energy Company	Yes	
MRO NERC Standards Review Subcommittee	Yes	
Austin Energy	Yes	
Lakeland Electric	Yes	
Brazos Electric Power Cooperative, Inc.	Yes	
LCRA TSC	Yes	
Oncor Electric Delivery	Yes	NA
FirstEnergy Corp.	Yes	
Platte River Power Authority	Yes	
Response: Thank you for your response.		

5. **The SDT has modified the modeling requirements. Some commenters expressed concern that the modeling requirements contained in Requirement R1 of the first draft of TPL-001-1 were either duplicative of the requirements in the MOD standards, or to the extent new modeling requirements were proposed, that the appropriate venue for such modeling requirements would be the MOD standards. The SDT believes that additional modeling requirements not presently contained in the MOD standards are necessary for Transmission Planning purposes. The SDT has incorporated these additional requirements with the intent that they will be removed from the TPL standard when they are incorporated into the MOD standards at a later date.**

   The SDT has also modified proposed modeling requirements contained in Requirement R1 of the first draft of TPL-001-1 based on industry comments and moved these requirements to Requirements R9 through R14 in the second draft for ease of removal later on. Furthermore, in response to industry comments, the SDT has separated the modeling requirements into individual requirements for each responsible entity. Do you concur with the modifications reflected in Requirements R9 – R14? If not, please state why and/or suggest specific changes..

Summary Consideration:

In response to industry comments, the SDT has removed requirements R9-R14 and enhanced requirement R1 to more clearly specify the modeling information needed to support accurate Planning Assessments. Any comments received from the industry on MOD standards will be forwarded to NERC staff for inclusion in NERC Reliability Standards Development Projects 2010-04 Modeling Data and 2010-05 Demand Data.

The following requirements have been changed due to industry comments:

R1. Each Transmission Planner and Planning Coordinator shall maintain System models for performing the studies needed to complete their Planning Assessment. The models shall use data consistent with the data provided in accordance with ~~Requirements R9 through R14,~~ the MOD-010 and MOD-012 standards~~,~~ and other data sources,~~.~~ and shall simulate projected System conditions including requirements of regulatory authorities and other legal obligations.

R1.1 ~~The Planning Assessment shall include documentation of the technical rationale for modification of any data that was provided in Requirement R9 through R14, MOD-010, and MOD-012.~~Models for the Planning Assessment shall represent:

R1.1.1 Planned outages of generation and Transmission Facilities, if specifically known.

R1.1.2 New planned Facilities and changes to existing Facilities for each year of the Near-Term and Long-Term Transmission Planning Horizon, such as:

- Transmission Lines
- Generators
- Circuit breakers
- Reactive Power devices

- Protection System equipment
- Control devices
- New technologies

R1.1.3 Real and reactive Demand of Load

R1.1.4 Firm Transmission Service

R1.1.5 Interchange

R1.1.6 Network resources required to supply Load

R2.1.4 When an entity's spare equipment strategy could result in the unavailability of major Transmission equipment that has a lead time of one year or more (such as a transformer), an analysis of the impact on System performance shall be assessed. The analysis shall reflect the Contingencies identified in Table 1 during the conditions that the System is expected to experience due to the unavailability of the long lead time equipment.

Organization	Question 5:	Question 5 Comments:
Dominion - Electric Transmission Planning	Yes and No	For requirements R9, R12, R13, the wording should be changed from ..."shall provide its respective Planning Coordinator with modeling information ..." to "shall provide its respective Planning Coordinator and Transmission Planner with modeling information ..."
NPCC	No	With respect to R9 "including the expected mix of industrial, commercial and residential loads", this provision may be inadequate to be practically useful. The potential issues include the variation in end-use load mix through the daily load cycle, seasonal load composition variations, and the ability to translate these end-uses into reasonable and useful steady-state and dynamic load models. It is important to understand how the information will be used and how much additional detail, such as distribution network detail, is also required. It is also important to note that some Canadian Provinces do not "classify" their load mix using "industrial, commercial and residential" designations but their load modeling is sufficient, accurate and granular enough to simulate system response. Add to the last sentence of R9 through R14 the following phrase, "within ninety days of a request for such information or as otherwise described in procedures established by the Planning Coordinator."
TVA System Planning	No	TVA provides the following comments: " Distribution Provider" in R9 should be replaced with "Load Serving Entity." Also in R9, is the expected mix of load to be presented individually or as a total of commercial, residential, and industrial loads? Would requiring this mix of load forecasts also result in a change to any MOD or FAC requirements dealing with

Organization	Question 5:	Question 5 Comments:
		load forecasts?” Transmission Planner" in R10 should be "Transmission Service Provider." Is this requirement also in MODs? In R11, R12, and R13 suggest adding "Transmission Planner" to "Planning Coordinator". In R13, Resource Planner may not have knowledge of Reactive Power devices and new technologies.
Manitoba Hydro	Yes and No	R1: Requirement R1 places the obligation for maintaining a model on the PC/TP. While the PC/TP can maintain data for its system(s), the models generally used for planning assessments are regional models developed and maintained by the Regions. Could the SDT explain its expectation of the scope and responsibilities of the model to be maintained? R9-R14: This TPL draft includes Requirements R9 to R14 that impose obligations on the PC/TP that differ from the way planning models are compiled in accordance with the existing MOD standards. Manitoba Hydro comments on R9 to R14, as follows: R9: Agree. R10: The TSP is the Functional Model entity that should provide the Firm Transmission Service data and Interchange Schedules to the PC. R11: Agree R12: Agree R13: We disagree that the Resource planner is responsible for Reactive Power devices. Can the SDT explain what they consider should be included in new technologies? R14: While we agree that the TP can provide the PC data of planned faculties, isn't this data already required to be provided under the MOD standards?
Transmission Agency of Northern California	Yes	While we agree with separating R1 to form R9 through R14, we believe that R9 (modeling information for real and reactive load forecast data) should be applicable to Load Serving Entities (LSE) instead of (or in additional to) the Distribution Provider. In any case, this type of exchange of load information is already covered in MOD Standard or in the respective tariffs, and should not be included again in the proposed TPL-001-1 Standard.
OPUC	Yes	R9. — 14 can be addressed in the MOD standards.
Pacific Gas and Electric Co.	Yes	While we agree with separating R1 to form R9 through R14, we believe that R9 (modeling information for real and reactive load forecast data) should be applicable to Load Serving Entities (LSE) instead of (or in additional to) the Distribution Provider. In any case, this type of exchange of load information is already covered in MOD Standard or in the respective

Organization	Question 5:	Question 5 Comments:
		tariffs, and should not be included again in the proposed TPL-001-1 Standard.
US Army Corsp of Engineers, Northwestern Division	Yes and No	R12 requires the GO to provide "modeling information" for planned outages and/or changes to the generator owner facilities to the Planning Coordinator for each year of the Transmission planning horizon. You need to be more specific with what type of "modeling information" you are requesting from the GO. The GO may have the model parameters for their equipment but this doesn't mean that they have expertise necessary to model system responses or even run a model simulation. So if you are expecting the GO to perform model simulations for each year of the Transmission planning horizon the GO may not have the expertise necessary to comply. Recommend you clarify what you mean by "modeling information".
Public Service Company of New Mexico	Yes	While we agree with separating R1 to form R9 through R14, we believe that R9 (modeling information for real and reactive load forecast data) should be applicable to Load Serving Entities (LSE) instead of (or in additional to) the Distribution Provider. In any case, this type of exchange of load information is already covered in MOD Standard or in the respective tariffs, and should not be included again in the proposed TPL-001-1 Standard.
Puget Sound Energy, Inc.	Yes	While we agree with separating R1 to form R9 through R14, we believe that R9 (modeling information for real and reactive load forecast data) should be applicable to Load Serving Entities (LSE) instead of (or in additional to) the Distribution Provider. In any case, this type of exchange of load information is already covered in MOD Standard or in the respective tariffs, and should not be included again in the proposed TPL-001-1 Standard.
ITC Holdings: ITC, METC, ITC Midwest	Yes and No	In general, we approve and concur with these requirements. The requirement R9 that the distribution providers submit the expected mix of residential, commercial, and industrial loads is necessary to model the dynamic behavior of loads as required in R 2.4.1. This requirement will better model the dynamic response of loads to voltage changes. In R10, the Transmission Planner provides OASIS type information. The TSP should provide this not the TP. R-13 ? Reactive Power Devices and new technologies belongs under every entity, i.e., Distribution Planners should be included as a provider of reactive power devices as well as Resource Planner and Transmission Planner.
Idaho Power Company	Yes	While we agree with separating R1 to form R9 through R14, we believe that R9 (modeling information for real and reactive load forecast data) should be applicable to Load Serving Entities (LSE) instead of (or in additional to) the Distribution Provider. In any case, this type of exchange of load information is already covered in MOD Standard or in the respective tariffs, and should not be included again in the proposed TPL-001-1 Standard.
Hydro-Québec TransEnergie (HQT)	No	With respect to R9 "including the expected mix of industrial, commercial and residential loads", this provision may be inadequate to be practically useful. The potential issues include the variation in end-use load mix through the daily load

Organization	Question 5:	Question 5 Comments:
		cycle, seasonal load composition variations, and the ability to translate these end-uses into reasonable and useful steady-state and dynamic load models. It is important to understand how the information will be used and how much additional detail such as distribution network detail is also required. It is also important to note that some Canadian Provinces do not "classify" their load mix using "industrial commercial and residential" designations but their load modeling is sufficient, accurate and granular enough to simulate system response. Add to the last sentence of R9 through R14 the following phrase, "within ninety days of a request for such information or as otherwise described in procedures established by the Planning Coordinator."
Sierra Pacific Power Company / Nevada Power Company	Yes	While we agree with separating R1 to form R9 through R14, we believe that R9 (modeling information for real and reactive load forecast data) should be applicable to Load Serving Entities (LSE) instead of (or in additional to) the Distribution Provider. In any case, this type of exchange of load information is already covered in MOD Standard or in the respective tariffs, and should not be included again in the proposed TPL-001-1 Standard.
Black Hills Corporation	Yes	While we agree with separating R1 to form R9 through R14, we believe that R9 (modeling information for real and reactive load forecast data) should be applicable to Load Serving Entities (LSE) instead of (or in additional to) the Distribution Provider. In any case, this type of exchange of load information is already covered in MOD Standard or in the respective tariffs, and should not be included again in the proposed TPL-001-1 Standard.
Florida Power and Light	No	The requirement that “all projected firm transfers modeled” (appropriate for the load level being studied) currently in the TPL Standards does not appear in the proposed standard. Does the SDT feel that Transmission Planners should have unlimited latitude in deciding which types of power transfers to assume in their reliability studies? R9. is not an appropriate requirement as the distribution provider will in many cases not know the exact mix of load types at each ?transmission node? The meaning of “transmission node” is unclear, is this substation? R11. is unclear as to what is meant by “consideration given to spare equipment strategy.” What is the appropriate consideration for compliance? What facilities are required to have a spare equipment strategy for compliance? Maintenance outages and times for all BES equipment are not likely to be scheduled or known throughout the entire planning horizon. Rather than specifying "for each year of the planning horizon" it should be limited to "if specifically known”. The Resource Planners identified in R13. should know about future generation additions and retirements as well as expected range DSM capabilities but would not generally know about reactive power devices or new technologies. Reactive power devices or new technologies should be removed from R13.
CenterPoint Energy	No	We believe the SDT should have reflected the views of most commenters in this revised draft. Requirements R9 through R14 are overly prescriptive and do not solve an actual problem. Furthermore, we are concerned about requirement

Organization	Question 5:	Question 5 Comments:
and CPS Energy		"creep" where standards include new requirements appropriately addressed in other standards (in this case, the MOD standards) because a different SDT believes the approved standard is inadequate. To clarify our main premise that the excess, misplaced requirements do not solve an actual problem, we believe one would need an extensive imagination to conjure a scenario where insufficient modeling by transmission planners in the subject matter addressed by requirements R9 through R14 have contributed or are reasonably likely to contribute in any meaningful way to a significant reliability event. In summary, we concur with the majority of commenters from the previous draft that R9 through R14 should be deleted. We also believe R1.1 is hopelessly unrealistic. In fact, we are concerned it is counter-productive and more likely to degrade reliability than improve it. R1.1 discourages transmission planners from revising inaccurate, speculative, or outdated modeling data by imposing new documentation burdens and compliance liability. We recommend that R1.1 be deleted.
SRP	Yes	While we agree with separating R1 to form R9 through R14, we believe that R9 (modeling information for real and reactive load forecast data) should be applicable to Load Serving Entities (LSE) instead of (or in additional to) the Distribution Provider. In any case, this type of exchange of load information is already covered in MOD Standard or in the respective tariffs, and should not be included again in the proposed TPL-001-1 Standard.
Tucson Electric Power Company	Yes	While we agree with separating R1 to form R9 through R14, we believe that R9 (modeling information for real and reactive load forecast data) should be applicable to Load Serving Entities (LSE) instead of (or in addition to) the Distribution Provider. In any case, this type of exchange of load information is already covered in MOD Standard or in the respective tariffs, and should not be included again in the proposed TPL-001-1 Standard.
SERC Dynamics Review Subcommittee	No	For R9 the LSE should provide the load forecast instead of the DP. For R9 - R14, It is not clear that the specification of data flow appropriate for both RTO and non-RTO situations because there are significant differences in the role of planning coordinator. For example: 1) Who builds and manages the base cases? Shouldn't the data be submitted to this entity? 2) According to the definition provided in this standard, the Planning Coordinator is ?The responsible entity that coordinates and integrates transmission facility and service plans, resource plans, and protection systems.? Additionally, we recommend the TPL SDT write a SAR to get the data related changes into the MOD standards or adding it the issues to be considered by the drafting team in the development plan under project number 2010-04 otherwise it will be difficult to remember to include these items in the revised MOD standards.
Modesto Irrigation District	Yes	Comments: While we agree with separating R1 to form R9 through R14, we believe that R9 (modeling information for real and reactive load forecast data) should be applicable to Load Serving Entities (LSE) instead of (or in additional to) the Distribution Provider. In any case, this type of exchange of load information is already covered in MOD Standard or in the

Organization	Question 5:	Question 5 Comments:
		respective tariffs, and should not be included again in the proposed TPL-001-1 Standard.
Arkansas Electric Coop. Corp.	No	R9. I disagree with providing the mix of industrial, commercial and residential, especially within a 90 day period. It is difficult enough to be able to develop a forecast must less try to quesstimate the mix of the loads.R9 through R14 -- the timing requirement should be tied to the regions model development schedule and not 90 days. The 90 days is too restrictive and not practical however model data should be updated at least annually.
Midwest ISO	No	Since the Transmission Planner has the primary model building responsibility it makes sense to have them aggregate model building information. Therefore, requirement R9 should have the Distribution Provider providing the Transmission Planner and Planning Coordinator with modeling information for real and reactive load forecast? etc. The data of R10 such as firm TS data may not be known by the Transmission Planner (ofter a TO in the RTOs). Also the language implies that there are more than one BA under a TP, also not a typical arrangement in an RTO/ISO. A hierarchical approach might be more appropriate such that the Distribution Provider, the Transmission Provider, and the Transmission Owner supply the data they control to the Transmission Planner and the Planning Authority so that those entities can build models they need to meet the study requirements of the standard.
Tri-State Generation and Transmission Association, Inc.	Yes	We are pleased the SDT pulled out these Requirements. Does the SDT plan to leave them in the standard as notes until they can be incorporated into other standards where they belong? In R11, the term "long-term" is not clear.
Tri-State G&T	Yes	While we agree with separating R1 to form R9 through R14, we believe that R9 (modeling information for real and reactive load forecast data) should be applicable to Load Serving Entities (LSE) instead of (or in additional to) the Distribution Provider. In any case, this type of exchange of load information is already covered in MOD Standard or in the respective tariffs, and should not be included again in the proposed TPL-001-1 Standard.
AEP	Yes	However, although the responsible entities listed for each individual requirement are correct from a functional model (compliance) perspective, in actual practice the data flow may not (and in many instances does not) follow the paths outlined in this draft. For example, the node loads, scheduled interchanges, generation models, facility additions, etc., are all provided to the Transmission Owner (TO), since it's the TO that typically builds the planning models for their transmission footprint and then provides those models to the Transmission Planner and Planning Coordinator. Therefore, the Transmission Owner should be added as a recipient of this type of data.
Austin Energy	No	Requirements R9 through R14 should be deleted and re-introduced later as part of a change to MOD standards. R1.1 imposes burdensome documentation requirements which will likely become a disincentive for revising modeling data and

Organization	Question 5:	Question 5 Comments:
		should be deleted.
Lakeland Electric	No	It is sufficient to direct the TP or PC to obtain and include the appropriate data outlined in R9 through R14 in their respective model cases. The proposed addition of R9-R14 just adds more evidential paperwork requirements to the TP or PCs plate.
Southern Company Transmission	No	R9 needs to be clarified that the forecast is based on expected mix of residential, commercial, and industrial loads, but that this mix does not have to be supplied.
Brazos Electric Power Cooperative, Inc.	Yes	R9-R14 do not belong in this Standard. Adding requirements in the wrong location only adds to the confusion by forcing review of more Standards by other less relevant entities and causing additional burden by insuring the requirements match between Standards for the SDT. R1.1 should be deleted. Tracking all those changes (outages, etc?) is unreasonable and will essentially be unenforceable, for if the data is not tracked, how will anyone know it is not tracked?. Requiring large amounts of documentation that provide no additional benefit or causes undo burden will result in fewer studies or effort placed into proper study.
ColumbiaGrid	Yes	While we agree with separating R1 to form R9 through R14, we believe that R9 (modeling information for real and reactive load forecast data) should be applicable to Load Serving Entities (LSE) instead of (or in additional to) the Distribution Provider. In any case, this type of exchange of load information is already covered in MOD Standard or in the respective tariffs, and should not be included again in the proposed TPL-001-1 Standard.
Southern California Edison	Yes	While we agree with separating R1 to form R9 through R14, we believe that R9 (modeling information for real and reactive load forecast data) should be applicable to Load Serving Entities (LSE) instead of (or in additional to) the Distribution Provider. In any case, this type of exchange of load information is already covered in MOD Standard or in the respective tariffs, and should not be included again in the proposed TPL-001-1 Standard.
Northeast Utilities	No	Northeast Utilities has participated with ISO-NE and NPCC and supports the comments filed by those organizations.
North Carolina Electric Membership Corp	Yes	We would like to add a couple of items for clarification. 1) Planning Coordinators and Transmission Planners should make it clear to LSEs, DPs and GOs as to what extent they model loads, reactive devices, and generators and not just rely on FAC-001, FAC-002 or the entities Facility Connection Requirements document to convey that information. 2) If requirements 9 through 14 are to be removed at a later date, then the SDT should be required to initiate the

Organization	Question 5:	Question 5 Comments:
		appropriate action or SAR before its disbanding to insure this happens.
ERCOT System Planning	No	ERCOT recommends that R1.1 be deleted. ERCOT shares the opinion of some that R1.1 is counter-productive and more likely to degrade reliability than improve it. R1.1 discourages transmission planners from revising inaccurate, speculative, or outdated modeling data by imposing new documentation burdens and compliance liability. Adding additional requirements to document changes to data required in requirements R9 through R14, MOD-010, and MOD-012 could induce an atmosphere of using inaccurate data to eliminate the need to document a needed change. Furthermore, it is believed that all modeling requirements should exist in a Modeling standard not a performance standard.
Duke Energy	Yes	In order to ensure these requirements move to the MOD standards, the TPL SDT is encouraged to write a SAR to get the data related changes into the MOD standards or add it to the issues to be considered by the drafting team in the development plan under project number 2010-04.
Central Maine Power Company	No	a. With respect to R9 "including the expected mix of industrial, commercial and residential loads", this provision may be inadequate to be practically useful. The potential issues include the variation in end-use load mix through the daily load cycle, seasonal load composition variations, and the ability to translate these end-uses into reasonable and useful steady-state and dynamic load models. It is important to understand how the information will be used and how much additional detail such as distribution network detail is also required. b. Add to the last sentence of R9 through R14 the following phrase, "within ninety days of a request for such information or as otherwise described in procedures established by the Planning Coordinator."
New York Independent System Operator	No	With respect to R9 "including the expected mix of industrial, commercial and residential loads", this provision may be inadequate to be practically useful. The potential issues include the variation in end-use load mix through the daily load cycle, seasonal load composition variations, and the ability to translate these end-uses into reasonable and useful steady-state and dynamic load models. It is important to understand how the information will be used and how much additional detail such as distribution network detail is also required. Add to the last sentence of R9 through R14 the following phrase, "within ninety days of a request for such information or as otherwise described in procedures established by the Planning Coordinator."
Alberta Electric System Operator	Yes	While we agree with separating R1 to form R9 through R14, we believe that R9 (modeling information for real and reactive load forecast data) should be applicable to Load Serving Entities (LSE) instead of (or in additional to) the Distribution Provider. In any case, this type of exchange of load information is already covered in MOD Standard or in the respective tariffs, and should not be included again in the proposed TPL-001-1 Standard.

Organization	Question 5:	Question 5 Comments:
FirstEnergy Corp.	No	FE does not support the modeling requirements within the TPL standard and suggest that the SDT remove these requirements. This standard should be viewed on a premise that a valid and appropriate system model exist so that the fundamental focus of the standard is as stated in its purpose statement "Establish Transmission System planning performance requirements... to develop a Bulk Electric System that will operate reliably over a broad spectrum of System conditions." If the R9 through R14 requirements remain, we offer the following comments: R9 - In requirement R9, the DP is to provide nodal load projections and include the expected mix of industrial, commercial, and residential Loads. System planning software can not presently accommodate this level of detail along with other load codes/classifications that may already be in use; i.e. municipal load, rural electric cooperative load, etc. Is the intent to require this information in models built and maintained by industry, i.e. MMWG? R10 - The TP does not have access to Interchange Schedules and resources required to supply Load for each of its Balancing Authority. This information may need to be provided by the Resource Planner or some other appropriate entity.
US Bureau of Reclamation	Yes	Comments: While we agree with separating R1 to form R9 through R14, we believe that R9 (modeling information for real and reactive load forecast data) should be applicable to Load Serving Entities (LSE) instead of (or in additional to) the Distribution Provider. In any case, this type of exchange of load information is already covered in MOD Standard or in the respective tariffs, and should not be included again in the proposed TPL-001-1 Standard.
BPA Transmission Reliability Program	No	Requirements for data gathering and load modeling belong in the MOD Standard and not in TPL-001-1. Requirements for dynamic load models should not be specified at this time, because the models have not been developed yet or approved by the RRO (also see comments regarding R2.4.1 under Item 2, above).

Response: In response to comments from you and others in the industry, the SDT has removed Requirements R9-R14 and enhanced Requirement R1 to more clearly specify the modeling information needed to support accurate Planning Assessments.

R1. Each Transmission Planner and Planning Coordinator shall maintain System models for performing the studies needed to complete their Planning Assessment. The models shall use data consistent with the data provided in accordance with ~~Requirements R9 through R14,~~ the MOD-010 and MOD-012 standards~~,~~ and other data sources,~~.~~ and shall simulate projected System conditions including requirements of regulatory authorities and other legal obligations.

R1.1 ~~The Planning Assessment shall include documentation of the technical rationale for modification of any data that was provided in Requirement R9 through R14, MOD-010, and MOD-012.~~Models for the Planning Assessment shall represent:

R1.1.1 Planned outages of generation and Transmission Facilities, if specifically known.

R1.1.2 New planned Facilities and changes to existing Facilities for each year of the Near-Term and Long-Term Transmission Planning Horizon, such as

Transmission Lines

Organization	Question 5:	Question 5 Comments:
Generators Circuit breakers Reactive Power devices Protection System equipment Control devices New technologies **R1.1.3** Real and reactive Demand of Load **R1.1.4** Firm Transmission Service **R1.1.5** Interchange **R1.1.6** Network resources required to supply Load		
Los Angeles Department of Water and Power	Yes	See the comment from WECC
Response: The SDT did not receive any specific comments from WECC.		
National Grid	No	a. With respect to R9 "including the expected mix of industrial, commercial and residential loads", this provision may be inadequate to be practically useful. The potential issues include the variation in end-use load mix through the daily load cycle, seasonal load composition variations, and the ability to translate these end-uses into reasonable and useful steady-state and dynamic load models. It is important to understand how the information will be used and how much additional detail such as distribution network detail is also required. b. Add to the last sentence of R9 through R14 the following phrase, "within ninety days of a request for such information or as otherwise described in procedures established by the Planning Coordinator." c. Flexibility is needed to conform with the requirements of the specific Planning Coordinator. Suggest changing R10 to read as follows: R10. Each Transmission Planner shall provide its respective Planning Coordinator with modeling information for Firm Transmission Service data, Interchange Schedules and resources required to supply Load for each of its Balancing Authorities for each year of the Transmission planning horizon, within ninety days of a request for such information or as otherwise described in procedures established by the Planning Coordinator.

Organization	Question 5:	Question 5 Comments:
		d. Flexibility is needed to conform with the requirements of the specific Planning Coordinator. Suggest changing R11 to read as follows R11. Each Transmission Owner shall provide its respective Planning Coordinator with modeling information for known planned outages and long-term outages for Transmission equipment for each year of the Transmission planning horizon with consideration given to spare equipment strategy, within ninety days of a request for such information or as otherwise described in procedures established by the Planning Coordinator. e. Flexibility is needed to conform with the requirements of the specific Planning Coordinator. Suggest changing R12 to read as follows: R12. Each Generator Owner shall provide its respective Planning Coordinator with modeling information for known planned outages and long-term outages for generation equipment for each year of the Transmission planning horizon, within ninety days of a request for such information or as otherwise described in procedures established by the Planning Coordinator. f. Flexibility is needed to conform with the requirements of the specific Planning Coordinator. Suggest changing R13 and R14 as follows:R13. Each Resource Planner shall provide its respective Planning Coordinator with the modeling information for new planned facilities for each year of the Transmission planning horizon including but not limited to generators, Reactive Power devices, and new technologies, within ninety days of a request for such information or as otherwise described in procedures established by the Planning Coordinator.. [Violation Risk Factor: TBD] [Time Horizon: TBD] R14. Each Transmission Planner shall provide its respective Planning Coordinator with modeling information for new planned facilities for each year of the Transmission planning horizon including but not limited to Transmission Lines, circuit breakers, Reactive Power devices, Protection System equipment and control devices, and new technologies, within ninety days of a request for such information or as otherwise described in procedures established by the Planning Coordinator. [Violation Risk Factor: TBD] [Time Horizon: TBD] g. Planned and long-term outages are two fundamentally different concepts and should be treated separately. Planned and Long-Term outages should be defined. Define how planning events in Tables 1 and 2 are associated with each type of outage (e.g. P4, P5, or P6). Should there be specific contingency descriptions associated with long-term outages? Define length of a "Long Term" outage. Planned outages should be addressed in the operating horizon unless otherwise defined in the planning horizon.
MidAmerican Energy Company	No	MEC disagrees with the approach of temporary requirements because of the problems that arise due to conflicting or uncoordinated standards (e.g. conflicting requirements between FAC-010-1 and TPL-002-0). We suggest the drafting team submit SARs to make the desired changes in the appropriate MOD standards. However, if these requirements are retained than we suggest the following few changes to R9-R14: The R9 wording on providing "the expected mix of industrial, commercial, and residential loads" should be dropped as the representative mix is difficult to quantify and verify while the benefit to representing the mix is unproven versus normal regional dynamic load representation practices. Many regions already convert normal steady state powerflow loads to standard mixes of, constant MVA, constant current, and shunt admittances which accounts for dynamic behavior. If the SDT decides not to drop these words, the MRO recommends "the expected mix of industrial, commercial, and residential loads" be changed to "the forecasted mix of industrial, commercial,

Organization	Question 5:	Question 5 Comments:
		and residential loads". In R9 through R13 the responsible entities should be giving their information to the Transmission Planner in addition to the Planning Coordinator. In R10, revise the text to: "Each Transmission Service Provider shall provide ?" In R11, is the text referring to "known planned outages" and "known long term outages"? What is the distinction that is meant to be made between the two specified types of outages? In R12, revise the text to: "? modeling information for planned facilities changes, known planned outages ?". Also, is the text referring to "known planned outages" and "known long term outages"? What is the distinction that is meant to be made between the two specified types of outages? In R13, revise the text to: "? for planned facilities changes for each year of the Transmission planning horizon including but not limited to generators, and new technologies ?". This wording broadens the meaning from simply "new" facilities to also include any "changes" to existing facilities. In R14, revise the text to: "? for planned facilities changes for each year ?". This wording broadens the meaning from simply "new" facilities to also include any "changes" to existing facilities.
MRO NERC Standards Review Subcommittee	No	The MRO disagrees with the approach of temporary requirements because of the problems that arise due to conflicting or uncoordinated standards (e.g. conflicting requirements between FAC-010-1 and TPL-002-0). We suggest the drafting team submit SARs to make the desired changes in the appropriate MOD standards. However, if these requirements are retained than we suggest the following few changes to R9-R14: In R9, revise the text to: "? load forecast data for at least the coincident peak of each year ?" The R9 wording on providing "the expected mix of industrial, commercial, and residential loads" should be dropped as the representative mix is difficult to quantify and verify while the benefit to representing the mix is unproven versus normal regional dynamic load representation practices. Many regions already convert normal steady state powerflow loads to standard mixes of, constant MVA, constant current, and shunt admittances which accounts for dynamic behavior. If the SDT decides not to drop these words, the MRO recommends "the expected mix of industrial, commercial, and residential loads" be changed to "the forecasted mix of industrial, commercial, and residential loads". In R9 through R13 the responsible entities should be giving their information to the Transmission Planner in addition to the Planning Coordinator. In R9, revise the text to: "? load forecast data for at least the coincident peak of each year ?"In R10, revise the text to: "Each Transmission Service Provider shall provide ?" In R11, is the text referring to "known planned outages" and "known long term outages"? What is the distinction that is

Organization	Question 5:	Question 5 Comments:
		meant to be made between the two specified types of outages? In R12, revise the text to: "? modeling information for planned facilities changes, known planned outages ?". Also, is the text referring to "known planned outages" and "known long term outages"? What is the distinction that is meant to be made between the two specified types of outages? In R13, revise the text to: "? for planned facilities changes for each year of the Transmission planning horizon including but not limited to generators, and new technologies ?". This wording broadens the meaning from simply "new" facilities to also include any "changes" to existing facilities. We suggested removing the reference to Reactive Power Devices because these devices would not be owned by Resource Planners. In R14, revise the text to: "? for planned facilities changes for each year ?". This wording broadens the meaning from simply "new" facilities to also include any "changes" to existing facilities.
LCRA TSC	No	R-11 states that "Each Transmission Owner shall provide its respective Planning Coordinator with modeling information for known planned outages and long-term outages for Transmission equipment." This is typically achieved through outage coordination between the individual Transmission Operators and the System Operator. More clarification may help by defining the difference between planned outages and long-term outages as they are used in R-11. This may be an Operations standard versus a Planning standard requirement.
NERC and Regional Coordination	No	R9 - Reactive load forecasts are not generally provided by distribution provider to the Transmission Planner.R11 - The requirements for providing “long term outages” to the Planning Coordinator is vague. What is a “long term outage” and do I need to plan for it? I think the right answer is only if it is expected to occur over the period that the TP establishes their critical system conditions. SDT should initiate the appropriate SAR prior to disbanding.
American Transmission Company	No	We disagree with the approach of temporary requirements because of the problems that arise due to conflicting or uncoordinated standards (e.g. conflicting requirements between FAC-010-1 and TPL-002-0). We support the approach of developing appropriate MOD standards SARs to make the desired changes. However, if these requirements are retained than we suggest the following few changes to R9-R14.In R9, revise the text to: "? load forecast data for at least the coincident peak of each year In R10, revise the text to: "Each Transmission Service Provider shall provide "In R11, is the text referring to "known planned outages" and "known long term outages" What is the distinction that is meant to be made between the two specified types of outages In R12, revise the text to: "? modeling information for planned facilities changes, known planned outages ?". Also, is the text referring to "known planned outages" and "known long term outages"? What is the distinction that is meant to be made between the two specified types of outages

Organization	Question 5:	Question 5 Comments:
		In R13, revise the text to: "? for planned facilities changes for each year of the Transmission planning horizon including but not limited to generators, and new technologies ?". This wording broadens the meaning from simply "new" facilities to also include any "changes" to existing facilities. We suggested removing the reference to Reactive Power Devices because these devices would not be owned by Resource Planners. In R14, revise the text to: "for planned facilities changes for each year ?". This wording broadens the meaning from simply "new" facilities to also include any "changes" to existing facilities.
Florida Reliability Coordinating Council, inc	No	R9 through R14 ?R9 through R14 should not be addressed in this TPL Standard. Requirements R9 through R14 should be included in future revisions to the MOD standards. If R9 through R14 remain in the Standard, then the following comments are appropriate: R9 ? Recommend adding ?and season (as defined by the Planning Coordinator)? after ?? load forecast data for each year? .Recommend adding ?(as defined by the Planning Coordinator)? after ?Transmission nodes? to allow the Planning Coordinator to appropriately define the term Transmission node. Recommend deleting ?including the expected mix of industrial, commercial, and residential Loads,? from the requirement since this information is not required by Transmission Planners or the Planning Coordinator. Many distribution providers will not know the mix of load type for a given Transmission node. R11 ?Recommend the removal of ?with consideration given to spare equipment strategy,? from this requirement. We feel that the consideration of spare equipment strategy would be better suited in an operating horizon standard (TOPs) rather than in the TPL standard. The term ?long-term outage? in this requirement is vague and the text ?and long-term outages? should be eliminated. The FERC language in Order 693 P-1725 states ?Accordingly, the Commission directs the ERO to modify the planning Reliability Standards to require the assessment of planned outages consistent with the entity's spare equipment strategy.? There is no mention of ?long-term outages? in conjunction with spare equipment strategy. R12 ? Recommend rewording as follows: ?Each Generator Owner shall provide its respective Planning Coordinator with modeling information for known planned generator outages for each year of the Transmission planning horizon, within ninety days of a request for such information." The language ?long-term outages for generation equipment? is vague and unclear as to what is a long-term outage and what specific type of generation equipment should be considered. R13 ? Propose adding ?and any changes to existing plans? after ?new planned facilities? as shown below: ?Each Transmission Planner shall provide its respective Planning Coordinator with modeling information for new planned Facilities and any changes to existing plans for each year of the Transmission planning horizon??
NSTAR Electric	No	1. With respect to R9 "including the expected mix of industrial, commercial and residential loads", this provision may be inadequate to be practically useful. The potential issues include the variation in end-use load mix through the daily load

Organization	Question 5:	Question 5 Comments:
		cycle, seasonal load composition variations, and the ability to translate these end-uses into reasonable and useful steady-state and dynamic load models. It is important to understand how the information will be used and how much additional detail such as distribution network detail is also required. 2. Add to the last sentence of R9 as follows "within ninety days of a request for such information or as otherwise described in procedures established by the Planning Coordinator." 3. Flexibility is needed to conform with the requirements of the specific Planning Coordinator. Suggest changing R10 to read as follows: "R10. Each Transmission Planner shall provide its respective Planning Coordinator with modeling information for Firm Transmission Service data, Interchange Schedules and resources required to supply Load for each of its Balancing Authorities for each year of the Transmission planning horizon, within ninety days of a request for such information or as otherwise described in procedures established by the Planning Coordinator." 4. Flexibility is needed to conform with the requirements of the specific Planning Coordinator. Suggest changing R11 to read as follows:"R11. Each Transmission Owner shall provide its respective Planning Coordinator with modeling information for known planned outages and long-term outages for Transmission equipment for each year of the Transmission planning horizon with consideration given to spare equipment strategy, within ninety days of a request for such information or as otherwise described in procedures established by the Planning Coordinator." 5. Flexibility is needed to conform with the requirements of the specific Planning Coordinator. Suggest changing R12 to read as follows:"R12. Each Generator Owner shall provide its respective Planning Coordinator with modeling information for known planned outages and long-term outages for generation equipment for each year of the Transmission planning horizon, within ninety days of a request for such information or as otherwise described in procedures established by the Planning Coordinator." 6. Flexibility is needed to conform with the requirements of the specific Planning Coordinator. Suggest changing R13 and R14 to read as follows:"R13. Each Resource Planner shall provide its respective Planning Coordinator with the modeling information for new planned facilities for each year of the Transmission planning horizon including but not limited to generators, Reactive Power devices, and new technologies, within ninety days of a request for such information or as otherwise described in procedures established by the Planning Coordinator.. [Violation Risk Factor: TBD] [Time Horizon: TBD] R14. Each Transmission Planner shall provide its respective Planning Coordinator with modeling information for new planned facilities for each year of the Transmission planning horizon including but not limited to Transmission Lines, circuit breakers, Reactive Power devices, Protection System equipment and control devices, and new technologies, within ninety days of a request for such information or as otherwise described in procedures established by the Planning Coordinator.. [Violation Risk Factor: TBD] [Time Horizon: TBD] " 7. Planned and long-term outages are two fundamentally different concepts and should be treated separately. Planned and Long-Term outages should be defined. Define how planning events in Tables 1 and 2 are associated with each type of outage (e.g. P4, P5, or P6). There should be specific contingency descriptions associated with long-term outages.

Organization	Question 5:	Question 5 Comments:
		Define length of a "Long Term" outage. Planned outages should be addressed in the operating horizon unless otherwise defined in the planning horizon.
ISO New England Inc.	No	a. With respect to R9 "including the expected mix of industrial, commercial and residential loads", this provision may be inadequate to be practically useful. The potential issues include the variation in end-use load mix through the daily load cycle, seasonal load composition variations, and the ability to translate these end-uses into reasonable and useful steady-state and dynamic load models. It is important to understand how the information will be used and how much additional detail such as distribution network detail is also required. b. Add to the last sentence of R9 through R14 the following phrase, "within ninety days of a request for such information or as otherwise described in procedures established by the Planning Coordinator." c. Flexibility is needed to conform with the requirements of the specific Planning Coordinator. Suggest changing R10 to read as follows: R10. Each Transmission Planner shall provide its respective Planning Coordinator with modeling information for Firm Transmission Service data, Interchange Schedules and resources required to supply Load for each of its Balancing Authorities for each year of the Transmission planning horizon, within ninety days of a request for such information or as otherwise described in procedures established by the Planning Coordinator. d. Flexibility is needed to conform with the requirements of the specific Planning Coordinator. Suggest changing R11 to read as followsR11. Each Transmission Owner shall provide its respective Planning Coordinator with modeling information for known planned outages and long-term outages for Transmission equipment for each year of the Transmission planning horizon with consideration given to spare equipment strategy, within ninety days of a request for such information or as otherwise described in procedures established by the Planning Coordinator. e. Flexibility is needed to conform with the requirements of the specific Planning Coordinator. Suggest changing R12 to read as follows: R12. Each Generator Owner shall provide its respective Planning Coordinator with modeling information for known planned outages and long-term outages for generation equipment for each year of the Transmission planning horizon, within ninety days of a request for such information or as otherwise described in procedures established by the Planning Coordinator. f. Flexibility is needed to conform with the requirements of the specific Planning Coordinator. Suggest changing R13 and R14 as follows:R13. Each Resource Planner shall provide its respective Planning Coordinator with the modeling information for new planned facilities for each year of the Transmission planning horizon including but not limited to generators, Reactive Power devices, and new technologies, within ninety days of a request for such information or as otherwise described in procedures established by the Planning Coordinator.. [Violation Risk Factor: TBD] [Time Horizon: TBD] R14. Each Transmission Planner shall provide its respective Planning Coordinator with modeling information for new planned facilities for each year of the Transmission planning horizon including but not limited to Transmission Lines, circuit breakers, Reactive Power devices, Protection System equipment and control devices, and new technologies, within ninety days of a request for such information or as otherwise described in procedures established by the Planning Coordinator.

Organization	Question 5:	Question 5 Comments:
		[Violation Risk Factor: TBD] [Time Horizon: TBD] g. Planned and long-term outages are two fundamentally different concepts and should be treated separately. Planned and Long-Term outages should be defined. Define how planning events in Tables 1 and 2 are associated with each type of outage (e.g. P4, P5, or P6). Should there be specific contingency descriptions associated with long-term outages? Define length of a "Long Term" outage. Planned outages should be addressed in the operating horizon unless otherwise defined in the planning horizon.

Response: In response to comments from you and others in the industry, the SDT has removed Requirements R9-R14 and enhanced Requirement R1 to more clearly specify the modeling information needed to support accurate Planning Assessments.

The SDT agrees that the wording regarding modeling of outages is confusing. In response the SDT has eliminated Requirement R11 and included a new Requirement R1.1.1 to require modeling of planned outages of generation and Transmission Facilities when they are specifically known.

R1. Each Transmission Planner and Planning Coordinator shall maintain System models for performing the studies needed to complete their Planning Assessment. The models shall use data consistent with the data provided in accordance with ~~Requirements R9 through R14,~~ the MOD-010 and MOD-012 standards~~,~~ and other data sources,~~.~~ and shall simulate projected System conditions including requirements of regulatory authorities and other legal obligations.

R1.1 ~~The Planning Assessment shall include documentation of the technical rationale for modification of any data that was provided in Requirement R9 through R14, MOD-010, and MOD-012.~~Models for the Planning Assessment shall represent:

R1.1.1 Planned outages of generation and Transmission Facilities, if specifically known.

R1.1.2 New planned Facilities and changes to existing Facilities for each year of the Near-Term and Long-Term Transmission Planning Horizon, such as

- Transmission Lines
- Generators
- Circuit breakers
- Reactive Power devices
- Protection System equipment
- Control devices
- New technologies

R1.1.3 Real and reactive Demand of Load

R1.1.4 Firm Transmission Service

Organization	Question 5:	Question 5 Comments:
R1.1.5 Interchange **R1.1.6** Network resources required to supply Load		
Gainesville Regional Utilities	Yes and No	I agree with the approach you are taking concerning this modeling data. I understand that "long term outages" for transmission and generation elements refer to a time frame greater that one year. But I am unclear if the "known planned outage" refers to the same time frame or does it apply to a normal scheduled maintenance type outage of less that one year. Are these "shorter that one year" outages better handled by sensitivity studies since they are normally during an non-peak seasons of the year? Again, the smaller utilities should provide all the requested data to the RRO, but should only have to answer to issues involving their elements discovered at the RRO level.
Response: The SDT agrees that the wording regarding modeling of outages is confusing. In response the SDT has eliminated Requirement R11 and included a new Requirement R1.1.1 to require modeling of planned outages of generation and Transmission Facilities when they are specifically known. **R1.1.1** Planned outages of generation and Transmission Facilities, if specifically known		
JEA	Yes and No	R9. JEA does not agree that the Transmission Planners should have the responsibility to perform load development or sanity checks on the DP's forecasted real and reactive loads based upon superfluous information like the customer mix. Also, JEA recommends adding language that gives the Planning Coordinator the option to require the forecast by season. R10. JEA agrees R11. JEA recommends that R11 be split into two functional requirements: (A) the provision of known planned outage information, and (B) the provision of "potential long-term forced outages of transmission equipment where readily available spares are not identified". JEA can support requirement (A), but believes that requirement (B) should be part of an operating horizon standard (TOP?) where the availability of spares and spare equipment strategies can be refined in a responsive manner as the opportunities evolve. JEA does not believe that the industry should overbuild its system for the possibility of a rare "low probability" equipment failure event will occur and no reasonable replacement alternative will exist in the world. R12. Need to define long-term outages R13. JEA agrees R14. JEA agrees
Ameren	No	We consider the proposed requirements R9-R14 to be largely a duplication of the MOD standards and do not agree that they belong in the proposed TPL-001-1. We would propose that a reference to the MOD standards would be more appropriate so as not to create a double-jeopardy compliance situation. If it is determined that the requirements R9-R14

Organization	Question 5:	Question 5 Comments:
		need to stay, the proposed standard needs to reflect the existing data flow processes and consider who builds the models, which is the Transmission Planner, and not the Planning Coordinator. According to the definition provided in this standard, the Planning Coordinator is "The responsible entity that coordinates and integrates transmission facility and service plans, resource plans, and protection systems." In our case, the Transmission Planner receives: a) load forecast (real and reactive) information from the Distribution Planner or Load Serving Entity, b) transmission ratings/impedance/topology(outage) information from the Transmission Owners, c) generation ratings/capabilities/outage information from the Generation Owners, and d) designated network resources (existing and future), as well as external obligations, from Resource Planners. The Transmission Planner develops powerflow and corresponding dynamic models from this information including load magnitude and distribution, generation dispatch, and net scheduled interchange, and provides the models or modeling components to the Reliability Coordinator and Planning Coordinator. Other organizations may have similar problems with data flow processes as specified in R9-R14.We view the R9 requirement of the proposed TPL-001-1 for the Distribution Provider to provide real and reactive load forecast data, including load mix information, to conflict with R1.4 of MOD-013-1 which has the RRO as setting the requirement for the dynamic load data. R10 needs to be modified to reflect the RTO activities related to the coordination and sale of Firm Transmission Service, which is not a Transmission Planning activity.R11 needs to be modified to drop the "spare equipment strategy". This is not a modeling issue and should be covered in standard TOP-002-2 (see R1 and R6).R13 needs to be modified to drop the "Reactive Power devices and new technologies" because Resource Planners typically do not know about these devices. The Transmission Planner or Owner may be the more appropriate entity. We view R14 as an extension of Standards MOD-010-0, MOD-011-0, MOD-012-0, and MOD-013-0.
Exelon Transmission Planning	Yes and No	R11 shouldn't include consideration of a spare equipment strategy. All known planned and long-term outages of transmission equipment should be included regardless of the spare equipment strategy.
IESO	Yes and No	A. R9: Agreed B. R10: Holding the TP to provide modeling information on Firm Transmission Service, (a TSP's role), Interchange Schedules (also a TSP's role), and resources required to supply Load for each of its Balancing Authorities (Resource Planner's role) may not be appropriate. In fact, the TP relies on others to provide this set of information for developing its own study model. We suggest to change the responsible entities to these specific entities; or if the TP is required to provide the PC with the model, then there should be requirements in other standards to obligate these other entities to provide the TP with the needed information. C. R11: The phrase "with consideration given to spare equipment strategy" is vague (not enforceable or measurable) and does not appear to add anything to the required product which should already have the spare strategy and capability taken into account when outage plans are developed. We suggest to remove this phrase. If this was retained, the follow on question is why R12 doesn't have a similar requirement (note that a generator outage may not be due to maintenance of the generator itself; it could be due to outages to step-up transformers, breakers or switches for which spares may be

Organization	Question 5:	Question 5 Comments:
		carried). D. R12: Agreed. E. R13: We are not sure what purpose to include "and new technologies" would serve if such technologies do not result in the provision of generators and/or reactive sources which are already covered. Further, this is vague to determine what constitutes "new technologies" and hence this is not enforceable or measurable. We suggest to remove this term. F. R14: Same comment as in R13 on "new technologies".

Response: In response to comments from you and others in the industry, the SDT has removed Requirements R9-R14 and enhanced Requirement R1 to more clearly specify the modeling information needed to support accurate Planning Assessments.

The standard's wording regarding "spare equipment strategy" has also been revised and removed from the modeling requirements. Requirement R2.1.5 now addresses how a Transmission Planner's "spare equipment strategy" should be considered in Transmission planning.

R1. Each Transmission Planner and Planning Coordinator shall maintain System models for performing the studies needed to complete their Planning Assessment. The models shall use data consistent with the data provided in accordance with ~~Requirements R9 through R14,~~ the MOD-010 and MOD-012 standards~~,~~ and other data sources,~~.~~ and shall simulate projected System conditions including requirements of regulatory authorities and other legal obligations.

R1.1 ~~The Planning Assessment shall include documentation of the technical rationale for modification of any data that was provided in Requirement R9 through R14, MOD-010, and MOD-012.~~Models for the Planning Assessment shall represent:

R1.1.1 Planned outages of generation and Transmission Facilities, if specifically known.

R1.1.2 New planned Facilities and changes to existing Facilities for each year of the Near-Term and Long-Term Transmission Planning Horizon, such as

- Transmission Lines
- Generators
- Circuit breakers
- Reactive Power devices
- Protection System equipment
- Control devices
- New technologies

R1.1.3 Real and reactive Demand of Load

Organization	Question 5:	Question 5 Comments:
R1.1.4 Firm Transmission Service **R1.1.5** Interchange **R1.1.6** Network resources required to supply Load **R2.1.4** When an entity's spare equipment strategy could result in the unavailability of major Transmission equipment that has a lead time of one year or more (such as a transformer), an analysis of the impact on System performance shall be assessed. The analysis shall reflect the Contingencies identified in Table 1 during the conditions that the System is expected to experience due to the unavailability of the long lead time equipment.		
Progress Energy Florida, Inc.	No	PEF as a general rule believes that Requirements R9-14 can and should be addressed in a MOD Standard. Individual comments on particular ones that PEFs sees as problematic are as follows:R9: This requirement is problematic in its present wording. As worded it would appear to infringe upon the outlined process regarding provision of load forecast data as stipulated in PEFs Attachment K document, mandated to be included as an Attachment to our Tariff per FERC Order 890. In PEF's Attachment K, load forecast data, as submitted by all entities responsible for providing such data for PEF native load, must be submitted by January 1 of each year. Implementation of R9 would thus set in place two binding regulatory processes for a situation in which only one is needed. Furthermore, the requirement uses the term "transmission node", a term which is ambiguous and not easily applicable in the electric utility business. Terms such as "feeders", "substations" or "delivery points" might be more appropriate.R11: PEF appreciates the consideration given with the term "known planned outages", given that specific dates for planned outages in the long-term planning horizon are often difficult to know. This point concludes, however, with the addition of the phrase ?with consideration given to spare equipment strategy?, and PEF does not understand what is meant by this term nor why it is given special consideration in a discussion of planned outages. Spare equipment is just as crucial, if not more so, in the event of an unplanned outage. Furthermore, consideration of spare equipment strategy is already handled as part of PEF's planning processes and as part of the existing TPL Standards. PEF therefore requests that the phrase "with consideration given to spare equipment strategy" be removed from R11.R13: PEF is unsure as to the meaning of "for each year of the Planning horizon". PEF would point out that if from one planning cycle to the next, the modeling of a particular planned generator has not changed, the Resource Planners should not have to re-submit the same data over and over again on an annual basis. Additionally, PEF asserts that its Resource Planners are not involved in the development or implementation of Reactive Power devices or new technologies, and therefore requests that these specifications be removed.
Response: In response to comments from you and others in the industry, the SDT has removed Requirements R9-R14 and enhanced Requirement R1 to more clearly specify the modeling information needed to support accurate Planning Assessments. The standard's wording regarding "spare equipment strategy" has also been revised and removed from the modeling requirements. Requirement R2.1.4 now addresses how a Transmission Planner's "spare equipment strategy" should be considered in Transmission planning. The phrase "for each year of the Transmission Planning Horizon" was deleted in the associated requirements. Requirement R1.1.2 now addresses that the models		

Organization	Question 5:	Question 5 Comments:
shall represent each year of the Near-Term and Long Term Transmission Planning Horizon. The SDT agrees with your comment on the Resource Planner. The standard is no longer applicable to the Resource Planner and the requirement has been deleted. **R1.** Each Transmission Planner and Planning Coordinator shall maintain System models for performing the studies needed to complete their Planning Assessment. The models shall use data consistent with the data provided in accordance with ~~Requirements R9 through R14,~~ the MOD-010 and MOD-012 standards~~,~~ and other data sources,~~.~~ and shall simulate projected System conditions including requirements of regulatory authorities and other legal obligations. **R1.1** ~~The Planning Assessment shall include documentation of the technical rationale for modification of any data that was provided in Requirement R9 through R14, MOD-010, and MOD-012.~~Models for the Planning Assessment shall represent: **R1.1.1** Planned outages of generation and Transmission Facilities, if specifically known. **R1.1.2** New planned Facilities and changes to existing Facilities for each year of the Near-Term and Long-Term Transmission Planning Horizon, such as Transmission Lines Generators Circuit breakers Reactive Power devices Protection System equipment Control devices New technologies **R1.1.3** Real and reactive Demand of Load **R1.1.4** Firm Transmission Service **R1.1.5** Interchange **R1.1.6** Network resources required to supply Load **R2.1.4** When an entity's spare equipment strategy could result in the unavailability of major Transmission equipment that has a lead time of one year or more (such as a transformer), an analysis of the impact on System performance shall be assessed. The analysis shall reflect the Contingencies identified in Table 1 during the conditions that the System is expected to experience due to the unavailability of the long lead time equipment.		
Lafayette Utilities	No	In Draft 2 of TPL-001, the SDT has adopted ?Planning Coordinator? as a new defined term. That term is used frequently in the new draft Reliability Standard (including in Requirements R9 - R14 but also, most notably, in Section A.4.1.1). The

Organization	Question 5:	Question 5 Comments:
System		SDT explained in its response to comments on Draft 1 that it had taken the definition of "Planning Coordinator" from the NERC Functional Model. However, the term "Planning Coordinator" is not used in the NERC Registry Criteria, nor does it appear in the NERC Glossary. Because the latter form the basis for allocating compliance responsibilities, the SDT should eliminate use of "Planning Authority" and should adopt in its stead a term that is used in the Registry Criteria (such as "Planning Authority"). With respect to the incorporation of data provided under Reliability Standards MOD-010 and MOD-012 into the studies contemplated by the revised version of TPL-001 (see Requirements R1 and R5), Lafayette urges the SDT to clarify entities? obligations with respect to the provision and use of this data, particularly with respect to Planning Coordinators/Authorities. As presently drafted, MOD-010 and MOD-012 do not apply to Planning Coordinators or Planning Authorities, and these standards also do not provide for these entities to receive MOD-010 and MOD-012 data from the entities that are subject to these two Standards. Further, to the extent that Requirements R1 and R5 require Transmission Planners to use MOD-010 and MOD-012 data, is it contemplated that Transmission Planners will obtain this data from Resource Planners and Transmission/Generation Owners in their areas, or will Transmission Planners merely be obligated to incorporate the data that they themselves provide under MOD-010 and MOD-012 into their studies? Requirement R9 directs each Distribution Provider to furnish its "Planning Coordinator" with modeling information that includes "real and reactive load forecast data" at Transmission nodes" and "the expected mix of industrial, commercial, and residential Loads." As discussed previously with respect to Requirement 2.4.1, Distribution Providers may consider the information required by R9 to be commercially sensitive such that its disclosure could have adverse competitive effects. The information specified in R9 therefore should be protected from disclosure unless the provider of the information authorizes its release or other appropriate protections are in place. Additionally, given that this requirement directs the provision of "load forecast data," it seems more appropriate that the requirement apply to "Load-Serving Entities," "Distribution Providers that serve load" or "Distribution Providers that are also Load-Serving Entities." Requirement R10 assumes that the Transmission Planner has access at all times (and, therefore, is in a position to provide within 90 days of a request) to Firm Transmission Service Data, Interchange Schedules, and resources required to serve load for each of its Balancing Authorities for each year of the transmission planning horizon. The Transmission Planner, however, may only receive such information periodically (e.g., annually or semi-annually) from its Balancing Authorities for use in the planning process. It is more likely that, at any point during the year, the Transmission Owner, Transmission Operator, or Transmission Service Provider would have access to the specified information. Requirement R10 should be expanded to include these other entities, which probably will have access to the data throughout the planning cycle. Requirement R11 does not specify whether outage information provided by a Transmission Owner must be updated (e.g., if the outage schedule changes after being provided upon request by the Planning Coordinator). The Transmission Owner's obligations with respect to providing updated information should be clearly stated. Additionally, it is not clear what the SDT means by the phrase "giving consideration to spare equipment strategy." If the intent is that Transmission Owners shall factor into their outage decisions and timing the availability of spare equipment that might affect the need for or duration of an outage, that intent should be stated in clear terms.
Response: v4 of the Functional Model which has been approved by the BOT includes the term 'Planning Coordinator'. The definition has been deleted from this		

Organization	Question 5:	Question 5 Comments:

posting as it has already been implemented in another project.

In response to comments from you and others in the industry, the SDT has removed Requirements R9-R14 and enhanced Requirement R1 to more clearly specify the modeling information needed to support accurate Planning Assessments.

The standard's wording regarding "spare equipment strategy" has also been revised and removed from the modeling requirements. Requirement R2.1.4 now addresses how a Transmission Planner's "spare equipment strategy" should be considered in Transmission planning.

R1. Each Transmission Planner and Planning Coordinator shall maintain System models for performing the studies needed to complete their Planning Assessment. The models shall use data consistent with the data provided in accordance with ~~Requirements R9 through R14,~~ the MOD-010 and MOD-012 standards~~,~~ and other data sources,~~.~~ and shall simulate projected System conditions including requirements of regulatory authorities and other legal obligations.

R1.1 ~~The Planning Assessment shall include documentation of the technical rationale for modification of any data that was provided in Requirement R9 through R14, MOD-010, and MOD-012.~~Models for the Planning Assessment shall represent:

R1.1.1 Planned outages of generation and Transmission Facilities, if specifically known.

R1.1.2 New planned Facilities and changes to existing Facilities for each year of the Near-Term and Long-Term Transmission Planning Horizon, such as

- Transmission Lines
- Generators
- Circuit breakers
- Reactive Power devices
- Protection System equipment
- Control devices
- New technologies

R1.1.3 Real and reactive Demand of Load

R1.1.4 Firm Transmission Service

R1.1.5 Interchange

R1.1.6 Network resources required to supply Load

R2.1.4 When an entity's spare equipment strategy could result in the unavailability of major Transmission equipment that has a lead time of one year or more (such as a transformer), an analysis of the impact on System performance shall be assessed. The analysis shall reflect the Contingencies identified in Table 1 during the conditions that the System is expected to experience due to the unavailability of the long lead time equipment.

Organization	Question 5:	Question 5 Comments:
E.ON U.S. Transmission Planning	Yes and No	R1 states "Each Transmission Planner and Planning Coordinator shall maintain System models " and R7 states "Each Transmission Planner and Planning Coordinator shall determine and identify individual and joint responsibilities" but R9-R14 requires that data flow through the Planning Coordinator. Requirements R9-R14 should allow the data to be provided to either, as appropriate for the situation.R9 ?neighboring systems? should be replaced with more descriptive terms such as Planning Coordinators of ? or Transmission Planners of ? R10 The Transmission Planner is a user of this data, just like the Planning Coordinator, and is not the source of this data. The responsibility should be placed on the "source provider" like R9 and R11-R14. R11 The requirement should be limited to planned outages and existing outages that may be long-term due to the spare equipment strategy. The contingency analysis covers all other future outages. R12 The requirement should be limited to planned outages and existing outages that may be long-term due to the spare equipment strategy. The contingency analysis covers all other future outages.

Response: In response to comments from you and others in the industry, the SDT has removed Requirements R9-R14 and enhanced Requirement R1 to more clearly specify the modeling information needed to support accurate Planning Assessments.

The SDT agrees that the wording regarding modeling of outages is confusing. In response the SDT has eliminated Requirement R11 and included a new Requirement R1.1.1 to require modeling of planned outages of generation and Transmission Facilities when they are specifically known.

The standard's wording regarding "spare equipment strategy" has also been revised and removed from the modeling requirements. Requirement R2.1.4 now addresses how a Transmission Planner's "spare equipment strategy" should be considered in Transmission planning.

R1. Each Transmission Planner and Planning Coordinator shall maintain System models for performing the studies needed to complete their Planning Assessment. The models shall use data consistent with the data provided in accordance with ~~Requirements R9 through R14,~~ the MOD-010 and MOD-012 standards~~,~~ and other data sources,~~.~~ and shall simulate projected System conditions including requirements of regulatory authorities and other legal obligations.

R1.1 ~~The Planning Assessment shall include documentation of the technical rationale for modification of any data that was provided in Requirement R9 through R14, MOD-010, and MOD-012.~~Models for the Planning Assessment shall represent:

R1.1.1 Planned outages of generation and Transmission Facilities, if specifically known.

R1.1.2 New planned Facilities and changes to existing Facilities for each year of the Near-Term and Long-Term Transmission Planning Horizon, such as

- Transmission Lines
- Generators
- Circuit breakers
- Reactive Power devices

Organization	Question 5:	Question 5 Comments:
Protection System equipment Control devices New technologies **R1.1.3** Real and reactive Demand of Load **R1.1.4** Firm Transmission Service **R1.1.5** Interchange **R1.1.6** Network resources required to supply Load **R2.1.4** When an entity's spare equipment strategy could result in the unavailability of major Transmission equipment that has a lead time of one year or more (such as a transformer), an analysis of the impact on System performance shall be assessed. The analysis shall reflect the Contingencies identified in Table 1 during the conditions that the System is expected to experience due to the unavailability of the long lead time equipment.		
Orlando Utiliites Commission	No	If improvements are needed to the MOD standards then those should be addressed in the MOD standards. This is beyond the scope of the TPL standards. Creating requirements that are not within the scope of a particular standard invites compliances issues and also creates an environment where it may not be possible to comply with both standards. However if you are going to retain these please consider: R7: Revising to state "Each Transmission Planner and their associated Planning Coordinator" otherwise this could be interpreted that every TP & PC has to have an agreement with every other TP and PC in existence on their joint and individual responsibilities. R8: This seems to be redundant with the FERC order 890 requirements for an Attachment K process. That process already has an audit mechanism in FERC and a reporting mechanism in the form of the clients of that process. Having NERC auditors monitor this type of process seems a distraction from their purpose of enhancing system reliability.
Response: In response to comments from you and others in the industry, the SDT has removed Requirements R9-R14 and enhanced Requirement R1 to more clearly specify the modeling information needed to support accurate Planning Assessments. **R1.** Each Transmission Planner and Planning Coordinator shall maintain System models for performing the studies needed to complete their Planning Assessment. The models shall use data consistent with the data provided in accordance with ~~Requirements R9 through R14,~~ the MOD-010 and MOD-012 standards~~,~~ and other data sources,~~.~~ and shall simulate projected System conditions including requirements of regulatory authorities and other legal obligations. **R1.1** ~~The Planning Assessment shall include documentation of the technical rationale for modification of any data that was provided in Requirement R9 through R14, MOD-010, and MOD-012.~~Models for the Planning Assessment shall represent:		

Organization	Question 5:	Question 5 Comments:
R1.1.1 Planned outages of generation and Transmission Facilities, if specifically known. **R1.1.2** New planned Facilities and changes to existing Facilities for each year of the Near-Term and Long-Term Transmission Planning Horizon, such as Transmission Lines Generators Circuit breakers Reactive Power devices Protection System equipment Control devices New technologies **R1.1.3** Real and reactive Demand of Load **R1.1.4** Firm Transmission Service **R1.1.5** Interchange **R1.1.6** Network resources required to supply Load Regarding the comment pertaining to Requirement R7, the SDT believes there is an inherent association between the TP and its PC and it should not be interpreted that every TP needs an agreement with every other TP and PC. Regarding the comment pertaining to Requirement R8, the SDT believes the requirement captures the intent of FERC Order 890.		
BCTC	Yes	We can live with the proposed Requirements, but expect some problems may arise with implementation. For example, to accurately model our system for stability studies, we require models of adjacent systems. It is not clear how we will coordinate this requirement within the WECC base case process.
PacifiCorp	Yes	We agree that the MOD Standards need modifications and additions to be used for Transmission Planning, We also agree with the movement of the R1of the first draft to the R9 through R14 of this draft, We also agree that when the MOD Standards are replaced, then remove these Requirements from the TPL Standard.
Arizona Public Service Co.	Yes	We agree that the MOD Standards need modifications and additions to be used for Transmission Planning, We also agree with the movement of the R1of the first draft to the R9 through R14 of this draft, We also agree that when the MOD Standards are replaced, then remove these Requirements from the TPL Standard.

Organization	Question 5:	Question 5 Comments:
City Water, Light & Power - Springfield, Illinois	Yes	
Progress Energy Carolinas	Yes	
Platte River Power Authority	Yes	
Tenaska, Inc.	Yes	
SMUD	Yes	
SERC Reliability Review Subcommittee and Planning Standards Subcommittee	Yes	
Oncor Electric Delivery	Yes	NA
Entergy Services, Inc.	Yes	
Response: Thank you for your response but the majority of the industry has responded negatively and the SDT has changed the requirements as shown in the summary response. .		

6. The SDT has modified the requirements relating to short circuit analysis Do you concur with the modifications reflected in Requirements R2.3 and R4. If not, please state why and/or suggest specific changes.

Summary Consideration:

The majority of commenters responded negatively. In general, commenters indicated a need for clarifying what specific short-circuit studies were required. While it's an annual requirement, what year or years should be studied? Is there both a short-term and long-term requirement or is it just short-term? In addition, the need for studies beyond those of a "normal system" was also questioned. To provide clarity on these issues, the SDT changed Requirements R2.3 and R2.6.2 and created a new Requirement, R2.7, to address the need for corrective actions specific to when fault interrupting duties are exceeded while also deleting Requirement R4 as those requirements are now included in Requirement R2.3. In addition, some entities suggested these requirements belong in a separate standard such as FAC-002 or a new standard. However, the SAR for this project specified that short-circuit requirements would be included in TPL-001; therefore, the suggestion to move these short-circuit study requirements to a separate standard cannot be implemented. Also, the need for, or applicability, of 'single Contingencies' in Requirement R4 was dropped when Requirement R4 was merged into Requirement R2.3.

In response to industry comments, Requirement R4 has been deleted and the following requirements have been changed:

R2.3 The short circuit analysis portion of the Planning Assessment shall be conducted annually addressing the Near-Term Transmission Planning Horizon and can be supported by current or past studies. The analysis shall determine the maximum short circuit interruption duty on fault interrupting devices using the System short circuit model with any generation and Transmission Facilities in service which could impact the study area.

R2.6.2 (now R2.5.2) For steady state, short circuit, ~~Generating Plant Stability,~~ or ~~System~~ Stability analysis: the ~~study~~ present System model shall not include any material changes, such as, generation or Transmission additions/removals, or topology changes that have occurred in the intervening period and would impact the study area. Material generation changes could include:

- The addition/deletion/change of individual generating unit capability of 20 MW or greater.
- An aggregated addition/deletion/change to a group of generating units directly connected through their step-up transformer(s) to the BES which total 20 MW or greater.

R2.7 For short circuit analysis, if the short circuit current interruption duty on fault interrupting devices determined in Requirement R2.3 exceeds their Equipment Rating, the Planning Assessment shall include a Corrective Action Plan to address the Equipment Rating violations. The Corrective Action Plan shall:

R2.7.1 List System deficiencies and the associated actions needed to achieve required System performance.

R2.7.2 Be reviewed in subsequent annual Planning Assessments as to implementation status.

Organization	Question 6:	Question 6 Comments:
NPCC	No	In R4, suggest striking, "that would result in greater circuit breaker interrupting duties?".
Los Angeles Department of Water and Power	No	Short circuit study is a static study, there is no dynamic involved. The main purpose of short circuit study, from a planning perspective, is to size the breakers to ensure the breakers can interrupt a fault in the system when called upon. R4 requires simulation including contingencies, for what purpose is not known. The language implies there are single contingencies that could result in higher duties. I disagree. The highest duty a circuit breaker will see is when the system is whole and with all generator units in service and the fault to be cleared is a bus fault. Any single contingency that involve losing a unit or any component in the system will result in a weaker system and less short circuit duties. This is elementary. I cannot envision of any single contingency that would put more units on line or switch in additional transmission facilities beyond a full system with all unit already in service. In R2.3, the requirement is to do the study on an annual basis "and" support of past studies. If the intent is to allow past studies to substitute for annual study, the word "and" should be changed to "or". If the intent is to mandate annual study, then the support of past studies is irrelevant since the annual study supersedes past ones. In addition, short circuit study does not need to be performed annually unless there is substantive addition to the system in the form of a generating unit or a major transmission facility. So it make sense to allow past studies in lieu of annual study if there is no substantive addition to the system.
Transmission Agency of Northern California	Yes and No	We agree with R2.3. However, R4 requires assessment of ?Short-circuit capability of its equipment under normal conditions and following any single Contingency condition that would result in greater circuit breaker interrupting duties?. Since short circuit studies are typically performed by applying a fault on a Facility starting from a normal condition, there can be confusion whether the result would constitute ?normal? condition or ?following any single Contingency condition?. Also, by specifying the normal and single contingency conditions, R4 is straying into ?how? to perform a study, which is not necessary in a standard. We suggest deleting the reference to the contingencies to be used in the study.
OPUC	Yes and No	What constitutes a ?normal condition? still needs further clarity.
Pacific Gas and Electric Co.	Yes and No	We agree with R2.3. However, R4 requires assessment of ?Short-circuit capability of its equipment under normal conditions and following any single Contingency condition that would result in greater circuit breaker interrupting duties?. Since short circuit studies are typically performed by applying a fault on a Facility starting from a normal condition, there can be confusion whether the result would constitute “normal” condition or “following any single Contingency condition”. Also, by specifying the normal and single contingency conditions, R4 is straying into ?how? to perform a study, which is not necessary in a standard. We suggest deleting the reference to the contingencies to be used in the study.
Public Service Company of New Mexico	Yes and No	We agree with R2.3. However, R4 requires assessment of ?Short-circuit capability of its equipment under normal conditions and following any single Contingency condition that would result in greater circuit breaker interrupting duties?. Since short circuit studies are typically performed by applying a fault on a Facility starting from a normal condition, there can be confusion

Organization	Question 6:	Question 6 Comments:
		whether the result would constitute ?normal? condition or ?following any single Contingency condition?. Also, by specifying the normal and single contingency conditions, R4 is straying into “how” to perform a study, which is not necessary in a standard. We suggest deleting the reference to the contingencies to be used in the study.
PacifiCorp	Yes and No	We agree with R2.3. However, R4 requires assessment of “Short circuit capability of its equipment under normal condition and following any single Contingency condition that would result in greater circuit breaker interrupting duties”. Since short circuit studies are typically performed by applying a three phase fault on a Facility starting from a normal condition, please clarify whether the result would constitute ?normal? condition or ?following any single Contingency condition?.
Puget Sound Energy, Inc.	Yes and No	We agree with R2.3. However, R4 requires assessment of “Short circuit capability of its equipment under normal conditions and following any single Contingency condition that would result in greater circuit breaker interrupting duties”. Since short circuit studies are typically performed by applying a fault on a Facility starting from a normal condition, there can be confusion whether the result would constitute “normal” condition or “following any single Contingency condition”. Also, by specifying the normal and single contingency conditions, R4 is straying into “how” to perform a study, which is not necessary in a standard. We suggest deleting the reference to the contingencies to be used in the study.
Idaho Power Company	Yes and No	We agree with R2.3. However, R4 requires assessment of “Short circuit capability of its equipment under normal condition and following any single Contingency condition that would result in greater circuit breaker interrupting duties”. Since short circuit studies are typically performed by applying a fault on a Facility starting from a normal condition, there can be confusion whether the result would constitute “normal” condition or ?following any single Contingency condition”. Also, by specifying the normal and single contingency conditions, R4 is straying into “how” to perform a study, which is not necessary in a standard. We suggest deleting the reference to the contingencies to be used in the study.
SMUD	Yes and No	We agree with R2.3. However, R4 requires assessment of ?Short-circuit capability of its equipment under normal conditions and following any single Contingency condition that would result in greater circuit breaker interrupting duties?. Since short circuit studies are typically performed by applying a fault on a Facility starting from a normal condition, there can be confusion whether the result would constitute ?normal? condition or ?following any single Contingency condition?. Also, by specifying the normal and single contingency conditions, R4 is straying into ?how? to perform a study, which is not necessary in a standard. We suggest deleting the reference to the contingencies to be used in the study.
Hydro-Quebec TransEnergie (HQT)	No	In R4, suggest striking, "that would result in greater circuit breaker interrupting duties?".
Sierra Pacific Power Comapny	Yes and No	We agree with R2.3. However, R4 requires assessment of “Short circuit capability of its equipment under normal condition and following any single Contingency condition that would result in greater circuit breaker interrupting duties”. Since short circuit

Organization	Question 6:	Question 6 Comments:
/ Nevada Power Company		studies are typically performed by applying a fault on a Facility starting from a normal condition, there can be confusion whether the result would constitute “normal” condition or “following any single Contingency condition”. Also, by specifying the normal and single contingency conditions, R4 is straying into “how” to perform a study, which is not necessary in a standard. We suggest deleting the reference to the contingencies to be used in the study.
Black Hills Corporation	Yes and No	We agree with R2.3. However, R4 requires assessment of ?Short-circuit capability of its equipment under normal conditions and following any single Contingency condition that would result in greater circuit breaker interrupting duties?. Since short circuit studies are typically performed by applying a fault on a Facility starting from a normal condition, there can be confusion whether the result would constitute “normal” condition or “following any single Contingency condition”. Also, by specifying the normal and single contingency conditions, R4 is straying into “how” to perform a study, which is not necessary in a standard. We suggest deleting the reference to the contingencies to be used in the study.
Arizona Public Service Co.	Yes and No	We agree with R2.3. However, R4 requires assessment of “Short circuit capability of its equipment under normal condition and following any single Contingency condition that would result in greater circuit breaker interrupting duties”. Since short circuit studies are typically performed by applying a three phase fault on a Facility starting from a normal condition, please clarify whether the result would constitute “normal” condition or “following any single Contingency condition”.
Exelon Transmission Planning	No	R2.3 is not clear as to which year’s studies are required. Is the Planning Assessment time frames in R2 also applicable to R4? The phrase 'years one or two of the near-term planning horizon' should be included.
SRP	Yes and No	We agree with R2.3. However, R4 requires assessment of ?Short-circuit capability of its equipment under normal conditions and following any single Contingency condition that would result in greater circuit breaker interrupting duties?. Since short circuit studies are typically performed by applying a fault on a Facility starting from a normal condition, there can be confusion whether the result would constitute ?normal? condition or ?following any single Contingency condition?. Also, by specifying the normal and single contingency conditions, R4 is straying into ?how? to perform a study, which is not necessary in a standard. We suggest deleting the reference to the contingencies to be used in the study.
Tucson Electric Power Company	Yes and No	We agree with R2.3. However, R4 requires assessment of ?Short-circuit capability of its equipment under normal conditions and following any single Contingency condition that would result in greater circuit breaker interrupting duties?. Since short circuit studies are typically performed by applying a fault on a Facility starting from a normal condition, there can be confusion whether the result would constitute ?normal? condition or ?following any single Contingency condition?. Also, by specifying the normal and single contingency conditions, R4 is straying into ?how? to perform a study, which is not necessary in a standard. We suggest deleting the reference to the contingencies to be used in the study.

Organization	Question 6:	Question 6 Comments:
SERC Dynamics Review Subcommittee	Yes	It is not clear in the standard what is meant by ?single contingency?? Is the concern in Requirement R4 limited to single contingencies that may result in a system state which results in a greater circuit breaker interrupting duty?
Austin Energy	Yes and No	Transmission Planners should assess equipment short-circuit capability under normal conditions, but the need assess its capability following a contingency is so rare it should be left to the planner's selective analysis and not made a specific requirement in the standards.
Modesto Irrigation District	Yes and No	Comments: We agree with R2.3. However, R4 requires assessment of ?Short-circuit capability of its equipment under normal conditions and following any single Contingency condition that would result in greater circuit breaker interrupting duties?. Since short circuit studies are typically performed by applying a fault on a Facility starting from a normal condition, there can be confusion whether the result would constitute ?normal? condition or ?following any single Contingency condition?. Also, by specifying the normal and single contingency conditions, R4 is straying into “how” to perform a study, which is not necessary in a standard. We suggest deleting there reference to the contingencies to be used in the study.
Tri-State Generatino and Transmission Association, Inc.	Yes and No	R2.3 is acceptable as written. R4 is redundant and should be eliminated. Also, the contingency short circuit study requirement does not appear to meet the purpose described in this draft standard (breaker duty monitoring). Three-phase short circuits on an intact system should cover the highest fault conditions, and thus the most critical breaker duty conditions.
Tri-State G&T	Yes and No	We agree with R2.3. However, R4 requires assessment of ?Short-circuit capability of its equipment under normal conditions and following any single Contingency condition that would result in greater circuit breaker interrupting duties?. Since short circuit studies are typically performed by applying a fault on a Facility starting from a normal condition, there can be confusion whether the result would constitute “normal” condition or “following any single Contingency condition.” Also, by specifying the normal and single contingency conditions, R4 is straying into “how” to perform a study, which is not necessary in a standard. We suggest deleting the reference to the contingencies to be used in the study.
Lakeland Electric	No	R2.3 or R4 should specify how many and / or how to choose which years of the planning horizon shall be studied. R4 should specify method of choosing which single contingencies to study as larger systems will require an inordinate amount of work to outage every element during each of the study years of the short circuit analysis.
Brazos Electric Power Cooperative, Inc.	No	2.3 is acceptable, the deletion was recommended in our previous comments.R4 should not be added to this Standard. It adds nothing to the document the way it is worded and is quite similar to 2.3.

Organization	Question 6:	Question 6 Comments:
NERC and Regional Coordination	No	Attributes of the short circuit analysis needs to be better define. For example which studies need to be done, for what period and how often.
ColumbiaGrid	Yes and No	We agree with R2.3. However, R4 requires assessment of “Short circuit capability of its equipment under normal condition and following any single Contingency condition that would result in greater circuit breaker interrupting duties”. Since short circuit studies are typically performed by applying a fault on a Facility starting from a normal condition, there can be confusion whether the result would constitute “normal” condition or “following any single Contingency condition”. Also, by specifying the normal and single contingency conditions, R4 is straying into “how” to perform a study, which is not necessary in a standard. We suggest deleting the reference to the contingencies to be used in the study. We suggest R4 be modified to read “Short circuit capability of its equipment under plausible system configurations that would result in the greatest circuit breaker interrupting duties”.
Midwest ISO	No	The language throughout the standard is not precise as relates to "studies", "analysis", and "assessments". R2.3 appears to say that the actual simulations upon which the annual assessments are made need not be a current year study. If that is the intent the following wording would be more clear: "Short-circuit assessments shall be conducted annually and may be supported by current or past studies. R4 should be grouped with R2.4. In general the standard seems to meander and elements of the same types of studies are scattered, making it difficult to grasp the study requirements with clarity. Also the language of R4 is unclear as it describes short circuit studies in terms of contingencies. Better language would be "shall assess the short-circuit capability of its equipment under system intact topology and any single facility (or branch) out condition that is expected to result in greater ?".
Southern California Edison	Yes and No	We agree with R2.3. However, R4 requires assessment of “Short-circuit capability of its equipment under normal conditions and following any single Contingency condition that would result in greater circuit breaker interrupting duties?. Since short circuit studies are typically performed by applying a fault on a Facility starting from a normal condition, there can be confusion whether the result would constitute “normal” condition or “following any single Contingency condition”. Also, by specifying the normal and single contingency conditions, R4 is straying into “how” to perform a study, which is not necessary in a standard. We suggest deleting the reference to the contingencies to be used in the study.
Northeast Utilities	No	Northeast Utilities has participated with ISO-NE and NPCC and supports the comments filed by those organizations.
Duke Energy	No	It is not clear in R4 what is meant by ?single contingency? and this situation is unlikely to increase fault current. The phrase ?under normal conditions and following any single Contingency condition that would result in greater circuit breaker interrupting

Organization	Question 6:	Question 6 Comments:
		duties? should be deleted.
Central Maine Power Company	No	a. R2.3 should be changed to indicate the year(s) for short circuit analysis. b. In R4, suggest replacing, " and following any single Contingency condition that would result in greater circuit breaker interrupting duties" with, " giving due consideration to the potential sequence of equipment operation". c. It should be stated in the standard that assumptions should be based on procedures provided by each Transmission Planner and by the Planning Coordinator.
NSTAR Electric	No	1. R2.3 should be changed to indicate the year(s) for short circuit analysis. 2. In R4, suggest replacing, " and following any single Contingency condition that would result in greater circuit breaker interrupting duties" with , " giving due consideration to the potential sequence of equipment operation". 3. It should be stated in the standard that assumptions should be based on procedures provided by each Transmission Planner and by the Planning Coordinator.
New York Independent System Operator	No	In R4, suggest striking, "that would result in greater circuit breaker interrupting duties?".
Alberta Electric System Operator	No	We agree with R2.3. However, R4 requires assessment of ?Short-circuit capability of its equipment under normal conditions and following any single Contingency condition that would result in greater circuit breaker interrupting duties?. Since short circuit studies are typically performed by applying a fault on a Facility starting from a normal condition, there can be confusion whether the result would constitute ?normal? condition or ?following any single Contingency condition?. Also, by specifying the normal and single contingency conditions, R4 is straying into ?how? to perform a study, which is not necessary in a standard. We suggest deleting the reference to the contingencies to be used in the study.
ISO New England Inc.	No	a. R2.3 should be changed to indicate the year(s) for short circuit analysis. b. In R4, suggest replacing, " and following any single Contingency condition that would result in greater circuit breaker interrupting duties" with , " giving due consideration to the potential sequence of equipment operation". c. It should be stated in the standard that assumptions should be based on procedures provided by each Transmission Planner and by the Planning Coordinator.
US Bureau of	No	Comments: We agree with R2.3. However, R4 requires assessment of “Short circuit capability of its equipment under normal

Organization	Question 6:	Question 6 Comments:
Reclamation		conditions and following any single Contingency condition that would result in greater circuit breaker interrupting duties". Comment Form for 2nd Draft of Standard TPL-001-1Assess Transmission Future Needs (Project 2006-02)Page 7 of 12Since short circuit studies are typically performed by applying a fault on a Facility starting from a normal condition, there can be confusion whether the result would constitute ?normal? condition or ?following any single Contingency condition?. Also, by specifying the normal and single contingency conditions, R4 is straying into ?how? to perform a study, which is not necessary in a standard. We suggest deleting the reference to the contingencies to be used in the study.
BPA Transmission Reliability Program	Yes and No	We agree with R2.3. However, we recommend removing the reference to single contingency conditions in R4, for the same reasons as described in the WECC comments. See below: "Since short circuit studies are typically performed by applying a fault on a Facility starting from a normal condition, there can be confusion whether the result would constitute "normal" condition or "following any single Contingency condition". Also, by specifying the normal and single contingency conditions, R4 is straying into "how" to perform a study, which is not necessary in a standard. We suggest deleting the reference to the contingencies to be used in the study.
Response: Requirement R4 has been deleted and those requirements have been merged into Requirement R2.3 to reflect the expected short circuit model. Also, the need for, or applicability, of 'single Contingencies' in Requirement R4 was dropped when Requirement R4 was merged into Requirement R2.3. **R2.3** The short circuit analysis portion of the Planning Assessment shall be conducted annually addressing the Near-Term Transmission Planning Horizon and can be supported by current or past studies. The analysis shall determine the maximum short circuit interruption duty on fault interrupting devices using the System short circuit model with any generation and Transmission Facilities in service which could impact the study area.		
City Water, Light & Power - Springfield, Illinois	Yes and No	For R2.4 stability studies should not be required annually but should only be required if there is a significant change to the system or system stability was marginal as shown in previous studies.
Response: This question is related to short circuit, Requirement R2.3, not Requirement R2.4, Stability. However, if past studies are applicable, it is not necessary to rerun Stability studies more often than once every 5 years. Your examples are good examples of when a Stability study may need to be rerun more often than once every 5 years.		
BCTC	Yes	R.3 and R4 are acceptable, although we note the R4 gets into details of how to do short circuit analysis which is unnecessary for this standard. In some cases it may be necessary to consider multiple contingencies. Should R2.6.2 say "the SYSTEM shall not include material changes?"?
Response: Requirement R4 has been deleted and those requirements have been merged into Requirement R2.3 to reflect the expected short circuit model. **R2.3** The short circuit analysis portion of the Planning Assessment shall be conducted annually addressing the Near-Term Transmission Planning Horizon and can		

Organization	Question 6:	Question 6 Comments:
be supported by current or past studies. The analysis shall determine the maximum short circuit interruption duty on fault interrupting devices using the System short circuit model with any generation and Transmission Facilities in service which could impact the study area. The SDT has changed Requirement R2.6.2 (now R2.5.2) to provide clarification. **R2.5.2** For steady state, short circuit, ~~Generating Plant Stability,~~ or ~~System~~ Stability analysis: the ~~study~~ present System model shall not include any material changes, such as, generation or Transmission additions/removals, or topology changes that have occurred in the intervening period and would impact the study area. Material generation changes could include:		
Manitoba Hydro	No	R4: The wording for the assessment should be changed from "shall assess the short circuit ability of its equipment" to "shall assess whether bus short circuit levels are within the capability of its equipment". The short circuit assessment should only be required if changes to system topology or generation occur. While short circuit levels are critical for system equipment specifications, ten year planning horizon models are generally not adequate for this purpose as ultimate system fault levels are required. The SDT should clarify the modelling details required for the short circuit assessment and the deliverable of the short circuit assessment. The standard doesn't stipulate if an existing NERC model will need to be modified to include the sequence data and thus allow for three phase and SLG fault analysis or if the planner is to use our "in house" models and just report the results. Typically, short circuit models used for fault studies are not load or season specific, and the simulation is conducted using a flat-analysis (load ignored and voltage at 1.0 pu). Typically, all elements are in service to ensure maximum fault contribution. Can the SDT provide details on what cases have to be assessed ? Year One, each of the first five year, etc. What is the generation dispatch that should be considered? For purposes of equipment rating, a dispatch considering all available generation may need to be considered. Manitoba Hydro requests the SDT to provide some specifics on the need for doing intact and n-1 fault analysis. We think the requirement to consider single contingency conditions is getting into the details of bus modeling to maximize the fault level. If so this seems to be getting into short circuit study methodology and is too prescriptive and unnecessary. To explain this comment, we include a summary of the process used at Manitoba Hydro as follows: Manitoba Hydro follows a two step procedure when studying breaker capability of our system:1. Breaker Rating vs. Bus Fault - Breakers are required to accommodate the entire bus maximum symmetrical fault current at nominal bus voltage with no consideration given to what the circuit breaker may actually be required to interrupt due to its location in the ring. Stations with fault levels above 95% of rated breaker interrupting capability are flagged for further study. This type of analysis will accurately rule out a high percentage of breakers whose capability is adequate. If an appropriate model is available, this step could take up to three person-months for the Manitoba Hydro system. 2. Detailed Examination of Breaker Duty and Location - By considering faults on both the equipment and bus side of the breaker the exact fault current that the breaker must interrupt can be determined. In a ring bus arrangement the breaker in question is assumed the last breaker to clear the fault. In addition, factors such as X/R ratio & operating voltage are also taken into account. To provide a safety margin to account for modeling tolerances we recommend a circuit breaker for replacement when the fault value is greater then 95% of the breaker rating. Other companies may use different breaker replacement threshold levels. This detailed analysis could require up to one person-month, depending on the size of the station, for each detailed assessment. The standard should specify what is to be reported as a result of the short circuit study. Should the report include:? Documentation of the criteria used for the study? A

Organization	Question 6:	Question 6 Comments:
		listing of the SLG and three phase fault levels compared to the lowest breaker capability at a bus. ? Documentation of more detailed analysis of for breakers whose capability is within threshold of the station fault level.? A listing of the breakers to be replaced. Alternatively, should the standard just require the planner have a separate report on the fault analysis that can be provided on request.
Response: Requirement R4 has been deleted and those requirements have been merged into Requirement R2.3 to reflect the expected short circuit model. **R2.3** The short circuit analysis portion of the Planning Assessment shall be conducted annually addressing the Near-Term Transmission Planning Horizon and can be supported by current or past studies. The analysis shall determine the maximum short circuit interruption duty on fault interrupting devices using the System short circuit model with any generation and Transmission Facilities in service which could impact the study area. The SDT has chosen not to prescribe all conditions but expects that studies would assume all equipment in service, which could impact the study area, to calculate maximum potential fault currents.		
National Grid	No	a. R2.3 should be changed to indicate the year(s) for short circuit analysis. b. In R4, suggest replacing, " and following any single Contingency condition that would result in greater circuit breaker interrupting duties" with , " giving due consideration to the potential sequence of equipment operation". c. It should be stated in the standard that assumptions should be based on procedures provided by each Transmission Planner and by the Planning Coordinator.
Response: (a) & (b): Requirement R4 has been deleted and those requirements have been merged into Requirement R2.3 to reflect the expected short circuit model. Also, the need for, or applicability, of 'single Contingencies' in Requirement R4 was dropped when Requirement R4 was merged into Requirement R2.3. **R2.3** The short circuit analysis portion of the Planning Assessment shall be conducted annually addressing the Near-Term Transmission Planning Horizon and can be supported by current or past studies. The analysis shall determine the maximum short circuit interruption duty on fault interrupting devices using the System short circuit model with any generation and Transmission Facilities in service which could impact the study area. (c) Procedures used to meet short-circuit requirements of Requirement R2.3 should be included in Requirement R2.7.1 mandated Corrective Action Plans.		
Gainesville Regional Utilities	Yes and No	With a small system like ours, I would like to see a provision where if you do not have any changes in our local portion of the BES, then the previous studies would support my assessment.
Response: This is addressed in the revised Requirement R2.6.2 (now R2.5.2). **R2.5.2** For steady state, short circuit, ~~Generating Plant Stability,~~ or ~~System~~ Stability analysis: the ~~study~~ present System model shall not include any material changes, such as, generation or Transmission additions/removals, or topology changes that have occurred in the intervening period and would impact the study area. Material generation changes could include:		

Organization	Question 6:	Question 6 Comments:
The addition/deletion/change of individual generating unit capability of 20 MW or greater. An aggregated addition/deletion/change to a group of generating units directly connected through their step-up transformer(s) to the BES which total 20 MW or greater.		
JEA	Yes and No	JEA can agree to this requirement; however, JEA would like to see it addressed in FAC-002 to maintain consistency with the FAC standard requirements.
Response: FAC-002 references the TPL standards to ensure that a short-circuit study is run for new Facilities. The SDT believes that the consistency will continue to exist. The SAR for TPL-001-1 specified that short-circuit studies were to be included in the requirements.		
Progress Energy Florida, Inc.	No	PEF disagrees with, and recommends removal of both R2.3 and R4 on the following grounds:R2.3: Evidence that short circuit analysis has been performed is already mandated through Requirement R1.4 NERC Standard FAC-002-0. Inclusion of the mandate in the TPL Standard is redundant.R4: While the fundamental inadequacy of the short circuit issue is its inclusion in the TPL Standard to begin with (see R2.3 comments), PEF is perplexed at the proposed requirement to perform short circuit analysis for single contingencies. PEF cannot conceive of a scenario for which a single contingency scenario would result in increased fault duty. Such a mindset essentially considers short circuit analysis as equivalent to load flow analysis, which it clearly is not. Short circuit analysis is performed to adequately set relays, size equipment and prevent equipment damage, and as such is not appropriate for inclusion in a TPL Standard.
Florida Power and Light	No	R4. Why is short circuit analysis required for single contingencies? Removing equipment through contingency outages lowers available short circuit duty. Short circuit analysis is not a parallel version of load flow analysis. Evidence that short circuit studies have been performed is currently required in the existing FAC-002-0 Standard. Since the primary concern is the appropriate sizing of equipment and the prevention of equipment damage as opposed to overall grid reliability, we do not see the need for a set of requirements within the proposed TPL standard for short circuit studies.
Florida Reliability Coordinating Council, inc	No	Recommend for the removal of both R2.3 and R2.4. Short Circuit analysis should be addressed in FAC-002 by revising the standard to include additional detail within FAC-002. Another option would be to develop a new standard addressing short circuit studies and requirements.
Response: FAC-002 requires coordination for new Facilities but points back to the TPL standards for requirements that must be coordinated. The SDT believes short-circuit requirements belong in TPL-001-1 and the SAR for TPL-001-1 specified that short-circuit studies were to be included in requirements. Requirement R4 has been deleted and those requirements have been merged into Requirement R2.3 to reflect the expected short circuit model. **R2.3** The short circuit analysis portion of the Planning Assessment shall be conducted annually addressing the Near-Term Transmission Planning Horizon and can be supported by current or past studies. The analysis shall determine the maximum short circuit interruption duty on fault interrupting devices using the System		

Organization	Question 6:	Question 6 Comments:
short circuit model with any generation and Transmission Facilities in service which could impact the study area.		
Lafayette Utilities System	No	Lafayette has identified two issues with respect to the Short Circuit Analysis required in TPL-001. First, Requirements R2.3 and R4 do not describe the required Short Circuit Analyses in sufficient detail to ensure that these studies are performed using topology assumptions that are consistent with the assumptions used in the Steady-State and Stability Studies. If inconsistent topology assumptions are used, the results of the analyses would not present a clear and consistent picture for planning purposes. Second, interconnection studies performed under the FERC LGIP procedures typically include considerable short-circuit analysis of the interconnecting transmission system. Entities required to perform an annual Planning Assessment should be permitted to use, for TPL-001 compliance purposes, any up-to-date short-circuit analyses that may have been conducted for an LGIP interconnection study. Forcing these entities to re-perform the analyses for TPL-001 compliance would impose unnecessary cost.
Response: Requirement R4 has been deleted and those requirements have been merged into Requirement R2.3 to reflect the expected short circuit model. **R2.3** The short circuit analysis portion of the Planning Assessment shall be conducted annually addressing the Near-Term Transmission Planning Horizon and can be supported by current or past studies. The analysis shall determine the maximum short circuit interruption duty on fault interrupting devices using the System short circuit model with any generation and Transmission Facilities in service which could impact the study area. Please note that this requirement allows for the utilization of past studies.		
Ameren	No	Requirement R4 should be modified to remove the Planning Coordinator such that the "Transmission Planner shall assess the short-circuit capability of its equipment considering maximum interrupting duty for normal or single element outage conditions".
Response: The Planning Coordinator is the appropriate entity in some areas. In those areas where this is not the case, the Planning Coordinator may defer to the Transmission Planner's studies. This is a joint responsibility between the Transmission Planner and Planning Coordinator.		
CenterPoint Energy and CPS Energy	No	We believe R4 is unnecessary and, judging from industry comments to the previous draft, likely to cause confusion among auditors and planners alike. Furthermore, we believe R4 does not address an actual problem. We are not aware of situations where equipment has been under-rated from the standpoint of short circuit ratings. We recommend that R4 be deleted.
Response: The SDT does not believe that the concepts of Requirement R4 should be eliminated as without them, there would be a requirement for short-circuit studies with no specific result expected. However, Requirement R4 has been deleted and those requirements have been merged into Requirement R2.3 to reflect the expected short circuit model. **R2.3** The short circuit analysis portion of the Planning Assessment shall be conducted annually addressing the Near-Term Transmission Planning Horizon and can be supported by current or past studies. The analysis shall determine the maximum short circuit interruption duty on fault interrupting devices using the System		

Organization	Question 6:	Question 6 Comments:
short circuit model with any generation and Transmission Facilities in service which could impact the study area.		
MidAmerican Energy Company	No	a. Since the TPL contingency requirements already require bus fault, stuck breaker, and breaker failure contingencies, MEC asks the SDT to clarify the purpose of the short circuit study requirements. The benefit to additional short-circuit studies is minimal since analyses already ensure that the system can withstand bus faults and breaker failures. b. The SDT should clarify what single contingencies are to be studied for short circuit studies in R2.4. Is it single contingency as defined in Table 1? Or is it a broader or narrower definition? MEC recommends that since this is a new requirement, that TPL-001-1 be limited to raise the bar only to involve the single contingencies identified in P1. Failure to do so will require a great deal of additional modeling work in short-circuit studies if single contingencies in P2 are to be included in these studies with minimal benefit.
Response: (a) These requirements apply to steady state (load flow) and Stability analysis but they do not specifically address short-circuit requirements. The performance requirements in Requirement R2.3 are specific to short-circuit studies. (b) Requirement R4 has been deleted and those requirements have been merged into Requirement R2.3 to reflect the expected short circuit model. Also, the need for, or applicability, of 'single Contingencies' in Requirement R4 was dropped when Requirement R4 was merged into Requirement R2.3. **R2.3** The short circuit analysis portion of the Planning Assessment shall be conducted annually addressing the Near-Term Transmission Planning Horizon and can be supported by current or past studies. The analysis shall determine the maximum short circuit interruption duty on fault interrupting devices using the System short circuit model with any generation and Transmission Facilities in service which could impact the study area.		
MRO NERC Standards Review Subcommittee	No	a. Since the TPL contingency requirements already require bus fault, stuck breaker, and breaker failure contingencies, the MRO asks the SDT to clarify the purpose of the short circuit study requirements. The benefit to additional short-circuit studies is minimal since analyses already ensure that the system can withstand bus faults and breaker failures. b. The SDT should clarify what single contingencies are to be studied for short circuit studies in R2.4. Is it single contingency as defined in Table 1? Or is it a broader or narrower definition? The MRO recommends that since this is a new requirement, that TPL-001-1 be limited to raise the bar only to involve the single contingencies identified in P1. Failure to do so will require a great deal of additional modeling work in short-circuit studies if single contingencies in P2 are to be included in these studies with minimal benefit. c. The MRO suggests added clarification of the following questions: 1. Should analysis be performed for the near-term and long-term planning horizon? 2. Should only the peak system condition be analyzed? 3. What does the analysis include (e.g. breaker over duty evaluation and protective relay coordination)? R4 - Clarify that the "short-circuit capability of its equipment under normal conditions" (P0) refers to interruptible rating for breakers only.
Response: (a) These requirements apply to steady state (load flow) and Stability analysis but they do not specifically address short-circuit requirements. The		

Organization	Question 6:	Question 6 Comments:
performance requirements in Requirement R2.3 are specific to short-circuit studies. (b) Requirement R4 has been deleted and those requirements have been merged into Requirement R2.3 to reflect the expected short circuit model. Also, the need for, or applicability, of 'single Contingencies' in Requirement R4 was dropped when Requirement R4 was merged into Requirement R2.3. **R2.3** The short circuit analysis portion of the Planning Assessment shall be conducted annually addressing the Near-Term Transmission Planning Horizon and can be supported by current or past studies. The analysis shall determine the maximum short circuit interruption duty on fault interrupting devices using the System short circuit model with any generation and Transmission Facilities in service which could impact the study area. (c) The SDT believes that the concerns raised here are covered in the revised requirement R2.3.		
Arkansas Electric Coop. Corp.	No	R2.3.1 should not be deleted. While system wide short circuit analysis should be done annually, there are situations where changes in the BES do impact the short circuit. If these changes result in new equipment needing to be ordered then this needs to be know as soon as possible in order to prevent exceeding equipment ratings or delays because of lead times on equipment.
Response: Requirement R4 has been deleted and those requirements have been merged into Requirement R2.3 to reflect the expected short circuit model. **R2.3** The short circuit analysis portion of the Planning Assessment shall be conducted annually addressing the Near-Term Transmission Planning Horizon and can be supported by current or past studies. The analysis shall determine the maximum short circuit interruption duty on fault interrupting devices using the System short circuit model with any generation and Transmission Facilities in service which could impact the study area. The SDT has added Requirement R2.7 to provide a Corrective Action Plan. **R2.7** For short circuit analysis, if the short circuit current interruption duty on fault interrupting devices determined in Requirement R2.3 exceeds their Equipment Rating, the Planning Assessment shall include a Corrective Action Plan to address the Equipment Rating violations. The Corrective Action Plan shall: **R2.7.1** List System deficiencies and the associated actions needed to achieve required System performance. **R2.7.2** Be reviewed in subsequent annual Planning Assessments as to implementation status.		
ERCOT System Planning	No	ERCOT believes R4 is unnecessary and does not address an actual problem; ERCOT recommends that R4 be deleted. ERCOT does not presently possess the capability or have access to the data needed to perform the calculations required by R4 as this requirement should apply to only the equipment owner (GO or TO).
Response: The Planning Coordinator is the appropriate entity in some areas. In those areas where this is not the case, the Planning Coordinator may defer to the Transmission Planner's studies. This is a joint responsibility between the Transmission Planner and Planning Coordinator. Requirement R4 has been deleted and those requirements have been merged into Requirement R2.3 to reflect the expected short circuit model. **R2.3** The short circuit analysis portion of the Planning Assessment shall be conducted annually addressing the Near-Term Transmission Planning Horizon and can		

Organization	Question 6:	Question 6 Comments:
be supported by current or past studies. The analysis shall determine the maximum short circuit interruption duty on fault interrupting devices using the System short circuit model with any generation and Transmission Facilities in service which could impact the study area.		
American Transmission Company	No	We suggest added clarification of the following questions: 1. Should analysis be performed for the near-term and long-term planning horizon? 2. Should only the peak system condition be analyzed? 3. What does the analysis include (e.g. breaker over duty evaluation and protective relay coordination)? 4. Does the analysis of single contingency for greater duties refer to only the P1 category or both the P1 and P2 categories?R4 - Does the equipment capability reference include the ground grid and bus structures?
Response: The SDT did not add references to equipment beyond interrupting equipment. Circuit breaker or interrupting device ratings should already include support equipment. Lines are rated by the most limiting element and interrupting equipment ratings should also be rated by the most limiting equipment. Requirement R4 has been deleted and those requirements have been merged into Requirement R2.3 to reflect the expected short circuit model. **R2.3** The short circuit analysis portion of the Planning Assessment shall be conducted annually addressing the Near-Term Transmission Planning Horizon and can be supported by current or past studies. The analysis shall determine the maximum short circuit interruption duty on fault interrupting devices using the System short circuit model with any generation and Transmission Facilities in service which could impact the study area.		
FirstEnergy Corp.	No	We do not feel that it is necessary to annually update the short circuit analysis. We suggest the SDT consider increasing this timeframe. In addition, short circuit analysis should be reviewed in areas where transmission or generation changes are planned. Lastly, we feel it would be beneficial for the standard to provide examples of contingencies that could increase fault duties.
Response: An annual "assessment" must be made, but this doesn't necessarily mean a new study unless topology changes accordingly. The SDT has revised Requirement R2.6.2 (now R2.5.2) which allows for the use of past studies. **R2.5.2** For steady state, short circuit, ~~Generating Plant Stability,~~ or ~~System~~ Stability analysis: the ~~study~~ present System model shall not include any material changes, such as, generation or Transmission additions/removals, or topology changes that have occurred in the intervening period and would impact the study area. Material generation changes could include: The addition/deletion/change of individual generating unit capability of 20 MW or greater. An aggregated addition/deletion/change to a group of generating units directly connected through their step-up transformer(s) to the BES which total 20 MW or greater. Requirement R4 has been deleted and those requirements have been merged into Requirement R2.3 to reflect the expected short circuit model. **R2.3** The short circuit analysis portion of the Planning Assessment shall be conducted annually addressing the Near-Term Transmission Planning Horizon and can be supported by current or past studies. The analysis shall determine the maximum short circuit interruption duty on fault interrupting devices using the System		

Organization	Question 6:	Question 6 Comments:
short circuit model with any generation and Transmission Facilities in service which could impact the study area.		
Orlando Utiliites Commission	Yes and No	OUC agrees with other commentors that if there is a need for monitoring this, it should perhaps be in a different standard.
Response: The SAR for TPL-001-1 specified that short-circuit studies were to be included in the requirements.		
Dominion - Electric Transmission Planning	Yes	
TVA System Planning	Yes	
Progress Energy Carolinas	Yes	
Platte River Power Authority	Yes	
Tenaska, Inc.	Yes	
ITC Holdings: ITC, METC, ITC Midwest	Yes	
Southern Company Transmission	Yes	
LCRA TSC	Yes	
IESO	Yes	

Organization	Question 6:	Question 6 Comments:
North Carolina Electric Membership Corp	Yes	
E.ON U.S. Transmission Planning	Yes	
SERC Reliability Review Subcommittee and Planning Standards Subcommittee	Yes	
Oncor Electric Delivery	Yes	NA
Entergy Services, Inc.	Yes	
Response: Thank you for your response.		

7. The SDT has reformatted the Steady State and Stability Performance Tables. Do you concur with the modified format? If not, please state why and/or suggest specific changes.

Summary Consideration:

In responding to the reformatted performance tables, industry stakeholders had several comments related to the format changes and also took an opportunity to provide feedback on the table content as well. A summary of the more common industry responses is provided below along with the SDT's reply to each.

FORMAT COMMENTS:

1. The most common input received from industry related to the format of the tables was a desire for the SDT to consider a single table design covering both steady-state and stability. The SDT has reformatted the performance tables (Table 1 Steady-State and Table 2 Stability) into a single table format based on commonalities between the two prior individual tables. The new Table 1 is titled "Steady State and Stability Performance". The move to a single table was based on a significant number of comments and based on the SDT's view that the Planning Events were the same for both Steady-State and Stability. For Extreme Events, the separation of Steady-State and Stability that many in industry seem to prefer for the two table format has been retained in the new table design.

2. Many commenters felt the two table design was unduly long covering 13 pages compared to the two (2) pages used for the existing FERC approved TPL standards. Based on the redesigned single format table, the SDT has condensed the information to only 3 pages in the proposed Draft 3 version.

3. Another format change requested was to repeat the header row of column headings on each page. The SDT agrees and has made this change.

4. A few commenters correctly pointed out confusion between the introductory notes and the footnotes which both used numeric references. The SDT corrected this problem by using alpha character references for the introductory notes. The references within the table now clearly point to the footnotes and follow a more logical numerical order.

5. Several stakeholders suggested a Planning Event category naming convention for Planning Steady-State as (P1, P2, P3, …) and Stability as (S1, S2, S3, …) for the two table design. The SDT did not make this change based on a redesign to a single performance table. The team has retained the P1 through P7 references for Planning Events.

CONTENT COMMENTS:

1. The SDT agrees with a number of stakeholders that expressed an opinion on the need to allow for all types of conditional Firm Transmission Service Interruptions, not just those limited to HVDC. The SDT recognizes that the prior Draft 2 version unintentionally provided preferential treatment to HVDC. In the new performance Table 1, a new footnote has been added (see footnote 5) to the column title "Interruption of Firm Transmission Service Allowed" that corrects the problem identified.

2. Some commenters questioned the distinction in performance requirements for the above 300 kV systems. The SDT believes the Draft 2 changes are responsive to the prior industry feedback and reflect an appropriate middle ground related to the importance of the EHV Transmission System. The team has now included a slightly modified version of stated performance requirements in Draft 3. The SDT has clarified that interruption of Firm Transmission Service is warranted for some Contingencies. The SDT has added footnotes 5 and 10 related to Firm Transmission Service. Footnote 5 indicates that interruption of conditional firm Transmission service is permitted for all Planning Events and footnote 10 indicates that interruption of Firm Transmission Service coupled with appropriate generation re-dispatch can be utilized for multiple Contingency events as a System adjustment, where indicated in Table 1 as being part of the Initial System Condition, and as a post-Contingency corrective action so long as no interruption of Non-Consequential Load occurs and all Facility Ratings are maintained.

3. A number of commenters expressed concern related to Planning Event P5 "Protection System Failure" and the need to evaluate a single component failure of a BES Protection System; particularly a failure of a station battery. The SDT has revised the P5 Planning Event description to remove the reference to "single component failure" and the event description was changed to match what is stated in the currently approved TPL standards under Category C6 through C9. The intent of P5 is to evaluate a failure of a single Protection System design that introduces a delayed clearing mode that may also include additional electrical Facilities being removed when compared to normal fault clearing. A Protection System failure resulting in loss of the substation (one voltage level plus transformers) would not qualify as a P5 Planning Event since that event is considered an Extreme Event. A Standard Authorization Request (SAR) has been issued for industry comment (1/20/2009 through 2/18/2009) based on work completed by the System Protection and Controls Task Force (SPCTF). The proposed project will address the need for Protection System redundancy, based on an n-1 failure of individual components of the Protection System.

4. Some commenters were confused by Planning Event P2.1 and the SDT has added footnote 8 to better clarify the intent of the P2.1 Contingency review.

5. Many stakeholders correctly noted that Extreme Event item 1 excluded the reference to shunt device. This has been corrected and now includes shunt devices.

6. Some commenters questioned the order of the Planning Events and questioned if they were based on a high to low probability order. The SDT chose to order the table by three main areas: 1) no Contingency (P0), 2) single Contingency

(P1 and P2), and multiple Contingency (P3 through P7). While the SDT agrees there is some overlap in probability order, for example, between P2 and P3, the SDT has more importantly made the proper performance level requirements based on a reliability "risk" level where risk accounts for impact times (x) probability of occurrence.

7. Some commenters expressed concern with the inability to shed Non-Consequential Load in response to a single Contingency event. It was indicated that some stakeholders rely on an SPS to drop local area network Load in response to some single Contingency events and that these system designs are permissible under the presently approved TPL-002-0 standard. FERC, in Order 693, was clear in paragraph 1794 that interruption of Non-Consequential Load is not permitted for single Contingency events. This position was vetted in draft 1 of TPL-001-1 and most stakeholders and the SDT support this position. The use of an SPS design would be permitted for a single Contingency event if the SPS design interrupts service to customers involved in an interruptible Load contract arrangement. As an alternative, an entity could seek an entity variance for the situation described through their Regional Entity organization. In paragraph 1794, FERC clarified that "…an entity may seek a regional difference to the Reliability Standard from the ERO for case-specific circumstances". The process described by FERC as a regional difference is described in detail in the "NERC Standards Development Procedure" document under the subsection titled "Variances to NERC Reliability Standards".

The following changes have been made to the standard based on industry comments:

Requirements:

R2.8 The Planning Assessment shall provide the largest Consequential Load Loss (megawatt Demand) and the associated event caused by any P1 event and any P2 event in Table 1.

R2.9 The Planning Assessment shall identify the maximum permissible Non-Consequential Load Loss (megawatt Demand) for those Planning Events where Non-Consequential Load Loss is allowed in Table 1.

Table 1 Header Notes

e. For all Planning Events, planned System adjustments such as Transmission configuration changes and redispatch of generation are allowed if such adjustments are executable within the time duration applicable to the Facility Ratings.

h. Planning Event P0 is applicable to steady state only.

Table 1 - Extreme Events – Steady State:

1. Loss of a single generator, Transmission Circuit, DC Line, shunt device, or transformer forced out of service followed by another single generator, Transmission Circuit, DC Line, shunt device, or transformer forced out of service prior to System adjustments.

3b. ~~Loss of two Transmission lines in different rights-of-way prior to System adjustments for conditions such as:~~

Table 1 Footnotes:

2. If the event analyzed involves BES elements at multiple System voltage levels, the lowest System voltage level for stated performance criteria applies regarding allowances for interruptions of Firm Transmission Service and loss of Non-Consequential Load.

3. Unless specified otherwise, simulate Normal Clearing faults. Single line to ground (SLG) or three phase (3Ø) are the fault types, that must be evaluated in Stability simulations for the event described. A 3Ø fault study indicating criteria are being met shall provide sufficient evidence that a SLG condition would also meet criteria.

5. When the conditions and/or event(s) being studied form the basis for conditional Firm Transmission Service, curtailment of that conditional Firm Transmission Service is allowed.

7. Requirements which are applicable to shunt devices also apply to FACTS devices that are connected to ground.

8. Inadvertent tripping of breakers on one end of a normally networked Transmission circuit such that the line is now open at that end and possibly serving Load radial from a single source point.

10. Curtailment of firm transmission service, when coupled with the appropriate re-dispatch of resources obligated to re-dispatch, is allowed both as a System adjustment (as identified in the column titled 'Initial System Conditions') and a corrective action, where it can be demonstrated that Facilities remain within applicable Facility Ratings and those adjustments do not result in the shedding of any firm Load. Where limited options for re-dispatch exist, sensitivities associated with the availability of those resources must be considered. Where Facilities external to the Transmission Planner's planning region are relied upon, Facility Ratings in those regions must be considered.

11. A stuck breaker means that for a gang-operated breaker, all three phases of the breaker have remained closed. For an independent pole operated (IPO) breaker, only one pole is assumed to remain closed. ~~The~~A stuck breaker ~~event~~ introduces a delayed clearing mode. ~~Normal Clearing is when the Protection System operates as designed and the Fault is cleared in the time normally expected with proper functioning of the installed protection systems. Breaker fail relay operation is a predetermined time that occurs after the Protection System operates and the breaker has failed. Breaker fail relaying will also isolate a predetermined portion of the electric system to isolate the failed breaker. Delayed clearing of a Fault is due to failure of any Protection System component that prevents the Protection System from operating normally.~~

Organization	Question 7:	Question 7 Comments:
Dominion - Electric Transmission Planning	Yes and No	(1) Dominion - Electric Transmission is okay with the format changes, but suggests that consideration be given to changing the category naming convention for Stability Performance Table 2 to S1, S2, etc. rather than P1, P2, etc. for clarity and to distinguish them from Steady State Performance Table 1.(2) The tables could be improved if the headings were put on each separate page.
Response: The SDT has reformatted the performance tables (Table 1 Steady-State and Table 2 Stability) into a single table format based on commonalities between the two prior individual tables. The new Table 1 is titled "Steady State and Stability Performance". This change has negated the need for the Planning		

Organization	Question 7:	Question 7 Comments:
Event category naming convention changes suggested by the commenter and the SDT retained the P1 through P7 references for Planning Events. The new single performance table is greatly condensed from the Draft 2 version and the entire body of material is now contained on three pages compared to the thirteen pages that the prior Table 1 and Table 2 encompassed. Headers are repeated on subsequent pages.		
NPCC	No	In both Table 1 and Table 2, the "Interruption of Firm Transmission Service Allowed" column. It is problematic to try to create an "exemption" based on type of facility such as HVDC. There are many other situations in which Firm Transmission Service has been provided, but may need to be curtailed partially or completely following an outage. It is recommended that a note be added stating that the only exception would be for curtailment of conditioned (or Conditional) Firm Transmission Service, recognizing that there may need to be some form of grandfathering in order to avoid having to rewrite transmission service agreements. In both Table 1 and Table 2, the "Extreme Event Descriptions" item 1 should add "or shunt device." In Table 1, the "Extreme Event Descriptions" item 3b should be deleted; it is redundant with Item 1. In Table 2, Note 5 includes significant clarifications and should not be buried in the bottom of the contingency table; Note 5 would be better placed in the definitions section. In Table 1 and Table 2, Contingency P5 requires a fault plus Protection System Failure, such as a battery system, which may remove ALL protection at some substations. This Contingency P5 requires all voltages and loadings to remain within criteria, and a stable system response; without interruption of firm transmission service and without Non-Consequential Load Loss, at voltages above 300 kV. Was this an intended outcome of this standard?
Northeast Utilities	No	Northeast Utilities has participated with ISO-NE and NPCC and supports the comments filed by those organizations.
Response: The SDT team agrees with the commenter's opinion on the need to allow for all types of conditional Firm Transmission Service Interruptions and that the prior Draft 2 version unintentionally provided preferential treatment to HVDC. In the new performance Table 1, a new footnote has been added (see footnote 5) to the column title "Interruption of Firm Transmission Service Allowed" that corrects the problem identified by the commenter. **5**. When the conditions and/or event(s) being studied form the basis for conditional Firm Transmission Service, curtailment of that conditional Firm Transmission Service is allowed. The SDT agrees that shunt devices were excluded in Extreme Event item 1 of the Steady-State and Stability tables and the problem has been corrected. The SDT agrees with the commenter regarding the opinion that item 3B in the Extreme Event portion of the prior Daft 2 Table 1 Steady-State was redundant and the item has been removed and is no longer referenced in this draft. **Extreme Events - 3b**. ~~Loss of two Transmission lines in different rights-of-way prior to System adjustments for conditions such as:~~ The SDT appreciates the input related to the footnote on "System Stable" (new footnote 1). The SDT has chosen to leave the information within a footnote and		

Organization	Question 7:	Question 7 Comments:
did not include it as a new definition for the NERC Glossary of Terms as suggested by the commenter. Related to the P5 "Protection System Failure" Planning Event the SDT has not deviated from its stance of requiring more stringent performance requirements for the above 300 kV System. The SDT has revised the P5 Planning Event description to remove the reference to "single component failure" and the event description was changed to match what is stated in the currently approved TPL standards under Category C6 through C9. The intent of P5 is to evaluate a failure of a single Protection System design that introduces a delayed clearing mode that may also include additional electrical Facilities being removed when compared to the normal fault clearing. A Protection System failure resulting in loss of the substation (one voltage level plus transformers) would not qualify as a P5 Planning Event since that event is considered an Extreme Event. A Standard Authorization Request (SAR) has been issued for industry comment (1/20/2009 through 2/18/2009) based on work completed by the System Protection and Controls Task Force (SPCTF). The proposed project will address the need for Protection System redundancy, based on an n-1 failure of individual components of the Protection System.		
TVA System Planning	Yes	TVA believes that the new table format does make the tables much easier to follow. However, the tables can be a little hard to follow for those categories that have both over and under 300-kV categories. Also having header pages at the top of each page of the tables would also help. Should P6 and P7 events be moved to Extreme Events since firm transmission and non-consequential load can be dropped for these events? Seems like these events are very similar to the Extreme Events.
Response: The SDT has reformatted the performance tables (Table 1 Steady-State and Table 2 Stability) into a single table format based on commonalities between the two prior individual tables. The new Table 1 is titled "Steady State and Stability Performance". The new single performance table is greatly condensed from the Draft 2 version and the entire body of material is now contained on three pages compared to the thirteen pages that the prior Table 1 and Table 2 encompassed. Headers are repeated on subsequent pages. The SDT has elected to retain both P6 (N-1-1) and P7 (Common Tower N-2) Planning Events in this third draft. There was no compelling industry opinion for the change and the events were considered by the SDT to be credible events and warrant the Planning Event level of scrutiny. There are more severe versions of these events contained with the Extreme Event area.		
City Water, Light & Power - Springfield, Illinois	Yes and No	Place the titles on each page and put the borders back in.
Response: The SDT has reformatted the performance tables (Table 1 Steady-State and Table 2 Stability) into a single table format based on commonalities between the two prior individual tables. The new Table 1 is titled "Steady State and Stability Performance". The new single performance table is greatly condensed from the Draft 2 version and the entire body of material is now contained on three pages compared to the thirteen pages that the prior Table 1 and Table 2 encompassed. Headers are repeated on subsequent pages. The SDT believes the new table will also address your concern regarding the borders. If not, please provide a more specific comment in your review of the Draft		

Organization	Question 7:	Question 7 Comments:
3 standard.		
Progress Energy Carolinas	Yes	The readability of the tables could be improved if the headings were put on each separate page. Separating out the tables for steady state and stability greatly improves and clarifies the requirements of the standard. Additionally, we would prefer that dynamic planning events use labeling such as D1, D2, etc. instead of P1, P2, etc. to differentiate them from steady state events.
Response: The SDT has reformatted the performance tables (Table 1 Steady-State and Table 2 Stability) into a single table format based on commonalities between the two prior individual tables. The new Table 1 is titled "Steady State and Stability Performance". The move to a single table has negated the need for the Planning Event category naming convention changes suggested by the commenter and the team retained the P1 through P7 references for Planning Events. The move to a single table was based on a significant number of comments and based on the SDT's view that the Planning Events were the same for both Steady-State and Stability. For Extreme Events, the separation of Steady-State and Stability that many in industry seem to prefer for the two table format has been retained in the new table. The new single performance table is greatly condensed from the Draft 2 version and the entire body of material is now contained on three pages compared to the thirteen pages that the prior Table 1 and Table 2 encompassed. Headers are repeated on subsequent pages.		
Platte River Power Authority	Yes and No	I like the emphasis on stability performance but I prefer one table combining steady-state and stability Categories since the Planning Events are common to both. Divide notes, Evaluation Requirements, and Extreme Events Descriptions into two sub-tables.
Response: The SDT has reformatted the performance tables (Table 1 Steady-State and Table 2 Stability) into a single table format based on commonalities between the two prior individual tables. The new Table 1 is titled "Steady State and Stability Performance". The move to a single table was based on a significant number of commenters, like yourself, who felt a single table would suffice. For Extreme Events, the separation of Steady-State and Stability that many in industry seem to prefer for the two table format has been retained in the new table. The SDT divided the top notes between those that are applicable to Steady-state, Stability or both as suggested by the commenter.		
BCTC	No	The differences in the tables requiring two tables are not apparent. Furthermore, we have become familiar with working with the current Table 1. Changing to these new tables will result in transition costs. We see no problems with continuing to use the current Table 1 and would prefer to retain it.
Response: While the new tables and naming conventions will require some effort for industry adaption, the SDT believes the tables provide greater clarity and drive the reliability improvements desired by FERC Order 693.		

Organization	Question 7:	Question 7 Comments:
Manitoba Hydro	No	There appears to be little difference between Table I and II other than the performance requirements at the start of each table, which should be embedded within standard. Manitoba Hydro would prefer one table as we believe it serves to simplify the standard readability. Additional Comments on Table 1:The Performance Requirements (Items 1 to 6) should have a heading "Evaluation Requirements". These evaluation requirements should be included in the standard body. Also they should be labeled A to F to avoid confusion with the Notes at the end of the Table. Item 6 is not applicable for steady state analysis. Suggest changing "Notes" to "Table I Notes" for improved readability if more than one table is retained. Planning Events: In cases where Non-consequential Load Loss is allowed, has the SDT discussed limiting the amount of load lost? Planning Events: For the multiple contingency events, in cases where Interruption of Firm Transmission Service or Non-Consequential Load Loss is allowed, the SDT should clarify that such loss is only allowed after the second event. P1: Similar to DC lines, interruption of Firm Transmission Service should be allowed for AC transmission lines, as in many cases, the firm transmission service is dependent on the outaged AC transmission line or transformer, that is, the contract path. P2-1: Suggest changing :single ended line: to "open ended line". P3: Similar to DC lines, interruption of Firm Transmission Service should be allowed if transfer is dependent on the outaged AC transmission line or transformer - the contract path. Planning Events >300 kV: Interruption of firm transfer should be allowed if AC contract path is lost due to an event. In many cases the majority of the firm transfer is carried by the contract path ac line, not that unlike the case of the DC line. MH has sold Firm Transmission Service, the delivery of which is dependent on the single circuit Winnipeg-Twin Cities 500 kV line being in-service, This Firm Transmission Service is available in the order of 99.6% of the time. Assuming two 5 day planned maintenance outages per year the availability is 97.3% per year. MH's transmission customers did not want to pay some $800 million in capital costs for a second 500 kV line to increase the Firm Transmission Service availability by 2%, especially considering that Firm Transmission Service loss does not result in loss of load, but results in a call for redispatch (call for Operating Reserves being carried to cover for loss of the largest generator or largest loaded transmission line with associated fast generation runback (SPS)). The inability to interrupt Firm Transmission Service will drive expensive new line construction, or require withdrawal of 1500 MW of firm transmission service from the market. P4: Greater than 300 kV - Interruption of Firm Transmission Service should be allowed if transfer is dependent on the outaged AC transmission line or transformer. The low probability of P4 events does not warrant the cost of raising the reliability performance requirements.

Organization	Question 7:	Question 7 Comments:
		P5: Greater than 300 kV - Interruption of Firm Transmission Service should be allowed if transfer is dependent on the outaged AC transmission line or transformer. NERC defines a Protection System as "Protective relays, associated communication systems, voltage and current sensing devices, station batteries and DC control circuitry. In many cases, the protective relays, associated communication circuits and DC control circuits consist of two separate or redundant systems, but the voltage and current devices and station battery may be common. Is the SDT considering a current sensing device, or the station battery, for example, to be a single point of failure? Table 1 Note 4: Imposes a requirement on FACTS devices, and therefore should be elevated to the Requirements in the standard body. Also FACTs devices can be put in a series connection as well as shunt. Perhaps some additional clarification is required. Additional Comments on Table 2: Stability Performance Requirements: ?The Performance Requirements (Items 1 to 5) should have a heading "Evaluation Requirements". These evaluation requirements should be included in the standard body. Also they should be labeled A to E to avoid confusion with the Notes at the end of the Table 2 – Item 4: should the simulation also include the effect of reclosing where applicable? Planning Events: Same as comments on Table 1 regarding treatment of Firm Transmission Service and Non-Consequential Load Loss for >300 kV P4: Greater than 300 kV - Interruption of Firm Transmission Service should be allowed if transfer is dependent on the outaged AC transmission line or transformer. P5: Greater than 300 kV - Interruption of Firm Transmission Service should be allowed if transfer is dependent on the outaged AC transmission line or transformer. Multiple Contingency events (P3, P6): Does the SDT envision these multiple events being simulated as a stability run for the second event using a base case with an adjusted system - considering the first event is typically P1 which has been previously run as a separate simulation, typically a P1 event? P5: see Table 1 comment re what is considered a single point of failure. Extreme Events: Evaluation Requirement 1 - R5.5.4 should be R5.4.4 Extreme Event Description 2H: A 3 phase bus fault on a switching station would not normally result in loss of a voltage level and transformers at a station. The event should just be loss of one voltage level plus transformers in a substation. Table 2 Notes: Suggest changing "Notes" to "Table 2 Notes" if more than one table is retained. Note 5 a. Stipulates requirements for generating unit performance - should not be buried in the notes. Also, what is the SDT rationale for allowing units to pull out of synchronism for single contingency events like P2, or P5 - stuck breaker, or P7 - common tower, which is a normal clearing event.

Organization	Question 7:	Question 7 Comments:
		P1: Similar to DC lines, interruption of Firm Transmission Service should be allowed if transfer is dependent on the outaged AC transmission line or transformer. P3: Similar to DC lines, interruption of Firm Transmission Service should be allowed if transfer is dependent on the outaged AC transmission line or transformer. It is important for a probabilistic measure of likelihood to be considered in designing Table 1 and Table 2. The various categories of contingencies, P1 to P7, for example, should be ideally arranged in order of magnitude of likelihood, so that the acceptable consequences or the performance requirements may be in an increasing level of severity. However, there are events with intrinsically different probabilities currently classified within each of these contingency categories. For example, in P3 (following loss of a generator followed by system adjustments), another generator forced outage is more likely than a transformer forced outage. In P2 (single contingency), loss of a bus section is less likely than the P3 event of a double generator contingency. Therefore, these P categories, as currently defined, overlap one another in the scale of likelihood. As a result of it, Table 1 and Table 2 have allowed for certain rarer events (e.g., included in single-contingency P2 and double-contingency P3 categories) to incur some significant consequences with unspecified limits, e.g., interruption of firm transmission services or "non-consequential" load loss. It may be better to follow the NERC Reliability Concepts White Paper's approach of displaying these tables in categories of event likelihood, so that the acceptable consequences would be in an increasing level of severity. This approach would then be consistent with Probabilistic Risk Assessment, when the industry has collected enough transmission outage data to enable such a method be applied. Though the US power industry does not have transmission outage statistics collected and analyzed across the industry, Canadian utilities do have excellent data. It seems to be possible for the various contingency events in the current Tables 1 and 2 to be recategorized according to five or six groups of "order of magnitude of likelihood", e.g., M0, M1, M2, M3, M4 and M5. Each order of magnitude of likelihood is ten times less likely than the preceding order. For example, the first order (M1) would be for outage probabilities greater than 1%. The second order (M2) would be for outage probabilities between 0.1% and 1%. The third order (M3) would be between 0.01% and 0.1%, etc. Multiple independent contingencies could be classified based on the product of their individual probabilities, e.g., a generator outage is of order M1, and a transmission circuit outage is of order M2. Therefore, a double contingency of a generator and a transmission circuit is of order M3, but a double generator contingency is of order M2. Having placed the initiating contingencies in these orders of likelihood, it is then feasible for the industry stakeholders to try to agree on the level of acceptable consequences for these magnitude orders of likelihood. In the current draft of this standard, there is no quantified variable degree of acceptable consequences, as envisioned in the NERC Reliability Concept White Paper.There is distinctly different treatment of whether the out-of-service element is below or above 300KV. There is difference in allowing or not allowing firm transaction interruption and/or non-consequential load loss, but neither of them has a specified limit on the MW amounts. With the current layout of Tables 1 and 2, it is not readily apparent that the proposed standard is consistent with a sound risk approach. Having a sound risk approach is very important because investment decisions will be made according to these new, proposed and still-deterministic standards. Planners may find out in their studies that the costs of meeting some unlikely contingencies requiring expensive transmission investments are very high and that these costs are not justifiable based on avoiding those rare consequences. On the other hand, because the amounts of acceptable firm transaction interruption and non-consequential load loss are not specified, the transmission system designed to that

Organization	Question 7:	Question 7 Comments:
		standard with unspecified limits may become vulnerable to cascading events that initiate in the transmission grid below 300 KV. Many entries in the Tables allow non-consequential load losses, but no limits are specified. It raises the question, "If any non-consequential load loss is acceptable, is there a need to study that contingency scenario?" Without a reasonable set of limits, the criteria may not be effective in assuring system reliability. NERC's event analysis group has been using five categories of consequences to classify recent blackouts or major disturbances. A condensed summary of this is as follows. Category 1. Abnormal frequencies > 5min; or inter-area oscillations Cateorgy 2. System separation with no loss of load or generation; or loss of generation (between 1,000 and 2,000 MW in the EI or WI and between 500 MW and 1,000 MW in ERCOT) Category 3. Loss of load (less than 1,000 MW); or loss of generation (> 2,000 MW in the EI or WI and > 500 MW in ERCOT); System separation or islanding with loss of load or generation (less than 1,000 MW). Category 4. System separation or islanding of more than 1,000 MW of load; or loss of load (1,000 to 9,999 MW). Category 5. Loss of load (10,000 MW or more) Lay persons as well as transmission planners can understand and appreciate these ways of defining consequences, e.g., category 5 events mean more than 10,000 MW of load or generation loss. A way to propose reasonable limits to the highly unlikely but potentially severe contingencies, e.g., M3, M4, and M5, would be to limit their designed consequences to Category 2, 3 or 4. A well designed transmission system should limit the consequences of potential cascading outages and their likelihood so that fewer major blackouts would occur, while balancing the cost of investment to the cost of outages to the customers. A number of utilities are already performing PRA studies for their transmission planning. The advantages of using PRA have been demonstrated in the nuclear power industry. It would be desirable to have a pathway for the power industry to transition from the still-deterministic planning criteria in TPL-001 to a probabilistic planning criteria, without having to wait for another major revision to the TPL standard. If the Tables 1 and 2 are arranged and presented consistently with the NERC Reliability Concepts White Paper, the approach will enable that transition to take place naturally. If the TPL-001 standards establish a PRA-compatible Table 1 and Table 2, with contingency categories sorted in order of magnitude of likelihood, and their acceptable consequences also arranged in order of consequences (such as the five categories), the reliability requirement is already seen in the PRA-compatible way of a constant Risk level, Risk = Likelihood x Consequence. When the industry has good data to quantify the probabilities of these various contingencies, the implication of this ?already-accepted? Risk Level would be clear and numerically expressable. What is useful at this time is for the industry to make a forward-looking estimate of what this Risk level would be like, and consider whether it is appropriate and consistent with sound economic and risk principles.

Response: The SDT has reformatted the performance tables (Table 1 Steady-State and Table 2 Stability) into a single table format based on commonalities between the two prior individual tables. The new Table 1 is titled “Steady State and Stability Performance”. The move to a single table was based on a significant number of comments and based on the SDT’s view that the Planning Events were the same for both Steady-State and Stability. For Extreme Events, the separation of Steady-State and Stability that many in industry seem to prefer for the two table format has been retained in the new table. The new single performance table is greatly condensed from the Draft 2 version and the entire body of material is now contained on three pages compared to the thirteen pages that the prior Table 1 and Table 2 encompassed. Headers are repeated on subsequent pages.

The top introductory notes have been retained and are now referred to alphabetically to avoid confusion with the referenced footer notes. The top notes also

Organization	Question 7:	Question 7 Comments:

better clarify which are applicable to steady-state, stability or both.

The standard does not place a limit on the amount of Non-Consequential Load loss allowed. However, the maximum Consequential Load loss and its associated Contingency require documentation. See Requirements R2.9 and 2.10.

R2.8 The Planning Assessment shall provide the largest Consequential Load Loss (megawatt Demand) and the associated event caused by any P1 event and any P2 event in Table 1.

R2.9 The Planning Assessment shall identify the maximum permissible Non-Consequential Load Loss (megawatt Demand) for those Planning Events where Non-Consequential Load Loss is allowed in Table 1.

In regards to the Planning Event P3, the SDT team agrees with the commenter's opinion on the need to allow for all types of conditional Firm Transmission Service interruptions and that the prior Draft 2 version unintentionally provided preferential treatment to HVDC. In the new performance Table 1, a new footnote has been added (see footnote 5) to the column title "Interruption of Firm Transmission Service Allowed" that corrects the problem identified by the commenter. The SDT believes that interruption of Firm Transmission Service may be justified, so long no firm load loss occurs if the performance requirements do not permit the load shed. See new footnote 10 regarding the SDT stance on interruption of Firm Transmission Service and its use in multiple contingency Planning Events.

In regards to Planning Event P2.1, the reference to "single ended" has been removed and footnote 8 was added to further clarify the event required for study.

Based on feedback received the SDT was not compelled to alter its stance on the provision for Non-Consequential Load shed for a P4 and P5 event. However, the SDT has added footnotes 5 and 10 related to Firm Transmission Service. Footnote 5 indicates that interruption of conditional firm transfers is permitted for all Planning Events and footnote 10 indicates that interruption of Firm Transmission Service coupled with appropriate generation re-dispatch can be utilized for multiple Contingency events as a System adjustment, where indicated in Table 1 as being part of the Initial System Condition, and as a post-Contingency corrective action so long as no interruption of Non-Consequential Load occurs and all Facility Ratings are maintained.

The SDT has revised the P5 Planning Event description to remove the reference to "single component failure" and the event description was changed to match what is stated in the currently approved TPL standards under Category C6 through C9. The intent of P5 is to evaluate a failure of a single Protection System design that introduces a delayed clearing mode that may also include additional electrical Facilities being removed when compared to the normal fault clearing. A Protection System failure resulting in loss of the substation (one voltage level plus transformers) would not qualify as a P5 Planning Event since that event is considered an Extreme Event. A Standard Authorization Request (SAR) has been issued for industry comment (1/20/2009 through 2/18/2009) based on work completed by the System Protection and Controls Task Force (SPCTF). The proposed project will address the need for Protection System redundancy, based on an n-1 failure of individual components of the Protection System.

The SDT agrees that FACTS can be series devices and the footnote reference has been modified to better clarify the intent is shunt devices, connected to ground. See footnote 7.

7. Requirements which are applicable to shunt devices also apply to FACTS devices that are connected to ground.

The SDT has reformatted the performance tables (Table 1 Steady-State and Table 2 Stability) into a single table format based on commonalities between the two prior individual tables. The new Table 1 is titled "Steady State and Stability Performance". The move to a single table was based on a significant number of

Organization	Question 7:	Question 7 Comments:
comments and based on the SDT's view that the Planning Events were the same for both Steady-State and Stability. For Extreme Events, the separation of Steady-State and Stability that many in industry seem to prefer for the two table format has been retained in the new table. The new single performance table is greatly condensed from the Draft 2 version and the entire body of material is now contained on three pages compared to the thirteen pages that the prior Table 1 and Table 2 encompassed. Headers are repeated on subsequent pages. The requirements do not require study of reclosing actions. Only the initial Protection System responses must be simulated. P3 – see above response for Table 1. Based on feedback received the SDT was not compelled to alter its stance on the provision for Non-Consequential Load shed for a P4 and P5 event. However, the SDT has added footnotes 5 and 10 related to Firm Transmission Service. Footnote 5 indicates that interruption of conditional firm transfers is permitted for all Planning Events and footnote 10 indicates that interruption of Firm Transmission Service coupled with appropriate generation re-dispatch can be utilized for multiple Contingency events as a System adjustment, where indicated in Table 1 as being part of the Initial System Condition, and as a post-Contingency corrective action so long as no interruption of Non-Consequential Load occurs and all Facility Ratings are maintained. In the multiple Contingency P3 (Gen + 1) and P6 (N-1-1), within a stability study only the 2nd outage is required to be reviewed. The first Contingency is a precondition that needs to be modeled but not evaluated for its Stability response if the P3 or P6 condition is studied for Stability. The SDT has revised the P5 Planning Event description to remove the reference to "single component failure" and the event description was changed to match what is stated in the currently approved TPL standards under Category C6 through C9. The intent of P5 is to evaluate a failure of a single Protection System design that introduces a delayed clearing mode that may also include additional electrical Facilities being removed when compared to the normal fault clearing. A Protection System failure resulting in loss of the substation (one voltage level plus transformers) would not qualify as a P5 Planning Event since that event is considered an Extreme Event. A Standard Authorization Request (SAR) has been issued for industry comment (1/20/2009 through 2/18/2009) based on work completed by the System Protection and Controls Task Force (SPCTF). The proposed project will address the need for Protection System redundancy, based on an n-1 failure of individual components of the Protection System. In the Extreme Events area of the Stability table the reference to Requirement R5.5.4 has been removed due to a circular reference between the requirements and the table. The Extreme Event item 2h is written consistent with the presently approved TPL D8 and D9 contingencies. The SDT has reformatted the performance tables (Table 1 Steady-State and Table 2 Stability) into a single table format based on commonalities between the two prior individual tables. The new Table 1 is titled "Steady State and Stability Performance". The move to a single table was based on a significant number of comments and based on the SDT's view that the Planning Events were the same for both Steady-State and Stability. For Extreme Events, the separation of Steady-State and Stability that many in industry seem to prefer for the two table format has been retained in the new table. The new single performance table is greatly condensed from the Draft 2 version and the entire body of material is now contained on three pages compared to the thirteen pages that the prior Table 1 and Table 2 encompassed. Headers are repeated on subsequent pages. The SDT team agrees with the commenter's opinion on the need to allow for all types of conditional Firm Transmission Service interruptions and that the prior Draft 2 version unintentionally provided preferential treatment to HVDC. In the new performance Table 1, a new footnote has been added (see footnote 5) to the			

Organization	Question 7:	Question 7 Comments:
column title "Interruption of Firm Transmission Service Allowed" that corrects the problem identified by the commenter Regarding bottom note 5a, now shown as footnote 1, the SDT believes that no unit should be allowed to pull out of synchronism for more likely single Contingency events such as a three-phase fault on a line, transformer, or generator - a P1 event. The P2 events, even though classified as single Contingency events with normal clearing, are less likely to occur (bus faults, internal breaker faults, etc.). P5 and P7 are multiple Contingency events and are less likely to occur. The SDT believes it is appropriate to allow units to pull out of synchronism for less likely events as long as the other conditions of footnote 1 are maintained. The Planning Events, in general are ordered based on level of probability. However, the SDT chose to order the table by three main areas: 1) no Contingency (P0), 2) single Contingency (P1, P2) and 3) multiple Contingency (P3 through P7). While the SDT agrees with the commenter that there is some overlap in probability order, for example between P2 and P3, we believe the SDT has more importantly made the proper performance level requirements based on a reliability "risk" level where risk accounts for impact times (x) probability of occurrence. The commenter's proposed shift from deterministic planning to probabilistic planning is outside the scope of the SAR for this project. The SDT believes the commenters suggested focus on more detailed probabilistic analysis is better addressed after the industry obtains additional outage data and insight obtained through the TADS effort.		
Los Angeles Department of Water and Power	No	The performance table allows different performance for same contingency at different voltage classes that is arbitrary separated. This is discriminatory and without any scientific or historical basis. There should be only one class for the whole transmission system. Transmission system at below 300kV should not be granted preferential treatment. Mindful also that the initiating causes of last two major continental wide blackouts(one in WECC and the other in the Eastern Interconnections) both started in system at less than 300kV.
Response: The SDT believes it has provided sufficient reasoning why the above 300 kV System should be held to a higher standard. The initial draft of the proposed Transmission planning standard held the planning of 300 kV and higher Transmission Systems to a more stringent requirement than the remaining BES. Although not unanimous, the majority of the SDT believed the 300 kV and higher Systems (EHV) generally represent the backbone of many Systems in the various Interconnections and that the more stringent requirements were appropriate when considering N-1-1 Contingencies of two EHV Facilities. Systems operated above 300 kV generally do not directly serve end-use Load customers but rather act as the medium for moving large amounts of power from production to various Load centers where the energy is then delivered by other Transmission or sub-Transmission Systems to end-use customers. It is the desire of NERC and various stakeholders that the backbone of the electric power grid be robust and held to a higher degree of reliability. Additionally, loss of the EHV system stresses the lower voltage parallel paths. EHV transformers can be exposed to long duration outages. Therefore, it was the conclusion of the SDT in Draft 1 to propose greater reliability and operational flexibility through more stringent performance requirements when considering certain N-1 and N-1-1 Contingency events of EHV Systems. Throughout the industry, substation arrangements at EHV levels reflect the importance of these Systems as the designs often consist of the more flexible and reliable ring-bus, breaker-and–a-half or double bus-double breaker protection schemes as compared to the simpler, lower cost single bus arrangements that are commonly found on lower voltage systems. The feedback received from the industry was divided related to the SDT's emphasis placed on a higher expectation for the 300 kV and higher systems. Some commenters questioned the importance and the high costs that may be needed to mitigate existing system designs. Others agreed with the SDT's approach and indicated that the impact to their systems would be minimal. Some commenters even questioned why the more stringent approach was not applied to the entire		

Organization	Question 7:	Question 7 Comments:
100 kV and higher systems. The SDT believes the Draft 2 changes are responsive to industry feedback and reflect an appropriate middle ground related to the importance of the EHV Transmission System.		
Transmission Agency of Northern California	Yes and No	We do not disagree with the proposed format changes of the Tables. However, we are not sure if separating into two Tables is necessary, or beneficial. It seems like an extra column for event could be added and some changes to the notes would greatly simplify the table. Some of the rows could also be combined; one such example is P2-2 (Loss of Bus Section) and P2-3 (Internal Breaker Fault, non-bus-tie). Will the SDT plan on combining some similar rows? Table 1, P4 and P5 refer to "Faults" as part of the contingency. This is steady state performance and faults are not modeled in steady state. Table 1, P2.1 refers to a "single ended line". Technically, this means we need to generate a "false" bus at each end of the line to evaluate this condition or use a dispatcher power flow which included breaker modeling. Is this an accurate interpretation of the intent of this requirement? We believe there should be no distinction between the voltage classes and support the use of load shed for all cases identified in P4 through P7.
Public Service Company of New Mexico	Yes and No	We do not disagree with the proposed format changes of the Tables. However, we are not sure if separating into two Tables is necessary, or beneficial. It seems like an extra column for event could be added and some changes to the notes would greatly simplify the table. Some of the rows could also be combined; one such example is P2-2 (Loss of Bus Section) and P2-3 (Internal Breaker Fault, non-bus-tie). Will the SDT plan on combining some similar rows? Table 1, P4 and P5 refer to "Faults" as part of the contingency. This is steady state performance and faults are not modeled in steady state. Table 1, P2.1 refers to a "single ended line". Technically, this means we need to generate a "false" bus at each end of the line to evaluate this condition or use a dispatcher power flow which included breaker modeling. Is this an accurate interpretation of the intent of this requirement? We believe there should be no distinction between the voltage classes and support the use of load shed for all cases identified in P4 through P7.
Puget Sound Energy, Inc.	Yes and No	We do not disagree with the proposed format changes of the Tables. However, we are not sure if separating into two Tables is necessary, or beneficial. It seems like an extra column for events could be added and some changes to the notes would greatly simplify the table. Some of the rows could also be combined; one such example is P2-2 (Loss of Bus Section) and P2-3 (Internal Breaker Fault, non-bus-tie). Will the SDT plan on combining some similar rows? Table 1, P4 and P5 refer to "Faults" as part of the contingency. This is steady state performance and faults are not

Organization	Question 7:	Question 7 Comments:
		modeled in steady state. Table 1, P2.1 refers to a "single ended line". Technically, this means we need to generate a "false" bus at each end of the line to evaluate this condition or use a dispatcher power flow which included breaker modeling. Is this an accurate interpretation of the intent of this requirement? We believe there should be no distinction between the voltage classes and support the use of load shed for all cases identified in P4 through P7.
Black Hills Corporation	Yes and No	We do not disagree with the proposed format changes of the Tables. However, we are not sure if separating into two Tables is necessary, or beneficial. It seems like an extra column for event could be added and some changes to the notes would greatly simplify the table. Some of the rows could also be combined; one such example is P2-2 (Loss of Bus Section) and P2-3 (Internal Breaker Fault, non-bus-tie). Will the SDT plan on combining some similar rows? Table 1, P4 and P5 refer to "Faults" as part of the contingency. This is steady state performance and faults are not modeled in steady state. Table 1, P2.1 refers to a "single ended line". Technically, this means we need to generate a "false" bus at each end of the line to evaluate this condition or use a dispatcher power flow which included breaker modeling. Is this an accurate interpretation of the intent of this requirement? We believe there should be no distinction between the voltage classes and support the use of load shed for all cases identified in P4 through P7.
Tucson Electric Power Company	Yes and No	We do not disagree with the proposed format changes of the Tables. However, we are not sure if separating into two Tables is necessary, or beneficial. It seems like an extra column for event could be added and some changes to the notes would greatly simplify the table. Some of the rows could also be combined; one such example is P2-2 (Loss of Bus Section) and P2-3 (Internal Breaker Fault, non-bus-tie). Will the SDT plan on combining some similar rows? Table 1, P4 and P5 refer to "Faults" as part of the contingency. This is steady state performance and faults are not modeled in steady state. Table 1, P2.1 refers to a "single ended line". Technically, this means we need to generate a "false" bus at each end of the line to evaluate this condition or use a dispatcher power flow which included breaker modeling. Is this an accurate interpretation of the intent of this requirement? We believe there should be no distinction between the voltage classes and support the use of load shed for all cases identified in P4 through P7.The proposed format covers multiple pages. Add the header rows to each page for easier reading.

Organization	Question 7:	Question 7 Comments:
Pacific Gas and Electric Co.	Yes and No	We do not disagree with the proposed format changes of the Tables. However, we are not sure if separating into two Tables is necessary, or beneficial. It seems like an extra column for event could be added and some changes to the notes would greatly simplify the table. Some of the rows could also be combined; one such example is P2-2 (Loss of Bus Section) and P2-3 (Internal Breaker Fault, non-bus-tie). Will the SDT plan on combining some similar rows? Table 1, P4 and P5 refer to "Faults" as part of the contingency. This is steady state performance and faults are not modeled in steady state. Table 1, P2.1 refers to a "single ended line". Technically, this means we need to generate a "false" bus at each end of the line to evaluate this condition or use a dispatcher power flow which included breaker modeling. Is this an accurate interpretation of the intent of this requirement? We believe there should be no distinction between the voltage classes and support the use of load shed for all cases identified in P4 through P7.
Idaho Power Company	Yes and No	We do not disagree with the proposed format changes of the Tables. However, we are not sure if separating into two Tables is necessary, or beneficial. It seems like an extra column for event could be added and some maybe some changes to the notes would greatly simplify the table. Some of the rows could also be combined; one such example is P2-2 (Loss of Bus Section) and P2-3 (Internal Breaker Fault, non-bus-tie). Will the SGT plan on combining some similar rows? Table 1, P4 and P5 refer to "Faults" as part of the contingency. This is steady state performance and faults are not modeled in steady state. Table 1, P2.1 refers to a "single ended line". Technically, this means we need to generate a "false" bus at each end of the line to evaluate this condition or use a dispatcher power flow which included breaker modeling. Is this an accurate interpretation of the intent of this requirement? We believes there should be no distinction between the voltage classes and supports the use of load shed for all cases identified in P4 through P7.
SMUD	Yes and No	We do not disagree with the proposed format changes of the Tables. However, we are not sure if separating into two Tables is necessary, or beneficial. It seems like an extra column for event could be added and some changes to the notes would greatly simplify the table. Some of the rows could also be combined; one such example is P2-2 (Loss of Bus Section) and P2-3 (Internal Breaker Fault, non-bus-tie). Will the SDT plan on combining some similar rows? Table 1, P4 and P5 refer to "Faults" as part of the contingency. This is steady state performance and faults are not modeled in steady state.

Organization	Question 7:	Question 7 Comments:
		Table 1, P2.1 refers to a "single ended line". Technically, this means we need to generate a "false" bus at each end of the line to evaluate this condition or use a dispatcher power flow which included breaker modeling. Is this an accurate interpretation of the intent of this requirement? We believe there should be no distinction between the voltage classes and support the use of load shed for all cases identified in P4 through P7.
Sierra Pacific Power Comapny / Nevada Power Company	Yes and No	We do not disagree with the proposed format changes of the Tables. However, we are not sure if separating into two Tables is necessary, or beneficial. It seems like an extra column for event could be added and some maybe some changes to the notes would greatly simplify the table. Some of the rows could also be combined; one such example is P2-2 (Loss of Bus Section) and P2-3 (Internal Breaker Fault, non-bus-tie). Will the SGT plan on combining some similar rows? Table 1, P4 and P5 refer to "Faults" as part of the contingency. This is steady state performance and faults are not modeled in steady state. Table 1, P2.1 refers to a "single ended line". Technically, this means we need to generate a "false" bus at each end of the line to evaluate this condition or use a dispatcher power flow which included breaker modeling. Is this an accurate interpretation of the intent of this requirement? We believes there should be no distinction between the voltage classes and supports the use of load shed for all cases identified in P4 through P7.
SRP	Yes and No	We do not disagree with the proposed format changes of the Tables. However, we are not sure if separating into two Tables is necessary, or beneficial. It seems like an extra column for event could be added and some changes to the notes would greatly simplify the table. Some of the rows could also be combined; one such example is P2-2 (Loss of Bus Section) and P2-3 (Internal Breaker Fault, non-bus-tie). Will the SDT plan on combining some similar rows? Table 1, P4 and P5 refer to "Faults" as part of the contingency. This is steady state performance and faults are not modeled in steady state. Table 1, P2.1 refers to a "single ended line". Technically, this means we need to generate a "false" bus at each end of the line to evaluate this condition or use a dispatcher power flow which included breaker modeling. Is this an accurate interpretation of the intent of this requirement? We believe there should be no distinction between the voltage classes and support the use of load shed for all cases identified in P4 through P7.
Tucson Electric	Yes and No	We do not disagree with the proposed format changes of the Tables. However, we are not sure if separating into two

Organization	Question 7:	Question 7 Comments:
Power Company		Tables is necessary, or beneficial. It seems like an extra column for event could be added and some changes to the notes would greatly simplify the table. Some of the rows could also be combined; one such example is P2-2 (Loss of Bus Section) and P2-3 (Internal Breaker Fault, non-bus-tie). Will the SDT plan on combining some similar rows? Table 1, P4 and P5 refer to "Faults" as part of the contingency. This is steady state performance and faults are not modeled in steady state. Table 1, P2.1 refers to a "single ended line". Technically, this means we need to generate a "false" bus at each end of the line to evaluate this condition or use a dispatcher power flow which included breaker modeling. Is this an accurate interpretation of the intent of this requirement? We believe there should be no distinction between the voltage classes and support the use of load shed for all cases identified in P4 through P7.The proposed format covers multiple pages. Add the header rows to each page for easier reading.
Modesto Irrigation District	Yes and No	Comments: We do not disagree with the proposed format changes of the Tables. However, we are not sure if separating into two Tables is necessary, or beneficial. It seems like an extra column for event could be added and some changes to the notes would greatly simplify the table. Some of the rows could also be combined; one such example is P2-2 (Loss of Bus Section) and P2-3 (Internal Breaker Fault, non-bus-tie). Will the SDT plan on combining some similar rows? Table 1, P4 and P5 refer to "Faults" as part of the contingency. This is steady state performance and faults are not modeled in steady state. Table 1, P2.1 refers to a "single ended line". Technically, this means we need to generate a "false" bus at each end of the line to evaluate this condition or use a dispatcher power flow which included breaker modeling. Is this an accurate interpretation of the intent of this requirement? We believe there should be no distinction between the voltage classes and support the use of load shed for all cases identified in P4 through P7.
Tri-State G&T	Yes and No	We do not disagree with the proposed format changes of the Tables. However, we are not sure if separating into two Tables is necessary, or beneficial. It seems like an extra column for event could be added and some changes to the notes would greatly simplify the table. Some of the rows could also be combined; one such example is P2-2 (Loss of Bus Section) and P2-3 (Internal Breaker Fault, non-bus-tie). Will the SDT plan on combining some similar rows? Table 1, P4 and P5 refer to "Faults" as part of the contingency. This is steady state performance and faults are not modeled in steady state. Table 1, P2.1 refers to a "single ended line". Technically, this means we need to generate a "false" bus at each end of the line to evaluate this condition or use a dispatcher power flow which included breaker modeling. Is this an accurate

Organization	Question 7:	Question 7 Comments:
		interpretation of the intent of this requirement? We believe there should be no distinction between the voltage classes and support the use of load shed for all cases identified in P4 through P7.
ColumbiaGrid	Yes and No	We do not disagree with the proposed format changes of the Tables. However, we are not sure if separating into two Tables is necessary, or beneficial. It seems like an extra column for event could be added and some maybe some changes to the notes would greatly simplify the table. Some of the rows could also be combined; one such example is P2-2 (Loss of Bus Section) and P2-3 (Internal Breaker Fault, non-bus-tie). Will the SGT plan on combining some similar rows? Table 1, P4 and P5 refer to "Faults" as part of the contingency. This is steady state performance and faults are not modeled in steady state. Please explain/define the term "single ended line" used in Table 1, P2.1. We believe there should be no distinction between the voltage classes and support the use of load shed for all cases identified in P4 through P7.
Alberta Electric System Operator	No	We do not agree with the proposed format changes of the Tables, separating into two Tables is not necessary, or beneficial. It seems like an extra column for event could be added and some changes to the notes would greatly simplify the table. Some of the rows could also be combined; one such example is P2-2 (Loss of Bus Section) and P2-3 (Internal Breaker Fault, non-bus-tie). Will the SDT plan on combining some similar rows? Table 1, P4 and P5 refer to "Faults" as part of the contingency. This is steady state performance and faults are not modeled in steady state. Table 1, P2.1 refers to a "single ended line". Technically, this means we need to generate a "false" bus at each end of the line to evaluate this condition or use a dispatcher power flow which included breaker modeling. Is this an accurate interpretation of the intent of this requirement? We believe there should be no distinction between the voltage classes and support the use of load shed for all cases identified in P4 through P7.
US Bureau of Reclamation	No	We do not disagree with the proposed format changes of the Tables. However, we are not sure if separating into two Tables is necessary, or beneficial. It seems like an extra column for event could be added and some changes to the notes would greatly simplify the table. Some of the rows could also be combined; one such example is P2-2 (Loss of Bus Section) and P2-3 (Internal Breaker Fault, non-bus-tie). Will the SDT plan on combining some similar rows? Table 1, P4 and P5 refer to "Faults" as part of the contingency. This is steady state performance and faults are not

Organization	Question 7:	Question 7 Comments:
		modeled in steady state. Table 1, P2.1 refers to a "single ended line". Technically, this means we need to generate a "false" bus at each end of the line to evaluate this condition or use a dispatcher power flow which included breaker modeling. Is this an accurate interpretation of the intent of this requirement? We believe there should be no distinction between the voltage classes and support the use of load shed for all cases identified in P4 through P7.

Response: The SDT agrees with the commenter related to the prior two table format and based on feedback received from the Draft 2 standard the SDT has reformatted the performance tables (Table 1 Steady-State and Table 2 Stability) into a single table format based on commonalities between the two prior individual tables. The new Table 1 is titled "Steady State and Stability Performance". The SDT believes the commenter will find that the new format is greatly condensed and more user friendly from a readability view.

The commenter is correct that the use of the term "fault" in the P4 and P5 events is not needed from a steady-state view; however, the SDT felt the term is needed to accurately describe the event to be analyzed. From a steady-state perspective, only the resulting condition would be analyzed. Also, with the combined format the term is now better used as the Planning Events also describe the type of fault to be studied within a Stability study. Footnote 3 clarifies that the type of fault is referenced only for the Stability studies.

In regards to the P2.1 event, the intent is to capture a potential condition of serving Load that is tapped from a normally networked line from a single source location. If a line exists (breaker to breaker) that does not directly serve Load, the P2.1 condition would not apply and only the normal N-1 condition of the line would be studied. See the newly added footnote 8 that better describes the intent of the P2.1 Planning Event.

The SDT believes it provided sufficient justification in its Draft 1 response as to why a greater expectation is placed on the above 300 kV (EHV) system. The feedback received from the industry was divided related to the SDT's emphasis placed on a higher expectation for the 300 kV and higher systems. Some commenters questioned the importance and the high costs that may be needed to mitigate existing system designs. Others agreed with the SDT's approach and indicated that the impact to their systems would be minimal. Some commenters even questioned why the more stringent approach was not applied to the entire 100 kV and higher systems. The SDT believes the Draft 2 changes are responsive to industry feedback and reflect an appropriate middle ground related to the importance of the EHV Transmission System.

Based on feedback received the SDT was not compelled to alter its stance on the provision for non-consequential load shed. However, the SDT has added footnotes 5 and 10 related to Firm Transmission Service. Footnote 5 indicates that interruption of conditional firm transfers is permitted for all Planning Events and footnote 10 indicates that interruption of Firm Transmission Service coupled with appropriate generation re-dispatch can be utilized for multiple Contingency events as a System adjustment, where indicated in Table 1 as being part of the Initial System Condition, and as a post-Contingency corrective action so long as no interruption of Non-Consequential Load occurs and all Facility Ratings are maintained.

5. When the conditions and/or event(s) being studied form the basis for conditional Firm Transmission Service, curtailment of that conditional Firm Transmission Service is allowed.

Organization	Question 7:	Question 7 Comments:
National Grid	No	a. In the column "Interruption of Firm Transmission Service Allowed" in both Tables 1 and 2, it is problematic to try to create an "exemption" based on type of facility such as HVDC. There are many other situations in which Firm Transmission Service has been provided, but may need to be curtailed partially or completely following an outage. b. The term 'Firm' may have several different definitions. If 'Firm' Transmission Service or load may be interrupted for exceptional events, then it is conditional and 'Conditional Firm' should be defined. It is recommended that a note be added stating that "the only exception would be for curtailment of conditioned (or Conditional) Firm Transmission Service", recognizing that there may need to be some form of grandfathering in order to avoid having to rewrite transmission service agreements. c. In both Table 1 and Table 2, the "Extreme Event Descriptions" item 1 should add "or shunt device." d. In Table 1, the "Extreme Event Descriptions" items 3a and 3b should be deleted; they are redundant with Item 1. e. In Table 2, Note 5 includes significant clarifications and should not be buried in the bottom of the contingency table; Note 5 would be better placed in the definitions section. f. In Table 1 and Table 2, Contingency P5 requires a fault plus Protection System Failure. Assuming that the battery system is included in the Protection System, which it is in NPCC, then ALL protection at substations with single battery systems would be lost. This Contingency P5 requires a stable system response while all bus voltages and loadings to remain within criteria, without interruption of firm transmission service and without Non-Consequential Load Loss, at system voltages above 300 kV. Was this an intended outcome of this standard?
Central Maine Power Company	No	a. In both Table 1 and Table 2, the "Interruption of Firm Transmission Service Allowed" column. It is problematic to try to create an "exemption" based on type of facility such as HVDC. There are many other situations in which Firm Transmission Service has been provided, but may need to be curtailed partially or completely following an outage. b. The term 'Firm' may have several different definitions. If 'Firm' Transmission Service or load may be interrupted for exceptional events, then it is conditional and 'Conditional Firm' should be defined. It is recommended that a note be added stating that "the only exception would be for curtailment of conditioned (or Conditional) Firm Transmission Service", recognizing that there may need to be some form of grandfathering in order to avoid having to rewrite transmission service agreements. c. In both Table 1 and Table 2, the "Extreme Event Descriptions" item 1 should add "or shunt device." d. In Table 1, the "Extreme Event Descriptions" items 3a and 3b should be deleted; they are redundant with Item 1. e. In Table 2, Note 5 includes significant clarifications and should not be buried in the bottom of the contingency table; Note 5 would be better placed in the definitions section.

Organization	Question 7:	Question 7 Comments:
		f. In Table 1 and Table 2, Contingency P5 requires a fault plus Protection System Failure. Assuming that the battery system is included in the Protection System, which it is in NPCC, then ALL protection at substations with single battery systems would be lost. This Contingency P5 requires a stable system response while all bus voltages and loadings to remain within criteria, without interruption of firm transmission service and without Non-Consequential Load Loss, at system voltages above 300 kV. Was this an intended outcome of this standard?
NSTAR Electric	No	1. Referring to both Table 1 and Table 2, the "Interruption of Firm Transmission Service Allowed" column, it is problematic to try to create an "exemption" based on the type of facility such as HVDC. There are situations in which Firm Transmission Service has been provided, but may need to be curtailed partially or completely following an outage. The term 'Firm' may have several different definitions. If 'Firm' Transmission Service or load may be interrupted for exceptional events, then it is conditional and 'Conditional Firm' should be defined. It is recommended that a note be added stating that "the only exception would be for curtailment of conditioned (or Conditional) Firm Transmission Service", recognizing that there may need to be some form of grandfathering in order to avoid having to rewrite transmission service agreements. 2. In both Table 1 and Table 2, the "Extreme Event Descriptions" item 1 should add "or shunt device." 3. In Table 1, the "Extreme Event Descriptions" items 3a and 3b should be deleted; they are redundant with Item 1. 4. Table 2, Note 5 includes significant clarifications which should not be buried in the back; they are better placed in the definitions section. 5. In Table 1 and Table 2, Contingency P5 requires a fault plus Protection System Failure. Protection System Failure should be defined and noted if the battery system is included.
New York Independent System Operator	No	In both Table 1 and Table 2, the "Interruption of Firm Transmission Service Allowed" column. It is problematic to try to create an "exemption" based on type of facility such as HVDC. There are many other situations in which Firm Transmission Service has been provided, but may need to be curtailed partially or completely following an outage. It is recommended that a note be added stating that the only exception would be for curtailment of conditioned (or Conditional) Firm Transmission Service, recognizing that there may need to be some form of grandfathering in order to avoid having to rewrite transmission service agreements. In both Table 1 and Table 2, the "Extreme Event Descriptions" item 1 should add "or shunt device." In Table 1, the "Extreme Event Descriptions" item 3b should be deleted; it is redundant with Item 1. In Table 2, Note 5 includes significant clarifications and should not be buried in the bottom of the contingency table; Note

Organization	Question 7:	Question 7 Comments:
		5 would be better placed in the definitions section. In Table 1 and Table 2, Contingency P5 requires a fault plus Protection System Failure, such as a battery system which may remove ALL protection at some substations. This Contingency P5 requires all voltages and loadings to remain within criteria, and a stable system response; without interruption of firm transmission service and without Non-Consequential Load Loss, at voltages above 300 kV. Was this an intended outcome of this standard?
ISO New England Inc.	No	a. In both Table 1 and Table 2, the "Interruption of Firm Transmission Service Allowed" column. It is problematic to try to create an "exemption" based on type of facility such as HVDC. There are many other situations in which Firm Transmission Service has been provided, but may need to be curtailed partially or completely following an outage. b. The term 'Firm' may have several different definitions. If 'Firm' Transmission Service or load may be interrupted for exceptional events, then it is conditional and 'Conditional Firm' should be defined. It is recommended that a note be added stating that "the only exception would be for curtailment of conditioned (or Conditional) Firm Transmission Service", recognizing that there may need to be some form of grandfathering in order to avoid having to rewrite transmission service agreements. c. In both Table 1 and Table 2, the "Extreme Event Descriptions" item 1 should add "or shunt device." d. In Table 1, the "Extreme Event Descriptions" items 3a and 3b should be deleted; they are redundant with Item 1. e. In Table 2, Note 5 includes significant clarifications and should not be buried in the bottom of the contingency table; Note 5 would be better placed in the definitions section. f. In Table 1 and Table 2, Contingency P5 requires a fault plus Protection System Failure. Assuming that the battery system is included in the Protection System, which it is in NPCC, then ALL protection at substations with single battery systems would be lost. This Contingency P5 requires a stable system response while all bus voltages and loadings to remain within criteria, without interruption of firm transmission service and without Non-Consequential Load Loss, at system voltages above 300 kV. Was this an intended outcome of this standard?

Response:

The SDT agrees with the commenter's opinion on the need to allow for all types of conditional Firm Transmission Service interruptions and that the prior Draft 2 version unintentionally provided preferential treatment to HVDC. In the new performance Table 1, a new footnote has been added (see footnote 5) to the column title "Interruption of Firm Transmission Service Allowed" that corrects the problem identified by the commenter.

The SDT agrees with the commenter that interruption of Firm Transmission Service may be justified, so long as firm Non-Consequential Load is not interrupted if the performance requirements do not permit the Load shed. See new footnote 10 regarding the SDT stance on interruption of Firm Transmission Service and its use in multiple Contingency Planning Events.

Organization	Question 7:	Question 7 Comments:
The SDT agrees that shunt devices were excluded in Extreme Event item 1 of the Steady-State and Stability tables and the problem has been corrected. The SDT agrees with the commenter regarding the opinion that item 3B in the Extreme Event portion of the prior Daft 2 Table 1 Steady-State was redundant and the item has been removed and is no longer referenced in this draft. **Extreme Events - 3b**. ~~Loss of two Transmission lines in different rights-of-way prior to System adjustments for conditions such as:~~ The SDT appreciates the input related to the footnote on "System Stable" (new footnote 1) but the SDT chose to keep it as a footnote reference for convenience to the TPL standard and not include it as a new definition for the NERC Glossary of Terms as suggested by the commenter. Related to the P5 "Protection System Failure" Planning Event the SDT has not deviated from its stance of requiring more stringent performance requirements for the above 300 kV System. The SDT has revised the P5 Planning Event description to remove the reference to "single component failure" and the event description was changed to match what is stated in the currently approved TPL standards under Category C6 through C9. The intent of P5 is to evaluate a failure of a single Protection System design that introduces a delayed clearing mode that may also include additional electrical Facilities being removed when compared to the normal fault clearing. A Protection System failure resulting in loss of the substation (one voltage level plus transformers) would not qualify as a P5 Planning Event since that event is considered an Extreme Event. A Standard Authorization Request (SAR) has been issued for industry comment (1/20/2009 through 2/18/2009) based on work completed by the System Protection and Controls Task Force (SPCTF). The proposed project will address the need for Protection System redundancy, based on an n-1 failure of individual components of the Protection System.		
Tenaska, Inc.	Yes and No	Should add a column to the tables indicated when automatic generation runback/tripping is allowed.
Response: Redispatch of generation is allowed for all Planning Events provided that all Facilities shall be operating within their Facility Ratings and within their thermal and voltage limits. The requirement has been removed and replaced with Table 1 header note "e" since the text in the former requirement was explanatory of what was allowed and not requirement language. **Header note 'e'**: For all Planning Events, planned System adjustments such as Transmission configuration changes and redispatch of generation are allowed if such adjustments are executable within the time duration applicable to the Facility Ratings.		
Gainesville Regional Utilities	No	Some of the notes at the top of each table could be considered to apply to some of the events within the table that conflict in part with the standard and with what was stated in the nation wide phone conference. I would also like to see a note in the tables that reflect a technical rationale for the range of elements considered, since some may be impractical and of no technical value for contingencies involving certain facilities especially those on the smaller systems within the interconnected region.
Response: The SDT has adjusted the top notes and refer to them with alpha character references to avoid confusion with the table footnotes that are referenced within the table. The set of Contingencies considered are not greatly different than those in the currently approved TPL suite of standards. We have attempted to add simplicity as to those Contingencies that are deemed to be Planning Events, thus requiring corrective action plans, and the Extreme Events which do not require corrective action plans.		

Organization	Question 7:	Question 7 Comments:
ITC Holdings: ITC, METC, ITC Midwest	Yes and No	While we like the tables, we don't understand what ?Interruption of Firm Transmission Service Allowed? means in a stability study (as per table 2). How would you interpret that in real-time & study terms? Would you make the stability scenario a limit to selling transmission service? In table 2, should we interpret SLG or 3-phase Fault in P1 and P3 to mean that SLG is the criteria (minimum) but you can run and document the more severe 3 phase faults for compliance purposes? What is the minimum criteria?
Response: The SDT has added footnotes 5 and 10 related to Firm Transmission Service. Footnote 5 indicates that interruption of conditional firm transfers is permitted for all Planning Events and footnote 10 indicates that interruption of Firm Transmission Service coupled with appropriate generation re-dispatch can be utilized as a System adjustment, where indicated in Table 1 as being part of the Initial System Condition, and as a post-Contingency corrective action so long as no interruption of Non-Consequential Load occurs and all Facility Ratings are maintained. In some instances, it may be necessary to interrupt Firm Transmission Service in preparation for the studied condition. It could be that from a Stability point of view such action would be beneficial under some conditions. **Footnote 5.** When the conditions and/or event(s) being studied form the basis for conditional Firm Transmission Service, curtailment of that conditional Firm Transmission Service is allowed. **Footnote #10** – Curtailment of firm transmission service, when coupled with the appropriate re-dispatch of resources obligated to re-dispatch, is allowed both as a System adjustment (as identified in the column titled 'Initial System Conditions') and a corrective action, where it can be demonstrated that Facilities remain within applicable Facility Ratings and those adjustments do not result in the shedding of any firm Load. Where limited options for re-dispatch exist, sensitivities associated with the availability of those resources must be considered. Where Facilities external to the Transmission Planner's planning region are relied upon, Facility Ratings in those regions must be considered. The SDT has corrected the confusion related to the "SLG or 3-phase" fault reference that the commenter describes in the P1 Planning Event. The table now says 3-phase. We added footnote #3 to clarify the fault types and what study results are sufficient for the case of an SLG fault condition. **3.** Unless specified otherwise, simulate Normal Clearing faults. Single line to ground (SLG) or three phase (3Ø) are the fault types, that must be evaluated in Stability simulations for the event described. A 3Ø fault study indicating criteria are being met shall provide sufficient evidence that a SLG condition would also meet criteria.		
Hydro-Quebec Transenergie (HQT)	No	In both Table 1 and Table 2, the "Interruption of Firm Transmission Service Allowed", a definition should be provided to clarify that term. That term is more of a Market concept not used by all TOs and defined in their Transmission Tariff. Also, the standard might need to introduce a new term "Consequential Transmission Service Loss" as it does for the Load. Firm Transmission services are generally defined as a service of the same priority as the one for the native load. That does not mean it could not be interrupted. In both Table 1 and Table 2, the "Extreme Event Descriptions" item 1 should add "or shunt device." In Table 1, the "Extreme Event Descriptions" item 3b should be deleted; it is redundant with Item 1.

Organization	Question 7:	Question 7 Comments:
		In Table 2, Note 5 includes significant clarifications and should not be buried in the bottom of the contingency table; Note 5 would be better placed in the definitions section. In Table 1 and Table 2, Contingency P5 requires a fault plus Protection System Failure. The "Protection System Failure" aspect of this contingency brings the necessity to define more clearly what is intended. The notion of needed redundancy or single elements of the protection system, be it physical or electric, has to be addressed to clearly understand the implication of that contingency. Until such clarification is included in this standard or in the future "Redundancy standard", this contingency should not be effective.

Response: The NERC Glossary of Terms presently defines Firm Transmission Service as "The highest quality (priority) service offered to customers under a filed rate schedule that anticipates no planned interruption." FERC in Order 693 was clear that no planned interruption of Firm Transmission Service should be permitted for single Contingency conditions. We agree that there may be times when Firm Transmission Service should be permitted. The SDT has added footnotes 5 and 10 related to Firm Transmission Service. Footnote 5 indicates that interruption of conditional firm transfers is permitted for all Planning Events and footnote 10 indicates that interruption of Firm Transmission Service coupled with appropriate generation re-dispatch can be utilized for multiple Contingency events as a System adjustment, where indicated in Table 1 as being part of the Initial System Condition, and as a post-Contingency corrective action so long as no interruption of Non-Consequential Load occurs and all Facility Ratings are maintained.

5. When the conditions and/or event(s) being studied form the basis for conditional Firm Transmission Service, curtailment of that conditional Firm Transmission Service is allowed.

Footnote #10 – Curtailment of firm transmission service , when coupled with the appropriate re-dispatch of resources obligated to re-dispatch, is allowed both as a System adjustment (as identified in the column titled 'Initial System Conditions') and a corrective action, where it can be demonstrated that Facilities remain within applicable Facility Ratings and those adjustments do not result in the shedding of any firm Load. Where limited options for re-dispatch exist, sensitivities associated with the availability of those resources must be considered. Where Facilities external to the Transmission Planner's planning region are relied upon, Facility Ratings in those regions must be considered.

The SDT agrees that shunt devices were excluded in Extreme Event item 1 of the Steady-State and Stability tables and the problem has been corrected.

Extreme Event Steady State #1

Loss of a single generator, Transmission Circuit, DC Line, shunt device, or transformer forced out of service followed by another single generator, Transmission Circuit, DC Line, shunt device, or transformer forced out of service prior to System adjustments.

The SDT agrees with the commenter regarding the opinion that item 3B in the Extreme Event portion of the prior Daft 2 Table 1 Steady-State was redundant and the item has been removed and is no longer referenced in this draft.

Extreme Event – Steady State:

3b. ~~Loss of two Transmission lines in different rights-of-way prior to System adjustments for conditions such as:~~

The SDT appreciates the input related to the footnote on "System Stable" (new footnote 1) but the SDT chose to keep it as a footnote reference for convenience

Organization	Question 7:	Question 7 Comments:
to the TPL standard and not include it as definition for the NERC Glossary of Terms as suggested by the commenter. Related to the P5 "Protection System Failure" Planning Event the SDT has not deviated from its stance of requiring more stringent performance requirements for the above 300 kV System. The SDT has revised the P5 Planning Event description to remove the reference to "single component failure" and the event description was changed to match what is stated in the currently approved TPL standards under Category C6 through C9. The intent of P5 is to evaluate a failure of a single Protection System design that introduces a delayed clearing mode that may also include additional electrical facilities being removed when compared to the normal fault clearing. A Protection System failure resulting in loss of the substation (one voltage level plus transformers) would not qualify as a P5 Planning Event since that event is considered an Extreme Event. A Standard Authorization Request (SAR) has been issued for industry comment (1/20/2009 through 2/18/2009) based on work completed by the System Protection and Controls Task Force (SPCTF). The proposed project will address the need for Protection System redundancy, based on an n-1 failure of individual components of the Protection System.		
Progress Energy Florida, Inc.	No	The Steady State and Stability Tables (Tables 1 and 2), are overly long, confusing, and contain circular references. PEF strongly advises returning to the content and format of Table 1 in the existing TPL Standards, or at the very least, consolidation of the Tables into a single Table. Furthermore, for certain events in Tables 1 and 2, the SDT's intent concerning the scope of the events and how the events would be simulated in Transmission Planning analyses is not clear. PEF furthermore does not agree with "Interruption of Firm Transmission Service Allowed" and "Non-Consequential Load Loss Allowed" as benchmarks for whether or not a particular BES is reliable (see additional comments in Question 15 on this issue). Tables 1 and 2 at present are 13 pages in total, whereas the existing Table 1, which PEF feels is comprehensive and not in need of revision, is merely 1.5 pages long. PEF understands that the reason behind the length and complexity of Tables 1 and 2 stems from a desire by some to contain all of the primary TPL compliance issues in a tabular format. The end result, however, is not effective and must be made more concise.
Response: The SDT has reformatted the performance tables (Table 1 Steady-State and Table 2 Stability) into a single table format based on commonalities between the two prior individual tables. The new Table 1 is titled "Steady State and Stability Performance". The new single performance table is greatly condensed from the Draft 2 version and the entire body of material is now contained on three pages compared to the thirteen pages that the prior Table 1 and Table 2 encompassed. The new format more closely mimics the existing TPL table in its readability. The set of Contingencies considered are not greatly different than those in the currently approved TPL suite of standards. The SDT has attempted to add simplicity as to those Contingencies that are deemed to be Planning Events, thus requiring corrective action plans, and the Extreme Events which do not require corrective action plans. The change in performance expectations for the above 300 kV System are supported by many in the industry. Please see our response to Q15 for further information.		
Ameren	Yes	The tables could be improved by including the column headings on each page.

Organization	Question 7:	Question 7 Comments:
		Separating the steady-state and stability performance requirements for each planning event helps to provide clarification.
Response: The SDT has reformatted the performance tables (Table 1 Steady-State and Table 2 Stability) into a single table format based on commonalities between the two prior individual tables. The new Table 1 is titled "Steady State and Stability Performance". The move to a single table was based on a significant number of comments and based on the SDT's view that the Planning Events were the same for both Steady-State and Stability. For Extreme Events, the separation of Steady-State and Stability that many in industry seem to prefer for the two table format has been retained in the new table. The new single performance table is greatly condensed from the Draft 2 version and the entire body of material is now contained on three pages compared to the thirteen pages that the prior Table 1 and Table 2 encompassed. Headers are repeated on subsequent pages.		
City of Tallahassee, FL	Yes and No	while this was an improvement, the tables are still confusing and make determination of the compliance requirements difficult. Especially where there are multiple events within a single event category (like P3 or P6) there's confusion about what would be allowed between the two element outages.
Response: The SDT has reformatted the performance tables (Table 1 Steady-State and Table 2 Stability) into a single table format based on commonalities between the two prior individual tables. The new Table 1 is titled "Steady State and Stability Performance". The move to a single table was based on a significant number of comments to do so and based on the SDT's view that the Planning Events were the same for both Steady-State and Stability. For Extreme Events, the separation of Steady-State and Stability that many in industry seem to prefer for the two table format has been retained in the new table. The new single performance table is greatly condensed from the Draft 2 version and the entire body of material is now contained on three pages compared to the thirteen pages that the prior Table 1 and Table 2 encompassed. The SDT believes the changes improve the readability of the tables. There are concerns expressed by numerous respondents that after the first single Contingency and System adjustment, curtailment of Firm Transmission Services (or firm transfers) and shedding of firm Load would not be allowed in preparation for the second Contingency. The SDT added Footnote # 10 to the end of Table 1 to reflect that Curtailment or Interruption of Firm Transmission Service in preparation for the next Contingency will be allowed as long as firm Load, not outaged by the initial event, continues to be served. **Footnote #10** – Curtailment of firm transmission service , when coupled with the appropriate re-dispatch of resources obligated to re-dispatch, is allowed both as a System adjustment (as identified in the column titled 'Initial System Conditions') and a corrective action, where it can be demonstrated that Facilities remain within applicable Facility Ratings and those adjustments do not result in the shedding of any firm Load. Where limited options for re-dispatch exist, sensitivities associated with the availability of those resources must be considered. Where Facilities external to the Transmission Planner's planning region are relied upon, Facility Ratings in those regions must be considered.		
Florida Power and	No	The Table format is extremely confusing and too long.

Organization	Question 7:	Question 7 Comments:
Light		The allowed and disallowed actions as well as the applicable time frames for them is not clearly stated. The tables 1 &2 should be combined and condensed so that they can be read more easily. In their current format, these tables sprawl across 13 pages. The use of footnotes or expanded information in the Table headings is needed to understand the performance requirements.
Response: The SDT has reformatted the performance tables (Table 1 Steady-State and Table 2 Stability) into a single table format based on commonalities between the two prior individual tables. The new Table 1 is titled "Steady State and Stability Performance". The move to a single table was based on a significant number of comments to do so and based on the SDT's view that the Planning Events were the same for both Steady-State and Stability. For Extreme Events, the separation of Steady-State and Stability that many in industry seem to prefer for the two table format has been retained in the new table. The new single performance table is greatly condensed from the Draft 2 version and the entire body of material is now contained on three pages compared to the thirteen pages that the prior Table 1 and Table 2 encompassed. The SDT believes the changes improve the readability of the tables. The changes to the new table have removed the need for repeat headers. Regarding the commenter's statement "The allowed and disallowed actions as well as the applicable time frames for them is not clearly stated." It is assumed that this is in reference to the P6 N-1-1 Planning Event. There are concerns expressed by numerous respondents that after the first single Contingency and System adjustment, curtailment of Firm Transmission Services (or firm transfers) and shedding of firm Load would not be allowed in preparation for the second Contingency. The SDT added Footnote # 10 to the end of Table 1 to reflect that Curtailment or Interruption of Firm Transmission Service in preparation for the next Contingency will be allowed as long as firm Load, not outaged by the initial event, continues to be served. **Footnote #10** – Curtailment of firm transmission service, when coupled with the appropriate re-dispatch of resources obligated to re-dispatch, is allowed both as a System adjustment (as identified in the column titled 'Initial System Conditions') and a corrective action, where it can be demonstrated that Facilities remain within applicable Facility Ratings and those adjustments do not result in the shedding of any firm Load. Where limited options for re-dispatch exist, sensitivities associated with the availability of those resources must be considered. Where Facilities external to the Transmission Planner's planning region are relied upon, Facility Ratings in those regions must be considered.		
Exelon Transmission Planning	No	Tables 1 and 2 should be changed such that the header should read 'BES Elements Overloaded' rather than 'BES Elements out of Service' regarding the voltage distinction. The header notes should either not be numbered or numbered with a different scheme to differentiate them from the numbered footnotes to avoid confusion. It is not obvious that all of the footnotes are used in the Tables. The headings should be repeated on each page. Could these tables be made smaller by eliminating some of the unused space such as the large boxes containing a single

Organization	Question 7:	Question 7 Comments:
		'x'?
Response: The SDT has reformatted the performance tables (Table 1 Steady-State and Table 2 Stability) into a single table format based on commonalities between the two prior individual tables. The new Table 1 is titled "Steady State and Stability Performance". The move to a single table was based on a significant number of comments to do so and based on the SDT's view that the Planning Events were the same for both Steady-State and Stability. For Extreme Events, the separation of Steady-State and Stability that many in industry seem to prefer for the two table format has been retained in the new table. The new single performance table is greatly condensed from the Draft 2 version and the entire body of material is now contained on three pages compared to the thirteen pages that the prior Table 1 and Table 2 encompassed. The SDT believes the changes improve the readability of the tables. The confusion with regards to the prior "BES Elements Overloaded" has been eliminated in the new table as the prior columns have been deleted. The commenters' suggestion to repeat table headings was a common response from industry, but is no longer a need based on the new table design. The SDT has now utilized alpha character references for the top notes of the table to avoid confusion with the footnotes which are referenced throughout the table. All footnotes are accounted for with the table and are now referenced sequentially for improved readability.		
CenterPoint Energy and CPS Energy	No	We originally believed that eliminating the old Category A, B, C, and D nomenclature would be beneficial. However, looking at the contingency types now being proposed, we are concerned that more confusion has been created. For example, matching applicable facility ratings to Category A, B, and C conditions is reasonably manageable. Matching applicable facility ratings to 7 contingency "buckets" is more confusing, less manageable, and unnecessary. NYISO proposed the concept of analyzing credible multiple contingencies in the operating realm. Most industry opined that NYISO's proposal lacked merit for operating requirements, and we agreed. However, we believe the proposal may have merit for planning requirements. The concept of applying reasonable credibility criteria to multiple contingencies to be studied offers a way to limit multiple contingency analysis to credible scenarios. Less credible (or incredible) scenarios would then fall into the Extreme category. As proposed, the multiple (seven-fold) approach of categorizing contingencies, combined with various sensitivities or alternative scenarios, for multiple years, is unrealistic and unnecessary. We believe creating a separate table for stability performance might be beneficial, but we believe 7 buckets of contingencies is hopelessly unrealistic for stability analyses.
Response: The set of Contingencies considered are not greatly different than those in the currently approved TPL suite of standards. The SDT tried to better clarify those Contingencies that are deemed to be Planning Events, thus requiring corrective action plans, and the Extreme Events which do not require corrective action plans. Most in industry are receptive to the new Contingency categorization so the TPL SDT has not altered its organization of the performance requirements. The SDT believes the Planning Events describe the credible Contingencies that warrant more rigorous study and the Extreme Events represent the less credible events that need to be reviewed on a more selective basis by the individual transmission planner. In regards to matching an applicable Facility Rating to the 7 Planning Event categories, the SDT believes the 7 categories do not add any additional level of		

Organization	Question 7:	Question 7 Comments:
complexity. The need to cover sensitivity analysis is based on a FERC directive from Order 693 and the SDT believes it is a reasonable request which will drive the industry to better understand their individual Transmission Systems. At this time all Planning Events are still within the scope of possible System conditions that could require a Stability review. The SDT believes the proposed TPL explicitly clarifies that only the "more severe" events require Stability analysis as stated in Requirement R4.4. At this time all Planning Events are still within the scope of possible system conditions that could require a Stability review. The SDT believes the proposed TPL explicitly clarifies that only the "more severe" events require Stability analysis which was implicitly understood within industry for the Version 0 standards as the commenter describes. Many of the conditions described by the commenter could be used as the basis for how a Transmission Planner would select the subset of Planning Events requiring a Stability review.		
MidAmerican Energy Company	No	MEC suggests that the Categories symbols in Table 1 and Table 2 be different to help distinguish between them (e.g. P1:S1, P2:S2, P3.2:S3.2, etc.) MEC suggests that the header text (i.e. Category, Initial System Condition, etc.) be repeated on every applicable page to be more reader-friendly. The superscripts do not refer clearly to the respective notes. (There are numbered notes in the beginning of the table, numbered items in the extreme events evaluation requirements section, numbered items in extreme event description section, and numbered notes at the end of the table). Perhaps the referenced notes should have unique numerology or format to make the superscript references clearer.
MRO NERC Standards Review Subcommittee	No	The MRO suggests that the Categories symbols in Table 1 and Table 2 be different to help distinguish between them (e.g. P1:S1, P2:S2, P3.2:S3.2, etc.) The MRO suggests that the header text (i.e. Category, Initial System Condition, etc.) be repeated on every applicable page to be more reader-friendly. The superscripts do not refer clearly to the respective notes. (There are numbered notes in the beginning of the table, numbered items in the extreme events evaluation requirements section, numbered items in extreme event description section, and numbered notes at the end of the table). Perhaps the referenced notes should have unique numerology or format to make the superscript references clearer.
American Transmission Company	No	We think that the tables are so similar that they should be recombined into one. This would require reasonable adaptation of the tables. If the tables are kept separate, then we suggest that the Categories symbols in Table 1 and Table 2 be different to help distinguish between them (e.g. P1:S1, P2:S2, P3.2:S3.2, etc. We suggest that the header text (i.e. Category, Initial System Condition, etc.) be repeated on every applicable page to be

Organization	Question 7:	Question 7 Comments:
		more reader-friendly. The superscripts do not refer clearly to the respective notes. (There are numbered notes in the beginning of the table, numbered items in the extreme events evaluation requirements section, numbered items in extreme event description section, and numbered notes at the end of the table). Perhaps the referenced notes should have unique numerology or format to make the superscript references clearer.
Response: The SDT has reformatted the performance tables (Table 1 Steady-State and Table 2 Stability) into a single table format based on commonalities between the two prior individual tables. The new Table 1 is titled "Steady State and Stability Performance". This changed has negated the need for the Planning Event category naming convention changes suggested by the commenter and the team retained the P1 through P7 references for Planning Events. The new single performance table is greatly condensed from the Draft 2 version and the entire body of material is now contained on three pages compared to the thirteen pages that the prior Table 1 and Table 2 encompassed. Headers are repeated on subsequent pages. The SDT agrees with the commenter regarding the top notes within the table. We have changed the references to alpha characters to avoid confusion with the footnotes that are referenced with the tables using superscript characters.		
SERC Dynamics Review Subcommittee	Yes	The tables could be improved if the headings were put on each separate page. Separating out the tables for steady state and stability improves and clarifies the requirements of the standard.
Response: The SDT has reformatted the performance tables (Table 1 Steady-State and Table 2 Stability) into a single table format based on commonalities between the two prior individual tables. The new Table 1 is titled "Steady State and Stability Performance". This changed has negated the need for the Planning Event category naming convention changes suggested by the commenter and the team retained the P1 through P7 references for Planning Events. The new single performance table is greatly condensed from the Draft 2 version and the entire body of material is now contained on three pages compared to the thirteen pages that the prior Table 1 and Table 2 encompassed. Headers are repeated on subsequent pages. The move to a single table was based on a significant number of comments and based on the SDT's view that the Planning Events were the same for both Steady-State and Stability. For Extreme Events, the separation of Steady-State and Stability that many in industry seem to prefer for the two table format has been retained in the new table.		
Austin Energy	No	Matching facility rating to seven contingency categories is confusing. Furthermore, these seven categories combined with alternative scenarios and sensitivity studies for several years into the future is overly burdensome, unnecessary, and unrealistic.
Response: In regards to matching an applicable Facility Rating to the 7 Planning Event categories, the SDT believes the 7 categories do not add any additional level of complexity. The set of Contingencies considered are not greatly different than those in the currently approved TPL suite of standards. The SDT tried to		

Organization	Question 7:	Question 7 Comments:
better clarify those Contingencies that are deemed to be Planning Events, thus requiring corrective action plans, and the Extreme Events which do not require corrective action plans. Most in industry are receptive to the new Contingency categorization so the TPL SDT has altered its organization of the performance requirements. The need to cover sensitivity analysis is based on a FERC directive from Order 693 and the SDT believes it is a reasonable request which will drive the industry to better understand their individual transmission systems.		
Arkansas Electric Coop. Corp.	No	I disagree with statement #4 for the reasons given in my comments on question 3. Also, if you are going to allow it then consequential generation loss needs to be defined. I also disagree with statement #5. This is a planning standard and as such systems should be planned for planning steady state. Statement #5 should only be allowed if the resulting operator actions are taken into account. A fault on a networked transmission line may open the breakers at each end. Statement #5 stops here when in reality operator actions would isolate the faulted sections and service restored with the transmission line now being operated as two radials. The resulting two radials are what need to meet the performance requirements. Events should be taken to their logical conclusions and the resulting system topology be what meets the performance requirements. The tables need some borders and section dividers. Headers should be on each page. No firm transmission or Non-Consequential Load Loss should be allowed for P2. I think the SDT has it backwards. Non-Consequential Load Loss should never occur and the tables should reflect what is allowed to happen with Consequential Load Loss for each event. Many of the scenarios reflect what should happen with Consequential Load Loss and not Non-Conseqeuntial Load Loss. For example: P2 Bus Section for less than 300 kV -- The load on that bus under this contingency would be Consequential NOT Non-Consequential. For the loss of that bus the load connected to that bus should be ALL the load that is lost, therefore no Non-Consequential Load Loss should occur.
Response: Please see the SDT's response to your question 3 comment regarding your disagreement with statement #4. The SDT concluded from the overall industry comments that a definition for consequential generation loss was not needed and therefore was not added to the standard at this time. The commenter disagrees with statement #5 of the Draft 2 standard which states "Simulate the removal of all elements that Protection Systems and controls are expected to disconnect for each event." However, FERC Order 693 paragraph 1707 references that within the NOPR that preceded the Final Rule "…the Commission believes that the simulations used in planning assessments should faithfully duplicate what will happen in the actual power system and not a generic listing of outages" In paragraph 1716, the Final Rule further clarified that this is the intent of the Commission. Therefore, the wording in the proposed standard. The commenter's disagreement seems to be based on a feeling of needing to plan for no Load drop for single Contingency events; however, in paragraph 1773 it is clear the FERC does allow the loss of Consequential Load. Therefore, Consequential Load Loss that occurs with the initial event is permitted. Serving radial Load tapped from a networked line, from a "singled ended" view or from a single source end (one end of the line open) is covered by Planning Event P2.1 and new footnote 8 should help alleviate the commenter's concerns. Under P2.1 it should be expected that no Load loss would occur. **Footnote 8**: Inadvertent tripping of breakers on one end of a normally networked Transmission circuit such that the line is now open at that end and possibly		

Organization	Question 7:	Question 7 Comments:
		serving Load radial from a single source point. The need for headers on each page has been alleviated based on the SDT reformatting of the table to a single table format and greatly condensing the tabular information. The SDT disagrees with the commenter that the SDT "has it backwards" related to the references of Consequential Load Loss and Non-Consequential Load Loss for each event. The performance table accurately depicts when Non-Consequential Load Loss is permitted for various events. Consequential Load Loss is allowed for all events. The table does not try to categorize a type of Load (Consequential or Non-Consequential) that the event is causing to lose electrical service. The initial Protection System actions to the event always trip Consequential Load. The performance table merely clarifies if the Transmission Planner can drop any additional Firm Load (Non-Consequential Load Loss) to alleviate the event and meet performance requirements. In the P2.2 (bus section) event that the commenter references, the difference between the EHV and HV performance requirements is that the Transmission Planner is allowed to drop additional Non-Consequential Load for the HV event.
Midwest ISO	No	Please add a General Requirements heading before items 1-6 (Steady State) and 1-5 (Stability) which appear to be applicable to all events for each table. The two columns under "BES elements out of Service" could be stricken for simplicity and clarity. If there is a voltage distinction needed, then add it next to the "Yes" or "No" under the "Interuption of Firm Service" or "Loss of Load" columns. Items P0 through P7 are identical in Table 1 - Steady State Performance and Table 2 Stability Performance. The only distinctions are the notes or whether it is an outaged event in Table 1 or a 3 phase/SLG fault in Table 2. Having two tables is redundant and unnecessary, and does not add clarity. It is also recommended that you combine the notes and extreme events from Table 1 - Steady State Performance and Table 2 - Stability Performance into one table. If both tables are to be retained then it is recommended that the SDT take into consideration the following suggestions. With the old Version 0 table, where there was not a separate stability table, it was understood that each of the event types needed to be assessed, but only those that the responsible entity knew were the more severe from a stability perspective needed to have stability analysis performed. By listing events such as single circuit faults (P1) under Table 2, this implies that all events should be simulated with dynamics, though requirement 5.4.1 states events "that would produce more severe System impacts shall be identified,...". The burden to explain why certain events were not selected can be construed now as having to run dynamics on all line faults, or explain why each line was not selected. Most lines embedded within the grid and not near generators or of particular significance to grid dynamic stability need not be studied. We do not believe that the SDT is requiring any additional burden of proof as to why every line in the system is not studied with dynamics, but the standard makes that question more murky than it was before. An overzealous compliance monitor could be confused by the new layout at great expense to the industry. If Table 2 remains, change

Organization	Question 7:	Question 7 Comments:
		Table 2 - Stability Performance to only those events that are important to Stability Analysis. For example the following faults to run would be: 1) Faults near large generators (generator buses, generator lines or transformers near generators)2) Faults with delayed clearing near large generators3) Faults on long or heavily loaded lines with large phase angle differences between terminals. A majority of faults on lines less than 200kV are rarely severe so it is recommended to have the standards reflect this in Table 2 - Stability Performance.
Response: The SDT was persuaded by the commenter and other industry respondents that the two performance tables presented in Draft 2 were redundant in many areas. The SDT has reformatted the performance tables (Table 1 Steady-State and Table 2 Stability) into a single table format based on commonalities between the two prior individual tables. The new Table 1 is titled "Steady State and Stability Performance" The new single performance table is greatly condensed from the Draft 2 version and the entire body of material is now contained on three pages compared to the thirteen pages that the prior Table 1 and Table 2 encompassed. At this time all Planning Events are still within the scope of possible system conditions that could require a Stability review. The SDT believes the proposed TPL explicitly clarifies that only the "more severe" events require Stability analysis which was implicitly understood within industry for the Version 0 standards as the commenter describes. Many of the conditions described by the commenter could be used as the basis for how a Transmission Planner would select the subset of Planning Events requiring a Stability review.		
Tri-State Generation and Transmission Association, Inc.	Yes and No	It does not seem that there should be different performance limits for DC and AC lines. It is unclear why there is a separation of voltage classes. Perhaps it would be helpful for each TP to specify which voltage levels are considered Bulk on their particular system, then split studies according to that definition. We applaud the SDT's efforts to split contingencies into groups with more-or-less the same system impact. We encourage the SDT that it would be very beneficial to regroup them in order of probability of occurrence, or even better, to group them by order-of-magnitude of occurrence probability. The P categories as now defined seem to overlap in likelihood. For example, in P3 following loss of a generator followed by system adjustments, another generator forced outage is more likely than a transformer forced outage. Loss of a bus section (P2 single contingency) is less likely than the P3 event of a double generator contingency. There is more on the concept of grouping Performance Tables in order of event likelihood in the NERC White Paper, "Reliability Concepts". At the least, notes in the tables - regarding 1) system impact and 2) likelihood of events listed - would be most welcome.
Response: The SDT agrees with the commenter's opinion on the need to allow for all types of conditional Firm Transmission Service interruptions and that the prior Draft 2 version unintentionally provided preferential treatment to HVDC. In the new performance Table 1, a new footnote has been added (see footnote 5) to the column title "Interruption of Firm Transmission Service Allowed" that corrects the problem identified by the commenter. **5**. When the conditions and/or event(s) being studied form the basis for conditional Firm Transmission Service, curtailment of that conditional Firm Transmission Service is allowed.		

Organization	Question 7:	Question 7 Comments:
The SDT believes it provided sufficient justification in its Draft 1 response as to why a greater expectation is placed on the above 300 kV (EHV) System. The feedback received from the industry was divided related to the SDT's emphasis placed on a higher expectation for the 300 kV and higher Systems. Some commenters questioned the importance and the high costs that may be needed to mitigate existing System designs. Others agreed with the SDT's approach and indicated that the impact to their Systems would be minimal. Some commenters even questioned why the more stringent approach was not applied to the entire 100 kV and higher Systems. The SDT believes the Draft 2 changes are responsive to industry feedback and reflect an appropriate middle ground related to the importance of the EHV Transmission System. The performance requirements only apply to the Bulk Electric System and the split in voltage provides a subset of the BES. The Planning Events, in general, are ordered based on level of probability. However, the SDT chose to order the table by three main areas: 1) no Contingency (P0), 2) single Contingency (P1, P2) and 3) multiple Contingency (P3 through P7). While the SDT agrees with the commenter that there is some overlap in probability order, for example between P2 and P3, the SDT believes it has more importantly made the proper performance level requirements based on a reliability "risk" level where risk accounts for impact times (x) probability of occurrence.		
AEP	Yes	The formatting is okay. We would like to see the two tables merged. Except in the extreme disturbances sections, Table 1 and Table 2 are nearly identical (the only difference is that fault types are added to Table 2). The tables could easily be merged into one, including the extreme disturbances sections to some extent.
Response: The SDT was persuaded by the commenter and others industry respondents that the two performance tables presented in Draft 2 were redundant in many areas. The SDT has reformatted the performance tables (Table 1 Steady-State and Table 2 Stability) into a single table format based on commonalities between the two prior individual tables. The new Table 1 is titled "Steady State and Stability Performance" The new single performance table is greatly condensed from the Draft 2 version and the entire body of material is now contained on three pages compared to the thirteen pages that the prior Table 1 and Table 2 encompassed.		
NB Power Transmission	No	In the past, power systems within the NPCC Region have been designed to meet NPCC design criteria, which is basically that any design contingency does not cause instability of the NPCC defined bulk power system, and does not result in any emergency limit violations (thermal, voltage or stability), unless those violations are contained within a small local area of the system and can be mitigated. Design to NPCC criteria may include, and does include in many cases, interruption or curtailment of firm transmission service, underfrequency load shedding, undervoltage load shedding or SPS tripping of generation and/or load. The proposed table introduces new design criteria for which present power systems within NPCC are not presently designed to - being the restrictions on interruption of firm transmission service and consequential load for certain contingencies as outlined in the table, which up to this point was acceptable by NPCC design criteria, and the present NERC TPL Standard. The table should not impose new design criteria on the existing power system and should be relaxed such that present NPCC design criteria is acceptable into the future, as historically it has been proven to provide acceptable levels of reliability in the NPCC area. There would be enormous impacts on existing transmission service agreements and compliance issues if the design criteria outlined in the table is imposed. Meeting the design criteria outline in the table would require building new transmission facilities with, in some cases, very little benefit to the

Organization	Question 7:	Question 7 Comments:
		loads in terms of reliability. For example, there is an area of the system consisting predominately load. This area is supplied by two 345 kV transmission lines and three 138 kV lines. Studies show that under certain low probability, but predictable, conditions that the loss of one of the 345 kV supplies will result in unacceptable low voltage or thermal limit violations on equipment within the area. Therefore, an SPS has been utilized which trips load within the area on the loss of the 345 kV line in order to prevent unacceptable low voltage or thermal limit violations under these low probability conditions. In this case these loads are considered non-consequential and tripping them for a loss of a 345 kV line is unacceptable as per P1 in the table. Now assume that this arrangement has been in service operationally for the past 10 years and has only operated twice resulting in a 2 hour outage to these loads each time. Now also assume that these same loads have been interrupted 15 times (for a total of 30 hours) in the past 10 years because outages of a radial line within the area that these loads connected to. In this case, the loads are considered consequential and these interruptions are acceptable. Compliance with the design criteria in the table in this case would require building additional transmission into this area to prevent the load loss by SPS on the loss of the 345 kV line. Assume the cost of this new transmission is 80 million dollars and its net benefit would be to prevent (historically) 2 interruptions out of 17 total interruptions to only the loads in question within the area. The design criteria in the table in this case do not provide adequate benefit for cost for these loads in this area. Adequate transmission planning must take into account engineering judgment concerning cost/benefit ratio to loads as well as type of loads served, expectations of loads in terms of interruptions and where money can be best spent to reduce interruptions to loads. The criteria outlined in the table does not achieve this in all cases. The table should not dictate what contingencies can result in consequential load loss or interruption of firm transmission service. These decisions should be left to local planning engineers who have in-depth knowledge of local transmission issues (as well the interconnected power system)and reliability needs of loads involved. The table should only state that the listed contingencies will not result in system instability or violations of emergency thermal and voltage limits following all automatic actions. Table 1 in the existing version of the TPL Standards with its footnotes b) and C) presently allows for this and does not have criteria as stringent as the new table. The new table should not introduce new, more stringent design criteria.

Response: The NB Power Transmission company has two primary concerns within their response: 1) an inability to interrupt Firm Transmission Service and 2) the inability to shed local Load for what they deem a low probability single Contingency event involving a 345 kV line.

Regarding the Firm Transmission Service concern, the SDT has added footnotes 5 and 10 that should help alleviate the NB Power Transmission company's concerns. Footnote 5 indicates that interruption of conditional firm transfers is permitted for all Planning Events and footnote 10 indicates that interruption of Firm Transmission Service coupled with appropriate generation re-dispatch can be utilized for multiple Contingency events as a System adjustment, where indicated in Table 1 as being part of the Initial System Condition, and as a post-Contingency corrective action so long as no interruption of Non-Consequential Load occurs and all Facility Ratings are maintained.

Footnote 5 – When the conditions and/or event(s) being studied form the basis for conditional Firm Transmission Service, curtailment of that conditional Firm Transmission Service is allowed.

Footnote 10 – Curtailment of firm transmission service, when coupled with the appropriate re-dispatch of resources obligated to re-dispatch, is allowed both as a

Organization	Question 7:	Question 7 Comments:
System adjustment (as identified in the column titled 'Initial System Conditions') and a corrective action, where it can be demonstrated that Facilities remain within applicable Facility Ratings and those adjustments do not result in the shedding of any firm Load. Where limited options for re-dispatch exist, sensitivities associated with the availability of those resources must be considered. Where Facilities external to the Transmission Planner's planning region are relied upon, Facility Ratings in those regions must be considered. NB Power expressed concern with the inability to shed Non-Consequential Load in response to a single Contingency event. It was indicated that they rely on an SPS to drop local area network Load in response to some single Contingency events and that these system designs are permissible under the presently approved TPL-002-0 standard. FERC in Order 693 was clear in paragraph 1794 that that interruption of Non-Consequential Load is not permitted for single Contingency events. This position was vetted in draft 1 of the TPL-001-1 and most stakeholders (and the SDT) aligned with FERC's position. The use of an SPS design would be permitted for a single Contingency event if the SPS design interrupts service to customers involved in an interruptible Load contract arrangement. As an alternative, an entity could seek an entity variance for the situation described. The process for obtaining an entity variance is described in detail in the "NERC Standards Development Procedure" document under the subsection titled "Variances to NERC Reliability Standards" The commenter seems to be confused by the term Consequential Load Loss based on the statement "…The proposed table introduces new design criteria for which present power systems within NPCC are not presently designed to - being the restrictions on interruption of firm transmission service and consequential load for certain contingencies as outlined in the table…" The proposed standard places no restrictions on Consequential Load Loss for any of the Planning Events or Extreme Events. The as designed Protection System actions to the event always trip Consequential Load. The performance table merely clarifies if the Transmission Planner can drop any additional Firm Load (Non-Consequential Load Loss) to alleviate the event and meet performance requirements.		
Lakeland Electric	No	Separating steady-state from dynamic (stability) in the tables makes sense. Several suggestions: On page 11 move the planning events note 1 below the Planning Events title or begin note 1 with "For planning events ?" to remove confusion between planning events and extreme event requirements. Include an analysis section in the steady-state and stability requirements sections of TPL-1 that explicitly lays out the performance requirements (including the notes) - this would make the performance requirements very clear on a line item basis and the tables would become a quick reference. Special attention should be given to defined period of time between multiple events and the actions available to the operator. In table 2 (page 17) note 3 should be changed to: "Uncontrolled cascading and islanding ?" in order to be consistent with R5.4.4. " . . . If the evaluation of implementing a change . . . shall be conducted."
Response: The SDT has reformatted the performance tables (Table 1 Steady-State and Table 2 Stability) into a single table format based on commonalities between the two prior individual tables. The new Table 1 is titled "Steady State and Stability Performance". The move to a single table was based on a significant number of comments and based on the SDT's view that the Planning Events were the same for both Steady-State and Stability. For Extreme Events, the separation of Steady-State and Stability that many in industry seem to prefer for the two table format has been retained in the new table. The new single performance table is greatly condensed from the Draft 2 version and the entire body of material is now contained on three pages compared to the thirteen pages		

Organization	Question 7:	Question 7 Comments:
that the prior Table 1 and Table 2 encompassed. In the new table format, the top notes were placed under the heading of "Planning Events" as the commenter and other industry participants of suggested. It is not exactly clear what the commenter has in mind related to the "analysis section" described in the response. However, the SDT believes the new table format provides a better "at glance" view of what is needed. However, this does not negate the need to fully understand all requirements within the standard. The time period for allowable System adjustments made to avert performance requirement violations must be completed within the time duration rating and respect the ratings limit. The reference to Requirement R5.4.4 has been deleted.		
Southern Company Transmission	Yes and No	We suggest that the word "requirements" be added to the title of the tables as in Steady State Performance Requirements. We also suggest for header note 2 of Table 2 that the words be changed from "Dynamic voltages shall" to "Voltages during dynamic simulation shall"
Response: The SDT did not include the proposed use of "requirements" in the title of the performance table since they are not within the requirements section of the standard. The SDT agrees with the proposed change in note two of Table 2. The two tables have been consolidated into one table and the header note reference for this item is now note "h". **Header note 'h'**: Planning Event P0 is applicable to steady state only.		
Brazos Electric Power Cooperative, Inc.	No	Compared to the new table format, the old Categories were better. Perhaps if there is confusion with the old table or format, this should be cleaned up. We suggest the old tables remain, or combine some of the new sections to reduce the number of categories.
Response: The set of Contingencies considered are not greatly different than those in the currently approved TPL suite of standards. The SDT tried to better clarify those Contingencies that are deemed to be Planning Events, thus requiring corrective action plans, and the Extreme Events which do not require corrective action plans. Most in industry are receptive to the new Contingency.		
IESO	Yes and No	Condition (5) at the top of Table 1, and Condition (4) at the top of Table 2 are not required since they are already covered by R3.2 and R5.2, respectively. Further, Condition (6) in Table (1) and Condition (5) in Table 2 should be stipulated in R3 and R5 since these are not performance requirements, but rather the analysis (simulation) requirements.

Organization	Question 7:	Question 7 Comments:
Response: The commenter is correct that Condition 5 of the Table 1 and condition 4 of Table 2 which state "Simulate the removal of all elements that Protection Systems and controls are expected to disconnect for each event" is also within the standard's requirement language. However, the SDT has retained this information within the new performance table as it is key information repeated for clarity and convenience. In regards to the comments on condition 6 and condition 5 which refer to "normal clearing", the SDT believes that Requirements R3 and R4 which refer to the need to meet performance requirements stated within Table 1 cover the concern raised. The table note that references "simulate Normal Clearing unless otherwise specified" is now introductory note "d".		
North Carolina Electric Membership Corp	Yes and No	We would like the headings to be repeated at the head of each page. Also, enumerate Stability Tables different from the Steady State to distinguish between them.
Response: The SDT has reformatted the performance tables (Table 1 Steady-State and Table 2 Stability) into a single table format based on commonalities between the two prior individual tables. The new Table 1 is titled "Steady State and Stability Performance". This changed has negated the need for the Planning Event category naming convention changes suggested by the commenter and the team retained the P1 through P7 references for Planning Events. The new single performance table is greatly condensed from the Draft 2 version and the entire body of material is now contained on three pages compared to the thirteen pages that the prior Table 1 and Table 2 encompassed. Therefore, the need for repeating headers on subsequent pages has been eliminated as all Planning Events are presented on a single page.		
ERCOT System Planning	No	The table is hard to read and follow since it spans multiple pages and the table headers are not repeated on each page. ERCOT believes that there are two many categories. For example, in Table 1 both Category P1 and Category P3 are not necessary. Since they require the same system performance and P3 is more severe than P1, it can be assumed that successful simulation of P3 would result in successful simulation of P1. Category P2-1 can not be simulated without modification to typical transmission models. Normal steady state power flow software typically has as a line either in or out of service, but not half in and half out. "Breaker Fault" and "Stuck Breaker" definitions are included in the table notes, but would probably be better placed with the other defined terms. It is somewhat unclear as to why there are multiple names as the steady state system impact and requirements are the same. Also, the stability impacts would be more severe for a stuck breaker assuming delayed clearing. This would allow for removal of P2-3 and P2-4 in both Tables 1 & 2. It appears that P4 and P5 are duplicating efforts as well. It is not specified which entity is responsible to define and provide contingency definitions in industry standard software format such as those requiring knowledge of protection system failures and lines on the same structure for more than 1 mile. Only entities such as TOs and GOs have access to that knowledge.

Organization	Question 7:	Question 7 Comments:

Response: The SDT has reformatted the performance tables (Table 1 Steady-State and Table 2 Stability) into a single table format based on commonalities between the two prior individual tables. The new Table 1 is titled "Steady State and Stability Performance". The new single performance table is greatly condensed from the Draft 2 version and the entire body of material is now contained on three pages compared to the thirteen pages that the prior Table 1 and Table 2 encompassed. Headers are repeated on subsequent pages.

The set of Contingencies considered are not greatly different than those in the currently approved TPL suite of standards. The SDT tried to better clarify those Contingencies that are deemed to be Planning Events, thus requiring corrective action plans, and the Extreme Events which do not require corrective action plans. Most in industry are receptive to the new Contingency categorization so the TPL SDT has not altered its organization of the performance requirements. The P3 and P1 Contingency events are unique and can provide differing results since they result in unique generation dispatch. The SDT believes it is import to study both conditions.

In regards to the P2.1 event, the intent is to capture a potential condition of serving Load that is tapped from a normally networked line from a single source location in the Contingency (single ended) condition. If a line exists (breaker to breaker) that does not directly serve Load, the P2.1 condition would not apply and only the normal N-1 condition of the line would be studied. See the newly added footnote 8 that better describes the intent of the P2.1 Planning Event. The SDT believe existing transmission models will not require adjustment for the P2.1 event, however, Contingency lists run against the model may require some adjustments.

8. Inadvertent tripping of breakers on one end of a normally networked Transmission circuit such that the line is now open at that end and possibly serving Load radial from a single source point.

The stuck breaker reference remains as a footnote to the table – see footnote #11.

11. A stuck breaker means that for a gang-operated breaker, all three phases of the breaker have remained closed. For an independent pole operated (IPO) breaker, only one pole is assumed to remain closed. ~~The~~A stuck breaker ~~event~~ introduces a delayed clearing mode. ~~Normal Clearing is when the Protection System operates as designed and the Fault is cleared in the time normally expected with proper functioning of the installed protection systems. Breaker fail relay operation is a predetermined time that occurs after the Protection System operates and the breaker has failed. Breaker fail relaying will also isolate a predetermined portion of the electric system to isolate the failed breaker. Delayed clearing of a Fault is due to failure of any Protection System component that prevents the Protection System from operating normally.~~

The commenter is correct that some conditions such as "stuck breaker" or "internal breaker fault" would yield similar outcomes from a steady-state perspective, however, when considered from a dynamic Stability analysis each could have unique outcomes. As the commenter notes a delayed clearing mode, such as the stuck breaker analysis, would be expected to be more severe from a Stability mode. The SDT has retained P2.3 and P2.4 as they are considered single Contingency events as compared to the multiple Contingency stuck breaker event.

The P4 and P5 are unique Planning Events. The P5 Protection System failure can produce various outcomes depending on the Protection System element which failed – relay, CT, PT, battery, etc. The SDT has revised the P5 event description to remove the reference to "single component failure" and has revised the P5 event description to retain what is stated in the currently approved TPL standards under Category C6 through C9 related to the study of Protection System failures. It is left to the judgment of the Transmission Planner and the Planning Coordinator to select the appropriate review and it is expected that a worst case scenario that is something less than loss of the substation, which is considered an Extreme Event, would be evaluated. Finally, as noted in Requirement R3.4,

Organization	Question 7:	Question 7 Comments:
the Transmission Planner and Planning Coordinator is provided flexibility in selecting the more severe P5 events for study related to their system and it is not expected that every possible scenario for Protection System failure would be studied. It most cases it is unlikely that detailed system protection knowledge would be needed to develop the Contingency lists needed to perform Transmission planning studies. Ultimately it is the Transmission Planner and Planning Coordinator responsibility to ensure the simulated Contingencies accurately simulate the removal of all elements that the Protection Systems are expected to disconnect for a given event. If assistance is needed from asset owners then it is the Transmission Planner and/or Planning Coordinator's responsibility to coordinate such a review. The standard does not place requirements on the asset owners.		
Duke Energy	Yes	Separating the steady state and stability tables greatly improves and clarifies the requirements of the standard. The tables could be improved if the headings were put on each separate page. Placing headers in the requirements section of the standard would improve understanding of the flow of the document.
Response: The SDT has reformatted the performance tables (Table 1 Steady-State and Table 2 Stability) into a single table format based on commonalities between the two prior individual tables. The new Table 1 is titled "Steady State and Stability Performance". The move to a single table was based on a significant number of comments to do so and based on the SDT's view that the Planning Events were the same for both Steady-State and Stability. For Extreme Events, the separation of Steady-State and Stability that many in industry seem to prefer for the two table format has been retained in the new table. The SDT feels that with the consolidation of requirements that were made for the third posting that headings within the body of the requirements are not needed and NERC legal staff does not support the use of headings to subdivide requirements.		
Florida Reliability Coordinating Council, inc	No	The Steady State and Stability Performance Tables are very long (currently the these two table are 13 pages) and confusing. Please consider combining and condensing the two tables into one, and either add footnotes or expand the table headings to allow better understanding of the performance requirements.
Response: The SDT has reformatted the performance tables (Table 1 Steady-State and Table 2 Stability) into a single table format based on commonalities between the two prior individual tables. The new Table 1 is titled "Steady State and Stability Performance". The move to a single table was based on a significant number of comments and based on the SDT's view that the Planning Events were the same for both Steady-State and Stability. For Extreme Events, the separation of Steady-State and Stability that many in industry seem to prefer for the two table format has been retained in the new table. The new single performance table is greatly condensed from the Draft 2 version and the entire body of material is now contained on three pages compared to the thirteen pages that the prior Table 1 and Table 2 encompassed. Therefore, the need for repeating headers on subsequent pages has been eliminated as all Planning Events are presented on a single page.		

Organization	Question 7:	Question 7 Comments:
The SDT believes the new table format improves the readability of the expected performance requirements.		
SERC Reliability Review Subcommittee and Planning Standards Subcommittee	Yes	We recommend that the headings be repeated at the head of each page.
Response: The SDT has reformatted the performance tables (Table 1 Steady-State and Table 2 Stability) into a single table format based on commonalities between the two prior individual tables. The new Table 1 is titled "Steady State and Stability Performance". The new single performance table is greatly condensed from the Draft 2 version and the entire body of material is now contained on three pages compared to the thirteen pages that the prior Table 1 and Table 2 encompassed. Headers are repeated on subsequent pages.		
Oncor Electric Delivery	No	In Table 1-Steady State Performance several terms more relating to system stability performance appear such as post-transient voltage, voltage instability, fault plus stuck breaker, etc. These terms would appear to be most appropriate in only Table 2-Stability Performance, where this type of analysis is performed, e.g.- placing a fault at a location based on available short circuit MVA at that point in the transmission system and then analyzing the post transient voltage and generator response.
Response: The SDT agrees that the prior draft Table 1 included some terms that were more appropriate for stability analysis references. The SDT has reformatted the performance tables (Table 1 Steady-State and Table 2 Stability) into a single table format based on commonalities between the two prior individual tables. The new Table 1 is titled "Steady State and Stability Performance". The move to a single table was based on a significant number of comments to do so and based on the SDT's view that the Planning Events were the same for both Steady-State and Stability. For Extreme Events, the separation of Steady-State and Stability that many in industry seem to prefer for the two table format has been retained in the new table. The SDT believes the new table format improves the readability of the expected performance requirements. Additionally, the SDT took great care to separate the introductory table notes for those items that apply to both steady-state and stability analysis as well as independently to one or the other.		
FirstEnergy Corp.	Yes	The overall table format is much improved over Draft 1 and it provides better alignment between the steady-state and stability tables. The SDT is encouraged to consider consolidation into one table based on the minimal differences within the two tables. FE offers the following additional comments related to the tables:TABLE 1, STEADY-STATE & TABLE 2, STABILITY: 1) Do the table notes at the top of the table only apply to the Planning Events? If so, it is suggested to move the row that says Planning Events to be positioned above the notes.

Organization	Question 7:	Question 7 Comments:
		2) Top Table Notes, Item 2 - It is our opinion that it should be based on the TPs criteria. 3) Top Table Notes, Item 3 - These should read consistent on both tables. Also, is cascading well understood and how is it tested for? 4) The use of numeric notes at both the top and bottom of the table causes confusion related to the superscript number references on various terms within the table. The superscript items appear to be footnote references to the notes area at the bottom of the table. It is suggested that the items listed at the top of the table use alpha character references to demarcate each item. 5) Remove the footnote reference to note 3 on the Header titled "Event" (column 3). The reference in column 4 is better suited and covers the intent of the note. 6) For the P3 contingencies, it is unnecessary to individually analyze all BES generation units within a footprint along with an additional contingency. The planner allowed to use reasonable judgment and run only a subset of the larger units in this scenario. For example, there would be no need to contingencies against an outage of each unit at a multi-unit plant. Checking the contingencies against the outage of the largest unit at that plant would be sufficient. 7) A header row should be repeated on each page for improved readability. TABLE 1, STEADY-STATE: 1) Extreme event descriptions, item 2e ? why is this needed? How would this occur? What would be evaluated, high voltage? Stability issues? Note that it wouldn't be stability concern - this is the steady state table. 2) Extreme event descriptions, item 3b - how is this condition any different than what is studied in extreme event item 1 (N-2, no adjustment)? We suggest that item 3b be removed. 3) Extreme event descriptions, item 3c is too vague and it is suggested that it be removed. 4) Notes section (bottom of table), item 1 - Various topics are covered within this note - stuck breaker, breaker relay failure, normal clearing, delayed clearing - it should be broken up. Why include a discussion about delayed clearing in a steady-state table? 5) Notes section (bottom of table), item 4 ? We interpret FACTS to mean Flexible AC Transmission Devices and this means different things to different companies. FACTS devices can be series devices and not necessarily shunts as referred to in the table. It is noted that there is not footnote reference pointing to item 4 within the table. TABLE 2, Stability: 1) Planning Event P1 - Indicates SLG or 3-PH, which one is needed? This should be clarified in the requirements that reference this table. The intent is likely that most planners would perform the less labor intensive 3-PH simulation and if criteria were met, then the conclusion would be that SLG is also met. However, as presently written, the "OR" could be manipulated to allow someone to meet criteria for SLG but not the 3-PH. The requirements should provide clear

Organization	Question 7:	Question 7 Comments:
		expectations in this regard. (Same comment applies to P3 and P6) 2) Planning Event P1.2 - At what position on the line is the fault to be tested? Either the table or requirements that reference this Planning Event should be clear in what is required. 3) Planning Event P1.3 ? Is the fault to be placed on the high-side or low-side of the transformer? Either the table or requirements that reference this Planning Event should be clear. 4) Planning Events P1 and P2 - Is the intent that a TP would need to run all possible P1 and P2 events in dynamic stability simulations? If not, the requirements should be worded to allow the TP some flexibility in selecting the items having the most impact. To expect all of these events to be simulated within dynamics is unrealistic and unnecessary. 5) Planning Event P2.1 ? While we agree this event is warranted in steady-state, we question the need to cover this item within stability. Wouldn't breaker action clearing a fault always produce a more severe system disturbance than an inadvertent breaker trip? 6) Extreme Events ? The reference to R5.5.4 should be R5.4.4 7) Extreme Events - Items 2, a,b,c,d - should "protection system" be capitalized as the defined term in the NERC Glossary? 8) Extreme Events - Items 2f and 2gshould be removed. It is inconceivable that the simultaneous faults described could occur. 9) Notes section (bottom of table), item 1 - Does not read consistent with Note 1 from Table 1 Steady-State. As stated above, various topics are covered within this note - stuck breaker, breaker relay failure, normal clearing, delayed clearing - it should be broken up. 10) Note number 4 from Table 1 Steady-State (item on shunt/FACTS) is missing in Table 2. The first 5 notes from Table 1 should be reflected in Table 2 with the existing Table 2 note 5 being re-numbered to item 6. 11) Table 2 Note 5.a.ii. - We question whether the number of units totaling the Contingency reserve is a good criteria. Also, with regard to the phrase "the resulting apparent impedance swings must not pass through relay characteristics that would result in the tripping of any Transmission System elements", we suggest a change to "the resulting power swing shall not cause the system to separate or form electrical islands".
Response: The SDT has reformatted the performance tables (Table 1 Steady-State and Table 2 Stability) into a single table format based on commonalities between the two prior individual tables. The new Table 1 is titled “Steady State and Stability Performance”. The move to a single table was based on a significant number of comments to do so and based on the SDT’s view that the Planning Events were the same for both Steady-State and Stability. For Extreme Events, the separation of Steady-State and Stability that many in industry seem to prefer for the two table format has been retained in the new table.		

Organization	Question 7:	Question 7 Comments:

SDT RESPONSE TO THE COMMENTS MADE THAT ARE APPLICABLE TO BOTH TABLE 1 AND TABLE 2:

1) The notes at the top of the table are intended for the Planning Events. The SDT has taken the advance offered by FE and others within industry and moved the "Planning Events" title to be positioned above the introductory notes.

2) Regarding prior Top note 2, now note "g". The SDT did not make the change recommended and believes both the Transmission Planner and Planning Coordinator criteria need to be considered and the more restrictive criteria applied if warranted. Generally, the criteria used for applicable facilities would be known and agreed upon between the Transmission Planner and Planning Coordinator, for example within an RTO environment.

3) Top Table note item 3 is now referred to as note "a". The inconsistency described by the commenter is now corrected with the single table format. Cascading is a defined term in the NERC Glossary of Terms.

4) The SDT has adjusted the top notes and refer to them with alpha character references to avoid confusion with the table footnotes that are referenced within the table.

5) The footnote reference to note 3 on the Header titled "Event" (column 3) of the prior Table version has been removed. The footnote recommended by the commenter is now used and is referenced as footnote 2 in the new table.

2. If the event analyzed involves BES elements at multiple System voltage levels, the lowest System voltage level for stated performance criteria applies regarding allowances for interruptions of Firm Transmission Service and loss of Non-Consequential Load.

6) Contingency P3 is considered a multiple Contingency event and as described in Requirement R3.4 the Transmission Planner is expected to cover those Contingencies "… that are expected to produce more severe System impacts shall be identified, evaluated for System performance, and the rationale for the Contingencies selected for evaluation shall be available as supporting information and shall include an explanation of why the remaining Contingencies would produce less severe System results." Therefore, the SDT agrees with the commenter that the Transmission Planner would not be required to run every generation outage in combination with an addition single Contingency.

7) The new single performance table is greatly condensed from the Draft 2 version and the entire body of material is now contained on three pages compared to the thirteen pages that the prior Table 1 and Table 2 encompassed. Headers are repeated on subsequent pages.

SDT RESPONSE TO THE COMMENTS MADE THAT ARE APPLICABLE ONLY TO TABLE 1:

1) The 2e Extreme Event came from the existing TPL standard, category D11 contingency. The SDT considers this to be more appropriate for steady state analysis than for Stability analysis and that the main intent is to guard against an extreme voltage rise.

2) The SDT agrees with FE related to Extreme Event item 3b and it has been removed in the new table.

3b. ~~Loss of two Transmission lines in different rights-of-way prior to System adjustments for conditions such as:~~

3) The SDT disagrees with the commenter that "Extreme event description item 3c is too vague and it is suggested that it be removed."

4) The SDT agrees that a variety of topics were covered in the prior footnote 1 of Table 1 and that a discussion on delayed clearing was not applicable to a steady-state table. We have revised this footnote which is now footnote 11 to focus on the stuck breaker topic. Many of the prior references in this note were

Organization	Question 7:	Question 7 Comments:

NERC Glossary of Terms definitions and have been removed.

11. A stuck breaker means that for a gang-operated breaker, all three phases of the breaker have remained closed. For an independent pole operated (IPO) breaker, only one pole is assumed to remain closed. ~~The~~A stuck breaker ~~event~~ introduces a delayed clearing mode. ~~Normal Clearing is when the Protection System operates as designed and the Fault is cleared in the time normally expected with proper functioning of the installed protection systems. Breaker fail relay operation is a predetermined time that occurs after the Protection System operates and the breaker has failed. Breaker fail relaying will also isolate a predetermined portion of the electric system to isolate the failed breaker. Delayed clearing of a Fault is due to failure of any Protection System component that prevents the Protection System from operating normally.~~

5) The SDT has corrected the footnote reference to FACTS to better clarify that the SDT's intent of referring to only those FACTS devices which are shunt devices. The new footnote is footnote 7 and is now referenced within the Planning Event table information.

7. Requirements which are applicable to shunt devices also apply to FACTS devices that are connected to ground.

SDT RESPONSE TO THE COMMENTS MADE THAT ARE APPLICABLE ONLY TO TABLE 2:

1) The confusion in Planning Event P1 – indicating a "SLG or 3-PH" has been resolved and now more clearly indicates that a 3-PH fault must be passed. The P3 and P6 Planning Events now indicate the intent is to pass a SLG event for these items. However, as stated in footnote 3, if a Stability study indicates that criteria is met for a 3-PH analysis, the results of that test are sufficient to meet the less stringent SLG criteria.

2) This is left to the judgment of the Transmission Planner and the Planning Coordinator. It is expected that you study the worst case fault location.

3) This is left to the judgment of the Transmission Planner and the Planning Coordinator. It is expected that you study the worst case fault location.

4) It is not expected that a Transmission Planner would analyze every Planning Event scenario for P1 and P2 within a Stability study. Requirement R4.5 provides the Transmission Planner the flexibility desired by FE in selecting the items having the most impact.

5) No. Sometimes opening a breaker produces a more severe dynamic voltage swing than clearing a fault at that location. A fault can stimulate machine exciters into a faster response. A slower response from exciters due to opening a breaker can result in larger dynamic voltage swings.

6) The reference to requirement R5.5.4 has been removed as some commenters felt this created a circular reference between the table and the requirement language.

7) The commenter is correct that the term "Protection System" as used in Extreme (Stability) Events items 2, a,b,c,d is a NERC defined term in the NERC Glossary of Terms and is now correctly capitalized within these Extreme Event descriptions

8) Extreme (Stability) Events items 2f and 2g have been retained by the SDT and these items are consistent with the current FERC approved TPL-004 category D6 and D7. Other commenters have not objected to these items.

9) The SDT agrees that a variety of topics were covered in the prior footnote 1 of Table 2 and that a discussion on delayed clearing was not applicable to a steady-state table. We have revised this footnote which is now footnote 11 to focus on the stuck breaker topic. Many of the prior references in this note were NERC Glossary of Terms definitions and have been removed. The prior footnote 1 inconsistencies indicated by the commenter have been resolved by moving to

Organization	Question 7:	Question 7 Comments:
the single table format. 10) The SDT agrees that there were missing footnotes in Table 2 when compared to the prior Table 1 footnotes. This is no longer an issue in the single table format as only one set of footnotes is used. 11) The SDT believes that the Contingency reserve is the appropriate maximum amount of generation which should be allowed to be lost for Planning events P2-P7. Also, the SDT believes the appropriate performance requirement for Planning Events is for no additional lines to be allowed to trip due to apparent impedance swings.		
Orlando Utiliites Commission	Yes and No	I like the concept of the new performance tables however if they could be made shorter that would be handy. I have the following specific suggestions, although they may be moot if the table is redesigned. The way the notes at the top of table 1 and table 2 are written it appears that they apply to planning single, planning multiple and extreme event sub-tables. However this is in conflict with some parts of the standard itself and the team's comments on the conference call. For example Requirement R3.3.2.2 applies facility ratings only to planning single contingencies only, so which is correct the requirement or the note that applies it to everything? I have several suggestions to fix this: 1. Move the "notes" to under the Planning Event sub table 2. Making 4 tables with the Extreme Events being a table 2 & 4 respectively 3. Indicating the notes as only applying to specific planning events. The discrepancy between requirement R3.3.2.2, the table note and comments on the conference call also needs to be corrected either by expanding the applicability of R3.3.2.2 to multiple contingencies or reducing the scope of the corresponding note. It should be clarified somewhere that the Transmission Planner and Planning Coordinator select the range of the system contingencies for N-1. Otherwise some may interpret this as only having to test contingencies on their own system (insufficient from a reliability perspective for many systems) while some auditors may interpret this as requiring every possible n-1 in the US and Canada as necessary. For example a requirement R3.2.3 could be added stating "The planning assessment should include a technical rationale for the range of transmission lines, transformers and other equipment considered". This could also be handled as a note on the tables to the effect of "The study should include a technical rationale for the range of transmission line and generators considered."
Response: The introductory notes have been moved under the "Planning Event" portion of the performance table as suggested by the commenter. The notes apply to all Planning Events – system normal (n-0), single Contingency and multiple Contingency. The commenter raises a valid point of confusion related to allowable System adjustments as Requirement R3.3.2.2 seems to imply that the System adjustments may only be applicable for single Contingency. Redispatch of generation and other System adjustments are allowed for provided that all Facilities shall be operating within their Facility Ratings. The requirement has been removed and replaced with Table 1 header note "e" since the text in the former requirement was explanatory of what was allowed and not requirement language. **e.** For all Planning Events, planned System adjustments such as Transmission configuration changes and redispatch of generation are allowed if such		

Organization	Question 7:	Question 7 Comments:
adjustments are executable within the time duration applicable to the Facility Ratings. The SDT has reformatted the performance tables (Table 1 Steady-State and Table 2 Stability) into a single table format based on commonalities between the two prior individual tables. The new Table 1 is titled "Steady State and Stability Performance". The new single performance table is greatly condensed from the Draft 2 version and the entire body of material is now contained on three pages compared to the thirteen pages that the prior Table 1 and Table 2 encompassed. The list of Contingencies is expected to cover the Transmission Planner or Planning Coordinator system for which they are responsible for, including any tie-lines to adjacent Transmission systems. The standard does not preclude the Transmission Planner or Planning Coordinator to expand the list of Contingencies to include some Contingencies of interest or known impact for the adjacent System(s). It is expected that through peer reviews, the Transmission Planner or Planning Coordinator may initially learn of any new event within an adjacent System that impacts their own System.		
Entergy Services, Inc.	Yes and No	Given the type of information the SDT was trying to convey in the Tables, the format is fine. However, the enhanced standards create a conflict between the planning criteria used for evaluating transmission service (typically a standard N-1 thermal only analysis for ATC/AFC calculations) and the criteria for reliability as proposed by this standard. This disconnect will unfairly shift the cost of expanding the transmission system to the native load customers while wholesale and point-to-point transmission customers will reap the benefits of the additional capacity installed.
Response: The SDT has added footnotes 5 and 10 related to Firm Transmission Service. Footnote 5 indicates that interruption of conditional firm transfers is permitted for all Planning Events and footnote 10 indicates that interruption of Firm Transmission Service coupled with appropriate generation re-dispatch can be utilized for multiple Contingency events as a System adjustment, where indicated in Table 1 as being part of the Initial System Condition, and as a post-Contingency corrective action so long as no interruption of Non-Consequential Load occurs and all Facility Ratings are maintained. **5**. When the conditions and/or event(s) being studied form the basis for conditional Firm Transmission Service, curtailment of that conditional Firm Transmission Service is allowed. **Footnote #10** – Curtailment of firm transmission service, when coupled with the appropriate re-dispatch of resources obligated to re-dispatch, is allowed both as a System adjustment (as identified in the column titled 'Initial System Conditions') and a corrective action, where it can be demonstrated that Facilities remain within applicable Facility Ratings and those adjustments do not result in the shedding of any firm Load. Where limited options for re-dispatch exist, sensitivities associated with the availability of those resources must be considered. Where Facilities external to the Transmission Planner's planning region are relied upon, Facility Ratings in those regions must be considered.		
BPA Transmission Reliability Program	No	We suggest that the tables for Steady State and Stability Performance could be combined into one table, for simplicity. Separate columns could be used for Steady State versus Stability performance criteria.
Response: The SDT has reformatted the performance tables (Table 1 Steady-State and Table 2 Stability) into a single table format based on commonalities between the two prior individual tables. The new Table 1 is titled "Steady State and Stability Performance". The move to a single table was based on a significant number of comments to do so and based on the SDT's view that the Planning Events were the same for		

Organization	Question 7:	Question 7 Comments:
both Steady-State and Stability. For Extreme Events, the separation of Steady-State and Stability that many in industry seem to prefer for the two table format has been retained in the new table. The new single performance table is greatly condensed from the Draft 2 version and the entire body of material is now contained on three pages compared to the thirteen pages that the prior Table 1 and Table 2 encompassed. Headers are repeated on subsequent pages.		
PPL EnergyPlus	Yes	The new format is a nice improvement. On the SDT conference call, it was stated that table 1 and table 2 assume different starting points; if so, could this be spelled out in the standard? Also, consequential generation loss isn't defined.
Response: The SDT has reformatted the performance tables (Table 1 Steady-State and Table 2 Stability) into a single table format based on commonalities between the two prior individual tables. The new Table 1 is titled "Steady State and Stability Performance". The move to a single table was based on a significant number of comments and based on the SDT's view that the Planning Events were the same for both Steady-State and Stability. For Extreme Events, the separation of Steady-State and Stability that many in industry seem to prefer for the two table format has been retained in the new table. The new single performance table is greatly condensed from the Draft 2 version and the entire body of material is now contained on three pages compared to the thirteen pages that the prior Table 1 and Table 2 encompassed. Headers are repeated on subsequent pages. The initial system conditions are described for each of the Planning Events and are the same for both steady-state and Stability. The SDT did not feel the need to define consequential generation loss for the standard.		
PacifiCorp	Yes	We agree with the proposed format changes of the Tables.
JEA	Yes and No	JEA can live with them as is, but would also welcome enhancements. Will defer enhancements to others.
Lafayette Utilities System	Yes	
Arizona Public Service Co.	Yes	We agrees with the proposed format changes of the Tables.
LCRA TSC	Yes	
NERC and Regional Coordination	Yes	

Organization	Question 7:	Question 7 Comments:
E.ON U.S. Transmission Planning	Yes	

Response: Thank you for your response. The SDT has reformatted the performance tables (Table 1 Steady-State and Table 2 Stability) into a single table format based on commonalities between the two prior individual tables. The new Table 1 is titled "Steady State and Stability Performance".

The move to a single table was based on a significant number of comments and based on the SDT's view that the Planning Events were the same for both Steady-State and Stability. For Extreme Events, the separation of Steady-State and Stability that many in industry seem to prefer for the two table format has been retained in the new table.

The new single performance table is greatly condensed from the Draft 2 version and the entire body of material is now contained on three pages compared to the thirteen pages that the prior Table 1 and Table 2 encompassed. Headers are repeated on subsequent pages.

8. **A new definition for "Bus-Tie Breaker" was added to clarify the type of substation design and breaker position that qualify as a Bus-tie Breaker. Do you agree with the proposed definition? If not, please explain.**

Summary Consideration:

Based on the comments received from the industry, the SDT has revised the definition of Bus-tie Breaker.

Bus-tie Breaker: A circuit breaker that is positioned to connect two individual ~~straight bus~~ substation bus configurations. ~~(Substation configurations such as ring-bus, breaker-and-a-half, or double bus-double breaker protection schemes do not use bus-tie breakers.)~~.

Organization	Question 8:	Question 8 Comments:
NPCC	No	The definition provided is too limiting. It says that if you have two rings with a bus tie breaker in between, it is no longer a bus tie breaker. NPCC Participating Members Recommend, "A circuit breaker that is positioned to connect two individual station configurations." We do not agree that, "(Substation configurations such as ring-bus, breaker-and-a-half, or double bus-double breaker protection schemes do not use bus-tie breakers.)", as we have examples where stations of this nature are connected through a single "bus-tie breaker".
TVA System Planning	Yes	TVA does appreciate this clarification, but suggests the following wording: "A circuit breaker that is positioned to connect two individual straight bus substation configurations that if faulted results in both bus sections being cleared."
Omaha Public Power District	No	The term "straight bus" is not an industry-standard term. Replace "straight bus" by "single-bus, single-breaker".
Progress Energy Carolinas		The use of the word "straight" in the definition raised questions. We recommend the word straight be removed or change the definition to the following. "Bus-tie Breaker: A circuit breaker positioned to connect two individual buses with one or more other breaker positions on each bus. (Substation configurations such as a ring-bus, breaker-and-a-half, or double-breaker do not generally include bus-tie breakers.)"
Platte River Power Authority	Yes and No	Delete the sentence in parentheses.
BCTC	No	Some breaker-and-a-half and double-breaker layouts may have bus breakers located mid-way in the side elements. What would these breakers be called? We propose the following definition: A circuit breaker that divides a bus section with multiple tap off points into two bus sections.

Organization	Question 8:	Question 8 Comments:
Manitoba Hydro	Yes	The Bus-tie Breaker definition provides the clarification Manitoba Hydro requested in our draft 1 comments. However, we suggest the wording in brackets should be deleted as it is possible to add bus-tie breakers to schemes like the breaker-and-a-third bus in large stations.
Transmission Agency of Northern California	No	We do not disagree with the proposed definition change. However, we do not agree that ?Substation configurations such as ring-bus, breaker-and-a-half, or double bus-double breaker protection schemes do not use bus-tie breakers. Some breaker-and-a-half and double-breaker layouts may have bus breakers located mid-way in the side elements. We propose the following definition: A circuit breaker that divides a bus section with multiple tap off points into two bus sections.
National Grid	No	The definition provided is too limiting. It says that if you have a two rings with a bus tie breaker in between, it is no longer a bus tie breaker. We recommend modifying the definition to read, "A circuit breaker that is positioned to connect two individual station configurations. We do not agree that, "(Substation configurations such as ring-bus, breaker-and-a-half, or double bus-double breaker protection schemes do not use bus-tie breakers.)", as we have examples where stations of this nature are connected through a single "bus-tie breaker".
OPUC	Yes and No	A better definition of Bus-Tie Breaker might be: “A circuit breaker that divides a bus section with multiple tap off points into two bus sections.”
Pacific Gas and Electric Co.	No	We do not disagree with the proposed definition change. However, we do not agree that ?Substation configurations such as ring-bus, breaker-and-a-half, or double bus-double breaker protection schemes do not use bus-tie breakers. Some breaker-and-a-half and double-breaker layouts may have bus breakers located mid-way in the side elements. We propose the following definition: A circuit breaker that divides a bus section with multiple tap off points into two bus sections.
Public Service Company of New Mexico	No	We do not disagree with the proposed definition change. However, we do not agree that “Substation configurations such as ring-bus, breaker-and-a-half, or double bus-double breaker protection schemes do not use bus-tie breakers. Some breaker-and-a-half and double-breaker layouts may have bus breakers located mid-way in the side elements. We propose the following definition: A circuit breaker that divides a bus section with multiple tap off points into two bus sections.
Puget Sound Energy, Inc.	No	We do not disagree with the proposed definition change. However, we do not agree that “Substation configurations such as ring-bus, breaker-and-a-half, or double bus-double breaker protection schemes do not use bus-tie breakers. Some breaker-and-a-half and double-breaker layouts may have bus breakers located mid-way in the side elements. We propose the following definition: A circuit breaker that divides a bus section with multiple tap off points into two

Organization	Question 8:	Question 8 Comments:
		bus sections.
Idaho Power Company	No	We do not disagree with the proposed definition change. However, we do not agree that ?Substation configurations such as ring-bus, breaker-and-a-half, or double bus-double breaker protection schemes do not use bus-tie breakers. Some breaker-and-a-half and double-breaker layouts may have bus breakers located mid-way in the side elements. We propose the following definition: A circuit breaker that divides a bus section with multiple tap off points into two bus sections.
SMUD	No	We do not disagree with the proposed definition change. However, we do not agree that “Substation configurations such as ring-bus, breaker-and-a-half, or double bus-double breaker protection schemes do not use bus-tie breakers. Some breaker-and-a-half and double-breaker layouts may have bus breakers located mid-way in the side elements. We propose the following definition: A circuit breaker that divides a bus section with multiple tap off points into two bus sections.
Hydro-Qu?bec Trans?nergie (HQT)	No	? The definition provided is too limiting. It says that if you have a two rings with a bus tie breaker in between, it is no longer a bus tie breaker. HQT recommend, "A circuit breaker that is positioned to connect two individual station configurations. We do not agree that, "(Substation configurations such as ring-bus, breaker-and-a-half, or double bus-double breaker protection schemes do not use bus-tie breakers.)", as we have examples where stations of this nature are connected through a single "bus-tie breaker".
Sierra Pacific Power Comapny / Nevada Power Company	No	We do not disagree with the proposed definition change. However, we do not agree that ?Substation configurations such as ring-bus, breaker-and-a-half, or double bus-double breaker protection schemes do not use bus-tie breakers. Some breaker-and-a-half and double-breaker layouts may have bus breakers located mid-way in the side elements. We propose the following definition: A circuit breaker that divides a bus section with multiple tap off points into two bus sections.
Ameren	No	To provide clarity, a revised definition is proposed. "A bus-tie breaker is a circuit breaker that connects two individual bus sections with one or more breaker positions on each bus; substation configurations such as ring-bus, breaker-and-a-half, or double bus-double-breaker do not have bus-tie circuit breakers."
SRP	No	We do not disagree with the proposed definition change. However, we do not agree that ?Substation configurations such as ring-bus, breaker-and-a-half, or double bus-double breaker protection schemes do not use bus-tie breakers. Some breaker-and-a-half and double-breaker layouts may have bus breakers located mid-way in the side elements. We propose the following definition: A circuit breaker that divides a bus section with multiple tap off points into two bus sections.

Organization	Question 8:	Question 8 Comments:
MidAmerican Energy Company	No	MEC suggests applying the proposed definition to a new term, "Straight Bus-Tie Breaker". The creation of a narrow, special application definition of "bus tie breaker" is generally confusing and misleading. The term "bus tie breakers" is widely used in the industry in the context of various bus configurations. In addition, this narrow definition may create confusion if other Standards refer to bus-tie breaker in a different context.
Tucson Electric Power Company	No	We do not disagree with the proposed definition change. However, we do not agree that ?Substation configurations such as ring-bus, breaker-and-a-half, or double bus-double breaker protection schemes do not use bus-tie breakers. Some breaker-and-a-half and double-breaker layouts may have bus breakers located mid-way in the side elements. We propose the following definition: A circuit breaker that divides a bus section with multiple tap off points into two bus sections.
SERC Dynamics Review Subcommittee	No	The use of the word ?straight? in the definition raised questions. We recommend the word straight be removed or change the definition to the suggestion below: Suggestion: Bus-tie breakers are defined as a circuit breaker position that connects two individual buses with one or more breaker positions on each bus.
MRO NERC Standards Review Subcommittee	No	The MRO suggests applying the proposed definition to a new term, "Straight Bus-Tie Breaker". The creation of a narrow, special application definition of "bus tie breaker" is generally confusing and misleading. The term "bus tie breakers" is widely used in the industry in the context of various bus configurations. In addition, this narrow definition may create confusion if other Standards refer to bus-tie breaker in a different context.
Modesto Irrigation District	No	We do not disagree with the proposed definition change. However, we do not agree that ?Substation configurations such as ring-bus, breaker-and-a-half, or double bus-double breaker protection schemes do not use bus-tie breakers. Some breaker-and-a half and double-breaker layouts may have bus breakers located mid-way in the side elements. We propose the following definition: A circuit breaker that divides a bus section with multiple tap off points into two bus sections.
Tri-State G&T	No	We do not disagree with the proposed definition change. However, we do not agree that ?Substation configurations such as ring-bus, breaker-and-a-half, or double bus-double breaker protection schemes do not use bus-tie breakers. Some breaker-and-a-half and double-breaker layouts may have bus breakers located mid-way in the side elements. We propose the following definition: A circuit breaker that divides a bus section with multiple tap off points into two bus sections.
Brazos Electric Power Cooperative,	No	Part of the definition of a bus tie breaker as outlined in this Standard should be that it is the ONLY connection between 2 substation buses. Not sure why the word 'straight' is used in this definition. If a bus with a 90 degree turn is connected to another bus by a single tie breaker, does this not apply? Also, breaker and a half schemes do

Organization	Question 8:	Question 8 Comments:
Inc.		sometimes have a bus tie breaker in them although its probably not common. Including those specifics in not needed.
ColumbiaGrid	No	We do not disagree with the proposed definition change. However, we do not agree that ?Substation configurations such as ring-bus, breaker-and-a-half, or double bus-double breaker protection schemes do not use bus-tie breakers. Some breaker-and-a-half and double-breaker layouts may have bus breakers located mid-way in the side elements. We propose the following definition: A circuit breaker that divides a bus section with multiple tap off points into two bus sections.
Southern California Edison	No	We do not disagree with the proposed definition change. However, we do not agree that ?Substation configurations such as ring-bus, breaker-and-a-half, or double bus-double breaker protection schemes do not use bus-tie breakers. Some breaker-and-a-half and double-breaker layouts may have bus breakers located mid-way in the side elements. We propose the following definition: A circuit breaker that divides a bus section with multiple tap off points into two bus sections.
Northeast Utilities	No	Northeast Utilities has participated with ISO-NE and NPCC and supports the comments filed by those organizations.
North Carolina Electric Membership Corp	No	To provide clarity, a revised definition is proposed. A bus-tie breaker is a circuit breaker that connects two individual bus sections in a straight bus substation configuration. Substation configurations such as ring-bus, breaker-and-a-half, or double bus-double-breaker do not have bus-tie circuit breakers.
American Transmission Company	No	We suggest applying the proposed definition to a new term, "Straight Bus-Tie Breaker". The creation of a narrow, special application definition of "bus tie breaker" is generally confusing and misleading. The term "bus tie breakers" is widely used in the industry in the context of various bus configurations. In addition, this narrow definition may create confusion if other Standards refer to bus-tie breaker in a different context.
Duke Energy	No	The use of the word ?straight? in the definition raised questions and did not seem crucial to the definition. We recommend the word ?straight? be removed from the definition.
Central Maine Power Company	No	The definition provided is too limiting. It indicates that if a substation has two rings with a bus tie breaker in between, that breaker is no longer a bus tie breaker. Recommend instead, "A circuit breaker that is positioned to connect two individual station configurations. The breakers in a bus scheme are not bus tie breakers but the breakers that tie bus schemes together are bus-tie breakers."
NSTAR Electric	No	The definition provided is too limiting and should be changed to "A circuit breaker that is positioned to connect two individual station configurations. The breakers in a bus scheme are not bus tie breakers but the breakers that tie bus

Organization	Question 8:	Question 8 Comments:
		schemes together are bus-tie breakers."
New York Independent System Operator	No	The definition provided is too limiting. It says that if you have a two rings with a bus tie breaker in between, it is no longer a bus tie breaker. Recommend, "A circuit breaker that is positioned to connect two individual station configurations. We do not agree that, "(Substation configurations such as ring-bus, breaker-and-a-half, or double bus-double breaker protection schemes do not use bus-tie breakers.)", as we have examples where stations of this nature are connected through a single "bus-tie breaker".
SERC Reliability Review Subcommittee and Planning Standards Subcommittee	No	To provide clarity, a revised definition is proposed. A bus-tie breaker is a circuit breaker that connects two individual bus sections in a straight bus substation configuration. Substation configurations such as ring-bus, breaker-and-a-half, or double bus-double-breaker do not have bus-tie circuit breakers.
Alberta Electric System Operator	No	We do not disagree with the proposed definition change. However, we do not agree that ?Substation configurations such as ring-bus, breaker-and-a-half, or double bus-double breaker protection schemes do not use bus-tie breakers. Some breaker-and-a-half and double-breaker layouts may have bus breakers located mid-way in the side elements. We propose the following definition: "A circuit breaker that's only protective purpose is to isolate a segment of a bus."
ISO New England Inc.	No	he definition provided is too limiting. It says that if you have two rings with a bus tie breaker in between, it is no longer a bus tie breaker. Recommend, "A circuit breaker that is positioned to connect two individual station configurations. The breakers in a bus scheme are not bus tie breakers but the breakers that tie bus schemes together are bus-tie breakers."
Orlando Utiliites Commission	Yes and No	I neither for or against breaking out these breakers as a separate class. However a graphic or sketch of some example an easier concept to understand both in terms of what it is and why it is worthy of special attention.
Entergy Services, Inc.	No	Change term from ?Bus-tie Breaker? to ?Straight Bus Substation Bus-tie Breaker? with the following definition: A bus-tie breaker is a circuit breaker that connects two individual bus sections in a straight bus substation configuration. References to Bus-tie Breaker in the standard would also need to be changed accordingly.
US Bureau of Reclamation	No	We do not disagree with the proposed definition change. However, we do not agree that ?Substation configurations such as ring-bus, breaker-and-a-half, or double bus-double breaker protection schemes do not use bus-tie breakers. Some breaker-and-a half and double-breaker layouts may have bus breakers located mid-way in the side elements. We propose the following definition: A circuit breaker that divides a bus section with multiple tap off points into two

Organization	Question 8:	Question 8 Comments:
		bus sections.
BPA Transmission Reliability Program	No	The term "Bus Tie" implies tying any two buses together. However, the intent of this standard is actually referring to connecting the main buses of two adjacent main and auxiliary configured substations together. Therefore, we recommend changing the term "Bus Tie Breaker" to "Bus Sectionalizing Breaker". We also recommend removing the parentheses portion of the Bus Tie Breaker definition. It does not provide clarification and may not apply to all utilities' systems.
Response: The SDT has revised the definition as follows: **Bus-tie Breaker**: A circuit breaker that is positioned to connect two individual ~~straight bus~~ substation bus configurations. ~~(Substation configurations such as ring-bus, breaker-and-a-half, or double bus-double breaker protection schemes do not use bus-tie breakers.)~~		
Progress Energy Florida, Inc.	No	PEF understands the intent behind the wording of the definition, but neither agrees with the definition nor its use in various applications in the Standard. Bus tie breakers as defined in the draft Standard are limited to connecting two straight bus configurations. In reality, the term bus-tie breaker can be, and is used for other applications. PEF suggests that the SDT further research the use of this term in the industry. But more to the point, PEF does not see the need for a distinction between bus tie and non bus tie breakers and ultimately recommends that this be removed from the Standard.
Florida Power and Light	No	Bus tie breakers are defined exclusively to straight bus configurations. They can be used for other breaker configurations. We do not see the need for a distinction between bus tie and non bus tie breakers.
Response: The SDT notes that a number of commenters disagreed with the definition. However, the number who indicate that the distinction should be eliminated is in the minority. Therefore, the SDT has retained the distinction while having made changes to provide a simpler and broader definition of bus-tie breaker.		
Dominion - Electric Transmission Planning	Yes	
City Water, Light & Power - Springfield, Illinois	Yes	

Organization	Question 8:	Question 8 Comments:
Los Angeles Department of Water and Power	Yes	
Tenaska, Inc.	Yes	
Gainesville Regional Utilities	Yes	
JEA	Yes	
PacifiCorp	Yes	We agree with the proposed format changes of the Tables.
ITC Holdings: ITC, METC, ITC Midwest	Yes	
Tacoma Power	Yes	
Lafayette Utilities System	Yes	
Black Hills Corporation	Yes	
Arizona Public Service Co.	Yes	We agree with the proposed definition change.
Exelon Transmission Planning	Yes	
Austin Energy	Yes	
Midwest ISO	Yes	This is a good definition.

Organization	Question 8:	Question 8 Comments:
Tri-State Generation and Transmission Association, Inc.	Yes	
AEP	Yes	
Lakeland Electric	Yes	
Southern Company Transmission	Yes	
LCRA TSC	Yes	
NERC and Regional Coordination	Yes	
IESO	Yes	
E.ON U.S. Transmission Planning	Yes	
ERCOT System Planning	Yes	
Oncor Electric Delivery	Yes	NA
FirstEnergy Corp.	Yes	
Response: The SDT thanks you for your response but the majority of commenters expressed a desire to change the definition.		

9. **Some commenters questioned why a Bus-tie Breaker would have a different performance requirement than a non-Bus-tie Breaker, stating that all breakers have the same probability for failure. It may be true that generally the probability for failure of any given breaker would not vary substantially among similar types of breakers, but the Bus-tie Breaker reduces exposure and consequences of bus faults. The different performance expectations in Tables 1 and 2 are based on promoting a higher level of reliability for the Transmission Systems operated above 300 kV.**

   It is recognized by the SDT that a straight bus design has some undesirable exposure to bus faults, but that Bus-tie Breakers can be utilized to improve reliability for bus faults and problems associated with exit breakers. As a result, the risk of an internal breaker fault was deemed to be significantly less than the benefit that is gained by reducing the exposure to a total bus failure. Therefore, provisions were built into the performance requirements that would not discourage their use.

   Do you agree that non-Bus-tie Breakers rated above 300 kV should have more stringent performance requirements than Bus-tie Breakers? If not, please explain why and/or suggest specific changes.

Summary Consideration:

While a significant number of parties commented negatively about the higher performance requirement for non-Bus-tie Breakers above 300 kV, higher performance requirements are encouraged by FERC Order No. 693 and the majority of the industry has indicated support for the higher performance requirement. Therefore, the SDT has kept the higher performance requirement for non-Bus-tie Breakers above 300 kV.

A number of commenters raised concerns with the less stringent requirement for DC systems. The SDT has removed the less stringent requirements for DC lines in the Table.

Due to industry comments, the SDT has changed/added the following:

Footnote 5 - When the conditions and/or event(s) being studied form the basis for conditional firm transmission service, curtailment of that conditional firm transmission service is allowed

Footnote #10 – Curtailment of firm transmission service, when coupled with the appropriate re-dispatch of resources obligated to re-dispatch, is allowed both as a System adjustment (as identified in the column titled 'Initial System Conditions') and a corrective action, where it can be demonstrated that Facilities remain within applicable Facility Ratings and those adjustments do not result in the shedding of any firm Load. Where limited options for re-dispatch exist, sensitivities associated with the availability of those resources must be considered. Where Facilities external to the Transmission Planner's planning region are relied upon, Facility Ratings in those regions must be considered.

Consequential Load Loss: ~~Load that is no longer connected to a source as a result of the event being studied or which is lost as a result of the load's response to the transient conditions of the event (other than through the action of UVLS or UFLS schemes). Although Load which is lost as a result of the Load's response to the transient conditions of the event is considered Consequential Load Loss and is permitted when Consequential Load Loss is allowed, Transmission planning entities are not allowed to rely upon the expectation of such Load loss to meet steady state performance requirements.~~ All Load that is no longer served by any Transmission Facilities as a result of the Facilities being removed from service by a planned Protection System operation to isolate fault conditions.

Non-Consequential Load Loss: Non-Interruptible Load loss other than Consequential Load Loss, Supplemental Load Loss, and Load Reduction.~~. For example, non-Interruptible Load loss that occurs through manual (operator initiated) or automatic operations such as under-voltage Load shedding, under frequency Load shedding, or Special Protection Systems would be considered Non-Consequential Load Loss~~

Load Reduction: Load that is still connected to the System, but is reduced due to lower voltage conditions following a Planning or Extreme Event.

Supplemental Load Loss: Load that is disconnected from the network by end-user equipment responding to post-Contingency System conditions.

Organization	Question 9:	Question 9 Comments:
TVA System Planning	No	Since an internal fault on any breaker is a low probability event, we believe that Non-consequential Load Loss should be allowed.
Alberta Electric System Operator	No	We believe that Non-Consequential Load Loss should be allowed for loss of either Bus-Tie or Non-Bus-Tie Breakers regardless of voltage class.
Response: While a significant number of parties commented negatively about the higher performance requirement for non-Bus-tie Breakers above 300 kV, higher performance requirements are encouraged by FERC Order No. 693 and the majority of the industry has indicated support for the higher performance requirement. Therefore, the SDT has kept the higher performance requirement for non-Bus-tie Breakers above 300 kV.		
BCTC	Yes	BCTC agrees with different performance levels. However, we have a different rationale. Our reasoning is that a bus fault has a lower probability than a line fault. Bus tie breakers are called on to interrupt faults less often than line breakers. The failure probably may be the same but the frequency of failure is lower (because they are not called on to operate as often). The explanation given above by the SDT appears to be more related to a WECC issue that bus breaker failure should be Category D.
Response: Thank you for your support of the SDT's position.		
Platte River Power Authority	No	I think the performance for non-bus-tie breakers should be the same for all BES voltages for the same reason I agree with the performance of P2.4 Internal Breaker Fault (bus tie) and P4.6 Stuck Breaker where the Stuck Breaker could be a bus-tie or "sectionalizing" breaker.

Organization	Question 9:	Question 9 Comments:
Manitoba Hydro	No	Based on industry outage statistics, event P4, the non-bus tie breaker failure has a lower probability of occurrence than event P7, the common structure event. Consequently, Manitoba Hydro recommends that the performance requirement for >300 kV should be the same as P7. Imposing a higher performance expectation on the >300 kV facilities will require significant bus reconfiguration costs to ensure compliance for existing stations. The additional cost can not be justified by the reliability gain given the low probability of the event.
Transmission Agency of Northern California	Yes and No	We interpret ?exit breakers? to mean a breaker on an element that comes in from outside the substation. We agree with applying less stringent performance requirements to bus tie breakers above 300 kV. Further, we believe that Non-Consequential Load Loss should be allowed for loss of either Bus-Tie or Non-Bus-Tie Breakers regardless of voltage class. The SDT has not presented evidence that the probabilities of failure for breakers within the same substation are significantly different for different voltage classes.
Pacific Gas and Electric Co.	Yes and No	We interpret “exit breakers” to mean a breaker on an element that comes in from outside the substation. We agree with applying less stringent performance requirements to bus tie breakers above 300 kV. Further, we believe that Non-Consequential Load Loss should be allowed for loss of either Bus-Tie or Non-Bus-Tie Breakers regardless of voltage class. The SDT has not presented evidence that the probabilities of failure for breakers within the same substation are significantly different for different voltage classes
Public Service Company of New Mexico	Yes and No	We interpret “exit breakers” to mean a breaker on an element that comes in from outside the substation. We agree with applying less stringent performance requirements to bus tie breakers above 300 kV. Further, we believe that Non-Consequential Load Loss should be allowed for loss of either Bus-Tie or Non-Bus-Tie Breakers regardless of voltage class. The SDT has not presented evidence that the probabilities of failure for breakers within the same substation are significantly different for different voltage classes.
PacifiCorp	No	We do not agree with the rationale for the requiring more stringent performance requirement levels for non-bus tie breakers above 300 kV. The SDT has not presented evidence that the probabilities of failure for breakers within the same substation are significantly different for different voltage classes.
Idaho Power Company	Yes and No	We interpret ?exit breakers? to mean a breaker on an element that comes in from outside the substation. We agree with the rationale for the requiring more stringent performance requirement levels for non-bus tie breakers above 300 kV. Further, we believe that Non-Consequential Load Loss should be allowed for loss of either Bus-Tie or Non-Bus-Tie Breakers regardless of voltage class. The SDT has not presented evidence that the probabilities of failure for breakers within the same substation are significantly different for different voltage classes

Organization	Question 9:	Question 9 Comments:
SMUD	Yes and No	We interpret ?exit breakers? to mean a breaker on an element that comes in from outside the substation. We agree with applying less stringent performance requirements to bus tie breakers above 300 kV. Further, we believe that Non-Consequential Load Loss should be allowed for loss of either Bus-Tie or Non-Bus-Tie Breakers regardless of voltage class. The SDT has not presented evidence that the probabilities of failure for breakers within the same substation are significantly different for different voltage classes
Sierra Pacific Power Company / Nevada Power Company	Yes	We interpret ?exit breakers? to mean a breaker on an element that comes in from outside the substation. We agree with the rationale for the requiring more stringent performance requirement levels for non-bus tie breakers above 300 kV. Further, we believe that Non-Consequential Load Loss should be allowed for loss of either Bus-Tie or Non-Bus-Tie Breakers regardless of voltage class. The SDT has not presented evidence that the probabilities of failure for breakers within the same substation are significantly different for different voltage classes
Black Hills Corporation	Yes and No	We interpret ?exit breakers? to mean a breaker on an element that comes in from outside the substation. We agree with applying less stringent performance requirements to bus tie breakers above 300 kV. Further, we believe that Non-Consequential Load Loss should be allowed for loss of either Bus-Tie or Non-Bus-Tie Breakers regardless of voltage class. The SDT has not presented evidence that the probabilities of failure for breakers within the same substation are significantly different for different voltage classes
Arizona Public Service Co.	No	We do not agree with the rationale for the requiring more stringent performance requirement levels for non-bus tie breakers above 300 kV. The SDT has not presented evidence that the probabilities of failure for breakers within the same substation are significantly different for different voltage classes.
SRP	Yes and No	We interpret ?exit breakers? to mean a breaker on an element that comes in from outside the substation. We agree with applying less stringent performance requirements to bus tie breakers above 300 kV. Further, we believe that Non-Consequential Load Loss should be allowed for loss of either Bus-Tie or Non-Bus-Tie Breakers regardless of voltage class. The SDT has not presented evidence that the probabilities of failure for breakers within the same substation are significantly different for different voltage classes
MidAmerican Energy Company	No	MEC recognizes that the addition of this requirement is an attempt to raise the bar above the existing standards. However, the more stringent non-bus-tie performance criteria should only be adopted if there is sufficient evidence to demonstrate the expected reliability risk (i.e. system impact x probability of occurrence) is high enough to warrant the cost of the system modifications that would be needed to meet the criteria. System modifications that involve the installation of line and substation facilities >300 kV will likely take years and cost tens to hundreds of millions to build. There should be a reliability risk analysis that justifies the application of this performance criteria before it is adopted.

Organization	Question 9:	Question 9 Comments:
Tucson Electric Power Company	Yes and No	We interpret “exit breakers” to mean a breaker on an element that comes in from outside the substation. We agree with applying less stringent performance requirements to bus tie breakers above 300 kV. Further, we believe that Non-Consequential Load Loss should be allowed for loss of either Bus-Tie or Non-Bus-Tie Breakers regardless of voltage class. The SDT has not presented evidence that the probabilities of failure for breakers within the same substation are significantly different for different voltage classes
MRO NERC Standards Review Subcommittee	No	The MRO recognizes that the addition of this requirement is an attempt top raise the bar above the existing standards. However, the more stringent non-bus-tie performance criteria should only be adopted if there is sufficient evidence to demonstrate the expected reliability risk (i.e. system impact x probability of occurrence) is high enough to warrant the cost of the system modifications that would be needed to meet the criteria. System modifications that involve the installation of line and substation facilities >300 kV will likely take years and cost tens to hundreds of millions to build. There should be a reliability risk analysis that justifies the application of this performance criteria before it is adopted.
Modesto Irrigation District	Yes and No	Comments: We interpret “exit breakers” to mean a breaker on an element that come in from outside the substation. We agree with applying less stringent performance requirements to bus tie breakers above 300 kV. Further, we believe that Non-Consequential Load Loss should be allowed for loss of either Bus-Tie or Non-Bus-Tie Breakers regardless of voltage class. The SDT has not presented evidence that the probabilities of failure for breakers within the same substation are significantly different for different voltage classes
Tri-State G&T	Yes and No	We interpret “exit breakers” to mean a breaker on an element that comes in from outside the substation. We agree with applying less stringent performance requirements to bus tie breakers above 300 kV. Further, we believe that Non-Consequential Load Loss should be allowed for loss of either Bus-Tie or Non-Bus-Tie Breakers regardless of voltage class. The SDT has not presented evidence that the probabilities of failure for breakers within the same substation are significantly different for different voltage classes
ColumbiaGrid	Yes	Please explain/define the term “exit breakers”. We agree with the rationale for the requiring more stringent performance requirement levels for non-bus tie breakers above 300 kV. Further, we believe that Non-Consequential Load Loss should be allowed for loss of either Bus-Tie or Non-Bus-Tie Breakers regardless of voltage class. The SDT has not presented evidence that the probabilities of failure for breakers within the same substation are significantly different for different voltage classes.
Southern California Edison	Yes and No	We interpret “exit breakers” to mean a breaker on an element that comes in from outside the substation. We agree with applying less stringent performance requirements to bus tie breakers above 300 kV. Further, we believe that Non-Consequential Load Loss should be allowed for loss of either Bus-Tie or Non-Bus-Tie Breakers regardless of voltage class. The SDT has not presented evidence that the probabilities of failure for breakers within the same substation are significantly

Organization	Question 9:	Question 9 Comments:
		different for different voltage classes
American Transmission Company	No	We recognize that the addition of this requirement is an attempt top raise the bar above the existing standards. However, the more stringent non-bus-tie performance criteria should only be adopted if there is sufficient evidence to demonstrate the expected reliability risk (i.e. system impact x probability of occurance) is high enough to warrant the cost of the system modifications that would be needed to meet the criteria. System modifications that involve the installation of line and substation facilities >300 kV will likely take years and cost tens to hundreds of millions to build. It would be helpful to have a reliability risk analysis that justifies the application of this performance criteria before it is adopted.
Entergy Services, Inc.	No	The probability of an EHV breaker failure is extremely low. Statistically, the probability of an internal breaker failure on any given day in our system is approximately 1 failure every 10,000 days. The probability of a stuck EHV breaker in our system is approximately 1 failure every 21,000 days. While the impact of such events can be severe, the significant cost to remedy such low probability events seems unlikely to pass any reasonable cost/benefit analysis.
US Bureau of Reclamation	No	We interpret “exit breakers” to mean a breaker on an element that come in from outside the substation. We agree with applying less stringent performance requirements to bus tie breakers above 300 kV. Further, we believe that Non-Consequential Load Loss should be allowed for loss of either Bus-Tie or Non-Bus-Tie Breakers regardless of voltage class. The SDT has not presented evidence that the probabilities of failure for breakers within the same substation are significantly different for different voltage classes
Response: The SDT feels the 300 kV and higher systems generally represent an extra-high-voltage (EHV) range that is considered the backbone of many systems in the various Interconnections. Systems operated at this range generally do not directly serve end-use Load customers but rather act as the medium for moving large amounts of power from production to various Load centers which then deliver the power among other Transmission or sub-Transmission Systems to end use customers. It is the desire of NERC and various stakeholders that the backbone of the electric power grid be robust and held to a higher degree of reliability. While a significant number of parties commented negatively about the higher performance requirement for non-Bus-tie Breakers above 300 kV, higher performance requirements are encouraged by FERC Order No. 693 and the majority of the industry has indicated support for the higher performance requirement. Therefore, the SDT has kept the higher performance requirement for non-Bus-tie Breakers above 300 kV.		
Los Angeles Department of Water and Power	No	The arbitrary separation based on voltage class is discriminatory and without any scientific or historical basis. The probability of breaker failure do not increase with voltage class. In fact, breaker failures are seldom heard of at above the 300kV classes. Most breaker failures occur in lower voltage classes such as 230kv, 115kv, etc. where the short circuit current tends to be higher and thus stressing breaker contacts more severely giving rise to breaker failures. Delete any separation of voltage classes.
Response: The SDT believes that the separation for a more stringent requirement at above 300 kV is not “arbitrary”. The SDT feels the 300 kV and higher systems generally represent an extra-high-voltage (EHV) range that is considered the backbone of many systems in the various Interconnections. Systems		

Organization	Question 9:	Question 9 Comments:
operated at this range generally do not directly serve end-use Load customers but rather act as the medium for moving large amounts of power from production to various Load centers which then deliver the power among other Transmission or sub-Transmission Systems to end use customers. It is the desire of NERC and various stakeholders that the backbone of the electric power grid be robust and held to a higher degree of reliability. The SDT believes that the separation above 300 kV is not "discriminatory" in that the standard is intended to be in place for all operators, owners, and users of the Transmission System. Finally, the SDT believes that there is scientific and historical basis in the sense that our representation of the differences between Systems above 300 kV as opposed to below 300 kV are a reasonable review of the uses of the NERC-wide Transmission System including scientific and historical considerations. While a significant number of parties commented negatively about the higher performance requirement for non-Bus-tie Breakers above 300 kV, higher performance requirements are encouraged by FERC Order No. 693 and the majority of the industry has indicated support for the higher performance requirement. Therefore, the SDT has kept the higher performance requirement for non-Bus-tie Breakers above 300 kV.		
National Grid	No	They should have the same performance requirements, however we understand that it is better to encourage bus-tie breakers in some applications than to hold them to the higher standard. Future station designs that need this differential treatment should be discouraged.
Central Maine Power Company	No	They should have the same performance requirements, however we understand that it is better to encourage bus-tie breakers in some applications than to hold them to the higher standard. Future station designs that need this differential treatment should be discouraged.
NSTAR Electric	No	They should have the same performance requirements. The performance standards should not encourage differential treatment for the same equipment.
FirstEnergy Corp.	Yes and No	Fundamentally, from a purest perspective, we believe that all breakers should be treated as having the same probability of failure. However, we understand the SDT's intent and agree to the higher performance expectations for the above 300kV transmission system. We also agree that without the exception provided for bus-tie breakers, some entities may take the approach to simply operate their bus-tie breakers open in order to meet the performance requirements, which would be counterproductive to the improved reliability sought by the team. The alternative would be back to back bus-tie breaker installations which may not even be feasible due to space limitations. On a going forward basis, future station designs at this voltage level should avoid straight bus designs.
ISO New England Inc.	No	They should have the same performance requirements, however we understand that it is better to encourage bus-tie breakers in some applications than to hold them to the higher standard. Future station designs that need this differential treatment should be discouraged.

Organization	Question 9:	Question 9 Comments:
Northeast Utilities	Yes	Northeast Utilities has participated with ISO-NE and NPCC and supports the comments filed by those organizations.
Response: The SDT understands your comment as being supportive of the more stringent requirement for non-Bus-tie Breakers above 300 kV and of a more stringent requirement for Bus-tie Breakers above 300 kV in new substations. While there are a significant number of parties that commented negatively about the higher system performance requirement for non-Bus-tie Breakers above 300 kV, higher performance requirements are encouraged by FERC Order No. 693 and the industry has indicated support for the higher performance requirement for non-Bus-tie Breakers above 300 kV and for a lower performance requirement for Bus-tie Breakers above 300 kV. Therefore, the SDT has not altered the higher system performance requirement for loss of non-Bus-tie Breakers above 300 kV and has not raised the system performance requirement for loss of Bus-tie Breakers above 300 kV for new substations.		
Tenaska, Inc.	Yes and No	Voltage is a questionable criteria for determining whether a breaker's performance requirements should be different. May want to consider a lower voltage cutoff (below 100 or below 200) as lower performance MAY have less of an impact.
Response: The SDT feels the 300 kV and higher systems generally represent an extra-high-voltage (EHV) range that is considered the backbone of many systems in the various Interconnections. Systems operated at this range generally do not directly serve end-use Load customers but rather act as the medium for moving large amounts of power from production to various Load centers which then deliver the power among other Transmission or sub-Transmission Systems to end use customers. It is the desire of NERC and various stakeholders that the backbone of the electric power grid be robust and held to a higher degree of reliability. While a significant number of parties commented negatively about the higher performance requirement for non-Bus-tie Breakers above 300 kV, higher performance requirements are encouraged by FERC Order No. 693 and the majority of the industry has indicated support for the higher performance requirement. Therefore, the SDT has kept the higher performance requirement for non-Bus-tie Breakers above 300 kV and has not raised the system performance requirement for loss of breakers at lower voltages.		
Gainesville Regional Utilities	Yes	Our control area operates at 138 kV. Does everyone think that holding the owners of above 300 kV operating voltage systems to a higher standard really increases the total BES reliability? Does giving the DC systems a pass on some of the requirements really make sense in the world of reliability?
Response: The SDT believes that holding the owners of above 300 kV operating voltage systems to a higher standard increases the total BES reliability. The SDT feels the 300 kV and higher systems generally represent an extra-high-voltage (EHV) range that is considered the backbone of many systems in the various Interconnections. Systems operated at this range generally do not directly serve end-use Load customers but rather act as the medium for moving large amounts of power from production to various Load centers which then deliver the power among other Transmission or sub-Transmission Systems to end use customers. It is the desire of NERC and various stakeholders that the backbone of the electric power grid be robust and held to a higher degree of reliability. While a significant number of parties commented negatively about the higher performance requirement for non-Bus-tie Breakers above 300 kV, higher performance requirements are encouraged by FERC Order No. 693 and the majority of the industry has indicated support for the higher performance requirement. Therefore, the SDT has kept the higher performance requirement for non-Bus-tie Breakers above 300 kV. A number of commenters raised concerns with the less stringent requirement for DC systems. The SDT has removed the less stringent requirements for DC lines.		

Organization	Question 9:	Question 9 Comments:
Progress Energy Florida, Inc.	No	PEF is opposed to distinction between non-Bus-tie breakers and Bus-tie breakers, and furthermore is opposed to the more stringent requirements for both in facilities above 300 kV. One primary reason has already been acknowledged by the SDT, that breakers have the same failure rate no matter the configuration in which they are placed. PEF can see two potential outcomes to the missteps being made regarding the breaker distinction: a) multiple redundancy of breakers for both Bus-tie and non-Bus-tie breaker schemes, which will require tearing down many Substations, acquiring additional property in many cases, and completely rebuilding the Substations to allow room for redundancy of breakers in series with one another; b) choosing to remove existing breakers for which a scenario of non-compliance is imminent, which could potentially pose a reliability risk to the system and possibly result in heightened risk for other Event categories.
Response: The SDT feels the 300 kV and higher systems generally represent an extra-high-voltage (EHV) range that is considered the backbone of many systems in the various Interconnections. Systems operated at this range generally do not directly serve end-use Load customers but rather act as the medium for moving large amounts of power from production to various Load centers which then deliver the power among other Transmission or sub-Transmission Systems to end use customers. It is the desire of NERC and various stakeholders that the backbone of the electric power grid be robust and held to a higher degree of reliability. Cost estimates were requested in other questions and were utilized by the SDT in determining a balance between such costs and reliability. While a significant number of parties commented negatively about the higher performance requirement for non-Bus-tie Breakers above 300 kV, higher performance requirements are encouraged by FERC Order No. 693 and the majority of the industry has indicated support for the higher performance requirement. Therefore, the SDT has kept the higher performance requirement for non-Bus-tie Breakers above 300 kV. The SDT understands your argument about discouraging the use of breakers with a higher breaker failure performance requirement. However, the SDT notes that the Transmission Planner has always needed to plan for breaker failure since it is an event that does occur. Any reliability risk that is created by taking a breaker out of service to respond to this new higher performance requirement should be covered by the responsible entity by conducting system analysis using the new standard. If the reliability risk created by eliminating a breaker results in a failure to meet the performance requirements as outlined in the new standard, then the responsible entity will be required to develop Corrective Action Plans to mitigate the risk.		
Lafayette Utilities System	No	See paragraph (b) in response to Question 15.
Response: Lafayette Utilities System indicated in paragraph b in response to Question 15 that “Adopting less stringent performance requirements for loss of elements below 300 kV may be discriminatory.” Lafayette Utilities System further indicated that this may be because more wholesale customer Load may be served at these lower voltages than Transmission Owner Load. The SDT believes that the separation above 300 kV is not “discriminatory” in that the standard is intended to be in place for all operators, owners, and users of the Transmission System. Further, the SDT disagrees with the notion that it may be discriminatory in that more wholesale Load is served from under 300 kV than the Transmission Owner’s Load. As indicated in the SDT’s responses to the comments of others, the SDT believes that systems operating above 300 kV generally do not directly serve end-use Load customers but rather act as the medium for moving large amounts of power from production to various Load centers which then deliver the power among other Transmission or sub-Transmission Systems to end use customers.		

Organization	Question 9:	Question 9 Comments:
Ameren	Yes and No	Yes: The installation of bus-tie circuit breakers in a straight bus configuration would reduce exposure to a) bus faults or to b) line faults with breaker failure without adding much risk for internal fault in the bus-tie breaker. Those entities that employ a straight bus substation design with bus-tie breakers have recognized that failure of the bus-tie breaker, a very low probability event, would result in the loss of multiple transmission elements and perhaps firm load for a short time until the bus sections can be restored, but bus-tie breakers are an investment worth the risk. Therefore, it is generally agreed that the outage of non-bus-tie circuit breakers should have higher performance requirements than the outage of bus-tie circuit breakers. The SDT should be commended for this change since the previous draft version. No: However, it is not clear that adopting a higher standard of performance for planning events involving transmission facilities 345 kV and above will improve overall system reliability. Some areas of the continent already have n-2 planning criteria, yet these systems have still experienced significant outages including blackouts. It is suggested that a review of the Transmission Availability Data System (TADS) data, when available, should be conducted to help assess what system performance requirements need to be strengthened before arbitrarily determining to "raise the bar" for certain voltage levels and system designs. The industry should not be forced to invest a great deal of capital to meet a new standard requirement when it would not have an immediate impact on system reliability. Some sort of cost/benefit analysis should be performed to justify any change from the present TPL-001 through 004 standard requirements. On the Ameren system, there is no indication that transmission system reliability has been degraded through the use of straight bus configurations. Also, further clarification is required to explain how to drop consequential load without cutting firm transmission service to those affected/outaged customers, and this needs to be added to the notes in Tables 1 and 2.
North Carolina Electric Membership Corp	Yes and No	The installation of bus-tie circuit breakers in a straight bus configuration would reduce exposure to a) bus faults or to b) line faults with breaker failure without adding much risk for internal fault in the bus-tie breaker. Those entities that employ a straight bus substation design with bus-tie breakers have recognized that failure of the bus-tie breaker, a very low probability event, would result in the loss of multiple transmission elements and perhaps firm load for a short time until the bus sections can be restored, but bus-tie breakers are an investment worth the risk. Therefore, it is generally agreed that the outage of non-bus-tie circuit breakers should have higher performance requirements than the outage of bus-tie circuit breakers. The SDT should be commended for this change since the previous draft version. However, it is not clear that adopting a higher standard of performance for planning events involving transmission facilities 345 kV and above will improve overall system reliability. Some areas of the continent already have n-2 planning criteria, yet these systems have still experienced significant outages including blackouts. It is suggested that a review of the Transmission Availability Data System (TADS) data, when available, should be conducted to help assess what system performance requirements need to be strengthened before arbitrarily determining to "raise the bar" for certain voltage levels and system designs. The industry should not be forced to invest a great deal of capital to meet a new standard requirement when it would not have an immediate impact on system reliability. Some sort of cost/benefit analysis should be performed to

Organization	Question 9:	Question 9 Comments:
		justify any change from the present TPL-001 through 004 standard requirements. Also, further clarification is required to explain how to drop consequential load without cutting firm transmission service to those affected/outaged customers, and this needs to be added to the notes in Tables 1 and 2.
SERC Reliability Review Subcommittee and Planning Standards Subcommittee	No	The installation of bus-tie circuit breakers in a straight bus configuration would reduce exposure to a) bus faults or to b) line faults with breaker failure without adding much risk for internal fault in the bus-tie breaker. Those entities that employ a straight bus substation design with bus-tie breakers have recognized that failure of the bus-tie breaker, a very low probability event, would result in the loss of multiple transmission elements and perhaps firm load for a short time until the bus sections can be restored, but bus-tie breakers are an investment worth the risk. Therefore, it is generally agreed that the outage of non-bus-tie circuit breakers should have higher performance requirements than the outage of bus-tie circuit breakers. The SDT should be commended for this change since the previous draft version. However, it is not clear that adopting a higher standard of performance for planning events involving transmission facilities 345 kV and above will improve overall system reliability. Some areas of the continent already have n-2 planning criteria, yet these systems have still experienced significant outages including blackouts. It is suggested that a review of the Transmission Availability Data System (TADS) data, when available, should be conducted to help assess what system performance requirements need to be strengthened before arbitrarily determining to "raise the bar" for certain voltage levels and system designs. The industry should not be forced to invest a great deal of capital to meet a new standard requirement when it would not have an immediate impact on system reliability. Some sort of cost/benefit analysis should be performed to justify any change from the present TPL-001 through 004 standard requirements. Also, further clarification is required to explain how to drop consequential load without cutting firm transmission service to those affected/outaged customers, and this needs to be added to the notes in Tables 1 and 2.

Response: The SDT thanks you for your support with regard to the reason for a less stringent requirement for Bus-tie breakers**.** The SDT feels the 300 kV and higher systems generally represent an extra-high-voltage (EHV) range that is considered the backbone of many systems in the various Interconnections. Systems operated at this range generally do not directly serve end-use Load customers but rather act as the medium for moving large amounts of power from production to various Load centers which then deliver the power among other Transmission or sub-Transmission Systems to end use customers. It is the desire of NERC and various stakeholders that the backbone of the electric power grid be robust and held to a higher degree of reliability. Cost estimates were requested in other questions and were utilized by the SDT in determining a balance between such costs and reliability. While a significant number of parties commented negatively about the higher performance requirement for non-Bus-tie Breakers above 300 kV, higher performance requirements are encouraged by FERC Order No. 693 and the majority of the industry has indicated support for the higher performance requirement. Therefore, the SDT has kept the higher performance requirement for non-Bus-tie Breakers above 300 kV.

The SDT understands your issue with regard to explaining the dropping of consequential Load without cutting Firm Transmission Service to those affected/outaged customers. The SDT has made changes to footnotes 5 and 10 in the table and revised the definition of Consequential Load Loss and Non-Consequential Load Loss to clarify the issue.

Footnote 5 - When the conditions and/or event(s) being studied form the basis for conditional firm transmission service, curtailment of that conditional firm

Organization	Question 9:	Question 9 Comments:
transmission service is allowed. **Footnote #10** – Curtailment of firm transmission service, when coupled with the appropriate re-dispatch of resources obligated to re-dispatch, is allowed both as a System adjustment (as identified in the column titled 'Initial System Conditions') and a corrective action, where it can be demonstrated that Facilities remain within applicable Facility Ratings and those adjustments do not result in the shedding of any firm Load. Where limited options for re-dispatch exist, sensitivities associated with the availability of those resources must be considered. Where Facilities external to the Transmission Planner's planning region are relied upon, Facility Ratings in those regions must be considered. **Consequential Load Loss:** ~~Load that is no longer connected to a source as a result of the event being studied or which is lost as a result of the load's response to the transient conditions of the event (other than through the action of UVLS or UFLS schemes). Although Load which is lost as a result of the Load's response to the transient conditions of the event is considered Consequential Load Loss and is permitted when Consequential Load Loss is allowed, Transmission planning entities are not allowed to rely upon the expectation of such Load loss to meet steady state performance requirements.~~ All Load that is no longer served by any Transmission Facilities as a result of the Facilities being removed from service by a planned Protection System operation to isolate fault conditions. **Non-Consequential Load Loss:** Non-Interruptible Load loss other than Consequential Load Loss, Supplemental Load Loss, and Load Reduction.~~. For example, non-Interruptible Load loss that occurs through manual (operator initiated) or automatic operations such as under-voltage Load shedding, under-frequency Load shedding, or Special Protection Systems would be considered Non-Consequential Load Loss~~ **Load Reduction:** Load that is still connected to the System, but is reduced due to lower voltage conditions following a Planning or Extreme Event. **Supplemental Load Loss:** Load that is disconnected from the network by end-user equipment responding to post-Contingency System conditions.		
Florida Power and Light	No	These provisions made to not discourage the use of bus tie breakers will also not discourage the use of the single breaker/single bus substation arrangement which can have very severe consequence when used on critical BES substations. The TPL-001-1 draft also sets a threshold of higher performance to facilities above 300 kV than previously established in the existing standard. We do not agree that such a threshold is necessary or warranted. Requirements which are more stringent for these facilities may wrongly influence decisions on project alternatives in favor of facilities with less stringent requirements. Related to the more stringent requirements for facilities above 300 kV, FPL also disagrees with the performance requirements contemplated by the proposed draft standard for DC lines. The SDT stated performance requirements for DC lines as currently drafted, is discriminatory as compared to AC line performance, and needs to be addressed. This could be viewed as an exemption for DC lines and violates FERC's comparability principle as it relates to reliability performance. The TPL-001-1 draft sets a lower performance requirement for the loss of a single pole of a DC line than in the existing standard by allowing interruption of firm transfer if the transfer is deemed to be dependent on the outaged line. Firm transfers are also dependent upon AC lines. The proposed standard does not distinguish between asynchronous DC ties and the more common parallel connected DC tie. With an asynchronous DC tie, the transfer is lost with the tie, which is analogous to Consequential Load Loss which is already allowed. With a parallel DC

Organization	Question 9:	Question 9 Comments:
		tie, the transfer will be shifted to the parallel AC system and should have the same performance requirements. We do not agree that such an exception for DC lines is necessary or warranted. The decision in selecting DC vs. AC in transmission lines has traditionally been based on the break-even cost and performance of the two alternatives. The lower performance requirement may wrongly influence decisions on project alternatives in favor of DC facilities because of the less stringent reliability performance requirements.
Response: The SDT understands that the standard as drafted does not discourage the use of straight bus arrangements below 300 kV by allowing interruption of Firm Transmission Service and Non-Consequential Load Loss for all P4 events below 300 kV. The SDT feels the 300 kV and higher systems generally represent an extra-high-voltage (EHV) range that is considered the backbone of many systems in the various Interconnections. Systems operated at this range generally do not directly serve end-use Load customers but rather act as the medium for moving large amounts of power from production to various Load centers which then deliver the power among other Transmission or sub-Transmission Systems to end use customers. It is the desire of NERC and various stakeholders that the backbone of the electric power grid be robust and held to a higher degree of reliability. While a significant number of parties commented negatively about the higher performance requirement for non-Bus-tie Breakers above 300 kV, higher performance requirements are encouraged by FERC Order No. 693 and the majority of the industry has indicated support for the higher performance requirement. Therefore, the SDT has kept the higher performance requirement for non-Bus-tie Breakers above 300 kV. A number of commenters raised concerns with the less stringent requirement for DC systems. The SDT has removed the less stringent requirements for DC lines.		
Tri-State Generatino and Transmission Association, Inc.	No	Performance requirements should depend on the potential loss of load impact of a breaker failure, not the voltage level.
Response: The SDT believes that while theoretically there would be potential merit in a loss of load impact approach to performance requirements for breaker failure; it would result in performance requirements that would be difficult to enforce. For example, such an approach would require completing estimates of the loss of Load for Contingencies for various conditions and then documenting it. The auditor would need to review these estimates as well as the documentation to become convinced that the correct performance requirement was used for each breaker. This review would need to be in addition to any other activity performed by the auditor to ensure compliance with the standard. The SDT feels the 300 kV and higher systems generally represent an extra-high-voltage (EHV) range that is considered the backbone of many systems in the various Interconnections. Systems operated at this range generally do not directly serve end-use Load customers but rather act as the medium for moving large amounts of power from production to various Load centers which then deliver the power among other Transmission or sub-Transmission Systems to end use customers. It is the desire of NERC and various stakeholders that the backbone of the electric power grid be robust and held to a higher degree of reliability. While a significant number of parties commented negatively about the higher performance requirement for non-Bus-tie Breakers above 300 kV, higher performance requirements are encouraged by FERC Order No. 693 and the majority of the industry has indicated support for the higher performance requirement. Therefore, the SDT has kept the higher performance requirement for non-Bus-tie Breakers above 300 kV.		

Organization	Question 9:	Question 9 Comments:
Brazos Electric Power Cooperative, Inc.	Yes	Yes but this seems to add another category of items to provide for in the assessment.
Response: Thank you for your support.		
IESO	No	We hold the view that all breakers can be exposed to the same types of event, i.e., they can have internal faults and can be "stuck" when attempting to open as instructed. As such, there should not be any difference in the expected system performance among them in response to system events, and regardless of the voltage levels. We suggest the SDT to revised Tables 1 and 2 such that their expected performance are identical.
Response: The SDT feels the 300 kV and higher systems generally represent an extra-high-voltage (EHV) range that is considered the backbone of many systems in the various Interconnections. Systems operated at this range generally do not directly serve end-use Load customers but rather act as the medium for moving large amounts of power from production to various Load centers which then deliver the power among other Transmission or sub-Transmission Systems to end use customers. It is the desire of NERC and various stakeholders that the backbone of the electric power grid be robust and held to a higher degree of reliability. While a significant number of parties commented negatively about the higher performance requirement for non-Bus-tie Breakers above 300 kV, higher performance requirements are encouraged by FERC Order No. 693 and the majority of the industry has indicated support for the higher performance requirement. Therefore, the SDT has kept the higher performance requirement for non-Bus-tie Breakers above 300 kV.		
Duke Energy	No	In Table 1, Category P4, Events 1 through 5 addressing a stuck non-bus tie breaker >300kV should allow Interruption of Firm Transmission Service and Non-Consequential Load Loss, because P4 addresses a multiple contingency.
Response: The SDT feels the 300 kV and higher systems generally represent an extra-high-voltage (EHV) range that is considered the backbone of many systems in the various Interconnections. Systems operated at this range generally do not directly serve end-use Load customers but rather act as the medium for moving large amounts of power from production to various Load centers which then deliver the power among other Transmission or sub-Transmission Systems to end use customers. It is the desire of NERC and various stakeholders that the backbone of the electric power grid be robust and held to a higher degree of reliability. While a significant number of parties commented negatively about the higher performance requirement for non-Bus-tie Breakers above 300 kV, higher performance requirements are encouraged by FERC Order No. 693 and the majority of the industry has indicated support for the higher performance requirement. Therefore, the SDT has kept the higher performance requirement for non-Bus-tie Breakers above 300 kV. The SDT recognizes that Duke Energy has indirectly brought up the issue as to how the interruption of Firm Transmission Service relates to the dropping of Load in its comment. The SDT has made changes to footnotes 5 and 10 in the table and revised the definition of Consequential Load Loss and Non-Consequential Load Loss to clarify the issue. **Footnote 5** - When the conditions and/or event(s) being studied form the basis for conditional firm transmission service, curtailment of that conditional firm		

Organization	Question 9:	Question 9 Comments:
transmission service is allowed. **Footnote #10** – Curtailment of firm transmission service, when coupled with the appropriate re-dispatch of resources obligated to re-dispatch, is allowed both as a System adjustment (as identified in the column titled 'Initial System Conditions') and a corrective action, where it can be demonstrated that Facilities remain within applicable Facility Ratings and those adjustments do not result in the shedding of any firm Load. Where limited options for re-dispatch exist, sensitivities associated with the availability of those resources must be considered. Where Facilities external to the Transmission Planner's planning region are relied upon, Facility Ratings in those regions must be considered. **Consequential Load Loss:** ~~Load that is no longer connected to a source as a result of the event being studied or which is lost as a result of the load's response to the transient conditions of the event (other than through the action of UVLS or UFLS schemes). Although Load which is lost as a result of the Load's response to the transient conditions of the event is considered Consequential Load Loss and is permitted when Consequential Load Loss is allowed, Transmission planning entities are not allowed to rely upon the expectation of such Load loss to meet steady state performance requirements.~~ All Load that is no longer served by any Transmission Facilities as a result of the Facilities being removed from service by a planned Protection System operation to isolate fault conditions. **Non-Consequential Load Loss:** Non-Interruptible Load loss other than Consequential Load Loss, Supplemental Load Loss, and Load Reduction.~~. For example, non-Interruptible Load loss that occurs through manual (operator initiated) or automatic operations such as under-voltage Load shedding, under-frequency Load shedding, or Special Protection Systems would be considered Non-Consequential Load Loss~~ **Load Reduction:** Load that is still connected to the System, but is reduced due to lower voltage conditions following a Planning or Extreme Event. **Supplemental Load Loss:** Load that is disconnected from the network by end-user equipment responding to post-Contingency System conditions.		
Orlando Utilities Commission	Yes and No	If they are going to be two classes of equipment with an arbitrary cut off 300 kV is a good cutoff. However I would prefer to see the decision on what is "super BES" and regular "BES" less arbitrary and more reliability driven, such as letting the regions define this cut off just as they define BES in a manner suitable to the design of their regional system.
Response: The SDT believes that the separation for a more stringent requirement above 300 kV is not "arbitrary". The SDT feels the 300 kV and higher systems generally represent an extra-high-voltage (EHV) range that is considered the backbone of many systems in the various Interconnections. Systems operated at this range generally do not directly serve end-use Load customers but rather act as the medium for moving large amounts of power from production to various Load centers which then deliver the power among other Transmission or sub-Transmission Systems to end use customers. It is the desire of NERC and various stakeholders that the backbone of the electric power grid be robust and held to a higher degree of reliability. The SDT is preparing a NERC-wide standard for which a region can submit a regional difference that is justified based upon physical differences in that region and/or to result in a regional difference that is a higher performance requirement than the NERC-wide standard. Therefore, if a region has good cause for a different "cutoff", then the region can submit a regional difference through the NERC standards development process. This regional difference could even be submitted as part of this standards writing effort. However, it should be noted that once the regional difference is approved through the NERC standards development process, then it will be submitted to FERC and other regulatory authorities for approval. While there are a significant number of parties that commented negatively about the higher system performance requirement for non-Bus-tie Breakers above 300		

Organization	Question 9:	Question 9 Comments:
kV, higher performance requirements are encouraged by FERC Order No. 693 and the industry has indicated support for the higher performance requirement. Therefore, the SDT has not altered the higher system performance requirement for loss of non-Bus-tie Breakers above 300 kV.		
BPA Transmission Reliability Program	Yes	In general, performance requirements should be more stringent for higher voltage systems. Therefore, we agree that non-bus-tie breakers above 300 kV should have more stringent requirements.
Dominion - Electric Transmission Planning	Yes	
NPCC	Yes	
City Water, Light & Power - Springfield, Illinois	Yes	
Progress Energy Carolinas	Yes	
JEA	Yes	
Puget Sound Energy, Inc.	Yes	We agree that the failure of non-bus tie breakers above 300 kV to operate can have much higher consequence.
ITC Holdings: ITC, METC, ITC Midwest	Yes	
Tacoma Power	Yes	
Hydro-Quebec TransEnergie	Yes	

Organization	Question 9:	Question 9 Comments:
(HQT)		
Exelon Transmission Planning	Yes	
SERC Dynamics Review Subcommittee	Yes	The logic and the proposal seem reasonable.
Austin Energy	Yes	
Arkansas Electric Coop. Corp.	Yes	
Midwest ISO	Yes	
AEP	Yes	
Lakeland Electric	Yes	
Southern Company Transmission	Yes	
LCRA TSC	Yes	
NERC and Regional Coordination	Yes	Comments: PJM supports the use of bus tie breakers.
E.ON U.S. Transmission Planning	Yes	

Organization	Question 9:	Question 9 Comments:
ERCOT System Planning	Yes	
Oncor Electric Delivery	Yes	NA
Response: Thank you for your response.		

10. The SDT made modifications in this second draft to the requirements relating to sensitivity cases. Do you concur with the modifications reflected in Requirements R2.1.3 and 2.1.4? If not, please state why and/or suggest specific changes.

Summary Consideration:

A number of commenters agreed with the concept of the sensitivity analysis but were concerned that there is a conflict with sensitivities already included in base studies, sensitivity details, explaining why sensitivities were not run and how they affected Corrective Actions. The SDT has made the following changes:

1 – Requirements R2.1.3 and R2.4.3 have been revised to make it clear that "sensitivity case(s) that are intended to stress the System with variations in one or more of the following conditions not already included in the studies shall be included in the Assessment". The standard expects that at least one more of those variances listed in Requirements R2.1.3 and R2.4.3 that have not been integrated into the required studies are at least considered as "sensitivities". In addition, as written, the standard is requiring at a minimum, one case run for each required year for steady state and Stability. The entity may run as many additional cases as it deems appropriate to understand how the System responds to the variances.

The revision also includes the removal of the requirement to explain why a sensitivity was not run since it would be necessary to run the study regardless to provide proof why it was not run. Since these are sensitivities, any and all variances provide some level of information as to how the System responds to such variances.

2 – The sensitivities listed in Requirement R2.1.3 were revised for clarity; however, the SDT did not want to be more prescriptive because of the huge number of possible variances that can occur. It is up to the planning entity to determine which and how much of a variance is appropriate for its studies.

3 – Requirements R2.1.4 and R2.4.4 that require explanation of performing additional sensitivities that are not listed in Requirement R2.1.3 have been deleted.

4 – Requirement R2.6 has been revised for clarity. The entity can use any sensitivity studies it has performed in conjunction with the required current and past studies to develop its Corrective Action Plan.

The following requirements were changed due to industry comments:

R2.1.3 For each of the studies described in Requirements R2.1.1 and ~~Requirement~~ R2.1.2, sensitivity case(s) that are intended to stress the System with ~~sensitivities~~ variations ~~that reflect~~ in one or more of the following conditions not already included in the studies shall be ~~run and documentation of the technical rationale for why each of the conditions was or was not selected shall be supplied~~ included in the Assessment:

R2.4.1 System peak Load for one of the five years. For peak System Load levels, a Load model shall be used which appropriately represents the dynamic behavior of Loads, including consideration of the behavior of induction motor Loads. An aggregate system Load model which represents the overall dynamic behavior of the Load is acceptable.

R2.4.3 For each of the studies described in Requirements R2.4.1 and ~~Requirement~~ R2.4.2, sensitivity case(s) that are intended to stress the System with variations ~~to reflect~~ in one or more of the following conditions not already included in the studies shall be ~~run and documentation of the technical rationale for why each of the conditions was or was not selected shall be supplied~~ included in the Assessment:

R2.7 (now R2.6) For Planning Events shown in Table 1 ~~– Steady State Performance and Table 2 – Stability Performance~~, when the analysis indicates an inability of the System to meet the performance requirements in the tables, the Planning Assessment shall include Corrective Action Plans addressing how the performance requirements will be met. Revisions to the Corrective Action Plans are allowed in subsequent assessments but the System shall continue to meet the performance requirements in the tables. Corrective Action Plans do not need to be developed solely to meet the performance requirements for sensitivities run in accordance with Requirements R2.1.3 and R2.4.3. The Corrective Action Plan shall:

Organization	Question 10:	Question 10 Comments:
Dominion - Electric Transmission Planning	No	We are of the opinion that the proof of a negative that is required for sensitivity cases (i.e. - that the sensitivity cases were more severe for those selected conditions vs. those not tested) is burdensome. The burden of proof lies on the transmission planner.
NPCC	No	If a TP/PC conducts the studies specified in R2.1.1 and R2.1.2 with one or more of the sensitivities which stress the system in the normal course of study are we to assume that fulfills the requirements of R2.1 completely, without additional studies of a less-stressed system?
Hydro-Qu?bec Trans?nergie (HQT)	No	If a TP/PC conducts the studies specified in R2.1.1 and R2.1.2 with one or more of the sensitivities which stress the system in the normal course of study, are we to assume that fulfills the requirements of R2.1 completely, without additional studies of a less-stressed system?
Northeast Utilities	No	Northeast Utilities has participated with ISO-NE and NPCC and supports the comments filed by those organizations.

Response: R2.1.3 and R2.4.3 have been revised to make it clear that "~~s~~ensitivity case(s) that are intended to stress the System with variations in one or more of the following conditions not already included in the studies shall be included in the Assessment".

R2.1.3 For each of the studies described in Requirements R2.1.1 and ~~Requirement~~ R2.1.2, sensitivity case(s) that are intended to stress the System with ~~sensitivities~~ variations ~~that reflect~~ in one or more of the following conditions not already included in the studies shall be ~~run and documentation of the technical rationale for why each of the conditions was or was not selected shall be supplied~~ included in the Assessment:

R2.4.3 For each of the studies described in Requirements R2.4.1 and ~~Requirement~~ R2.4.2, ~~s~~ensitivity case(s) that are intended to stress the System with variations ~~to reflect~~ in one or more of the following conditions not already included in the studies shall be ~~run and documentation of the technical rationale for why each of the conditions was or was not selected shall be supplied~~ included in the Assessment:

Organization	Question 10:	Question 10 Comments:
TVA System Planning	No	We recommend that sensitivity studies not be required for each of the near term years as required in R2.1.3 and R2.1.1. Sensitivities should only be required for only one year in the near term. These sensitivity study requirements are too prescriptive. Many examples of sensitivities are already inherent in the existing requirements. Sensitivity studies of load variation are inherent in the fact that several different study years and conditions are already being required. Outages of reactive sources and generation should already be included in studies of multiple contingencies. The process of planning new generation (system impact studies) will include studies of the future with and without the proposed new equipment. The TP and PC can better select the most appropriate sensitivities for their system.
Response: The standard is requiring at a minimum one case run for each required current year for steady state and Stability. This translates into three cases for steady state. The entity may run as many additional cases as it deems appropriate to understand how the System responds to the variances. Requirements R2.1.3 and R2.4.3 have been revised to make it clear that "~~s~~ensitivity case(s) that are intended to stress the System with variations in one or more of the following conditions not already included in the studies shall be included in the Assessment". The standard expects that at least one more of those variances listed in Requirements R2.1.3 and R2.4.3 that have not been integrated into the required studies are at least considered as "sensitivities". In addition, as written, the standard is requiring at a minimum, one case run for each required current year for steady state and Stability. This translates into three cases for steady state. The entity may run as many additional cases as it deems appropriate to understand how the System responds to the variances. **R2.1.3** For each of the studies described in Requirements R2.1.1 and ~~Requirement~~ R2.1.2, sensitivity case(s) that are intended to stress the System with ~~sensitivities~~ variations ~~that reflect~~ in one or more of the following conditions not already included in the studies shall be ~~run and documentation of the technical rationale for why each of the conditions was or was not selected shall be supplied~~ included in the Assessment: **R2.4.3** For each of the studies described in Requirements R2.4.1 and ~~Requirement~~ R2.4.2, ~~s~~ensitivity case(s) that are intended to stress the System with variations ~~to reflect~~ in one or more of the following conditions not already included in the studies shall be ~~run and documentation of the technical rationale for why each of the conditions was or was not selected shall be supplied~~ included in the Assessment:		
Progress Energy Carolinas	No	These requirements are overly prescriptive. Many examples of sensitivities are already inherent in the existing requirements. Some sensitivity studies are in effect adding an additional level of contingency (N-2 or N-3). Sensitivity studies of load variation are already inherent in the fact that several different study years and conditions are already being required. Outages of reactive sources and generation should already be included in studies of multiple contingencies. The process of planning new generation (system impact studies) will include studies of the future with and without the proposed new equipment. Proper consideration and selection of the most appropriate sensitivities is within the engineering judgment of the Transmission Planner and Planning Coordinator. Singling out and creating sub-requirements for the sensitivities listed in the current TPL draft creates a special focus on these specific sensitivities that may not be warranted for a given system. This could easily lead to an over focus on these particular issues to the detriment of overall system reliability. There should be no enumerated list of required sensitivities. Engineering judgment needs to be permitted.
Response: The SDT believes that sensitivities are necessary and consistent with the requirements of FERC Order 693. The draft standard includes the		

Organization	Question 10:	Question 10 Comments:
requirement, as specified in FERC Order 693, that planning decisions be based on a portfolio of analyses. In section 12.a.ii "Sensitivity studies and critical system conditions", FERC provided direction to consider a full range of variables considered to be significant that need to be assessed and documentation provided that explains the rationale for the selection of variables assessed. In addition to the firm obligation scenario, the portfolio of analyses should be supplemented to include information from sensitivity analysis. The sensitivity analysis should be developed using additional cases that simulate reasonably stressed System conditions. The SDT has included several parameters that can be varied to create the requisite sensitivity case(s). Requirements R2.1.3 and R2.4.3 have been revised to make it clear that "~~s~~ensitivity case(s) that are intended to stress the System with variations in one or more of the following conditions not already included in the studies shall be included in the Assessment". The standard expects that at least one more of those variances listed in Requirements R2.1.3 and R2.4.3 that have not been integrated into the required studies are at least considered as "sensitivities". In addition, as written, the standard is requiring at a minimum, one case run for each required current year for steady state and Stability. This translates into three cases for steady state. The entity may run as many additional cases as it deems appropriate to understand how the System responds to the variances. **R2.1.3** For each of the studies described in Requirements R2.1.1 and ~~Requirement~~ R2.1.2, sensitivity case(s) that are intended to stress the System with ~~sensitivities~~ variations ~~that reflect~~ in one or more of the following conditions not already included in the studies shall be ~~run and documentation of the technical rationale for why each of the conditions was or was not selected shall be supplied~~ included in the Assessment: **R2.4.3** For each of the studies described in Requirements R2.4.1 and ~~Requirement~~ R2.4.2, ~~s~~ensitivity case(s) that are intended to stress the System with variations ~~to reflect~~ in one or more of the following conditions not already included in the studies shall be ~~run and documentation of the technical rationale for why each of the conditions was or was not selected shall be supplied~~ included in the Assessment:		
Los Angeles Department of Water and Power	No	R2.1.3 and 2.1.4 deal with operating scenarios that need to be studied by operating engineers under TOP but is duplicative and serve no useful purpose when performed by planning engineers for the purpose of future expansions. Transmission planning is to ensure that future system is expanded to handle expected system growth. Mixing operating studies in the planning of future system shows a confused perspective on the different roles between operating studies and planning studies. A responsible utility must perform both types of studies but they should not be mixed together or be required under two different standards, the TOP and TPL. The consideration of load variations, different dispatching scenarios, planned or unplanned transmission outages, system expansion not coming in on schedule, etc., are operating issues that should be and must be addressed in operating studies, and the proper place is in TOP, not TPL.
Response: The SDT believes that planners must consider these possible variances and reinforce the System so that when it comes to Real-time operation, the TOP will have a System sufficiently robust to operate around any of the conditions. Commenters generally agree that these are the responsibility of planning.		
Transmission Agency of Northern	Yes and No	We generally agree with the concept of the sensitivity analysis since this is standard practice in understanding system performance risks and the effectiveness of improvements. It is ambiguous from a criteria perspective, however, what role is played by the sensitivities in developing Corrective Action Plans and what risks are created by misapplication of the intent of such sensitivity analyses. Clarification of the following is needed along with examples of applicable sensitivities and how

Organization	Question 10:	Question 10 Comments:
California		these would be factored into Corrective Action Plans. If a Transmission Planner performs studies on the ?base case? of which the loads represented are 1 in 10 year adverse weather condition (10% chance that the actual load may exceed the projected load), does this constitute a sensitivity analysis. If so, will the Transmission Planner have to then perform additional less stringent studies at the load levels representing 1 in 2 year adverse weather conditions (50% chance that the actual load may exceed the projected load) to demonstrate compliance? R2.1.4 requires explanation of performing additional sensitivities that are not listed in the R2.1.3. This would discourage entities from performing additional sensitivities. In addition, in the above example, the Transmission Planners should not have to explain why they feel that this higher level (1 in 10 year adverse weather) of load is the "base case" condition. R2.7 also states that "Corrective Action Plans do not need to be developed solely to meet the performance requirements for sensitivities". Consider a Transmission Planner that has built transmission based on the 1 in 10 year adverse weather load assumed in the ?base case?, will the judgment of the Transmission Planner be then questioned because the "base case" used is equivalent to a sensitivity case and not a 1 in 2 year adverse weather base case?
Pacific Gas and Electric Co.	Yes and No	We generally agree with the concept of the sensitivity analysis since this is standard practice in understanding system performance risks and the effectiveness of improvements. It is ambiguous from a criteria perspective, however, what role is played by the sensitivities in developing Corrective Action Plans and what risks are created by misapplication of the intent of such sensitivity analyses. Clarification of the following is needed along with examples of applicable sensitivities and how these would be factored into Corrective Action Plans. If a Transmission Planner performs studies on the ?base case? of which the loads represented are 1 in 10 year adverse weather condition (10% chance that the actual load may exceed the projected load), does this constitute a sensitivity analysis. If so, will the Transmission Planner have to then perform additional less stringent studies at the load levels representing 1 in 2 year adverse weather conditions (50% chance that the actual load may exceed the projected load) to demonstrate compliance? R2.1.4 requires explanation of performing additional sensitivities that are not listed in the R2.1.3. This would discourage entities from performing additional sensitivities. In addition, in the above example, the Transmission Planners should not have to explain why they feel that this higher level (1 in 10 year adverse weather) of load is the "base case" condition. R2.7 also states that ?Corrective Action Plans do not need to be developed solely to meet the performance requirements for sensitivities?. Consider a Transmission Planner that has built transmission based on the 1 in 10 year adverse weather load assumed in the ?base case?, will the judgment of the Transmission Planner be then questioned because the "base case" used is equivalent to a sensitivity case and not a 1 in 2 year adverse weather base case?
Public Service Company of New Mexico	Yes and No	We generally agree with the concept of the sensitivity analysis since this is standard practice in understanding system performance risks and the effectiveness of improvements. It is ambiguous from a criteria perspective, however, what role is played by the sensitivities in developing Corrective Action Plans and what risks are created by misapplication of the intent of such sensitivity analyses. Clarification of the following is needed along with examples of applicable sensitivities and how

Organization	Question 10:	Question 10 Comments:
		these would be factored into Corrective Action Plans. If a Transmission Planner performs studies on the ?base case? of which the loads represented are 1 in 10 year adverse weather condition (10% chance that the actual load may exceed the projected load), does this constitute a sensitivity analysis. If so, will the Transmission Planner have to then perform additional less stringent studies at the load levels representing 1 in 2 year adverse weather conditions (50% chance that the actual load may exceed the projected load) to demonstrate compliance? R2.1.4 requires explanation of performing additional sensitivities that are not listed in the R2.1.3. This would discourage entities from performing additional sensitivities. In addition, in the above example, the Transmission Planners should not have to explain why they feel that this higher level (1 in 10 year adverse weather) of load is the "base case" condition. R2.7 also states that ?Corrective Action Plans do not need to be developed solely to meet the performance requirements for sensitivities?. Consider a Transmission Planner that has built transmission based on the 1 in 10 year adverse weather load assumed in the "base case", will the judgment of the Transmission Planner be then questioned because the "base case" used is equivalent to a sensitivity case and not a 1 in 2 year adverse weather base case?
PacifiCorp	Yes and No	We generally agree with the concept of the sensitivity analysis. However, clarifications of the following is needed: For example, if a TP performs studies on the "base case" of which the loads are 90/10, does this constitute a sensitivity analysis. If so, will the TP have to then perform additional less stringent studies at the 50/50 load level to demonstrate compliance? R2.1.4 requires explanation of performing additional sensitivities that are not listed in the R2.1.3. This would discourage entities from performing additional sensitivities. In addition, in the above example, the TP should not have to explain why they feel that this higher level (90/10) of load is the "base case" condition.? R2.7 also states that Corrective Action Plans do not need to be developed solely to meet the performance requirements for sensitivities?. Consider a TP that has built transmission based on the 90/10 load assumed in the "base case", will the judgment of the TP be then questioned because of it's sensitivity "base case" and not a 50/50 base case?
Puget Sound Energy, Inc.	Yes and No	We generally agree with the concept of the sensitivity analysis since this is standard practice in understanding system performance risks and the effectiveness of improvements. It is ambiguous from a criteria perspective, however, what role is played by the sensitivities in developing Corrective Action Plans and what risks are created by misapplication of the intent of such sensitivity analyses. Clarification of the following is needed along with examples of applicable sensitivities and how these would be factored into Corrective Action Plans. If a Transmission Planner performs studies on the "base case" of which the loads represented are 1 in 10 year adverse weather condition (10% chance that the actual load may exceed the projected load), does this constitute a sensitivity analysis. If so, will the Transmission Planner have to then perform additional less stringent studies at the load levels representing 1 in 2 year adverse weather conditions (50% chance that the actual load may exceed the projected load) to demonstrate compliance?

Organization	Question 10:	Question 10 Comments:
		R2.1.4 requires explanation of performing additional sensitivities that are not listed in the R2.1.3. This would discourage entities from performing additional sensitivities. In addition, in the above example, the Transmission Planners should not have to explain why they feel that this higher level (1 in 10 year adverse weather) of load is the "base case" condition. R2.7 also states that "Corrective Action Plans do not need to be developed solely to meet the performance requirements for sensitivities". Consider a Transmission Planner that has built transmission based on the 1 in 10 year adverse weather load assumed in the "base case", will the judgment of the Transmission Planner be then questioned because the "base case" used is equivalent to a sensitivity case and not a 1 in 2 year adverse weather base case?
Idaho Power Company	Yes and No	We generally agree with the concept of the sensitivity analysis since this is standard practice in understanding system performance risks and the effectiveness of improvements. It is ambiguous from a criteria perspective, however, what role is played by the sensitivities in developing Corrective Action Plans and what risks are created by misapplication of the intent of such sensitivity analyses. Clarification of the following is needed along with examples of applicable sensitivities and how these would be factored into Corrective Action Plans.If a Transmission Planner performs studies on the "base case" of which the loads represented are 1 in 10 year adverse weather condition (10% chance that the actual load may exceed the projected load), does this constitute a sensitivity analysis. If so, will the Transmission Planner have to then perform additional less stringent studies at the load levels representing 1 in 2 year adverse weather conditions (50% chance that the actual load may exceed the projected load) to demonstrate compliance? R2.1.4 requires explanation of performing additional sensitivities that are not listed in the R2.1.3. This would discourage entities from performing additional sensitivities. In addition, in the above example, the Transmission Planners should not have to explain why they feel that this higher level (1 in 10 year adverse weather) of load is the "base case" condition. R2.7 also states that ?Corrective Action Plans do not need to be developed solely to meet the performance requirements for sensitivities?. Consider a Transmission Planner that has built transmission based on the 1 in 10 year adverse weather load assumed in the ?base case?, will the judgment of the Transmission Planner be then questioned because ?base case? used is equivalent to a sensitivity case and not a 1 in 2 year adverse weather base case?
Sierra Pacific Power Company / Nevada Power Company	Yes and No	We generally agree with the concept of the sensitivity analysis since this is standard practice in understanding system performance risks and the effectiveness of improvements. It is ambiguous from a criteria perspective, however, what role is played by the sensitivities in developing Corrective Action Plans and what risks are created by misapplication of the intent of such sensitivity analyses. Clarification of the following is needed along with examples of applicable sensitivities and how these would be factored into Corrective Action Plans. If a Transmission Planner performs studies on the ?base case? of which the loads represented are 1 in 10 year adverse weather condition (10% chance that the actual load may exceed the projected load), does this constitute a sensitivity analysis. If so, will the Transmission Planner have to then perform additional less stringent studies at the load levels representing 1 in 2 year adverse weather conditions (50% chance that the actual load may exceed the projected load) to demonstrate compliance? R2.1.4 requires explanation of performing additional sensitivities that are not listed in the R2.1.3. This would discourage

Organization	Question 10:	Question 10 Comments:
		entities from performing additional sensitivities. In addition, in the above example, the Transmission Planners should not have to explain why they feel that this higher level (1 in 10 year adverse weather) of load is the ?base case? condition. R2.7 also states that ?Corrective Action Plans do not need to be developed solely to meet the performance requirements for sensitivities?. Consider a Transmission Planner that has built transmission based on the 1 in 10 year adverse weather load assumed in the ?base case?, will the judgment of the Transmission Planner be then questioned because ?base case? used is equivalent to a sensitivity case and not a 1 in 2 year adverse weather base case?
Black Hills Corporation	Yes and No	We generally agree with the concept of the sensitivity analysis since this is standard practice in understanding system performance risks and the effectiveness of improvements. It is ambiguous from a criteria perspective, however, what role is played by the sensitivities in developing Corrective Action Plans and what risks are created by misapplication of the intent of such sensitivity analyses. Clarification of the following is needed along with examples of applicable sensitivities and how these would be factored into Corrective Action Plans. If a Transmission Planner performs studies on the ?base case? of which the loads represented are 1 in 10 year adverse weather condition (10% chance that the actual load may exceed the projected load), does this constitute a sensitivity analysis. If so, will the Transmission Planner have to then perform additional less stringent studies at the load levels representing 1 in 2 year adverse weather conditions (50% chance that the actual load may exceed the projected load) to demonstrate compliance? R2.1.4 requires explanation of performing additional sensitivities that are not listed in the R2.1.3. This would discourage entities from performing additional sensitivities. In addition, in the above example, the Transmission Planners should not have to explain why they feel that this higher level (1 in 10 year adverse weather) of load is the ?base case? condition. R2.7 also states that ?Corrective Action Plans do not need to be developed solely to meet the performance requirements for sensitivities?. Consider a Transmission Planner that has built transmission based on the 1 in 10 year adverse weather load assumed in the ?base case?, will the judgment of the Transmission Planner be then questioned because the “base case” used is equivalent to a sensitivity case and not a 1 in 2 year adverse weather base case?
Arizona Public Service Co.	Yes and No	We generally agrees with the concept of the sensitivity analysis. However, clarifications of the following is needed: For example, if a TP performs studies on the ?base case? of which the loads are 90/10, does this constitute a sensitivity analysis. If so, will the TP have to then perform additional less stringent studies at the 50/50 load level to demonstrate compliance? R2.1.4 requires explanation of performing additional sensitivities that are not listed in the R2.1.3. This would discourage entities from performing additional sensitivities. In addition, in the above example, the TP should not have to explain why they feel that this higher level (90/10) of load is the “base case” condition. R2.7 also states that

Organization	Question 10:	Question 10 Comments:
		Corrective Action Plans do not need to be developed solely to meet the performance requirements for sensitivities?. Consider a TP that has built transmission based on the 90/10 load assumed in the ?base case?, will the judgment of the TP be then questioned because of it's sensitivity "base case" and not a 50/50 base case?
SRP	Yes and No	We generally agree with the concept of the sensitivity analysis since this is standard practice in understanding system performance risks and the effectiveness of improvements. It is ambiguous from a criteria perspective, however, what role is played by the sensitivities in developing Corrective Action Plans and what risks are created by misapplication of the intent of such sensitivity analyses. Clarification of the following is needed along with examples of applicable sensitivities and how these would be factored into Corrective Action Plans. If a Transmission Planner performs studies on the ?base case? of which the loads represented are 1 in 10 year adverse weather condition (10% chance that the actual load may exceed the projected load), does this constitute a sensitivity analysis. If so, will the Transmission Planner have to then perform additional less stringent studies at the load levels representing 1 in 2 year adverse weather conditions (50% chance that the actual load may exceed the projected load) to demonstrate compliance? R2.1.4 requires explanation of performing additional sensitivities that are not listed in the R2.1.3. This would discourage entities from performing additional sensitivities. In addition, in the above example, the Transmission Planners should not have to explain why they feel that this higher level (1 in 10 year adverse weather) of load is the ?base case? condition. R2.7 also states that ?Corrective Action Plans do not need to be developed solely to meet the performance requirements for sensitivities?. Consider a Transmission Planner that has built transmission based on the 1 in 10 year adverse weather load assumed in the ?base case?, will the judgment of the Transmission Planner be then questioned because the "base case" used is equivalent to a sensitivity case and not a 1 in 2 year adverse weather base case?
Tucson Electric Power Company	Yes and No	We generally agree with the concept of the sensitivity analysis since this is standard practice in understanding system performance risks and the effectiveness of improvements. It is ambiguous from a criteria perspective, however, what role is played by the sensitivities in developing Corrective Action Plans and what risks are created by misapplication of the intent of such sensitivity analyses. Clarification of the following is needed along with examples of applicable sensitivities and how these would be factored into Corrective Action Plans. If a Transmission Planner performs studies on the ?base case? of which the loads represented are 1 in 10 year adverse weather condition (10% chance that the actual load may exceed the projected load), does this constitute a sensitivity analysis. If so, will the Transmission Planner have to then perform additional less stringent studies at the load levels representing 1 in 2 year adverse weather conditions (50% chance that the actual load may exceed the projected load) to demonstrate compliance? R2.1.4 requires explanation of performing additional sensitivities that are not listed in the R2.1.3. This would discourage entities from performing additional sensitivities. In addition, in the above example, the Transmission Planners should not have to explain why they feel that this higher level (1 in 10 year adverse weather) of load is the ?base case? condition. R2.7 also states that ?Corrective Action Plans do not need to be developed solely to meet the performance requirements for

Organization	Question 10:	Question 10 Comments:
		sensitivities?. Consider a Transmission Planner that has built transmission based on the 1 in 10 year adverse weather load assumed in the ?base case?, will the judgment of the Transmission Planner be then questioned because the “base case” used is equivalent to a sensitivity case and not a 1 in 2 year adverse weather base case?
Modesto Irrigation District	Yes and No	We generally agree with the concept of the sensitivity analysis since this is a standard practice in understanding system performance risks and the effectiveness of improvements. It is ambiguous from a criteria perspective, however, what role is played by the sensitivities in developing Corrective Action Plans and what risks are created by misapplication of the intent of such sensitivity analyses. Clarification of the following is needed along with examples of applicable sensitivities and how these would be factored into Corrective Action Plans. If a Transmission Planner performs studies on the “base case” of which the loads represented are 1 in 10 year adverse weather condition (10% chance that the actual load may exceed the projected load), does this constitute a sensitivity analysis. If so, will the Transmission Planner have to then perform additional less stringent studies at the load levels representing 1 in 2 year adverse weather conditions (50% chance that the actual load may exceed the projected load) to demonstrate compliance? R2.1.4 requires explanation of performing additional sensitivities that are not listed in the R2.1.3. This would discourage entities from performing additional sensitivities. In addition, in the above example, the Transmission Planners should not have to explain why they feel that this higher level (1 in 10 year adverse weather) of load is the “base case” condition. R2.7 also states that ?Corrective Action Plans do not need to be developed solely to meet the performance requirements for sensitivities?. Consider a Transmission Planner that has built transmission based on the 1 in 10 year adverse weather load assumed in the “base case”, will the judgment of the Transmission Planner be then questioned because the “base case” used is equivalent to a sensitivity case and not a 1 in 2 year adverse weather base case?
Tri-State G&T	Yes and No	e generally agree with the concept of the sensitivity analysis since this is standard practice in understanding system performance risks and the effectiveness of improvements. It is ambiguous from a criteria perspective, however, what role is played by the sensitivities in developing Corrective Action Plans and what risks are created by misapplication of the intent of such sensitivity analyses. Clarification of the following is needed along with examples of applicable sensitivities and how these would be factored into Corrective Action Plans. If a Transmission Planner performs studies on the ?base case? of which the loads represented are 1 in 10 year adverse weather condition (10% chance that the actual load may exceed the projected load), does this constitute a sensitivity analysis. If so, will the Transmission Planner have to then perform additional less stringent studies at the load levels representing 1 in 2 year adverse weather conditions (50% chance that the actual load may exceed the projected load) to demonstrate compliance? R2.1.4 requires explanation of performing additional sensitivities that are not listed in the R2.1.3. This would discourage entities from performing additional sensitivities. In addition, in the above example, the Transmission Planners should not have to explain why they feel that this higher level (1 in 10 year adverse weather) of load is the “base case” condition. R2.7 also states that ?Corrective Action Plans do not need to be developed solely to meet the performance requirements for

Organization	Question 10:	Question 10 Comments:
		sensitivities?. Consider a Transmission Planner that has built transmission based on the 1 in 10 year adverse weather load assumed in the "base case", will the judgment of the Transmission Planner be then questioned because the "base case" used is equivalent to a sensitivity case and not a 1 in 2 year adverse weather base case?
Southern California Edison	Yes and No	We generally agree with the concept of the sensitivity analysis since this is standard practice in understanding system performance risks and the effectiveness of improvements. It is ambiguous from a criteria perspective, however, what role is played by the sensitivities in developing Corrective Action Plans and what risks are created by misapplication of the intent of such sensitivity analyses. Clarification of the following is needed along with examples of applicable sensitivities and how these would be factored into Corrective Action Plans .If a Transmission Planner performs studies on the ?base case? of which the loads represented are 1 in 10 year adverse weather condition (10% chance that the actual load may exceed the projected load), does this constitute a sensitivity analysis. If so, will the Transmission Planner have to then perform additional less stringent studies at the load levels representing 1 in 2 year adverse weather conditions (50% chance that the actual load may exceed the projected load) to demonstrate compliance? R2.1.4 requires explanation of performing additional sensitivities that are not listed in the R2.1.3. This would discourage entities from performing additional sensitivities. In addition, in the above example, the Transmission Planners should not have to explain why they feel that this higher level (1 in 10 year adverse weather) of load is the "base case" condition. R2.7 also states that ?Corrective Action Plans do not need to be developed solely to meet the performance requirements for sensitivities?. Consider a Transmission Planner that has built transmission based on the 1 in 10 year adverse weather load assumed in the "base case", will the judgment of the Transmission Planner be then questioned because the "base case" used is equivalent to a sensitivity case and not a 1 in 2 year adverse weather base case?
Alberta Electric System Operator	No	We generally agree with the concept of the sensitivity analysis since this is standard practice in understanding system performance risks and the effectiveness of improvements. It is ambiguous from a criteria perspective, however, what role is played by the sensitivities in developing Corrective Action Plans and what risks are created by misapplication of the intent of such sensitivity analyses. Clarification of the following is needed along with examples of applicable sensitivities and how these would be factored into Corrective Action Plans. If a Transmission Planner performs studies on the ?base case? of which the loads represented are 1 in 10 year adverse weather condition (10% chance that the actual load may exceed the projected load), does this constitute a sensitivity analysis. If so, will the Transmission Planner have to then perform additional less stringent studies at the load levels representing 1 in 2 year adverse weather conditions (50% chance that the actual load may exceed the projected load) to demonstrate compliance? R2.1.4 requires explanation of performing additional sensitivities that are not listed in the R2.1.3. This would discourage entities from performing additional sensitivities. In addition, in the above example, the Transmission Planners should not have to explain why they feel that this higher level (1 in 10 year adverse weather) of load is the ?base case? condition. R2.7 also states that ?Corrective Action Plans do not need to be developed solely to meet the performance requirements for

Organization	Question 10:	Question 10 Comments:
		sensitivities?. Consider a Transmission Planner that has built transmission based on the 1 in 10 year adverse weather load assumed in the "base case", will the judgment of the Transmission Planner be then questioned because the "base case" used is equivalent to a sensitivity case and not a 1 in 2 year adverse weather base case?
US Bureau of Reclamation	No	We generally agree with the concept of the sensitivity analysis since this is standard practice in understanding system performance risks and the effectiveness of improvements. It is ambiguous from a criteria perspective, however, what role is played by the sensitivities in developing Corrective Action Plans and what risks are created by misapplication of the intent of such sensitivity analyses. Clarification of the following is needed along with examples of applicable sensitivities and how these would be factored into Corrective Action Plans. If a Transmission Planner performs studies on the ?base case? of which the loads represented are 1 in 10 year adverse weather condition (10% chance that the actual load may exceed the projected load), does this constitute a sensitivity analysis. If so, will the Transmission Planner have to then perform additional less stringent studies at the load levels representing 1 in 2 year adverse weather conditions (50% chance that the actual load may exceed the projected load) to demonstrate compliance? R2.1.4 requires explanation of performing additional sensitivities that are not listed in the R2.1.3. This would discourage entities from performing additional sensitivities. In addition, in the above example, the Transmission Planners should not have to explain Comment Form for 2nd Draft of Standard TPL-001-1Assess Transmission Future Needs (Project 2006-02) Page 9 of 12 why they feel that this higher level (1 in 10 year adverse weather) of load is the ?base case? condition. R2.7 also states that "Corrective Action Plans do not need to be developed solely to meet the performance requirements for sensitivities". Consider a Transmission Planner that has built transmission based on the 1 in 10 year adverse weather load assumed in the ?base case?, will the judgment of the Transmission Planner be then questioned because the ?base case? used is equivalent to a sensitivity case and not a 1 in 2 year adverse weather base case?

Response: Requirements R2.1.3 and R2.4.3 have been revised to make it clear that "~~s~~ensitivity case(s) that are intended to stress the System with variations in one or more of the following conditions not already included in the studies shall be included in the Assessment". The standard expects that at least one more of those variances listed in Requirements R2.1.3 and R2.4.3 that have not been integrated into the required studies are at least considered as "sensitivities".

R2.1.3 For each of the studies described in Requirements R2.1.1 and ~~Requirement~~ R2.1.2, sensitivity case(s) that are intended to stress the System with ~~sensitivities~~ variations ~~that reflect~~ in one or more of the following conditions not already included in the studies shall be ~~run and documentation of the technical rationale for why each of the conditions was or was not selected shall be supplied~~ included in the Assessment:

R2.4.3 For each of the studies described in Requirements R2.4.1 and ~~Requirement~~ R2.4.2, ~~s~~ensitivity case(s) that are intended to stress the System with variations ~~to reflect~~ in one or more of the following conditions not already included in the studies shall be ~~run and documentation of the technical rationale for why each of the conditions was or was not selected shall be supplied~~ included in the Assessment:

The SDT agrees and has deleted Requirement R2.1.4.

Requirement R2.7 (now R2.6) has been revised for clarity. The entity can use any sensitivities studies it has performed in conjunction with the required current and

Organization	Question 10:	Question 10 Comments:
past studies to develop its Corrective Action Plan. **R2.6** For Planning Events shown in Table 1 ~~– Steady State Performance and Table 2 – Stability Performance~~, when the analysis indicates an inability of the System to meet the performance requirements in the tables, the Planning Assessment shall include Corrective Action Plans addressing how the performance requirements will be met. Revisions to the Corrective Action Plans are allowed in subsequent assessments but the System shall continue to meet the performance requirements in the tables. Corrective Action Plans do not need to be developed solely to meet the performance requirements for sensitivities run in accordance with Requirements R2.1.3 and R2.4.3. The Corrective Action Plan shall:		
National Grid	No	a. With respect to R2.1.3., delete "... that Stress the System with sensitivities ...". b. R2.1.3 should be revised to clarify that if a TP/PC conducts the studies specified in R2.1.1 and R2.1.2 with one or more of the sensitivities which stress the system in the normal course of study, then additional studies of a less-stressed system are not required. c. The intention of Paragraph R2.1.4 is unclear and appears to be unnecessary; therefore, it should be removed.
Response: a. and b. Requirements R2.1.3 and R2.4.3 have been revised to make it clear that "sensitivity case(s) that are intended to stress the System with variations in one or more of the following conditions not already included in the studies shall be included in the Assessment". **R2.1.3** For each of the studies described in Requirements R2.1.1 and ~~Requirement~~ R2.1.2, sensitivity case(s) that are intended to stress the System with ~~sensitivities~~ variations ~~that reflect~~ in one or more of the following conditions not already included in the studies shall be ~~run and documentation of the technical rationale for why each of the conditions was or was not selected shall be supplied~~ included in the Assessment: **R2.4.3** For each of the studies described in Requirements R2.4.1 and ~~Requirement~~ R2.4.2, ~~s~~ensitivity case(s) that are intended to stress the System with variations ~~to reflect~~ in one or more of the following conditions not already included in the studies shall be ~~run and documentation of the technical rationale for why each of the conditions was or was not selected shall be supplied~~ included in the Assessment: c. Requirement R2.1.4 has been deleted.		
Gainesville Regional Utilities	No	If the RRO or the larger neighboring utilities agree, See Comment 1, it should be unnecessary for the smaller utility to performance any sensitivities except for those agreed to and performed by the RRO level. If the smaller utility has any of their elements that create issues in these regionally conducted sensitivities, then they could be accountable for providing potential remedies (most sensitivities do not necessarily require a remedy or project, per say). The variety of sensitivities suggested to be performed for a smaller utility probably will not add any reliability to the regional BES while the effort will take up a very large amount of the smaller utilities' manpower resources.
Response: All planning entities need to follow the same set of requirements. Smaller entities may not have the resources to perform some studies but can depend on and point to studies run by larger surrounding entities to satisfy their planning requirements.		

Organization	Question 10:	Question 10 Comments:
JEA	Yes and No	Will stress JEA resources to provide auditable evidence depending on the final measure applied.

Response: The SDT believes that sensitivities are necessary and consistent with the requirements in FERC Order 693. The draft standard includes the requirement, as specified in FERC Order 693, that planning decisions be based on a portfolio of analyses. In section 12.a.ii "Sensitivity studies and critical system conditions" FERC provided direction to consider a full range of variables considered to be significant that need to be assessed and documentation provided that explains the rationale for the selection of variables assessed.

The standard is requiring at a minimum one case run for each required current year for steady state and Stability. This translates into three cases for steady state. The entity may run as many additional cases as it deems appropriate to understand how the system responds to the variances.

ITC Holdings: ITC, METC, ITC Midwest	No	While we appreciate that the addition of sensitivity studies is commendable and agree with 2.1.3 and 2.1.4 per se, the later clarification in R2.7 that "Corrective Action Plans do not need to be developed solely to meet the performance requirements for sensitivities" negates project justification (to many) based on sensitivity studies. Explaining as per R2.4.3 the reasons why you did or did not run a sensitivity study is less important, in many respects, than why you did or did not provide a Corrective Action Plan for performance failures observed in sensitivity studies. I.e., the study is the "cart" and the CAP is the "horse". Hence, at a minimum some form of Corrective Action Plan should be required.
PPL EnergyPlus	Yes and No	All of the sensitivity requirements should be structured to keep sensitivities from forcing un-needed construction. R2.1.3 & 4 are a good step but the point about planning around the base case might be made even more forcefully.

Response: Requirements R2.1.3 and R2.4.3 have been revised to make it clear that "~~s~~ensitivity case(s) that are intended to stress the System with variations in one or more of the following conditions not already included in the studies shall be included in the Assessment". The standard expects that at least one more of those variances listed in Requirements R2.1.3 and R2.4.3 that have not been integrated into the required studies are at least considered as "sensitivities". Embedding the sensitivity in the "base case" will result in a CAP that addresses the particular "sensitivities".

R2.1.3 For each of the studies described in Requirements R2.1.1 and ~~Requirement~~ R2.1.2, sensitivity case(s) that are intended to stress the System with ~~sensitivities~~ variations ~~that reflect~~ in one or more of the following conditions not already included in the studies shall be ~~run and documentation of the technical rationale for why each of the conditions was or was not selected shall be supplied~~ included in the Assessment:

R2.4.3 For each of the studies described in Requirements R2.4.1 and ~~Requirement~~ R2.4.2, ~~s~~ensitivity case(s) that are intended to stress the System with variations ~~to reflect~~ in one or more of the following conditions not already included in the studies shall be ~~run and documentation of the technical rationale for why each of the conditions was or was not selected shall be supplied~~ included in the Assessment:

In addition, Requirement R2.7 (now R2.6) has been revised for clarity. The entity can use any sensitivities studies it has performed in conjunction with the required current and past studies to develop its Corrective Action Plan.

R2.6 For Planning Events shown in Table 1 ~~– Steady State Performance and Table 2 – Stability Performance~~, when the analysis indicates an inability of the System to meet the performance requirements in the tables, the Planning Assessment shall include Corrective Action Plans addressing how the performance

Organization	Question 10:	Question 10 Comments:
requirements will be met. Revisions to the Corrective Action Plans are allowed in subsequent assessments but the System shall continue to meet the performance requirements in the tables. Corrective Action Plans do not need to be developed solely to meet the performance requirements for sensitivities run in accordance with Requirements R2.1.3 and R2.4.3. The Corrective Action Plan shall:		
SMUD	Yes and No	We agree. However, the conditions listed in R3.5.1, R3.5.2 and R3.5.3 are applicable to the overall TPL Standard. Their specific listing in R3.5 gives the impression that these Requirements are only applied to R3.5 and not to the other Requirements in this Standard. In other words, are there any Requirements in this Standard that R3.5.1, R3.5.2 and R3.5.3 do not apply to? Therefore, we suggest TPL-001-1 be silent on this issue and move R3.5.1 through R3.5.3, (and the equivalent in the stability study R5.4.3.1 through R5.4.3.3) to a Requirement applicable to Assessment studies in general, such as the bullet points in the Performance Tables .Added Reference 3.5.1: In cases where an SPS is deployed to reduce thermal overloads such that flows are brought within established facility ratings, but, for a short duration (seconds) until it is fully executed, the facility flows exceed the established rating, is that considered a violation or an acceptable engineering judgment that facilities are judiciously being brought to operate within ratings? Or, should the facility owner ensure establishment of a documented rating even for the short duration of seconds? Q10:TSS response: We generally agree with the concept of the sensitivity analysis since this is standard practice in understanding system performance risks and the effectiveness of improvements. It is ambiguous from a criteria perspective, however, what role is played by the sensitivities in developing Corrective Action Plans and what risks are created by misapplication of the intent of such sensitivity analyses. Clarification of the following is needed along with examples of applicable sensitivities and how these would be factored into Corrective Action Plans. If a Transmission Planner performs studies on the ?base case? of which the loads represented are 1 in 10 year adverse weather condition (10% chance that the actual load may exceed the projected load), does this constitute a sensitivity analysis. If so, will the Transmission Planner have to then perform additional less stringent studies at the load levels representing 1 in 2 year adverse weather conditions (50% chance that the actual load may exceed the projected load) to demonstrate compliance? R2.1.4 requires explanation of performing additional sensitivities that are not listed in the R2.1.3. This would discourage entities from performing additional sensitivities. In addition, in the above example, the Transmission Planners should not have to explain why they feel that this higher level (1 in 10 year adverse weather) of load is the “base case” condition. R2.7 also states that ?Corrective Action Plans do not need to be developed solely to meet the performance requirements for sensitivities?. Consider a Transmission Planner that has built transmission based on the 1 in 10 year adverse weather load assumed in the ?base case?, will the judgment of the Transmission Planner be then questioned because the “base case” used is equivalent to a sensitivity case and not a 1 in 2 year adverse weather base case? Is some Non-Consequential Load Loss for an N-1 contingency on a sensitivity case using an extremely high load forecast acceptable as a Corrective Action Plan in the planning phase?
Response: The SDT agrees with your comment and has deleted Requirements R3.5.1, R3.5.2 and R3.5.3. Requirements R2.1.3 and R2.4.3 have been revised to make it clear that “sensitivity case(s) that are intended to stress the System with variations in one or more of the following conditions not already included in the		

Organization	Question 10:	Question 10 Comments:
studies shall be included in the Assessment". The standard expects that at least one more of those variances listed in Requirements R2.1.3 and R2.4.3 that have not been integrated into the required studies are at least considered as "sensitivities". **R2.1.3** For each of the studies described in Requirements R2.1.1 and ~~Requirement~~ R2.1.2, sensitivity case(s) that are intended to stress the System with ~~sensitivities~~ variations ~~that reflect~~ in one or more of the following conditions not already included in the studies shall be ~~run and documentation of the technical rationale for why each of the conditions was or was not selected shall be supplied~~ included in the Assessment: **R2.4.3** For each of the studies described in Requirements R2.4.1 and ~~Requirement~~ R2.4.2, ~~s~~ensitivity case(s) that are intended to stress the System with variations ~~to reflect~~ in one or more of the following conditions not already included in the studies shall be ~~run and documentation of the technical rationale for why each of the conditions was or was not selected shall be supplied~~ included in the Assessment: The SDT agrees and has deleted Requirement R2.1.4. Requirement R2.7 (now R2.6) has been revised for clarity. The entity can use any sensitivities studies it has performed in conjunction with the required current and past studies to develop its Corrective Action Plan. **R2.6** For Planning Events shown in Table 1 ~~– Steady State Performance and Table 2 – Stability Performance~~, when the analysis indicates an inability of the System to meet the performance requirements in the tables, the Planning Assessment shall include Corrective Action Plans addressing how the performance requirements will be met. Revisions to the Corrective Action Plans are allowed in subsequent assessments but the System shall continue to meet the performance requirements in the tables. Corrective Action Plans do not need to be developed solely to meet the performance requirements for sensitivities run in accordance with Requirements R2.1.3 and R2.4.3. The Corrective Action Plan shall:		
Progress Energy Florida, Inc.	No	PEF has significant concerns with each of the sub-Requirements listed in R2.1.3. Each is ambiguous, vague and open to variations in interpretation. It therefore makes no sense that "documentation of the technical rationale for why each of the conditions was or was not selected" is a requirement. Indeed, given that all of the sub-Requirements of R2.1.3 are vague, unspecific, unwieldy concepts, PEF is not sure how said documentation could be accomplished. Concerning R2.1.4, PEF has the same concerns that were expressed regarding the modified requirements mentioned in Question 2, and similarly here would suggest a substitute to the language in R2.1.4. Significant concerns with the previous sub-Requirements notwithstanding, PEF suggests either returning to the language in each existing Standard's R1.3.2, or adding an R2.1.3.8 that states "Other known critical system conditions specific to the system studied by the Transmission Planner or Planning Coordinator."
Response: The SDT did not want to be more prescriptive because of the huge number of possible variances that can occur. It is up to the planning entity to determine which and how much of a variance is appropriate for its studies. In addition, Requirements R2.1.3 and R2.4.3 have been revised to remove the requirement to explain why a sensitivity was not run since it would be necessary to run the study regardless to provide proof why it was not run. Since these are sensitivities, any and all variances provide some level of information as to how the System responds to such variances. **R2.1.3** For each of the studies described in Requirements R2.1.1 and ~~Requirement~~ R2.1.2, sensitivity case(s) that are intended to stress the System with ~~sensitivities~~ variations ~~that reflect~~ in one or more of the following conditions not already included in the studies shall be ~~run and documentation of the technical~~		

Organization	Question 10:	Question 10 Comments:
~~rationale for why each of the conditions was or was not selected shall be supplied~~ included in the Assessment: **R2.4.3** For each of the studies described in Requirements R2.4.1 and ~~Requirement~~ R2.4.2, ~~s~~ensitivity case(s) that are intended to stress the System with variations ~~to reflect~~ in one or more of the following conditions not already included in the studies shall be ~~run and documentation of the technical rationale for why each of the conditions was or was not selected shall be supplied~~ included in the Assessment:		
Lafayette Utilities System	No	As to the performance of sensitivity analyses under R2.1.3, Lafayette believes that insufficient detail is provided to define with clarity cases that involve ?modification of expected transfers? (per R2.1.3.2). For example, it is unclear whether the phrase ?modification of expected transfers? is intended to refer to a change in directional bias in the model, a reduction in flows due to variation between reservations and schedules, or something else. Additional definition should be provided to ensure that sensitivity cases performed pursuant to R2.1.3.2 are meaningful and useful.
Response: The SDT did not want to be more prescriptive because of the huge number of possible variances that can occur. It is up to the planning entity to determine which and how much of a variance is appropriate for its studies		
Ameren	No	Similar to our comment above for R2.4.3, there should not be a requirement to explain why sensitivities were not selected. Also, it is not clear if R2.1.4 is a requirement or an option. While we agree that the system cannot be adequately planned based on a single snapshot of expected system conditions, these items in R2.1.3.1-7 are too prescriptive and are inappropriate for inclusion here. The sensitivities listed appear to be options and not sub-requirements, and may result in over-focusing on the particular issues listed to the detriment of overall system reliability. Some sensitivity studies are in effect adding an additional level of contingency to the analysis work (n-2 or n-3). Outages of reactive sources and generation should already be included in studies of multiple contingencies. The process of planning new generation (system impact studies) will include studies of the future system with and without the proposed new equipment. Engineering judgment should be used to develop the sensitivity scenarios, and it should be encouraged that the same scenarios should not be performed every year so that a portfolio of sensitivity scenarios would be developed over time. The standard should not include an enumerated list of required sensitivities. If two sensitivities are required to be performed each year, then the standard should state so, but we believe that more than one sensitivity scenario for each peak and off-peak case per year for assessment is too burdensome to run complete contingency analyses. Proposed alternative wording for R2.1.3 which addresses above concerns is as follows:R2.1.3. "For each of the studies described in Requirement R2.1.1 and Requirement R2.1.2, sensitivity case(s) that stress the System to reflect one or more conditions such as variation in load assumptions, modification of expected transfers, variability and outages of reactive resources, generation additions, retirements, or other dispatch scenarios are integral to a thorough assessment of reliability. Document how and why appropriate sensitivities were selected."
Response: Requirements R2.1.3 and R2.4.4 have been revised to remove the requirement to explain why a sensitivity was not run since it would be necessary to run the study regardless to provide proof why it was not run.		

Organization	Question 10:	Question 10 Comments:
Requirements R2.1.3 and R2.4.3 have been revised to make it clear that "~~s~~ensitivity case(s) that are intended to stress the System with variations in one or more of the following conditions not already included in the studies shall be included in the Assessment". The standard expects that at least one more of those variances listed in Requirements R2.1.3 and R2.4.3 that have not been integrated into the required studies are at least considered as "sensitivities". In addition, as written, the standard is requiring at a minimum, one case run for each required current year for steady state and Stability. This translates into three cases for steady state. The entity may run as many additional cases as it deems appropriate to understand how the System responds to the variances. **R2.1.3** For each of the studies described in Requirements R2.1.1 and ~~Requirement~~ R2.1.2, sensitivity case(s) that are intended to stress the System with ~~sensitivities~~ variations ~~that reflect~~ in one or more of the following conditions not already included in the studies shall be ~~run and documentation of the technical rationale for why each of the conditions was or was not selected shall be supplied~~ included in the Assessment: **R2.4.3** For each of the studies described in Requirements R2.4.1 and ~~Requirement~~ R2.4.2, ~~s~~ensitivity case(s) that are intended to stress the System with variations ~~to reflect~~ in one or more of the following conditions not already included in the studies shall be ~~run and documentation of the technical rationale for why each of the conditions was or was not selected shall be supplied~~ included in the Assessment:		
Florida Power and Light	No	The words ?documentation of the technical rationale for why each of the conditions was or was not selected shall be supplied? should be removed from R2.4.3. The sensitivity selection is necessarily subjective and judgmental. It is not clear what constitutes a valid rationale document. Compliance assessment of such a document would be subjective and is not needed.
Response: Requirements R2.1.3 and R2.4.3 have been revised to remove the requirement to explain why a sensitivity was not run since it would be necessary to run the study regardless to provide proof why it was not run. The SDT believes that documentation of why a sensitivity was selected for study should be provided. **R2.1.3** For each of the studies described in Requirements R2.1.1 and ~~Requirement~~ R2.1.2, sensitivity case(s) that are intended to stress the System with ~~sensitivities~~ variations ~~that reflect~~ in one or more of the following conditions not already included in the studies shall be ~~run and documentation of the technical rationale for why each of the conditions was or was not selected shall be supplied~~ included in the Assessment: **R2.4.3** For each of the studies described in Requirements R2.4.1 and ~~Requirement~~ R2.4.2, ~~s~~ensitivity case(s) that are intended to stress the System with variations ~~to reflect~~ in one or more of the following conditions not already included in the studies shall be ~~run and documentation of the technical rationale for why each of the conditions was or was not selected shall be supplied~~ included in the Assessment:		
Exelon Transmission Planning	No	We support efforts to improve load and dynamic load modeling, however we have concerns in being able to do so in an accurate manner - See comments to question #2. The state of industry development is such that this is not ready for inclusion in a standard such as R2.4.1 and R2.4.3.1.
Response: As with all planning models, assumptions must be made that the entity feels are representative of how the system will respond and perform. Models can only attempt to simulate the System based on expected conditions. The standard has been modified to explain that "an aggregate System Load model which represents the overall dynamic behavior of the Load is acceptable".		

Organization	Question 10:	Question 10 Comments:
R2.4.1 System peak Load for one of the five years. For peak System Load levels, a Load model shall be used which appropriately represents the dynamic behavior of Loads, including consideration of the behavior of induction motor Loads. An aggregate system Load model which represents the overall dynamic behavior of the Load is acceptable		
CenterPoint Energy and CPS Energy	No	We believe R2.1.3 and R2.1.4 are overly prescriptive and should be deleted. It requires engineering judgment and experience to know whether a planning analysis is materially impacted by certain assumptions and, if so, which sensitivity analyses should be performed. Literally interpreted by an auditor, R2.1.3 would require at least one sensitivity analysis for each one of the contingencies shown in Tables 1 and 2 for each study specified in R2.1.1 and R2.1.2 and documentation for each contingency of each study why each sensitivity specified in R2.1.3 was or was not selected. The likely result is not value-added engineering analysis of actual reliability concerns. Instead, the likely outcome is unnecessary and burdensome additional analysis and documentation that is impractical, creating confusion and uncertainty as to what the practical interpretation of impractical requirements might ultimately be.
SERC Dynamics Review Subcommittee	No	These requirements are very prescriptive. Many examples of sensitivities are already inherent in the existing requirements. Some sensitivity studies are in effect adding an additional level of contingency (N-2 or N-3). Sensitivity studies of load variation are already inherent in the fact that several different study years and conditions are already being required. Outages of reactive sources and generation should already be included in studies of multiple contingencies. The process of planning new generation (system impact studies) will include studies of the future with and without the proposed new equipment. The TP and PC can better select the most appropriate sensitivities for their system. In general we believe that breaking these requirements into specific sub requirements, focusing on specific sensitivities, is too prescriptive and inappropriate. It will lead to over focus on these particular issues to the detriment of system reliability. There should be no enumerated list of required sensitivities. Engineering judgment needs to be permitted.
Response: Requirements R2.1.3 and R2.4.3 have been revised to make it clear that "~~s~~ensitivity case(s) that are intended to stress the System with variations in one or more of the following conditions not already included in the studies shall be included in the Assessment". The standard expects that at least one more of those variances listed in Requirements R2.1.3 and R2.4.3 that have not been integrated into the required studies are at least considered as "sensitivities". In addition, as written the standard is requiring at a minimum one case run for each required current year for steady state and Stability. This translates into three cases for steady state. The entity may run as many additional cases as it deems appropriate to understand how the system responds to the variances. In addition, Requirements R2.1.4 and R2.4.4 have been deleted. **R2.1.3** For each of the studies described in Requirements R2.1.1 and ~~Requirement~~ R2.1.2, sensitivity case(s) that are intended to stress the System with ~~sensitivities~~ variations ~~that reflect~~ in one or more of the following conditions not already included in the studies shall be ~~run and documentation of the technical rationale for why each of the conditions was or was not selected shall be supplied~~ included in the Assessment: **R2.4.3** For each of the studies described in Requirements R2.4.1 and ~~Requirement~~ R2.4.2, ~~s~~ensitivity case(s) that are intended to stress the System with variations ~~to reflect~~ in one or more of the following conditions not already included in the studies shall be ~~run and documentation of the technical rationale for why each of the~~		

Organization	Question 10:	Question 10 Comments:
~~conditions was or was not selected shall be supplied~~ included in the Assessment:		
MidAmerican Energy Company	No	a. MEC is not sure why R2.4.3.1 for sensitivities for Stability studies is a less definitive definition for load model variations then the steady state studies in R2.1.3.1. MEC recommends that R2.1.3.1 be changed to "Variations in Load model assumptions." b. MEC believes R2.1.4 and R2.4.4 should be deleted because its unnecessary to make a requirement of sensitivities that an entity chooses to do above and beyond the requirements in R2.1.3 and R2.4.3. If the SDT chooses not to delete these requirements, then MEC believes that R2.1.4 should be a subrequirement of R2.1.3 and R2.4.4 should be made a subrequirement of R2.4.3. The responsible entity should be allowed to select the appropriate sensitivity that should be performed. This is especially necessary given the need to perform each of these sensitivity analyses for six situations each year: peak and off-peak for two short-term years and one long-term year. Even with the requirement for one sensitivity for each case that amounts to six additional sets of analysis for steady-state and six for stability.
Response: a. As with all planning models, assumptions must be made that the entity feels are representative of how the System will respond and perform. Models can only attempt to simulate the System based on expected conditions. The standard has been modified to explain that "an aggregate system Load model which represents the overall dynamic behavior of the Load is acceptable". **R2.4.1** System peak Load for one of the five years. For peak System Load levels, a Load model shall be used which appropriately represents the dynamic behavior of Loads, including consideration of the behavior of induction motor Loads. An aggregate system Load model which represents the overall dynamic behavior of the Load is acceptable b. Requirements R2.1.3 and R2.4.3 have been revised to make it clear that "~~s~~ensitivity case(s) that are intended to stress the System with variations in one or more of the following conditions not already included in the studies shall be included in the Assessment". The standard expects that at least one more of those variances listed in Requirements R2.1.3 and R2.4.3 that have not been integrated into the required studies are at least considered as "sensitivities". In addition, as written, the standard is requiring at a minimum, one case run for each required current year for steady state and Stability. This translates into three cases for steady state. The entity may run as many additional cases as it deems appropriate to understand how the system responds to the variances. In addition, Requirements R2.1.4 and R2.4.4 have been deleted. **R2.1.3** For each of the studies described in Requirements R2.1.1 and ~~Requirement~~ R2.1.2, sensitivity case(s) that are intended to stress the System with ~~sensitivities~~ variations ~~that reflect~~ in one or more of the following conditions not already included in the studies shall be ~~run and documentation of the technical rationale for why each of the conditions was or was not selected shall be supplied~~ included in the Assessment: **R2.4.3** For each of the studies described in Requirements R2.4.1 and ~~Requirement~~ R2.4.2, ~~s~~ensitivity case(s) that are intended to stress the System with variations ~~to reflect~~ in one or more of the following conditions not already included in the studies shall be ~~run and documentation of the technical rationale for why each of the conditions was or was not selected shall be supplied~~ included in the Assessment:		
MRO NERC	No	a. The MRO is not sure why R2.4.3.1 for sensitivities for Stability studies is a less definitive definition for load model

Organization	Question 10:	Question 10 Comments:
Standards Review Subcommittee		variations then the steady state studies in R2.1.3.1. The MRO recommends that R2.1.3.1 be changed to "Variations in Load model assumptions." b. The MRO believes R2.1.4 and R2.4.4 should be deleted because its unnecessary to make a requirement of sensitivities that an entity chooses to do above and beyond the requirements in R2.1.3 and R2.4.3. If the SDT chooses not to delete these requirements, then MRO believes that R2.1.4 should be a subrequirement of R2.1.3 and R2.4.4 should be made a subrequirement of R2.4.3. The responsible entity should be allowed to select the appropriate sensitivity that should be performed. This is especially necessary given the need to perform each of these sensitivity analyses for six situations each year: peak and off-peak for two short-term years and one long-term year. Even with the requirement for one sensitivity for each case that amounts to six additional sets of analysis for steady-state and six for stability. c. For R2.1.4, we suspect that these analysis are similar to extreme event contingencies and do not have specific performance requirements. We would also like some explanation of what and how to provide the technical rationale for why each condition was or was not used.

Response: As with all planning models, assumptions must be made that the entity feels are representative of how the System will respond and perform. Models can only attempt to simulate the System based on expected conditions. The standard has been modified to explain that "an aggregate system Load model which represents the overall dynamic behavior of the Load is acceptable".

R2.4.1 System peak Load for one of the five years. For peak System Load levels, a Load model shall be used which appropriately represents the dynamic behavior of Loads, including consideration of the behavior of induction motor Loads. An aggregate system Load model which represents the overall dynamic behavior of the Load is acceptable.

b. Requirements R2.1.3 and R2.4.3 have been revised to make it clear that "~~s~~ensitivity case(s) that are intended to stress the System with variations in one or more of the following conditions not already included in the studies shall be included in the Assessment". The standard expects that at least one more of those variances listed in Requirements R2.1.3 and R2.4.3 that have not been integrated into the required studies are at least considered as "sensitivities". In addition, as written, the standard is requiring at a minimum, one case run for each required current year for steady state and Stability. This translates into three cases for steady state. The entity may run as many additional cases as it deems appropriate to understand how the system responds to the variances. In addition, Requirements R2.1.4 and R2.4.4 have been deleted.

R2.1.3 For each of the studies described in Requirements R2.1.1 and ~~Requirement~~ R2.1.2, sensitivity case(s) that are intended to stress the System with ~~sensitivities~~ variations ~~that reflect~~ in one or more of the following conditions not already included in the studies shall be ~~run and documentation of the technical rationale for why each of the conditions was or was not selected shall be supplied~~ included in the Assessment:

R2.4.3 For each of the studies described in Requirements R2.4.1 and ~~Requirement~~ R2.4.2, ~~s~~ensitivity case(s) that are intended to stress the System with variations ~~to reflect~~ in one or more of the following conditions not already included in the studies shall be ~~run and documentation of the technical rationale for why each of the conditions was or was not selected shall be supplied~~ included in the Assessment:

c. Requirement R2.1.4 has been deleted.

Organization	Question 10:	Question 10 Comments:
Austin Energy	No	Appropriate sensitivity analysis should be determined by the Transmission Planner and/or the Planning Coordinator (ISO or RTO) and not made a routine requirement. Therefore, R2.1.3 should be deleted.
SERC Reliability Review Subcommittee and Planning Standards Subcommittee	No	These requirements are very prescriptive. Many examples of sensitivities are already inherent in the existing requirements. Some sensitivity studies are in effect adding an additional level of contingency (N-2 or N-3). Sensitivity studies of load variation are already inherent in the fact that several different study years and conditions are already being required. Outages of reactive sources and generation should already be included in studies of multiple contingencies. The process of planning new generation (system impact studies) will include studies of the future with and without the proposed new equipment. The TP and PC can better select the most appropriate sensitivities for their system. In general we believe that breaking these requirements into specific sub requirements, focusing on specific sensitivities, is too prescriptive and inappropriate. It will lead to over focus on these particular issues to the detriment of system reliability. The standard should not include an enumerated list of required sensitivities Engineering judgment needs to be permitted.
Response: Requirements R2.1.3 and R2.4.3 have been revised to make it clear that "sensitivity case(s) that are intended to stress the System with variations in one or more of the following conditions not already included in the studies shall be included in the Assessment". The standard expects that at least one more of those variances listed in Requirements R2.1.3 and R2.4.3 that have not been integrated into the required studies are at least considered as "sensitivities". In addition, as written the standard is requiring at a minimum one case run for each required current year for steady state and Stability. This translates into three cases for steady state. The entity may run as many additional cases as it deems appropriate to understand how the system responds to the variances. **R2.1.3** For each of the studies described in Requirements R2.1.1 and ~~Requirement~~ R2.1.2, sensitivity case(s) that are intended to stress the System with ~~sensitivities~~ variations ~~that reflect~~ in one or more of the following conditions not already included in the studies shall be ~~run and documentation of the technical rationale for why each of the conditions was or was not selected shall be supplied~~ included in the Assessment: **R2.4.3** For each of the studies described in Requirements R2.4.1 and ~~Requirement~~ R2.4.2, sensitivity case(s) that are intended to stress the System with variations ~~to reflect~~ in one or more of the following conditions not already included in the studies shall be ~~run and documentation of the technical rationale for why each of the conditions was or was not selected shall be supplied~~ included in the Assessment:		
Midwest ISO	No	This reminds us of Category D from original table--requiring us to study something but take no action. Sensitivities are not appropriate nor effective in a planning world in which you require an array of sensitivity studies but require no action will be taken. While running sensitivities enables us to better understand system limits, why have it as a requirement if there is no action plan obligation.
Response: The requirement was added to ensure that the entities do run certain variances that would stress the System. Requirement R2 requires that such studies are documented as part of the Planning Assessment. The entity is to determine the risk associated with not modifying the Corrective Action Plan to consider these studies. The documentation puts the entity on record as stating that the variance was considered but may or may not have been incorporated in the Plan makes the entity liable for its decision.		

Organization	Question 10:	Question 10 Comments:
Tri-State Generation and Transmission Association, Inc.	No	We appreciate the extra detail describing sensitivity cases, but do not think it is reasonable to require explanations of why each condition suggested in R2.1.3.1-R2.1.3.7 was or was not studied. It should be sufficient that sensitivity studies are considered appropriate by the individual utility. R2.1.4 should be demoted to R2.1.3.8 (and the "shall include rationale" clause removed).
Response: Requirements R2.1.3 and R2.4.3 have been revised to remove the requirement to explain why a sensitivity was not run since it would be necessary to run the study regardless to provide proof why it was not run. The SDT believes that documentation of why a sensitivity was selected for study should be provided. Requirements R2.1.4 and R2.4.4 have been deleted. **R2.1.3** For each of the studies described in Requirements R2.1.1 and ~~Requirement~~ R2.1.2, sensitivity case(s) that are intended to stress the System with ~~sensitivities~~ variations ~~that reflect~~ in one or more of the following conditions not already included in the studies shall be ~~run and documentation of the technical rationale for why each of the conditions was or was not selected shall be supplied~~ included in the Assessment: **R2.4.3** For each of the studies described in Requirements R2.4.1 and ~~Requirement~~ R2.4.2, ~~s~~ensitivity case(s) that are intended to stress the System with variations ~~to reflect~~ in one or more of the following conditions not already included in the studies shall be ~~run and documentation of the technical rationale for why each of the conditions was or was not selected shall be supplied~~ included in the Assessment:		
Lakeland Electric	No	R2.1.3.1 requires other than peak sensitivity studies while R2.1.2 requires Off peak studies. Recommend further defining of R2.1.2 to specific load level or points on forecast demand curves to eliminate any overlap between two requirements.
Response: The SDT has used the defined term “Off-Peak” and believes that this is sufficient.		
Southern Company Transmission	No	R 2.1.3 One should only have to explain why sensitivity was performed, not why it was not performed. In general we believe that breaking these requirements into specific sub requirements focusing on specific sensitivities is too prescriptive and inappropriate. It will lead to over focus on these particular issues to the detriment of system reliability. There should be no list of sensitivities enumerated as subrequirements. Engineering judgment needs to be permitted. A specific proposal for R2.1.3 which addresses the above concerns is provided as follows:R2.1.3. For each of the studies described in Requirement R2.1.1 and Requirement R2.1.2, sensitivity case(s) shall be run and documented that stress the System to reflect one or more conditions such as higher or lower Load than forecasted with variability of Load/demand and Load power factors due to season, weather, or time of day; modification of expected transfers; unavailability of long lead time Facilities; variability and outages of reactive resources; generation additions, retirements, or other dispatch scenarios; decreased effectiveness of controllable Loads and Demand Side Management; modification of planned Transmission outages. Document why each sensitivity was selected.
Response: Requirements R2.1.3 and R2.4.4 have been revised to remove the requirement you reference. In addition, Requirements R2.1.3 and R2.4.3 have been		

Organization	Question 10:	Question 10 Comments:
revised to make it clear that "~~s~~ensitivity case(s) that are intended to stress the System with variations in one or more of the following conditions not already included in the studies shall be included in the Assessment". The standard expects that at least one more of those variances listed in Requirements R2.1.3 and R2.4.3 that have not been integrated into the required studies are at least considered as "sensitivities". **R2.1.3** For each of the studies described in Requirements R2.1.1 and ~~Requirement~~ R2.1.2, sensitivity case(s) that are intended to stress the System with ~~sensitivities~~ variations ~~that reflect~~ in one or more of the following conditions not already included in the studies shall be ~~run and documentation of the technical rationale for why each of the conditions was or was not selected shall be supplied~~ included in the Assessment: **R2.4.3** For each of the studies described in Requirements R2.4.1 and ~~Requirement~~ R2.4.2, sensitivity case(s) that are intended to stress the System with variations ~~to reflect~~ in one or more of the following conditions not already included in the studies shall be ~~run and documentation of the technical rationale for why each of the conditions was or was not selected shall be supplied~~ included in the Assessment:		
Brazos Electric Power Cooperative, Inc.	No	2.1.3 should have been left alone. We have a real problem with the addition of 'technical' and documenting why things were NOT selected. We would also like to see more leeway provided to the TP and PC by adding language similar to that mentioned above such as "as deemed necessary by the TP or PC".2.1.4 should be incorporated into 2.1.3 in a similar fashion as our suggested changes for 2.4.3.
Response: Requirements R2.1.3 and R2.4.4 have been revised to remove the requirement to explain why a sensitivity was not run since it would be necessary to run the study regardless to provide proof why it was not run. In addition, Requirements R2.1.3 and R2.4.3 have been revised to make it clear that "~~s~~ensitivity case(s) that are intended to stress the System with variations in one or more of the following conditions not already included in the studies shall be included in the Assessment". The standard expects that at least one more of those variances listed in Requirements R2.1.3 and R2.4.3 that have not been integrated into the required studies are at least considered as "sensitivities". In addition, Requirements R2.1.4 and R2.4.4 have been deleted. **R2.1.3** For each of the studies described in Requirements R2.1.1 and ~~Requirement~~ R2.1.2, sensitivity case(s) that are intended to stress the System with ~~sensitivities~~ variations ~~that reflect~~ in one or more of the following conditions not already included in the studies shall be ~~run and documentation of the technical rationale for why each of the conditions was or was not selected shall be supplied~~ included in the Assessment: **R2.4.3** For each of the studies described in Requirements R2.4.1 and ~~Requirement~~ R2.4.2, ~~s~~ensitivity case(s) that are intended to stress the System with variations ~~to reflect~~ in one or more of the following conditions not already included in the studies shall be ~~run and documentation of the technical rationale for why each of the conditions was or was not selected shall be supplied~~ included in the Assessment:		
NERC and Regional Coordination	No	The standard as worded:? Implies all tests are run for a given sensitivity the standard should be revised to read applicable testing for the applicable sensitivity.? Requires proof of negative o Why a sensitivity was not selected? Requires that expansion plans identify the impact of sensitivity o Many sensitivities may have varying impacts on an expansion plan. Suggested changes:R2.1.3 - For each of the studies described in Requirement R2.1.1 and Requirement R2.1.2, sensitivity case(s) that reflect one or more of the following conditions shall be incorporated into the assessment. Documentation of the

Organization	Question 10:	Question 10 Comments:
		technical rationale for why each of the conditions was selected and the portion of the assessment that included each selected sensitivity shall be supplied. R2.1.4, R2.4.3, and R2.4.4 - need to be modified accordingly. Delete R2.1.4 as it is superfluous. If a PC runs a sensitivity study and includes that analysis in its Plan, then why would NERC mandate that the PC explain why the non-mandated sensitivity study was run. If a study is required then it should be mandated. If a study is not mandated then he PC should not be held accountable for explaining the un-mandated study.R2.4.3.1 ? Variation in load model. Specific numbers should be included. R2.4.3.2 - Modification of expected transfers ? Be more specific. Firm or non-firm transfer and amount of MWR2.4.3.3 - Unavailability of long lead time Facilities. How many years out we are looking at and for how long it must be out of service.R2.4.3.4 - Variability of Reactive Source ? need to be more specific (give me MVARS). We already test this under FAC 010 for lost of shunt capacitor.R2.4.3.5 - This should already been taken into account when we do studies. So be more specific.R2.7.2 - Include a description of how results of the sensitivities selected in accordance with Requirements R2.1.3, R2.1.4, R2.4.3, and R2.4.4 impacted the list of actions developed in accordance with R2.7.1.R2.1 - Revise wording - The annual assessment of the of the NT Planning Horizon shall include: then go into the sub-bullets. The SDT must clarify exactly explicitly how many studies (in terms of numbers) must be done each planning horizon for short term and long term and how much sensitivity study for term.

Response: Requirements R2.1.3 and R2.4.3 have been revised to make it clear that "~~s~~ensitivity case(s) that are intended to stress the System with variations in one or more of the following conditions not already included in the studies shall be included in the Assessment". The standard expects that at least one more of those variances listed in Requirements R2.1.3 and R2.4.3 that have not been integrated into the required studies are at least considered as "sensitivities".

Also, Requirements R2.1.3 and R2.4.3 have been revised to remove the requirement to explain why a sensitivity was not run since it would be necessary to run the study regardless to provide proof why it was not run.

R2.1.3 For each of the studies described in Requirements R2.1.1 and ~~Requirement~~ R2.1.2, sensitivity case(s) that are intended to stress the System with ~~sensitivities~~ variations ~~that reflect~~ in one or more of the following conditions not already included in the studies shall be ~~run and documentation of the technical rationale for why each of the conditions was or was not selected shall be supplied~~ included in the Assessment:

R2.4.3 For each of the studies described in Requirements R2.4.1 and ~~Requirement~~ R2.4.2, ~~s~~ensitivity case(s) that are intended to stress the System with variations ~~to reflect~~ in one or more of the following conditions not already included in the studies shall be ~~run and documentation of the technical rationale for why each of the conditions was or was not selected shall be supplied~~ included in the Assessment:

The SDT agrees with the commenter and has deleted Requirements R2.1.4 and R2.4.4.

The SDT did not want to be more prescriptive and provide specific details and number for variances that the entity may select because of the huge number of possible variances that can occur. It is up to the planning entity to determine which and how much of a variance is appropriate for its studies.

Requirement R2, along with its sub-requirements, requires the sensitivities run are to be documented. Requirement R2.6 requires that the Corrective Actions be listed. The entity can add the details and further explanation of how the sensitivities were incorporated into the Plans.

Organization	Question 10:	Question 10 Comments:
Since the basis of the standard is to allow the entity to support the Planning Assessment using current and past studies, the standard cannot dictate the specific number of studies to be made. The standard does specify the current cases that must be run in Requirements R2.1.1, R2.1.2, R2.2, R2.4.1 and R2.4.2.		
IESO	No	As we commented on R2.4.3, we continue to express our disagreement to include sensitivity testing in R2.1.3 and R2.1.4. We are disappointed that despite disagreements by the majority of the commenters and their suggestions to leave sensitivity testing to the TP's and PC's discretion, the SDT continues to stipulate detailed requirements for sensitivity testing. The SDT in its summary response to comments indicates that these testing are intended as "?providing some guidance on what could be included in the sensitivity studies without being too prescriptive." If these are indeed intended as guidance rather than enforceable requirements, then they should be provided in a technical document or a reference document that supports the standard, not in the standard itself.
Response: Requirements R2.1.3 and R2.4.3 have been revised to make it clear that "sensitivity case(s) that are intended to stress the System with variations in one or more of the following conditions not already included in the studies shall be included in the Assessment". The standard expects that at least one more of those variances listed in Requirements R2.1.3 and R2.4.3 that have not been integrated into the required studies are at least considered as "sensitivities". In addition, as written, the standard is requiring at a minimum, one case run for each required current year for steady state and Stability. This translates into three cases for steady state. The entity may run as many additional cases as it deems appropriate to understand how the System responds to the variances.		
North Carolina Electric Membership Corp	Yes and No	Sensitivities to base assumptions for studies are always good utility practice. But we agree with others that these may be overly prescriptive in requiring each and every one. Allow the TP and PC to select the appropriate sensitivities for the annual assessments with input from customers and affected stakeholders. We are concerned that the requirement for every sensitivity each and every year would result in excessive burden to existing PCs and TPs doing this analysis with no resulting improvement to reliability.
Response: Requirements R2.1.3 and R2.4.3 have been revised to make it clear that "sensitivity case(s) that are intended to stress the System with variations in one or more of the following conditions not already included in the studies shall be included in the Assessment". The standard expects that at least one more of those variances listed in Requirements R2.1.3 and R2.4.3 that have not been integrated into the required studies are at least considered as "sensitivities". In addition, as written the standard is requiring at a minimum one case run for each required current year for steady state and Stability. This translates into three cases for steady state. The entity may run as many additional cases as it deems appropriate to understand how the System responds to the variances.		
E.ON U.S. Transmission Planning	Yes and No	2. R2.1.3.2 refers to modification of expected transfers as a sensitivity test. Does this include transfers across the system, such as a transfer from Cinergy to TVA?
Response: The SDT did not want to be more prescriptive because of the huge number of possible variances that can occur. It is up to the planning entity to determine which and how much of a variance is appropriate for its studies		

Organization	Question 10:	Question 10 Comments:
ERCOT System Planning		The sensitivity cases suggested are unnecessary and unfeasible. For example, generation additions to cases that can already meet the load under contingency conditions do not create a reliability problem as the new generator can always be turned off. On the other extreme, sensitivity analysis of possible, unknown and uncontrollable generation retirements along with the Table 1 requirements of P3 (Generator + 1) contingency analysis presents an overwhelming study and documentation burden that will not add a corresponding benefit to the study and the results would be meaningless.
Response: The SDT believes that planners must consider these possible variances and reinforce the System so that when it comes to Real-time operation, the TOP will have a system sufficiently robust to operate around any of the conditions. Commenters generally agree that these are the responsibility of planning. Requirements R2.1.3 and R2.4.3 have been revised to make it clear that "~~s~~ensitivity case(s) that are intended to stress the System with variations in one or more of the following conditions not already included in the studies shall be included in the Assessment". The standard expects that at least one more of those variances listed in Requirements R2.1.3 and R2.4.3 that have not been integrated into the required studies are at least considered as "sensitivities". **R2.1.3** For each of the studies described in Requirements R2.1.1 and ~~Requirement~~ R2.1.2, sensitivity case(s) that are intended to stress the System with ~~sensitivities~~ variations ~~that reflect~~ in one or more of the following conditions not already included in the studies shall be ~~run and documentation of the technical rationale for why each of the conditions was or was not selected shall be supplied~~ included in the Assessment: **R2.4.3** For each of the studies described in Requirements R2.4.1 and ~~Requirement~~ R2.4.2, ~~s~~ensitivity case(s) that are intended to stress the System with variations ~~to reflect~~ in one or more of the following conditions not already included in the studies shall be ~~run and documentation of the technical rationale for why each of the conditions was or was not selected shall be supplied~~ included in the Assessment:		
American Transmission Company	No	For R2.1.3, we would like further explanation of what technical rationale is expected and how it should be provided as to why each condition sensitivity was or was not used. In the subrequirements, we are unsure of what is exactly meant by "variability of load demand and load power factors", "modification of expected transfers", "long lead time Facilities", and "modification of planned outages". For R2.1.4, it is unclear what specific performance requirements must be met for these other sensitivities. We would also like some explanation of what technical rationale is expected and how it should be provided as to why each condition sensitivity was or was not used.
Response: Requirements R2.1.3 and R2.4.4 have been revised to remove the requirement to explain why a sensitivity was not run since it would be necessary to run the study regardless to provide proof why it was not run. Since these are sensitivities, any and all variances provide some level of information as to how the system responds to such variances. **R2.1.3** For each of the studies described in Requirements R2.1.1 and ~~Requirement~~ R2.1.2, sensitivity case(s) that are intended to stress the System with ~~sensitivities~~ variations ~~that reflect~~ in one or more of the following conditions not already included in the studies shall be ~~run and documentation of the technical rationale for why each of the conditions was or was not selected shall be supplied~~ included in the Assessment: **R2.4.3** For each of the studies described in Requirements R2.4.1 and ~~Requirement~~ R2.4.2, ~~s~~ensitivity case(s) that are intended to stress the System with variations ~~to reflect~~ in one or more of the following conditions not already included in the studies shall be ~~run and documentation of the technical rationale for why each of the~~		

Organization	Question 10:	Question 10 Comments:
~~conditions was or was not selected shall be supplied~~ included in the Assessment: The SDT did not want to be more prescriptive because of the huge number of possible variances that can occur. It is up to the planning entity to determine which and how much of a variance is appropriate for its studies. Also, Requirements R2.1.4 and R2.4.4 have been deleted.		
Duke Energy	No	Although we agree with the perceived intent of R2.1.3, we believe the wording should be revised to make it very clear that it is not necessary to perform studies to substantiate your technical rationale for choosing not to perform any particular sensitivity study. Documented engineering judgment to support the decision not to perform the particular sensitivity studies should be sufficient. Recommend renumbering R2.1.4 to R2.1.3.8 and reword as follows: Any other sensitivity, as deemed appropriate by the Transmission Planner or Planning Coordinator for their individual systems.
Florida Reliability Coordinating Council, inc	No	R2.1.3 and R2.1.4 as written can create issues during the compliance assessment. These requirements place the burden of justifying the inclusion / exclusion of the sensitivities on the TP or PC. Thus, only a sensitivity deem appropriate by the TP or PC and not performed can be found non-compliant. R2.1.4 can be eliminated by modifying the wording in R2.1.3 as follows:? For each of the studies described in Requirement R2.1.1 and Requirement R2.1.2, at least one sensitivity shall be performed that stress the system based on one or more of the following conditions, plus any additional conditions determined by the Transmission Planer and Planning Coordinator. The Planning Assessment will also include the technical rationale for why each of the conditions was or was not selected for study that year.?
Response: Requirements R2.1.3 and R2.4.4 have been revised to remove the requirement to explain why sensitivity was not run since it would be necessary to run the study regardless to provide proof why it was not run. Since these are sensitivities, any and all variances provide some level of information as to how the system responds to such variances. **R2.1.3** For each of the studies described in Requirements R2.1.1 and ~~Requirement~~ R2.1.2, sensitivity case(s) that are intended to stress the System with ~~sensitivities~~ variations ~~that reflect~~ in one or more of the following conditions not already included in the studies shall be ~~run and documentation of the technical rationale for why each of the conditions was or was not selected shall be supplied~~ included in the Assessment: **R2.4.3** For each of the studies described in Requirements R2.4.1 and ~~Requirement~~ R2.4.2, ~~s~~ensitivity case(s) that are intended to stress the System with variations ~~to reflect~~ in one or more of the following conditions not already included in the studies shall be ~~run and documentation of the technical rationale for why each of the conditions was or was not selected shall be supplied~~ included in the Assessment:		
Central Maine Power Company	No	a. With respect to R2.1.3 delete "that Stress the System with sensitivities". b. R2.1.3 should be revised to clarify that if a TP/PC conducts the studies specified in R2.1.1 and R2.1.2 with one or more of the sensitivities which stress the system in the normal course of study, then additional studies of a less-stressed system are not required.

Organization	Question 10:	Question 10 Comments:
		c. The intention of Paragraph R2.1.4 is unclear and appears to be unnecessary; therefore, it should be removed.
ISO New England Inc.	No	a. With respect to R2.1.3 delete " that Stress the System with sensitivities". b. R2.1.3 should be revised to clarify that if a TP/PC conducts the studies specified in R2.1.1 and R2.1.2 with one or more of the sensitivities which stress the system in the normal course of study, then additional studies of a less-stressed system are not required. c. The intention of Paragraph R2.1.4 is unclear and appears to be unnecessary; therefore, it should be removed.
ColumbiaGrid	Yes	We generally agree with the concept of the sensitivity analysis since this is standard practice in understanding system performance risks and the effectiveness of improvements. R2.1.4 requires explanation of performing additional sensitivities that are not listed in the R2.1.3. This would discourage entities from performing additional sensitivities. In addition, in the above example, the Transmission Planners should not have to explain why they feel that this higher level (1 in 10 year adverse weather) of load is the ?base case? condition.
Response: Requirements R2.1.3 and R2.4.3 have been revised to make it clear that "~~s~~ensitivity case(s) that are intended to stress the System with variations in one or more of the following conditions not already included in the studies shall be included in the Assessment". The standard expects that at least one more of those variances listed in Requirements R2.1.3 and R2.4.3 that have not been integrated into the required studies are at least considered as "sensitivities". **R2.1.3** For each of the studies described in Requirements R2.1.1 and ~~Requirement~~ R2.1.2, sensitivity case(s) that are intended to stress the System with ~~sensitivities~~ variations ~~that reflect~~ in one or more of the following conditions not already included in the studies shall be ~~run and documentation of the technical rationale for why each of the conditions was or was not selected shall be supplied~~ included in the Assessment: **R2.4.3** For each of the studies described in Requirements R2.4.1 and ~~Requirement~~ R2.4.2, ~~s~~ensitivity case(s) that are intended to stress the System with variations ~~to reflect~~ in one or more of the following conditions not already included in the studies shall be ~~run and documentation of the technical rationale for why each of the conditions was or was not selected shall be supplied~~ included in the Assessment: The SDT agrees and has deleted R2.1.4.		
NSTAR Electric	No	1. With respect to R2.1.3 delete "that Stress the System with sensitivities".2. R2.1.3 should be revised to clarify that if a TP/PC conducts the studies specified in R2.1.1 and R2.1.2 with one or more of the sensitivities which stress the system in the normal course of study, then additional studies of a less-stressed system are not required.3. The intention of Paragraph R2.1.4 is unclear and appears to be unnecessary; therefore, it should be removed.
Response: Requirements R2.1.3 and R2.4.3 have been revised to make it clear that "sensitivity case(s) that are intended to stress the System with variations in one or more of the following conditions not already included in the studies shall be included in the Assessment". **R2.1.3** For each of the studies described in Requirements R2.1.1 and ~~Requirement~~ R2.1.2, sensitivity case(s) that are intended to stress the System with		

Organization	Question 10:	Question 10 Comments:
~~sensitivities~~ variations ~~that reflect~~ in one or more of the following conditions not already included in the studies shall be ~~run and documentation of the technical rationale for why each of the conditions was or was not selected shall be supplied~~ included in the Assessment: **R2.4.3** For each of the studies described in Requirements R2.4.1 and ~~Requirement~~ R2.4.2, sensitivity case(s) that are intended to stress the System with variations ~~to reflect~~ in one or more of the following conditions not already included in the studies shall be ~~run and documentation of the technical rationale for why each of the conditions was or was not selected shall be supplied~~ included in the Assessment: Requirements R2.1.4 and R2.4.4 have been deleted.		
New York Independent System Operator	No	If a TP/PC conducts the studies specified in R2.1.1 and R2.1.2 with one or more of the sensitivities which stress the system in the normal course of study, we assume that fulfills the requirements of R2.1 completely, without additional studies of a less-stressed system. Is that correct?
Response: Requirements R2.1.3 and R2.4.3 have been revised to make it clear that "sensitivity case(s) that are intended to stress the System with variations in one or more of the following conditions not already included in the studies shall be included in the Assessment". **R2.1.3** For each of the studies described in Requirements R2.1.1 and ~~Requirement~~ R2.1.2, sensitivity case(s) that are intended to stress the System with ~~sensitivities~~ variations ~~that reflect~~ in one or more of the following conditions not already included in the studies shall be ~~run and documentation of the technical rationale for why each of the conditions was or was not selected shall be supplied~~ included in the Assessment: **R2.4.3** For each of the studies described in Requirements R2.4.1 and ~~Requirement~~ R2.4.2, ~~s~~ensitivity case(s) that are intended to stress the System with variations ~~to reflect~~ in one or more of the following conditions not already included in the studies shall be ~~run and documentation of the technical rationale for why each of the conditions was or was not selected shall be supplied~~ included in the Assessment: The standard expects that at least one more of those variances listed in Requirement R2.1.3 and R2.4.3 that have not been integrated into the required studies are at least considered as "sensitivities". In addition, as written the standard is requiring at a minimum one case run for each required current year for steady state and Stability. This translates into three cases for steady state. The entity may run as many additional cases as it deems appropriate to understand how the System responds to the variances.		
Oncor Electric Delivery	Yes	Generally agree with modifications although would again stress that detailed load modeling for stability analysis may be as revealing as some of the sensitivity studies recommended in R2.1.3 if they were only run with steady state analysis.
Response: As with all planning models, assumptions must be made that the entity feels are representative of how the System will respond and perform. Models can only attempt to simulate the System based on expected conditions. The standard has been modified to explain that "an aggregate system Load model which represents the overall dynamic behavior of the Load is acceptable". **R2.4.1** System peak Load for one of the five years. For peak System Load levels, a Load model shall be used which appropriately represents the dynamic behavior of Loads, including consideration of the behavior of induction motor Loads. An aggregate system Load model which represents the overall dynamic		

Organization	Question 10:	Question 10 Comments:
behavior of the Load is acceptable.		
FirstEnergy Corp.	No	The requirements related to sensitivity cases as written in draft 2 are an improvement over draft 1 as they now allow flexibility in choosing sensitivities, compared to what use to be a fixed list of options. However, we do not agree with the need to document the technical rationale for why each listed condition was or was not selected. This seems to create a needless paper trail from an auditing viewpoint. If any documentation is needed, it should be limited to why the sensitivity was selected and it should not be required to indicate why others were not selected. Therefore, we suggest rewording 2.3.1 as follows: "For each of the studies described in Requirement R2.1.1 and Requirement R2.1.2, sensitivity case(s) that stress the System with sensitivities that reflect one or more of the following conditions shall be run and documentation of the technical rationale for why each of the conditions was selected shall be supplied:"R2.1.4 - This is an optional requirement and should be worked into the list of options within 2.1.3. As a stand alone requirement, what type of measure or VSL would be applicable for this requirement? We suggest re-numbering this requirement as a new 2.1.3.8 and reword it as follows: "Any other sensitivities, as deemed appropriate by the Transmission Planner or Planning Coordinator for their individual systems".R2.1.3.3 ? This requirement indicates sensitivity is needed for "Unavailability of long lead time facilities." Why is this required in a near-term planning horizon? How long is long? Doesn't the N-1-1 (Planning Event P6) test already account for this related to the outage of existing equipment which may present long lead times? Same comments apply for R2.4.3 and R2.4.4 in the stability study section.
Response: Requirements R2.1.3 and R2.4.3 have been revised to remove the requirement to explain why a sensitivity was not run since it would be necessary to run the study regardless to provide proof why it was not run. **R2.1.3** For each of the studies described in Requirements R2.1.1 and ~~Requirement~~ R2.1.2, sensitivity case(s) that are intended to stress the System with ~~sensitivities~~ variations ~~that reflect~~ in one or more of the following conditions not already included in the studies shall be ~~run and documentation of the technical rationale for why each of the conditions was or was not selected shall be supplied~~ included in the Assessment: **R2.4.3** For each of the studies described in Requirements R2.4.1 and ~~Requirement~~ R2.4.2, ~~s~~ensitivity case(s) that are intended to stress the System with variations ~~to reflect~~ in one or more of the following conditions not already included in the studies shall be ~~run and documentation of the technical rationale for why each of the conditions was or was not selected shall be supplied~~ included in the Assessment: The STD agrees. Requirements R2.1.4 and R2.4.4 have been deleted. The near-term horizon extends from one to five years. Equipment scheduled for installation in five years requires ordering today. Requirements R2.1.3 and R2.4.3 have been revised to make it clear that "~~s~~ensitivity case(s) that are intended to stress the System with variations in one or more of the following conditions not already included in the studies shall be included in the Assessment". The standard expects that at least one more of those variances listed in Requirements R2.1.3 and R2.4.3 that have not been integrated into the required studies are at least considered as "sensitivities".		
Orlando Utilities	Yes and No	I generally agree with the intent of requiring studies beyond just one load level and system condition; however I have some

Organization	Question 10:	Question 10 Comments:
Commission		specific suggestions, questions and comments. R2.1.3: As worded I have several concerns: 1. This would make any study performed that did not include sensitivities useless for performing the assessment. I recommend identify sensitivities and studies separately, with sensitivities just being smaller versions of studies. (Our usual definition is that a study demonstrates specific solutions to problems identified, whereas a sensitivity merely comments on the presence or lack of problems and how they relate to what is seen in the more formal studies. Obviously a problem found in a sensitivity not seen in a regular study receives additional focus.) 2. This would force the study to look only at the sensitivities listed rather then allow one or more of the conditions, plus additional conditions all in one run. This would force an entity to run additional studies if they wished to exceed the requirements rather then a single study that meets and exceeds the requirements. I suggest the following wording instead to still require the sensitivities, but allow flexibility in how they are performed. "R 2.1.3: At least one sensitivity shall be performed that stress the system based on one or more of the following conditions, plus any additional conditions determined by the transmission planner and planning coordinator. The Planning Assessment will also include the technical rationale for why each of the conditions was or was not selected for study that year. R.2.1.3.1- Suggest adding system growth, for example "season, weather, unpredicted system growth, or time of day". As written it does not seem to allow a study based on the long range load growth prediction being off, but instead only on a change in season, weather or time of day. R2.1.4: What was intended by using the phrase "Documentation of the technical rationale" instead of simply saying "shall include technical rationale"? I suggest dropping the "documentation of the" as this could cause confusion on an audit as to what is the difference between the "technical rationale" and "documentation of the technical rationale" unless the drafting team plans to define what "documentation of technical rationale is" other then the rationale itself.

Response: Requirements R2.1.3 and R2.4.3 have been revised to make it clear that "~~s~~ensitivity case(s) that are intended to stress the System with variations in one or more of the following conditions not already included in the studies shall be included in the Assessment". The standard expects that at least one more of those variances listed in Requirements R2.1.3 and R2.4.3 that have not been integrated into the required studies are at least considered as "sensitivities". In addition, as written, the standard is requiring at a minimum, one case run for each required current year for steady state and Stability. This translates into three cases for steady state. The entity may run as many additional cases as it deems appropriate to understand how the system responds to the variances.

R2.1.3 For each of the studies described in Requirements R2.1.1 and ~~Requirement~~ R2.1.2, sensitivity case(s) that are intended to stress the System with ~~sensitivities~~ variations ~~that reflect~~ in one or more of the following conditions not already included in the studies shall be ~~run and documentation of the technical rationale for why each of the conditions was or was not selected shall be supplied~~ included in the Assessment:

R2.4.3 For each of the studies described in Requirements R2.4.1 and ~~Requirement~~ R2.4.2, ~~s~~ensitivity case(s) that are intended to stress the System with variations ~~to reflect~~ in one or more of the following conditions not already included in the studies shall be ~~run and documentation of the technical rationale for why each of the conditions was or was not selected shall be supplied~~ included in the Assessment:

The SDT did not want to be more prescriptive because of the huge number of possible variances that can occur. It is up to the planning entity to determine which

Organization	Question 10:	Question 10 Comments:
and how much of a variance is appropriate for its studies. Requirements R2.1.3 and R2.4.4 have been revised to remove the requirement to explain why a sensitivity was not run since it would be necessary to run the study regardless to provide proof why it was not run. Since these are sensitivities, any and all variances provide some level of information as to how the system responds to such variances. Requirements R2.1.4 and R2.4.4 have been deleted		
Entergy Services, Inc.	No	R2.1.3.2 - Modification of expected transfers: Modification of expected transfers infers that non-firm transmission use would be estimated based on historical data or perhaps an economic outlook. To plan the system for such non-firm use is an imprudent burden on rate payers. Economic tools are available to ascertain the benefits of system upgrades and prudently allocate the costs of such upgrades. Generation assets and the future plans of those assets is market sensitive information that could easily be extracted from such sensitivity analyses. Results of these sensitivity studies should be used to aid in reliably operating the system. They should not be a basis for constructing transmission facilities for reliability. These types of studies are aligned with the operating horizon. See also comments made above regarding 2.1.3.4 and 2.1.3.7.In general, we believe that breaking these requirements into specific sub requirements, focusing on specific sensitivities, is too prescriptive and inappropriate. It will lead to over focus on these particular issues to the detriment of system reliability. There should be no enumerated list of required sensitivities. Engineering judgment needs to be permitted. Many examples of sensitivities are already inherent in the existing requirements. Some sensitivity studies are in effect adding an additional level of contingency (N-2 or N-3). Sensitivity studies of load variation are already inherent in the fact that several different study years and conditions are already being required. Outages of reactive sources and generation should already be included in studies of multiple contingencies. The process of planning new generation (system impact studies) will include studies of the future with and without the proposed new equipment. The TP and PC can better select the most appropriate sensitivities for their system. We recommend that engineering judgment continue to be recognized as a vital component of planning.
Response: Requirements R2.1.3 and R2.4.3 have been revised to make it clear that "sensitivity case(s) that are intended to stress the System with variations in one or more of the following conditions not already included in the studies shall be included in the Assessment". The standard expects that at least one more of those variances listed in Requirements R2.1.3 and R2.4.3 that have not been integrated into the required studies are at least considered as "sensitivities". In addition, as written, the standard is requiring at a minimum, one case run for each required current year for steady state and Stability. This translates into three cases for steady state. The entity may run as many additional cases as it deems appropriate to understand how the system responds to the variances. **R2.1.3** For each of the studies described in Requirements R2.1.1 and ~~Requirement~~ R2.1.2, sensitivity case(s) that are intended to stress the System with ~~sensitivities~~ variations ~~that reflect~~ in one or more of the following conditions not already included in the studies shall be ~~run and documentation of the technical rationale for why each of the conditions was or was not selected shall be supplied~~ included in the Assessment: **R2.4.3** For each of the studies described in Requirements R2.4.1 and ~~Requirement~~ R2.4.2, sensitivity case(s) that are intended to stress the System with variations ~~to reflect~~ in one or more of the following conditions not already included in the studies shall be ~~run and documentation of the technical rationale for why each of the conditions was or was not selected shall be supplied~~ included in the Assessment:		

Organization	Question 10:	Question 10 Comments:
The SDT believes that planners must consider these possible variances and reinforce the System so that when it comes to Real-time operation, the TOP will have a System sufficiently robust to operate around any of the conditions. Commenters generally agree that these are the responsibility of planning. The SDT did not want to be more prescriptive because of the huge number of possible variances that can occur. It is up to the planning entity to determine which and how much of a variance is appropriate for its studies.		
BPA Transmission Reliability Program	No	For those conditions that are "not" studied, it makes sense to explain why that particular condition was not selected. However, we do not agree with R2.1.3 that a rationale needs to be provided for why a particular sensitivity "is" selected for study. Running additional sensitivities provides a better understanding of system performance and doesn't need further justification. Requirement R2.1.4 is not needed and should be removed. It should be up to the Transmission Provider's discretion whether they run additional sensitivity studies beyond what the standard requires in R2.1.3, and it should not be necessary to justify why they chose to run them. What a sensitivity study consists of, needs further clarification. For example, if a system assessment is performed using a case with transmission paths stressed near their limits, is this considered the baseline or a sensitivity? If it is considered the baseline, would a sensitivity be required at reduced stress levels and what purpose would this serve when the original case produced the more severe system impacts? This needs further clarification.
Response: Requirements R2.1.3 and R2.4.3 have been revised to remove the requirement to explain why sensitivity was not run since it would be necessary to run the study regardless to provide proof why it was not run. **R2.1.3** For each of the studies described in Requirements R2.1.1 and ~~Requirement~~ R2.1.2, sensitivity case(s) that are intended to stress the System with ~~sensitivities~~ variations ~~that reflect~~ in one or more of the following conditions not already included in the studies shall be ~~run and documentation of the technical rationale for why each of the conditions was or was not selected shall be supplied~~ included in the Assessment: **R2.4.3** For each of the studies described in Requirements R2.4.1 and ~~Requirement~~ R2.4.2, sensitivity case(s) that are intended to stress the System with variations ~~to reflect~~ in one or more of the following conditions not already included in the studies shall be ~~run and documentation of the technical rationale for why each of the conditions was or was not selected shall be supplied~~ included in the Assessment: Requirements R2.1.4 and R2.4.4 have been deleted. Requirements R2.1.3 and R2.4.3 have been revised to make it clear that “sensitivity case(s) that are intended to stress the System with variations in one or more of the following conditions not already included in the studies shall be included in the Assessment”. The standard expects that at least one more of those variances listed in Requirements R2.1.3 and R2.4.3 that have not been integrated into the required studies are at least considered as “sensitivities”.		
City Water, Light & Power - Springfield, Illinois	Yes	

Organization	Question 10:	Question 10 Comments:
Platte River Power Authority	Yes	
BCTC	Yes	
Manitoba Hydro	Yes	
Tenaska, Inc.	Yes	
Arkansas Electric Coop. Corp.	Yes	
AEP	Yes	
LCRA TSC	Yes	
Response: Thank you for your response.		

11. **In response to industry comments, the SDT modified Table 1 requirements for Planning Event P6. Planning Event P6 involves independent overlapping single contingencies (n-1-1) involving two Transmission Facilities excluding generators. This Planning Event generally correlates to P5 of the first draft and now includes shunt devices. The P6 event was also revised to permit loss of Non-Consequential Load to meet performance requirements for Systems above 300 kV.**

    Do you concur with the modifications? If not, please state why and/or suggest specific changes.

Summary Consideration:

A substantial majority of the industry respondents agree with the revision to permit loss of Non-Consequential Load to meet performance requirements for P6 Events involving systems above as well as below 300 kV, considering the low probability of such Events.

There are concerns that this change would make it difficult for scheduling maintenance outages because the existing TPL-003-0 allows shedding of Non-Consequential Load after the next outage . However, in the proposed standard, If a facility is scheduled out of service for maintenance, the next outage would be considered a single Contingency Event, and loss of Non-Consequential Load is not permitted.

There are concerns expressed by numerous respondents that after the first single Contingency and System adjustment, curtailment of Firm Transmission Services (or firm transfers) and shedding of firm Load would not be allowed in preparation for the second Contingency. The SDT added Footnote # 10 to the end of Table 1 to reflect that Curtailment or Interruption of Firm Transmission Service in preparation for the next Contingency will be allowed. However, until the next Contingency occurs, System performance will need to meet the requirements for a single Contingency Event. As such, the proposed standard will not allow loss of any firm Non-Consequential Load, except for contracted Interruptible Loads, in preparation for the next Contingency. Nonetheless, the SDT has provided an exception (Requirement R2.6.4) to address those situations, which may arise that are beyond the control of the Transmission Planner or Planning Coordinator, and, which can prevent the implementation of the relevant Corrective Action Plan in the required timeframe.

Some respondents requested that System adjustment be defined. The SDT believes that Header note ‘e’ and the new Footnote # 10 provides the description of the System adjustments allowed after a first Contingency Event.

There were also requests for clarification between a P1 Event, which occurred after another Facility has been out of service, for example, for scheduled maintenance, and a P6 Event, since the former will not allow loss of Non-Consequential Load, while the latter would allow it. The SDT believes that the difference between these two Events is whether the prior outage was planned (such as maintenance) or anticipated (such as extended outage). Therefore, if the Prior outage is planned or anticipated, then the next N-1 is a single Contingency Event, otherwise, it would be a P6 Event.

Concerns were also expressed that the TP and PC should have discretion on the Contingencies (for example, shunt devices) to study and analyze. One response suggests that the P6 Event to be studied should have a common reason to occur. The SDT modified Requirement R3.3 (now R3.4) to allow the PC and TP to determine the single and multiple Contingencies to be included in the planning analyses. This would give the TP and the PC the discretion to study the Contingency most suited to the area of study, and they can choose not to study loss of shunt devices, or those P6 Events that do not have a common reason to occur, if these are less severe than the Events studied.

Some responses suggest that there should be a specific limit to the amount of Load loss allowed. While the SDT does not disagree with having some specific limits below which Load loss would be allowed, arriving at such an amount may be too case-specific and too prescriptive for a Continent-wide Standard.

One response disagrees that the requirement should be so much more severe for an internal breaker fault as opposed to two single line outages for elements over 300 kV. The SDT believes that an internal breaker fault would remove from service all Facilities connecting to the faulted breaker simultaneously, which would likely be more severe than outage of two single lines.

As a result of industry comments, the following requirements were changed:

R3.3.3 (now R3.4) Those Planning Event Contingencies in Table 1 ~~– Steady State Performance~~ ~~not covered in Requirement R3.3.2~~ that are expected to produce more severe System impacts shall be identified~~,~~ and a list of those Contingencies to be evaluated for System performance in Requirement R3.1 created~~,~~. ~~and t~~The rationale for the Contingencies selected for evaluation shall be available as supporting information and shall ~~includ~~include~~e~~ an explanation of why the remaining Contingencies would produce less severe System results.

Header note 'e' - For all Planning Events, planned System adjustments such as Transmission configuration changes and redispatch of generation are allowed if such adjustments are executable within the time duration applicable to the Facility Ratings.

Footnote #10 – Curtailment of firm transmission service, when coupled with the appropriate re-dispatch of resources obligated to re-dispatch, is allowed both as a System adjustment (as identified in the column titled 'Initial System Conditions') and a corrective action, where it can be demonstrated that Facilities remain within applicable Facility Ratings and those adjustments do not result in the shedding of any firm Load. Where limited options for re-dispatch exist, sensitivities associated with the availability of those resources must be considered. Where Facilities external to the Transmission Planner's planning region are relied upon, Facility Ratings in those regions must be considered.

Organization	Question 11:	Question 11 Comments:
Dominion - Electric Transmission Planning	No	For Bulk Electric System (BES) Elements out of Service above 300 kV, interruption of Firm Transmission Service and Non-Consequential Load Loss should not be allowed. We favor the language proposed in the previous draft.
ITC Holdings: ITC, METC, ITC Midwest	No	Allowing load loss for shutdown plus contingency might seriously jeopardize maintenance outages when you actually encounter this situation in real-time. It's easy to say these things in the ?planning horizon? but it might be politically unacceptable for "real-time". This is particularly true for higher voltage systems above 300kV. We understand that there could be "load-pocket" situations at lower voltages where this might be allowed but EHV systems are back-bone systems. This would set a bad precedent if allowed.
Lafayette Utilities	No	Lafayette does not agree that the loss of Non-Consequential Load should be permitted as a corrective action. See also

Organization	Question 11:	Question 11 Comments:
System		paragraph (b) in response to Question 15.
Arkansas Electric Coop. Corp.	No	Non-Consequential Load Loss should not be allowed. See comments to question 7.
Response: Thank you for your comments but the majority of the industry respondents agree with the revision to permit loss of Non-Consequential Load to meet performance requirements for P6 Events involving Systems above as well as below 300 kV considering the low probability of such Events.		
City Water, Light & Power - Springfield, Illinois	Yes and No	Shunt devices should only need to be included in contingency analysis at the discretion of the TP or PC.
CenterPoint Energy and CPS Energy	No	We believe P6 should be deleted. As noted earlier, we believe credible multiple contingencies should be studied as planning events, with incredible multiple contingencies possibly considered as extreme events. If P6 is retained, we believe loss of shunt devices should not be studied and believes the ability to systematically study the contingency loss of every individual switched shunt device is not supported by commercially available PTI software because up to this point it has not generally been recognized as a necessary or desirable analysis to perform. Also, if P6 is retained, we believe loss of Non-Consequential Load should be permitted at any voltage level for this type of extreme event.
Response: Requirement R3.3.3 (now Requirement R3.4) was modified to allow the PC and TP to determine the single and multiple Contingencies to be included in the planning analyses. This would give the TP and the PC the discretion to study the Contingencies most suited to the study area, including whether to include shunt devices in the analyses. **R3.4** Those Planning Event Contingencies in Table 1 ~~– Steady State Performance~~ ~~not covered in Requirement R3.3.2~~ that are expected to produce more severe System impacts shall be identified~~,~~ and a list of those Contingencies to be evaluated for System performance in Requirement R3.1 created~~,~~. ~~and t~~The rationale for the Contingencies selected for evaluation shall be available as supporting information and shall ~~includ~~include~~e~~ an explanation of why the remaining Contingencies would produce less severe System results.		
Progress Energy Carolinas	No	While we agree interruption of firm transmission service and non-consequential load loss should not be allowed to meet the planning requirements for the first system contingency (defined as initial system condition in the table), these system adjustments should be allowed to prepare for the second event so that the system will meet the requirements following the second event. We recommend that clarifying changes be made to ensure that this is clearly understood. One suggestion would be to include the following footnote to P6 in both the Steady State and Stability Tables.? Foot note: Interruption of firm transmission service and/or non-consequential load loss is allowed after the first event as a System adjustment to prepare

Organization	Question 11:	Question 11 Comments:
		for and meet the requirements of the second event. See also our related response to question 15.
Gainesville Regional Utilities	Yes and No	I believe some clarification is needed to specify that you can or can not curtail firm transmission service prior to the next event, because as written it could lead to compliance audit issues. I don't believe the intend of order 693 was to cause a need for utilities to be exposed to large cost increases for their customers while very little to no improvement in reliability is provided as it deals with very low probability conditions which would yield no increase in transfer capability.
JEA	Yes and No	JEA agrees with the changes on the surface, but still does not agree with the concept that it can not curtail Firm Transmission Service after the first N-1 event in preparation for the second N-1 event. JEA's existing Firm Transmission Service customers understand the need to maintain these existing transmission loading relief procedures in order to maintain security of the BES. The only JEA system element that causes this concern has a very high availability and would have a very costly infrastructure improvement to meet this requirement resulting in all of JEA's Firm Transmission Service Customers experiencing increased service cost or in the worst case having their service opportunities permanently curtailed.
Florida Power and Light	No	The P6 Planning Event is not clearly defined. It appears that the Initial System Condition is the Planning Event of P1, with the ?System Adjustments? allowed under P1 to keep facilities within the applicable ratings. R3.5.3. requires that a sustainable, stable, operating condition is maintained. This does not state prepared for the next contingency?. Given FERC's interpretation of TPL-002-0 Category B (see paragraphs below for excerpts from Order 693) that the system is not required to be able to withstand another N-1 contingency, the proposed new standard appears to require that this state be "sustained" indefinitely after a P1 event, or until the P6 Event, which is loss of the second element, with no mention of the time duration between the initial system condition and the event. The performance criteria for a P1 event can be met as long as it does not contemplate another event that would change the event to a P6 event. However, a P6 event is a TPL-003-0 Category C event which must contemplate a second contingency after the first. The existing TPL standards accomplished this with footnote b) in the Tables for all of the TPL standards, allowing system adjustments including curtailment of contracted firm transfers to prepare for the next contingency. Since FERC clearly states that this is not a requirement under TPL-002-0, but that it is addressed in TPL-003-0, they directed the ERO to modify the footnote for TPL-002-0. In TPL-003-0 the Category C3 event refers to a "Category B contingency, manual system adjustments, followed by another Category B contingency", however since the footnote for Category B contained the "To prepare for the next contingency?." language, and it is contained in the Table for TPL-003-0, that language must apply to the C3 event. Further, in Order 693, on TPL-003-0, FERC (1) did not direct the ERO to modify the same footnote which is contained in TPL-003-0, (2) recognizes that these are low probability events, and (3) stated that it "does not intend to recommend action on this issue [the appropriateness and value of including the ability of the system to withstand two simultaneous Category B contingencies for major load pockets] at

Organization	Question 11:	Question 11 Comments:
		this time and, instead, directs the ERO to consider the comments in possible future revisions to the Reliability Standard.? The SDT has inappropriately applied the direction of FERC on TPL-002-0 to the P6 event (which is similar to TPL-003-0 C3) without regard to its implications on the industry, the ratepayers, or even its own standards, as the impact of the team's interpretation would require changes in the methods of determining TTC's, ATC's, and SOL's. The additional costs (both monetary and intangible) incurred by ratepayers for no gain in the ability to transfer firm electric power, far outweigh any gain in reliability benefits for these low probability events. Just to provide one example to illustrate this point, if the SDT's current interpretation for a P6 event is not modified, FPL would have to spend in excess of $ 1 Billion dollars, in order to meet this performance criteria for 500 kV facilities, for an event with a probability of less than 0.07 per hundred mile-years (based on FPL's 500 kV facilities), which would be passed on to its ratepayers. There are many other examples on the FPL system, as well as other systems. This interpretation is fatally flawed and makes no sense from a reliability or cost perspective, not to mention the intangible impacts of siting, right-of-way acquisition, EMF, NIMBY, etc. Further, assuming the SDT interpretation, how could one justify the need before state commissions, and exercise eminent domain in the courts to take someone's land for right-of-way, a process that could take as long as 8-10 years, for minimal increase in reliability, and no increase in transfer capability. In order to assist the SDT, these paragraphs are included with references to FERC Order 693, to show that it has misinterpreted Order 693. The following captions stated below should help clarify this point. Order 693 states: P.1788 ?Under TPL-002-0 the system is not required to be able to withstand another N-1 contingency. That N-1 requirement is a Category C contingency which is addressed by TPL-003-0.? Therefore, the end state of P1 is not a ?secure? state, but a ?normal operating state?, as stated in P. 1796 ?The Commission, therefore, directs the ERO to modify the second sentence of footnote (b) to clarify that manual system adjustments other than shedding of firm load or curtailment of firm transfers are permitted to return the system to a normal operating state after the first contingency, provided these adjustment can be accomplished within the time period allowed by the short term or emergency ratings.? These two determinations by FERC together show that their interpretation of normal operating state is not the secure, ready for the next contingency state, rather, it is the state in which the performance criteria have been met for that planning event. With regard to the FERC direction of Order 693 on TPL-003 and ?the appropriateness and value of including the ability of the system to withstand two simultaneous Category B contingencies for major load pockets?, FERC states in P. 1824, ?Many commenters indicated that this was a very low probability event and the costs for addressing such an event would be significant. As a result, EEI states that a dialogue must first be initiated within the industry and with state public utility commissions to identify such load pockets, to target the required potentially significant transmission investments and to develop plans for allocating the costs of such investments. In light of these comments, the Commission does not intend to recommend action on this issue at this time and, instead, directs the ERO to consider the comments in possible future revisions to the Reliability Standard.?FPL agrees with the increased performance requirement for the P3 multiple contingency event that assumes the loss of a generator as the first contingency. Firm transfers should not depend upon specific generators being on line, however firm transfers must depend upon transmission lines being in-service.
SERC Dynamics	Yes	The changes are more practical. If two or more 500kV lines are lost, it makes complete sense to allow loss of non-consequential load so long as cascading outages are not triggered. While we agree interruption of firm transmission service

Organization	Question 11:	Question 11 Comments:
Review Subcommittee		and non-consequential load loss should not be allowed to meet the planning requirements for the first system contingency (defined as initial system condition in the table), these system adjustments should be allowed to prepare for the second event so that the system will meet the requirements following the second event. We recommend that clarifying changes be made to incorporate this concept. We recommend that the statement above be included as modification or as a footnote for the P6 portion of the table as follows:Foot note: Interruption of firm transmission service and non-consequential load loss should be allowed after the first event as a system adjustment to prepare for the second event and meet the requirements following the second event.See our related response to question 15.
Southern Company Transmission	Yes and No	The requirements are more practical now. If two or more 500kV lines are lost, it makes complete sense to allow loss of non-consequential load so long as cascading outages are not triggered. While we agree interruption of firm transmission service and non-consequential load loss should not be allowed to meet the planning requirements for the first system contingency (to get loadings back within normal ratings), these system adjustments should be allowed to prepare for the second event so that the system will meet the requirements following the second event. We recommend that clarifying changes be made to incorporate this concept. We recommend that the statement below be included as modification or as a footnote for the P6 portion of the table as follows: Interruption of firm transmission service and non-consequential load loss are allowed after the first event as a system adjustment to prepare for the second event in order to meet the requirements following the second event.
Duke Energy	Yes	The changes are more practical. If two or more 500kV lines are lost, it makes complete sense to allow loss of non-consequential load so long as cascading outages are not triggered.? While we agree interruption of firm transmission service and non-consequential load loss should not be allowed to meet the planning requirements for the first system contingency (defined as initial system condition in the table), these system adjustments should be allowed to prepare for the second event so that the system will meet the requirements following the second event.? We recommend that clarifying changes be made to incorporate this concept. We recommend that the statement above be included as a modification or as a footnote for the P6 portion of the Steady State and Stability tables as follows: "For P6 multiple contingency events, Transmission configuration changes and redispatch of generation are allowed provided that all Facilities shall be operating within their Facility Ratings and within their thermal and voltage limits. Permissible Transmission configuration changes include dropping of load and firm transfers needed to prepare for the second contingency. See our related response to question 15.
SERC Reliability Review Subcommittee and Planning Standards	Yes	Since Event P6 is essentially a sub-set of the existing Category C.3 Contingency events, we support these modifications which make the system performance requirements for P6 consistent with what exist today for Category C.3. While we agree interruption of firm transmission service and non-consequential load loss should not be allowed to meet the planning requirements for the first system contingency, these system adjustments should be allowed to prepare for the second event so that the system will meet the requirements following the second event. We recommend that clarifying changes be made to incorporate this concept. We recommend that the statement below be included as modification or as a footnote for the P6 portion of the table as follows: Interruption of firm transmission service and non-consequential load loss are allowed after the

Organization	Question 11:	Question 11 Comments:
Subcommittee		first event as a system adjustment to prepare for the second event in order to meet the requirements following the second event.
Orlando Utilities Commission	Yes and No	As written the standard does not seem to forbid the adjustment of firm transfers and non-consequential load in preparation for the second part of an N-1-1, however that conflicts with the teams statements on the recent national call. If the intent is to forbid the adjustment of firm transfers and non-consequential load in preparation for the second part of an n-1-1 that needs to be made explicitly clear in the standard. This is especially important since one of the current understandings of the standards relating to Transmission Planning and System Operating Limits clearly allow such adjustments, and to not make it clear is building a compliance trap for the unwary. While I do not support the creation of this n-1-1 threshold if it is going to be established it needs to be abundantly clear.
Entergy Services, Inc.	Yes and No	Since Event P6 is essentially a sub-set of the existing Category C.3 Contingency events, we support these modifications which make the system performance requirements for P6 consistent with what exist today for Category C.3.While we agree interruption of firm transmission service and non-consequential load loss should not be allowed to meet the planning requirements for the first system contingency (to get loadings back within normal ratings), these system adjustments should be allowed to prepare for the second event so that the system will meet the requirements following the second event. We recommend that clarifying changes be made to incorporate this concept. We recommend that the statement below be included as modification or as a footnote for the P6 portion of the table as follows: Interruption of firm transmission service and non-consequential load loss are allowed after the first event as a system adjustment to prepare for the second event in order to meet the requirements following the second event. As the requirement is now implemented in the table, transmission service would need to be made available only if they can be accommodated for N-2 events. This would place these services on equal footing from a reliability perspective but would virtually eliminate the firm transmission market.
Response: Footnote #10 has been added to the end of Table 1 to reflect that curtailment or interruption of Firm Transmission Service will be allowed in preparation for the next Contingency. However, until the next Contingency occurs, System performance will need to meet the requirements for Event P1. As such, the proposed standard will not allow loss of any Non-Consequential Load, except for contracted Interruptible Loads, in preparation for the next Contingency. Nonetheless, the SDT has provided an exception (R2.6.4) to address those situations, which may arise that are beyond the control of the Transmission Planner or Planning Coordinator, and, which can prevent the implementation of the relevant Corrective Action Plan in the required timeframe. **Footnote #10** – Curtailment of firm transmission service, when coupled with the appropriate re-dispatch of resources obligated to re-dispatch, is allowed both as a System adjustment (as identified in the column titled 'Initial System Conditions') and a corrective action, where it can be demonstrated that Facilities remain within applicable Facility Ratings and those adjustments do not result in the shedding of any firm Load. Where limited options for re-dispatch exist, sensitivities associated with the availability of those resources must be considered. Where Facilities external to the Transmission Planner's planning region are relied upon, Facility Ratings in those regions must be considered.		
Transmission	Yes	We agree with revising P6 to permit loss of Non-Consequential Load to meet performance requirements for Systems above

Organization	Question 11:	Question 11 Comments:
Agency of Northern California		300kV. However, we are concerned that with the loss of the first N-1 in P6, curtailment of firm transmission service or firm transfers would not be allowed as part of system adjustment in preparation for the next N-1. Allowing curtailment of transmission service or firm transfers for such system adjustments should be added to R3.3.2.2. Otherwise, the power transfer under normal condition (before the first N-1) will have to be significantly curtailed in anticipation for meeting performance requirements after N-1-1, or transmission facilities, which would have otherwise been unnecessary, would have to be built. Either would adversely impact customers. We also have questions on Event P6 in both Performance Tables 1 and 2: We would like some clarification on the overlapping single contingencies as denoted in Event P6 (N-1-1), and one where a single contingency, say Event P1 (N-1), follows a prior "planned" outage of a Facility (N-1). The former would allow the Non-consequential Load Loss, while the latter would prohibit it.
Pacific Gas and Electric Co.	Yes	We agree with revising P6 to permit loss of Non-Consequential Load to meet performance requirements for Systems above 300kV. However, we are concerned that with the loss of the first N-1 in P6, curtailment of firm transmission service or firm transfers would not be allowed as part of system adjustment in preparation for the next N-1. Allowing curtailment of transmission service or firm transfers for such system adjustments should be added to R3.3.2.2. Otherwise, the power transfer under normal condition (before the first N-1) will have to be significantly curtailed in anticipation for meeting performance requirements after N-1-1, or transmission facilities, which would have otherwise been unnecessary, would have to be built. Either would adversely impact customers. We also have questions on Event P6 in both Performance Tables 1 and 2: We would like some clarification on the overlapping single contingencies as denoted in Event P6 (N-1-1), and one where a single contingency, say Event P1 (N-1), follows a prior "planned" outage of a Facility (N-1). The former would allow the Non-consequential Load Loss, while the latter would prohibit it.
Public Service Company of New Mexico	Yes	We agree with revising P6 to permit loss of Non-Consequential Load to meet performance requirements for Systems above 300kV. However, we are concerned that with the loss of the first N-1 in P6, curtailment of firm transmission service or firm transfers would not be allowed as part of system adjustment in preparation for the next N-1. Allowing curtailment of transmission service or firm transfers for such system adjustments should be added to R3.3.2.2. Otherwise, the power transfer under normal condition (before the first N-1) will have to be significantly curtailed in anticipation for meeting performance requirements after N-1-1, or transmission facilities, which would have otherwise been unnecessary, would have to be built. Either would adversely impact customers. We also have questions on Event P6 in both Performance Tables 1 and 2: We would like some clarification on the overlapping single contingencies as denoted in Event P6 (N-1-1), and one where a single contingency, say Event P1 (N-1), follows a prior "planned" outage of a Facility (N-1). The former would allow the Non-consequential Load Loss, while the latter would prohibit it.
Puget Sound Energy, Inc.	Yes	We agree with revising P6 to permit loss of Non-Consequential Load to meet performance requirements for Systems above 300 kV. However, we are concerned that with the loss of the first N-1 in P6, curtailment of firm transmission service or firm transfers would not be allowed as part of system adjustment in preparation for the next N-1. Allowing curtailment of transmission service or firm transfers for such system adjustments should be added to R3.3.2.2. Otherwise, the power

Organization	Question 11:	Question 11 Comments:
		transfer under normal condition (before the first N-1) will have to be significantly curtailed in anticipation for meeting performance requirements after N-1-1, or transmission facilities, which would have otherwise been unnecessary, would have to be built. Either would adversely impact customers. We also have questions on Event P6 in both Performance Tables 1 and 2: We would like some clarification on the overlapping single contingencies as denoted in Event P6 (N-1-1), and one where a single contingency, say Event P1 (N-1), follows a prior "planned" outage of a Facility (N-1). The former would allow the Non-consequential Load Loss, while the latter would prohibit it.
Idaho Power Company	Yes	We agree with revising P6 to permit loss of Non-Consequential Load to meet performance requirements for Systems above 300kV. However, we are concerned that with the loss of the first N-1 in P6, curtailment of firm transmission service or firm transfers would not allowed as part of system adjustment in preparation for the next N-1. Allowing curtailment of transmission service or firm transfers for such system adjustments should be added to R3.3.2.2. Otherwise, the power transfer under normal condition (before the first N-1) will have to be significantly curtailed in anticipation for meeting performance requirements after N-1-1, or transmission facilities, which would have otherwise been unnecessary, would have to be built. Either would adversely impact customers. We also have questions on Event P6 in both Performance Tables 1 and 2: We would like some clarification on the overlapping single contingencies as denoted in Event P6 (N-1-1), and one where a single contingency, say Event P1 (N-1), follows a prior "planned" outage of a Facility (N-1). The former would allow the Non-consequential Load Loss, while the latter would prohibit it.
SMUD	Yes	We agree with revising P6 to permit loss of Non-Consequential Load to meet performance requirements for Systems above 300kV. However, we are concerned that with the loss of the first N-1 in P6, curtailment of firm transmission service or firm transfers would not be allowed as part of system adjustment in preparation for the next N-1. Allowing curtailment of transmission service or firm transfers for such system adjustments should be added to R3.3.2.2. Otherwise, the power transfer under normal condition (before the first N-1) will have to be significantly curtailed in anticipation for meeting performance requirements after N-1-1, or transmission facilities, which would have otherwise been unnecessary, would have to be built. Either would adversely impact customers. We also have questions on Event P6 in both Performance Tables 1 and 2: We would like some clarification on the overlapping single contingencies as denoted in Event P6 (N-1-1), and one where a single contingency, say Event P1 (N-1), follows a prior "planned" outage of a Facility (N-1). The former would allow the Non-consequential Load Loss, while the latter would prohibit it.
Sierra Pacific Power Company / Nevada Power Company	Yes	We agree with revising P6 to permit loss of Non-Consequential Load to meet performance requirements for Systems above 300kV. However, we are concerned that with the loss of the first N-1 in P6, curtailment of firm transmission service or firm transfers would not allowed as part of system adjustment in preparation for the next N-1. Allowing curtailment of transmission service or firm transfers for such system adjustments should be added to R3.3.2.2. Otherwise, the power transfer under normal condition (before the first N-1) will have to be significantly curtailed in anticipation for meeting performance requirements after N-1-1, or transmission facilities, which would have otherwise been unnecessary, would have to be built. Either would adversely impact customers. We also have questions on Event P6 in both Performance Tables 1

Organization	Question 11:	Question 11 Comments:
		and 2: We would like some clarification on the overlapping single contingencies as denoted in Event P6 (N-1-1), and one where a single contingency, say Event P1 (N-1), follows a prior "planned" outage of a Facility (N-1). The former would allow the Non-consequential Load Loss, while the latter would prohibit it.
Black Hills Corporation	Yes	We agree with revising P6 to permit loss of Non-Consequential Load to meet performance requirements for Systems above 300kV. However, we are concerned that with the loss of the first N-1 in P6, curtailment of firm transmission service or firm transfers would not be allowed as part of system adjustment in preparation for the next N-1. Allowing curtailment of transmission service or firm transfers for such system adjustments should be added to R3.3.2.2. Otherwise, the power transfer under normal condition (before the first N-1) will have to be significantly curtailed in anticipation for meeting performance requirements after N-1-1, or transmission facilities, which would have otherwise been unnecessary, would have to be built. Either would adversely impact customers. We also have questions on Event P6 in both Performance Tables 1 and 2: We would like some clarification on the overlapping single contingencies as denoted in Event P6 (N-1-1), and one where a single contingency, say Event P1 (N-1), follows a prior "planned" outage of a Facility (N-1). The former would allow the Non-consequential Load Loss, while the latter would prohibit it.
SRP	Yes	We agree with revising P6 to permit loss of Non-Consequential Load to meet performance requirements for Systems above 300kV. However, we are concerned that with the loss of the first N-1 in P6, curtailment of firm transmission service or firm transfers would not be allowed as part of system adjustment in preparation for the next N-1. Allowing curtailment of transmission service or firm transfers for such system adjustments should be added to R3.3.2.2. Otherwise, the power transfer under normal condition (before the first N-1) will have to be significantly curtailed in anticipation for meeting performance requirements after N-1-1, or transmission facilities, which would have otherwise been unnecessary, would have to be built. Either would adversely impact customers. We also have questions on Event P6 in both Performance Tables 1 and 2: We would like some clarification on the overlapping single contingencies as denoted in Event P6 (N-1-1), and one where a single contingency, say Event P1 (N-1), follows a prior "planned" outage of a Facility (N-1). The former would allow the Non-consequential Load Loss, while the latter would prohibit it.
Tucson Electric Power Company	Yes	We agree with revising P6 to permit loss of Non-Consequential Load to meet performance requirements for Systems above 300kV. However, we are concerned that with the loss of the first N-1 in P6, curtailment of firm transmission service or firm transfers would not be allowed as part of system adjustment in preparation for the next N-1. Allowing curtailment of transmission service or firm transfers for such system adjustments should be added to R3.3.2.2. Otherwise, the power transfer under normal condition (before the first N-1) will have to be significantly curtailed in anticipation for meeting performance requirements after N-1-1, or transmission facilities, which would have otherwise been unnecessary, would have to be built. Either would adversely impact customers. We also have questions on Event P6 in both Performance Tables 1 and 2: We would like some clarification on the overlapping single contingencies as denoted in Event P6 (N-1-1), and one where a single contingency, say Event P1 (N-1), follows a prior "planned" outage of a Facility (N-1). The former would allow

Organization	Question 11:	Question 11 Comments:
		the Non-consequential Load Loss, while the latter would prohibit it.
Modesto Irrigation District	Yes	We agree with revising P6 to permit loss of Non-Consequential Load to meet performance requirements for Systems above 300kV. However, we are concerned that with the loss of the first N-1 in P6, curtailment of firm transmission service or firm transfers would not be allowed as part of system adjustment in preparation for the nextN-1. Allowing curtailment of transmission service or firm transfers for such system adjustments should be added to R3.3.2.2. Otherwise, the power transfer under normal condition (before the first N-1) will have to be significantly curtailed in anticipation for meeting performance requirements after N-1-1, or transmission facilities, which would have otherwise been unnecessary, would have to be built. Either would adversely impact customers. We also have questions on Event P6 in both Performance Tables 1 and 2: We would like some clarification on the overlapping single contingencies as denoted in Event P6 (N-1-1), and one where a single contingency, say Event P1 (N-1), follows a prior "planned" outage of a Facility (N-1). The former would allow the Non-consequential Load Loss, while the latter would prohibit it.
Tri-State G&T	Yes	We agree with revising P6 to permit loss of Non-Consequential Load to meet performance requirements for Systems above 300kV. However, we are concerned that with the loss of the first N-1 in P6, curtailment of firm transmission service or firm transfers would not be allowed as part of system adjustment in preparation for the next N-1. Allowing curtailment of transmission service or firm transfers for such system adjustments should be added to R3.3.2.2. Otherwise, the power transfer under normal condition (before the first N-1) will have to be significantly curtailed in anticipation for meeting performance requirements after N-1-1, or transmission facilities, which would have otherwise been unnecessary, would have to be built. Either would adversely impact customers. We also have questions on Event P6 in both Performance Tables 1 and 2: We would like some clarification on the overlapping single contingencies as denoted in Event P6 (N-1-1), and one where a single contingency, say Event P1 (N-1), follows a prior "planned" outage of a Facility (N-1). The former would allow the Non-consequential Load Loss, while the latter would prohibit it.
ColumbiaGrid	Yes	We agree with revising P6 to permit loss of Non-Consequential Load to meet performance requirements for Systems above 300kV. However, we are concerned that with the loss of the first N-1 in P6, curtailment of firm transmission service or firm transfers would not be allowed as part of system adjustment in preparation for the next N-1. Allowing curtailment of transmission service or firm transfers for such system adjustments should be added to R3.3.2.2. Otherwise, the power transfer under normal condition (before the first N-1) will have to be significantly curtailed in anticipation for meeting performance requirements after N-1-1, or transmission facilities, which would have otherwise been unnecessary, would have to be built. Either would adversely impact customers. We also have questions on Event P6 in both Performance Tables 1 and 2: We would like some clarification on the overlapping single contingencies as denoted in Event P6 (N-1-1), and one where a single contingency, say Event P1 (N-1), follows a prior "planned" outage of a Facility (N-1). The former would allow the Non-consequential Load Loss, while the latter would prohibit it.

Organization	Question 11:	Question 11 Comments:
Southern California Edison	Yes	We agree with revising P6 to permit loss of Non-Consequential Load to meet performance requirements for Systems above 300kV. However, we are concerned that with the loss of the first N-1 in P6, curtailment of firm transmission service or firm transfers would not be allowed as part of system adjustment in preparation for the next N-1. Allowing curtailment of transmission service or firm transfers for such system adjustments should be added to R3.3.2.2. Otherwise, the power transfer under normal condition (before the first N-1) will have to be significantly curtailed in anticipation for meeting performance requirements after N-1-1, or transmission facilities, which would have otherwise been unnecessary, would have to be built. Either would adversely impact customers. We also have questions on Event P6 in both Performance Tables 1 and 2: We would like some clarification on the overlapping single contingencies as denoted in Event P6 (N-1-1), and one where a single contingency, say Event P1 (N-1), follows a prior "planned" outage of a Facility (N-1). The former would allow the Non-consequential Load Loss, while the latter would prohibit it.
Alberta Electric System Operator	Yes	We agree with revising P6 to permit loss of Non-Consequential Load to meet performance requirements for Systems above 300kV. However, we are concerned that with the loss of the first N-1 in P6, curtailment of firm transmission service or firm transfers would not be allowed as part of system adjustment in preparation for the next N-1. Allowing curtailment of transmission service or firm transfers for such system adjustments should be added to R3.3.2.2. Otherwise, the power transfer under normal condition (before the first N-1) will have to be significantly curtailed in anticipation for meeting performance requirements after N-1-1, or transmission facilities, which would have otherwise been unnecessary, would have to be built. Either would adversely impact customers. We also have questions on Event P6 in both Performance Tables 1 and 2: We would like some clarification on the overlapping single contingencies as denoted in Event P6 (N-1-1), and one where a single contingency, say Event P1 (N-1), follows a prior "planned" outage of a Facility (N-1). The former would allow the Non-consequential Load Loss, while the latter would prohibit it.
US Bureau of Reclamation	Yes	We agree with revising P6 to permit loss of Non-Consequential Load to meet performance requirements for Systems above 300kV. However, we are concerned that with the loss of the first N-1 in P6, curtailment of firm transmission service or firm transfers would not be allowed as part of system adjustment in preparation for the nextN-1. Allowing curtailment of transmission service or firm transfers for such system adjustments should be added to R3.3.2.2. Otherwise, the power transfer under normal condition (before the first N-1) will have to be significantly curtailed in anticipation for meeting performance requirements after N-1-1, or transmission facilities, which would have otherwise been unnecessary, would have to be built. Either would adversely impact customers. We also have questions on Event P6 in both Performance Tables 1 and 2: We would like some clarification on the overlapping single contingencies as denoted in Event P6 (N-1-1), and one where a single contingency, say Event P1 (N-1), follows a prior "planned" outage of a Facility (N-1). The former would allow the Non-consequential Load Loss, while the latter would prohibit it.
BPA Transmission	Yes and No	We agree with the revision to permit the loss of Non-Consequential Load to meet performance requirements for Systems above 300 kV. However, a better definition is needed for "system adjustments". For example, are curtailments permitted as

Organization	Question 11:	Question 11 Comments:
Reliability Program		part of "system adjustments"? Within category P6, there needs to be a common reason for the overlapping outage to occur, such as lines on a common tower, and the appropriate reasons need to be clearly identified in the requirements. In general, we believe that performance category P6 should be part of the Operating Standards rather than the Planning Standards. For these types of events, it is the responsibility of Operations to determine the necessary system adjustments to prepare for the next contingency within the operating horizon prior to year one as defined in the Planning Standards. Therefore, the performance requirements for this category of contingencies, do not belong in the Planning Standards.
Response: Footnote # 10 has been added to the end of Table 1 to reflect that curtailment or interruption of Firm Transmission Service will be allowed in preparation for the next Contingency. **Footnote #10** – Curtailment of firm transmission service, when coupled with the appropriate re-dispatch of resources obligated to re-dispatch, is allowed both as a System adjustment (as identified in the column titled 'Initial System Conditions') and a corrective action, where it can be demonstrated that Facilities remain within applicable Facility Ratings and those adjustments do not result in the shedding of any firm Load. Where limited options for re-dispatch exist, sensitivities associated with the availability of those resources must be considered. Where Facilities external to the Transmission Planner's planning region are relied upon, Facility Ratings in those regions must be considered. Regarding the difference between overlapping single Contingencies as denoted in Event P6 (N-1-1), and one where a single Contingency, say Event P1 (N-1), follows a prior "planned" outage of a Facility (i.e., N-1), the difference would be whether the prior outage was planned (such as maintenance) or anticipated (such as extended outage). If the Prior outage is planned or anticipated, then the next N-1 is a P1 Event, otherwise, it is a P6 Event.		
Progress Energy Florida, Inc.	No	PEF is pleased that between the 1st and 2nd drafts, the "no" was changed to "yes" concerning allowance of curtailment of Firm Transmission Service or curtailment of Non-Consequential Load for Event P6. PEF has significant concerns, however, regarding the issue of "System Adjustments" associated with P6 and P6's direct association with P1, and thus must check "no" on this Question despite the improvements that have been made. A major misstep has been made with regard to development of P6. Every P1 event is by default the first half of a P6 event. Given that fact, PEF sees several concerns with this issue. First, for P1 events, neither curtailment of Firm Transmission Service nor curtailment of Non-Consequential Load are allowed, regardless of voltage. Both are allowed, however, for a P6 event. In order for the two events to not contradict each other, the conclusion that must be reached is that curtailment of Firm Transmission Service and curtailment of Non-Consequential Load are not allowed as part of System Adjustments, i.e. they are not allowed in between the two steps of P6, only after the 2nd step of P6 (Note: this is not clear partly due to the fact that the term "System Adjustments" is not defined anywhere in the Standard, and PEF therefore requests that the SDT define the term, and that the term should include the allowance of curtailment of Firm Transmission Service and the loss of Non-Consequential Load). PEF has two very serious concerns with that conclusion: a) FERC in its Order 693 stated that the BES is not required to have to withstand another N-1 contingency. Specifically, in Paragraph 1788 of Order 693 FERC states that ?Under TPL-002-0 the system is not required to be able to withstand another N-1 contingency. That N-1 requirement is a Category C contingency which is addressed by TPL-003-0.? Thus FERC clearly made a distinction between N-1 events for which a 2nd N-1 event never happens and N-1-1 events. The SDT, however, has

Organization	Question 11:	Question 11 Comments:
		not written the draft TPL Standard in such a way that Transmission Owners can reasonably and fairly plan for the 2nd N-1 event as TPL-003-0 has done. b) PEF has several 1st N-1 events on their 500 kV system for which "System Adjustments" are necessarily going to have to include either the curtailment of Firm Transmission Service or the curtailment of Non-Consequential Load in order to prepare for the 2nd N-1 event. The draft TPL Standard, while far from definitive on this matter, appears to allow neither as part of System Adjustments. PEF will thus be forced to i) construct redundant 500 kV facilities, at a cost to our ratepayers that will doubtless run into the range of billions of dollars, or ii) significantly reduce the posted levels of ATC/TTC of the various transmission paths available. Option (ii) is not a better option than option (i), for two main reasons: reducing ATC/TTC essentially puts marketing entities out of business, and forces utilities to build more generation sites to compensate for the loss of energy brought in using the previously higher ATC values. Either option results in prohibitively high costs to be passed on to the ratepayers for no measurable increase in BES reliability. This discussion also brings up additional concerns that include the lack of consideration of State government jurisdiction, the lack of public involvement, and ultimately, the lack of sufficient reason to construct such redundancy. PEF has never had a 500 kV N-1-1 event on its system. For this draft Standard to require redundancy projects costing billions of dollars for events that to date have never occurred is preposterous (note: additional comments concerning public outreach, no State government involvement, etc., are contained in the response to Question 15).
Response: Footnote # 10 has been added to the end of Table 1 to reflect that curtailment or interruption of Firm Transmission Service will be allowed in preparation for the next Contingency. However, until the next Contingency occurs, System performance will need to meet the requirements for a single Contingency Event. As such, the proposed standard will not allow loss of any Non-Consequential Load, except for contracted Interruptible Loads, in preparation for the next Contingency. Header note 'e' provides the System adjustments allowed after a first Contingency Event. **Header note 'e'** -- For all Planning Events, planned System adjustments such as Transmission configuration changes and redispatch of generation are allowed if such adjustments are executable within the time duration applicable to the Facility Ratings. **Footnote #10** – Curtailment of firm transmission service, when coupled with the appropriate re-dispatch of resources obligated to re-dispatch, is allowed both as a System adjustment (as identified in the column titled 'Initial System Conditions') and a corrective action, where it can be demonstrated that Facilities remain within applicable Facility Ratings and those adjustments do not result in the shedding of any firm Load. Where limited options for re-dispatch exist, sensitivities associated with the availability of those resources must be considered. Where Facilities external to the Transmission Planner's planning region are relied upon, Facility Ratings in those regions must be considered.		
Ameren	No	Please clarify that the shunt devices to be considered for outage are those that are directly connected to the transmission system. For the P6 events involving a transmission facility and a shunt device, local voltage instability issues may result in dropping of load in the vicinity of the outaged facilities, but the concern should be that the load dropped is not wide-spread. The words "Voltage instability" should be removed from Header Note 3 of Table 1 so that it becomes "Cascading outages and uncontrolled islanding shall not occur."

Organization	Question 11:	Question 11 Comments:
Response: Requirement R3.3.3 (now Requirement R3.4) was modified to allow the PC and TP to determine the single and multiple Contingencies to be included in the planning analyses. This would give the TP and the PC the discretion to study the Contingency most suited to the study area. **R3.4** Those Planning Event Contingencies in Table 1 ~~– Steady State Performance not covered in Requirement R3.3.2~~ that are expected to produce more severe System impacts shall be identified~~,~~ and a list of those Contingencies to be evaluated for System performance in Requirement R3.1 created~~,~~. ~~and t~~The rationale for the Contingencies selected for evaluation shall be available as supporting information and shall ~~includ~~include~~e~~ an explanation of why the remaining Contingencies would produce less severe System results. However, "voltage instability" has not been removed from the Header Note 3 (now Note a) because voltage instability in a local area can spread to the rest of the System if not arrested in time, and a planning analysis is needed to ascertain if there is a voltage stability problem, and, if so, the corrective actions needed.		
Exelon Transmission Planning	No	We do not agree that the requirement should be so much more severe for an internal breaker fault as opposed to two single line outages for elements over 300 kV.
Response: An internal breaker fault is a single event covered in FERC Order 693. In addition, an internal breaker fault would remove from service all Facilities connecting to the faulted breaker simultaneously, which would likely be more severe than the outage of two single lines.		
MidAmerican Energy Company	No	MEC suggests that there be more explanation of what system adjustments are permitted. There should be some specific limit like 100MW below which load loss is allowed. Otherwise, very high cost solutions will be required for very low probability events.
MRO NERC Standards Review Subcommittee	No	The MRO suggests that there be more explanation of what system adjustments are permitted. There should be some specific limit like 100MW below which load loss is allowed. Otherwise, very high cost solutions will be required for very low probability events.
Response: Footnote # 10 has been added to the end of Table 1 to reflect that curtailment or interruption of Firm Transmission Service will be allowed in preparation for the next Contingency. While the SDT does not disagree with having some specific limits below which load loss would be allowed, arriving at such an amount may be too case-specific and too descriptive for a Continent-wide Standard. **Footnote #10** – Curtailment of firm transmission service, when coupled with the appropriate re-dispatch of resources obligated to re-dispatch, is allowed both as a System adjustment (as identified in the column titled 'Initial System Conditions') and a corrective action, where it can be demonstrated that Facilities remain within applicable Facility Ratings and those adjustments do not result in the shedding of any firm Load. Where limited options for re-dispatch exist, sensitivities associated with the availability of those resources must be considered. Where Facilities external to the Transmission Planner's planning region are relied upon, Facility Ratings in those regions must be considered.		

Organization	Question 11:	Question 11 Comments:
Austin Energy	No	It should be left to the Transmission Planner and/or Planning Coordinator (ISO or RTO) to select the credible multiple contingencies to be studied as planning events. Therefore P6 should be deleted.
Brazos Electric Power Cooperative, Inc.	No	P6 should be incorporated back into P5. Up to this point, studying all shunt devices has not been considered to have a significant impact on the BES. In addition these are picked up when studying other contingencies. Certain type devices should be reviewed individually, FACTS devices, etc? but this should be at the discretion of the TP or PC. Currently adding shunt devices as a category would require modification to case data or software to be able to automatically run through them all and we are not convinced this is worth the effort.
Response: Requirement R3.3.3 (now Requirement R3.4) was modified to allow the PC and TP to determine the single and multiple Contingencies to be included in the planning analyses. This would give the TP and the PC the discretion to study the Contingency most suited to the study area, and can choose not to study P6 Events if they are less severe than the Events studied. Therefore, P6 is not deleted. **R3.4** Those Planning Event Contingencies in Table 1 ~~– Steady State Performance~~ ~~not covered in Requirement R3.3.2~~ that are expected to produce more severe System impacts shall be identified~~,~~ and a list of those Contingencies to be evaluated for System performance in Requirement R3.1 created~~,~~. ~~and t~~The rationale for the Contingencies selected for evaluation shall be available as supporting information and shall ~~includ~~include~~e~~ an explanation of why the remaining Contingencies would produce less severe System results.		
AEP	Yes	Table 1 does not specify a maximum amount of allowable non-consequential load loss for those categories (including P6) that have a "Yes" listed under the "Non-Consequential Load Loss Allowed" (last) column. See load loss definition under Attachment D of PJM Manual 14B for an example of a maximum amount specification.
Response: While the SDT does not disagree with having some specific maximum amount of allowable Non-Consequential Load loss for these events, arriving at such an amount may be too case-specific and too descriptive for a Continent-wide Standard		
ERCOT System Planning	No	The former P5 of the first draft only required transmission circuits of 300 kV and above to be simulated out of service followed by loss of transmission circuit or transformer. P6 of the second draft requires all BES (100 kV and above) transmission circuits, transformers, dc lines, and shunt devices in combination of another BES circuit, transformer, dc line, and shunt device. The number of contingencies that have to be simulated increased dramatically to an impractical level and would require days of uninterrupted computer run time to complete. This, in combination with other contingencies and sensitivities required in this draft of the standard, is not feasible for large entities. ERCOT recommends that this planning event P6 retain the verbiage regarding transmission lines and transformer low side windings above 300kV.
Response: The previous draft P5 set requirements for N-1-1 300 kV and above; P8 sets requirements for N-1-1 below 300 kV. P6 in this draft combines both P5 and P8 from the previous draft. So, the work load for both drafts would be the same. In addition, Requirement R3.3.3 (now Requirement R3.4) was modified to allow the PC and TP to determine the single and multiple Contingencies to be included in the planning analyses. This would give the TP and the PC the discretion		

Organization	Question 11:	Question 11 Comments:
to study the Contingency most suited to the study area, and can choose not to study P6 Events if they are less severe than the events studied. **R3.4 T**hose Planning Event Contingencies in Table 1 ~~– Steady State Performance~~ ~~not covered in Requirement R3.3.2~~ that are expected to produce more severe System impacts shall be identified~~,~~ and a list of those Contingencies to be evaluated for System performance in Requirement R3.1 created~~,~~. ~~and t~~The rationale for the Contingencies selected for evaluation shall be available as supporting information and shall ~~includ~~include~~e~~ an explanation of why the remaining Contingencies would produce less severe System results.		
American Transmission Company	Yes	We suggest that there be more explanation of what system adjustments are permitted. We understand that the revised P6 allows loss of Non-Consequential Load for Systems below 300 kV as well.
Response: Header note 'e' provides the System adjustments allowed after a first Contingency Event. In addition, Footnote # 10 has been added to the end of Table 1 to reflect that curtailment or interruption of firm Transmission Service will be allowed in preparation for the next Contingency. **Header note 'e'** -- For all Planning Events, planned System adjustments such as Transmission configuration changes and redispatch of generation are allowed if such adjustments are executable within the time duration applicable to the Facility Ratings. **Footnote #10** – Curtailment of firm transmission service, when coupled with the appropriate re-dispatch of resources obligated to re-dispatch, is allowed both as a System adjustment (as identified in the column titled 'Initial System Conditions') and a corrective action, where it can be demonstrated that Facilities remain within applicable Facility Ratings and those adjustments do not result in the shedding of any firm Load. Where limited options for re-dispatch exist, sensitivities associated with the availability of those resources must be considered. Where Facilities external to the Transmission Planner's planning region are relied upon, Facility Ratings in those regions must be considered.		
Florida Reliability Coordinating Council, inc	No	For P6 events (and all other events that allow system adjustments after the loss of a transmission device), this draft does not clearly define when the requirements in the columns marked as ?Interruption of Firm Transmission Service? or ?Non-consequential Load Loss Allowed? apply. The SDT should clearly state that the requirements in these columns are only applicable after the Event occurs from the Initial System Condition. In addition, the SDT should make it clear whether Interruption of Firm Transmission Service and Non-consequential Load Loss is allowed in preparation for the 2nd Event. On the NERC conference call for the 2nd draft, the SDT chair indicated that Interruption of Firm Transmission Service and Non-consequential Load Loss is not acceptable in preparation for the next event. In Order 693, Para. 1788 - Para. 1796, FERC distinguished between ?preparing for the next contingency? and returning to a system normal state. The SDT removed the allowance that was made in footnote c of TPL-003-0 to ?To prepare for the next contingency, system adjustments are permitted, including curtailments of contracted Firm (non-recallable reserved) electric power Transfers.? (emphasis added) for Category C3 events (now P6 for facilities greater than 300kV). This change in the standard is not directed by the FERC Order 693 and is not a reliability improvement that is cost justified. Forced outage rates for equipment greater than 300kV is very low and the impact on markets is very large. Many utilities have granted long term transmission service to entities with the expectation that the service can be curtailed if required in preparation for the next event. If this is not allowed, entities

Organization	Question 11:	Question 11 Comments:
		within FRCC will have to greatly reduce the long term firm imports into FRCC or construct additional EHV transmission lines from a location well into Georgia down to a point in the southeastern portion of FRCC. While an in-depth cost has not been completed for a project of this size in many years, it is reasonable to expect that a cost in excess of $1.5 - $2.0 Billion. This investment will only slightly increase the amount of firm imports into FRCC (and replace the imports allowed before this change) for an event that may only occur only once every 20+ years. If this event happens, the Transmission Owners will re-dispatch their own generation to curtail their transactions in addition to curtailing the firm transmission service of others, per their OATT. The SDT should clearly state for these Planning Events, all system adjustments including Interruption of Firm Transmission Service and Non-consequential Load Loss is acceptable in preparation for the second Event where system adjustments are allowed between events.
Response: The SDT believes that Table 1 is clear that the events occur from P0 as the starting condition. Footnote # 10 has been added to the end of Table 1 to reflect that curtailment or interruption of Firm Transmission Service will be allowed in preparation for the next Contingency. However, until the next Contingency occurs, System performance will need to meet the requirements for event P1. As such, the proposed standard will not allow loss of any Non-Consequential Load, except for contracted Interruptible Loads, in preparation for the next Contingency. **Footnote #10** – Curtailment of firm transmission service, when coupled with the appropriate re-dispatch of resources obligated to re-dispatch, is allowed both as a System adjustment (as identified in the column titled 'Initial System Conditions') and a corrective action, where it can be demonstrated that Facilities remain within applicable Facility Ratings and those adjustments do not result in the shedding of any firm Load. Where limited options for re-dispatch exist, sensitivities associated with the availability of those resources must be considered. Where Facilities external to the Transmission Planner's planning region are relied upon, Facility Ratings in those regions must be considered.		
FirstEnergy Corp.	Yes	We agree with the change that now permits the loss of Non-Consequential Load for N-1-1 to meet performance requirements regardless of the voltage level studied. It is well understood that following a single contingency (N-1) that no Non-Consequential Load loss or interruption of Firm Transmission service is permitted. The SDT needs to clarify for industry if interruption of Firm Transfers is permitted pre-contingency to prepare for the 2nd (over-lapping) contingency. This is presently permissible in the existing TPL standards as Table 1 footnote 'b' reads ?? To prepare for the next contingency, system adjustments are permitted, including curtailments of contracted Firm (non-recallable reserved) electric power Transfers.?
Response: Footnote # 10 has been added to the end of Table 1 to reflect that curtailment or interruption of Firm Transmission Service will be allowed in preparation for the next Contingency. **Footnote #10** – Curtailment of firm transmission service, when coupled with the appropriate re-dispatch of resources obligated to re-dispatch, is allowed both as a System adjustment (as identified in the column titled 'Initial System Conditions') and a corrective action, where it can be demonstrated that Facilities remain within applicable Facility Ratings and those adjustments do not result in the shedding of any firm Load. Where limited options for re-dispatch exist, sensitivities associated with the availability of those resources must be considered. Where Facilities external to the Transmission Planner's planning region are relied upon, Facility Ratings		

Organization	Question 11:	Question 11 Comments:
in those regions must be considered.		
PPL EnergyPlus	Yes	
NPCC	Yes	
Northeast Utilities	Yes	Northeast Utilities has participated with ISO-NE and NPCC and supports the comments filed by those organizations.
TVA System Planning	Yes	
Platte River Power Authority	Yes	
BCTC	Yes	
National Grid	Yes	
Tenaska, Inc.	Yes	
OPUC	Yes	
PacifiCorp	Yes	We agree with revising P6 to permit loss of Non-Consequential Load to meet performance requirements for Systems above 300kV.
Hydro-Quebec TransEnergie (HQT)	Yes	
Arizona Public Service Co.	Yes	We agree with revising P6 to permit loss of Non-Consequential Load to meet performance requirements for Systems above 300kV.

Organization	Question 11:	Question 11 Comments:
Midwest ISO	Yes	
Tri-State Generation and Transmission Association, Inc.	Yes	
Lakeland Electric	Yes	
LCRA TSC	Yes	
NERC and Regional Coordination	Yes	
North Carolina Electric Membership Corp	Yes	
E.ON U.S. Transmission Planning	Yes	
Central Maine Power Company	Yes	
NSTAR Electric	Yes	

Organization	Question 11:	Question 11 Comments:
New York Independent System Operator	Yes	
Oncor Electric Delivery	Yes	NA
ISO New England Inc.	Yes	
Manitoba Hydro	Yes	Considering the very low probability of such an event (based on industry data), Manitoba Hydro agrees that Interruption of Firm Transmission Service and Non-consequential Load Loss is acceptable.
Los Angeles Department of Water and Power	Yes	yes, only because there is no discrimination among different and arbitrary voltage classes.
IESO	Yes	We concur with the need to test N-1-1 contingencies involving transmission facilities allowing interruptions to firm transmission services and non-consequential load loss to meet performance requirements, for any voltage levels as long as adverse reliability impacts on the BES are exhibited.
Response: Thank you for your response.		

12. **Comments from some entities received from the posting of the 1st draft standard indicated that significant additional costs will be required to meet the proposed requirements and performance tables. Commenters also indicated that it would take several years to install the additional facilities needed to meet the change in requirements. The SDT has attempted to adjust and clarify the proposed requirements and performance in light of these initial comments; however, the SDT needs more specific information on these concerns so that it can put the proposed requirements in perspective and make more adjustments as appropriate. Questions 12, 13 & 14 address these concerns.**

    What do you estimate will be your additional approximate costs, if any, to support the proposed requirements and performance tables over and above what you are currently doing for the following: Analysis:

    One time cost to supplement past study portfolio and analyze the supplemental studies (depending on the extent of supplemental work needed, this may be an accumulated cost over more than one year):

    How many years do you estimate that it will take to complete supplemental studies and associated analysis?

    On-going additional cost for expanded studies and analysis:

Summary Consideration:

The SDT has reviewed the responses and will use the data as background information in making any further decisions with regard to this standard. No direct changes were made to any of the requirements at this time based on this information.

Organization	1 - Question 12 Comments:	2 - Question 12 Comments:	3 - Question 12 Comments:
Dominion - Electric Transmission Planning	It is extremely difficult, if not impossible, to accurately determine the costs required to perform supplemental studies in order to become compliant with these proposed standards. It will take time to just become familiar with the proposed changes as well as developing the necessary documentation to show compliance. What is obvious is that increased staffing levels will be required to perform the assessments. Furthermore, it will take significant time to become fully compliant. Therefore, a grace	As stated above, this is difficult to predict but a grace period of 2 to 3 years should be considered.	At this point we are estimating at least 2 to 3 additional resources may be required to perform the additional studies on an ongoing basis. For Dominion, three (3) additional engineers to perform this analysis is approximately $500,000 per year (including benefits and overheads).

Organization	1 - Question 12 Comments:	2 - Question 12 Comments:	3 - Question 12 Comments:
	period of 2 to 3 years should be granted in order to perform the required assessments and become compliant.		
NPCC	NPCC Participating Members believe some additional cost for analysis and study may be required in order to meet the final requirements of the standard and the associated performance tables. However, the ability to accurately estimate the costs of these studies, how long the analysis may take and how much additional effort may need to be made to compile the documentation is not possible at this time. Many believe posing this question is premature and cannot be quantified at this time, and it may hold questionable value without a better understanding of the complete final requirements of the standard. Many believed that the sensitivity language, although currently being performed to some extent within NPCC, that now appears in the standard, could have a drastic effect on the extent to which this additional analysis is conducted and the associated costs.		
TVA System Planning	One component of these costs is based on modification to the load flow database. A massive effort would need to be undertaken to model bus sections and breaker codes in order to simulate the planning events needed to stay current with the proposed standards. Also, man-power to perform the extra analysis was considered. Additional man-power of 5 engineers (2 years) would	The majority of the time would be spent modifying the load flow database so that the new planning event simulations could be analyzed. ? Time duration estimate of 2 years would be required.	Additional man-power of 4 engineers at costs of $400,000 per year would be required.

Organization	1 - Question 12 Comments:	2 - Question 12 Comments:	3 - Question 12 Comments:
	be required at cost of $1,000,000		
Progress Energy Carolinas	$150,000	3 Years	$50,000/year
BCTC	We estimate an initial one time cost of up to $50,000 for BCTC planners to become familiar with the new format and requirements of the standards and make changes to their assessment process. In addition, additional study costs for sensitivity studies (many stability studies) may cost an additional $50,000. Many segments of the BCTC system are stability limited and we have significant experience with the needs and timelines for doing stability studies. Stability studies identify the need for RAS for multiple contingencies, which is fairly short lead time. We are currently satisfied with the amount of stability studies we do for the near and long term planning horizons. We do not need to do sensitivity studies. We do not expect any significant additional costs for studying Extreme Events because most of the wide area events listed are not applicable to the BCTC system.	1 Year	The additional cost could be from $50,000 to $100,000 per year. We will incur additional study costs for sensitivity studies and expect additional planning administration costs for reconciling between reinforcements required to meet the CLL/NCLL definitions and P3 requirements vs. what we actually propose as doable projects.
Manitoba Hydro	$500,000	2 to 3 person years years	$300,000
Los Angeles Department of Water and Power	I do not object to added studies serving useful purposes; however, duplicative studies are a waste of resources. Mixing operating studies and requiring such studies in the planning of future system shows a confused perspective on the	Please be more specific as to what additional studies are being referred here.	

Organization	1 - Question 12 Comments:	2 - Question 12 Comments:	3 - Question 12 Comments:
	purpose of planning studies verses operating studies.		
National Grid	The comment period was not long enough to develop a thoughtful response to the impact that the new standards might have. Therefore costs can be speculated to be incrementally hundreds of thousands per year.	The comment period was not long enough to develop a thoughtful response to the impact that the new standards might have on the planning studies, but a very rough thought would be that any additional needs would be captured within the normal planning studies, which would likely occur within two study cycles of the effective date of the standard.	If the new requirements are included in the normal study cycle and the costs are the incremental costs required by additional study requirements, then the annual costs will be less than the first year costs, but we still will need additional staffing, which will cost hundreds of thousands per year. In addition to cost, there is a significant concern over whether or not the labor market can provide enough qualified staff to complete the required work.
Pacific Gas and Electric Co.	We expect supplemental studies to be needed for the entire 500 kV system and most of the 230 kV system. We estimate the one time cost for supplemental studies to be around $100,000.	Assuming that the supplemental studies would be added to the on-going work, we estimate the time to complete the supplemental studies to be about 2 to 3 years.	We estimate that the additional cost for the expanded studies and analysis would be about $50,000/year.
Gainesville Regional Utilities	$50,000. I don't feel this is needed for smaller utilities.	3 years. Again, I don't feel this is needed for smaller utilities.	$60,000. Again, I don't feel this is needed for smaller utilities.
JEA	$80,000 per year.	3 years	$80,000 per year.
PacifiCorp	$500,000 (approx)	three years	$250,000
Puget Sound Energy, Inc.	$1,000,000 for the STD in its current form. The recovery of firm transmission following N-1 will be the largest cost for PSE	10 years.	$300,000
ITC Holdings: ITC, METC, ITC Midwest	While we recognize that the standards might require us to garner a little more manpower and will take a little more time, we believe that running these studies is	While we recognize that the standards might require us to garner a little more manpower and will take a little more time, we believe that running these studies is	While we recognize that the standards might require us to garner a little more manpower and will take a little more time, we believe that running these studies is

Organization	1 - Question 12 Comments:	2 - Question 12 Comments:	3 - Question 12 Comments:
	important.	important.	important.
Idaho Power Company	Appx $50k	2 to 3 years	Appx $50k
SMUD		Three study cycles would be my guess. Related matters: Since the definition for “Year One” allows for the start of each assessment to be up to 18 month from the “completion” of the previous Planning Assessment, using the term ?annual?, “annually” in the definition and in various sections of the standard is confusing. An alternate word or dropping the words annual/annually would make more sense. What is considered as “completion” of an assessment (in definition of Year One)?	
Hydro-Québec TransÉnergie (HQT)	HQT believe some additional cost for analysis and study may be required in order to meet the final requirements of the standard and the associated performance tables, however the ability to accurately estimate the costs of these studies, how long the analysis may take and how much additional effort may need to be made to compile the documentation is not possible at this time. Many believe posing this question is premature and cannot be quantified at this time and it may hold questionable value without a better understanding of the complete final requirements of the standard. Many believed that the sensitivity language, although currently being performed to some extent within NPCC, that now appears in		

Organization	1 - Question 12 Comments:	2 - Question 12 Comments:	3 - Question 12 Comments:
	the standard, could have a drastic affect on the extent to which this additional analysis is conducted and the associated costs		
Progress Energy Florida, Inc.	Given that a) PEF has never performed analysis to the extent that the draft TPL Standard is requiring and b) the draft is going through an iterative process and is at present considered a "moving target", a reasonably accurate estimate, or even a wild guess, cannot be provided for this answer. Having said that, it can be reasonably said that any estimate that could safely claim a reasonable degree of accuracy would require analysis performed full-time by several individuals over a period of several months (or possibly a period greater than one year). Just the cost of the assessment analysis alone would present an O&M challenge to PEF's Transmission department.	PEF has assessed this question and determined that any period of time less than 10 years would be inadequate to assess the supplemental nature of the requirements of the draft TPL Standard, to say nothing of the time required to construct the required facilities.	PEF, again stating that this cannot be considered an accurate estimate for the reasons stated in 12a, would estimate the burdened labor cost to perform such supplemental analysis on an ongoing basis to be at least $1M annually.
Sierra Pacific Power Comapny / Nevada Power Company	$400,000	2 Man Years	$250,000/year
Lafayette Utilities System	Lafayette has not analyzed in any detail the resource requirements addressed in this question. Based on available information, we estimate that supplementing existing studies would require at least 1 FTE familiar with stability analysis to be able to complete this portion of TPL. The new steady-state analysis will require the addition of 1 FTE to be able to complete the additional P5-P7	See response to part 1 of Question 12.	See response to part 1 of Question 12.

Organization	1 - Question 12 Comments:	2 - Question 12 Comments:	3 - Question 12 Comments:
	requirements. These will be ongoing expenses whether accomplished by hiring new staff or relying on external service providers.		
Arizona Public Service Co.	Two person-year.	2-years.	one person year.
Ameren	One component of cost is to model in more detail all straight busses and bus-tie breakers at all transmission voltage levels. Contingency scenarios would also need to be developed and/or modified to correspond with the new powerflow models. The sensitivities presently specified will greatly increase the cost and time needed for updating all plant stability studies.	One-time costs to provide additional modeling detail and modify and test the revised contingency lists would be approximately 1 man-month or about $8000. Updating all plant stability studies would take approximately 5 man-years, at an estimated cost of approximately $500,000 (including benefits). Given existing regional requirements to complete the annual assessment by July 1 of the calendar year, additional staffing would likely be needed to complete this work, unless compliance were phased in over a number of years, similar to the MOD-024 and MOD-025 standards with respect to generator testing.	A review of the studies required for R2.1 indicates that at least 6 powerflow modeling scenarios would need to be completed to cover the base cases and sensitivities, which would be a 50% increase in the amount of work presently performed to meet the existing TPL-001 through 004 requirements for the near-term assessment. A review of the studies required for R2.4 indicates that at least 4 stability scenario models would need to be completed, which would be a 100% increase in the amount of work presently performed. Our present compliance performance and analyses activities take approximately 30 man-months to complete. We would expect the additional study analyses to add an additional 20 man-months of work and require 4-5 additional engineers at an annual cost of $400,000 to $500,000 (including benefits), given the regional requirement to complete the annual assessment by July 1.
City of Tallahassee, FL	we estimate a cost of $100,000 minimum since the City would likely have to outsource some of this analysis in addition to the work done by in-house system	hard to give a good estimate since the full ramifications of the required studies is not clear in the current draft. I would estimate 2 years at least.	similar costs to what was estimated above for the supplemental study cost, since staffing level is such that much of this ongoing work will likely be outsourced.

Organization	1 - Question 12 Comments:	2 - Question 12 Comments:	3 - Question 12 Comments:
	planning staff.		
Florida Power and Light	These costs cannot be determined without having experience with the new standard and its analysis requirements. Analysis of existing studies will undoubtedly uncover substantial additional study that would need to be performed, but the costs of such analysis and studies could not be reasonably estimated beyond stating that the costs would be significant resulting from 1000's of man-hours spent on supplemental work that would only determine if we were in compliance, not including any work necessary to determine what would be necessary to bring deficiencies in to compliance.	It would not be unreasonable to find that it takes one full planning horizon (10 years) to complete supplemental studies and analysis for the draft standard, because it is so prescriptive. Requirements such as R2.2.1 that requires that the planning assessment be extended for longer lead time projects (such as the multiple new nuclear projects being considered across the U.S.) and R2.4.1 that specifies "...including the behavior of induction motor loads" will likely invalidate past studies that took considerable time to perform and would have to be reproduced with the newly required considerations. Requirements such as R2.6 (and subrequirenments) invalidate many existing studies, because of subjective terms such as "material changes" and "would impact the study area" without definitions of "material" or "impact". Re-analyzing all existing studies and re-writing the results and conclusions using the new terminology (P0, P1, P5 etc. instead of Category A, B or C2, C3, C5 etc.) used in the new performance tables will also add substantially to the effort needed to insure compliance and make the information auditable.	$ 5 million dollars annually is perhaps very conservative.
CenterPoint Energy and CPS Energy	We have no analysis to support an answer to this question, and we believe any such analysis would be speculative. We believe the reality of the situation is that the requirements are not practically achievable	3-4 years, assuming reasonably practical interpretation of the impractical requirements.	

Organization	1 - Question 12 Comments:	2 - Question 12 Comments:	3 - Question 12 Comments:
	at any cost, so the ultimate cost would depend on practical interpretations of impractical requirements. Even if the cost could be reasonably estimated, we oppose detracting valuable expertise away from necessary, value-added analyses to unnecessary, over-reaching theoretical analyses and documentation for audit purposes.		
SRP	The additional study work associated with this Standard could cost up to SRP $100k.	1 to 2 years to complete these additional studies.	Estimate addition on-going costs of $50k.
MidAmerican Energy Company	MEC estimates that the total cost for one-time software licenses would be about $100,000.	MEC estimates that the lead time to perform supplemental studies and analyses to meet the new requirements would be 2 years.	MEC estimates that the on-going additional cost of expanded studies and analyses to meet the new requirements would be about $150,000 to $200,000 for additional staff and continuing software fees.
Tucson Electric Power Company	$200,000	6 month study performed by consultant	1 man-year
SERC Dynamics Review Subcommittee	The sensitivities will greatly increase the cost and time need for planning because the work is directly proportional to the number of sensitivities.		
MRO NERC Standards Review Subcommittee	The MRO estimates that the additional one-time costs of supplemental studies and analysis to meet the new requirements might be spread over five years because some analysis only has to be updated every five years. The MRO estimates that the total cost over five years for additional staff, consulting services, or software fees would be about $200,000 to $300,000 per	The MRO estimates that the lead time to perform supplemental studies and analysis to meet the new requirements would be up to 5 years.	The MRO estimates that the on-going additional cost of expanded studies and analysis to meet the new requirements would be about $150,000 to $200,000 for additional staff and continuing software fees per responsible entity.

Organization	1 - Question 12 Comments:	2 - Question 12 Comments:	3 - Question 12 Comments:
	responsible entity.		
Modesto Irrigation District	Unknown at this time.		
Midwest ISO	Some additional costs will be required to comply with all the requirements. This is difficult to quantify at this time.	This is difficult to quantify at this time, but any increased requirements should be clearly identified by the SDT and a transition period should be developed if the standards are intended to be more restrictive.	There will be an increase in ongoing cost for expanded studies and analysis. A transition period for staffing and process development will be required.
Tri-State Generation and Transmission Association, Inc.	Scenario assessments will significantly increase workload. Development of dynamic load models is ongoing, and will need a much longer implementation period than the steady state portions of the standard. As much as $500,000 may be required to address all of R2.1.3 scenario requirements.	It would take as much as two years for the initial supplemental studies with existing staff.	Ongoing additional sensitivity and dynamic studies would cost approximately $300,000 per year.
AEP	Additional one-time cost of 33 man-months	2 years	Additional ongoing cost of 12 man-months
Lakeland Electric	Unknown	Unknown	Unknown
Brazos Electric Power Cooperative, Inc.	We have no real way to estimate this or determine these costs.	Again, we have no real feel for making an estimate but it would be safe to say that the studies would take longer than the planning window. In other words, the results would not be completed before we would have to start them over again.	
NERC and Regional Coordination	Clarity about the exact number of supplemental studies required needs to be added to the standard before this question can bee addressed. The requirements		

Organization	1 - Question 12 Comments:	2 - Question 12 Comments:	3 - Question 12 Comments:
	contained within the standard are nebulous. The requirements need to clearly state the depth of the studies required for each time horizon.		
ColumbiaGrid	The new TPL Standard raises the bar of transmission system performance. This can be expected to require significant additional analysis, documentation and system reinforcements (or reduced firm transfers allowed on the system if system reinforcements are not made). We will defer to our members to provide quantification of those elements.		
IESO	Minimal, if any, since the IESO has been conducting and documenting planning studies that meet events and performance criteria that are very similar to those specified in the draft TPL-001 standard. However, this is speculative at this time since we are not sure what the eventual standard will be like. Another uncertain area is the extent to which additional studies are required if sensitivity testing is mandated. Please see our comments under Q2 and Q10 on sensitivity testing. If sensitivity testing should become a requirement, then the scope is very wide and we are unable to have a good handle on the incremental time and cost to supplement past study portfolio.	Minimal, if any, for the reasons indicated above, other than for meeting the sensitivity testing requirements (if mandated) which cannot be quantified.	Minimal, if any, for the reasons indicated above, other than for meeting the sensitivity testing requirements (if mandated) which cannot be quantified.
Northeast Utilities	Northeast Utilities has participated with ISO-NE and NPCC and supports the comments filed by those organizations.	Northeast Utilities has participated with ISO-NE and NPCC and supports the comments filed by those organizations.	Northeast Utilities has participated with ISO-NE and NPCC and supports the comments filed by those organizations.

Organization	1 - Question 12 Comments:	2 - Question 12 Comments:	3 - Question 12 Comments:
North Carolina Electric Membership Corp	N/A	N/A	N/A
ERCOT System Planning		At least 4 years. It will take as long as the largest entity in our system which has estimated about 4 years. We are totally dependent on them for all data needed for these studies.	he workload to support the existing TPL-001 to TPL-004 has already consumed two full-time senior positions. Add to that the new requirements for steady state studies necessary in this standard would take at least another full time position. The new stability study requirements and short circuit requirement added would double the number of people necessary for a total of approximately six full time positions with moderate to high experience levels. (Four incremental FTEs with estimated annual cost of $650,000). Purchasing additional licenses for study software is an additional expense.
American Transmission Company	We estimate that the additional one-time costs of supplemental studies and analyses to meet the new requirements might be spread over five years because some analysis only has to be updated every five years. So, we estimate that the total cost over five years for additional staff or consulting services may about $200,000 to $300,000.	We estimate that the lead time to perform supplemental studies and analyses to meet the new requirements might be up to 5 years.	We estimate that the on-going additional cost of expanded studies and analyses to meet the new requirements might be about $150,000 to $200,000 for additional staff.
New York Independent System Operator	A very preliminary estimate would be potentially millions of dollars.	Again, a very preliminary estimate would be two years.	Preliminary estimate is on the order of hundreds of thousands of dollars In addition to cost, there is a significant concern over whether or not there will be

Organization	1 - Question 12 Comments:	2 - Question 12 Comments:	3 - Question 12 Comments:
			enough staff to complete the required work.
SERC Reliability Review Subcommittee and Planning Standards Subcommittee	One component of these costs is based on modification to the loadflow database. A massive effort would need to be undertaken to model bus sections and breaker codes in order to simulate the planning events needed to stay current with the new standards. Also, man-power to perform the extra analysis was considered. Additional man-power: 5 engineers (2 years) Cost: $1,000,000	The majority of the time would be spent modifying the loadflow database so that the new planning event simulations could be analyzed. Time: 2 years	Additional man-power: 4 engineers Costs: $400,000 / year The following analysis was performed by one large integrated utility in SERC. The results are not representative of all utilities in the SERC region, but would be multiplied many times over to fully represent the SERC region as a whole. A comprehensive study of the impact of these proposed and incomplete standards is not feasible until they are finalized. Regarding manpower, aside from the estimated costs there is the very real situation that the number of qualified engineers available in the industry is nowhere near what would be necessary to carry out the studies (including sensitivities) called for by the proposed standard. This reality needs to be taken into consideration by the Standards Drafting Team when it makes its implementation plan recommendations.
Oncor Electric Delivery	Cost to supplement past study portfolio would be between $250,000 to 750,000.	3 to 5 years with added resources (staff)	$500,000 annually
ISO New England Inc.	The comment period was not long enough to develop a thoughtful response to the impact that the new standards might have. Therefore cost can not be reasonably speculated.	The comment period was not long enough to develop a thoughtful response to the impact that the new standards might have on the planning studies, but a very rough thought would be that any additional needs would be captured within the normal planning studies, which would likely occur within two study cycles of the effective date of the standard.	The comment period was not long enough to develop a thoughtful response to the impact that the new standards might have on study effort and the associated cost. In addition to cost, there is a significant concern over whether or not there will be enough staff to complete the required work.

Organization	1 - Question 12 Comments:	2 - Question 12 Comments:	3 - Question 12 Comments:
Orlando Utilities Commission	$75,000 to supplement past study portfolio. (We have a fairly small system, only 1400 MW)	Two years, one year to recruit additional planner, the second to perform the baseline studies. This assumes there are sufficient trained personnel in the industry and they can be recruited.	$75,000 each year.
Entergy Services, Inc.	Cost will be covered by the on-going study costs as indicated below.	18 to 24 months	$1,200,000 / year
BPA Transmission Reliability Program	This information is not available.	This information is not available.	This information is not available.
Response: The SDT thanks all who responded to this survey question.			

13. **Documentation: One time cost to prepare reporting documentation associated with studies needed to supplement past study portfolio (depending on the time required to complete the supplemental work, this may be an accumulated cost over more than one year) – and on-going additional cost for documentation of expanded studies and analysis:**

Summary Consideration:

The SDT has reviewed the responses and will use the data as background information in making any further decisions with regard to this standard. No direct changes were made to any of the requirements at this time based on this information.

Organization	1 - Question 13 Comments:	2 - Question 13 Comments:
Dominion - Electric Transmission Planning	The initial process development and documentation will be the most difficult and time consuming portion. Dominion - Electric Transmission recommends a period of 3 to 5 years be given for this initial period of becoming compliant and preparing the documentation. As noted above, it is difficult to provide cost estimates, but we expect at least 2 to 3 additional resources will be required, at a minimum.	See response above.
NPCC	See above	
TVA System Planning	Additional man-power of 1 engineer (1 year) would be required at cost of $100,000	Additional man-power of 1 engineer at costs of $100,000 / year
Progress Energy Carolinas	$60,000	$20,000/year
BCTC	Included in the above. We do not do analysis without documentation.	Included in the above. We do not do studies without documenting them
Manitoba Hydro	$200,000	$100,000
Los Angeles Department of Water and Power	This assumes that past studies are inadequate and supplemental studies are needed. The standard does add a lot of duplicative and unnecessary operating scenarios that are already required	

Organization	1 - Question 13 Comments:	2 - Question 13 Comments:
	under TOP and MOD; but they should be deleted because they serve no useful purpose under TPL, why even spend an extra penny if it is for naught.	
National Grid	See response to question 12.	See response to question 12.
Pacific Gas and Electric Co.	This cost would be included in the cost of performing the supplemental studies.	This cost would be included in the cost of performing the expanded studies and analysis
Gainesville Regional Utilities	Probably would be covered in the previously provided annual cost. Again, I don't feel this is needed for smaller utilities.	Probably would be covered in the previously provided annual cost. Again, I don't feel this is needed for smaller utilities.
JEA	Included in Question 12 estimates.	Included in Question 12 estimates.
PacifiCorp	$250,000 over two years	$125,00
Puget Sound Energy, Inc.	$150,000 for the STD in its current form.	$50,000
ITC Holdings: ITC, METC, ITC Midwest	While we recognize that the standards might require us to garner a little more manpower and will take a little more time, we believe that running these studies is important.	While we recognize that the standards might require us to garner a little more manpower and will take a little more time, we believe that running these studies is important.
Idaho Power Company	Appx $50k	Appx $50k
Hydro-Quebec TransEnergie (HQT)	See Q12	
Progress Energy Florida, Inc.	Again, these costs cannot be reasonably estimated given the difficulties stated in the answer to Question 12a. It would reasonable to expect that the number of individuals in PEF's Transmission Planning group would have to dramatically increase, at least doubling in size or possibly significantly more	Documentation cannot be separated from the actual analysis itself, and thus would be included as part of the $1M estimate stated in the answer to Question 12b above.

Organization	1 - Question 13 Comments:	2 - Question 13 Comments:
	than doubling.	
Sierra Pacific Power Comapny / Nevada Power Company	$100,000	$50,000
Lafayette Utilities System	See response to part 1 of Question 12.	See response to part 1 of Question 12.
Arizona Public Service Co.	$200,000.00	$100,000.00
Ameren	Documentation preparation to include the short-circuit assessment, the amount of consequential load dropped for single contingencies, the expanded requirements of the Corrective Action Plan, and how the sensitivities affect the Corrective Action Plan would take a man-week or two at most (no significant cost increase or manpower increase).	Our present documentation activities to develop the assessment and the corrective action plan take approximately 2 man-months to complete. We would expect the documentation to cover the additional study analyses to add an additional 2 man-months of work. The additional documentation for the Consequential Load Loss, short-circuit analysis, expanded requirements of the Corrective Action Plan, and documentation of how the sensitivities studied affect the corrective plan are estimated to double the existing reporting requirements, resulting in an increase of 3.5 man-months and require 2 additional engineers at an annual cost of $200,000 (including benefits), given the regional requirement to complete the assessment by July 1.
City of Tallahassee, FL	documentation cost was included in the cost estimates for #12, since development of the documentation is part of the study work scope.	
Florida Power and Light	These costs cannot be determined without having experience with the new standard and its documentation requirements. Analysis of existing studies will undoubtedly uncover substantial additional documentation that would need to be produced, but the costs of such document production could not be reasonably estimated beyond stating that the costs would be significant resulting from 1000's of man-hours spent on supplemental work	This would be included in the $5 million dollar estimate provided above.

Organization	1 - Question 13 Comments:	2 - Question 13 Comments:
	that would only serve to meet audit requirements.	
CenterPoint Energy and CPS Energy	As with our response to question 12, we believe the answer depends upon the ultimate practical interpretation of the impractical requirements.	
SRP	Estimate $30k to prepare documentation.	Estimate $15k each additional year documentation.
MidAmerican Energy Company	Included in amounts for 12.	Included in amounts in 12.
Tucson Electric Power Company	included in previous question	included in previous question
MRO NERC Standards Review Subcommittee	Included in amounts for 12.	Included in amounts for 12.
Midwest ISO	We agree some additional costs will be incurred for expanded documentation.	ore requirements and more studies will increase documentation costs.
Tri-State Generatino and Transmission Association, Inc.	An additional $100,000 would be required to document studies for compliance purposes.	Perhaps $50,000/year - half of the initial amount required.
AEP	Additional one-time cost of 15 man-months	Additional ongoing cost of 7 man-months
Lakeland Electric	Unknown	Unknown
NERC and Regional Coordination	Clarity about the required documentation and coordination needs to be added to the standard before this question can bee addressed. As written, our interpretation is the increase in documentation requirements is substantial.	

Organization	1 - Question 13 Comments:	2 - Question 13 Comments:
ColumbiaGrid	The new TPL Standard raises the bar of transmission system performance. This can be expected to require significant additional analysis, documentation and system reinforcements (or reduced firm transfers allowed on the system if system reinforcements are not made). We will defer to our members to provide quantification of those elements.	
IESO	Minimal, if any, for the reasons indicated above, other than for meeting the sensitivity testing requirements (if mandated) which cannot be quantified.	Minimal, if any, for the reasons indicated above, other than for meeting the sensitivity testing requirements (if mandated) which cannot be quantified.
Northeast Utilities	Northeast Utilities has participated with ISO-NE and NPCC and supports the comments filed by those organizations.	Northeast Utilities has participated with ISO-NE and NPCC and supports the comments filed by those organizations.
North Carolina Electric Membership Corp	N/A	N/A
American Transmission Company	We estimate that the one time cost for expanded studies and analysis documentation to meet the new requirements might be about $20,000.	We estimate that the on-going cost for expanded studies and analysis documentation to meet the new requirements might be about $10,000.
New York Independent System Operator	included above	included above
SERC Reliability Review Subcommittee and Planning Standards Subcommittee	Additional man-power: 1 engineer (1 year)Costs: $100,000	Additional man-power: 1 engineer Costs: $100,000 / year. The following analysis was performed by one large integrated utility in SERC. The results are not representative of all utilities in the SERC region, but would be multiplied many times over to fully represent the SERC region as a whole. A comprehensive study of the impact of these proposed and incomplete standards is not feasible until they are finalized. Regarding manpower, aside from the estimated costs there is the very real situation that the number of qualified engineers available in the industry is nowhere

Organization	1 - Question 13 Comments:	2 - Question 13 Comments:
		near what would be necessary to carry out the studies (including sensitivities) called for by the proposed standard. This reality needs to be taken into consideration by the Standards Drafting Team when it makes its implementation plan recommendations.
Oncor Electric Delivery	$250,000	$100,000
ISO New England Inc.	See response to question 12.	See response to question 12.
Orlando Utilities Commission	$25,000	$25,000
Entergy Services, Inc.	$150,000	$100,000 / year
BPA Transmission Reliability Program	This information is not available.	This information is not available.
Response: The SDT thanks all who responded to this survey question.		

14. System Reinforcement: One time cost, capital investment, to expand your system reinforcement program (due to lead times associated with different types of facilities, this will probably be an accumulated cost over several years). How many years do you estimate that it will take to complete this initial expanded system reinforcement program:

Summary Consideration:

The SDT has reviewed the responses and will use the data as background information in making any further decisions with regard to this standard. No direct changes were made to any of the requirements at this time based on this information.

Organization	1 - Question 14 Comments:	2 - Question 14 Comments:
Dominion - Electric Transmission Planning	Difficult to estimate the investment required, but it will be in the millions if not hundreds of millions of dollars.	Siting new transmission in Virginia can take a minimum of 5 to 7 years if new right-of-way acquisition is required. It is difficult to provide an estimate of time, but it will be quite extensive.
NPCC	NPCC participating members have expressed compliance concerns that this standard, and in particular this question, imply NERC has the ability to "force" transmission reinforcements and construction. It should be emphasized and clarified that the standard should require transmission studies only, and per the Energy Policy Act, NERC does not have this authority as the ERO as granted by FERC in the US and NO authority allowing this in Canada. Also NPCC participating members expressed concern that a validly conducted assessment which shows that criteria are not met (in the 5 or 10 year horizon) could result in non-compliance with the Standard. If NERC believes that it can issue monetary penalties for 5 or 10 year assessments that show that performance criteria will not be met under future system conditions, there is a key question that requires explanation: What behavior is NERC attempting to incent through fining parties for conducting assessments which identify problems in a 5 to 10 year horizon? Also, NERC should further explain how it would view the relevance of a State or Provincial decision not to permit new facilities when issuing such a potential penalty such as preclusive siting issues with Generating Plants.	See above

Organization	1 - Question 14 Comments:	2 - Question 14 Comments:
TVA System Planning	Costs would include the implementation of redundant protection schemes for the P5 planning event (fault + failure of protection scheme), additional 500-kV facilities for P2.2 (single contingency - bus section outage) and P4 (fault + stuck breaker) events, and additional 161-kV facilities for the P3 (Generator +1) events. Estimated cost of $1 billion	Time duration of 10 years would be required
Progress Energy Carolinas	$100,000,000	10 years
BCTC	We do not believe that this cost is not relevant for determining the applicable standards and have not estimated it. The reinforcement costs are orders of magnitude greater that the costs of alternatives the changes in this standard propose to prohibit (e.g. use of RAS, curtailment in anticipation of the next contingency). We believe it is very unlikely that we would get approval for the projects that would be required to meet the proposed changes.	It is highly unlikely that we would be able to get funding approval for the system reinforcements required to meet the proposed changes in these standards.
Manitoba Hydro	An estimate of the cost to Manitoba Hydro is $1.0 Billion.	The licensing and construction of facilities to achieve compliance will require at least 10 years.
Los Angeles Department of Water and Power	If this question is referring to discriminatory treatment between different voltage classes that is arbitrary; the effort should be directed to either treat all the voltage classes equally or do come up with a scientific or historical basis to support the requirement. This is an engineering standard, all the criteria should have some scientific/engineering rationale that can be supported either by physics or historical data.	
National Grid	The comment period was not long enough to develop a thoughtful response to the impact that the new standards might have on the construction requirements. Therefore cost can not be reasonably speculated.	At least 5 beyond the study period. Lines requiring new Rights-of-Way may require 10.
Pacific Gas and	The capital investments would be dependent on the system	Any transmission facilities that would require a certification of

Organization	1 - Question 14 Comments:	2 - Question 14 Comments:
Electric Co.	reinforcements needed due to the added requirements. For example, if after the first contingency, redispatch to curtail firm transfers is not allowed in anticipation of the next single contingency, the system reinforcements could easily include more 500 kV lines and related facilities. The costs of such reinforcements could be a few Billion dollars.	public convenience and necessity could take more that five years for permitting, engineering and construction. Transmission Planning could take a few more years depending on the transmission reinforcements to be constructed.
Gainesville Regional Utilities	$50 Million. Again, I don't feel this is needed for smaller utilities.	7 years. Again, I don't feel this is needed for smaller utilities.
Public Service Company of New Mexico	This ultimately depends on the degree to which the local area issues addressed by footnote b of Table 1 of the existing TPL are maintained. Without the local area concepts of the existing TPL, costs could run into the hundreds of millions of dollars.	This ultimately depends on the degree to which the local area issues addressed by footnote b of Table 1 of the existing TPL are maintained. Without the local area concepts of the existing TPL, permitting requirements would result in some projects exceeding 10-years.
JEA	Could be up to $1 Billion and would depend on the physical ability to terminate at existing 500 kV substations and the ability to acquire 500 kV ROW outside of JEA's and Florida's jurisdiction.	Minimum of 7 years if DOE declares a Corridor of National Interest. Otherwise it could be longer and more costly.
PacifiCorp	$100,000,000 + Will not be able to estimate the total cost until after the studies are complete.	10 years
Puget Sound Energy, Inc.	$800,000,000 to recover Firm Transmission capacity with no adjustment following N-1.	15 years
ITC Holdings: ITC, METC, ITC Midwest	Since we have been following the NERC Planning Standards, at this point we do not expect an additional one time system reinforcement cost.	Since we have been following the NERC Planning Standards, at this point we do not expect an additional time-frame for a system reinforcement program.
Idaho Power Company	Not sure	5 years
SMUD	A field test of the revised standard would be the appropriate way to arrive at the approximate costs to support the new/modified	A field test would be the time to get an educated estimate.

Organization	1 - Question 14 Comments:	2 - Question 14 Comments:
	requirements.	
Hydro-Quebec Transenergie (HQT)	HQT and NPCC participating members have expressed compliance concerns that this standard, and in particular this question, imply NERC has the ability to "force" transmission reinforcements and construction. It should be emphasized and clarified that the standard should require transmission studies only, and per the Energy Policy Act, NERC does not have this authority as the ERO as granted by FERC in the US and NO authority allowing this in Canada. Also HQT and NPCC participating members expressed concern that a validly-conducted assessment which shows that criteria are not met (in the 5 or 10 year horizon) could result in non-compliance with the Standard. If NERC believes that it can issue monetary penalties for 5 or 10 year assessments that show that performance criteria will not be met under future system conditions, there is a key question that requires explanation: What behavior is NERC attempting to incent through fining parties for conducting assessments which identify problems in a 5 to 10 year horizon? Also, NERC should further explain how it would view the relevance of a State or Provincial decision not to permit new facilities when issuing such a potential penalty such as preclusive siting issues with Generating Plants.	
Progress Energy Florida, Inc.	Again, due to the difficulties described in the answer to Question 12a, given that the amount of analysis cannot be reasonably estimated, neither can the one-time capital cost. PEF did state in the answer to Question 11 that the cost to our 500 kV system alone would easily run in to the range of costing billions of dollars. How many billions, we are not sure, but we have sufficient experience through presently planned 500 kV projects on our system to know that the cost for such expansion is in the range of billions of dollars. Given that PEF has not been able to comprehensively assess the costs to its 230 kV and 115 kV system, it is likely that the total cost of implementing the draft TPL Standard would be many, many billions of dollars. As stated earlier, this concern is reinforced in the answer to Question 15, but	PEF does not believe the undertaking required in the present draft of the TPL Standard, questionably described here as an "initial" program, could reasonably be implemented in our lifetime. As stated in our answers to Questions 12 and 13, the planning time would run at least 10 years, or one complete long-term planning cycle. Implementation, particularly given the scope of 500 kV projects and challenges with operating the existing system while constructing such large projects, will take an additional 10 years. An estimate of 20 years, however, assumes that the industry is in place to make such projects feasible continent-wide. Just a cursory assessment of the limited resources of the Transmission Construction industry, combined with the global demand for concrete and steel, leads us to conclude that implementation of

Organization	1 - Question 14 Comments:	2 - Question 14 Comments:
	we are extremely concerned that our ratepayers will potentially be burdened with such exorbitant cost for so little benefit, and are certain that our PSC and our ratepayers will agree.	the draft Standard's requirements is not feasible short of a World War II-scale re-tooling of our entire economy. Given the significant challenges the U.S. economy is already facing, the prudency of such a colossal undertaking with minimal benefit becomes even more questionable.
Sierra Pacific Power Company / Nevada Power Company	$800 Million	10 years
Lafayette Utilities System	See response to part 1 of Question 12.	See response to part 1 of Question 12.
Arizona Public Service Co.	Hard to quantify without studying.	5 years
Ameren	Our present interpretation is that the proposed revised standard would have a minimum impact on the reinforcement of the Ameren system. The modification to remove the requirement that bus-tie circuit breakers must have the same performance requirements as non-bus-tie breakers significantly reduces our issues of non-compliance, and particularly for circuit breakers 300 kV and above.	Our present interpretation is that the proposed revised standard would have a minimum impact on the reinforcement of the Ameren system.
City of Tallahassee, FL	depending on the interpretation of the standard as currently drafted, this cost could be substantial (at least $20M) over a 5-year capital budget period (consistent with the City's current practice). It's doubtful this level of funding could be achieved/maintained given other financial pressures for local governments.	Unable to develop an answer to this question, since it depends on the ability to successfully site and permit generation and transmission facilities (which is becoming increasingly harder to complete), and the requirements of any successful siting effort may make the costs prohibitive (ie, underground transmission facilities and/or stringent controls on generating facilities).
Florida Power and Light	These costs cannot be determined without having experience with the new standard and its performance requirements. The costs of such investment could be in the 10's of billions of dollars for FPL because of the increased level of performance contemplated by the draft standard.	If we knew what was needed today, it could conceivably take up to 10 years to complete, if the projects are all feasible. Without knowing what is necessary, a fair estimate would be 20 years. This does not take into consideration that the entire industry would be competing for the same limited resources of material and manpower to complete this reinforcement. Justification would be

Organization	1 - Question 14 Comments:	2 - Question 14 Comments:
		problematic and eminent domain may not be enforceable due to the remote low probability of an N-1-1 event, and lack of a true reliability need.
Exelon Transmission Planning		Analysis has not been completed at this time to determine the extent of the additional burden, but significant expenditures, in terms of personnel, tools and transmission upgrades, are anticipated if this draft were implemented.
CenterPoint Energy and CPS Energy	We believe the proposed requirements may not impose additional capital investment for system re-enforcements for our companies. We believe we are already achieving the reliability goals embodied in the proposed requirements but in a much more efficient and cost-effective way than the overly prescriptive approach proposed in these requirements.	
SRP	Unknown costs, there are numerous raise the bar Standards, hard to determine the additional cost to SRP until the complete studies are performed and evaluated.	Unknown until the reinforcements are determined.
MidAmerican Energy Company	The additional one-time costs of system reinforcements to meet the new requirements would depend on the results of the new studies and be hard to forecast. However, if they involved just a few 345 kV substation modifications and 345 kV line additions, then MEC estimates that it would cost in the range of hundreds of millions of dollars per responsible entity.	The lead time to build new system projects would depend on the results of new studies and be hard to forecast. However, if they involved a 345 kV substation modification or a 345 kV line addition, MEC estimates that it would take 5 to 7 years to complete the new projects.
Tucson Electric Power Company	unable to determine without actual studies	10+ years5 year budget and 10 year plans have been approved. Proposed projects in the 5-10 year time frame would need revised and accelerated and new projects would be proposed following the completion of these proposed projects.
SERC Dynamics Review Subcommittee		The lead time for new line construction is at least 7 years.

Organization	1 - Question 14 Comments:	2 - Question 14 Comments:
MRO NERC Standards Review Subcommittee	The additional one-time costs of system reinforcements to meet the new requirements would depend on the results of the new studies and be hard to forecast. However, if they involved just a few 345 kV substation modifications and 345 kV line additions, then we estimate that it would cost in the range of hundreds of millions of dollars per responsible entity.	The lead time to build new system projects would depend on the results of new studies and be hard to forecast. However, if they involved a 345 kV substation modification or a 345 kV line addition, we estimate that it would take 5 to 7 years to complete the substation project and 8 to 12 years (or more) to complete the new transmission line project.
Midwest ISO	This is difficult to quantify at this time.	This is difficult to quantify at this time.
Tri-State Generatino and Transmission Association, Inc.	We do not anticipate additional investment beyond currently planned facilities.	Transmission projects generally take between 3 and 6 years to complete.
Tri-State G&T		10-Jun
Lakeland Electric	Unknown	Unknown
Southern Company Transmission	These costs cannot be determined without having experience with the new standard and its performance requirements.	
NERC and Regional Coordination	Clarity needs to be added throughout the requirements. Our interpretation of the standards as written will not result in substantial capitol investment. These standards will not have a substantial impact on improved system reliability, however; the requirements do significantly increase the manpower investment in study documentation and efforts associated with reporting study results.	
ColumbiaGrid	The new TPL Standard raises the bar of transmission system performance. This can be expected to require significant additional analysis, documentation and system reinforcements (or reduced firm transfers allowed on the system if system reinforcements are not made). We will defer to our members to provide quantification of those elements.	

Organization	1 - Question 14 Comments:	2 - Question 14 Comments:
IESO	None expected at this time.	None expected at this time.
Northeast Utilities	Northeast Utilities has participated with ISO-NE and NPCC and supports the comments filed by those organizations.	Northeast Utilities has participated with ISO-NE and NPCC and supports the comments filed by those organizations.
North Carolina Electric Membership Corp	N/A	N/A
American Transmission Company	The additional one-time costs of system reinforcements to meet the new requirements would depend on the results of the new studies and be hard to forecast. However, if they involved just a few 345 kV substation modifications and 345 kV line additions, then we would estimate that it costs may be in the range of hundreds of millions of dollars.	The lead time to build new system projects would depend on the results of new studies and be hard to forecast. However, if they involved a 345 kV substation modification or a 345 kV line addition, we estimate that it might take 5 to 7 years to complete the substation project and 8 to 12 years (or more) to complete the new transmission line project.
New York Independent System Operator	Depending on facilities covered by the standard, it is estimated that the cost to bring facilities into compliance potentially could be on the order of billions of dollars.	A preliminary estimate is that it would take at least five but potentially up to ten years to bring facilities into compliance.
SERC Reliability Review Subcommittee and Planning Standards Subcommittee	Typical costs for a large utility in SERC would include the implementation of redundant protection schemes for the P5 planning event (fault + failure of protection scheme), additional 500-kV facilities for P2.2 (single contingency - bus section outage) and P4 (fault + stuck breaker) events, and additional 161-kV facilities for the P3 (Generator +1) events. Cost: $1 billion	Time: 10 years The following analysis was performed by one large integrated utility in SERC. The results are not representative of all utilities in the SERC region, but would be multiplied many times over to fully represent the SERC region as a whole. A comprehensive study of the impact of these proposed and incomplete standards is not feasible until they are finalized. Regarding manpower, aside from the estimated costs there is the very real situation that the number of qualified engineers available in the industry is nowhere near what would be necessary to carry out the studies (including sensitivities) called for by the proposed standard. This reality needs to be taken into consideration by the Standards Drafting Team when it makes its implementation plan recommendations.
Oncor Electric	Unknown, dependent on results of analysis and solutions	Unknown, dependent on results of analysis and solutions

Organization	1 - Question 14 Comments:	2 - Question 14 Comments:
Delivery	implemented	implemented
ISO New England Inc.	See response to question 12.	See response to question 12.
Orlando Utilities Commission	$0.00 if system adjustment in preparation for the second part of N-1-1 can include firm transfer and non-consequential load adjustments when necessary. $500 Million if n-1-1 conditions must be met without firm transfer and non-consequential load - adjustments before the second event, at 230 kV and above$1 Billion if n-1-1 conditions above are met on load serving systems below 230 kV.	10 Years to meet n-1-1 without curtailment/reduction prior to the second n-1. A significant portion of the work would be in either downtown, established residential or highly sensitive environmental areas, all of which may require extensive legal proceedings to build the projects. There would also be a large amount of simultaneous work going on nationwide that would result in a shortage in construction & design personnel as well a scarcity in needed materials.
Entergy Services, Inc.	Without performing the requisite analyses, Entergy does not know definitively how much it will cost to comply with these revised standards. However, Entergy expects the cost could be up to $1 billion to become fully compliant.	15 - 20 years The time required for construction will be elongated due to the need for significant numbers of new construction projects. This will require that projects be queued by the TPs because of constraints in available materials, labor and other resources.
BPA Transmission Reliability Program	This information is not available.	This information is not available.
Response: The SDT thanks all who responded to this survey question.		

15. (A) Do you generally support the revised standard? (B) Are you unsure whether you generally support the revised standard? or (C) Do you definitely not support the revised standard? Please check the appropriate box below. If your response is either (B) or (C), please explain your single biggest concern with the revised standard, including which specific requirement or set of requirements causes you the most concern and why.

A – Generally support the revised standard
B – Unsure about supporting the revised standard
C – Definitely do not support the revised standard

Summary Consideration: 50% of the commenters voted that they did NOT support the revised standard at this time. 35% are unsure. Some of the major issues that were raised by the industry for Question 15 include:

1. System Adjustment in event P6 - Many commenters believe that after the first N-1 in P6, curtailment of Firm Transmission Service or firm transfers should be allowed as part of System adjustment in preparation for the next N-1, citing that this is presently allowed in footnote b in existing Table 1. Otherwise, the Firm Transmission Service under normal System intact condition (before the first N-1) will have to be significantly curtailed in anticipation for meeting performance requirements after N-1-1. Many believe this would in effect be imposing an N-2 criterion for offering Firm Transmission Service.

SDT response: The SDT agrees that clarification regarding treatment of Firm Transmission Service and Non-Consequential Load Loss during adjustment is necessary. Footnote 10 in Revision 3 of the Standard provides clarification.

2. Dropping local load - Many commenters opposed not being able to drop some local network Load for a single Contingency event as long as Bulk Electric System reliability was not impacted. This is presently allowed in footnote b of the existing TPL-002. However, there is no such allowance any longer for losing Non-Consequential Load for a single Contingency in the proposed draft. Many commenters suggested that orderly dropping of local network Load could limit the spread of the disturbance beyond the local area and allow BES reliability to be maintained. Some local network customer curtailments or local area Load loss has been allowed by local regulatory authorities as long as the overall reliability of the interconnected System was not impacted. This is a result of tradeoffs between providing a higher level of reliability in a local area and the cost and environmental impacts of providing that service.

SDT response: Some commenters expressed concern with the inability to shed Non-Consequential Load in response to a single Contingency event. It was indicated that some stakeholders rely on an SPS to drop local area network Load in response to some single Contingency events and that these System designs are permissible under the presently approved TPL-002-0 standard. FERC in Order 693 was clear in paragraph 1794 that that interruption of Non-Consequential Load is not permitted for single Contingency events. This position was vetted in draft 1 of the TPL-001-1

and most stakeholders and the SDT support this position. The use of an SPS design would be permitted for a single Contingency event if the SPS design interrupts service to customers involved in an interruptible Load contract arrangement. As an alternative, an entity could seek an Entity Variance for the situation described through their Regional Entity organization. In paragraph 1794 FERC clarified that "…an entity may seek a regional difference to the Reliability Standard from the ERO for case-specific circumstances". The process described by FERC as a regional difference is described in detail in the "NERC Standards Development Procedure" document under the subsection titled "Variances to NERC Reliability Standards".

3. Raising the bar for 300 kV and above - Many commenters believe that the SDT has not yet justified raising the bar on Facilities above 300 kV. Some pointed out that the higher performance requirements for Facilities >300 kV are tied to very low probability events, so the enhanced reliability is not worth the cost. Some also pointed out that disruptions on lower voltage circuits can cause real and reactive power flow fluctuations across, and eventual separation of, higher-voltage networks. Many believe that there should be no distinction in voltage classes for allowing or not allowing controlled Load shed for applicable events.

SDT response: The SAR for this standard recognized FERC orders which indicated a need to "raise the bar" for the industry. The SDT agrees and is attempting to do this in a reasonable fashion. There is significant flexibility in the Corrective Action Plans allowed for any additional performance requirements which must be met. Industry consensus, through approval of the SAR, is that revision of the existing TPL standards is appropriate.

4. Load modeling for dynamics - Many commenters believe that Load modeling is a significant open issue, such as the models for dynamic studies have yet to be developed and the data is not yet in hand. Many find this conflicting with implementation of the TPL standards due to modeling details being a gating item to completing some System studies.

SDT response: The SDT agrees and believes that industry guidance is needed to capture the appropriate dynamic behavior of Loads. In response to comments, the SDT has removed Requirements R9-R14 and enhanced Requirement R1 to more clearly specify the modeling information needed to support accurate Planning Assessments. Any comments received from the industry on MOD standards will be forwarded to NERC for inclusion into NERC Reliability Standards Development Projects 2010-04 Modeling Data and 2010-05 Demand Data. Requirement R2.4.1 has been modified to include the following: "An aggregate system Load model which represents the overall dynamic behavior of the Load is acceptable."

5. Sensitivity analysis - Another concern of commenters is the prescriptive nature of sensitivity scenarios, listed within Requirement R2.1.3 for steady-state and Requirement R2.4.3 for Stability, and the volume of associated study work. Some commenters feel that the Transmission Planner and Planning Coordinator can better select the most appropriate sensitivities for their System. Commenters also feel that examples of sensitivities are already inherent in the existing requirements, such that some sensitivity studies are in effect adding an additional level of Contingency (N-2 or N-3). Many commenters feel that the additional analyses proposed by the revised standard are not warranted and are already covered adequately in the existing studies and TPL standards.

SDT response: The intent of the SDT in requiring performance of sensitivity studies is to identify critical System conditions and to expand the planners' portfolio of knowledge about vulnerabilities on their System. This is also an expectation from FERC Order 693 paragraphs 1704 - 1706.

As a result of industry comments, the following changes have been made to TPL-001-1:

Consequential Load Loss: ~~Load that is no longer connected to a source as a result of the event being studied or which is lost as a result of the load's response to the transient conditions of the event (other than through the action of UVLS or UFLS schemes). Although Load which is lost as a result of the Load's response to the transient conditions of the event is considered Consequential Load Loss and is permitted when Consequential Load Loss is allowed, Transmission planning entities are not allowed to rely upon the expectation of such Load loss to meet steady state performance requirements.~~ All Load that is no longer served by any Transmission Facilities as a result of the Facilities being removed from service by a planned Protection System operation to isolate fault conditions.

Non-Consequential Load Loss: Non-Interruptible Load loss other than Consequential Load Loss, Supplemental Load Loss, and Load Reduction.~~.~~ ~~For example, non-Interruptible Load loss that occurs through manual (operator initiated) or automatic operations such as under-voltage Load shedding, under-frequency Load shedding, or Special Protection Systems would be considered Non-Consequential Load Loss~~.

Year One: The first year that a Transmission Planner is responsible for assessing. This is further defined as the planning window that begins 12-18 months from the ~~completion of the previous annual Planning Assessment~~ current calendar year.

R1 Each Transmission Planner and Planning Coordinator shall maintain System models for performing the studies needed to complete their Planning Assessment. The models shall use data consistent with the data provided in accordance with ~~Requirements R9 through R14,~~ the MOD-010 and MOD-012 standards~~,~~ and other data sources,~~.~~ and shall simulate projected System conditions including requirements of regulatory authorities and other legal obligations.

R1.1.1 Planned outages of generation and Transmission Facilities, if specifically known.

R2 Each Transmission Planner and Planning Coordinator shall ~~conduct and document the results of~~ prepare ~~its~~an annual Planning Assessment of its portion of the BES. This Planning Assessment shall use current or past studies, document assumptions, document results, and shall cover steady state analyses, short circuit analyses, and Stability analyses ~~including both System and Generating Unit Stability~~.

R2.1.3 For each of the studies described in Requirements R2.1.1 and ~~Requirement~~ R2.1.2, sensitivity case(s) that are intended to stress the System with ~~sensitivities~~ variations ~~that reflect~~ in one or more of the following conditions not already included in the studies shall be ~~run and documentation of the technical rationale for why each of the conditions was or was not selected shall be supplied~~ included in the Assessment:

- ~~Variability and outages of r~~Reactive resource~~s~~ capability

R2.1.4 When an entity's spare equipment strategy could result in the unavailability of major Transmission equipment that has a lead time of one year or more (such as a transformer), an analysis of the impact on System performance shall be assessed. The analysis shall reflect the Contingencies identified in Table 1 during the conditions that the System is expected to experience due to the unavailability of the long lead time equipment.

R2.4.1 System peak Load for one of the five years. For peak System Load levels, a Load model shall be used which appropriately represents the dynamic behavior of Loads, including consideration of the behavior of induction motor Loads. An aggregate system Load model which represents the overall dynamic behavior of the Load is acceptable.

R2.4.3 For each of the studies described in Requirements R2.4.1 and ~~Requirement~~ R2.4.2, ~~s~~ensitivity case(s) that are intended to stress the System with variations ~~to reflect~~ in one or more of the following conditions not already included in the studies shall be ~~run and documentation of the technical rationale for why each of the conditions was or was not selected shall be supplied~~ included in the Assessment:

R2.6.1 (now R2.5.1) For steady state, short circuit, or ~~System~~ Stability analysis: the study shall be five calendar years old or less.

R2.6.2 (now R2.5.2) For steady state, short circuit, ~~Generating Plant Stability,~~ or ~~System~~ Stability analysis: the ~~study~~ present System model shall not include any material changes, such as, generation or Transmission additions/removals, or topology changes that have occurred in the intervening period and would impact the study area. Material generation changes could include:

R2.7 (now R2.6) For Planning Events shown in Table 1~~ – Steady State Performance and Table 2 – Stability Performance~~, when the analysis indicates an inability of the System to meet the performance requirements in ~~the t~~Table~~s~~ 1, the Planning Assessment shall include Corrective Action Plans addressing how the performance requirements will be met. Revisions to the Corrective Action Plans are allowed in subsequent assessments but the System shall continue to meet the performance requirements in the tables. Corrective Action Plans do not need to be developed solely to meet the performance requirements for sensitivities run in accordance with Requirements R2.1.3 and R2.4.3. The Corrective Action Plan shall:

Under Requirement R2.6.1:

- Installation or modification of Protection Systems or Special Protection Systems
- Installation or modification of automatic generation tripping as a response to a single or multiple Contingency to mitigate Stability performance violations.
- Installation or modification of manual and automatic generation runback/tripping as a response to a single or multiple Contingency to mitigate Steady State performance violations.

R2.8 The Planning Assessment shall provide the largest Consequential Load Loss (megawatt Demand) and the associated event caused by any P1 event and any P2 event in Table 1.

R3. For the steady state portion of the Planning Assessment, each Transmission Planner and Planning Coordinator shall perform analysis for the Near-Term and Long-Term Transmission Planning Horizon studies in Requirement R2.1 and Requirement R2.2. ~~The studies shall be based on computer power flow simulations that analyze BES normal performance (n-0) and System response to c~~Contingencies in Table 1 ~~– Steady State Performance.~~ The studies shall be based on computer simulations using models utilizing data provided in Requirement R1.

R3.1 Studies shall be performed to determine whether the BES meets the performance requirements in Table 1~~ – Steady State Performance.~~ based on the lists created in Requirement R3.4.

R3.3.2 For all generators, studies shall consider the minimum steady state voltage limitations ~~of all generators~~ and identify how the generators are ~~treated~~ analyzed in the steady state simulation

R3.3.3 For all Transmission lines, studies shall consider relay loadability and identify how loadability is ~~treated~~ analyzed in the steady state simulation.

R3.4 Those Planning Event Contingencies in Table 1 ~~– Steady State Performance~~ ~~not covered in Requirement R3.3.2~~ that are expected to produce more severe System impacts shall be identified~~,~~ and a list of those Contingencies to be evaluated for System performance in Requirement R3.1 created~~,~~. ~~and t~~The rationale for the Contingencies selected for evaluation shall be available as supporting information and shall ~~includ~~include~~e~~ an explanation of why the remaining Contingencies would produce less severe System results.

R4 For the Stability portion of the Planning Assessment, as described in Requirement R2.4~~ and Requirement R2.5~~, each Transmission Planner and Planning Coordinator shall perform the Contingency analyses listed in Table ~~2~~1 ~~– Stability Performance~~. The studies shall be based on computer simulations using models utilizing data provided in Requirement R1. ~~The studies shall be based on computer simulations using models utilizing data provided in Requirements R9 through R14, the MOD-010 and MOD-012 standards, and other data sources, to include known planned and long term outages of Transmission or generation equipment. The studies shall cover both System Stability and Generating Unit Stability. The following requirements apply to both System Stability and Generating Unit Stability studies unless otherwise noted.~~

R4.3.2 ~~Studies shall consider~~ Simulate generator performance under anticipated conditions including how the voltage ride through capability ~~of all generators and identify how the generators are treated~~ is analyzed~~in the simulation~~.

R4.4 ~~At a minimum, t~~Those Planning Event Contingencies in Table ~~2~~1 – ~~Stability Performance~~ that ~~would~~are expected to produce more severe System impacts shall be identified, and a list of those Contingencies to be evaluated for System performance in Requirement R4.1 created~~,~~. ~~and t~~The rationale for the Contingencies selected for evaluation shall be available as supporting information with an explanation of why the remaining Contingencies would produce less severe System results.

R7. Each Planning Coordinator shall coordinate the distribution of Planning Assessment results among~~ neighboring systems~~ adjacent Planning Coordinators and any functional entity who has indicated a reliability need, coordinating analysis of these results through an open and transparent peer review process such as described in FERC Order 890.

Header note 'e' - For all Planning Events, planned System adjustments such as Transmission configuration changes and redispatch of generation are allowed if such adjustments are executable within the time duration applicable to the Facility Ratings.

Extreme Event 2b (steady state) - Loss of all Transmission lines on a common ~~r~~Right-of-~~w~~Way.

Footnote 1.a.ii - For all other Planning Events: No generating unit or units totaling more than the Contingency ~~r~~Reserve of the Balancing Authority (or Reserve Sharing Group if applicable) shall be allowed to pull out of synchronism. Generators that pull out of synchronism must have out-of-step protection or some other means to trip the generator for this condition and the resulting apparent impedance swings must not pass through relay characteristics that would result in the tripping of any Transmission System elements other than the generating unit and its direct connection Facilities.

Footnote 3 - Unless specified otherwise, simulate Normal Clearing faults. Single line to ground (SLG) or three phase (3Ø) are the fault types, that must be evaluated in Stability simulations for the event described. A 3Ø fault study indicating criteria are being met shall provide sufficient evidence that a SLG condition would also meet criteria.

Footnote 5 - When the conditions and/or event(s) being studied form the basis for conditional Firm Transmission Service, curtailment of that conditional Firm Transmission Service is allowed.

Footnote #10 – Curtailment of firm transmission service, when coupled with the appropriate re-dispatch of resources obligated to re-dispatch, is allowed both as a System adjustment (as identified in the column titled 'Initial System Conditions') and a corrective action, where it can be demonstrated that Facilities remain within applicable Facility Ratings and those adjustments do not result in the shedding of any firm Load. Where limited options for re-dispatch exist, sensitivities associated with the availability of those resources must be considered. Where Facilities external to the Transmission Planner's planning region are relied upon, Facility Ratings in those regions must be considered.

Footnote #12 - Excludes circuits that share a common structure for 1 mile or less.

Organization	Question 15:	Question 15 Comments:
El Paso Electric Company	B — Unsure about supporting the revised standard	While this 2nd draft TPL standard has some positive changes, notably: The allowance to use RAS to trip generation for N-1 (see R3.5 Manual and automatic generation run-back/tripping is allowed as a response to a single or multiple Contingency ...) with some rather generic conditions. The allowance for Non-consequential Load Loss for loss of a transmission Facility, followed by system adjustment, followed by loss of a second transmission Facility (see P6 in draft performance Tables 1 and 2). This is the same as Category C3 in the existing TPL-003-0.On the down side, as proposed, Standard TPL-001-1:1. Will not allow curtailment of firm transfer (or firm transmission service) after the first N-1, in preparation for the next N-1 regardless of transmission voltage level. This is a major issue. Curtailment of firm transfer after the first N-1 has always been a part of system adjustment in preparation for the next N-1 as stated in foot note b of the existing TPL-002-0:"b. Planned or controlled interruption of electric supply to radial customers or some local Network customers, connected to or supplied by the Faulted element or by the affected area, may occur in certain areas without impacting the overall reliability of the interconnected transmission systems. To prepare for the next contingency, system adjustments are permitted, including curtailments of contracted Firm (non-recallable reserved) electric power Transfers." Not allowing this could mean reduction of firm transfer capability pre-contingency unless new circuits are built.2. The existing standard (http://www.nerc.com/files/TPL-003-0.pdf) does not distinguish between voltage classes, curtailment of firm transfer and, planned and controlled load shedding are allowed regardless of voltage class for Category C events. The proposed standard will not allow curtailment of firm transmission service, or planned and controlled load shedding for loss of Facilities with operating voltage above 300 kV involving the following in the proposed Performance Tables 1 and 2:P2-2: Bus Section fault (Category C1) P2-3: Breaker fault (Category C2) P4: SLG Fault + stuck breaker (Categories C6 - C9) P5: SLG Fault + protection system failure (Categories C6 - C9)The number of Facilities lost would depend on the bus configuration for above 300 kV. If you have a ring-bus, breaker and a half or double breaker double bus, you would lose at the most 2 Facilities. But if you have Main-Aux or single breaker double bus, you will lose all Facilities connecting to the faulted Facility.
Response: In response to your comment and those of others in the industry on allowing curtailment of Firm Transmission Service as System adjustment after		

Organization	Question 15:	Question 15 Comments:
an N-1 Contingency, the SDT has added footnotes 5 and 10 to Table 1 - Steady State & Stability Performance. **Footnote 5** - When the conditions and/or event(s) being studied form the basis for conditional Firm Transmission Service, curtailment of that conditional Firm Transmission Service is allowed. **Footnote 10** – Curtailment of firm transmission service, when coupled with the appropriate re-dispatch of resources obligated to re-dispatch, is allowed both as a System adjustment (as identified in the column titled 'Initial System Conditions') and a corrective action, where it can be demonstrated that Facilities remain within applicable Facility Ratings and those adjustments do not result in the shedding of any firm Load. Where limited options for re-dispatch exist, sensitivities associated with the availability of those resources must be considered. Where Facilities external to the Transmission Planner's planning region are relied upon, Facility Ratings in those regions must be considered.		
Dominion - Electric Transmission Planning	B — Unsure about supporting the revised standard	(1) Unsure about cost/effort necessary to meet requirements (2) Uncertain that compliance with the proposed requirements in this standard would significantly improve reliability (3) R2.6.2: The entire sentence is confusing as it is modified. The original sentence in the previous draft made more sense. Please check and correct accordingly. (4) R 5.3: This requirement considers voltage ride-through capability of all generators. Nowhere in this TPL standard or in the MOD standards are Generator Owners specifically required to provide such data to Transmission Planners and Planning Coordinators. Stating the requirements for generator dynamics data and dynamic load characteristics in general terms, as listed below (from the MOD Standards), are vague. (a) shall provide appropriate equipment characteristics (b) shall provide dynamics system modeling and simulation data (c) Shall develop comprehensive dynamics data requirements .... to model and analyze the dynamic behavior... (5) In Table-2 Stability Performance, several places refer to "SLG or 3-phase Faults" . Since it states "or", does this mean we can get by with studying only SLG faults? We do not think that is the intent of this phrase; thus, a clarification is warranted. (6) One of our comments on the previous draft was with respect to a second-zone fault clearing due to protection system failure for a fault beyond zone 1 coverage of primary relies. The SDT's response was (Specific 1): "The SDT agrees with your concern and is working on a solution for a future draft." The question is repeated below, as a pending "to do" item, using the revised 'Table-2 Stability Performance' as reference: Category 5 in 'Table-2 Stability Performance' refers to a protection system failure event. We interpret this as, among other things, having a fault beyond the first-zone coverage of the primary protection scheme with the carrier equipment failure (or the carrier cut-off switch left in "OFF" position by a technician - a human error) resulting in a second-zone trip of the faulted line. The second-zone trip time is generally in the range of 30-35 cycles. This may be critical from the stability aspect for the terminal end at a generating plant even though only one element will be lost. Also, the second-zone trips may need to be studied for transmission lines out of next terminal from the generator end if the next terminal is connected to the generator terminal via a short line. We think that an

Organization	Question 15:	Question 15 Comments:
		additional single contingency Category should be added to this Table to cover the "Event" of second-zone trip scenario.

Response: 1. The SDT is striving to develop a standard that appropriately supports BES reliability and has industry consensus. The SDT is cognizant of the cost factors and additional efforts involved and has taken them into consideration in its deliberations in the development of this draft.

2. The SAR for this standard recognized FERC orders which indicated a need to "raise the bar" for the industry. The SDT agrees and is attempting to do this in a reasonable fashion. There is significant flexibility in the Corrective Action Plans allowed for any additional performance requirements which must be met. Industry consensus, through approval of the SAR, is that revision of the existing TPL standards is appropriate.

3. The SDT has revised the language of Requirement R2.6.2 (now R2.5.2).

R2.5.2 For steady state, short circuit, ~~Generating Plant Stability,~~ or ~~System~~ Stability analysis: the ~~study~~ present System model shall not include any material changes, such as, generation or Transmission additions/removals, or topology changes that have occurred in the intervening period and would impact the study area. Material generation changes could include:

4. The SDT understands that the Transmission Planner and the Planning Coordinator need data from the Generator Owners. However, revising the MOD standards is beyond the scope of this standard revision. Further, we note that one of the requirements of FERC Order 890 for long-term Transmission planning involves formal data exchange between stakeholders and the Transmission Planner and the Planning Coordinator. It is our understanding that these data exchange processes have been successful in providing better planning information about stakeholders such as independent Generator Owners. Also, we note that there is an ongoing standards development project, Generation Verification Project 2007-2009. You may wish to submit your comment to that SDT about the need for the Generator Owner providing this information to the Transmission Planner and the Planning Coordinator.

5. The SDT has combined the tables into a single table and clarified the "SLG or 3 phase" designations. In addition, the SDT has added footnote 3 to provide clarity.

Footnote 3 - Unless specified otherwise, simulate Normal Clearing faults. Single line to ground (SLG) or three phase (3Ø) are the fault types, that must be evaluated in Stability simulations for the event described. A 3Ø fault study indicating criteria are being met shall provide sufficient evidence that a SLG condition would also meet criteria.

6. The SDT has revised the language in the P5 category to clearly identify the required performance for an event with a Protection System failure. The current draft requires the planner to recognize the equipment that will be removed from service and the timing (including delays with back-up Protection Systems if the primary is out of service) during their Stability studies. The scenario you described is therefore covered by P5. The SDT does not see a need to have a separate event for that scenario.

NPCC	C — Definitely do not support the revised standard	This standard as drafted does not allow exceptions for small parts of the system as long as interconnected system reliability is maintained, which is allowed in the existing TPL standards in footnotes b) and c) in Table 1. Unless such exceptions are allowed significant transfer restrictions or large reinforcements must be made. The applicable TPL footnotes are: Planned or controlled interruption of electric supply to radial customers or some local Network customers, connected to or supplied by the Faulted element or by the affected area, may occur in certain areas without impacting the overall

Organization	Question 15:	Question 15 Comments:
		reliability of the interconnected transmission systems. To prepare for the next contingency, system adjustments are permitted, including curtailments of contracted Firm (non-recallable reserved) electric power Transfers. Depending on system design and expected system impacts, the controlled interruption of electric supply to customers (load shedding), the planned removal from service of certain generators, and/or the curtailment of contracted Firm (nonrecallable reserved) electric power Transfers may be necessary to maintain the overall reliability of the interconnected transmission systems. This comment form did not allow for the following items to be addressed: a. Definition of the Long-Term Planning Horizon. The planning horizon, for assessment purposes should be limited to 10 years. Such an assessment should be sufficient to identify requirements that may take an extended time to implement. b. Definition of Planning Coordinator is part of the NERC Functional Model, For consistency it should be removed from the Standard. c. Put headings on each section to identify requirements of section. Add headings to the tops of the subsequent pages in the performance tables. Headings only appear on the first page at the beginning of the Table. d. With respect to R2.2 - Delete "current" from the phrase "current System Peak Load study" and replace "study" with "assessment." e. Remove R2.2.1, the requirement to extend the assessment beyond 10 years. What does the length of the project have to do with the assessment? If it takes 15 years to build something, why does this require a review of year 15? What is the purpose of this assessment? f. R3.3.2 requires clarification - This standard needs to permit discretion regarding the single contingencies that need to be tested, similar to R 3.3.3 and R3.4. It is unnecessary to test all events. For example, contingencies may be limited to relevant disturbances that are contained within or directly impact the studied system. g. With respect to R3.2.1 - Clarify whether the intent of the standard is to address station service minimum voltage limitation, maximum leading VAR absorption capability or both at steady state. h. Remove R3.2.2 - Relay loadability is addressed in PRC-023 standard. i. With respect to R3.3.2.1 - Recommend the removal of the requirement to assess the expected duration of Consequential Load loss. It's not considered anywhere else in the standard. j. With respect to R3.3.3 - The paragraph refers to Table 1 Contingencies P3 through P7; this should be explicitly stated. Rationale for inclusion of testing should not be required; should only need to explain why certain Contingencies were not tested. This discretion should be applicable to all contingencies. k. With respect to section R5 - The concept of planned and long-term outages should apply to the general Planning Assessment, or not at all. It should not be specific to the Stability Assessment.

Organization	Question 15:	Question 15 Comments:
		l. The provisions of Section R.5.3 should have a corresponding MOD standard apply a requirement to provide information regarding all direct and indirect protective and control actions that could result in the inadvertant trip of the generator. Such a provision should include "other equipment (e.g. HVDC, SVC's, Statcoms)", and identify how these devices are treated in the simulation. m. Planned outages should be addressed in the operating horizon unless otherwise defined in the planning horizon.
New York Independent System Operator	C — Definitely do not support the revised standard	This standard as drafted does not allow exceptions for small parts of the system as long as interconnected system reliability is maintained, which is allowed in the existing TPL standards in footnotes b) and c) in Table 1. Unless such exceptions are allowed significant transfer restrictions or large reinforcements must be made. The applicable TPL footnotes are:? b) Planned or controlled interruption of electric supply to radial customers or some local Network customers, connected to or supplied by the Faulted element or by the affected area, may occur in certain areas without impacting the overall reliability of the interconnected transmission systems. To prepare for the next contingency, system adjustments are permitted, including curtailments of contracted Firm (non-recallable reserved) electric power Transfers.? c) Depending on system design and expected system impacts, the controlled interruption of electric supply to customers (load shedding), the planned removal from service of certain generators, and/or the curtailment of contracted Firm (nonrecallable reserved) electric power Transfers may be necessary to maintain the overall reliability of the interconnected transmission systems. This comment form did not allow for the following items to be addressed: a. Definition of the Long-Term Planning Horizion. The planning horizon, for assessment purposes should be limited to 10 years. Such an assessment should be sufficient to identify requirements that may take an extended time to implement. b. Definition of Planning Coordinator is part of the NERC Functional Model, Remove from Standard. c. Put headings on each section to identify requirements of section. d. With respect to R2.2 - Delete "current" from the phrase "current System Peak Load study" and replace "study" with "assessment." e. Remove R2.2.1, the requirement to extend the assessment beyond 10 years. What does the length of the project have to do with the assessment? If it takes 15 years to build something, why does this require a review of year 15? What is the purpose of this assessment? f. R3.3.2 requires clarification - This standard needs to permit discretion regarding the single contingencies that need to be tested, similar to R 3.3.3 and R3.4. It is completely unnecessary to test all events. For example, contingencies may be limited to relevant disturbances that are contained within or directly impact the studied system. g. With respect to R3.2.1 - Clarify whether the intent of the standard is to address station service minimum voltage limitation, maximum leading VAR absorption capability or both at steady state. h. Remove R3.2.2 - Relay loadability is addressed in PRC-023 standard. i. With respect to R3.3.2.1 - Recommend the removal of the requirement to assess the expected duration of

Organization	Question 15:	Question 15 Comments:
		Consequential Load loss. It's not considered anywhere else in the standard. j. With respect to R3.3.3 - The paragraph refers to Table 1 Contingencies P3 through P7; this should be explicitly stated. Rationale for inclusion of testing should not be required; should only need to explain why certain Contingencies were not tested. This discretion should be applicable to all contingencies. k. With respect to section R5 - The concept of planned and long-term outages should apply to the general Planning Assessment, or not at all. It should not be specific to the Stability Assessment. l. The provisions of Section R.5.3 should have a corresponding MOD standard apply a requirement to provide information regarding all direct and indirect protective and control actions that could result in the inadvertant trip of the generator. Such a provision should include "other equipment (e.g. HVDC, SVC's, Statcoms)", and identify how these devices are treated in the simulation. m. Planned outages should be addressed in the operating horizon unless otherwise defined in the planning horizion.
Northeast Utilities	C — Definitely do not support the revised standard	Northeast Utilities has participated with ISO-NE and NPCC and supports the comments filed by those organizations.

Response: Some commenters expressed concern with the inability to shed Non-Consequential Load in response to a single Contingency event. It was indicated that some stakeholders rely on an SPS to drop local area network Load in response to some single Contingency events and that these System designs are permissible under the presently approved TPL-002-0 standard. FERC in Order 693 was clear in paragraph 1794 that that interruption of Non-Consequential Load is not permitted for single Contingency events. This position was vetted in draft 1 of the TPL-001-1 and most stakeholders and the SDT support this position. The use of an SPS design would be permitted for a single Contingency event if the SPS design interrupts service to customers involved in an interruptible Load contract arrangement. As an alternative, an entity could seek an Entity Variance for the situation described through their Regional Entity organization. In paragraph 1794 FERC clarified that "…an entity may seek a regional difference to the Reliability Standard from the ERO for case-specific circumstances". The process described by FERC as a regional difference is described in detail in the "NERC Standards Development Procedure" document under the subsection titled "Variances to NERC Reliability Standards".

A. The SDT believes that a review of System conditions beyond the 10-year horizon is warranted. FERC Order 693 requires that the planning horizon take into account the lead times for siting and permitting of new long-distance Transmission lines and other long lead time solutions. The SDT has received industry comments regarding the need to exceed a 10-year horizon to account for longer lead time projects. Establishing planning horizons that are shorter than Transmission lead times may create gaps where the identification of a reliability need to which Transmission may be the best solution occurs too late to avert the identified reliability violation. Further, Operating Procedures or alternative short-term capital projects may be needed to limit the impact of the planning event until the planned Facilities can be completed. This information needs to be included in the Assessment.

Organization	Question 15:	Question 15 Comments:

B. Planning Coordinator has been defined in another project and as such has been deleted here.

C. The SDT also feels that the Tables need to be as clear and concise as possible. To that end, this version combined Tables 1 and 2 into one table with a revised format. The Planning Events are shown on one page so repeating the headings will not be needed.

D. The SDT believes that the existing language is appropriate. No change made.

E The SDT believes that a review of System conditions beyond the 10-year horizon is warranted under some circumstances. For example, if it takes 15 years to build a Transmission line, then the need for that line would have to be determined 15 years ahead of the in-service date. Therefore, Requirement R2.2.1 requires you to perform an Assessment on year 15 if it takes you 15 years to build a line.

F. The SDT has removed Requirement R3.3.2 and replaced it with additional language in Requirement R3.1. The SDT agrees with your interpretation that it does not require evaluation of all single Contingencies. Rather, the SDT specifically states in Requirement R3.4 that those Contingencies that are expected to produce the more severe System impacts shall be identified, evaluated for System performance, and the rationale for the Contingencies selected for evaluation shall be available as supporting information and shall include an explanation of why the remaining Contingencies would produce less severe results.

R3.1 Studies shall be performed to determine whether the BES meets the performance requirements in Table 1~~ – Steady State Performance.~~ based on the lists created in Requirement R3.5.

G. The SDT has not limited the purpose of this requirement to either minimum acceptable station service voltages or maximum Mvar absorption. The SDT believes that the purpose of Requirement R3.2.1 (now R3.3.2) is to determine if generators will be able to operate or trip off following the Contingency.

H. The SDT believes that relay load limits or loadability needs to be considered in the Contingency analyses. The studies should determine if Transmission line loadings could reach the relay loadability level which may add to the existing Contingency and perhaps, result in an unbounded cascading event. No change made.

I. By definition, Consequential Load Loss is allowed. To meet industry concern as well as FERC Order 693, the SDT has added Requirement R2.~~-~~8 to identify the event causing the single largest Consequential Load Loss Demand and its value and eliminate the reporting of the expected duration. Requirement R3.3.2.1 has been deleted in favor of new Requirement R2.8.

R2.8 The Planning Assessment shall provide the largest Consequential Load Loss (megawatt Demand) and the associated event caused by any P1 event and any P2 event in Table 1.

J. The SDT agrees that the rationale should be for all Planning Events but not for Extreme Events.

K. The SDT agrees and has moved this concept within Requirement R1 (see Requirement R1.1.1) so that it is applicable to all planning assessments. Further, both Requirements R3 and R5 (now R4) have been revised to make reference to Requirement R1**.**

R1.1.1 Planned outages of generation and Transmission Facilities, if specifically known.

R3. For the steady state portion of the Planning Assessment, each Transmission Planner and Planning Coordinator shall perform analysis for the Near-Term and Long-Term Transmission Planning Horizon studies in Requirement R2.1 and Requirement R2.2. ~~The studies shall be based on computer power flow simulations that analyze BES normal performance (n-0) and System response to c~~Contingencies in Table 1 – Steady State Performance. The studies shall be

Organization	Question 15:	Question 15 Comments:
based on computer simulations using models utilizing data provided in Requirement R1. **R4** For the Stability portion of the Planning Assessment, as described in Requirement R2.4 ~~and Requirement R2.5~~, each Transmission Planner and Planning Coordinator shall perform the Contingency analyses listed in Table ~~2~~1 ~~– Stability Performance~~. The studies shall be based on computer simulations using models utilizing data provided in Requirement R1. ~~The studies shall be based on computer simulations using models utilizing data provided in Requirements R9 through R14, the MOD-010 and MOD-012 standards, and other data sources, to include known planned and long term outages of Transmission or generation equipment. The studies shall cover both System Stability and Generating Unit Stability. The following requirements apply to both System Stability and Generating Unit Stability studies unless otherwise noted.~~ L. Requirement R5.3. has been modified (now R4.3.2) to address simulation of how generators perform under conditions being studied to address these concerns. "Other equipment" is addressed in Requirement R5.4. **R4.3.2** ~~Studies shall consider~~ Simulate generator performance under anticipated conditions including how the voltage ride through capability ~~of all generators and identify how the generators are treated~~ is analyzed~~in the simulation~~ M. While planned outages are addressed in the operating horizon, it is important that a Transmission Planner review the ability of its System to accommodate planned (maintenance) outages. Additionally, any specific known Facility outages need to be appropriately modeled for the planning horizon studied.		
TVA System Planning	C — Definitely do not support the revised standard	TVA's main concern is that no technical justification for "raising the bar" on facilities above 300-kV has yet been demonstrated such as required on P2, P4, and P5 for 300 kV and above. TVA is very concerned that "raising the bar" would be a financial burden on TVA's ratepayers. TVA would also like to provide the following additional comments to this second draft as follows: 1. In R2.4.1, load models that appropriately represent the dynamic behavior of motor loads are required. TVA believes that industry guidance is needed on how to properly model these loads. Does this requirement mandate the use of specific load models for each bus, or would an aggregate load model which represents the system as a whole be sufficient? It should be clearly stated whether the load model in R2.4.3.1 refers to system load or the dynamic load model at individual busses. 2. In R3.2.1 and R5.3, need industry guidance on how to actually determine the minimum steady state voltage limitations of generators. Is there a MOD or FAC requirement for generation owners to provide this information? 3. Which single contingency events should be included in calculations for Available Transfer Capacity? Should P2 events be included in addition to P1 events since P2 events are also defined as single contingency events in Tables? 4. Would like further clarification from the team on what does P5 exactly includes? For instance, does it include battery failures, CT failures, etc? 5. The existing TPL 002-0 allows for some local load to be dropped for a single contingency event as long as the Bulk system reliability was not impacted. However there is no such allowance any longer for losing such load for a single contingency in the proposed draft. It would be very expensive for TVA to fix all such events in several remote areas that

Organization	Question 15:	Question 15 Comments:
		would have very little impact on the overall reliability of the TVA bulk system. TVA believes that the capital spent for these fixes could be used to better strengthen the overall bulk system in much better ways. 6. Suggest rewording R2.2.1 from "To accommodate any known longer lead time projects" to "To identify any potential longer lead time projects". 7. Can operational guides be used indefinitely in R2.7.1 or does the team propose a limit on how long operational guides can be used until a capital fix is implemented? 8. In R3.3.2.1, what is the purpose for needing the expected duration of consequential load loss? There is a concern that this requirement will be very burdensome to keep track of the quantity of consequential load loss as well as expected duration. Who is requesting this info? It appears that this may be a local regulatory issue, not a reliability issue. 9. Suggest changing definition of "Planning Events" in the Definitions to say "Events that have a higher probability of occurrence and require Transmission system performance requirements to be met." 10. Should the proposed standard mention that utilities should run contingencies outside their system that could impact their own internal system? TVA believes that additional documentation be included in the new standard to address this. 11. Functional entity in 4.1.4 should be "LSE" instead of "DP" 12. In the Definitions for "Year One", suggest replacing "previous" with "most recent" to help clarify when the planning window should begin. 13. Should "peak" in R2.1.1 be replaced with "On Peak" as shown in the NERC glossary of terms? Also the requirements in this requirement are too prescriptive - should allow some flexibility to allow the TP which years to study as long as a minimum number of cases are studied. 14. Suggest replacing "Plant" in R2.6.2 with "Unit" to match terms used in Definitions. 15. In R2.7.1.1, what is meant by "project initiation date"? Is it when engineering starts, construction starts, etc? 16. Suggest rewording requirements R3.3.3 and R3.4 to be more clear - such as breaking each of these into several sentences each. Existing wording is very confusing. 17. There is a concern with R5.6.1 with the requirement to perform simulation on 20 MW generators (to be consistent with the Registration Criteria). We recommend a 75 MW generator cutoff for required simulations. Also in R5.6.2, should last word in sentence be "greater" or "lesser"? 18. In the Tables under Extreme Events, is 3.b. (loss of two TLs on different ROWs actually already covered under 1 (loss of two elements prior to system adjustments)? Also in the Tables under Extreme Events, it may be difficult for a TP to know enough about nuclear plant design to perform studies mentioned under 3.a.vi.

Organization	Question 15:	Question 15 Comments:
		19. In the notes under Extreme Events, we suggest that notes #2 and #3 be combined together since they are very similar in nature. 20. Should the P3 planning event descriptor (G+1) in the performance tables be (G+N-1) or (G-1, N-1)? The existing descriptor (G+1) tends to note that an element is being added to the system instead of being removed. 21. Should the new standard address specific voltage limit requirements that must be maintained during these planning events? Since different utilities have different voltage limits on their buses, should there be some consolidation to ensure the standard is applied equally at all utilities? 22. The note for Planning Event P1 states that “No generating unit or units shall be allowed to pull out of synchronism. A generator being disconnected from the System by Fault clearing action or by a Special Protection System is not considered pulling out of synchronism.” The standard does not allow consideration for small units with a Zone 2 fault. It is not practical to add pilot relaying on all lines from a plant with a small unit that would be stable for close-in three phase faults, and could be adequately protected when a Zone-2 fault would cause a small generator to trip off with out-of-step (OOS) protection. The table for P1 should allow small units (<75 MW) to trip using SPS or OOS protection.

Response: The SDT is attempting to raise the bar by developing a standard that appropriately supports BES reliability and has industry consensus. The majority of the SDT believes that 300 kV is an appropriate cutoff and that Transmission Systems above this level represent backbone Systems and are part of regional "grids". The SDT is cognizant of the cost factors involved here and is taking them into consideration in its deliberations and has provided for flexibility in Corrective Action Plans. FERC has noted in their orders that many of the concerns about raising the bar show more concern about economics than reliability (examples, Order 890, paragraph 423; Order 693, paragraph 1792, etc.).

1. The SDT agrees and believes that industry guidance is needed to capture the appropriate dynamic behavior of Loads. In response to comments, the SDT has removed Requirements R9-R14 and enhanced Requirement R1 to more clearly specify the modeling information needed to support accurate Planning Assessments. Any comments received from the industry on MOD standards will be forwarded to NERC for inclusion into NERC Reliability Standards Development Projects 2010-04 Modeling Data and 2010-05 Demand Data. Requirement R2.4.1 has been modified to include the following: "An aggregate system Load model which represents the overall dynamic behavior of the Load is acceptable."

2. The SDT believes that FAC-009-1, Requirements R1 and R2 require that generators provide these low voltage limitations as part of their Facility Ratings. Also, PRC-024, which is under development, will attempt to require generators to meet voltage ride-through criteria.

FERC Order 693, paragraph 1773 regarding FERC Commission directed changes to TPL-002 states "...requires all generators to ride through the same set of Category B and C contingencies as required by wind generators in Order No. 661, or to simulate those generators that cannot ride through as tripping".

The current MOD standards that address steady-state and dynamic simulation data requirements do not explicitly require the Generator Operators to provide voltage ride-through capability. These standards are set to be addressed by Project 2010-04 within NERC's Standards Development Work Plan. Based on the proposed TPL requirement, Requirement R5.3 (now R4.3.2), it is expected that the Transmission Planner would contact Generator Operators applicable to their System to obtain such data. If the data is not provided, it would be expected that a Transmission Planner state its assumption on the Vmin used for a generator

Organization	Question 15:	Question 15 Comments:

terminal voltage for assessing ride-through capability. It's likely such information could be obtained through generator manufacturers.

3. Questions related to ATC calculations are beyond the scope of this standard. Please see NERC Reliability Standard MOD 001-1, Requirement R7 & Measure M7 for additional information on ATC calculations.

4. The description of the P5 event has been clarified in this Revision of the Standard.

5. Some commenters expressed concern with the inability to shed Non-Consequential Load in response to a single Contingency event. It was indicated that some stakeholders rely on an SPS to drop local area network Load in response to some single Contingency events and that these System designs are permissible under the presently approved TPL-002-0 standard. FERC in Order 693 was clear in paragraph 1794 that that interruption of Non-Consequential Load is not permitted for single Contingency events. This position was vetted in draft 1 of the TPL-001-1 and most stakeholders and the SDT support this position. The use of an SPS design would be permitted for a single Contingency event if the SPS design interrupts service to customers involved in an interruptible Load contract arrangement.

6. The SDT believes that the existing language is appropriate. An assessment of year 15 would be needed to accommodate a Transmission line if it takes 15 years to build a line.

7. The SDT has not established a limit as to how long Operating Procedures may be used to meet System performance requirements and has left that decision for the Transmission Planner/Planning Coordinator.

8. By definition, Consequential Load Loss is allowed. To meet industry concern, as well as FERC Order 693, the SDT has added Requirement R2.8 to identify the event causing the single largest Consequential Load Loss Demand and its value and eliminate the reporting of the expected duration. Requirement R3.3.2.1 has been deleted in favor of new Requirement R2.8.

R2.8 The Planning Assessment shall provide the largest Consequential Load Loss (megawatt Demand) and the associated event caused by any P1 event and any P2 event in Table 1.

9. The definition of Extreme Events already states that these events have a lower probability of occurrence than Planning Events. The SDT did not make the change suggested by the commenter as there was no industry consensus to alter the definition.

10. The list of Contingencies is expected to cover the Transmission Planner's or Planning Coordinator's System for which they are responsible, including any tie-lines to adjacent Transmission Systems. The standard does not preclude the Transmission Planner or Planning Coordinator to expand the list of Contingencies to include some Contingencies of interest or known impact for adjacent System(s). It is expected that through peer reviews, the Transmission Planner or Planning Coordinator may initially learn of any new event within an adjacent System that impacts their own System.

11. Applicability 4.1.4 has been deleted due to the deletion of Requirements R9 – 14.

12. The SDT believes that it is not necessary to replace "previous" with "most recent" since Planning Assessments are required on an annual basis.

13. The SDT believes that the term "System peak Load" is appropriate. The SDT does not believe that Requirement R2.1.1 is too prescriptive, but is the minimum needed to gauge the timing for System reinforcements in the near-term horizon.

14. This draft of standard has been revised to remove word "plant" from Requirement R2.6.2 (now R2.5.2). Requirement R2.5.2 from the last draft of the

Organization	Question 15:	Question 15 Comments:
standard has been deleted. **R2.5.2** For steady state, short circuit, ~~Generating Plant Stability,~~ or ~~System~~ Stability analysis: the ~~study~~ present System model shall not include any material changes, such as, generation or Transmission additions/removals, or topology changes that have occurred in the intervening period and would impact the study area. Material generation changes could include: 15. The SDT has not defined a project initiation date and will leave that definition to be determined by the Transmission Planner and/or Planning Coordinator. 16. Most of the industry did not seem to find Requirements R3.3.3 and R3.4 unclear or confusing. Therefore, the SDT has decided to not undertake any rewording. Requirements R3.3.3 and R3.4 have been relabeled as Requirements R4.4 and R4.5 respectively. 17. The requirement for study has been changed to 20 MW for a single generator or for an aggregate of generators. This language is now in Requirement R2.5.2. Requirement R5.5.2 was deleted. 18. The SDT agrees and has removed the redundancy found with Extreme Event 3.b. Having multiple nuclear units out of service simultaneously is an Extreme Event, but it has occurred. The SDT recommends that the Transmission Planner consider sensitivities with different combinations of nuclear plants being out of service, including the possibility that they are all shut down simultaneously. To reinforce the more apparent combinations, the Transmission Planner may discuss the operational requirements and the equipment and design similarities of the nuclear plants with the appropriate Resource Planner or Generator Operator to determine credible scenarios which could commonly affect the nuclear plants. 19. The SDT discussed the combining of notes 2 & 3 but felt they wanted them separate for clarity. Note 2 is focusing on interruptions of Firm Transmission Service and Non-Consequential Load and Note 3 refers to transformer outage events. 20. The SDT has deleted the parenthetical to provide clarity. 21. The SDT has addressed this issue by the Header note 'b' for Steady State Only in Table 1 - Steady State & Stability Performance, where the Planning Coordinator sets the acceptable voltage deviations. The SDT believes that adjacent Planning Coordinators can adequately address this concern. 22. The SDT believes that any unit that is tripped by out of synchronism protection is actually in an "out of synchronism" condition and this should not occur for a P1 event regardless of generator size.		
City Water, Light & Power - Springfield, Illinois	A — Generally support the revised standard	
Response: Thank you for your response.		
Omaha Public	B — Unsure	Event 1 of Category P2 in Tables 1 and 2 addresses events consisting of "Breaker(s) opening without a Fault resulting in a

Organization	Question 15:	Question 15 Comments:
Power District	about supporting the revised standard	single ended line." Category P2 is labeled as a "single contingency" category, yet it seems like an event consisting of the opening of more than one breaker would actually be a multiple contingency. Please consider whether the "(s)" should be removed after the word "breaker" in the event description so that it addresses only a single breaker opening without a Fault. Table 1 does not address multiple contingencies consisting of loss of a transmission circuit, transformer, single pole of a DC line, or shunt device, followed by System adjustments, followed by the loss of a generator. It seems like Table 1 should be modified to address this type of multiple contingency. In the description of Event 1 of Category P2 in Table 1, remove the text "Loss of one of the following:". In the description of Event 2 of Category P2 in Table 1, replace "Bus section" by "Loss of a bus section". Assuming that this does not change the intent of the drafting team, in R3.3.2.2, R3.5.1, R5.4.3.1, change "shall be operating" to "are operating". In R3.3.2.2, consider removing the phrase "and within their thermal and voltage limits", because it seems like it may be redundant given the definition of the term "Facility Rating". In the event descriptions of Categories P1, P3, and P6 of Table 2, does the term "3-phase fault" apply to DC lines? If not, consider using a separate introductory phrase with the event descriptions of Categories P1, P3, and P6 of Table 2 that involve DC lines. Also consider removing the words "Loss of" in the description of Event 4 of Category P6 in Table 2. Since a definition was developed for "Bus-tie Breaker", capitalize the terms "bus-tie" and "bus tie" wherever they appear in the standard.

Response: The SDT believes that events which can result in a single line or line section being fed radially from one end must be analyzed to ensure that Load served from the line can be reliably served from either end regardless of station configuration.

The SDT expanded the existing Table 1 description to include the requirement to study the loss of any generator followed by the loss of a transmission element. The SDT made this decision based on the fact that generator outages are more probable and in many cases have longer outage durations than transmission element outages. The SDT considered a requirement to study any outage of a transmission element followed by a generator outage but decided that this would be very burdensome for a lower probability event and therefore, decided not to add it in Table 1 of the draft standard.

P2 - The tables have been combined and the words "Loss of" have been removed.

The SDT agrees. Event 2 in P2 has been modified for clarity.

Requirement R3.3.2.2 has been deleted in favor of Header note ‘e’ in the Table. Please note that the two tables in the second draft have been reduced to one table in the third draft. Requirements R3.5.1 and R5.4.3.1 have been deleted from the Standard.

Organization	Question 15:	Question 15 Comments:
The "3-phase faults" does not apply to DC lines. The SDT has revised the Table accordingly. P6 - The tables have been combined and the words "Loss of" have been removed. The final draft will have all defined terms capitalized.		
Progress Energy Carolinas	C — Definitely do not support the revised standard	While be believe that in many ways the proposed draft standard represents an improvement of the current standard, we have a number of significant concerns that preclude our endorsement for the proposed standard as currently drafted. These include those discussed in the comments to above questions and the below additional comments.1) In both the Steady State and Stability Tables, Category P6 is the loss of a system element, following system adjustments, followed by the loss of another element. The table columns for this category say that interruption of firm transmission service is allowed. The table, however, is not clear whether the interruption of firm service is allowed as part of the system adjustment (between the outages) or whether it is only allowed after the second outage. It was stated in the NERC TPL SDT WebEx that the interruption is not allowed as part of the system adjustment. If this is the interpretation, this would be a dramatic change from the existing standard and would result in the unintended consequence of significantly reducing transfer capability of interfaces to a fraction of their currently reported capability. This would in effect be imposing an n-2 criteria for offering firm transmission service. This would not be an acceptable situation for the users, owners and operators of the bulk power system. 2) The proposed sensitivities create significant amount of additional work for the sole purpose of demonstrating compliance to this standard without any demonstratable benefit towards improving system reliability. While sensitivities should be appropriately considered in studies, this standard should not be overly prescriptive with respect to specific sensitivities or study methodologies.
Response: 1. The SDT agrees that clarification regarding treatment of Firm Transmission Service and Non-Consequential Load Loss during adjustment is necessary. Footnote 10 in Draft 3 of the Standard provides this clarification. **Footnote #10** – Curtailment of firm transmission service, when coupled with the appropriate re-dispatch of resources obligated to re-dispatch, is allowed both as a System adjustment (as identified in the column titled 'Initial System Conditions') and a corrective action, where it can be demonstrated that Facilities remain within applicable Facility Ratings and those adjustments do not result in the shedding of any firm Load. Where limited options for re-dispatch exist, sensitivities associated with the availability of those resources must be considered. Where Facilities external to the Transmission Planner's planning region are relied upon, Facility Ratings in those regions must be considered. 2. The SDT agrees with the respondent that the sensitivities evaluated should be based on the individual situations and therefore, the SDT has not required specific sensitivities, but rather, required that at least one sensitivity should be evaluated for an Assessment to be complete.		
Platte River Power	A — Generally	In Tables 1 and 2, Categories P1 and P3, under the column heading "Interruption of Firm Transmission Service Allowed," change the note in the performance box to read "Yes, if transfer is dependent on the outaged Element." (Not just for a DC

Organization	Question 15:	Question 15 Comments:
Authority	support the revised standard	line Element.) This conditional statement applies to most Firm Point-To-Point Transmission Service (Firm PTP) applications where an outaged Element reduces the Transfer Capability of the PTP service if the Element cannot be restored to service after an allowable time frame (30 minutes or so) and the Transfer Capability is reduced to a Prior Outage System Conditions level. This "extended Contingency situation" could cause an interruption or curtailment to the firm service. The interruption and curtailment responses to a Contingency might be different between Firm PTP and Network Integration Transmission Service.
Response: The SDT has removed the "Yes if transfer is dependent on the outaged DC line" comments from the Table to ensure that AC and DC lines are treated equally. The draft standard does not allow interruption of Firm Transmission Service as a System response to Event P1. However, the SDT added Footnotes # 5 and 10 to the end of Table 1 to reflect that curtailment or interruption of Firm Transmission Service in preparation for the next Contingency will be allowed provided there is no shedding of firm Load. **Footnote 5** - When the conditions and/or event(s) being studied form the basis for conditional Firm Transmission Service, curtailment of that conditional Firm Transmission Service is allowed. **Footnote #10** – Curtailment of firm transmission service, when coupled with the appropriate re-dispatch of resources obligated to re-dispatch, is allowed both as a System adjustment (as identified in the column titled 'Initial System Conditions') and a corrective action, where it can be demonstrated that Facilities remain within applicable Facility Ratings and those adjustments do not result in the shedding of any firm Load. Where limited options for re-dispatch exist, sensitivities associated with the availability of those resources must be considered. Where Facilities external to the Transmission Planner's planning region are relied upon, Facility Ratings in those regions must be considered.		
BCTC	C — Definitely do not support the revised standard	BCTC appreciates the efforts of the SDT to explore ways to improve our planning standards. We understand that some of the proposed enhancements may assist Transmission Planners with justifying the need for system reinforcements. Many areas of our system already meet the proposed improvements, for example, most (but not all) of our 500 kV system already meets the proposed standards for systems above 300 kV. We have planned our system without support from a standard. The proposed changes do not really help us in any way and have a number of undesirable consequences. Consequently, BCTC does not support a number of the proposed additions and is uncertain about supporting some of the other changes. Our concerns are summarized below under headings of System Issues and Study Issues. System Issues:1. BCTC plans, manages and operates 18,000 km of transmission in British Columbia. This includes 5700 km of 500 kV transmission lines. For the BCTC system, the proposed definitions for Consequential Load Loss and Non-consequential Load Loss, specifically that load loss due to RAS/SPS is Non-Consequential Load Loss, will provide no reliability benefits for our 500 kV transmission backbone system providing wholesale open access service and interconnecting to the rest of the western interconnection relative to what we have today. No reinforcements of this 500 kV transmission will be required as a result of these more stringent definitions. Any potential reliability benefits of any additional facilities built to comply with these definitions would be at the local service level, primarily in rural areas currently served by radial lines. The possible benefits would be small. There is a very low probability that we would get funding approval for these facilities. For most of our system including most of our backbone 500 kV and local networks in

Organization	Question 15:	Question 15 Comments:
		metropolitan and urban areas BCTC already meets the requirements for these definitions. As noted in our comments at item 3, a portion of the BCTC system above 300 kV cannot meet the proposed P1(A) > 300 kV. We require further clarification of these definitions such as allowing load shedding in local networks. Otherwise, we will not be planning a doable/plausible set of actions, but rather just generating a list of projects that will not be approved. Our resulting subsequent corrective plan will be to use load shedding RAS, which will conflict with the definitions. Order 693 does not require NERC to prohibit load shedding, only clarify the amount and duration of load shedding that is permitted (paragraphs 1795 and 1797). BCTC's concerns can be addressed by including the local network component of Footnote (b) - modify the definition of Consequential Load Loss to permit the use of RAS in local networks (including local networks interconnecting generation), by allowing Non-Consequential Load Loss for local networks in Tables 1 and 2, or by modifying the definition of BES to exempt local networks from the definition of BES. BCTC could also consider a limit on load shedding if the industry would develop one. BCTC raised these issues in our comments on the first draft. The SDT response (page 332) does not address our concerns. We also note FPL comment 7 (page 359) regarding removal of localized load reduction provided in Footnote (b). We do not believe that the SDT has addressed FPL's issue. Unless the local network component of Footnote (b) is included and we can get a clarification to address our concern with P1 (A), the proposed standard is not suitable for the BCTC system and we do not support the standard. 2. Contingency P1 needs to permit curtailment of firm service for flow through firm transmission service to prepare for the next contingency. If it does not, some flow through open access transmission customers may have less ATC available if RAS is not available to meet the new restrictions on the P6 contingency, while this ATC will be available for services sourcing or sinking within the transmission provider's system. P6 allows the use of RAS in response to the second contingency (Event). For firm service originating or sinking in our system, we can use RAS and have many RAS systems already in place. However, for flow throughs it may not be possible to implement RAS or there may be a time delay until RAS can be installed. If RAS cannot be implemented, it would be preferable to provide the firm service and curtail in preparation for the second contingency rather than deny the firm service (or require that the system be built for N-2 capability, which also may not be possible), which is what we will have to do to adhere to the new standard. The result is that flow through transactions will have to use non-firm service while non-flow-through may use exactly the same transmission for firm. Also keep in mind that while P4 and P5 are only those multiple contingencies initiated by a common mode failure, P6 is any two elements not necessarily common mode. Therefore, P6 can be more limiting than P4 or P5. For P4 and P5 contingencies the BCTC system has less dependence on RAS than does the second event of a P6. Consequently P6 will be more limiting on flow throughs than P4 and P5. Order 693 contains direction to NERC to address Footnote (b). Some commenters have taken issue with the SDT interpretation of Order 693 (e.g. FRCC item 2, page 365). Given the different interpretations and the potential for impacts on ATC, we suggest that the SDT review this issue with FERC and find out if what the SDT is proposing is what they really want. Without this change or clarification we do not support the standard. 3. Regarding Q30 in the Comments on First Draft, BCTC believes that DC and AC lines should have the same performance requirements with respect to interruption of firm transmission service. This relates to our concern above

Organization	Question 15:	Question 15 Comments:
		regarding flow through transactions. We do not understand why interruption of firm service would be an acceptable response to the loss of a single pole of a DC line (i.e. response to the contingency) but not an acceptable step to prepare for the next contingency of an AC line. We would ask that the SDT provide further explanation of its response that "many of the transfers over DC lines are automatically curtailed when the DC line is outaged" (page 220). We can do the same with AC lines for transfers sinking or sourcing within our system. Is the SDT assuming that RAS/SPS is used? We agree with the comments of FPL, FRCC, Southern Transmission and Manitoba Hydro (pages 219 and 221) and FPL (page 360, item 11). We disagree with the SDT decision to allow different performance for DC than AC lines. We do not support this element of this standard. 4. Contingency P3 should have the same performance requirement as P6. In two recent CPCN approvals for reinforcements of the BCTC backbone system, approval was granted based on generator contingencies being treated the same as transmission contingencies. We believe it highly unlikely that we would have received funding to approval to meet contingency P3. In our local service areas relying on generation for firm supply and for our bulk system, we consider dependable generator capacity on a case by case basis. We do not arbitrary assume a generator N-1 as a preexisting planning condition. We consider firm generator capability as a sensitivity case, not a planning criteria. We disagree with requiring a generator initial system condition having a more stringent performance requirement than other initial conditions. Without this change we do not support this standard. 5. BCTC is concerned that including the generator runback/tripping requirement in this standard will encourage more use of generator runback and tripping and will make it more difficult to get regulatory approval for transmission reinforcements. If retained, there needs to be a tie into reserves requirements. While we agree with permitting generator runback/tripping, at this time we are unsure about supporting this standard with this permissive requirement included. Study Issues:6. R2.5 and R5.5 on Generating Unit Stability studies are adequately addressed by FAC-001 and 002. Triggering events such as increased output or new existers need to go through our generator interconnection process and be paid for by the customer. In fact, we would not be aware of any of these triggering events unless a request comes from a customer. Without clarification of which generator studies are addressed through FAC-001 first, we do not support this standard. 7. We request that the SDT provide an explanation of why it believes it is important to maintain a distinction between system and generating unit stability studies. 8. Table 1 Steady State Performance lists 6 items above the Planning Events title. Should these be listed below the Planning Events title?
Response: 1. The SDT has added footnote 10 and clarified that for a P1 event, Transmission service could be interrupted as long as all of the Non-Consequential Load continued to be served. This draft does not allow “local network” Load to be shed for a P1 event, however, the conditions that you describe could warrant a regional difference.		

Organization	Question 15:	Question 15 Comments:
Footnote #10 – Curtailment of firm transmission service, when coupled with the appropriate re-dispatch of resources obligated to re-dispatch, is allowed both as a System adjustment (as identified in the column titled 'Initial System Conditions') and a corrective action, where it can be demonstrated that Facilities remain within applicable Facility Ratings and those adjustments do not result in the shedding of any firm Load. Where limited options for re-dispatch exist, sensitivities associated with the availability of those resources must be considered. Where Facilities external to the Transmission Planner's planning region are relied upon, Facility Ratings in those regions must be considered. 2. Footnote # 10 has been added to the end of Table 1 to reflect that curtailment or interruption of Firm Transmission Service will be allowed in preparation for the next Contingency. However, until the next Contingency occurs, System performance will need to meet the requirements for Event P1. As such, the proposed standard will not allow loss of any Non-Consequential Load, except for contracted interruptible Loads, in preparation for the next Contingency. 3. The SDT has removed this differentiation in the Table such that AC and DC lines will be treated equally. See footnote #10. 4. The SDT believes that the loss of a generator unit is a much more likely to occur than the loss of other major BES elements and thus the P3 event warrants more stringent performance requirements than the P6 event. The performance requirements for P3 have been clarified by addition of footnote 10 in Revision 3 of the Standard. 5. By a nearly unanimous response the Industry favors manual and automatic generation run-back and tripping as a response to a single or multiple Contingency. The SDT has eliminated the conditions in Sub-requirements R3.5.1, R3.5.2, and R3.5.3 for Contingency events as well as similar conditions in Sub-requirements R5.4.3.1, R5.4.3.2, and R5.4.3.3 for Stability events in the third draft. Accordingly, the SDT has modified Sub-requirement R3.5 for Contingency events and relocated it under Requirement R2.6.1. Likewise, the SDT has modified Sub-requirement R5.4.3 for Stability events and relocated it to become a bullet under R2.6.1. The resource adequacy issues are not directly included in this standard. In addition, with the creation of P3, the SDT has addressed the issue of the reduction of generation resources by treating the loss of one generator unit, followed by System adjustment, as the initial condition for all other single Contingencies. Therefore, the SDT does not believe that generation tripping as a corrective action needs to be tied to resource adequacy issues. Installation or modification of manual and automatic generation runback/tripping as a response to a single or multiple Contingency to mitigate Steady State performance violations. Installation or modification of automatic generation tripping as a response to a single or multiple Contingency to mitigate Stability performance violations 6. Both Requirement R2.5 and Requirement R5.5 have been deleted since, in response to industry comments, Generating Unit Stability is no longer separately addressed in the standard. 7. Based on comments from others, the SDT has removed the requirements for separate Generating Unit Stability analysis and System Stability analysis. 8. The SDT has reformatted and combined the two Tables into a single Table for this draft to address these types of problems.		
Manitoba Hydro	C — Definitely do	Manitoba Hydro can not accept the standard due to the requirements imposed on Firm Transmission Service and on facilities >300 kV. The standard would have to allow Firm Transmission Service to be curtailed in situations where Non-

Organization	Question 15:	Question 15 Comments:
	not support the revised standard	consequential Load is not lost. The higher performance requirements for facilities >300 kV are tied to very low probability events, so the enhanced reliability is not worth the cost. TPL-001-1 Other Comment Action Plan: Schedule of Anticipated Actions needs to be revised. - Action 3 shows rev 3 out for ballot in 2Q09. TPL-00101 Purpose: Is the purpose to ?Establish Transmission System planning performance requirements? or to ?Establish planned Transmission System performance requirements? The term ?probable contingencies? is not defined or used in the standard ? use of the term may cause confusion. R7: The TP and PC are required to determine the responsibilities for performing the assessment. Are the responsibilities to be documented as part of the assessment? R8: This requirement should avoid reference to a FERC order as the order does not apply to all entities. The requirement should just require the planner to demonstrate that the assessment was distributed to potentially impacted stakeholders. The last sentence is incomplete.

Response: In response to your comment and those of others in the industry on allowing curtailment of Firm Transmission Service as a System adjustment after an N-1 Contingency, the SDT has added footnotes 5 and 10 to Table 1 - Steady State & Stability Performance.

Footnote 5 - When the conditions and/or event(s) being studied form the basis for conditional Firm Transmission Service, curtailment of that conditional Firm Transmission Service is allowed.

Footnote #10 – Curtailment of firm transmission service, when coupled with the appropriate re-dispatch of resources obligated to re-dispatch, is allowed both as a System adjustment (as identified in the column titled 'Initial System Conditions') and a corrective action, where it can be demonstrated that Facilities remain within applicable Facility Ratings and those adjustments do not result in the shedding of any firm Load. Where limited options for re-dispatch exist, sensitivities associated with the availability of those resources must be considered. Where Facilities external to the Transmission Planner's planning region are relied upon, Facility Ratings in those regions must be considered.

The schedule has been updated.

The SDT believes the Purpose is accurate as written because it defines planning practices and conditions to be studied. As per A.3, the purpose of Standard TPL-001-1 is to "Establish Transmission System planning performance requirements within the planning horizon to develop a Bulk Electric System (BES) that will operate reliably over a broad spectrum of System conditions and following a wide range of probable Contingencies." In this definition, the word probable is left up to the Transmission Planner/Planning Coordinator to determine so that they can set System performance requirements locally based on experience.

R7 (now R6). There is no requirement to document the responsibilities as part of the Assessment but Measure M6 in the new draft clearly states that a document must be produced as evidence that Requirement R6 has been successfully completed. This could be a standalone document or part of the Assessment at the discretion of the responsible entity.

Organization	Question 15:	Question 15 Comments:
R8 (now R7): The SDT believes the addition of the reference to the FERC Order 890 adds clarity to the expectations of the requirement without making the requirements of the Order applicable to all NERC entities. The incomplete sentence has been deleted.		
Los Angeles Department of Water and Power	C — Definitely do not support the revised standard	I do not support the standard as currently written. There are too many requirements that are discriminatory, duplicative, and arbitrary/punitive. The unintended consequence of this standard would be forcing companies and planners to plan the system to take advantage of some requirements that will result in a future system that is less robust (a single line serving multiple radial loads instead of network, for example) if not to entiely discourage any further expansion of the transmission system above 300kV (the discriminatory treatment of two classes without any rational justification).
Response: The SDT believes that the appropriate justifications have been made. The SDT changes made after the first draft were due to industry consensus. The SDT believes that these changes are justified by the various comments received from industry.		
Transmission Agency of Northern California	B — Unsure about supporting the revised standard	- We agree that the Standard as presented is clearer, but there are numerous issues that still need resolution, Measures, VSLs, Implementation Plan, etc., before we can give a full approval of this Standard. - There is no mention in the purpose of the Sta
Response: Measures, VSL's and the Implementation Plan have been addressed in the third draft of the standard.		
National Grid	B — Unsure about supporting the revised standard	Aside from the comments to the prior questions, there are several issues of concern that prevent us from supporting the present draft of the revised standard. We offer the following constructive comments in an effort to support the worthwhile effort that is being pursued so that we can reach a point of satisfaction that we could vote to support the revised standard. Our concerns are listed in a rough order of priority. a. This standard as drafted does not allow exceptions for small parts of the system as long as interconnected system reliability is maintained, which is allowed in the existing TPL standards in footnotes b) and c) in Table 1. Unless such exceptions are allowed significant transfer restrictions or large reinforcements must be made. The applicable TPL footnotes are: Existing TPL footnote b) Planned or controlled interruption of electric supply to radial customers or some local Network customers, connected to or supplied by the Faulted element or by the affected area, may occur in certain areas without impacting the overall reliability of the interconnected transmission systems. To prepare for the next contingency, system adjustments are permitted, including curtailments of contracted Firm (non-recallable reserved) electric power Transfers. Existing TPL footnote c) Depending on system design and expected system impacts, the controlled interruption of electric supply to customers (load shedding), the planned removal from service of certain generators, and/or the curtailment of contracted Firm (nonrecallable reserved) electric power Transfers may be necessary to maintain the overall reliability of the interconnected transmission systems.

Organization	Question 15:	Question 15 Comments:
		b. This standard does not address base conditions. Without defining base conditions the initial status of generation dispatch and transfers across the system is ill defined. Therefore the contingency analysis doesn't have a predictable basis for a consistent and repeatable study. c. The reference to Special Protection Systems is completely permissive. Although there are good applications for Special Protection Systems, their use must be constrained to have a reliable system and to promote construction of needed infrastructure. d. This standard does not provide flexibility to shed load, which restricts the ability to control post contingency response for low impact events. This may result in advancing need for upgrades in response to low impact events. This is in conflict with FERC's directive to have the Transmission Provider waiting for market response to transmission needs and having the Transmission Provider provide a role to back stop the market. e. Definition of the Long-Term Planning Horizion. The planning horizon, for assessment purposes should be limited to 10 years. Such an assessment should be sufficient to identify requirements that may take an extended time to implement. f. Definition of Planning Coordinator is part of the NERC Functional Model, Remove from Standard. g. Put headings on each section to identify requirements of section. h. With respect to R2.2 - Delete "current" from the phrase"current System Peak Load study" and replace "study" with "assessment." i. Remove R2.2.1, the requirement to extend the assessment beyond 10 years. What does the length of the project have to do with the assessment? If it takes 15 years to build something, why does this require a review of year 15? What is the purpose of this assessment? j. R3.3.2 requires clarification - This standard needs to permit discretion regarding the single contingencies that need to be tested, similar to R 3.3.3 and R3.4. It is completely unnecessary to test all events. For example, contingencies may be limited to relevant disturbances that are contained within or directly impact the studied system. k. With respect to R3.2.1 - Clarify whether the intent of the standard is to address station service minimum voltage limitation, maximum leading VAR absorption capability or both at steady state. l. Remove R3.2.2 - Relay loadability is addressed in PRC-023 standard. m. With respect to R3.3.2.1 - Recommend the removal of the requirement to assess the expected duration of Consequential Load loss. It's not considered anywhere else in the standard. n. With respect to R3.3.3 - The paragraph refers to Table 1 Contingencies P3 through P7; this should be explicitly stated. Rationale for inclusion of testing should not be required; should only need to explain why certain Contingencies were not tested. This discretion should be applicable to all contingencies.

Organization	Question 15:	Question 15 Comments:
		o. With respect to section R5 - The concept of planned and long-term outages should apply to the general Planning Assessment, or not at all. It should not be specific to the Stability Assessment. p. The provisions of Section R.5.3 should have a corresponding MOD standard apply a requirement to provide information regarding all direct and indirect protective and control actions that could result in the inadvertent trip of the generator. Such a provision should include "other equipment (e.g. HVDC, SVC's, Statcoms)", and identify how these devices are treated in the simulation. q. Planned outages should be addressed in the operating horizon unless otherwise defined in the planning horizon. r. What is a "current" study?

Response: A. Some commenters expressed concern with the inability to shed Non-Consequential Load in response to a single Contingency event. It was indicated that some stakeholders rely on an SPS to drop local area network Load in response to some single Contingency events and that these System designs are permissible under the presently approved TPL-002-0 standard. FERC in Order 693 was clear in paragraph 1794 that that interruption of Non-Consequential Load is not permitted for single Contingency events. This position was vetted in draft 1 of TPL-001-1 and most stakeholders and the SDT support this position. The use of an SPS design would be permitted for a single Contingency event if the SPS design interrupts service to customers involved in an interruptible Load contract arrangement. As an alternative, an entity could seek an Entity Variance for the situation described through their Regional Entity organization. In paragraph 1794, FERC clarified that "…an entity may seek a regional difference to the Reliability Standard from the ERO for case-specific circumstances". The process described by FERC as a regional difference is described in detail in the "NERC Standards Development Procedure" document under the subsection titled "Variances to NERC Reliability Standards".

B. The SDT has modified Requirement R1 to include additional details on what should be modeled in the cases. However, the SDT intentionally provides flexibility for the Transmission Planner/Planning Coordinator to decide which "base case" to use since initial conditions for a System will vary from region to region and will need to be established on a local level, not via a national standard. The required studies and sensitivity analysis ensures that sufficient study is performed to cover an appropriate range of System conditions.

C. The SDT does not believe that it would be appropriate to attempt to specify limitations to the use of Special Protection Systems in this standard. The proposed TPL-001-1 and existing standards provide adequate guidance to the industry on application of Special Protection Systems.

D. The SDT has made clarifications regarding Firm Transmission Service and Non-Consequential Load Loss. Footnote # 10 has been added to the end of Table 1. The standard does not preclude the possibility of obtaining contractually interruptible load. It is the general opinion of the SDT that dropping of Non-Consequential Load should not be allowed for the Planning Events involving only one element as described in Table 1 of the proposed Standard, and to meet the intent of FERC Order 693. Further, this Standard is proposed to "raise the bar" to improve System reliability, which would require responses (Corrective Action Plans) to address those so-called low-impact events that may have been overlooked or ignored with the existing Standard TPL-002-0.

Footnote #10 – Curtailment of firm transmission service, when coupled with the appropriate re-dispatch of resources obligated to re-dispatch, is allowed both as a System adjustment (as identified in the column titled 'Initial System Conditions') and a corrective action, where it can be demonstrated that Facilities remain within applicable Facility Ratings and those adjustments do not result in the shedding of any firm Load. Where limited options for re-dispatch exist, sensitivities associated with the availability of those resources must be considered. Where Facilities external to the Transmission Planner's planning region are relied upon,

Organization	Question 15:	Question 15 Comments:

Facility Ratings in those regions must be considered.

E. The SDT believes that a review of System conditions beyond the 10-year horizon is warranted. FERC Order 693 requires that the planning horizon take into account the lead times for siting and permitting of new long-distance Transmission lines and other long lead time solutions. The SDT has received industry comments regarding the need to exceed a 10-year horizon to account for longer lead time projects. Establishing planning horizons that are shorter than Transmission lead times may create gaps where the identification of a reliability need to which Transmission may be the best solution occurs too late to avert the identified reliability violation. Further, Operating Procedures or alternative short-term capital projects may be needed to limit the impact of the Planning Event until the planned facilities can be completed. This information needs to be included in the Assessment.

F. The definition for Planning Coordinator was deleted because the term has already been defined and added to the NERC Glossary by another SDT.

G. The SDT also feels that the Tables need to be as clear and concise as possible. To that end, the next version will combine Tables 1 and 2 into one table with a revised format.

H. The SDT believes that the existing language is appropriate.

I. The SDT believes that a review of System conditions beyond the 10-year horizon is warranted under some circumstances. For example, if it takes 15 years to build a Transmission line, then the need for that line would have to be determined 15 years ahead of the in-service date. Therefore, Requirement R2.2.1 requires you to perform an Assessment on year 15 if it takes you 15 years to build a line.

J. The SDT has removed Requirement R3.3.2 and replaced it with additional language in Requirement R3.1. The SDT does agree with your interpretation that it does not require evaluation of all single Contingencies. The SDT specifically states in Requirement R3.4 that those Contingencies that are expected to produce the more severe System impacts shall be identified, evaluated for System performance, and the rationale for the Contingencies selected for evaluation shall be available as supporting information and shall include an explanation of why the remaining Contingencies would produce less severe results.

R3.1 Studies shall be performed to determine whether the BES meets the performance requirements in Table 1~~ Steady State Performance.~~ based on the lists created in Requirement R3.4.

K. The SDT has not limited the purpose of this requirement to either minimum acceptable station service voltages or maximum Mvar absorption. The SDT believes that the purpose of Requirement R3.2.1 (now R3.3.2) is to determine if generators could continue to operate or if they would trip off following the Contingency.

L. The SDT believes that relay load limits or loadability need to be considered in the Contingency analyses. The studies should determine if Transmission line loadings could reach the relay loadability level, which may add to the existing Contingency and perhaps, result in an unbounded cascading event.

M. To meet industry concern as well as FERC Order 693, the SDT has added Requirement R 2.8 to identify the event causing the single largest Consequential Load Loss Demand and its value and eliminate the reporting of the expected duration. Requirement R3.3.2.1 has been deleted in favor of new Requirement R2.8.

R2.8 The Planning Assessment shall provide the largest Consequential Load Loss (megawatt Demand) and the associated event caused by any P1 event and any P2 event in Table 1.

Organization	Question 15:	Question 15 Comments:

N. The SDT has re-written Requirement R3.3 (now Requirement R3.4) to address your initial concern. Although the language and format of the proposed Standard have been revised from earlier versions, the SDT continues to believe that the Transmission Planners should evaluate the System performance for the events that are expected to produce the more severe System impacts, including both single and multi-Contingency events. The wording of new Requirement R3.4 (the old Requirement R3.3.3) now requires a listing of the Contingencies to be evaluated, the rationale for their selection and why the remaining Contingencies would be expected to produce less severe results. This will provide a complete evaluation of the potential Contingencies to be studied – those selected and those excluded.

R3.4 Those Planning Event Contingencies in Table 1 ~~– Steady State Performance not covered in Requirement R3.3.2~~ that are expected to produce more severe System impacts shall be identified~~,~~ and a list of those Contingencies to be evaluated for System performance in Requirement R3.1 created~~,~~. ~~and t~~The rationale for the Contingencies selected for evaluation shall be available as supporting information and shall ~~includ~~include~~e~~ an explanation of why the remaining Contingencies would produce less severe System results.

O. The SDT agrees and has moved this concept within Requirement R1 (see Requirement R1.1.1) so that it is applicable to all planning Assessments. Further, both Requirement R3 and Requirement R5 (now R4) have been revised to make reference to Requirement R1.

R1.1.1 Planned outages of generation and Transmission Facilities, if specifically known.

R3. For the steady state portion of the Planning Assessment, each Transmission Planner and Planning Coordinator shall perform analysis for the Near-Term and Long-Term Transmission Planning Horizon studies in Requirement R2.1 and Requirement R2.2. ~~The studies shall be based on computer power flow simulations that analyze BES normal performance (n-0) and System response to c~~Contingencies ~~in Table 1 – Steady State Performance.~~ The studies shall be based on computer simulations using models utilizing data provided in Requirement R1.

R4 For the Stability portion of the Planning Assessment, as described in Requirement R2.4 ~~and Requirement R2.5~~, each Transmission Planner and Planning Coordinator shall perform the Contingency analyses listed in Table ~~2~~1 ~~– Stability Performance~~. The studies shall be based on computer simulations using models utilizing data provided in Requirement R1. ~~The studies shall be based on computer simulations using models utilizing data provided in Requirements R9 through R14, the MOD-010 and MOD-012 standards, and other data sources, to include known planned and long term outages of Transmission or generation equipment. The studies shall cover both System Stability and Generating Unit Stability. The following requirements apply to both System Stability and Generating Unit Stability studies unless otherwise noted.~~

P. Requirement R5.3 (now R 4.3.2) has been modified to address simulation of how generators perform under conditions being studied. The current MOD standards that address steady-state and dynamic simulation data requirements do not explicitly require the Generator Operators to provide voltage ride-through capability. These standards are set to be addressed by Project 2010-04 within NERC's Standards Development Work Plan. It is expected that the Transmission Planner would contact Generator Operators applicable to their System to obtain such data. If the data is not provided, it would be expected that a Transmission Planner state its assumption on the Vmin used for a generator terminal voltage for assessing ride-through capability. It's likely such information could be obtained through generator manufacturers. The "Other equipment" is addressed in the revised Requirement R4.3.3.

Q. The SDT agrees and therefore has changed R1.1.1 to state "if specifically known."

R. The SDT believes that a current study is a study that has been completed for the latest Assessment, as opposed to a past study that may have been completed up to five years ago.

Organization	Question 15:	Question 15 Comments:
Tenaska, Inc.	A — Generally support the revised standard	A few issues that may need some thought include: Are reactive power devices a responsibility of Resource Planners in R13? On the Extreme Events description for local area, what is a load center? Does the loss of a large body of water as a cooling source result in the immediate loss of generation such that it is a contingency which affects steady state, stability, or short circuit studies?
Response: In response to industry comments, the SDT has removed Requirements R9-R14 and thus eliminated the responsibility of a Resource Planner. The SDT believes that a Load center is a location where energy is delivered by Transmission or sub-Transmission Systems to end-use customers. The loss of a large body of water as a cooling source could cause an immediate loss of generation or could only cause some generation reduction. The Transmission Planner or Planning Coordinator would need to analyze their System in order to determine the proper simulation(s).		
Pacific Gas and Electric Co.	B — Unsure about supporting the revised standard	We agree that the Standard as presented is clearer, but there are numerous issues that still need resolution, Measures, VSLs, Implementation Plan, etc., before WECC can give a full approval of this Standard. ? There is no mention in the purpose of the Standard about minimizing loss of load for more probable unplanned contingencies. Maybe there needs to be some definition around what is meant by reliability. ? We believe that with the loss of the first N-1 in P6, curtailment of firm transmission service or firm transfers should be allowed as part of system adjustment in preparation for the next N-1. This should be added to R3.3.2.2. Otherwise, the power transfer under normal condition (before the first N-1) will have to be significantly curtailed in anticipation for meeting performance requirements after N-1-1. This will unnecessarily impede commerce. Or, to maintain the same firm power transfer under normal conditions, construction of transmission facilities will be required. Either way, this would impose a much stricter standard than exists today resulting in very costly unnecessary system improvements and invalidate terms of many transmission service contracts that allow for implementation of pro-rate curtailments of firm transmission rights during forced and planned outage conditions.? We disagree with the application of the proposed definitions of Consequential Load Loss and Non-Consequential Load Loss in conjunction with “raising the bar”. Local Network load should be included in Consequential Load and the loss should be allowed for single contingencies. The TPL standard is to maintain reliability of the BES. Under certain conditions orderly dropping of local network load could limit the spread of the disturbance beyond the local area and allow BES reliability to be maintained. This would minimize the total amount of load loss and allow for quicker load restoration. The proposed definitions for Consequential Load Loss and Non-consequential Load Loss will provide no reliability benefits for high voltage (>300 kV) transmission backbone system providing wholesale open access service and interconnecting to the rest of the western interconnection. Any potential reliability benefits of any additional facilities built to comply with these definitions would be at the local service level. As mention in comments to Q3 above, some local network customer

Organization	Question 15:	Question 15 Comments:
		curtailments or local area load loss has been allowed by local regulatory authorities as long as the overall reliability of the interconnected system was not impacted. This is a result of tradeoffs between providing a higher level of reliability in a local area and the cost and environmental impacts of providing that service. Such tradeoffs are subject to local regulatory authority or contract negotiated between the transmission provider and its transmission customers. Regarding the terms interruption of firm transmission service?, there needs be clarification on what Interruption means. Since it is referring to firm transmission service, we would interpret this to mean curtailment needed after a particular contingency and adjustments. There also needs to be clarification on what Firm Transmission Service? means. Two points, 1) the NERC definition states ?highest quality service offered to customers under a filed rate schedule that anticipates no planned interruption.? The Standard implies anticipation of ?unplanned? interruption for certain contingencies. 2) Is this referring to a transmission product as defined in FERC Order 890, or firm transfers modeled for the conditions being studied? One way to interpret the intent is the firm transfers being modeled for the conditions in the powerflow to meet demand that would result in load not being served if that firm transfer were curtailed. If there is other generation in the system that could increase to meet the load if the transfer being modeled is interrupted, then interruption of firm transmission service should also be allowed for P1 through P5 contingencies in the table. In addition, we believe that DC and AC lines should have the same performance requirements with respect to interruption of firm transmission service. We do not understand why interruption of firm service would be an acceptable response to the loss of a single pole of a DC line (i.e. response to the contingency) but not an acceptable response to prepare for the next contingency of an AC line. The transfers over both AC and DC lines can automatically be curtailed when the line is outaged.
Public Service Company of New Mexico	C — Definitely do not support the revised standard	We agree that the Standard as presented is clearer, but there are numerous issues that still need resolution, Measures, VSLs, Implementation Plan, etc., before WECC can give a full approval of this Standard. ? There is no mention in the purpose of the Standard about minimizing loss of load for more probable unplanned contingencies. Maybe there needs to be some definition around what is meant by reliability. ? We believe that with the loss of the first N-1 in P6, curtailment of firm transmission service or firm transfers should be allowed as part of system adjustment in preparation for the next N-1. This should be added to R3.3.2.2. Otherwise, the power transfer under normal condition (before the first N-1) will have to be significantly curtailed in anticipation for meeting performance requirements after N-1-1. This will unnecessarily impede commerce. Or, to maintain the same firm power transfer under normal conditions, construction of transmission facilities will be required. Either way, this would impose a much stricter standard than exists today resulting in very costly unnecessary system improvements and invalidate terms of many transmission service contracts that allow for implementation of pro-rate curtailments of firm transmission rights during forced and planned outage conditions.? We disagree with the application of the proposed definitions of Consequential Load Loss and Non-Consequential Load Loss in conjunction with ?raising the bar?. Local Network load should be included in Consequential Load and the loss

Organization	Question 15:	Question 15 Comments:
		should be allowed for single contingencies. The TPL standard is to maintain reliability of the BES. Under certain conditions orderly dropping of local network load could limit the spread of the disturbance beyond the local area and allow BES reliability to be maintained. This would minimize the total amount of load loss and allow for quicker load restoration. The proposed definitions for Consequential Load Loss and Non-consequential Load Loss will provide no reliability benefits for high voltage (>300 kV) transmission backbone system providing wholesale open access service and interconnecting to the rest of the western interconnection. Any potential reliability benefits of any additional facilities built to comply with these definitions would be at the local service level. ? As mention in comments to Q3 above, some local network customer curtailments or local area load loss has been allowed by local regulatory authorities as long as the overall reliability of the interconnected system was not impacted. This is a result of tradeoffs between providing a higher level of reliability in a local area and the cost and environmental impacts of providing that service. Such tradeoffs are subject to local regulatory authority or contract negotiated between the transmission provider and its transmission customers. Regarding the terms ?interruption of firm transmission service?, there needs be clarification on what Interruption means. Since it is referring to firm transmission service, we would interpret this to mean curtailment needed after a particular contingency and adjustments. There also needs to be clarification on what “Firm Transmission Service” means. Two points, 1) the NERC definition states ?highest quality service offered to customers under a filed rate schedule that anticipates no planned interruption.? The Standard implies anticipation of “unplanned” interruption for certain contingencies. 2) Is this referring to a transmission product as defined in FERC Order 890, or firm transfers modeled for the conditions being studied? One way to interpret the intent is the firm transfers being modeled for the conditions in the powerflow to meet demand that would result in load not being served if that firm transfer were curtailed. If there is other generation in the system that could increase to meet the load if the transfer being modeled is interrupted, then interruption of firm transmission service should also be allowed for P1 through P5 contingencies in the table. In addition, we believe that DC and AC lines should have the same performance requirements with respect to interruption of firm transmission service. We do not understand why interruption of firm service would be an acceptable response to the loss of a single pole of a DC line (i.e. response to the contingency) but not an acceptable response to prepare for the next contingency of an AC line. The transfers over both AC and DC lines can automatically be curtailed when the line is outaged.
Puget Sound Energy, Inc.	C — Definitely do not support the revised standard	We agree that the Standard as presented is clearer, but there are numerous issues that still need resolution, Measures, VSLs, Implementation Plan, etc., before PSE can give a full approval of this Standard. There is no mention in the purpose of the Standard about minimizing loss of load for more probable unplanned contingencies. Maybe there needs to be some definition around what is meant by reliability. We believe that with the loss of the first N-1 in P6, curtailment of firm transmission service or firm transfers should be allowed as part of system adjustment in preparation for the next N-1. This should be added to R3.3.2.2. Otherwise, the power transfer under normal condition (before the first N-1) will have to be significantly curtailed in anticipation for meeting

Organization	Question 15:	Question 15 Comments:
		performance requirements after N-1-1. This will unnecessarily impede commerce. Or, to maintain the same firm power transfer under normal conditions, construction of transmission facilities will be required. Either way, this would impose a much stricter standard than exists today resulting in very costly unnecessary system improvements and invalidate terms of many transmission service contracts that allow for implementation of pro-rate curtailments of firm transmission rights during forced and planned outage conditions. We disagree with the application of the proposed definitions of Consequential Load Loss and Non-Consequential Load Loss in conjunction with "raising the bar". Local Network load should be included in Consequential Load and the loss should be allowed for single contingencies. The TPL standard is to maintain reliability of the BES. Under certain conditions orderly dropping of local network load could limit the spread of the disturbance beyond the local area and allow BES reliability to be maintained. This would minimize the total amount of load loss and allow for quicker load restoration. The proposed definitions for Consequential Load Loss and Non-consequential Load Loss will provide no reliability benefits for high voltage (>300 kV) transmission backbone system providing wholesale open access service and interconnecting to the rest of the western interconnection. Any potential reliability benefits of any additional facilities built to comply with these definitions would be at the local service level. As mention in comments to Q3 above, some local network customer curtailments or local area load loss has been allowed by local regulatory authorities as long as the overall reliability of the interconnected system was not impacted. This is a result of tradeoffs between providing a higher level of reliability in a local area and the cost and environmental impacts of providing that service. Such tradeoffs are subject to local regulatory authority or contract negotiated between the transmission provider and its transmission customers. Regarding the terms "interruption of firm transmission service", there needs be clarification on what Interruption means. Since it is referring to firm transmission service, we would interpret this to mean curtailment needed after a particular contingency and adjustments. There also needs to be clarification on what "Firm Transmission Service" means. Two points, 1) the NERC definition states "highest quality service offered to customers under a filed rate schedule that anticipates no planned interruption." The Standard implies anticipation of "unplanned" interruption for certain contingencies. 2) Is this referring to a transmission product as defined in FERC Order 890, or firm transfers modeled for the conditions being studied? One way to interpret the intent is the firm transfers being modeled for the conditions in the power flow to meet demand that would result in load not being served if that firm transfer were curtailed. If there is other generation in the system that could increase to meet the load if the transfer being modeled is interrupted, then interruption of firm transmission service should also be allowed for P1 through P5 contingencies in the table. In addition, we believe that DC and AC lines should have the same performance requirements with respect to interruption of firm transmission service. We do not understand why interruption of firm service would be an acceptable response to the loss of a single pole of a DC line (i.e. response to the contingency) but not an acceptable response to prepare for the next contingency of an AC line. The transfers over both AC and DC lines can automatically be curtailed when the line is out of service.
Idaho Power	B — Unsure	We agree that the Standard as presented is clearer, but there are numerous issues that still need resolution, Measures,

Organization	Question 15:	Question 15 Comments:
Company	about supporting the revised standard	VSLs, Implementation Plan, etc., before WECC can give a full approval of this Standard.? There is no mention in the purpose of the Standard about minimizing loss of load for more probable unplanned contingencies. Maybe there needs to be some definition around what is meant by reliability.? We believe that with the loss of the first N-1 in P6, curtailment of firm transmission service or firm transfers should be allowed as part of system adjustment in preparation for the next N-1. This should be added to R3.3.2.2. Otherwise, the power transfer under normal condition (before the first N-1) will have to be significantly curtailed in anticipation for meeting performance requirements after N-1-1. This will unnecessarily impede commerce. Or, to maintain the same firm power transfer under normal conditions, construction of transmission facilities will be required. Either way, this would impose a much stricter standard than exists today resulting in very costly unnecessary system improvements and invalidate terms of many transmission service contracts that allow for implementation of pro-rate curtailments of firm transmission rights during forced and planned outage conditions.? We disagree with the application of the proposed definitions of Consequential Load Loss and Non-Consequential Load Loss in conjunction with ?raising the bar?. Local Network load should be included in Consequential Load and the loss should be allowed for single contingencies. The TPL standard is to maintain reliability of the BES. Under certain conditions orderly dropping of local network load could limit the spread of the disturbance beyond the local area and allow BES reliability to be maintained. This would minimize the total amount of load loss and allow for quicker load restoration. The proposed definitions for Consequential Load Loss and Non-consequential Load Loss will provide no reliability benefits for high voltage (>300 kV) transmission backbone system providing wholesale open access service and interconnecting to the rest of the western interconnection. Any potential reliability benefits of any additional facilities built to comply with these definitions would be at the local service level.? As mention in comments to Q3 above, some local network customer curtailments or local area load loss has been allowed by local regulatory authorities as long as the overall reliability of the interconnected system was not impacted. This is a result of tradeoffs between providing a higher level of reliability in a local area and the cost and environmental impacts of providing that service. Such tradeoffs are subject to local regulatory authority or contract negotiated between the transmission provider and its transmission customers. Regarding the terms ?interruption of firm transmission service?, there needs be clarification on what Interruption means. Since it is referring to firm transmission service, we would interpret this to mean curtailment needed after a particular contingency and adjustments. There also needs to be clarification on what “Firm Transmission Service” means. Two points, 1) the NERC definition states ?highest quality service offered to customers under a filed rate schedule that anticipates no planned interruption.? The Standard implies anticipation of “unplanned” interruption for certain contingencies. 2) Is this referring to a transmission product as defined in FERC Order 890, or firm transfers modeled for the conditions being studied? One way Comment Form for 2nd Draft of Standard TPL-001-1Assess Transmission Future Needs (Project 2006-02)Page 12 of 12to interpret the intent is the firm transfers being modeled for the conditions in the powerflow to meet demand that would result in load not being served if that firm transfer were curtailed. If there is other generation in the system that could increase to meet the load if the transfer being modeled is interrupted, then interruption

Organization	Question 15:	Question 15 Comments:
		of firm transmission service should also be allowed for P1 through P5 contingencies in the table. In addition, we believe that DC and AC lines should have the same performance requirements with respect to interruption of firm transmission service. We do not understand why interruption of firm service would be an acceptable response to the loss of a single pole of a DC line (i.e. response to the contingency) but not an acceptable response to prepare for the next contingency of an AC line. The transfers over both AC and DC lines can automatically be curtailed when the line is outaged.
SMUD	C — Definitely do not support the revised standard	We agree that the Standard as presented is clearer, but there are numerous issues that still need resolution, Measures, VSLs, Implementation Plan, etc., before giving a full approval of this Standard. ? There is no mention in the purpose of the Standard about minimizing loss of load for more probable unplanned contingencies. Maybe there needs to be some definition around what is meant by reliability. ? We believe that with the loss of the first N-1 in P6, curtailment of firm transmission service or firm transfers should be allowed as part of system adjustment in preparation for the next N-1. This should be added to R3.3.2.2. Otherwise, the power transfer under normal condition (before the first N-1) will have to be significantly curtailed in anticipation for meeting performance requirements after N-1-1. This will unnecessarily impede commerce. Or, to maintain the same firm power transfer under normal conditions, construction of transmission facilities will be required. Either way, this would impose a much stricter standard than exists today resulting in very costly unnecessary system improvements and invalidate terms of many transmission service contracts that allow for implementation of pro-rata curtailments of firm transmission rights during forced and planned outage conditions.? We disagree with the application of the proposed definitions of Consequential Load Loss and Non-Consequential Load Loss in conjunction with ?raising the bar?. Local Network load should be included in Consequential Load and the loss should be allowed for single contingencies. The TPL standard is to maintain reliability of the BES. Under certain conditions orderly dropping of local network load could limit the spread of the disturbance beyond the local area and allow BES reliability to be maintained. This would minimize the total amount of load loss and allow for quicker load restoration. The proposed definitions for Consequential Load Loss and Non-consequential Load Loss will provide no reliability benefits for high voltage (>300 kV) transmission backbone system providing wholesale open access service and interconnecting to the rest of the western interconnection. Any potential reliability benefits of any additional facilities built to comply with these definitions would be at the local service level. ? As mention in comments to Q3 above, some local network customer curtailments or local area load loss has been allowed by local regulatory authorities as long as the overall reliability of the interconnected system was not impacted. This is a result of trade offs between providing a higher level of reliability in a local area and the cost and environmental impacts of providing that service. Such tradeoffs are subject to local regulatory authority or contract negotiated between the transmission provider and its transmission customers. Regarding the terms ?interruption of firm transmission service?, there needs be clarification on what Interruption means. Since it is referring to firm transmission service, we would interpret this to mean curtailment needed after a particular

Organization	Question 15:	Question 15 Comments:
		contingency and adjustments. There also needs to be clarification on what ?Firm Transmission Service? means. Two points, 1) the NERC definition states ?highest quality service offered to customers under a filed rate schedule that anticipates no planned interruption.? The Standard implies anticipation of ?unplanned? interruption for certain contingencies. 2) Is this referring to a transmission product as defined in FERC Order 890, or firm transfers modeled for the conditions being studied? One way to interpret the intent is the firm transfers being modeled for the conditions in the powerflow to meet demand that would result in load not being served if that firm transfer were curtailed. If there is other generation in the system that could increase to meet the load if the transfer being modeled is interrupted, then interruption of firm transmission service should also be allowed for P1 through P5 contingencies in the table. In addition, we believe that DC and AC lines should have the same performance requirements with respect to interruption of firm transmission service. We do not understand why interruption of firm service would be an acceptable response to the loss of a single pole of a DC line (i.e. response to the contingency) but not an acceptable response to prepare for the next contingency of an AC line. The transfers over both AC and DC lines can automatically be curtailed when the line is outaged.
Sierra Pacific Power Company / Nevada Power Company	B — Unsure about supporting the revised standard	We agree that the Standard as presented is clearer, but there are numerous issues that still need resolution, Measures, VSLs, Implementation Plan, etc., before WECC can give a full approval of this Standard. There is no mention in the purpose of the Standard about minimizing loss of load for more probable unplanned contingencies. Maybe there needs to be some definition around what is meant by reliability. We believe that with the loss of the first N-1 in P6, curtailment of firm transmission service or firm transfers should be allowed as part of system adjustment in preparation for the next N-1. This should be added to R3.3.2.2. Otherwise, the power transfer under normal condition (before the first N-1) will have to be significantly curtailed in anticipation for meeting performance requirements after N-1-1. This will unnecessarily impede commerce. Or, to maintain the same firm power transfer under normal conditions, construction of transmission facilities will be required. Either way, this would impose a much stricter standard than exists today resulting in very costly unnecessary system improvements and invalidate terms of many transmission service contracts that allow for implementation of pro-rate curtailments of firm transmission rights during forced and planned outage conditions. We disagree with the application of the proposed definitions of Consequential Load Loss and Non-Consequential Load Loss in conjunction with ?raising the bar?. Local Network load should be included in Consequential Load and the loss should be allowed for single contingencies. The TPL standard is to maintain reliability of the BES. Under certain conditions orderly dropping of local network load could limit the spread of the disturbance beyond the local area and allow BES reliability to be maintained. This would minimize the total amount of load loss and allow for quicker load restoration. The proposed definitions for Consequential Load Loss and Non-consequential Load Loss will provide no reliability benefits for high voltage (>300 kV) transmission backbone system providing wholesale open access service and interconnecting to the rest of the western interconnection. Any potential reliability benefits of any additional facilities built to comply with these

Organization	Question 15:	Question 15 Comments:
		definitions would be at the local service level. As mention in comments to Q3 above, some local network customer curtailments or local area load loss has been allowed by local regulatory authorities as long as the overall reliability of the interconnected system was not impacted. This is a result of tradeoffs between providing a higher level of reliability in a local area and the cost and environmental impacts of providing that service. Such tradeoffs are subject to local regulatory authority or contract negotiated between the transmission provider and its transmission customers. Regarding the terms ?interruption of firm transmission service?, there needs be clarification on what Interruption means. Since it is referring to firm transmission service, we would interpret this to mean curtailment needed after a particular contingency and adjustments. There also needs to be clarification on what ?Firm Transmission Service? means. Two points, 1) the NERC definition states ?highest quality service offered to customers under a filed rate schedule that anticipates no planned interruption.? The Standard implies anticipation of ?unplanned? interruption for certain contingencies. 2) Is this referring to a transmission product as defined in FERC Order 890, or firm transfers modeled for the conditions being studied? One way to interpret the intent is the firm transfers being modeled for the conditions in the powerflow to meet demand that would result in load not being served if that firm transfer were curtailed. If there is other generation in the system that could increase to meet the load if the transfer being modeled is interrupted, then interruption of firm transmission service should also be allowed for P1 through P5 contingencies in the table. In addition, we believe that DC and AC lines should have the same performance requirements with respect to interruption of firm transmission service. We do not understand why interruption of firm service would be an acceptable response to the loss of a single pole of a DC line (i.e. response to the contingency) but not an acceptable response to prepare for the next contingency of an AC line. The transfers over both AC and DC lines can automatically be curtailed when the line is outaged.
Black Hills Corporation	B — Unsure about supporting the revised standard	We agree that the Standard as presented is clearer, but there are numerous issues that still need resolution, Measures, VSLs, Implementation Plan, etc., before a full approval of this Standard can be given. There is no mention in the purpose of the Standard about minimizing loss of load for more probable unplanned contingencies. Maybe there needs to be some definition around what is meant by reliability. We believe that with the loss of the first N-1 in P6, curtailment of firm transmission service or firm transfers should be allowed as part of system adjustment in preparation for the next N-1. This should be added to R3.3.2.2. Otherwise, the power transfer under normal condition (before the first N-1) will have to be significantly curtailed in anticipation for meeting performance requirements after N-1-1. This will unnecessarily impede commerce. Or, to maintain the same firm power transfer under normal conditions, construction of transmission facilities will be required. Either way, this would impose a much stricter standard than exists today resulting in very costly unnecessary system improvements and invalidate terms of many transmission service contracts that allow for implementation of pro-rate curtailments of firm transmission rights during forced and planned outage conditions. We disagree with the application of the proposed definitions of Consequential Load Loss and Non-Consequential Load

Organization	Question 15:	Question 15 Comments:
		Loss in conjunction with ?raising the bar?. Local Network load should be included in Consequential Load and the loss should be allowed for single contingencies. The TPL standard is to maintain reliability of the BES. Under certain conditions orderly dropping of local network load could limit the spread of the disturbance beyond the local area and allow BES reliability to be maintained. This would minimize the total amount of load loss and allow for quicker load restoration. The proposed definitions for Consequential Load Loss and Non-consequential Load Loss will provide no reliability benefits for high voltage (>300 kV) transmission backbone system providing wholesale open access service and interconnecting to the rest of the western interconnection. Any potential reliability benefits of any additional facilities built to comply with these definitions would be at the local service level. As mention in comments to Q3 above, some local network customer curtailments or local area load loss has been allowed by local regulatory authorities as long as the overall reliability of the interconnected system was not impacted. This is a result of tradeoffs between providing a higher level of reliability in a local area and the cost and environmental impacts of providing that service. Such tradeoffs are subject to local regulatory authority or contract negotiated between the transmission provider and its transmission customers. Regarding the terms ?interruption of firm transmission service?, there needs be clarification on what Interruption means. Since it is referring to firm transmission service, we would interpret this to mean curtailment needed after a particular contingency and adjustments. There also needs to be clarification on what “Firm Transmission Service” means. Two points, 1) the NERC definition states ?highest quality service offered to customers under a filed rate schedule that anticipates no planned interruption.? The Standard implies anticipation of “unplanned” interruption for certain contingencies. 2) Is this referring to a transmission product as defined in FERC Order 890, or firm transfers modeled for the conditions being studied? One way to interpret the intent is the firm transfers being modeled for the conditions in the powerflow to meet demand that would result in load not being served if that firm transfer were curtailed. If there is other generation in the system that could increase to meet the load if the transfer being modeled is interrupted, then interruption of firm transmission service should also be allowed for P1 through P5 contingencies in the table. In addition, we believe that DC and AC lines should have the same performance requirements with respect to interruption of firm transmission service. We do not understand why interruption of firm service would be an acceptable response to the loss of a single pole of a DC line (i.e. response to the contingency) but not an acceptable response to prepare for the next contingency of an AC line. The transfers over both AC and DC lines can automatically be curtailed when the line is outaged.
Tucson Electric Power Company	C — Definitely do not support the revised standard	The Standard as presented is clearer, but there are numerous issues that still need resolution. There should be no distinction in voltage classes for allowing or not allowing controlled load shed for applicable events. We support the use of load shed for events at voltages greater than 300 kV where load shed is allowed for the same type of event for voltages below 300 kV. We agree that the Standard as presented is clearer, but there are numerous issues that still need resolution, Measures, VSLs, Implementation Plan, etc., before WECC can give a full approval of this Standard. ?

Organization	Question 15:	Question 15 Comments:
		There is no mention in the purpose of the Standard about minimizing loss of load for more probable unplanned contingencies. Maybe there needs to be some definition around what is meant by reliability. ? We believe that with the loss of the first N-1 in P6, curtailment of firm transmission service or firm transfers should be allowed as part of system adjustment in preparation for the next N-1. This should be added to R3.3.2.2. Otherwise, the power transfer under normal condition (before the first N-1) will have to be significantly curtailed in anticipation for meeting performance requirements after N-1-1. This will unnecessarily impede commerce. Or, to maintain the same firm power transfer under normal conditions, construction of transmission facilities will be required. Either way, this would impose a much stricter standard than exists today resulting in very costly unnecessary system improvements and invalidate terms of many transmission service contracts that allow for implementation of pro-rate curtailments of firm transmission rights during forced and planned outage conditions.? We disagree with the application of the proposed definitions of Consequential Load Loss and Non-Consequential Load Loss in conjunction with ?raising the bar?. Local Network load should be included in Consequential Load and the loss should be allowed for single contingencies. The TPL standard is to maintain reliability of the BES. Under certain conditions orderly dropping of local network load could limit the spread of the disturbance beyond the local area and allow BES reliability to be maintained. This would minimize the total amount of load loss and allow for quicker load restoration. The proposed definitions for Consequential Load Loss and Non-consequential Load Loss will provide no reliability benefits for high voltage (>300 kV) transmission backbone system providing wholesale open access service and interconnecting to the rest of the western interconnection. Any potential reliability benefits of any additional facilities built to comply with these definitions would be at the local service level. ? As mention in comments to Q3 above, some local network customer curtailments or local area load loss has been allowed by local regulatory authorities as long as the overall reliability of the interconnected system was not impacted. This is a result of tradeoffs between providing a higher level of reliability in a local area and the cost and environmental impacts of providing that service. Such tradeoffs are subject to local regulatory authority or contract negotiated between the transmission provider and its transmission customers. Regarding the terms ?interruption of firm transmission service?, there needs be clarification on what Interruption means. Since it is referring to firm transmission service, we would interpret this to mean curtailment needed after a particular contingency and adjustments. There also needs to be clarification on what ?Firm Transmission Service? means. Two points, 1) the NERC definition states ?highest quality service offered to customers under a filed rate schedule that anticipates no planned interruption.? The Standard implies anticipation of ?unplanned? interruption for certain contingencies. 2) Is this referring to a transmission product as defined in FERC Order 890, or firm transfers modeled for the conditions being studied? One way to interpret the intent is the firm transfers being modeled for the conditions in the powerflow to meet demand that would result in load not being served if that firm transfer were curtailed. If there is other generation in the system that could increase to meet the load if the transfer being modeled is interrupted, then interruption of firm transmission service should also be allowed for P1 through P5 contingencies in the table. In addition, we believe that DC and AC lines should have the same performance requirements with respect to interruption

Organization	Question 15:	Question 15 Comments:
		of firm transmission service. We do not understand why interruption of firm service would be an acceptable response to the loss of a single pole of a DC line (i.e. response to the contingency) but not an acceptable response to prepare for the next contingency of an AC line. The transfers over both AC and DC lines can automatically be curtailed when the line is outaged.
Tri-State G&T	C — Definitely do not support the revised standard	We agree that the Standard as presented is clearer, but there are numerous issues that still need resolution, Measures, VSLs, Implementation Plan, etc., before WECC can give a full approval of this Standard. ? There is no mention in the purpose of the Standard about minimizing loss of load for more probable unplanned contingencies. Maybe there needs to be some definition around what is meant by reliability. ? We believe that with the loss of the first N-1 in P6, curtailment of firm transmission service or firm transfers should be allowed as part of system adjustment in preparation for the next N-1. This should be added to R3.3.2.2. Otherwise, the power transfer under normal condition (before the first N-1) will have to be significantly curtailed in anticipation for meeting performance requirements after N-1-1. This will unnecessarily impede commerce. Or, to maintain the same firm power transfer under normal conditions, construction of transmission facilities will be required. Either way, this would impose a much stricter standard than exists today resulting in very costly unnecessary system improvements and invalidate terms of many transmission service contracts that allow for implementation of pro-rate curtailments of firm transmission rights during forced and planned outage conditions.? We disagree with the application of the proposed definitions of Consequential Load Loss and Non-Consequential Load Loss in conjunction with ?raising the bar?. Local Network load should be included in Consequential Load and the loss should be allowed for single contingencies. The TPL standard is to maintain reliability of the BES. Under certain conditions orderly dropping of local network load could limit the spread of the disturbance beyond the local area and allow BES reliability to be maintained. This would minimize the total amount of load loss and allow for quicker load restoration. The proposed definitions for Consequential Load Loss and Non-consequential Load Loss will provide no reliability benefits for high voltage (>300 kV) transmission backbone system providing wholesale open access service and interconnecting to the rest of the western interconnection. Any potential reliability benefits of any additional facilities built to comply with these definitions would be at the local service level. ? As mention in comments to Q3 above, some local network customer curtailments or local area load loss has been allowed by local regulatory authorities as long as the overall reliability of the interconnected system was not impacted. This is a result of tradeoffs between providing a higher level of reliability in a local area and the cost and environmental impacts of providing that service. Such tradeoffs are subject to local regulatory authority or contract negotiated between the transmission provider and its transmission customers. Regarding the terms ?interruption of firm transmission service?, there needs be clarification on what Interruption means. Since it is referring to firm transmission service, we would interpret this to mean curtailment needed after a particular contingency and adjustments. There also needs to be clarification on what “Firm Transmission Service” means. Two points, 1) the NERC definition states ?highest quality service offered to customers under a filed rate schedule that

Organization	Question 15:	Question 15 Comments:
		anticipates no planned interruption.? The Standard implies anticipation of "unplanned" interruption for certain contingencies. 2) Is this referring to a transmission product as defined in FERC Order 890, or firm transfers modeled for the conditions being studied? One way to interpret the intent is the firm transfers being modeled for the conditions in the powerflow to meet demand that would result in load not being served if that firm transfer were curtailed. If there is other generation in the system that could increase to meet the load if the transfer being modeled is interrupted, then interruption of firm transmission service should also be allowed for P1 through P5 contingencies in the table. In addition, we believe that DC and AC lines should have the same performance requirements with respect to interruption of firm transmission service. We do not understand why interruption of firm service would be an acceptable response to the loss of a single pole of a DC line (i.e. response to the contingency) but not an acceptable response to prepare for the next contingency of an AC line. The transfers over both AC and DC lines can automatically be curtailed when the line is outaged.
ColumbiaGrid	A — Generally support the revised standard	We agree that the Standard as presented is clearer, but there are numerous issues that still need resolution. There is no mention in the purpose of the Standard about minimizing loss of load for more probable unplanned contingencies. Maybe there needs to be some definition around what is meant by reliability. We believe that with the loss of the first N-1 in P6, curtailment of firm transmission service or firm transfers should be allowed as part of system adjustment in preparation for the next N-1. This should be added to R3.3.2.2. Otherwise, the power transfer under normal condition (before the first N-1) will have to be significantly curtailed in anticipation for meeting performance requirements after N-1-1. This will unnecessarily impede commerce. Or, to maintain the same firm power transfer under normal conditions, construction of transmission facilities will be required. Either way, this would impose a much stricter standard than exists today resulting in very costly unnecessary system improvements and invalidate terms of many transmission service contracts that allow for implementation of pro-rate curtailments of firm transmission rights during forced and planned outage conditions. We disagree with the application of the proposed definitions of Consequential Load Loss and Non-Consequential Load Loss in conjunction with "raising the bar". Local Network load should be included in Consequential Load and the loss should be allowed for single contingencies. The TPL standard is to maintain reliability of the BES. Under certain conditions orderly dropping of local network load could limit the spread of the disturbance beyond the local area and allow BES reliability to be maintained. This would minimize the total amount of load loss and allow for quicker load restoration. The proposed definitions for Consequential Load Loss and Non-consequential Load Loss will provide no reliability benefits for high voltage (>300 kV) transmission backbone system providing wholesale open access service and interconnecting to the rest of the western interconnection. Any potential reliability benefits of any additional facilities built to comply with these definitions would be at the local service level. As mention in comments to Q3 above, some local network customer curtailments or local area load loss has been allowed by local regulatory authorities as long as the overall reliability of the interconnected system was not impacted. This is a result of tradeoffs between providing a higher level of reliability in a

Organization	Question 15:	Question 15 Comments:
		local area and the cost and environmental impacts of providing that service. Such tradeoffs are subject to local regulatory authority or contract negotiated between the transmission provider and its transmission customers. Interruption of firm transmission service does not mean that firm load is not served. If there is other generation in the system that could increase to meet the firm load requirements if the firm transfer being modeled is interrupted, then interruption of firm transmission service should be allowed for P1 through P5 contingencies in the table. In addition, we believe that DC and AC lines should have the same performance requirements with respect to interruption of firm transmission service. We do not understand why interruption of firm service would be an acceptable response to the loss of a single pole of a DC line (i.e. response to the contingency) but not an acceptable response to prepare for the next contingency of an AC line. The transfers over both AC and DC lines should be allowed to be curtailed when the line is outaged.
Southern California Edison	B — Unsure about supporting the revised standard	Our Response is (B) and (C).We agree that the Standard as presented is clearer, but there are numerous issues that still need resolution, Measures, VSLs, Implementation Plan, etc., before WECC can give a full approval of this Standard. There is no mention in the purpose of the Standard about minimizing loss of load for more probable unplanned contingencies. Maybe there needs to be some definition around what is meant by reliability. We believe that with the loss of the first N-1 in P6, curtailment of firm transmission service or firm transfers should be allowed as part of system adjustment in preparation for the next N-1. This should be added to R3.3.2.2. Otherwise, the power transfer under normal condition (before the first N-1) will have to be significantly curtailed in anticipation for meeting performance requirements after N-1-1. This will unnecessarily impede commerce. Or, to maintain the same firm power transfer under normal conditions, construction of transmission facilities will be required. Either way, this would impose a much stricter standard than exists today resulting in very costly unnecessary system improvements and invalidate terms of many transmission service contracts that allow for implementation of pro-rate curtailments of firm transmission rights during forced and planned outage conditions. We disagree with the application of the proposed definitions of Consequential Load Loss and Non-Consequential Load Loss in conjunction with “raising the bar”. Local Network load should be included in Consequential Load and the loss should be allowed for single contingencies. The TPL standard is to maintain reliability of the BES. Under certain conditions orderly dropping of local network load could limit the spread of the disturbance beyond the local area and allow BES reliability to be maintained. This would minimize the total amount of load loss and allow for quicker load restoration. The proposed definitions for Consequential Load Loss and Non-consequential Load Loss will provide no reliability benefits for high voltage (>300 kV) transmission backbone system providing wholesale open access service and interconnecting to the rest of the western interconnection. Any potential reliability benefits of any additional facilities built to comply with these definitions would be at the local service level. As mention in comments to Q3 above, some local network customer curtailments or local area load loss has been allowed by local regulatory authorities as long as the overall reliability of the interconnected system was not impacted. This is a

Organization	Question 15:	Question 15 Comments:
		result of tradeoffs between providing a higher level of reliability in a local area and the cost and environmental impacts of providing that service. Such tradeoffs are subject to local regulatory authority or contract negotiated between the transmission provider and its transmission customers. Regarding the terms “interruption of firm transmission service”, there needs be clarification on what Interruption means. Since it is referring to firm transmission service, we would interpret this to mean curtailment needed after a particular contingency and adjustments. There also needs to be clarification on what “Firm Transmission Service” means. Two points, 1) the NERC definition states ?highest quality service offered to customers under a filed rate schedule that anticipates no planned interruption.? The Standard implies anticipation of “unplanned” interruption for certain contingencies. 2) Is this referring to a transmission product as defined in FERC Order 890, or firm transfers modeled for the conditions being studied? One way to interpret the intent is the firm transfers being modeled for the conditions in the powerflow to meet demand that would result in load not being served if that firm transfer were curtailed. If there is other generation in the system that could increase to meet the load if the transfer being modeled is interrupted, then interruption of firm transmission service should also be allowed for P1 through P5 contingencies in the table. In addition, we believe that DC and AC lines should have the same performance requirements with respect to interruption of firm transmission service. We do not understand why interruption of firm service would be an acceptable response to the loss of a single pole of a DC line (i.e. response to the contingency) but not an acceptable response to prepare for the next contingency of an AC line. The transfers over both AC and DC lines can automatically be curtailed when the line is outaged.
Alberta Electric System Operator	C — Definitely do not support the revised standard	We agree that the Standard as presented is clearer, but there are numerous identified issues that still need resolution, in addition to the Measures, VSLs, Implementation Plan, etc., before AESO could give a full approval of this Standard. – There is no mention in the purpose of the Standard about minimizing loss of load for more probable unplanned contingencies. Maybe there needs to be some definition around what is meant by reliability. – We believe that with the loss of the first N-1 in P6, curtailment of firm transmission service or firm transfers should be allowed as part of system adjustment in preparation for the next N-1. This should be added to R3.3.2.2. Otherwise, the power transfer under normal condition (before the first N-1) will have to be significantly curtailed in anticipation for meeting performance requirements after N-1-1. This will unnecessarily impede commerce. Or, to maintain the same firm power transfer under normal conditions, construction of transmission facilities will be required. Either way, this would impose a much stricter standard than exists today resulting in very costly unnecessary system improvements and invalidate terms of many transmission service contracts that allow for implementation of pro-rate curtailments of firm transmission rights during forced and planned outage conditions.- We disagree with the application of the proposed definitions of Consequential Load Loss and Non-Consequential Load Loss in conjunction with ?raising the bar? for loss of Facilities with operating voltages 300 kV or higher (P2, P4, and P5 in the Performance Tables). We believe there should be no distinction between the voltage classes.-

Organization	Question 15:	Question 15 Comments:
		Regarding the terms ?interruption of firm transmission service?, there needs be clarification on what Interruption means. Since it is referring to firm transmission service, we would interpret this to mean curtailment needed after a particular contingency and adjustments. There also needs to be clarification on what ?Firm Transmission Service? means. Two points, 1) the NERC definition states ?highest quality service offered to customers under a filed rate schedule that anticipates no planned interruption.? The Standard implies anticipation of ?unplanned? interruption for certain contingencies. 2) Is this referring to a transmission product, or firm transfers modeled for the conditions being studied? One way to interpret the intent is the firm transfers being modeled for the conditions in the powerflow to meet demand that would result in load not being served if that firm transfer were curtailed. If there is other generation in the system that could increase to meet the load if the transfer being modeled is interrupted, then interruption of firm transmission service should also be allowed for P1 through P5 contingencies in the table.- In addition, we believe that DC and AC lines should have the same performance requirements with respect to interruption of firm transmission service. We do not understand why interruption of firm service would be an acceptable response to the loss of a single pole of a DC line (i.e. response to the contingency) but not an acceptable response to prepare for the next contingency of an AC line. The transfers over both AC and DC lines can automatically be curtailed when the line is outaged.
US Bureau of Reclamation	C ? Definitely do not support the revised standard	We agree that the Standard as presented is clearer, but there are numerous issues that still need resolution, Measures, VSLs, Implementation Plan, etc., before WECC can give a full approval of this Standard.? There is no mention in the purpose of the Standard about minimizing loss of load for more probable unplanned contingencies. Maybe there needs to be some definition around what is meant by reliability.? We believe that with the loss of the first N-1 in P6, curtailment of firm transmission service or firm transfers should be allowed as part of system adjustment in preparation for the next N-1. This should be added to R3.3.2.2. Otherwise, the power transfer under normal condition (before the first N-1) will have to be significantly curtailed in anticipation for meeting performance requirements after N-1-1. This will unnecessarily impede commerce. Or, to maintain the same firm power transfer under normal conditions, construction of transmission facilities will be required. Either way, this would impose a much stricter standard than exists today resulting in very costly unnecessary system improvements and invalidate terms of many transmission service contracts that allow for implementation of pro-rate curtailments of firm transmission rights during forced and planned outage conditions.? We disagree with the application of the proposed definitions of Consequential Load Loss and Non-Consequential Load Loss in conjunction with ?raising the bar?. Local Network load should be included in Consequential Load and the loss should be allowed for single contingencies. The TPL standard is to maintain reliability of the BES. Under certain conditions orderly dropping of local network load could limit the spread of the disturbance beyond the local area and allow BES reliability to be maintained. This would minimize the total amount of load loss and allow for quicker load restoration. The proposed definitions for Consequential Load Loss and Non-consequential Load Loss will provide no reliability benefits for

Organization	Question 15:	Question 15 Comments:
		high voltage (>300 kV) transmission backbone system providing wholesale open access service and interconnecting to the rest of the western interconnection. Any potential reliability benefits of any additional facilities built to comply with these definitions would be at the local service level.? As mention in comments to Q3 above, some local network customer curtailments or local area load loss has been allowed by local regulatory authorities as long as the overall reliability of the interconnected system was not impacted. This is a result of tradeoffs between providing a higher level of reliability in a local area and the cost and environmental impacts of providing that service. Such tradeoffs are subject to local regulatory authority or contract negotiated between the transmission provider and its transmission customers. Regarding the terms ?interruption of firm transmission service?, there needs be clarification on what Interruption means. Since it is referring to firm transmission service, we would interpret this to mean curtailment needed after a particular contingency and adjustments. There also needs to be clarification on what “Firm Transmission Service” means. Two points, 1) the NERC definition states ?highest quality service offered to customers under a filed rate schedule that anticipates no planned interruption.? The Standard implies anticipation of ?unplanned? interruption for certain contingencies. 2) Is this referring to a transmission product as defined in FERC Order 890, or firm transfers modeled for the conditions being studied? One way Comment Form for 2nd Draft of Standard TPL-001-1Assess Transmission Future Needs (Project 2006-02) Page 12 of 12to interpret the intent is the firm transfers being modeled for the conditions in the powerflow to meet demand that would result in load not being served if that firm transfer were curtailed. If there is other generation in the system that could increase to meet the load if the transfer being modeled is interrupted, then interruption of firm transmission service should also be allowed for P1 through P5 contingencies in the table. In addition, we believe that DC and AC lines should have the same performance requirements with respect to interruption of firm transmission service. We do not understand why interruption of firm service would be an acceptable response to the loss of a single pole of a DC line (i.e. response to the contingency) but not an acceptable response to prepare for the next contingency of an AC line. The transfers over both AC and DC lines can automatically be curtailed when the line is outaged.

Response: Measures, VSL's, and the Implementation Plan will be addressed in the next draft of the standard.

The NERC standards are based on deterministic principles. Probability is considered in a high level perspective as a means of rationalizing the inclusion of various deterministic events; however it is difficult to discuss probability in this context without creating misunderstandings. The SDT recommends that you review the NERC definition of Adequate Level of Reliability (ALR), which is the reliability goal for all NERC standards. In response to your comment and those of others in the industry, the SDT has proposed differentiating between loss of firm Load and loss of Firm Transmission Service. This differentiation is provided in footnotes 5 and 10 to Table 1 - Steady State & Stability Performance. In the event that loss of Firm Transmission Service is inadequate, the SDT believes that there are alternatives to loss of Load or construction. For example, companies may contract with interruptible Load and shed customers voluntarily.

Some commenters expressed concern with the inability to shed Non-Consequential Load in response to a single Contingency event. It was indicated that some stakeholders rely on an SPS to drop local area network Load in response to some single Contingency events and that these System designs are permissible under the presently approved TPL-002-0 standard. FERC in Order 693 was clear in paragraph 1794 that that interruption of Non-Consequential Load is not

Organization	Question 15:	Question 15 Comments:
permitted for single Contingency events. This position was vetted in draft 1 of TPL-001-1 and most stakeholders and the SDT support this position. The use of an SPS design would be permitted for a single Contingency event if the SPS design interrupts service to customers involved in an interruptible Load contract arrangement. Footnote # 10 has been added to the end of Table 1 to reflect that curtailment or interruption of Firm Transmission Service will be allowed in preparation for the next Contingency. However, until the next Contingency occurs, System performance will need to meet the requirements for Event P1. As such, the proposed standard will not allow loss of any Non-Consequential Load, except for contracted interruptible Loads, in preparation for the next Contingency. "Firm Transmission Service" is a NERC defined term and is also addressed by FERC in OATT. **Footnote #10** – Curtailment of firm transmission service, when coupled with the appropriate re-dispatch of resources obligated to re-dispatch, is allowed both as a System adjustment (as identified in the column titled 'Initial System Conditions') and a corrective action, where it can be demonstrated that Facilities remain within applicable Facility Ratings and those adjustments do not result in the shedding of any firm Load. Where limited options for re-dispatch exist, sensitivities associated with the availability of those resources must be considered. Where Facilities external to the Transmission Planner's planning region are relied upon, Facility Ratings in those regions must be considered. The SDT has removed this differentiation in the Table such that AC and DC lines will be treated equally.		
Gainesville Regional Utilities	C — Definitely do not support the revised standard	First, a starting point for the study process (base case) needs to be better defined even if the intent was to allow the TP's & PC's to make the decision. The standard should describe the rules to properly conduct a base case study within each region. This should support any following analysis studies and their finding since you will be starting from the same set of system elements operating at a base condition. Secondly, this standard should focus on what is best for the customer considering 1) the probability of the contingency events, 2) the potential expense to the customer for practically NO improvement in BES reliability, and 3)the extraordinary added burden on the smaller utilities to run additional, no added value studies with documentation to meet an exhausted detailed audit with the potential for penalties probably not proportioned to the utilities revenue stream.
Response: The SDT has modified Requirement R1 to include additional details on what should be modeled in the cases. However, the SDT intentionally provides flexibility for the Transmission Planner/Planning Coordinator to decide which "base case" to use since initial conditions for a system will vary from region to region and will need to be established on a local level, not via a national standard. The required studies and sensitivity analysis ensures that sufficient study is performed to cover an appropriate range of System conditions. **R1** Each Transmission Planner and Planning Coordinator shall maintain System models for performing the studies needed to complete their Planning Assessment. The models shall use data consistent with the data provided in accordance with ~~Requirements R9 through R14,~~ the MOD-010 and MOD-012 standards~~,~~ and other data sources,~~.~~ and shall simulate projected System conditions including requirements of regulatory authorities and other legal obligations. The SDT has retained the basis of the previous standard and raised the bar in some respects. While the performance requirements must be met, they do not necessarily mandate a solution. Considerable flexibility in Corrective Action Plans allows for economic considerations. The SDT is striving to develop a standard that appropriately supports BES reliability and has industry consensus. The SDT is cognizant of the cost factors (including ROW) involved here and is		

Organization	Question 15:	Question 15 Comments:
taking them into consideration in its deliberations.		
Lakeland electric	B — Unsure about supporting the revised standard	Suggested changes listed below to more directly address what I think is the intent of the item: Planning Events: Events that require Transmission system performance requirements to be met. Comment: I think that this suggested revision better defines a Planning Event and how they may be used in a study or assessment. Revision to: Planning Events Planning Events: Simulated events that are modeled to test the Transmission system's ability to meet performance requirements. R2.6.2. For steady state, short circuit, Generating Plant Stability, or System Stability analysis: the study shall not include any material changes, such as, generation or Transmission additions/removals, or topology changes that have occurred in the intervening period and would impact the study area. Comment: the requirement as stated leaves one guessing about the usability of a study that may have included the changes that occurred in the intervening period. Changes that were studied but not implemented could also invalidate a study they were included in. Revision to R2.6.2R2.6.2. For steady state, short circuit, Generating Plant Stability, or System Stability analysis: the study shall not include any material changes, such as, generation or Transmission additions/removals, or topology changes that were not included in the original study but have occurred in the intervening period and would impact the study area results.
Response: The SDT did not incorporate the commenter's suggested change and the Planning Event definition remains the same as in Draft 2. The SDT believes the stated definition more correctly indicates the intent that for Planning Events the performance requirements must be met, not simply that simulations need to be completed to indicate if the performance requirements are met or not. The SDT does not agree with your comment and believes that the cancellation of a planned Facility that was included in prior models would be a material change to the network model and therefore would not allow the past study to support the Planning Assessment. The key phrase within the requirement is "the study", therefore, the intent is model simulation changes and not limited only to real physical System changes. Therefore, the SDT believes the instance raised by the commenter is adequately covered.		
JEA	C — Definitely do not support the revised standard	The inability to curtail Firm Transmission Service under P6 assessments in preparation for the next N-1 event. Also, under P1 and lower probability contingency events, JEA recommends a standard requirement that allows for the loss of Non-Consequential load during short term periods (suggest allowing up to 3 year minimum) where the system load growth has caused post-contingency remedial action plans to not be completely affective in bringing the Facility(ies) within normal operating limits. As a specific theoretical example, lets say a 10 year assessment shows load growth causing this situation in year 5, but in year 7 generators are added to the area of concern and the issue is resolved, but in year 6, Non-consequential load is required to be shed, do we still need to propose a capital improvement project?
Response: The SDT agrees that clarification regarding treatment of Firm Transmission Service and Non-Consequential Load Loss during adjustment is		

Organization	Question 15:	Question 15 Comments:
necessary. Footnote 10 in the Revision 3 of the Standard provides clarification. **Footnote #10** – Curtailment of firm transmission service, when coupled with the appropriate re-dispatch of resources obligated to re-dispatch, is allowed both as a System adjustment (as identified in the column titled 'Initial System Conditions') and a corrective action, where it can be demonstrated that Facilities remain within applicable Facility Ratings and those adjustments do not result in the shedding of any firm Load. Where limited options for re-dispatch exist, sensitivities associated with the availability of those resources must be considered. Where Facilities external to the Transmission Planner's planning region are relied upon, Facility Ratings in those regions must be considered. The proposed standard does not require capital improvements, but it does require the performance metrics to be achieved. Certainly there will be circumstances where the addition of Transmission or generation facilities may be the only practical solution. For the specific example that you described, if there were no acceptable Operating Procedures to bridge the time period before the generator comes on line, entering into interruptible Load contracts would be another option. The standard does not preclude such actions.		
PacifiCorp	A — Generally support the revised standard	We generally agree with the Standard as presented so far, but there are numerous issues that still need resolution, Measures, VSLs, Implementation Plan, etc., before WECC can give a full approval of this Standard. We believe that with the loss of the first N-1 in P6, curtailment of firm transmission service or firm transfers should be allowed as part of system adjustment in preparation for the next N-1. This should be added to R3.3.2.2. Otherwise, the power transfer under normal condition (before the first N-1) will have to be significantly curtailed in anticipation for meeting performance requirements after N-1-1. This will unnecessarily impede commerce.
Response: Measures, VSL's, and the Implementation Plan will be addressed in the next draft of the standard. The SDT agrees that clarification regarding treatment of Firm Transmission Service and Non-Consequential Load Loss during adjustment is necessary. Footnote 10 in the Revision 3 of the Standard provides clarification. Requirement R3.3.2.2 has been deleted in favor of Header note 'e' in the Table. **Footnote #10** – Curtailment of firm transmission service, when coupled with the appropriate re-dispatch of resources obligated to re-dispatch, is allowed both as a System adjustment (as identified in the column titled 'Initial System Conditions') and a corrective action, where it can be demonstrated that Facilities remain within applicable Facility Ratings and those adjustments do not result in the shedding of any firm Load. Where limited options for re-dispatch exist, sensitivities associated with the availability of those resources must be considered. Where Facilities external to the Transmission Planner's planning region are relied upon, Facility Ratings in those regions must be considered.		
ITC Holdings: ITC, METC, ITC Midwest	B — Unsure about supporting the revised standard	ITC and ITC Midwest biggest concerns are some missed opportunities to "raise the bar". We believe the draft standard is a significant improvement over existing standards which are largely fill-in-the-blank. However, we have some concerns regarding some of the language wherein CAPs are not required, even though a performance requirement has been violated. For example, providing for a bare minimum sensitivity study and not requiring a CAP based on a performance violation may increase operational awareness but does not ?raise the bar? or improve transmission performance. Allowing for non-consequential load loss following a shutdown and contingency might be an acceptable real time operating

Organization	Question 15:	Question 15 Comments:
		procedure but is not a significant advancement on a transmission planning basis. Frequently, operating procedures like this should lead to a planning solution, particularly above 300kV
Response: The SDT translated the existing TPL standards, added clarity, and "raised the bar" in areas where the SDT believes are merited. Even though the existing TPL standards do not address sensitivities, the SDT has added a requirement to complete at least one additional sensitivity. The SDT believes that it is important and valuable for the Transmission Planner and Planning Coordinator to run significant sensitivities and share the results with their neighbors. The SDT did not limit when Operating Procedures, other than Non-Consequential Load loss, could be utilized. The SDT believes that it is important for the Transmission Planner and Planning Coordinator to determine when an Operating Procedure can be utilized and when new Facilities need to be constructed. A Corrective Action Plan is required for all performance violations of all Planning Events in Table 1, except, as you have noted for sensitivity study performance violations. The SDT concurred with the FERC orders that sensitivity study results do not necessarily result in a Corrective Action Plan. From paragraph 1704 of Order 693: "The Commission notes that it is not the purpose of sensitivity studies to identify remedial actions, but, as stated in the NOPR, if different scenarios that lead to criteria violations are probable they require mitigation plans…… In any case, we are not requiring the construction of additional facilities." While the standard does not "require" a Corrective Action Plan, it does not preclude a Corrective Action Plan, particularly if it meets FERC requirements for a "mitigation" plan if the Planning Events are "probable". The majority of the SDT, based on industry comments, did not feel that Non-Consequential Load loss should be precluded from N-1-1 events. A Corrective Action Plan is not required if Non-Consequential Load loss is allowed under local criteria but the standard does not prevent local criteria from prohibiting Non-Consequential Load loss for N-1-1 events.		
Hydro-Quebec Transenergie (HQT)	C — Definitely do not support the revised standard	This standard as drafted does not allow exceptions for small parts of the system as long as interconnected system reliability is maintained, which is allowed in the existing TPL standards in footnotes b) and c) in Table 1. Unless such exceptions are allowed significant transfer restrictions or large reinforcements must be made. The applicable TPL footnotes are:? Planned or controlled interruption of electric supply to radial customers or some local Network customers, connected to or supplied by the Faulted element or by the affected area, may occur in certain areas without impacting the overall reliability of the interconnected transmission systems. To prepare for the next contingency, system adjustments are permitted, including curtailments of contracted Firm (non-recallable reserved) electric power Transfers.? Depending on system design and expected system impacts, the controlled interruption of electric supply to customers (load shedding), the planned removal from service of certain generators, and/or the curtailment of contracted Firm (nonrecallable reserved) electric power Transfers may be necessary to maintain the overall reliability of the interconnected transmission systems.? This comment form did not allow for the following items to be addressed:? a. Definition of the Long-Term Planning Horizon. The planning horizon, for assessment purposes should be limited to 10 years. Such an assessment should be sufficient to identify requirements that may take an extended time to implement.? b. Definition of Planning Coordinator is part of the NERC Functional Model, For consistency it should be removed from the Standard.? c. We propose that the Standard be subdivided by subjects into 4 different Standards : ? TPL-001-1: Modeling and System Assessment (R1, R2, R9 to R14)? TPL-002-1: Short circuit and Steady State Performance (R3, R4)? TPL-003-1: Stability Performance (R5)? TPL-004-1: Coordination (R6, R7, R8)? If the previous proposition is not retained, at least the Standard

Organization	Question 15:	Question 15 Comments:
		Requirements should be organized by topics (Modeling, Assessment, Coordination, etc.) and headings put on each section to identify requirements of section. Add headings to the tops of the subsequent pages in the performance tables. Headings only appear on the first page at the beginning of the Table.? d. With respect to R2.2 - Delete "current" from the phrase" current System Peak Load study" and replace "study" with "assessment."? e. Remove R2.2.1, the requirement to extend the assessment beyond 10 years. What does the length of the project have to do with the assessment? If it takes 15 years to build something, why does this require a review of year 15? What is the purpose of this assessment?? f. R3.3.2 requires clarification - This standard needs to permit discretion regarding the single contingencies that need to be tested, similar to R 3.3.3 and R3.4. It is unnecessary to test all events. For example, contingencies may be limited to relevant disturbances that are contained within or directly impact the studied system.? g. With respect to R3.2.1 - Clarify whether the intent of the standard is to address station service minimum voltage limitation, maximum leading VAR absorption capability or both at steady state.? h. Remove R3.2.2 - Relay loadability is addressed in PRC-023 standard.? i. With respect to R3.3.2.1 - Recommend the removal of the requirement to assess the expected duration of Consequential Load loss. It's not considered anywhere else in the standard.? j. With respect to R3.3.3 - The paragraph refers to Table 1 Contingencies P3 through P7; this should be explicitly stated. Rationale for inclusion of testing should not be required; should only need to explain why certain Contingencies were not tested. This discretion should be applicable to all contingencies.? k. With respect to section R5 - The concept of planned and long-term outages should apply to the general Planning Assessment, or not at all. It should not be specific to the Stability Assessment. ? l. The provisions of Section R.5.3 should have a corresponding MOD standard apply a requirement to provide information regarding all direct and indirect protective and control actions that could result in the inadvertent trip of the generator. Such a provision should include "other equipment (e.g. HVDC, SVC's, Statcoms)", and identify how these devices are treated in the simulation.? m. Planned outages should be addressed in the operating horizon unless otherwise defined in the planning horizon. ? n. In both Table 1 and Table 2, note 3, "variable frequency transformers" should be removed from the last sentence. A new sentence should be added for reference voltage as it applies to "variable frequency transformers" and "back-to-back" facilities.

Organization	Question 15:	Question 15 Comments:

Response: Some commenters expressed concern with the inability to shed Non-Consequential Load in response to a single Contingency event. It was indicated that some stakeholders rely on an SPS to drop local area network Load in response to some single Contingency events and that these System designs are permissible under the presently approved TPL-002-0 standard. FERC in Order 693 was clear in paragraph 1794 that that interruption of Non-Consequential Load is not permitted for single Contingency events. This position was vetted in draft 1 of the TPL-001-1 and most stakeholders and the SDT support this position. The use of an SPS design would be permitted for a single Contingency event if the SPS design interrupts service to customers involved in an interruptible Load contract arrangement.

A. The SDT believes that a review of System conditions beyond the 10-year horizon is warranted. FERC Order 693 requires that the planning horizon take into account the lead times for siting and permitting of new long-distance Transmission lines and other long lead time solutions. The SDT has received industry comments regarding the need to exceed a 10-year horizon to account for longer lead time projects. Establishing planning horizons that are shorter than Transmission lead times may create gaps where the identification of a reliability need to which Transmission may be the best solution occurs too late to avert the identified reliability violation. Further, Operating Procedures or alternative short-term capital projects may be needed to limit the impact of the planning event until the planned Facilities can be completed. This information needs to be included in the Assessment.

B. The definition for Planning Coordinator was deleted because the term has already been defined and added to the NERC Glossary by another SDT.

C. The SDT agrees with FERC Order 693 in aggregating all of the planning requirements into a single standard. The SDT also feels that the Tables need to be as clear and concise as possible. To that end, this version combined Tables 1 and 2 into one table with a revised format. The Planning Events are shown on one page so repeating the headings will not be needed.

D. The SDT believes that the existing language is appropriate. No change made.

E The SDT believes that a review of System conditions beyond the 10-year horizon is warranted under some circumstances. For example, if it takes 15 years to build a Transmission line, then the need for that line would have to be determined 15 years ahead of the in-service date. Therefore, Requirement R2.2.1 requires you to perform an Assessment on year 15 if it takes you 15 years to build a line.

F. The SDT has removed Requirement R3.3.2 and replaced it with additional language in Requirement R3.1. The SDT agrees with your interpretation that it does not require evaluation of all single Contingencies. Rather, the SDT specifically states in Requirement R3.4 that those Contingencies that are expected to produce the more severe System impacts shall be identified, evaluated for System performance, and the rationale for the Contingencies selected for evaluation shall be available as supporting information and shall include an explanation of why the remaining Contingencies would produce less severe results.

R3.1 Studies shall be performed to determine whether the BES meets the performance requirements in Table 1~~ Steady State Performance.~~ based on the lists created in Requirement R3.5.

G. The SDT has not limited the purpose of this requirement to either minimum acceptable station service voltages or maximum Mvar absorption. The SDT believes that the purpose of Requirement R3.2.1 (now R3.3.2) is to determine if generators will be able to operate or trip off following the Contingency.

H. The SDT believes that relay load limits or loadability needs to be considered in the Contingency analyses. The studies should determine if Transmission line loadings could reach the relay loadability level which may add to the existing Contingency and perhaps, result in an unbounded cascading event. No change made.

Organization	Question 15:	Question 15 Comments:
I. By definition, Consequential Load Loss is allowed. To meet industry concern as well as FERC Order 693, the SDT has added Requirement R2.~~-~~8 to identify the event causing the single largest Consequential Load Loss Demand and its value and eliminate the reporting of the expected duration. Requirement R3.3.2.1 has been deleted in favor of new Requirement R2.8. **R2.8** The Planning Assessment shall provide the largest Consequential Load Loss (megawatt Demand) and the associated event caused by any P1 event and any P2 event in Table 1. J. The SDT agrees that the rationale should be for all Planning Events but not for Extreme Events. K. The SDT agrees and has moved this concept within Requirement R1 (see Requirement R1.1.1) so that it is applicable to all planning assessments. Further, both Requirements R3 and R5 (now R4) have been revised to make reference to Requirement R1**.** **R1.1.1** Planned outages of generation and Transmission Facilities, if specifically known. **R3**. For the steady state portion of the Planning Assessment, each Transmission Planner and Planning Coordinator shall perform analysis for the Near-Term and Long-Term Transmission Planning Horizon studies in Requirement R2.1 and Requirement R2.2. ~~The studies shall be based on computer power flow simulations that analyze BES normal performance (n-0) and System response to c~~Contingencies in Table 1 ~~– Steady State Performance.~~ The studies shall be based on computer simulations using models utilizing data provided in Requirement R1. **R4** For the Stability portion of the Planning Assessment, as described in Requirement R2.4 ~~and Requirement R2.5~~, each Transmission Planner and Planning Coordinator shall perform the Contingency analyses listed in Table ~~2~~1 ~~– Stability Performance~~. The studies shall be based on computer simulations using models utilizing data provided in Requirement R1. ~~The studies shall be based on computer simulations using models utilizing data provided in Requirements R9 through R14, the MOD-010 and MOD-012 standards, and other data sources, to include known planned and long term outages of Transmission or generation equipment. The studies shall cover both System Stability and Generating Unit Stability. The following requirements apply to both System Stability and Generating Unit Stability studies unless otherwise noted.~~ L. Requirement R5.3 (now R4.3.2) has been modified to address simulation of how generators perform under conditions being studied. "Other equipment" is addressed in Requirement R5.4. **R4.3.2** ~~Studies shall consider~~ Simulate generator performance under anticipated conditions including how the voltage ride through capability ~~of all generators and identify how the generators are treated~~ is analyzed~~in the simulation~~ M. While planned outages are addressed in the operating horizon, it is important that a Transmission Planner review the ability of its System to accommodate planned (maintenance) outages. Additionally, any specific known Facility outages need to be appropriately modeled for the planning horizon studied. N. Tables 1 and 2 have been combined into one table for the next posting. The SDT believes that it has adequately addressed "variable frequency transformers" as well as "back-to-back" facilities by including it in the same note as other transformers (Note #3).		
Progress Energy Florida, Inc.	C — Definitely do not support the revised	PEF considers the draft TPL Standard in its present state to be infeasible, unnecessary, burdensome and inferior to the existing Standards. The basic approach to equate reliability of the BES to whether or not Firm Transmission Service and/or Non-Consequential Load Loss can be sustained is an erroneous approach, is not justifiable, infringes upon

Organization	Question 15:	Question 15 Comments:
	standard	regulation already in place as part of dealings with the Florida Public Service Commission (PSC), and infringes upon requirements in the OATT. Given the numerous concerns PEF has with the revised draft Standard, expounding on those concerns requires extensive documentation. We therefore cannot reduce our concerns down to a single issue, nor can we single out a single requirement or set of requirements as the top concern, other than to say that the entire Standard development process either needs to be discontinued or the SDT should provide detail as to how much consideration would be given to transmission systems with historically excellent reliability via a variance process. The following is a list of PEF's primary concerns with the revised draft Standard and explanation as to why the Standard development process should be discontinued: 1. PEF has planned to, and demonstrated compliance with, the existing TPL Standards for several years now. PEF is intimately familiar with the existing Standards, and has done an excellent job in planning the PEF system, in conjunction with the other Transmission Owner members of FRCC, non-FRCC adjacent Transmission Owners, and all requestors of Transmission or Generator Interconnection Service using the existing TPL Standards. PEF thus believes that history has shown, particularly within the realm of PEF's Transmission Planning boundaries, that the existing four TPL Standards are not inadequate or inferior in any way. Statements in recent months alluding to the existing Standards? inferiority, confusing language or language subject to opposing interpretations, do not hold up when applied to the PEF and FRCC systems. PEF thus does not believe the Standards require modification. 2. PEF, through its aforementioned participation with FRCC and through its interaction and compliance with regulation by the Florida PSC, has historically demonstrated excellent Transmission Reliability, and can provide documentation to that effect through FRCC and Florida PSC channels. PEF therefore again asserts that modification or increased stringency in the TPL Standards is not merited. 3. The development of TPL-001-1 stems from a fundamental misinterpretation of the intent of FERC Order 693. NERC for the most part, rather than "clarify" or "consider" various matters raised by FERC, chose to accept all suggestions. Specifically, PEF notes the following misinterpretations regarding Order 693:a) In Paragraph 1692, the Commission agreed with one particular utility's assertion that integrating the four existing TPL Standards into a single standard would be an improvement, and directed NERC to "consider" this. NERC, rather than considering this, formed the SDT, which appears to have spent little considering the issue but rather have deemed it a foregone conclusion that the four existing TPL standards must be abolished and a new standard must be written. b) In Paragraphs 1694 and 1706, the Commission recognizes the significant differences in the various transmission systems, and the impossibility of developing a standardized list of "sensitivities" of critical operating conditions that every Transmission Planner and Planning Coordinator must analyze, regardless of their applicability. The Commission therefore stated that it is reasonable for planning entities to have a means to identify an appropriate range of critical operating conditions, without having to anticipate ?every conceivable critical operating condition.? They furthermore state that their conclusion on the whole matter is that ?only those deemed to be significant need to be assessed?. PEF agrees, and thus is perplexed by the erroneous developments in Requirements R2.4, R2.5, R5.4, R5.5, R2.1.3 and R2.1.4. PEF has

Organization	Question 15:	Question 15 Comments:
		addressed the inadequacies of these Requirements in the answers to Questions 2 and 10. c) In Paragraph 1704, the Commission, amongst other statements, states that they ?are not requiring the construction of additional facilities?. This general statement made by the Commission is demonstrated to be untrue upon examining the realities of the Standard development process. FERC, by directing NERC to consider various clarifications and/or improvements to the TPL Standards, has set in motion a process which will prohibit either Interruption of Firm Transmission Service or the loss of Non-Consequential Load for various outage scenarios, effectively necessitating the construction of redundant facilities. FERC's statement conflicts with the ongoing process in a major way, and PEF respectfully requests that the SDT confer with appropriate FERC personnel to get clarification on this matter. d) In Paragraph 1725, the Commission directs the ERO to modify the planning Reliability Standards to require the assessment of planned outages consistent with the entity's spare equipment strategy. PEF does not disagree with the specifics of analyzing events with respect to spare equipment, except to the extent that the Commission appears to think that such analysis is not adequately covered in the existing TPL Standards. PEF believes that the existing TPL Standards adequately address this issue and all other issues pertaining to the planning of a transmission system. Furthermore, the process is to be followed ?consistent with the entity's spare equipment strategy?, thus deferring to the processes and judgment of the individual Transmission Owners, which calls into question the need to include it in the draft Standard. For additional discussion on this issue, see the answer to Question 5 with regard to Requirement R11. e) In Paragraph 1782, PG&E points out the contradiction that FERC creates in Paragraph 1796 by directing NERC to remove the 2nd sentence of footnote (b). The contradiction also involves key statements made by the Commission in Paragraph 1788. For a more detailed explanation of this contradiction, see the answer to Question 11. f) Paragraph 1794 is part of the Commission Determination section. The Commission states its belief that no TPL Standard should allow an entity to plan for the loss of non-consequential load in the event of a single contingency. The Commission then directs NERC to "clarify the Reliability Standard.", and furthermore state that any Transmission Planners or Planning Coordinators seeking to plan for the loss of non-consequential load in the event of a single contingency can make their comments known through a) filing comments in the standards development process, or b) filing for a regional difference for case-specific circumstances. PEF points out that the Commission merely stated their belief and directed NERC to clarify the Standard. They did not order NERC to change the Standard to reflect its beliefs. NERC, while having the leeway to question FERC's approach in this Paragraph, did not question the approach, but rather deferred to the suggestion in Paragraph 1794 (as well as nearly every other suggestion or request for clarification) that FERC made. PEF is concerned that NERC and the SDT appear to be limiting the extent to which they question or make suggestions to FERC. PEF at present will take the approach of stating the prudency and need to plan for the curtailment of Firm Transmission Service and loss of non-consequential load in the event of a single contingency through the comments process. PEF, however, reserves the right to consider the variance approach or legal approaches, depending on further iterations in the development of the Standard. g) In Paragraph 1795, "The Commission" suggests that the ERO consider developing a ceiling on the amount and duration

Organization	Question 15:	Question 15 Comments:
		of consequential load loss that will be acceptable. If the ERO determines that such a ceiling is appropriate, it should be developed through the ERO's Reliability Standards development process.? To this effect, the SDT drafted Requirement R.3.3.2.1, which at present states ?Consequential Load loss (expected maximum demand and expected duration) following a single Contingency shall be identified in the Planning Assessment.? PEF asserts that this issue is under the jurisdiction of the State Public Service Commissions, who are already doing an excellent job in regulating Consequential Load Loss as part of SAIDI/CMI requirements. FERC and NERC are overstepping their bounds of jurisdiction by attempting to essentially ?double-regulate? an issue that is already adequately regulated via the States. PEF furthermore objects to Requirement R.3.3.2.1 on the grounds that duration of events cannot be estimated with any reasonable degree of accuracy. To handle the challenges of this issue by stating a long-duration worst-case scenario for each outage would be inaccurate, and would tend to foster needless scrutiny and concern on any and all outages associated with Consequential Load Loss. h) In Paragraph 1796, "The Commission" directs the ERO to modify the second sentence of footnote (b) to clarify that manual system adjustments other than shedding of firm load or curtailment of firm transfers are permitted to return the system to a normal operating state after the first contingency, provided these adjustment can be accomplished within the time period allowed by the short term or emergency ratings.? The Commission directed the ERO only to make modifications on the 2nd sentence of footnote (b). The SDT in the draft TPL Standard has eliminated footnote (b) altogether. PEF is surprised and disappointed at the response by FERC to PG&E's very correct assertion that eliminating the allowance of shedding of firm load or curtailment of firm transfers from footnote (b) contradicts the allowance made in footnote (c) regarding C.3 events. FERC's only response was to state that ?manual adjustments referred to in both cases [i.e. Category B and Category C.3 events] apply after the first N-1 contingency?. The fallacy of this statement is that shedding of firm load or curtailment of firm transfers is allowed by footnote (c) for C.3 events, and that every Category B event is by default the first part of a Category C.3 event. PEF asserts that FERC, and consequently the NERC SDT, has created a draft Standard that contradicts direction and suggestion in Order 693 regarding this issue. PEF furthermore asserts that curtailment of Firm Transmission Service or Non-Consequential Load are not valid benchmarks for assessing the reliability of the BES. For additional comments on this issue, see the answer to Question 11. i) Regarding Paragraph 1833, the paragraph in its entirety states: ?MidAmerican states that it supports the proposal to modify TPL-004-0 to require identification of options for reducing the probability or impacts of extreme events that cause cascading. Accordingly, for the reasons cited in the NOPR, the Commission directs the ERO to modify the Reliability Standard to make this modification to the Reliability Standard.? PEF does not understand what FERC has directed on this matter. Furthermore, PEF does not understand the meaning or requirements behind the entire ?Extreme Events? section in the draft Standard, which appears to have resulted from the direction in this particular Paragraph. FERC wants NERC to modify the Standard to ?require identification of options for reducing the probability or impacts of extreme events that cause cascading.? This statement is vague, confusing and does not appear to mandate anything. PEF therefore requests that language in TPL-001-1 to this effect be removed. Furthermore, in Paragraph 1834, the Commission, regarding its preference to expand TPL-004-0 to include analysis of more events such as hurricanes, ice storms, successful cyber

Organization	Question 15:	Question 15 Comments:
		attacks, etc., directs NERC to ?expand the list of events with examples of such events identified above.? This request, similar to Paragraph 1833, does not appear to direct NERC to make specific directions in a Standard. If it was FERC's intent that TPL-004 or its successor be modified to include some or all of FERC's suggested events, and to expand the list further, PEF has many concerns concerning this. The direction in Paragraph 1834 has resulted in the aforementioned Extreme Events section, which contains a note 1 referring to Requirement R3.4. PEF has multiple questions and concerns with the language in this Requirement. The Requirement as worded appears to mandate that Transmission Planners and Planning Coordinators must find the most severe Extreme Event scenarios that can be conceived. Such wording would define any reasonable limit as to which Extreme Events are likely and worthy of analysis, and which are not. Furthermore, many of the events suggested by FERC, such as loss of a large gas pipeline, wildfires, hurricanes, tornadoes, cyber attacks, etc., cannot reasonably be studied. To make any assessment of these events that even approached a level of thoroughness is infeasible, and furthermore has no significant benefit. PEF requests that the SDT point out to FERC that these events cannot be studied, and therefore need to be excluded from any TPL Standard. 4. The main approach of the draft TPL Standard consists of whether to allow or disallow load loss for certain outage scenarios (the most problematic Event categories being P1, P2.2, P2.3, P3, P4, P5 and P6), an approach to which PEF is opposed, and furthermore believes that level of service to retail load is not an issue that NERC/FERC should be regulating. The local utility commissions (the Florida PSC, etc.) have already set in place processes for reviewing/approving the level of transmission built to support the level of service to load, and thus FERC and NERC inappropriately attempt to regulate an issue which the States already adequately regulate. PEF can, and has demonstrated in its internal planning assessments and in assessments performed with FRCC that load curtailment and/or Firm Transmission Service curtailment do not adversely impact the reliability of the BES. In fact, certain post-contingency scenarios can be shown to demonstrate that such curtailments actually promote reliability and a speedier, safer, more efficient recovery of the BES after an event. 5. Several Event categories as presently defined in the draft TPL Standard present outage scenarios on the PEF system for which implementation of redundant transmission facilities would be required, at an exorbitant cost to ratepayers. The redundancy requirements at PEF's 500 kV, 230 kV and 115 kV Substations are numerous, and have not yet been comprehensively quantified, although this analysis is underway. One scenario for which PEF is already certain that redundancy of the 500 kV system would be required is the apparent disallowance of curtailment of Firm Transmission Service or Non-Consequential Load as part of ?System Adjustments? in between the two events of P6. PEF again would point out that no definition of ?System Adjustments? exists at present, and the SDT therefore must define it if compliance is expected. Be that as it may, PEF's 500 kV redundancy projects would clearly cost many billions of dollars, with extremely little benefit. PEF would furthermore point out that this is but one example requiring unnecessary Transmission upgrades, and that further analysis will potentially reveal several more Event categories in Tables 1 and 2 for which additional cost-prohibitive and unneeded projects would be mandated. 6. PEF is surprised and disappointed that neither FERC nor NERC have accepted any responsibility to alert the public or the State and local governments to this process. The public have not been involved in the development of the draft

Organization	Question 15:	Question 15 Comments:
		standard, nor have they been informed that they would bear the financial impact of the increased stringency. In fact, The SDT on p. 369 of the 1st draft Comments Document has stated that ?This is a performance based reliability standard and does not and should not consider economics.? PEF considers this statement to be reckless and irresponsible, and does not accept FERC's and NERC's apparent position that they have no responsibility in this matter. The fact that the draft Standard and FERC Order 693 can be downloaded by anyone from FERC's and NERC's websites does not constitute a sufficient good-faith notice of this process to the public. PEF requests that FERC and NERC specifically address this issue by explaining their failure to involve and inform the public. Assigning this responsibility to each Transmission Planner and Planning Coordinator is not acceptable. FERC and NERC have set this process in motion, and as creators of the process owe an explanation to those who would "foot the bill" for the process. 7. The low voltage threshold of jurisdiction of the draft Standard, previously defined in NERC's definition of the BES as 100 kV, is not specified in the draft Standard. This is a significant misstep by NERC in that a change to NERC's Glossary Definition of the BES, which would ostensibly be done outside the boundaries of this Standard, could profoundly change the requirement for complying with TPL-001-1 without changing a single word of the Standard. PEF is particularly concerned that this Standard must never have jurisdiction over local load-serving transmission systems, regardless of voltage. Any TPL Standard, existing or future, must focus on the reliability of the BES, i.e. the bulk grid, NOT the local load-serving portions of the transmission system. The draft Standard at present does not address this issue at all and leaves Transmission Planners and Planning Coordinators vulnerable to non-compliance with a mere change in the wording of a Definition outside of the Standard. 8. PEF strenuously objects to the allowance of interruption of Firm Transmission Service in Events P1 and P3 for DC lines, while disallowing the same for AC lines. PEF asserts that the determination should be "Yes" for both, and that disallowance for AC lines a) puts DC systems into an elite class of transmission for no explicable reason and b) encourages owners of AC Transmission Systems to replace them with DC, cost concerns notwithstanding. Furthermore, this differentiation fails to recognize or give consideration to the fact that AC systems support Firm Transmission Service; some areas of the AC transmission system carry significant amounts of Firm Transmission Service, and thus a "No" determination for P1 and P3 essentially mandates either implementing redundancy for those parts of the AC system carrying significant amounts of Firm Transmission Service, or severely curtailing Firm Transmission Service on the existing AC systems.

Response: The SAR for this standard recognized FERC orders which indicated a need to "raise the bar" for the industry. The SDT is attempting to do this in a reasonable fashion. There is significant flexibility in the Corrective Action Plans allowed for any additional performance requirements which must be met. Industry consensus, through approval of the SAR, is that revision of the existing TPL standards is appropriate.

1 & 2. Industry consensus, through approval of the SAR, is that revision of the existing TPL standards is appropriate.

3A. The SDT and industry consensus, at this point in the development process, is that consolidation in a single standard is the best course of action. The SDT did not start out with a preconceived idea that there should only be one TPL standard. The SDT started the drafting process by reviewing all of the available

Organization	Question 15:	Question 15 Comments:
documents. This included the existing TPL standards, the SAR, FERC Order 693, and other NERC documents. After reviewing this material, the SDT determined that the majority of the language in the individual standards was in all four of the standards. After much discussion, the SDT determined that the industry would be better served with a single standard instead of staying with four individual standards. B. Please see the responses provided in questions 2 and 10. C. The revised TPL-001-1 standard itself does not require construction of additional Facilities although that may be a consequence of application of the standard. Additional operating guides or changes in dispatch are other possible consequences. Footnotes 5 and 10 have been added that provide further clarification regarding interruption of Firm Transmission Service. FERC staff has been available to the SDT for consultation throughout the process. **Footnote 5** - When the conditions and/or event(s) being studied form the basis for conditional Firm Transmission Service, curtailment of that conditional Firm Transmission Service is allowed. **Footnote #10** – Curtailment of firm transmission service, when coupled with the appropriate re-dispatch of resources obligated to re-dispatch, is allowed both as a System adjustment (as identified in the column titled 'Initial System Conditions') and a corrective action, where it can be demonstrated that Facilities remain within applicable Facility Ratings and those adjustments do not result in the shedding of any firm Load. Where limited options for re-dispatch exist, sensitivities associated with the availability of those resources must be considered. Where Facilities external to the Transmission Planner's planning region are relied upon, Facility Ratings in those regions must be considered. D The SDT has removed Requirement R11 from the proposed standard and Requirement R2.1.4 has been included to help clarify the spare equipment strategy issue. **R2.1.4** When an entity's spare equipment strategy could result in the unavailability of major Transmission equipment that has a lead time of one year or more (such as a transformer), an analysis of the impact on System performance shall be assessed. The analysis shall reflect the Contingencies identified in Table 1 during the conditions that the System is expected to experience due to the unavailability of the long lead time equipment. E. Please see response to your comments on question 11. F. FERC direction provided in Order 693, SDT expertise, and industry input are all being considered in development of the standard. G. To meet industry concern as well as FERC Order 693, the SDT has added Requirement R 2.8 to identify the event causing the single largest Consequential Load Loss Demand and its value and eliminate the reporting of the expected duration. Requirement R3.3.2.1 has been removed from the draft. **R2.8** The Planning Assessment shall provide the largest Consequential Load Loss (megawatt Demand) and the associated event caused by any P1 event and any P2 event in Table 1. H. The SDT is being responsive to FERC direction in paragraph 1796 and agrees that clarification regarding Non-Consequential Load Loss and Firm Transmission Service requirements is necessary. Table 1 specifies the specific events when Loss of Non-Consequential Load is allowed. Footnotes #5 & 10 have been added to the end of Table 1 to explain Firm Transmission Service requirements. Also, please see response to your comments on question 11. I The SDT believes that the requirement to study Extreme Events in the existing TPL-004-0 must remain in this standard. The SDT has not expanded the number of Extreme Events that must be studied but rather gave examples of how the events may occur. The only significant change in the analysis of Extreme		

Organization	Question 15:	Question 15 Comments:
Events is the new requirement for the Transmission Planner or Planning Coordinator to evaluate whether there are cost effective ways to reduce the likelihood or the impact of a particular event and document those findings. The SDT believes that this is a very reasonable approach to ensuring that these major events, even with a small probability, are reviewed and prudent decisions are made. 4. The issues raised on NERC/FERC regulations are beyond the scope of the SDT. However, changes have been made to the 3rd draft of the standard to further clarify the SDT's position on curtailments and service to Loads. Also, Load curtailments are allowed if those customers have signed an Interruptible Load contract arrangement. **Footnote 5** - the conditions and/or event(s) being studied form the basis for conditional Firm Transmission Service, curtailment of that conditional Firm Transmission Service is allowed. **Footnote #10** – Curtailment of firm transmission service, when coupled with the appropriate re-dispatch of resources obligated to re-dispatch, is allowed both as a System adjustment (as identified in the column titled 'Initial System Conditions') and a corrective action, where it can be demonstrated that Facilities remain within applicable Facility Ratings and those adjustments do not result in the shedding of any firm Load. Where limited options for re-dispatch exist, sensitivities associated with the availability of those resources must be considered. Where Facilities external to the Transmission Planner's planning region are relied upon, Facility Ratings in those regions must be considered. 5. The SDT has made the following changes to address the concerns raised by you and others: 1) Added Header note 'e' to the table to show that System adjustments can be made following a single Contingency event, in preparation for the next event; 2) Added footnote 5 to address conditional firm issues, and 3) Added footnote 10 to address re-dispatching resources while continuing to serve firm Load. **Header note 'e' -** For all Planning Events, planned System adjustments such as Transmission configuration changes and redispatch of generation are allowed if such adjustments are executable within the time duration applicable to the Facility Ratings. **Footnote 5** - When the conditions and/or event(s) being studied form the basis for conditional Firm Transmission Service, curtailment of that conditional Firm Transmission Service is allowed. **Footnote #10** – Curtailment of firm transmission service, when coupled with the appropriate re-dispatch of resources obligated to re-dispatch, is allowed both as a System adjustment (as identified in the column titled 'Initial System Conditions') and a corrective action, where it can be demonstrated that Facilities remain within applicable Facility Ratings and those adjustments do not result in the shedding of any firm Load. Where limited options for re-dispatch exist, sensitivities associated with the availability of those resources must be considered. Where Facilities external to the Transmission Planner's planning region are relied upon, Facility Ratings in those regions must be considered. 6. NERC is following the officially sanctioned standards development process with regard to this project just as it follows the process for all standards development work. This is an open, transparent process which has been approved by FERC. Any member of the public is free to participate and/or comment. State regulators are included in the process (Segment 9) and comments are welcome from them just as they are from any other segment of the public or industry. Comments are frequently received from state agencies during the lifetime of a project and two regulatory agencies did provide comments on the second posting. As for the comments on economics, it was not reckless but a statement of fact. However, costs are being considered as should be evident by the questions raised (Q12 thru Q14) in the second posting. The SDT is cognizant of the cost factors involved here and is taking them into consideration in its deliberations.		

Organization	Question 15:	Question 15 Comments:
7. Revisions to definitions in the NERC Glossary of Terms must be approved in accordance with the standards process and issues with application to existing standards would be considered. In addition, each Regional Entity has the ability to establish its own unique definition of the BES. 8 The SDT has removed this differentiation in the Table such that AC and DC lines will be treated equally.		
Lafayette Utilities System	C — Definitely do not support the revised standard	Lafayette's single biggest concern is that the second draft version of TPL-001 imposes performance requirements that are less stringent than those imposed in the previous draft. As the SDT stated in its response to comments on Draft 1: ?The SDT modified the performance requirements relative to Non-Consequential Loss of Load and revised Tables 1 & 2 to add greater detail and provide for more situations where it is acceptable to lose Non-Consequential Load.? This ?watering down? of the standard appears to result from complaints about the costs that certain commenting parties claimed would be necessary to achieve compliance with the performance requirements set forth in Draft 1. This is evident from the SDT's statement in the foreword to the comments form for Draft 2 that the SDT has ?attempted to adjust and clarify the proposed requirements and performance in light of these initial comments,? and that the SDT needs additional information about cost and other compliance issues so that it can ?make more adjustments as appropriate.? Lafayette questions whether it is appropriate for the SDT to shape the performance standards to alleviate certain commenters? cost concerns. The SDT should be focused on developing performance requirements that are judged to be optimal from the standpoint of protecting reliability consistent with sound engineering and planning. Striking a balance between reliability and cost is a policy determination for which responsibility lies elsewhere than in the SDT. Claims that the standards would impose excessive costs are more properly addressed to FERC when the revised TPL-001 is filed for approval because Congress assigned to FERC the responsibility to make judgments of this sort. The SDT should not be ?adjusting? (that is, watering down) the performance requirements in response to transmission owner arguments about the costs of compliance. The dilution of the performance requirements is manifest in a number of elements contained in the proposed draft, including (but not limited to) the following: a) Table 1 (Steady State Performance) would permit the interruption of Firm Transmission Service and the loss of Non-Consequential Load in three P1 (Single Contingency) scenarios involving AC lines. In Order 693 (at paragraph 1794), however, FERC emphasized that loss of Non-Consequential Load in single contingency situations is not permissible. b) Adopting less stringent performance requirements for loss of elements below 300kV may be discriminatory. Most wholesale customer loads are served from delivery facilities that operate at voltages lower than 300kV. The outage of facilities operating at less than 300kV therefore may encompass 100% of a wholesale customer's load, while it is likely to impact a much smaller portion of the total load served by the owner of the affected transmission facilities. Therefore, adopting less stringent performance requirements for facilities operating at less than 300kV would impose a disproportionate burden on affected wholesale customers, as compared to the transmission owner. c) In addition to its potentially discriminatory effect, the notion of imposing difference performance standards based on operating voltage would incent transmission owners to scrimp on needed improvements to lower voltage facilities. Presumably, the distinction originates from a belief that outages on 300kV and lower facilities will have less impact on the

Organization	Question 15:	Question 15 Comments:
		Bulk Electric System. As the August 2003 blackout demonstrated, however, disruptions on lower voltage circuits can cause real and reactive power flow fluctuations across, and eventual separation of, higher-voltage networks. d) Regarding the SDT's elimination of the requirement to re-test cases to ascertain the efficacy of additions included in a Corrective Action Plan (sub-requirement 2.7.2 in Draft 1), it is unclear why this requirement was deleted since very few commenters complained that it would be burdensome. It is hard to see how such a re-testing obligation would impose a significant burden, at least insofar as the steady state analysis is concerned. Eliminating the re-testing requirement seems likely to provide minimal savings, but could be important to verifying that appropriate Corrective Action Plan decisions are made.
Response: There are no intentions by the SDT to "water down" reliability. In fact the SDT has raised the bar in many places; e.g., above 300 kV requirements. Resources and expenditures versus adequate level of reliability are being given due consideration throughout the process and will ultimately be determined by the industry through the ballot process. a Table 1 does *not* permit the interruption of Firm Transmission Service or the loss of Non-Consequential Load in three P1 (Single Contingency) scenarios involving AC lines. b & c. The majority of the SDT believed the 300 kV and higher Systems (EHV) generally represent the backbone of many Systems in the various Interconnections and that the more stringent requirements were appropriate when considering N-1-1 Contingencies of two EHV Facilities. Systems operated above 300 kV generally do not directly serve end-use Load customers but rather act as the medium for moving large amounts of power from production to various Load centers where the energy is then delivered by other Transmission or sub-Transmission Systems to end use customers. It is the desire of NERC and various stakeholders that the backbone of the electric power grid be robust and held to a higher degree of reliability. d. The retesting of the cases was deleted due to the SDT believing that this requirement was too burdensome; however, any utility may exceed the requirements listed and perform this retesting if they so desire.		
Arizona Public Service Co.	A —Generally support the revised standard	We generally agree with the Standard as presented so far, but there are numerous issues that still need resolution, Measures, VSLs, Implementation Plan, etc., before WECC can give a full approval of this Standard.
Compliance Elements Development Resource Pool (CEDRP)		With regard to Violation Severity Levels for this standard, the CEDRP doesn't believe the version that has be posted for comment can be commented on from a VSL perspective for two reasons 1) it does not have any measures listed and 2) there are so many "sub-requirements" the VSLs would be quite unmanageable, unless each sub-requirement is of equal importance to fulfilling the objective of the standard. Because there are no measures we can't achieve any insight into importance. The SDT may want to consider trimming the standard down to its most basic elements and providing the details (sub-requirements) in a reference document.

Organization	Question 15:	Question 15 Comments:
Response: Measures, VSL's, and the Implementation plan will be addressed in the next draft of the standard.		
Ameren	C — Definitely do not support the revised standard	From an engineering perspective, the biggest concerns are the additional requirements, including prescribed sensitivity studies, associated with R2 for both steady-state and stability scenarios. We believe that we already cover the needs of our system with the existing NERC standards and Ameren Transmission Planning Criteria & Guidelines. The additional analyses proposed by the revised standard are not warranted and any upgrades indentified by the additional analyses will not provide any significant increase in system reliability. For 2008 compliance, Ameren performed the following steady-state contingency analyses on each of four near-term models and one long-term model:617 Category B single contingencies involving lines and transformers.30 Category B single contingencies involving generators 50 MW and above.1699 Category B single branch outages.135 Category C-1 bus faults. 260 Category C-2 breaker failures.112,575 Category C-3 double contingencies involving lines and transformers.18,510 Category C3 contingencies involving 617 lines and transformers and 30 generating units.73 Category C-5 double-circuit tower outages. For 2008 compliance, Ameren performed 496 stability scenarios of four near-term models and one long-term model: Assuming that we can acquire the qualified manpower, which is presently not available, we estimate that proposed new requirements will increase our compliance activity time by approximately 24 man-months or 2 man-years in a six-month window (January-June) to produce the same quality studies that we produce now. Consequently, we view these proposed additional study efforts as excessively burdensome. Further, we do not see how the additional study work and documentation required by the proposed standard will lead to any significant improvements in reliability. Additional comments: The question of expected Consequential Load Loss magnitude and duration, as specified in R3.3.2.1, is not germane to the reliability of the Bulk Electric System, and is a matter for Distribution Planners and local regulatory authority and is not needed in this reliability standard.
Response: The SDT has received many comments regarding the increased planning requirements to meet the proposed standard. The SDT has reviewed the study work required to comply with the proposed standard as compared to the existing TPL standards. The SDT believes that we have added some additional study work and asked a question about the additional man-hours required to complete any new analysis. However, after this review, the SDT still believes that the requirements for sensitivity studies must remain to document the selection of critical System conditions and study years used in assessing System conditions (see paragraph 1704 of Order 693) and that System conditions are as important as Contingencies in evaluating the performance of present and future Systems (paragraph 1705). The SDT is striving to develop a standard that appropriately supports BES reliability and has industry consensus. The SDT is cognizant of the cost factors involved here and is taking them into consideration in its deliberations. To meet industry concern as well as FERC Order 693, the SDT has added Requirement R 2.8 to identify the event causing the single largest Consequential Load Loss Demand and its value and eliminate the reporting of the expected duration. Requirement R3.3.2.1 has been deleted in favor of new Requirement R2.8. **R2.8** The Planning Assessment shall provide the largest Consequential Load Loss (megawatt Demand) and the associated event caused by any P1 event and any P2 event in Table 1.		

Organization	Question 15:	Question 15 Comments:
City of Tallahassee, FL	C — Definitely do not support the revised standard	The requirement regarding non-interruption of firm transmission service in the steady state performance table for Category P1 events does not properly take into consideration the flexibility necessary for utilities with limited interconnections or interconnections with limited transfer capability. This flexibility, which currently exists in the TPL-001 standard (footnote b in the table), allows a utility to curtail firm transactions to prepare for the next contingency. As drafted, in the circumstance where the single element outage in Category P1 was a tie line, even if this line were critical to supporting the transaction (or were required to be in service by the terms of the power contract), interruption of firm service would be a violation of the proposed standard even though such interruption would be either required or appropriate to ensure the reliability of the bulk electric system. For utilities where tie line capacity is constrained or limited, this requirement for Category P1 will require substantial investment in duplicate facilities to ensure that firm transfers would not be interrupted, and the cost of that investment would likely not offer ratepayers a commensurate benefit (presuming such a duplicate facility could even be sited and permitted).For utilities with just a few large generating units (such as a small municipal utility), the requirements for Category P3 in Table 1 set a threshold for compliance that may not be achievable without substantial investment in additional/duplicate transmission facilities and possibly generating units. The concern relates to the restriction about limiting interruption of firm transmission service or non-consequential load following a G-1/N-1 event; the particular scenario is outlined in the bullets below:? Presume a utility with only two large units and some small gas turbines? Under P3, one of these large units is forced out of service? Reserves are called for and delivered along with replacement power using available import capability? Then presume that the N-1 outage in P3 is a major tie line that is critical to the support of the firm power imports? Under the proposed standard, the utility would be unable to curtail the firm purchase or shed any non-consequential load and remain compliant, even though there would be a significant generation/load imbalance & the appropriate response for the reliability of the grid in the region would be to interrupt the transaction and possibly shed load.The flexibility afforded in the existing TPL-001 standard would in fact allow the utility to respond to this event in a more appropriate way while avoiding a very expensive expansion/duplication of facilities (notwithstanding the considerable challenges that the utility would face for siting and permitting of the necessary facilities).
Response: The SDT has made clarifications regarding Firm Transmission Service and Non-Consequential Load Loss. Footnote # 10 has been added to the end of Table 1. The standard does not preclude the possibility of obtaining contractually interruptible load in lieu of system upgrades in the scenario described. **Footnote #10** – Curtailment of firm transmission service, when coupled with the appropriate re-dispatch of resources obligated to re-dispatch, is allowed both as a System adjustment (as identified in the column titled 'Initial System Conditions') and a corrective action, where it can be demonstrated that Facilities remain within applicable Facility Ratings and those adjustments do not result in the shedding of any firm Load. Where limited options for re-dispatch exist, sensitivities associated with the availability of those resources must be considered. Where Facilities external to the Transmission Planner's planning region are relied upon, Facility Ratings in those regions must be considered.		
Florida Power and Light	C — Definitely do not support the revised	The standard, as currently drafted, is unacceptable. Without the ability to curtail firm transfers to prepare for a next contingency, a "super-firm" priority of transmission service is created for non-native load customers. This goes contrary to the intent of the Open Access Transmission Tariff (OATT) that curtailments be comparable and non-discriminatory. – From

Organization	Question 15:	Question 15 Comments:
	standard	the OATT: – Curtailment of Firm Transmission Service: In the event that a Curtailment on the Transmission Provider's Transmission System, or a portion thereof, is required to maintain reliable operation of such system, Curtailments will be made on a non-discriminatory basis to the transaction(s) that effectively relieve the constraint. If multiple transactions require Curtailment, to the extent practicable and consistent with Good Utility Practice, the Transmission Provider will curtail service to Network Customers and Transmission Customers taking Firm Point-To-Point Transmission Service on a basis comparable to the curtailment of service to the Transmission Provider's Native Load Customers. All Curtailments will be made on a non-discriminatory basis, however, Non-Firm Point-To-Point Transmission Service shall be subordinate to Firm Transmission Service. When the Transmission Provider determines that an electrical emergency exists on its Transmission System and implements emergency procedures to Curtail Firm Transmission Service, the Transmission Customer shall make the required reductions upon request of the Transmission Provider. However, the Transmission Provider reserves the right to Curtail, in whole or in part, any Firm Transmission Service provided under the Tariff when, in the Transmission Provider's sole discretion, an emergency or other unforeseen condition impairs or degrades the reliability of its Transmission System. The Transmission Provider will notify all affected Transmission Customers in a timely manner of any scheduled Curtailments. The SDT has drafted language contrary to FERC specific requirements on comparability. The FERC has consistently directed Transmission Providers to treat all firm transaction on a comparable basis, yet the SDT, in its latest draft is creating a "super-firm" category for only firm transmission service. By creating a higher priority ("super-firm", non-comparable service) for non-native load customers than for native load, native load customers bear a higher cost burden. This and the costs to the ratepayers for negligible increase in already high reliability due to the performance requirements of the standard makes this draft completely unacceptable for FPL to support. FPL will vote against acceptance of this draft standard unless significant changes are made to comport what FPL believes was the intent of FERC Order 693 with regard to the TPL standards.
Response: The SDT agrees that clarification regarding Firm Transmission Service and Non-Consequential Load Loss is necessary. Footnote # 10 has been added to the end of Table 1: **Footnote #10** – Curtailment of firm transmission service, when coupled with the appropriate re-dispatch of resources obligated to re-dispatch, is allowed both as a System adjustment (as identified in the column titled 'Initial System Conditions') and a corrective action, where it can be demonstrated that Facilities remain within applicable Facility Ratings and those adjustments do not result in the shedding of any firm Load. Where limited options for re-dispatch exist, sensitivities associated with the availability of those resources must be considered. Where Facilities external to the Transmission Planner's planning region are relied upon, Facility Ratings in those regions must be considered.		
Exelon Transmission Planning	C — Definitely do not support the revised standard	We appreciate the effort involved in improving this planning standard, and believe in this goal. We are not yet able to support this revised at this time due to the concerns expressed above.

Organization	Question 15:	Question 15 Comments:
Response: Thank you for your comments.		
CenterPoint Energy and CPS Energy	C — Definitely do not support the revised standard	Without re-iterating previous comments, we will summarize that we find this proposed standard to be an overly prescriptive and unrealistic paper chase that does not add value to the planning process. We also are concerned that this standard demonstrates an unhealthy, one sided approach to planning that does not balance reliability goals against other public policy goals, such as cost and landowner impact.
Austin Energy	C — Definitely do not support the revised standard	The proposed standard is overly burdensome and too prescriptive. It will only result in a marginal improvement in reliability and its primary effect will be to devolve into a paper-chase for auditors.
Response: The SDT is striving to develop a standard that appropriately supports BES reliability and has industry consensus.		
SRP	B — Unsure about supporting the revised standard	SRP is concerned about what actions will be allowed to meet the higher performance requirements in the transition period and how long will these transition periods last for the different Requirements?
Response: The SDT has developed the Implementation Plan which is included in the 3rd draft of the standard.		
MidAmerican Energy Company	C — Definitely do not support the revised standard	MEC commends the SDT for significantly improving the standard, MEC believes that the standard still must be improved significantly. Probably the most important improvement would be to completely reformat the standard to provide for more organization and clearer VSLs. MEC recognizes that this may result in some initial confusion during the standard writing process, but if such organization results in less confusion over the next decade of applying the standard, the reorganization is well worth it. If the SDT does nothing else, it should reorganize the standard. Here are some suggestions for improvement: R1.1 is not clear. What does this mean? Surely the SDT does not expect that any time the data is modified a rationale is required. Shouldn't this data be updated as necessary? Wouldn't a requirement for providing a rationale each time such changes are made potentially discourage improvements to the models? This requirement should be clarified and limited to a few specific cases that were there are real reliability concerns R2.5.2 - the SDT should revise the material transmission system changes. Addition of a new substation in one of the transmission lines connected to the plant should be revised to specifically refer to a switching station or to a non-

Organization	Question 15:	Question 15 Comments:
		distribution substation. A substation directly serving load is not a good example of a material transmission system change in the context of Generation Unit Stability studies. R2.6.2 - The SDT should revise the material transmission system changes because as presently defined, studies will need to be conducted every year for every year in the assessment period. This is because apparently the SDT has defined any system change as a material change. Since it is rare for there to be a system that does not exhibit some system change from year to year, this will mean ten-year and more studies every year. MEC recommends that the SDT revise this requirement to make clear that only significant system changes are material changes. R2.7.1 - The SDT has written this requirement to include a requirement that the responsible entity must indicate how long Operating Procedures apply. This implies that Operating Procedures should be interim measures. MEC believes that reliability can be maintained with permanent Operating Procedures and recommends that the need to indicate "how long the Operating Procedures will be needed" be deleted from this requirement. R3.3.2.1 - The SDT should delete the need to provide the expected duration of the Consequential Load Loss in this requirement because this requirements a probabilistic calculation and probabilistic planning is not the state-of-the art of the industry. This is reflected in the standard which has been written to continue deterministic planning criteria. As a result, it is a contradiction to require this probabilistic quantity in the middle of this deterministic planning standard. R3.3.2.2 - clarify that the single contingency events are the events in the tab le. R3.4 and R5.4.4 - MEC urges that the SDT delete or revise the words "why the remaining Contingencies would produce less severe System results." Given the expansive nature of the Extreme events it is virtually impossible to comply with this requirement. It is more likely that the responsible entity could show that the more likely and more severe Extreme events were studied. It would be better yet if the SDT would merely require that the responsible entity provide the rationale for the selection of Extreme Events that were studied. R5.5.1 provides an exclusion for changes in individual generating units that require study. Yet R2.6.2 has a broader definition of when Generating Plant Stability is required. These definitions need to be consistent. The definition in R5.5.1 seems to narrow to be a good definition for "material changes." MEC believes that the R5.5.1 should be expanded. Year One definition - MEC suggests that the Standards Drafting Team's (SDT's) Year One definition unnecessarily constrains the time between the completion of assessments as compared to the study period to begin no more or no less than 12 to 18 months. There is no reliability benefits derived by constraining the period between the completion of an assessment and the study period for the next study period. In fact, this may encourage a Transmission Planner to unnecessarily delay "completing" a study just to ensure that the 12 to 18 month requirement is met. For example, lets assume that a Transmission Planner's 2008 Assessment is complete as of May 2008. By the definition of Year One, then the study period for the 2009 Assessment will need to begin from May 2009 through November 2009. This means that the 2009 Assessment must include the 2009-2010 Winter Peak and cannot start with the 2010 Calendar Year. Why??? If a Transmission Planner wants to have a study period that begins with the calendar year, then the Transmission Planner

Organization	Question 15:	Question 15 Comments:
		would need to delay completing the study until July 2009. Why??? What is the reliability benefits for delay??? MidAmerican suggests that the definition of Year One be changed to allow the study period to begin no later than 24 months after the completion of the previous year's study.? Accountability: We suggest that Transmission Service Provider be added because we also suggest that the Transmission Service Provider be responsible for R10.? R2.1 - We suggest that this requirement involves too much study work and we ask that the SDT reduce the number of current studies needed for all subrequirements. ? R2.7.1 - We agree with the requirement, but suggest a slight text change replace "? or Special Protection Schemes,?" with " . . . or Special Protection Systems, . . ."? R2.7.1.1 - We disagree with the "include project initiation date" portion of this requirement. The initiation date is often uncertain and subject to change, which may add considerable work to investigate, monitor and update the date. In addition, we do not know why this information is required to assure BES reliability.? R3.3.2.1 - We agree with the requirement, but suggest a slight text change of: ". . . shall be allowed in the Planning Assessment".? R3.3.2.2 - We agree with the requirement, but suggest a slight text change of: ". . . within their Facility Ratings and within the time period allowed by the applicable time limited ratings.".? R5.4.3.1 - We agree with the requirement, but suggest a slight text change of: ". . . within their Facility Ratings and within the time period allowed by the applicable time limited ratings.".? Table 1? Planning Events ? Header: We suggest that the header be repeated on every applicable page to be more reader-friendly.? Superscripts: The superscripts do not refer clearly to the respective notes (e.g. there are number notes in the beginning of the table, in the extreme events evaluation requirements section, in extreme event description section, and at the end of the table). Perhaps the notes at the end of the table should have unique numbering to make the superscript references clearer.? Shunt device: To avoid the need for future interpretation or clarification, we suggest that the meaning of shunt device be explained or defined somewhere in the standard (e.g. cap bank, inductor bank, SVC, STATCOM, etc.). We need to find out how shunt device outages can (or could in the future) be automatically included in the ACCC routine. We interpret that if each stage of a capacitor bank has a circuit switcher, then the outage would be of the largest cap bank stage.? Extreme Event Evaluation Requirements? 3 Extreme Event Descriptions? 2b & 3b - We agree with the descriptions, but suggest referring to the defined term: "Right-of-Way."?

Organization	Question 15:	Question 15 Comments:
		Note 4 - We agree with the description, but the acronym FACTS should be explained in the standard or a definition be added for "FACTS". Table 2 Header: We suggest that the header be repeated on every applicable page to be more reader-friendly. Other numbering and format changes suggested for Table 1 should also be considered for Table 2.

Response: A. The SDT agrees and has removed the need for documentation of the technical rationale for modification of any data.

B Requirement R2.5 and its sub-requirements have been removed from the proposed standard. Guidelines for the use of past studies to support the Planning Assessment have been added to what is now Requirement R2.5.2. The SDT did not want to be overly prescriptive when describing the type of changes that could be considered material and has left the text general. It is up to the Transmission Planner and Planning Coordinator to provide specificity as to what type of topology changes constitutes a change sufficient to warrant re-evaluation.

R2.5.2 For steady state, short circuit, ~~Generating Plant Stability,~~ or ~~System~~ Stability analysis: the ~~study~~ present System model shall not include any material changes, such as, generation or Transmission additions/removals, or topology changes that have occurred in the intervening period and would impact the study area. Material generation changes could include:

C The SDT does not agree that studies are required for every year of the Assessment period. However, please note that Requirement R2.5 and its sub-requirements have been removed from the proposed standard. Guidelines for the use of past studies to support the Planning Assessment have been added to what is now Requirement R2.5.2. The SDT did not want to be overly prescriptive when describing the type of changes that could be considered material and has left the text general. It is up to the Transmission Planner and Planning Coordinator to provide specificity as to what type of topology changes constitutes a change sufficient to warrant re-evaluation.

D The SDT has retained this requirement and believes that this information should be included in the Planning Assessment.

E To meet industry concern as well as FERC Order 693, the SDT has added Requirement R 2.8 to identify the event causing the single largest Consequential Load Loss Demand and its value and eliminate the reporting of the expected duration. Requirement R3.3.2.1 has been removed from the draft.

R2.8 The Planning Assessment shall provide the largest Consequential Load Loss (megawatt Demand) and the associated event caused by any P1 event and any P2 event in Table 1.

F The SDT has deleted Requirement R3.3.2 and has replaced it with additional language in Requirement R3.1 which will hopefully clarify things.

R3.1 Studies shall be performed to determine whether the BES meets the performance requirements in Table 1 ~~– Steady State Performance.~~ based on the lists created in Requirement R3.4.

G. The SDT disagrees with your comment. The SDT believes that this language is needed to ensure that the worst possible situation is studied based on engineering judgment and knowledge of the System.

H. To address industry comments such as yours, Generating Unit Stability is no longer explicitly addressed in the standard and the definitions of Consequential and Non-Consequential Load Loss have been modified.

Consequential Load Loss: ~~Load that is no longer connected to a source as a result of the event being studied or which is lost as a result of the load's response to the transient conditions of the event (other than through the action of UVLS or UFLS schemes). Although Load which is lost as a result of the Load's~~

Organization	Question 15:	Question 15 Comments:

~~response to the transient conditions of the event is considered Consequential Load Loss and is permitted when Consequential Load Loss is allowed, Transmission planning entities are not allowed to rely upon the expectation of such Load loss to meet steady state performance requirements.~~ All Load that is no longer served by any Transmission Facilities as a result of the Facilities being removed from service by a planned Protection System operation to isolate fault conditions.

Non-Consequential Load Loss: Non-Interruptible Load loss other than Consequential Load Loss, Supplemental Load Loss, and Load Reduction.~~. For example, non-Interruptible Load loss that occurs through manual (operator initiated) or automatic operations such as under-voltage Load shedding, under-frequency Load shedding, or Special Protection Systems would be considered Non-Consequential Load Loss~~.

I. The SDT has changed the definition for Year One to accommodate industry concerns.

Year One: The first year that a Transmission Planner is responsible for assessing. This is further defined as the planning window that begins 12-18 months from the ~~completion of the previous annual Planning Assessment~~ current calendar year.

In response to industry comments, the SDT has removed Requirements R9-R14.

R2.1 – The SDT has received many comments regarding the increased planning requirements to meet the proposed standard. However, the SDT believes that the requirements for sensitivity studies must remain to satisfy FERC Order 693. FERC has stated that the sensitivity studies would be used to document the selection of critical System conditions and study years used in assessing System conditions (see paragraph 1704) and that System conditions are as important as Contingencies in evaluating the performance of present and future Systems (paragraph 1705).

R2.7.1 (now R2.6.1) – The SDT agrees and had replaced "schemes" with "systems".

Installation or modification of Protection Systems or Special Protection Systems

R2.7.1.1 (now R2.6.2) - The SDT believes that a project initiation date is an effective measure to track a functional entity's planning and engineering activities and its efforts to provide and maintain a reliable BES.

R3.3.2.1 - To meet industry concern as well as FERC Order 693, the SDT has added Requirement R 2.8 to identify the event causing the single largest Consequential Load Loss Demand and its value and eliminate the reporting of the expected duration. Requirement R3.3.2.1 has been deleted in favor of new Requirement R2.8.

R3.3.2.2 - Based on your comment, the SDT has addressed the applicable time-limited rating in what was Header note 'a' for Steady State Only in Table 1 - Steady State & Stability Performance. Requirement R3.3.2.2 has been deleted in favor of Header note 'e' in the revised Table. Please note that the two tables in the second draft have been reduced to one table in the third draft.

Header note 'e' - For all Planning Events, planned System adjustments such as Transmission configuration changes and redispatch of generation are allowed if such adjustments are executable within the time duration applicable to the Facility Ratings.

R5.4.3.1 - The SDT has deleted Requirement R5.4.3.1.

Headers - The SDT also feels that the Tables need to be as clear and concise as possible. To that end, Tables 1 and 2 have been combined into one table with

Organization	Question 15:	Question 15 Comments:
a revised format. The Planning Events are shown on one page so repeating the headings will not be needed. Superscripts – As part of the change to a single table, the SDT has attempted to clean up various items such as superscripts. Shunt device - The SDT believes that shunt devices are commonly used in the electric utility industry and does not require any further explanation. The SDT recommends contacting the software manufacturer for additional information about the ACCC routine. The SDT believes that the cap bank outage would be based on what elements would need to trip in order to clear the simulated fault condition. Extreme Events - The SDT agrees with your comments and has made the change. The SDT has removed item 3.b. from Extreme Events since this was already covered in Extreme Event 1. **Extreme Event 2b -** Loss of all Transmission lines on a common ~~r~~Right-of-~~w~~Way. Note 4 - The SDT believes that "FACTS" is commonly used in the electric utility industry and does not require any further explanation.		
SERC Dynamics Review Subcommittee	B — Unsure about supporting the revised standard	SERC is in category BA ? Generally support the revised standard ? B ? Unsure about supporting the revised standard ? See three specific concerns below C ? Definitely do not support the revised standard ? 1) Load Modeling is a significant open issue. The models for dynamic studies have yet to be developed and the data is not in hand. This is conflicting with implementation of the TPL standards because modeling details are a gating item to completing some system studies. 2) The proposed sensitivities create significant amount of additional work making the compliance aspect more burdensome and less clear. 3) Category P6 is the loss of a system element, following system adjustments, followed by the loss of another element. The table columns for this category say that interruption of firm transmission service is allowed. The table, however, is not clear whether the interruption of firm service is allowed as part of the system adjustment (between the outages) or whether it is only allowed after the second outage. It was stated in the NERC TPL SDT WebEx that the interruption is not allowed as part of the system adjustment. If this is the interpretation, this will cause many SERC members to not support the revised standard. This would be a dramatic change from the existing standard and would result in the unintended consequence of significantly reducing transfer capability of interfaces to a fraction of their currently reported capability. This would in effect be imposing an n-2 criteria for offering firm transmission service. This would not be an acceptable situation for the users, owners and operators of the bulk power system.
Response: 1. The SDT agrees and believes that industry guidance is needed to capture the appropriate dynamic behavior of Loads. In response to comments from you and others in the industry, the SDT has removed Requirements R9-R14 and enhanced Requirement R1 to more clearly specify the modeling information needed to support accurate Planning Assessments. Any comments received from the industry on MOD standards will be forwarded to NERC for inclusion into NERC Reliability Standards Development Projects 2010-04, Modeling Data and 2010-05, Demand Data. Requirement R2.4.1 has been modified		

Organization	Question 15:	Question 15 Comments:
to clarify expectations regarding load modeling for dynamics studies. **R1** Each Transmission Planner and Planning Coordinator shall maintain System models for performing the studies needed to complete their Planning Assessment. The models shall use data consistent with the data provided in accordance with ~~Requirements R9 through R14,~~ the MOD-010 and MOD-012 standards~~,~~ and other data sources,~~.~~ and shall simulate projected System conditions including requirements of regulatory authorities and other legal obligations. **R2.4.1** System peak Load for one of the five years. For peak System Load levels, a Load model shall be used which appropriately represents the dynamic behavior of Loads, including consideration of the behavior of induction motor Loads. An aggregate system Load model which represents the overall dynamic behavior of the Load is acceptable. 2. The intent of the SDT in requiring performance of sensitivity studies is to identify critical System conditions and to expand planners' portfolio of knowledge about vulnerabilities on their System. This is also an expectation from FERC Order 693 paragraphs 1704 - 1706. Requirement R2.1.3 has been reworded to account for sensitivity studies already performed by the planner. **R2.1.3** For each of the studies described in Requirements R2.1.1 and ~~Requirement~~ R2.1.2, sensitivity case(s) that are intended to stress the System with ~~sensitivities~~ variations ~~that reflect~~ in one or more of the following conditions not already included in the studies shall be ~~run and documentation of the technical rationale for why each of the conditions was or was not selected shall be supplied~~ included in the Assessment: 3. The SDT agrees that clarification regarding treatment of Firm Transmission Service and Non-Consequential Load Loss during adjustment is necessary. Footnote 10 in the Revision 3 of the Standard provides clarification. **Footnote #10** – Curtailment of firm transmission service, when coupled with the appropriate re-dispatch of resources obligated to re-dispatch, is allowed both as a System adjustment (as identified in the column titled 'Initial System Conditions') and a corrective action, where it can be demonstrated that Facilities remain within applicable Facility Ratings and those adjustments do not result in the shedding of any firm Load. Where limited options for re-dispatch exist, sensitivities associated with the availability of those resources must be considered. Where Facilities external to the Transmission Planner's planning region are relied upon, Facility Ratings in those regions must be considered.		
MRO NERC Standards Review Subcommittee	C — Definitely do not support the revised standard	While the MRO commends the SDT for significantly improving the standard, the MRO believes that the standard still must be improved significantly. Here are some suggestions for improvement: a. R1.1 is not clear. What does this mean? Surely the SDT does not expect that any time the data is modified a rationale is required. Shouldn't this data be updated as necessary? Wouldn't a requirement for providing a rationale each time such changes are made potentially discourage improvements to the models? This requirement should be clarified and limited to a few specific cases that were there are real reliability concerns. b. R2.5.2 - the SDT should revise the material transmission system changes. Addition of a new substation in one of the transmission lines connected to the plant should be revised to specifically refer to a switching station or to a non-distribution substation. A substation directly serving load is not a good example of a material transmission system change in the context of Generation Unit Stability studies. c. R2.6.2 - The SDT should revise the material transmission system changes because as presently defined, studies will

Organization	Question 15:	Question 15 Comments:
		need to be conducted every year for every year in the assessment period. This is because apparently the SDT has defined any system change as a material change. Since it is rare for there to be a system that does not exhibit some system change from year to year, this will mean ten-year and more studies every year. The MRO recommends that the SDT revise this requirement to make clear that only significant system changes are material changes. d. R2.7.1 - The SDT has written this requirement to include a requirement that the responsible entity must indicate how long Operating Procedures apply. This implies that Operating Procedures should be interim measures. The MRO believes that reliability can be maintained with permanent Operating Procedures and recommends that the need to indicate "how long the Operating Procedures will be needed" be deleted from this requirement. e. R3.3.2.1 - The SDT should delete the need to provide the expected duration of the Consequential Load Loss in this requirement because this requirements a probabilistic calculation and probabilistic planning is not the state-of-the art of the industry. This is reflected in the standard which has been written to continue deterministic planning criteria. As a result, it is a contradiction to require this probabilistic quantity in the middle of this deterministic planning standard. f. R3.3.2.2 - clarify that the single contingency events are the events in the table. g. R3.4 and R5.4.4 - the MRO urges that the SDT delete or revise the words "why the remaining Contingencies would produce less severe System results." Given the expansive nature of the Extreme events it is virtually impossible to comply with this requirement. It is more likely that the responsible entity could show that the more likely and more severe Extreme events were studied. It would be better yet if the SDT would merely require that the responsible entity provide the rationale for the selection of Extreme Events that were studied. h. R5.5.1 provides an exclusion for changes in individual generating units that require study. Yet R2.6.2 has a broader definition of when Generating Plant Stability is required. These definitions need to be consistent. The definition in R5.5.1 seems to narrow to be a good definition for "material changes." The MRO believes that the R5.5.1 should be expanded. i. Year One definition - The MRO suggests that the Standards Drafting Team's (SDT's) Year One definition unnecessarily constrains the time between the completion of assessments as compared to the study period to begin no more or no less than 12 to 18 months. There are no reliability benefits derived by constraining the period between the completion of an assessment and the study period for the next study period. In fact, this may encourage a Transmission Planner to unnecessarily delay "completing" a study just to ensure that the 12 to 18 month requirement is met. For example, let's assume that a Transmission Planner's 2008 Assessment is complete as of May 2008. By the definition of Year One, then the study period for the 2009 Assessment will need to begin from May 2009 through November 2009. This means that the 2009 Assessment must include the 2009-2010 Winter Peak and cannot start with the 2010 Calendar Year. Why? If a Transmission Planner wants to have a study period that begins with the calendar year, then the Transmission Planner would need to delay completing the study until July 2009. Why? What are the reliability benefits for delay? The MRO suggests that the definition of Year One be changed to allow the study period to begin no later than 24 months after the completion of the previous year's study.? Definitions: The MRO agrees with the removal of the "Base Case" definition and

Organization	Question 15:	Question 15 Comments:
		the revisions to the other definitions, except as noted below or elsewhere.? Long Term Planning Horizon definition: The MRO suggests a slight text change of: "Transmission planning period that covers years six through ten. Studies beyond ten years are required to accommodate . . .".? Accountability: The MRO suggests that Transmission Service Provider be added because we also suggest that the Transmission Service Provider be responsible for R10.? Requirements: The MRO agrees with the revisions to the Requirements, except as noted below or elsewhere.? R1.1 - The MRO agrees with the requirement, but would like more description of what to provide in the technical rationale.? R2.1 - The MRO suggests that this requirement involves too much study work and we ask that the SDT reduce the number of current studies needed for all subrequirements. ? R2.6.2 - The MRO agrees with the requirement, but suggest a slight text change of: " . . . short circuit, Generating Unit Stability or System Stability analysis . . .".? R2.7 - The MRO agrees with the requirement, as long as it is really required by FERC Order 693 paragraph 1704.? R2.7.1 - The MRO agrees with the requirement, but suggest a slight text change replace "? or Special Protection Schemes,?" with " . . . or Special Protection Systems, . . ."? R2.7.1.1 - The MRO disagrees with the "include project initiation date" portion of this requirement. The initiation date is often uncertain and subject to change, which may add considerable work to investigate, monitor and update the date. In addition, we do not know why this information is required to assure BES reliability.? R2.7.2 - The MRO agrees with the requirement, as long as it is really required by FERC Order 693 paragraph 1704.? R3.2.2 - The MRO agrees with the requirement, but suggest a slight text change of: "For all BES Transmission lines . . .". ? R3.3.2.1 - The MRO agrees with the requirement, but suggest a slight text change of: ". . . shall be allowed in the Planning Assessment".? R3.3.2.2 - The MRO agrees with the requirement, but suggest a slight text change of: ". . . within their Facility Ratings and within the time period allowed by the applicable time limited ratings.".? R5.1 - The MRO agrees with the requirement, but suggest a slight text change of: ". . . the response of the applicable portion of the BES".? R5.2 - This clarifying requirement should also be included in the steady state and short circuit analysis sections.? R5.3 - The MRO agrees with the requirement, but suggest a slight text change of: ". . . capability of all generators that may have a significant adverse effect on the BES."?

Organization	Question 15:	Question 15 Comments:
		R5.4.3.1 - The MRO agrees with the requirement, but suggest a slight text change of: ". . . within their Facility Ratings and within the time period allowed by the applicable time limited ratings.".? R6 - The MRO agrees with the requirement, but suggest a slight text change of: ". . . shall provide the rationale for and document . . .".? R8 - The MRO disagrees with the requirement, but suggest a text change of: "Each Planning Coordinator shall establish a list of neighboring system and coordinate the distribution of Planning Assessment results among affected entities the listed neighboring systems, coordinating analysis of these results through an open and transparent peer review process."? Table 1? Planning Events ? Header: The MRO suggests that the header be repeated on every applicable page to be more reader-friendly.? Superscripts: The superscripts do not refer clearly to the respective notes (e.g. there are number notes in the beginning of the table, in the extreme events evaluation requirements section, in extreme event description section, and at the end of the table). Perhaps the notes at the end of the table should have unique numbering to make the superscript references clearer.? Shunt device: To avoid the need for future interpretation or clarification, we suggest that the meaning of shunt device be explained or defined somewhere in the standard (e.g. cap bank, inductor bank, SVC, STATCOM, etc.). We need to find out how shunt device outages can (or could in the future) be automatically included in the ACCC routine. We interpret that if each stage of a capacitor bank has a circuit switcher, then the outage would be of the largest cap bank stage.? P2.2 (>300 kV), P2.3(>300 kV), P3 (>300 kV), P4 (>300 kV), P5 (>300 kV), P6 (>300 kV) - This requirement is raising the bar above the existing standards. In the existing standards, this is a Category C event in which load shedding was allowed. A higher criteria for >300 kV may not be appropriate at this time. The new requirement may require the installation of facilities that are costly and have a very long implementation timeframe. We should consider what the cost of this higher requirement might be for ATC and other utilities. If the new >300 kV requirement is not reduced, then we would want the implementation timeframe to be long enough to allow reasonable time to transition from a system built to the old requirement to a system built for the new requirement. The time needed for planning, design engineering, regulatory approvals, and construction of >300 kV facilities can be very long (e.g. up to 10 or more years).? P6 - Why isn't the generator listed as a one of the possible subsequent element outages?? P7 - The MRO disagrees with this requirement. Wisconsin statues require giving preference to using existing ROW for new transmission circuits, but this requirement discourages building multiple circuits on common ROW. Should there be an exclusion in this standard similar to the TLP-503-MRO-1 standard (e.g. could be slightly more than 1 mile due to review?.? Extreme Event Evaluation Requirements? 2 - The MRO agrees with the requirement, but perhaps a definition be added for "System Controls", since one exists for "System Protection".?

Organization	Question 15:	Question 15 Comments:
		3 - The MRO agrees with the requirement, but suggest a slight text change of: "Simulate Normal Clearing unless otherwise specified in the Extreme Event Descriptions."? Extreme Event Descriptions? 2a - The MRO agrees with the description, but suggest a slight text change of: "Loss of a structure or tower line with three or more circuits.."? 2b & 3b - The MRO agrees with the descriptions, but suggest referring to the defined term: "Right-of-Way."? 2e, 3.a.i, & 3.a.ii - The MRO agrees with the descriptions, but how large is "large" and how major is "major"?? 3.a.v - What is meant by successful cyber attack? Is it a type of cyber attack that is documented to have been successful? ? 3c - The MRO agrees with the description, but suggest a slight text change of: "Other events based upon actual operating experience such as:" ? Note 4 - The MRO agrees with the description, but the acronym FACTS should be explained in the standard or a definition be added for "FACTS".? Table 2? 1 - The MRO disagrees with this note. We suggest that it be expanded to include the applicable part as Table 1. "The System shall remain stable. In addition, Facility Equipment Ratings shall not be exceeded. Planned System adjustments are allowed, unless precluded in the Requirements, to keep Facilities within the Facility Ratings, if such adjustments are executable within the time duration applicable to the Facility Ratings."? 3 - The MRO disagrees with this note. We suggest that it be expanded to include the applicable part as Table 1. "Dynamic voltage instability, Cascading outages, and uncontrolled islanding shall not occur."? Between 3 & 4 - The MRO disagrees with omitting Note 4 of Table 1 from Table 2. We suggest including: "Consequential Load and consequential generation loss is allowed for all events shown."? Planning Events? Same comments on Header, Superscripts, and Shunt Device as in Table 1.? Same comments about stricter requirements for P2.2 (>300 kV), P2.3(>300 kV), P3 (>300 kV), P4 (>300 kV), P5 (>300 kV), P6 (>300 kV) as in Table 1.? Same comment about P7 as in Table 1.? Extreme Event Evaluation Requirements? Same comment about Requirement 2 and 3 as in Table 1.? 3 - The MRO agrees with the requirement, but suggest a slight text change of: "Simulate Normal Clearing unless otherwise specified in the Extreme Event Descriptions."?

Organization	Question 15:	Question 15 Comments:
		Notes5 - The MRO disagrees with limiting this requirement to just Category P1 category. We suggest that the synchronism requirement be applied to more categories.

Response: A. The SDT agrees and has removed the need for documentation of the technical rationale for modification of any data.

B Requirement R2.5 and its sub-requirements have been removed from the proposed standard. Guidelines for the use of past studies to support the Planning Assessment have been added to Requirement R2.6.2 (now R2.5.2). The SDT did not want to be overly prescriptive when describing the type of changes that could be considered material and has left the text general. It is up to the Transmission Planner and Planning Coordinator to provide specificity as to what type of topology changes constitutes a change sufficient to warrant re-evaluation.

R2.5.2 For steady state, short circuit, ~~Generating Plant Stability,~~ or ~~System~~ Stability analysis: the ~~study~~ present System model shall not include any material changes, such as, generation or Transmission additions/removals, or topology changes that have occurred in the intervening period and would impact the study area. Material generation changes could include:

C The SDT does not agree that studies are required for every year of the Assessment period. However, please note that Requirement R2.5 and its sub-requirements have been removed from the proposed standard. Guidelines for the use of past studies to support the Planning Assessment have been added to what is now Requirement R2.5.2. The SDT did not want to be overly prescriptive when describing the type of changes that could be considered material and has left the text general. It is up to the Transmission Planner and Planning Coordinator to provide specificity as to what type of topology changes constitutes a change sufficient to warrant re-evaluation.

D The SDT has retained this requirement and believes that this information should be included in the Planning Assessment.

E To meet industry concern as well as FERC Order 693, the SDT has added Requirement R 2.8 to identify the event causing the single largest Consequential Load Loss Demand and its value and eliminate the reporting of the expected duration. Requirement R3.3.2.1 has been removed from the draft.

R2.8 The Planning Assessment shall provide the largest Consequential Load Loss (megawatt Demand) and the associated event caused by any P1 event and any P2 event in Table 1.

F The SDT has deleted Requirement R3.3.2 and has replaced it with additional language in Requirement R3.1 while adding Header note 'e' and deleting the reference to single Contingencies which will hopefully clarify things.

R3.1 Studies shall be performed to determine whether the BES meets the performance requirements in Table 1 ~~– Steady State Performance.~~ based on the lists created in Requirement R3.4.

Header note 'e' - For all Planning Events, planned System adjustments such as Transmission configuration changes and redispatch of generation are allowed if such adjustments are executable within the time duration applicable to the Facility Ratings.

G. The SDT disagrees with your comment. The SDT believes that this language is needed to ensure that the worst possible situation is studied based on engineering judgment and knowledge of the System.

H. To address industry comments such as yours, Generating Unit Stability is no longer explicitly addressed in the standard and the definitions of Consequential

Organization	Question 15:	Question 15 Comments:

and Non-Consequential Load Loss have been modified.

Consequential Load Loss: ~~Load that is no longer connected to a source as a result of the event being studied or which is lost as a result of the load's response to the transient conditions of the event (other than through the action of UVLS or UFLS schemes). Although Load which is lost as a result of the Load's response to the transient conditions of the event is considered Consequential Load Loss and is permitted when Consequential Load Loss is allowed, Transmission planning entities are not allowed to rely upon the expectation of such Load loss to meet steady state performance requirements.~~ All Load that is no longer served by any Transmission Facilities as a result of the Facilities being removed from service by a planned Protection System operation to isolate fault conditions.

Non-Consequential Load Loss: Non-Interruptible Load loss other than Consequential Load Loss, Supplemental Load Loss, and Load Reduction.~~. For example, non-Interruptible Load loss that occurs through manual (operator initiated) or automatic operations such as under-voltage Load shedding, under-frequency Load shedding, or Special Protection Systems would be considered Non-Consequential Load Loss~~.

I. The SDT has changed the definition for Year One to accommodate industry concerns.

Year One: The first year that a Transmission Planner is responsible for assessing. This is further defined as the planning window that begins 12-18 months from the ~~completion of the previous annual Planning Assessment~~ current calendar year.

Accountability - In response to industry comments, the SDT has removed Requirements R9-R14 and enhanced Requirement R1 to more clearly specify the modeling information needed to support accurate Planning Assessments.

R1 Each Transmission Planner and Planning Coordinator shall maintain System models for performing the studies needed to complete their Planning Assessment. The models shall use data consistent with the data provided in accordance with ~~Requirements R9 through R14,~~ the MOD-010 and MOD-012 standards~~,~~ and other data sources,~~.~~ and shall simulate projected System conditions including requirements of regulatory authorities and other legal obligations.

R1.1 – The SDT agrees and has removed the need for documentation of the technical rationale for modification of any data.

R2.1 – The SDT has received many comments regarding the increased planning requirements to meet the proposed standard. However, the SDT believes that the requirements for sensitivity studies must remain to satisfy FERC Order 693. FERC has stated that the sensitivity studies would be used to document the selection of critical System conditions and study years used in assessing System conditions (see paragraph 1704) and that System conditions are as important as Contingencies in evaluating the performance of present and future Systems (paragraph 1705).

R2.6.2 – Based on comments from others, the SDT has removed the requirements for separate Generating Unit Stability analysis and System Stability analysis.

R2.7.1 (now R2.6.1) – The SDT agrees and had replaced "schemes" with "systems".

Installation or modification of Protection Systems or Special Protection Systems

R2.7.1.1 (now 2.6.2) - The SDT believes that a project initiation date is an effective measure to track a functional entities' planning and engineering activities and their efforts to provide and maintain a reliable BES.

R2.7.2 – The old Requirement R2.7.2 has been deleted.

Organization	Question 15:	Question 15 Comments:

R3.2.2 – The Purpose section of the Standard states that this Standard is to develop requirements for the Bulk Electric System, BES.

R3.3.2.1 - To meet industry concern as well as FERC Order 693, the SDT has added Requirement R 2.8 to identify the event causing the single largest Consequential Load Loss Demand and its value and eliminate the reporting of the expected duration. Requirement R3.3.2.1 has been deleted in favor of new Requirement R2.8.

R3.3.2.2 - Based on your comment, the SDT has addressed the applicable time-limited rating in what was Header note 'a' for Steady State Only in Table 1 - Steady State & Stability Performance. Requirement R3.3.2.2 has been deleted in favor of Header note 'e' in the revised Table. Please note that the two tables in the second draft have been reduced to one table in the third draft.

Header note 'e' - For all Planning Events, planned System adjustments such as Transmission configuration changes and redispatch of generation are allowed if such adjustments are executable within the time duration applicable to the Facility Ratings.

R5.1 & R5.2 (now R4.1 and R4.2) – Most of the industry did not have difficulty understanding that the analysis is limited to the Transmission Planner's or Planning Coordinator's portion of the BES. Therefore, the SDT is not persuaded by your comment to add extra wording.

R5.3 (now R4.3) – The SDT disagrees with the suggested change due to the additional studies that would be required to determine which generators would have an adverse impact.

R5.4.3.1 - The SDT has deleted Requirement R5.4.3.1.

R6 – The SDT believes "define and document" as written are more appropriate than "rationale for and document". The SDT did not revise Requirement R6 (now R5) as proposed – but did make other modifications to this requirement based on other stakeholder comments..

R8 – The SDT has clarified this in a revised Requirement R7.

R7 Each Planning Coordinator shall coordinate the distribution of Planning Assessment results among ~~neighboring systems~~ adjacent Planning Coordinators and any functional entity who has indicated a reliability need, coordinating analysis of these results through an open and transparent peer review process such as described in FERC Order 890.

Headers - The SDT also feels that the Tables need to be as clear and concise as possible. To that end, Tables 1 and 2 have been combined into one table with a revised format. The headings are repeated on subsequent pages.

Superscripts – As part of the change to a single table, the SDT has attempted to clean up various items such as superscripts.

Shunt device - The SDT believes that shunt devices are commonly used in the electric utility industry and does not require any further explanation. The SDT recommends contacting the software manufacturer for additional information about the ACCC routine. The SDT believes that the cap bank outage would be based on what elements would need to trip in order to clear the simulated fault condition.

P2.2 – The majority of the SDT believed the 300 kV and higher Systems (EHV) generally represent the backbone of many Systems in the various Interconnections and that the more stringent requirements were appropriate when considering N-1-1 Contingencies of two EHV Facilities. Systems operated above 300 kV generally do not directly serve end-use Load customers but rather act as the medium for moving large amounts of power from production to various Load centers where the energy is then delivered by other Transmission or sub-Transmission Systems to end use customers. It is the desire of NERC

Organization	Question 15:	Question 15 Comments:
and various stakeholders that the backbone of the electric power grid be robust and held to a higher degree of reliability. The Implementation Plan will address any need for transition and will be included in the next revision. P6 – This is already covered in P3. P7 – The SDT is cognizant of the concerns surrounding the construction of new Transmission lines, including the desire by many to fully utilize existing Right-of-Ways. In its consideration of Footnote 12 (exclusion for common structures less than 1 mile), the SDT considered the impact that this requirement could have on construction of new Facilities. However, after deliberations the SDT believes that the 1 mile exclusion should be maintained for the reliability of the BES and that individual exceptions can be addressed within the NERC process. Extreme Events 2 - The SDT agrees that "Protection System" is defined in the Glossary of Terms Used In Reliability Standards. However, the SDT believes that these "System Control" issues should be addressed by the NERC SPCTF drafting team. Extreme Events 3 – The SDT has already included "For all Extreme Events Evaluated" at the beginning of the Evaluation Requirements under Extreme Events. Extreme Events 2a – The SDT believes that the Extreme Events #2.a. is already sufficient. Extreme Events 2b & 3b - The SDT agrees with your comments and has made the change. The SDT has removed item 3.b. from Extreme Events since this was already covered in Extreme Event 1. **Extreme Event 2b -** Loss of all Transmission lines on a common ~~r~~Right-of-~~w~~Way. Extreme Event 2e – The SDT suggests that the terms "large", "major", and "successful" be defined between the TP and PC. Extreme Event 3a – A successful cyber attack would be any attack where an unauthorized person gained access to the systems described in the event. Extreme Event 3c – The SDT believes that the wording of 3b (was 3c) is already sufficient. Note 4 - The SDT believes that "FACTS" is commonly used in the electric utility industry and does not require any further explanation. Tables 2 – As part of the 3rd draft of the revised standard, the 2 tables have been merged into a single table and a general clean-up of the text has been made. Table 2, note 1 – The SDT has reviewed your comment and feels that your request to add "Facility Equipment Ratings shall not be exceeded. Planned System adjustments are allowed, unless precluded in the Requirements, to keep Facilities within the Facility Ratings, if such adjustments are executable within the time duration applicable to the Facility Ratings." apply to Stability is not appropriate. For the purposes of this standard, Facility Equipment ratings refer to steady state calculated values and planned System adjustments refer to the time frame associated with returning the thermal flow within the applicable steady state Facility Rating. Table 2, note 3 – The SDT agrees with your comment on making general note 3, located at the beginning of Table 1, "Voltage instability, cascading outages, and uncontrolled islanding shall not occur" applicable to both Steady State and Stability and has made that change in the next version. Note 4 – The SDT also agrees that the general note 4, at the beginning of Table 1, applicable to both Steady State and Stability and has made that change in the next version.		

Organization	Question 15:	Question 15 Comments:
Note 3 – The SDT has already included "For all Extreme Events Evaluated" at the beginning of the Evaluation Requirements under Extreme Events. Note 5 – The SDT also feels that the synchronism requirement should apply to more than just the P1 Category but under certain conditions. As stated in Note 1.a.ii, for planning events other than P1, no generating unit or units totaling more than the Contingency reserve of the Balancing Authority shall be allowed to pull out of synchronism. If less than the Contingency reserve, then the resulting apparent impedance swings must not pass through relay characteristics that would result in the tripping of any Transmission System elements other than the generating unit and its direct connection Facilities		
Modesto Irrigation District	B — Unsure about supporting the revised standard	Concerns about the following: attempt to introduce interconnection stability studies into TPL studies, and redefinition of Consequential and Non-Consequential Load Loss.
Response: The SDT believes that there is no significant distinction between generator and System Stability and has modified the definitions and Requirements R2, R2.6.1 (now R2.5.1), R2.6.2 (now R2.5.2), R5 (now R4), and R5.5 (now R4.4) in the third draft. **R2** Each Transmission Planner and Planning Coordinator shall ~~conduct and document the results of~~ prepare ~~its~~an annual Planning Assessment of its portion of the BES. This Planning Assessment shall use current or past studies, document assumptions, document results, and shall cover steady state analyses, short circuit analyses, and Stability analyses ~~including both System and Generating Unit Stability~~. **R2.5.1** For steady state, short circuit, or ~~System~~ Stability analysis: the study shall be five calendar years old or less. **R2.5.2** For steady state, short circuit, ~~Generating Plant Stability,~~ or ~~System~~ Stability analysis: the ~~study~~ present System model shall not include any material changes, such as, generation or Transmission additions/removals, or topology changes that have occurred in the intervening period and would impact the study area. Material generation changes could include: **R4.** For the Stability portion of the Planning Assessment, as described in Requirement R2.4 ~~and Requirement R2.5~~, each Transmission Planner and Planning Coordinator shall perform the Contingency analyses listed in Table ~~2~~1 ~~– Stability Performance~~. The studies shall be based on computer simulations using models utilizing data provided in Requirement R1. ~~The studies shall be based on computer simulations using models utilizing data provided in Requirements R9 through R14, the MOD-010 and MOD-012 standards, and other data sources, to include known planned and long term outages of Transmission or generation equipment. The studies shall cover both System Stability and Generating Unit Stability. The following requirements apply to both System Stability and Generating Unit Stability studies unless otherwise noted.~~ **R4.4** ~~At a minimum, t~~Those Planning Event Contingencies in Table ~~2~~1 – ~~Stability Performance~~ that ~~would~~are expected to produce more severe System impacts shall be identified, and a list of those Contingencies to be evaluated for System performance in Requirement R4.1 created~~,~~. ~~and t~~The rationale for the Contingencies selected for evaluation shall be available as supporting information with an explanation of why the remaining Contingencies would produce less severe System results. In response to numerous concerns, the following changes were made to the draft standard regarding Consequential and Non-Consequential Load Loss		

Organization	Question 15:	Question 15 Comments:
definitions. **Consequential Load Loss:** ~~Load that is no longer connected to a source as a result of the event being studied or which is lost as a result of the load's response to the transient conditions of the event (other than through the action of UVLS or UFLS schemes). Although Load which is lost as a result of the Load's response to the transient conditions of the event is considered Consequential Load Loss and is permitted when Consequential Load Loss is allowed, Transmission planning entities are not allowed to rely upon the expectation of such Load loss to meet steady state performance requirements.~~ All Load that is no longer served by any Transmission Facilities as a result of the Facilities being removed from service by a planned Protection System operation to isolate fault conditions. **Non-Consequential Load Loss:** Non-Interruptible Load loss other than Consequential Load Loss, Supplemental Load Loss, and Load Reduction.~~.~~ ~~For example, non-Interruptible Load loss that occurs through manual (operator initiated) or automatic operations such as under-voltage Load shedding, under-frequency Load shedding, or Special Protection Systems would be considered Non-Consequential Load Loss~~.		
Arkansas Electric Coop. Corp.	B — Unsure about supporting the revised standard	I have a growing concern that the NERC Reliability Standards are not going far enough to ensure adequate and reliable service to customers and users of the BES. Each revision of the standards seem to be driven by the need to preserve the integrity of the grid and preventing cascading blackouts but stop short of ensuring that load continues to be served under contingency conditions and adequate grid capacity is available. For the customers and end users of the system if their load is allowed to be dropped or can not be served because of the lack of capacity then the BES is not reliable. The definitions of Consequential Load Loss and Non-Consequential Load Loss concern me the most. How these definitions are then applied in the tables is also a great concern. Hopefully my previous comments to the other questions in the comment form provide explanation. Another concern I have is the fact that I tried to provide comments last fall to draft 1 of the standards and they were not allowed. After following the instructions provided I provided my comments before the deadline. I later discovered they were not posted. After repeated attempts asking NERC to determine why my comments were not received and posted and showing evidence that they had been provided by the deadline, the only response I received was pretty much "sorry Charlie". Mistakes happen. NERC should be big enough to admit when they make a mistake instead of just blowing them off. I have no way of knowing if or how many times this may have happened before. I am not trying to say that anything malicious was intended, however it does leaves me with concern that fair treatment is being given to all comments and cast a shadow over confidence in the standards approval process.
Response: The SDT is striving to develop a standard that appropriately supports BES reliability and has industry consensus. The SDT believes that your concerns are mostly addressed by the revised Table 1 - Steady State and Stability Performance, along with the revised definitions of Non-Consequential Load Loss and Consequential Load Loss in the updated draft of TPL-001 standard. **Consequential Load Loss:** ~~Load that is no longer connected to a source as a result of the event being studied or which is lost as a result of the load's response to the transient conditions of the event (other than through the action of UVLS or UFLS schemes). Although Load which is lost as a result of the Load's response to the transient conditions of the event is considered Consequential Load Loss and is permitted when Consequential Load Loss is allowed,~~		

Organization	Question 15:	Question 15 Comments:
~~Transmission planning entities are not allowed to rely upon the expectation of such Load loss to meet steady state performance requirements.~~ All Load that is no longer served by any Transmission Facilities as a result of the Facilities being removed from service by a planned Protection System operation to isolate fault conditions. **Non-Consequential Load Loss:** Non-Interruptible Load loss other than Consequential Load Loss, Supplemental Load Loss, and Load Reduction.~~. For example, non-Interruptible Load loss that occurs through manual (operator initiated) or automatic operations such as under-voltage Load shedding, under-frequency Load shedding, or Special Protection Systems would be considered Non-Consequential Load Loss~~. Comments from AECI were included in the responses to the comments from the first posting. Please go back and review the posted comment form.		
Midwest ISO	C — Definitely do not support the revised standard	We appreciate the hard work of the SDT and understand the difficulty of this task. We applaud the efforts to improve the standard. However, in its present state, in general the revised standard fails in one if its primary stated goals: create a "clear and concise standard". While some of the ideas are an improvement, overall the standard is very meandering and it makes it difficult to figure out what the requirements are for a particular analysis type without flipping back and forth between the scattered requirements. For example R2 addresses various aspects of both Near and long term studies, steady state, short circuit, stability, on peak, off peak and other topics. Then there are separate sections (R3, 4, 5) that speak to the various analysis types again. It probably makes sense to the SDT that has evolved with the drafts and discussions, but when you pick it up it is very confusing. One thing that would help greatly would be to label the major Requirements sections to convey the organization of the document. If the SDT made a topical outline of the standard by major Requirement this could help the team organize the standard better. Resulting topical headers may look something like the following for example, R1: ModelingR2: Study Types and Assessment RequirementsR3: Steady State Analysis MethodsR4: Short Circuit Analysis Methods?R5: Stability Analysis Methods Etc. If it has not been done (and it looks like it has not), the SDT should consider having the language reviewed by the NERC or other legal team. Language that seems clear to experienced engineers may not be precise as is critical for standards that carry monetary penalties. An independent review by a non-engineer lawyer would help greatly. Of course, the SDT would then have to undo some damage that would undoubtedly be done to context by the lawyers - but the pass through legal would be a good step.? ? Other concerns:? P5 requires testing for a single component failure within a Protection System. What is this referencing? How can a PC/TP be expected to be intricately aware of protection systems and effects of single component failures? Under 2.7.2, there is a generic requirement to expand a list of possible corrective actions under 2.7.1 for any sensitivities under R2.1.3, 2.1.4, 2.4.3 and 2.4.4. This is very open ended and subject to interpretation. How can an auditor review such requirements with consistency?
Response: The SDT has attempted to make the latest draft more clear and concise - such as condensing Table 1 and 2 into a single table. The SDT has considered having headers/labels in the document and these are strongly discouraged by NERC's legal staff. The overall format of the tables has been modified to make it more reader friendly. NERC is following the officially sanctioned standards development process with regard to this project just as it follows the process for all standards development		

Organization	Question 15:	Question 15 Comments:
work. This is an open, transparent process which has been approved by FERC. Review and comment by any entity's legal staff is welcome, but not a required part of the process. The description of the P5 event has been clarified in draft 3 to address your concern. Requirement R2.7.2 has been removed. The SDT has modified Requirement R2.7 (now R2.6) to clarify that Correction Action Plans do not need to be developed solely to meet the performance requirements for sensitivities run in accordance with Requirements R2.1.3 and R2.4.3. **R2.6** For Planning Events shown in Table 1~~ – Steady State Performance and Table 2 – Stability Performance~~, when the analysis indicates an inability of the System to meet the performance requirements in ~~the t~~Table~~s~~ 1, the Planning Assessment shall include Corrective Action Plans addressing how the performance requirements will be met. Revisions to the Corrective Action Plans are allowed in subsequent assessments but the System shall continue to meet the performance requirements in the tables. Corrective Action Plans do not need to be developed solely to meet the performance requirements for sensitivities run in accordance with Requirements R2.1.3 and R2.4.3. The Corrective Action Plan shall:		
Tri-State Generation and Transmission Association, Inc.	A — Generally support the revised standard	We appreciate the efforts of the SDT, considering the difficulty of the task that was and is before them. Our biggest concern is potential confusion regarding sensitivity studies. Secondly, we absolutely must make the Performance Table completely clear and concise. Additional work now will pay big dividends later. Thirdly, there is some ambiguity of several terms used in the Standard that prevents exact interpretation of significant portions of the Standard. Here are a few additional comments we hope the SDT will find helpful: It may simplify considerations of assessments and modeling work to define ?assessment? as including written documentation. Then the Standard would not need to separately include "and shall include written documentation" in the body of the standard titles. Also, the SDT should make it clear that "assessment" is what is required; that annual re-study analysis may not necessarily be required. Thanks to the SDT for keeping this feature. It will greatly simplify our work, and should speed the audit process as well. There seems to be some ambiguity between either 1) requiring specific years to be studied and 2) leaving timeframe selection to the TP. Assessment for year One or Two (R2.1.1) may be performed by either the TOP or the TP. Studies of year One or year Two are generally considered to be operating studies and should probably not be required in TPL-001-1. Also in R2.1.1, year Five is specified as a required study year. No matter what the requirement says, the TP will need to assess performance for critical timeframes. This would lead to additional study if year four were the critical year for example. And for sensitivity studies of delayed facilities (R2.1.3.3) additional study years might be required. Perhaps a reasonable compromise would be to require something in the 2 to 5-year timeframe, and something in the 6 to 10-year timeframe. For coordination with regional study groups in our area, one would logically choose year 5 and year 10, but the specific choice should be up to the TP (and PC if any). Sole-Customers on radial service who are responsible for facility upgrades should be allowed to elect a lower reliability

Organization	Question 15:	Question 15 Comments:
		than the rest of the system. It seems that operating scenarios required to be studied by TOP should not need study in the planning horizon by the TP, and should be excluded from this standard. Specific comments concerning other sections of the draft standard: 1. In the definition of Generating Stability Study, we suggest "the lack of damping" be changed to "damping" 2. In R2.1 title, please move listed requirements in the second sentence to sub-requirements (they are already there). 3. In R2.1 title sentence, the term "annual current" presents two additional requirements. We suggest those words be deleted. 4. In R2.1, delete the end of the title sentence, ending the sentence with "the following studies" 5. In R2.1.3.2, the meaning of "transfer" is not clear. 6. In R2.1.3.4, the term "variability" is not clear. do you mean "Operating Capability"? 7. In R2.1, R2.2 and 2.4, the phrase "Near Term (or Long Term) Transmission Planning Horizon portion of the" could be omitted. "Near Term" and "Long Term" study horizons should just be specified as sub-requirements of Steady State, Stability, and Short Circuit 8. In R2.7.3, the term "identified System Facilities" is not clear. System Additions? 9. Heading R3.3 is not needed. Renumber section sub headings to 3.2.3, etc.

Response: In response to industry comments regarding sensitivity studies, the SDT has made changes to Requirements R2.1.3 and R2.4.3 and each of their sub-requirements to clarify expectations related to sensitivity studies.

R2.1.3 For each of the studies described in Requirements R2.1.1 and ~~Requirement~~ R2.1.2, sensitivity case(s) that are intended to stress the System with ~~sensitivities~~ variations ~~that reflect~~ in one or more of the following conditions not already included in the studies shall be ~~run and documentation of the technical rationale for why each of the conditions was or was not selected shall be supplied~~ included in the Assessment:

R2.4.3 For each of the studies described in Requirements R2.4.1 and ~~Requirement~~ R2.4.2, ~~s~~ensitivity case(s) that are intended to stress the System with variations ~~to reflect~~ in one or more of the following conditions not already included in the studies shall be ~~run and documentation of the technical rationale for why each of the conditions was or was not selected shall be supplied~~ included in the Assessment:

The SDT also feels that the Tables need to be as clear and concise as possible. To that end, the next version will combine Tables 1 and 2 into one table with a revised format.

The SDT crafted the definition of Planning Assessment using the term "documented" instead of "written" such that an assessment can be either in written or

Organization	Question 15:	Question 15 Comments:
electronic format. Requirement R2 states that the assessment is to be performed annually. The SDT chose the Year One definition such that this would be out of the operational planning horizon and into the planning horizon. The SDT chose the years to be studied such that both the Near-Term and Long-Term Planning Horizons would be adequately studied and has not seen a sufficient number of comments to warrant changing the requirements. . Sole-customers who are responsible for facility upgrades are allowed to elect lower reliability than the rest of the system if those customers have signed an Interruptible Load contract arrangement. The SDT believes that all significant probable Contingencies over a wide range of operating conditions should be studied. 1. The definitions for both Generating Unit Stability Study and System Stability Study have both been removed and these Stability areas have been combined into just one Stability area. 2, 3, and 4. The SDT disagrees with the proposed changes and believes that compliance with Requirement R2.1 can be shown through the use of both current and past studies. 5. The SDT believes that "transfers" is generally understood to mean electric power that is transferred or moved from one area to another, and as such, has not added a definition of transfers. 6. The SDT has revised the language to replace "variability" with reactive resources "capability". ~~Variability and outages of r~~Reactive resource~~s~~ capability. 7. The SDT believes that the format and the language of these requirements are appropriate and no additional changes are needed. 8.,The SDT received only a single comment regarding use of the terms "identified System Facilities" and therefore believes the proposed language is clear and appropriate. "Identified System Facilities" are those new or modified facilities which were identified in previous Corrective Action Plans. 9. Requirement R3.3 has been removed and replaced with additional language in Requirement R3.1. **R3.1** Studies shall be performed to determine whether the BES meets the performance requirements in Table 1~~— Steady State Performance.~~ based on the lists created in Requirement R3.5.		
Lakeland Electric	B — Unsure about supporting the revised standard	Curtailing firm transmission should explicitly be a viable option when preparing for the next contingency if the previous contingency and a credible next contingency call for curtailing firm transactions for reliabilities sake. Not allowing for firm transmission curtailment in this case seems to be a market requirement driving a reliability requirement. Determining the duration of consequential load loss (R3.3.2.1) is impractical as the root cause of the event vice the defined event type (e.g. - loss of line) determines the duration of the outage. A line can be outaged by a temporary lock out of protection device or 15 spans of a line might be destroyed by fire. The difference between the two make determination of duration impractical.

Organization	Question 15:	Question 15 Comments:
		System peak Load (R2.1.1) needs to specify if it is the specific year, season or historical peak demand. Forecasting methodologies affect the system peak load that is projected. Differences between a 50/50 and 80/20 case will result in different forecast peak data.
Response: Footnote # 10 has been added to the end of Table 1 to reflect that curtailment or interruption of Firm Transmission Service will be allowed in preparation for the next Contingency. However, until the next Contingency occurs, System performance will need to meet the requirements for Event P1. As such, the proposed standard will not allow loss of any Non-Consequential Load, except for contracted Interruptible Loads, in preparation for the next Contingency. **Footnote #10** – Curtailment of firm transmission service, when coupled with the appropriate re-dispatch of resources obligated to re-dispatch, is allowed both as a System adjustment (as identified in the column titled 'Initial System Conditions') and a corrective action, where it can be demonstrated that Facilities remain within applicable Facility Ratings and those adjustments do not result in the shedding of any firm Load. Where limited options for re-dispatch exist, sensitivities associated with the availability of those resources must be considered. Where Facilities external to the Transmission Planner's planning region are relied upon, Facility Ratings in those regions must be considered. To meet industry concern as well as FERC Order 693, the SDT has added Requirement R2.8 to identify the event causing the single largest Consequential Load Loss Demand and its value and eliminate the reporting of the expected duration. Requirement R3.3.2.1 has been removed from the draft. **R2.8** The Planning Assessment shall provide the largest Consequential Load Loss (megawatt Demand) and the associated event caused by any P1 event and any P2 event in Table 1. The SDT intentionally provides flexibility for the Transmission Planner/Planning Coordinator to decide which Load forecasting methodology to use. The required studies and sensitivity analysis ensures that sufficient study is performed to cover an appropriate range of System conditions.		
Southern Company Transmission	C — Definitely do not support the revised standard	Category P6 is the loss of a system element, followed by system adjustments, followed by the loss of another element. The table columns for this category say that interruption of firm transmission service is allowed. The table, however, is not clear whether the interruption of firm service is allowed as part of the system adjustment (between the outages) or whether it is only allowed after the second outage. It was stated in the NERC TPL SDT WebEx (August 26, 2008) that the interruption is not allowed as part of the system adjustment. If this is the interpretation, this will cause Southern Company to not support the revised standard. This would be a dramatic change from the existing standard and would result in the unintended consequence of significantly reducing transmission system capability to accommodate firm transmission service including reduction of transfer capability of interfaces to a fraction of their currently reported capability. This would in effect be imposing an n-2 criteria for offering firm transmission service. This would not be an acceptable situation for the users, owners and operators of the bulk power system. In addition, the standard should clarify the accommodation of Conditional Firm Service as defined by FERC Order 890.
Response: The SDT agrees that clarification regarding treatment of Firm Transmission Service and Non-Consequential Load Loss during adjustment is		

Organization	Question 15:	Question 15 Comments:
necessary. Footnote 10 in draft 3 of the Standard provides clarification. **Footnote #10** – Curtailment of firm transmission service, when coupled with the appropriate re-dispatch of resources obligated to re-dispatch, is allowed both as a System adjustment (as identified in the column titled 'Initial System Conditions') and a corrective action, where it can be demonstrated that Facilities remain within applicable Facility Ratings and those adjustments do not result in the shedding of any firm Load. Where limited options for re-dispatch exist, sensitivities associated with the availability of those resources must be considered. Where Facilities external to the Transmission Planner's planning region are relied upon, Facility Ratings in those regions must be considered.		
Brazos Electric Power Cooperative, Inc.	C — Definitely do not support the revised standard	Our biggest concern is the apparent lack of experience or understanding in the repercussions of including so many required studies and detailed documentation. And to what end? The amount of data that would be required to be saved will be so voluminous no one could go through it all to make any meaningful determination in a timely fashion. It's one thing to study every possible combination of outage but you then have to do something with the results, not just record them somewhere because a standard requires it. On the other hand some progress is being made in removing some of the more ambiguous or useless items so we are getting there to some degree. Deleting 1.1.2, 1.1.3, 2.7.3, 2.7.4, and 5.4 are good starts. However it appears some things were added that are just confusing or are unnecessary. 5.5.2 seems to simply restate the obvious intent of the section, to meet the performance requirements so its not really needed. Phrases such as "document why categories were NOT selected" are intuitively obvious. Categories were not selected because, in the judgment of the TP or PC, they were not deemed useful to study so why document this each time. R6 is also a confusing addition to this Standard and we aren't sure what it's intended to require. Use of the word "proxies" is probably not the best substitute for what was intended. We suggest R6 be deleted as well.
Response: The SDT has received many comments regarding the increased planning requirements to meet the proposed standard. However, the SDT believes that the requirements for sensitivity studies must remain to satisfy FERC Order 693. FERC has stated that the sensitivity studies would be used to document the selection of critical System conditions and study years used in assessing System conditions (see paragraph 1704) and that System conditions are as important as Contingencies in evaluating the performance of present and future Systems (paragraph 1705). Neither FERC, nor the SDT, believes that every possible combination outage needs to be analyzed for every System condition, but FERC expects those that produce the most severe reliability impacts should be documented (paragraph 1706). In response to industry comments, Requirement R5.5 has been deleted since Generating Unit Stability is no longer explicitly addressed in the standard. The SDT agrees and has deleted the phrase from Requirements R2.1.3 and R2.4.3. **R2.1.3** For each of the studies described in Requirements R2.1.1 and ~~Requirement~~ R2.1.2, sensitivity case(s) that are intended to stress the System with ~~sensitivities~~ variations ~~that reflect~~ in one or more of the following conditions not already included in the studies shall be ~~run and documentation of the technical~~		

Organization	Question 15:	Question 15 Comments:
~~rationale for why each of the conditions was or was not selected shall be supplied~~ included in the Assessment: **R2.4.3** For each of the studies described in Requirements R2.4.1 and ~~Requirement~~ R2.4.2, ~~s~~ensitivity case(s) that are intended to stress the System with variations ~~to reflect~~ in one or more of the following conditions not already included in the studies shall be ~~run and documentation of the technical rationale for why each of the conditions was or was not selected shall be supplied~~ included in the Assessment: The industry did not seem to find usage of "proxies" in Requirement R6 (now R5) unclear or confusing. Therefore, the SDT has determined that no change to Requirement R6 is needed with regard to the use of proxies.		
LCRA TSC	A — Generally support the revised standard	LCRA had a comment on the first posting stating that the loss of any two Transmission circuits on a common structure should be viewed as a single contingency as a single component failure (tower, shield wire, conductor, hardware) could in-fact lead to the loss of two circuits. In the second draft, this outage is still being viewed as a Multiple Contingency (P7). At the same time, the loss of a tower line with three or more circuits is being viewed as an Extreme Event, when the same single failure could lead to the loss of multiple circuits. So, even if a double circuit outage is viewed as a Multiple Contingency, shouldn't a multiple circuit outage be viewed the same. In the Definitions of Terms Used in Standard, Extreme Event is defined as Events which are more severe and have a lower probability of occurrence than Planning Events. What is a "lower probability of occurrence"? Is this to be determined by each TP or TO? How is this probability determined? Are we to assume from this definition that we can use probabilistic planning to determine which Events should be studies even at the N-1 level?
Response: The SDT does not believe that the loss of a tower line with three or more circuits is similar in probability to two circuits on a common structure. Therefore, it is appropriate to classify the events differently. The SDT views "lower probability of occurrence" events as those events that occur much less often than Planning Events. The SDT does not intend for this probability to be determined by each utility. The SDT desires that Extreme Events be studied - but do not necessarily have to have Corrective Action Plans.		
NERC and Regional Coordination	C — Definitely do not support the revised standard	Changes should be made to the sensitivity analysis. See question 10 above. R2.6 - The need to restudy previously studied years should be left to the transmission planner when in their judgment there is a material change. Based on the material change the TP should be responsible for determining what aspects of the performance requirements need to be proven
Response: Please see the response to question 10. The SDT believes that past studies must be five calendar years old or less to be relevant and the associated models should not have had material changes. Requirement R2.5 and its sub-requirements have been removed from the proposed standard. Guidelines for the use of past studies to support the Planning Assessment have been added to what is now Requirement R2.5.2. The SDT did not want to be overly prescriptive when describing the type of changes that could be considered material and has left the text general. It is up to the Transmission Planner and Planning Coordinator to provide specificity as to what type of		

Organization	Question 15:	Question 15 Comments:
topology changes constitutes changes sufficient to warrant re-evaluation. **R2.5.2** For steady state, short circuit, ~~Generating Plant Stability,~~ or ~~System~~ Stability analysis: the ~~study~~ present System model shall not include any material changes, such as, generation or Transmission additions/removals, or topology changes that have occurred in the intervening period and would impact the study area. Material generation changes could include:		
IESO	A — Generally support the revised standard	(i) We generally support the direction and principle of the revised standard. It is a step in the right direction to more clearly stipulate the types of events and expected performance requirements with inclusion of multiple element contingencies and multiple single contingencies, and allowance for interruptions to firm transmission services and non-consequential load loss. (ii) More details and refinements are expected to be provided that address the issue of sensitivity testing, reduce the number of layers in the subrequirements (to facilitate ease of developing Measures and Violation Severity Levels), more clearly specify the responsible entities, etc. We look forward to seeing these improvements in the next revision, along with the first draft of Violation Risk Factors, Time Horizons, Measures, Data Retention Periods, and Violation Risk Factors when the requirements approach their near final draft form. (iii) We suggest the SDT review the development plan with the Standard Process Manager, especially the timing for posting the standard for balloting, responding to comments and conducting recalculating ballot. The timing between the initial ballot and recirculation ballot is usually short, and the balloted standard is not supposed to change. The proposed development plan appears to allow a long lead time between the two ballots, and for making changes to the standard between them.
Response: i. Thank you for your comments. ii. The SDT has streamlined the document and the tables to add clarity and has added the elements that were missing from the previous drafts. VRF, tec., have been added to the 3rd draft. iii. All development plans are reviewed with the Process Manager prior to finalization as per established procedure.		
North Carolina Electric Membership Corp	B — Unsure about supporting the revised standard	While we are satisfied that the changes are moving in the right direction, we share concerns that are being expressed by other SERC TPs and PCs that the standard may be overly prescriptive in some areas such as the sensitivities being required.
Response: The SDT agrees and has clarified the language to allow the Transmission Planner and Planning Coordinator to choose the sensitivities (Requirements R2.1.3 & R2.4.3).		

Organization	Question 15:	Question 15 Comments:
R2.1.3 For each of the studies described in Requirements R2.1.1 and ~~Requirement~~ R2.1.2, sensitivity case(s) that are intended to stress the System with ~~sensitivities~~ variations ~~that reflect~~ in one or more of the following conditions not already included in the studies shall be ~~run and documentation of the technical rationale for why each of the conditions was or was not selected shall be supplied~~ included in the Assessment: **R2.4.3** For each of the studies described in Requirements R2.4.1 and ~~Requirement~~ R2.4.2, ~~s~~ensitivity case(s) that are intended to stress the System with variations ~~to reflect~~ in one or more of the following conditions not already included in the studies shall be ~~run and documentation of the technical rationale for why each of the conditions was or was not selected shall be supplied~~ included in the Assessment:		
E.ON U.S. Transmission Planning	C — Definitely do not support the revised standard	It is confusing that single Contingency and multiple Contingency are used throughout the document when the Categories in Tables 1 and 2 are Single Contingency and Multiple Contingency. Also System normal, normal conditions and Normal System are spread throughout the document. If they all mean the same, use the same wording. If not, explain the difference. R2.4.1. - Does this apply only to motors directly connected to the BES? Is there a size (hp/MW) limit? Who is responsible to provide this data to the Planning Coordinator? I would think it would both the Distribution Providers or the Generator Owners but R9 & R12 do not mention this. R2.4.1 refers to ?the dynamic behavior of Loads? and induction motor loads. How would this model data be developed, and by who? R2.5.2. - Define “Material”. Is an addition of a load tap point material? R2.6.2. ? Define ?study area?. Does a topology change over 300 miles away trigger a stability study for a generating plant? R2.7.1.1. ? Define ?project initiation date?. Would this include going to the PSC to get approval or just when construction begins? R3.2.1 states ?? and identify how the generators are treated in the steady state simulation.? What is meant by ?treated?? I request the use of more descriptive wording. R3.2.2 states ?? and identify how loadability is treated in the steady state simulation.? What is meant by ?treated?? I request the use of more descriptive wording. R3.3.1 “System normal” is a Planning Event included in Table 1. R3.3.2 capitalize ?Single? if you referring to P1 and P2 events. If not, this is confusing. R3.3.2.1 states ?Consequential Load loss (expected maximum demand and expected duration) following a single Contingency shall be identified in the Planning Assessment.? Quantification of expected duration requires a probability analysis of load cycles, repair time, and potentially of other factors that will be difficult, if not impossible, to develop with any confidence. The Planning Assessment is based on a deterministic evaluation. Requiring the expected duration is

Organization	Question 15:	Question 15 Comments:
		inconsistent and useless. R3.3.2.2 Is this the intent? ? Following Single Contingency events, Transmission configuration changes and redispatch of generation can be simulated to return the system to Normal Rating provided that all Facilities shall be operating within their Emergency Rating. R5.3 states ?? and identify how the generators are treated in the simulation.? What is meant by "treated"? I request the use of more descriptive wording. R5.5.1 and R5.5.2 should be moved to 2.5. These requirements outline the generators and the sensitivities to be analyzed. R5 appears to focus on Tables 1 and 2. R5.5.2 states ?Shall be performed for changes in the real power output?? What types of ?changes?, or ?changes? due to what? Is intention of the requirement, that Generating Unit Stability be assessed at two levels of real power output that differ by more than 10% of the existing capability or more than 20 MW, whichever is greater? R6 states ?? and document the proxies used in the simulation?.? What is meant by ?proxies?? I request the use of more descriptive wording. R8 ends with ?This distribution shall include:? Include what? Table 1 There used to be limits on multiple circuit towers and common ROW greater than 1 mile. Is this left to the Transmission Planner and Planning Coordinator ? Extreme Events ? Item 3b is the same as Item 1, this should be removed. Table 2 Note 5.a.ii How can this be applied when the largest unit in the Balancing Authority Area is larger than the contingency reserve of the Balancing Authority. This requirement is excessive. At some level, subsequent trips of generators and/or lines should be allowed as long as Cascading does not occur.

Response: The row headers are capitalized in the Table. Please note that the two Tables have been changed to just one Table in this draft.

R2.4.1 – The SDT does not believe the requirement applies only to motors directly connected to the BES, nor is there a specific hp/MW limit. In response to comments from you and others in the industry, the SDT has removed Requirements R9-R14 and enhanced Requirement R1 to more clearly specify the modeling information needed to support accurate Planning Assessments.

R1 Each Transmission Planner and Planning Coordinator shall maintain System models for performing the studies needed to complete their Planning Assessment. The models shall use data consistent with the data provided in accordance with ~~Requirements R9 through R14,~~ the MOD-010 and MOD-012 standards~~,~~ and other data sources,~~.~~ and shall simulate projected System conditions including requirements of regulatory authorities and other legal obligations.

R2.4.1 – Requirement R2.4.1 has been modified to clarify expectations regarding load modeling for dynamics studies.

R2.4.1 System peak Load for one of the five years. For peak System Load levels, a Load model shall be used which appropriately represents the dynamic behavior of Loads, including consideration of the behavior of induction motor Loads. An aggregate system Load model which represents the overall dynamic

Organization	Question 15:	Question 15 Comments:

behavior of the Load is acceptable.

R2.5.2 – Requirement R2.5 and its sub-requirements have been removed from the proposed standard.

R2.6.2 (now R2.5.2) –The SDT believes that it is up to the Planning Coordinator and Transmission Planner to define the study area and to determine which System changes could impact the study area

R2.7.1.1 (now R2.6.2)– The SDT has not defined a project initiation date and will leave that definition to be determined by the Transmission Planner and Planning Coordinator.

R3.2.1 – "Identify how generators are treated" means that you identify at what voltage you would believe that the generator would trip. Any time you run a dynamic simulation or a steady state simulation and you don't trip the generator, you are implicitly assuming that it will ride through the voltage excursion obtained in the simulation. The requirement is to identify what you are assuming for voltage ride-through criteria for the generators you have modeled.

R3.2.2 – The SDT has changed 'treated' to analyzed'. .

R3.3.2 For all generators, studies shall consider the minimum steady state voltage limitations ~~of all generators~~ and identify how the generators are ~~treated~~ analyzed in the steady state simulation.

Requirement R3.3.1 has been removed and replaced with additional language in Requirement R3.1.

R3.1 Studies shall be performed to determine whether the BES meets the performance requirements in Table 1~~ – Steady State Performance.~~ based on the lists created in Requirement R3.5.

R3.3.2 – This requirement was deleted.

R3.3.2.1 **-** To meet industry concern as well as FERC Order 693, the SDT has added Requirement R2.8 to identify the event causing the single largest Consequential Load Loss Demand and its value and eliminate the reporting of the expected duration. Requirement R3.3.2.1 has been deleted in favor of new Requirement R2.8.

R2.8 The Planning Assessment shall provide the largest Consequential Load Loss (megawatt Demand) and the associated event caused by any P1 event and any P2 event in Table 1.

R3.3.2.2 - Based on your comment, the SDT has addressed the applicable time-limited rating in what was Header note 'a' for Steady State Only in Table 1 - Steady State & Stability Performance. Requirement R3.3.2.2 has been deleted in favor of Header note 'e' in the revised Table. Please note that the two tables in the second draft have been reduced to one table in the third draft.

Header note 'e' - For all Planning Events, planned System adjustments such as Transmission configuration changes and redispatch of generation are allowed if such adjustments are executable within the time duration applicable to the Facility Ratings.

R5.3 - The SDT agrees that the word "treated" is vague and has revised Requirement R5.3 (now Requirement R4.3.2) and Requirement R3.2.2 (now R3.3.3) to clarify the requirement.

Organization	Question 15:	Question 15 Comments:
R3.3.3 For all Transmission lines, studies shall consider relay loadability and identify how loadability is ~~treated~~ analyzed in the steady state simulation. **R4.3.2** ~~Studies shall consider~~ Simulate generator performance under anticipated conditions including how the voltage ride through capability ~~of all generators and identify how the generators are treated~~ is analyzed~~in the simulation~~. R5.5.1 & R5.5.2 - In response to industry comments, both Requirement R2.5 and Requirement R5.5 have been deleted since Generating Unit Stability is no longer explicitly addressed in the standard. R6 (now R5) - Most of the industry did not find usage of "proxies" in Requirement R6 unclear or confusing. Therefore, the SDT has determined that no change to Requirement R6 is needed with regard to proxies. R8 - The incomplete sentence was a typo and has been deleted from Requirement R8. Footnote 12 has been added to Table 1 to address your comment on the exclusion criterion for multiple circuit towers. **Footnote 12** - Excludes circuits that share a common structure for 1 mile or less. The SDT agrees with removing the redundancy found with Extreme Event 3.b. Please see footnote 1.a.ii for clarification. **Footnote 1.a.ii -** For all other Planning Events: No generating unit or units totaling more than the Contingency ~~r~~Reserve of the Balancing Authority (or Reserve Sharing Group if applicable) shall be allowed to pull out of synchronism. Generators that pull out of synchronism must have out-of-step protection or some other means to trip the generator for this condition and the resulting apparent impedance swings must not pass through relay characteristics that would result in the tripping of any Transmission System elements other than the generating unit and its direct connection Facilities.		
ERCOT System Planning	C — Definitely do not support the revised standard	The NERC reliability standard requirements should represent the minimum studies necessary to achieve reliability given the broad range of entities of various sizes and capabilities. Instead, the standards seem to represent the gold standard of the kind of studies that could be accomplished (steady-state, short circuit, and stability) given infinite time and resources with the number and variety of contingencies and sensitivities necessary. This level of steady state and stability studies can only be undertaken by the larger entities with a deep and experienced engineering staff. Why are most of the requirements applicable to a Transmission Planner and Planning Coordinator? Unless they are the same entity, this is an unnecessary duplication of effort. If a Planning Coordinator has a number of Transmission Planners in its region, then these requirements have to be fulfilled by each Transmission Planner for its individual area and the Planning Coordinator for the region made up of the individual areas? What is the Planning Coordinator coordinating if it is duplicating the work of the Transmission Planner?
Response: The SDT is striving to develop a standard that appropriately supports BES reliability and has industry consensus. The SDT is cognizant of the cost factors involved here and is taking them into consideration in its deliberations. This standard does not represent the gold standard, but rather the SDT is developing a standard based on consensus industry support.		

Organization	Question 15:	Question 15 Comments:
The SDT recognizes that the Transmission Planner and Planning Coordinator must work closely together as defined in the NERC functional model. The Transmission Planner and Planning Coordinator should closely coordinate all work to avoid any unnecessary duplication. Requirement R6 has been included in the standard to ensure that Planning Assessments are complete and coordinated in situations where the Transmission Planner and Planning Coordinator are not the same entity**.**		
American Transmission Company	B — Unsure about supporting the revised standard	We agree with most of the requirements of revised standard. However, the following list of suggestions and comments are given for consideration. Definitions: We agree with the removal of the "Base Case" definition and the revisions to the other definitions, except as noted above or below. Long Term Planning Horizon definition: We suggest a slight text change of: "Transmission planning period that covers years six through ten. Studies beyond ten years are required to accommodate . . .". Accountability: We suggest that Transmission Service Provider be added because we also suggest that the Transmission Service Provider be the responsible entity for R10. Requirements: We agree with the revisions to the Requirements, except as noted above or below. R1.1 - We agree with the requirement, but would like more description of what to provide in the technical rationale. R2.1 - We agree with the requirement, but suggest this text change, ". . . by the following annual studies . . .". R2.6.1 - We agree with the requirement, but suggest a slight text change of: " . . . short circuit, Generating Unit Stability or System Stability analysis . . .". R2.6.2 - We agree with the requirement, but suggest a slight text change of: " . . . short circuit, Generating Unit Stability or System Stability analysis . . .". R2.7 - We agree with the requirement, as long as it is really required by FERC Order 693 paragraph 1704. R2.7.1 - We agree with the requirement, but suggest a slight text change of: " . . . or Special Protection Systems, . . ." R2.7.1.1 - We disagree with the "include project initiation date" portion of this requirement. The initiation date is often uncertain and subject to change, which may add considerable work to investigate, monitor and update the date. In addition, we do not know why this information is required to assure BES reliability. R2.7.2 - We agree with the requirement, as long as it is really required by FERC Order 693 paragraph 1704. R3.2.2 - We agree with the requirement, but suggest a slight text change of: "For all BES Transmission lines . . .". R3.3.2.1 - We agree with the requirement, but suggest a slight text change of: ". . . shall be allowed in the Planning

Organization	Question 15:	Question 15 Comments:
		Assessment". R3.3.2.2 - We agree with the requirement, but suggest a slight text change of: ". . . within their Facility Ratings and within the time period allowed by the applicable time limited ratings.". R5 - Is the text referring to "known planned outages" and "known long term outages"? What is the distinction that is meant to be made between the two specified types of outages? R5.1 - We agree with the requirement, but suggest a slight text change of: ". . . the response of the applicable portion of the BES". R5.2 - This clarifying requirement should also be included in the short circuit analysis section. R5.3 - We agree with the requirement, but suggest a slight text change of: ". . . capability of all generators that may have a significant adverse effect on the BES." R5.4.3.1 - We agree with the requirement, but suggest a slight text change of: ". . . within their Facility Ratings and within the time period allowed by the applicable time limited ratings.". R8 - We disagree with the requirement, but suggest a text change of: "Each Planning Coordinator shall establish a list of neighboring system and coordinate the distribution of Planning Assessment results among affected entities the listed neighboring systems, coordinating analysis of these results through an open and transparent peer review process." Table 1Planning Events Header: We suggest that the header be repeated on every applicable page to be more reader-friendly. Superscripts: The superscripts do not refer clearly to the respective notes (e.g. there are number notes in the beginning of the table, in the extreme events evaluation requirements section, in extreme event description section, and at the end of the table). Perhaps the notes at the end of the table should have unique numbering to make the superscript references clearer. Shunt device: To avoid the need for future interpretation or clarification, we suggest that the meaning of shunt device be explained or defined somewhere in the standard (e.g. cap bank, inductor bank, SVC, STATCOM, etc.). We need to find out how shunt device outages can (or could in the future) be automatically included in the ACCC routine. We interpret that if each stage of a capacitor bank has a circuit switcher, then the outage would be of the largest cap bank stage. P2.2 (>300 kV), P2.3(>300 kV), P3 (>300 kV), P4 (>300 kV), P5 (>300 kV) - We recognize that the addition of this requirement is an attempt top raise the bar above the existing standards. However, the more stringent performance criteria should only be adopted if there is sufficient evidence to demonstrate the expected reliability risk (i.e. system impact x probability of occurrence) is high enough to warrant the cost of the system modifications that would be needed to meet the criteria. System modifications that involve the installation of line and substation facilities >300 kV will likely take years and cost tens to hundreds of millions to build. It would be helpful to have a reliability risk analysis that justifies the application of

Organization	Question 15:	Question 15 Comments:
		this performance criteria before it is adopted. If the proposed >300 kV performance requirement is retained, then we would want the implementation timeframe to be long enough to allow reasonable time to transition from a system built to the old requirement to a system built for the new requirement. The time needed for planning, design engineering, regulatory approvals, and construction of >300 kV facilities can be very long (e.g. up to 10 or more years). P7 - We disagree with this requirement. Wisconsin statues require giving preference to using existing ROW for new transmission circuits, but this requirement discourages building multiple circuits on common ROW. Should there be a waiver in this standard similar to the TLP-503-MRO-1 standard for lines slightly more than 1 mile based on a review? Extreme Event Evaluation Requirements2 - We agree with the requirement, but perhaps a definition be added for "System Controls", since one exists for "System Protection". 3 - We agree with the requirement, but suggest a slight text change of: "Simulate Normal Clearing unless otherwise specified in the Extreme Event Descriptions." Extreme Event Descriptions2a - We agree with the description, but suggest a slight text change of: "Loss of a structure or tower line with three or more circuits.." 2b & 3b - We agree with the descriptions, but suggest referring to the defined term: "Right-of-Way." 2e, 3.a.i, & 3.a.ii - We agree with the description a, but how large is "large" and how major is "major"? 3.a.v - What is meant by successful cyber attack? Is it a type of cyber attack that is documented to have been successful? 3c - We agree with the description, but suggest a slight text change of: "Other events based upon actual operating experience such as:" Note 4 - We agree with the description, but the acronym FACTS should be explained in the standard or a definition be added for "FACTS". Table 21 - We disagree with this note. We suggest that it be expanded to include the applicable part as Table 1. "The System shall remain stable. In addition, Facility Equipment Ratings shall not be exceeded. Planned System adjustments are allowed, unless precluded in the Requirements, to keep Facilities within the Facility Ratings, if such adjustments are executable within the time duration applicable to the Facility Ratings." 3 - We disagree with this note. We suggest that it be expanded to include the applicable part as Table 1. "Dynamic voltage instability, Cascading outages, and uncontrolled islanding shall not occur." Between 3 & 4 - We disagree with omitting Note 4 of Table 1 from Table 2. We suggest including: "Consequential Load and consequential generation loss is allowed for all events shown." Planning Events Same comments on Header, Superscripts, and Shunt Device as in Table 1.Same comments about stricter requirements for P2.2 (>300 kV), P2.3 (>300 kV), P3 (>300 kV), P4 (>300 kV), P5 (>300 kV) as in Table 1.Same comment

Organization	Question 15:	Question 15 Comments:
		about P7 as in Table 1.Extreme Event Evaluation Requirements Same comment about Requirement 2 and 3 as in Table 1. 3 - We agree with the requirement, but suggest a slight text change of: "Simulate Normal Clearing unless otherwise specified in the Extreme Event Descriptions." Notes5 - We disagree with limiting this requirement to just Category P1 category. We suggest that the synchronism requirement be applied to more categories.

Response: The SDT believes that a review of system conditions beyond the 10-year horizon is warranted. FERC Order 693 requires that the planning horizon take into account the lead times for siting and permitting of new long-distance Transmission lines and other long lead time solutions. The SDT has received industry comments regarding the need to exceed a 10-year horizon to account for longer lead time projects. Establishing planning horizons that are shorter than Transmission lead times may create gaps where the identification of a reliability need to which Transmission may be the best solution occurs too late to avert the identified reliability violation. Further, Operating Procedures or alternative short-term capital projects may be needed to limit the impact of the Planning Event until the planned Facilities can be completed. This information needs to be included in the Assessment.

In response to industry comments, the SDT has removed Requirements R9-R14 thus eliminating any need to add the Transmission Service Provider.

R1.1 - The SDT agrees and has removed the need for documentation of the technical rationale for modification of any data.

R2.1 - The SDT believes that the existing language is appropriate and there needs to be a distinction between current and past studies that would allow both to support compliance with the requirement.

R2.6.1 & R2.6.2 - Based on comments from others, the SDT has removed the requirements for separate Generating Unit Stability analysis and System Stability analysis.

R2.7 (now R2.6) – The SDT believes that it is.

R2.7.1 (now R2.6.1) - The SDT agrees with the proposed change.

Installation or modification of Protection Systems or Special Protection Systems.

R2.7.1.1 (now R2.6.2) - The SDT believes that a project initiation date is an effective measure to track a functional entity's planning and engineering activities and their efforts to provide and maintain a reliable BES.

R2.7.2 – Requirement R2.7.2 has been deleted.

R3.2.2 - The Purpose section of the Standard states that this Standard is to develop requirements for the Bulk Electric System, BES. No change required.

R3.3.2.1 – Requirement R3.3.2.1 has been deleted in favor of new Requirement R2.8 which includes the term 'Planning Assessment'.

R2.8 The Planning Assessment shall provide the largest Consequential Load Loss (megawatt Demand) and the associated event caused by any P1 event and any P2 event in Table 1.

Organization	Question 15:	Question 15 Comments:

R3.3.2.2 - Based on your comment, the SDT has addressed the applicable time-limited rating in what was Header note 'a' for Steady State Only in Table 1 - Steady State & Stability Performance. Requirement R3.3.2.2 has been deleted in favor of Header note 'e' in the revised Table. Please note that the two tables in the second draft have been reduced to one table in the third draft.

Header note 'e' - For all Planning Events, planned System adjustments such as Transmission configuration changes and redispatch of generation are allowed if such adjustments are executable within the time duration applicable to the Facility Ratings.

R5 - The SDT agrees and has moved this concept within Requirement R1 (see Requirement R1.1.1) so that it is applicable to all Planning Assessments. Further, both Requirements R3 and R5 (now R4) have been revised to make reference to Requirement R1.

R1 Each Transmission Planner and Planning Coordinator shall maintain System models for performing the studies needed to complete their Planning Assessment. The models shall use data consistent with the data provided in accordance with ~~Requirements R9 through R14,~~ the MOD-010 and MOD-012 standards~~,~~ and other data sources.~~.~~ and shall simulate projected System conditions including requirements of regulatory authorities and other legal obligations.

R3. For the steady state portion of the Planning Assessment, each Transmission Planner and Planning Coordinator shall perform analysis for the Near-Term and Long-Term Transmission Planning Horizon studies in Requirement R2.1 and Requirement R2.2. ~~The studies shall be based on computer power flow simulations that analyze BES normal performance (n-0) and System response to c~~Contingencies in Table 1 ~~– Steady State Performance.~~ The studies shall be based on computer simulations using models utilizing data provided in Requirement R1.

R4. For the Stability portion of the Planning Assessment, as described in Requirement R2.4 ~~and Requirement R2.5~~, each Transmission Planner and Planning Coordinator shall perform the Contingency analyses listed in Table ~~2~~1 ~~– Stability Performance~~. The studies shall be based on computer simulations using models utilizing data provided in Requirement R1. ~~The studies shall be based on computer simulations using models utilizing data provided in Requirements R9 through R14, the MOD-010 and MOD-012 standards, and other data sources, to include known planned and long term outages of Transmission or generation equipment. The studies shall cover both System Stability and Generating Unit Stability. The following requirements apply to both System Stability and Generating Unit Stability studies unless otherwise noted.~~

R5.1 - Most of the industry did not have difficulty understanding that the analysis is limited to the Transmission Planner's or Planning Coordinator's portion of the BES. Therefore, the SDT is not persuaded by your comment to add extra wording.

R5.2 - The SDT has moved the short circuit analysis from Requirement R4 to Requirement R2.7 and R2 already references BES.

R5.3 - The SDT disagrees with the suggested change due to the additional studies that would be required to determine which generators would have an adverse impact.

The SDT has deleted R5.4.3.1.

The SDT has clarified this issue in Requirement R8 (now R7).

R7 Each Planning Coordinator shall coordinate the distribution of Planning Assessment results among ~~neighboring systems~~ adjacent Planning Coordinators and any functional entity who has indicated a reliability need, coordinating analysis of these results through an open and transparent peer review process such as described in FERC Order 890.

Organization	Question 15:	Question 15 Comments:
Header - The SDT also feels that the Tables need to be as clear and concise as possible. To that end, the next version will combine Tables 1 and 2 into one table with a revised format. The Planning Events are shown on one page so repeating the headings will not be needed. Superscripts - All the notes from both tables have been combined and listed numerically. Shunt device - The SDT believes that shunt device is commonly used in the electric utility industry and does not require any further explanation. The SDT recommends contacting the software manufacturer for additional information about the ACCC routine. The SDT believes that the cap bank outage would be based on what elements would need to trip in order to clear the simulated fault condition. P2 - The SDT is attempting to raise the bar by developing a standard that appropriately supports BES reliability and has industry consensus. The majority of the SDT believes that 300 kV is an appropriate cutoff and that Transmission Systems above this level represent backbone Systems and are part of regional "grids". The SDT is cognizant of the cost factors involved here and is taking them into consideration in its deliberations and has provided for flexibility in Corrective Action Plans. The Implementation Plan will be addressed in the next posting of the standard. P7 - The SDT is cognizant of the concerns surrounding the construction of new Transmission lines, including the desire by many to fully utilize existing Right-of-Ways. In its consideration of Footnote 12 (exclusion for common structures less than 1 mile), the SDT considered the impact that this requirement could have on construction of new Facilities. However, after deliberations, the SDT believes that the 1 mile exclusion should be maintained for the reliability of the BES and that individual exceptions can be addressed within the NERC process. Extreme Events 2 - The SDT agrees that "Protection System" is defined in the Glossary of Terms Used In Reliability Standards. However, the SDT believes that this issue should be more properly addressed by the NERC SPCTF drafting team. 3 - The SDT has previously included "For all Extreme Events evaluated" at the beginning of the Evaluation Requirements for Extreme Events. No change required. 2a - The SDT believes that the Extreme Events #2.a. is already sufficient. 2b - The SDT will use the defined term of "Right-of-Way" as suggested (see 2b steady state and 2 g Stability). 2e et al - The SDT suggests that the terms "large", "major", and "successful" be defined between the Transmission Planner and Planning Coordinator. 3a - The SDT believes that the wording (was 3c) is already sufficient. No change required. Note 4 - The SDT believes that "FACTS" is commonly used in the electric utility industry and does not require any further explanation. Table 21 - The SDT has reviewed your comment and feels that your request to add "Facility Equipment Ratings shall not be exceeded. Planned System adjustments are allowed, unless precluded in the Requirements, to keep Facilities within the Facility Ratings, if such adjustments are executable within the time duration applicable to the Facility Ratings." apply to Stability is not appropriate. For the purposes of this standard, Facility Equipment Ratings refer to steady state calculated values and planned System adjustments refer to the time frame associated with returning the thermal flow within the applicable steady state Facility Rating. 3 - The SDT agrees with your comment and has made that change in Header note ‘a’ in the next version. Also, the next version will combine Tables 1 and 2			

Organization	Question 15:	Question 15 Comments:
into one table with a revised format. 3 & 4 - The SDT has reformatted and combined the two Tables into a single Table for the next draft. 3 – The SDT has already included "For all Extreme Events Evaluated" at the beginning of the Evaluation Requirements for Extreme Events. 5 - The SDT also feels that the synchronism requirement should apply to more than just P1 Category but under certain conditions and has adjusted the notes accordingly. **Footnote 1.a.ii -** For all other Planning Events: No generating unit or units totaling more than the Contingency ~~r~~Reserve of the Balancing Authority (or Reserve Sharing Group if applicable) shall be allowed to pull out of synchronism. Generators that pull out of synchronism must have out-of-step protection or some other means to trip the generator for this condition and the resulting apparent impedance swings must not pass through relay characteristics that would result in the tripping of any Transmission System elements other than the generating unit and its direct connection Facilities.		
Duke Energy	B — Unsure about supporting the revised standard	While we generally support the revised standard, we are unsure of the total cost impact, and whether the additional costs are justified by increased reliability. 1) Load Modeling is a significant open issue. The models for dynamic studies have yet to be developed and the data is not in hand. This standard should allow for the use of the best available information. 2) Category P6 is the loss of a system element, following system adjustments, followed by the loss of another element. The table columns for this category say that interruption of firm transmission service and non-consequential load loss is allowed. The table, however, is not clear whether the interruption of firm service and non-consequential load loss is allowed as part of the system adjustment (between the outages) or whether it is only allowed after the second outage. It was stated in the NERC TPL SDT WebEx that the interruption is not allowed as part of the system adjustment. This would be a dramatic change from the existing standard and would result in the unintended consequence of significantly reducing transfer capability of interfaces to a fraction of their currently reported capability. This would in effect be imposing an n-2 criteria for offering firm transmission service. Duke Energy does not believe this would be an acceptable situation for the users, owners and operators of the bulk power system. 3) The statement in R2.7 "Corrective Action Plans do not need to be developed solely to meet the performance requirements for sensitivities," implies that there are performance requirements for sensitivity studies. Recommend rewording to clarify that there are no performance requirements for sensitivity studies. 4) Recommend rewording R3.3.2.1 as follows: "The single highest consequential load loss and its expected duration following a single contingency shall be documented in the Planning Assessment." 5) In R5.3 the statement, ?and identify how the generators are treated in the simulation,? should be deleted. The word "treated" is vague and typically specific equipment modeling is not identified in studies. The implementation schedule should also take into account the Standard to develop and provide this data is not approved. Since this data is not yet available, please revise the statement as follows: ?Studies shall use the best available information to consider the voltage

Organization	Question 15:	Question 15 Comments:
		ride through capability of all generators." 6) In Table 1, Category P2 Event 1 needs to be revised to recognize the impact of this event on Bulk Electric System reliability for events on the system that are > 300 kV vs. events on the system that are <= 300 kV. P2.1 should not allow for interruption of firm transmission service or loss of non-consequential load for > 300kV; however, it should allow for interruption of firm transmission service or loss of non-consequential load for <= 300 kV. The requirement as currently written would require expenditures for the <= 300 KV system where such an event has minimal impact on Bulk Electric System reliability. In addition, the likelihood of events needs to be considered as requirements are developed. A review of Duke Energy Carolinas data shows that the likelihood of a P2.1 event on Duke's 100 kV system is an order of magnitude less than for a P1 event on the same 100 kV system. This is another indicator that the requirement as written would result in the need for expenditures that provide minimal value to enhancing the reliability of the Bulk Electric System.

Response: The SDT is striving to develop a standard that appropriately supports BES reliability and has industry consensus. The SDT is cognizant of the cost factors involved here and has taken them into consideration in its deliberations in the development of this draft.

1. The SDT agrees and believes that industry guidance is needed to capture the appropriate dynamic behavior of loads. In response to comments from you and others in the industry, the SDT has removed Requirements R9-R14 and enhanced Requirement R1 to more clearly specify the modeling information needed to support accurate Planning Assessments. Requirement R2.4.1 has been modified to clarify expectations regarding Load modeling for dynamics studies.

R1 Each Transmission Planner and Planning Coordinator shall maintain System models for performing the studies needed to complete their Planning Assessment. The models shall use data consistent with the data provided in accordance with ~~Requirements R9 through R14,~~ the MOD-010 and MOD-012 standards~~,~~ and other data sources,~~.~~ and shall simulate projected System conditions including requirements of regulatory authorities and other legal obligations.

R2.4.1 System peak Load for one of the five years. For peak System Load levels, a Load model shall be used which appropriately represents the dynamic behavior of Loads, including consideration of the behavior of induction motor Loads. An aggregate system Load model which represents the overall dynamic behavior of the Load is acceptable.

2. The SDT agrees that clarification regarding treatment of Firm Transmission Service and Non-Consequential Load Loss during adjustment is necessary. Footnote 10 in the Revision 3 of the Standard provides clarification.

Footnote #10 – Curtailment of firm transmission service, when coupled with the appropriate re-dispatch of resources obligated to re-dispatch, is allowed both as a System adjustment (as identified in the column titled 'Initial System Conditions') and a corrective action, where it can be demonstrated that Facilities remain within applicable Facility Ratings and those adjustments do not result in the shedding of any firm Load. Where limited options for re-dispatch exist, sensitivities associated with the availability of those resources must be considered. Where Facilities external to the Transmission Planner's planning region are relied upon, Facility Ratings in those regions must be considered.

3. The SDT has modified the language dealing with the sensitivities in Requirement R2.7 (now R2.6) and added the phrase "run in accordance with Requirements R2.1.3 and R2.4.3." However, the performance requirements for sensitivity studies are the same as the performance requirements for the base study. The difference is that a Corrective Action Plan is required when performance requirements are not met in the base study. A Corrective Action Plan is not

Organization	Question 15:	Question 15 Comments:
necessarily required when the performance requirements are not met for a sensitivity study. **R2.6** For Planning Events shown in Table 1~~— Steady State Performance and Table 2 — Stability Performance~~, when the analysis indicates an inability of the System to meet the performance requirements in ~~the t~~Table~~s~~ 1, the Planning Assessment shall include Corrective Action Plans addressing how the performance requirements will be met. Revisions to the Corrective Action Plans are allowed in subsequent assessments but the System shall continue to meet the performance requirements in the tables. Corrective Action Plans do not need to be developed solely to meet the performance requirements for sensitivities run in accordance with Requirements R2.1.3 and R2.4.3. The Corrective Action Plan shall: 4. To meet industry concern as well as FERC Order 693, the SDT has added Requirement R2.8 to identify the event causing the single largest Consequential Load Loss Demand and its value and eliminate the reporting of the expected duration. Requirement R3.3.2.1 has been removed from the draft. **R2.8** The Planning Assessment shall provide the largest Consequential Load Loss (megawatt Demand) and the associated event caused by any P1 event and any P2 event in Table 1. 5. The SDT has revised Requirement R5.3 (now R4.3.2) to provide clarification in this area. **R4.3.2** ~~Studies shall consider~~ Simulate generator performance under anticipated conditions including how the voltage ride through capability ~~of all generators and identify how the generators are treated~~ is analyzed~~in the simulation~~ 6. The SDT feels that for this event (explained in detail in footnote 8 of draft 3 of this Standard) interruption of neither firm nor Non-Consequential Load should be allowed for any BES voltage level, i.e., above or below 300 kV. This is consistent with FERC Order 693 that does not allow dropping of Non-Consequential firm Load following any single Contingency.		
Florida Reliability Coordinating Council, inc	C — Definitely do not support the revised standard	The SDT should consider and allow, for all planning events, , loss of Non-Consequential load as an interim measure for a period of up to 5 years in the situation where system load growth has caused post-contingency action plans to not effectively bring Facilities within normal operating limits due to unexpected or unforeseen regulatory requirements, equipment capability* and/or the installation of large industrial/commercial customers. *Equipment Capability is added to address unforeseen industry changes in the methodology used to calculating the rating of equipment.
Response: Some commenters expressed concern with the inability to shed Non-Consequential Load in response to a single Contingency event. It was indicated that some stakeholders rely on an SPS to drop local area network Load in response to some single Contingency events and that these System designs are permissible under the presently approved TPL-002-0 standard. FERC in Order 693 was clear in paragraph 1794 that that interruption of Non-Consequential Load is not permitted for single Contingency events. This position was vetted in draft 1 of TPL-001-1 and most stakeholders and the SDT support this position. The use of an SPS design would be permitted for a single Contingency event if the SPS design interrupts service to customers involved in an Interruptible Load contract arrangement.		
Central Maine Power	B —Unsure about supporting the	Aside from the comments to the prior questions, there are several issues of concern that prevent us from supporting the present draft of the revised standard. We offer the following constructive comments in an effort to support the worthwhile effort that is being pursued so that we can reach a point of satisfaction that we could vote to support the revised standard.

Organization	Question 15:	Question 15 Comments:
Company	revised standard	Our concerns are listed in a rough order of priority. a. This standard as drafted does not allow exceptions for small parts of the system as long as interconnected system reliability is maintained, which is allowed in the existing TPL standards in footnotes b) and c) in Table 1. Unless such exceptions are allowed significant transfer restrictions or large reinforcements must be made. The applicable TPL footnotes are: Existing TPL footnote b) Planned or controlled interruption of electric supply to radial customers or some local Network customers, connected to or supplied by the Faulted element or by the affected area, may occur in certain areas without impacting the overall reliability of the interconnected transmission systems. To prepare for the next contingency, system adjustments are permitted, including curtailments of contracted Firm (non-recallable reserved) electric power Transfers. Existing TPL footnote c) Depending on system design and expected system impacts, the controlled interruption of electric supply to customers (load shedding), the planned removal from service of certain generators, and/or the curtailment of contracted Firm (nonrecallable reserved) electric power Transfers may be necessary to maintain the overall reliability of the interconnected transmission systems. b. This standard does no address base conditions. Without defining base conditions the initial status of generation dispatch and transfers across the system is ill defined. Therefore the contingency analysis doesn't have a predictable basis for a consistent and repeatable study. c. The reference to Special Protection Systems is completely permissive. Although there are good applications for Special Protection Systems, their use must be constrained to have a reliable system and to promote construction of needed infrastructure. d. This standard does not provide flexibility to shed load, which restricts the ability to control post contingency response for low impact events. This may result in advancing need for upgrades in response to low impact events. This may result in advancing need for upgrades in response to low impact events. This is in conflict with FERC's directive to have the Transmission Provider waiting for market response to transmission needs and having the Transmission Provider provide a role to back stop the market. e. Definition of the Long-Term Planning Horizion. The planning horizion, for assessment purposes should be limited to 10 years. Such an assessment should be sufficient to identify requirements that may take an extended time to implement. f. Definition of Planning Coordinator is part of the NERC Functional Model, Remove from the standard. g. Put headings on each section to identify the requirements of the section. h. With respect to R2.2 - Delete "current" from the phrase "current System Peak Load Study" and replace "study" with "assessment." i. Remove R2.2.1, the requirement to extend the assessment beyond 10 years. What does the length of the project have to do with the assessment? If it takes 15 years to build something, why does this require a review of year 15? What is the

Organization	Question 15:	Question 15 Comments:
		purpose of this assessment? j. R3.3.2 requires clarification - This standard needs to permit discretion regarding the single contingencies that need to be tested, similar to R3.3.3 and R3.4. It is completely unnecessary to test all events. For example, contingencies may be limited to relevant disturbances that are contained within or directly impact the studied system. k. With respect to R3.2.1 - Clarify whether the intent of the standard is to address station service minimum voltage limitation, maximum leading VAR absorption capability or both at steady state. l. Remove R3.2.2 - Relay loadibility is addressed in the PRC-023 Standard. m. With respect to R3.3.2.1 - Recommend the removal of the requirement to assess the expected duration of Consequential Load loss. It's not considered anywhere else in the standard. n. With respect to R3.3.3 - The paragraph refers to Table 1 Contingencies P3 through P7; this should be explicitly stated. Rationale for inclusion of testing should not be required; should only need to explain why certain Contingencies were not tested. This discretion should be applicable to all contingencies. o. With respect to section R5 - The concept of planned and long-term outages should apply to the general Planning Assessment, or not at all. It should not be specific to the Stability Assessment. p. The provisions of Section R5.3 should have a corresponding MOD standard apply a requirement to provide information regarding all direct and indirect protective and control actions that could result in the inadvertent trip of the generator. Such a provision should include "other equipment (e.g. HVDC, SVC's, Statcoms)", and identify how those devices are treated in the simulation. q. Planned outages should be addressed in the operating horizon unless otherwise defined in the planning horizon. r. Recommend allowing the same non-consequential interruption for >300kV as for <300kV. Distinctions and acceptability should be based on consequence, not voltage class. s. What is a "current" study?
ISO New England Inc.	B — Unsure about supporting the revised standard	Aside from the comments to the prior questions, there are several issues of concern that prevent us from supporting the present draft of the revised standard. We offer the following constructive comments in an effort to support the worthwhile effort that is being pursued so that we can reach a point of satisfaction that we could vote to support the revised standard. Our concerns are listed in a rough order of priority. a. This standard as drafted does not allow exceptions for small parts of the system as long as interconnected system reliability is maintained, which is allowed in the existing TPL standards in footnotes b) and c) in Table 1. Unless such exceptions are allowed significant transfer restrictions or large reinforcements must be made. The applicable TPL footnotes

Organization	Question 15:	Question 15 Comments:
		are: Existing TPL footnote b) Planned or controlled interruption of electric supply to radial customers or some local Network customers, connected to or supplied by the Faulted element or by the affected area, may occur in certain areas without impacting the overall reliability of the interconnected transmission systems. To prepare for the next contingency, system adjustments are permitted, including curtailments of contracted Firm (non-recallable reserved) electric power Transfers. Existing TPL footnote c) Depending on system design and expected system impacts, the controlled interruption of electric supply to customers (load shedding), the planned removal from service of certain generators, and/or the curtailment of contracted Firm (nonrecallable reserved) electric power Transfers may be necessary to maintain the overall reliability of the interconnected transmission systems. b. This standard does no address base conditions. Without defining base conditions the initial status of generation dispatch and transfers across the system is ill defined. Therefore the contingency analysis doesn't have a predictable basis for a consistent and repeatable study. c. The reference to Special Protection Systems is completely permissive. Although there are good applications for Special Protection Systems, their use must be constrained to have a reliable system and to promote construction of needed infrastructure. d. This standard does not provide flexibility to shed load, which restricts the ability to control post contingency response for low impact events. This may result in advancing need for upgrades in response to low impact events. This may result in advancing need for upgrades in response to low impact events. This is in conflict with FERC's directive to have the Transmission Provider waiting for market response to transmission needs and having the Transmission Provider provide a role to back stop the market. e. Definition of the Long-Term Planning Horizion. The planning horizion, for assessment purposes should be limited to 10 years. Such an assessment should be sufficient to identify requirements that may take an extended time to implement. f. Definition of Planning Coordinator is part of the NERC Functional Model, Remove from the standard. g. Put headings on each section to identify the requirements of the section. h. With respect to R2.2 - Delete "current" from the phrase "current System Peak Load Study" and replace "study" with "assessment." i. Remove R2.2.1, the requirement to extend the assessment beyond 10 years. What does the length of the project have to do with the assessment? If it takes 15 years to build something, why does this require a review of year 15? What is the purpose of this assessment? j. R3.3.2 requires clarification - This standard needs to permit discretion regarding the single contingencies that need to be tested, similar to R3.3.3 and R3.4. It is completely unnecessary to test all events. For example, contingencies may be limited to relevant disturbances that are contained within or directly impact the studied system.

Organization	Question 15:	Question 15 Comments:
		k. With respect to R3.2.1 - Clarify whether the intent of the standard is to address station service minimum voltage limitation, maximum leading VAR absorption capability or both at steady state. l. Remove R3.2.2 - Relay loadibility is addressed in the PRC-023 Standard. m. With respect to R3.3.2.1 - Recommend the removal of the requirement to assess the expected duration of Consequential Load loss. It's not considered anywhere else in the standard. n. With respect to R3.3.3 - The paragraph refers to Table 1 Contingencies P3 through P7; this should be explicitly stated. Rationale for inclusion of testing should not be required; should only need to explain why certain Contingencies were not tested. This discretion should be applicable to all contingencies. o. With respect to section R5 - The concept of planned and long-term outages should apply to the general Planning Assessment, or not at all. It should not be specific to the Stability Assessment. p. The provisions of Section R5.3 should have a corresponding MOD standard apply a requirement to provide information regarding all direct and indirect protective and control actions that could result in the inadvertant trip of the generator. Such a provision should include "other equipment (e.g. HVDC, SVC's, Statcoms)", and identify how those devices are treated in the simulation. q. Planned outages should be addressed in the operating horizion unless otherwise defined in the planning horizion. r. Recommend allowing the same non-consequential interruption for >300kV as for <300kV. Distinctions and acceptability should be based on consequence, not voltage class. s. What is a "current" study?

Response: A. Some commenters expressed concern with the inability to shed Non-Consequential Load in response to a single Contingency event. It was indicated that some stakeholders rely on an SPS to drop local area network Load in response to some single Contingency events and that these System designs are permissible under the presently approved TPL-002-0 standard. FERC in Order 693 was clear in paragraph 1794 that that interruption of Non-Consequential Load is not permitted for single Contingency events. This position was vetted in draft 1 of TPL-001-1 and most stakeholders and the SDT support this position. The use of an SPS design would be permitted for a single Contingency event if the SPS design interrupts service to customers involved in an interruptible Load contract arrangement.

B. The SDT has modified Requirement R1 to include additional details on what should be modeled in the cases. However, the SDT intentionally provides flexibility for the Transmission Planner/Planning Coordinator to decide which "base case" to use since initial conditions for a System will vary from region to region and will need to be established on a local level, not via a national standard. The required studies and sensitivity analysis ensures that sufficient study is performed to cover an appropriate range of System conditions.

C. The SDT does not believe that it would be appropriate to attempt to specify limitations to the use of Special Protection Systems in this standard. The proposed TPL-001-1 and existing standards provide adequate guidance to the industry on application of Special Protection Systems.

Organization	Question 15:	Question 15 Comments:

D. The SDT has made clarifications regarding Firm Transmission Service and Non-Consequential Load Loss. Footnote # 10 has been added to the end of Table 1. The standard does not preclude the possibility of obtaining contractually interruptible load. It is the general opinion of the SDT that dropping of Non-Consequential Load should not be allowed for the Planning Events involving only one element as described in Table 1 of the proposed Standard, and to meet the intent of FERC Order 693. Further, this Standard is proposed to "raise the bar" to improve System reliability, which would require responses (Corrective Action Plans) to address those so-called low-impact events that may have been overlooked or ignored with the existing Standard TPL-002-0.

Footnote #10 – Curtailment of firm transmission service, when coupled with the appropriate re-dispatch of resources obligated to re-dispatch, is allowed both as a System adjustment (as identified in the column titled 'Initial System Conditions') and a corrective action, where it can be demonstrated that Facilities remain within applicable Facility Ratings and those adjustments do not result in the shedding of any firm Load. Where limited options for re-dispatch exist, sensitivities associated with the availability of those resources must be considered. Where Facilities external to the Transmission Planner's planning region are relied upon, Facility Ratings in those regions must be considered.

E. The SDT believes that a review of System conditions beyond the 10-year horizon is warranted. FERC Order 693 requires that the planning horizon take into account the lead times for siting and permitting of new long-distance Transmission lines and other long lead time solutions. The SDT has received industry comments regarding the need to exceed a 10-year horizon to account for longer lead time projects. Establishing planning horizons that are shorter than Transmission lead times may create gaps where the identification of a reliability need to which Transmission may be the best solution occurs too late to avert the identified reliability violation. Further, Operating Procedures or alternative short-term capital projects may be needed to limit the impact of the Planning Event until the planned facilities can be completed. This information needs to be included in the Assessment.

F. The definition for Planning Coordinator was deleted because the term has already been defined and added to the NERC Glossary by another SDT.

G. The SDT also feels that the Tables need to be as clear and concise as possible. To that end, the next version will combine Tables 1 and 2 into one table with a revised format.

H. The SDT believes that the existing language is appropriate.

I. The SDT believes that a review of System conditions beyond the 10-year horizon is warranted under some circumstances. For example, if it takes 15 years to build a Transmission line, then the need for that line would have to be determined 15 years ahead of the in-service date. Therefore, Requirement R2.2.1 requires you to perform an Assessment on year 15 if it takes you 15 years to build a line.

J. The SDT has removed Requirement R3.3.2 and replaced it with additional language in Requirement R3.1. The SDT does agree with your interpretation that it does not require evaluation of all single Contingencies. The SDT specifically states in **R**equirement R3.4 that those Contingencies that are expected to produce the more severe System impacts shall be identified, evaluated for System performance, and the rationale for the Contingencies selected for evaluation shall be available as supporting information and shall include an explanation of why the remaining Contingencies would produce less severe results.

R3.1 Studies shall be performed to determine whether the BES meets the performance requirements in Table 1~~ – Steady State Performance.~~ based on the lists created in Requirement R3.5.

K. The SDT has not limited the purpose of this requirement to either minimum acceptable station service voltages or maximum Mvar absorption. The SDT believes that the purpose of Requirement R3.2.1 is to determine if generators could continue to operate or if they would trip off following the Contingency.

Organization	Question 15:	Question 15 Comments:

L. The SDT believes that relay load limits or loadability need to be considered in the Contingency analyses. The studies should determine if Transmission line loadings could reach the relay loadability level, which may add to the existing Contingency and perhaps, result in an unbounded cascading event.

M. To meet industry concern as well as FERC Order 693, the SDT has added Requirement R 2.9 to identify the event causing the single largest Consequential Load Loss Demand and its value and eliminate the reporting of the expected duration. Requirement R3.3.2.1 has been deleted in favor of new Requirement R2.9.

R2.9 The Planning Assessment shall provide the largest Consequential Load Loss (megawatt Demand) and the associated event caused by any P1 event and any P2 event in Table 1.

N. The SDT has re-written Requirement R3.3 (now Requirement R3.5) to address your initial concern. Although the language and format of the proposed Standard have been revised from earlier versions, the SDT continues to believe that the Transmission Planners should evaluate the System performance for the events that are expected to produce the more severe System impacts, including both single and multi-Contingency events. The wording of new Requirement R3.5 (the old Requirement R3.3.3) now requires a listing of the Contingencies to be evaluated, the rationale for their selection and why the remaining Contingencies would be expected to produce less severe results. This will provide a complete evaluation of the potential Contingencies to be studied – those selected and those excluded.

R3.5 Those Planning Event Contingencies in Table 1 ~~– Steady State Performance not covered in Requirement R3.3.2~~ that are expected to produce more severe System impacts shall be identified~~,~~ and a list of those Contingencies to be evaluated for System performance in Requirement R3.1 created~~,~~. ~~and t~~The rationale for the Contingencies selected for evaluation shall be available as supporting information and shall ~~includ~~include~~e~~ an explanation of why the remaining Contingencies would produce less severe System results.

O. The SDT agrees and has moved this concept within Requirement R1 (see Requirement R1.1.1) so that it is applicable to all planning Assessments. Further, both Requirement R3 and Requirement R5 have been revised to make reference to Requirement R1.

R1.1.1 Planned outages of generation and Transmission Facilities, if specifically known.

R3. For the steady state portion of the Planning Assessment, each Transmission Planner and Planning Coordinator shall perform analysis for the Near-Term and Long-Term Transmission Planning Horizon studies in Requirement R2.1 and Requirement R2.2. ~~The studies shall be based on computer power flow simulations that analyze BES normal performance (n-0) and System response to c~~Contingencies ~~in Table 1 – Steady State Performance.~~ The studies shall be based on computer simulations using models utilizing data provided in Requirement R1.

R5 For the Stability portion of the Planning Assessment, as described in Requirement R2.4~~ and Requirement R2.5~~, each Transmission Planner and Planning Coordinator shall perform the Contingency analyses listed in Table ~~2~~1 ~~– Stability Performance~~. The studies shall be based on computer simulations using models utilizing data provided in Requirement R1. ~~The studies shall be based on computer simulations using models utilizing data provided in Requirements R9 through R14, the MOD-010 and MOD-012 standards, and other data sources, to include known planned and long term outages of Transmission or generation equipment. The studies shall cover both System Stability and Generating Unit Stability. The following requirements apply to both System Stability and Generating Unit Stability studies unless otherwise noted.~~

P. Requirement R5.3 has been modified to address simulation of how generators perform under conditions being studied. The current MOD standards that address steady-state and dynamic simulation data requirements do not explicitly require the Generator Operators to provide voltage ride-through capability.

Organization	Question 15:	Question 15 Comments:
These standards are set to be addressed by Project 2010-04 within NERC's Standards Development Work Plan. It is expected that the Transmission Planner would contact Generator Operators applicable to their System to obtain such data. If the data is not provided, it would be expected that a Transmission Planner state its assumption on the Vmin used for a generator terminal voltage for assessing ride-through capability. It's likely such information could be obtained through generator manufacturers. The "Other equipment" is addressed in the revised R5.4. Q. The SDT agrees and therefore has changed R1.1.1 to state "if specifically known." R. FERC order 693 (see paragraphs 342, 1792, 1794) suggests that Non-Consequential Load loss for single Contingencies is unacceptable. Note from paragraph 1792 of order 693: "We view these arguments as based largely on the matter of economics, not reliability, with the underlying premise that it is not economically feasible to invest in the bulk electric system to the point that it can continue service to all firm load customers under some specific N-1 scenarios." The fact that the table allows Load loss for some "lower probability" N-1 events (some P2 events) for any Transmission voltage is recognition by the SDT that probability impacts both costs and practicality. S. The SDT believes that a current study is a study that has been completed for the latest Assessment, as opposed to a past study that may have been completed up to five years ago.		
NSTAR Electric	B — Unsure about supporting the revised standard	Aside from the comments to the prior questions, listed below are several others issues: 1. This standard does not address base conditions regarding generation dispatch and transfers across the system. Initial condition guidelines would be very important to establishing consistent application of the performance standards. 2. This standard should allow exceptions for loss of small parts of the system as long as reliability is maintained on the interconnected BES. There is such an allowance in the existing TPL standards in Table 1, footnotes b) and c). 3. The reference to Special Protection Systems is too permissive. The use of Special Protection Systems and their inherent complexity should be restricted to ensure a reliable system and to promote construction of needed infrastructure. 4. The Long-Term Planning Horizon should be limited to 10 years, a sufficient timeframe to identify requirements that may take an extended time to implement. 5. Definition of Planning Coordinator is part of the NERC Functional Model. It should be removed from the TPL standard. 6. Put headings on each section to identify the requirements of the section. 7. With respect to R2.2, delete "current" from the phrase "current System Peak Load Study" and replace "Study" with "Assessment." 8. R3.3.2 should be changed to permit discretion regarding the single contingencies that need to be tested, similar to R3.3.3 and R3.4. It is unnecessary to test all possible events. 9. R3.2.1 should be clarified as to whether the intent of the standard is to address station service minimum voltage

Organization	Question 15:	Question 15 Comments:
		limitation, maximum leading VAR absorption capability or both. 10. Remove R3.2.2. Relay loadibility is addressed in the PRC-023 Standard. 11. In R3.3.2.1, remove the requirement to assess the expected duration of Consequential Load loss. This requirement is unnecessary and not considered anywhere else in the standard. 12. With respect to R3.3.3, the paragraph refers to Table 1 Contingencies P3 through P7; this should be explicitly stated. Also, the rationale for inclusion of testing should not be required. It only makes sense to explain why certain Contingencies were not tested. This discretion should be applicable to all contingencies in all sections of the standard.

Response: 1. The SDT has modified Requirement R1 to include additional details on what should be modeled in the cases. However, the SDT intentionally provides flexibility for the Transmission Planner/Planning Coordinator to decide which "base case" to use since initial conditions for a System will vary from region to region and will need to be established on a local level, not via a national standard. The required studies and sensitivity analysis ensures that sufficient study is performed to cover an appropriate range of System conditions.

2. Some commenters expressed concern with the inability to shed Non-Consequential Load in response to a single Contingency event. It was indicated that some stakeholders rely on an SPS to drop local area network Load in response to some single Contingency events and that these System designs are permissible under the presently approved TPL-002-0 standard. FERC in Order 693 was clear in paragraph 1794 that that interruption of Non-Consequential Load is not permitted for single Contingency events. This position was vetted in draft 1 of TPL-001-1 and most stakeholders and the SDT support this position. The use of an SPS design would be permitted for a single Contingency event if the SPS design interrupts service to customers involved in an Interruptible Load contract arrangement. As an alternative, an entity could seek an Entity Variance for the situation described through their Regional Entity organization. In paragraph 1794 FERC clarified that "…an entity may seek a regional difference to the Reliability Standard from the ERO for case-specific circumstances". The process described by FERC as a regional difference is described in detail in the "NERC Standards Development Procedure" document under the subsection titled "Variances to NERC Reliability Standards".

3. The SDT does not believe that it would be appropriate to attempt to specify limitations to the use of Special Protection Systems in this standard. The proposed TPL-001-1 and existing standards provide adequate guidance to the industry on application of Special Protection Systems.

4. The SDT believes that a review of System conditions beyond the 10-year horizon is warranted. FERC Order 693 requires that the planning horizon take into account the lead times for siting and permitting of new long-distance Transmission lines and other long lead time solutions. The SDT has received industry comments regarding the need to exceed a 10-year horizon to account for longer lead time projects. Establishing planning horizons that are shorter than Transmission lead times may create gaps where the identification of a reliability need to which Transmission may be the best solution occurs too late to avert the identified reliability violation. Further, Operating Procedures or alternative short-term capital projects may be needed to limit the impact of the Planning Event until the planned Facilities can be completed. This information needs to be included in the Assessment.

5. The definition for Planning Coordinator was deleted because the term has already been defined and added to the NERC Glossary by another SDT.

6. The SDT has considered this action but NERC's legal staff advised against using headings in the body of standards.

Organization	Question 15:	Question 15 Comments:
7. The SDT believes that the existing language is appropriate. 8. The SDT has removed the Requirement R3.3.2 and replaced it with additional language in Requirement R3.1. The SDT does agree with your interpretation that it does not require evaluation of all single Contingencies. The SDT specifically states in Requirement R3.4 that those Contingencies that are expected to produce the more severe System impacts shall be identified, evaluated for System performance, and the rationale for the Contingencies selected for evaluation shall be available as supporting information and shall include an explanation of why the remaining Contingencies would produce less severe results. **R3.1** Studies shall be performed to determine whether the BES meets the performance requirements in Table 1~~ – Steady State Performance.~~ based on the lists created in Requirement R3.4. 9. The SDT has not limited the purpose of this requirement to either minimum acceptable station service voltages or maximum Mvar absorption. The SDT believes that the purpose of Requirement R3.2.1 (now R3.3.2) is to determine if generators could continue to operate or if they would trip off following the contingency. 10. The SDT believes that relay load limits or loadability need to be considered in the Contingency analyses. The studies should determine if Transmission line loadings could reach the relay loadability limits, which may add to the existing Contingency and perhaps, result in an unbounded cascading event. 11. To meet industry concern as well as FERC Order 693, the SDT has added Requirement R2.8 to identify the event causing the single largest Consequential Load Loss Demand and its value and eliminate the reporting of the expected duration. Requirement R3.3.2.1 has been removed from the draft. **R2.8** The Planning Assessment shall provide the largest Consequential Load Loss (megawatt Demand) and the associated event caused by any P1 event and any P2 event in Table 1. 12. Although the implied assumption that the more severe impacts would be identified in the P3 through P7 Contingencies, there may be exceptions and the SDT does not believe it necessary to modify the language in this regard. The wording of new Requirement R3.~~5~~ 4 (the old Requirement R3.3.3) now requires a listing of the Contingencies to be evaluated, the rationale for their selection and why the remaining Contingencies would be expected to produce less severe results. This will provide a complete evaluation of the potential Contingencies to be studied – those selected and those excluded. **R3.4** Those Planning Event Contingencies in Table 1 ~~– Steady State Performance not covered in Requirement R3.3.2~~ that are expected to produce more severe System impacts shall be identified~~,~~ and a list of those Contingencies to be evaluated for System performance in Requirement R3.1 created~~,~~. ~~and t~~The rationale for the Contingencies selected for evaluation shall be available as supporting information and shall ~~includ~~include~~e~~ an explanation of why the remaining Contingencies would produce less severe System results.		
SERC Reliability Review Subcommittee and Planning Standards Subcommittee		C. Definitely do not support the revised standard. A majority of SERC technical experts do not support the revised standard. The primary concern is that the need for additional requirements for planning 300kV systems and above has not been demonstrated. We do not believe that a sufficient case for ?raising the bar? has been provided and that this requirement can have a huge impact on utilities and ratepayers. R2.1.3 and R2.4.3 requirements are very prescriptive. Many examples of sensitivities are already inherent in the existing requirements. Some sensitivity studies are in effect adding an additional level of contingency (N-2 or N-3). Sensitivity studies of load variation are already inherent in the fact that several different study years and conditions are already being

Organization	Question 15:	Question 15 Comments:
		required. Outages of reactive sources and generation should already be included in studies of multiple contingencies. The process of planning new generation (system impact studies) will include studies of the future with and without the proposed new equipment. The TP and PC can better select the most appropriate sensitivities for their system. We recommend that engineering judgment continue to be recognized as a vital component of planning. Category P6 is the loss of a system element, followed by system adjustments, followed by the loss of another element. The table columns for this category say that interruption of firm transmission service is allowed. The table, however, is not clear whether the interruption of firm service is allowed as part of the system adjustment (between the outages) or whether it is only allowed after the second outage. It was stated in the NERC TPL SDT WebEx (August 26, 2008) that the interruption is not allowed as part of the system adjustment. This would be a dramatic change from the existing standard and would result in the unintended consequence of significantly reducing transmission system capability to accommodate firm transmission service including reduction of transfer capability of interfaces to a fraction of their currently reported capability. This would in effect be imposing an n-2 criteria for offering firm transmission service. This would not be an acceptable situation for the users, owners and operators of the bulk power system. Additional Comments: There is concern with load modeling requirements (use of word ?appropriately? in R2.4.1). Does this requirement mandate the use of specific load models for each bus, or would an aggregate load model which represents the system as a whole be sufficient? Does the use of the PSS/E CONL function satisfy the requirements for a load model? There is a concern that R3.3.2.1 is burdensome regarding the need to keep track of the quantity of consequential load loss and expected duration. Who is collecting this information and why is it needed? It appears that this is a local regulatory issue, not a reliability issue. There is a concern with R5.6.1 with the requirement to perform simulations on 20 MW generators (to be consistent with the Registration Criteria). We recommend a 75 MW generator cutoff for required simulations.

Response: The SDT is attempting to raise the bar by developing a standard that appropriately supports BES reliability and has industry consensus. The majority of the SDT believes that 300 kV is an appropriate cutoff and that Transmission Systems above this level represent backbone Systems and are part of regional "grids". The SDT is cognizant of the cost factors involved here and is taking them into consideration in its deliberations and has provided for flexibility in corrective action plans. FERC has noted in their orders that many of the concerns about raising the bar show more concern about economics than reliability (examples, Order 890, paragraph 423; Order 693, paragraph 1792, etc.).

The SDT agrees and have clarified the language to allow the Transmission Planner and Planning Coordinator to chose the sensitivities (Requirements R2.1.3 & R2.4.3)

R2.1.3 For each of the studies described in Requirements R2.1.1 and ~~Requirement~~ R2.1.2, sensitivity case(s) that are intended to stress the System with ~~sensitivities~~ variations ~~that reflect~~ in one or more of the following conditions not already included in the studies shall be ~~run and documentation of the technical rationale for why each of the conditions was or was not selected shall be supplied~~ included in the Assessment:

Organization	Question 15:	Question 15 Comments:
R2.4.3 For each of the studies described in Requirements R2.4.1 and ~~Requirement~~ R2.4.2, ~~s~~ensitivity case(s) that are intended to stress the System with variations ~~to reflect~~ in one or more of the following conditions not already included in the studies shall be ~~run and documentation of the technical rationale for why each of the conditions was or was not selected shall be supplied~~ included in the Assessment: The SDT agrees that clarification regarding treatment of Firm Transmission Service and Non-Consequential Load Loss during adjustment is necessary. Footnote 10 in the Revision 3 of the Standard provides clarification. **Footnote #10** – Curtailment of firm transmission service, when coupled with the appropriate re-dispatch of resources obligated to re-dispatch, is allowed both as a System adjustment (as identified in the column titled 'Initial System Conditions') and a corrective action, where it can be demonstrated that Facilities remain within applicable Facility Ratings and those adjustments do not result in the shedding of any firm Load. Where limited options for re-dispatch exist, sensitivities associated with the availability of those resources must be considered. Where Facilities external to the Transmission Planner's planning region are relied upon, Facility Ratings in those regions must be considered. The SDT does not believe that specific Load models for each bus are necessary. An aggregate Load model which represents the System behavior as a whole may be used. Requirement R2.4.1 has been revised. The SDT does not believe that the use of PSS/E Activity CONL by itself provides the appropriate representation for dynamic Loads. For example, the SDT believes that using PSS/E Activity CONL is not sufficiently robust to appropriately model summer peak Loads with high concentrations of induction motors during for low voltage/motor stall conditions. A dynamic Load model such as CLOD, in conjunction with Activity CONL to model the non-induction motor load would be required to more accurately assess the system for FIDVR - Fault Induced Delayed Voltage Recovery. **R2.4.1** System peak Load for one of the five years. For peak System Load levels, a Load model shall be used which appropriately represents the dynamic behavior of Loads, including consideration of the behavior of induction motor Loads. An aggregate system Load model which represents the overall dynamic behavior of the Load is acceptable. To meet industry concern as well as FERC Order 693, the SDT has deleted Requirement R3.3.2.1 and replaced it with Requirement R 2.8. The SDT believes that quantifying the single largest Consequential Load Loss and identifying the event causing it provides a useful metric for system performance and reliability. **R2.8** The Planning Assessment shall provide the largest Consequential Load Loss (megawatt Demand) and the associated event caused by any P1 event and any P2 event in Table 1. The requirement for study has been changed to 20 MW for a single generator or for an aggregate of generators. This language is now in Requirement R2.5.2. **R2.5.2** For steady state, short circuit, ~~Generating Plant Stability,~~ or ~~System~~ Stability analysis: the ~~study~~ present System model shall not include any material changes, such as, generation or Transmission additions/removals, or topology changes that have occurred in the intervening period and would impact the study area. Material generation changes could include:		
Oncor Electric Delivery	B — Unsure about supporting the revised	Initially performing outstanding tasks as well as annual maintenance of documentation and regular updates would require extreme significant resources both personal and financial. Transmission Planning to this level requires high level subject matter experts with both specific transmission system knowledge as well as overall industry experience. Considerable expense would also be required to train personal and track activities. The procurement documents necessary to interface

Organization	Question 15:	Question 15 Comments:
	standard	with consultants in this area where "in house" expertise is not available would also be required. Time would also be spent on evaluating new software and analysis tools such as EPRI dynamic models. A phased in approach would be taken to complete the tasks while still performing essential Oncor and ERCOT related activities associated with System Planning.
Response: The SDT has received many comments regarding the increased planning requirements to meet the proposed standard. However, the SDT believes that the requirements for sensitivity studies must remain to satisfy FERC Order 693. FERC has stated that the sensitivity studies would be used to document the selection of critical System conditions and study years used in assessing System conditions (see paragraph 1704) and that System conditions are as important as Contingencies in evaluating the performance of present and future Systems (paragraph 1705). The SDT is striving to develop a standard that appropriately supports BES reliability and has industry consensus. The SDT is cognizant of the cost factors involved and has considered them in its deliberations. The SDT is developing the Implementation Plan and will include it in the next draft of the standard		
FirstEnergy Corp.	A — Generally support the revised standard	1) For this standard, "Protection System" failure should be limited to only relay event failures. 2) R1 ? As stated in our response to Question 5, FE does not support the modeling requirements within the TPL standard and suggest that the SDT remove these requirements. This standard should be viewed on a premise that a valid and appropriate system model exist so that the fundamental focus of the standard is as stated in its purpose statement "Establish Transmission System planning performance requirements... to develop a Bulk Electric System that will operate reliably over a broad spectrum of System conditions." If R1 remains, the phrase "and other data sources" should be removed. 3) R1.1 ? this requirement requires the documentation of ANY data modification. Do you really mean ANY? How much detail is needed in the documentation? Is a line by line comparison of all data values before/after needed or is a general overview discussion sufficient? For instance, FE replaces its system model as shown in the MMWG representation with a more detailed system representation model when performing planning studies. This can included many differences from the MMWG system equivalent. How much documentation is needed in this situation? 4) R2.6 ? This is not a requirement and should be removed and shown as explanatory text (footnote). 5) R3 - Requirement R3.1 is redundant to statements in the text of R3 and R3.3 and R3.4. We suggest that R3.1 be removed. It is suggested that R3.4 be indented and become a R3.3 sub-requirement. R3.5 would be better placed ahead of R3.3 along with the existing R3.2.
Response: 1. The SDT believes that these protection issues will be further clarified by the NERC SPCTF drafting team. The spirit of the TPL standard will remain that Load loss must not be planned for any single failure. 2. The SDT has removed Requirements R9-R14 and enhanced Requirement R1 to more clearly specify the modeling information needed to support accurate Planning Assessments. **R1** Each Transmission Planner and Planning Coordinator shall maintain System models for performing the studies needed to complete their Planning		

Organization	Question 15:	Question 15 Comments:
Assessment. The models shall use data consistent with the data provided in accordance with ~~Requirements R9 through R14,~~ the MOD-010 and MOD-012 standards~~,~~ and other data sources,~~.~~ and shall simulate projected System conditions including requirements of regulatory authorities and other legal obligations. 3. The SDT agrees and has removed the need for documentation of the technical rationale for modification of any data. 4. The SDT disagrees and believes that the format and language of Requirement R2.6 (now R2.5) and its new sub-requirements are appropriate. 5. The SDT has modified the language of Requirement R3.1 and deleted Requirement R3.3 to eliminate the redundancy. **R3.1** Studies shall be performed to determine whether the BES meets the performance requirements in Table 1~~— Steady State Performance.~~ based on the lists created in Requirement R3.5.		
Orlando Utilities Commission	C — Definitely do not support the revised standard	This standard is a definite improvement over the current set of standards. The majority of my comments are on details rather then the overall concept. My single biggest concern is the handling of n-1-1. This represents a significant expense to transmission customers and serious restriction on making firm transmission available, but due to the low probability of these events it would represent little if any practical improvement in customer reliability or grid security.
Response: Please see footnote #10 with regard to N-1-1. The SDT is striving to develop a standard that appropriately supports BES reliability and has industry consensus. The SDT is cognizant of the cost factors involved here and is taking them into consideration in its deliberations. **Footnote #10** – Curtailment of firm transmission service, when coupled with the appropriate re-dispatch of resources obligated to re-dispatch, is allowed both as a System adjustment (as identified in the column titled 'Initial System Conditions') and a corrective action, where it can be demonstrated that Facilities remain within applicable Facility Ratings and those adjustments do not result in the shedding of any firm Load. Where limited options for re-dispatch exist, sensitivities associated with the availability of those resources must be considered. Where Facilities external to the Transmission Planner's planning region are relied upon, Facility Ratings in those regions must be considered.		
Entergy Services, Inc.	C — Definitely do not support the revised standard	No cost-benefit studies have been completed to justify the significant investment and no detailed analysis of the expected reliability impact has been conducted for the Eastern Interconnection. Some research suggests that infrastructure expansion will reduce the number of large BES events, but that each event would impact larger areas with longer restoration times. http://eceserv0.ece.wisc.edu/~dobson/PAPERS/complexsystemsresearch.html Additionally, there is a fatal disconnect between the enhanced reliability standard and the FERC's current standard for selling firm transmission service. A utility cannot be required to build to an N-1-1 standard to satisfy reliability requirements and also be required to sell additional firm transmission service using a lower N-1 reliability standard. Such a situation would create an untenable situation where reliability standards force construction that the utility is then required to make available for sale pursuant to the provisions of the OATT and, once sold in accordance with the OATT, results in the utility being out of compliance with the reliability requirement. Requirement P2.1 in the table will have direct impact on local load reliability but not grid reliability. For example, a long line

Organization	Question 15:	Question 15 Comments:
		in a radial configuration due to a single contingency would only impact the reliability in a local area. Any implementation plan should consider all aspects of obstacles that Transmission owners will encounter including, ROW and land acquisition delays, inflationary impact on raw materials and other resources, capital funding constraints and associated regulatory lag, etc. Category P6 prescribes what is effectively an n-2 criteria for offering firm transmission service by not allowing the curtailment of firm transmission service as a system adjustment. Many areas are limited in how much local generation is available for re-dispatch as a system adjustment and thus compliance would be realized only by costly transmission construction by TPs.
Response: The SDT is striving to develop a standard that appropriately supports BES reliability and has industry consensus. The SDT is cognizant of the cost factors involved here and is taking them into consideration in its deliberations. The SDT agrees that clarification regarding Firm Transmission Service and Non-Consequential Load Loss is necessary. Footnote # 10 has been added to the end of Table 1: **Footnote #10** – Curtailment of firm transmission service, when coupled with the appropriate re-dispatch of resources obligated to re-dispatch, is allowed both as a System adjustment (as identified in the column titled 'Initial System Conditions') and a corrective action, where it can be demonstrated that Facilities remain within applicable Facility Ratings and those adjustments do not result in the shedding of any firm Load. Where limited options for re-dispatch exist, sensitivities associated with the availability of those resources must be considered. Where Facilities external to the Transmission Planner's planning region are relied upon, Facility Ratings in those regions must be considered. The SDT agrees that the Implementation Plan should consider matters you have listed. Nevertheless, the SDT feels that for this event (explained in detail in the footnote 8 of draft 3 of this Standard) interruption of neither firm nor Non-Consequential Load should be allowed for any BES voltage level, i.e., above or below 300 kV. This is consistent with FERC Order 693 that does not allow dropping Non-Consequential firm Load following any single Contingency. The SDT agrees that clarification regarding treatment of Firm Transmission Service and Non-Consequential Load Loss during adjustment is necessary. Footnote 10 in draft 3 of the Standard provides clarification.		
BPA Transmission Reliability Program	B — Unsure about supporting the revised standard	We are unsure about supporting the revised standard. A couple of additional concerns are described below. The purpose of the Standard is not clearly defined. There should be more clarity given to what reliability means in the context of these standards (e.g. minimize load loss for more probable contingencies, etc.). Regarding the terms "interruption of firm transmission service", there needs to be clarification of what "Interruption" means. Does it include curtailment needed after a particular contingency and adjustments? There also needs to be clarification on what "Firm Transmission Service" means. Two points: 1) the NERC definition states "highest quality of service offered to customers under a filed rate schedule that anticipates no planned interruption." The Standard implies anticipation of "unplanned' interruption for certain contingencies. 2) Is this referring to a transmission product as defined in FERC Order

Organization	Question 15:	Question 15 Comments:
		890, or firm transfers modeled for the conditions being studied? One way to interpret the intent, is the firm transfers being modeled for the conditions in the powerflow, to meet demand that would result in load not being served if that firm transfer were curtailed. If there is other generation in the system that could increase to meet the load, if the transfer being modeled is interrupted, then interruption of firm transmission service should be allowed for P1 through P5 contingencies in the table.
Response: The SDT believes that the Purpose under A.3 adequately captures the main intent which is to develop a "Bulk Electric System (BES) that will operate reliably over a broad spectrum of System conditions and following a wide range of probable Contingencies." Footnote # 10 has been added to the end of Table 1 to reflect that curtailment or interruption of Firm Transmission Service will be allowed in preparation for the next Contingency. However, until the next Contingency occurs, System performance will need to meet the requirements for Event P1. As such, the proposed standard will not allow loss of any Non-Consequential Load, except for contracted Interruptible Loads, in preparation for the next Contingency. "Firm Transmission Service" is a NERC defined term and is also addressed by FERC in OATT. **Footnote #10** – Curtailment of firm transmission service, when coupled with the appropriate re-dispatch of resources obligated to re-dispatch, is allowed both as a System adjustment (as identified in the column titled 'Initial System Conditions') and a corrective action, where it can be demonstrated that Facilities remain within applicable Facility Ratings and those adjustments do not result in the shedding of any firm Load. Where limited options for re-dispatch exist, sensitivities associated with the availability of those resources must be considered. Where Facilities external to the Transmission Planner's planning region are relied upon, Facility Ratings in those regions must be considered.		
PPL EnergyPlus	A — Generally support the revised standard	
Response: Thank you for your support.		

Consideration of Comments on Third Draft of Standard TPL-001-1 — Project 2006-02

The Assess Transmission Future Needs Standard Drafting Team thanks all commenters who submitted comments on the third draft of the TPL-001-1 standard. This standard was posted for a 45-day public comment period from May 26, 2009 through July 9, 2009. The stakeholders were asked to provide feedback on the standards through a special Electronic Comment Form. There were 85 sets of comments, including comments from more than 170 different people from over 85 companies representing 9 of the 10 Industry Segments as shown in the table on the following pages.

http://www.nerc.com/filez/standards/Assess-Transmission-Future-Needs.html

Due to industry comments and continuing review of Order 693 directives applicable to TPL, changes have been made to the following:

Definitions: Consequential Load Loss, Non-Consequential Load Loss, and Year One

Requirements: R1 and parts 1.1, 1.1.1, 1.1.2, 1.1.3, 1.1.4, 1.1.5, and 1.1.6; R2 and parts 2.1, 2.1.3, 2.1.4 (and bullets 1, 3, and 7), 2.1.5, 2.1.6, 2.2, 2.2.1, 2.3, 2.4, 2.4.1, 2.4.3 (and bullets 1 and 3), 2.5, 2.6.1, 2.6.2, 2.7, 2.7.1 bullet 2, 2.7.2, 2.7.5, 2.7.6, 2.8, 2.8.2, 2.9; R3 and parts 3.1, 3.2, 3.3, 3.3.2, 3.3.3, 3.3.4, 3.4, 3.4.1, 3.5, 3.6; R4 and parts 4.1, 4.1.1, 4.1.2, 4.1.3, 4.2, 4.3, 4.3.2, 4.3.3, 4.3.4, 4.4, 4.4.1, 4.5; R5, R6, R7; R8 and part 8.1.

Measures: M1, M5, M7, and M8.

VSLs: R1, R2, R3, R4, R5, R6, R7, and R8.

Table elements: Header notes 'a', 'c', 'f', and 'k'; P4, P7; extreme event 'a', steady state 1, Stability 1; footnotes: 2, 3, 4, 7, 9, 10, and 11

Implementation Plan

In addition, the SDT has reformatted the standard to meet the latest guidelines.

The SDT feels that the volume and scope of these changes warrants a fourth posting of this standard.

If you feel that your comment has been overlooked, please let us know immediately. Our goal is to give every comment serious consideration in this process! If you feel there has been an error or omission, you can contact the Vice President and Director of Standards, Gerry Adamski, at 609-452-8060 or at gerry.adamski@nerc.net. In addition, there is a NERC Reliability Standards Appeals Process.[1]

[1] The appeals process is in the Reliability Standards Development Procedures: http://www.nerc.com/standards/newstandardsprocess.html.

Index to Questions, Comments, and Responses

1. Requirement R1 — Please provide any specific comments on the requirement text, VRF, Time Horizon, measure associated with the requirement, data retention associated with the requirement, and/or the VSL associated with the requirement. 12

2. Requirement R2 — Please provide any specific comments on the requirement text, VRF, Time Horizon, measure associated with the requirement, data retention associated with the requirement, and/or the VSL associated with the requirement. 59

3. Requirement R3 – Please provide any specific comments on the requirement text, VRF, Time Horizon, measure associated with the requirement, data retention associated with the requirement, and/or the VSL associated with the requirement. 176

4. Requirement R4 – Please provide any specific comments on the requirement text, VRF, Time Horizon, measure associated with the requirement, data retention associated with the requirement, and/or the VSL associated with the requirement. 211

5. Requirement R5 – Please provide any specific comments on the requirement text, VRF, Time Horizon, measure associated with the requirement, data retention associated with the requirement, and/or the VSL associated with the requirement. 238

6. Requirement R6 – Please provide any specific comments on the requirement text, VRF, Time Horizon, measure associated with the requirement, data retention associated with the requirement, and/or the VSL associated with the requirement. 245

7. Requirement R7 – Please provide any specific comments on the requirement text, VRF, Time Horizon, measure associated with the requirement, data retention associated with the requirement, and/or the VSL associated with the requirement. 250

8. The SDT changed several definitions in response to industry comments to the second posting. Do you agree with these changes? If not, please clearly indicate which definition you disagree with and provide specific comments. 263

9. Do you agree with the changes in the performance elements and notes in Table 1? If not, please provide specific comments by note number, note alpha character, or performance category. Please note that footnotes 5 and 10 are handled separately in question 10. 289

10. The changes to the Table include the addition/revision of footnotes 5 and 10 that address curtailment of Firm Transmission Service and conditional Firm Transmission Service. Do you agree with the footnotes? If not, please provide specific comments.332

11. The SDT has provided an Implementation Plan as part of this posting. The plan includes the retirement of TPL-005-0 and TPL-006-0. Do you agree with the elements of the Plan? If not, please provide specific comments. 343

The Industry Segments are:

1 — Transmission Owners
2 — RTOs, ISOs
3 — Load-serving Entities
4 — Transmission-dependent Utilities
5 — Electric Generators
6 — Electricity Brokers, Aggregators, and Marketers
7 — Large Electricity End Users
8 — Small Electricity End Users
9 — Federal, State, Provincial Regulatory or other Government Entities
10 — Regional Reliability Organizations, Regional Entities

		Commenter	Organization	Industry Segment									
				1	2	3	4	5	6	7	8	9	10
1.	Group	William Bigdely	Dominion - Electric Transmission	X									

	Additional Member	Additional Organization	Region	Segment Selection
1.	J. Ronnie Bailey	Dominion - Electric Transmission Planning	SERC	
2.	Kirit Doshi	Dominion - Electric Transmission Planning	SERC	
3.	Craig Crider	Dominion - Electric Transmission Planning	SERC	
4.	Mehdi Shakibafar	Dominion - Electric Transmission Planning	SERC	
5.	Dennis Kaminsky	Dominion - Electric Transmission Planning	SERC	
6.	Solomon Yirga	Dominion - Electric Transmission Planning	SERC	
7.	Michael Gildea	Dominion - Electric Market Policy	SERC	
8.	Louis Slade, Jr.	Dominion - Electric Market Policy	SERC	
9.	Jalal Babik	Dominion - Electric Market Policy	SERC	

2.	Group	Guy Zito	Northeast Power Coordinating Council										X

	Additional Member	Additional Organization	Region	Segment Selection
1.	Ralph Rufrano	New York Power Authority	NPCC	5
2.	Alan Adamson	New York State Reliability Council	NPCC	10
3.	Gregory Campoli	New York Independent System Operator	NPCC	2
4.	Roger Champagne	Hydro-Quebec TransEnergie	NPCC	2

	Commenter	Organization	Industry Segment									
			1	2	3	4	5	6	7	8	9	10
5. Kurtis Chong	Independent Electricity System Operator	NPCC 2										
6. Sylvain Clermont	Hydro-Quebec TransEnergie	NPCC 1										
7. Manuel Couto	National Grid	NPCC 1										
8. Chris de Graffenried	Consolidated Edison Co. of New York, Inc.	NPCC 1										
9. Peter Yost	Consolidated Edison Co. of New York, Inc.	NPCC 3										
10. Mike Garton	Dominion Resources Services, Inc.	NPCC 5										
11. Brian L. Gooder	Ontario Power Generation Incorporated	NPCC 5										
12. Kathleen Goodman	ISO - New England	NPCC 2										
13. David Kiguel	Hydro One Networks Inc.	NPCC 1										
14. Michael R. Lombardi	Northeast Utilities	NPCC 1										
15. Michael Schiavone	National Grid	NPCC 1										
16. Bruce Metruck	New York Power Authority	NPCC 6										
17. Chris Orzel	FPL Energy/NextEra Energy	NPCC 5										
18. Robert Pellegrini	The United Illuminating Company	NPCC 1										
19. Gerry Dunbar	Northeast Power Coordinating Council	NPCC 10										
20. Lee Pedowicz	Northeast Power Coordinating Council	NPCC 10										
3. Group	W. R. Schoneck	Transmission Planning	X		X							

Additional Member	Additional Organization	Region	Segment Selection
1. John Shaffer	FPL	FRCC	
2. Pedro Modia	FPL	FRCC	
3. Carlos Candelaria	FPL	FRCC	
4. Kiko Barredo	FPL	FRCC	

4. Group	Phillip R. Kleckley	SERC Engineering Committee Planning Standards Subcommittee			X							

Additional Member	Additional Organization	Region	Segment Selection
1. John Sullivan	Ameren	SERC	1
2. Jim Kelley	PowerSouth Energy Coop	SERC	1
3. Pat Huntley	SERC Reliability Corp	SERC	10
4. Bob Jones	Southern Co. Services	SERC	1
5. David Marler	TVA	SERC	1

		Commenter	Organization	Industry Segment									
				1	2	3	4	5	6	7	8	9	10
5.	Group	Steve Hill	Modesto Irrigation District	X		X		X					

	Additional Member	Additional Organization	Region	Segment Selection
1.	Spencer Tacke	Modesto Irrigation	WECC	

6.	Group	Matt Muldoon	OPUC									X	

	Additional Member	Additional Organization	Region	Segment Selection
1.	Jerry Murray	OPUC	WECC	9

7.	Group	Richard Kafka	Pepco Holdings, Inc. - Affiliates	X		X		X	X				

	Additional Member	Additional Organization	Region	Segment Selection
1.	Bill Mitchell	Delmarva Power & Light	RFC	1
2.	John Radman	Potomac Electric Power Co.	RFC	1
3.	Jim Summers	Atlantic City Electric	RFC	1
4.	Brian Willis	Potomac Electric Power Co.	RFC	1
5.	Lisa Fairchild	Potomac Electric Power Co.	RFC	1

8.	Group	Denise Koehn	Bonneville Power Administration	X				X	X				

	Additional Member	Additional Organization	Region	Segment Selection
1.	Berhanu Tesema	Transmission Planning	WECC	1
2.	Chuck Matthews	Transmission Planning	WECC	1
3.	Kyle Kohne	Transmission Planning	WECC	1
4.	Melivin Rodrigues	Transmission Planning	WECC	1
5.	Kendall Rydell	Transmission Planning	WECC	1
6.	Larry Furumasu	Transmission Planning	WECC	1

9.	Group	Carol Gerou	MRO MRO NERC Standards Review Subcommittee										X

	Additional Member	Additional Organization	Region	Segment Selection
1.	Neal Balu	Wisconsin Public Service	MRO	3, 4, 5, 6
2.	Terry Bilke	Midwest ISO Inc.	MRO	2
3.	Ken Goldsmith	Alliant Energy	MRO	4

		Commenter	Organization	Industry Segment									
				1	2	3	4	5	6	7	8	9	10
4.	Jim Haigh	Western Area Power Administration	MRO 1, 6										
5.	Joseph Knight	Great River Energy	MRO 1, 3, 5, 6										
6.	Alice Murdock	Xcel Energy	MRO 1, 3, 5, 6										
7.	Scott Nickels	Rochester Public Utilities	MRO 1, 3, 5, 6										
8.	Dave Rudolph	Basin Electric Power Cooperative	MRO 1, 3, 5, 6										
9.	Eric Ruskamp	Lincoln Electric System	MRO 1, 3, 5, 6										
10.	Joe DePoorter	Madison Gas & Electric	MRO 3, 4, 5, 6										
10.	Group	Rick Foster	SERC Engineering Committee Dynamics Review Subcommittee (DRS)	X									X

	Additional Member	Additional Organization	Region	Segment Selection
1.	John Sullivan	Ameren Services Company	SERC	1
2.	Anthony Williams	Duke Energy Carolinas	SERC	1
3.	Sujit Mandal	Entergy	SERC	1
4.	Venkat Kolluri	Entergy	SERC	1
5.	John O'Connor	Progress Energy Carolinas	SERC	1
6.	Bob Jones	Southern Company Services, Inc. - Trans	SERC	1
7.	Lee Taylor	Southern Company Services, Inc. - Trans	SERC	1
8.	Robbie Bottoms	Tennessee Valley Authority	SERC	1
9.	Tom Cain	Tennessee Valley Authority	SERC	1
10.	Herb Schrayshuen	SERC Reliability Corporation	SERC	10

11.	Group	Ian Grant	SERC Engineering Committee Reliability Review Subcommittee (RRS)	X									X

	Additional Member	Additional Organization	Region	Segment Selection
1.	Curtis Stepanek	Ameren Services Company	SERC	1
2.	Eugene Warnecke	Ameren Services Company	SERC	1
3.	Kevin Hopper	Associated Electric Cooperative, Inc.	SERC	1
4.	Karl Kohlrus	City of Springfield, IL - CWLP	SERC	1
5.	Brian D. Moss	Duke Energy Carolinas	SERC	1
6.	Julia Tucker	East Kentucky Power Cooperative	SERC	1
7.	Kham Vongkhamchanh	Entergy	SERC	1

		Commenter	Organization	Industry Segment									
				1	2	3	4	5	6	7	8	9	10
8. Ken Wofford	Georgia Transmission Corporation	SERC	1										
9. Mark Kuras	PJM Interconnection, LLC	SERC	1										
10. Mark Byrd	Progress Energy Carolinas	SERC	1										
11. Clay Young	South Carolina Electric & Gas Company	SERC	1										
12. Rod Hardiman	Southern Company Services, Inc. - Trans	SERC	1										
13. Timothy Smith	Tennessee Valley Authority	SERC	1										
14. Herb Schrayshuen	SERC Reliability Corporation	SERC	10										
12.	Group	Doug Hohlbaugh	FirstEnergy Corp	X		X	X	X	X				
Additional Member	**Additional Organization**	**Region**	**Segment Selection**										
1. John Stephens	FE	RFC	1										
2. Jeff Mackauer	FE	RFC	1										
13.	Group	Ben Li	IRC Standards Review Committee		X								
Additional Member	**Additional Organization**	**Region**	**Segment Selection**										
1. Matt Goldberg	ISO-NE	NPCC	2										
2. Bill Phillips	MISO	MRO	2										
3. Anita Lee	AESO	WECC	2										
4. James Castle	NYISO	NPCC	2										
5. Charles Yeung	SPP	SPP	2										
6. Steve Myers	ERCOT	ERCOT	2										
7. Lourdes Estrada-Salinero	CAISO	WECC	2										
8. Pat Brown	PJM	RFC	2										
14.	Individual	Tim Ponseti, VP	TVA System Planning	X									
15.	Individual	Eric Mortenson	Exelon Transmission Planning	X		X		X					
16.	Individual	Hugh Francis	Southern Company	X		X		X					
17.	Individual	David Bradt	United Illuminating	X									
18.	Individual	Cordell Grand	Louisiana Energy and Power Authority			X							

		Commenter	Organization	Industry Segment									
				1	2	3	4	5	6	7	8	9	10
19.	Individual	Mark Graham	System Protection and Transmission Planning Department	X									
20.	Individual	John Cummings	PPL Energy Plus						X				
21.	Individual	Sandra Shaffer	PacifiCorp	X		X		X	X				
22.	Individual	Brandy A. Dunn	Western Area Power Administration	X									
23.	Individual	Min Tra	Tampa Electric	X				X					
24.	Individual	Richard Becker	Florida Reliability Coordinating Council, Inc - Transmission Working Group	X			X	X					X
25.	Group	Frank Gaffney, Regulatory Compliance Officer	FMPA, and it's All-Requirements Project Participants, as follows: Lakeland Electric; Fort Pierce Utilities Authority; Keys Energy Services; City of Vero Beach; Beaches Energy Services; Kissimmee Utility Authority; and Lake Worth Utilities	X		X			X				
26.	Individual	Mark Byrd	Progress Energy Carolina (PEC)	X									
27.	Individual	John Allen	City Utilities of Springfield, MO	X									
28.	Individual	Blake Williams	CPS Energy	X				X					
29.	Individual	Tom Mielnik	MidAmerican Energy Company	X		X		X	X				
30.	Individual	James Tucker	Deseret Generation & Transmission	X		X		X					
31.	Individual	Michael R. Lombardi	Northeast Utilities	X		X	X	X					
32.	Individual	Brian Keel	SRP	X									
33.	Individual	L. Earl Fair	Gainesville Regional Utilities	X									

		Commenter	Organization	Industry Segment									
				1	2	3	4	5	6	7	8	9	10
34.	Individual	Don Gilbert	JEA	X		X		X					
35.	Individual	Catherine Mathews	NorthWestern Corporation NorthWestern Energy (NWE) (NWMT)	X		X		X					
36.	Individual	Dilip Mahendra	SMUD	X		X	X	X	X				
37.	Individual	Bart White	Progress Energy Florida, Inc.	X		X							
38.	Individual	Alice Murdock	Xcel Energy	X		X			X				
39.	Individual	Kathleen Goodman	ISO New England, Inc.		X								
40.	Individual	Baj Agrawal	Arizona Public Service Co	X		X							
41.	Individual	Randy MacDonald	New Brunswick System Operator		X								
42.	Individual	Dana Cabbell	Southern California Edison Company	X		X							
43.	Individual	Terry Huval	Lafayette Utilities System										
44.	Individual	Robert Easton	Western Area Power Administration	X								X	
45.	Individual	Robert Priest	Mississippi Delta Energy Agency										
46.	Individual	Roger Champagne	Hydro-Québec TransEnergie (HQT)	X									
47.	Individual	Phil Sanchez	Western Area Power Administration	X								X	
48.	Individual	Chifong Thomas	Pacific Gas and Electric Co,	X		X		X					
49.	Individual	Kirit Shah	Ameren	X		X		X	X				
50.	Individual	Joe Seabrook	Puget Sound Energy, Inc.	X									
51.	Individual	Eric Bryant	Maine Public Advocate								X	X	

		Commenter	Organization	Industry Segment									
				1	2	3	4	5	6	7	8	9	10
52.	Individual	Scott Helyer	Tenaska, Inc.					X					
53.	Individual	Kasia Mihalchuk	Manitoba Hydro	X		X		X	X				
54.	Individual	Brent Ingebrigtson	E.ON U.S.	X		X		X	X				
55.	Individual	Sergio Garza	LCRA Transmission Services Corporation	X									
56.	Individual	Carol Sedewitz	National Grid	X									
57.	Individual	Edward J Davis	Entergy Services, Inc	X		X		X	X				
58.	Individual	Joe Knight	Great River Energy	X		X		X	X				
59.	Individual	Pat Harrington	BC Hydro			X		X	X				
60.	Individual	Marie Knox	Midwest ISO		X								
61.	Individual	Jessica Rice	NV Energy	X									
62.	Individual	Mark Kuras	PJM		X								
63.	Individual	David Albers	Brazos Electric Cooperative	X									
64.	Individual	James H. Sorrels, Jr.	American Electric Power	X		X		X	X				
65.	Individual	Michael Ayotte	ITC Holdings	X									
66.	Individual	Mary Ann Groszek	Northern Indiana Public Service Company	X									
67.	Individual	Wang, Yu (David)	San Diego Gas and Electric Co	X									
68.	Individual	Peter S. Schommer	Minnesota Power			X		X	X				
69.	Individual	Tim Wu	LADWP	X		X		X					

		Commenter	Organization	Industry Segment									
				1	2	3	4	5	6	7	8	9	10
70.	Individual	John Collins	Platte River Power Authority	X									
71.	Individual	Larry Brusseau	MAPPCOR			X							
72.	Individual	Aaron Staley	Orlando Utilities Commission	X				X					
73.	Individual	Jason Shaver	American Transmission Company	X									
74.	Individual	John Mayhan	Omaha Public Power District	X		X		X	X				
75.	Individual	David Angell	Idaho Power	X									
76.	Individual	Casey Hashimoto	Turlock Irrigation District			X							
77.	Individual	Gregory Campoli	New York Independent System Operator		X								
78.	Individual	Greg Rowland	Duke Energy	X		X			X				
79.	Individual	David M. Conroy	Central Maine Power Company	X									
80.	Individual	Darcy O'Connell	California ISO		X								
81.	Individual	Gary Trent	Tucson Electric Power Company	X		X		X					
82.	Individual	Dan Rochester	Independent Electricity System Operator		X								
83.	Individual	Harold Wyble	Kansas City Power & Light	X		X		X	X				
84.	Individual	Rao Somayajula	ReliabilityFirst Corporation										
85.	Individual	Vivian Wang	British Columbia Transmission Corporation										

1. **Requirement R1 — Please provide any specific comments on the requirement text, VRF, Time Horizon, measure associated with the requirement, data retention associated with the requirement, and/or the VSL associated with the requirement.**

Summary Consideration: The SDT has made several clarifying changes to Requirement R1 and its various parts based on industry comments. The major changes made were to delete the phrase "including requirements of regulatory authorities and other legal obligations" from Requirement R1, the addition of "existing facilities' to the parts of Requirement R1, changing 'planned' outages to 'known' outages, combining the part calling for Firm Transmission Service and Interchange, and clarifying the final part as to the use of resources. Measure M1 was revised to provide greater clarity. The VSLs for Requirement R1 have been revised to match the new wording in the requirement.

R1 Each Transmission Planner and Planning Coordinator shall maintain System models within its respective area for performing the studies needed to complete its Planning Assessment. The models shall use the latest data consistent with that provided in accordance with the MOD-010 and MOD-012 standards, supplemented by other sources as needed, including items represented in the Corrective Action Plan, and shall represent projected System conditions.

1.1 System models shall represent:

1.1.1 Existing Facilities

1.1.2 Known outage(s) of generation or Transmission Facility(ies) with a duration of at least six months.

1.1.3 New planned Facilities and changes to existing Facilities

1.1.4 Real and reactive Load forecasts

1.1.5 Known commitments for Firm Transmission Service and Interchange

1.1.6 Resources required to supply Load

M1 Each Transmission Planner and Planning Coordinator shall provide evidence, in electronic or hard copy format, that it is maintaining System models, using the latest data consistent with MOD-010 and MOD-012, including items represented in the Corrective Action Plan, representing projected System conditions, and that the models represent the required information in accordance with Requirement R1.

R1 VSL	The responsible entity's System model failed to represent one of the Requirement R1, parts 1.1.1 through 1.1.6	The responsible entity's System model failed to represent two of the Requirement R1, parts 1.1.1 through 1.1.6. OR The System model did not use the latest data consistent with the data provided in accordance with the MOD-010 and	The responsible entity's System model failed to represent three of the Requirement R1, parts 1.1.1 through 1.1.6.	The responsible entity's System model failed to represent four or more of the Requirement R1, parts 1.1.1 through 1.1.6. OR The System model did not represent projected System conditions as described in Requirement

		MOD-012 standards and other sources, including items represented in the Corrective Action Plan.		R1.

Organization	Question 1 Comment
Dominion - Electric Transmission	R1 - Dominion questions the legal authority NERC has to include the recently inserted language "including requirements of regulatory authorities and other legal obligations." This language is too broad and far exceeds the jurisdiction of NERC's mission. R1.1.5 - Dominion has seen base case models built by other transmission entities which do not include area interchanges for all areas and must be solved with area interchange "turned off". Would these base case models be in violation of R.1.1.5?
Response: The goal is for the responsible entity to build a realistic simulation, and the entity has to comply not only with the criteria in the TPL standard's tables, but also with other non-NERC regulations. However, the SDT has removed "including requirements of regulatory authorities and other legal obligations" since utilities already have to abide by such requirements. **R1** Each Transmission Planner and Planning Coordinator shall maintain System models within its respective area for performing the studies needed to complete its Planning Assessment. The models shall use the latest data consistent with that provided in accordance with the MOD-010 and MOD-012 standards, supplemented by other sources as needed, including items represented in the Corrective Action Plan, and shall represent projected System conditions. The SDT believes that the base cases should include any area interchange that is planned between utilities. Requirement R1, part 1.1.5 has been revised to include known commitments for Firm Transmission Service and Interchange. **1.1.5** Known commitments for Firm Transmission Service and Interchange	
Northeast Power Coordinating Council	R1--There needs to be some direction provided on the initial conditions used in the assessment. This guidance should include discussion as to whether or not representations of generator forced outages are to be represented in the base case or if they are addressed through the sensitivity testing (Could add R1.1.7 Reasonable representations of unplanned generator outages.) Additionally, the standard is also silent on the treatment of system transfers, both internal and external, as to how they should be modeled in the base case. For some areas, their current practice is to include heavy system stresses in their base case, which leaves little for sensitivity testing. It is unclear if this practice works within the purview of this standard. Guidance is needed on how to treat base case generation dispatch and system transfers. The inclusion of "requirements of regulatory authorities and other legal obligations" is not understood. Even if some version of this language is kept in the final standard, it seems to belong in R2 rather than R1. "Simulate" should be changed to "incorporate". R1.1.1 Priority comment. Only known long-term outages of generation and transmission should be required to be modeled.

Organization	Question 1 Comment
	R1.1.2 comment - Do we need to have the list of equipment to model? How are circuit breakers, and other equipment modeled? Also, what should be the level of detail and the form that Protection System Equipment and Control Devices be modeled? We recommend deleting the list. Make R1.1.2 simply read as follows: R1.1.2--Projected system configuration, taking into account new planned Facilities and changes to existing Facilities, for each year of the Near-Term and Long-Term Transmission Planning Horizon. R1.1.5 comment What specifically needs to be modeled under Interchange "R1.1.6 comment " This needs further definition or it should be deleted. It is not clear what a network resource required to supply load is. Does this refer to Network Resource per FERC LGIP?

Response: The SDT believes that the outages should be modeled to insure the System reliability during the outage durations. If a Transmission element outage occurs during a specified time, then the new base case for that time period would result with that element out of service pre-Contingency. All performance criteria would then apply to that new base case. Requirement R1, part 1.1.2 has been revised to include known outages of generation or Transmission Facilities with a minimum duration of 6 months.

> **1.1.2** Known outage(s) of generation or Transmission Facility(ies) with a duration of at least six months.

Requirement R1, part 1.1.5 has been revised to include known commitments for Firm Transmission Service and Interchange.

> **1.1.5** Known commitments for Firm Transmission Service and Interchange

The goal is for the responsible entity to build a realistic simulation, and the entity has to comply not only with the criteria in the TPL standard's tables, but also with other non-NERC regulations. However, the SDT has removed "including requirements of regulatory authorities and other legal obligations" since utilities already have to abide by such requirements.

> **R1** Each Transmission Planner and Planning Coordinator shall maintain System models within their respective areas for performing the studies needed to complete their Planning Assessment. The models shall use the latest data consistent with that provided in accordance with the MOD-010 and MOD-012 standards, supplemented by other sources as needed, including items represented in the Corrective Action Plan, and shall represent projected System conditions.

The SDT has changed the word "simulate" to "represent" in Requirement R1.

Requirement R1, part 1.1.2 has been revised to include known outages of generation or Transmission Facilities with a minimum duration of 6 months.

The SDT has removed the equipment list under Requirement R1, part 1.1.2 (now part 1.1.3). Transmission lines, generators, and reactive power devices are already included in MOD standards. Circuit breakers, Protection System equipment, and control devices are not typically modeled - the impact of these devices is typically simulated and thus these are already included in Requirement R3, part 3.3, Requirement R4, part 4.3, and in header note 'c' in Table 1. New technologies were removed from the list as they are already covered in the Corrective Action Plan under Requirement R2, part 2.7. Existing Facilities are now shown under Requirement R1, part 1.1.1.

> **1.1.1** Existing Facilities

Interchange is defined in the NERC glossary as "energy transfers that cross Balancing Authority boundaries" while Firm Transmission Service is "the highest quality (priority) service offered to customers under a filed rate schedule that anticipates no planned interruption." Requirement R1, part 1.1.5 has been revised to include

Organization	Question 1 Comment
known commitments for Firm Transmission Service and Interchange. The intent of the SDT was that this includes network resource as per the FERC LGIP but that it is not limited to that. The SDT has clarified the wording for Requirement R1, part 1.1.6. **1.1.6** Resources required to supply Load	
Transmission Planning	R1.1. COMMENT: Should read: Models for performing the studies needed to complete the Planning Assessment shall represent: instead of Models for the Planning Assessment shall represent: R1.1.1. COMMENT: Should the requirement specify which known outages should be modeled? For example, would it be considered incomplete and therefore a violation if a known generator maintenance outage with a one week duration is not included (not modeled off-line) in a case that represents a full summer season at peak conditions? Please provide guidelines as to what duration outages should be modeled in representative planning horizon cases. (i.e. one day, several days, one week, one month, in a case that represents a significantly longer time period.) R1.1.2. COMMENT: Should add Transformers to this list; COMMENT: What is meant by “represent” - Planning models do not typically include explicit Circuit breaker modeling. The planning models used for power flow, dynamics and short circuit analysis represent the power system with busses and branches. The effect of circuit breakers is taken into account as part of contingency modeling. Including circuit breakers as a sub-requirement is likely to result in transmission planners being required to demonstrate that circuit breakers are modeled. Explicit representation of circuit breakers with existing software would result in major convergence problems due to large number of low impedance branches. COMMENT: Should clarify "Protection System equipment" to apply only to system stability models. Does this mean all relays on the system must be included in the dynamics modeling? While a certain limited number of protective relays can be modeled with the software used for dynamics, it is not practical to model more than a very small percentage of the protection systems used in the BES. Including protective relays as a sub-requirement is likely to result in transmission planners being required to demonstrate that all protective relays are modeled which is an impossible task. The modeling of protective relays should be caveated with as deemed appropriate. COMMENT: "Control devices" Should be specific. Is this for Phase Angle Regulators (PAR), Synchronous Condensers, Static Var Compensators (SVC), exciters, governors etc? Control devices should be specifically defined as the following: PAR, SVC, HVDC. COMMENT: "New technologies" seems too broad. Needs to be better defined. Planning models may not have the capability to adequately model new technologies. R1.1.4. Firm Transmission Service COMMENT: Should add that is expected to be utilized in the study case scenario because not all Firm Transmission Service can be included in every study case model. Some firm transmission reservations (Network Resources that could be Reserves) are used optionally depending upon the availability of other Network resources. The following apply to all VRF, Time Horizon, Measure, Data Retention, and VSL for all requirements in the standard.VRF: Agree. No comment.

Organization	Question 1 Comment
	Time Horizon: COMMENT: Long-Term Planning This is confusing. Is it only the newly defined Long-Term Transmission Planning Horizon? Shouldn't it include the Near-Term Transmission Planning Horizon Suggest Long-Term and Near-Term Transmission Planning Horizon as used in definitions. Measure: Agree. No comment. Data Retention: Agree. No comment. VSL: Are bullets in requirements all required? (I.e. If circuit breakers are not explicitly modeled, as the bullet list in R1.1.2 seems to indicate, is it a violation?) What is meant by did not simulate projected System conditions as described in R1. How are projected System conditions criteria described in R1?

Response: The SDT has reworded the requirement.

1.1 System models shall represent:

Requirement R1, part 1.1.2 has been revised to include known outages of generation or Transmission Facilities with a minimum duration of 6 months.

1.1.2 Known outage(s) of generation or Transmission Facility(ies) with a duration of at least six months.

The SDT has removed the equipment list under Requirement R1, part 1.1.2 (now part 1.1.3). Transmission lines, generators, and reactive power devices are already included in MOD standards. Circuit breakers, Protection System equipment, and control devices are not typically modeled - the impact of these devices are typically simulated and thus these are already included in Requirement R3, part 3.3, Requirement R4, part 4.3, and in header note 'c' in Table 1. New technologies were removed from the list as they are already covered in the Corrective Action Plan under Requirement R2, part 2.7.

The SDT has revised Requirement R1, part 1.1.2 to provide clarity.

New technologies include any technology that is not currently in use on the electric power System that helps improve efficiency (i.e., energy storage/production technologies, low sag conductors, solid state interrupters, etc.). New technologies were removed from the equipment list under Requirement R1, part 1.1.2 since these are already covered in the Corrective Action Plan under Requirement R2, part 2.7

Models are only specific to the case study. Requirement R1, part 1.1.5 has been revised to include known commitments for Firm Transmission Service and Interchange.

1.1.5 Known commitments for Firm Transmission Service and Interchange

The *Time Horizon* term at the end of the requirement deals with mitigation time periods (as shown below) and is not connected to the assessment time frames. Time Horizons are a consideration when there is a violation of a requirement – the impact to the BES of violating a requirement with a long-term planning horizon is not expected to be as severe as the impact associated with violating a requirement with a real-time operations time horizon. No change made.

Mitigation Time Horizon - The time horizons available for mitigating a violation to a requirement include the following::

- **Long-term Planning** — a planning horizon of one year or longer.

Organization	Question 1 Comment

- **Operations Planning** — operating and resource plans from day-ahead up to and including seasonal.
- **Same-day Operations** — routine actions required within the timeframe of a day, but not real-time.
- **Real-time Operations** — actions required within one hour or less to preserve the reliability of the bulk electric system.
- **Operations Assessment** — follow-up evaluations and reporting of real time operations.

Thank you for your response on Measures and Data Retention.

The SDT has removed the equipment list. Transmission lines, generators, and reactive power devices were removed from the equipment list due to already being included in MOD standards. Circuit breakers, Protection System equipment, and control devices were removed from the equipment list since these items are already included in Requirement R3, part 3.3, Requirement R4, part 4.3, and in header note c in Table 1. New technologies were removed from the list as they are already covered in the Corrective Action Plan under Requirement R2, part 2.7.

The SDT has deleted the equipment list.

The SDT has replaced "simulate" with "represent" under the Severe VSL category for R1.

R1 VSL	The responsible entity's System model failed to represent one of the Requirement R1, parts 1.1.1 through 1.1.6	The responsible entity's System model failed to represent two of the Requirement R1, parts 1.1.1 through 1.1.6. OR The System model did not use the latest data consistent with the data provided in accordance with the MOD-010 and MOD-012 standards and other sources, including items represented in the Corrective Action Plan.	The responsible entity's System model failed to represent three of the Requirement R1, parts 1.1.1 through 1.1.6.	The responsible entity's System model failed to represent four or more of the Requirement R1, parts 1.1.1 through 1.1.6. OR The System model did not represent projected System conditions as described in Requirement R1.

Requirement R1 contains the requirements needed for creating proper base cases.

SERC Engineering Committee Planning Standards	R1.1.2: In bullet three of R1.1.2, are bus-tie circuit breakers to be represented in the models? Typically circuit breakers are included in the contingency definitions along with the protection system equipment used in the power flow models. The number of zero impedance branches which can presently be modeled using PSS/E software is limited to 4000. Also, the number of buses

Organization	Question 1 Comment
Subcommittee	included in the power flow models would increase with additional breaker modeling. Protection System Equipment: The SDT stated during its June 30th Webinar that protection system equipment need not be explicitly represented in models, but had difficulty in determining adequate wording for the proposed sub-requirement. Because protection system action is described in R3.3.1, R3.3.4, R4.3.1, and R4.3.3 we suggest that protection system equipment be removed from the list in R1.1.2.
Response: The SDT has removed the equipment list under Requirement R1, part 1.1.2 (now part 1.1.3). Transmission lines, generators, and reactive power devices are already included in MOD standards. Circuit breakers, Protection System equipment, and control devices are not typically modeled - the impact of these devices are typically simulated and thus these are already included in Requirement R3, part 3.3, Requirement R4, part 4.3, and in header note 'c' in Table 1. New technologies were removed from the list and are already covered in the Corrective Action Plan under Requirement R2, part 2.7.1 in the revised standard.	
Modesto Irrigation District	Comment: Are all bullets under R1.1.2 required to be explicitly modeled or are the effect of the devices or the effect of the removal of the devices to be modeled? We don't explicitly model circuit breakers or explicitly model protection system equipment in the steady state model. R1.1.4 should refer to expected transfers to be consistent with the bullet under R2.1.3. Please explain the difference between R1.1.4 and R1.1.5
Response: The SDT has removed the equipment list under Requirement R1, part 1.1.2 (now part 1.1.3). Transmission lines, generators, and reactive power devices are already included in MOD standards. Circuit breakers, Protection System equipment, and control devices are not typically modeled - the impact of these devices are typically simulated and thus these are already included in Requirement R3, part R3.3, Requirement R4, part 4.3, and in header note 'c' in Table 1. New technologies were removed from the list and are already covered in the Corrective Action Plan under Requirement R2, part 2.7.1 in the revised standard. Requirement R1.1.5 has been revised to include known commitments for Firm Transmission Service and Interchange. **1.1.5** Known commitments for Firm Transmission Service and Interchange Interchange is defined in the NERC glossary as "energy transfers that cross Balancing Authority boundaries" while Firm Transmission Service is "the highest quality (priority) service offered to customers under a filed rate schedule that anticipates no planned interruption."	
OPUC	1. Requirement R1 Please provide any specific comments on the requirement text, VRF, Time Horizon, measure associated with the requirement, data retention associated with the requirement, and/or the VSL associated with the requirement.Comments: A: Language in R1.1.2 still needs further clarification. Base case models do not clarify modeling required for the effect or absence of circuit breakers, protection system equipment and control devices. B: Clarity would be increased were R1.1.4 to refer to expected transfers rather than Firm Transmission Service, permitting the elimination of then redundant R1.1.5 C: Removing "including requirements of regulatory authorities and other legal obligations" at the end of R1 would also eliminate redundant text.
Response: The SDT has removed the equipment list under Requirement R1, part 1.1.2 (now part 1.1.3). Transmission lines, generators, and reactive power devices	

Organization	Question 1 Comment
are already included in MOD standards. Circuit breakers, Protection System equipment, and control devices are not typically modeled - the impact of these devices are typically simulated and thus these are already included in Requirement R3, part R3.3, Requirement R4, part 4.3, and in header note 'c' in Table 1. New technologies were removed from the list and are already covered in the Corrective Action Plan under Requirement R2, part 2.7.1 in the revised standard. **1.1.3** New planned Facilities and changes to existing Facilities Requirement R1, part 1.1.5 has been revised to include known commitments for Firm Transmission Service and Interchange. **1.1.5** Known commitments for Firm Transmission Service and Interchange The goal is for the responsible entity to build a realistic simulation, and the entity has to comply not only with the criteria in the TPL standard's tables, but also with other non-NERC regulations. However, the SDT has removed "including requirements of regulatory authorities and other legal obligations" since utilities already have to abide by such requirements. **R1** Each Transmission Planner and Planning Coordinator shall maintain System models within its respective areas for performing the studies needed to complete its Planning Assessment. The models shall use the latest data consistent with that provided in accordance with the MOD-010 and MOD-012 standards, supplemented by other sources as needed, including items represented in the Corrective Action Plan, and shall represent projected System conditions.	
Bonneville Power Administration PacifiCorp Deseret Generation & Transmission SRP Southern California Edison Company Pacific Gas and Electric Co, NV Energy San Diego Gas and Electric Co California ISO	The language in R1.1.2 needs to be clarified. Many of these facilities are not explicitly included in the models in the base cases (circuit breakers, protection system equipment, control devices). The language should be clarified to require modeling the effect of the devices or the effect of the removal of the devices where it is expected to impact the study outcome. Clarity is needed to explain the difference between R1.1.4 and R1.1.5. Expected interchange can be reasonably projected, but information on Firm Transmission Service is not always known or reasonably projected for future cases. For consistency with the 2nd bullet under R2.1.3, R1.1.4 should refer to expected transfers rather than Firm Transmission Service. With this change, R1.1.4 and R1.1.5 would be redundant and one should be deleted. We disagree with the inclusion of the words including requirements of regulatory authorities and other legal obligations at the end of R1. Entities already are required to do this. It does not need to be included in the standard.
Response: The SDT has removed the equipment list under Requirement R1, part 1.1.2 (now part 1.1.3). Transmission lines, generators, and reactive power devices are already included in MOD standards. Circuit breakers, Protection System equipment, and control devices are not typically modeled - the impact of these devices are typically simulated and thus these are already included in Requirement R3, part R3.3, Requirement R4, part 4.3, and in header note 'c' in Table 1. New technologies were removed from the list and are already covered in the Corrective Action Plan under Requirement R2, part 2.7.1 in the revised standard. Interchange is defined in the NERC glossary as "energy transfers that cross Balancing Authority boundaries" while Firm Transmission Service is "the highest quality (priority) service offered to customers under a filed rate schedule that anticipates no planned interruption." Requirement R1, part 1.1.5 has been revised to include	

Organization	Question 1 Comment
known commitments for Firm Transmission Service and Interchange. **1.1.5** Known commitments for Firm Transmission Service and Interchange The goal is for the responsible entity to build a realistic simulation, and the entity has to comply not only with the criteria in the TPL standard's tables, but also with other non-NERC regulations. However, the SDT has removed "including requirements of regulatory authorities and other legal obligations" since utilities already have to abide by such requirements. **R1** Each Transmission Planner and Planning Coordinator shall maintain System models within its respective area for performing the studies needed to complete its Planning Assessment. The models shall use the latest data consistent with that provided in accordance with the MOD-010 and MOD-012 standards, supplemented by other sources as needed, including items represented in the Corrective Action Plan, and shall represent projected System conditions.	
SERC Engineering Committee Dynamics Review Subcommittee (DRS)	There may be a potential conflict between MOD-010 and MOD-012 and legal documents such as Interconnection Agreements e.g. IA may specify a capacity level that exceeds the reported test levels. In the case of such conflicts, which one should rule? An order of precedence is needed as part of this requirement. Suggest adding terminal equipment to the list of planned facilities. The phrase, for each year of the Near-Term and Long-Term Transmission Planning Horizon, should be revised to remove each year because there may not be studies in each year.
Response: The SDT believes that additional modeling requirements not presently contained in the MOD standards are necessary for Transmission Planning purposes. The SDT has removed "including requirements of regulatory authorities and other legal obligations" since utilities already have to abide by such requirements. **R1** Each Transmission Planner and Planning Coordinator shall maintain System models within its respective areas for performing the studies needed to complete its Planning Assessment. The models shall use the latest data consistent with that provided in accordance with the MOD-010 and MOD-012 standards, supplemented by other sources as needed, including items represented in the Corrective Action Plan, and shall represent projected System conditions. The SDT has removed the equipment list under Requirement R1, part 1.1.2. Transmission lines, generators, and reactive power devices are already included in MOD standards. Circuit breakers, Protection System equipment, and control devices are not typically modeled - the impact of these devices are typically simulated and thus these are already included in Requirement R3, part R3.3, Requirement R4, part 4.3, and in header note 'c' in Table 1. New technologies were removed from the list and are already covered in the Corrective Action Plan under Requirement R2, part 2.7.1 in the revised standard. The reference to "year" has been removed from Requirement R1, part 1.1.2 (now part 1.1.3). **1.1.3** New planned Facilities and changes to existing Facilities	
SERC Engineering Committee Reliability Review Subcommittee (RRS)	In bullet three of R1.1.2, are bus-tie circuit breakers to be represented in the models? Typically circuit breakers are included in the contingency definitions along with the protection system equipment used in the powerflow models. The number of zero impedance branches which can presently be modeled using PSS/E software is limited to 4000. Also, the number of buses included in the

Organization	Question 1 Comment
	powerflow models would increase with additional breaker modeling. In R1.1.2, don't we need to also represent the existing transmission system, and not just changes to the existing system In R1.1.2, does the phrase for each year signify each year for which assessment work was performed, or each year of the Near-Term and Long-Term Transmission Planning Horizon? The phrase, for each year of the Near-Term and Long-Term Transmission Planning Horizon, should be revised to remove each year because there may not be studies in each year. In bullet five of R1.1.2, what protection system equipment is to be included in the stability models In bullet seven of Requirement R1.1.2, what "new technologies" are to be represented in the models Concerned about only having one year to implement all new modeling requirements - especially the additional relay requirements noted in R1.1.2. The SDT stated during its June 30th Webinar that protection system equipment need not be explicitly represented in models, but had difficulty in determining adequate wording for the proposed sub-requirement. Because protection system action is described in R3.3.1, R3.3.4, R4.3.1, and R4.3.3 we suggest that protection system equipment be removed from the list in R1.1.2. There may be a potential conflict between MOD-010 and MOD-012 and legal documents such as Interconnection Agreements e.g. IA may specify a capacity level that exceeds the reported test levels. In the case of such conflicts, which one should rule? There may be a need to add definitions to discern the difference between planned and proposed projects. Suggest replacing circuit breakers in R1.1.2 with terminal equipment since circuit breakers are covered by Protection System Equipment. Does there need to be a reference in R1 to NERC Reliability Assessment Guidebook version 1.2 on pp 17-18 for everyone to use a 50/50 load forecast for inclusion in the planning models?? R1.1.4 Firm Transmission Service - a single source can have transmission service to multiple sinks, and can be associated with transmission service in excess of the capacity of the source. There is a lack of clarity regarding the means by which Firm Transmission Service, a marketing term, is to be included in planning models. For example, should the standard define how to model wind farms (100% - off-peak and 20% on-peak, based on firm capacity from the wind generators, or other dispatch levels)? Not sure if this is applicable to Requirement 1 or 2.

Response: The SDT has removed the equipment list under Requirement R1, part 1.1.2. Transmission lines, generators, and reactive power devices are already included in MOD standards. Circuit breakers, Protection System equipment, and control devices are not typically modeled - the impact of these devices are typically simulated and thus these are already included in Requirement R3, part 3.3, Requirement R4, part 4.3, and in header note 'c' in Table 1. New technologies were removed from the list and are already covered in the Corrective Action Plan under Requirement R2, part 2.7.

The SDT has revised Requirement R1, part 1.1.1 to include "existing system".

1.1.1 Existing Facilities

The reference to "year" has been removed from Requirement R1, part 1.1.2 (now part 1.1.3)

Organization	Question 1 Comment
	1.1.3 New planned Facilities and changes to existing Facilities Requirement R1, part 1.1.2 (now part1.1.3) has been revised as described above. New technologies include any technology that is not currently in use on the electric power System that helps improve efficiency (i.e., energy storage/production technologies, low sag conductors, solid state interrupters, etc.). New technologies were removed from the equipment list in Requirement R1, part 1.1.2 (now part 1.1.3) since these are already covered in the Corrective Action Plan under Requirement R2, part 2.7.1 in the revised standard. The SDT believes that additional modeling requirements not presently contained in the MOD standards are necessary for Transmission Planning purposes. However, the SDT has removed "including requirements of regulatory authorities and other legal obligations" since utilities already have to abide by such requirements. **R1** Each Transmission Planner and Planning Coordinator shall maintain System models within its respective area for performing the studies needed to complete its Planning Assessment. The models shall use the latest data consistent with that provided in accordance with the MOD-010 and MOD-012 standards, supplemented by other sources as needed, including items represented in the Corrective Action Plan, and shall represent projected System conditions. In Draft 1, the SDT proposed using the terms "planned" and "committed" (similar to your proposal of proposed and planned) to distinguish the "firmness" of projects. Based on industry comments, the SDT eliminated the terms from Draft 2. No change made. Requirement R1, part 1.1.2 (now part1.1.3) has been revised as described above. The SDT does not believe that a reference is needed to the NERC Reliability Assessment Guidebook since most utilities are using at least a 50/50 Load forecast as a minimum. No change made. The SDT believes that all firm Transmission contracts should be modeled. Requirement R1, part 1.1.5 has been revised to include known commitments for Firm Transmission Service and Interchange. **1.1.5** Known commitments for Firm Transmission Service and Interchange
FirstEnergy Corp	As stated in prior comment periods, we hold the opinion that the TPL-001-1 standard should start from the premise that a valid system model exist based on MOD-010, MOD-012 and other FERC approved MOD standards that are not referenced by this TPL-001-1 standard. The inclusion of R1 introduces an overlap and potential for double jeopardy violations that need not occur. The TPL-001-1 standard should not delve into model building and keep to its core purpose of assessing future performance of the BES.Specific comments, Requirements of R1A. R1.1.2: The last bullet "New Technologies" is too vague and should be struck from the requirement. B. R1.1.4: It is not well understood how "Firm Transmission Service" would be evaluated by a compliance auditor when reviewing a simulation model. The models contain agreed upon Interchange Transactions between BA areas, but no details are provided to reflect individual Firm Transmission Service arrangements. In reality only the net-Interchange values between BA areas are reflected in the simulation models. C. R1.1.6: FE believes this requirement would be more accurately assigned to the Resource Planner or Load Serving Entity and not the Transmission Planner.

Organization	Question 1 Comment
	We agree with the stated Measures, VRF, Time-Horizon, Data Retention and VSL of requirement R1

Response: The SDT believes that additional modeling requirements not presently contained in the MOD standards are necessary for Transmission Planning purposes. However, the SDT has removed "including requirements of regulatory authorities and other legal obligations" since utilities already have to abide by such requirements.

> **R1** Each Transmission Planner and Planning Coordinator shall maintain System models within its respective area for performing the studies needed to complete its Planning Assessment. The models shall use the latest data consistent with that provided in accordance with the MOD-010 and MOD-012 standards, supplemented by other sources as needed, including items represented in the Corrective Action Plan, and shall represent projected System conditions.

New technologies include any technology that is not currently in use on the electric power System that helps improve efficiency (i.e., energy storage/production technologies, low sag conductors, solid state interrupters, etc.). The SDT has removed the equipment list under Requirement R1, part 1.1.2 (now part 1.1.3). Transmission lines, generators, and reactive power devices are already included in MOD standards. Circuit breakers, Protection System equipment, and control devices are not typically modeled - the impact of these devices are typically simulated and thus these are already included in Requirement R3, part 3.3, Requirement R4, part 4.3, and in header note 'c' in Table 1. New technologies were removed from the list and are already covered in the Corrective Action Plan under Requirement R2, part 2.7.1 in the revised standard.

Requirement R1, part 1.1.5 has been revised to include known commitments for Firm Transmission Service and Interchange.

> **1.1.5** Known commitments for Firm Transmission Service and Interchange

The SDT believes that the Transmission Planner/Planning Coordinator is responsible for incorporating this information into the System models. No change made.

Thank you for your response on Measures et al.

IRC Standards Review Committee	(1) R1.1.1 requires that models shall represent planned outages of generation and transmission facilities, if specifically known. Does this allow or require a PC/TP to include outages due to maintenance and due to construction programs where certain facilities are out of service during phases of construction as part of the Assessment? Such maintenance and construction schedules are made but may not be finalized over the planning horizon. Further, are planned outages to be treated as creating a "normal system condition" or is the planned outage a contingency from which system adjustments are made prior to subsequent events" (2) MOD 10 and 12 are based on requirements determined by the RRO in MOD 11 and 13 respectively. Is this appropriate? Further, the PC is not an applicable entity in MOD 10 and 12. (3)What are "other data sources"?

Response: The SDT believes that the outages (if known) should be modeled to insure the System reliability during the outage durations. If a Transmission element outage occurs during a specified time, then the new base case for that time period would result with that element out of service pre-contingency. All performance criteria would then apply to that new base case. Requirement R1, part 1.1.2 (now part 1.1.3) has been revised to include known outages of generation or Transmission Facilities with a minimum duration of 6 months.

Organization	Question 1 Comment
1.1.2 Known outage(s) of generation or Transmission Facility(ies) with a duration of at least six months. The SDT understands that MOD-010 and -012 are impacted by MOD-011 and -013. The Planning Coordinator is not applicable - but has to utilize data provided by others such as in MOD-010 and -012.No change made. The SDT had removed the reference to "other data sources" under Requirement R1. **R1** Each Transmission Planner and Planning Coordinator shall maintain System models within its respective area for performing the studies needed to complete its Planning Assessment. The models shall use the latest data consistent with that provided in accordance with the MOD-010 and MOD-012 standards, supplemented by other sources as needed, including items represented in the Corrective Action Plan, and shall represent projected System conditions.	
TVA System Planning	The phrase, for each year of the Near-Term and Long-Term Transmission Planning Horizon, should be revised to remove each year because there may not be studies actually required in each year. The SDT stated during its June 30th Webinar that protection system equipment need not be explicitly represented in models, but had difficulty in determining adequate wording for the proposed sub-requirement. Because protection system action is described in R3.3.1, R3.3.4, R4.3.1, and R4.3.3 we suggest that protection system equipment be removed from the list in R1.1.2. If R1.1.2 is not removed, TVA is concerned about the level of resources that will be required to model these additional relay requirements in the one year allowed in the Implementation Plan. In bullet three of R1.1.2, are bus-tie circuit breakers to be represented in the models? Typically circuit breakers are included in the contingency definitions along with the protection system equipment used in the powerflow models. In bullet seven of Requirement R1.1.2, what "new technologies" are to be represented in the models?
Response: The reference to "year" has been removed from Requirement R1, part 1.1.2 (now part 1.1.3). **1.1.3** New planned Facilities and changes to existing Facilities The SDT has removed the equipment list under Requirement R1, part 1.1.2 (now part 1.1.3). Transmission lines, generators, and reactive power devices are already included in MOD standards. Circuit breakers, Protection System equipment, and control devices are not typically modeled - the impact of these devices are typically simulated and thus these are already included in Requirement R3, part 3.3, Requirement R4, part 4.3, and in header note 'c' in Table 1. New technologies were removed from the list and are already covered in the Corrective Action Plan under Requirement R2, part 2.7.1 in the revised standard. See Requirement R1, part 1.1.2 comment above New technologies include any technology that is not currently in use on the electric power System that helps improve efficiency (i.e., energy storage/production technologies, low sag conductors, solid state interrupters, etc.). New technologies were removed from the Requirement R1, part 1.1.2 list (now part 1.1.3) and are already covered in the Corrective Action Plan under Requirement R2, part 2.7.1 in the revised standard.	
Southern Company	The VSLs for Requirement R1 incorporates several sub-requirements but neglects one of the three components of the main requirement. Consider that R1 requires the TP and RC to (a) maintain System models, (b) use data consistent with certain MOD standards, and (c) simulate projected System conditions. Because the first component is not a part of the proposed VSL and the

Organization	Question 1 Comment
	purpose of this standard mentions a broad spectrum of System conditions, the recommendation is to add maintaining the system model into the VSLs for R1. R1.1.3 uses the terminology real and reactive Demand of Load. We suggest striking the word "Demand" because it refers only to real power. We recommend the the SDT limit R1 to load flow and stability models. Does R1 apply to short circuit models? If so does this imply that the short circuit model must be the same as the load flow model?
Response: The SDT revised the VSLs for Requirement R1 to align with the changes made to the requirement – note that the revised R1 does not use the word, "simulate." The SDT has modified Requirement R1, part 1.1.3 (now part 1.1.4). **1.1.4** Real and reactive Load forecasts The SDT believes that Requirement R1 also contains some requirements that are necessary for short circuit cases but R1 does not require the models to be the same, since different software applications may be used. No change made.	
United Illuminating Northeast Utilities ISO New England, Inc. Central Maine Power Company	R1 Priority Comment- There needs to be some direction provided on the initial conditions used in the assessment. This guidance should include discussion as to whether or not representations of generator forced outages are to be represented in the base case or if they are addressed through the sensitivity testing (Could add R1.1.7 Reasonable representations of unplanned generator outages.) Additionally, the standard is also silent on the treatment of system transfers, both internal and external, as to how they should be modeled in the base case. For some areas, their current practice is to include heavy system stresses in their base case, which leaves little for sensitivity testing. It is unclear if this practice works within this standard. R1.1.1 Priority comment R1.1.1 should be removed. It seems like there is an overlap between the requirements of this standard and Operational Planning studies with respect to known outages. Planned outages are addressed by our Operational Planning processes and Transmission Operating Procedures removing the need for this to be incorporated into Planning Assessments. In addition, outages are not generally known years in advance R1 Comment We do not understand what it means to include requirements of regulatory authorities and other legal obligations. Even if some version of this language is kept in the final standard, it seems to belong in R2 rather than R1. R1.1.2 comment - Do we need to have the list of equipment to model? How do we model circuit breakers, etc? We recommend deleting the list. Make R1.1.2 simply read: R1.1.2 New planned Facilities and changes to existing Facilities for each year of the Near-Term and Long-Term Transmission Planning Horizon. R1.1.5 comment What specifically needs to be modeled under Interchange R1.1.6 comment This needs further definition or it should be deleted. It is not clear what a network resource required to supply load is. Does this refer to Network Resource per FERC LGIP?

Organization	Question 1 Comment
Response: The SDT believes that the outages should be modeled to insure the System reliability during the outage durations. If a Transmission element outage occurs during a specified time, then the new base case for that time period would result with that element out of service pre-contingency. All performance criteria would then apply to that new base case. Requirement R1, part 1.1.2 (now part 1.1.3) has been revised to include known outages of generation or Transmission Facilities with a minimum duration of 6 months. **1.1.3** New planned Facilities and changes to existing Facilities Requirement R1, part 1.1.5 has been revised to include known commitments for Firm Transmission Service and Interchange. **1.1.5** Known commitments for Firm Transmission Service and Interchange The goal is for the responsible entity to build a realistic simulation, and the entity has to comply not only with the criteria in the TPL standard's tables, but also with other non-NERC regulations. However, the SDT has removed "including requirements of regulatory authorities and other legal obligations" since utilities already have to abide by such requirements. Requirement R1, part 1.1.2 has been revised to include known outages of generation or Transmission Facilities with a minimum duration of 6 months. **1.1.2** Known outage(s) of generation or Transmission Facility(ies) with a duration of at least six months. The SDT has removed the equipment list under Requirement R1, part 1.1.2 (now part1.1.3). Transmission lines, generators, and reactive power devices are already included in MOD standards. Circuit breakers, Protection System equipment, and control devices are not typically modeled - the impact of these devices are typically simulated and thus these are already included in Requirement R3, part 3.3, Requirement R4, part 4.3, and in header note 'c' in Table 1. New technologies were removed from the list and are already covered in the Corrective Action Plan under Requirement R2, part 2.7.1 in the revised standard. Interchange is defined in the NERC glossary as "energy transfers that cross Balancing Authority boundaries" while Firm Transmission Service is "the highest quality (priority) service offered to customers under a filed rate schedule that anticipates no planned interruption." Requirement R1, part 1.1.6 has been broadened while still incorporating Network Resources. **1.1.6** Resources required to supply Load	
System Protection and Transmission Planning Department	R1 the requirement to maintain System models for performing the studies is redundant with MOD-010, and should be moved to MOD-010. The phrase that requires model data used in Studies used for Annual Assessments be consistent with data submitted under MOD-010 seems OK. R1.1.2, a sub-requirement of R1.1, states that models for Planning Assessments shall represent "new planned Facilities and changes to existing Facilities for each year of the Near-Term and Long-Term Transmission Planning Horizon". Is this a requirement for maintaining a case representing every year of the near-term and long-term planning horizons (i.e. 10 cases)? We do not think that is what the SDT had in mind. If all that is required to remain cognizant of Facility In-Service dates so that topology is reliable, please so state. To make this read clearer, we suggest you take out the phrase for each year . Regarding bullet 5 of R1.1.2, does inclusion of Protection System equipment require modeling of all relays in dynamic studies? The NERC definition of Facility pertains to equipment energized at primary voltages, not Protective System equipment. We

Organization	Question 1 Comment
	suggest the Protective Systems be eliminated from this list. To make this read clearer, we suggest you delete text and bullet items following Transmission Planning Horizon. Regarding R1.1.2 bullet items: The bullets list examples of Facilities. This list is not needed, since the term Facility is already defined in the NERC Glossary. If you do not remove all bullets, then we warn you that the bullet "New Technologies" can be interpreted to cover a broad range of topics by an auditor and is not clearly defined by NERC, so we cannot visualize measurable documentation.
Response: The SDT believes that additional modeling requirements not presently contained in the MOD standards are necessary for Transmission Planning purposes. No change made. Thank you for your response. The reference to "year" has been removed from Requirement R1, part 1.1.2 (now part 1.1.3). **1.1.3** New planned Facilities and changes to existing Facilities The SDT has removed the equipment list under Requirement R1, part 1.1.2 (now part1.1.3). Transmission lines, generators, and reactive power devices are already included in MOD standards. Circuit breakers, Protection System equipment, and control devices are not typically modeled - the impact of these devices are typically simulated and thus these are already included in Requirement R3, part 3.3, Requirement R4, part 4.3, and in header note 'c' in Table 1. New technologies were removed from the list and are already covered in the Corrective Action Plan under Requirement R2, part 2.7.1 in the revised standard. The bulleted list has been deleted.	
PPL Energy Plus	PPL agrees with the requirement that regulatory and legal requirements need to be respected in planning studies. Also, Requirement R1.1.6 appears to conflict with FERC Pro-forma OATT Section 30.4 in that Network Resource output should not be limited as this Requirement states.
Response: The SDT has removed "including requirements of regulatory authorities and other legal obligations" since utilities already have to abide by such requirements. **R1** Each Transmission Planner and Planning Coordinator shall maintain System models within its respective area for performing the studies needed to complete its Planning Assessment. The models shall use the latest data consistent with that provided in accordance with the MOD-010 and MOD-012 standards, supplemented by other sources as needed, including items represented in the Corrective Action Plan, and shall represent projected System conditions. Requirement R1, part 1.1.6 has been broadened while still incorporating Network Resources. **1.1.6** Resources required to supply Load	
Western Area Power Administration	Since the modeling data used for the Planning Assessment is initially created and governed per Mod-10 & Mod-12 Standards, this requirement should be clarified to include maintain revisions of the modeling data required to perform the Planning Assessment

Organization	Question 1 Comment
	and not just "maintain system models for performing the studies needed to complete their Planning Assessment?.
Orlando Utilities Commission	-This section is very clear. Section R1.1.1 brings clarity to the question regarding planned outages.-The phrase Models shall use data consistent with MOD-010?, is the intent for the data to be "identical" to the data provided under MOD-10 and -12, or
Kansas City Power & Light	R1 states that the models used in these studies shall be consistent with data provided through MOD-010 and MOD-012. The data submitted for these are updated on a schedule provided by the RRO and not necessarily reflective of any emerging changes that may have occurred between the MOD data collection cycle. The requirement should allow for exceptions to allow the most recent information to be included in the TPL studies.
Response: The SDT has modified Measure M1 to use the latest data available. **M1** Each Transmission Planner and Planning Coordinator shall provide evidence, in electronic or hard copy format, that it is maintaining System models, using the latest data consistent with MOD-010 and MOD-012, including items represented in the Corrective Action Plan, representing projected System conditions, and that the models represent the required information in accordance with Requirement R1.	
Tampa Electric	R1 Ensure that statement reflects that TP and PC are only responsible for their planning area. R1.1.2 Add transformers to list and clarify modeling of circuit breakers and protection system equipment. Models should reflect the effect of this equipment, not the actual equipment. R1.1.4 Models should only reflect firm transmission service that is expected to be utilized in the study case. Consider changing effective dates of all requirements to be the same date so that you do not have to meet two standards during the same time period.
Response: The SDT had modified Requirement R1 to state that the Transmission Planner/Planning Coordinator are each responsible for maintaining System models for its respective area. **R1** Each Transmission Planner and Planning Coordinator shall maintain System models within its respective area for performing the studies needed to complete its Planning Assessment. The models shall use the latest data consistent with that provided in accordance with the MOD-010 and MOD-012 standards, supplemented by other sources as needed, including items represented in the Corrective Action Plan, and shall represent projected System conditions. The SDT has removed the equipment list under Requirement R1, part 1.1.2 (now part 1.1.3). Transmission lines, generators, and reactive power devices are already included in MOD standards. Circuit breakers, Protection System equipment, and control devices are not typically modeled - the impact of these devices are typically simulated and thus these are already included in Requirement R3, part 3.3, Requirement r4, part 4.3, and in header note 'c' in Table 1. New technologies were removed from the list and are already covered in the Corrective Action Plan under Requirement R2, part 2.7.1 in the revised standard. The SDT believes that all firm Transmission should be modeled. Requirement R1, part 1.1.5 has been revised to include known commitments for Firm Transmission Service and Interchange.	

Organization	Question 1 Comment
1.1.5 Known commitments for Firm Transmission Service and Interchange The SDT believes that certain steps need to be taken in succession to allow utilities to progress toward meeting the new requirements - while not placing an undue burden for utilities to meet all the new requirements at the same time. Also additional time is needed for many utilities to meet "raising the bar" requirements that may be required and which could take considerable lead time. No change made.	
Florida Reliability Coordinating Council, Inc - Transmission Working Group	R1 and M1: Consider clarifying that it is not the TP or PC responsibility to independently verify the consistency of the System models for portions of the Bulk Electric System outside of the TP or PC planning area (related to not using data consistent with data submitted as part of MOD-010 and MOD-012, each TP and PC should not have to review the data submitted by those outside of its planning area, but only its own planning area). Please Clarify the phrase Models shall use data consistent with .MOD-010 is the intent for the data to be identical to the data provided under MOD-10 and MOD-12, or consistent meaning that the data might be older or newer depending on when the assessment took place vs when the data was submitted. R1.1 Consider changing Assessment (which does not include models) or re-wording to Models for performing the studies needed to complete the Planning Assessment shall represent:?R1.1.1 Brings clarity to the question regarding planned outages. R1.1.2: Consider adding “Transformers” to the list of facilities. R1.1.2, please clarify what the drafting team intentions are for Circuit Breakers. Planning models used for power flow, dynamics and short circuit do not include circuit breakers. Modeling circuit breakers would cause convergence problems in the models due to that large number of zero impedance line sections. We sugges eliminating circuit breaker from the bullet list. R1.1.2 Protection System equipment this should be clarified to only apply to system stability models. The modeling of protective relays should be caveated with as deemed appropriate. We suggest eliminating Protection System equiptment from the bullet list. R1.1.4 Consider adding that is expected to be utilized in the study case scenario not all Firm Transmission can be included in all studies and are only used upon the availability of other resources . Consider changing the effective dates of R1 and R7 to take effect at the same time as R2 through R6 so you do not have to meet two standards during the same time period. Otherwise, clarify how the effective date impacts which version of the standard is to be used in an assessment before a scheduled compliance audit.
Response: The SDT has modified Requirement R1 to state that the Transmission Planner and Planning Coordinator are each responsible for maintaining System models for its respective area. **R1** Each Transmission Planner and Planning Coordinator shall maintain System models within its respective area for performing the studies needed to complete its Planning Assessment. The models shall use the latest data consistent with that provided in accordance with the MOD-010 and MOD-012 standards, supplemented by other sources as needed, including items represented in the Corrective Action Plan, and shall represent projected System conditions. The SDT believes that additional modeling requirements not presently contained in the MOD standards are necessary for Transmission Planning purposes. The SDT has incorporated these additional requirements with the intent that they will be removed from the TPL standard when they are incorporated into the MOD standards at a	

Organization	Question 1 Comment
later date. The SDT has modified Measure M1 to use the latest data available. **M1** Each Transmission Planner and Planning Coordinator shall provide evidence, in electronic or hard copy format, that it is maintaining System models, using the latest data consistent with MOD-010 and MOD-012, including items represented in the Corrective Action Plan, representing projected System conditions, and that the models represent the required information in accordance with Requirement R1. The SDT agrees and has reworded Requirement R1, part 1.1. **1.1** System models shall represent: The SDT has removed the equipment list under Requirement R1, part 1.1.2 (now part 1.1.3). Transmission lines, generators, and reactive power devices are already included in MOD standards. Circuit breakers, Protection System equipment, and control devices are not typically modeled - the impact of these devices are typically simulated and thus these are already included in Requirement R3, part 3.3, Requirement R4, part 4.3, and in header note 'c' in Table 1. New technologies were removed from the list and are already covered in the Corrective Action Plan under Requirement R2, part 2.7.1 in the revised standard. Requirement R1, part 1.1.5 has been revised to include known commitments for Firm Transmission Service and Interchange. **1.1.5** Known commitments for Firm Transmission Service and Interchange The SDT believes that certain steps need to be taken in succession to allow utilities to progress toward meeting the new requirements - while not placing an undue burden for utilities to meet all the new requirements at the same time. Also additional time is needed for many utilities to meet "raising the bar" requirements that may be required and which could take considerable lead time. No change made.	
FMPA	R1, consider clarifying that it is not the TP or PC responsibility to independently verify the consistency of the System models for portions of the Bulk Electric System outside of the TP or PC planning area (related to not using data consistent with data submitted as part of MOD-010 and MOD-012, each TP and PC should not have to review the data submitted by those outside of its planning area, but only its own planning area). R1.1.2: Consider adding Transformers to the list of facilities. R1.1.2, please clarify what the SDTs intentions are for Circuit Breakers. Planning models used for power flow, dynamics and short circuit do not include circuit breakers. Modeling circuit breakers would cause convergence problems in the models due to that large number of zero impedance line sections. We suggest clarifying that the intent is to develop planned Facility Ratings in the models to reflect new Circuit Breakers, and to reflect the location and timing of circuit breakers in contingency lists, and not to model the actual circuit breakers. R1.1.2 "Protection System equipment should be clarified to only apply to system stability models. The modeling of protective relays should be caveated with as deemed appropriate. We suggest clarifying that the intent is, for power flow and short circuit studies, Protection System Equipment would be incorporated into Facility Ratings and the contingency list. And we suggest further clarifying that the intent is the same for Stability Studies, with the addition of modeling Protection System equipment that could significantly impact stability response (e.g., out-of-step relaying) as deemed appropriate through engineering judgment. R1.1.4 Consider adding "that is expected to be utilized in the study case scenario" not all Firm Transmission can be included in all studies and are only used upon the availability of other resources (for instance, if there are two firm point-to-point contracts in opposite directions across the same Interchange, both probably ought not to be modeled at the same time). Consider changing the effective dates of R1 and R7 to take effect at the same time as R2 through R6 so you do not have to meet

Organization	Question 1 Comment
	two standards during the same time period. Otherwise, clarify how the effective date impacts which version of the standard is to be used in an assessment before a scheduled compliance audit.
Response: The SDT had modified Requirement R1 to state that the Transmission Planner/Planning Coordinator are each responsible for maintaining System models for its respective area. **R1** Each Transmission Planner and Planning Coordinator shall maintain System models within its respective area for performing the studies needed to complete its Planning Assessment. The models shall use the latest data consistent with that provided in accordance with the MOD-010 and MOD-012 standards, supplemented by other sources as needed, including items represented in the Corrective Action Plan, and shall represent projected System conditions. The SDT has removed the equipment list under Requirement R1, part 1.1.2 (now part 1.1.3). Transmission lines, generators, and reactive power devices are already included in MOD standards. Circuit breakers, Protection System equipment, and control devices are not typically modeled - the impact of these devices are typically simulated and thus these are already included in Requirement R3, part R3.3, Requirement r4, part 4.3, and in header note 'c' in Table 1. New technologies were removed from the list and are already covered in the Corrective Action Plan under Requirement R2, part 2.7.1 in the revised standard. The SDT believes that all firm Transmission should be modeled. Requirement R1, part 1.1.5 has been revised to include known commitments for Firm Transmission Service and Interchange. **1.1.5** Known commitments for Firm Transmission Service and Interchange The SDT believes that certain steps need to be taken in succession to allow utilities to progress toward meeting the new requirements - while not placing an undue burden for utilities to meet all the new requirements at the same time. Also additional time is needed for many utilities to meet "raising the bar" requirements that may be required and which could take considerable lead time. No change made.	
Progress Energy Carolina (PEC)	PEC would like clarification on the following: "Models for the Planning Assessment shall represent: Circuit Breakers, Protection System Equipment, etc." The clarification should state that the models do not have to explicitly include these elements as long as their effect can be modeled.
Response: The SDT has removed the equipment list under Requirement R1, part 1.1.2 (now part 1.1.3). Transmission lines, generators, and reactive power devices are already included in MOD standards. Circuit breakers, Protection System equipment, and control devices are not typically modeled - the impact of these devices are typically simulated and thus these are already included in Requirement R3, part R3.3, Requirement R4, part 4.3, and in header note 'c' in Table 1. New technologies were removed from the list and are already covered in the Corrective Action Plan under Requirement R2, part 2.7.1 in the revised standard.	
Gainesville Regional Utilities	Concerning the effective dates of R1 & R7, I suggest that you move them to be effective at the same time as R2 through R6 so you will not have to try to meet two standards during the same time period. Effective Date: Clarify how the effective date impacts which version of the standard (and it reference numbering) is to be used in an assessment just before (in cycle) a scheduled compliance audit. Suggest that the term "Corrective Action Plan" be retitled to "Improvement Action Plan" because the first implies that the situation is "wrong or incorrect" which may not be the case.

Organization	Question 1 Comment
Response: The SDT believes that certain steps need to be taken in succession to allow utilities to progress toward meeting the new requirements - while not placing an undue burden for utilities to meet all the new requirements at the same time. Also additional time is needed for many utilities to meet "raising the bar" requirements that may be required and which could take considerable lead time. No change made. The Effective Date of the requirements in force at the time the Planning Assessment is completed will dictate which requirements are the governing requirements. The SDT believes that the term "Corrective Action Plan" (a defined term) is sufficient due to lack of comments received from industry requesting this change. No change made.	
JEA	Reword R1.1.2. New planned Facilities and changes to existing and old planned Facilities for each year of the Near-Term and Long-Term Transmission Planning Horizon where such Facilities affect the electric connectivity and topology of the system or affects the accurate simulation of system disturbance response where practical. [Delete bulleted list]Add R1.2. Where it is not practical to model all Facilities composing the electric system connectivity and topology, consideration of those Facilities and their affect on the model simulations shall be documented in detail in the annual Planning Assessment where appropriate. This addition may not be necessary with rewording of R3.
Response: The SDT has removed the equipment list under Requirement R1, part 1.1.2 (now part 1.1.3). Transmission lines, generators, and reactive power devices are already included in MOD standards. Circuit breakers, Protection System equipment, and control devices are not typically modeled - the impact of these devices are typically simulated and thus these are already included in Requirement R3, part R3.3, Requirement R4, part 4.3, and in header note 'c' in Table 1. New technologies were removed from the list and are already covered in the Corrective Action Plan under Requirement R2, part 2.7.1 in the revised standard.	
NorthWestern Corporation NorthWestern Energy (NWE) (NWMT)	The system models that are described in MOD-010 Requirement1, MOD-011 Requirement 1, MOD-012 Requirement 1, and MOD-013 Requirement 1 do not address all the bulleted items under R.1.2. Circuit breakers, protection system equipment and control devices are not modeled. Rather, the effect of these devices, such as circuit breaker misoperation, thermal overload, etc., on the transmission system are modeled. The wording of these bullets should be corrected to match what is actually modeled. Firm Transmission Service, listed in R.1.1.4, is not specifically addressed in MOD-010. Requirement 1 of MOD-010 states existing and future Interchange Schedules as data requirements for steady-state modeling and simulation. Models in the West do not model Firm Transmission Service as such. It is difficult to know what the Firm Transmission Service will be in the future. This is particularly true in regions where there is a predominance of merchant generation and proposals for the interconnection of new merchant generation. It is more reasonable to estimate the expected interchanges. The definition for Interchange Energy transfers that cross Balancing Authority boundaries describes the modeling requirement better that the definition of Firm Transmission Service The highest quality (priority) service offered to customers under a filed rate schedule that anticipates no planned interruptions. The wording Expected Transfers" is used in R2.1.3 and R2.4.3. To maintain consistency, this term could be used in R.1.1.4 and could also be substituted in Table 1 for Firm Transmission. From a Planning perspective, since Firm Transmission cannot be determined from a study model. R1.1.4 and R1.1.5 should be deleted and replaced with a requirement to model expected transfers on interconnections with neighboring Balancing Authorities. For study purposes R.1.1.6 is not needed either. In the models, the load represented is served by the generators modeled. Network Resources are more in tune with local area studies that ensure that the network load can be served by the network

Organization	Question 1 Comment
	resources over available transmission. The words "including requirements of regulatory authorities and other legal obligations at the end of R1. does not need to be in the standard.
Response: The SDT believes that additional modeling requirements not presently contained in the MOD standards are necessary for Transmission Planning purposes. The SDT has removed the equipment list under Requirement R1, part 1.1.2 (now part 1.1.3). Transmission lines, generators, and reactive power devices are already included in MOD standards. Circuit breakers, Protection System equipment, and control devices are not typically modeled - the impact of these devices are typically simulated and thus these are already included in Requirement R3, part 3.3, Requirement R4, part 4.3, and in header note 'c' in Table 1. New technologies were removed from the list and are already covered in the Corrective Action Plan under Requirement R2, part 2.7.1 in the revised standard. Interchange is defined in the NERC glossary as "energy transfers that cross Balancing Authority boundaries" while Firm Transmission Service is "the highest quality (priority) service offered to customers under a filed rate schedule that anticipates no planned interruption." Requirement R1, part 1.1.5 has been revised to include known commitments for Firm Transmission Service and Interchange. **1.1.5** Known commitments for Firm Transmission Service and Interchange The SDT believes that Requirement R1, part 1.1.6 is still required but it has been broadened. **1.1.6** Resources required to supply Load The SDT has removed "including requirements of regulatory authorities and other legal obligations" since utilities already have to abide by such requirements. **R1** Each Transmission Planner and Planning Coordinator shall maintain System models within its respective area for performing the studies needed to complete its Planning Assessment. The models shall use the latest data consistent with that provided in accordance with the MOD-010 and MOD-012 standards, supplemented by other sources as needed, including items represented in the Corrective Action Plan, and shall represent projected System conditions	
SMUD	R1: The requirement should end after the words "shall simulate projected System conditions.". The following words should be deleted as it results in a clause that is overly broad and does not specify clear and concise reliability requirements: "including requirements of regulatory authorities and other legal obligations".
Response: The SDT agrees and has changed Requirement R1 accordingly. **R1** Each Transmission Planner and Planning Coordinator shall maintain System models within its respective area for performing the studies needed to complete its Planning Assessment. The models shall use the latest data consistent with that provided in accordance with the MOD-010 and MOD-012 standards, supplemented by other sources as needed, including items represented in the Corrective Action Plan, and shall represent projected System conditions.	
Progress Energy Florida, Inc.	For R1.1.2, PEF has the following comments:T-T Transformers, as major components of the BES, should be on this list.PEF does not object to the inclusion of Circuit Breakers on this list, provided that representation is not required in steady state load flow

Organization	Question 1 Comment
	cases. Breaker failure scenarios can be extensively studied in the steady state and stability realms by removing from service the transmission facilities that such a breaker event would initiate.PEF assumes that the inclusion of Protection System Equipment applies only to Stability Analysis. As for breakers, relay failure scenarios can be extensively studied in the steady state realm by removing from service the transmission facilities that such a relay event would initiate. Additionally, PEF also assumes that a comprehensive modeling of all Protection System Equipment (e.g. Transformer Sudden Pressure Relays, Bus Diff Relays, etc.) in Stability Analysis is not required, since only a limited amount of relaying in dynamic modeling is needed to adequately model the system with respect to what transmission/generation components would trip for a given event.A lack of specificity on the term Control devices leaves it open to wide interpretation. The SDT should, in detail and/or with examples, state what is intended. The term New technologies is only acceptable for inclusion if provision is made for the fact that Planning analysis software often lags behind the design industry in getting new technologies modeled such that Planners can analyze them. For R1.1.4 on Firm Transmission Service: PEF assumes that the SDT understands that some firm transmission service is not always modeled in every case, depending upon the economics and availability of alternate resources.
Response: The SDT has removed the equipment list under Requirement R1, part 1.1.2 (now part 1.1.3). Transmission lines, generators, and reactive power devices are already included in MOD standards. Circuit breakers, Protection System equipment, and control devices are not typically modeled - the impact of these devices are typically simulated and thus these are already included in Requirement R3, part R3.3, Requirement R4, part 4.3, and in header note 'c' in Table 1. New technologies were removed from the list and are already covered in the Corrective Action Plan under Requirement R2, part 2.7.1 in the revised standard. New technologies include any technology that is not currently in use on the electric power System that helps improve efficiency (i.e., energy storage/production technologies, low sag conductors, solid state interrupters, etc.). New technologies were removed from the list and are already covered in the Corrective Action Plan under Requirement R2, part 2.7.1 in the revised standard. The SDT believes that all firm Transmission should be modeled. Requirement R1, part 1.1.5 has been revised to include known commitments for Firm Transmission Service and Interchange. **1.1.5** Known commitments for Firm Transmission Service and Interchange	
Xcel Energy	R1 states that the models used in these studies shall be consistent with data provided through MOD-010 and MOD-012. The data submitted for these are updated on a schedule provided by the RRO and not necessarily reflective of any emerging changes that may have occurred between the MOD data collection cycle. The requirement should allow for exceptions to allow the most recent information to be included in the TPL studies.
Response: The SDT has modified Measure M1 to use the latest data available. **M1** Each Transmission Planner and Planning Coordinator shall provide evidence, in electronic or hard copy format, that it is maintaining System models, using the latest data consistent with MOD-010 and MOD-012, including items represented in the Corrective Action Plan, representing projected System conditions, and that the models represent the required information in accordance with Requirement R1.	
Arizona Public Service Co	The language in R1.1.2 needs to be clarified. Many of these facilities are not explicitly included in the models in the base cases (circuit breakers, protection system equipment, control devices). The language should be clarified to require modeling the effect of

Organization	Question 1 Comment
	the devices or the effect of the removal of the devices only where it is expected to impact the study outcome. Clarity is needed to explain the difference between R1.1.4 and R1.1.5. Expected interchange can be reasonably projected, but information on Firm Transmission Service is not always known or reasonably projected for future cases. For consistency with the 2nd bullet under R2.1.3, R1.1.4 should refer to expected transfers rather than Firm Transmission Service. With this change, R1.1.4 and R1.1.5 would be redundant and one should be deleted. We disagree with the inclusion of the words including requirements of regulatory authorities and other legal obligations at the end of R1. Entities already are required to do this. It does not need to be included in the standard. VSL: Under Severe VSL Column: The last sentence The System model did not simulate projected System Conditions as described in Requirement R1 is vague and should be clarified. What is meant by did not simulate. Is it referring to gross errors or something else? We recommend that Sever VSL be assigned only if the Transmission Planner failed to do the planning assessment. Hence it should not apply to R1 at all since R1 is only related to modeling accuracy.
Response: The SDT has removed the equipment list under Requirement R1, part 1.1.2 (now part 1.1.3). Transmission lines, generators, and reactive power devices are already included in MOD standards. Circuit breakers, Protection System equipment, and control devices are not typically modeled - the impact of these devices are typically simulated and thus these are already included in Requirement R3, part R3.3, Requirement R4, part 4.3, and in header note 'c' in Table 1. New technologies were removed from the list and are already covered in the Corrective Action Plan under Requirement R2, part 2.7.1 in the revised standard. The SDT believes that transfers and Firm Transmission Service can actually be two separate items since Firm Transmission Service is "the highest quality (priority) service offered to customers under a filed rate schedule that anticipates no planned interruption." Requirement R1, part 1.1.5 has been revised to include known commitments for Firm Transmission Service and Interchange. **1.1.5** Known commitments for Firm Transmission Service and Interchange The SDT has removed "including requirements of regulatory authorities and other legal obligations" since utilities already have to abide by such requirements. **R1** Each Transmission Planner and Planning Coordinator shall maintain System models within its respective area for performing the studies needed to complete its Planning Assessment. The models shall use the latest data consistent with that provided in accordance with the MOD-010 and MOD-012 standards, supplemented by other sources as needed, including items represented in the Corrective Action Plan, and shall represent projected System conditions. The SDT has replaced "simulate" with "represent" in the requirement, measure and under the Severe VSL category for Requirement R1. The SDT believes that the Severe level should be applied as noted in the VSL table since these cases are the basis for having an accurate planning assessment.	
New Brunswick System Operator	It is not clear how TP and PC are to coordinate activities. If R6 provided direction on individual and joint responsibilities then R6 should be referred to in each of the requirements which require TP and PC coordination. The VSL and Measurement for requirement R1 appears focused the number of subrequirements represented in the model. Ideally the focus should be the impacts or error of the results if something is not properly represented. This shift in thinking will allow the planner to assess and focus on those subrequirements which are important to the study results. R1.1.1 Planned outage duration needs to be defined. For example, a planned outage for a year or more should be included in the

Organization	Question 1 Comment
	Near term assessment.

Response: Requirement R7 (formerly Requirement R6) requires the Transmission Planner and Planning Coordinator to determine and identify joint responsibilities. The SDT believes that having this as a separate requirement is sufficient. No change made.

The SDT believes that the VSLs for Requirement R1 are already sufficient based on lack of industry comments. Note that the VSLs were modified to conform to the changes made to the requirement. Violation Risk Factors assess the impact to the BES of violating a requirement – not VSLs.

Requirement R1, part 1.1.2 has been revised to include known outages of generation or Transmission Facilities with a minimum duration of 6 months.

1.1.2 Known outage(s) of generation or Transmission Facility(ies) with a duration of at least six months.

Western Area Power Administration	General, all-encompassing comment: The change in TPL Standards, while well intended, will be difficult to administer since it has taken a simple Performance Table and translated it into a legal-type document that is very complex to relate to the physical system for the planning and operations staff. The performance requirements must be related to the physical response characteristics of the interconnected system operation without depending on a legal advise for training my new transmission system planning staff. The language in R1.1.2 needs to be clarified. Many of these facilities are not explicitly included in the models in the base cases (circuit breakers, protection system equipment, control devices). The language should be clarified to require modeling the effect of the devices or the effect of the removal of the devices where it is expected to impact the study outcome. Clarity is needed to explain the difference between R1.1.4 and R1.1.5. Expected interchange can be reasonably projected, but information on Firm Transmission Service is not always known or reasonably projected for future cases. For consistency with the 2nd bullet under R2.1.3, R1.1.4 should refer to expected transfers rather than Firm Transmission Service. With this change, R1.1.4 and R1.1.5 would be redundant and one should be deleted. I disagree with the inclusion of the words including requirements of regulatory authorities and other legal obligations at the end of R1. Entities already are required to do this. It does not need to be included in the standard.

Response: The SDT believes that it is following the intent of FERC and NERC in creating a reliable Bulk Electric System by following the requirements in TPL 001-1.

The SDT has removed the equipment list under Requirement R1, part 1.1.2 (now part 1.1.3). Transmission lines, generators, and reactive power devices are already included in MOD standards. Circuit breakers, Protection System equipment, and control devices are not typically modeled - the impact of these devices are typically simulated and thus these are already included in Requirement R3, part R3.3, Requirement R4, part 4.3, and in header note 'c' in Table 1. New technologies were removed from the list and are already covered in the Corrective Action Plan under Requirement R2, part 2.7.1 in the revised standard.

The SDT believes that transfers and Firm Transmission Service are actually two separate items since Firm Transmission Service is "the highest quality (priority) service offered to customers under a filed rate schedule that anticipates no planned interruption." Requirement R1, part 1.1.5 has been revised to include known commitments for Firm Transmission Service and Interchange.

1.1.5 Known commitments for Firm Transmission Service and Interchange

The SDT has removed "including requirements of regulatory authorities and other legal obligations" since utilities already have to abide by such requirements.

Organization	Question 1 Comment
R1 Each Transmission Planner and Planning Coordinator shall maintain System models within its respective area for performing the studies needed to complete its Planning Assessment. The models shall use the latest data consistent with that provided in accordance with the MOD-010 and MOD-012 standards, supplemented by other sources as needed, including items represented in the Corrective Action Plan, and shall represent projected System conditions.	
Ameren	There may be a potential conflict between MOD-010 and MOD-012 and legal documents such as Interconnection Agreements e.g. IA may specify a capacity level that exceeds the reported test levels. In the case of such conflicts, it is not clear which one should rule. Suggest replacing circuit breakers in R1.1.2 with terminal equipment since circuit breakers are covered by Protection System Equipment. Consider adding a reference in R1 to NERC Reliability Assessment Guidebook version 1.2, pp 17-18 for use of a particular load forecast level for inclusion in the planning models. I n R1.1.2, revise the language to show that we need to also represent the existing transmission system, and not just changes to the existing system. In R1.1.2, Clarification is needed for the phrase for each year should signify only those years for which assessment work was performed, rather than each year of the Near-Term and Long-Term Transmission Planning Horizon. There typically is not a model built for each year of the Near-Term and Long-Term Transmission Planning Horizon. In bullet three of R1.1.2, it is not clear whether bus-tie circuit breakers to be represented in the models. Typically circuit breakers are included in the contingency definitions along with the protection system equipment used in the powerflow models. The number of zero impedance branches which can presently be modeled using PSS/E software is limited to 4000. Also, the number of buses included in the powerflow models would increase with additional breaker modeling. In bullet seven of Requirement R1.1.2, what "new technologies" are to be represented in the models" R1.1.4 Firm Transmission Service - a single source can have transmission service to multiple sinks, and can be associated with transmission service in excess of the capacity of the source. There is a lack of clarity regarding the means by which Firm Transmission Service, a marketing term, is to be included in planning models. For example, should the standard define how to model wind farms (100% - off-peak and 20% on-peak, based on firm capacity from the wind generators, or other dispatch levels)?

Response: The SDT believes that additional modeling requirements not presently contained in the MOD standards are necessary for Transmission Planning purposes.

The SDT has removed the equipment list under Requirement R1, part 1.1.2 (now part 1.1.3). Transmission lines, generators, and reactive power devices are already included in MOD standards. Circuit breakers, Protection System equipment, and control devices are not typically modeled - the impact of these devices are typically simulated and thus these are already included in Requirement R3, part R3.3, Requirement R4, part 4.3, and in header note 'c' in Table 1. New technologies were removed from the list and are already covered in the Corrective Action Plan under Requirement R2, part 2.7.1 in the revised standard.

The SDT does not believe that a reference is needed to the NERC Reliability Assessment Guidebook since most utilities are using at least a 50/50 Load forecast as a minimum. No change made.

Organization	Question 1 Comment
The SDT has revised Requirement R1, part 1.1.1 to include "existing Facilities". **1.1.1** Existing Facilities The SDT has deleted the reference to year. **1.1.3** New planned Facilities and changes to existing Facilities See response to Requirement R1, part 1.1.2 above. . New technologies include any technology that is not currently in use on the electric power System that helps improve efficiency (i.e., energy storage/production technologies, low sag conductors, solid state interrupters, etc.). New technologies were removed from the list in Requirement R1, part 1.1.2 (now part 1.1.3) and are already covered in the Corrective Action Plan under Requirement R2, part 2.7.1 in the revised standard. The SDT believes that all firm Transmission contracts should be modeled. Requirement R1, part 1.1.5 has been revised to include known commitments for Firm Transmission Service and Interchange. **1.1.5** Known commitments for Firm Transmission Service and Interchange	
Puget Sound Energy, Inc.	The language in R1.1.2 needs to be clarified. Many of these facilities are not explicitly included in the models in the base cases (circuit breakers, protection system equipment, control devices). The language should be clarified to require modeling the effect of the devices or the effect of the removal of the devices where it is expected to impact the study outcome. Clarity is needed to explain the difference between R1.1.4 and R1.1.5. Expected interchange can be reasonably projected, but information on Firm Transmission Service is not always known or reasonably projected for future cases. For consistency with the 2nd bullet under R2.1.3, R1.1.4 should refer to expected transfers rather than Firm Transmission Service. With this change, R1.1.4 and R1.1.5 would be redundant and one should be deleted.
Response: The SDT has removed the equipment list under Requirement R1, part 1.1.2 (now part 1.1.3). Transmission lines, generators, and reactive power devices are already included in MOD standards. Circuit breakers, Protection System equipment, and control devices are not typically modeled - the impact of these devices are typically simulated and thus these are already included in Requirement R3, part R3.3, Requirement R4, part 4.3, and in header note 'c' in Table 1. New technologies were removed from the list and are already covered in the Corrective Action Plan under Requirement R2, part 2.7.1 in the revised standard. The SDT believes that transfers and Firm Transmission Service are actually two separate items since Firm Transmission Service is "the highest quality (priority) service offered to customers under a filed rate schedule that anticipates no planned interruption." Requirement R1, part 1.1.5 has been revised to include known commitments for Firm Transmission Service and Interchange. **1.1.5** Known commitments for Firm Transmission Service and Interchange	
Tenaska, Inc.	It is not clear that Requirement R1 requires ALL existing generators, substations, transmission line, transformers, etc. to be explicitly modeled for steady state and stability studies. In fact, Requirement 1.1.6 could be interpreted to exclude various generators from the models if they are not contracted to supply load. A suggestion is to re-word R1.1 to read as follows:R1.1 Models for the Planning Assessment shall represent all existing generators, substations (including specific busses within a substation), transmission lines, loads, capacitors, reactors, and other equipment connected to the transmission system and shall

Organization	Question 1 Comment
	further represent the following:(continue with R1.1.1 through R1.1.6) A further refinement to R1.1.6 should also be considered as follows:R1.1.6 Committment and dispatch schedules of resources expected to serve Load for the specific model.
Response: The intent of the SDT is to model all bulk electric Transmission Facilities depending on the model used - whether for load flow, Stability, or short circuit. The SDT has modified Requirement R1, part 1.1 to provide better clarity on these models. **1.1** System models shall represent: Requirement R1, part 1.1.6 has been broadened while still incorporating Network Resources. **1.1.6** Resources required to supply Load	
Manitoba Hydro	Requirement Text: R1: What is meant by including requirements of regulatory authorities and other legal obligations? This phase should be deleted. Can NERC make it an obligation in a standard to follow regulatory authority and other legal obligations? The planner has scope to determine the projected system conditions, and if a local regulator mandated a requirement, the planner would be able to include it without this statement. R1.1.1: Only long duration known planned or scheduled outages that are expected to last over a system peak should be included in the scope of this standard. Known planned or scheduled maintenance outages should not be a part of the planning scope as they are short duration and are planned to be taken when system conditions allow. Suggest wording change to Planned outages of generation and Transmission Facilities with an expected duration of 6 months or longer, if specifically known. R1.1.2: Suggest deleting new technologies as it is unknown as to what this is. If the SDT wants to make the list all inclusive, add words such as shall include but not be limited to in the requirement wording. Circuit breakers are not specifically represented in the planning models in order to keep the number of buses within the program capabilities. However, the effect of the circuit breaker configuration is normally considered in the creation of contingency files. Can the drafting team confirm that circuit breakers do not have to be specifically represented in the model? The same comment can be said about protection system equipment. Some generic zone 1 modeling may be included but in general the effect of protection equipment is included in contingency files. R1.1.4 & R1.1.5: Firm Transmission Service represents a contract that the planner is obligated to include. Based on the NERC definition, Interchange is defined as Energy transfers that cross Balancing Authority boundaries. Including it as a requirement mandates system expansion for non-firm system usage. Interchange is already covered in the sensitivities (Expected Transfers) and should not be a specific sub requirement of R1.1.2. Perhaps simply documenting the value of the Interchange used in the Model is sufficient. This value may change in the sensitivity analysis conducted in R2.1.3 and the TP/PA will decide the level that they will plan on protecting.Measure: The measure requires the planner to provide evidence such as the System model. What further evidence is required to ensure the planner is using data consistent with the MOD standards, is simulating projected system conditions, and that the models represent the required information in accordance with Requirement R1? It is suggested to remove and shall simulate projected System conditions from the main paragraph of R1 and reword R1.1 to System models and contingency files for the Planning Assessment shall represent projected System Conditions including:

Organization	Question 1 Comment
	Requirement R1 is very vague, and the Measure refers back to R1. The MOD standards deal with the building of the model. Most planners provide data in accordance with the MOD standards for a regional model building process. These models form the basis for the models the TPs and the PC use. The R1could be more specific by requiring the PC/TP to provide rationale for the projected system conditions used, which might include the generation schedule assumed, the transfer conditions, why peak or off-peak is important, etc.. VSLs: The requirement is very generic in nature and leans on the MOD requirements. Verification of compliance to this requirement will be problematic. What will be required to prove that the data "is consistent with the data provided in accordance with the MOD-010 and MOD-012 and other data sources"? What are these other data sources?? R1 only stipulates that the planner shall "simulate expected system conditions", so how does one decided that the "model did not simulate projected System Conditions as described in R1" (severe VSL)?

Response: The goal is for the responsible entity to build a realistic simulation, and the entity has to comply not only with the criteria in the TPL standard's tables, but also with other non-NERC regulations. However, the SDT has removed "including requirements of regulatory authorities and other legal obligations" since utilities already have to abide by such requirements.

> **R1** Each Transmission Planner and Planning Coordinator shall maintain System models within its respective area for performing the studies needed to complete its Planning Assessment. The models shall use the latest data consistent with that provided in accordance with the MOD-010 and MOD-012 standards, supplemented by other sources as needed, including items represented in the Corrective Action Plan, and shall represent projected System conditions.

Requirement R1, part 1.1.2 has been revised to include known outages of generation or Transmission Facilities with a minimum duration of 6 months**.**

> **1.1.2** Known outage(s) of generation or Transmission Facility(ies) with a duration of at least six months

New technologies include any technology that is not currently in use on the electric power System that helps improve efficiency (i.e., energy storage/production technologies, low sag conductors, solid state interrupters, etc.). New technologies were removed from the equipment list in Requirement R1.1.2 since these are already covered in the Corrective Action Plan under Requirement R2, part 2.7.1 in the revised standard.

The SDT has removed the equipment list under Requirement R1, part 1.1.2. Transmission lines, generators, and reactive power devices are already included in MOD standards. Circuit breakers, Protection System equipment, and control devices are not typically modeled - the impact of these devices are typically simulated and thus these are already included in Requirement R3, part 3.3, Requirement R4, part 4.3, and in header note 'c' in Table 1. New technologies were removed from the list and are already covered in the Corrective Action Plan under Requirement R2, part 2.7.

Requirement R1, part 1.1.5 has been revised to include known commitments for Firm Transmission Service and Interchange.

> **1.1.5** Known commitments for Firm Transmission Service and Interchange

Requirement R1 has been revised to replace "simulate" with "represent".

> **R1** Each Transmission Planner and Planning Coordinator shall maintain System models within its respective area for performing the studies needed to complete its Planning Assessment. The models shall use the latest data consistent with that provided in accordance with the MOD-010 and MOD-012 standards, supplemented by other sources as needed, including items represented in the Corrective Action Plan, and shall represent projected System

Organization	Question 1 Comment

conditions.

The SDT believes that additional modeling requirements not presently contained in the MOD standards are necessary for Transmission Planning purposes. The SDT has incorporated these additional requirements with the intent that they will be removed from the TPL standard when they are incorporated into the MOD standards at a later date.

The SDT has removed “and other date sources” from Requirement R1.

The SDT has replaced "simulate" with "represent" under the Severe VSL category for Requirement R1.

R1 VSL	The responsible entity’s System model failed to represent one of the Requirement R1, parts 1.1.1 through 1.1.6	The responsible entity’s System model failed to represent two of the Requirement R1, parts 1.1.1 through 1.1.6. OR The System model did not use the latest data consistent with the data provided in accordance with the MOD-010 and MOD-012 standards and other sources, including items represented in the Corrective Action Plan.	The responsible entity’s System model failed to represent three of the Requirement R1, parts 1.1.1 through 1.1.6.	The responsible entity’s System model failed to represent four or more of the Requirement R1, parts 1.1.1 through 1.1.6. OR The System model did not represent projected System conditions as described in Requirement R1.

E.ON U.S.	R1.Delete and other data sources. Consistency with MOD-010 and MOD-012 standards is measurable and should suffice. Delete including requirements of regulatory authorities and other legal obligations. The term: shall simulate projected System conditions does not exclude the above. If there is some significance to this statement it should be an item in R1.1. R1.1.4.Firm Transmission Service is often sold for less than one year on an as available basis. Also, Firm Transmission Service may be sold on one system without a complete path. As stated, it appears necessary to include these examples in the Planning models. E.ON U.S. believes that there should be some limitations put on this requirement such as Long-Term Firm Transmission Service for a period of 5 or more years.

Response: The SDT believes that additional modeling requirements not presently contained in the MOD standards are necessary for Transmission Planning purposes. The SDT has removed “and other data sources”.

R1 Each Transmission Planner and Planning Coordinator shall maintain System models within its respective area for performing the studies needed to complete its Planning Assessment. The models shall use the latest data consistent with that provided in accordance with the MOD-010 and MOD-012 standards, supplemented by other sources as needed, including items represented in the Corrective Action Plan, and shall represent projected System

Organization	Question 1 Comment
	conditions. The goal is for the responsible entity to build a realistic simulation, and the entity has to comply not only with the criteria in the TPL standard's tables, but also with other non-NERC regulations. However, the SDT has removed “including requirements of regulatory authorities and other legal obligations” since utilities already have to abide by such requirements. Requirement R1, part 1.1.5 has been revised to include known commitments for Firm Transmission Service and Interchange. **1.1.5** Known commitments for Firm Transmission Service and Interchange
National Grid	Comments: R1: A. Priority Comment- There needs to be some direction provided on the initial conditions used in the assessment. This guidance should encourage the use of initial conditions that reasonably stress transfers across interfaces between companies, areas, regions, into load pockets, and out of constrained areas. The expectation that transfers are reasonably stressed for a variety of interface conditions will require the consideration of different generation dispatches, which goes beyond the single generator out of service requirement of the standard. If initial conditions consider reasonably stressed conditions, then sensitivity analysis is embedded in the process. If sensitivity is embedded in the process, it is unclear if additional sensitivity is still required by the standard. B. In the reference to regulatory authorities and other legal obligations it is suggested that the phrase be changed from "simulate projected System conditions including requirements of regulatory authorities and other legal obligations" to "include projected System conditions and requirements of regulatory authorities and other legal obligation." In common usage of terms, models are used to simulate system response, but models alone do not simulate the system. Violation Severity Levels:R1 Suggest changing the phrase "simulate projected System conditions as described in Requirement R1" to "include projected System as described in Requirement R1," consistent with the recommended change to Requirement R1. Errata:Delete the period after "R1" in the first bullet in the Data Retention section. R1.1.1 Priority comment ? R1.1.1 should be removed. - Planned outages are addressed by Operational Planning processes and Transmission Operating Procedures for up to two years ahead removing the need for this to be incorporated into Planning Assessments. - If outages are planned, but Operations can not accommodate them in real time, then the outages are cancelled. - Outages are not generally known beyond one to two years in advance. R1.1.2 Comment - We recommend deleting the list of facilities:- Circuit breakers are not modeled as elements in a power flow nor are Control Devices and Protection Systems - The list of facilities is not consistent with the definition of “Facilities” in the NERC GlossaryR1.1.2 should simply read:R1.1.2New planned Facilities and changes to existing Facilities for each year of the Near-Term and Long-Term Transmission Planning Horizon. R1.1.3 Comment - The use of "real and reactive power" is prevalent within the industry, but R1.1.3 should be changed to "Active and reactive Demand of Load." When load is expressed as a complex quantity, active power is the real portion and reactive power is the imaginary portion. Thus for consistency, we should refer to active and reactive. R1.1.5 Comment What specifically needs to be modeled under Interchange” R1.1.6 Comment “This needs further definition or it should be deleted. It is not clear what a “network resource required to supply

Organization	Question 1 Comment
	load" is. Does this refer to Network Resource per FERC LGIP?

Response: Requirement R1, part 1.1.5 has been revised to include known commitments for Firm Transmission Service and Interchange. However the expected transfers under Requirement R2, part 2.1.3 are to further stress the system as a possible sensitivity analysis.

1.1.5 Known commitments for Firm Transmission Service and Interchange

The SDT has removed "including requirements of regulatory authorities and other legal obligations" since utilities already have to abide by such requirements.

R1 Each Transmission Planner and Planning Coordinator shall maintain System models within its respective area for performing the studies needed to complete its Planning Assessment. The models shall use the latest data consistent with that provided in accordance with the MOD-010 and MOD-012 standards, supplemented by other sources as needed, including items represented in the Corrective Action Plan, and shall represent projected System conditions.

The SDT has replaced "simulate" with "represent" under the Severe VSL category for Requirement R1.

R1 VSL	The responsible entity's System model failed to represent one of the Requirement R1, parts 1.1.1 through 1.1.6	The responsible entity's System model failed to represent two of the Requirement R1, parts 1.1.1 through 1.1.6. OR The System model did not use the latest data consistent with the data provided in accordance with the MOD-010 and MOD-012 standards and other sources, including items represented in the Corrective Action Plan.	The responsible entity's System model failed to represent three of the Requirement R1, parts 1.1.1 through 1.1.6.	The responsible entity's System model failed to represent four or more of the Requirement R1, parts 1.1.1 through 1.1.6. OR The System model did not represent projected System conditions as described in Requirement R1.

The SDT agrees and had made this change under Data Retention.

Requirement R1, part 1.1.2 has been revised to include known outages of generation or Transmission Facilities with a minimum duration of 6 months.

1.1.2 Known outage(s) of generation or Transmission Facility(ies) with a duration of at least six months.

The SDT believes that additional modeling requirements not presently contained in the MOD standards are necessary for Transmission Planning purposes. The SDT has removed the equipment list under Requirement R1, part 1.1.2 (now part 1.1.3). Transmission lines, generators, and reactive power devices are already included in

Organization	Question 1 Comment
MOD standards. Circuit breakers, Protection System equipment, and control devices are not typically modeled - the impact of these devices are typically simulated and thus these are already included in Requirement R3, part R3.3, Requirement R4, part 4.3, and in header note 'c' in Table 1. New technologies were removed from the list and are already covered in the Corrective Action Plan under Requirement R2, part 2.7.1 in the revised standard. The SDT has modified Requirement R1, part 1.1.4 (former part 1.1.3). **1.1.4** Real and reactive Load forecasts Interchange is defined in the NERC glossary as "energy transfers that cross Balancing Authority boundaries" while Firm Transmission Service is "the highest quality (priority) service offered to customers under a filed rate schedule that anticipates no planned interruption." The intent is to include, but not be limited to these requirements. The SDT has revised Requirement R1, part 1.1.6. **1.1.6** Resources required to supply Load	
Entergy Services, Inc	Planned facilities and planned changes to existing facilities should be further defined to ensure facilities or changes that are unlikely to be constructed are not included in the models. See the proposed definition of planned facilities in the comments provided to question #8. Facilities included in the models should be only those projects that are committed to by the Transmission Owner or other users of the transmission grid. Consistent with the standards requirement to include only firm transmission service (R1.1.4), uncommitted facilites should not be included because an oversubscription of the grid could occur. R1.1: Please clarify what the SDT means by models for the Planning Assessment shall present, expecially for facilities such as circuit breakers, protection system equipment, and new technologies. Models also need to represent existing facilities R1.1.2: The phrase, for each year of the Near-Term and Long-Term Transmission Planning Horizon, should be revised to remove each year because there may not be studies in each year. R1.1.4: Firm Transmission Service - a single source can have transmission service to multiple sinks, and can be associated with transmission service in excess of the capacity of the source. There is a lack of clarity regarding the means by which Firm Transmission Service, a marketing term, is to be included in planning models. Not sure if this is applicable to Requirement 1 or 2.
Response: The projects that get included under the Corrective Action Plans are presumed to be the utility's best alternatives at that time in order to achieve compliance. The SDT understands that these alternatives may change over time - but these changes must be addressed under Requirement R2, part 2.7.6 in the revised standard. The SDT has removed the equipment list under Requirement R1, part 1.1.2 (now part 1.1.3). Transmission lines, generators, and reactive power devices are already included in MOD standards. Circuit breakers, Protection System equipment, and control devices are not typically modeled - the impact of these devices are typically simulated and thus these are already included in Requirement R3, part 3.3, Requirement R4, part 4.3, and in header note 'c' in Table 1. New technologies were removed from the list and are already covered in the Corrective Action Plan under Requirement r2, part 2.7.1 in the revised standard. The reference to year has been deleted. The SDT believes that all firm Transmission contracts should be modeled. Requirement R1, part 1.1.5 has been revised to include known commitments for Firm Transmission Service and Interchange.	

Organization	Question 1 Comment
1.1.5 Known commitments for Firm Transmission Service and Interchange	
Great River Energy	R1.1 is just repeating what should already be in the MOD-010 and MOD-012 requirements. Why re-iterate this in the TPL standard? The planners are expecting that the model building process will already include these components listed in R1.1 otherwise there wouldn't be a functional model. R1.1.1 may be the only thing that needs to be identified in R1 as any known long-term outage or retirement of a facility may have happened after the model building process. If R1.1 is kept I would suggest removing "Models for" so that R1.1 reads "The Planning Assessment shall represent: R 1.1.1 says the assessment shall represent planned outages if specifically known. It does not however distinguish the length of the outage to be considered. Should a 1 week maintenance outage in Year five be included? Should a 2 year complete rebuild outage lasting through year two and three be included? It is GRE's opinion that the SDT needs to add a comment about the length of the planned outage and its relevance to the assessment. In the Violation Severity Levels, R1 seems to be weak since any solved model should meet this requirement. Again this would seem to be more related to the MOD010 and MOD012 process. R1 should focus on documenting changes that are being preformed against the data that was submitted in MOD-010 and MOD-012 process.
Response: The SDT believes that additional modeling requirements not presently contained in the MOD standards are necessary for Transmission Planning purposes. The SDT has incorporated these additional requirements with the intent that they will be removed from the TPL standard when they are incorporated into the MOD standards at a later date. The SDT has removed the equipment list under Requirement R1, part 1.1.2 (now part 1.1.3). Transmission lines, generators, and reactive power devices are already included in MOD standards. Circuit breakers, Protection System equipment, and control devices are not typically modeled - the impact of these devices are typically simulated and thus these are already included in Requirement R3, part R3.3, Requirement R4, part 4.3, and in header note 'c' in Table 1. New technologies were removed from the list and are already covered in the Corrective Action Plan under Requirement R2, part 2.7.1 in the revised standard. The SDT has revised the language in Requirement R1, part 1.1 (now part 1.1.2) based on industry comments. . **1.1.2** Known outage(s) of generation or Transmission Facility(ies) with a duration of at least six months. The SDT believes that the Severe level should be applied as noted in the VSL table since these cases are the basis for having an accurate Planning Assessment. No change made.	
BC Hydro	Comments: Consider just referring to the MOD series of standards, not specific individual MOD standards because the numbering of the MOD standards could change and additional relevant MOD standards could be added. Consider rewording the second sentence to read, The data and models shall meet all requirements of the MOD series of standards. The MOD standards should include the requirements of regulatory authorities and other legal obligations and need not be repeated in the TBL standard(s). R1.1.2: Consider changing to, New planned Facilities and planned changes to existing and changing the fifth bullet to read, Normal actions of Protection System equipment R1.1.3: Consider changing to, "End-use customer loads and generators [how small loads are aggregated should be covered in the MOD standards. A key point is that large industrial customers with significant generation that reduces their net peak demand should not be represented simply as a net load since that would not properly model the dynamic impacts of the load and

Organization	Question 1 Comment
	generation components]. R1.1.4: Consider changing to, Worst-case transfers on Firm Transmission Service Reservations. R1.1.5: Consider removing this requirement. It should be covered by R1.1.4 R1.1.6: Consider changing to, Generating units [the MOD standards should specify the details like how exciters, governors and associated control equipment must be modeled] Comment on M1: Consider changing to, using data consistent with the MOD series of standards, simulating. Consider just referring to the entire series of a particular standard, not specific individual standards because the numbering of the standards being referenced could change and additional relevant individual standards could be added.

Response: The SDT believes that additional modeling requirements not presently contained in the MOD standards are necessary for Transmission Planning purposes. The SDT referenced the specific MOD standards to ensure that the requirements were limited to those needed to complete the Planning Assessment. When the MOD standards are revised, this standard will be reviewed for conforming changes. The SDT has removed "including requirements of regulatory authorities and other legal obligations" since utilities already have to abide by such requirements.

> **R1** Each Transmission Planner and Planning Coordinator shall maintain System models within its respective area for performing the studies needed to complete its Planning Assessment. The models shall use the latest data consistent with that provided in accordance with the MOD-010 and MOD-012 standards, supplemented by other sources as needed, including items represented in the Corrective Action Plan, and shall represent projected System conditions.

The SDT has reworded Requirement R1, part 1.1.1 to include existing Facilities.

> **1.1.1** Existing Facilities

The SDT has removed the equipment list under Requirement R1, part 1.1.2 (now part 1.1.3). Transmission lines, generators, and reactive power devices are already included in MOD standards. Circuit breakers, Protection System equipment, and control devices are not typically modeled - the impact of these devices are typically simulated and thus these are already included in Requirement R3, part R3.3, Requirement r4, part 4.3, and in header note 'c' in Table 1. New technologies were removed from the list and are already covered in the Corrective Action Plan under Requirement R2, part 2.7.1 in the revised standard.

The SDT has modified Requirement R1, part 1.1.4 (now part 1.1.5) to state "Real and reactive Load Forecasts. Note that the generator modeling is addressed in the MOD standards.

> **1.1.4** Real and reactive Load forecasts

The SDT believes that all contracted firm Transmission should be modeled. Requirement R1, part 1.1.5 has been revised to include known commitments for Firm Transmission Service and Interchange.

> **1.1.5** Known commitments for Firm Transmission Service and Interchange

See response for Requirement R1, part 1.1.2 above.

The SDT believes that the specific MOD standards should be addressed in this TPL 001-1 draft since they deal directly with the modeling requirements necessary for creating base cases. No change made.

Organization	Question 1 Comment
Midwest ISO	Generally the Midwest ISO agrees with FirstEnergy's comments regarding this requirement. However, if the SDT insists on keeping this requirement as is then we propose the following corrections specific to each requirement. Specific Comments for Requirement 1: A) Under R1 there is language that references "other data sources; can the SDT please offer some clarification on what "other data sources are to be Could other data sources be Tariff requirements" B) Again under R1, the Time Horizon of the TPL standards is intended for years one through 10; However the Time Horizon shown in R1 only says "Long-term Planning". By definition of Long-Term Transmission Planning Horizon this covers years 6 through 10 and beyond. Suggestion to change the Time Horizon to read: Near-Term and Long-Term Transmission Planning. C) Under R1.1.1 it is required that models represent planned outages of generation and transmission facilities, if specifically known. This does not allow or require a Transmission Planner or Planning Coordinator to include outages due to maintenance and/or due to construction programs where certain facilities are out of service during various phases of construction, as part of the Assessment. For this reason, we believe the following language for R1.1.1 would improve this requirement: Planned outages of generation and Transmission Facilities if specifically scheduled or planned for. D) Under R1.1.1 we suggest adding sub-requirement R1.1.7 Generation dispatch patterns deemed appropriate by the Transmission Planner and Planning Coordinator. This clarifies that when building System models, generation dispatch is part of the model building process. E) Under R1.1.2 there is uncertainty around the language of New planned Facilities. We offer the following definition for Planned Facilities to be added to the definition section of this standard and further added to the NERC Glossary of Terms: Planned Facilities Generation and Transmission Facilities that are expected to be implemented with an in service date prior to the plan year being studied. F) Under R1.1.2 a bullet should be added for Relay Loadability Limitations. The standard requirements for relay loadability are included in PRC-023-1.

Response: The SDT has removed the language "and other data sources".

> **R1** Each Transmission Planner and Planning Coordinator shall maintain System models within its respective area for performing the studies needed to complete its Planning Assessment. The models shall use the latest data consistent with that provided in accordance with the MOD-010 and MOD-012 standards, supplemented by other sources as needed, including items represented in the Corrective Action Plan, and shall represent projected System conditions.

The *Time Horizon* term at the end of the requirement deals with mitigation time periods (as shown below) and is not connected to the assessment time frames. No change made. Time Horizons are a consideration when there is a violation of a requirement – the impact to the BES of violating a requirement with a long-term planning horizon is not expected to be as severe as the impact associated with violating a requirement with a real-time operations time horizon.

Mitigation Time Horizon

The time horizons available for mitigating a violation to a requirement include the following:

- **Long-term Planning** — a planning horizon of one year or longer.

Organization	Question 1 Comment
	• **Operations Planning** — operating and resource plans from day-ahead up to and including seasonal. • **Same-day Operations** — routine actions required within the timeframe of a day, but not real-time. • **Real-time Operations** — actions required within one hour or less to preserve the reliability of the bulk electric system. • **Operations Assessment** — follow-up evaluations and reporting of real time operations. If a transmission element outage occurs during a specified time, then the new base case for that time period would result with that element out of service pre-contingency. Requirement R1, part 1.1.2 has been revised to include known outages of generation or Transmission Facilities with a minimum duration of 6 months. **1.1.2** Known outage(s) of generation or Transmission Facility(ies) with a duration of at least six months. Requirement R1, part 1.1.6 now states Resources required to supply Load. **1.1.6** Resources required to supply Load Requirement R1, part 1.1.3 covers new planned Facilities and changes to existing Facilities. **1.1.3** New planned Facilities and changes to existing Facilities The SDT has removed the equipment list under Requirement R1, part 1.1.2. Transmission lines, generators, and reactive power devices are already included in MOD standards. Circuit breakers, Protection System equipment, and control devices are not typically modeled - the impact of these devices are typically simulated and thus these are already included in Requirement R3, part 3.3, Requirement R4, part 4.3, and in header note 'c' in Table 1. New technologies were removed from the list and are already covered in the Corrective Action Plan under Requirement R2, part 2.7. Relay loadability is covered under Requirement R3, part 3.3.3. No change made.
PJM	In R1, why require a Planning Coordinator AND a Transmission Planner to maintain models for the same area Concern with the words - for each yearin R1.1.2. Does this mean that a case for each year, at least, will need to be produced? Will five, one for each season and a light load, each year need to be produced R1.1.5 is not clear. Is the Interchange exclusive of Firm Transmission Service as mentioned in R1.1.4 Maybe -non-firm transmission service-- is clearer.
Response: Requirement R7 requires the Transmission Planner and Planning Coordinator to determine and identify joint responsibilities. The SDT has modified Requirement R1 to state that the Transmission Planner and Planning Coordinator are responsible for maintaining System models for their respective areas. **R1** Each Transmission Planner and Planning Coordinator shall maintain System models within their respective areas for performing the studies needed to complete their Planning Assessment. The models shall use the latest data consistent with that provided in accordance with the MOD-010 and MOD-012 standards, supplemented by other sources as needed, including items represented in the Corrective Action Plan, and shall represent projected System conditions. The SDT has revised Requirement R1, part 1.1.2 (now part 1.1.3) to delete the reference to "year".	

Organization	Question 1 Comment
1.1.3 New planned Facilities and changes to existing Facilities The SDT believes that transfers and Firm Transmission Service are actually two separate items since Firm Transmission Service is "the highest quality (priority) service offered to customers under a filed rate schedule that anticipates no planned interruption." Requirement R1, part 1.1.5 has been revised to include known commitments for Firm Transmission Service and Interchange. **1.1.5** Known commitments for Firm Transmission Service and Interchange	
American Electric Power	Under R1.1.2. Add Transformers, otherwise, revise Transmission Lines to read Transmission Facilities. Also under R1.1.2., add Series Reactors and Capacitors as a distinct category of facilities from Reactive Power devices that include shunt capacitors and reactors, and Control devices that include phase angle regulating and variable frequency transformers, FACTS devices, and other power electronics. These additions would further clarify the types of facilities that should be included, and these comments are made in full recognition that the introductory sentence to R1.1.2. contains the wording such as.
Response: The SDT has removed the equipment list under Requirement R1, part 1.1.2 (now part 1.1.3). Transmission lines, generators, and reactive power devices are already included in MOD standards. Circuit breakers, Protection System equipment, and control devices are not typically modeled - the impact of these devices are typically simulated and thus these are already included in Requirement R3, part 3.3, requirement R4, part 4.3, and in header note 'c' in Table 1. New technologies were removed from the list and are already covered in the Corrective Action Plan under Requirement R2, part 2.7. The SDT has also revised this requirement to remove 'such as'.	
ITC Holdings	Comments: We question the value of R1.1.1, which requires the inclusion of transmission or generator outages if..known, in a planning standard. If an outage puts you in a compliance deficiency for the duration of any outage, would you be fined for such an instance? Category P6 contingencies should cover these outages and not require a separate requirement such as R1.1.1. This requirement could also make an entity subject to fines for long term outages needed to upgrade or replace equipment as part of a CAP for other category violations. If this requirement is kept, it should be restricted to very long term outages and exclude those outages needed to complete CAPs for other violations. R1.1.6 requires the use of Network Resources to supply load. For many planning studies, particularly beyond the five year window, the capacity additions needed to supply load are frequently unknown. Since there are no requirements or guidelines for assuming what and where these resources will be, assumptions will have to be made regarding the needed resources. Additionally, existing network resources could be retired or re-designated to serve other load. It is unclear as written exactly what would be a violation of this requirement if known network resources are not sufficient to serve projected load. Finally, with the advent of market power, would a dispatch utilizing this type of dispatch be considered a violation of this standard.
Response: The SDT believes that the outages should be modeled to insure the system reliability during the outage durations. Requirement R1, part 1.1.2 has been revised to include known outages of generation or Transmission Facilities with a minimum duration of 6 months. If a transmission element outage occurs during a specified time, then the new base case for that time period would result with that element out of service pre-contingency. All performance criteria would then apply to that new base case. **1.1.2** Known outage(s) of generation or Transmission Facility(ies) with a duration of at least six months.	

Organization	Question 1 Comment
The SDT has revised Requirement R1, part 1.1.6. to include Resources required to supply Load. **1.1.6** Resources required to supply Load	
Northern Indiana Public Service Company	Under R1.1, insert, "as applicable" after "represent". Since R1 covers steady state, short circuit and dynamic models, data requirements should be applicable to the specific model. Representation of circuits breakers, protection system equipment and control devices is not typical of steady state model inputs.
Response: The SDT has removed the equipment list under Requirement R1, part 1.1.2. Transmission lines, generators, and reactive power devices are already included in MOD standards. Circuit breakers, Protection System equipment, and control devices are not typically modeled - the impact of these devices are typically simulated and thus these are already included in Requirement R3, part 3.3, Requirement R4, part 4.3, and in header note 'c' in Table 1. New technologies were removed from the list and are already covered in the Corrective Action Plan under Requirement R2, part 2.7.	
Minnesota Power	A) Under R1 there is language that references other data sources; can the SDT please offer some clarification on what other data sources are to be? Could other data sources be Tariff requirements? B) Again under R1, the Time Horizon of the TPL standards is intended for years one through 10; However the Time Horizon shown in R1 only says Long-term Planning. By definition of Long-Term Transmission Planning Horizon this covers years 6 through 10 and beyond. Suggestion to change the Time Horizon to read: Near-Term and Long-Term Transmission Planning. C) Under R1.1.1 it is required that models represent planned outages of generation and transmission facilities, if specifically known. However, the requirement does not distinguish the length of the outage to be considered. Should a one week maintenance outage in Year Five be included? Should a two-year complete rebuild outage lasting through the entire years 2 and 3 be included? The SDT team needs to add a comment about the length of the planned outage and its relevance to the assessment. D) R1.1 is repeating what should already be in the MOD-010 and MOD-012 requirements. Is the inclusion of these elements in the TPL standard redundant? The planners expect the model building process will already included the components listed in R1.1, otherwise there would not be a functional model. If R1.1 is kept, we suggest removing the "Models for" so that R1.1 reads "The Planning Assessment shall represent:"
Response: The goal is for the responsible entity to build a realistic simulation, and the entity has to comply not only with the criteria in the TPL standard's tables, but also with other non-NERC regulations. The SDT has deleted the language "and other data sources". **R1** Each Transmission Planner and Planning Coordinator shall maintain System models within their respective areas for performing the studies needed to complete their Planning Assessment. The models shall use the latest data consistent with that provided in accordance with the MOD-010 and MOD-012 standards, supplemented by other sources as needed, including items represented in the Corrective Action Plan, and shall represent projected System conditions. The *Time Horizon* term at the end of the requirement deals with mitigation time periods (as shown below) and is not connected to the assessment time frames. Time Horizons are a consideration when there is a violation of a requirement – the impact to the BES of violating a requirement with a long-term planning horizon is not expected to be as severe as the impact associated with violating a requirement with a real-time operations time horizon. No change made.	

Organization	Question 1 Comment
Mitigation Time Horizon The time horizons available for mitigating a violation to a requirement include the following: • **Long-term Planning** — a planning horizon of one year or longer. • **Operations Planning** — operating and resource plans from day-ahead up to and including seasonal. • **Same-day Operations** — routine actions required within the timeframe of a day, but not real-time. • **Real-time Operations** — actions required within one hour or less to preserve the reliability of the bulk electric system. • **Operations Assessment** — follow-up evaluations and reporting of real time operations. The SDT believes that the outages should be modeled to insure the system reliability during the outage durations. If a transmission element outage occurs during a specified time, then the new base case for that time period would result with that element out of service pre-contingency. All performance criteria would then apply to that new base case. Requirement R1, part 1.1.2 has been revised to include known outages of generation or Transmission Facilities with a minimum duration of 6 months. **1.1.2** Known outage(s) of generation or Transmission Facility(ies) with a duration of at least six months. The SDT believes that additional modeling requirements not presently contained in the MOD standards are necessary for Transmission Planning purposes. The SDT has incorporated these additional requirements with the intent that they will be removed from the TPL standard when they are incorporated into the MOD standards at a later date. The SDT has reworded Requirement R1, part 1.1. **1.1** System models shall represent:	
LADWP	For R1.1.4 the requirements should be based on "expected transfer" instead of "firm transmission service". When projecting into future, the term "firm transmission service" is meaningless because transmission service contracts can be changed overnight. Using "firm transmission service" as a base would also exclude any new contract that are not considered in the study. It is very short-sighted to plan new transmssion facilities only based on "firmed transmission services". R1.1.2 is very confusing. What is a new technology? Is it something we don't know? If we know what it is, is it still a new tchnology? If we don't know, how do we model it? Also, we do not model individual circuit breaker but the effect of the circuit breakers; same apply with control devices or protective system equipment. Need more clarity. In general, a laundry list of items to be represented is a bad idea because it gives the impression that anything not on the list does not need to be modeled.
Response: The SDT believes that transfers and Firm Transmission Service are actually two separate items since Firm Transmission Service is “the highest quality (priority) service offered to customers under a filed rate schedule that anticipates no planned interruption.” Requirement R1, part 1.1.5 has been revised to include known commitments for Firm Transmission Service and Interchange. **1.1.5** Known commitments for Firm Transmission Service and Interchange	

Organization	Question 1 Comment
New technologies include any technology that is not currently in use on the electric power System that helps improve efficiency (i.e., energy storage/production technologies, low sag conductors, solid state interrupters, etc.). New technologies were removed from the list in Requirement R1, part 1.1.2 and are already covered in the Corrective Action Plan under Requirement R2, part 2.7.1 in the revised standard. The SDT has removed the equipment list under Requirement R1, part 1.1.2. Transmission lines, generators, and reactive power devices are already included in MOD standards. Circuit breakers, Protection System equipment, and control devices are not typically modeled - the impact of these devices are typically simulated and thus these are already included in Requirement R3, part 3.3, Requirement R4, part 4.3, and in header note 'c' in Table 1. New technologies were removed from the list and are already covered in the Corrective Action Plan under Requirement R2, part 2.7.1 in the revised standard.	
Platte River Power Authority	R1.1.2. "....for each year of the Near-Term and Long-Term..." Models for each year of the 10 years in the planning horizons are not developed in our Region. Please clarify your intention. R1.1.2. 3rd bullet - "Circuit breakers (or the effects of)" R1.1.2. 4th bullet - "Protection System equipment (or the effects of)" R1.1.2. 5th bullet - "Control devices (or the effects of)" R1.1.2. 6th bullet - "New techonologies (or the effects of)" R1.1.4. "Firm Transmission Service (or expected transfers)
Response: The SDT has deleted "year". **1.1.3** New planned Facilities and changes to existing Facilities The SDT has removed the equipment list under Requirement R1, part 1.1.2 (now part 1.1.3). Transmission lines, generators, and reactive power devices are already included in MOD standards. Circuit breakers, Protection System equipment, and control devices are not typically modeled - the impact of these devices are typically simulated and thus these are already included in Requirement R3, part 3.3, Requirement R4, part 4.3, and in header note 'c' in Table 1. New technologies were removed from the list and are already covered in the Corrective Action Plan under Requirement R2, part 2.7.1 in the revised standard. The SDT believes that transfers and Firm Transmission Service are actually two separate items since Firm Transmission Service is "the highest quality (priority) service offered to customers under a filed rate schedule that anticipates no planned interruption." Requirement R1, part 1.1.5 has been revised to include known commitments for Firm Transmission Service and Interchange. **1.1.5** Known commitments for Firm Transmission Service and Interchange	
MAPPCOR	R1 - what it means to include requirements of regulatory authorities and other legal obligations. Even if some version of this language is kept in the final standard, it seems to belong in R2 rather than R1. R1.1.1 - should remove the word specifically since it means nothing. Only known long-term outages of generation and transmission should be required to be modeled. R1.1.2 in the first line should have the word studied to avoid confusion, to read "New planned Facilities and changes to existing Facilities for each year studied of the "?

Organization	Question 1 Comment
	R1 states that the models used in these studies shall be consistent with data provided through MOD-010 and MOD-012. The data submitted for these are updated on a schedule provided by the RRO and not necessarily reflective of any emerging changes that may have occurred between the MOD data collection cycle. The requirement should allow for exceptions to allow the most recent information to be included in the TPL studies.

Response: : The goal is for the responsible entity to build a realistic simulation, and the entity has to comply not only with the criteria in the TPL standard's tables, but also with other non-NERC regulations. However, the SDT has removed "including requirements of regulatory authorities and other legal obligations" since utilities already have to abide by such requirements.

> **R1** Each Transmission Planner and Planning Coordinator shall maintain System models within their respective areas for performing the studies needed to complete their Planning Assessment. The models shall use the latest data consistent with that provided in accordance with the MOD-010 and MOD-012 standards, supplemented by other sources as needed, including items represented in the Corrective Action Plan, and shall represent projected System conditions.

The SDT has deleted 'if specifically known'.

> **1.1.2** Known outage(s) of generation or Transmission Facility(ies) with a duration of at least six months.

The SDT has deleted "year".

The SDT has modified Measure M1 to use the latest data available.

> **M1** Each Transmission Planner and Planning Coordinator shall provide evidence, in electronic or hard copy format, that it is maintaining System models, using the latest data consistent with MOD-010 and MOD-012, including items represented in the Corrective Action Plan, representing projected System conditions, and that the models represent the required information in accordance with Requirement R1.

Idaho Power	The language in R1.1.2 needs to be clarified. Many of these facilities are not explicitly included in the models in the base cases (circuit breakers, protection system equipment, control devices). The language should be clarified to require modeling the effect of the devices or the effect of the removal of the devices where it is expected to impact the study outcome. Clarity is needed to explain the difference between R1.1.4 and R1.1.5. Expected interchange can be reasonably projected, but information on Firm Transmission Service is not always known or reasonably projected for future cases. For consistency with the 2nd bullet under R2.1.3, R1.1.4 should refer to expected transfers rather than Firm Transmission Service. With this change, R1.1.4 and R1.1.5 would be redundant and one should be deleted.

Response: The SDT has removed the equipment list under Requirement R1, part 1.1.2. Transmission lines, generators, and reactive power devices are already included in MOD standards. Circuit breakers, Protection System equipment, and control devices are not typically modeled - the impact of these devices are typically simulated and thus these are already included in Requirement r3, part 3.3, Requirement r4, part 4.3, and in header note 'c' in Table 1. New technologies were removed from the list and are already covered in the Corrective Action Plan under Requirement R2, part 2.7.1 in the revised standard.

The SDT believes that transfers and Firm Transmission Service are actually two separate items since Firm Transmission Service is "the highest quality (priority) service offered to customers under a filed rate schedule that anticipates no planned interruption." Requirement R1, part 1.1.5 has been revised to include known commitments for Firm Transmission Service and Interchange.

Organization	Question 1 Comment
1.1.5 Known commitments for Firm Transmission Service and Interchange	
Turlock Irrigation District	TPL 001-1 R1 could potentially result in a WECC auditor having to determine compliance with requirements of regulatory authorities and other legal obligations, beyond the scope of its expertise. TID proposes that if that language is to be retained, it shall be assumed that the requirements of regulatory authorities and other legal obligations are being simulated unless those other entities have formally found the member to be in violation of their requirements or obligations.
Response: The goal is for the responsible entity to build a realistic simulation, and the entity has to comply not only with the criteria in the TPL standard's tables, but also with other non-NERC regulations. However, the SDT has removed "including requirements of regulatory authorities and other legal obligations" since utilities already have to abide by such requirements. **R1** Each Transmission Planner and Planning Coordinator shall maintain System models within its respective area for performing the studies needed to complete its Planning Assessment. The models shall use the latest data consistent with that provided in accordance with the MOD-010 and MOD-012 standards, supplemented by other sources as needed, including items represented in the Corrective Action Plan, and shall represent projected System conditions.	
New York Independent System Operator	R1.1.1 requires that models shall represent planned outages of generation and transmission facilities, if specifically known. The standard should be clarified to state whether it allows or requires a PC/TP to include as part of the Assessment outages due to maintenance and due to construction programs where certain facilities are out of service during phases of construction. Such maintenance and construction schedules are established but may not be finalized over the planning horizon. Further, the standard is not clear whether planned outages are to be treated as creating a normal system condition or as a contingency from which system adjustments are made prior to subsequent eventsMOD 10 and 12 are based on requirements determined by the RRO in MOD 11 and 13 respectively. Is this appropriate? Further, the PC is not an applicable entity in MOD 10 and 12. Moreover, the standard should define other data sources. R1.1.2. states that models for facilities such as circuit breakers and protection systems should be represented. Comment - The list of facilities should be deleted for the following reasons:- it is not needed;- the NYISO does not model circuit breakers, Control Devices, and Protection Systems;- it is not consistent with the definition of Facilities in the NERC Glossary.
Response: The SDT believes that the outages should be modeled to insure the System reliability during the outage durations. If a Transmission element outage occurs during a specified time, then the new base case for that time period would result with that element out of service pre-contingency. Requirement R1, part 1.1.2 has been revised to include known outages of generation or Transmission Facilities with a minimum duration of 6 months. **1.1.2** Known outage(s) of generation or Transmission Facility(ies) with a duration of at least six months. The Planning Coordinator is to still use the information provided under MOD-010 and -012. The SDT has removed "and other data sources". **R1** Each Transmission Planner and Planning Coordinator shall maintain System models within its respective area for performing the studies needed to	

Organization	Question 1 Comment
complete its Planning Assessment. The models shall use the latest data consistent with that provided in accordance with the MOD-010 and MOD-012 standards, supplemented by other sources as needed, including items represented in the Corrective Action Plan, and shall represent projected System conditions. The SDT has removed the equipment list under Requirement R1, part 1.1.2. Transmission lines, generators, and reactive power devices are already included in MOD standards. Circuit breakers, Protection System equipment, and control devices are not typically modeled - the impact of these devices are typically simulated and thus these are already included in Requirement R3, part 3.3, Requirement R4, part 4.3, and in header note 'c' in Table 1. New technologies were removed from the list and are already covered in the Corrective Action Plan under Requirement R2, part 2.7.1 in the revised standard.	
Duke Energy	Revise R1.1.2 to include the phrase to be studied as follows: New planned Facilities and changes to existing Facilities for each year to be studied of the Near-Term and Long-Term Transmission Planning Horizon, such as :
Response: The SDT has deleted "year". **1.1.3** New planned Facilities and changes to existing Facilities Existing Facilities are now shown under Requirement R1, part 1.1.1. **1.1.1** Existing Facilities	
Tucson Electric Power Company	The language in R1.1.2 needs to be clarified. Many of these facilities are not explicitly included in the models in the base cases (circuit breakers, protection system equipment, control devices). The language should be clarified to require modeling the effect of the devices or the effect of the removal of the devices where it is expected to impact the study outcome. An alternative, instead of specifically listing elements, make a general statement that the models should include those elements required in MOD-010 through MOD-013. If an element is missing, double jeopardy could result due to a violation of the applicable MOD standard and this TPL standard. Clarity is needed to explain the difference between R1.1.4 and R1.1.5. Expected interchange can be reasonably projected, but information on Firm Transmission Service is not always known or reasonably projected for future cases. For consistency with the 2nd bullet under R2.1.3, R1.1.4 should refer to expected transfers rather than Firm Transmission Service. With this change, R1.1.4 and R1.1.5 would be redundant and one should be deleted. We disagree with the inclusion of the words including requirements of regulatory authorities and other legal obligations at the end of R1. Entities already are required to do this. It does not need to be included in the standard.
Response: The SDT has removed the equipment list under Requirement R1, part 1.1.2. Transmission lines, generators, and reactive power devices are already included in MOD standards. Circuit breakers, Protection System equipment, and control devices are not typically modeled - the impact of these devices are typically simulated and thus these are already included in Requirement R3, part 3.3, Requirement R4, part 4.3, and in header note 'c' in Table 1. New technologies were removed from the list and are already covered in the Corrective Action Plan under Requirement R2, part 2.7.1 in the revised standard. The SDT believes that additional modeling requirements not presently contained in the MOD standards are necessary for Transmission Planning purposes. The SDT has incorporated these additional requirements with the intent that they will be removed from the TPL standard when they are incorporated into the MOD standards at a later date.	

Organization	Question 1 Comment
The SDT believes that transfers and Firm Transmission Service are actually two separate items since Firm Transmission Service is "the highest quality (priority) service offered to customers under a filed rate schedule that anticipates no planned interruption." Requirement R1, part 1.1.5 has been revised to include known commitments for Firm Transmission Service and Interchange. **1.1.5** Known commitments for Firm Transmission Service and Interchange The goal is for the responsible entity to build a realistic simulation, and the entity has to comply not only with the criteria in the TPL standard's tables, but also with other non-NERC regulations. However, the SDT has removed "including requirements of regulatory authorities and other legal obligations" since utilities already have to abide by such requirements. **R1** Each Transmission Planner and Planning Coordinator shall maintain System models within its respective area for performing the studies needed to complete its Planning Assessment. The models shall use the latest data consistent with that provided in accordance with the MOD-010 and MOD-012 standards, supplemented by other sources as needed, including items represented in the Corrective Action Plan, and shall represent projected System conditions.	
Independent Electricity System Operator	1. R1: What modeling/simulation is envisaged by the phrase requirements of regulatory authorities and other legal obligations? Note that this condition is not included in the measure or the VSL, making its compliance (whatever it is) irrelevant. If it is indeed a needed condition, then it should be measured and included in the VSL language under the Severe condition. Further, we suggest replacing simulate with incorporate since R1 deals with building of the system model that will be used to perform simulations governed by Requirement R2. Moreover, we do not think this requirement (to simulate projected System conditions including requirements of regulatory authorities and other legal obligations) belongs to R1, which is a requirement to develop the system model. R2 is the requirement for conducting Planning Assessments which include simulation using the model. We suggest moving this requirement to R2 upon making appropriate changes, where necessary to address our comments on the wording. 2. We recommend introducing applicable before regulatory authorities. 3. R1.1.2: suggest to add Transformers. 4. R1.1.5: suggest to change Interchange to Interchange Schedules or Interchange Transactions. 5. We agree with the VRF, Time Horizon, Measures and VSLs, other than the requirements of regulatory authorities and other legal obligations noted above.
Response: The goal is for the responsible entity to build a realistic simulation, and the entity has to comply not only with the criteria in the TPL standard's tables, but also with other non-NERC regulations. However, the SDT has removed "including requirements of regulatory authorities and other legal obligations" since utilities already have to abide by such requirements. **R1** Each Transmission Planner and Planning Coordinator shall maintain System models within its respective area for performing the studies needed to complete its Planning Assessment. The models shall use the latest data consistent with that provided in accordance with the MOD-010 and MOD-012 standards, supplemented by other sources as needed, including items represented in the Corrective Action Plan, and shall represent projected System conditions.	

Organization	Question 1 Comment
The SDT has changed the word "simulate" to "represent" in Requirement R1. The SDT has removed the equipment list under Requirement R1, part 1.1.2. Transmission lines, generators, and reactive power devices are already included in MOD standards. Circuit breakers, Protection System equipment, and control devices are not typically modeled - the impact of these devices are typically simulated and thus these are already included in Requirement R3, part 3.3, Requirement R4, part 4.3, and in header note 'c' in Table 1. New technologies were removed from the list and are already covered in the Corrective Action Plan under Requirement R2, part 2.7.1 in the revised standard. Requirement R1, part 1.1.5 has been revised to include known commitments for Firm Transmission Service and Interchange. **1.1.5** Known commitments for Firm Transmission Service and Interchange Thank you for your response on VRF et al.	
Kansas City Power & Light	R1 states that the models used in these studies shall be consistent with data provided through MOD-010 and MOD-012. The data submitted for these are updated on a schedule provided by the RRO and not necessarily reflective of any emerging changes that may have occurred between the MOD data collection cycle. The requirement should allow for exceptions to allow the most recent information to be included in the TPL studies.
Response: The SDT has modified Measure M1 to use the latest data available. **M1** Each Transmission Planner and Planning Coordinator shall provide evidence, in electronic or hard copy format, that it is maintaining System models, using the latest data consistent with MOD-010 and MOD-012, including items represented in the Corrective Action Plan, representing projected System conditions, and that the models represent the required information in accordance with Requirement R1.	
ReliabilityFirst Corporation	R1.1.1 requires to include Planned outages of generation and Transmission Facilities, "if specifically known" Should the generation be capitalized? Suggest changing it to "All planned Generation and Transmission facilities should be modeled. R1.1.2 Use of the word "such as" is not very clear and may not be enforceable. There are some size limitations in the study tools and it may not be possible to model all circuit breakers. Last three bullets are very hard to model and these are not consistent with MOD-010 and MOD-012. I am not sure what "New Technologies" mean. Does this require a model for each year? This contradicts the requirements in Sections R2.1-R2.1.1, R2.1.2 and R2.2. Suggest changing this to read "New planned Facilities and changes to existing Facilities for Near-Term and Long-Term Transmission Planning Horizon as described in Sections R2.1-R2.1.1, R2.1.2 and R2.2." Modeling of Protection Systems, Control Systems requires new data collection effort and falls under Section 1600 of NERC Rules of Procedure. The list does not include Transformers.Suggest removing Protection System equipment and Control devices from the list and adding another sub-section which states "Models should reflect the limitations imposed by Protective Devices and Control systems characteristics. Define "New Technologies"

Organization	Question 1 Comment
	R1.1.3 Here it is better to include the Type of Forecast (50/50 or 90/10). A reference NERC Reliability Assessment Guidebook can be included here.

Response: Generation is not a defined term itself in the NERC glossary - thus it does not need to be capitalized in Requirement R1.1.1. Requirement R1, part 1.1.2 has been revised to include known outages of generation or Transmission Facilities with a minimum duration of 6 months.

1.1.2 Known outage(s) of generation or Transmission Facility(ies) with a duration of at least six months.

The SDT has revised R1.1.2 to remove "such as". The SDT has removed the equipment list under Requirement R1, part 1.1.2. Transmission lines, generators, and reactive power devices are already included in MOD standards. Circuit breakers, Protection System equipment, and control devices are not typically modeled - the impact of these devices are typically simulated and thus these are already included in Requirement R3, part 3.3, Requirement R4, part 4.3, and in header note 'c' in Table 1. New technologies were removed from the list and are already covered in the Corrective Action Plan under Requirement R2, part 2.7.1 in the revised standard.

New technologies include any technology that is not currently in use on the electric power System that helps improve efficiency (i.e., energy storage/production technologies, low sag conductors, solid state interrupters, etc.).

The SDT has deleted "year".

1.1.3 New planned Facilities and changes to existing Facilities

The SDT does not believe that a reference is needed to the NERC Reliability Assessment Guidebook since most utilities are using at least a 50/50 Load forecast as a minimum. No change made.

2. Requirement R2 — Please provide any specific comments on the requirement text, VRF, Time Horizon, measure associated with the requirement, data retention associated with the requirement, and/or the VSL associated with the requirement.

Summary Consideration: The industry had many comments on Requirement R2 but for the most part, the questions were requesting clarification. The SDT has changed a number of the parts of this requirement with the major changes being: part 2.1.4 and part 2.4.3 on sensitivities, additional clarification on part 2.2 for the Long-Term Transmission Planning Horizon and the addition of a new part 2.7.2 on multiple sensitivity deficiencies. The full list of changes is:

Year One: The first year that a Planning Coordinator or a Transmission Planner is responsible for assessing. This is further defined as the planning window that begins 12-18 months from the end of the current calendar year.

R2. Each Transmission Planner and Planning Coordinator shall prepare an annual Planning Assessment of its portion of the BES. This Planning Assessment shall use current or past studies, document assumptions, summarize documented results, and cover steady state analyses, short circuit analyses, and Stability analyses.

2.1.4 (previously 2.1.3) For each of the studies described in Requirement R2, parts 2.1.1 and 2.1.2, sensitivity case(s) shall be utilized to demonstrate the impact of changes to the basic assumptions used in the model for the list of items shown below. To accomplish this, the sensitivity analysis in the Planning Assessment must vary one or more of the following conditions not already included in the studies by a sufficient amount to stress the System within a range of credible conditions that demonstrate a measurable change in performance.

- Real and reactive forecasted Load.
- Expected transfers.
- Expected in service dates of new or modified Transmission Facilities.
- Reactive resource capability.
- Generation additions, retirements, or other dispatch scenarios.
- Controllable Loads and Demand Side Management.
- Duration or timing of planned Transmission outages.

2.1.5 (previously 2.1.4) When an entity's spare equipment strategy could result in the unavailability of major Transmission equipment that has a lead time of one year or more (such as a transformer), an analysis of the impact of this possible unavailability on System performance shall be assessed. The Planning Assessment shall reflect the P0, P1, and P2 categories identified in Table 1 during the conditions that the System is expected to experience due to the possible unavailability of the long lead time equipment.

2.2 The Long-Term Transmission Planning Horizon portion of the steady state analysis shall be assessed annually and be supported by the following annual current study, supplemented with qualified past studies as indicated in Requirement R2, part 2.6:

2.2.1 A current study assessing expected System peak Load conditions for one of the years in the Long-Term Transmission Planning Horizon and the rationale for why that year was selected.

2.3 The short circuit analysis portion of the Planning Assessment shall be conducted annually addressing the Near-Term Transmission Planning Horizon and can be supported by current or past studies as indicated in Requirement R2, part 2.6. The analysis shall be used to determine whether circuit breakers have interrupting capability for Faults that they will be expected to interrupt using the System short circuit model with any planned generation and Transmission Facilities in service which could impact the study area.

2.4 The Near-Term Transmission Planning Horizon portion of the Stability analysis shall be assessed annually and be supported by current or past studies as indicated in Requirement R2, part2.6. The following studies are required.

2.4.1 System peak Load for one of the five years. System peak Load levels shall include a Load model which represents the dynamic behavior of Loads that could impact the study area, considering the behavior of induction motor Loads. An aggregate System Load model which represents the overall dynamic behavior of the Load is acceptable.

2.4.3 For each of the studies described in Requirement R2, parts 2.4.1 and 2.4.2, sensitivity case(s) shall be utilized to demonstrate the impact of changes to the basic assumptions used in the model for the list of items shown below. To accomplish this, the sensitivity analysis in the Planning Assessment must vary one or more of the following conditions not already included in the studies by a sufficient amount to stress the System within a range of credible conditions that demonstrate a measurable change in performance.

- Load level, Load forecast, or dynamic model assumptions.
- Expected transfers.
- Expected in service dates of new or modified Facilities.
- Reactive resource capability.
- Generation additions, retirements, or other dispatch scenarios.

2.5 (new) The Long-Term Transmission Planning Horizon portion of the Stability analysis shall be assessed to address the impact of proposed generation additions or changes in that timeframe and be supported by current or past studies.

2.6.1 (previously 2.5.1) For steady state, short circuit, or Stability analysis: the study shall be five calendar years old or less, unless a technical rationale can be provided to demonstrate that the results of an older study are still valid.

2.6.2 (previously 2.5.2) For steady state, short circuit, or Stability analysis: the study shall not include any material changes unless a technical rationale can be provided to demonstrate that System changes do not impact the performance results in the study area.

2.7 (previously 2.6) For planning events shown in Table 1, when the analysis indicates an inability of the System to meet the performance requirements in Table 1, the Planning Assessment shall include Corrective Action Plan(s) addressing how the performance requirements will be met. Revisions to the Corrective Action Plan(s) are allowed in subsequent Planning Assessments but the planned System shall continue to meet the performance requirements in Table 1. Corrective Action Plan(s) do not need to be developed solely to meet the performance requirements for a single sensitivity run in accordance with Requirements R2, parts 2.1.4 and 2.4.3. The Corrective Action Plan(s) shall:

2.7 (previously 2.6) bullet 2: Installation, modification, or removal of Protection Systems or Special Protection Systems

2.7.2 (new) Include actions to resolve performance deficiencies identified in multiple sensitivity studies or provide a rationale for why actions were not necessary.

2.7.5 (previously 2.6.4) If situations arise that are beyond the control of the Transmission Planner or Planning Coordinator that prevent the implementation of a Corrective Action Plan in the required timeframe, then the Transmission Planner or Planning Coordinator is permitted to utilize Non-Consequential Load Loss and curtailment of Firm Transmission Service to correct the situation that would normally not be permitted in Table 1, provided that the Transmission Planner or Planning Coordinator documents that they are taking actions to resolve the situation. The

Transmission Planner or Planning Coordinator shall document the situation causing the problem, alternatives evaluated, and the use of Non-Consequential Load Loss or curtailment of Firm Transmission Service.

2.7.6 (previously 2.6.5) Be reviewed in subsequent annual Planning Assessments for continued validity and implementation status of identified System Facilities and Operating Procedures.

2.8 (previously 2.7) For short circuit analysis, if the short circuit current interrupting duty on circuit breakers determined in Requirement R2, part 2.3 exceeds their Equipment Rating, the Planning Assessment shall include a Corrective Action Plan to address the Equipment Rating violations. The Corrective Action Plan shall:

2.8.2 (previously 2.7.2) Be reviewed in subsequent annual Planning Assessments for continued validity and implementation status.

2.9 (previously 2.8) The Planning Assessment shall provide the expected largest Consequential Load Loss (megawatt Demand) identified by the analysis of P1 and P2 events in Table 1.

R2 VSL	The responsible entity failed to comply with Requirement R2, part 2.9 or Requirement R2, part 2.6.	The responsible entity failed to comply withRequirement R2, part 2.3 or part 2.8.	The responsible entity failed to comply with one of the following parts of Requirement R2: part 2.1, part 2.2, part 2.4, part 2.5, or part 2.7	The responsible entity failed to comply with two or more of thefollowing parts of Requirement R2: part 2.1, part 2.2, part 2.4, or part 2.7.

Organization	Question 2 Comment
Dominion - Electric Transmission	R2.1.3 - Dominion suggests that SDT needs to be more specific on which of thevariations to include. Also for the last bullet, the SDT needs to clarify the duration ortiming of planned transmission outages (in relation to Planning horizon). R2.4.1 - While we appreciate the intent of introducing induction motor modeling in simulations, this is a difficult proposal in actual practice. The question of how much of the load is comprised of induction motors and what is a reasonable/practical model has been around now for over twenty years yet is still not resolved satisfactorily. For example, we have heard several experts declare the CLOAD model is inadequate for study. NERC needs to take the lead in developing appropriate models for the widely used simulation software and a methodology for determining load composition prior to requiring induction Load modeling in dynamic simulation studies. Additionally, this requirement states that Aggregate System Load model is acceptable to represent the dynamic behavior of induction motor Loads. Our interpretation is that such aggregate models shall be inserted by the Planners at the time of study, over a specific study area as determined by TP, and these models are not to be represented in the interconnection-wide (i.e. ERAG/MMWG) dynamics base cases. If ERAG/MMWG dynamics base cases are populated with such aggregate load models, the dynamic simulation cases could become very difficult to solve, if not impossible. R2.8 - Dominion does not see any purpose in reporting largest consequential load loss. This is not easily calculated, and

Organization	Question 2 Comment
	would vary from year by year, season by season. R2.9 - Dominion requests further clarification. Is the intent of this requirement to develop criteria for maximum allowable non-consequential load loss prior to requiring a corrective action plan or to just calculate such a load loss where it is permitted in Table 1?

Response: Part 2.1.3 (now Part 2.1.4) has been revised to provide greater clarification. It is intended that the Planning Coordinator or the Transmission Planner will select the variation to include in the sensitivity studies.

2.1.4 For each of the studies described in Requirement R2, parts 2.1.1 and 2.1.2, sensitivity case(s) shall be utilized to demonstrate the impact of changes to the basic assumptions used in the model for the list of items shown below. To accomplish this, the sensitivity analysis in the Planning Assessment must vary one or more of the following conditions not already included in the studies by a sufficient amount to stress the System within a range of credible conditions that demonstrate a measurable change in performance.

- Real and reactive forecasted Load.
- Expected transfers.
- Expected in service dates of new or modified Transmission Facilities.
- Reactive resource capability.
- Generation additions, retirements, or other dispatch scenarios.
- Controllable Loads and Demand Side Management.
- Duration or timing of planned Transmission outages.

The last bullet in Part R2.1.3 (now Part 2.1.4) is intended to cover planned outages of Facilities in sensitivity studies if such planned outages are known at the time the planning studies are performed, for example, nuclear power plant refueling, generating unit maintenance, etc.

Part 2.4.1 is intended to allow the Planning Coordinator and Transmission Planner the discretion in the use of aggregated System Load models in Stability Studies, if specific models are not available. However, it does not dictate the methodology or the process on how the studies are to be done.

Parts 2.8 and 2.9 were intended to contribute to open and transparent transmission planning for peer review. The SDT reviewed both requirements and agrees that as written, they were unclear. Part 2.9 has been deleted. Part 2.8 has been revised and included as Part 2.9 in the new version to require that the Planning Assessment provides the expected largest Consequential Load Loss identified by the analysis of P1 and P2 events in Table 1 only.

2.9 The Planning Assessment shall provide the expected largest Consequential Load Loss (megawatt Demand) identified by the analysis of P1 and P2 events in Table 1.

Northeast Power Coordinating Council	It is recommended to replace the phrase prepare with conduct and document in the first sentence.R2.1.1 Comment The requirement to evaluate year one or year two should be removed. This is not consistent with the time horizon

Organization	Question 2 Comment
	identified in R2. R2.1.3 Comment - The emphasis on sensitivity testing in the existing section appears misdirected and should be focused on reasonable risk. The assessment should have to include a discussion of reasonable risk. The sensitivity list can be used to select sensitivities to assess risk. Having a requirement to perform one sensitivity just to meet the requirement of the standard does not add value to the assessment. R2.1.4 With respect to spare equipment strategy; this requirement imposes severe testing requirements upon the system. However, there is no discussion on the generation dispatch or system transfers that are to be used for this portion of the assessment. The expectations for changes in system stresses need to be clear as part of the standard. Additionally, this section does not contemplate changing the acceptability of load loss. After experiencing a major contingency such as this, some change in the acceptability of load loss should be expected. The standard should consider allowing Non-Consequential load loss for P1 & P2 events. The standard needs to allow Non-Consequential load loss for P3 & P4 events. Remove the wording (such as a transformer). What constitutes "spare equipment strategy"? Would a strategy that involves out-of-merit dispatch or operational restrictions be considered a valid "spare equipment strategy". If a transformer is lost, could a reconfiguration of the transmission system constitute a valid "spare equipment strategy" R2.2 Comment We suggest replacing the phrase a current System peak Load study with a valid System peak Load study in the first sentence. The word current is confusing as some read the word current to mean today's rather than valid. R2.3 Comment Please provide guidance as to what year should be represented when performing short circuit studies. R2.4.1 Comment ? Change to read: "For peak System Load levels, a Load model shall be used which appropriately represents the dynamic behavior of Loads, including consideration of the behavior of induction motor Loads or an aggregate System Load model which represents the overall dynamic behavior of the Load. R2.5.1 Comment We suggest deleting this requirement, and incorporating it into R2.5.2. R2.5.2 Comment To incorporate R.2.5.1 into R2.5.2; please modify the section as follows: For steady state, short circuit, or Stability analysis the study shall be less than five calendar years old or less: the latest Transmission Planning Horizon System model shall not include any material changes, such as, generation or Transmission additions/removals, or topology changes that have occurred in the intervening period and would impact the study area. Material generation changes could include: The addition/deletion/change of individual generating unit capability determined to be material by the Planning Coordinator or Transmission Planner. [A 20 MVA generator is fairly small in a 30,000 MW system and system concerns would already be addressed though the System Impact Study]" An aggregated addition/deletion/change to a group of generating units directly connected through their step-up transformer(s) to the BES determined to be material by the Planning Coordinator or Transmission Planner. R2.6 Priority Comment As written, this section undermines the value of the sensitivity testing. This section should require a corrective action plan to fix problems determined in sensitivity analysis if there is a reasonable risk of occurrence. We suggest making the standard read Provide documentation that explains the reasoning for the sensitivities considered and selected. R2.6 Comment At the end of the second sentence, the phrase in the tables is used. We suggest using more definitive

Organization	Question 2 Comment
	language such as in Table 1. R2.6.2 Comment The phrase Project Initiation Date needs to be defined. It is unclear if this is this the date of ground breaking, purchase orders being issued, solution study initiation, etc. Additionally, in the second sentence the phrase as well as an in-service date should be modified to read as well as a target in-service date. R2.6.3 Comment Plans can provide a target in-service year but not an actual in-service year. R2.6.4 Priority Comment There should be a cutoff point when changes occur beyond a certain date. When that date occurs, further changes will be evaluated in the next year's assessment. Otherwise, if a state makes a decision not to site a project a few weeks prior to the end of the assessment period, there will not be sufficient time to incorporate this into that year's assessment and develop corrective actions. R2.8 Comment Largest consequential load loss is not factored into the Planning Assessment and should therefore be deleted. R2.9 Comment This requirement is unclear. Is this requirement asking for each transmission planner to list their criteria for non-consequential load loss, or is it asking how much non-consequential load loss was being relied upon in the assessment? We recommend that the requirement be modified to require documentation of the maximum amount of non-consequential load loss that was relied upon during the assessment. It is strongly recommended that the standard should consider not allow non-consequential load loss to resolve any violation arising from the planning events in Table 1. Therefore, this requirement would then be deleted. The use of System Off-Peak Load is too general. Is the intention to have the system minimum load used here? Because of the seasonal differences in equipment ratings, seasonal peak and off peak (minimum) loads should be analyzed.

Response: The SDT was not able to locate the word "prepare" in the first sentence of Part 2.1.1. However, Requirement R2 states, "Each Transmission Planner and Planning Coordinator shall prepare an annual Planning Assessment of its portion of the BES. This Planning Assessment shall use current or past studies, document assumptions, document results, and shall cover steady state analyses, short circuit analyses, and Stability analyses". The SDT assumes that the comment was meant for this sentence. The SDT does not think that replacing "prepare" with "conduct and document" would add clarity, since Requirement R2 includes the requirement to document assumptions and results. No change made.

The SDT disagrees that the requirement to evaluate Year One and year two is inconsistent with the Time Horizon in R2. The new definition defines Year One as the first year that the planner is responsible for assessing. No change made.

Part 2.1.3 (now Part 2.1.4) has been rewritten to clarify the intent of the requirement. The Planning Coordinator or Transmission Planner can include a discussion of risk in response to the new Part 2.7.2 on the actions to resolve performance deficiencies identified in multiple sensitivity studies or provide a rationale for why actions were not necessary. No change made.

In Part 2.1.4 (now Part 2.1.5) when a piece of long lead-time Equipment is unavailable, System adjustments will need to be made. The System, after it is adjusted to accommodate that piece of Equipment out of service will be treated as the "normal" (P0) condition in Table 1 and the rest of Table 1 will be applied as stated. Part 2.1.4 is intended for the Planning Coordinator and/or Transmission Planner to take into account their spare equipment strategy for long lead time Equipment when assessing the performance of their System. If the loss of a piece of major Equipment can be replaced within a reasonable period of time, planning studies for the following year can assume that that piece of Equipment will be replaced. If not, its impact of unavailability would need to be assessed. Actions such as out of

Organization	Question 2 Comment
	merit dispatch, operational restrictions, System reconfiguration can be part of a Corrective Action Plan if the System cannot meet performance requirements without the Facility in service. Part 2.1.5 has been revised to require that the assessment reflect the P0, P1, and P2 categories identified in Table 1 during the conditions that the System is expected to experience due to the possible unavailability of the long lead time Equipment. **2.1.5** When an entity's spare equipment strategy could result in the unavailability of major Transmission equipment that has a lead time of one year or more (such as a transformer), an analysis of the impact of this possible unavailability on System performance shall be assessed. The Planning Assessment shall reflect the P0, P1, and P2 categories identified in Table 1 during the conditions that the System is expected to experience due to the possible unavailability of the long lead time equipment. Part 2.2 is intended to require a study performed in the current year, as opposed to studies performed in the past years. Part 2.2 has been revised to provide greater clarity. **2.2** The Long-Term Transmission Planning Horizon portion of the steady state analysis shall be assessed annually and be supported by the following annual current study, supplemented with qualified past studies as indicated in Requirement R2, part 2.6: For Part 2.3 the decision on the year to be represented in the study is left to the discretion of the Planning Coordinator or Transmission Planner. Part 2.3 only requires it to be either a study that was performed during the current year or in the past. For example, this year is 2009 and a study performed in 2009 is a current study, the study can investigate the System in a future year, which is at the discretion of the Planning Coordinator or Transmission Planner performing the study. Part 2.3 has been revised to provide greater clarity. **2.3** The short circuit analysis portion of the Planning Assessment shall be conducted annually addressing the Near-Term Transmission Planning Horizon and can be supported by current or past studies as indicated in Requirement R2, part 2.6. The analysis shall be used to determine whether circuit breakers have interrupting capability for Faults that they will be expected to interrupt using the System short circuit model with any planned generation and Transmission Facilities in service which could impact the study area. Part 2.4.1 was not changed as suggested because the intent of the last sentence is to allow the use of an aggregated System Load model as an appropriate Load representation. The suggested change could be read to mean that an aggregated System Load model would not appropriately represent the dynamic behavior of Loads. However, Part 2.4.1 has been revised to provide greater clarity. **2.4.1** System peak Load for one of the five years. System peak Load levels shall include a Load model which represents the dynamic behavior of Loads that could impact the study area, considering the behavior of induction motor Loads. An aggregate System Load model which represents the overall dynamic behavior of the Load is acceptable. Parts 2.5 .1 and 2.5.2 (new Parts 2.6.1 and 2.6.2) were not combined. While the SDT appreciates the concern that a 20 MW generation addition can be small compared to a large System, a NERC standard needs to be clear as to the applicability. A requirement, which contains "determined to be material by the Planning Coordinator or Transmission Planner", is not clear. Therefore, changing from 20 MW to "material" will also have to require justification from the Planning Coordinator or Transmission Planner on what is "material". Material has been deleted from the requirement. Part 2.6.2 and 2.6.3 have been removed. Part 2.6 has been modified and included as new Part 2.7. The intent is to allow discretion for the Planning Coordinator or Transmission Planner to correct those deficiencies if they are prevalent (i.e., occur in more than one sensitivity). Although not required, the standard does not preclude the Planning Coordinator or Transmission Planner to develop Corrective Action Plans for high risk scenarios. However, if the scenario is high risk, then it should have been included in the base assumptions in the assessment and the Corrective Action Plan would have been required. The end of the second sentence has been changed to refer to

Organization	Question 2 Comment
Table 1 as suggested. **2.7** For planning events shown in Table 1, when the analysis indicates an inability of the System to meet the performance requirements in Table 1, the Planning Assessment shall include Corrective Action Plan(s) addressing how the performance requirements will be met. Revisions to the Corrective Action Plan(s) are allowed in subsequent Planning Assessments but the planned System shall continue to meet the performance requirements in Table 1. Corrective Action Plan(s) do not need to be developed solely to meet the performance requirements for a single sensitivity run in accordance with Requirements R2, parts 2.1.4 and 2.4.3. The Corrective Action Plan(s) shall: Part 2.6.4 (now 2.7.5) allows the Planning Coordinator or Transmission Planner to address situations that are beyond its control by utilizing Non-Consequential Load Loss and/or curtailment of Firm Transmission Service, which are normally not permitted. Depending on the urgency of the need, the Corrective Action Plan may be developed outside the normal Assessment cycle at the discretion of the Planning Coordinator or Transmission Planner involved. No change made. Parts 2.8 and 2.9 were intended to contribute to open and transparent transmission planning for peer review. The SDT reviewed both requirements and agrees that as written, they were unclear. Part 2.9 has been deleted. Part 2.8 has been revised and included as Part 2.9 in the new version to require that the Planning Assessment provides the expected largest Consequential Load Loss identified by the analysis of P1 and P2 events in Table 1 only. **2.9** The Planning Assessment shall provide the expected largest Consequential Load Loss (megawatt Demand) identified by the analysis of P1 and P2 events in Table 1. The recommendation that "the standard should consider not allow non-consequential load loss to resolve any violation arising from the planning events in Table 1" will include also the multiple Contingencies, for which loss of Non-Consequential Load is allowed in the existing TPL Standards. While the sentiment is laudable, it may not be practical. No change made. The use of System Off-Peak Load is intended to be general to allow the Planning Coordinator or the Transmission Planner to use their best judgment suited to the study area, since the System must be able to meet performance requirements over all demand levels. The Planning Coordinator or Transmission Planner is not precluded from investigating more System conditions than are required in this standard. No change made.	
Transmission Planning	R2.1.4. COMMENT: For the analysis to reflect the contingencies in Table 1 (P0 through P7 plus Extreme Events) is excessive. R2.5.2. COMMENT: The 20 MW change listed in bullet items are extremely small to larger transmission systems and by themselves would be unlikely to change BES response. As drafted, requirement 2.5 may be interpreted to preclude the use of any previous study in which the base case is not identical to the current planning case. It is recommended 2.5.2 be rewritten as follows; For steady state, short circuit, or Stability analysis: the present System model shall not include any material changes, such as, generation or Transmission additions/removals, or topology changes that have occurred in the intervening period that would impact the study area. R2.6.2. COMMENT: What is considered a project initiation date is it implying a construction start date, or the first time that it was identified as a mitigation plan? Additionally, R2.6.2 and R2.6.3 are not necessary because a Corrective Action Plan, by definition, includes an "associated timetable for implementation". Recommend deleting this requirement. R2.8. COMMENT: Why is this data collection a requirement? The effort required to determine this data is substantial and the value of this data is questionable. Recommend deleting this requirement. R2.9. COMMENT: Why is this data collection a requirement? The effort required to determine this data is substantial and

Organization	Question 2 Comment
	the value of this data is questionable. Recommend deleting this requirement.

Response: Part 2.1.4 (now Part 2.1.5) has been revised to require that the assessment reflect the P0, P1, and P2 categories identified in Table 1 during the conditions that the System is expected to experience due to the possible unavailability of the long lead time equipment.

> **2.1.5** When an entity's spare equipment strategy could result in the unavailability of major Transmission equipment that has a lead time of one year or more (such as a transformer), an analysis of the impact of this possible unavailability on System performance shall be assessed. The Planning Assessment shall reflect the P0, P1, and P2 categories identified in Table 1 during the conditions that the System is expected to experience due to the possible unavailability of the long lead time equipment.

While the SDT appreciates the concern, the proposed revision could be interpreted as removing the threshold for minimum change in generation. Part 2.5.2 has been revised as Part 2.6.2 to include an alternative threshold to be based on the study area's installed generation capacity.

> **2.6.2** For steady state, short circuit, or Stability analysis: the study shall not include any material changes unless a technical rationale can be provided to demonstrate that System changes do not impact the performance results in the study area.

In our last meeting the SDT agreed to revise Part 2.6 (and included it as Part 2.7) and project initiation date is no longer required.

> **2.7** For planning events shown in Table 1, when the analysis indicates an inability of the System to meet the performance requirements in Table 1, the Planning Assessment shall include Corrective Action Plan(s) addressing how the performance requirements will be met. Revisions to the Corrective Action Plan(s) are allowed in subsequent Planning Assessments but the planned System shall continue to meet the performance requirements in Table 1. Corrective Action Plan(s) do not need to be developed solely to meet the performance requirements for a single sensitivity run in accordance with Requirements R2, parts 2.1.4 and 2.4.3. The Corrective Action Plan(s) shall:

Parts 2.8 and 2.9 were intended to contribute to open and transparent transmission planning for peer review. The SDT reviewed both requirements and agrees that as written, they were unclear. Part 2.9 has been deleted. Part 2.8 has been revised and included as Part 2.9 in the new version to require that the Planning Assessment provides the expected largest Consequential Load Loss identified by the analysis of P1 and P2 events in Table 1 only.

> **2.9** The Planning Assessment shall provide the expected largest Consequential Load Loss (megawatt Demand) identified by the analysis of P1 and P2 events in Table 1.

SERC Engineering Committee Planning Standards Subcommittee	R2.1: In R2.1, change the reference to requirement R2.6 (at the end of the last line) to R2.5. R2.1.4: In Requirement R2.1.4, recommend that the requirement be revised as follows: "When an entity's spare equipment strategy could result in the unavailability of major Transmission equipment that has a lead time of one year or more (such as a transformer), an analysis of the impact of this possible unavailability on System performance shall be assessed. The analysis shall reflect the Contingencies identified in Table 1 during the conditions that the System is expected to experience the possible unavailability of the long lead time equipment. R2.4.1: In Requirement R2.4.1, it is suggested that it be reworded to the following: "System peak Load for one of the five years, including Load models which appropriately represents the dynamic behavior of Loads, considering the behavior of induction motor Loads. An aggregate System Load model which represents the overall dynamic behavior of the Load is acceptable.

Organization	Question 2 Comment
	R2.5.1:With the elimination of the distinction between system and generating plant stability studies, the blanket requirement in R2.5.1 that all stability analyses be five calendar years old or less, regardless of any material changes to the system, would cause needless work to be performed on those plants or areas of the system where no changes are occurring. Recommend add the following to the end of R2.5.1: unless justification can be provided to demonstrate that the results of an older study are still valid. R2.6.2: In Requirement R2.6.2, what constitutes a "project initiation date," and how will it be used? Please clarify. R2.8: Please explain the reason why Requirement R2.8 is needed in the Assessment. Reporting the largest Consequential Load Loss does not impact reliability. R2.9: Please explain the reason why Requirement R2.9 is needed in the Assessment. Reporting the largest Non-Consequential Load Loss does not impact reliability.

Response: In the new version, Part.2.6 now contains the requirement for the use of past studies, so Part 2.1 now has the correct reference. No change made.

Part 2.1.4 (now Part 2.1.5) has been revised to require that the assessment reflect the P0, P1, and P2 categories identified in Table 1 during the conditions that the System is expected to experience due to the possible unavailability of the long lead time Equipment.

> **2.1.5** When an entity's spare equipment strategy could result in the unavailability of major Transmission equipment that has a lead time of one year or more (such as a transformer), an analysis of the impact of this possible unavailability on System performance shall be assessed. The Planning Assessment shall reflect the P0, P1, and P2 categories identified in Table 1 during the conditions that the System is expected to experience due to the possible unavailability of the long lead time equipment.

Part 2.4.1 has been revised to reflect your suggestion.

> **2.4.1** System peak Load for one of the five years. System peak Load levels shall include a Load model which represents the dynamic behavior of Loads that could impact the study area, considering the behavior of induction motor Loads. An aggregate System Load model which represents the overall dynamic behavior of the Load is acceptable.

Part 2.5.1 has been revised and included as Part 2.6.1 to address your concerns.

> **2.6.1** For steady state, short circuit, or Stability analysis: the study shall be five calendar years old or less, unless a technical rationale can be provided to demonstrate that the results of an older study are still valid.

In our last meeting the SDT agreed to revise Part 2.6 (and included it as Part 2.7) and project initiation date is no longer required.

> **2.7** For planning events shown in Table 1, when the analysis indicates an inability of the System to meet the performance requirements in Table 1, the Planning Assessment shall include Corrective Action Plan(s) addressing how the performance requirements will be met. Revisions to the Corrective Action Plan(s) are allowed in subsequent Planning Assessments but the planned System shall continue to meet the performance requirements in Table 1. Corrective Action Plan(s) do not need to be developed solely to meet the performance requirements for a single sensitivity run in accordance with Requirements R2, parts 2.1.4 and 2.4.3. The Corrective Action Plan(s) shall:

Parts 2.8 and 2.9 were intended to contribute to open and transparent transmission planning for peer review. The SDT reviewed both requirements and agrees that as written, they were unclear. Part 2.9 has been deleted. Part 2.8 has been revised and included as Part 2.9 in the new version to require that the Planning

Organization	Question 2 Comment
Assessment provides the expected largest Consequential Load Loss identified by the analysis of P1 and P2 events in Table 1 only. **2.9** The Planning Assessment shall provide the expected largest Consequential Load Loss (megawatt Demand) identified by the analysis of P1 and P2 events in Table 1.	
Modesto Irrigation District	On pages 6 and 7 under sections R2.1.3 and R2.4.3, I think the magnitude of the variations in the conditions asked for in the sensitivity cases, should be defined and not left to the analyst to decide. On page 8 under Section R2.5.2, examples of material changes for generation are given, but no examples for transmission changes. Shouldn't we include examples of material transmission changes, too Comments: Short circuit analyses is a local phenomenon and should not be required as part of a transmission planning assessment of the BES R2.8 and R2.9 load loss comment. We don't agree with R2.8 & R2.9. What reliability purpose is served by these requirements?
Response: The items in Parts R2.1.3 (now Part 2.1.4) and 2.4.3 are intended for use as guides. NERC Standards must allow room for discretion of the Planning Coordinator and/or Transmission Planner who are closer to the issues in their respective areas. In Part 2.5.2 the SDT removed the examples related to the generation changes and therefore have not added examples of transmission changes. Part 2.3 is intended for the Planning Coordinator and/or Transmission Planner to assess whether circuit breakers supporting the BES have interrupting capability for Faults that they will be expected to interrupt and is not specifically related to new planned Facilities. Part 2.3 has been revised to provide greater clarity. **2.3** The short circuit analysis portion of the Planning Assessment shall be conducted annually addressing the Near-Term Transmission Planning Horizon and can be supported by current or past studies as indicated in Requirement R2, part 2.6. The analysis shall be used to determine whether circuit breakers have interrupting capability for Faults that they will be expected to interrupt using the System short circuit model with any planned generation and Transmission Facilities in service which could impact the study area. Parts 2.8 and R2.9 were intended to contribute to open and transparent transmission planning for peer review. The SDT reviewed both requirements and agrees that as written, they were unclear. Part 2.9 has been deleted. Part 2.8 has been revised and included as Part 2.9 in the new version to require that the Planning Assessment provides the expected largest Consequential Load Loss identified by the analysis of P1 and P2 events in Table 1 only. **2.9** The Planning Assessment shall provide the expected largest Consequential Load Loss (megawatt Demand) identified by the analysis of P1 and P2 events in Table 1.	
OPUC	2. Requirement R2 Please provide any specific comments on the requirement text, VRF, Time Horizon, measure associated with the requirement, data retention associated with the requirement, and/or the VSL associated with the requirement.Comments: A: Short circuit of over-stressed breakers is already addressed in Table 1.Ex1: P2-3,4 (Internal Breaker Fault),Ex2: P4 (Stuck Breaker while attempting to clear a fault). B: In R2.1.4 Table 1, it is unclear how transformer contingency analysis can be aggregated or batched. It is also still unclear

Organization	Question 2 Comment
	whether corrective action plans are required solely to meet performance requirements for sensitivities.

Response: Part 2.3 is intended for the Planning Coordinator and/or Transmission Planner to assess the whether circuit breakers supporting the BES have interrupting capability for Faults that they will be expected to interrupt and is not specifically related to new planned Facilities. This is not the same as the examples cited. Part 2.3 has been revised to provide greater clarity.

> **2.3** The short circuit analysis portion of the Planning Assessment shall be conducted annually addressing the Near-Term Transmission Planning Horizon and can be supported by current or past studies as indicated in Requirement R2, part 2.6. The analysis shall be used to determine whether circuit breakers have interrupting capability for Faults that they will be expected to interrupt using the System short circuit model with any planned generation and Transmission Facilities in service which could impact the study area.

Part 2.1.4 (now Part 2.1.5) has been revised to require that the assessment reflect the P0, P1, and P2 categories identified in Table 1 during the conditions that the System is expected to experience due to the possible unavailability of the long lead time Equipment.

> **2.1.5** When an entity's spare equipment strategy could result in the unavailability of major Transmission equipment that has a lead time of one year or more (such as a transformer), an analysis of the impact of this possible unavailability on System performance shall be assessed. The Planning Assessment shall reflect the P0, P1, and P2 categories identified in Table 1 during the conditions that the System is expected to experience due to the possible unavailability of the long lead time equipment.

Part 2.6 has been revised and included as Part 2.7 to state that Corrective Action Plans do not need to be developed solely to meet the performance requirements for a single sensitivity run. Part 2.7.2 has also been added to require that the Corrective Action Plan include actions to resolve performance deficiencies identified in multiple sensitivity studies or provide a rationale for why actions were not necessary. The intent is to allow discretion for the Planning Coordinator or Transmission Planner to correct those deficiencies if they are prevalent (i.e., occur is more than one sensitivity).

> **2.7** For planning events shown in Table 1, when the analysis indicates an inability of the System to meet the performance requirements in Table 1, the Planning Assessment shall include Corrective Action Plan(s) addressing how the performance requirements will be met. Revisions to the Corrective Action Plan(s) are allowed in subsequent Planning Assessments but the planned System shall continue to meet the performance requirements in Table 1. Corrective Action Plan(s) do not need to be developed solely to meet the performance requirements for a single sensitivity run in accordance with Requirements R2, parts 2.1.4 and 2.4.3. The Corrective Action Plan(s) shall:
>
> **2.7.2** Include actions to resolve performance deficiencies identified in multiple sensitivity studies or provide a rationale for why actions were not necessary.

Bonneville Power Administration	Short circuit analyses is a local phenomenon and should not be required as part of a transmission planning assessment of the BES. In any case, the effects of failure of over-stressed breakers are already included in the Events to be assessed in Table 1. For example, P2-3 and P2-4 (Internal Breaker Fault), and P4 (Stuck Breaker while attempting to clear a fault). R2.1.1: Peak load modeled for the near term planning horizon may not be Year one or year two. Therefore, R2.1.1 should be revised to say System peak load for one of the five years. Clarity is needed in R2.1.4. The requirement to assess the Contingencies identified in Table 1 is too burdensome. This requirement does not specify any limits on the equipment for which an analysis must be conducted. As currently drafted, this could require a separate analysis for each transformer (or any long lead-time equipment) for which a spare is not available. A separate initial case would need to be developed to assess the Contingencies identified in Table 1 for each transformer.

Organization	Question 2 Comment
	This could result in a countless number of additional cases. We recommend a threshold be established, such as all transformers with a low side voltage above 200 kV. We also recommend changing this from a separate sub-Requirement to one of the sensitivities to be considered under 2.1.3. We also believe that the statement at the end of R2.6 that indicates corrective action plans are not required solely to meet the performance requirements for sensitivities should also apply to the spare equipment requirement. The 20 MW threshold identified as material change for generation in R2.5 is too small. The limit should be raised or based on a percentage of the study area's installed generating capacity. R2.8 should be deleted. It is not necessary for reliability. What will be done with this information on the largest Consequential Load Loss and the associated event caused by any P1 event and any P2 event? if it is documented? R2.9 should be deleted. It is not necessary for reliability. It will be difficult to determine the maximum permissible Non-Consequential Load value. It will end up being based on cost (monetary, societal, environmental, etc.), which is dependent, among other things, on the types of load being served. It very well may be a case by case situation.

Response: Part 2.3 is intended for the Planning Coordinator and/or Transmission Planner to assess the whether circuit breakers supporting the BES have interrupting capability for Faults that they will be expected to interrupt and is not specifically related to new planned Facilities. Part 2.3 has been revised to provide greater clarity.

> **2.3** The short circuit analysis portion of the Planning Assessment shall be conducted annually addressing the Near-Term Transmission Planning Horizon and can be supported by current or past studies as indicated in Requirement R2, part 2.6. The analysis shall be used to determine whether circuit breakers have interrupting capability for Faults that they will be expected to interrupt using the System short circuit model with any planned generation and Transmission Facilities in service which could impact the study area.

Part 2.1.1 is intended to require studies for System Peak Load Conditions for 2 of the years in the near-term planning horizon: 1) A Year five case to identify potential problem that can be addressed if the planned projects proceed as scheduled. 2) A Year one or Year two case to identify any potential problems unanticipated in the five-year case, which if not addressed, could impact operations as time progresses. Therefore, the SDT declines to make the change as suggested.

Part 2.1.4 (now Part 2.1.5) has been revised to require that the assessment reflect the P0, P1, and P2 categories identified in Table 1 during the conditions that the System is expected to experience due to the possible unavailability of the long lead time Equipment.

> **2.1.5** When an entity's spare equipment strategy could result in the unavailability of major Transmission equipment that has a lead time of one year or more (such as a transformer), an analysis of the impact of this possible unavailability on System performance shall be assessed. The Planning Assessment shall reflect the P0, P1, and P2 categories identified in Table 1 during the conditions that the System is expected to experience due to the possible unavailability of the long lead time equipment.

Part 2.5 has been revised and references to the 20 MW change have been deleted.

> **2.5** The Long-Term Transmission Planning Horizon portion of the Stability analysis shall be assessed to address the impact of proposed generation additions or changes in that timeframe and be supported by current or past studies.

Parts 2.8 and 2.9 were intended to contribute to open and transparent transmission planning for peer review. The SDT reviewed both requirements and agrees

Organization	Question 2 Comment
that as written, they were unclear. Part 2.9 has been deleted. Part 2.8 has been revised and included as Part 2.9 in the new version to require that the Planning Assessment provides the expected largest Consequential Load Loss identified by the analysis of P1 and P2 events in Table 1 only. **2.9** The Planning Assessment shall provide the expected largest Consequential Load Loss (megawatt Demand) identified by the analysis of P1 and P2 events in Table 1.	
MRO NERC Standards Review Subcommittee	MRO NSRS proposes the following comments for R2: Modify R2.6.2 to remove the obligation to include the project initiation date. The inclusion of this date would add unnecessary work that is not needed to assure adequate BES reliability In addition, it is not clear whether initiation refers to the commencement of engineering, design, construction, etc.Augment R2.6.5 to include annual verification of the continued validity of the Corrective Action Plan because the value of implementation status is dependent on the status of continued validity. MRO NSRS suggests this text: Be reviewed in subsequent annual Planning Assessments for continued validity and implementation status . . . Augment R2.7.2 to include annual verification of the continued validity of the Corrective Action Plan because the value of implementation status is dependent on the status of continued validity. MRO NSRS suggests this text that is similar to R2.6.5: Be reviewed in subsequent annual Planning Assessments for continued validity and implementation status. Remove R2.8. MRO NSRS does not know of any reason why the investigation and inclusion of the largest Consequential Load Loss caused by any P1 or any P2 events is needed to assure adequate BES reliability. In addition, all events involving Consequential Load Loss are studied, not just the largest load loss (see R3.3.1).
Response: In our last meeting the SDT agreed to revise Part 2.6 (and included it as Part 2.7) and project initiation date is no longer required. **2.7** For planning events shown in Table 1, when the analysis indicates an inability of the System to meet the performance requirements in Table 1, the Planning Assessment shall include Corrective Action Plan(s) addressing how the performance requirements will be met. Revisions to the Corrective Action Plan(s) are allowed in subsequent Planning Assessments but the planned System shall continue to meet the performance requirements in Table 1. Corrective Action Plan(s) do not need to be developed solely to meet the performance requirements for a single sensitivity run in accordance with Requirements R2, parts 2.1.4 and 2.4.3. The Corrective Action Plan(s) shall: Parts 2.6.5 and 2.7.2 have been revised and included as Parts 2.7.6 and 2.8.2 respectively to reflect your suggestion. **2.7.6** Be reviewed in subsequent annual Planning Assessments for continued validity and implementation status of identified System Facilities and Operating Procedures. **2.8.2** Be reviewed in subsequent annual Planning Assessments for continued validity and implementation status. Part 2.8 is intended to contribute to open and transparent transmission planning for peer review. The SDT reviewed the requirement and agrees that as written, it was unclear. Part 2.8 has been revised and included as Part 2.9 in the new version to require that the Planning Assessment provides the expected largest Consequential Load Loss identified by the analysis of P1 and P2 events in Table 1 only. **2.9** The Planning Assessment shall provide the expected largest Consequential Load Loss (megawatt Demand) identified by the analysis of P1 and P2 events in Table 1.	

Organization	Question 2 Comment
SERC Engineering Committee Dynamics Review Subcommittee (DRS)	1. R2.1.4 Loss of 2 transformers is itself a very severe contingency. However, when it is combined with R2.1.4 (spare equipment strategy) it can lead to a triple contingenecy which is unnecessarily severe and has an extremely low probability of occurrence. We recommend that the requirement be deleted from the standard. In the subrequirements of 2.1.3 and 2.4.3, the use of the word timing is unclear. Consider using in service date or schedule for. With the elimination of the distinction between system and generating plant stability studies, the blanket requirement in R2.5.1 that all stability analyses be five calendar years old or less, regardless of any material changes to the system, would cause needless work to be performed on those plants or areas of the system where no changes are occurring. Recommend add the following to the end of R2.5.1: unless justification can be provided to demonstrate that the results of an older study are still valid.

Response: Part 2.1.4 (now Part 2.1.5) is intended for the Planning Coordinator and/or Transmission Planner to take into account their spare Equipment strategy for long lead time Equipment when assessing the performance of their System. If the loss of a piece of major Equipment can be replaced within a reasonable period of time, planning studies for the following year can assume that that piece of Equipment will be replaced. If not, its impact of unavailability would need to be assessed. Part 2.1.5 has been revised to require that the assessment reflect the P0, P1, and P2 categories identified in Table 1 during the conditions that the System is expected to experience due to the possible unavailability of the long lead time Equipment.

> **2.1.5** When an entity's spare equipment strategy could result in the unavailability of major Transmission equipment that has a lead time of one year or more (such as a transformer), an analysis of the impact of this possible unavailability on System performance shall be assessed. The Planning Assessment shall reflect the P0, P1, and P2 categories identified in Table 1 during the conditions that the System is expected to experience due to the possible unavailability of the long lead time equipment.

Parts 2.1.3 (now Part 2.1.4) and 2.4.3 have been revised to reflect your suggestion.

> **2.1.4** For each of the studies described in Requirement R2, parts 2.1.1 and 2.1.2, sensitivity case(s) shall be utilized to demonstrate the impact of changes to the basic assumptions used in the model for the list of items shown below. To accomplish this, the sensitivity analysis in the Planning Assessment must vary one or more of the following conditions not already included in the studies by a sufficient amount to stress the System within a range of credible conditions that demonstrate a measurable change in performance.
>
> - Real and reactive forecasted Load.
> - Expected transfers.
> - Expected in service dates of new or modified Transmission Facilities.
> - Reactive resource capability.
> - Generation additions, retirements, or other dispatch scenarios.
> - Controllable Loads and Demand Side Management.
> - Duration or timing of planned Transmission outages.

Organization	Question 2 Comment
	2.4.3 For each of the studies described in Requirement R2, parts 2.4.1 and 2.4.2, sensitivity case(s) shall be utilized to demonstrate the impact of changes to the basic assumptions used in the model for the list of items shown below. To accomplish this, the sensitivity analysis in the Planning Assessment must vary one or more of the following conditions not already included in the studies by a sufficient amount to stress the System within a range of credible conditions that demonstrate a measurable change in performance. • Load level, Load forecast, or dynamic model assumptions. • Expected transfers. • Expected in service dates of new or modified Facilities. • Reactive resource capability. • Generation additions, retirements, or other dispatch scenarios. Part 2.5.1 has been revised and included as Part 2.6.1 to address your concerns. **2.6.1** For steady state, short circuit, or Stability analysis: the study shall be five calendar years old or less, unless a technical rationale can be provided to demonstrate that the results of an older study are still valid.
SERC Engineering Committee Reliability Review Subcommittee (RRS)	The proposed standard not only raises the bar for system performance requirements, but also raises the bar for reporting and documentation. We need to employ almost as many librarians and technical writers as engineers to develop and keep track of the documentation. Engineers need to spend more time performing the studies and spend less time documenting studies keeping track of documentation for multiple years. R2 Instead of document results the requirement should be to summarize results. While results will be documented, the Planning Assessment should just include a summary. R2.1 What's the value in being able to use qualified past studies if you have to use annual current studies? Strike the words supplemented with and insert the word or. In R2.1, change the reference to requirement R2.6 (at the end of the last line) to R2.5. Do not understand the rationale for being so prescriptive in requiring specific years to be studied in R2.1.1. Why not allow the TP and/or PC to decide on the three years to be studied in the Near Term? In the subrequirements of R2.1.3 and R2.4.3, the use of the word "timing" is unclear. Consider using in service date or schedule for. " In R2.1.3, it is suggested that the studies be referred to as the "base studies" to avoid confusion with the sensitivity studies. Also suggest that another phrase be added at the end for clarity. The entire R2.1.3 would then be as follows: For each of the base studies described in Requirements R2.1.1 and R2.1.2, sensitivity case(s) that are intended to stress the System with variations in one or more of the following conditions not already included in the studies shall be included in the Assessment. Sensitivity studies would include changes to:oIn Requirement R2.1.4, it is suggested that language be added to reflect the possible unavailability of the equipment, such as: When an entity's spare equipment strategy could result in the unavailability of major Transmission equipment that has a lead

Organization	Question 2 Comment
	time of one year or more (such as a transformer), an analysis of the impact of this possible unavailability on System performance shall be assessed. The analysis shall reflect the Contingencies identified in Table 1 during the conditions that the System is expected to experience the possible unavailability of the long lead time equipment. How would adequate lead times be determined" In Requirement R2.1.4, recommend that the requirement be revised as follows: When an entity's spare equipment strategy could result in the unavailability of major Transmission equipment that has a lead time of one year or more (such as a transformer), an analysis of the impact of this possible unavailability on System performance shall be assessed. The analysis shall reflect the Contingencies identified in Table 1 during the conditions that the System is expected to experience the possible unavailability of the long lead time equipment. Since R2.3 short circuit analysis is a new raising the bar requirement, should the implementation plan for this be for 5 years like the other new requirements? R2.3 Insert the phrase "one year of after the word addressing. In Requirements R2.3 and R2.4, do we need a reference to Requirement R2.5 for the past studies" Further clarification is needed in R2.4.1 concerning load models that appropriately represent the dynamic behavior of loads. In Requirement R2.4.1, it is suggested that it be reworded to the following: System peak Load for one of the five years, including Load models which appropriately represents the dynamic behavior of Loads, considering the behavior of induction motor Loads. An aggregate System Load model which represents the overall dynamic behavior of the Load is acceptable. R2.4.1: It is not clear how much Load must have a dynamic model. Likely, it must still be proven that the analysis software can accommodate every load in the model having a load model that includes induction motor models. To help address this, revise Load to be Load that could impact the study area is acceptable. Is a NERC drafting team addressing these issues to determine an industry standard? Load models referenced in R2.4.1 should be confined to the consideration of transient stability study work. In Requirement R2.4.3, it is suggested that this sub-requirement be reworded to the following: For each of the base studies described in Requirements R2.4.1 and R2.4.2, sensitivity case(s) that are intended to stress the System with variations in one or more of the following conditions not already included in the base studies shall be included in the Assessment. Sensitivity studies would include changes to: Regarding Requirement R2.6, it is suggested that the word "modeled" be added as follows: For Planning Events shown in Table 1, when the analysis indicates an inability of the System to meet the performance requirements in Table 1, the Planning Assessment shall include Corrective Action Plans addressing how the performance requirements will be met. Revisions to the Corrective Action Plans are allowed in subsequent assessments but the System modeled shall continue to meet the performance requirements in the tables. Corrective Action Plans do not need to be developed solely to meet the performance requirements for sensitivities run in accordance with Requirements R2.1.3 and R2.4.3. The Corrective Action Plan shall: In bullet three of Requirement R2.6.1, would we allow automatic generation tripping for a single (P1) event if it is not consequential? It seems that tripping of generation should be restricted to P2 events 2 or 3 at a minimum. In bullet five of Requirement R2.6.1, is there a maximum duration that operating procedures can be used before a capital

Organization	Question 2 Comment
	project must be included (or completed) in the Corrective Action Plan? With the elimination of the distinction between system and generating plant stability studies, the blanket requirement in R2.5.1 that all stability analyses be five calendar years old or less, regardless of any material changes to the system, would cause needless work to be performed on those plants or areas of the system where no changes are occurring. Similar to the draft MOD-026-1 standard, this period should be 10 years. With the elimination of the distinction between system and generating plant stability studies, the blanket requirement in R2.5.1 that all stability analyses be five calendar years old or less, regardless of any material changes to the system, would cause needless work to be performed on those plants or areas of the system where no changes are occurring. Recommend add the following to the end of R2.5.1: unless justification can be provided to demonstrate that the results of an older study are still valid. R2.5.2 Suggest deleting the phrase Material generation changes could include: and the two accompanying bullets. A change of 20 MW on a large system may not always be material. In Posting #2, undervoltage load shed, underfrequency load shed, and Special Protection Schemes were considered to be Non-Consequential Load Loss. In R2.6.1, installation or modification of Protection Systems or Special Protection Systems are now allowed as part of the Corrective Action Plan. Should undervoltage and underfrequency load shed also be allowed in the Corrective Action Plan? In Requirement R2.6.2, what constitutes a "project initiation date," and how will it be used? Please clarify. Please explain the reason why Requirement R2.8 is needed in the Assessment and how does reporting the largest Consequential Load Loss impact reliability? Please explain the reason why Requirement R2.9 is needed in the Assessment and how does reporting the largest Non-Consequential Load Loss impact reliability? If contingencies occur inside one utility that affect facilities in another utility, which utility is responsible for running these studies during the annual assessments?? R2.8 and R2.9 should be deleted. We don't see a reliability-related need for these requirements. In R2.9, does the requirement require the maximum non-consequential load that can occur for contingencies in Table 1 or does it require just the maximum that a utility will allow on its system? Suggest clarifying permissible or perhaps using similar language as found in R2.8. R2.9: One cannot determine the maximum permissible Non-Consequential Load Loss for every Planning Event. First of all, this should not be a requirement, as it is, for those events that do not even cause Non-Consequential Load Loss. Secondly, to obtain the maximum permissible value, one would have to stress the system in some way until one of the performance requirements are violated. That is an unreasonable stipulation and cumbersome to perform such an analysis.
Response: Requirement R2 has been revised to reflect your suggestion. **R2.** Each Transmission Planner and Planning Coordinator shall prepare an annual Planning Assessment of its portion of the BES. This Planning	

Organization	Question 2 Comment
	Assessment shall use current or past studies, document assumptions, summarize documented results, and cover steady state analyses, short circuit analyses, and Stability analyses. In Part 2.1 it is envisioned that not all parts of the studies on which the Assessment is to be based can rely on past studies. For example, a study on year five performed during the past year may not be representative of year five in the current year. A past study can still be used if it can be demonstrated that the requirements for use of past studies are met. No change made. In the new version, Part 2.6 now contains the requirement for the use of past studies, so Part 2.1 now has the correct reference. No change made. Part 2.1.1 is intended to require studies for System Peak Load Conditions for 2 of the years in the near-term planning horizon: 1) A Year five case to identify potential problem that can be addressed if the planned projects proceed as scheduled. 2) A Year one or Year two case to identify any potential problems unanticipated in the five-year case, which if not addressed, could impact operations as time progresses. Therefore, the SDT declines to make the change as suggested. Parts 2.1.3 (now Part 2.1.4) and R2.4.3 have been revised to clarify the word "timing". **2.1.4** For each of the studies described in Requirement R2, parts 2.1.1 and 2.1.2, sensitivity case(s) shall be utilized to demonstrate the impact of changes to the basic assumptions used in the model for the list of items shown below. To accomplish this, the sensitivity analysis in the Planning Assessment must vary one or more of the following conditions not already included in the studies by a sufficient amount to stress the System within a range of credible conditions that demonstrate a measurable change in performance. • Real and reactive forecasted Load. • Expected transfers. • Expected in service dates of new or modified Transmission Facilities. • Reactive resource capability. • Generation additions, retirements, or other dispatch scenarios. • Controllable Loads and Demand Side Management. • Duration or timing of planned Transmission outages. **2.4.3** For each of the studies described in Requirement R2, parts 2.4.1 and 2.4.2, sensitivity case(s) shall be utilized to demonstrate the impact of changes to the basic assumptions used in the model for the list of items shown below. To accomplish this, the sensitivity analysis in the Planning Assessment must vary one or more of the following conditions not already included in the studies by a sufficient amount to stress the System within a range of credible conditions that demonstrate a measurable change in performance. • Load level, Load forecast, or dynamic model assumptions. • Expected transfers. • Expected in service dates of new or modified Facilities. • Reactive resource capability. • Generation additions, retirements, or other dispatch scenarios. The SDT reviewed Part 2.1.3 and declined to use the term "base study" because "base study" may have different meanings in different parts of the continent, and

Organization	Question 2 Comment
the term, "studies described in Parts 2.1.1 and R2.1.2" should be sufficient to avoid confusion. No change made. Part 2.1.4 (now Part 2.1.5) is intended for the Planning Coordinator and/or Transmission Planner to take into account their spare Equipment strategy for long lead time Equipment when assessing the performance of their System. If the loss of a piece of major Equipment can be replaced within a reasonable period of time, planning studies for the following year can assume that that piece of Equipment will be replaced. If not, its impact of unavailability would need to be assessed. Part 2.1.5 has been revised to require that the assessment reflect the P0, P1, and P2 categories identified in Table 1 during the conditions that the System is expected to experience due to the possible unavailability of the long lead time Equipment. **2.1.5** When an entity's spare equipment strategy could result in the unavailability of major Transmission equipment that has a lead time of one year or more (such as a transformer), an analysis of the impact of this possible unavailability on System performance shall be assessed. The Planning Assessment shall reflect the P0, P1, and P2 categories identified in Table 1 during the conditions that the System is expected to experience due to the possible unavailability of the long lead time equipment. The SDT does not feel that Part 2.3 raises the bar as entities should have been performing these studies all along. No change made. The SDT declines to revise Part 2.3 to include short circuit analysis for one of the years in the Near-Term Transmission Planning Horizon because Part 2.3 only requires that a Planning Assessment be performed. Past studies can be used to support the Planning Assessment. No change made. Parts 2.3 and 2.4 have been revised to include the reference to the requirements for use of past studies. **2.3** The short circuit analysis portion of the Planning Assessment shall be conducted annually addressing the Near-Term Transmission Planning Horizon and can be supported by current or past studies as indicated in Requirement R2, part 2.6. The analysis shall be used to determine whether circuit breakers have interrupting capability for Faults that they will be expected to interrupt using the System short circuit model with any planned generation and Transmission Facilities in service which could impact the study area. **2.4** The Near-Term Transmission Planning Horizon portion of the Stability analysis shall be assessed annually and be supported by current or past studies as indicated in Requirement R2, part 2.6. The following studies are required: Part 2.4.1 has been revised to reflect your suggestion. In addition, Requirement R2.4 concerns only "The Near-Term Transmission Planning Horizon portion of the Stability analysis". Part 2.4.1 is a sub-part of Part 2.4, and so should also carry the same limitation. **2.4.1** System peak Load for one of the five years. System peak Load levels shall include a Load model which represents the dynamic behavior of Loads that could impact the study area, considering the behavior of induction motor Loads. An aggregate System Load model which represents the overall dynamic behavior of the Load is acceptable. The SDT reviewed Part 2.4.3 and declined to use the term "base study" because "base study" may have different meanings in different parts of the continent, and the term, "studies described in Parts 2.4.1 and R2.4.2" should be sufficient to avoid confusion. No change made. Part 2.6 has been revised and included as Part 2.7 to reflect your suggestion. The third bullet in Part 2.6.1 is intended to meet the requirements in Table 1. Generation tripping is allowed at the discretion of the Planning Coordinator or Transmission Planner for P1 Events as long as there is no loss of firm Non-Consequential Load. In addition, in the fifth bullet, the duration for use of an operating procedure is also at the discretion of the Planning Coordinator or Transmission Planner because it may not be feasible environmentally to implement Transmission reinforcements in some locations. Part 2.5.1 has been revised and included as Part 2.6.1 to address your concerns, but the SDT disagrees that the timeframe should be changed to 10 years. **2.6.1** For steady state, short circuit, or Stability analysis: the study shall be five calendar years old or less, unless a technical rationale can be provided

Organization	Question 2 Comment
	to demonstrate that the results of an older study are still valid. Part 2.5 has been revised to reflect your suggestion. **2.5** The Long-Term Transmission Planning Horizon portion of the Stability analysis shall be assessed to address the impact of proposed generation additions or changes in that timeframe and be supported by current or past studies. Use of generation tripping not precluded within the Standard and the maximum duration for operating procedures in Corrective Action Plans is not addressed within the standard. UVLS and UFLS are not precluded in the Corrective Action Plan for those events where controlled load shedding is allowed. The Standard does not address the acceptability of the tools to be used for any Corrective Action Plan. In our last meeting the SDT agreed to revise Part 2.6 (and included it as Part 2.7) and project initiation date is no longer required. **2.7** For planning events shown in Table 1, when the analysis indicates an inability of the System to meet the performance requirements in Table 1, the Planning Assessment shall include Corrective Action Plan(s) addressing how the performance requirements will be met. Revisions to the Corrective Action Plan(s) are allowed in subsequent Planning Assessments but the planned System shall continue to meet the performance requirements in Table 1. Corrective Action Plan(s) do not need to be developed solely to meet the performance requirements for a single sensitivity run in accordance with Requirements R2, parts 2.1.4 and 2.4.3. The Corrective Action Plan(s) shall: Parts 2.8 and 2.9 were intended to contribute to open and transparent Transmission planning for peer review. The SDT reviewed both requirements and agrees that as written, they were unclear. Part 2.9 has been deleted. Part 2.8 has been revised and included as Part 2.9 in the new version to require that the Planning Assessment provides the expected largest Consequential Load Loss identified by the analysis of P1 and P2 events in Table 1 only. **2.9** The Planning Assessment shall provide the expected largest Consequential Load Loss (megawatt Demand) identified by the analysis of P1 and P2 events in Table 1. If Contingencies occur inside one utility that affect facilities in another utility, the Planning Coordinator or Transmission Planner for the utility, whose system is impacted would be responsible for performing the annual Assessment for those contingencies known to cause the impact. A certain amount of coordination will need to occur between the utilities. The parties can then mutually agree upon a Corrective Action Plan.
FirstEnergy Corp	The standard provides prescriptive language in requirement R2.4.1 regarding dynamic stability load models but is silent on steady-state load modeling. Most transmission planners use a conservative approach of simulating constant power loads in the steady-state environment, but other steady-state load modeling assumptions such as constant impedance load and constant current load can be utilized. At a minimum, the standard should require the transmission planner to document its load modeling assumptions for steady-state simulations. To this end, we suggest a new sub-requirement R2.1.1 be placed ahead of the existing R2.1.1 that parallels R2.4.1 and indicates the TP should document its load modeling assumptions for steady-state simulations. Specific comments, Requirements of R2A. R2.1: The requirement incorrectly references R2.6 which should be a reference to R2.5. B. R2.1.1: We propose that the SDT adjust requirement R2.1.1 to annually require one current year Near-Term and one Long-Term study, with the Long-Term study required to alternate between year six and year ten every other assessment year. This would reduce the workload on the industry and cover the mid-point transition period between the Near-term and

Organization	Question 2 Comment
	Long-Term horizons that the standard team believes needs some attention. We find the requirement to perform two Near-Term studies and one Long-Term study each year overly burdensome, in light of the increased workload caused by sensitivity analysis for each steady-state and stability review that is required. FE believes that one current year study within each time period should suffice in being able to interpolate and extrapolate results to cover the entire assessment range; especially when supplemented with qualified past study results. C. We offer the following comments related to requirement R2.4.1: 1. In the last round of comments we made the following comment "This requirement should be separated into two requirements as it covers two distinct topics; a) peak load study for one of the near-term years and b) dynamic load modeling." The SDT responded "...This Requirement is to make you properly represent the dynamic behavior of Loads at high System Load levels." Apparently, the SDT did not agree with our recommendation to split the requirement as no change was made in this regard. Therefore, as written the standard in R2.4.2 (stability study of the Off-Peak Load level) seems to imply that the appropriate modeling of dynamic behavior of loads, including consideration of induction motor loads, is NOT required for the Off-Peak Load stability study. Please clarify or confirm this view of R2.4.2. 2. R2.4.1: We are still of the opinion that the word "appropriately" is vague and only serves to add confusion within this requirement. It's recommended that "appropriately" be struck from the requirement. 3. R2.4.1: In Draft 3, the SDT added text to this requirement that states "An aggregate System Load model which represents the overall dynamic behavior of the Load is acceptable" to clarify that a detailed dynamic Load model is not required at each bus. We understand this to mean that the model is not expected to try and replicate the dynamic behavior of individual end-user Load characteristics and that general approximations for a customer class(es) (residential, commercial or industrial) simulated at a given load bus is acceptable. 4. Based on our comments C.1 through C.3 we propose the following requirement language: R2.4.1. System peak Load for one of the five years.R2.4.2. System Off-Peak Load for on of the five years.R2.4.3. Load models used for stability analysis shall represent the dynamic behavior of Loads, including the behavior of induction motor Loads. The study shall document assumptions made for representing the dynamic behavior of Loads, based on the following load classes - residential, commercial and industrial. D. R2.5.2: For clarity and readability we propose to insert the word "that" between the words "and would" so the requirement reads "...intervening period and that would impact ...". E. R2.6.1: This requirement indicates that an entity's Corrective Action Plans list situations where Table 1 Performance Criteria are not met and the associated actions needed to achieve required System performance. What if the actions and plans associated with newly identified deficiencies (current year studies) are not yet fully known and require further analysis and a more detailed study of various options. Would it be acceptable for a TP to indicate that the planned solution is To Be Determined? This could be a likely scenario for a long-term planning horizon study which may identify a number of deficiencies which require more detailed analysis to determine the appropriate solution. F. R2.6.2: We believe this requirement is overly prescriptive in requiring a project initiate date. The standard should not question an entity's project management but stay focused on whether or not the Correct Action Plan was put in place in a timely fashion. We propose that the team strike from this requirement the reference to project initiation date and focus on

Organization	Question 2 Comment
	whether or not Corrective Action Plans were completed in a timely manner to ensure Table 1 Performance Criteria is met. Additionally, project initiation date is pertinent to a operating procedure solution that is allowed by the standard. R2.6.4: We support requirement R2.6.4 but suggest the word "prudent" be struck from the text of the requirement as it can be subjective and open for debate. G. R2.7: This requirement introduces additional Corrective Action Plan requirements beyond what is stated in R2.6. FE proposes that the SDT restructure the two requirements into a single requirement (and sub-requirements) focused on Corrective Action Plans. H. R2.8: Does this requirement apply to sensitivity simulations? If so, it has limited applications to only those sensitivity analyses that consider variations in load such as a higher forecast (90/10), or increased reactive load (sensitivity to poor power-factor loads), etc. The SDT should consider clarifying the intent of the requirement if each current year study as well as their corresponding sensitivity simulation model(s) is intended to have this information documented within the assessment report. I. R2.9: We ask the SDT to confirm or correct our understanding that the requirement is asking about a TPs criteria for maximum allowable non-consequential load drop and NOT the maximum non-consequential load shed required to meet performance criteria for a particular contingency evaluation. We agree with the stated Measures, VRF, Time-Horizon, Data Retention and VSL of requirement R2

Response: The language does not preclude the documentation of the steady state Load model used because steady state assumption of Load model is a degree of conservativeness. See header note b. No change made.

In the new version, Part 2.6 now contains the requirement for the use of past studies, so Part 2.1 now has the correct reference. No change made.

As written, Requirements R2 and Part 2.1.1 provides flexibility for the Planning Coordinator or Transmission Planner to use past studies to support the current year assessment and to assess other years in addition to those identified in Part 2.1.1. So the suggestion to alternate between year six and year ten every other assessment is already allowed as written. No change made.

In Part 2.4.1 the SDT specifies the dynamic Load model representation for on peak because the System voltages are generally lower during on peak. The percentage of motor load, e.g., in air conditioners, could significantly increase reactive power requirements especially when they stall due to low System voltage and can therefore impact dynamic System performance on-peak. However, motor Load would likely not pose the same problem during off-peak as the System voltages are usually higher. So, in Part 2.4.2, it can be left to the discretion of the Planning Coordinator or Transmission Planner whether the dynamic motor Load would need to be represented per Part 2.4.1,

Part 2.5.2 has been modified and included as Part 2.6.2 and the “intervening period” language has been deleted.

2.6.2 For steady state, short circuit, or Stability analysis: the study shall not include any material changes unless a technical rationale can be provided to demonstrate that System changes do not impact the performance results in the study area.

In our last meeting the SDT agreed to revise Part 2.6 (and included it as Part 2.7) and project initiation date is no longer required.

2.7 For planning events shown in Table 1, when the analysis indicates an inability of the System to meet the performance requirements in Table 1, the

Organization	Question 2 Comment
	Planning Assessment shall include Corrective Action Plan(s) addressing how the performance requirements will be met. Revisions to the Corrective Action Plan(s) are allowed in subsequent Planning Assessments but the planned System shall continue to meet the performance requirements in Table 1. Corrective Action Plan(s) do not need to be developed solely to meet the performance requirements for a single sensitivity run in accordance with Requirements R2, parts 2.1.4 and 2.4.3. The Corrective Action Plan(s) shall: Part 2.6 has been modified and included as new Part 2.7. Part 2.6.1 requires a Corrective Action Plan be developed to enable the System performance requirements in Table 1 and Part 2.6 states that "revisions to the Corrective Action Plans are allowed in subsequent assessments but the System shall continue to meet the performance requirements in Table 1". This allows the Planning Coordinator or Transmission Planner to develop a Corrective Action Plan that can consist, for example, of a number of potential alternative solutions, and, the Corrective Action Plan can be revised as the study continues. 'Prudent' has been deleted in Part 2.6.4 (now Part 2.7.5). **2.7.5** If situations arise that are beyond the control of the Transmission Planner or Planning Coordinator that prevent the implementation of a Corrective Action Plan in the required timeframe, then the Transmission Planner or Planning Coordinator is permitted to utilize Non-Consequential Load Loss and curtailment of Firm Transmission Service to correct the situation that would normally not be permitted in Table 1, provided that the Transmission Planner or Planning Coordinator documents that they are taking actions to resolve the situation. The Transmission Planner or Planning Coordinator shall document the situation causing the problem, alternatives evaluated, and the use of Non-Consequential Load Loss or curtailment of Firm Transmission Service. Part 2.7: Short circuit duty Assessment has been revised for clarity and included as Part 2.8. **2.8** For short circuit analysis, if the short circuit current interrupting duty on circuit breakers determined in Requirement R2, part 2.3 exceeds their Equipment Rating, the Planning Assessment shall include a Corrective Action Plan to address the Equipment Rating violations. The Corrective Action Plan shall: Parts 2.8 and R2.9 were intended to contribute to open and transparent transmission planning for peer review. The SDT reviewed both requirements and agrees that as written, they were unclear. Part 2.9 has been deleted. Part 2.8 has been revised and included as Part 2.9 in the new version to require that the Planning Assessment provides the expected largest Consequential Load Loss identified by the analysis of P1 and P2 events in Table 1 only. **2.9** The Planning Assessment shall provide the expected largest Consequential Load Loss (megawatt Demand) identified by the analysis of P1 and P2 events in Table 1.
IRC Standards Review Committee	(1) When a spare equipment strategy does not cover the long lead time unavailability as stated in 2.1.4, will the system be treated as normal system condition or as having a contingency from which system adjustments are to be made prior to subsequent events. (2) Under R2.5 ?Past Studies may be used to support the Planning Assessment if they meet the following requirements and the sub requirement R2.5.2 states that for SS, SC, or stability analysis; the PRESENT system model shall not include any material changes, such as ".Does this mean that past studies may be used to support planning assessments as long as there are no material changes to the present system model" If so, that would be an impossible scenario to recreate.
Response: In Part 2.1.4 (now Part 2.1.5) when a piece of long lead-time Equipment is unavailable, System adjustments will need to be made. The System, after it is adjusted to accommodate that piece of Equipment out of service will be treated as the "normal" (P0) condition in Table 1. Part 2.1.5 is intended for the Planning Coordinator and/or Transmission Planner to take into account their spare Equipment strategy for long lead time Equipment when assessing the	

Organization	Question 2 Comment
performance of their System. If the loss of a piece of major Equipment can be replaced within a reasonable period of time, planning studies for the following year can assume that that piece of Equipment will be replaced. If not, its impact of unavailability would need to be assessed. Part 2.1.5 has been revised to require that the assessment reflect the P0, P1, and P2 categories identified in Table 1 during the conditions that the System is expected to experience due to the possible unavailability of the long lead time Equipment. **2.1.5** When an entity's spare equipment strategy could result in the unavailability of major Transmission equipment that has a lead time of one year or more (such as a transformer), an analysis of the impact of this possible unavailability on System performance shall be assessed. The Planning Assessment shall reflect the P0, P1, and P2 categories identified in Table 1 during the conditions that the System is expected to experience due to the possible unavailability of the long lead time equipment. Part 2.5.2 is intended to allow the use of past study if the System that is being modeled for Assessment today has not materially changed from the one modeled in the past study for the study area. While changes are expected to occur between planning cycles, not all changes have significant impacts on System performance. For example, if the load growth in an area has not changed significantly, there is no change in the Transmission System and no addition of new generation, and then a case can be made that the past study can be used to support a new Assessment.	
TVA System Planning	Do not understand the rationale for being so prescriptive in requiring specific years to be studied in R2.1.1. Why not allow the TP and/or PC to decide on the three years to be studied in the Near Term? Since R2.3 short circuit analysis is a new raising the bar requirement, should the implementation plan for this be for 5 years like the other new raising the bar requirements? Further clarification is needed in R2.4.1 concerning load models that appropriately represent the dynamic behavior of loads. Is a NERC drafting team addressing these issues to determine an industry standard? If contingencies occur inside one utility that affect facilities in another utility, which utility is responsible for running these studies during the annual assessments? In R2.6.1, is there any limit to the time duration that a SPS and/or operating procedures can be used in the CAP? In Posting #2, undervoltage load shed, underfrequency load shed, and Special Protection Schemes were considered to be Non-Consequential Load Loss. In R2.6.1, installation or modification of Protection Systems or Special Protection Systems are now allowed as part of the Corrective Action Plan. Should undervoltage and underfrequency load shed also be allowed in the Corrective Action Plan? In R2.9, does the requirement require the maximum non-consequential load that can occur for contingencies in Table 1 or does it require just the maximum that a utility will allow on its system? Suggest clarifying permissible or perhaps using similar language as found in R2.8. Please explain the reason why Requirement R2.9 is needed in the Assessment. Reporting the largest Non-Consequential Load Loss doe not impact reliability. In R2.1, change the reference to requirement R2.6 (at the end of the last line) to R2.5. With the elimination of the distinction between system and generating plant stability studies, the blanket requirement in R2.5.1 that all stability analyses be five calendar years old or less, regardless of any material changes to the system, would

Organization	Question 2 Comment
	cause needless work to be performed on those plants or areas of the system where no changes are occurring. Recommend add the following to the end of R2.5.1: unless justification can be provided to demonstrate that the results of an older study are still valid. In Requirement R2.6.2, what constitutes a "project initiation date," and how will it be used? Please clarify. Please explain the reason why Requirement R2.8 is needed in the Assessment. Reporting the largest Consequential Load Loss does not impact reliability. R2.1 What's the value in being able to use qualified past studies if you have to use annual current studies Strike the words supplemented with and insert the word or R2.3 Insert the phrase one year of after the word addressing. In the subrequirements of 2.1.3 and 2.4.3, the use of the word timing is unclear. Consider using in service date or schedule for. In R2.6, does the Corrective Action Plan need to show all possible alternatives to fix a problem that has been identified - or does only one solution need to be shown for a problem?

Response: As written, Requirement R2 and Part 2.1.1 provides flexibility for the Planning Coordinator or Transmission Planner to use past studies to support the current year Planning Assessment, and to assess other years in addition to those identified in Part 2.1.1. So the suggestion is already allowed as written. No change made.

The SDT does not feel that Part 2.3 raises the bar as entities should have been performing these studies all along. No change made.

Part 2.4.1 requires only that the Load model appropriately represent the dynamic behavior of Loads. It is up to the Planning Coordinator and Transmission Planner, who are closer to the issues in the planning area to determine the application of the Load models. No change made.

If Contingencies occur inside one utility that affect Facilities in another utility, the Planning Coordinator or Transmission Planner for the utility whose System is impacted would be responsible for performing the annual Assessment for those Contingencies known to cause the impact. A certain amount of coordination will need to occur between the utilities. The parties can then mutually agree upon a Corrective Action Plan.

Part 2.6 has been revised and included as Part 2.7 in the new version. In the fifth bullet in Part 2.6.1, the duration for use of an operating procedure is at the discretion of the Planning Coordinator or Transmission Planner because it may not be feasible to implement Transmission reinforcements in some locations.

> **2.7** For planning events shown in Table 1, when the analysis indicates an inability of the System to meet the performance requirements in Table 1, the Planning Assessment shall include Corrective Action Plan(s) addressing how the performance requirements will be met. Revisions to the Corrective Action Plan(s) are allowed in subsequent Planning Assessments but the planned System shall continue to meet the performance requirements in Table 1. Corrective Action Plan(s) do not need to be developed solely to meet the performance requirements for a single sensitivity run in accordance with Requirements R2, parts 2.1.4 and 2.4.3. The Corrective Action Plan(s) shall:

UVLS and UFLS are not precluded in the Corrective Action Plan for those events where controlled Load shedding is allowed. The Standard does not address the acceptability of the tools to be used for any Corrective Action Plan. Part.2.6 does not specify how the Corrective Action Plan is written, it only requires that there is a plan to correct the potential problem identified in the Assessment. Therefore, it can be a number of alternatives or a single definitive alternative as long as the potential problem is addressed.

Organization	Question 2 Comment
Part 2.9 has been deleted. In the new version, Part.2.6 now contains the requirement for the use of past studies, so Part 2.1 now has the correct reference. No change made. Part 2.5.1 has been revised and included as Part 2.6.1 to address your concerns. **2.6.1** For steady state, short circuit, or Stability analysis: the study shall be five calendar years old or less, unless a technical rationale can be provided to demonstrate that the results of an older study are still valid. In our last meeting the SDT agreed to revise Part 2.6 (and included it as Part 2.7) and project initiation date is no longer required. The SDT believes that Requirement R2, part 2.8 (now part 2.9) supports the objective of ensuring BES reliability by ensuring that the largest expected amount of Consequential Load Loss is reported in an open, transparent process. Part 2.9 has been clarified. **2.9** The Planning Assessment shall provide the expected largest Consequential Load Loss (megawatt Demand) identified by the analysis of P1 and P2 events in Table 1. In Part 2.1 it is envisioned that not all parts of the studies on which the Assessment is to be based can rely on past studies. For example, a study on year five performed during the past year may not be representative of year five in the current year. A past study can still be used if it can be demonstrated that the requirements for use of past studies are met. Parts 2.1.3 (now Part 2.1.4) and 2.4.3 have been revised to reflect your suggestion. **2.1.4** For each of the studies described in Requirement R2, parts 2.1.1 and 2.1.2, sensitivity case(s) shall be utilized to demonstrate the impact of changes to the basic assumptions used in the model for the list of items shown below. To accomplish this, the sensitivity analysis in the Planning Assessment must vary one or more of the following conditions not already included in the studies by a sufficient amount to stress the System within a range of credible conditions that demonstrate a measurable change in performance. • Real and reactive forecasted Load. • Expected transfers. • Expected in service dates of new or modified Transmission Facilities. • Reactive resource capability. • Generation additions, retirements, or other dispatch scenarios. • Controllable Loads and Demand Side Management. • Duration or timing of planned Transmission outages. **2.4.3** For each of the studies described in Requirement R2, parts 2.4.1 and 2.4.2, sensitivity case(s) shall be utilized to demonstrate the impact of changes to the basic assumptions used in the model for the list of items shown below. To accomplish this, the sensitivity analysis in the Planning Assessment must vary one or more of the following conditions not already included in the studies by a sufficient amount to stress the System within a range of credible conditions that demonstrate a measurable change in performance.

Organization	Question 2 Comment
	• Load level, Load forecast, or dynamic model assumptions. • Expected transfers. • Expected in service dates of new or modified Facilities. • Reactive resource capability. • Generation additions, retirements, or other dispatch scenarios. Part.2.6 does not specify how the Corrective Action Plan is written, it only requires that there is a plan to correct the potential problem identified in the Assessment. Therefore, it can be a number of alternatives or a single definitive alternative as long as the potential problem is addressed.
Exelon Transmission Planning	There are large amounts of resources required to perform the volume of studies required, including the dynamic and steady state sensitivities, extreme studies, and one-year lead time equipment spares. Many of these studies ultimately do not require additional consideration or reinforcement and have low threshold triggers, such as a 20 MW generation change. Performing these studies will be very burdensome to many TPs and result in few, if any, reliability benefits. We believe that the TP should be given more flexibility to allocate planning resources to areas of maximum benefit. The Spare Strategy in R2.1.4 is still not well defined. What types of equipment are included? How would a one-year lead time element be determined for consideration in this requirement? In R2.4.1, we recommend changing appropriately represents to a dynamic model appropriate for the type of stability study being performed? The TP should be allowed to perform only those specific stability studies needed and pertinent to its system. The same can be said about the dynamic load model. Differing interpretations are possible. We suggest changing the last sentence in R2.4.1 to .., a Load model shall be used which appropriately represents..An aggregate System Dynamic Load model which represents the overall dynamic behavior of the Load is acceptable. In 2.1.3 and 2.4.3 strike Expected from the phrase Expected transfers. Expected transfers should already be in the base case. In R2.5.2, the determination of a Material change is an engineering judgment issue and it should not be categorically defined here. There may be more significant material changes than a 20 MW increase in generation that would be better to study. In the phrase, For steady statesuch as generation or transmission additions/removals, or topology changes and would impact the study area, it is suggested to change would to could and impact the study area to significantly change the previous study results. The term should not be Corrective Action Plan, which implies a violation of a requirement. Suggest changing this term to Future Reliability Plan. What is the intended use for reporting the largest consequential and maximum non-consequential load loss amount and event? This would be a potential security concern if made public. There is a similar concern with the extreme event analysis. In 2.6.2 please define Initiation Date. While we appreciate your previous consideration of this comment, it is still not clear what this means. Is this the date of mitigation identification, regulatory approval date, construction start date, equipment procurement date, etc? If this is a commonly understood term not requiring a formal definition, could you then please

Organization	Question 2 Comment
	provide that definition in your response? If there is going to be a requirement to report on each contingency that results in non-consequential load loss it should be specified.

Response: If there are specific requirements in the standard that you feel would require the Transmission Planner to allocate their resources a certain way then you need to supply those specifics. As it stands, the SDT feels that the Transmission Planner can allocate resources any way they want. The standard does not dictate how they should meet requirements. No change made.

Part 2.1.4 (now Part 2.1.5) requires that the Planning Coordinator and/or Transmission Planner consider the possibility that a piece of major Equipment can be out of service for an extended period of time because no spare piece of Equipment is on hand or can be purchased and be placed in service such that the outage won't last into the next planning cycle. Loss of a transformer is given as an example as a piece of major Equipment, which if forced out of service and had to be replaced with a new transformer, may have a lead time of more than one year. However, if a company has a strategy, for example, to have spare transformers in its system, or have an agreement with another entity to share spare transformers, it would significantly reduce the probability of an outage of a transformer for longer than one year. Part 2.1.5 has been revised to require that the assessment reflect the P0, P1, and P2 categories identified in Table 1 during the conditions that the System is expected to experience due to the possible unavailability of the long lead time Equipment.

> **2.1.5** When an entity's spare equipment strategy could result in the unavailability of major Transmission equipment that has a lead time of one year or more (such as a transformer), an analysis of the impact of this possible unavailability on System performance shall be assessed. The Planning Assessment shall reflect the P0, P1, and P2 categories identified in Table 1 during the conditions that the System is expected to experience due to the possible unavailability of the long lead time equipment.

Part 2.4.1 has been revised to address your concerns.

> **2.4.1** System peak Load for one of the five years. System peak Load levels shall include a Load model which represents the dynamic behavior of Loads that could impact the study area, considering the behavior of induction motor Loads. An aggregate System Load model which represents the overall dynamic behavior of the Load is acceptable.

The SDT declines to strike "Expected Transfers" from Parts 2.1.3 (now Part 2.1.4) and 2.4.3. Parts 2.1.4 and 2.4.3 are sensitivity cases to be examined, which should cover conditions different from the base case. In any case, the Planning Coordinator or Transmission Planner are only required to examine one of the items from the list, and has the flexibility to choose other sensitivity cases if changes in expected transfer is not applicable.

Part 2.5.2 has been modified and included as Part 2.6.2. The SDT declines to change the term "Corrective Action Plan" to "Future Reliability Plan" because the Standard only requires the System performance to meet requirements. If a System meets requirements, then a Corrective Action Plan would not be necessary. An entity can still choose to install Transmission reinforcements for other reasons, but they would not be required by this Standard.

> **2.6.2** For steady state, short circuit, or Stability analysis: the study shall not include any material changes unless a technical rationale can be provided to demonstrate that System changes do not impact the performance results in the study area.

Parts 2.8 and 2.9 were intended to contribute to open and transparent Transmission planning for peer review. The SDT reviewed both requirements and agrees that as written, they were unclear. Part 2.9 has been deleted. Part 2.8 has been revised and included as Part 2.9 in the new version to require that the Planning Assessment provides the expected largest Consequential Load Loss identified by the analysis of P1 and P2 events in Table 1 only. The SDT does not believe that this requirement represents a security concern as rewritten.

> **2.9** The Planning Assessment shall provide the expected largest Consequential Load Loss (megawatt Demand) identified by the analysis of P1 and P2

Organization	Question 2 Comment
	events in Table 1. In our last meeting the SDT agreed to revise Part 2.6 (and included it as Part 2.7) and project initiation date is no longer required. **2.7** For planning events shown in Table 1, when the analysis indicates an inability of the System to meet the performance requirements in Table 1, the Planning Assessment shall include Corrective Action Plan(s) addressing how the performance requirements will be met. Revisions to the Corrective Action Plan(s) are allowed in subsequent Planning Assessments but the planned System shall continue to meet the performance requirements in Table 1. Corrective Action Plan(s) do not need to be developed solely to meet the performance requirements for a single sensitivity run in accordance with Requirements R2, parts 2.1.4 and 2.4.3. The Corrective Action Plan(s) shall: The comment – "If there is going to be a requirement to report on each contingency that results in non-consequential load loss it should be specified" does not reference any specific Requirement and therefore, the SDT can't respond. No change made.
Southern Company	The Lower VSL describes a scenario where the TP or PC fails one or both of two particular sub-requirements. This language does not reconcile how failure of two sub-requirements is consistent with failure of only one of the same requirements. The recommendation is to restructure the VSL such that it is invoked when either sub-requirement is violated (not when both are violated). Generating unit stability has now been combined with system stability to be just one category - Stability. Previously, the shelf life of generating unit stability studies was indefinite -only needed to be restudied when system changes required it. Now the maximum shelf life of Stability studies is five years. Does this mean that generating unit stability studies must be repeated every five years whether system changes make it necessary or not? Requirement 2.3 stating that the short circuit analysis portion of the Planning Assessment shall be conducted annually addressing the Near-Term Transmission Planning Horizon. It is not clear if the intent of the requirement is to study every year within Year One and year five. A statement similar to R2.1.1 Year One or two and year five for steady state analysis would be helpful. Some clarification is needed for R2.3 on the term Near-Term. Requirement 2.3 stating that "the analysis shall determine the maximum short circuit interruption duty on fault interrupting devices using the System short circuit model with any generation and Transmission Facilities in service which could impact the study area. What interrupting devices are included? Would the circuit breakers be enough? Moreover, the term System short circuit model is used for the first time (and the only time) here for the entire document. It is very common to use a different short circuit model for short circuit analysis while the steady state and stability analysis use different System models (power flow models). Some clarification is needed. R2.8 and R2.9 use the term megawatt "Demand". This is redundant. We suggest striking the word demand.

Response: The Lower VSL for Requirement R2 has been revised.

R2 VSL	The responsible entity failed to comply with Requirement R2, part 2.9	The responsible entity failed to comply withRequirement R2, part 2.3 or part 2.8.	The responsible entity failed to comply with one of the following parts of Requirement R2: part 2.1,	The responsible entity failed to comply with two or more of thefollowing parts of Requirement R2: part 2.1,

Organization	Question 2 Comment			
			part 2.2, part 2.4, part 2.5, or part 2.7	part 2.2, part 2.4, or part 2.7.

Part 2.5.1 has been revised and included as Part 2.6.1 to address your concerns.

2.6.1 For steady state, short circuit, or Stability analysis: the study shall be five calendar years old or less, unless a technical rationale can be provided to demonstrate that the results of an older study are still valid.

The SDT declines to revise Part 2.3 to include short circuit analysis for one of the years in the Near-Term Transmission Planning Horizon because Part 2.3 only requires that a Planning Assessment be performed. Past studies can be used to support the Planning Assessment.

Part 2.3 is intended for the Planning Coordinator and/or Transmission Planner to assess the whether circuit breakers supporting the BES have interrupting capability for Faults that they will be expected to interrupt and is not specifically related to new planned Facilities. Part 2.3 has been revised to provide greater clarity.

2.3 The short circuit analysis portion of the Planning Assessment shall be conducted annually addressing the Near-Term Transmission Planning Horizon and can be supported by current or past studies as indicated in Requirement R2, part 2.6. The analysis shall be used to determine whether circuit breakers have interrupting capability for Faults that they will be expected to interrupt using the System short circuit model with any planned generation and Transmission Facilities in service which could impact the study area.

The “megawatt” Is the qualifier for “Demand”. The SDT believe it is clear as written. No change made.

United Illuminating	R2 Comment We recommend replacing the phrase “prepare” with “conduct and document” in the first sentence. R2.1.1 Comment The requirement to evaluate year one or year two should be removed. This is not consistent with the time horizon identified in R2. R2.1.2 Comment The requirement should be removed. With no description of the system stresses and generator outages to be applied when assessing the off-peak load, it is difficult to imagine any issues which would arise which are not revealed in the peak load evaluation that could not be addressed through generation dispatch adjustments. R2.1.3 Comment - The emphasis on sensitivity testing in the existing section appears misdirected and should be focused on reasonable risk. The assessment should have to include a discussion of reasonable risk. The sensitivity list can be used to select sensitivities to assess risk. Having a requirement to perform one sensitivity just to meet the requirement of the standard does not add value to the assessment. R2.1.4 Priority Comment With respect to spare equipment strategy, this requirement imposes severe testing requirements upon the system. However, there is no discussion on the generation dispatch or system transfers that are to be used for this portion of the assessment. The expectations for changes in system stresses need to be clear as part of the standard. Additionally, this section does not contemplate changing the acceptability of load loss. After experiencing a major contingency such as this, some change in the acceptability of load loss should be expected. The standard should consider allowing Non-Consequential load loss for P1 & P2 events. The standard needs to allow Non-Consequential load loss for P3 & P4 events. Why doesn’t the standard state (such as a transformer, generator or power electronic device) and not just

Organization	Question 2 Comment
	(such as a transformer). R2.2 Comment We suggest replacing the phrase "a current System peak Load study" with a valid System peak Load study in the first sentence. The word current is confusing as some read the word current to mean today's rather than valid. R2.3 Comment Please provide guidance as to what year should be represented when performing short circuit studies. R2.4.1 Comment Change to read: "For peak System Load levels, a Load model shall be used which appropriately represents the dynamic behavior of Loads, including consideration of the behavior of induction motor Loads or an aggregate System Load model which represents the overall dynamic behavior of the Load. R2.5.1 Comment? We suggest deleting this requirement, and incorporating it into R2.5.2. R2.5.2 Comment To incorporate R.2.5.1 into R2.5.2; please modify the section as follows: For steady state, short circuit, or Stability analysis the study shall be less than five calendar years old or less: the present System model shall not include any material changes, such as, generation or Transmission additions/removals, or topology changes that have occurred in the intervening period and would impact the study area. Material generation changes could include: The addition/deletion/change of individual generating unit capability determined to be material by the Planning Coordinator or Transmission Planner. [A 20 MVA generator is fairly small in a 30,000 MW system and system concerns would already be addressed though the System Impact Study]? An aggregated addition/deletion/change to a group of generating units directly connected through their step-up transformer(s) to the BES determined to be material by the Planning Coordinator or Transmission Planner. R2.6 Priority Comment As written, this section undermines the value of the sensitivity testing. This section should require a corrective action plan to fix problems determined in sensitivity analysis if there is a reasonable risk of occurrence. We suggest making the standard read Provide documentation that explains the reasoning for the sensitivities considered and selected. R2.6 Comment At the end of the second sentence, the phrase "in the tables" is used. We suggest using more definitive language such as in Table 1. R2.6.2 Comment The phrase Project Initiation Date needs to be defined. It is unclear if this is this the date of ground breaking, purchase orders being issued, solution study initiation, etc. Additionally, in the second sentence the phrase "as well as an in-service date" should be modified to read "as well as a target in-service date". R2.6.3 Comment Plans can provide a target in-service year but not an actual in-service year. R2.6.4 Priority Comment There should be a cutoff point when changes occur beyond a certain date. When that date occurs, further changes will be evaluated in the next year's assessment. Otherwise, if a state makes a decision not to site a project a few weeks prior to the end of the assessment period, there will not be sufficient time to incorporate this into that year's assessment and develop corrective actions. R2.8 Comment Largest consequential load loss is not factored into the Planning Assessment and should therefore be deleted. R2.9 Comment This requirement is unclear. Is this requirement asking for each transmission planner to list their criteria for

Organization	Question 2 Comment
	non-consequential load loss, or is it asking how much non-consequential load loss was being relied upon in the assessment? We recommend that the requirement be modified to require documentation of the maximum amount of non-consequential load loss that was relied upon during the assessment.

Response: The SDT does not think that replacing "prepare" with "conduct and document" would add clarity, since Requirement R2 includes a requirement to document assumptions and results. No change made.

The *Time Horizon* term at the end of the requirement deals with mitigation time periods (as shown below) and is not connected to the assessment time frames. No change made. Time Horizons are a consideration when there is a violation of a requirement – the impact to the BES of violating a requirement with a long-term planning horizon is not expected to be as severe as the impact associated with violating a requirement with a real-time operations time horizon.

Mitigation Time Horizon

The time horizons available for mitigating a violation to a requirement include the following:

- **Long-term Planning** — a planning horizon of one year or longer.
- **Operations Planning** — operating and resource plans from day-ahead up to and including seasonal.
- **Same-day Operations** — routine actions required within the timeframe of a day, but not real-time.
- **Real-time Operations** — actions required within one hour or less to preserve the reliability of the bulk electric system.
- **Operations Assessment** — follow-up evaluations and reporting of real time operations.

Part 2.1.2 requires that the Planning Coordinator and/or Transmission Planner also consider off-peak conditions because the System must be able to meet performance requirements over all demand levels. System peak condition may not represent all stressed conditions. For example, during off-peak, the Load is low, and the generation would have to be turned off to achieve Load-resource balance. Turning down resources within a Load area could result in reliability problems. Lowering the Load in areas with many non-dispatchable resources could also pose potential problems. As the System incorporates more and more renewable resources, some of them are non-dispatchable; a standard must be forward looking so the Planning Coordinator and Transmission Planner can identify potential problems as part of the Assessment. No change made.

Part 2.1.3 (now Part 2.1.4) has been rewritten to clarify the intent of the requirement. The requirement does not preclude a discussion of risk.

> **2.1.4** For each of the studies described in Requirement R2, parts 2.1.1 and 2.1.2, sensitivity case(s) shall be utilized to demonstrate the impact of changes to the basic assumptions used in the model for the list of items shown below. To accomplish this, the sensitivity analysis in the Planning Assessment must vary one or more of the following conditions not already included in the studies by a sufficient amount to stress the System within a range of credible conditions that demonstrate a measurable change in performance.
>
> - Real and reactive forecasted Load.
> - Expected transfers.
> - Expected in service dates of new or modified Transmission Facilities.

Organization	Question 2 Comment
	• Reactive resource capability. • Generation additions, retirements, or other dispatch scenarios. • Controllable Loads and Demand Side Management. • Duration or timing of planned Transmission outages. In Part 2.1.4 (now Part 2.1.5) when a piece of long lead-time Equipment is unavailable, System adjustments will need to be made. The System, after it is adjusted to accommodate that piece of Equipment out of service will be treated as the "normal" (P0) condition in Table 1 and the rest of Table 1 will be applied as stated. Part 2.1.5 is intended for the Planning Coordinator and/or Transmission Planner to take into account their spare Equipment strategy for long lead time Equipment when assessing the performance of their System. If a piece of major Equipment can be replaced within a reasonable period of time, planning studies for the following year can assume that that piece of Equipment will be replaced. If not, its impact of unavailability would need to be assessed. Actions such as out of merit dispatch, operational restrictions, System reconfiguration can be part of a Corrective Action Plan if the System cannot meet performance requirements without the Facility in service. Part 2.1.5 has been revised to require that the assessment reflect the P0, P1, and P2 categories identified in Table 1 during the conditions that the System is expected to experience due to the possible unavailability of the long lead time Equipment. **2.1.5** When an entity's spare equipment strategy could result in the unavailability of major Transmission equipment that has a lead time of one year or more (such as a transformer), an analysis of the impact of this possible unavailability on System performance shall be assessed. The Planning Assessment shall reflect the P0, P1, and P2 categories identified in Table 1 during the conditions that the System is expected to experience due to the possible unavailability of the long lead time equipment. Part 2.2 is intended to require a study performed in the current year, as opposed to studied performed in the past years. Part 2.2 has been revised to provide greater clarity. **2.2** The Long-Term Transmission Planning Horizon portion of the steady state analysis shall be assessed annually and be supported by the following annual current study, supplemented with qualified past studies as indicated in Requirement R2, part 2.6: For Part 2.3 the decision on the year to be represented in the study is left to the discretion of the Planning Coordinator or Transmission Planner. Part 2.3 only requires it to be either a study that was performed during the current year or in the past. For example, this year is 2009 and a study performed in 2009 is a current study, the study can investigate the System in a future year, which is at the discretion of the Planning Coordinator or Transmission Planner performing the study. Requirement R2.3 has been revised to provide greater clarity. **2.3** The short circuit analysis portion of the Planning Assessment shall be conducted annually addressing the Near-Term Transmission Planning Horizon and can be supported by current or past studies as indicated in Requirement R2, part 2.6. The analysis shall be used to determine whether circuit breakers have interrupting capability for Faults that they will be expected to interrupt using the System short circuit model with any planned generation and Transmission Facilities in service which could impact the study area. Part 2.4.1 was revised but not changed as proposed because the intent of the last sentence is to allow the use of an aggregated System Load model as an appropriate Load representation. The suggested change could be read to mean that an aggregated System Load model would not appropriately represent the dynamic behavior of Loads. Parts 2.5 .1 and 2.5.2 (new Parts 2.6.1 and 2.6.2) were not combined. While the SDT appreciates the concern that a 20 MW generation addition can be small compared to a large System, a NERC standard needs to be clear as to the applicability. A requirement which contains "determined to be material by the Planning Coordinator or Transmission Planner" is not clear. Therefore, changing from 20 MW to "material" will also have to require justification from the Planning

Organization	Question 2 Comment
Coordinator or Transmission Planner on what is "material". Material has been deleted. Part 2.6 has been modified and included as new Part 2.7. The intent is to allow discretion for the Planning Coordinator or Transmission Planner to correct those deficiencies if they are prevalent (i.e., occur is more than one sensitivity). Although not required, the standard does not preclude the Planning Coordinator or Transmission Planner to develop Corrective Action Plans for high risk scenarios. However, if the scenario is high risk, then it should have been included in the base assumptions in the assessment and the Corrective Action Plan would have been required. The end of the second sentence has been changed to refer to Table 1 as suggested. **2.7** For planning events shown in Table 1, when the analysis indicates an inability of the System to meet the performance requirements in Table 1, the Planning Assessment shall include Corrective Action Plan(s) addressing how the performance requirements will be met. Revisions to the Corrective Action Plan(s) are allowed in subsequent Planning Assessments but the planned System shall continue to meet the performance requirements in Table 1. Corrective Action Plan(s) do not need to be developed solely to meet the performance requirements for a single sensitivity run in accordance with Requirements R2, parts 2.1.4 and 2.4.3. The Corrective Action Plan(s) shall: In our last meeting the SDT agreed to revise Part 2.6 (and included it as Part 2.7) and project initiation date is no longer required. Part 2.6.4 allows the Planning Coordinator or Transmission Planner to address situations that are beyond its control by utilizing Non-Consequential Load Loss and/or curtailment of Firm Transmission Service, which are normally not permitted. Depending on the urgency of the need, the Corrective Action Plan may be developed outside the normal Assessment cycle at the discretion of the Planning Coordinator or Transmission Planner involved. Parts 2.8 and 2.9 were intended to contribute to open and transparent transmission planning for peer review. The SDT reviewed both requirements and agrees that as written, they were unclear. Part 2.9 has been deleted. Part 2.8 has been revised and included as Part 2.9 in the new version to require that the Planning Assessment provides the expected largest Consequential Load Loss identified by the analysis of P1 and P2 events in Table 1 only. **2.9** The Planning Assessment shall provide the expected largest Consequential Load Loss (megawatt Demand) identified by the analysis of P1 and P2 events in Table 1.	
Louisiana Energy and Power Authority	R2.5. This basic requirement intends, as we understand it, to require that earlier studies not be used for a current assessment if they are no longer accurate. But the phrasing is potentially confusing, and would be clearer if revised. Since the requirement deals with the use of past studies, we suggest that R2.5.2 be revised to state that the study may be used only if there have been no material changes, so that R2.5 reads in full:R2.5. Past studies may be used to support the Planning Assessment if they meet the following requirements: R2.5.1. For steady state, short circuit, or Stability analysis: the study shall be five calendar years old or less. R2.5.2. For steady state, short circuit, or Stability analysis: the study may be used only if there have been no material changes, such as generation or Transmission additions/removals, or topology changes that have occurred in the intervening period and would impact the study area. Material generation changes could include: The addition/deletion/change of individual generating unit capability of 20 MW or greater. An aggregated addition/deletion/change to a group of generating units directly connected through their step-up transformer(s) to the BES which total 20 MW or greater. With respect to footnote 10 to Table 1, we fear that the flexibility suggested by those provisions may be excessive for a planning standard. The ambiguity occasioned by stating emergency actions that can properly be taken in a planning standard can be utilized by those who plan the system in a manner which plans to drop non-consequential loads just as footnote b has been used in the past. If this is intended to raise the bar as stated these provisions do not belong in a

Organization	Question 2 Comment
	planning standard, at least as now stated. It may be appropriate to remove the reference to footnote 10, at least in the Initial System Condition entry in P3, where it suggests that it can be invoked after loss of a single generator, and we request the SDT to review that footnote to assure that it is appropriate in the other entries to which it is applied.
Response: Part 2.5 has been revised and included as Part 2.6 as shown. **2.6.1** For steady state, short circuit, or Stability analysis: the study shall be five calendar years old or less, unless a technical rationale can be provided to demonstrate that the results of an older study are still valid. **2.6.2** For steady state, short circuit, or Stability analysis: the study shall not include any material changes unless a technical rationale can be provided to demonstrate that System changes do not impact the performance results in the study area. Footnote 10 (now footnote 9) was added to address the disjoint between how some parties calculate ATC/AFC when assessing Long Term Firm Transmission Service and the currently proposed TPL-001-1 standard. TPL-001-1 requires Transmission Planners to plan their systems to meet multiple contingency events and some parties assess Long Term Firm Transmission Service on a first Contingency basis. Units obligated to re-dispatch, as contemplated in Footnote 9 are those units which are contractually bound to provide the service as well as those obligated to provide the service under Network Integrated Transmission Service, under FERC's pro forma OATT. Under the pro forma OATT, units designated as network resources receiving NITS are obligated to re-dispatch as requested by the Transmission Provider pursuant to Section 33.2 to maintain reliability. The footnote is worded such that curtailment/re-dispatch cannot result in the loss of firm Load preserves the guidance given by FERC in Order 693 that no single Contingency result in the loss of firm Load. No change made. The SDT has reviewed the application of footnote 10 (now footnote 9) and believes that it is correct. No change made.	
System Protection and Transmission Planning Department	R2 - The term "Stability Analysis" is used frequently in the standard, but is not clearly defined. Based on an IEEE paper ("Definition and Classification of Power System Stability," Kundar, et al) there are 5 different categories of stability analysis: 1)small signal angle stability; 2) transient angle stability; 3) frequency stability; 4) large disturbance voltage stability; and 5) small disturbance voltage stability. Does the writing committee intend to make the analysis of all these types of stability issues mandatory? I recommend inserting a new definition into the standard for stability as follows: "Stability Analysis - The study of the bulk electric power system's ability, for a given initial operating condition, to regain a state of operating equilibrium after being subjected to a physical disturbance. There are 5 accepted categories of power system stability: 1) small signal angle stability; 2) transient angle stability; 3) frequency stability; 4) large disturbance voltage stability; and 5) small disturbance voltage stability. While there are situations that exist that require small signal angle and voltage stability analysis, only transient angle stability, frequency stability, and large disturbance voltage stability analysis are generally relevant to system planning performance assessments. R2.1.4 is a new requirement directing studies to consider impacts of spare equipment strategy. Does this require the TP to run scenario analysis without certain transformers? It is not clear what is required. How many spare transformers are required? What reliability level is acceptable? R2.1.4 The one year cut-off seems arbitrary. One MONTH may be unacceptably long in some cases. Instead of one year or more, we suggest the requirement state an extended time period.

Organization	Question 2 Comment
	R2.2. The wording on this requirement is not clear. Is it trying to say that a long-term (5-10 year) peak loading study is required to be performed annually R2.2: What is meant by the term current System peak Load study A powerflow study performed under expected peak-load conditions? Or a forecast of peak loads? R2.3 A short circuit analysis requirement is now added to Planning Assessment requirements. Short circuit analysis appears to be in the standard to document adequate ratings for interrupting equipment. That would be the purpose of short circuit studies we perform. If there are other intended meanings, then additional detail is needed. R2.3 We do not agree that a short circuit analysis needs to be conducted annually. The requirement for a new short circuit duty study should be driven by changes in the system, as is done for powerflow study work. In short, until system changes are made, we would not anticipate higher fault duties, and there would be no reason to rerun studies. R2.4.1 requires dynamic load models. Development of dynamic load models is ongoing, and therefore will need a much longer implementation period than the steady state portions of the standard. We are not sure two years will be enough. It depends partly on pending work that is not under our control.R1.1.2, R2.1.4, R2.5.2, R3.3.4, R4.3.3, R5 When text of a Standard Requirement includes the phrase such as or could include, then gives a list of possible choices, we take it to mean "just one of these items, or none of these, or something not listed here". In other words, such as lists are really non-required, non-interpretable, non-measurable options. They should not be included in requirements. Lists such as these belong in transmittal notes and associated SDT commentary, not in Compliance Standard Requirements. R2.5.2 Limits such as "addition/deletion/change to a group of generating units . . . which total 20 MW or greater. are not always appropriate. Appropriateness of Generation netting with load should depend on system size and engineering judgment, not artificial limits. The suggestion list following generation changes could include: should be eliminated. R2.6.2. For the Near-Term Transmission Planning Horizon, include both a project initiation date as well as an in-service date? The assessment report should not require a full project development just a description of what is required to provide adequate service within specified operating criteria. The term project initiation is not clear. Requirement R2.6.2 should be eliminated. R2.8. The Planning Assessment shall provide the largest Consequential Load Loss (megawatt Demand) and the associated event caused by any P1 event and any P2 event in Table 1. is complicated, and may require new modeling software capability to comply. Software vendors would develop this capability. Why is this required? What is the expected benefit to system reliability?

Response: The SDT disagrees that the Standard should include a definition of Stability analysis because it is covered in Requirement R2. "Stability analysis" is not a defined NERC term and is not intended to be defined as in IEEE; however, it does not conflict with the IEEE definition. No change made.

Part 2.1.4 (now Part 2.1.5) requires that the Planning Coordinator and/or Transmission Planner consider the possibility that a piece of major Equipment can be out of service for an extended period of time because no spare piece of Equipment is on hand or can be purchased and be placed in service such that the outage won't last into the next planning cycle. Loss of a transformer is given as an example as a piece of major Equipment, which if forced out of service and had to be replaced with a new transformer, and may have a lead time of more than one year. However, if a company has a strategy, for example, to have spare transformers in its system, or have agreement with another entity to share spare transformers, it would significantly reduce the probability of an outage of a transformer for longer than

Organization	Question 2 Comment
one year. The Planning Coordinator and/or Transmission Planner will need to decide which pieces of major Equipment in their respective Systems would be more vulnerable to long term outage. In Part 2.1.5 when a piece of long lead-time Equipment is unavailable, System adjustments will need to be made. The System, after it is adjusted to accommodate that piece of Equipment out of service will be treated as the "normal" (P0) condition in Table 1 and the rest of Table 1 will be applied as stated. Part 2.1.5 has been revised to require that the assessment reflect the P0, P1, and P2 categories identified in Table 1 during the conditions that the System is expected to experience due to the possible unavailability of the long lead time Equipment. **2.1.5** When an entity's spare equipment strategy could result in the unavailability of major Transmission equipment that has a lead time of one year or more (such as a transformer), an analysis of the impact of this possible unavailability on System performance shall be assessed. The Planning Assessment shall reflect the P0, P1, and P2 categories identified in Table 1 during the conditions that the System is expected to experience due to the possible unavailability of the long lead time equipment. Part 2.2 has been revised to provide greater clarity. The standard will require that a study for one year within the Long-Term Transmission Planning Horizon be conducted. The Planning Assessment can be supplemented by past studies. **2.2** The Long-Term Transmission Planning Horizon portion of the steady state analysis shall be assessed annually and be supported by the following annual current study, supplemented with qualified past studies as indicated in Requirement R2, part 2.6: Part 2.3 has been revised to provide greater clarity. In addition, Part 2.3 is intended for the Planning Coordinator and/or Transmission Planner to assess whether circuit breakers supporting the BES have interrupting capability for Faults that they will be expected to interrupt and is not specifically related to new planned Facilities. The Assessment is to be supported by a current or past study. Therefore, annual short circuit study is not required if no material change has occurred. **2.3** The short circuit analysis portion of the Planning Assessment shall be conducted annually addressing the Near-Term Transmission Planning Horizon and can be supported by current or past studies as indicated in Requirement R2, part 2.6. The analysis shall be used to determine whether circuit breakers have interrupting capability for Faults that they will be expected to interrupt using the System short circuit model with any planned generation and Transmission Facilities in service which could impact the study area. Part 2.4.1 allows the use of an aggregate System Load model which represents the overall dynamic behavior of the Load that could impact the study area. Part 2.4.1 has been revised to provide greater clarity. In addition, the SDT was not able to locate the phrase "such as" in Requirement R2.4.1. There were two places in Requirement R2 that this phrase appears (Parts 2.1.4 and 2.5.2). In both instances, what follows were examples and not requirements. **2.4.1** System peak Load for one of the five years. System peak Load levels shall include a Load model which represents the dynamic behavior of Loads that could impact the study area, considering the behavior of induction motor Loads. An aggregate System Load model which represents the overall dynamic behavior of the Load is acceptable. Part 2.5.2 has been revised and included as Part 2.6.2 to address your concerns. **2.6.2** For steady state, short circuit, or Stability analysis: the study shall not include any material changes unless a technical rationale can be provided to demonstrate that System changes do not impact the performance results in the study area. In our last meeting the SDT agreed to revise Part 2.6 (and included it as Part 2.7) and project initiation date is no longer required. **2.7** For planning events shown in Table 1, when the analysis indicates an inability of the System to meet the performance requirements in Table 1, the Planning Assessment shall include Corrective Action Plan(s) addressing how the performance requirements will be met. Revisions to the Corrective Action Plan(s) are allowed in subsequent Planning Assessments but the planned System shall continue to meet the performance requirements in Table 1. Corrective Action Plan(s) do not need to be developed solely to meet the performance requirements for a single sensitivity run in accordance with

Organization	Question 2 Comment
Requirements R2, parts 2.1.4 and 2.4.3. The Corrective Action Plan(s) shall: Part 2.8 is intended to contribute to open and transparent transmission planning for peer review. The SDT reviewed the requirement and agrees that as written it was unclear. Part 2.8 has been revised and included as Part 2.9 in the new version to require that the Planning Assessment provides the expected largest Consequential Load Loss identified by the analysis of P1 and P2 events in Table 1 only. **2.9** The Planning Assessment shall provide the expected largest Consequential Load Loss (megawatt Demand) identified by the analysis of P1 and P2 events in Table 1.	
PPL Energy Plus	The standard appropriately recognizes that the planning horizon must be as long as the longest lead-time system upgrade, typically 8+ years for a new line. However, while Requirement 2.2.1 states this, it could be more clearly stated. Requirement R2.5.2 should be clarified to point out if the TP has discretion or if the 20 MW is binding. Requirement R2.6.4 should require TP's and PC's to post on an OASIS to assure easy access by affected parties to information on what is "beyond the control of these organizations. Please retain Requirements 2.8 and 2.9 as these are good measures of the quality of the plan produced by the planners.
Response: Part 2.2.1 has been revised because extending the Planning Horizon beyond 10 years for projects with lead time longer than 10 years is already covered in the definition of Long-Term Transmission Planning Horizon. **2.2.1** A current study assessing expected System peak Load conditions for one of the years in the Long-Term Transmission Planning Horizon and the rationale for why that year was selected. Part 2.5.2 (now Part 2.6.2) has been revised to address your suggestion. Both bullets included references to 20 MW have been deleted from the revised standard. **2.6.2** For steady state, short circuit, or Stability analysis: the study shall not include any material changes unless a technical rationale can be provided to demonstrate that System changes do not impact the performance results in the study area. The SDT declines to require a specific venue for the Planning Coordinator and/or Transmission Planner to post the information regarding Part 2.6.4. The way information is shared should be left to the individual entities involved in accordance with Requirement R7, included in the new version as Requirement R8. Parts 2.8 and 2.9 were intended to contribute to open and transparent transmission planning for peer review. The SDT reviewed both requirements and finds that as written, they were unclear. Part 2.9 has been deleted. Part 2.8 has been revised and included as Part 2.9 in the new version to require that the Planning Assessment provides the expected largest Consequential Load Loss identified by the analysis of P1 and P2 events in Table 1 only. **2.9** The Planning Assessment shall provide the expected largest Consequential Load Loss (megawatt Demand) identified by the analysis of P1 and P2 events in Table 1.	
PacifiCorp SRP Arizona Public Service Co	Short circuit analyses is a local phenomenon and should not be required as part of a transmission planning assessment of the BES. In any case, the effects of failure of over-stressed breakers are already included in the Events to be assessed in Table 1. For example, P2-3 and P2-4 (Internal Breaker Fault), and P4 (Stuck Breaker while attempting to clear a fault). Clarity is needed in R2.1.4. The requirement to assess the Contingencies identified in Table 1 is too burdensome. This requirement does not specify any limits on the equipment for which an analysis must be conducted. As currently drafted, this

Organization	Question 2 Comment
Southern California Edison Company Pacific Gas and Electric Co, California ISO Idaho Power San Diego Gas and Electric Co	could require a separate analysis for each transformer (or any long lead-time equipment) for which a spare is not available. A separate initial case would need to be developed to assess the Contingencies identified in Table 1 for each transformer. This could result in a countless number of additional cases. We recommend a threshold be established, such as all transformers with a low side voltage above 200 kV. We also recommend changing this from a separate sub-Requirement to one of the sensitivities to be considered under 2.1.3. We also believe that the statement at the end of R2.6 that indicates corrective action plans are not required solely to meet the performance requirements for sensitivities should also apply to the spare equipment requirement. The 20 MW threshold identified as material change for generation in R2.5 is too small. The limit should be raised or based on a percentage of the study area's installed generating capacity. R2.8 should be deleted. It is not necessary for reliability. What will be done with this information on the largest Consequential Load Loss and the associated event caused by any P1 event and any P2 event if it is documented? R2.9 should be deleted. It is not necessary for reliability. It will be difficult to determine the maximum permissible Non-Consequential Load value. It will end up being based on cost (monetary, societal, environmental, etc.), which is dependent, among other things, on the types of load being served. It very well may be a case by case situation.
NV Energy	Short circuit analyses is a local phenomenon and should not be required as part of a transmission planning assessment of the BES. In any case, the effects of failure of over-stressed breakers are already included in the Events to be assessed in Table 1. For example, P2-3 and P2-4 (Internal Breaker Fault), and P4 (Stuck Breaker while attempting to clear a fault).R2.1.3 should be modified to remove the last bullet point. Transmission outages should be a part of operational study work not planning study work. Clarity is needed in R2.1.4. The requirement to assess the Contingencies identified in Table 1 is too burdensome. This requirement does not specify any limits on the equipment for which an analysis must be conducted. As currently drafted, this could require a separate analysis for each transformer (or any long lead-time equipment) for which a spare is not available. A separate initial case would need to be developed to assess the Contingencies identified in Table 1 for each transformer. This could result in a countless number of additional cases. We recommend a threshold be established, such as all transformers with a low side voltage above 200 kV. We also recommend changing this from a separate sub-Requirement to one of the sensitivities to be considered under 2.1.3. We also believe that the statement at the end of R2.6 that indicates corrective action plans are not required solely to meet the performance requirements for sensitivities should also apply to the spare equipment requirement. The 20 MW threshold identified as material change for generation in R2.5 is too small. The limit should be based on a percentage of the study area'sinstalled generating capacity. R2.8 should be deleted. It is not necessary for reliability. What will be done with this information on the largest Consequential Load Loss and the associated event caused by any P1 event and any P2 event if it is documented R2.9 should be deleted. It is not necessary for reliability. It will be difficult to determine the maximum permissible Non-Consequential Load value. It will end up being based on cost (monetary, societal, environmental, etc.), which is dependent,

Organization	Question 2 Comment
	among other things, on the types of load being served. It very well may be a case by case situation.
Western Area Power Administration	Short circuit analyses is a local phenomenon and should not be required as part of a transmission planning assessment of the BES. In any case, the effects of failure of over-stressed breakers are already included in the Events to be assessed in Table 1. For example, P2-3 and P2-4 (Internal Breaker Fault), and P4 (Stuck Breaker while attempting to clear a fault).The last bullet under R2.1.3 - "Planned duration or timing of Transmission Outages." does not belong in a long-term planning standard. These-type of seasonal outages are studied and implemetation plans are derived as part of the TOP Standard requirements. In the WECC - this is also covered by the seasonal studies carried out by the Operating Transfer Capability Policy Committee (OTCPC) study groups. Clarity is needed in R2.1.4. The requirement to assess the Contingencies identified in Table 1 is too burdensome. This requirement does not specify any limits on the equipment for which an analysis must be conducted. As currently drafted, this could require a separate analysis for each transformer (or any long lead-time equipment) for which a spare is not available. A separate initial case would need to be developed to assess the Contingencies identified in Table 1 for each transformer. This could result in a countless number of additional cases. We recommend a threshold be established, such as all transformers with a low side voltage above 200 kV. We also recommend changing this from a separate sub-Requirement to one of the sensitivities to be considered under 2.1.3. We also believe that the statement at the end of R2.6 that indicates corrective action plans are not required solely to meet the performance requirements for sensitivities should also apply to the spare equipment requirement - OR simply delete this spare equipment requirement. The 20 MW threshold identified as material change for generation in R2.5 is too small. The limit should be raised or based on a percentage of the study area's installed generating capacity. R2.8 should be deleted. It is not necessary for reliability. What will be done with this information on the largest Consequential Load Loss and the associated event caused by any P1 event and any P2 event if it is documented? R2.9 should be deleted. This requirement is not necessary for reliability. It will be difficult to determine the maximum permissible Non-Consequential Load value. It will end up being based on cost (monetary, societal, environmental, etc.), which is dependent, among other things, on the types of load being served. It very well may be a case by case situation.

Response: Part 2.3 is intended for the Planning Coordinator and/or Transmission Planner to assess whether circuit breakers supporting the BES have interrupting capability for Faults that they will be expected to interrupt. Even though the effects of short circuit capability are localized and may be related to new planned Facilities, it is important to BES reliability. Part 2.3 has been revised to provide greater clarity.

> **2.3** The short circuit analysis portion of the Planning Assessment shall be conducted annually addressing the Near-Term Transmission Planning Horizon and can be supported by current or past studies as indicated in Requirement R2, part 2.6. The analysis shall be used to determine whether circuit breakers have interrupting capability for Faults that they will be expected to interrupt using the System short circuit model with any planned generation and Transmission Facilities in service which could impact the study area.

Part 2.1.4 (now Part 2.1.5) has been revised to require that the assessment reflect the P0, P1, and P2 categories identified in Table 1 during the conditions that the System is expected to experience due to the possible unavailability of the long lead time equipment.

Organization	Question 2 Comment
2.1.5 When an entity's spare equipment strategy could result in the unavailability of major Transmission equipment that has a lead time of one year or more (such as a transformer), an analysis of the impact of this possible unavailability on System performance shall be assessed. The Planning Assessment shall reflect the P0, P1, and P2 categories identified in Table 1 during the conditions that the System is expected to experience due to the possible unavailability of the long lead time equipment. Part 2.5 has been revised and included as Part 2.6 as shown. The references to a 20 MW threshold have been deleted from the revised standard. **2.6.1** For steady state, short circuit, or Stability analysis: the study shall be five calendar years old or less, unless a technical rationale can be provided to demonstrate that the results of an older study are still valid. **2.6.2** For steady state, short circuit, or Stability analysis: the study shall not include any material changes unless a technical rationale can be provided to demonstrate that System changes do not impact the performance results in the study area. Parts 2.8 and 2.9 were intended to contribute to open and transparent transmission planning for peer review. The SDT reviewed both requirements and agrees that as written, they were unclear. Part 2.9 has been deleted. Part 2.8 has been revised and included as Part 2.9 in the new version to require that the Planning Assessment provides the expected largest Consequential Load Loss identified by the analysis of P1 and P2 events in Table 1 only**.** **2.9** The Planning Assessment shall provide the expected largest Consequential Load Loss (megawatt Demand) identified by the analysis of P1 and P2 events in Table 1.	
Western Area Power Administration	Short-circuit studies as related to maintaining adequate protection devices and systems are normally performed either by a specific System Protection Group/Department or System Maintenance Department and should not be in this requirement, but Post-Transient Analysis to mitigate voltage collapse scenarios should be included (includes R2.5.1 & R2.5.2). Also, System Protection including mitigation of short-circuit duty above installed facilities capabilities or for new planned facilities are already covered by the PRC Standards and need not be included and duplicated in the TPL Planning Standard such as in R2.3 & R2.7.
Response: Parts 2.3 and 2.7 are intended for the Planning Coordinator and/or Transmission Planner to assess whether circuit breakers have interrupting capability for Faults that they will be expected to interrupt, and develop Corrective Action Plan is needed. As such, they are not specifically related to new planned Facilities. Requirement for Post-transient voltage collapse is included in Table 1, Header note (a), which states "Voltage instability, cascading outages, and uncontrolled islanding shall not occur." No change made.	
Tampa Electric	R2.1 should state R2.5 at the end of requirement instead of R2.6 R2.1.4 Consider revising to only include P0-P2 contingencies. R2.5.1 please clarify whether the 5 years is from the beginning of the assessment or end of the assessment. R2.6 Consider changing the terminology for "Corrective Action Plan" to "Transmission Plan" R2.8 Please clarify the reason for this requirement. This is not necessary for reliability and the effort to collect this information is substantial and does not benefit the BES. R2.9 Please clarify the reason for this requirement. This is not necessary for reliability and the effort to collect this

Organization	Question 2 Comment
	information is substantial.

Response: In the new version, Part.2.6 now contains the requirement for the use of past studies, so Part 2.1 now has the correct reference.

Part 2.1.4 (now Part 2.1.5) has been revised to require that the assessment reflect the P0, P1, and P2 categories identified in Table 1 during the conditions that the System is expected to experience due to the possible unavailability of the long lead time equipment.

> **2.1.5** When an entity's spare equipment strategy could result in the unavailability of major Transmission equipment that has a lead time of one year or more (such as a transformer), an analysis of the impact of this possible unavailability on System performance shall be assessed. The Planning Assessment shall reflect the P0, P1, and P2 categories identified in Table 1 during the conditions that the System is expected to experience due to the possible unavailability of the long lead time equipment.

For Part 2.5.1 the 5 years should be measured from the completion of the past study to be used to support the current Planning Assessment. However, Part 2.5.1 has been revised and included as Part 2.6.1, which will allow the use of studies older than 5 years if a technical rationale can be provided to demonstrate that the results of an older study are still valid.

> **2.6.1** For steady state, short circuit, or Stability analysis: the study shall be five calendar years old or less, unless a technical rationale can be provided to demonstrate that the results of an older study are still valid.

In Part 2.6, the SDT declines to change the term "Corrective Action Plan" to "Transmission Plan" because the Standard only requires the System performance to meet requirements. If a System meets requirements, then a Corrective Action Plan would not be necessary. An entity can still choose to install Transmission reinforcements for other reasons, but they would not be required by this Standard.

Parts 2.8 and 2.9 were intended to contribute to open and transparent transmission planning for peer review. The SDT reviewed both requirements and agrees that as written, they were unclear. Part 2.9 has been deleted. Part 2.8 has been revised and included as Requirement R2.9 in the new version to require that the Planning Assessment provides the expected largest Consequential Load Loss identified by the analysis of P1 and P2 events in Table 1 only.

> **2.9** The Planning Assessment shall provide the expected largest Consequential Load Loss (megawatt Demand) identified by the analysis of P1 and P2 events in Table 1.

Florida Reliability Coordinating Council, Inc - Transmission Working Group	Incorrect reference shown at the end of R2.1. The appropriate reference should be R2.5. The end of the first sentence of R2.3 should have a reference to R2.5. The end of the first sentence of R2.4 should have a reference to R2.5. R2.1.4 - Please consider revising this for the analysis to include only Contingencies P0-P2 in Table 1. Alternatively we suggest moving this requirement to be under sections 2.1.3 and 2.4.3 and treated as a sensitivity. R2.5 ? This requirement is very valuable in clarifying that past studies can be used and what criteria needs to be met for them to be used. However it is not clear if all new studies could be met using past studies (e.g. a small system with very few changes year to year) of if some sub-requirements require a new study every year, with past studies only used as supporting information. If the intent is that some sub-requirements can not be met with past studies, then consider making that clear through a foot note or a list under Section 2.5 listing which study requirements may depend only past studies that are still current.

Organization	Question 2 Comment
	R2.5.1 Please clarify if the 5 calendar years is from the date the assessment is "finished" or the date the study process for the assessment begins. R2.5.2 the identified 20 MW threshold is extremely small and would be doubtful to change the response of the BES. This requirement could also be interpreted that a previous study where the base case is not identical to the current planning case could be used. Please consider the following proposed language: For steady state, short circuit, or Stability analysis: the present System model shall not include any material changes, such as, generation or Transmission additions/removals, or topology changes that have occurred in the intervening period that would impact the study area. (not show the list) R2.6 - Requiring sensitivities but not requiring that they meet specific performance requirements is a sound approach.R2.6 requires a corrective action plan when performance will not be met in the simulations. However, if an entity has already planned a needed facility and/or operation steps for a given conditions, the simulations will not show any deficiencies and therefore no corrective action plan is required. The term Corrective Action Plan implies that the situation is wrong or incorrect, consider changing the approach to be to require an entity to have a planning and Operations plan, Improvement Action Plan?, or simply a Transmission Plan that includes all facilities planned for the BES and descriptions of conditions where an operational process is being used. R2.6.1 (Bullet 2) This requirement should also account for the removal of a Special Protection Systems: Installation, modification or removal of Protection Systems or Special Protection Systems?. R2.6.4 This is an excellent addition R2.8 Please explain the reason for this requirement. The effort required to collect this data is substantial and does not have any benefit to the BES. R2.9 Please explain the reason for this requirement. It seems to cause Entities to develop performance criteria for themselves for Multiple and Extreme Contingencies that are not in Table 1. The effort required to collect this data to compare against any self-imposed criteria is substantial and does not have any benefit to the BES. The requirement will result in inconsistency across North America. There is also no discussion of what happens if a Multiple or Extreme contingency is shown to exceed the Entity's self-imposed criteria, is the Entity then non-compliant? If so, what if the Entity simply changes the self-imposed criteria? We suggest eliminating this requirement.

Response: In the new version, Part.2.6 now contains the requirement for the use of past studies, so Part 2.1 now has the correct reference.

Parts 2.3 & 2.4 have been revised to reflect your suggestion.

> **2.3** The short circuit analysis portion of the Planning Assessment shall be conducted annually addressing the Near-Term Transmission Planning Horizon and can be supported by current or past studies as indicated in Requirement R2, part 2.6. The analysis shall be used to determine whether circuit breakers have interrupting capability for Faults that they will be expected to interrupt using the System short circuit model with any planned generation and Transmission Facilities in service which could impact the study area.
>
> **2.4** The Near-Term Transmission Planning Horizon portion of the Stability analysis shall be assessed annually and be supported by current or past studies as indicated in Requirement R2, part2.6. The following studies are required.

Part 2.1.4 (now Part 2.1.5) has been revised to require that the assessment reflect the P0, P1, and P2 categories identified in Table 1 during the conditions that the

Organization	Question 2 Comment
	System is expected to experience due to the possible unavailability of the long lead time equipment. **2.1.5** When an entity's spare equipment strategy could result in the unavailability of major Transmission equipment that has a lead time of one year or more (such as a transformer), an analysis of the impact of this possible unavailability on System performance shall be assessed. The Planning Assessment shall reflect the P0, P1, and P2 categories identified in Table 1 during the conditions that the System is expected to experience due to the possible unavailability of the long lead time equipment. For Part 2.5.1 the 5 years should be measured from the completion of the past study to be used to support the current Planning Assessment. However, Part 2.5.1 has been revised and included as Part 2.6.1, which will allow the use of studies older than 5 years if a technical rationale can be provided to demonstrate that the results of an older study are still valid. **2.6.1** For steady state, short circuit, or Stability analysis: the study shall be five calendar years old or less, unless a technical rationale can be provided to demonstrate that the results of an older study are still valid. Part 2.5.2 has been revised and included as Part 2.6.2 to provide greater clarity. The references to a 20 MW threshold have been deleted from the revised standard. **2.6.2** For steady state, short circuit, or Stability analysis: the study shall not include any material changes unless a technical rationale can be provided to demonstrate that System changes do not impact the performance results in the study area. In Part 2.6 (now Part 2.7), the SDT declines to change the term "Corrective Action Plan" to "Transmission Plan" because the Standard only requires the System performance to meet requirements. If a System meets requirements, then a Corrective Action Plan would not be necessary. An entity can still choose to install Transmission reinforcements for other reasons, but they would not be required by this Standard. Although additions of Protection Systems and Special Projection Systems are usually associated with projects to enable the System to meet performance requirements, the second bullet in Part 2.7 has been modified to include removal of Protection Systems or Special Protection Systems to provide greater clarity. **2.7 bullet 2:** Installation, modification, or removal of Protection Systems or Special Protection Systems Parts 2.8 and R2.9 were intended to contribute to open and transparent Transmission planning for peer review. The SDT reviewed both requirements and agrees that as written, they were unclear. Part 2.9 has been deleted. Part 2.8 has been revised and included as Part 2.9 in the new version to require that the Planning Assessment provides the expected largest Consequential Load Loss identified by the analysis of P1 and P2 events in Table 1 only. **2.9** The Planning Assessment shall provide the expected largest Consequential Load Loss (megawatt Demand) identified by the analysis of P1 and P2 events in Table 1.
FMPA	Incorrect reference shown at the end of R2.1. The appropriate reference should be R2.5. The end of the first sentence of R2.3 should have a reference to R2.5. The end of the first sentence of R2.4 should have a reference to R2.5. R2.1.4, what does (t)he analysis shall reflect the Contingencies identified in Table 1 mean? Is the intention similar to sensitivities, where there is no direct requirement to meet the performance standards of Table 1? If so, why not include loss of a long lead time Facility followed by other contingencies one of the Sensitivities and not have a separate sub-requirement for it? Or, is the intention that the TP and PC must meet the performance requirements of Table 1 considering the outage of a long lead time Facility? We hope that the intent is not to require Entities to be able to meet the performance requirements

Organization	Question 2 Comment
	of Table 1 assuming a long lead time Facility out of service. If that is the intent, then we believe that only Contingencies P0-P2 in Table 1 ought to apply to Requirement R2.1.4. Otherwise, Requirement R2.1.4 would require building transmission to triple contingency (N-3) criteria. Contingency P3 requires building transmission to a single contingency plus a generator outage (a double contingency that has the same performance criteria requirements as single contingencies). Since generators are long term lead Facilities that no one that we know of carries spares for, R2.1.4 as written would mean that Contingency P3 becomes two generators out of service with system adjustments followed by another contingency (N-3). This would have the (possibly unintended) consequences of significantly reducing long-term firm ATC since utilities will likely use TRM to account for the potential for long-term outages. If meeting the criteria of Table 1 is the intent of the SDT, then a potential way to address this is to restate R2.1.4 to state that only P0 through P2 (zero and single contingency) apply to R2.1.4.If meeting the performance criteria of Table 1 is the intent of the SDT for R2.1.4, then we also believe that R2.1.4 should also only apply to the EHV and not the HV system. Yes, when a major piece of equipment such as a transformer fails, it could be out for a long period of time; however, a transformer failure is far less probable than an over-head transmission line failure (e.g., a transformer failure is in the range of a once in 50 year event, whereas a transmission line fails probably once a year or once every other year, almost two orders of magnitude difference). A major 500 kV/230 kV autotransformer failure will have a far larger radius of impact than a 230 kV/138 kV autotransformer meant to serve the local area, giving additional support to purchasing a spare transformer for the 500/230 kV auto (EHV system). A small utility with only one or two 230 / 138 kV autos does not have sufficient justification to purchase a spare autotransformer due to the very low failure rate and the much more localized purpose of the transformer. If the intent of the SDT is to meet the performance requirements of Table 1 for R2.1.4, then the standard would essentially cause many small utilities who cannot justify spare autos to plan to serve only load and significantly reduce ATC in the planning horizon. Based on the lesser impact of HV connected autos as compared to EHV connected autos, and if the intent of the SDT is to meet the performance requirements of Table 1 for R2.1.4, then we would recommend that, for auto-transformers, R2.1.4 should only be applicable to EHV connected auto-transformers. R2.8 Please explain the reason for this requirement. The effort required to collect this data is substantial and does not have any benefit to the BES. R2.9 Please explain the reason for this requirement. It seems to cause Entities to develop performance criteria for themselves for Multiple and Extreme Contingencies that are not in Table 1. The effort required to collect this data to compare against any self-imposed criteria is substantial and does not have any benefit to the BES. The requirement will result in inconsistency across North America. There is also no discussion of what happens if a Multiple or Extreme contingency is shown to exceed the Entity's self-imposed criteria, is the Entity then non-compliant? If so, what if the Entity simply changes the self-imposed criteria?

Response: In the new version, Part 2.6 now contains the requirement for the use of past studies, so Part 2.1 now has the correct reference.

Parts 2.3 and 2.4 have been revised to reflect your suggestion.

2.3 The short circuit analysis portion of the Planning Assessment shall be conducted annually addressing the Near-Term Transmission Planning Horizon and can be supported by current or past studies as indicated in Requirement R2, part 2.6. The analysis shall be used to determine whether circuit breakers have interrupting capability for Faults that they will be expected to interrupt using the System short circuit model with any planned

Organization	Question 2 Comment
	generation and Transmission Facilities in service which could impact the study area. **2.4** The Near-Term Transmission Planning Horizon portion of the Stability analysis shall be assessed annually and be supported by current or past studies as indicated in Requirement R2, part 2.6. The following studies are required. Part 2.1.4 (now Part 2.1.5) requires that the Planning Coordinator and/or Transmission Planner consider the possibility that a piece of major Transmission Equipment can be out of service for an extended period of time because no spare piece of Equipment is on hand or can be purchased and be placed in service such that the outage won't last into the next planning cycle. Loss of a transformer is given as an example as a piece of major Equipment, which if forced out of service and had to be replaced with a new transformer, may have a lead time of more than one year. However, if a company has a strategy, for example, to have spare transformers in its System, or have agreement with another entity to share spare transformers, it would significantly reduce the probability of an outage of a transformer for longer than one year. The Planning Coordinator and/or Transmission Planner will need to decide which pieces of major Equipment in their respective systems would be more vulnerable to long term outage. In Part 2.1.5 when a piece of long lead-time Equipment is unavailable, System adjustments will need to be made. The System, after it is adjusted to accommodate that piece of Equipment out of service will be treated as the "normal" (P0) condition in Table 1 and the rest of Table 1 will be applied as stated. Part 2.1.5 has been revised to require that the assessment reflect the P0, P1, and P2 categories identified in Table 1 during the conditions that the System is expected to experience due to the possible unavailability of the long lead time Equipment. **2.1.5** When an entity's spare equipment strategy could result in the unavailability of major Transmission equipment that has a lead time of one year or more (such as a transformer), an analysis of the impact of this possible unavailability on System performance shall be assessed. The Planning Assessment shall reflect the P0, P1, and P2 categories identified in Table 1 during the conditions that the System is expected to experience due to the possible unavailability of the long lead time equipment. Parts 2.8 and 2.9 were intended to contribute to open and transparent Transmission planning for peer review. The SDT reviewed both requirements and agrees that as written, they were unclear. Part 2.9 has been deleted. Part 2.8 has been revised and included as Part 2.9 in the new version to require that the Planning Assessment provides the expected largest Consequential Load Loss identified by the analysis of P1 and P2 events in Table 1 only. **2.9** The Planning Assessment shall provide the expected largest Consequential Load Loss (megawatt Demand) identified by the analysis of P1 and P2 events in Table 1.
Progress Energy Carolina (PEC)	PEC believes that "R2.1.1. System peak Load for either Year One or year two, and for year five" is unneccesarily prescriptive. PEC recommends eliminating the Year One or year two addition. PEC believes that R2.1.4. concerning an entity's spare equipment strategy is overly conservative. The standard should only require N-2 deep planning and not N-3. PEC believes that for R2.4.1 "a Load model shall be used which appropriately represents the dynamic behavior of Loads, including consideration of the behavior of induction motor Loads" should be clarified to include "as appropriate" clause. Induction motor load modeling should not be required for all dynamic studies. PEC believes that for R2.5.2. The language "For steady state, short circuit, or Stability analysis: the present System model shall not include any material changes, such as, generation or Transmission additions/removals, or topology changes that have occurred in the intervening period and would impact the study area" needs to be made more clear. The important point is that material changes must be modeled if they have occurred. Also the 20MW threshold is far too small to be material. PEC believes that R2.8. and P2.9 are unnecessary and should be removed.

Organization	Question 2 Comment
	Response: Requirement R2, part 2.1.1 is intended to require studies for System Peak Load Conditions for 2 of the years in the Near-Term Transmission Planning Horizon: (1) A year five case to identify potential problem that can be addressed if the planned projects proceed as scheduled; (2) A Year One or year two case to identify any potential problems unanticipated in the five-year case, which if not addressed, could impact operations as time progresses. The standard provides flexibility for the Planning Coordinator or Transmission Planner to use past studies to support the current year assessment, and to assess other years in addition to those identified in Requirement R2, part 2.1.1. No change made. Part 2.1.4 (now Part 2.1.5) requires that the Planning Coordinator and/or Transmission Planner consider the possibility that a piece of major Equipment can be out of service for an extended period of time because no spare piece of Equipment is on hand or can be purchased and be placed in service such that the outage won't last into the next planning cycle. Loss of a transformer is given as an example as a piece of major Equipment, which if forced out of service and had to be replaced with a new transformer, may have a lead time of more than one year. However, if a company has a strategy, for example, to have spare transformers in its System, or have agreement with another entity to share spare transformers, it would significantly reduce the probability of an outage of a transformer for longer than one year. In Part 2.1.5 when a piece of long lead-time Equipment is unavailable, System adjustments will need to be made. The System, after it is adjusted to accommodate that piece of Equipment out of service will be treated as the "normal" (P0) condition in Table 1 and the rest of Table 1 will be applied as stated. Part 2.1.5 has been revised to require that the assessment reflect the P0, P1, and P2 categories identified in Table 1 during the conditions that the System is expected to experience due to the possible unavailability of the long lead time Equipment. **2.1.5** When an entity's spare equipment strategy could result in the unavailability of major Transmission equipment that has a lead time of one year or more (such as a transformer), an analysis of the impact of this possible unavailability on System performance shall be assessed. The Planning Assessment shall reflect the P0, P1, and P2 categories identified in Table 1 during the conditions that the System is expected to experience due to the possible unavailability of the long lead time equipment. Part 2.4.1 allows the use of an aggregate System Load model which represents the overall dynamic behavior of the Load that could impact the study area. Part 2.4.1 has been revised to provide greater clarity. **2.4.1** System peak Load for one of the five years. System peak Load levels shall include a Load model which represents the dynamic behavior of Loads that could impact the study area, considering the behavior of induction motor Loads. An aggregate System Load model which represents the overall dynamic behavior of the Load is acceptable. Part 2.5.2 has been revised and included as Part 2.6.2 to address your concerns. The references to a 20 MW threshold have been deleted from the revised standard. **2.6.2** For steady state, short circuit, or Stability analysis: the study shall not include any material changes unless a technical rationale can be provided to demonstrate that System changes do not impact the performance results in the study area. Parts 2.8 and 2.9 were intended to contribute to open and transparent Transmission planning for peer review. The SDT reviewed both requirements and agrees that as written, they were unclear. Part 2.9 has been deleted. Part 2.8 has been revised and included as Part 2.9 in the new version to require that the Planning Assessment provides the expected largest Consequential Load Loss identified by the analysis of P1 and P2 events in Table 1 only. **2.9** The Planning Assessment shall provide the expected largest Consequential Load Loss (megawatt Demand) identified by the analysis of P1 and P2 events in Table 1.
CPS Energy	As written, is it the intent of Requirement R2.1.4. to escalate the contingencies in Table 1 from "N-1" to "N-2" and "N-2" to N-3" for long lead-time replacement equipment, such as autotransformers and GSUs? If so, we feel that this requirement is

Organization	Question 2 Comment
	overly burdensome that will result in unnecessary expense to the customers. In Requirement R2.4.1., what is the intent of the second sentence if an aggregate system load model is acceptable? We feel that the second sentence should be removed. In Requirement R2.6.2., we feel that statement of the project initiation date has no benefit and should be removed as a requirement. The required in-service date should be adequate. We do not believe that there is any benefit to reliability by documenting the Consequential and Non-Consequential Load Loss data required by Requirements R2.8. and R2.9.
Response: Part 2.1.4 (now Part 2.1.5) requires that the Planning Coordinator and/or Transmission Planner consider the possibility that a piece of major Equipment can be out of service for an extended period of time because no spare piece of Equipment is on hand or can be purchased and be placed in service such that the outage won't last into the next planning cycle. Loss of a transformer is given as an example as a piece of major Equipment, which if forced out of service and had to be replaced with a new transformer, may have a lead time of more than one year. However, if a company has a strategy, for example, to have spare transformers in its System, or have agreement with another entity to share spare transformers, it would significantly reduce the probability of an outage of a transformer for longer than one year. Part 2.1.5 has been revised to require that the assessment reflect the P0, P1, and P2 categories identified in Table 1 during the conditions that the System is expected to experience due to the possible unavailability of the long lead time Equipment. **2.1.5** When an entity's spare equipment strategy could result in the unavailability of major Transmission equipment that has a lead time of one year or more (such as a transformer), an analysis of the impact of this possible unavailability on System performance shall be assessed. The Planning Assessment shall reflect the P0, P1, and P2 categories identified in Table 1 during the conditions that the System is expected to experience due to the possible unavailability of the long lead time equipment. In Part 2.4.1, the intent for the second sentence is that if more accurate Load Model is available it should be used. The standard should not inadvertently disallow improved Load modeling. In our last meeting the SDT agreed to revise Part 2.6 (and included it as Part 2.7) and project initiation date is no longer required. **2.7** For planning events shown in Table 1, when the analysis indicates an inability of the System to meet the performance requirements in Table 1, the Planning Assessment shall include Corrective Action Plan(s) addressing how the performance requirements will be met. Revisions to the Corrective Action Plan(s) are allowed in subsequent Planning Assessments but the planned System shall continue to meet the performance requirements in Table 1. Corrective Action Plan(s) do not need to be developed solely to meet the performance requirements for a single sensitivity run in accordance with Requirements R2, parts 2.1.4 and 2.4.3. The Corrective Action Plan(s) shall: Parts 2.8 and 2.9 were intended to contribute to open and transparent Transmission planning for peer review. The SDT reviewed both requirements and agrees that as written, they were unclear. Part 2.9 has been deleted. Part 2.8 has been revised and included as Part 2.9 in the new version to require that the Planning Assessment provides the expected largest Consequential Load Loss identified by the analysis of P1 and P2 events in Table 1 only. **2.9** The Planning Assessment shall provide the expected largest Consequential Load Loss (megawatt Demand) identified by the analysis of P1 and P2 events in Table 1.	
MidAmerican Energy Company	MidAmerican commends the SDT for all its hard work on this standard. MidAmerican offers the following comments on R2: MidAmerican believes that the second sentence of R2.3 as written will result in unnecessary modeling for the required short

Organization	Question 2 Comment
	circuit analysis. MidAmerican recommends that the sentence The analysis shall determine the maximum short circuit interruption duty on fault interrupting devices using the System short circuit model with any generation and Transmission Facilities in service which could impact the study area. MidAmerican recommends that R2.3 be changed by deleting the words any and could and replace with the words materially. In this way, the sentence would read, They analysis shall determine the maximum short circuit interruption duty on fault interrupting devices using the System short circuit model with generation and Transmission Facilities in service which materially impact the study area. Requirement 2.5 is too confining and is complicated and unnecessary. MidAmerican asks that the requirement be deleted in its entirety. Alternatively, if the SDT does not agree with deleting all of R2.5, then MidAmerican asks that the SDT consider deleting the R2.5.1. MidAmerican believes R2.4 will ensure that analysis is fresh by requiring a certain number of studies be conducted for certain years in the planning horizon. Why add the requirement for no older than 5 calander years? With the R2.4 and the material requirements in R2.5.2 shouldn't that be more than enough to ensure that the analysis is fresh enough to support the assessment?? If R2.5.2 is not deleted, the words and interconnected to the Bulk Electric System should be added behind 20 MW or greater. Requirement 2.6.2 requires the project initiation date. MidAmerican recommends that the SDT delete the requirement to provide this date as an initiation date is not related to system reliability. If the SDT believes it is critical to get this date, then the SDT should define it. Does it mean when engineering starts, when it is decided to proceed, or something else? At a minimum, MidAmerican believes that the SDT should add the word expected behind largest to avoid unnecessary compliance issues for an unexpected event, and clarify that R2.8 and R2.9 are not required for sensitivity cases.

Response: Part 2.3 has been revised to provide greater clarity. However, the SDT declines to make the changes suggested because Part 2.3 is intended for the Planning Coordinator and/or Transmission Planner to assess whether circuit breakers have interrupting capability for Faults that they will be expected to interrupt, and develop a Corrective Action Plan as needed. As such, they are not specifically related to individual new planned Facilities.

> **2.3** The short circuit analysis portion of the Planning Assessment shall be conducted annually addressing the Near-Term Transmission Planning Horizon and can be supported by current or past studies as indicated in Requirement R2, part 2.6. The analysis shall be used to determine whether circuit breakers have interrupting capability for Faults that they will be expected to interrupt using the System short circuit model with any planned generation and Transmission Facilities in service which could impact the study area.

Deleting Part 2.5 would leave no guidance on when past studies can be used to support current Assessment. This can increase work load. Part 2.5 has been revised and included as Part 2.6 as shown.

> **2.6.1** For steady state, short circuit, or Stability analysis: the study shall be five calendar years old or less, unless a technical rationale can be provided to demonstrate that the results of an older study are still valid.
>
> **2.6.2** For steady state, short circuit, or Stability analysis: the study shall not include any material changes unless a technical rationale can be provided to demonstrate that System changes do not impact the performance results in the study area.

In our last meeting the SDT agreed to revise Part 2.6 (and included it as Part 2.7) and project initiation date is no longer required.

Organization	Question 2 Comment
2.7 For planning events shown in Table 1, when the analysis indicates an inability of the System to meet the performance requirements in Table 1, the Planning Assessment shall include Corrective Action Plan(s) addressing how the performance requirements will be met. Revisions to the Corrective Action Plan(s) are allowed in subsequent Planning Assessments but the planned System shall continue to meet the performance requirements in Table 1. Corrective Action Plan(s) do not need to be developed solely to meet the performance requirements for a single sensitivity run in accordance with Requirements R2, parts 2.1.4 and 2.4.3. The Corrective Action Plan(s) shall: Parts 2.8 and 2.9 were intended to contribute to open and transparent Transmission planning for peer review. The SDT reviewed both requirements and agrees that as written, they were unclear. Part 2.9 has been deleted. Part 2.8 has been revised and included as Part 2.9 in the new version to require that the Planning Assessment provides the expected largest Consequential Load Loss identified by the analysis of P1 and P2 events in Table 1 only. **2.9** The Planning Assessment shall provide the expected largest Consequential Load Loss (megawatt Demand) identified by the analysis of P1 and P2 events in Table 1.	
Deseret Generation & Transmission	R2.5.2 For Past studies to be used in the Planning Assessment, the suggestion that the addition of a 20 MW generator would disqualify those past studies is way too restrictive. It should be left up to the Transmission Planner to evaluate the applicabililty of past studies and the two sub bullets should be removed and replace with a general statement about past studies should adequately represent the present system to be used in the Planning Assessment. Short circuit analyses is a local phenomenon and should not be required as part of a transmission planning assessment of the BES. In any case, the effects of failure of over-stressed breakers are already included in the Events to be assessed in Table 1. For example, P2-3 and P2-4 (Internal Breaker Fault), and P4 (Stuck Breaker while attempting to clear a fault). Clarity is needed in R2.1.4. The requirement to assess the Contingencies identified in Table 1 is too burdensome. This requirement does not specify any limits on the equipment for which an analysis must be conducted. As currently drafted, this could require a separate analysis for each transformer (or any long lead-time equipment) for which a spare is not available. A separate initial case would need to be developed to assess the Contingencies identified in Table 1 for each transformer. This could result in a countless number of additional cases. We recommend a threshold be established, such as all transformers with a low side voltage above 200 kV. We also recommend changing this from a separate sub-Requirement to one of the sensitivities to be considered under 2.1.3. We also believe that the statement at the end of R2.6 that indicates corrective action plans are not required solely to meet the performance requirements for sensitivities should also apply to the spare equipment requirement. R2.8 should be deleted. It is not necessary for reliability. What will be done with this information on the “largest Consequential Load Loss and the associated event caused by any P1 event and any P2 event” if it is documented? R2.9 should be deleted. It is not necessary for reliability. It will be difficult to determine the maximum permissible Non-Consequential Load value. It will end up being based on cost (monetary, societal, environmental, etc.), which is dependent, among other things, on the types of load being served. It very well may be a case by case situation.
Response: Part 2.5.2 has been revised and included as Part 2.6.2 to address your concerns. The references to a 20 MW threshold have been deleted from the revised standard. **2.6.2** For steady state, short circuit, or Stability analysis: the study shall not include any material changes unless a technical rationale can be provided to	

Organization	Question 2 Comment
	demonstrate that System changes do not impact the performance results in the study area. Part 2.3 is intended for the Planning Coordinator and/or Transmission Planner to assess the whether circuit breakers supporting the BES have interrupting capability for Faults that they will be expected to interrupt and is not specifically related to new planned Facilities. Part 2.3 has been revised to provide greater clarity. **2.3** The short circuit analysis portion of the Planning Assessment shall be conducted annually addressing the Near-Term Transmission Planning Horizon and can be supported by current or past studies as indicated in Requirement R2, part 2.6. The analysis shall be used to determine whether circuit breakers have interrupting capability for Faults that they will be expected to interrupt using the System short circuit model with any planned generation and Transmission Facilities in service which could impact the study area. Part 2.1.4 (now Part 2.1.5) has been revised to require that the assessment reflect the P0, P1, and P2 categories identified in Table 1 during the conditions that the System is expected to experience due to the possible unavailability of the long lead time equipment. Part 2.6 has been modified and included as new Part 2.7. The intent is to allow discretion for the Planning Coordinator or Transmission Planner to correct those deficiencies if they are prevalent (i.e., occur is more than one sensitivity). Part 2.7.2 has also been added to require that the Corrective Action Plan include actions to resolve performance deficiencies identified in multiple sensitivity studies or provide a rationale for why actions were not necessary. The intent is to allow discretion for the Planning Coordinator or Transmission Planner to correct those deficiencies if they are prevalent (i.e., occur is more than one sensitivity). **2.7** For planning events shown in Table 1, when the analysis indicates an inability of the System to meet the performance requirements in Table 1, the Planning Assessment shall include Corrective Action Plan(s) addressing how the performance requirements will be met. Revisions to the Corrective Action Plan(s) are allowed in subsequent Planning Assessments but the planned System shall continue to meet the performance requirements in Table 1. Corrective Action Plan(s) do not need to be developed solely to meet the performance requirements for a single sensitivity run in accordance with Requirements R2, parts 2.1.4 and 2.4.3. The Corrective Action Plan(s) shall: **2.7.2** Include actions to resolve performance deficiencies identified in multiple sensitivity studies or provide a rationale for why actions were not necessary. Parts 2.8 and 2.9 were intended to contribute to open and transparent transmission planning for peer review. The SDT reviewed both requirements and agrees that as written, they were unclear. Part 2.9 has been deleted. Part 2.8 has been revised and included as Part 2.9 in he new version to require that the Planning Assessment provides the expected largest Consequential Load Loss identified by the analysis of P1 and P2 events in Table 1 only. **2.9** The Planning Assessment shall provide the expected largest Consequential Load Loss (megawatt Demand) identified by the analysis of P1 and P2 events in Table 1.
Northeast Utilities	R2 Comment We recommend replacing the phrase prepare with conduct and document in the first sentence. R2.1.1 Comment The requirement to evaluate year one or year two should be removed. This is not consistent with the time horizon identified in R2. R2.1.2 Comment The requirement should be removed. With no description of the system stresses and generator outages to be applied when assessing the off-peak load, it is difficult to imagine any issues which would arise which are not revealed in the peak load evaluation that could not be addressed through generation dispatch adjustments.

Organization	Question 2 Comment
	R2.1.3 Comment - The emphasis on sensitivity testing in the existing section appears misdirected and should be focused on reasonable risk. The assessment should have to include a discussion of reasonable risk. The sensitivity list can be used to select sensitivities to assess risk. Having a requirement to perform one sensitivity study just to meet the requirement of the standard does not add value to the assessment. R2.1.3 Comment - What should be the time duration for the bullet that reads Planned duration or timing of Transmission outages R2.1.4 Priority Comment With respect to spare equipment strategy, this requirement imposes severe testing requirements upon the system. However, there is no discussion on the generation dispatch or system transfers that are to be used for this portion of the assessment. The expectations for changes in system stresses need to be clear as part of the standard. Additionally, this section does not contemplate changing the acceptability of load loss. After experiencing a major contingency such as this, some change in the acceptability of load loss should be expected. The standard needs to allow Non-Consequential load loss for P3 & P6 events when spare equipment strategy is incorporated in the testing. An example of such an event, that non-consequential load loss should be acceptable, would be a long-term outage of one transformer at a station which would be modeled in the base, followed by event P6 testing on initial system condition of a transformer out of service then followed by a 2nd transformer outage. This would be three transformers out at the same station and this could approach Extreme Events Contingency. R2.2 Comment We suggest replacing the phrase a current System peak Load study with a valid System peak Load study in the first sentence. The word current is confusing, as some read the word current to mean today's rather than valid. R2.3 Comment Please provide guidance as to what year should be represented when performing short circuit studies. R2.4.1 Comment ? Change to read: "For peak System Load levels, a Load model shall be used which appropriately represents the dynamic behavior of Loads, including consideration of the behavior of induction motor Loads or an aggregate System Load model which represents the overall dynamic behavior of the Load. R2.5.1 Comment" We suggest deleting this requirement, and incorporating it into R2.5.2. R2.5.2 Comment To incorporate R.2.5.1 into R2.5.2; please modify the section as follows: For steady state, short circuit, or Stability analysis the study shall be less than five calendar years old or less: the present System model shall not include any material changes, such as, generation or Transmission additions/removals, or topology changes that have occurred in the intervening period and would impact the study area. Material generation changes could include: The addition/deletion/change of individual generating unit capability determined to be material by the Planning Coordinator or Transmission Planner. [A 20 MW generator is fairly small in a 30,000 MW system and system concerns would already be addressed through the System Impact Study]?An aggregated addition/deletion/change to a group of generating units directly connected through their step-up transformer(s) to the BES determined to be material by the Planning Coordinator or Transmission Planner. R2.6 Priority Comment As written, this section undermines the value of the sensitivity testing. This section should require a corrective action plan to fix problems determined in sensitivity analysis if there is a reasonable risk of occurrence. We suggest making the standard read Provide documentation that explains the reasoning for the sensitivities considered and selected. R2.6 Comment At the end of the second sentence, the phrase in the tables is used. We suggest using more definitive language such as in Table 1.

Organization	Question 2 Comment
	R2.6.2 Comment The phrase Project Initiation Date needs to be defined. It is unclear if this is the date of ground breaking, purchase orders being issued, solution study initiation, etc. Additionally, in the second sentence the phrase as well as an in-service date should be modified to read as well as a target in-service date. R2.6.3 Comment Plans can provide a target in-service year but not an actual in-service year. R2.6.4 Priority Comment There should be a cutoff point when changes occur beyond a certain date. When that date occurs, further changes will be evaluated in the next year's assessment. Otherwise, if a state makes a decision not to site a project a few weeks prior to the end of the assessment period, there will not be sufficient time to incorporate this into that year's assessment and develop corrective actions. R2.8 Comment Largest consequential load loss is not factored into the Planning Assessment and should therefore be deleted. R2.9 Priority Comment We highly recommend that the standard should not allow non-consequential load loss to resolve any violation arising from the planning events in Table 1. Therefore, this requirement should be deleted.
ISO New England, Inc.	R2 Comment We recommend replacing the phrase prepare with conduct and document in the first sentence. R2.1.1 Comment The requirement to evaluate year one or year two should be removed. This is not consistent with the time horizon identified in R2. R2.1.2 Comment The requirement should be removed. With no description of the system stresses and generator outages to be applied when assessing the off-peak load, it is difficult to imagine any issues which would arise which are not revealed in the peak load evaluation that could not be addressed through generation dispatch adjustments. R2.1.3 Comment - The emphasis on sensitivity testing in the existing section appears misdirected and should be focused on reasonable risk. The assessment should have to include a discussion of reasonable risk. The sensitivity list can be used to select sensitivities to assess risk. Having a requirement to perform one sensitivity just to meet the requirement of the standard does not add value to the assessment. R2.1.4 Priority Comment With respect to spare equipment strategy, this requirement imposes severe testing requirements upon the system. However, there is no discussion on the generation dispatch or system transfers that are to be used for this portion of the assessment. The expectations for changes in system stresses need to be clear as part of the standard. Additionally, this section does not contemplate changing the acceptability of load loss. After experiencing a major contingency such as this, some change in the acceptability of load loss should be expected. The standard should consider allowing Non-Consequential load loss for P1 & P2 events. The standard needs to allow Non-Consequential load loss for P3 & P4 events. Why doesn't the standard state (such as a transformer, generator or power electronic device) and not just (such as a transformer). R2.2 Comment We suggest replacing the phrase a current System peak Load study with a valid System peak Load study in the first sentence. The word current is confusing as some read the word current to mean today's rather than valid. R2.3 Comment Please provide guidance as to what year should be represented when performing short circuit studies. R2.4.1 Comment Change to read: For peak System Load levels, a Load model shall be used which appropriately

Organization	Question 2 Comment
	represents the dynamic behavior of Loads, including consideration of the behavior of induction motor Loads or an aggregate System Load model which represents the overall dynamic behavior of the Load. R2.5.1 Comment? We suggest deleting this requirement, and incorporating it into R2.5.2.R2.5.2 Comment To incorporate R.2.5.1 into R2.5.2; please modify the section as follows: For steady state, short circuit, or Stability analysis the study shall be less than five calendar years old or less: the present System model shall not include any material changes, such as, generation or Transmission additions/removals, or topology changes that have occurred in the intervening period and would impact the study area. Material generation changes could include: The addition/deletion/change of individual generating unit capability determined to be material by the Planning Coordinator or Transmission Planner. [A 20 MVA generator is fairly small in a 30,000 MW system and system concerns would already be addressed though the System Impact Study]? An aggregated addition/deletion/change to a group of generating units directly connected through their step-up transformer(s) to the BES determined to be material by the Planning Coordinator or Transmission Planner. R2.6 Priority Comment As written, this section undermines the value of the sensitivity testing. This section should require a corrective action plan to fix problems determined in sensitivity analysis if there is a reasonable risk of occurrence. We suggest making the standard read Provide documentation that explains the reasoning for the sensitivities considered and selected. R2.6 Comment At the end of the second sentence, the phrase in the tables is used. We suggest using more definitive language such as in Table 1. R2.6.2 Comment The phrase Project Initiation Date needs to be defined. It is unclear if this is this the date of ground breaking, purchase orders being issued, solution study initiation, etc. Additionally, in the second sentence the phrase as well as an in-service date should be modified to read as well as a target in-service date. R2.6.3 Comment Plans can provide a target in-service year but not an actual in-service year. R2.6.4 Priority Comment There should be a cutoff point when changes occur beyond a certain date. When that date occurs, further changes will be evaluated in the next year's assessment. Otherwise, if a state makes a decision not to site a project a few weeks prior to the end of the assessment period, there will not be sufficient time to incorporate this into that year's assessment and develop corrective actions. R2.8 Comment Largest consequential load loss is not factored into the Planning Assessment and should therefore be deleted. R2.9 Comment This requirement is unclear. Is this requirement asking for each transmission planner to list their criteria for non-consequential load loss, or is it asking how much non-consequential load loss was being relied upon in the assessment? We recommend that the requirement be modified to require documentation of the maximum amount of non-consequential load loss that was relied upon during the assessment.
Central Maine Power Company	R2 Comment We recommend replacing the phrase prepare with conduct and document in the first sentence. R2.1.1 Comment The requirement to evaluate year one or year two should be removed. This is not consistent with the time horizon identified in R2.

Organization	Question 2 Comment
	R2.1.2 Comment The requirement should be removed. With no description of the system stresses and generator outages to be applied when assessing the off-peak load, it is difficult to imagine any issues which would arise which are not revealed in the peak load evaluation that could not be addressed through generation dispatch adjustments. R2.1.3 Comment - The emphasis on sensitivity testing in the existing section appears misdirected and should be focused on reasonable risk. The assessment should have to include a discussion of reasonable risk. The sensitivity list can be used to select sensitivities to assess risk. Having a requirement to perform one sensitivity just to meet the requirement of the standard does not add value to the assessment. R2.1.4 Priority Comment With respect to spare equipment strategy, this requirement imposes severe testing requirements upon the system. However, there is no discussion on the generation dispatch or system transfers that are to be used for this portion of the assessment. The expectations for changes in system stresses need to be clear as part of the standard. Additionally, this section does not contemplate changing the acceptability of load loss. After experiencing a major contingency such as this, some change in the acceptability of load loss should be expected. The standard should consider allowing Non-Consequential load loss for P1 & P2 events. The standard needs to allow Non-Consequential load loss for P3 & P4 events. Why doesn't the standard state "(such as a transformer, generator or power electronic device)" and not just "(such as a transformer)". What constitutes "spare equipment strategy" Would a strategy that involves out-of-merit dispatch or operational restrictions be considered a valid "spare equipment strategy". If a transformer is lost, could a reconfiguration of transmission constitute a valid "spare equipment strategy"? R2.2 Comment We suggest replacing the phrase a current System peak Load study with a valid System peak Load study in the first sentence. The word current is confusing as some read the word current to mean today's rather than valid. R2.3 Comment Please provide guidance as to what year should be represented when performing short circuit studies. R2.4.1 Comment Change to read: For peak System Load levels, a Load model shall be used which appropriately represents the dynamic behavior of Loads, including consideration of the behavior of induction motor Loads or an aggregate System Load model which represents the overall dynamic behavior of the Load. R2.5.1 Comment We suggest deleting this requirement, and incorporating it into R2.5.2. R2.5.2 Comment To incorporate R.2.5.1 into R2.5.2; please modify the section as follows:For steady state, short circuit, or Stability analysis the study shall be less than five calendar years old or less: the present System model shall not include any material changes, such as, generation or Transmission additions/removals, or topology changes that have occurred in the intervening period and would impact the study area. Material generation changes could include: The addition/deletion/change of individual generating unit capability determined to be material by the Planning Coordinator or Transmission Planner. [A 20 MVA generator is fairly small in a 30,000 MW system and system concerns would already be addressed though the System Impact Study]? An aggregated addition/deletion/change to a group of generating units directly connected through their step-up transformer(s) to the BES determined to be material by the Planning Coordinator or Transmission Planner. R2.6 Priority Comment As written, this section undermines the value of the sensitivity testing. This section should require a corrective action plan to fix problems determined in sensitivity analysis if there is a reasonable risk of occurrence. We suggest making the standard read Provide documentation that explains the reasoning for the sensitivities considered and

Organization	Question 2 Comment
	selected. R2.6 Comment At the end of the second sentence, the phrase in the tables is used. We suggest using more definitive language such as in Table 1?. R2.6.2 Comment The phrase Project Initiation Date needs to be defined. It is unclear if this is this the date of ground breaking, purchase orders being issued, solution study initiation, etc. Additionally, in the second sentence the phrase as well as an in-service date should be modified to read as well as a target in-service date?. R2.6.3 Comment Plans can provide a target in-service year but not an actual in-service year. R2.6.4 Priority Comment There should be a cutoff point when changes occur beyond a certain date. When that date occurs, further changes will be evaluated in the next year's assessment. Otherwise, if a state makes a decision not to site a project a few weeks prior to the end of the assessment period, there will not be sufficient time to incorporate this into that year's assessment and develop corrective actions. R2.8 Comment Largest consequential load loss is not factored into the Planning Assessment and should therefore be deleted. R2.9 Comment This requirement is unclear. Is this requirement asking for each transmission planner to list their criteria for non-consequential load loss, or is it asking how much non-consequential load loss was being relied upon in the assessment? We recommend that the requirement be modified to require documentation of the maximum amount of non-consequential load loss that was relied upon during the assessment.

Response: The SDT does not think that in Requirement R2 replacing "prepare" with "conduct and document" would add clarity, since Requirement R2 includes requirement to document assumptions and results. No change made.

The *Time Horizon* term at the end of the requirement deals with mitigation time periods (as shown below) and is not connected to the assessment time frames. No change made. Time Horizons are a consideration when there is a violation of a requirement – the impact to the BES of violating a requirement with a long-term planning horizon is not expected to be as severe as the impact associated with violating a requirement with a real-time operations time horizon.

Mitigation Time Horizon

The time horizons available for mitigating a violation to a requirement include the following:

- **Long-term Planning** — a planning horizon of one year or longer.
- **Operations Planning** — operating and resource plans from day-ahead up to and including seasonal.
- **Same-day Operations** — routine actions required within the timeframe of a day, but not real-time.
- **Real-time Operations** — actions required within one hour or less to preserve the reliability of the bulk electric system.
- **Operations Assessment** — follow-up evaluations and reporting of real time operations.

Part 2.1.2 requires that the Planning Coordinator and/or Transmission Planner also consider off-peak conditions because the System must be able to meet

Organization	Question 2 Comment

performance requirements over all demand levels. System peak condition may not represent all stressed conditions. For example, during off-peak, that Load is low, and the generation would have to be turned off to achieve Load-resource balance. Turning down resources within a Load area could result in reliability problems. Lowering the Load in areas with many non-dispatchable resources could also pose potential problems. As the System incorporates more and more renewable resources, some of them are non-dispatchable; a standard must be forward looking so the Planning Coordinator and Transmission Planner can identify potential problems as part of the Assessment. No change made.

Part 2.1.3 (now Part 2.1.4) has been rewritten to clarify the intent of the requirement. The requirement does not preclude a discussion of risk.

> **2.1.4** For each of the studies described in Requirement R2, parts 2.1.1 and 2.1.2, sensitivity case(s) shall be utilized to demonstrate the impact of changes to the basic assumptions used in the model for the list of items shown below. To accomplish this, the sensitivity analysis in the Planning Assessment must vary one or more of the following conditions not already included in the studies by a sufficient amount to stress the System within a range of credible conditions that demonstrate a measurable change in performance.
>
> - Real and reactive forecasted Load.
> - Expected transfers.
> - Expected in service dates of new or modified Transmission Facilities.
> - Reactive resource capability.
> - Generation additions, retirements, or other dispatch scenarios.
> - Controllable Loads and Demand Side Management.
> - Duration or timing of planned Transmission outages.

Part 2.1.4 (now Part 2.1.5) requires that the Planning Coordinator and/or Transmission Planner consider the possibility that a piece of major Equipment can be out of service for an extended period of time because no spare piece of Equipment is on hand or can be purchased and be placed in service such that the outage won't last into the next planning cycle. Loss of a transformer is given as an example as a piece of major Equipment, which if forced out of service and had to be replaced with a new transformer, may have a lead time of more than one year. However, if a company has a strategy, for example, to have spare transformers in its System, or have agreement with another entity to share spare transformers, it would significantly reduce the probability of an outage of a transformer for longer than one year. The Planning Coordinator and/or Transmission Planner will need to decide which pieces of major Equipment in their respective Systems would be more vulnerable to long term outage. In Part 2.1.5 when a piece of long lead-time Equipment is unavailable, System adjustments will need to be made. The System, after it is adjusted to accommodate that piece of Equipment out of service will be treated as the "normal" (P0) condition in Table 1 and the rest of Table 1 will be applied as stated. Part 2.1.5 has been revised to require that the assessment reflect the P0, P1, and P2 categories identified in Table 1 during the conditions that the System is expected to experience due to the possible unavailability of the long lead time Equipment.

> **2.1.5** When an entity's spare equipment strategy could result in the unavailability of major Transmission equipment that has a lead time of one year or more (such as a transformer), an analysis of the impact of this possible unavailability on System performance shall be assessed. The Planning Assessment shall reflect the P0, P1, and P2 categories identified in Table 1 during the conditions that the System is expected to experience due to the possible unavailability of the long lead time equipment.

Part 2.2 is intended to require a study performed in the current year, as opposed to studied performed in the past years. Part 2.2 has been revised to provide

Organization	Question 2 Comment
	greater clarity. **2.2** The Long-Term Transmission Planning Horizon portion of the steady state analysis shall be assessed annually and be supported by the following annual current study, supplemented with qualified past studies as indicated in Requirement R2, part 2.6: For Part 2.3 the decision on the year to be represented in the study is left to the discretion of the Planning Coordinator or Transmission Planner. Part 2.3 only requires it to be either study that was performed during the current year or in the past. For example, this year is 2009 and a study performed in 2009 is a current study, the study can investigate the System in a future year, which is at the discretion of the Planning Coordinator or Transmission Planner performing the study. Part 2.3 has been revised to provide greater clarity. **2.3** The short circuit analysis portion of the Planning Assessment shall be conducted annually addressing the Near-Term Transmission Planning Horizon and can be supported by current or past studies as indicated in Requirement R2, part 2.6. The analysis shall be used to determine whether circuit breakers have interrupting capability for Faults that they will be expected to interrupt using the System short circuit model with any planned generation and Transmission Facilities in service which could impact the study area. Part 2.4.1 was not changed as proposed because the intent of the last sentence is to allow the use of an aggregated System Load model as an appropriate Load representation. The suggested change could be read to mean that an aggregated System Load model would not appropriately represent the dynamic behavior of Loads. Note that changes were made to Part 2.4.1 based on other stakeholder comments. Parts 2.5 .1 and R2.5.2 (new Parts 2.6.1 and R2.6.2) were not combined. The references to the “20 MW” threshold have been deleted from the revised standard. Part 2.6 has been modified and included as new Part 2.7. The intent is to allow discretion for the Planning Coordinator or Transmission Planner to correct those deficiencies if they are prevalent (i.e., occur is more than one sensitivity). Although not required, the standard does not preclude the Planning Coordinator or Transmission Planner to develop Corrective Action Plans for high risk scenarios. However, if the scenario is high risk, then it should have been included in the base assumptions in the assessment and the Corrective Action Plan would have been required. The end of the second sentence has been changed to refer to Table 1 as suggested. **2.7** For planning events shown in Table 1, when the analysis indicates an inability of the System to meet the performance requirements in Table 1, the Planning Assessment shall include Corrective Action Plan(s) addressing how the performance requirements will be met. Revisions to the Corrective Action Plan(s) are allowed in subsequent Planning Assessments but the planned System shall continue to meet the performance requirements in Table 1. Corrective Action Plan(s) do not need to be developed solely to meet the performance requirements for a single sensitivity run in accordance with Requirements R2, parts 2.1.4 and 2.4.3. The Corrective Action Plan(s) shall: Requirement R2, part 2.6.3 has been deleted. Part 2.6.4 allows the Planning Coordinator or Transmission Planner to address situations that are beyond its control by utilizing Non-Consequential Load Loss and/or curtailment of Firm Transmission Service, which are normally not permitted. Depending on the urgency of the need, the Corrective Action Plan may be developed outside the normal Assessment cycle at the discretion of the Planning Coordinator or Transmission Planner involved. No change made. Parts 2.8 and R2.9 were intended to contribute to open and transparent Transmission planning for peer review. The SDT reviewed both requirements and agrees that as written, they were unclear. Part 2.9 has been deleted. Part 2.8 has been revised and included as Part 2.9 in the new version to require that the Planning Assessment provides the expected largest Consequential Load Loss identified by the analysis of P1 and P2 events in Table 1 only. **2.9** The Planning Assessment shall provide the expected largest Consequential Load Loss (megawatt Demand) identified by the analysis of P1 and P2 events in Table 1.

Organization	Question 2 Comment
Gainesville Regional Utilities	R2.1.1- References a "system peak Load" for each of the referenced years. Some utilities are summer peaking and some are winter peaking and others may have a history of having one or the other in any given year. So can you clarify which peak you are referring to or change to statement to perform studies involving both seasonal peaks? R.2.4.1- I suggest quantifying the reference to the behavior of induction motor loads to single motors greater than 1000 hp or multi motors at one bus totalling more that 2000 hp or so, since smaller induction motors probably will not have any significant impact of the BES. I feel this is best handled as a sensitivity issue determined by the PC who is familiar with this area. R2.5.1- If the system has not had any significant changes of the last ten years, then a study going back to that change should be acceptable for the assessment. R2.5.2- Should the "shall not include" really read as "shall include"? R2.6- The reference to "tables" in line 6 should be "table" since there is only a Table 1 in the standard. R2.6.1-R2.6.3- Question-- Why is the font size of the bullet text smaller that the other bullet segments?

Response: In Requirement R2, part 2.1.1, the selection of the system peak Load conditions is at the discretion of the Planning Coordinator or Transmission Planner. The standard allows for use of past studies to support a current Assessment. Therefore, for an area with both summer and winter peaks, the Planning Coordinator or Transmission Planner can choose to perform summer and winter peak cases on alternate years and the Assessment can rely on, e.g., a summer peak study performed in the current year and a winter peak study performed in the previous year, provided the requirement for use of past year studies is satisfied. No change made.

Part 2.4.1 allows for the use of an aggregate System Load model which represents the overall dynamic behavior of the Load that could impact the study area. So as written, the suggested representation is allowed. Note that changes were made to Part 2.4.1 based on other stakeholder comments.

Part 2.5.1 has been revised and included as Requirement R2, part 2.6.1 to address your concerns.

> **2.6.1** For steady state, short circuit, or Stability analysis: the study shall be five calendar years old or less, unless a technical rationale can be provided to demonstrate that the results of an older study are still valid.

In Part 2.5.2 “shall not include” is correct because the intent is that for the past study to be applicable, the present System should not have changed materially compared to that represented in the past study. However, Requirement R2, part 2.5.2 has been revised and included as Requirement R2, part 2.6.2 in the new version to provide greater clarity.

> **2.6.2** For steady state, short circuit, or Stability analysis: the study shall not include any material changes unless a technical rationale can be provided to demonstrate that System changes do not impact the performance results in the study area.

Part 2.6 (now 2.7) was modified to use the phrase, “in Table 1” rather than “in the tables.”

Part 2.5.1 (now 2.6.1) has been revised as shown.

> **2.6.1** For steady state, short circuit, or Stability analysis: the study shall be five calendar years old or less, unless a technical rationale can be provided to demonstrate that the results of an older study are still valid.

Organization	Question 2 Comment
2.6.2 For steady state, short circuit, or Stability analysis: the study shall not include any material changes unless a technical rationale can be provided to demonstrate that System changes do not impact the performance results in the study area. For Part 2.6.1 (now 2.7.1) the format has been corrected. Parts 2.6.2 and 2.6.3 were deleted from the revised standard.	
JEA	R2.1.4 It is not clear if this spare equipment strategy excludes Generator Owner's obligations for their generation plant equipment and only includes Transmission Owner's equipment. It is also not clear what Measurable document is required to back up a position of no vulnerabilities. I recommend that we limit the spare equipment strategy to TO equipment and not include GO equipment which excludes step-up transformers, turbines, generators, rotors, etc.Also, it does seem unreasonable to assess the long-term loss of a transformer to the "Extreme Events" of Table 1 or any other event other than the P3 events unless substituted in the assessment by a more extreme and probable event. An event from P3 alone should be sufficient to expose a weakness of a spare equipment strategy based on historical industry statistics for such likelihood. Propose changing "The analysis shall reflect the Contingencies identified in Table 1..." to "An analysis shall be performed that as a minimum assesses the impact of the long term outage of Transmission Owner equipment under either a P3 event that could occur in the absence of the subject equipment" or a more stressful event as deemed appropriate by the Functional Entity performing the assessment. R2.6.4 First of all, some level of expected Non-consequential load loss is always prudent to balance customer expectations on cost and reliability subject to Local and State Authority's guidance. Second, load development and gneration development are the major drivers for transmission development needs. Generation plans are more dependable and manageable as to timing and impact. Load development is not very dependable and manageable relative to transmission system improvement needs. It is not unusual for new load forecast to either expose a transmission weakness or on the other hand to eradicate a transmission weakness in the Near Term horizon. Without guidance, it could be assumed that affects from load forecast are beyond the control of the Transmission Planner and Transmission Coordinator. In addition, it is not unusual to have the load forecast lead the generation plan by a few years causing a need for Non-Consequential Load Loss until such time the additional generation is in-service providing generation balance to the load area and mitigating the transmission improvement needs. This occurs frequently as generation development lags load development in fast growing communities. Propose establishing a cap on Non-Consequential Load Loss for all Corrective Action Plans where the Table 1 events currently do not allow at all. An additional option for the SDT to consider could be to add an allowance of lag time (maybe 4-5 years) to cover the gap while the generation addition is being developed.
Response: Part 2.1.4 (now Part 2.1.5) requires that the Planning Coordinator and/or Transmission Planner consider the possibility that a piece of major Transmission Equipment can be out of service for an extended period of time because no spare piece of Equipment is on hand or can be purchased and be placed in service such that the outage won't last into the next planning cycle. However, the major Equipment is not limited to the major Equipment of the Transmission Owner; this standard covers major pieces of pieces of Transmission Equipment without regard to ownership. Loss of a transformer is given as an example as a piece of major Equipment, which if forced out of service and had to be replaced with a new transformer, may have a lead time of more than one year. However, if a company has a strategy, for example, to have spare transformers in its System, or have agreement with another entity to share spare transformers, it would significantly reduce the probability of an outage of a transformer for longer than one year. Requirement R2, part 2.1.5 has been revised to require that the analysis reflect the P0, P1, and P2 categories identified in Table 1 during the conditions that the System is expected to experience due to the possible unavailability of the long lead time Equipment.	

Organization	Question 2 Comment
2.1.5 When an entity's spare equipment strategy could result in the unavailability of major Transmission equipment that has a lead time of one year or more (such as a transformer), an analysis of the impact of this possible unavailability on System performance shall be assessed. The Planning Assessment shall reflect the P0, P1, and P2 categories identified in Table 1 during the conditions that the System is expected to experience due to the possible unavailability of the long lead time equipment. For Part 2.6.4 (now 2.7.5), the SDT declines to set a cap on Non-Consequential Load Loss on situations that are outside the control of the Planning Coordinator or the Transmission Planner. The premise is that the Corrective Action Plan has already been developed, but was not able to be implemented in time. The situation can occur with both unexpected changes in generation, Load pattern or delay in permitting and construction of new Transmission Facilities. In addition, a cap on the allowable Non-Consequential Load Loss may be different for different areas and may not be practical in a Continent-wide standard. No change made.	
NorthWestern Corporation NorthWestern Energy (NWE) (NWMT)	Short circuit analysis is a local issue. The reliability of the BES does not depend on the regular assessment of short circuit duty. Therefore, we believe short circuit analysis should be deleted from R2. R2.1.4 needs more clarification as to what constitutes major Transmission equipment. This would require a separate analysis (study) for each transformer (or any long lead-time equipment) for which a spare is not available, which could result in numerous additional cases. Major Transmission equipment could be limited to voltage levels greater than 200 kV. An exception should be made for phase-shifting transformers. As the system changes, with new generation and transmission lines being added, these analyses could become outdated very quickly. If a transformer were to fail, the Planning Department would immediately study the current system with this transformer removed. As stated in R2.4.1, the requirement to include induction motor loads is too prescriptive. At this time, with all of the unknown or estimated variables in the system model, accuracy of the model would not be improved. If a highly industrialized section were to develop within the NWE footprint, induction motor load could be added to the system model. The 20 MW threshold identified as "material change" for generation in R2.5 is too small. A better number for material generation changes would be 100 MW or a limit based on a percentage of the study area's installed generating capacity. Also, an aggregate of 20 MW addition/deletion generation would depend on the location of the individual generators to determine whether the overall system would be affected or not. The statement at the end of R2.6 that indicates corrective action plans are not required solely to meet the performance requirements for sensitivities should also apply to the spare equipment requirement. R2.8 should be deleted. It is not necessary for reliability. R2.9 should be deleted. It is not necessary for reliability.
Response: Part 2.3 is intended for the Planning Coordinator and/or Transmission Planner to assess the whether circuit breakers supporting the BES have interrupting capability for Faults that they will be expected to interrupt and is not specifically related to new planned Facilities. Requirement R2, part 2.3 has been revised to provide greater clarity. **2.3** The short circuit analysis portion of the Planning Assessment shall be conducted annually addressing the Near-Term Transmission Planning Horizon and can be supported by current or past studies as indicated in Requirement R2, part 2.6. The analysis shall be used to determine whether circuit breakers have interrupting capability for Faults that they will be expected to interrupt using the System short circuit model with any planned	

Organization	Question 2 Comment
	generation and Transmission Facilities in service which could impact the study area. Part 2.1.4 (now Part 2.1.5) has been revised to require that the assessment reflect the P0, P1, and P2 categories identified in Table 1 during the conditions that the System is expected to experience due to the possible unavailability of the long lead time Equipment. **2.1.5** When an entity's spare equipment strategy could result in the unavailability of major Transmission equipment that has a lead time of one year or more (such as a transformer), an analysis of the impact of this possible unavailability on System performance shall be assessed. The Planning Assessment shall reflect the P0, P1, and P2 categories identified in Table 1 during the conditions that the System is expected to experience due to the possible unavailability of the long lead time equipment. Part 2.4.1 is intended to allow the Planning Coordinator and Transmission Planner the discretion in the use of Aggregated System Load models in Stability Studies, if specific models are not available. However, it does not dictate the methodology or the process on how the studies are to be done. No change made. Part 2.5 has been revised and included as requirement R2, part 2.6 as shown. Note that the references to the "20 MW" threshold were deleted from the revised standard. **2.6.1** For steady state, short circuit, or Stability analysis: the study shall be five calendar years old or less, unless a technical rationale can be provided to demonstrate that the results of an older study are still valid. **2.6.2** For steady state, short circuit, or Stability analysis: the study shall not include any material changes unless a technical rationale can be provided to demonstrate that System changes do not impact the performance results in the study area. Parts 2.8 and R2.9 were intended to contribute to open and transparent Transmission planning for peer review. The SDT reviewed both requirements and agrees that as written, they were unclear. Part 2.9 has been deleted. Part 2.8 has been revised and included as Requirement R2, part 2.9 in the new version to require that the Planning Assessment provides the expected largest Consequential Load Loss identified by the analysis of P1 and P2 events in Table 1 only. **2.9** The Planning Assessment shall provide the expected largest Consequential Load Loss (megawatt Demand) identified by the analysis of P1 and P2 events in Table 1.
SMUD	R2.1.3 and R2.4.3The sentence, "sensitivity case(s) that are intended to stress the System with variations in one or more of the following conditions not already included in the studies shall be included in the Assessment: ", should be modified by changing the second 'included' to 'considered'. R2.1.4Since there is no NERC reliability standard requirement for a 'spare equipment strategy', what is the standing of a requirement that is based on having one R2.5.2There is no example given for 'Transmission additions/removals' Recommend that the wording of this requirement be made more discretionary with a requirement that the Transmission Planner include language explaining the reasons for using past studies.
Response: Parts 2.1.3 (now Part 2.1.4) and R2.4.3 have been revised. However, the SDT declines to change the work "included" to "considered" because the intent is that if the base case modeled already models the stressed condition, such as 1 in 10 adverse weather Load, even higher Load may not need to be included in the sensitivity study, **2.1.4** For each of the studies described in Requirement R2, parts 2.1.1 and 2.1.2, sensitivity case(s) shall be utilized to demonstrate the impact of	

Organization	Question 2 Comment
	changes to the basic assumptions used in the model for the list of items shown below. To accomplish this, the sensitivity analysis in the Planning Assessment must vary one or more of the following conditions not already included in the studies by a sufficient amount to stress the System within a range of credible conditions that demonstrate a measurable change in performance. • Real and reactive forecasted Load. • Expected transfers. • Expected in service dates of new or modified Transmission Facilities. • Reactive resource capability. • Generation additions, retirements, or other dispatch scenarios. • Controllable Loads and Demand Side Management. • Duration or timing of planned Transmission outages. **2.4.3** For each of the studies described in Requirement R2, parts 2.4.1 and 2.4.2, sensitivity case(s) shall be utilized to demonstrate the impact of changes to the basic assumptions used in the model for the list of items shown below. To accomplish this, the sensitivity analysis in the Planning Assessment must vary one or more of the following conditions not already included in the studies by a sufficient amount to stress the System within a range of credible conditions that demonstrate a measurable change in performance. • Load level, Load forecast, or dynamic model assumptions. • Expected transfers. • Expected in service dates of new or modified Facilities. • Reactive resource capability. • Generation additions, retirements, or other dispatch scenarios. The SDT has included the spare equipment strategy in Part 2.1.4 to ensure that the BES is designed so that it remains reliable even with long lead time Equipment unavailable, consistent with the directive from FERC Order 693. **2.1.5** When an entity's spare equipment strategy could result in the unavailability of major Transmission equipment that has a lead time of one year or more (such as a transformer), an analysis of the impact of this possible unavailability on System performance shall be assessed. The Planning Assessment shall reflect the P0, P1, and P2 categories identified in Table 1 during the conditions that the System is expected to experience due to the possible unavailability of the long lead time equipment. The SDT revised Part 2.5.2 (now Part 2.6.2) to remove the "Transmission additions/removals" and "generation changes" language.
Progress Energy Florida, Inc.	Concerning R2.1.4, this sub-requirement is overly burdensome for two primary reasons: a) It amounts to a system-wide N-2 and N-3 analysis, which goes against FERC's policy of separation and distinction between types of events as stated in Paragraph 1788 of Order 693: Under TPL-002-0 the system is not required to be able to withstand another N-1 contingency. That N-1 requirement is a Category C contingency which is addressed by TPL-003-0. b) The requirement to perform system-wide analysis for such a scenario is a significant workload issue, and will take time away from analysis of more probable events. Concerning the issue of material changes in past studies in sub-requirement

Organization	Question 2 Comment
	R2.5.2, PEF objects to the specification of changes in units of 20 MW or greater, due to the fact that a change (or even deletion) of a 20 MW unit in a case modeling a large BES does not truly constitute a material change. The SDT in its response to Question 15 in the comments for draft 2 stated that The SDT did not want to be overly prescriptive when describing the type of changes that could be considered material and has left the text general. PEF suggests that the SDT take its own advice, making the language in R2.5.2 more general in nature and leaving such modeling details to the discretion of the Transmission Owner. In R2.6.2, PEF assumes that the term "project initiation date" is intended to mean the Construction Move-In date. If the term means the first date at which Planners had identified it as a mitigation, PEF would object to this as it would appear to preclude the right to develop superior mitigations, or to cancel a project if it can be demonstrated as no longer needed. Concerning R2.8 and R2.9, PEF strenuously objects to such requirements. These requirements have no bearing on demonstrating the reliability (or lack thereof) of the BES, and therefore should be removed from the Standard.

Response: Part 2.1.4 (now Part 2.1.5) is based on FERC Order 693, Paragraphs 1724 – 1727. Part 2.1.5 is intended for the Planning Coordinator and/or Transmission Planner to take into account their spare Equipment strategy for long lead time Equipment when assessing the performance of their System. If the loss of a piece of major Equipment can be replaced within a reasonable period of time, planning studies for the following year can assume that that piece of Equipment will be replaced. If not, its impact of unavailability would need to be assessed. Part 2.1.5 has been revised to require that the Planning Assessment reflect the P0, P1, and P2 categories identified in Table 1 during the conditions that the System is expected to experience due to the possible unavailability of the long lead time Equipment.

> **2.1.5** When an entity's spare equipment strategy could result in the unavailability of major Transmission equipment that has a lead time of one year or more (such as a transformer), an analysis of the impact of this possible unavailability on System performance shall be assessed. The Planning Assessment shall reflect the P0, P1, and P2 categories identified in Table 1 during the conditions that the System is expected to experience due to the possible unavailability of the long lead time equipment.

Part 2.5.2 has been revised and included as Requirement R2, part 2.6.2 to address your concerns. The revised standard does not include the reference to a "20 MW" threshold.

> **2.6.2** For steady state, short circuit, or Stability analysis: the study shall not include any material changes unless a technical rationale can be provided to demonstrate that System changes do not impact the performance results in the study area.

Part 2.6 has been revised and included as Requirement R2, part 2.7 in the new version.

> **2.7** For planning events shown in Table 1, when the analysis indicates an inability of the System to meet the performance requirements in Table 1, the Planning Assessment shall include Corrective Action Plan(s) addressing how the performance requirements will be met. Revisions to the Corrective Action Plan(s) are allowed in subsequent Planning Assessments but the planned System shall continue to meet the performance requirements in Table 1. Corrective Action Plan(s) do not need to be developed solely to meet the performance requirements for a single sensitivity run in accordance with Requirements R2, parts 2.1.4 and 2.4.3. The Corrective Action Plan(s) shall:

Parts 2.8 and R2.9 were intended to contribute to open and transparent Transmission planning for peer review. The SDT reviewed both requirements and agrees that as written, they were unclear. Part 2.9 has been deleted. Part 2.8 has been revised and included as Requirement R2, part 2.9 in he new version to require that the Planning Assessment provides the expected largest Consequential Load Loss identified by the analysis of P1 and P2 events in Table 1 only.

Organization	Question 2 Comment
2.9 The Planning Assessment shall provide the expected largest Consequential Load Loss (megawatt Demand) identified by the analysis of P1 and P2 events in Table 1.	
Xcel Energy	R2.1.3 is this indicating that only one of the variations need to be studied? ("in one or more of the following conditions"). Recommend having the planner work with the load to determine what sensitivity studies to perform. R2.1.4 it is unclear as to what should be done with the analysis that incorporates the company's spare equipment strategy. Is this requirement inferring that a company's spare equipment strategy need to ensure that it can still operate to within the requirements for contingencies of Table 1 without the component? R2.2.1 is the intent to have the study for the 10 year horizon or to include any project that is started within the next 10 years and thus the study must be extended to the forecasted completion of the project (conceivably as long as 20 years or more?) R2.6.4 recommend clarifying how situations beyond the control of the TP or PC are determined. It is unclear if this is to imply that if something is outside of the control of the department who conducts the planning studies or if it is outside the control of the registered function's legal entity (i.e. corporation). R2.8 appears to be nonessential information for reliability; for what purpose does this requirement exist? R2.9 - appears to be nonessential information for reliability; for what purpose does this requirement exist?

Response: Part 2.1.3 (now Part 2.1.4) does not preclude the Planning Coordinator or Transmission Planner working with other Functional Entities to develop strategies on performing sensitivity studies. Part 2.1.4 requires that the Planning Coordinator or Transmission Planner perform sensitivity studies for at least one of the variation not already covered in the studies described in Parts 2.1.1 and 2.1.2

Part 2.1.4 (now Part 2.1.5) requires that the Planning Coordinator and/or Transmission Planner consider the possibility that a piece of major Equipment can be out of service for an extended period of time because no spare piece of Equipment is on hand or can be purchased and be placed in service such that the outage won't last into the next planning cycle. Loss of a transformer is given as an example as a piece of major Equipment, which if forced out of service and had to be replaced with a new transformer, may have a lead time of more than one year. However, if a company has a strategy, for example, to have spare transformers in its System, or have agreements with another entity to share spare transformers, it would significantly reduce the probability of an outage of a transformer for longer than one year. Part 2.1.5 has been revised to require that the assessment reflect the P0, P1, and P2 categories identified in Table 1 during the conditions that the System is expected to experience due to the possible unavailability of the long lead time Equipment.

> **2.1.5** When an entity's spare equipment strategy could result in the unavailability of major Transmission equipment that has a lead time of one year or more (such as a transformer), an analysis of the impact of this possible unavailability on System performance shall be assessed. The Planning Assessment shall reflect the P0, P1, and P2 categories identified in Table 1 during the conditions that the System is expected to experience due to the possible unavailability of the long lead time equipment.

Part 2.2.1 has been revised because extending the Planning Horizon beyond 10 years for projects with lead times longer than 10 years is already covered in the definition of Long-Term Transmission Planning Horizon. This allowance is needed to provide planning flexibility, and is at the discretion of the Planning Coordinator or Transmission Planner. For example, if the System is found not to meet performance standards in year 10, but the project to correct the loading cannot be placed in service for 12 years, then the Corrective Action Plan needs to identify the interim solutions before the project can be brought on line.

> **2.2.1** A current study assessing expected System peak Load conditions for one of the years in the Long-Term Transmission Planning Horizon and the

Organization	Question 2 Comment
rationale for why that year was selected. Part 2.6.4 refers to the situations beyond the control of the Transmission Planner or Planning Coordinator as Functional Entities. Parts 2.8 and R2.9 were intended to contribute to open and transparent Transmission planning for peer review. The SDT reviewed both requirements and agrees that as written, they were unclear. Part 2.9 has been deleted. Part 2.8 has been revised and included as requirement R2, part 2.9 in the new version to require that the Planning Assessment provides the expected largest Consequential Load Loss identified by the analysis of P1 and P2 events in Table 1 only. **2.9** The Planning Assessment shall provide the expected largest Consequential Load Loss (megawatt Demand) identified by the analysis of P1 and P2 events in Table 1.	
New Brunswick System Operator	R2.1.4 Major transmission element needs to be defined. For example, what about sync condenser, or generator step up transformer R2.2 Clearity required. Example: What is meant by "current System peak load" It is not clear what supplemental load loss is. Would load tripped due to undervoltage or SPS as a result of a contingency be considered supplemental load? As a follow up what then is Non-consequential load (provide examples). How would this load be lost? The requirements appear the same regardless of the amount of Non-consequential load loss. Is there any consideration of applying thresholds both on suppmental and non-consequential load loss where these loads are defined as (or applied as) "exceeding xxx amount of MW". Regarding Table 1 b, what does the following mean: "However, Supplemental Load Loss associated with an event shall not be used to meet steady state performance requirements." Please clearify the definition of Year One. This definition also does not include Planning coordinator. Was that intentional?
Response: In Part 2.1.4 (now Part 2.1.5), major Transmission Equipment would be those pieces of Equipment, the loss of which can have significant impact on System performance. They are typically the ones listed in the Contingency Events in Table 1. Part 2.1.5 has been revised to require that the assessment reflect the P0, P1, and P2 categories identified in Table 1 during the conditions that the System is expected to experience due to the possible unavailability of the long lead time Equipment. **2.1.5** When an entity's spare equipment strategy could result in the unavailability of major Transmission equipment that has a lead time of one year or more (such as a transformer), an analysis of the impact of this possible unavailability on System performance shall be assessed. The Planning Assessment shall reflect the P0, P1, and P2 categories identified in Table 1 during the conditions that the System is expected to experience due to the possible unavailability of the long lead time equipment. Part 2.2 refers to a "current System peak Load study". This would be a System peak Load study that is performed in the current year. In the Definition Section, Supplemental Load Loss is defined as Load that is disconnected from the network by end-user Equipment responding to post-Contingency System conditions. Because the disconnection is at the discretion of the Load customer, not the Planning Coordinator or Transmission Planner, they cannot be counted on to leave the System. Therefore, the Transmission System cannot be planned as if such Load would disconnect. Part 2.2 has been revised to provide greater clarity. **2.2** The Long-Term Transmission Planning Horizon portion of the steady state analysis shall be assessed annually and be supported by the	

Organization	Question 2 Comment
	following annual current study, supplemented with qualified past studies as indicated in Requirement R2, part 2.6: A cap on the allowable Non-Consequential Load Loss may be different for different areas and may not be practical in a Continent-wide standard. No change made. See response for Part 2.2 above. The definition has been revised to include Planning Coordinator. **Year One:** The first year that a Planning Coordinator or a Transmission Planner is responsible for assessing. This is further defined as the planning window that begins 12-18 months from the end of the current calendar year.
Lafayette Utilities System	R2.5. This basic requirement intends, as we understand it, to require that earlier studies not be used for a current assessment if they are no longer accurate. But the phrasing is potentially confusing, and would be clearer if revised. Since the requirement deals with the use of past studies, we suggest that R2.5.2 be revised to state that the study may be used only if there have been no material changes, so that R2.5 reads in full: R2.5. Past studies may be used to support the Planning Assessment if they meet the following requirements: R2.5.1. For steady state, short circuit, or Stability analysis: the study shall be five calendar years old or less. R2.5.2. For steady state, short circuit, or Stability analysis: the study may be used only if there have been no material changes, such as generation or Transmission additions/removals, or topology changes that have occurred in the intervening period and would impact the study area. Material generation changes could include: The addition/deletion/change of individual generating unit capability of 20 MW or greater. An aggregated addition/deletion/change to a group of generating units directly connected through their step-up transformer(s) to the BES which total 20 MW or greater. With respect to footnote 10 to Table 1, we fear that the flexibility suggested by those provisions may be excessive for a planning standard. The ambiguity occasioned by stating emergency actions that can properly be taken in a planning standard can be utilized by those who plan the system in a manner which plans to drop non-consequential loads just as footnote b has been used in the past. If this is intended to raise the bar as stated these provisions do not belong in a planning standard, at least as now stated. It may be appropriate to remove the reference to footnote 10, at least in the Initial System Condition entry in P3, where it suggests that it can be invoked after loss of a single generator, and we request the SDT to review that footnote to assure that it is appropriate in the other entries to which it is applied. In addition to the foregoing, we are concerned that the language of footnote 10 to Table 1 is unclear and subject to at least one interpretation that would seriously undermine reliability. Specifically, the first sentence of footnote 10 permits "[c]urtailment of firm transmission service, when coupled with the appropriate re-dispatch of resources obligated to re-dispatch." The reference to an "obligat[ion] to re-dispatch" is ambiguous at best and should be clarified. For example, footnote 10 should not be read as permitting Balancing Authority A to rely on curtailment of firm transmission service coupled with re-dispatch of generation by adjacent Balancing Authority B during a Level 5 TLR event, based on the theory that, if a Level 5 TLR is declared and the Reliability Coordinator assigns to Balancing Authority B an NNL reduction responsibility that compels it to reload its resources, Balancing Authority B is therefore "obligated to re-dispatch" within the meaning of footnote 10. We suspect the intent of the first sentence of footnote 10 was to recognize and give effect to arrangements in which (following the example) Balancing Authority A has made a prior contractual arrangement with

Organization	Question 2 Comment
	Balancing Authority B (or another generation owner) to provide redispatch services when requested by Balancing Authority A. In that circumstance, Balancing Authority A would be allowed to couple the curtailment of firm transmission with redispatch provided by Balancing Authority B (or another generation owner) pursuant to its contractual obligation. We suggest that this limitation be reflected by revising the first sentence of footnote 10 to read as follows: Curtailment of firm transmission service, when coupled with the appropriate re-dispatch of resources subject to a contractual obligation to provide re-dispatch service to the operator of the system for which the Transmission Planner is responsible, is allowed both as a System adjustment (as identified in the column titled "Initial System Conditions") and a corrective action, where it can be demonstrated that Facilities remain within applicable Facility Ratings and those adjustments do not result in the shedding of any firm Load. Without the limitation reflected in the foregoing revision, an entity could interpret footnote 10 as allowing it to rely on the redispatch of generation by other systems that may be (in effect) mandated by a Reliability Coordinator during a Level 5 TLR event. That sort of "leaning" on adjacent systems should not be permitted as a System adjustment or corrective action under TPL-001, especially where it imposes uncompensated burdens and costs on the system(s) forced to redispatch under these circumstances.
Response: Part 2.5 has been revised and included as Requirement R2, part 2.6 as shown. Note that the revised standard does not include any reference to the "20 MW" threshold. **2.6.1** For steady state, short circuit, or Stability analysis: the study shall be five calendar years old or less, unless a technical rationale can be provided to demonstrate that the results of an older study are still valid. **2.6.2** For steady state, short circuit, or Stability analysis: the study shall not include any material changes unless a technical rationale can be provided to demonstrate that System changes do not impact the performance results in the study area. Footnote 10 (now footnote 9) was added to address the disjoint between how some parties calculate ATC/AFC when assessing Long Term Firm Transmission Service and the currently proposed TPL-001-1 standard. TPL-001-1 requires Transmission Planners to plan their systems to meet multiple contingency events and some parties assess Long Term Firm Transmission Service on a first Contingency basis. Units obligated to re-dispatch, as contemplated in Footnote 9 are those units which are contractually bound to provide the service as well as those obligated to provide the service under Network Integrated Transmission Service, under FERC's pro forma OATT. Under the pro forma OATT, units designated as network resources receiving NITS are obligated to re-dispatch as requested by the Transmission Provider pursuant to Section 33.2 to maintain reliability. The footnote is worded such that curtailment/re-dispatch cannot result in the loss of firm Load preserves the guidance given by FERC in Order 693 that no single Contingency result in the loss of firm Load. No change made. The SDT has reviewed the application of footnote 10 (now footnote 9) and believes that it is correct. No change made.	
Mississippi Delta Energy Agency	R2.5. This basic requirement intends, as we understand it, to require that earlier studies not be used for a current assessment if they are no longer accurate. But the phrasing is potentially confusing, and would be clearer if revised. Since the requirement deals with the use of past studies, we suggest that R2.5.2 be revised to state that the study may be used only if there have been no material changes, so that R2.5 reads in full:"R2.5. Past studies may be used to support the Planning Assessment if they meet the following requirements: R2.5.1. For steady state, short circuit, or Stability analysis: the study shall be five calendar years old or less. R2.5.2. For steady state, short circuit, or Stability analysis: the study may be used only if there have been no material changes, such as generation or Transmission additions/removals, or topology changes that have occurred in the intervening period and would impact the study area. Material generation changes could include: The addition/deletion/change of individual generating unit capability of 20 MW or greater. An aggregated

Organization	Question 2 Comment
	addition/deletion/change to a group of generating units directly connected through their step-up transformer(s) to the BES which total 20 MW or greater. With respect to footnote 10 to Table 1, we fear that the flexibility suggested by those provisions may be excessive for a planning standard. The ambiguity occasioned by stating emergency actions that can properly be taken in a planning standard can be utilized by those who plan the system in a manner which plans to drop non-consequential loads just as footnote b has been used in the past. If this is intended to raise the bar as stated these provisions do not belong in a planning standard, at least as now stated. It may be appropriate to remove the reference to footnote 10, at least in the Initial System Condition entry in P3, where it suggests that it can be invoked after loss of a single generator, and we request the SDT to review that footnote to assure that it is appropriate in the other entries to which it is applied.
Response: Part 2.5 has been revised and included as Requirement R2, part 2.6 as shown. Note that the revised standard does not include any reference to the "20 MW" threshold. **2.6.1** For steady state, short circuit, or Stability analysis: the study shall be five calendar years old or less, unless a technical rationale can be provided to demonstrate that the results of an older study are still valid. **2.6.2** For steady state, short circuit, or Stability analysis: the study shall not include any material changes unless a technical rationale can be provided to demonstrate that System changes do not impact the performance results in the study area. Footnote 10 (now footnote 9) was added to address the disjoint between how some parties calculate ATC/AFC when assessing Long Term Firm Transmission Service and the currently proposed TPL-001-1 standard. TPL-001-1 requires Transmission Planners to plan their systems to meet multiple contingency events and some parties assess Long Term Firm Transmission Service on a first Contingency basis.. Units obligated to re-dispatch, as contemplated in Footnote 9 are those units which are contractually bound to provide the service as well as those obligated to provide the service under Network Integrated Transmission Service, under FERC's pro forma OATT. Under the pro forma OATT, units designated as network resources receiving NITS are obligated to re-dispatch as requested by the Transmission Provider pursuant to Section 33.2 to maintain reliability. The footnote is worded such that curtailment/re-dispatch cannot result in the loss of firm Load preserves the guidance given by FERC in Order 693 that no single Contingency result in the loss of firm Load. No change made.	
Ameren	In R2, The phrase document results should be changed to summarize results. While results will be documented, the Planning Assessment should just include a summary. In R2.1, the reference to requirement R2.6 (at the end of the last line) should be changed to R2.5. In R2.1.3, it is suggested that the studies be referred to as the "base studies" to avoid confusion with the sensitivity studies. Also it is suggested that another phrase be added at the end for clarity. The entire R2.1.3 would then be as follows: For each of the base studies described in Requirements R2.1.1 and R2.1.2, sensitivity case(s) that are intended to stress the System with variations in one or more of the following conditions not already included in the studies shall be included in the Assessment. Sensitivity studies would include changes to: In Requirement R2.1.4, it is suggested that language be added to reflect the possible unavailability of the equipment, such as: When an entity's spare equipment strategy could result in the unavailability of major Transmission equipment that has a lead time of one year or more (such as a transformer), an analysis of the impact of this possible unavailability on System performance shall be assessed. The analysis shall reflect the Contingencies identified in Table 1 during the conditions that

Organization	Question 2 Comment
	the System is expected to experience the possible unavailability of the long lead time equipment. It is not clear how adequate lead times for equipment would be determined. In Requirements R2.3 and R2.4, consider adding a reference to Requirement R2.5 for the past studies. In Requirement R2.4.1, it is suggested that it be reworded to the following: System peak Load for one of the five years, including Load models which appropriately represents the dynamic behavior of Loads, considering the behavior of induction motor Loads. An aggregate System Load model which represents the overall dynamic behavior of the Load is acceptable. Load models referenced in R2.4.1 should be confined to the consideration of transient stability study work. With the elimination of the distinction between system and generating plant stability studies, the blanket requirement in R2.5.1 that all stability analyses be five calendar years old or less, regardless of any material changes to the system, would cause needless work to be performed on those plants or areas of the system where no changes are occurring. We suggest adding the following to the end of R2.5.1: unless justification can be provided to demonstrate that the results of an older study are still valid. In Requirement R2.4.3, it is suggested that this sub-requirement be reworded to the following: For each of the base studies described in Requirements R2.4.1 and R2.4.2, sensitivity case(s) that are intended to stress the System with variations in one or more of the following conditions not already included in the base studies shall be included in the Assessment. Sensitivity studies would include changes to: In bullet three of Requirement R2.6.1, would we allow automatic generation tripping for a single (P1) event if it is not consequential? It seems that tripping of generation should be restricted to P2 events 2 or 3 at a minimum. In bullet five of Requirement R2.6.1, is there a maximum duration that operating procedures can be used before a capital project must be included (or completed) in the Corrective Action Plan? In Requirement R2.6.2, it is not clear what constitutes a "project initiation date". Please clarify. Please explain the reason why Requirement R2.8 is needed in the Assessment. Reporting the largest Consequential Load Loss does not impact reliability. Please explain the reason why Requirement R2.9 is needed in the Assessment. Reporting the largest Non-Consequential Load Loss doe not impact reliability. The proposed standard not only raises the bar for system performance requirements, but also raises the bar for reporting and documentation. We need to employ almost as many librarians and technical writers as engineers to develop and keep track of the documentation. Engineers need to spend more time performing the studies and spend less time documenting studies keeping track of documentation for multiple years.

Response: Part 2 has been revised to reflect your suggestion.

R2. Each Transmission Planner and Planning Coordinator shall prepare an annual Planning Assessment of its portion of the BES. This Planning Assessment shall use current or past studies, document assumptions, summarize documented results, and cover steady state analyses, short circuit analyses, and Stability analyses.

Organization	Question 2 Comment
In the new version, Part 2.6 now contains the requirement for the use of past studies, so Part 2.1 now has the correct reference. No change made. The SDT reviewed Part 2.1.3 (now Part 2.1.4) and declined to use the term "base study" because "base study" may have different meanings in different parts of the continent, and the term, "studies described in Parts 2.1.1 and 2.1.2" should be sufficient to avoid confusion. No change made. Part 2.1.4 (now Part 2.1.5) has been revised to require that the assessment reflect the P0, P1, and P2 categories identified in Table 1 during the conditions that the System is expected to experience due to the possible unavailability of the long lead time Equipment. **2.1.5** When an entity's spare equipment strategy could result in the unavailability of major Transmission equipment that has a lead time of one year or more (such as a transformer), an analysis of the impact of this possible unavailability on System performance shall be assessed. The Planning Assessment shall reflect the P0, P1, and P2 categories identified in Table 1 during the conditions that the System is expected to experience due to the possible unavailability of the long lead time equipment. Parts 2.3 and 2.4 have been revised to include the reference to the requirements for use of past studies. **2.3** The short circuit analysis portion of the Planning Assessment shall be conducted annually addressing the Near-Term Transmission Planning Horizon and can be supported by current or past studies as indicated in Requirement R2, part 2.6. The analysis shall be used to determine whether circuit breakers have interrupting capability for Faults that they will be expected to interrupt using the System short circuit model with any planned generation and Transmission Facilities in service which could impact the study area. **2.4** The Near-Term Transmission Planning Horizon portion of the Stability analysis shall be assessed annually and be supported by current or past studies as indicated in Requirement R2, part2.6. The following studies are required. Part 2.4.1 has been revised to reflect your suggestion. In addition, Part 2.4 concerns only "The Near-Term Transmission Planning Horizon portion of the Stability analysis". Part 2.4.1 carries the same limitation as Part 2.4. **2.4.1** System peak Load for one of the five years. System peak Load levels shall include a Load model which represents the dynamic behavior of Loads that could impact the study area, considering the behavior of induction motor Loads. An aggregate System Load model which represents the overall dynamic behavior of the Load is acceptable. The requirement has been revised as suggested. **2.6.2** For steady state, short circuit, or Stability analysis: the study shall not include any material changes unless a technical rationale can be provided to demonstrate that System changes do not impact the performance results in the study area. The SDT reviewed Part 2.4.3 and declined to use the term "base study" because "base study" may have different meanings in different parts of the continent, and the term, "studies described in Parts 2.4.1 and 2.4.2" should be sufficient to avoid confusion. No change made. Part 2.6 has been revised and included as Requirement, part 2.7 to reflect your suggestion. **2.7** For planning events shown in Table 1, when the analysis indicates an inability of the System to meet the performance requirements in Table 1, the Planning Assessment shall include Corrective Action Plan(s) addressing how the performance requirements will be met. Revisions to the Corrective Action Plan(s) are allowed in subsequent Planning Assessments but the planned System shall continue to meet the performance requirements in Table 1. Corrective Action Plan(s) do not need to be developed solely to meet the performance requirements for a single sensitivity run in accordance with Requirements R2, parts 2.1.4 and 2.4.3. The Corrective Action Plan(s) shall: The third bullet in Part 2.6.1 (now 2.7.1) is intended to meet the requirements in Table 1. Generation tripping is allowed at the discretion of the Planning

Organization	Question 2 Comment
Coordinator or Transmission Planner for P1 Events as long as there is no loss of firm Non-Consequential Load. In addition, in the fifth bullet, the duration for use of an operating procedure is also at the discretion of the Planning Coordinator or Transmission Planner because it may not be feasible environmentally to implement Transmission reinforcements in some locations. Project initiation date has been deleted from the requirements. Parts 2.8 and 2.9 were intended to contribute to open and transparent Transmission planning for peer review. The SDT reviewed both requirements and agrees that as written, they were unclear. Part 2.9 has been deleted. Part 2.8 has been revised and included as Requirement R2, part 2.9 in the new version to require that the Planning Assessment provides the expected largest Consequential Load Loss identified by the analysis of P1 and P2 events in Table 1 only. **2.9** The Planning Assessment shall provide the expected largest Consequential Load Loss (megawatt Demand) identified by the analysis of P1 and P2 events in Table 1.	
Puget Sound Energy, Inc.	Short circuit analyses is a local phenomenon and should not be required as part of a transmission planning assessment of the BES. In any case, the effects of failure of over-stressed breakers are already included in the Events to be assessed in Table 1. For example, P2-3 and P2-4 (Internal Breaker Fault), and P4 (Stuck Breaker while attempting to clear a fault). Clarity is needed in R2.1.4. The requirement to assess the Contingencies identified in Table 1 is too burdensome. This requirement does not specify any limits on the equipment for which an analysis must be conducted. As currently drafted, this could require a separate analysis for each transformer (or any long lead-time equipment) for which a spare is not available. A separate initial case would need to be developed to assess the Contingencies identified in Table 1 for each transformer. This could result in a countless number of additional cases. We recommend a threshold be established, such as all transformers with a low side voltage above 200 kV. The 20 MW threshold identified as material change for generation in R2.5 is too small. The limit should be raised or based on a percentage of the study area's installed generating capacity. R2.7 should be deleted, see comment on R2 above. R2.8 should be deleted. It is not necessary for reliability. What will be done with this information on the largest Consequential Load Loss and the associated event caused by any P1 event and any P2 event? if it is documented? R2.9 should be deleted. It is not necessary for reliability. It will be difficult to determine the maximum permissible Non-Consequential Load value. It will end up being based on cost (monetary, societal, environmental, etc.), which is dependent, among other things, on the types of load being served. It very well may be a case by case situation.
Response: Part 2.3 is intended for the Planning Coordinator and/or Transmission Planner to assess the whether circuit breakers supporting the BES have interrupting capability for Faults that they will be expected to interrupt and is not specifically related to new planned Facilities. Part 2.3 has been revised to provide greater clarity. **2.3** The short circuit analysis portion of the Planning Assessment shall be conducted annually addressing the Near-Term Transmission Planning Horizon and can be supported by current or past studies as indicated in Requirement R2, part 2.6. The analysis shall be used to determine whether circuit breakers have interrupting capability for Faults that they will be expected to interrupt using the System short circuit model with any planned generation and Transmission Facilities in service which could impact the study area.	

Organization	Question 2 Comment
Part 2.1.4 (now Part 2.1.5) has been revised to require that the assessment reflect the P0, P1, and P2 categories identified in Table 1 during the conditions that the System is expected to experience due to the possible unavailability of the long lead time Equipment. **2.1.5** When an entity's spare equipment strategy could result in the unavailability of major Transmission equipment that has a lead time of one year or more (such as a transformer), an analysis of the impact of this possible unavailability on System performance shall be assessed. The Planning Assessment shall reflect the P0, P1, and P2 categories identified in Table 1 during the conditions that the System is expected to experience due to the possible unavailability of the long lead time equipment. The language in Part 2.5.2 that referenced a 20 MW threshold was deleted from the revised standard. The SDT assumes that you meant the comment on short circuit analysis above. The SDT declines to delete the requirement as the SDT believes that it is a necessary part of an overall Planning Assessment. Parts 2.8 and 2.9 were intended to contribute to open and transparent Transmission planning for peer review. The SDT reviewed the both requirements and agrees that as written, they were unclear. Part 2.9 has been deleted. Part 2.8 has been revised and included as Requirement R2, part 2.9 in the new version to require that the Planning Assessment provides the expected largest Consequential Load Loss identified by the analysis of P1 and P2 events in Table 1 only. **2.9** The Planning Assessment shall provide the expected largest Consequential Load Loss (megawatt Demand) identified by the analysis of P1 and P2 events in Table 1.	
Manitoba Hydro	Requirement Text: R2.1: Reference of past studies should be to R2.5, not R2.6 (typo). R2.1.3: The sensitivity to Planned duration or timing of Transmission Outages should be modified to only include Planned long duration Transmission outages that span multiple seasons, if known. Short duration planned maintenance outages should not be included in a planning assessment. R2.1.4 - The second sentence doesn't read right - the sentence should be changed to read: "The analysis shall reflect the Contingencies identified in Table 1 under the conditions that the System is expected to experience during the unavailability of the long lead time equipment. R2.2.1 - This sub-requirement should be deleted. Why do extra assessments beyond the 10 year period" Any items beyond 10 years will be covered when they fall into the 10 year period. For example, if we assess the 10 year horizon, then the project due to be complete in 12 years will be part of the assessment in 2 years when it is 10 years out. We will have to show every year how our system meets compliance regardless of this extra analysis, so what's the point. Every year we have to show how we comply in the short and long term so what difference does it make when each project is completed as long as we are in compliance or identify Corrective Action Plans (CAPs) along the way. R2.4.1: The statement "a Load model shall be used which appropriately represents the dynamic behavior of Loads is not very crisp. What will appropriate be interpreted to mean by the NERC auditor? Does an MOD standard exist that covers gathering data and validating loads models? This should be a first step. The SDT should add a statement that the application of detailed induction motor modeling can be limited to areas where poor voltage recovery is expected due to a high concentration of such load. The requirement should be modified to require the PC/TP to provide a rationale for the load models used in its specific planning area. R2.5: A Past Study is a definition and should be moved to the definition section. The definition only identifies power changes

Organization	Question 2 Comment
	as possible material changes, but should also include machine control (exciters/governors) changes. We suggest the bulleted list of Material Generation changes be expanded. R2.6.1: Can the SDT clarify how a rate application qualifies as a CAP action? R2.9 - The sentence should refer to maximum Non-Consequential Load Loss not maximum permissible Non-Consequential Load Loss.

Response: In the new version, Part 2.6 now contains the requirement for the use of past studies, so Part 2.1 now has the correct reference. No change made.

In Part 2.1.3 (now Part 2.1.4), outages that span multiple seasons are included in the last bullet, "Planned duration or timing of Transmission outages". No change made.

Part 2.1.4 (now Part 2.1.5) has been revised to reflect your suggestion.

> **2.1.5** When an entity's spare equipment strategy could result in the unavailability of major Transmission equipment that has a lead time of one year or more (such as a transformer), an analysis of the impact of this possible unavailability on System performance shall be assessed. The Planning Assessment shall reflect the P0, P1, and P2 categories identified in Table 1 during the conditions that the System is expected to experience due to the possible unavailability of the long lead time equipment.

Part 2.2.1 has been revised because extending the Planning Horizon beyond 10 years for projects with lead times longer than 10 years is already covered in the definition of Long-Term Transmission Planning Horizon. This allowance is needed to provide planning flexibility, and is at the discretion of the Planning Coordinator or Transmission Planner. For example, if the System is found not to meet performance standards in year 10, but the project to correct the loading cannot be placed in service for 12 years, then the Corrective Action Plan needs to identify the interim solutions before the project can be brought on line.

> **2.2.1** A current study assessing expected System peak Load conditions for one of the years in the Long-Term Transmission Planning Horizon and the rationale for why that year was selected.

Part 2.4.1 has been revised to provide greater clarity.

> **2.4.1** System peak Load for one of the five years. System peak Load levels shall include a Load model which represents the dynamic behavior of Loads that could impact the study area, considering the behavior of induction motor Loads. An aggregate System Load model which represents the overall dynamic behavior of the Load is acceptable.

The SDT declines to move past study to the Definition Section because the Definition, once approved, will apply to all NERC Standards, however, past study is only used in this TPL Standard.

In Part 2.6.1, "rate application" refers to rate incentives to change behavior of end-use customers and can be part of the "actions to achieve required System performance". This is included to allow for non-traditional solutions to achieving required System performance.

Part 2.9 has been deleted.

E.ON U.S.	R2.1.3Change For each of the studies to For at least one of the studies R2.1.1 and R2.1.2 require that 3 studies be performed each year. As written, the requirement indicates that the transmission planner has to perform at least one sensitivity study for the 3 studies required by R2.1.1 and R2.1.2. This means that the transmission planner would also have to perform 3 or more sensitivity studies each year. One sensitivity study for one of the 3 studies required by R2.1.1 and

Organization	Question 2 Comment
	R2.1.2 should suffice. R2.1.4.Delete "The analysis shall reflect the Contingencies identified in Table 1 during the conditions that the System is expected to experience due to the unavailability of the long lead time equipment. This statement is redundant since R3 requires this analysis for all of R2.1. Including this statement in R2.1.4 and not in R2.1.1 and R2.1.2 makes it appear that this requirement has different performance requirements. R2.4.3R2.4 does not require studies annually. However, if the transmission planner chooses to study a System Peak Load or a System Off-Peak Load condition R2.4.3 requires that the planner also study sensitivity to that same condition in the current year. E.ON U.S. believes it sufficient that the assessment include a sensitivity study for some System Peak Load and some System Off-Peak Load condition.R2.6The third sentence should be modified to include R2.1.4., so that it reads "Corrective Action Plans do not need to be developed solely to meet the performance requirements for sensitivities run in accordance with Requirements R2.1.3, R2.1.4 and R2.4.3. The annual studies performed for Category P6 alert the Transmission Planner to the risks of transformer failure. The Transmission Planner is required to design the system to limit those risks. If the delivery time for a piece of equipment is 11 months, then P6 allows Interruption of Firm Transmission Service and Non-Consequential Load Loss. If the delivery time for a piece of equipment is 12 months, then P1 requires that the system be designed for no Interruption of Firm Transmission Service and Non-Consequential Load Loss. This is a significant increase in performance requirements for an event that will most likely not extend beyond to a second System Peak Load period. If R2.1.4 is not included in the requirement the transmission planners would essentially be designing for an Extreme Event, i.e., events which are more severe and have a lower probability of occurrence than Planning Events. R2.6.1Operating Procedures, by NERC definition, require significantly more detail than is appropriate for a Corrective Action Plan. It is not appropriate that Transmission Planners write Operating Procedures to be used by NERC Certified System Operators. E.ON U.S. suggests that Operating Procedures be changed to mitigation plans. R2.6.5 Planning Assessments and System Facilities are not NERC defined terms. Operating Procedures, by NERC definition, require significantly more detail than is appropriate for a Corrective Action Plan. It is not appropriate that Transmission Planners write Operating Procedures to be used by NERC Certified System Operators. E.ON U.S. suggests that Operating Procedures be changed to mitigation plans. R2.8There are no requirements to limit Consequential Load Loss. Impacted customers are typically aware of the customary level of service and have chosen not to pay for extraordinary levels of service. E ON US questions the purpose and benefit of this requirement. While continuity of service to end use customers is an important measure of service reliability for which utilities answer to state authorities, BES reliability requires that the system remain balanced and that local failures not result in cascading BES events NERC standards should, pursuant to FPA Section 215, focus solely on BES reliability

Response: Parts 2.1.3 (now Part 2.1.4) and 2.4.3: The SDT disagrees with changing Parts 2.1.4 and 2.4.3 to requiring sensitivity study for only one System condition because this change potentially could reduce the Assessment to be based on one sensitivity study on one System condition. Since the same sensitivity can have different impacts on System performance under different System conditions, and different System conditions may require different sensitivities to be investigated, such limitation may not be adequate to maintain reliability going forward. No change made.

Part 2.1.4 (now Part 2.1.5) requires that the Planning Coordinator and/or Transmission Planner consider the possibility that a piece of major Transmission Equipment can be out of service for an extended period of time because no spare piece of Equipment is on hand or can be purchased and be placed in service

Organization	Question 2 Comment
such that the outage won't last into the next planning cycle. Loss of a transformer is given as an example as a piece of major Equipment, which if forced out of service and had to be replaced with a new transformer, may have a lead time of more than one year. However, if a company has a strategy, for example, to have spare transformers in its System, or have agreements with another entity to share spare transformers, it would significantly reduce the probability of an outage of a transformer for longer than one year. Part 2.1.5 has been revised to require that the assessment reflect the P0, P1, and P2 categories identified in Table 1 during the conditions that the System is expected to experience due to the possible unavailability of the long lead time Equipment. **2.1.5** When an entity's spare equipment strategy could result in the unavailability of major Transmission equipment that has a lead time of one year or more (such as a transformer), an analysis of the impact of this possible unavailability on System performance shall be assessed. The Planning Assessment shall reflect the P0, P1, and P2 categories identified in Table 1 during the conditions that the System is expected to experience due to the possible unavailability of the long lead time equipment. Part 2.6 is not intended for the Planning Coordinator or Transmission Planner to write Operating Procedures, only to reflect the effects or results of the Operating Procedures in its Corrective Action Plan. Mitigation Plan carries a special meaning for Compliance and so may not be appropriate for use in this standard. No change made. The term, "Planning Assessment" is one of several terms proposed for addition to the NERC Glossary of Terms Used in Reliability Standards. "System" and "Facilities" are already approved terms. Part 2.8 is intended to contribute to open and transparent Transmission planning for peer review. The SDT reviewed the requirement and agrees that as written it was unclear. Part 2.8 has been revised and included as Requirement R2, part 2.9 in the new version to require that the Planning Assessment provides the expected largest Consequential Load Loss identified by the analysis of P1 and P2 events in Table 1 only. **2.9** The Planning Assessment shall provide the expected largest Consequential Load Loss (megawatt Demand) identified by the analysis of P1 and P2 events in Table 1.	
LCRA Transmission Services Corporation	In R2.6.2, it is stated that a project initiation date is required as well as an in-service date. What is considered the project initiation date, the point at which the project plan is approved or the time at which construction is to begin? If it is the time at which construction is to begin, then LCRA TSC believes this requirement does not belong in the TPL-001-1 standard as the construction timeframe for a project is developed by groups outside of Planning based on resources and outage availability.
Response: Project initiation date has been deleted from the requirements.	
National Grid	R2 Comment In the first sentence, replace the phrase prepare with conduct and document and in the second sentence replace "This Planning Assessment shall use current or past studies, document assumptions, document results, and shall cover steady state analyses, short circuit analyses, and Stability analyses" with "The Planning Assessment shall review assumptions of current or past studies and assess the continuing validity of the steady state, short circuit, and stability results. The review of assumptions, supplemental analysis, and updated results shall be documented. R2.1 Comment A. The terms assess and annual study are referenced in the same requirement. It is unclear what constitutes either. Is an annual study required for every area or is an annual assessment required for every area, which may include some supporting study to address changes to the conditions? B. Requirement R2.1 should refer to R2.5 rather than R2.6 R2.1.1 Comment A. Year One and year two do not provide enough time to implement Corrective Action Plans and are better

Organization	Question 2 Comment
	suited for Operations studies. The requirement to evaluate Year One or year two should be removed. B. Is a year 5 study required annually for every area of a system? R2.1.2 Comment ? The requirement should be removed. With no description of the system stresses and generator outages to be applied when assessing the off-peak load, it is difficult to imagine any issues which would arise which are not revealed in the peak load evaluation that could not be addressed through generation dispatch adjustments. Need to define conditions for assessment. R2.1.3 Comment A. The emphasis on sensitivity testing in the existing section appears misdirected and should be focused on the expected accuracy of the assumptions. The assessment should have to include a discussion of accuracy of the assumptions. Having a requirement to perform one more sensitivity not already included is vague and does not add value to the assessment or the standard. B. Planned Transmission Outages are not known in the Planning horizon. Also the release of the outage on any given day is controlled by operations based on the conditions. The conditions are not known for the Planning assessment. The last bullet referring to Planned Transmission Outages should be deleted. C. Delete the phrase "are intended to." It is difficult to measure intent and what is important is whether the system has been stressed, not whether the responsible entity intended to stress the system. D. What is expected from a sensitivity analysis? Is it to change the base case and see how the case responded, is it to create a new base case and rerun all of the events, or is it to change the base case and rerun a select number of events. It is anticipated that the answer will vary based on what is changed. R2.1.4 Priority Comment With respect to spare equipment strategy; this requirement potentially imposes a requirement to plan for three events, which is overly severe. After experiencing a major contingency of a long lead time facility, there should be some change in the acceptability of risk. This change in risk could include an allowance for the loss of non-consequential load or some of the multiple events from Table 1 should be evaluated as Extreme Contingency events. R2.2 Comment We suggest replacing the phrase a current System peak Load study? with a valid System peak Load study in the first sentence. The word current is confusing as some read the word current to mean today's rather than valid. R2.3 Comment A. The requirement to conduct annually isn't consistent with support. We suggest Conducted annually should be replaced with the phrase assessed annually?.B. "Interruption duty" should be changed to "interrupting duty." All terms in the IEEE dictionary related to breaker opening use the word "interrupting," while terms related to loss of supply to customers use the word "interruption." R2.4.1 Comment A. The two sentences are describing an or condition and they should be merged to read: For peak System Load levels, a Load model shall be used which appropriately represents the dynamic behavior of Loads, including consideration of the behavior of induction motor Loads or an aggregate System Load model which represents the overall dynamic behavior of the Load. R2.4.3 Comment - Delete the phrase "are intended to." It is difficult to measure intent and what is important is whether the system has been stressed, not whether the responsible entity intended to stress the system.

Organization	Question 2 Comment
	R2.5 Comment If past studies only support, then a new study is still required. We suggest changing “Past studies may be used to support the Planning Assessment if they meet the following requirements:” to “Past studies may be used to fulfill all or a portion of the Planning Assessment provided they meet the following requirements:” Violation Severity Levels:R2 - There is no VSL associated with R2.5. A VSL should be added, perhaps under Moderate, that "past studies were utilized to fulfill all or a portion of the requirement, but the studies did not meet the requirements in R2.5." R2.5.1 Comment? We suggest deleting this requirement, and incorporating it into R2.5.2.R2.5.2 Comment To incorporate R.2.5.1 into R2.5.2; please modify the section as follows: For steady state, short circuit, or stability analysis the study shall be less than five calendar years old from the date of completion. The present System model shall not include any material changes, such as, generation or Transmission additions/removals, or topology changes that have occurred in the intervening period and would impact the study area. A material change does not require the whole study to be redone. It only requires that the affected portion of the study be reassessed. Material generation changes include: The addition/deletion/change of individual generating unit capability determined to be material by the Planning Coordinator or Transmission Planner. “ An aggregated addition/deletion/change to a group of generating units directly connected to the BES at one point of interconnection through one or more transformers and determined to be material by the Planning Coordinator or Transmission Planner. The reference to the step-up transformer may not capture a wind farm that could have transformers to step-up to a collection voltage and transformer that wouldn’t be labeled a GSU to connect to the system. R2.6 Priority Comment A. As written, this section undermines the value of the sensitivity testing. This section should require a corrective action plan to fix problems determined in sensitivity analysis if there is a reasonable risk of occurrence. We suggest making the standard read Provide documentation that explains the reasoning for the sensitivities considered and selected. B. At the end of the second sentence, the phrase in the tables” is used. We suggest using more definitive language such as in Table 1. R2.6.1 Comment -In the last bullet, the reference to "rate application" is unclear. R2.6.2 Comment The phrase Project Initiation Date needs to be defined. It is unclear if this is the date of ground breaking, purchase orders being issued, solution study initiation, etc. Additionally, in the second sentence the phrase as well as an in-service date should be modified to read as well as a target in-service date. R2.6.3 Comment Plans can provide a target in-service year, but not an actual in-service year. R2.6.4 Priority Comment There should be a cutoff point when changes occur beyond a certain date. When that date occurs, further changes will be evaluated in the next year’s assessment. Otherwise, if a state makes a decision not to site a project a few weeks prior to the end of the assessment period, there will not be sufficient time to incorporate this into that year’s assessment and develop corrective actions. R2.7 Comment A. "Interruption duty" should be changed to "interrupting duty." All terms in the IEEE dictionary related to breaker opening use the word "interrupting," while terms related to loss of supply to customers use the word "interruption."B. The requirement would be clearer if it we restructured as follows: "For short circuit analysis, if the short circuit interrupting duty determined in Requirement R2.3 exceeds the Equipment Rating of fault interrupting devices, the Planning Authority . .

Organization	Question 2 Comment
	." R2.8 Comment A. Largest consequential load loss is not factored into the Planning Assessment and should therefore be deleted. B. If it is not deleted, do we have to prepare one number for P1 and a separate number for P2? The phrase any P1 event and any P2 event in Table 1 could also be read as the worst loading for each event within P1 and P2, which could be hundreds of values depending on how many events are analyzed. We recommend that the requirement be modified to require documentation of the maximum amount of consequential load loss that was relied upon during the assessment of the P1 and P2 events.C. If it is not deleted, "shall provide" should be changed to "shall identify" for consistency with R2.9 R2.9 Comment A. Largest consequential load loss is not factored into the Planning Assessment and should therefore be deleted. B. If it is not deleted, this requirement is unclear. Is this requirement asking for each transmission planner to list their criteria for non-consequential load loss, or is it asking how much non-consequential load loss was being relied upon in the assessment? Including the word "permissible" implies the responsible entity must decide how much Non-Consequential Load Loss is allowed. We recommend that the requirement be modified to require documentation of the maximum amount of non-consequential load loss that was relied upon during the assessment of the P1 and P2 events.

Response: The SDT does not think that in Requirement R2 replacing "prepare" with "conduct and document" would add clarity, since Requirement R2 includes requirement to document assumptions and results. No change made.

In the Definition Section, Planning Assessment is defined as "Documented evaluation of future Transmission System performance and Corrective Action Plans to remedy identified deficiencies". Therefore, in Part 2.1, an Assessment is an evaluation of System performance based on studies performed. While an Assessment is required annually, it can be based on past studies as long as the requirement for a valid past study is met. As such, all studies used to support the Assessment do not have to be preformed annually. No change made.

In the new version, Part 2.6 now contains the requirement for the use of past studies, so Part 2.1 now has the correct reference. No change made.

For Part 2.1.1 Year One and year two are within the Planning Horizon. In the Definition Section, Year One is defined as "The first year that a Transmission Planner is responsible for assessing. This is further defined as the planning window that begins 12-18 months from the current calendar year". Operating Studies are performed for system conditions within 12 months of the current calendar year. No change made.

Part 2.1.1 is intended to require studies for System Peak Load Conditions for 2 of the years in the Near-Term Transmission Planning Horizon: (1) A Year five case to identify potential problems that can be addressed if the planned projects proceed as scheduled; (2) A Year one or Year two case to identify any potential problems unanticipated in the five-year case, which if not addressed, could impact operations as time progresses. The standard provides flexibility for the Planning Coordinator or Transmission Planner to use past studies to support the current year assessment and to assess other years in addition to those identified in Part 2.1.1. No change made.

Part 2.1.2 requires that the Planning Coordinator and/or Transmission Planner also consider off-peak conditions because the System must be able to meet performance requirements over all demand levels. System peak condition may not represent all stressed conditions. For example, during off-peak, the Load is low and the generation would have to be turned off to achieve Load-resource balance. Turning off resources within a Load area could result in reliability problems. Lowering the Load in areas with many non-dispatchable resources could also pose potential problems. As the System incorporates more and more renewable resources, some of them are non-dispatchable; a standard must be forward looking so the Planning Coordinator and Transmission Planner can identify potential problems. If studies for one of the Load periods are not needed annually, the Planning Coordinator or Transmission Planner can rely on past studies for the

Organization	Question 2 Comment

Planning Assessment. No change made.

Part 2.1.3 (now Part 2.1.4) has been rewritten to clarify the intent of the requirement. The Planning Coordinator or Transmission Planner can include a discussion of accuracy of the assumptions in response to the new Part 2.7.2 on the actions to resolve performance deficiencies identified in multiple sensitivity studies or provide a rationale for why actions were not necessary.

> **2.1.4** For each of the studies described in Requirement R2, parts 2.1.1 and 2.1.2, sensitivity case(s) shall be utilized to demonstrate the impact of changes to the basic assumptions used in the model for the list of items shown below. To accomplish this, the sensitivity analysis in the Planning Assessment must vary one or more of the following conditions not already included in the studies by a sufficient amount to stress the System within a range of credible conditions that demonstrate a measurable change in performance.
>
> - Real and reactive forecasted Load.
> - Expected transfers.
> - Expected in service dates of new or modified Transmission Facilities.
> - Reactive resource capability.
> - Generation additions, retirements, or other dispatch scenarios.
> - Controllable Loads and Demand Side Management.
> - Duration or timing of planned Transmission outages.
>
> **2.7.2** Include actions to resolve performance deficiencies identified in multiple sensitivity studies or provide a rationale for why actions were not necessary.

The last Bullet in Part 2.1.3 (now Part 2.1.4) is intended to cover planned outages of Facilities in sensitivity studies if such planned outages are known at the time the planning studies are performed, for example, planned outage of a major Transmission line during construction if the Corrective Action Plan calls for rebuilding of the line to a higher operating voltage. The sensitivity study can cover the "what if" situation where the project start can be delayed or the project may take longer to construct. No change made.

Part 2.1.3 - 'Are intended to' has been deleted.

The SDT declines to make the change as suggested. A Planning Assessment is not the same as a study. As stated in the Definition, a Planning Assessment is a "documented evaluation of future Transmission System performance and Corrective Action Plans to remedy identified deficiencies". As such, a Planning Assessment is based on a number of studies from which to draw conclusions about System performance and to develop Corrective Action Plans where needed. The suggested change would necessarily imply that a study is the same as a Planning Assessment, which is not the intent of Part 2.3.

Part 2.1.4 (now Part 2.1.5) is intended for the Planning Coordinator and/or Transmission Planner to take into account their spare Equipment strategy for long lead time Equipment when assessing the performance of their System. If the loss of a piece of major Equipment can be replaced within a reasonable period of time, planning studies for the following year can assume that that piece of Equipment will be replaced. If not, its impact of unavailability would need to be assessed. Part 2.1.5 has been revised to address some of your concerns. Part 2.1.4 has been revised to require that the assessment reflect the P0, P1, and P2 categories identified in Table 1 during the conditions that the System is expected to experience due to the possible unavailability of the long lead time Equipment.

> **2.1.5** When an entity's spare equipment strategy could result in the unavailability of major Transmission equipment that has a lead time of one year or

Organization	Question 2 Comment
	more (such as a transformer), an analysis of the impact of this possible unavailability on System performance shall be assessed. The Planning Assessment shall reflect the P0, P1, and P2 categories identified in Table 1 during the conditions that the System is expected to experience due to the possible unavailability of the long lead time equipment. Part 2.2 is intended to require a study performed in the current year, as opposed to studies performed in the past years. Part 2.2 has been revised to provide greater clarity. **2.2** The Long-Term Transmission Planning Horizon portion of the steady state analysis shall be assessed annually and be supported by the following annual current study, supplemented with qualified past studies as indicated in Requirement R2, part 2.6: Part 2.3 has been revised to provide greater clarity. **2.3** The short circuit analysis portion of the Planning Assessment shall be conducted annually addressing the Near-Term Transmission Planning Horizon and can be supported by current or past studies as indicated in Requirement R2, part 2.6. The analysis shall be used to determine whether circuit breakers have interrupting capability for Faults that they will be expected to interrupt using the System short circuit model with any planned generation and Transmission Facilities in service which could impact the study area. Part 2.4.1 was not changed as suggested because the intent of the last sentence is to allow the use of an aggregated System Load model as an appropriate Load representation. The suggested change could be read to mean that an aggregated System Load model would not appropriately represent the dynamic behavior of loads. However, Part 2.4.1 has been revised to provide greater clarity. **2.4.1** System peak Load for one of the five years. System peak Load levels shall include a Load model which represents the dynamic behavior of Loads that could impact the study area, considering the behavior of induction motor Loads. An aggregate System Load model which represents the overall dynamic behavior of the Load is acceptable. Part 2.4.3 has been revised to provide greater clarity, and the phrase, “are intended to” is no longer used. **2.4.3** For each of the studies described in Requirement R2, parts 2.4.1 and 2.4.2, sensitivity case(s) shall be utilized to demonstrate the impact of changes to the basic assumptions used in the model for the list of items shown below. To accomplish this, the sensitivity analysis in the Planning Assessment must vary one or more of the following conditions not already included in the studies by a sufficient amount to stress the System within a range of credible conditions that demonstrate a measurable change in performance. • Load level, Load forecast, or dynamic model assumptions. • Expected transfers. • Expected in service dates of new or modified Facilities. • Reactive resource capability. • Generation additions, retirements, or other dispatch scenarios. As revised Part 2.1.3 (now Part 2.1.4) requires the use of sensitivity studies to “demonstrate the impact of changes to the basic assumptions used in the model”. To this end the sensitivity studies need only to be able to demonstrate the impact of changes. Typically, a sensitivity study would be a subset of the study already performed. It usually involves comparing the base cases with and without the change under consideration, and rerunning a list of the worst Contingencies. However, each situation is different and the specifics are left to the Planning Coordinator or Transmission Planner who are more familiar with the situation(s) to be

Organization	Question 2 Comment
investigated. Part 2.5 (now Part 2.6) was not changed because studies, including past studies, are used to support the annual Assessment, and are not used to support current studies. The VSL for Part 2.5 (now Part 2.6) was added as a Lower VSL. R2, Lower VSL: The responsible entity failed to comply with Requirement R2, part 2.9 or Requirement R2, part 2.6. Parts 2.5.1 and 2.5.2 (new Parts 2.6.1 and 2.6.2) were not combined; however, they have been revised to address your concerns. **2.6.1** For steady state, short circuit, or Stability analysis: the study shall be five calendar years old or less, unless a technical rationale can be provided to demonstrate that the results of an older study are still valid. **2.6.2** For steady state, short circuit, or Stability analysis: the study shall not include any material changes unless a technical rationale can be provided to demonstrate that System changes do not impact the performance results in the study area. Part 2.6 has been modified and included as new Part 2.7. The intent is to allow discretion for the Planning Coordinator or Transmission Planner to correct those deficiencies if they are prevalent (i.e., occur is more than one sensitivity). Although not required, the standard does not preclude the Planning Coordinator or Transmission Planner to develop Corrective Action Plans for high risk scenarios. However, if the scenario is high risk, then it should have been included in the base assumptions in the assessment and the Corrective Action Plan would have been required. **2.7** For planning events shown in Table 1, when the analysis indicates an inability of the System to meet the performance requirements in Table 1, the Planning Assessment shall include Corrective Action Plan(s) addressing how the performance requirements will be met. Revisions to the Corrective Action Plan(s) are allowed in subsequent Planning Assessments but the planned System shall continue to meet the performance requirements in Table 1. Corrective Action Plan(s) do not need to be developed solely to meet the performance requirements for a single sensitivity run in accordance with Requirements R2, parts 2.1.4 and 2.4.3. The Corrective Action Plan(s) shall: Part 2.6 has been modified and included as new Part 2.7 In Part 2.6.1, “rate application” refers to rate incentives to change behavior of end-use customers and can be part of the “actions to achieve required System performance”. This is included to allow for non-traditional solutions to achieving required System performance. Part 2.6.3 - Project initiation date and in service date are no longer used in the requirements. Part 2.6.4 allows the Planning Coordinator or Transmission Planner to utilize Non-Consequential Load Loss and/or curtailment of Firm Transmission Service, which are normally not permitted to address situations that are beyond its control. Depending on the urgency of the need, the Corrective Action Plan may be developed outside the normal Assessment cycle at the discretion of the Planning Coordinator or Transmission Planner involved. Part 2.7 has been revised and included as Requirement R2, part 2.8 to reflect your suggestion. **2.8** For short circuit analysis, if the short circuit current interrupting duty on circuit breakers determined in Requirement R2, part 2.3 exceeds their Equipment Rating, the Planning Assessment shall include a Corrective Action Plan to address the Equipment Rating violations. The Corrective Action Plan shall:

Organization	Question 2 Comment
Parts 2.8 and 2.9 were intended to contribute to open and transparent Transmission planning for peer review. The SDT reviewed the both requirements and agrees that as written, they were unclear. Part 2.9 has been deleted. Part 2.8 has been revised and included as Requirement R2, part 2.9 in the new version to require that the Planning Assessment provides the expected largest Consequential Load Loss identified by the analysis of P1 and P2 events in Table 1 only. **2.9** The Planning Assessment shall provide the expected largest Consequential Load Loss (megawatt Demand) identified by the analysis of P1 and P2 events in Table 1.	
Entergy Services, Inc	The "study area" referred to in R2.3 should be defined. Does it mean external contingency events should be evaluated, or, the effects of internal contingency events on external parties. It should be clarified that generating facilities are not included in R2.1.4. The strategy may include agreements to share spare equipment among facilities, generation owners, and transmission owners. In R2.6.4 what is "prudent"? Who decides what is prudent? Recommend that the word be stricken. R2.6.4 is in conflict with the Implementation Plan. The Implementation plan omits P1 as an event where the bar has been raised but R2.6.4 allows the use of non-consequential load and firm transmission service curtailment. Clearly, the bar has been raised for any event, including P1, which allowed the curtailment of non-consequential load or firm transmission service in the existing standard. In R2.9 is the team requiring that a criteria be set by each Transmission Owner to set a maximum level of non-consequential load loss allowed by that Transmission Owner, or, that the amount of non-consequential load curtailment needed to meet the requirement be documented? What is the rationale for being so prescriptive in requiring specific years to be studied in R2.1.1 Why not allow the TP and/or PC to decide on the three years to be studied in the Near Term?? In the subrequirements of R2.1.3 and R2.4.3, the use of the word timing is unclear. Consider using in service date or “schedule for”. R2.1.4: The spare equipment strategy is too severe. The requirement should take into consideration the probability of occurrence of the events. Losing a transformer followed by the loss of a generator and a second transmission element is very unlikely. Non-consequential load loss should be allowed for this type of analysis. With the elimination of the distinction between system and generating plant stability studies, the blanket requirement in R2.5.1 that all stability analyses be five calendar years old or less, regardless of any material changes to the system, would cause needless work to be performed on those plants or areas of the system where no changes are occurring. Recommend adding the following to the end of R2.5.1: unless justification can be provided to demonstrate that the results of an older study are still valid. In R.2.4.1 it is mentioned that an aggregate System Load model that represents dynamic behavior of the load is acceptable. Does it mean that load at every bus in the study area has to be represented with an aggregate load model? This could be very cumbersome effort and we are not sure whether the software program can handle this magnitude of dynamic data. To help address this, revise Load to be Load that could impact the study area is acceptable. In Requirement R2.6.2, please clarify the definition of "project initiation date". Please explain the reason why Requirement R2.8 is needed in the Assessment and how does reporting the largest

Organization	Question 2 Comment
	Consequential Load Loss impact reliability?? Please explain the reason why Requirement R2.9 is needed in the Assessment and how does reporting the largest Non-Consequential Load Loss impact reliability?? Please clarify the use of the word permissible in the phrase "maximum permissible Non Consequential Load Loss".

Response: In Part 2.3 because the area that can be impacted is not confined to Facilities ownership, the study area should therefore include all Facilities that can reasonably be impacted. Where the study area involves several owners, coordination is required. However, since short circuit analysis is usually a localized issue, the area impacted would not be extensive.

Part 2.1.4 (now Part 2.1.5) refers to "unavailability of major Transmission equipment" without regard to ownership. Also, Part 2.1.5 only requires a spare equipment strategy but does not dictate the details of that strategy. So sharing of spare equipment is allowed. Part 2.1.5 has been revised to require that the assessment reflect the P0, P1, and P2 categories identified in Table 1 during the conditions that the System is expected to experience due to the possible unavailability of the long lead time equipment.

> **2.1.5** When an entity's spare equipment strategy could result in the unavailability of major Transmission equipment that has a lead time of one year or more (such as a transformer), an analysis of the impact of this possible unavailability on System performance shall be assessed. The Planning Assessment shall reflect the P0, P1, and P2 categories identified in Table 1 during the conditions that the System is expected to experience due to the possible unavailability of the long lead time equipment.

Part 2.6.4 has been revised to address your concerns and the word, "prudent" was removed.

The Implementation Plan has been revised to include certain P1 events where the bar is being raised.

Part 2.1.1 is intended to require studies for System Peak Load Conditions for 2 of the years in the near-term planning horizon: A Year five case to identify potential problem that can be addressed if the planned projects proceed as scheduled. A Year one or Year two case to identify any potential problems unanticipated in the five-year case, which if not addressed, could impact operations as time progresses. The standard provides flexibility for the Planning Coordinator or Transmission Planner to use past studies to support the current year assessment and to assess other years in addition to those identified in Part 2.1.1.

Parts 2.8 and 2.9 were intended to contribute to open and transparent transmission planning for peer review. The SDT reviewed both requirements and agrees that as written, they were unclear. Part 2.9 has been deleted. Part 2.8 has been revised and included as Part 2.9 in the new version to require that the Planning Assessment provides the expected largest Consequential Load Loss identified by the analysis of P1 and P2 events in Table 1 only.

> **2.9** The Planning Assessment shall provide the expected largest Consequential Load Loss (megawatt Demand) identified by the analysis of P1 and P2 events in Table 1.

Part 2.1.3 (now Part 2.1.4) and R2.4.3 have been revised to reflect your suggestion.

> **2.1.4** For each of the studies described in Requirement R2, parts 2.1.1 and 2.1.2, sensitivity case(s) shall be utilized to demonstrate the impact of changes to the basic assumptions used in the model for the list of items shown below. To accomplish this, the sensitivity analysis in the Planning Assessment must vary one or more of the following conditions not already included in the studies by a sufficient amount to stress the System within a range of credible conditions that demonstrate a measurable change in performance.

Organization	Question 2 Comment
	• Real and reactive forecasted Load. • Expected transfers. • Expected in service dates of new or modified Transmission Facilities. • Reactive resource capability. • Generation additions, retirements, or other dispatch scenarios. • Controllable Loads and Demand Side Management. • Duration or timing of planned Transmission outages. **2.4.3** For each of the studies described in Requirement R2, parts 2.4.1 and 2.4.2, sensitivity case(s) shall be utilized to demonstrate the impact of changes to the basic assumptions used in the model for the list of items shown below. To accomplish this, the sensitivity analysis in the Planning Assessment must vary one or more of the following conditions not already included in the studies by a sufficient amount to stress the System within a range of credible conditions that demonstrate a measurable change in performance. • Load level, Load forecast, or dynamic model assumptions. • Expected transfers. • Expected in service dates of new or modified Facilities. • Reactive resource capability. • Generation additions, retirements, or other dispatch scenarios. Part 2.4.1 has been revised to address your concerns. **2.4.1** System peak Load for one of the five years. System peak Load levels shall include a Load model which represents the dynamic behavior of Loads that could impact the study area, considering the behavior of induction motor Loads. An aggregate System Load model which represents the overall dynamic behavior of the Load is acceptable. Part 2.5 has been revised and included as Part 2.6. **2.6.1** For steady state, short circuit, or Stability analysis: the study shall be five calendar years old or less, unless a technical rationale can be provided to demonstrate that the results of an older study are still valid. **2.6.2** For steady state, short circuit, or Stability analysis: the study shall not include any material changes unless a technical rationale can be provided to demonstrate that System changes do not impact the performance results in the study area. Part 2.6.2 was removed.
Great River Energy	R 2.1, 2.3, and 2.4 need consistency. 2.1 says "The Near-Term Transmission Planning portion of the Steady State analysis..." 2.3 says "The short circuit portion of the Planning Assessment ... addressing the Near-Term Planning Horizon..." 2.4 says "The Near-Term Transmission Planning portion of the Stability analysis..." These three sentences confuse the order. As I understand the Planning Assessment has two parts, a Near-Term portion and a Long-Term portion. Each of those parts has three components, a Steady state component, a Short Circuit component, and a Stability component. I

Organization	Question 2 Comment
	believe the standard's language should be structured as such. R2.1.3- The last bullet would seem to indicate that planners have the capability of predicting the future. The statement would seem to fit more in an operating standard. A suggested revision would be: Known long-term transmission outages with duration greater than one year R 2.1.4 addresses the spare equipment strategy. What is the scope of this sensitivity? Is the intent to do only a full steady state analysis with regard to long lead time spares? R2.6.2 would seem to be placing the planner again in the capability of predicting the future. Coming up with specific dates based on budgets, projected growth rates, potential permitting issues, and material delivery schedules would make it difficult to define an initiating date and an in-service date. An in-service season and year may be more applicable in a planning study for near-term projects. GRE is not sure why an initiating date is of relevance in an assessment.

Response: In the third posting, the Standard, as proposed, requires steady state, Stability and short circuit analyses for the Near-Term Transmission Planning Horizon; steady state for the Long-Term Transmission Planning Horizon. In the fourth posting, the SDT proposes to add Stability analysis to the Long-Term Transmission Planning Horizon. So the requirements are not the same as you described. However, the Requirements have been revised to provide greater clarity.

> **2.3** The short circuit analysis portion of the Planning Assessment shall be conducted annually addressing the Near-Term Transmission Planning Horizon and can be supported by current or past studies as indicated in Requirement R2, part 2.6. The analysis shall be used to determine whether circuit breakers have interrupting capability for Faults that they will be expected to interrupt using the System short circuit model with any planned generation and Transmission Facilities in service which could impact the study area.
>
> **2.4** The Near-Term Transmission Planning Horizon portion of the Stability analysis shall be assessed annually and be supported by current or past studies as indicated in Requirement R2, part2.6. The following studies are required.

The last Bullet in Part 2.1.3 (now Part 2.1.4) is intended to cover planned outages of Facilities in sensitivity studies if such planned outages are known at the time the planning studies are performed, for example, planned outage of a major Transmission line during construction if the Corrective Action Plan calls for rebuilding of the line to a higher operating voltage. The corresponding sensitivity could simulate unplanned delay starts or unplanned extension of construction period. No change made.

Part 2.1.4 (now Part 2.1.5) is intended for the Planning Coordinator and/or Transmission Planner to take into account their spare Equipment strategy for long lead time Equipment when assessing the performance of their System. If the loss of a piece of major Equipment can be replaced within a reasonable period of time, planning studies for the following year can assume that that piece of Equipment will be replaced. If not, its impact of unavailability would need to be assessed. As such the analysis is not limited to steady state studies. Part 2.1.5 has been revised to require that the assessment reflect the P0, P1, and P2 categories identified in Table 1 during the conditions that the System is expected to experience due to the possible unavailability of the long lead time Equipment.

> **2.1.5** When an entity's spare equipment strategy could result in the unavailability of major Transmission equipment that has a lead time of one year or more (such as a transformer), an analysis of the impact of this possible unavailability on System performance shall be assessed. The Planning Assessment shall reflect the P0, P1, and P2 categories identified in Table 1 during the conditions that the System is expected to experience due to the possible unavailability of the long lead time equipment.

Parts 2.6.2 and 2.6.3 have been removed since the definition of Corrective Action Plan already includes "timetable for implementation".

Organization	Question 2 Comment
BC Hydro	Comments: Consider changing the second sentence to read, This Planning Assessment shall use current or past studies, document assumptions, document results and shall cover all analyses needed to clearly demonstrate that the proposed system expansion plan meets all planning criteria and standards. This standard should not limit the studies to only steady state analyses, short circuit analyses and Stability analyses none of which seem to be defined anywhere. In some cases it would be appropriate for planning studies to cover analyses of such phenomenon as electromagnetic transients, sub-synchronous resonance, ferroresonance and harmonics. The fact that Stability is capitalized suggests that it refers to the definition of Stability in the NERC glossary, but that definition reads just, The ability of an electric system to maintain a state of equilibrium during normal and abnormal conditions or disturbances?, but stability analyses (often more properly termed dynamic simulation studies) usually encompass more than simply electromechanical or voltage stability. Usually voltage and frequency excursions are also analyzed and perhaps temporary overcurrent also (eg, assessing temporary overvoltage levels across series capacitor banks).
Response: Even though the other types of studies as identified are important for specific cases, a NERC Standard needs to be applicable continent-wide. The modification could require the inclusion of studies such as EMTP, long-term stability, etc., in the annual Planning Assessment, which is not necessary in all cases. No change made.	
Midwest ISO	Opening Remarks. Specific Comments for Requirement 2:A) Under R2, the Time Horizon of the TPL standards is intended for years one through 10; However the Time Horizon shown in R2 only says Long-term Planning. By definition of Long-Term Transmission Planning Horizon this covers years 6 through 10 and beyond. Suggestion to change the Time Horizon to read: Near-Term and Long-Term Transmission Planning. B) Under R2.1 there is a reference to qualified past studies in R2.6. We believe that this reference should be pointing to R2.5 not R2.6. C) Under R2.1.3 there is ambiguity in the third bullet language new or modified Facilities and we believe that this language should mimic that of R1.1.2 in order to improve this requirement. The third bullet should read: Timing of the installation of new Planned Facilities or changes to existing Facilities. D) Under R2.1.3 there is ambiguity in the fourth bullet language capability and we believe that this language should read: Reactive resource capability (Generator, STATCOM, SVC, other?etc). We believe that this language addition improves this requirement. E) Under R2.1.3 there is ambiguity in the seventh bullet language Transmission outages and we believe that this language should read: Planned duration or timing of specifically scheduled or planned for Transmission outages. This language mimics similar language suggested above in R1.1.1 (letter C on page 3 of 9) F) When a spare equipment strategy does not cover the long lead time unavailability as stated in 2.1.4, will the system be treated as “normal system condition and Table 1 requirements or as having a contingency from which system adjustments are to be made prior to subsequent events. We believe that this task will be burdensome for large entities such as RTOs and we are not clear on the benefit that this requirement brings. For example: If in an RTO system where a party has spare equipment, how can the RTO ensure that a spare part from one asset owner can be made available to other asset owners”

Organization	Question 2 Comment
	G) Under R2.2 a System peak load study is required annually for one of the years in the assessment period. R2.2.1 requires the assessing entity to extend their planning assessment to accommodate any known longer lead time projects that may take longer than ten years to complete. It does not make sense to study the ten year horizon, find a problem in year ten which has a solution that required twelve years to build. For compliance with this standard, you would need to find another solution that can be built within ten years as opposed to the suggested language in R2.2.1 of extending the planning assessment beyond ten years to accommodate the solution that falls outside of the Long-Term Planning Horizon. No project solution greater than 10 years should be acceptable because it falls outside the Long-Term Transmission Planning Horizon. Suggestion to strike sub-requirement R2.2.1 from this standard. H) Under R2.3 the second sentence requires that "The analysis shall determine the maximum short circuit interruption duty on fault interrupting devices using the System short circuit model with any generation and Transmission Facilities in service which could impact the study year". We suggest changing the language to read: The analysis shall determine the maximum short circuit interruption duty on fault interrupting devices using the System short circuit model with Planned Facilities in service which could impact the study year". The definition of Planned Facilities was suggested to be added in the comment above in R1.1.2 under letter (E). I) Under R2.4 the second sentence requires states The following studies are required. We suggest changing the language to read: The following current studies are required. We believe that this language addition improves this requirement. J) Under R2.4.1 the first sentence leaves to much ambiguity as to who determines whether severity of system peak or off peak as well as whether the system load levels appropriately represents the dynamic behavior of loads. If the monitoring agency wishes to make this determination than it should be explicitly written here in this requirement. If the assessing entity is to make this determination than we offer the following language suggestion that we feel will improve this requirement. "For one of the five years, the more severe System peak or off peak System load level, as judged by the assessing entity, shall be used which in the judgment of the assessing entity appropriately represents the dynamic behavior of Loads including consideration of the behavior of induction motors". K) For R2.4.2, we suggest striking this requirement altogether and add System Off-Peak to R2.4.1 above in R2.4.1 under letter (I). L) Under R2.4.3 there is ambiguity in the third bullet language new or modified Facilities and we believe that this language should mimic that of R1.1.2 in order to improve this requirement. The third bullet should read: Timing of the installation of new Planned Facilities or changes to existing Facilities. M) Under R2.4.3 there is ambiguity in the fourth bullet language capability and we believe that this language should read: Reactive resource capability (Generator, STATCOM, SVC, other etc). We believe that this language addition improves this requirement. N) The sub requirement R2.5.2 states that for steady state, short circuit, or stability analysis; the present System model shall not include any material changes, such as..etc. The present language in this section is vague and requires discretion on the part of both the Transmission Planner and the Planning Coordinator performing the assessment. For example, new transmission enhancements may have been added since the previous System model was developed. In general, such topology enhancements will only improve reliability and would not necessitate re-assessment with a newly updated System

Organization	Question 2 Comment
	model. In addition, any significant generator additions would have been evaluated with a full separate generator interconnection study at which the full reliability of the System would have been taken into consideration. For this reason, we believe the following language for R2.5.2 would improve this requirement: For steady state, short circuit, or Stability analysis: the current System model of the assessed plan year shall not include any changes material to the assessment, as judged by the entity performing the assessment, such as, generation or Transmission additions/removals, or topology changes that have occurred in the intervening period and would impact the study year. Material generation changes could include: O) Under R2.6.1 the fifth bullet regarding the use of Operating Procedures needs to be made clearer. We believe that the following language will improve this requirement: Use of Operating Procedures specifying how long they will be needed as part of the Corrective Action Plan. Operating Procedures may not include Non-Consequential Load Loss when not permitted in Table 1. P) Under R2.6.1 the sixth bullet regarding the use of rate applications, DSM, new technologies or other initiatives can be improved with the following language additions: Use of rate applications, DSM, new technologies or other demand side initiatives can be improved with the following language additions. Q) Under R2.6.2 the language regarding project initiation date is vague. We suggest the following definition to be added to this standard and further added to the NERC Glossary of Terms: Project Initiation Date A date in which Planned Facilities are expected to break ground. R) Under R2.8 please add a coma between the words event and caused. A PC/TP would study multiple P1 and P2 events involving consequential load loss not just the largest. Unless the SDT has a measure in mind for consequential load loss, this requirement should be removed. S) Under R2.9 please strike the word permissible and replace with necessary. It is not clear what the SDT is requesting with this requirement.

Response: The *Time Horizon* term at the end of the requirement deals with mitigation time periods (as shown below) and is not connected to the assessment time frames. Time Horizons are a consideration when there is a violation of a requirement – the impact to the BES of violating a requirement with a long-term planning horizon is not expected to be as severe as the impact associated with violating a requirement with a real-time operations time horizon. No change made.

Mitigation Time Horizon

The time horizons available for mitigating a violation to a requirement include the following:

- **Long-term Planning** — a planning horizon of one year or longer.
- **Operations Planning** — operating and resource plans from day-ahead up to and including seasonal.
- **Same-day Operations** — routine actions required within the timeframe of a day, but not real-time.
- **Real-time Operations** — actions required within one hour or less to preserve the reliability of the bulk electric system.

Organization	Question 2 Comment
	• **Operations Assessment** — follow-up evaluations and reporting of real time operations In the new version, Part 2.6 now contains the requirement for the use of past studies, so Part 2.1 now has the correct reference. No change made Part 2.1.3 (including the third and seventh bullets) (and now Part 2.1.4) has been revised to provide greater clarity. The SDT declines to change the fourth bullet because adding a partial list of devices that could provide reactive resources may not improve clarity beyond the present description. **2.1.4** For each of the studies described in Requirement R2, parts 2.1.1 and 2.1.2, sensitivity case(s) shall be utilized to demonstrate the impact of changes to the basic assumptions used in the model for the list of items shown below. To accomplish this, the sensitivity analysis in the Planning Assessment must vary one or more of the following conditions not already included in the studies by a sufficient amount to stress the System within a range of credible conditions that demonstrate a measurable change in performance. • Real and reactive forecasted Load. • Expected transfers. • Expected in service dates of new or modified Transmission Facilities. • Reactive resource capability. • Generation additions, retirements, or other dispatch scenarios. • Controllable Loads and Demand Side Management. • Duration or timing of planned Transmission outages. Part 2.1.4 (now Part 2.1.5) requires that the Planning Coordinator and/or Transmission Planner consider the possibility that a piece of major Equipment can be out of service for an extended period of time because no spare piece of Equipment is on hand or can be purchased and be placed in service such that the outage won't last into the next planning cycle. Loss of a transformer is given as an example as a piece of major Equipment, which if forced out of service and had to be replaced with a new transformer, may have a lead time of more than one year. However, if a company has a strategy, for example, to have spare transformers in its System, or have agreement with another entity to share spare transformers, it would significantly reduce the probability of an outage of a transformer for longer than one year. Perhaps it would help if sharing major Equipment can be part of an operating agreement within entities belonging to the RTO; however, that would be outside the scope of this Standard. Part 2.1.5 has been revised to require that the assessment reflect the P0, P1, and P2 categories identified in Table 1 during the conditions that the System is expected to experience due to the possible unavailability of the long lead time Equipment. **2.1.5** When an entity's spare equipment strategy could result in the unavailability of major Transmission equipment that has a lead time of one year or more (such as a transformer), an analysis of the impact of this possible unavailability on System performance shall be assessed. The Planning Assessment shall reflect the P0, P1, and P2 categories identified in Table 1 during the conditions that the System is expected to experience due to the possible unavailability of the long lead time equipment. Part 2.2.1 has been revised because extending the Planning Horizon beyond 10 years for projects with lead time longer than 10 years is already covered in the definition of Long-Term Transmission Planning Horizon. This allowance is needed to provide planning flexibility, and is at the discretion of the Planning Coordinator or Transmission Planner. For example, if the System is found not to meet performance standard in year 10, but the project to correct the loading cannot be placed in service for 12 years, then the Corrective Action Plan needs to identify the interim solutions before the project can be brought on line. **2.2.1** A current study assessing expected System peak Load conditions for one of the years in the Long-Term Transmission Planning Horizon and the

Organization	Question 2 Comment
	rationale for why that year was selected. Part 2.3 has been revised to reflect your suggestion. **2.3** The short circuit analysis portion of the Planning Assessment shall be conducted annually addressing the Near-Term Transmission Planning Horizon and can be supported by current or past studies as indicated in Requirement R2, part 2.6. The analysis shall be used to determine whether circuit breakers have interrupting capability for Faults that they will be expected to interrupt using the System short circuit model with any planned generation and Transmission Facilities in service which could impact the study area. In Part 2.4.1, the SDT was not able to locate the reference to the comment on the "ambiguity as to who determines whether severity of system peak or off peak". No change made. Part 2.4.1 has been revised to provide greater clarity. However, the SDT declines to modify Part 2.4.1 to require study for "the more severe System peak or off peak System load level" for one of the five years in the Near-Term Transmission Planning Horizon because the System needs to meet performance requirements under all System conditions including peak and off-peak. In addition, the Planning Coordinator or Transmission Planner can rely on past studies as provided in Part 2.5 (Part 2.6 in the new version). For this reason Part 2.4.2 has been retained. **2.4.1** System peak Load for one of the five years. System peak Load levels shall include a Load model which represents the dynamic behavior of Loads that could impact the study area, considering the behavior of induction motor Loads. An aggregate System Load model which represents the overall dynamic behavior of the Load is acceptable. Part 2.4.3 (including the third bullet) has been revised to provide greater clarity. The SDT declines to change the fourth bullet because adding a partial list of devices that could provide reactive resources may not improve clarity beyond the present description. **2.4.3** For each of the studies described in Requirement R2, parts 2.4.1 and 2.4.2, sensitivity case(s) shall be utilized to demonstrate the impact of changes to the basic assumptions used in the model for the list of items shown below. To accomplish this, the sensitivity analysis in the Planning Assessment must vary one or more of the following conditions not already included in the studies by a sufficient amount to stress the System within a range of credible conditions that demonstrate a measurable change in performance. • Load level, Load forecast, or dynamic model assumptions. • Expected transfers. • Expected in service dates of new or modified Facilities. • Reactive resource capability. • Generation additions, retirements, or other dispatch scenarios. Part 2.5 has been revised and included as Part 2.6. **2.6.1** For steady state, short circuit, or Stability analysis: the study shall be five calendar years old or less, unless a technical rationale can be provided to demonstrate that the results of an older study are still valid. **2.6.2** For steady state, short circuit, or Stability analysis: the study shall not include any material changes unless a technical rationale can be provided to demonstrate that System changes do not impact the performance results in the study area. Part 2.6.1 has been revised and included as Part 2.7.1 to provide greater clarity. However, the SDT declines to include "Operating Procedures may not include Non-Consequential Load Loss when not permitted in Table 1" because it is redundant. Part 2.6.1 (now Part 2.7.1) is a sub-part of Part 2.6 (now Part 2.7), which

Organization	Question 2 Comment
explicitly requires meeting the performance requirements in Table 1. Parts 2.6.2 and 2.6.3 have been removed since the definition of Corrective Action Plan already includes “timetable for implementation” so a new NERC definition is not required. Parts 2.8 and 2.9 were intended to contribute to open and transparent Transmission planning for peer review. The SDT reviewed both requirements and agrees that as written, they were unclear. Part 2.9 has been deleted. Part 2.8 has been revised and included as Part 2.9 in the new version to require that the Planning Assessment provides the expected largest Consequential Load Loss identified by the analysis of P1 and P2 events in Table 1 only. **2.9** The Planning Assessment shall provide the expected largest Consequential Load Loss (megawatt Demand) identified by the analysis of P1 and P2 events in Table 1.	
PJM	In R2, why require a Planning Coordinator AND a Transmission Planner to perform this analysis? Isn’t this a duplication of effort? In R2, I have always heard that dynamics studies are performed to determine Stability. In R2.1, need to update reference to R2.6 from R2.5. In 2.1.1 and R2.1.2, is this annual peak or seasonal peak? Summer peak for summer peaking entities and winter peak for winter peaking entities or both summer and winter peak for all entities. R2.1.1 year one or two studies should be only required as operating studies. By their nature, the upgrades or fixes that could be accomplished in this time frame are limited to short lead time fixes. These analyses are needed to determine how to accommodate construction schedule deviations and near term system issues that may cause issues. Traditional Planning studies will be of no benefit in this timeframe. Change the requirement to be a study for year 3,4 or 5 with updates for material changes that occur when a previous year study is still within this time frame.R2.1.2 and R2.1.1 should be combined and the TP should assess and justify its choice of the critical load scenarios to analyze. Concerned about the extent of variations required in R2.1.3. Like would I have to vary all proposed generator in-service dates? Just a couple? One? Requirements need to be clear or compliance will assume the largest scope possible. Also in R2.1.3, first bullet words should align with the words of R1.1.3. Also in R2.1.3, second bullet words should align with words of R1.1.4 and R1.1.5. Also in R2.1.3, third bullet, modified facilities are not installed, suggest changing -installation to -availability--. Also in R2.1.3, fifth bullet, suggest moving retirements-- up to third bullet and dropping -- Generation additions, retirements, or other-- leaving just dispatch scenarios R2.1.4 should be deleted. There are no NERC requirements on spare equipment availability and this requirement seems like a backhanded way to include such a requirement. R2.2.1 should be reworded because it now requires everyone to extend their studies. Suggest If planned projects will take longer than ten years to complete, the Planning Assessment shall be extended accordingly- R2.4.1 Not sure I understand. The second sentence and the third sentence seem to be in conflict

Organization	Question 2 Comment
	R2.4.2. This requirement has lost significance with the deletion of unit stability. Off-Peak scenarios are critical for unit stability and analysis of pockets of known light load stability sensitivity. This requirement should not be worded to require a general system off-peak stability study since this will not provide useful information. The requirement should be reworded to clarify that the TP should identify its critical off-peak stability sensitivities and provide annual stability analyses that address the system's off peak stability issues.R.2.4.3 should only refer to R2.4.1 since R2.4.2 are sensitivities themselves. In R2.4.3, first bullet, how would load model assumptions be varied? Same comments on bullets here as R2.1.3 above. R2.5.2 is impossible to judge. Material changes needs to be defined. The word could in the sentence before the bullets makes them useless as a definition. By trying to define material changes the SDT has created a situation where, for large interconnection, it would be virtually impossible to use a past study. The addition of a 100 MW generator two states removed from the study area would not be considered material but by the guidelines in this requirement it can be interpreted as such. R2.5.2 Add that retools of past studies that address the local impacts of specific cumulative material changes that occur are sufficient to continue to support current planning assessment. R2.6 has a mixing sigular and plural tenses. What if only one problem is found and therefore only one Corrective Action Plan is needed. Or can one Plan cover all the problems found? Responses to R2.8 and R2.9 would be considered Critical Energy Infrastructure Information (CEII) and that should be noted so it can be protected. R2.8 and 2.9 change to read that the Planning Coordinator will provide its criteria for load loss that is adheared to for all events.

Response: Requirement R2 applies to both the Planning Coordinator and Transmission Planner because the Planning Coordinator may have a larger area than the Transmission Planner. Functional Model Version 3 states that, "Like the Resource Planners and Transmission Planners at the 'local' level, the Planning Coordinator maintains system models and performs the necessary studies to evaluate whether the composite resource and transmission plans of its Resource Planners and Transmission Planners are in compliance with reliability standards". No change made.

Please suggest modifications to more accurately describe "stability" Analyses. No change made.

In the new version, Part.2.6 now contains the requirement for the use of past studies, so Part 2.1 now has the correct reference. No change made.

For Part 2.1.1, Year One and year two are within the Planning Horizon. In the Definition Section, Year One is defined as "The first year that a Transmission Planner is responsible for assessing. This is further defined as the planning window that begins 12-18 months from the current calendar year". Operating Studies are performed for system conditions within 12 months of the current calendar year. Part 2.1.1 is intended to require studies for System Peak Load Conditions for 2 of the years in the Near-Term Transmission Planning Horizon: (1) A Year five case to identify potential problem that can be addressed if the planned projects proceed as scheduled; (2) A Year one or year two case to identify any potential problems unanticipated in the five-year case, which if not addressed, could impact operations as time progresses. The standard provides flexibility for the Planning Coordinator or Transmission Planner to use past studies to support the current year assessment and to assess other years in addition to those identified in Part 2.1.1. Part 2.1.2 requires that the Planning Coordinator and/or Transmission Planner also consider off-peak conditions in addition to peak conditions because the System must be able to meet performance requirements over all demand levels. System peak condition may not represent all stressed conditions. For example, during off-peak, the Load is low, and the generation would have to be

Organization	Question 2 Comment

turned off to achieve Load-resource balance. Turning down resources within a Load area could result in reliability problems. Lowering the Load in areas with many non-dispatchable resources could also pose potential problems. As the System incorporates more and more renewable resources, some of them are non-dispatchable; a standard must be forward looking so the Planning Coordinator and Transmission Planner can identify potential problems. If studies for one of the Load periods are not needed annually, the Planning Coordinator or Transmission Planner can rely on past studies for the Planning Assessment.

The bullets under Requirement R1, Part 1.1.3 have been removed from the revised standard, so no effort was made to line up the bullets in Requirement R1, Part 1.1.3 with the first two bullets under Requirement R2, Part 2.1.3. Parts 2.1.3 (now Part 2.1.4) and 2.4.3 and associated bullet lists have been revised to provide greater clarity for the expected changes. "Installation" has been removed from the third bullet. The SDT believes it is appropriate to treat generation change and transmission changes separately and did not move retirements up to the third bullet. The extent of the variations for each item listed is left to the discretion of the Planning Coordinator or Transmission Planner who are more familiar with the system being studied. Load modeling assumptions can be varied by varying, for example, the percentage of motor Load or the customer mix. It is up to the Planning Coordinator or the Transmission Planner to decide how the assumptions would be varied.

2.1.4 For each of the studies described in Requirement R2, parts 2.1.1 and 2.1.2, sensitivity case(s) shall be utilized to demonstrate the impact of changes to the basic assumptions used in the model for the list of items shown below. To accomplish this, the sensitivity analysis in the Planning Assessment must vary one or more of the following conditions not already included in the studies by a sufficient amount to stress the System within a range of credible conditions that demonstrate a measurable change in performance.

- Real and reactive forecasted Load.
- Expected transfers.
- Expected in service dates of new or modified Transmission Facilities.
- Reactive resource capability.
- Generation additions, retirements, or other dispatch scenarios.
- Controllable Loads and Demand Side Management.
- Duration or timing of planned Transmission outages.

2.4.3 For each of the studies described in Requirement R2, parts 2.4.1 and 2.4.2, sensitivity case(s) shall be utilized to demonstrate the impact of changes to the basic assumptions used in the model for the list of items shown below. To accomplish this, the sensitivity analysis in the Planning Assessment must vary one or more of the following conditions not already included in the studies by a sufficient amount to stress the System within a range of credible conditions that demonstrate a measurable change in performance.

- Load level, Load forecast, or dynamic model assumptions.
- Expected transfers.
- Expected in service dates of new or modified Facilities.
- Reactive resource capability.
- Generation additions, retirements, or other dispatch scenarios.

Part 2.1.4 (now Part 2.1.5) is based on FERC Order 693, Paragraphs 1724 – 1727. Part 2.1.4 requires that the Planning Coordinator and/or Transmission Planner consider the possibility that a piece of major Equipment can be out of service for an extended period of time because no spare piece of Equipment is on hand or

Organization	Question 2 Comment
can be purchased and be placed in service such that the outage won't last into the next planning cycle. Loss of a transformer is given as an example as a piece of major Equipment, which if forced out of service and had to be replaced with a new transformer, may have a lead time of more than one year. However, if a company has a strategy, for example, to have spare transformers in its System, or have agreement with another entity to share spare transformers, it would significantly reduce the probability of an outage of a transformer for longer than one year. The Planning Coordinator and/or Transmission Planner will need to decide which pieces of major Equipment in their respective systems would be more vulnerable to long term outage. **2.1.5** When an entity's spare equipment strategy could result in the unavailability of major Transmission equipment that has a lead time of one year or more (such as a transformer), an analysis of the impact of this possible unavailability on System performance shall be assessed. The Planning Assessment shall reflect the P0, P1, and P2 categories identified in Table 1 during the conditions that the System is expected to experience due to the possible unavailability of the long lead time equipment. Part 2.2.1 has been revised to reflect your suggestion. **2.2.1** A current study assessing expected System peak Load conditions for one of the years in the Long-Term Transmission Planning Horizon and the rationale for why that year was selected. Part 2.4.1 is intended to allow the use of aggregated system Load models if more accurate Load models are not available. Therefore, the second and third sentences are not in conflict. The SDT declines to include Part 2.4.2 in Part 2.4.3 because it is not intended to be a sensitivity study because the System needs to meet performance requirements under all System conditions including peak and off-peak. In addition, the Planning Coordinator or Transmission Planner can rely on past studies as provided in Part 2.5 (Part 2.6 in the new version). For this reason Part 2.4.2 has been retained. Part 2.5 has been revised and included as Part 2.6 as shown. The language referencing "material generation changes" has been removed from the revised standard. **2.6.1** For steady state, short circuit, or Stability analysis: the study shall be five calendar years old or less, unless a technical rationale can be provided to demonstrate that the results of an older study are still valid. **2.6.2** For steady state, short circuit, or Stability analysis: the study shall not include any material changes unless a technical rationale can be provided to demonstrate that System changes do not impact the performance results in the study area. Part 2.6 has been revised and included as Part 2.7 to address your concerns about mixing singular and plural possibilities. . **2.7** For planning events shown in Table 1, when the analysis indicates an inability of the System to meet the performance requirements in Table 1, the Planning Assessment shall include Corrective Action Plan(s) addressing how the performance requirements will be met. Revisions to the Corrective Action Plan(s) are allowed in subsequent Planning Assessments but the planned System shall continue to meet the performance requirements in Table 1. Corrective Action Plan(s) do not need to be developed solely to meet the performance requirements for a single sensitivity run in accordance with Requirements R2, parts 2.1.4 and 2.4.3. The Corrective Action Plan(s) shall: Parts 2.8 and R2.9 were intended to contribute to open and transparent Transmission planning for peer review. The standard does not preclude protection of the Critical Energy Infrastructure Information (CEII). The SDT reviewed both requirements and agrees that as written, they were unclear. Part 2.9 has been deleted. Part 2.8 has been revised and included as Part 2.9 in the new version to require that the Planning Assessment provides the expected largest Consequential Load Loss identified by the analysis of P1 and P2 events in Table 1 only. **2.9** The Planning Assessment shall provide the expected largest Consequential Load Loss (megawatt Demand) identified by the analysis of P1 and P2

Organization	Question 2 Comment
events in Table 1.	
Brazos Electric Cooperative	In R2.1, end of paragraph i believe you mean Requirement 2.5, not 2.6. In R2.6.2 we believe maintaining a 'project initiation date' serves no purpose and should be deleted. These dates are wildly variable given the nature of each project and the numerous issues that can affect these dates. 2.6.2 and 2.6.3 should be combined to simply require an in-service year/date and allow the owners to work as needed to meet these dates. We think R2.9 should be deleted as it is vague in nature, seems to serve no purpose and would be hard to verify the accuracy of the value in an audit. 2.8 is direct and can be easily detailed for an audit.
Response: In the new version, Part.2.6 now contains the requirement for the use of past studies, so Part 2.1 now has the correct reference. No change made. Project initiation date and in service date have been removed from the requirements. Parts 2.8 and R2.9 were intended to contribute to open and transparent Transmission planning for peer review. The SDT reviewed both requirements and agrees with the majority of commenters that as written, they were unclear. Part 2.9 has been deleted. Part 2.8 has been revised and included as Part 2.9 in the new version to require that the Planning Assessment provides the expected largest Consequential Load Loss identified by the analysis of P1 and P2 events in Table 1 only. **2.9** The Planning Assessment shall provide the expected largest Consequential Load Loss (megawatt Demand) identified by the analysis of P1 and P2 events in Table 1.	
American Electric Power	AEP agrees with R2.3., but should note that the planning horizon short circuit models are not presently developed in any systematic fashion, since, unlike the development of steady-state (power flow) and stability models that are mandated under MOD-010 and MOD-012, respectively, there are no NERC Standards that mandate the development of short circuit models in a similar fashion. As to R2.4., requiring study of both peak and off-peak conditions in every stability assessment removes the possibility in this regard that stability study scopes may be defined most appropriately by engineering judgment. We believe system load level is often important, but not necessarily more important than any of the other sensitivity variables listed under R2.4.3. We suggest listing system load level along with these and removing R2.4.1. and R2.4.2. The text in R2.4.1., referring to dynamic load modeling, may still be retained somewhere, and since this falls in the category of modeling and data, we suggest including this under R1.1. With regard to R2.5., a 20 MW increase in generation may well be construed as a material generation change, but it is questionable whether a 20 MW decrease would be for transmission planning purposes. Also, the validity of many studies, particularly plant oriented stability studies, may well extend beyond five years if there have been no transmission modifications in the vicinity of the plant or to the plant itself. In these instances, it would seem counter-productive to disqualify a study after five years. The duration of the validity of certain types of past studies is better determined by the occurrence of significant transmission or generation changes. Please note, under R2.6.2., to define project initiation date [Changed sequence to keep in numerical order].

Organization	Question 2 Comment
Response: Part 2.3 is intended for the Planning Coordinator and/or Transmission Planner to assess the whether circuit breakers supporting the BES have interrupting capability for Faults that they will be expected to interrupt and is not specifically related to new planned Facilities. However, a NERC-wide data base or models similar to MOD-010 or MOD-012 may be neither desirable nor necessary, since short circuit study concerns localized issues and can be contained within a study area. Part 2.3 has been revised to provide greater clarity. **2.3** The short circuit analysis portion of the Planning Assessment shall be conducted annually addressing the Near-Term Transmission Planning Horizon and can be supported by current or past studies as indicated in Requirement R2, part 2.6. The analysis shall be used to determine whether circuit breakers have interrupting capability for Faults that they will be expected to interrupt using the System short circuit model with any planned generation and Transmission Facilities in service which could impact the study area. The SDT declines to include Load levels in sensitivity studies in Part 2.4.3 and remove Parts 2.4.1 and 2.4.2. Since Part 2.4.3 would only require studying one or more of the list of sensitivities, this change can result in no Stability study performed for either peak Load or off-peak Load condition in the Near-Term Transmission Planning Horizon. In addition, the standard does not require a new Stability study be performed annually; the Planning Coordinator or Transmission Planner can rely on past studies as provided in Part 2.5 (Part 2.6 in the new version). For this reason no change was made. Part 2.5 has been revised and included as Part 2.6 as shown. The reference to the "20 MW" threshold has been removed from the revised standard. **2.6.1** For steady state, short circuit, or Stability analysis: the study shall be five calendar years old or less, unless a technical rationale can be provided to demonstrate that the results of an older study are still valid. **2.6.2** For steady state, short circuit, or Stability analysis: the study shall not include any material changes unless a technical rationale can be provided to demonstrate that System changes do not impact the performance results in the study area. Project initiation date has been removed from the requirements.	
ITC Holdings	Comments: In R2.1, there is a reference to R2. 6. Based on the posted red-line version, we believe this reference should be changed to R2.5. Should this same reference be included in R2.4?? In R2.3, it is stated that the short circuit analysis should be supported by either current or past studies. Should a reference be added to R2.5? In R2.6 it is stated: Corrective Action Plans do not need to be developed solely to meet the performance requirements for sensitivities run in accordance with Requirements R2.1.3 and R2.4.3. While we recognize that this conforms to FERC orders, it would still seem that this statement might be interpreted to mean that CAPs intended to cover a number of sensitivities go beyond standards and be used by interveners to block such CAPs. A revision to the standard to the standard to encourage CAP when needed for numerous sensitivities might be appropriate. R 2.6.4, as written, is very subjective. While we understand the need for R2.6.4, who is the ultimate judge of what situations are beyond the control of the TP or PC responsible for the mitigation plan and if they "are taking prudent actions to resolve the situation" As written, it is the auditor. This will be difficult to prove compliance and might provide significant discrepancies in compliance with standards.

Organization	Question 2 Comment
Response: In the new version, Part 2.6 now contains the requirement for the use of past studies, so Part 2.1 now has the correct reference. No change made. The reference has been added. **2.4** The Near-Term Transmission Planning Horizon portion of the Stability analysis shall be assessed annually and be supported by current or past studies as indicated in Requirement R2, part 2.6. The following studies are required: Parts 2.3 and 2.4 have been revised to add reference to Part 2.5 (included in the new version as Part 2.6). **2.3** The short circuit analysis portion of the Planning Assessment shall be conducted annually addressing the Near-Term Transmission Planning Horizon and can be supported by current or past studies as indicated in Requirement R2, part 2.6. The analysis shall be used to determine whether circuit breakers have interrupting capability for Faults that they will be expected to interrupt using the System short circuit model with any planned generation and Transmission Facilities in service which could impact the study area. Part 2.6 has been revised and included as Part 2.7. A new Part 2.7.2 has been added to require that the Corrective Action Plan include actions to resolve performance deficiencies identified in multiple sensitivity studies or provide a rationale for why actions were not necessary. **2.7** For planning events shown in Table 1, when the analysis indicates an inability of the System to meet the performance requirements in Table 1, the Planning Assessment shall include Corrective Action Plan(s) addressing how the performance requirements will be met. Revisions to the Corrective Action Plan(s) are allowed in subsequent Planning Assessments but the planned System shall continue to meet the performance requirements in Table 1. Corrective Action Plan(s) do not need to be developed solely to meet the performance requirements for a single sensitivity run in accordance with Requirements R2, parts 2.1.4 and 2.4.3. The Corrective Action Plan(s) shall: **2.7.2** Include actions to resolve performance deficiencies identified in multiple sensitivity studies or provide a rationale for why actions were not necessary. Part 2.6.4 has been revised and included as Part 2.7.5 to address your concerns. The word “prudent” is no longer used. **2.7.5** If situations arise that are beyond the control of the Transmission Planner or Planning Coordinator that prevent the implementation of a Corrective Action Plan in the required timeframe, then the Transmission Planner or Planning Coordinator is permitted to utilize Non-Consequential Load Loss and curtailment of Firm Transmission Service to correct the situation that would normally not be permitted in Table 1, provided that the Transmission Planner or Planning Coordinator documents that they are taking actions to resolve the situation. The Transmission Planner or Planning Coordinator shall document the situation causing the problem, alternatives evaluated, and the use of Non-Consequential Load Loss or curtailment of Firm Transmission Service.	
Northern Indiana Public Service Company	R2.3: Clarify the requirement. Does the short circuit study examine topology for a single year, the topology in years studied using the steady state models or each year of the near term planning horizon?
Response: Part 2.3 requires that the Assessment of short circuit duty requirements are conducted annually addressing the Near-Term Transmission Planning Horizon. However, the specific methodology or assumptions to be used are left to the discretion of the Planning Coordinator or Transmission Planner.	
Minnesota Power	A) Under R2, the Time Horizon of the TPL standards is intended for years one through 10; However the Time Horizon shown in R2 only says Long-term Planning. By definition of Long-Term Transmission Planning Horizon this covers years 6 through 10 and beyond. Suggestion to change the Time Horizon to read: Near-Term and Long-Term Transmission

Organization	Question 2 Comment
	Plannin?. B) Under R2.1 there is a reference to qualified past studies in R2.6. We believe that this reference should be pointing to R2.5 not R2.6. C) R2.1.4 addresses the spare equipment strategy. What is the scope of this sensitivity? Is the intent only to do a steady state analysis on equipment with long lead time spares D) Under R2.2 a System peak load study is required annually for one of the years in the assessment period. R2.2.1 requires the assessing entity to extend their planning assessment to accommodate any known longer lead time projects that may take longer than ten years to complete. It does not make sense to study the ten year horizon, then find a problem in year ten which has a solution that requires twelve years to build. For compliance with this standard, you would need to find another solution that can be built within ten years as opposed to the suggested language in R2.2.1 of extending the planning assessment beyond ten years to accommodate the solution that falls outside of the Long-Term Planning Horizon. No project solution greater than 10 years should be acceptable because it falls outside the Long-Term Transmission Planning Horizon. Suggestion to strike sub-requirement R2.2.1 from this standard. E) Requirements R2.1, R2.3, and R2.4 are written inconsistently. 2.1 says The Near-Term Transmission Planning portion of the Steady State analysis 2.3 says The short circuit portion of the Planning Assessment addressing the Near-Term Planning Horizon 2.4 says The Near-Term Transmission Planning portion of the Stability Analysis These three sentences confuse the order. As we understand, the Planning assessment has two parts: a Near-Term portion and a Long-Term portion. Each of those parts has three components: a Steady State component, a Short Circuit component, and a Stability component. We suggest the language in the standard should be structured consistently and appropriately as such) Under R2.4.3 there is ambiguity in the third bullet language new or modified Facilities and we believe that this language should mimic that of R1.1.2 in order to improve this requirement. The third bullet should read: Timing of the installation of new Facilities or changes to existing Facilities. G) The sub requirement R2.5.2 states that for steady state, short circuit, or stability analysis; the present System model shall not include any material changes, such as..etc. The present language in this section is vague and requires discretion on the part of both the Transmission Planner and the Planning Coordinator performing the assessment. For example, new transmission enhancements may have been added since the previous System model was developed. In general, such topology enhancements will only improve reliability and would not necessitate re-assessment with a newly updated System model. In addition, any significant generator additions would have been evaluated with a full separate generator interconnection study at which the full reliability of the System would have been taken into consideration. For this reason, we believe the following language for R2.5.2 would improve this requirement: For steady state, short circuit, or Stability analysis: the current System model of the assessed plan year shall not include any changes material to the assessment, as judged by the entity performing the assessment, such as, generation or Transmission additions/removals, or topology changes that have occurred in the intervening period and would impact the study year. Material generation changes could include: H) Modify R2.6.2 to remove the obligation to include the project initiation date. The inclusion of this date would add unnecessary work that is not needed to assure adequate BES reliability In addition, it is not clear whether initiation refers to

Organization	Question 2 Comment
	the commencement of engineering, design, construction, etc.

Response: The *Time Horizon* term at the end of the requirement deals with mitigation time periods (as shown below) and is not connected to the assessment time frames. Time Horizons are a consideration when there is a violation of a requirement – the impact to the BES of violating a requirement with a long-term planning horizon is not expected to be as severe as the impact associated with violating a requirement with a real-time operations time horizon. No change made.

Mitigation Time Horizon

The time horizons available for mitigating a violation to a requirement include the following:

- **Long-term Planning** — a planning horizon of one year or longer.
- **Operations Planning** — operating and resource plans from day-ahead up to and including seasonal.
- **Same-day Operations** — routine actions required within the timeframe of a day, but not real-time.
- **Real-time Operations** — actions required within one hour or less to preserve the reliability of the bulk electric system.
- **Operations Assessment** — follow-up evaluations and reporting of real time operations

In the new version, Part 2.6 now contains the requirement for the use of past studies, so Part 2.1 now has the correct reference. No change made.

In Part 2.1.4 (now Part 2.1.5) when a piece of long lead-time Equipment is unavailable, System adjustments will need to be made. The System, after it is adjusted to accommodate that piece of Equipment out of service will be treated as the "normal" (P0) condition in Table 1. Part 2.1.5 is intended for the Planning Coordinator and/or Transmission Planner to take into account their spare Equipment strategy for long lead time Transmission equipment when assessing the performance of their System. If the loss of a piece of major Equipment can be replaced within a reasonable period of time, planning studies for the following year can assume that that piece of Equipment will be replaced. If not, its impact of unavailability would need to be assessed. It is not intended to limit to steady state analyses only. Part 2.1.5 has been revised to require that the assessment reflect the P0, P1, and P2 categories identified in Table 1 during the conditions that the System is expected to experience due to the possible unavailability of the long lead time equipment.

> **2.1.5** When an entity's spare equipment strategy could result in the unavailability of major Transmission equipment that has a lead time of one year or more (such as a transformer), an analysis of the impact of this possible unavailability on System performance shall be assessed. The Planning Assessment shall reflect the P0, P1, and P2 categories identified in Table 1 during the conditions that the System is expected to experience due to the possible unavailability of the long lead time equipment.

Part 2.2.1 has been revised because extending the Planning Horizon beyond 10 years for projects with lead time longer than 10 years is already covered in the definition of Long-Term Transmission Planning Horizon. This allowance is needed to provide planning flexibility, and is at the discretion of the Planning Coordinator or Transmission Planner. For example, if the System is found not to meet performance standard in year 10, but the project to correct the loading cannot be placed in service for 12 years, then the Corrective Action Plan needs to identify the interim solutions before the project can be brought on line.

> **2.2.1** A current study assessing expected System peak Load conditions for one of the years in the Long-Term Transmission Planning Horizon and the rationale for why that year was selected.

As written the Planning Assessment consists of 2 parts: Near-Term Transmission Planning Horizon and Long-Term Transmission Planning Horizon, Steady State and Stability Assessments are required for both near-term and long-Term, but short circuit assessment is required only for the near-term. Part 2.3 has been revised

Organization	Question 2 Comment
to provide greater clarity. **2.3** The short circuit analysis portion of the Planning Assessment shall be conducted annually addressing the Near-Term Transmission Planning Horizon and can be supported by current or past studies as indicated in Requirement R2, part 2.6. The analysis shall be used to determine whether circuit breakers have interrupting capability for Faults that they will be expected to interrupt using the System short circuit model with any planned generation and Transmission Facilities in service which could impact the study area. The 3rd bullet of Part 2.4.3 has been revised. **2.4.3 bullet 3** Expected in service dates of new or modified Facilities Part 2.5.2 has been revised and included as Part 2.6.2 to provide greater clarity. **2.6.2** For steady state, short circuit, or Stability analysis: the study shall not include any material changes unless a technical rationale can be provided to demonstrate that System changes do not impact the performance results in the study area. Project initiation date has been removed from the requirements.	
LADWP	R2.3 There is no value to conduct short circuit analysis on an annual basis. Short circuit contribution is location constrained. Maximum short circuit interrupting duty cannot be determined by any planning cases; so putting this requirement in TPL will cause only confusion and will creat misleading information. If there is a need to develop a standard on how to evaluate maximum short circuit interrupting duty, the more appropriate place would be FAC. R2.1.3 Controllable Loads and DWM: DSM should not be a stand alone item in planning studies because DSM already is imbedded in load forecasts. Not sure what controllable loads are. R2.1.4 Any requirment dealing with spare parts should be handled in TOP, not TPL. TOP is the forum to develop operating procedures,"work-arounds", and so on when the non-availability of spare forced a company to develop temporary mitigations and it would be a mistake to suggest that planners should be able to consider such temporary fixes as acceptable planning solutions.R 2.5.2 The 20 MW threshold, at best, is "noise" for us. We would not be concerned with generation chnages that is 10 times this threshold. What is the rationale for requiring a new study just because there is a change in generation capability? R2.8 and 2.9 What measurements would this required information be measured against? I can't find any and if there is no measurement, it really does not belong. R2.6.2 Project initiation date is hard to define. Is it the date the project is budgeted? or the date the management approved the budget and at what level? or is it the date when engineering design is initiated? For both short term and long term planning horizons, the project in service date should be sufficient. there are too many variables to define "project initiation date" not to mention there is no measurable to benchmark such a requirement.
Response: Parts 2.3 and 2.7 are intended for the Planning Coordinator and/or Transmission Planner to assess whether circuit breakers supporting the BES have the interrupting capability for Faults that they will be expected to interrupt. No change made. Part 2.1.3 (now Part 2.1.4) is intended to cover sensitivity studies, for example, if DSM is imbedded in the Load forecast, the sensitivity study can simulate	

Organization	Question 2 Comment
conditions where not all effects of DSM is realizable, and the Load may be higher than studied . Controllable Load can be part of the local rate incentive program, where the customer Load can be controlled by the Transmission Operator. The bullets are examples, so the Planning Coordinator or Transmission Planner can choose the sensitivity and does not have to study, for example, controllable Load, if the related Load-Serving Entity does not have such a program. Part 2.1.4 (now Part 2.1.5) is intended for the Planning Coordinator and/or Transmission Planner to take into account their spare Equipment strategy for long lead time Transmission Equipment when assessing the performance of their System. If the loss of a piece of major Equipment can be replaced within a reasonable period of time, planning studies for the following year can assume that that piece of Equipment will be replaced. If not, its impact of unavailability would need to be assessed. Part 2.1.5 has been revised to require that the assessment reflect the P0, P1, and P2 categories identified in Table 1 during the conditions that the System is expected to experience due to the possible unavailability of the long lead time Equipment. **2.1.5** When an entity's spare equipment strategy could result in the unavailability of major Transmission equipment that has a lead time of one year or more (such as a transformer), an analysis of the impact of this possible unavailability on System performance shall be assessed. The Planning Assessment shall reflect the P0, P1, and P2 categories identified in Table 1 during the conditions that the System is expected to experience due to the possible unavailability of the long lead time equipment. Parts .2.8 and R2.9 were intended to contribute to open and transparent Transmission planning for peer review. The SDT reviewed both requirements and agrees that as written, they were unclear. Part 2.9 has been deleted. Part 2.8 has been revised and included as Part 2.9 in the new version to require that the Planning Assessment provides the expected largest Consequential Load Loss identified by the analysis of P1 and P2 events in Table 1 only. **2.9** The Planning Assessment shall provide the expected largest Consequential Load Loss (megawatt Demand) identified by the analysis of P1 and P2 events in Table 1. Part 2.5.2 (now 2.6.2) has been revised for clarity and the 20 MW threshold has been removed. **2.6.2** For steady state, short circuit, or Stability analysis: the study shall not include any material changes unless a technical rationale can be provided to demonstrate that System changes do not impact the performance results in the study area. Project initiation date has been removed from the requirements.	
Platte River Power Authority	R2.6.2. Expand on the meaning of the "initiation date." R2.8. I don't understand the relevance of this requirement. May your intention be explained differently? R2.9. I don't understand the relevance of this requirement. May your intention be explained differently?
Response: Project initiation date has been removed from the requirements. Parts 2.8 and R2.9 were intended to contribute to open and transparent Transmission planning for peer review. The SDT reviewed both requirements and agrees that as written, they were unclear. Part 2.9 has been deleted. Part 2.8 has been revised and included as Part 2.9 in the new version to require that the Planning Assessment provides the expected largest Consequential Load Loss identified by the analysis of P1 and P2 events in Table 1 only. **2.9** The Planning Assessment shall provide the expected largest Consequential Load Loss (megawatt Demand) identified by the analysis of P1 and P2 events in Table 1.	
MAPPCOR	R2.1.1 Consider calling this Near Term years instead of specifically naming certain years.

Organization	Question 2 Comment
	R2.1.3 eliminate the last bullet. Planned duration or timing of Transmission outages is part of R1.1.1 which already specifies that models will include planned outages of generation and transmission facilities. R2.1.4 the second line is unclear. There is a reference to lead time of one year or more Is the intent for that to mean outage duration of one year or more??? If so, it should be written that way. Also, in the 3rd line, eliminate the words an analysis of (otherwise it would direct one to assess an analysis.) This in essence is an N-3 study. This risk that a TO or GO takes will show up in the operations of the BES. Also some states assess a penalty for equipment that is sitting idle that cost the taxpayers, so you could be penalize for not have spare equipment or if you do have it. R2.2.1 does this mean, for example, that entities may be doing 12 year or 15 year assessments? It should be written to say what it means. R2.4.1 Change to read: For peak System Load levels, a Load model shall be used which appropriately represents the dynamic behavior of Loads, including consideration of the behavior of induction motor Loads or an aggregate System Load model which represents the overall dynamic behavior of the Load. R2.5.1 Suggest deleting this requirement, and incorporating it into R2.5.2. R2.5.2 Incorporate R.2.5.1 into R2.5.2; please modify the section as follows:For steady state, short circuit, or Stability analysis the study shall be less than five calendar years old or less: the latest Transmission Planning Horizon System model shall not include any material changes, such as, generation or Transmission additions/removals, or topology changes that have occurred in the intervening period and would impact the study area. Material generation changes could include: The addition/deletion/change of individual generating unit capability determined to be material by the Planning Coordinator or Transmission Planner. An aggregated addition/deletion/change to a group of generating units directly connected through their step-up transformer(s) to the BES determined to be material by the Planning Coordinator or Transmission Planner. R2.6 ? The creation of hard and fast Corrective Action Plans for the LTRA is not a good use of resources. The reason for planning studies is to uncover possible weak spots in the system for some number of years into the future, and then pursue additional studies to examine the issues. Planning studies include many assumptions, and the issues may not even arise on the real system. If they do, there may be many possible remedies. Creating CAPs with milestones and other firm dates for potential problems uncovered in assessments of future years is simply not practical, and the PC (PA) may have little or no influence on what remedy is selected even if a problem appears to be real. R2.6.2 The phrase Project Initiation Date needs to be defined. It is unclear if this is this the date of ground breaking, purchase orders being issued, solution study initiation, etc. Additionally, in the second sentence the phrase as well as an in-service date should be modified to read as well as a target in-service date. R2.6.3 Plans can provide a target in-service year but not an actual in-service year. R2.6.4 recommend clarifying how situations beyond the control of the TP or PC are determined. It is unclear if this is to imply that if something is outside of the control of the department who conducts the planning studies or if it is outside the control of the registered function's legal entity (i.e. corporation). There should be a cutoff point when changes occur beyond a certain date. When that date occurs, further changes will be evaluated in the next year's assessment. Otherwise, if a state makes a decision not to site a project a few weeks prior to the end of the assessment period, there will not be sufficient

Organization	Question 2 Comment
	time to incorporate this into that year's assessment and develop corrective actions. R2.8 appears to be nonessential information for reliability; for what purpose does this requirement exist? R2.9 - appears to be nonessential information for reliability; for what purpose does this requirement exist?

Response: Part 2.1.1 is intended to require studies for System Peak Load Conditions for 2 of the years in the Near-Term Transmission Planning Horizon: (1) A year five case to identify potential problem that can be addressed if the planned projects proceed as scheduled; (2) A Year One or year two case to identify any potential problems unanticipated in the five-year case, which if not addressed, could impact operations as time progresses. The standard provides flexibility for the Planning Coordinator or Transmission Planner to use past studies to support the current year assessment, and to assess other years in addition to those identified in R2.1.1.

The last Bullet in Part 2.1.3 is intended to cover planned outages of Facilities in sensitivity studies if such planned outages are known at the time the planning studies are performed, for example, a planned outage of a major Transmission line during construction if the Corrective Action Plan calls for rebuilding of the line to a higher operating voltage. The corresponding sensitivity could simulate unplanned delay starts or unplanned extension of construction period of the planned project. No change made.

Part 2.1.4 (now Part 2.1.5) is intended for the Planning Coordinator and/or Transmission Planner to take into account their spare Equipment strategy for long lead time Transmission equipment when assessing the performance of their System. If the loss of a piece of major Equipment can be replaced within a reasonable period of time, planning studies for the following year can assume that that piece of Equipment will be replaced. If not, its impact of unavailability would need to be assessed**.** Part 2.1.5 has been revised to require that the assessment reflect the P0, P1, and P2 categories identified in Table 1 during the conditions that the System is expected to experience due to the possible unavailability of the long lead time Equipment.

> **2.1.5** When an entity's spare equipment strategy could result in the unavailability of major Transmission equipment that has a lead time of one year or more (such as a transformer), an analysis of the impact of this possible unavailability on System performance shall be assessed. The Planning Assessment shall reflect the P0, P1, and P2 categories identified in Table 1 during the conditions that the System is expected to experience due to the possible unavailability of the long lead time equipment.

Part 2.2.1 has been revised because extending the Planning Horizon beyond 10 years for projects with lead time longer than 10 years is already covered in the definition of Long-Term Transmission Planning Horizon. This allowance is needed to provide planning flexibility, and is at the discretion of the Planning Coordinator or Transmission Planner. For example, if the System is found not to meet performance standard in year 10, but the project to correct the loading cannot be placed in service for 12 years, then the Corrective Action Plan needs to identify the interim solutions before the project can be brought on line.

> **2.2.1** A current study assessing expected System peak Load conditions for one of the years in the Long-Term Transmission Planning Horizon and the rationale for why that year was selected.

Part 2.4.1 has been modified.

> **2.4.1** System peak Load for one of the five years. System peak Load levels shall include a Load model which represents the dynamic behavior of Loads that could impact the study area, considering the behavior of induction motor Loads. An aggregate System Load model which represents the overall dynamic behavior of the Load is acceptable.

Part 2.5.1 (now Part 2.6.1) is considered a separate requirement by the SDT and has not been deleted or merged. It has been revised for clarity.

> **2.6.1** For steady state, short circuit, or Stability analysis: the study shall be five calendar years old or less, unless a technical rationale can be provided

Organization	Question 2 Comment
to demonstrate that the results of an older study are still valid. Part 2.5.2 (now Part 2.6.2) has been revised for clarity. **2.6.2** For steady state, short circuit, or Stability analysis: the study shall not include any material changes unless a technical rationale can be provided to demonstrate that System changes do not impact the performance results in the study area. Part 2.6 has been revised and included as Part 2.7 to address your concerns. **2.7** For planning events shown in Table 1, when the analysis indicates an inability of the System to meet the performance requirements in Table 1, the Planning Assessment shall include Corrective Action Plan(s) addressing how the performance requirements will be met. Revisions to the Corrective Action Plan(s) are allowed in subsequent Planning Assessments but the planned System shall continue to meet the performance requirements in Table 1. Corrective Action Plan(s) do not need to be developed solely to meet the performance requirements for a single sensitivity run in accordance with Requirements R2, parts 2.1.4 and 2.4.3. The Corrective Action Plan(s) shall: Project initiation date has been deleted from the requirements. The requirement for in service date has been deleted. Parts 2.8 and 2.9 were intended to contribute to open and transparent Transmission planning for peer review. The SDT reviewed both requirements and agrees with the majority of the commenters that as written, they were unclear. Part 2.9 has been deleted. Part 2.8 has been revised and included as Part 2.9 in he new version to require that the Planning Assessment provides the expected largest Consequential Load Loss identified by the analysis of P1 and P2 events in Table 1 only. **2.9** The Planning Assessment shall provide the expected largest Consequential Load Loss (megawatt Demand) identified by the analysis of P1 and P2 events in Table 1.	
Orlando Utilities Commission	-I think R2.1 has a typo and should reference requirement R2.5, not R2.6. – R2 Does the phrase “System Peak Load” require true system peak be tested, or a peak condition. As an example, FRCC experience a two peak loads, a summer peak that occurs regularl
Response: In the new version, Part 2.6 now contains the requirement for the use of past studies, so Part 2.1 now has the correct reference. No change made. System peak Load means the highest Load within the time period that is being evaluated.	
American Transmission Company	We propose the following comments for R2:In sections R2.1.3 and R2.4.3 please explain the reference to expected transfers and how that differs from R1.1.5 interchange. If these are analogous, then change the references to interchange. Modify R2.5.2 second bullet to clarify that this addresses an aggregated addition/deletion/change to a group of generating units directly connected through a shared step-up transformer . . . . Modify R2.6.2 to remove the obligation to include the project initiation date. The inclusion of this date would add unnecessary work that is not needed to assure adequate BES reliability. In addition, it is not clear whether initiation refers to the commencement of engineering, design, construction, etc.ATC agrees that the Transmission Planner should be responsible for a corrective action plan (R 2.6) and its associated sub-requirements, but we do not agree that the Planning

Organization	Question 2 Comment
	Coordinator should also be listed. Unlike a Transmission Planner, a Planning Coordinator does not have the ability or responsibility to implement a corrective action plan. Requirement 2.6 and its associated sub-requirements should be limited to only the Transmission Planner. Remove the R2.8 requirement. The activity of identifying and including the largest Consequential Load Loss caused by any P1 or any P2 events in the Planning Assessment may not assure adequate BES reliability. A P1 or P2 event with the largest Consequential Load Loss could occur at a location on the system that is strong enough to not result in any performance violation. The amount of Consequential Load Loss may not have a relevant correlation to system performance and reliability. Remove the R2.9 requirement. The activity of identifying and including the maximum permissible Non-Consequential Load Loss caused by selected Table 1 Planning Events may not assure adequate BES reliability. The maximum permissible Non-Consequential Load Loss could occur at a location on the system that is strong enough to not result in any performance violation. The maximum amount of Non-Consequential Load Loss may not have a relevant correlation to system performance and reliability. Add R2.10. The obligation to identify and observe applicable steady state voltage and post-Contingency voltage deviations should be a Requirement, rather than performance note a in the Planning Events, Steady State Only section of Table 1. And the obligation to identify and observe applicable transient voltage response limits should be a Requirement, rather than performance note b in the Planning Events, Stability Only section of Table 1. In addition, due to the system limit requirements of FAC-010 and FAC-014 the reference to the PC and TP is unnecessary. We suggest this text: The Planning Assessment shall identify the applicable steady state voltage, post-Contingency voltage deviations, and transient voltage response limits.

Response: Part 1.1.5 has been revised to state "Known commitments for Firm Transmission Service and Interchange" The NERC Glossary of Terms defines Firm Transmission Service as "the highest quality (priority) service offered to customers under a filed rate schedule that anticipates no planned interruption" and Interchange as "Energy transfers that cross Balancing Authority boundaries. "Transfer" can cover more than Firm Transmission Service or Interchange. Parts 2.1.3 and 2.4.3 would cover the sensitivity of changes in expected transfers regardless of the cause.

Part 2.5.2 – The examples in the bullets have been deleted.

Part 2.6.2 - Project initiation date has been deleted from the requirements.

Part 2.6 has been revised and included as Part 2.7 in the new version to address your concerns. The SDT declines to limit the application of Part 2.6 to the Transmission Planner because the Planning Coordinator would be responsible for coordination between Transmission Providers.

> **2.7** For planning events shown in Table 1, when the analysis indicates an inability of the System to meet the performance requirements in Table 1, the Planning Assessment shall include Corrective Action Plan(s) addressing how the performance requirements will be met. Revisions to the Corrective Action Plan(s) are allowed in subsequent Planning Assessments but the planned System shall continue to meet the performance requirements in Table 1. Corrective Action Plan(s) do not need to be developed solely to meet the performance requirements for a single sensitivity run in accordance with Requirements R2, parts 2.1.4 and 2.4.3. The Corrective Action Plan(s) shall:

Parts 2.8 and 2.9 were intended to contribute to open and transparent Transmission planning for peer review. The SDT reviewed both requirements and agrees with the majority of the commenters that as written, they were unclear. Part 2.9 has been deleted. Part 2.8 has been revised and included as Part 2.9 in the new

Organization	Question 2 Comment
version to require that the Planning Assessment provides the expected largest Consequential Load Loss identified by the analysis of P1 and P2 events in Table 1 only. **2.9** The Planning Assessment shall provide the expected largest Consequential Load Loss (megawatt Demand) identified by the analysis of P1 and P2 events in Table 1. The obligation to identify potential steady state, transient, post-transient and post-Contingency problems is already included in Parts 2.1 through 2.4 and in Part 2.6 (Part 2.7 in the new version). Therefore adding a new Part 2.10 is not needed.	
Turlock Irrigation District	TID expresses concern that the planning extension of R2.2.1 could lead to a scenario where a single members long term project (beyond 10 years) could then require all neighboring members to extend their own planning horizons (similar to a lowest common denominator issue) and face unnecessary technical issues.
Response: Part 2.2.1 has been revised because extending the Planning Horizon beyond 10 years for projects with lead time longer than 10 years is already covered in the definition of Long-Term Transmission Planning Horizon. This allowance is needed to provide planning flexibility, and is at the discretion of the Planning Coordinator or Transmission Planner. For example, if the System is found not to meet performance standard in year 10, but the project to correct the loading cannot be placed in service for 12 years, then the Corrective Action Plan needs to identify the interim solutions before the project can be brought on line. If a neighboring Planning Coordinator or Transmission Planner extends their planning horizon beyond ten years, it may be prudent for the Planning Coordinator or Transmission Planner to similarly extend the associated planning horizon, but it is not necessary for compliance of this standard. Therefore, the Planning Coordinator or Transmission Planner can choose whether to extend the planning horizon beyond 10 years for its own planning area(s) for the purpose of compliance. **2.2.1** A current study assessing expected System peak Load conditions for one of the years in the Long-Term Transmission Planning Horizon and the rationale for why that year was selected.	
New York Independent System Operator	R2.1.2 - System off-peak is more likely a stability issue than a steady state issue. If system off-peak becomes a steady state issue, it can be mitigated through generation redispatch. Accordingly, it appears that this requirement is not necessary for steady state analysis R2.1.4 - With respect to spare equipment strategy, this requirement potentially imposes a requirement to plan for three events, which is overly severe. As previously stated in R1, the system model should be a model of the projected system, which would include a long term actual forced outage. If this requirement is not referring to actual outages, then it is suggesting an N-1-1-1 analysis, which is a requirement that would require significant additional work with little value added for reliability because such contingencies have a very low probability. Under R2.5 - Past Studies may be used to support the Planning Assessment if they meet the following requirements and the sub-requirement R2.5.2 states that for SS, SC, or stability analysis "the PRESENT (emphasis added) System model shall not include any material changes, such as, . The NYISO interprets this language to mean that past studies may be used to support planning assessments as long as there are no material changes to the LATEST PLANNING HORIZON system model. The Standards Drafting Team should clarify whether this interpretation is correct. The standard should further state whether, if there was a material change such as a 20 MW generator, the past study may be used if the impact of this small change is assessed. Finally, the regional entity should have a process to determine whether changes are material that is

Organization	Question 2 Comment
	similar to the NPCCs process for determining what level of annual transmission review should be conducted each year.

Response: Regarding comment on Part 2.1.2, NERC Standards require that Systems can operate reliably over all demand levels. If steady state problems under off-peak conditions needed to be corrected through re-dispatch and/or switching to reconfigure the System, then a Corrective Action Plan involving re-dispatch and switching will need to be developed to ensure that the plan can be implemented. Since a past study can be used to support a current Assessment in accordance with Part 2.5 (Part 2.6 in the new version), an off-peak study would not have to be performed every year.

In Part 2.1.4 (now Part 2.1.5) when a piece of long lead-time Equipment is unavailable, System adjustments will need to be made. The System, after it is adjusted to accommodate that piece of Equipment out of service will be treated as the "normal" (P0) condition in Table 1 and the rest of Table 1 will be applied as stated. Part 2.1.5 is intended for the Planning Coordinator and/or Transmission Planner to take into account their spare Equipment strategy for long lead time Equipment when assessing the performance of their System. If the loss of a piece of major Equipment can be replaced within a reasonable period of time, planning studies for the following year can assume that that piece of Equipment will be replaced. If not, its impact of unavailability would need to be assessed. Part 2.1.5 has been revised to require that the assessment reflect the P0, P1, and P2 categories identified in Table 1 during the conditions that the System is expected to experience due to the possible unavailability of the long lead time Equipment.

> **2.1.5** When an entity's spare equipment strategy could result in the unavailability of major Transmission equipment that has a lead time of one year or more (such as a transformer), an analysis of the impact of this possible unavailability on System performance shall be assessed. The Planning Assessment shall reflect the P0, P1, and P2 categories identified in Table 1 during the conditions that the System is expected to experience due to the possible unavailability of the long lead time equipment.

Part 2.5.2 (now 2.6.2) has been revised for clarity. The bullets under 2.5.2 have been removed from the revised standard.

> **2.6.2** For steady state, short circuit, or Stability analysis: the study shall not include any material changes unless a technical rationale can be provided to demonstrate that System changes do not impact the performance results in the study area.

Duke Energy	R2 Instead of document results the requirement should be to summarize results. While results will be documented, the Planning Assessment should just include a summary. R2.1 What's the value in being able to use qualified past studies if you have to use annual current studies? Strike the words supplemented with and insert the word or. R2.5.2 Suggest deleting the phrase Material generation changes could include: and the two accompanying bullets. A change of 20 MW on a large system may not always be material. R2.8 and R2.9 should be deleted. We don't see a reliability-related need for these requirements. In the sub-requirements of 2.1.3 and 2.4.3, the use of the word timing is unclear. Consider using in service date or schedule for. R2.4.1: It is not clear how much Load a dynamic model must have. Likely, it must still be proven that the analysis software can accommodate every load in the model having a load model that includes induction motor models. To help address this, revise Load to be Load that could impact the study area is acceptable.

Response: Requirement R2 has been revised to provide greater clarity and the word, "summarize" was added in support of your suggestion.

Organization	Question 2 Comment
	R2. Each Transmission Planner and Planning Coordinator shall prepare an annual Planning Assessment of its portion of the BES. This Planning Assessment shall use current or past studies, document assumptions, summarize documented results, and cover steady state analyses, short circuit analyses, and Stability analyses. In Part 2.1 it is envisioned that not all parts of the studies, on which the Assessment is to be based, can rely on past studies. For example, a study on year five performed during the past year may not be representative of year five in the current year. A past study can still be used if it can be demonstrated that the requirements for use of past studies are met. No change made. 2.5.2 – Both bullets under 2.5.2 have been deleted as suggested Parts 2.8 and 2.9 were intended to contribute to open and transparent Transmission planning for peer review. The SDT reviewed both requirements and agrees with the majority of the commenters that as written, they were unclear. Part 2.9 has been deleted. Part 2.8 has been revised and included as Part 2.9 in the new version to require that the Planning Assessment provides the expected largest Consequential Load Loss identified by the analysis of P1 and P2 events in Table 1 only. **2.9** The Planning Assessment shall provide the expected largest Consequential Load Loss (megawatt Demand) identified by the analysis of P1 and P2 events in Table 1. Parts 2.1.3 (now Part 2.1.4) and 2.4.3 have been revised. **2.1.4** For each of the studies described in Requirement R2, parts 2.1.1 and 2.1.2, sensitivity case(s) shall be utilized to demonstrate the impact of changes to the basic assumptions used in the model for the list of items shown below. To accomplish this, the sensitivity analysis in the Planning Assessment must vary one or more of the following conditions not already included in the studies by a sufficient amount to stress the System within a range of credible conditions that demonstrate a measurable change in performance. • Real and reactive forecasted Load. • Expected transfers. • Expected in service dates of new or modified Transmission Facilities. • Reactive resource capability. • Generation additions, retirements, or other dispatch scenarios. • Controllable Loads and Demand Side Management. • Duration or timing of planned Transmission outages. **2.4.3** For each of the studies described in Requirement R2, parts 2.4.1 and 2.4.2, sensitivity case(s) shall be utilized to demonstrate the impact of changes to the basic assumptions used in the model for the list of items shown below. To accomplish this, the sensitivity analysis in the Planning Assessment must vary one or more of the following conditions not already included in the studies by a sufficient amount to stress the System within a range of credible conditions that demonstrate a measurable change in performance. • Load level, Load forecast, or dynamic model assumptions. • Expected transfers. • Expected in service dates of new or modified Facilities.

Organization	Question 2 Comment
	• Reactive resource capability. • Generation additions, retirements, or other dispatch scenarios. Part 2.4.1 has been revised to reflect your suggestion. **2.4.1** System peak Load for one of the five years. System peak Load levels shall include a Load model which represents the dynamic behavior of Loads that could impact the study area, considering the behavior of induction motor Loads. An aggregate System Load model which represents the overall dynamic behavior of the Load is acceptable.
Tucson Electric Power Company	Short circuit analyses is a local phenomenon and should not be required as part of a transmission planning assessment of the BES. In any case, the effects of failure of over-stressed breakers are already included in the Events to be assessed in Table 1. For example, P2-3 and P2-4 (Internal Breaker Fault), and P4 (Stuck Breaker while attempting to clear a fault). In R2.1, we believe the reference for past studies should be Requirement R2.5 not Requirement R2.6. Also, we suggest removing the phrase supplemented with and replacing it with the word or. This phrase indicates that previous studies cannot be a primary source for the assessment, which contradicts section 2.5.Remove the phrase not already included in the studies in R2.1.3. With this phrase included, you cannot use a previous sensitivity study to support the current assessment and Requirement R2.5 allows the use of previous studies if the conditions are met. Clarity is needed in R2.1.4. The requirement to assess the Contingencies identified in Table 1 is too burdensome. This requirement does not specify any limits on the equipment for which an analysis must be conducted. As currently drafted, this could require a separate analysis for each transformer (or any long lead-time equipment) for which a spare is not available. A separate initial case would need to be developed to assess the Contingencies identified in Table 1 for each transformer. This could result in a countless number of additional cases. We recommend a threshold be established, such as all transformers with a low side voltage above 200 kV. We also recommend changing this from a separate sub-Requirement to one of the sensitivities to be considered under 2.1.3. We also believe that the statement at the end of R2.6 that indicates corrective action plans are not required solely to meet the performance requirements for sensitivities should also apply to the spare equipment requirement.Remove the phrase "not already included in the studies" in R2.4.3. With this phrase included, you cannot use a previous sensitivity study to support the current assessment and Requirement R2.5 allows the use of previous studies if the conditions are met. The 20 MW threshold identified as "material change" for generation in R2.5 is too small. The limit should be raised or based on a percentage of the study area'sinstalled generating capacity. R2.8 should be deleted. It is not necessary for reliability. What will be done with this information on the "largest Consequential Load Loss and the associated event caused by any P1 event and any P2 event" if it is documented? R2.9 should be deleted. It is not necessary for reliability. It will be difficult to determine the maximum permissible Non-Consequential Load value. It will end up being based on cost (monetary, societal, environmental, etc.), which is dependent, among other things, on the types of load being served. It very well may be a case by case situation.
Response: Part 2.3 is intended for the Planning Coordinator and/or Transmission Planner to assess the whether circuit breakers supporting the BES have interrupting capability for Faults that they will be expected to interrupt. Even though the effects of short circuit capability is localized and may be related to new	

Organization	Question 2 Comment
	planned Facilities, it is important to BES reliability. Part 2.3 has been revised to provide greater clarity. **2.3** The short circuit analysis portion of the Planning Assessment shall be conducted annually addressing the Near-Term Transmission Planning Horizon and can be supported by current or past studies as indicated in Requirement R2, part 2.6. The analysis shall be used to determine whether circuit breakers have interrupting capability for Faults that they will be expected to interrupt using the System short circuit model with any planned generation and Transmission Facilities in service which could impact the study area. Part 2.1 requires certain current studies be conducted each year for the Near-Term steady state assessment, which can be supplemented with past studies. The SDT disagrees that the statements are contradictory. No change made. Part 2.1.4 (now Part 2.1.5) has been revised to require that the assessment reflect the P0, P1, and P2 categories identified in Table 1 during the conditions that the System is expected to experience due to the possible unavailability of the long lead time Equipment. **2.1.5** When an entity's spare equipment strategy could result in the unavailability of major Transmission equipment that has a lead time of one year or more (such as a transformer), an analysis of the impact of this possible unavailability on System performance shall be assessed. The Planning Assessment shall reflect the P0, P1, and P2 categories identified in Table 1 during the conditions that the System is expected to experience due to the possible unavailability of the long lead time equipment. Part 2.6 (now Part 2.7) has been revised for clarity. **2.7** For planning events shown in Table 1, when the analysis indicates an inability of the System to meet the performance requirements in Table 1, the Planning Assessment shall include Corrective Action Plan(s) addressing how the performance requirements will be met. Revisions to the Corrective Action Plan(s) are allowed in subsequent Planning Assessments but the planned System shall continue to meet the performance requirements in Table 1. Corrective Action Plan(s) do not need to be developed solely to meet the performance requirements for a single sensitivity run in accordance with Requirements R2, parts 2.1.4 and 2.4.3. The Corrective Action Plan(s) shall: The material change wording has been deleted from the requirement. . Parts 2.8 and 2.9 were intended to contribute to open and transparent Transmission planning for peer review. The SDT reviewed both requirements and agrees that as written, they were unclear. Part 2.9 has been deleted. Part 2.8 has been revised and included as Part 2.9 in the new version to require that the Planning Assessment provides the expected largest Consequential Load Loss identified by the analysis of P1 and P2 events in Table 1 only. **2.9** The Planning Assessment shall provide the expected largest Consequential Load Loss (megawatt Demand) identified by the analysis of P1 and P2 events in Table 1.
Independent Electricity System Operator	1. We think "conduct and document" is more appropriate than "prepare". Suggest to make this change. 2. We understand the reason for introducing the spare equipment strategy in R2.1.4 is to address comments raised on planned and long-term outages. However, this is not the only cause of unavailability of major Transmission equipment for more than 12 months. Construction or line upgrade program may also require certain transmission facilities be taken out of service for a protracted period. We suggest that R2.1.4 be revised to "When an entity's spare equipment strategy or transmission project construction plan could result in the unavailability of".. 3. When would PCs and TPs be expected to perform the analysis referred to in R2.1.4 ? in anticipation of the possibility of unavailability of major transmission equipment of after such unavailability has occurred or is planned?

Organization	Question 2 Comment
	4. R2.3: The first sentence is unclear and the wording can be supported is misleading. We suggest the first sentence be revised to: The short circuit analysis portion of the Planning Assessment addressing the Near-Term Transmission Planning Horizon shall be conducted annually and be supported by current or past studies. Alternatively, language similar to R2.4 may be considered: "The Near-Term Transmission Planning Horizon portion of the short circuit analysis shall be assessed annually and be supported by current or past studies. 5. R2.4 stipulates the details of the study for Near-Term Transmission Planning horizon for the stability analysis. Unlike its steady state analysis counterpart, there is no requirement stipulated for the Long-Term Transmission Planning horizon for the stability analysis. Is this intentional, or do the same conditions apply to the Long-Term stability analysis" 6. R2.6: Suggest to change in the tables to Table 1 at the end of the second sentence. 7. We agree with the VRFs, Mitigation Horizons and Measures. We also agree with the VSLs except R2.5 is not included. However, If R2.5 is meant to be explanatory (to illustrate the conditions under which past studies may be used), then the conditions should be provided in those requirements (e.g. R2.3) that allow for the use of past studies. If, however, these conditions are meant to be requirements, then their VSLs should be developed.

Response: The SDT does not see the proposed language as an improvement. No change made.

In Part 2.1.4 (now Part 2.1.5) when a piece of long lead-time Equipment is unavailable, System adjustments will need to be made. The System, after it is adjusted to accommodate that piece of Equipment out of service will be treated as the "normal" (P0) condition in Table 1 and the rest of Table 1 will be applied as stated. Part 2.1.5 is intended for the Planning Coordinator and/or Transmission Planner to take into account their spare Equipment strategy for long lead time Equipment when assessing the performance of their System. If the loss of a piece of major Equipment can be replaced within a reasonable period of time, planning studies for the following year can assume that that piece of equipment will be replaced. If not, its impact of unavailability would need to be assessed. Part 2.1.5 has been revised to require that the assessment reflect the P0, P1, and P2 categories identified in Table 1 during the conditions that the System is expected to experience due to the possible unavailability of the long lead time Equipment.

> **2.1.5** When an entity's spare equipment strategy could result in the unavailability of major Transmission equipment that has a lead time of one year or more (such as a transformer), an analysis of the impact of this possible unavailability on System performance shall be assessed. The Planning Assessment shall reflect the P0, P1, and P2 categories identified in Table 1 during the conditions that the System is expected to experience due to the possible unavailability of the long lead time equipment.

Part 2.3 has been revised to provide greater clarity**.**

> **2.3** The short circuit analysis portion of the Planning Assessment shall be conducted annually addressing the Near-Term Transmission Planning Horizon and can be supported by current or past studies as indicated in Requirement R2, part 2.6. The analysis shall be used to determine whether circuit breakers have interrupting capability for Faults that they will be expected to interrupt using the System short circuit model with any planned generation and Transmission Facilities in service which could impact the study area.

The SDT added Part 2.5 to address your concern.

> **2.5** The Long-Term Transmission Planning Horizon portion of the Stability analysis shall be assessed to address the impact of proposed generation additions or changes in that timeframe and be supported by current or past studies.

Organization	Question 2 Comment
Part 2.6 (now Part 2.7) has been changed as suggested. **2.7** For planning events shown in Table 1, when the analysis indicates an inability of the System to meet the performance requirements in Table 1, the Planning Assessment shall include Corrective Action Plan(s) addressing how the performance requirements will be met. Revisions to the Corrective Action Plan(s) are allowed in subsequent Planning Assessments but the planned System shall continue to meet the performance requirements in Table 1. Corrective Action Plan(s) do not need to be developed solely to meet the performance requirements for a single sensitivity run in accordance with Requirements R2, parts 2.1.4 and 2.4.3. The Corrective Action Plan(s) shall: The Lower VSL has been revised accordingly. R2, Lower VSL: The responsible entity failed to comply with Requirement R2, part 2.9 or Requirement R2, part 2.6.	
Kansas City Power & Light	R2.1.3 is this indicating that only one of the variations need to be studied? (in one or more of the following conditions). Recommend having the planner work with the load to determine what sensitivity studies to perform. R2.1.4 it is unclear as to what should be done with the analysis that incorporates the company's spare equipment strategy. Is this requirement inferring that a company's spare equipment strategy need to ensure that it can still operate to within the requirements for contingencies of Table 1 without the component? R2.2.1 ? is the intent to have the study for the 10 year horizon or to include any project that is started within the next 10 years and thus the study must be extended to the forecasted completion of the project (conceivably as long as 20 years or more?) R2.5.2 - Remove the word intervening and this requirement must be more specific about what this requirement is trying to communicate and acccomplish. R2.6.4 recommend clarifying how situations beyond the control of the TP or PC are determined. It is unclear if this is to imply that if something is outside of the control of the department who conducts the planning studies or if it is outside the control of the registered function's legal entity (i.e. corporation). R2.8 appears to be nonessential information for reliability; for what purpose does this requirement exist? R2.9 - appears to be nonessential information for reliability; for what purpose does this requirement exist?
Response: Part 2.1.3 (now Part 2.1.4) is intended for the Planning Coordinator or the Transmission Planner to investigate at least one of the conditions listed. Part 2.1.3 has been revised to provide greater clarity. It is expected that there will be coordination between the Planning Coordinator, the Transmission Planner and the other impacted Functional Entities. **2.1.4** For each of the studies described in Requirement R2, parts 2.1.1 and 2.1.2, sensitivity case(s) shall be utilized to demonstrate the impact of changes to the basic assumptions used in the model for the list of items shown below. To accomplish this, the sensitivity analysis in the Planning Assessment must vary one or more of the following conditions not already included in the studies by a sufficient amount to stress the System within a range of credible conditions that demonstrate a measurable change in performance. • Real and reactive forecasted Load.	

Organization	Question 2 Comment
	• Expected transfers. • Expected in service dates of new or modified Transmission Facilities. • Reactive resource capability. • Generation additions, retirements, or other dispatch scenarios. • Controllable Loads and Demand Side Management. • Duration or timing of planned Transmission outages. In Part 2.1.4 (now Part 2.1.5) when a piece of long lead-time Equipment is unavailable, System adjustments will need to be made. The System, after it is adjusted to accommodate that piece of Equipment out of service will be treated as the "normal" (P0) condition in Table 1 and the rest of Table 1 will apply. Part 2.1.5 is intended for the Planning Coordinator and/or Transmission Planner to take into account their spare Equipment strategy for long lead time Equipment when assessing the performance of their System. If the loss of a piece of major Equipment can be replaced within a reasonable period of time, planning studies for the following year can assume that that piece of equipment will be replaced. If not, its impact of unavailability would need to be assessed. Part 2.1.5 has been revised to require that the assessment reflect the P0, P1, and P2 categories identified in Table 1 during the conditions that the System is expected to experience due to the possible unavailability of the long lead time Equipment. **2.1.5** When an entity's spare equipment strategy could result in the unavailability of major Transmission equipment that has a lead time of one year or more (such as a transformer), an analysis of the impact of this possible unavailability on System performance shall be assessed. The Planning Assessment shall reflect the P0, P1, and P2 categories identified in Table 1 during the conditions that the System is expected to experience due to the possible unavailability of the long lead time equipment. Part 2.2.1 has been revised because extending the Planning Horizon beyond 10 years for projects with lead time longer than 10 years is already covered in the definition of Long-Term Transmission Planning Horizon. This allowance is needed to provide planning flexibility, and is at the discretion of the Planning Coordinator or Transmission Planner. For example, if the System is found not to meet performance standard in year 10, but the project to correct the loading cannot be placed in service for 12 years, then the Corrective Action Plan needs to identify the interim solutions before the project can be brought on line. **2.2.1** A current study assessing expected System peak Load conditions for one of the years in the Long-Term Transmission Planning Horizon and the rationale for why that year was selected. Part 2.5.2 has been revised and included as Part 2.6.2 in the new version to provide greater clarity. **2.6.2** For steady state, short circuit, or Stability analysis: the study shall not include any material changes unless a technical rationale can be provided to demonstrate that System changes do not impact the performance results in the study area. Part 2.6.4 (now 2.7.5) does not prejudge the acceptability of the situation outside the control of the Planning Coordinator or Transmission Planner, which has prevented the implementation of the Corrective Action Plan, provided that the Planning Coordinator or Transmission Planner documents that they are taking actions to resolve the situation. The Transmission Planner or Planning Coordinator shall document the situation causing the problem, alternatives evaluated, and the use of Non-Consequential Load Loss or curtailment of Firm Transmission Service. Parts 2.8 and 2.9 were intended to contribute to open and transparent Transmission planning for peer review. The SDT reviewed both requirements and agrees that as written, they were unclear. Part 2.9 has been deleted. Part 2.8 has been revised and included as Part 2.9 in the new version to require that the Planning

Organization	Question 2 Comment
Assessment provides the expected largest Consequential Load Loss identified by the analysis of P1 and P2 events in Table 1 only. **2.9** The Planning Assessment shall provide the expected largest Consequential Load Loss (megawatt Demand) identified by the analysis of P1 and P2 events in Table 1.	
ReliabilityFirst Corporation	R2- Suggest changing annual Planning Assessment to "annual Planning Assessment Report". Requires short circuit analysis, at present NERC wide common data base for conducting short circuit analysis, does not exist. Short circuit analysis is only performed when there are major system changes and their impact is local. R2.1.1 requires either Year One or year two, and year five. NERC members utilize Models developed by MMWG for the assessment study needs and they are usually lag by one year. R2.1.3 -Suggest changing last bullet to read "Transmission lines, Transformers, Generating unit and Reactive sources that are scheduled for extended outages during the study period should not be included in the Assessment Model." R2.4.1- The requirements in the two sentences seem to contradict each other. R2.4.2 – This does not mention modeling dynamic behavior of loads. R2.5.2 – "could include" is weak and may not be enforceable. Suggest removing all the text after the first paragraph. Does this require any additional studies to demonstrate that the changes do not impact previous conclusions? R2.7 – Short Circuit analysis should not be a part of Performance Requirements". These should be included in "PRC" Standards
Response: Requirement R2 has been revised. **R2.** Each Transmission Planner and Planning Coordinator shall prepare an annual Planning Assessment of its portion of the BES. This Planning Assessment shall use current or past studies, document assumptions, summarize documented results, and cover steady state analyses, short circuit analyses, and Stability analyses. Part 2.1.1 is intended to require studies for System Peak Load Conditions for 2 of the years in the near-term planning horizon: (1) A year five case to identify potential problem that can be addressed if the planned projects proceed as scheduled; (2) A Year One or year two case to identify any potential problems unanticipated in the five-year case, which if not addressed, could impact operations as time progresses. The standard provides flexibility for the Planning Coordinator or Transmission Planner to use past studies to support the current year assessment, and to assess other years in addition to those identified in Part 2.1.1. Therefore, if the models developed by MMWG lag by one year, it can qualify as a valid past study. Planned outages of generation and Transmission Facilities are included in Part 1.1.1 (included as Part 1.1.2 in the new version). Transmission Facilities covers lines, reactive devices, and other substation equipment. Part 2.1.3 (now Part 2.1.4) is intended to cover sensitivity studies on "what if" scenarios. Part 2.1.4 has been revised to provide greater clarity. **2.1.4** For each of the studies described in Requirement R2, parts 2.1.1 and 2.1.2, sensitivity case(s) shall be utilized to demonstrate the impact of changes to the basic assumptions used in the model for the list of items shown below. To accomplish this, the sensitivity analysis in the Planning Assessment must vary one or more of the following conditions not already included in the studies by a sufficient amount to stress the System within a range of credible conditions that demonstrate a measurable change in performance.	

Organization	Question 2 Comment
	• Real and reactive forecasted Load. • Expected transfers. • Expected in service dates of new or modified Transmission Facilities. • Reactive resource capability. • Generation additions, retirements, or other dispatch scenarios. • Controllable Loads and Demand Side Management. • Duration or timing of planned Transmission outages. Part 2.4.1 is intended to allow the use of aggregated system Load models if more accurate Load models are not available. Therefore, the second and third sentences are not in conflict. In Part 2.4.1 the SDT specifies the dynamic Load model representation for on peak because the System voltages are generally lower during on peak. The percentage of motor Load, e.g., in air conditioners, could significantly increase reactive power requirements especially when they stall due to low System voltage and can therefore impact dynamic System performance on-peak. However, motor Load would likely not pose the same problem during off-peak as the System voltages are usually higher. So, in Part 2.4.2, it can be left to the discretion of the Planning Coordinator or Transmission Planner whether the dynamic motor Load would need to be represented per the requirement in Part 2.4.1, Part 2.5.2 has been revised and included as Part 2.6.2 in the new version to provide greater clarity**.** **2.6.2** For steady state, short circuit, or Stability analysis: the study shall not include any material changes unless a technical rationale can be provided to demonstrate that System changes do not impact the performance results in the study area. Part 2.7 is intent to require a Corrective Action Plan if the short circuit duty requirement exceeds the current interrupting duty of the circuit breaker. No change made.

3. Requirement R3 – Please provide any specific comments on the requirement text, VRF, Time Horizon, measure associated with the requirement, data retention associated with the requirement, and/or the VSL associated with the requirement.

Summary Consideration: Minor wording changes were made to Requirement R3 to clarify that this requirement pertains to the requirements of the studies needed to support the Planning Assessment. Several industry commenters wanted confirmation that Requirement R3 applied to both the Planning Coordinator and the Transmission Planner feeling that the requirement could result in duplication of effort. The SDT directed the commenters to Requirement R6 (now Requirement R7), which provides a mechanism for determining individual and joint responsibilities for performing the required studies for the Planning Assessment. Several clarifying changes were made to the wording of the parts under Requirement R3 to address industry comments.

R3 For the steady state portion of the Planning Assessment, each Transmission Planner and Planning Coordinator shall perform studies for the Near-Term and Long-Term Transmission Planning Horizons in Requirement R2, parts 2.1, and 2.2. The studies shall be based on computer simulation models using data provided in Requirement R1.

R3.1 Studies shall be performed for planning events to determine whether the BES meets the performance requirements in Table 1 based on the Contingency list created in Requirement R3, part 3.4.

R3.2 Studies shall be performed to assess the impact of the extreme events which are identified by the list created in Requirement R3, part 3.5.

R3.3 Contingency analyses shall be performed and:

R3.3.2 Trip generators where simulations show generator bus voltages are less than known or assumed minimum generator steady state or ride through voltage limitations. Include in the assessment any assumptions made.

R3.3.3 Ensure relay loadability limits are respected.

R3.3.4 Simulate the expected automatic operation of existing and planned devices designed to provide Steady State control of electrical system quantities when such devices impact the study area. These devices may include equipment such as phase-shifting transformers, load tap changing transformers, and switched capacitors and inductors.

R3.4 Those planning events in Table 1, that are expected to produce more severe System impacts on its portion of the BES, shall be identified and a list of those Contingencies to be evaluated for System performance in Requirement R3, part 3.1 created. The rationale for those Contingencies selected for evaluation shall be available as supporting information.

R3.4.1 The Planning Coordinator and Transmission Planner shall coordinate with adjacent Planning Coordinators and Transmission Planners to ensure that Contingencies on adjacent Systems which may impact their Systems are included in the Contingency list.

R3.5 Those extreme events in Table 1 that are expected to produce more severe System impacts shall be identified and a list of those events to be evaluated for System performance in Requirement R3, part 3.2 created. The rationale for those Contingencies selected for evaluation shall be available as supporting information. If the analysis concludes there are cascading outages caused by the occurrence of extreme events, an evaluation of possible actions designed to reduce the likelihood or mitigate the consequences and adverse impacts of the event(s) shall be conducted.

R3, moderate VSL: The responsible entity did not base its studies on computer simulation models using data provided in Requirement R1.

Organization	Question 3 Comment
Northeast Power Coordinating Council	R3.3.2 Traditionally transmission planners have used their judgment about the minimum steady state voltage limitations of generators. If this standard is going to require its incorporation into the assessments, there should be an MOD standard developed requiring the generators to provide the necessary information prior to its inclusion as a requirement in this standard. R3.3.3 " PRC-023 requires relay loadability to be reflected in facility ratings. Therefore this additional requirement is unnecessary and should be deleted. R3.5 ? We recommend that the requirement for Extreme Event testing be removed from this standard as there is no requirement to develop a Corrective Action Plan to address unacceptable consequences. Otherwise we recommend the following:- Extreme Event performance should be a consideration when developing Corrective Action Plans to address Planning Events- It should be clear that an evaluation does not require solution development for all Extreme Events- Change "an evaluation of possible actions" to "where appropriate, reasonably practicable actions designed to reduce the likelihood or mitigate the consequences and adverse impacts of the event(s) shall be considered. For Requirements R3.4 and R3.5, what defines "more severe System impacts"?
Response: R3.3.2: The SDT agrees that judgment is used today. There is a project (PRC-024) that will address this issue. The wording has been changed to clarify the intent of the requirement. For this standard, all that is required is to identify the assumptions concerning voltage limitations of the unit and ensure that they are being treated within the simulation as they will react in the real world. No change made for this comment. R3.3.3: The SDT believes that the requirement is necessary for the TPL standard and has clarified the requirement in an attempt to remove the objections. **R3.3.3** Ensure relay loadability limits are respected. R3.5: The SDT disagrees that the standard should mandate corrective actions for extreme events due to the low probability of these events. However, the SDT believes that those extreme events that are expected to produce more serve System impacts should be analyzed to assess the extent of the impacts on the System to provide the Planning Coordinator/Transmission Planner with information to decide, where appropriate, if it is reasonable to provide some corrective actions to reduce the possibility or limit the consequences of an extreme event. The need to identify possible actions addresses an Order 693 directive. Your suggested wording would make identification of possible actions optional. No change made. R3.4 & R3.5: Requirement R3, parts 3.4 and 3.5 require the Planning Coordinator/Transmission Planner to prepare a list of planning event and extreme event Contingencies that, in the Planning Coordinator's and Transmission Planner's judgment, are expected to produce more severe System impacts, and to document the reasons for the Contingencies selected. The documented rationale provided by the Planning Coordinator/Transmission Planner will define what is considered to be the more severe System impacts.	
Transmission Planning	R3.3.1. COMMENT: This would make sense for 3-terminal lines which we are including in contingency files, but for normal 2-terminal lines, very unnecessary. Suggested language at the end would say "Simulation of individual element outages is allowed if it produces an effect more severe that the entire circuit outage". This implies that by modeling individual branch outages would represent more severe conditions than entire circuit outages due to the fact that there would be consequential load loss. R3.4. COMMENT: Table 1 as drafted is very confusing and could be interpreted incorrectly. Recommend revising the header for "Table 1 " Steady State & Stability Performance Extreme Events" Should be changed to "Table 2 - Steady State & Stability Performance Extreme Events" because the expected performance requirements associated with Planning Events could be

Organization	Question 3 Comment
	interpreted to be applicable to Extreme Events as well. Alternatively, the performance requirements at the top of Table 1 need to include a statement that they are applicable to Planning Events only.
Response: R3.3.1: The SDT disagrees with the comment as the intent of Requirement R3, part 3.3.1, consistent with FERC Order 693, is to perform the simulation to reflect how the Protection System will operate in the real System for each Contingency without operator intervention. The requirement does not preclude the Planning Coordinator/Transmission Planner from studying individual elements or other maintenance scenarios. Planning event P2-1 addresses an element outage configuration. Please also see footnote 8. No change made. R3.4: The SDT feels that the table headings are sufficiently clear as stated. No change made.	
SERC Engineering Committee Planning Standards Subcommittee	R3.1:In Requirement R3.1, it is suggested that the word "contingency" be added to describe the lists created in R3.4.: "Studies shall be performed to determine whether the BES meets the performance requirements in Table 1 based on the contingency lists created in Requirement R3.4. R3.3.1: Recommend that it be clarified that simulation of the more conservative case of a single branch (bus-to-bus) outage is acceptable, as opposed to always simulating the full breaker-to-breaker outage. R3.3.2The requirement needs to be clarified. It is not clear if it is referring to the ability of plants to meet their voltage schedule, or to their ability to stay connected during post contingencies. R3.3.4:In Requirement R3.3.4, it is suggested adding the words "and switched" to capacitors and reactors:"Simulate the expected operation of existing and planned devices designed to provide Steady State control of electrical system quantities. These devices include equipment such as phase-shifting transformers, load tap changing transformers, and switched capacitors and inductors.
Response: R3.1: The SDT agrees and has modified Requirement R3, part 3.1 accordingly **R3.1** Studies shall be performed for planning events to determine whether the BES meets the performance requirements in Table 1 based on the Contingency list created in Requirement R3, part 3.4. R3.3.1: The SDT disagrees with the comment as the intent of Requirement R3, part 3.3.1, consistent with FERC Order 693, is to perform the simulation to reflect how the Protection System will operate in the real System for each Contingency without operator intervention. The requirement does not preclude the Planning Coordinator/Transmission Planner from studying individual elements or other maintenance scenarios. Planning event P2-1 addresses a branch outage configuration. Please also see footnote 8 (now footnote7). No change made. R3.3.2: The wording has been changed to clarify the intent of the requirement. For this standard, all that is required is to identify the assumptions concerning voltage limitations of the unit and ensure they are being treated within the simulation as they will react in the real world. **R3.3.2** Trip generators where simulations show generator bus voltages are less than known or assumed minimum generator steady state or ride through voltage limitations. Include in the assessment any assumptions made. R3.3.4: The SDT agrees and has revised the wording. **R3.3.4** Simulate the expected automatic operation of existing and planned devices designed to provide Steady State control of electrical system quantities	

Organization	Question 3 Comment
when such devices impact the study area. These devices may include equipment such as phase-shifting transformers, load tap changing transformers, and switched capacitors and inductors.	
Modesto Irrigation District	On page 10 under Section R3.3.3, I believe more specifics on what is meant by "relay loadability" need to be given in regard to the requirement of "identify how loadability is analyzed in the steady state simulation". For example, does the analyst need to state that the maximum loading allowed on any system element is less than or equal to 150% of the element's maximum seasonal rating ? We believe that R3.3.1-R3.3.4 should be bullets under R3.3
Response: R3.3.3: The SDT has clarified the requirement to ensure relay loadability limits, as defined in the relay loadability standard, are respected in the analysis. **R3.3.3** Ensure relay loadability limits are respected. R3.3.1-R3.3.4: The SDT disagrees as these are mandatory requirements of the Contingency analyses. Bullets are only used to identify the possible, but not all inclusive, elements of a menu. No change made.	
OPUC	3. Requirement R3 ? Please provide any specific comments on the requirement text, VRF, Time Horizon, measure associated with the requirement, data retention associated with the requirement, and/or the VSL associated with the requirement.Comments:A: R3.3 should be modified to become the requirement to conduct contingency analyses with R3.3.1 thru 4 presented as bullets there-under.
Response: R3.3.1-R3.3.4: The SDT disagrees as these are mandatory requirements of the Contingency analyses. Bullets are only used to identify the possible, but not all inclusive, elements of a menu. No change made.	
Bonneville Power Administration	R3.1 should be clarified. Suggested clarification: R3.1 - "Studies shall be performed to determine whether the BES meets the performance requirements in Table 1. A reduced set of contingencies can be simulated based on a list created in requirement R3.4." As currently drafted, R3.3 is not a requirement. Without the statements in R3.3.1-R3.3.4, R3.3 is simply a phrase. Sub-Sub-Requirements R3.3.1 through R3.3.4 should be bullets under R3.3, with the language in R3.3 modified so that it becomes the requirement to conduct contingency analyses that address the four resulting bullets R3.3.2 is unclear as drafted. The minimum steady state voltage limitation for synchronous generators is not a very meaningful value. All generators with an automatic voltage regulator will maintain the set point voltage until the VAR capability of the generator is exceeded, and then the voltage will deteriorate. Requirement R3.4 also needs to be clarified as follows: R3.4 - "A reduced list of Contingencies can be developed for System Performance evaluation in Requirement R3.1 that includes those Planning Event Contingencies that are expected to produce more severe System impacts based on system performance as required in Table 1. "The Statement at the end of R3.4 and R4.4 says "rationale for the Contingencies selected for evaluation shall be available as supporting information and shall include an

Organization	Question 3 Comment
	explanation of why the remaining Contingencies would exhibit better system performance." The statement does not make sense and should be deleted since the contingencies selected are those to produce more sever system performance. R3.5 ? We disagree with the requirement to explain why remaining Extreme Contingencies would produce less severe System results than the ones selected for study. The first part of the requirement requires identification of events that produce more severe System impacts. The reason the others were not selected is because they were less severe or non-credible. In any case, theoretically, there can always be a more severe Extreme Contingencies than the one selected for study. For example, if the Extreme Contingency studied were simultaneous loss of 3 transmission lines with failure of redundant RAS, then simultaneous loss of 4 lines with failure of 2 sets of redundant RAS would be more severe. Listing all possible extreme events could result in a limitless list.

Response: R3.1: The SDT agrees and has modified the requirement.

> **R3.1** Studies shall be performed for planning events to determine whether the BES meets the performance requirements in Table 1 based on the Contingency list created in Requirement R3, part 3.4.

R3.3:The SDT has modified the wording to provide greater clarity. The SDT disagrees that Requirement R3 parts 3.3.1- 3.3.4 should be bullets as these are mandatory parts of the required contingency analyses. Bullets are only used to identify the possible but not all inclusive elements of a menu. No change made.

> **R3.3** Contingency analyses shall be performed and:

R3.3.2: The wording has been changed to clarify the intent of the requirement. For this standard, all that is required is to identify the assumptions concerning voltage limitations of the unit and ensure they are being treated within the simulation as they will react in the real world.

> **R3.3.2** Trip generators where simulations show generator bus voltages are less than known or assumed minimum generator steady state or ride through voltage limitations. Include in the assessment any assumptions made.

R3.4: The SDT has made a revision to the posted wording of the requirement to add clarity and address your comment.

> **R3.4** Those planning events in Table 1, that are expected to produce more severe System impacts on its portion of the BES, shall be identified and a list of those Contingencies to be evaluated for System performance in Requirement R3, part 3.1 created. The rationale for those Contingencies selected for evaluation shall be available as supporting information.

R3.4 & R4.4: Several industry commenters have indicated that an explanation of “why the remaining Contingencies would produce less severe System performance” should be deleted since the Contingencies selected are already justified as those that produce more severe System performance. The SDT agrees and has deleted the requirement for an “explanation of why the remaining Contingencies would produce less severe System results”.

R3.5: Several industry commenters have indicated that an explanation of “why the remaining Contingencies would produce less severe System performance” should be deleted since the contingencies selected are already justified as those that produce more severe System performance. The SDT agrees and has deleted the requirement for an “explanation of why the remaining Contingencies would produce less severe System results”.

> **R3.5** Those extreme events in Table 1 that are expected to produce more severe System impacts shall be identified and a list of those events to be evaluated for System performance in Requirement R3, part 3.2 created. The rationale for those Contingencies selected for evaluation shall be available as supporting information. If the analysis concludes there are cascading outages caused by the occurrence of extreme events, an evaluation of possible

Organization	Question 3 Comment
actions designed to reduce the likelihood or mitigate the consequences and adverse impacts of the event(s) shall be conducted.	
MRO MRO NERC Standards Review Subcommittee	MRO NSRS proposes the following comments for R3.Revise the R3.3.2 text to clarify that subsequent analysis is performed on generators whose voltages are expected to fall below the minimum voltage limits. MRO NSRS suggests this text: "Consider the minimum steady state voltage limitations of all generators and identify how generators with bus voltages below its minimum voltage limits are analyzed in the subsequent steady state simulations. Revise the R3.3.3 text to more clearly relate to the specific requirements in PRC-023. MRO NSRS suggests this text: "Incorporate relay loadability per PRC-023 and identify how relay loadability is analyzed in the steady state simulation.
Response: R3.3.2: The wording has been changed to clarify the intent of the requirement. For this standard, all that is required is to identify the assumptions concerning voltage limitations of the unit and ensure they are being treated within the simulation as they will react in the real world. **R3.3.2** Trip generators where simulations show generator bus voltages are less than known or assumed minimum generator steady state or ride through voltage limitations. Include in the assessment any assumptions made. R3.3.3: The SDT believes that the requirement is necessary for the TPL standard and has clarified the requirement. **R3.3.3** Ensure relay loadability limits are respected.	
SERC Engineering Committee Dynamics Review Subcommittee (DRS)	R3.3.3 applies to "all Transmission lines. Should this only apply to lines above 230 kV and lines identified as critical below 230 kV" At least this should be limited to BES lines. R3.3.4 says "Simulate the expected operation of existing and planned devices designed to provide Steady State control of electrical system quantities. This should say, "Simulate the expected operation of existing and planned BES devices designed to provide Steady State control of BES electrical system quantities.
Response: R3.3.3: The SDT has clarified the requirement to ensure relay loadability limits, as defined in the relay loadability standard, are respected in the analysis. **R3.3.3** Ensure relay loadability limits are respected. R3.3.4: The SDT disagrees as this standard only applies to the BES. No change made.	
SERC Engineering Committee Reliability Review Subcommittee (RRS)	In R3, should the "and" in the first sentence actually be "or"? especially for same footprint? Perhaps the "and" should be replaced by "and/or". Can the PC satisfy this requirement by reviewing studies performed by differing TPs or is separate analysis really required especially when the TP and PC have the same footprint"? In Requirement R3.1, it is suggested that the word "contingency" be added to describe the lists created in R3.4. R3.3.1. Recommend that it be clarified that simulation of the more conservative case of a single branch (bus-to-bus) outage is acceptable, as opposed to always simulating the full breaker-to-breaker outage. R3.3.2The requirement needs to be clarified. It is not clear if it is referring to the ability of plants to meet their voltage schedule, or

Organization	Question 3 Comment
	to their ability to stay connected during post contingencies. Studies shall be performed to determine whether the BES meets the performance requirements in Table 1 based on the contingency lists created in Requirement R3.4. "R3.3.2"For all generators, studies shall consider the minimum steady state voltage limitations and identify how the generators are analyzed in the steady state simulation. The above wording needs to be changed, as the intent of this sentence is unclear. Is the intent that Transmission Planners need to ensure that generating plants can meet their voltage schedule under Base Case (N-0) conditions? Is this the same as the generator underexcited operation limit?? In R3.3.2, need guidance on how to consider minimum steady state voltage limitations. Is there a NERC team addressing this" R3.3.3"For all Transmission lines, studies shall consider relay loadability and identify how loadability is analyzed in the steady state simulation. The above wording needs to be changed, as the intent of this sentence is unclear. Is the intent that Transmission Planners need to ensure that relay loading limits are included in the facility ratings? Is this the 130% of conductor rating limit?? Revise M3 to include a reference to R6, since the allocation of responsibilities will directly affect the evidence which is to be provided. In the VSL for R3, a severe VSL is listed as failing to meet performance requirement for P0 or P1. We do not understand why a severe VSL would be applied to an all ties closed event which should have little if any problems. We believe that this should be a lower or moderate VSL instead of severe. In R3.3.3 is the relay loadability required for all HV and EHV voltage levels? Previously NERC had required this for 230-kV and above only. This would be massive requirement for our Transmission Lines between 100 and 200-kV. Studies shall be performed to determine whether the BES meets the performance requirements in Table 1 based on the contingency lists created in Requirement R3.4. ? In Requirement R3.3.4, it is suggested adding the words "and switched" to capacitors and reactors: Simulate the expected operation of existing and planned devices designed to provide Steady State control of electrical system quantities. These devices include equipment such as phase-shifting transformers, load tap changing transformers, and switched capacitors and inductors.

Response: R3: The SDT believes that the requirement belongs to both the Planning Coordinator and the Transmission Planner. Requirement R7 provides a mechanism for determining individual and joint responsibilities for performing the required studies for the Planning Assessment regardless of whether the Planning Coordinator and Transmission Planner footprints overlap or not. No change made.

R3.1. The SDT agrees and has modified the requirement.

> **R3.1** Studies shall be performed for planning events to determine whether the BES meets the performance requirements in Table 1 based on the Contingency list created in Requirement R3, part 3.4.

R3.3.1: The SDT disagrees with the comment as the intent of Requirement R3, part 3.3.1, consistent with FERC Order 693, is to perform the simulation to reflect how the Protection System will operate in the real System for each Contingency without operator intervention. The requirement does not preclude the Planning Coordinator/Transmission Planner from studying individual elements or other maintenance scenarios. Planning event P2-1 addresses a branch outage configuration. Please also see footnote 8 (now footnote 7). No change made.

R3.3.2: The wording has been changed to clarify the intent of the requirement. For this standard, all that is required is to identify the assumptions concerning voltage

Organization	Question 3 Comment
limitations of the unit and ensure they are being treated within the simulation as they will react in the real world. There is a project (PRC-024) that will address this issue of minimum steady state voltage limitations. **R3.3.2** Trip generators where simulations show generator bus voltages are less than known or assumed minimum generator steady state or ride through voltage limitations. Include in the assessment any assumptions made. R3.3.3: The SDT has clarified the requirement to ensure relay loadability limits, as defined in the relay loadability standard, are respected in the analysis. **R3.3.3** Ensure relay loadability limits are respected. M3: The SDT disagrees. Requirement R6 (now Requirement R7) is an overarching requirement that applies to the entire set of analysis required to meet the requirements of the TPL standard and to the Corrective Action Plan developed as part of the assessment. The intent of this requirement is to clarify that TPL requirements can be met through joint or shared analysis. Coordinating and/or joint analysis does not alleviate the responsibility that all entities need to comply with the standard requirements. Therefore, the SDT sees no reason to link Requirement R3 directly to Requirement R6 (now Requirement R7) in the measure or anywhere else. The requirements stand by themselves and do not require such a linkage. No change made. VSL: The SDT disagrees with your assessment. The failure to perform studies to determine the BES meets performance requirement for the P0 and P1 categories is deemed to be severe as these categories represent steady state (no Contingency) and single Contingency (probable) operation and are significant elements of the overall requirement. No change made. R3.3.3: The SDT has clarified the requirement to ensure relay loadability limits, as defined in the relay loadability standard, are respected in the analysis. R3.3.4: The SDT agrees and has revised the wording. **R3.3.4** Simulate the expected automatic operation of existing and planned devices designed to provide Steady State control of electrical system quantities when such devices impact the study area. These devices may include equipment such as phase-shifting transformers, load tap changing transformers, and switched capacitors and inductors.	
FirstEnergy Corp	Specific comments, Requirements of R3:A. R3: For readability revise "computer simulations using models utilizing data" to "computer simulation models utilizing data" B. R3.3.2: The intent of this requirement is not clear. What is the voltage limitation sought? Vmin at the generator terminals, high-side of the GSU, low-side GSU, etc. Also the requirement text "identify how the generators are analyzed in the steady state simulation" does not drive a particular reliability goal. If the objective is to require tripping of units during a contingency simulation that are identified to be below their stated Vmin then the requirement should clearly state that the unit should be tripped and solution resolved. C. R3.3.3: This requirement should be removed as it is redundant with facility rating requirements stated in PRC-023, FAC-008 and FAC-009. D. R3.3.4: For readability we suggest inserting the word "may" in between "devices include".We agree with the stated Measures, VRF, Time-Horizon, Data Retention and VSL of requirement R3
Response: R3: The SDT has revised the wording accordingly.	

Organization	Question 3 Comment
	R3 For the steady state portion of the Planning Assessment, each Transmission Planner and Planning Coordinator shall perform studies for the Near-Term and Long-Term Transmission Planning Horizons in Requirement R2, parts 2.1, and 2.2. The studies shall be based on computer simulation models using data provided in Requirement R1. R3.3.2: The wording has been changed to clarify the intent of the requirement. For this standard, all that is required is to identify the assumptions concerning voltage limitations of the unit and ensure they are being treated within the simulation as they will react in the real world. **R3.3.2** Trip generators where simulations show generator bus voltages are less than known or assumed minimum generator steady state or ride through voltage limitations. Include in the assessment any assumptions made. R3.3.3: The SDT believes that the requirement is necessary for the TPL standard and has clarified the requirement in an attempt to remove the objections **R3.3.3** Ensure relay loadability limits are respected. R3.3.4: The STD has added the word "may" in between "devices include". **R3.3.4** Simulate the expected automatic operation of existing and planned devices designed to provide Steady State control of electrical system quantities when such devices impact the study area. These devices may include equipment such as phase-shifting transformers, load tap changing transformers, and switched capacitors and inductors. Measures, VRF, Time Horizon, Data Retention and VSLs: Thank you for your comment.
TVA System Planning	In R3.3.2, need guidance on how to consider minimum steady state voltage limitations. Is there a NERC team addressing this? It is not clear if it is referring to the ability of plants to meet their voltage schedule, or to their ability to stay connected during post contingencies. In R3, should the "and" in the first sentence actually be "or"? especially for same footprint? Perhaps the "and" should be replaced by "and/or". Can the PC satisfy this requirement by reviewing studies performed by differing TPs or is separate analysis really required especially when the TP and PC have the same footprint? In the VSL for R3, a severe VSL is listed as failing to meet performance requirement for P0 or P1. We do not understand why a severe VSL would be applied to an all ties closed event which should have little if any problems. We believe that this should be a lower or moderate VSL instead of severe. In R3.3.3 is the relay loadability required for all HV and EHV voltage levels? Previously NERC had required this for 230-kV and above only. This would be massive requirement for our TLs between 100 and 200-kV.
Response: R3.3.2: The wording has been changed to clarify the intent of the requirement. For this standard, all that is required is to identify the assumptions concerning voltage limitations of the unit and ensure they are being treated within the simulation as they will react in the real world. There is a project (PRC-024) that will address this issue. **R3.3.2** Trip generators where simulations show generator bus voltages are less than known or assumed minimum generator steady state or ride through	

Organization	Question 3 Comment
voltage limitations. Include in the assessment any assumptions made. R3: The SDT believes that the requirement belongs to both the Planning Coordinator and the Transmission Planner regardless of whether the Planning Coordinator and Transmission Planner footprints overlap or not. No change made. VSL: The SDT disagrees with your assessment. The failure to perform studies to determine the BES meets performance requirement for the P0 and P1 categories is deemed to be severe as these categories represent steady state (no Contingency) and single Contingency (probable) operation and are significant elements of the overall requirement. No change made. R3.3.3: The SDT has clarified the requirement to ensure relay loadability limits, as defined in the relay loadability standard, are respected in the analysis. **R3.3.3** Ensure relay loadability limits are respected.	
Exelon Transmission Planning	In R3.3.2 it should be clear that the TP / TO is not required to provide whatever voltage that the unit desires and that the intent of this requirement is to ensure that if a generator is going to trip due to low voltage that the simulation will include the generator tripping. 3.3.2 and 3.3.3. are somewhat redundant with 3.3.1 " suggest rewording 3.3.1 to say including transmission lines with respect to relay loadability and generators with respect to minimum operating voltage. If 3.3.3 is targeting the low voltage ride through capability of the wind generators it should be clear.
Response: R3.3.2: The wording has been changed to clarify the intent of the requirement. For this standard, all that is required is to identify the assumptions concerning voltage limitations of the unit and that they are being treated within the simulation as they will react in the real world (in your comment 3.3.3 referring to low voltage ride through, we assume in our response that you were referring to 3.3.2) **R3.3.2** Trip generators where simulations show generator bus voltages are less than known or assumed minimum generator steady state or ride through voltage limitations. Include in the assessment any assumptions made. R3.3.2 & R3.3.3: The SDT does not agree that Requirement R3 parts 3.3.1, 3.3.2 and 3.3.3 are somewhat redundant as they require distinctly different simulation actions. No change made. R3.3.3: This requirement is for all generators, not just wind. It is important for the planning models to accurately reflect how the System will actually perform.	
Southern Company	R3.3.3 applies to "all Transmission lines. To be consistent with the relay loadability standard, this should only apply to lines above 230 kV and lines between 100 kV and 230 kV identified as critical. R3.2 and R3.5 are both addressing the Extreme Events. However, R3.2 is referring to R3.5 while R3.5 is referring to R3.2. We suggest deleting the reference back to R3.2 which is in R3.5. A similar situation exists for R3.1 and R3.4. R3 seems to use the words studies and analyses interchangeably. Did the SDT intend for them to be the same? Using one term or the other would be better understood.

Organization	Question 3 Comment
	There are two tables labeled table 1. It would be much clearer to mark them table 1 Planning Events and table 2 Extreme Events.
Response: R3.3.3: The SDT has clarified the requirement to ensure relay loadability limits are respected in the analysis. **R3.3.3** Ensure relay loadability limits are respected. R3.1 & R3.4 and R3.2 & R3.5: The SDT has decided to retain the back references for clarity. No change made. R3: The SDT agrees that use of studies and analyses can be confusing. The wording in Requirement R3 has been revised to use studies. **R3** For the steady state portion of the Planning Assessment, each Transmission Planner and Planning Coordinator shall perform studies for the Near-Term and Long-Term Transmission Planning Horizons in Requirement R2, parts 2.1, and 2.2. The studies shall be based on computer simulation models using data provided in Requirement R1. Table 1: Based on Industry feedback, the SDT has decided to have one Table and believes that the headings are sufficiently clear to distinguish between planning and extreme events. No change made.	
United Illuminating	R3.3.2 Comment Traditionally transmission planners have used their judgment about the minimum steady state voltage limitations of generators. If this standard is going to require its incorporation into the assessments, there should be an MOD standard developed requiring the generators to provide the necessary information prior to its inclusion as a requirement in this standard. R3.3.3 Comment ? PRC-023 requires relay loadability to be reflected in facility ratings. Therefore this additional requirement is unnecessary and should be deleted. R3.5 Priority Comment ?We recommend that the requirement for Extreme Event testing be removed from this standard as there is no requirement to develop a Corrective Action Plan to address unacceptable consequences. Otherwise we recommend the following:- Extreme Event performance should be a consideration when developing Corrective Action Plans to address Planning Events- It should be clear that an evaluation does not require solution development for all Extreme Events- Change “an evaluation of possible actions”? to “where appropriate, reasonably practicable actions designed to reduce the likelihood or mitigate the consequences and adverse impacts of the event(s) shall be considered.
Response: R3.3.2: The SDT agrees that judgment is used today. There is a project (PRC-024) that will address this issue. The wording has been changed to clarify the intent of the requirement. For this standard, all that is required is to identify the assumptions concerning voltage limitations of the unit and ensure they are being treated within the simulation as they will react in the real world. **R3.3.2** Trip generators where simulations show generator bus voltages are less than known or assumed minimum generator steady state or ride through voltage limitations. Include in the assessment any assumptions made. R3.3.3: The SDT believes that the requirement is necessary for the TPL standard and has clarified the requirement in an attempt to remove the objections. **R3.3.3** Ensure relay loadability limits are respected. R3.5: The SDT disagrees that the standard should mandate corrective actions for extreme events due to the low probability of these events. However, SDT believes that those extreme events that are expected to produce more serve System impacts should be analyzed to assess the extent of the impacts on the System to provide the Planning Coordinator/Transmission Planner with information to decide, where appropriate, if it is reasonable to provide some corrective actions to reduce the	

Organization	Question 3 Comment
possibility or limit the consequences of an extreme event. The need to identify possible actions addresses an Order 693 directive. Your suggested wording would make identification of possible actions optional. No change made.	
System Protection and Transmission Planning Department	R3 appears to require redundant studies by TP and PC.If the TP and PC participate in the same studies, would this meet the intent of this requirement? This would include studies that are RRO sponsored, or performed by sub-regional planning groups.
Response: R3: The SDT believes that the requirement belongs to both the Planning Coordinator and the Transmission Planner. Requirement R7 (formerly Requirement R6) provides a mechanism for determining individual and joint responsibilities for performing the required studies for the Planning Assessment regardless of whether the PC and TP footprints overlap or not. No change made.	
PPL Energy Plus	It appears there is a 24 month grace period to allow modeling updates to meet R 3.3.1. This is a good idea since the powerflow computer models may not include the required data and will need to be updated.
Response: Thank you for your comment.	
PacifiCorp Deseret Generation & Transmission SRP Arizona Public Service Co Southern California Edison Company Western Area Power Administration Pacific Gas and Electric Co, Puget Sound Energy, Inc. NV Energy San Diego Gas and Electric Co California ISO Tucson Electric Power Company	As currently drafted, R3.3 is not a requirement. Without the statements in R3.3.1-R3.3.4, R3.3 is simply a phrase. Sub-Sub-Requirements R3.3.1 through R3.3.4 should be bullets under R3.3, with the language in R3.3 modified so that it becomes the requirement to conduct contingency analyses that address the four resulting bullets R3.3.2 is unclear as drafted. The minimum steady state voltage limitation for synchronous generators is not a very meaningful value. All generators with an automotive voltage regulator will maintain the set point voltage until the VAR capability of the generator is exceeded, and then the voltage will deteriorate. R3.5 ? We disagree with the requirement to explain why remaining Extreme Contingencies would produce less severe System results than the ones selected for study. The first part of the requirement requires identification of events that produce more severe System impacts. The reason the others were not selected is because they were less severe or non-credible. In any case, theoretically, there can always be a more severe Extreme Contingencies than the one selected for study. For example, if the Extreme Contingency studied were simultaneous loss of 3 transmission lines with failure of redundant RAS, then simultaneous loss of 4 lines with failure of 2 sets of redundant RAS would be more severe. Listing all possible extreme events could result in a limitless list.
NorthWestern Corporation NorthWestern Energy (NWE)	R3.3 is unclear. Requirements R3.3.1 through R3.3.4 should be bullets under R3.3, with R3.3 modified so that it becomes the

Organization	Question 3 Comment
(NWMT)	requirement to conduct contingency analyses that address the four resulting bullets R3.3.2 is unclear. The minimum steady state voltage limitation for synchronous generators is not a very meaningful value. All generators with an automatic voltage regulator will maintain the set point voltage until the VAR capability of the generator is exceeded, and then the voltage will deteriorate. In R3.3.3 the term "loadability" needs to be defined. R3.5 needs to be modified. It would be better to combine R3.2 with R3.5. The first part of the requirement requires identification of events that produce more severe System impacts. The presumed reason that the other contingencies were not selected is because they were deemed to be less severe or non-credible. In any case, theoretically, there can always be examples of more severe Extreme Contingencies than the one selected for study. This can be achieved by simply choosing events that are even less credible. For example, if the Extreme Contingency studied was a simultaneous loss of 3 transmission lines with the failure of a redundant RAS (SPS), then an event resulting in the simultaneous loss of 4 lines with the failure of 2 sets of redundant RASs would be even more severe. Listing all possible extreme events could result in a limitless list.
Response: R3.3: The SDT has modified the wording to provide greater clarity. The SDT disagrees that Requirement R3, parts 3.3.1- 3.3.4 should be bullets as these are mandatory requirements of the contingency analyses. Bullets are only used to identify the possible but not all inclusive elements of a menu. **R3.3** Contingency analyses shall be performed and: R3.3.2: The wording has been changed to clarify the intent of the requirement. For this standard, all that is required is to identify the assumptions concerning voltage limitations of the unit and ensure they are being treated within the simulation as they will react in the real world. **R3.3.2** Trip generators where simulations show generator bus voltages are less than known or assumed minimum generator steady state or ride through voltage limitations. Include in the assessment any assumptions made. R3.5: Several industry commenters have indicated that an explanation of "why the remaining Contingencies would produce less severe System performance" should be deleted since the Contingencies selected are already justified as those that produce more severe System performance. The SDT agrees and has deleted the requirement for an "explanation of why the remaining Contingencies would produce less severe System results". **R3.5** Those extreme events in Table 1 that are expected to produce more severe System impacts shall be identified and a list of those events to be evaluated for System performance in Requirement R3, part 3.2 created. The rationale for those Contingencies selected for evaluation shall be available as supporting information. If the analysis concludes there are cascading outages caused by the occurrence of extreme events, an evaluation of possible actions designed to reduce the likelihood or mitigate the consequences and adverse impacts of the event(s) shall be conducted.	
Western Area Power Administration	R3.3.3 should be covered in the PRC Standards. While R3.3 is labeled as "Contingency analysis", R3.3.4 is related to Steady State control and therefore should not be within R3.3.
Response: R3.3.3**:** The SDT believes that the requirement is necessary for the TPL standard and has clarified the requirement in an attempt to remove the objections. **R3.3.3** Ensure relay loadability limits are respected. R3.3.4: The SDT disagrees with your comment. The simulation of the expected operation of devices such as phase-shifting transformers, load tap changing transformers, etc., impacts the post-Contingency performance of the System. No change made.	

Organization	Question 3 Comment
Tampa Electric	Consider revising standard for clarity. Subrequirements are not clear as written. Consider moving subrequirements R3.3.1 - R3.3.4 under other requirements for clarification. R3.5 Including an explanation of why remaining contingencies would produce less severe system results could be a limitless effort. Listing all "possible" extreme events seems unrealistic.
Response: The SDT requires more information in order to respond to your request to clarify the standard and sub-requirements. Numerous clarifications have been made to the fourth posting due to specific industry comments. R3.3.1-R3.3.4: The SDT disagrees as these are mandatory requirements of the Contingency analyses. No change made. R3.5: Several industry commenters have indicated that an explanation of "why the remaining Contingencies would produce less severe System performance" should be deleted since the contingencies selected are already justified as those that produce more severe System performance. The SDT agrees and has deleted the requirement for an "explanation of why the remaining contingencies would produce less severe System results". **R3.5** Those extreme events in Table 1 that are expected to produce more severe System impacts shall be identified and a list of those events to be evaluated for System performance in Requirement R3, part 3.2 created. The rationale for those Contingencies selected for evaluation shall be available as supporting information. If the analysis concludes there are cascading outages caused by the occurrence of extreme events, an evaluation of possible actions designed to reduce the likelihood or mitigate the consequences and adverse impacts of the event(s) shall be conducted.	
Florida Reliability Coordinating Council, Inc - Transmission Working Group	R3.3.1 & 3.3.4 " Consider adding language that the entity should not be held responsible for simulating "the removal of all elements that the Protection System and other automatic controls are expected to disconnect for each Contingency without operator intervention? on neighboring systems, only on the entity's own system. Also, consider moving R3.3.1 and R3.3.4 under R3.1 as sub-requirements and require that the overall studies take into account the effect of protection systems and control devices in the performance of the BES and it's ability to meet the table 1 requirements. R3.3.1 ? This seems unnecessary for normal 2-terminal lines, consider adding language to the effect of: "Simulation of individual element outages is allowed if it produces an effect more severe than the entire circuit outage". R3.4 - Consider changing the header for table 1 - "Steady State & Stability Performance Extreme Events" to Table 2 - "Steady State & Stability Performance Events". As is, it could be interpreted that the expected performance requirements associated with Planning Events apply to Extreme Events also.
Response: R3.3.1 & R3.3.4: The SDT has determined that it is necessary for the Planning Coordinator and Transmission Planner to coordinate with adjacent Planning Coordinators and Transmission Planners to ensure that Contingencies on adjacent Systems which may impact their Systems are included in the Contingency list created in Requirement R3, part 3.4. Consequently, "the removal of all elements that the Protection System and other automatic controls are expected to disconnect for each Contingency without operator intervention" will also apply for the Contingencies on adjacent Systems. The fourth draft of the standard will include this change by adding Requirement R3, part 3.4.1. **R3.4.1** The Planning Coordinator and Transmission Planner shall coordinate with adjacent Planning Coordinators and Transmission Planners to ensure that Contingencies on adjacent Systems which may impact their Systems are included in the Contingency list.	

Organization	Question 3 Comment
The SDT believes that Requirement R3, parts 3.3.1 and 3.3.4 are separate mandatory requirements and disagrees that they should be moved under Requirement R3, part 3.1. No change made. R3.3.1: The SDT disagrees with the comment as the intent of Requirement R3, part 3.3.1, consistent with FERC Order 693, is to perform the simulation to reflect how the Protection System will operate in the real System for each Contingency without operator intervention. The requirement does not preclude the Planning Coordinator/Transmission Planner from studying individual elements or other maintenance scenarios. Planning event P2-1 addresses an individual outage configuration. Please also see footnote 8. No change made. R3.4 Table 1: Based on Industry feedback, the SDT has decided to have one Table and believes that headings are sufficiently clear. No change made.	
FMPA	R3.1, The criteria in Table 1 do not allow load shedding following a single contingency (e.g., the old footnote “b” was removed). While we agree this ought to be the case for the EHV system, we believe that there are cases where for the HV system, which often acts more like a distribution system, the costs to meet this standard would be prohibitive and unfair to the consumers served by those utilities. For instance, the Florida Keys served by the Florida Keys Electric Coop (FKEC) and Keys Energy Services (KEYS) is connected to the mainland by two 138 kV lines down to Tavernier Key (about 1/3rd the distance from the mainland to Key West). Currently, the system is planned and operated under single contingency to allow non consequential load shedding automatically via Under-Voltage Load Shedding, and to meet thermal limits by manual load shedding, all load shed is in the Florida Keys following the single contingency with no impact to the Bulk Electric System. The standard, as written, would force one of two things: 1) the construction of a third line in this environmentally pristine area at a very high cost that might increase rates to customers in the Florida Keys by 20% for a level of reliability that much of the Keys would not even experience since 2/3rds of the Keys is fed by a radial line with consequential load loss; or 2) separate the two lines such that both are operated radially with resultant consequential load loss, compliant with the standards, but actually causing consumers to have a lower level of reliability. We propose to reinstate footnote “b” for the HV system, allowing non-consequential load loss for lower voltage system that have little to no impact on the Bulk Electric System and limit the elimination of non-consequential load loss to be applicable to only the EHV. Alternatively, but less appealing and more of an administrative challenge would be to establish a Regional Entity administered process for application for exception to this criteria. FERC’s Order 693 at paragraph 1794 states that: “(t)he Commission also clarifies that an entity may seek a regional difference to the Reliability Standard from the ERO for case-specific circumstances”. We interpret this as meaning the Regional Entity can allow exceptions under certain criteria such as a significant increase in costs to consumers with little discernable benefit as is the case with the Florida Keys. For R3.2, we are at a loss of how a hurricane event can be modeled, and why such an evaluation is needed. Albeit, many contingencies can occur during a hurricane event, it is not likely that multiple contingencies will happen within the same < 1 minute window it takes to go from transient stability conditions to steady state conditions, and then it is unlikely that multiple significant contingency events will occur within the 30 minutes it takes operators to adjust the system to prepare for the next contingency. Therefore, we do not understand the significance of modeling a hurricane event. In addition, a hurricane can have an infinite number of different scenarios and time-lines of contingencies and picking one or two would be a meaningless exercise since an actual hurricane will be completely different than what is modeled. At least an earthquake has a fault line that makes it relatively easier to identify which facilities might be affected, but a hurricane has an infinite number of possibilities. We suggest eliminating hurricanes from extreme events and model potential results of a hurricane, such as loss of a ROW, loss of a substation or plant, and loss of a major load center. R3.3, the list ought to consider contingencies on neighboring systems that could impact the TP’s / PC’s system (this comment

Organization	Question 3 Comment
	would not carry over to R4.3 since stability is more a protection system / clearing time issue). R3.3.1, the entity should not be held responsible for simulating "the removal of all elements that the Protection System and other automatic controls are expected to disconnect for each Contingency without operator intervention" on neighboring systems, only on the Entity's own system. R3.4 and the first part of R3.5 ought to be combined, e.g., both require justification for why a limited set of worst case contingencies are studied for N-1, N-2 and extreme contingencies. The latter part of R3.5 concerning cascading outages for an extreme contingency should become the only requirement of R3.5 (there are currently two requirements embedded within R3.5).
Response: R3.1: To comply with Order 693, the SDT have decided to raise the performance requirements such that Non-Consequential Load loss should not be allowed for P1 events of Table 1. No change made. R3.2: Table 1 extreme events: Requirement R3, part 3.5 requires the Planning Coordinator/Transmission Planner to identify and compile a list of the extreme events that are expected to produce more severe System impacts, along with a rationale for selection of those Contingencies. The wide area extreme events such as item 3.iv are provided as examples and not meant to be a mandatory list of events to be simulated. No change made. R3.3: The SDT assumes that the comment "R3.3, the list ought to consider contingencies on neighboring systems that could impact the TP's / PC's system" actually refers to Requirement R3, part 3.4 where the Contingency list is created. The SDT agrees with your comment and has determined that it is necessary for the Planning Coordinator and Transmission Planner to coordinate with adjacent Planning Coordinators and Transmission Planners to ensure that Contingencies on adjacent Systems which may impact their Systems are included in the Contingency list created in Requirement R3, part 3.4. The fourth draft of the standard will include this change by adding Requirement R3, part 3.4.1. The need to include Contingencies on adjacent Systems will also apply to Stability. **R3.4.1** The Planning Coordinator and Transmission Planner shall coordinate with adjacent Planning Coordinators and Transmission Planners to ensure that Contingencies on adjacent Systems which may impact their Systems are included in the Contingency list. R3.3.1: The SDT has determined that it is necessary for the Planning Coordinator and Transmission Planner to coordinate with adjacent Planning Coordinators and Transmission Planners to ensure that Contingencies on adjacent Systems which may impact their Systems are included in the Contingency list created in Requirement R3, part 3.4. Consequently, "the removal of all elements that the Protection System and other automatic controls are expected to disconnect for each Contingency without operator intervention" will also apply for the Contingencies on adjacent Systems. The fourth draft of the standard will include this change. R3.4 & R3.5: The SDT does not agree that these requirements should be combined. Requirement R3, part 3.4 requires the development of a Contingency list of planning events, and Requirement R3, part 3.5 requires a Contingency list of extreme events - two separate requirements. The SDT agrees that both require that a rationale be provided for stating why the events selected are expected to produce the more severe System impacts. No change made. R3.5: The SDT disagrees and sees no reason to split these out as they would still be essentially the same requirement. No change made.	
CPS Energy	Requirement R3.3.2. needs clarification.
Response: R3.3.2: The wording has been changed to clarify the intent of the requirement. For this standard, all that is required is to identify the assumptions concerning voltage limitations of the unit and ensure they are being treated within the simulation as they will react in the real world. **R3.3.2** Trip generators where simulations show generator bus voltages are less than known or assumed minimum generator steady state or ride through	

Organization	Question 3 Comment
voltage limitations. Include in the assessment any assumptions made.	
MidAmerican Energy Company	MidAmerican commends the SDT for it hard wok on this standard and specifically its R3.3.1 wording. MidAmerican has suggestions for the following parts of R3:" . " R3.3.2 " delete the words "For all generators" at the beginning. It is unnecessary in that later in the requirement it states specifically that the responsible entity is to "identify how the generators are analyzed in the steady state limitation". R3.3.3 " use a similar construction to R3.3.2 but delete the words "For all transmission lines". In other words, replace "For all Transmission lines, studies shall consider relay loadability and identify how loadability is analyzed in the steady state limitations. With "Studies shall consider relay loadability and identify how loadability for transmission lines is analyzed in the steady state simulations. " R3.4 and R3.5 " change "remaining Contingencies" to "remaining unselected Contingencies".
Response: Thank you for your comments. R3.3.2: The wording has been changed to clarify the intent of the requirement. For this standard, all that is required is to identify the assumptions concerning voltage limitations of the unit and ensure they are being treated within the simulation as they will react in the real world. **R3.3.2** Trip generators where simulations show generator bus voltages are less than known or assumed minimum generator steady state or ride through voltage limitations. Include in the assessment any assumptions made. R3.3.3: The SDT has clarified the requirement to ensure relay loadability limits, as defined in the relay loadability standard, are respected in the analysis **R3.3.3** Ensure relay loadability limits are respected.. R3.4 & R3.5: The SDT has revised Requirement R3, parts 3.4 and 3.5 by eliminating the requirement to provide the rationale for the unselected Contingencies. **R3.4** Those planning events in Table 1, that are expected to produce more severe System impacts on its portion of the BES, shall be identified and a list of those Contingencies to be evaluated for System performance in Requirement R3, part 3.1 created. The rationale for those Contingencies selected for evaluation shall be available as supporting information. **R3.5** Those extreme events in Table 1 that are expected to produce more severe System impacts shall be identified and a list of those events to be evaluated for System performance in Requirement R3, part 3.2 created. The rationale for those Contingencies selected for evaluation shall be available as supporting information. If the analysis concludes there are cascading outages caused by the occurrence of extreme events, an evaluation of possible actions designed to reduce the likelihood or mitigate the consequences and adverse impacts of the event(s) shall be conducted.	
Northeast Utilities	R3.3.2 Comment - Traditionally transmission planners have used their judgment about the minimum steady state voltage limitations of generators. If this standard is going to require its incorporation into the assessments, there should be an MOD standard developed requiring the generators to provide the necessary information prior to inclusion of R3.3.2 as a requirement in this standard. R3.3.3 Comment - PRC-023 requires relay loadability to be reflected in facility ratings. Therefore this additional requirement is

Organization	Question 3 Comment
	unnecessary and should be deleted. R3.5 Priority Comment - We recommend that the requirement for Extreme Event testing be removed from this standard as there is no requirement to develop a Corrective Action Plan to address unacceptable consequences. Otherwise we recommend the following:-Extreme Event performance should be a consideration when developing Corrective Action Plans to address Planning Events-It should be clear that an evaluation does not require solution development for all Extreme Events-Change "an evaluation of possible actions"? to "where appropriate, reasonably practicable actions designed to reduce the likelihood or mitigate the consequences and adverse impacts of the event(s) shall be considered.
ISO New England, Inc. Central Maine Power Company	R3.3.2 Comment - Traditionally transmission planners have used their judgment about the minimum steady state voltage limitations of generators. If this standard is going to require its incorporation into the assessments, there should be an MOD standard developed requiring the generators to provide the necessary information prior to its inclusion as a requirement in this standard. R3.3.3 Comment - PRC-023 requires relay loadability to be reflected in facility ratings. Therefore this additional requirement is unnecessary and should be deleted. R3.5 Priority Comment -We recommend that the requirement for Extreme Event testing be removed from this standard as there is no requirement to develop a Corrective Action Plan to address unacceptable consequences. Otherwise we recommend the following:- Extreme Event performance should be a consideration when developing Corrective Action Plans to address Planning Events- It should be clear that an evaluation does not require solution development for all Extreme Events- Change "an evaluation of possible actions"? to "where appropriate, reasonably practicable actions designed to reduce the likelihood or mitigate the consequences and adverse impacts of the event(s) shall be considered.
Response: R3.3.2: The SDT agrees that judgment is used today. There is a project (PRC-024) that will address this issue. The wording has been changed to clarify the intent of the requirement. For this standard, all that is required is to identify the assumptions concerning voltage limitations of the unit and ensure they are being treated within the simulation as they will react in the real world. **R3.3.2** Trip generators where simulations show generator bus voltages are less than known or assumed minimum generator steady state or ride through voltage limitations. Include in the assessment any assumptions made. R3.3.3: The SDT believes that the requirement is necessary for the TPL standard and has clarified the requirement in an attempt to remove the objections. **R3.3.3** Ensure relay loadability limits are respected. R3.5: extreme events: The SDT disagrees that the standard should mandate corrective actions for extreme events due to the low probability of these events. However, the SDT believes that those extreme events that are expected to produce more serve System impacts should be analyzed to assess the extent of the impacts on the System to provide the Planning Coordinator/Transmission Planner with information to decide, where appropriate, if it is reasonable to provide some corrective actions to reduce the possibility or limit the consequences of an extreme event. No change made.	
JEA	R3. Change wording from "The studies shall be based on computer simulations using models utilizing data provided in Requirement R1." to "The studies shall be based on computer simulations using models that are the best representation of the future planned system and its associated use as provided by Requirement R1. The studies shall detail the effects of all future

Organization	Question 3 Comment
	equipment connectivity and topology arrangements and their associated Protection system responses to Contingency events regardless of model details." R3.3.2. I assume the concern here is on voltage ride through of generators and generator auxillary equipment. Propose changing language from "For all generators..." to"Include analysis of how generator and generator auxillary equipment over and under voltage protection and ride through capability were considered for the post-contingency steady state bus voltage levels." R3.3.3. I assume the concern here is ensuring consideration is given to how system protection relays could respond to post-contingency circuit emergency loadings. Protection systems that could limit the emergency ratings of transmission circuits should be considered in the Facitility Rating standard and therefore not necessary to include in the TPL standard. However, if requirement does remain in the TPL standard, propose changing language from:"For all transmission lines..." to"Include analysis of how implemented relay protection systems and their potential automatic response prior to timely corrective actions are considered for the post-contingency steady state circuit loadings".
Response: The SDT has revised Requirements R1 and R3 to provide greater clarity to the SDT's intent. **R1** Each Transmission Planner and Planning Coordinator shall maintain System models within its respective area for performing the studies needed to complete its Planning Assessment. The models shall use the latest data consistent with that provided in accordance with the MOD-010 and MOD-012 standards, supplemented by other sources as needed, including items represented in the Corrective Action Plan, and shall represent projected System conditions **R3** For the steady state portion of the Planning Assessment, each Transmission Planner and Planning Coordinator shall perform studies for the Near-Term and Long-Term Transmission Planning Horizons in Requirement R2, parts 2.1, and 2.2. The studies shall be based on computer simulation models using data provided in Requirement R1. R3.3.2: The wording has been changed to clarify the intent of the requirement. For this standard, all that is required is to identify the assumptions concerning voltage limitations of the unit and ensure they are being treated within the simulation as they will react in the real world. **R3.3.2** Trip generators where simulations show generator bus voltages are less than known or assumed minimum generator steady state or ride through voltage limitations. Include in the assessment any assumptions made. R3.3.3: The SDT believes that the requirement is necessary for the TPL standard and has clarified the requirement in an attempt to remove the objections. **R3.3.3** Ensure relay loadability limits are respected.	
SMUD	R3.5Listing all possible scenarios for studying extreme contingencies will result in a limitless list. Discretion should be given to the transmission planner on the selection of the contingencies without a requirement to list why other extreme contingencies have not been included. R3.3.2:When the word, 'consider' is used, it can be read as a guidance and not a requirement. The requirement is unclear.
Response: R3.5: Several industry commenters have indicated that an explanation of "why the remaining Contingencies would produce less severe System performance" should be deleted since the Contingencies selected are those to produce more severe System performance. The SDT agrees and has deleted the requirement for an "explanation of why the remaining Contingencies would produce less severe System results".	

Organization	Question 3 Comment
R3.5 Those extreme events in Table 1 that are expected to produce more severe System impacts shall be identified and a list of those events to be evaluated for System performance in Requirement R3, part 3.2 created. The rationale for those Contingencies selected for evaluation shall be available as supporting information. If the analysis concludes there are cascading outages caused by the occurrence of extreme events, an evaluation of possible actions designed to reduce the likelihood or mitigate the consequences and adverse impacts of the event(s) shall be conducted. R3.3.2: The wording has been changed to clarify the intent of the requirement. For this standard, all that is required is to identify the assumptions concerning voltage limitations of the unit and ensure they are being treated within the simulation as they will react in the real world. **R3.3.2** Trip generators where simulations show generator bus voltages are less than known or assumed minimum generator steady state or ride through voltage limitations. Include in the assessment any assumptions made.	
Progress Energy Florida, Inc.	Concerning R3.3.1, PEF believes that, in virtually every conceivable scenario, contingency analyses show that analysis of individual elements will reveal overloading or undervoltages, whereas the same event modeled according to protection system design (i.e. simulating the event as the actual "breaker-to-breaker" operation would occur) may not. Analysis of individual elements is therefore a more conservative method for studying the BES. PEF is not opposed to analysis of entire circuit outages; PEF therefore suggests that in addition to the existing language of R3.3.1, an additional sentence be added as follows: "Simulation of the loss of individual elements is acceptable in lieu of simulating the loss of all elements in a protection zone if it produces greater overloads or lower voltages. This approach would allow for more efficient coordination with Transmission Operators as they schedule planned outages or make system adjustments in outage scenarios.
Response: R3.3.1: The SDT disagrees with the comment as the intent of Requirement R3, part 3.3.1, consistent with FERC Order 693, is to perform the simulation to reflect how the Protection System will operate in the real System for each Contingency without operator intervention. The requirement does not preclude the Planning Coordinator/Transmission Planner from studying individual elements or other scenarios. Planning event P2-1 addresses an individual element outage configuration. Please also see footnote 8 (now footnote 7). No change made.	
Xcel Energy	R3.3.3: Relay loadability has no bearing beyond the near term horizon. Loadability is not determined several years out. R3.5 " does this imply that mitigation plans must be implemented" If not, then this is highly subjective and the last sentence of this requirement should be deleted.
Response: R3.3.3: The SDT does not agree with your comment**.** No change made. R3.5: The SDT disagrees that the standard should mandate corrective actions for extreme events due to the low probability of these events. However, the SDT believes that those extreme events that are expected to produce more serve System impacts should be analyzed to assess the extent of the impacts on the System to provide the Planning Coordinator/Transmission Planner with information to decide, where appropriate, if it is reasonable to provide some corrective actions to reduce the possibility or limit the consequences of an extreme event. The need to identify possible actions addresses an Order 693 directive. No change made.	
Ameren	In Requirement R3.1, it is suggested that the word "contingency" be added to describe the lists created in R3.4. Studies shall be performed to determine whether the BES meets the performance requirements in Table 1 based on the contingency lists created

Organization	Question 3 Comment
	in Requirement R3.4. R3.3.2 -For all generators, studies shall consider the minimum steady state voltage limitations and identify how the generators are analyzed in the steady state simulation. The above wording needs to be changed, as the intent of this sentence is unclear. It is not clear whether Transmission Planners need to ensure that generating plants can meet their voltage schedule under Base Case (N-0) conditions, or whether this would be the same as the generator underexcited operation limit. R3.3.3?For all Transmission lines, studies shall consider relay loadability and identify how loadability is analyzed in the steady state simulation. The above wording needs to be changed, as the intent of this sentence is unclear, whether the intent is that Transmission Planners ensure that relay loading limits are included in the facility ratings, or whether this reflect some rule of thumb, such as 130% of conductor rating. In Requirement R3.3.4, it is suggested adding the words "and switched" to capacitors and reactors: Simulate the expected operation of existing and planned devices designed to provide Steady State control of electrical system quantities. These devices include equipment such as phase-shifting transformers, load tap changing transformers, and switched capacitors and inductors.
Response: R3.1: The SDT agrees and has modified the requirement. **R3.1** Studies shall be performed for planning events to determine whether the BES meets the performance requirements in Table 1 based on the Contingency list created in Requirement R3, part 3.4. R3.3.2: The SDT has changed the wording to clarify the intent of the requirement. For this standard, all that is required is to identify the assumptions concerning voltage limitations of the unit and ensure they are being treated within the simulation as they will react in the real world. **R3.3.2** Trip generators where simulations show generator bus voltages are less than known or assumed minimum generator steady state or ride through voltage limitations. Include in the assessment any assumptions made. R3.3.3: The SDT has clarified the requirement to ensure relay loadability limits, as defined in the relay loadability standard, are respected in the analysis **R3.3.3** Ensure relay loadability limits are respected. R3.3.4: The SDT agrees and has revised the wording to read “and switched capacitors and inductors”. **R3.3.4** Simulate the expected automatic operation of existing and planned devices designed to provide Steady State control of electrical system quantities when such devices impact the study area. These devices may include equipment such as phase-shifting transformers, load tap changing transformers, and switched capacitors and inductors.	
Manitoba Hydro	R3.1: The requirement text should be changed to read “studies shall be performed for Planning Events to determine whether the BES meets the performance requirements in Table 1 based on the contingency list of events created in Requirement R3.4. . R3.2: Requirement wording should be similar to R3.4 for consistency. R3.4 & R3.5: The selection of the contingency list is based on the knowledge of the PC/TP. How do you produce “an explanation

Organization	Question 3 Comment
	of why the remaining Contingencies would produce less severe System results. without proving this with a study? If the explanation is "that based on engineering judgment, the remaining contingencies would produce less severe system results" then the explanation is implied and not necessary. VSLs: Under the moderate to severe VSL, the performance requirements currently refer to P2 through P7. We believe this is a typo and should be P1 through P7.
Response: R3.1: The SDT agrees and has modified the requirement. **R3.1** Studies shall be performed for planning events to determine whether the BES meets the performance requirements in Table 1 based on the Contingency list created in Requirement R3, part 3.4. R3.2: The SDT has revised the requirement. **R3.2** Studies shall be performed to assess the impact of the extreme events which are identified by the list created in Requirement R3, part 3.5. R3.4 & R3.5: Several industry commenters have indicated that an explanation of "why the remaining Contingencies would produce less severe System performance" should be deleted since the contingencies selected are already justified as those that produce more severe System performance. The SDT agrees and has deleted the requirement for an "explanation of why the remaining Contingencies would produce less severe System results". **R3.4** Those planning events in Table 1, that are expected to produce more severe System impacts on its portion of the BES, shall be identified and a list of those Contingencies to be evaluated for System performance in Requirement R3, part 3.1 created. The rationale for those Contingencies selected for evaluation shall be available as supporting information. **R3.5** Those extreme events in Table 1 that are expected to produce more severe System impacts shall be identified and a list of those events to be evaluated for System performance in Requirement R3, part 3.2 created. The rationale for those Contingencies selected for evaluation shall be available as supporting information. If the analysis concludes there are cascading outages caused by the occurrence of extreme events, an evaluation of possible actions designed to reduce the likelihood or mitigate the consequences and adverse impacts of the event(s) shall be conducted. VSL: The VSL matrix is correct. No change made.	
LCRA Transmission Services Corporation	In R3.3.4, what is meant by the term "electrical system quantities"? Quantities is typically an amount and its use here would indicate that a term such as parameters would be better suited.
Response: R3.3.4 Checking a few dictionary definitions: parameter: "an expression, a constant or variable whose value determines the specific form of the expression; one of an independent variable in a set of parametric equations; whereas quantity is defined as: an exact or specified amount or measure; that property by virtue of which is measurable; extent; measure, size, any amount. It appears that "quantities" is the better choice. No change made.	
National Grid	R3 Comment "Planning Assessment" and "shall perform analysis" are contradictory. R3 and its sub-requirements then reference study requirements. If this is an assessment, then the standard shouldn't be requiring a study.R3.1 Comment ? A. It is not clear what should be included in the list related to R3.4. Events P0 through P4 should include analysis of all BES facilities for which the Transmission Planner is responsible. Events P5 and higher should be limited to contingency events

Organization	Question 3 Comment
	that are deemed the most significant by the Transmission Planner. B. R3.1 refers to "lists". Is R3.4 creating one list or multiple lists" Suggest changing "lists" to "list" R3.2 Comment - Since R3.4 and R3.5 both require the responsible entity to create a list, the words in R3.2 be should be revised to be more similar to the words in R3.1. Suggest changing "Studies shall be performed to assess the impact of the Extreme Events identified in Requirement R3.5. to "Studies shall be performed to assess the impact of the Extreme Events, which are identified by the list created in Requirement R3.5. R3.3.2 Comment " A. Traditionally transmission planners have used their judgment about the minimum steady state voltage limitations of generators. If this standard is going to require its incorporation into the assessments, there should be an MOD standard developed requiring the generators to provide the necessary information prior to its inclusion as a requirement in this standard. B. Voltage limitations are for both minimum and maximum. If this requirement is kept, then "minimum" should be deleted. C. Is this requirement really looking at "voltage limits" or generator "reactive capability"? R3.3.3 - This requirement should be deleted. Each reliability issue should be addressed in one standard and relay loadability is addressed in PRC-023. If requirements of PRC-023 are met, the relay loadability does not constitute a limitation. If this requirement is intended to apply to modeling relay characteristics in stability simulations, which is not addressed by PRC-023, then the requirement should be more explicit. However, as written it appears that the intent was to be in-line with Blackout Recommendation 8a which relates to steady-state loadability, which is covered by PRC-023. R3.4 Comment - Table 1 includes both Steady State and Stability events. R3.4 needs to indicate that it only applies to the Steady State portion of the Table. R3.5 Priority Comment ?It is recommended that the requirement for Extreme Event testing be removed from this standard as there is no requirement to develop a Corrective Action Plan to address unacceptable consequences and the requirements are too vague to have auditable value. If the requirement is not deleted, the following is recommended:- Extreme Event performance should be a consideration when developing Corrective Action Plans to address Planning Events. If not, it will be difficult to utilize the results to obtain projects approvals.- It should be clear that an evaluation does not require solution development for all Extreme Events- Change "an evaluation of possible actions"? to "where appropriate, reasonably practicable actions designed to reduce the likelihood or mitigate the consequences and adverse impacts of the event(s) shall be considered. – The statement "and shall include an explanation of why the remaining Contingencies would produce less severe System results" is too open and should be deleted. Violation Severity Levels:R3.4 Since this is a binary requirement, should this have a Severe VSL? R3.5 Since this is a binary requirement, should this have a Severe VSL?
Response: R3: The SDT agrees that use of studies and analyses can be confusing and has changed the wording to provide greater clarity. **R3** For the steady state portion of the Planning Assessment, each Transmission Planner and Planning Coordinator shall perform studies for the Near-Term and Long-Term Transmission Planning Horizons in Requirement R2, parts 2.1, and 2.2. The studies shall be based on computer simulation models using	

Organization	Question 3 Comment
	data provided in Requirement R1. R3.4: Requirement R3, part 3.4 has been revised to indicate that the Planning Coordinator/Transmission Planner is to produce a Contingency list, of those planning events that are expected to produce more severe results on its portion of the BES. The Planning Coordinator/Transmission Planner is required to identify the Contingency list to be studied and provide the rationale as to why these Contingencies are expected to produce more severe results. There is no requirement to include all BES facilities for P0 to P4. No change made. R3.1: The SDT has changed "lists" to "list". **R3.1** Studies shall be performed for Planning Events to determine whether the BES meets the performance requirements in Table 1 based on the Contingency list created in Requirement R3, part 3.4. R3.2: The SDT has revised the wording of the requirement. **R3.2** Studies shall be performed to assess the impact of the extreme events which are identified by the list created in Requirement R3, part 3.5. R3.3.2: The SDT agrees that judgment is used today. There is a project (PRC-024) that will address this issue. The SDT has changed the wording to clarify the intent of the requirement. For this standard, all that is required is to identify the assumptions concerning voltage limitations of the unit and that they are being treated within the simulation as they will react in the real world. The word minimum was retained as the intent is to address low voltage ride through. No change made. R3.3.3: The SDT believes that the requirement is necessary for the TPL standard and has clarified the requirement in an attempt to remove the objections. R3.4: Although Table 1 includes both steady state and stability events, Requirement R3 is "for the steady state portion of the Planning Assessment.."; so there is no need for adding further clarification in Requirement R3, part 3.4. No change made. R3.5: The SDT disagrees that the standard should mandate corrective actions for extreme events due to the low probability of these events. However, SDT believes that those extreme events that are expected to produce more serve System impacts should be analyzed to assess the extent of the impacts on the System to provide the PC/TP with information to decide, where appropriate, if it is reasonable to provide some corrective actions to reduce the possibility or limit the consequences of an extreme event. The need to identify possible actions addresses an Order 693 directive. Your suggested wording would make identification of possible actions optional. No change made. Several industry commenters have indicated that an explanation of "why the remaining Contingencies would produce less severe System performance" should be deleted since the Contingencies selected are those to produce more severe System performance. The SDT agrees and has deleted the requirement for an "explanation of why the remaining contingencies would produce less severe System results". **R3.4** Those planning events in Table 1, that are expected to produce more severe System impacts on its portion of the BES, shall be identified and a list of those Contingencies to be evaluated for System performance in Requirement R3, part 3.1 created. The rationale for those Contingencies selected for evaluation shall be available as supporting information. **R3.5** Those extreme events in Table 1 that are expected to produce more severe System impacts shall be identified and a list of those events to be evaluated for System performance in Requirement R3, part 3.2 created. The rationale for those Contingencies selected for evaluation shall be available as supporting information. If the analysis concludes there are cascading outages caused by the occurrence of extreme events, an evaluation of possible actions designed

Organization	Question 3 Comment
to reduce the likelihood or mitigate the consequences and adverse impacts of the event(s) shall be conducted. VSLs: The VSLs for Requirement R3, parts 3.4 & 3.5 are required elements of the primary requirement. The VSLs categorize noncompliance with the requirement, "in total" – not with each of the individual parts of the requirement. No change made.	
Entergy Services, Inc	In R3.5 what would constitute "an evaluation of possible actions designed to reduce?" R3 should be broken into two pieces where the near term portion could be a Medium VRF but the long term section should be a Low VRF. Violations occuring in the longer term horizon are subjective and assumptions concerning future plans too broad to justify a Medium VRF. In Requirement R3.1, it is suggested that the word "contingency" be added to describe the lists created in R3.4.
Response: R3.5: In the event that an extreme event causes cascading outages, the "possible actions" would be the possible actions that would reduce the likelihood or mitigate the consequences and adverse impacts of the event". VRF: The SDT believes that all of the steady state responses are equally important. No change made. R3.1: The SDT agrees and has revised the wording. **R3.1** Studies shall be performed for planning events to determine whether the BES meets the performance requirements in Table 1 based on the Contingency list created in Requirement R3, part 3.4.	
Great River Energy	R3.3.3 The relay loadability section needs better definition. Is this identifying that: if the relay load limit is the most Limiting Element of a transmission line how it would be handled if it is overloaded considering that there may be some margin before opening the line and/orif the line reaches a certain overload level based on a non-Relay Load Limit being the Most Limiting Element that the relay load limit should be analyzed to see if it will actually activate an opening of the transmission line or the planners need to review all of the relays associated with all transmission lines within the model and indicate if loadability is a concern for each contingency analyzed. There are a lot of lines, (probably the majority), that have not defined a relay capability within the rating fields of the model! This would seem to be a FAC-009 issue. As a discussion point on R3.3.3, it would seem that relay loadability should be addressed in FAC-009 and the Model Building process. Putting this burden in the planning assessment will be difficult to determine if the Most Limiting Element within the model is not a relay load limit as those parameters typically are not the Most Limiting Element. Every line in the model may need to be defined as to what its relay loadability is to meet this requirement. Our regional model build reports a Most Limiting Element, a short term emergency level, and a long-term emergency for the three ratings available within the model. It would seem that the long-term emergency field should be replaced with a Relay Load Limit value such that the R3.3.3 would not be as great of a burden on the planner.
BC Hydro	R3.3.3: Consider changing it to read, "Demonstrate that, for all Transmission lines, relay loadability standards are met in accordance with the PRC series of standards"
Response: The SDT believes that the requirement is necessary for the TPL standard and has clarified the requirement in an attempt to remove the objections and to	

Organization	Question 3 Comment
ensure relay loadability limits, as defined in the relay loadability standard, are respected in the analysis. **R3.3.3** Ensure relay loadability limits are respected.	
Midwest ISO	Opening Remarks. Specific Comments for Requirement 3:A) Under R3, the Time Horizon of the TPL standards is intended for years one through 10; However the Time Horizon shown in R3 only says "Long-term Planning". By definition of Long-Term Transmission Planning Horizon this covers years 6 through 10 and beyond. Suggestion to change the Time Horizon to read: "Near-Term and Long-Term Transmission Planning". B) Under R3.1 the "Studies shall be performed to determine whether the BES meets the performance requirements in Table 1 based on the lists created in the Requirement 3.4". We believe that the following language will improve this requirement: Studies shall be performed to determine whether the BES meets the performance requirements in Table 1 based on the more severe contingency lists created in the Requirement 3.4. C) Under R3.3.2 the Midwest ISO generally agrees with FirstEnergy's comments on this. D) Under R3.3.3 the Midwest ISO feels that this sub-requirement is redundant with PRC-023-2 and therefore we feel that this sub-requirement needs to be removed and replaced with our suggested bullet language under R1.1.2 ? Relay Loadability Limitation (see F on page 3 of 9 above) E) Under R3.4 to make this requirement clearer, please add the following language between the words "expected to" in the first sentence: "expected by the assessing entity to" We believe that this language addition improves the clarity of this requirement. The first sentence would then read: Those Planning Event Contingencies in Table 1 that are expected by the assessing entity to produce more severe System impacts shall be identified and a list of those Contingencies to be evaluated for System performance in Requirement R3.1 created. F) Under R3.5 to make this requirement clearer, please add the following language between the words "expected to" in the first sentence: "expected by the assessing entity to" We believe that this language addition improves the clarity of this requirement. The first sentence would then read: Those Extreme Events in Table 1 that are expected by the assessing entity to produce more severe System impacts shall be identified and a list of those events to be evaluated for System performance in Requirement R3.2 created.
Response: The *Time Horizon* term at the end of the requirement deals with mitigation time periods (as shown below) and is not connected to the assessment time frames. Time Horizons are a consideration when there is a violation of a requirement – the impact to the BES of violating a requirement with a long-term planning horizon is not expected to be as severe as the impact associated with violating a requirement with a real-time operations time horizon. No change made. **Mitigation Time Horizon** The time horizons available for mitigating a violation to a requirement include the following: • **Long-term Planning** — a planning horizon of one year or longer. • **Operations Planning** — operating and resource plans from day-ahead up to and including seasonal.	

Organization	Question 3 Comment
	• **Same-day Operations** — routine actions required within the timeframe of a day, but not real-time. • **Real-time Operations** — actions required within one hour or less to preserve the reliability of the bulk electric system. • **Operations Assessment** — follow-up evaluations and reporting of real time operations. R3.1: The SDT has modified the requirement. **R3.1** Studies shall be performed for planning events to determine whether the BES meets the performance requirements in Table 1 based on the Contingency list created in Requirement R3, part 3.4. R3.3.2 The SDT has changed the wording to clarify the intent of the requirement. For this standard, all that is required is to identify the assumptions concerning voltage limitations of the unit and ensure they are being treated within the simulation as they will react in the real world. **R3.3.2** Trip generators where simulations show generator bus voltages are less than known or assumed minimum generator steady state or ride through voltage limitations. Include in the assessment any assumptions made. R3.3.3: The SDT believes that the requirement is necessary for the TPL standard and has clarified the requirement in an attempt to remove the objections. **R3.3.3** Ensure relay loadability limits are respected. R3.4 & R3.5: The Planning Coordinator/Transmission Planner are the applicable entities for this standard, so adding "by the assessing entity" is redundant. No change made.
PJM	In R3, why require a Planning Coordinator AND a Transmission Planner to perform this analysis? Isn't this a duplication of effort? R3.4 should come before R3.1. You should never reference down in a standard. Please present the items in the order in which they should be performed/considered. R3.5 should come before R3.2. You should never reference down in a standard. Please present the items in the order in which they should be performed/considered. R3.3.2 should be broken into two requirements since two separate tasks need to be performed. R3.3.3 should be broken into two requirements since two separate tasks need to be performed. Also in R3.3.3, analysis of relay loadability will require the inclusion of all relay models 200 kV and above. This information is not presently gathered by the ERAG MMWG for the Eastern Interconnection. To help with compliance, questions R3.3.4 needs more specificity. Maybe define a minimum percentage of total possible contingencies as a bright line whether you have performed enough more severe contingencies. Would expect a number between 10 and 25 percent. R3.4 should be broken into two requirements since two separate tasks need to be performed. To help with compliance questions, R3.3.5 needs more specificity. Maybe define a minimum percentage of total possible contingencies as a bright line whether you have performed enough more severe extreme contingencies. Would expect a number

Organization	Question 3 Comment
	between 10 and 25 percent. R3.5 should be broken into three requirements since three separate tasks need to be performed.
Response: R3: The SDT believes that the requirement belongs to both the Planning Coordinator and the Transmission Planner. No change made. R3.4 & R3.5: The SDT disagrees. No change made. R3.3.2: The SDT sees this as only one requirement to identify how the generators are analyzed. No change made. R3.3.3: The SDT sees this as only one requirement to identify how the relay loadability is analyzed. No change made. R3.3.3: The SDT has clarified the requirement to ensure all relay loadability limits are respected in the analysis. R3.3.4: The number of Contingencies is system specific and any percentage that the SDT would establish would be wrong for some entities. No change made. R3.4: The SDT disagrees as the tasks are related. No change made. R3.3.5: The number of Contingencies is system specific and any percentage that the SDT would establish would be wrong for some entities. No change made R3.5: The SDT disagrees as the tasks are related. No change made.	
Brazos Electric Cooperative	R3.4 and 3.5 give us a concern. Table 1 identifies a number of events that are to be assessed but requiring an explanation of why certain events would produce less severe results seems to be open ended thus making it hard to audit. If all the events in Table 1 are studied or have been studied in the past then what is one supposed to document? we understand this is to allow the planner a certain amount of flexibility in their analysis but it seems counter to the idea of requiring a review of all the events in Table 1. We don't have any suggested wording changes, just passing along a general idea.
Response: Several industry commenters have indicated that an explanation of "why the remaining Contingencies would produce less severe System performance" should be deleted since the contingencies selected are those that produce more severe System performance. The SDT agrees and has deleted the requirement for an "explanation of why the remaining Contingencies would produce less severe System results".	
American Electric Power	With regard to R3.3.3., please include transformers as relay loadability also applies to transformers.
Response: The SDT has clarified the requirement to ensure relay loadability limits are respected in the analysis. **R3.3.3** Ensure relay loadability limits are respected.	
ITC Holdings	Comments: If the SDT feels that a requirement such as R3.3.4 is necessary, it may also be necessary to identify further limitations on the use of the control devices referred to. For example, a manually controlled phase shifter would require a time period, or loading limits, to readjust flows to limit a post-contingency flow if not pre-set in the pre-contingency state. Similarly, a tap-changing transformer also requires an adjust period for voltage control. We suggest adding a statement to this requirement (or somewhere in performance requirements) that "all post-contingency flows/voltages must remain within the applicable facility ratings before,

Organization	Question 3 Comment
	during, and after the use of such control devices.
Response: The SDT has revised the requirement wording to clarify that the intent is to simulate automatic operation of existing and planned devices. **R3.3.4** Simulate the expected automatic operation of existing and planned devices designed to provide Steady State control of electrical system quantities when such devices impact the study area. These devices may include equipment such as phase-shifting transformers, load tap changing transformers, and switched capacitors and inductors.	
Northern Indiana Public Service Company	R3.3.3: Evaluation of loadability should be triggered only for those circuits with new protection settings issued since the last assessment; evaluation of circuits that have not been newly assigned or re-assign protection settings is a misuse of resources.
Response: The SDT has clarified the requirement to ensure all relay loadability limits are respected in the analysis. **R3.3.3** Ensure relay loadability limits are respected.	
Minnesota Power	A) Under R3, the Time Horizon of the TPL standards is intended for years one through 10; however, the Time Horizon shown in R3 only says "Long-term Planning". By definition of Long-Term Transmission Planning Horizon this covers years 6 through 10 and beyond. Suggestion to change the Time Horizon to read: "Near-Term and Long-Term Transmission Planning". B) R3.3.3 Is this sub-requirement redundant with PRC-023-2? Is it covered in FAC-009? We believe the SDT should review these standards and if it is a redundant requirement, then this sub-requirement needs to be removed. C) Under R3.4 to make this requirement clearer, please add the following language between the words "expected to" in the first sentence: "expected by the assessing entity to"? We believe that this language addition improves the clarity of this requirement. The first sentence would then read: "Those Planning Event Contingencies in Table 1 that are expected by the assessing entity to produce more severe System impacts shall be identified and a list of those Contingencies to be evaluated for System performance in Requirement R3.1 created. D) Under R3.5 to make this requirement clearer, please add the following language between the words "expected to" in the first sentence so that the phrase reads: "expected by the assessing entity to"? We believe that this language addition improves the clarity of this requirement. The first sentence would then read: "Those Extreme Events in Table 1 that are expected by the assessing entity to produce more severe System impacts shall be identified and a list of those events to be evaluated for System performance in Requirement R3.2 created.
Response: The *Time Horizon* term at the end of the requirement deals with mitigation time periods (as shown below) and is not connected to the assessment time frames. Time Horizons are a consideration when there is a violation of a requirement – the impact to the BES of violating a requirement with a long-term planning horizon is not expected to be as severe as the impact associated with violating a requirement with a real-time operations time horizon. No change made. **Mitigation Time Horizon** The time horizons available for mitigating a violation to a requirement include the following:	

Organization	Question 3 Comment
• **Long-term Planning** — a planning horizon of one year or longer. • **Operations Planning** — operating and resource plans from day-ahead up to and including seasonal. • **Same-day Operations** — routine actions required within the timeframe of a day, but not real-time. • **Real-time Operations** — actions required within one hour or less to preserve the reliability of the bulk electric system. • **Operations Assessment** — follow-up evaluations and reporting of real time operations. R3.3.3: The SDT believes that the requirement is necessary for the TPL standard and has clarified the requirement in an attempt to remove the objections. **R3.3.3** Ensure relay loadability limits are respected. R3.4& R3.5: The Planning Coordinator/Transmission Planer are the applicable entities, so adding "by the assessing entity" is redundant. No change made.	
LADWP	R3.4 This requirement is very strange. If there is a known planning event that is more severe than those listed in Table 1, it should be so identified in Table 1. It is not fair to ask every planner to search for more severe contingencies without any specifics. R3.4 should be deleted. R3.5 This is similar to R3.4; this requires proving of null set. The only way this requirement can be met is to perform an exhaustive and unlimited list of extreme event, real or imaginery, before a rationale can be rendered. This requirement should be deleted with the exception of the last sentence regarding "cascading outages.
Response: R3.4: Requirement R3.4 has been revised. The intent is not to identify additional Contingencies in addition to the planning events in Table 1, but to identify those Table 1 planning events that are expected to be more severe for your portion of the BES. Based on industry comments, the SDT has deleted the requirement to provide an explanation of "why the remaining Contingencies would produce less severe System performance". **R3.4** Those planning events in Table 1, that are expected to produce more severe System impacts on its portion of the BES, shall be identified and a list of those Contingencies to be evaluated for System performance in Requirement R3, part 3.1 created. The rationale for those Contingencies selected for evaluation shall be available as supporting information. R3.4 & R3.5: Several industry commenters have indicated that an explanation of "why the remaining Contingencies would produce less severe System performance" should be deleted since the Contingencies selected are those that produce more severe System performance. The SDT agrees and has deleted the requirement for an "explanation of why the remaining Contingencies would produce less severe System results". **R3.5** Those extreme events in Table 1 that are expected to produce more severe System impacts shall be identified and a list of those events to be evaluated for System performance in Requirement R3, part 3.2 created. The rationale for those Contingencies selected for evaluation shall be available as supporting information. If the analysis concludes there are cascading outages caused by the occurrence of extreme events, an evaluation of possible actions designed to reduce the likelihood or mitigate the consequences and adverse impacts of the event(s) shall be conducted.	
Platte River Power Authority	R3.3.3. Zone 3 type relay loadability studies (single and multiple contingency analyses) should be performed in the OPERATING HORIZON to provide results flagged for possible problems to the Relay Engineers who will evaluate a relay setting change on an Facility or a modification to a relay setting for a new Facility about to be put in-service. I do not see the value of Zone 3 relay

Organization	Question 3 Comment
	loadability checks in the Planning Horizon.
Response: The SDT does not agree that relay loadability should be limited to the Operating Horizon. The SDT has clarified the requirement to ensure relay loadability limits are respected in the analysis. **R3.3.3** Ensure relay loadability limits are respected.	
MAPPCOR	R3.3.2 - Traditionally transmission planners have used their judgment about the minimum steady state voltage limitations of generators. If this standard is going to require its incorporation into the assessments, there should be an MOD standard developed requiring the generators to provide the necessary information prior to its inclusion as a requirement in this standard. R3.3.3 - PRC-023 requires relay loadability to be reflected in facility ratings. Therefore this additional requirement is unnecessary and should be deleted. R3.4 is there a measure for what is a "more severe system impact"? R3.5 Recommend that the requirement for Extreme Event testing be removed from this standard as there is no requirement to develop a Corrective Action Plan to address unacceptable consequences. Otherwise we recommend the following:-Extreme Event performance should be a consideration when developing Corrective Action Plans to address Planning Events-It should be clear that an evaluation does not require solution development for all Extreme Events-Change "an evaluation of possible actions"? to "where appropriate, reasonably practicable actions designed to reduce the likelihood or mitigate the consequences and adverse impacts of the event(s) shall be considered.
Response: R3.3.2: The SDT agrees that judgment is used today. There is a project (PRC-024) that will address this issue. The SDT has changed the wording to clarify the intent of the requirement. For this standard, all that is required is to identify the assumptions concerning voltage limitations of the unit and ensure they are being treated within the simulation as they will react in the real world. **R3.3.2** Trip generators where simulations show generator bus voltages are less than known or assumed minimum generator steady state or ride through voltage limitations. Include in the assessment any assumptions made. R3.3.3: The SDT believes that the requirement is necessary for the TPL standard and has clarified the requirement in an attempt to remove the objections **R3.3.3** Ensure relay loadability limits are respected. R3.4: Requirement R3, part 3.4 requires the Planning Coordinator/Transmission Planner to prepare a list of planning event Contingencies that, in the Planning Coordinator's and Transmission Planner's judgment, are expected to produce more severe System impacts, and to document the rationale for the Contingencies selected. The documented rationale provided by the Planning Coordinator/Transmission Planner will define what is considered to be the more severe System impacts relative to the Contingencies not selected because they are expected to be less severe. No change made. R3.5: The SDT disagrees that the standard should mandate corrective actions for extreme events due to the low probability of these events. However, the SDT believes that those extreme events that are expected to produce more serve System impacts should be analyzed to assess the extent of the impacts on the System to provide the Planning Coordinator/Transmission Planner with information to decide, where appropriate, if it is reasonable to provide some corrective actions to reduce the possibility or limit the consequences of an extreme event. The need to identify possible actions addresses an Order 693 directive. Your suggested wording would	

Organization	Question 3 Comment
make identification of possible actions optional. No change made.	
Orlando Utilities Commission	For Requirement 3.3.1 and 3.3.4 I suggest adding language similar to 3.3.2 and 3.3.3 establishing that "studies shall consider" rather then requiring every simulation precisely recreate this usually minor part of system performance. These devices generally do not respond except for a nearby event, and even then their response is rarely such that it would make the situation "worse". The effect of these devices must be considered, but mandating that every simulation faithfully reproduce the response of every device is not only an efficient way to do this, it actually provides a counter incentive to going above and beyond the standard requirements. Any simulation used to meet this standard that failed to precisely reproduce the performance of this equipment would be a violation of this requirement (as currently written). As such there is no incentive for an entity to include anything but the absolute minimum number of simulations required to meet the standard, since each extra simulation represents an opportunity to miss this requirement. Good planning is based on running a broad range of events against a broad range of conditions and evaluating those responses against a set of performance criteria. This is encouraged by requiring that studies consider the response of equipment to these events rather then mandating their precise reproduction in simulation.
Response: R3.3.1: The SDT disagrees with the comment as the intent of Requirement R3, part 3.3.1, consistent with Order 693, is to perform the simulation to reflect how the Protection System will operate in the real System for each Contingency without operator intervention. No change made. R3.3.4: The SDT disagrees with your comment. The simulation of the expected operation of devices such as phase-shifting transformers, load tap changing transformers ,etc. impacts post-Contingency the performance of the System. No change made.	
American Transmission Company	We propose the following comments for R3.Revise the R3.3.2 text to clarify that subsequent analysis is performed on generators whose voltages are expected to fall below the minimum voltage limits. We suggest this text: Consider the minimum steady state voltage limitations of all generators and identify how generators with bus voltages below its minimum voltage limits are analyzed in the subsequent steady state simulations. Revise the R3.3.3 text to more clearly relate to the specific requirements in PRC-023. We suggest this text: "Incorporate relay loadability per PRC-023 and identify how relay loadability is analyzed in the steady state simulation. Add R3.3.5. The obligation to consider only planned System adjustments that are executable should be a Requirement, rather than performance note "e" in the Planning Events, Steady State & Stability section of Table 1. We suggest this text: "Consider planned System adjustments, such as Transmission configuration changes and redispatch of generation, that are executable within the time duration of the applicable Facility Ratings.
Response: R3.3.2: The SDT has changed the wording to clarify the intent of the requirement. For this standard, all that is required is to identify the assumptions concerning voltage limitations of the unit and ensure they are being treated within the simulation as they will react in the real world. **R3.3.2** Trip generators where simulations show generator bus voltages are less than known or assumed minimum generator steady state or ride through voltage limitations. Include in the assessment any assumptions made. R3.3.3: The SDT has clarified the requirement to ensure relay loadability limits are respected in the analysis. **R3.3.3** Ensure relay loadability limits are respected.	

Organization	Question 3 Comment
R3.3: The SDT disagrees as such planned System adjustments are considered to be operator corrective actions as opposed to automatic actions considered in Requirement R3, part 3.3. No change made.	
Idaho Power	R3.3.2 is unclear as drafted. The minimum steady state voltage limitation for synchronous generators is not a very meaningful value. All generators with an automatic voltage regulator will maintain the set point voltage until the VAR capability of the generator is exceeded, and then the voltage will deteriorate. R3.5 -The requirement to explain why remaining Extreme Contingencies would produce less severe System results than the ones selected for study is overly burdensome. The first part of the requirement requires identification of events that produce more severe System impacts. The reason the others were not selected is because they were less severe or non-credible. Listing all possible extreme events could result in a limitless list.
Response: R3.3.2: The SDT has changed the wording to clarify the intent of the requirement. For this standard, all that is required is to identify the assumptions concerning voltage limitations of the unit and ensure they are being treated within the simulation as they will react in the real world. **R3.3.2** Trip generators where simulations show generator bus voltages are less than known or assumed minimum generator steady state or ride through voltage limitations. Include in the assessment any assumptions made. R3.5: Several industry commenters have indicated that an explanation of "why the remaining Contingencies would produce less severe System performance" should be deleted since the Contingencies selected are those to produce more severe System performance. The SDT agrees and has deleted the requirement for an "explanation of why the remaining contingencies would produce less severe System results". **R3.5** Those extreme events in Table 1 that are expected to produce more severe System impacts shall be identified and a list of those events to be evaluated for System performance in Requirement R3, part 3.2 created. The rationale for those Contingencies selected for evaluation shall be available as supporting information. If the analysis concludes there are cascading outages caused by the occurrence of extreme events, an evaluation of possible actions designed to reduce the likelihood or mitigate the consequences and adverse impacts of the event(s) shall be conducted.	
New York Independent System Operator	R3.5. - The Extreme Events testing in Table 1 should be removed from this standard since there is no requirement to develop a Corrective Action Plan to address unacceptable consequences and the requirements are very general or vague. At a minimum, testing should only be required for EHV facilities or facilities specified by the Regional Entity ? for example, NPCC designates facilities that can have consequences outside an area as bulk power system facilities.
Response: R3.5: extreme events: The SDT disagrees that the standard should mandate corrective actions for extreme events due to the low probability of these events. However, SDT believes that those extreme events that are expected to produce more serve System impacts should be analyzed to assess the extent of the impacts on the System to provide the Planning Coordinator/Transmission Planner with information to decide, where appropriate, if it is reasonable to provide some corrective actions to reduce the possibility or limit the consequences of an extreme event. No change made.	
Duke Energy	Revise M3 to include a reference to R6, since the allocation of responsibilities will directly affect the evidence which is to be provided.
Response: M3: The SDT disagrees. Requirement R6 (now Requirement R7) is an overarching requirement that applies to the entire set of analysis required to meet	

Organization	Question 3 Comment
the requirements of the TPL standard and to the Corrective Action Plan developed as part of the assessment. The intent of this requirement is to clarify that TPL requirements can be met through joint or shared analysis. Coordinating and/or joint analysis does not alleviate the responsibility that all entities need to comply with the standard requirements. Therefore, the SDT sees no reason to link Requirement R3 directly to Requirement R6 (now Requirement R7) in the measure or anywhere else. The requirements stand by themselves and do not require such a linkage. No change made	
Independent Electricity System Operator	1. In our opinion, R3 as drafted is rather convoluted as it attempts to cover several objectives. Firstly, we recommend replacing "utilizing data in Requirement R1" with "developed in accordance with Requirement R1" both in the requirement and the VSLs. Secondly, is the main objective of R3 to ensure studies are conducted based on computer simulation utilizing data provided in Requirement R1? Or is it to ensure that this is done, and that all the other objectives are also fulfilled, for example: assessment of system performance (R3.1 and R3.5), conducting the analysis as specified in R3.2 and R3.3, identification of critical Planning Event contingencies (R3.4), etc. If it is the former, then not conducting studies based on computer simulation utilizing data provided in Requirement R1 alone should have a VSL of Severe. If it is the latter, then the requirement should be either: (a) Revised to place all supporting conditions in the subrequirements. As an example, R3 could be revised as follows:R3. The steady state analyses of the Near-Term and Long-Term Planning Assessment as stipulated in R2.1 and R2.2 shall be performed as follows:R3.1. Studies are conducted based on computer simulation utilizing data provided in Requirement R1;R3.2. Studies shall be performed to determine?. (the rest of the existing R3.1) R3.2. The existing R3.3, and so on.This way, not conducting studies based on computer simulation utilizing data provided in Requirement R1 will be "rolled up" to the VSLs for the main requirement, as is currently stated in the VSL table.Or(b) Restructure, if there are multiple main objectives in R3, to clearly have the main objectives in the main requirement, or split it into more than one main requirement.2. Based on the way R3 is written, we agree with the VRF, Time Horizon and Measure. However, we do have a difficulty with the VSL based on our comments above on the requirement, especially on the Moderate VSL for "The Transmission Planner or Planning Coordinator did not base its studies on computer simulations using models utilizing data provided in Requirement R1.
Response: Requirement R3 has been modified. **R3** For the steady state portion of the Planning Assessment, each Transmission Planner and Planning Coordinator shall perform studies for the Near-Term and Long-Term Transmission Planning Horizons in Requirement R2, parts 2.1, and 2.2. The studies shall be based on computer simulation models using data provided in Requirement R1. R3 is a single requirement and the SDT disagrees with the concept of splitting this up into separate requirements. No change made. The moderate VSL has been modified to align with the changes made to the wording of the requirement. **R3, moderate VSL**: The responsible entity did not base its studies on computer simulation models using data provided in Requirement R1.	
Kansas City Power & Light	R3.3.3: Relay loadability has no bearing beyond the near term horizon. Loadability is not determined several years out. R3.5 " does this imply that mitigation plans must be implemented" If not, then this is highly subjective and the last sentence of this requirement should be deleted.

Organization	Question 3 Comment
Response: R3.3.3 The SDT does not agree that relay loadability should be limited to the near term horizon. The SDT has clarified the requirement to ensure relay loadability limits, as defined in the relay loadability standard, are respected in the analysis. **R3.3.3** Ensure relay loadability limits are respected. R3.5: extreme events: The SDT disagrees that the standard should mandate corrective actions for extreme events due to the low probability of these events. However, SDT believes that those extreme events that are expected to produce more serve System impacts should be analyzed to assess the extent of the impacts on the System to provide the Planning Coordinator/Transmission Planner with information to decide, where appropriate, if it is reasonable to provide some corrective actions to reduce the possibility or limit the consequences of an extreme event.	
ReliabilityFirst Corporation	R3- Throughout this requirement there is a mention of developing a contingency table. It will be nice that such a table is developed under MOD-010 and MOD-012 standard. ERAG can develop such a list as part of their base case development effort. R3.3.3- Suggest changing it to read “For all Transmission lines, studies shall consider relay loadability, if that is the limiting factor for line loading.” R3.3.4 The term “expected operation” is vague. Some of these devices have relays which cause them to automatically respond to system changes, others are controlled by an operator. In both cases, the devices are “expected” to be utilized. Given that operator controlled devices are less certain to be utilized, and may be delayed in being utilized. The expected operation needs to be studied differently for automated devices and those requiring operator interventions.
Response: R3: Requirements R3.4 & R3.5 place the responsibility of creating planning event and extreme event Contingency lists on the applicable entities, the Planning Coordinator and the Transmission Planner as owners, operators or users of the BES. The SDT believes that requirement to develop these Contingency lists of planning and extreme events expected to produce the most severe results, and the rationale for the selection of these events, is best left to the Planning Coordinator/Transmission Planner responsible for its portion of the BES. However, the SDT does not believe that the standard would preclude ERAG from playing a role in the development of these Contingency lists; however, the compliance responsibility will fall to the Planning Coordinator/Transmission Planner. R3.3.3: The SDT has clarified the requirement to ensure relay loadability limits are respected in the analysis. **R3.3.3** Ensure relay loadability limits are respected. R3.3.4: The SDT agrees and has added automatic to the requirement. **R3.3.4** Simulate the expected automatic operation of existing and planned devices designed to provide Steady State control of electrical system quantities when such devices impact the study area. These devices may include equipment such as phase-shifting transformers, load tap changing transformers, and switched capacitors and inductors.	

4. Requirement R4 – Please provide any specific comments on the requirement text, VRF, Time Horizon, measure associated with the requirement, data retention associated with the requirement, and/or the VSL associated with the requirement.

Summary Consideration: The SDT has made numerous clarifying changes to the requirements due to industry comments. In addition, Requirement R4, part 4.3.3 has been added.

R4. For the Stability portion of the Planning Assessment, as described in Requirement R2, parts 2.4 and 2.5, each Transmission Planner and Planning Coordinator shall perform the Contingency analyses listed in Table 1. The studies shall be based on computer simulation models using data provided in Requirement R1.

4.1 Studies shall be performed for planning events to determine whether the BES meets the performance requirements in Table 1 based on the Contingency list created in Requirement R4, part 4.4.

4.2 Studies shall be performed to assess the impact of the extreme events which are identified by the list created in Requirement R4, part 4.5.

4.3 Contingency analyses shall be performed and:

4.3.2 Trip generators where simulations show generator bus voltages or high side of the GSU voltages are less than known or assumed generator low voltage ride through capability. Include in the assessment any assumptions made.

4.3.3 Simulate the impact of transient swings on Protection System operation for Transmission lines and transformers.

4.3.4 Simulate the expected automatic operation of existing and planned devices designed to provide dynamic control of electrical system quantities when such devices impact the study area. These devices may include equipment such as generation exciter control and power system stabilizers, static var compensators, power flow controllers, and DC Transmission controllers.

4.4 Those planning events in Table 1that are expected to produce more severe System impacts on its portion of the BES, shall be identified, and a list of those Contingencies to be evaluated for System performance in Requirement R4, part 4.1 created. The rationale for those Contingencies selected for evaluation shall be available as supporting information.

4.4.1 The Planning Coordinator and Transmission Planner shall coordinate with adjacent Planning Coordinators and Transmission Planners to ensure that Contingencies on adjacent Systems which may impact their Systems are included in the Contingency list.

4.5 Those extreme events in Table 1 that are expected to produce more severe System impacts shall be identified and a list of those events to be evaluated for System performance in Requirement R4, part 4.2 created. The rationale for those Contingencies selected for evaluation shall be available as supporting information. If the analysis concludes there are cascading outages caused by the occurrence of extreme events, an evaluation of possible actions designed to reduce the likelihood or mitigate the consequences of the event(s) shall be conducted.

Footnote 2 Unless specified otherwise, simulate Normal Clearing faults. Single line to ground (SLG) or three phase (3Ø) are the fault types, that must be evaluated in Stability simulations for the event described. A 3Ø or a double line to ground fault study indicating the criteria are being met is sufficient evidence that a SLG condition would also meet the criteria.

R4 VSL	The responsible entity did not identify planning events as described in Requirement R4, part 4.4 or extreme events as	The responsible entity did not perform studies as specified in Requirement R4, part 4.1 to determine	The responsible entity did not perform studies as specified in Requirement R4, part 4.1 to determine	The responsible entity did not perform studies as specified in Requirement R4, part 4.1 to determine that the BES meets the

	described in Requirement R4, part 4.5.	that the BES meets the performance requirements for one of the categories (P1 through P7) in Table 1. OR The responsible entity did not perform studies as specified in Requirement R4, part 4.2 to assess the impact of extreme events. OR The responsible entity did not base its studies on computer simulation models using data provided in Requirement R1.	that the BES meets the performance requirements for two of the categories (P1 through P7) in Table 1. OR The responsible entity did not perform Contingency analysis as described in Requirement R4, part 4.3.	performance requirements for three or more of the categories (P1 through P7) in Table 1.

Organization	Question 4 Comment
Dominion - Electric Transmission	R4.4 - Dominion believes that creating a master list of all contingencies a planner must take is burdensome and provides no planning value. In addition the contingencies will vary based on the loading configuration and the specific study case. In general, we start out with the very worst contingencies. If these cause hard rotor swings, we know we will probably have to do most of the possible contingencies in the station until we get down to contingencies that do not swing the generator much. But if the swings are light, then that particular load/topology situation probably does not need in-depth exploration. Creating a master list could create unnecessary study. However, we do support a list of the extreme contingencies in R4.5.
Response: Requirement R4, part R4.4 does not require a master list of all possible contingencies. The requirement is to create a list of those Contingencies expected to produce more severe results. There is nothing that prevents you from modifying the list based on simulation results (e.g., hard rotor swings). No change made.	
Northeast Power Coordinating Council	R4.3.2 - Traditionally transmission planners have assumed that generators would ride through low voltages associated with Planning Events which is generally adequate for non-wind generators. If this standard is going to require its incorporation into the assessments, there should be an MOD standard developed requiring the generators to provide the necessary information prior to its inclusion as a requirement in this standard. R4.5 Priority Comment ?We recommend that the requirement for Extreme Event testing be removed from this standard as there is no requirement to develop a Corrective Action Plan to address unacceptable consequences. Otherwise we recommend the following:- Extreme Event performance should be a consideration when developing Corrective Action Plans to

Organization	Question 4 Comment
	address Planning Events- It should be clear that an evaluation does not require solution development for all Extreme Events- Change "an evaluation of possible actions"? to "where appropriate, reasonably practicable actions designed to reduce the likelihood or mitigate the consequences and adverse impacts of the event(s) shall be considered. For Requirements R4.4 and R4.5, what defines "more severe System impacts"?
Response: R4.3.2: There is a reliability standard (PRC-024) under development which will require Generator Owners to provide information about the low voltage ride through capability of their generators based on relay settings. Requirement R4, part 4.3.2 requires you to include in the assessment how you analyzed voltage ride-through capability. If complete information on the ride-through capability is not available, then you should just document your assumptions regarding ride-through capability for the assessment. The SDT has changed the wording of Requirement R4, part 4.3.2 to clarify this. **4.3.2** Trip generators where simulations show generator bus voltages or high side of the GSU voltages are less than known or assumed generator low voltage ride through capability. Include in the assessment any assumptions made. R4.5: The SDT considers extreme event testing to be an important part of the assessment and therefore will not delete it. The expectation for extreme event testing is that for major problems you will evaluate actions to reduce likelihood or mitigate consequences. The SDT believes the original words express this concept better than your suggested words. No change made. R4.4 and R4.5: The definition of "more severe impacts" is left to the engineering judgment of the Transmission Planner and Planning Coordinator.	
Transmission Planning	R4.3.2. COMMENT: The inability to survive a given low voltage transient is often dependent on motor performance within the generating facility's auxiliary load distribution system and is not a specific relay setting. Determination of specific generating plant low voltage ride through capability requires extensive modeling of the plant distribution system and is outside the scope of this standard.
Response: R4.3.2: The intent of this requirement is to include in the assessment how voltage ride-through capability is analyzed in your studies. It does not require extensive modeling of a generating plant's distribution system. There is a reliability standard (PRC-024) under development which will require Generator Owners to provide information about the low voltage ride through capability of their generators based on relay settings. If complete information on the ride-through capability is not available, then you should document your assumptions regarding voltage ride-through capability for the assessment. The SDT has changed the wording of Requirement R4.3.2 to clarify this. **4.3.2** Trip generators where simulations show generator bus voltages or high side of the GSU voltages are less than known or assumed generator low voltage ride through capability. Include in the assessment any assumptions made.	
SERC Engineering Committee Planning Standards Subcommittee	R4.1:In Requirement R4.1, it is suggested that the word "contingency" be added to describe the lists created in R4.4?Studies shall be performed to determine whether the BES meets the performance requirements in Table 1 based on the contingency lists created in Requirement R4.4. R4.4:Regarding Requirement R4.4, it is suggested that a rewording be considered such as described below:? For each category of the Planning Events in Table 1, those Planning Event Contingencies that are expected to produce more severe System impacts shall be identified, and a list of those Contingencies to be evaluated for System performance in Requirement R4.1 shall be created. The rationale for the Contingencies selected for evaluation shall be available as supporting information

Organization	Question 4 Comment
	with an explanation of why the remaining Contingencies would produce less severe System results. R4.3.2:R4.3.2 requires that voltage ride through capability be analyzed. It is not clear what should be analyzed (e.g. auxiliary loads, generator protection, generator capability, etc.) This requirement needs more clarity. Footnote #3:Footnote #3 needs to be revised to include 2LG faults in addition to 3-Phase faults indicating that the SLG criteria is met.
Response: R4.1: The SDT agrees and has added the word "Contingency". **4.1** Studies shall be performed for planning events to determine whether the BES meets the performance requirements in Table 1 based on the Contingency list created in Requirement R4, part 4.4. R4.4: The SDT agrees and has modified the wording similar to your suggested wording, however - due to other stakeholder comments, the phrase requiring an explanation was deleted from the revised standard. **4.4** Those planning events in Table 1that are expected to produce more severe System impacts on its portion of the BES, shall be identified, and a list of those Contingencies to be evaluated for System performance in Requirement R4, part 4.1 created. The rationale for those Contingencies selected for evaluation shall be available as supporting information R4.3.2: The intent of this requirement is to include in the assessment how voltage ride-through capability is analyzed in your studies. It does not require extensive modeling of a generating plant's distribution system. There is a reliability standard (PRC-024) under development which will require Generator Owners to provide information about the low voltage ride through capability of their generators based on relay settings. If complete information on the ride-through capability is not available, then you should document your assumptions regarding voltage ride-through capability for the assessment. The SDT has changed the wording of Requirement R4, part 4.3.2 to clarify this. **4.3.2** Trip generators where simulations show generator bus voltages or high side of the GSU voltages are less than known or assumed generator low voltage ride through capability. Include in the assessment any assumptions made. Footnote #3 (now footnote #2): The SDT agrees and has modified the wording similar to your suggested wording. **Footnote 2** Unless specified otherwise, simulate Normal Clearing faults. Single line to ground (SLG) or three phase (3Ø) are the fault types, that must be evaluated in Stability simulations for the event described. A 3Ø or a double line to ground fault study indicating the criteria are being met is sufficient evidence that a SLG condition would also meet the criteria.	
Modesto Irrigation District	Comments: We believe that R4.3.1-R4.3.3 should be bullets under R4.3
Response: R4.3.1-R4.3.3: The SDT disagrees as these are mandatory elements of the Contingency analyses. Bullets are only used to identify the possible, but not all inclusive, elements of a menu. No change made.	
OPUC	4. Requirement R4 ? Please provide any specific comments on the requirement text, VRF, Time Horizon, measure associated with the requirement, data retention associated with the requirement, and/or the VSL associated with the requirement. Comments: A: R4.3 should be modified to become the requirement to conduct contingency analyses with R4.3.1 thru 3

Organization	Question 4 Comment
	presented as bullets there-under. B: R4.3.2 should clarify whether all relay protection must be modeled
Response: R4.3: The SDT disagrees as these are mandatory requirements of the Contingency analyses. Bullets are only used to identify the possible, but not all inclusive, elements of a menu. However, R4.3 has been modified to read more like a requirement as shown below. **4.3** Contingency analyses shall be performed and: R4.3.2: The intent of this requirement is to include in the assessment how voltage ride-through capability is analyzed in your studies. It does not require extensive modeling of all relay protection. There is a reliability standard (PRC-024) under development which will require Generator Owners to provide information about the low voltage ride through capability of their generators based on relay settings. If complete information on the ride-through capability is not available, then you should document your assumptions regarding voltage ride-through capability for the assessment. The SDT has changed the wording of Requirement R4, part 4.3.2 to clarify this. **4.3.2** Trip generators where simulations show generator bus voltages or high side of the GSU voltages are less than known or assumed generator low voltage ride through capability. Include in the assessment any assumptions made.	
Bonneville Power Administration	Requirement R4 should be consistent with R3. Suggested edit for R4. - "For the Stability portion of the Planning Assessment, each Transmission Planner and Planning Coordinator shall perform analysis for the Near-Term Transmission Planning Horizon studies in Requirement R2.4. The studies shall be based on computer simulations using models developed from the data provided in Requirement R1." R4.1 should be clarified consistent with comments to R3.1. Suggested clarification for R4.1 - "Studies shall be performed to determine whether the BES meets the performance requirements in Table 1. A reduced set of contingencies can be simulated based on a list created in requirement R4.4." As currently drafted, R4.3 is not a requirement. Without the statements in R4.3.1-R4.3.3, R4.3 is simply a phrase. Sub-Sub-Requirements R4.3.1 through R4.3.3 should be bullets under R4.3, with the language in R4.3 modified so that it becomes the requirement to conduct contingency analyses that address the three resulting bullets. R4.3.2 ? it is not clear what is required to be modeled. Typically a generator may have 10 or more protective relays. Is the intent to model all relay protection? The existing commercial programs do not have sufficient models or capacity to do that for all generators in the system. Requirement R4.4 also needs to be clarified as follows: R4.4 - "A reduced list of Contingencies can be developed for System Performance evaluation in Requirement R4.1 that includes those Planning Event Contingencies that are expected to produce more severe System impacts based on system performance as required in Table 1. R4.5 ? We disagree with the requirement to explain why remaining Extreme Contingencies would produce less severe System results than the ones selected for study. The first part of the requirement requires identification of events that produce more severe System impacts. The reason the others were not selected is because they were less severe or non-credible. In any case, theoretically, there can always be a more severe Extreme Contingency than the one selected for study. For example, if the Extreme Contingency studied were simultaneous loss of 3 transmission lines with failure of redundant RAS, then

Organization	Question 4 Comment
	simultaneous loss of 4 lines with failure of 2 sets of redundant RAS would be more severe. Listing all possible extreme events could result in a limitless list.

Response: The wording in Requirement R4 has been made identical to that in Requirement R3.

> **R4.** For the Stability portion of the Planning Assessment, as described in Requirement R2, parts 2.4 and 2.5, each Transmission Planner and Planning Coordinator shall perform the Contingency analyses listed in Table 1. The studies shall be based on computer simulation models using data provided in Requirement R1.

R4.1: The intent is to run the contingencies developed in Requirement R4, part 4.4, not a reduced set of them. No change made.

R4.3: The SDT disagrees as these are mandatory elements of the Contingency analyses. Bullets are only used to identify the possible, but not all inclusive, elements of a menu. However, Requirement R4, part 4.3 has been modified to read more like a requirement as shown below.

> **4.3** Contingency analyses shall be performed and:

R4.3.2: The intent of this requirement is to include in the assessment how voltage ride-through capability is analyzed in your studies. It does not require modeling of all relay protection. There is a reliability standard (PRC-024) under development which will require Generator Owners to provide information about the low voltage ride through capability of their generators based on relay settings. If complete information on the ride-through capability is not available, then you should document your assumptions regarding voltage ride-through capability for the assessment. The SDT has changed the wording of Requirement R4.3.2 to clarify this.

> **4.3.2** Trip generators where simulations show generator bus voltages or high side of the GSU voltages are less than known or assumed generator low voltage ride through capability. Include in the assessment any assumptions made.

R4.4: The intent of Requirement R4, part 4.4 is to identify and develop a list of Contingencies to be run. Your proposed wording does not capture that intent. No change made.

R4.5: Several industry commenters have indicated that an explanation of "why the remaining Contingencies would produce less severe System performance" should be deleted since the contingencies selected are already justified as those that produce more severe System performance. The SDT agrees and has deleted the requirement for an "explanation of why the remaining Contingencies would produce less severe System results".

MRO MRO NERC Standards Review Subcommittee	MRO NSRS proposes the following comments for R4:Add R4.3.3 text include relay loadability in the R4 (Stability) requirements to parallel R3.3.3 in the R3 (Steady State) requirement which would more clearly relate to the specific requirements in PRC-023. MRO NSRS suggests this text: "Incorporate relay loadability per PRC-023 and identify how relay loadability is analyzed in the dynamic simulation. In R4.3.4, MRO NSRS proposes limiting the scope to automatic devices and adding the notion of "including but not limited to". MRO NSRS suggests R4.3.4 text of: "Simulate the expected automatic operation of existing and planned control devices including but not limited to generation exciter control and power system stabilizers, static VAR compensators, power flow controllers, and DC Transmission controllers.

Response: R4.3: The SDT agrees with the general idea and has added Requirement R4, part 4.3.3. However, Requirement R4, part 4.3.3 requires that you "Simulate the impact of transient swings on Protection System operation for Transmission lines and transformers" rather than creating a stability requirement for relay loadability. This requirement is more applicable to stability studies than a relay loadability requirement would be. Relay loadability is more of a steady state

Organization	Question 4 Comment
issue than a dynamic issue. **4.3.3** Simulate the impact of transient swings on Protection System operation for Transmission lines and transformers. R4.3.4: The SDT has added the word "automatic" into Requirement R4, part 4.3.4 such that it now reads as follows: **4.3.4** Simulate the expected automatic operation of existing and planned devices designed to provide dynamic control of electrical system quantities when such devices impact the study area. These devices may include equipment such as generation exciter control and power system stabilizers, static var compensators, power flow controllers, and DC Transmission controllers.	
SERC Engineering Committee Reliability Review Subcommittee (RRS)	In R4, should the “and” in the first sentence actually be “or”?” Footnote #3 needs to be revised to include 2LG faults in addition to 3Phase faults indicating that the SLG criteria is met. In Requirement R4.1, it is suggested that the word "contingency" be added to describe the lists created in R4.4”Studies shall be performed to determine whether the BES meets the performance requirements in Table 1 based on the contingency lists created in Requirement R4.4. ? Regarding Requirement R4.4, it is suggested that a rewording be considered such as the following: For each category of the Planning Events in Table 1, those Planning Event Contingencies that are expected to produce more severe System impacts shall be identified, and a list of those Contingencies to be evaluated for System performance in Requirement R4.1 shall be created. The rationale for the Contingencies selected for evaluation shall be available as supporting information with an explanation of why the remaining Contingencies would produce less severe System results. ? R4.3.2 requires that voltage ride through capability be analyzed. It is not clear what should be analyzed (e.g. auxiliary loads, generator protection, generator capability, etc.) This requirement needs more clarity. ? R4.3.2 ? By in large, the industry does not have the input data or the methods to do this. It would seem necessary to have PRC-024 approved before this can be met. In R4.3.2, need guidance on how to consider minimum steady state voltage limitations.
Response: R4: Requiring the Planning Coordinator AND the Transmission Planner to perform analysis should not result in a duplication of effort. Requirement R6 (now Requirement R7) requires the two entities to agree on their individual and joint responsibilities. The SDT believes that ‘AND’ is the proper word rather than ‘OR’. Using ‘OR’ could be interpreted by one entity as not applying to them. No change made. Footnote #3 (now footnote #2): The SDT agrees and has made the suggested change. **Footnote 2** Unless specified otherwise, simulate Normal Clearing faults. Single line to ground (SLG) or three phase (3Ø) are the fault types, that must be evaluated in Stability simulations for the event described. A 3Ø or a double line to ground fault study indicating the criteria are being met is sufficient evidence that a SLG condition would also meet the criteria. R4.1: The SDT agrees and has made the suggested change. **4.1** Studies shall be performed for planning events to determine whether the BES meets the performance requirements in Table 1 based on the Contingency list created in Requirement R4, part 4.4.	

Organization	Question 4 Comment
R4.4: The SDT agrees and has made the suggested change however - due to other stakeholder comments, the phrase requiring an explanation was deleted from the revised standard. **4.4** Those planning events in Table 1that are expected to produce more severe System impacts on its portion of the BES, shall be identified, and a list of those Contingencies to be evaluated for System performance in Requirement R4, part 4.1 created. The rationale for those Contingencies selected for evaluation shall be available as supporting information R4.3.2: The intent of this requirement is to include in the assessment how voltage ride-through capability is analyzed in your studies. It does not require modeling of all relay protection. There is a reliability standard (PRC-024) under development which will require Generator Owners to provide information about the low voltage ride through capability of their generators based on relay settings. If complete information on the ride-through capability is not available, then you should document your assumptions regarding voltage ride-through capability for the assessment. The SDT has changed the wording of Requirement R4, part 4.3.2 to clarify this. **4.3.2** Trip generators where simulations show generator bus voltages or high side of the GSU voltages are less than known or assumed generator low voltage ride through capability. Include in the assessment any assumptions made.	
FirstEnergy Corp	Specific comments, Requirements of R4:A. R4.1: A space is needed between the text "Requirement and R4.4" which are run together in the requirement. B. R4.3.3: For readability we suggest inserting the word "may" in between "devices include". We agree with the stated Measures, VRF, Time-Horizon, Data Retention and VSL of requirement R4
Response: R4.1: The SDT has corrected this problem. **4.1** Studies shall be performed for planning events to determine whether the BES meets the performance requirements in Table 1 based on the Contingency list created in Requirement R4, part 4.4. R4.3.3: The SDT agrees and has made the suggested change. **4.3.4** Simulate the expected automatic operation of existing and planned devices designed to provide dynamic control of electrical system quantities when such devices impact the study area. These devices may include equipment such as generation exciter control and power system stabilizers, static var compensators, power flow controllers, and DC Transmission controllers.	
TVA System Planning	In R4, should the “and” in the first sentence actually be “or”? R4.3.2 requires that voltage ride through capability be analyzed. It is not clear what should be analyzed (e.g. auxiliary loads, generator protection, generator capability, etc.) This requirement needs more clarity. By in large, the industry does not have the input data or the methods to do this. It would seem necessary to have PRC-024 approved before this can be met.
Response: R4: Requiring the Planning Coordinator AND the Transmission Planner to perform analysis should not result in a duplication of effort. Requirement R6 (now Requirement R7) requires the two entities to agree on their individual and joint responsibilities. The SDT believes that ‘AND’ is the proper word rather than ‘OR’. Using OR could be interpreted by one entity as not applying to them. No change made. R4.3.2: The intent of this requirement is to include in the assessment how voltage ride-through capability is analyzed in your studies. It does not require modeling of	

Organization	Question 4 Comment
all relay protection. There is a reliability standard (PRC-024) under development which will require Generator Owners to provide information about the low voltage ride through capability of their generators based on relay settings. If complete information on the ride-through capability is not available, then you should document your assumptions regarding voltage ride-through capability for the assessment. The SDT has changed the wording of Requirement R4, part 4.3.2 to clarify this. **4.3.2** Trip generators where simulations show generator bus voltages or high side of the GSU voltages are less than known or assumed generator low voltage ride through capability. Include in the assessment any assumptions made.	
Exelon Transmission Planning	See comment in response to question 9 regarding the lack of definition related to the failure of a "single Protection System".
Response: See response to question 9 comment.	
Southern Company	Generating unit stability should be separated from system stability like in previous drafts. R4.2 and R4.5 are both addressing the extreme events. However, R4.2 is referring to R4.5 while R4.5 is referring to R4.2. We suggest deleting the reference back to R4.2 which is in R4.5. A similar situation exists for R4.1 and R4.4.
Response: The majority of the industry believes that there should be no distinction between generating unit stability and System Stability. No change made. R4.2, R4.5, R4.1, R4.4: The SDT does not see any harm in having the cross referencing. No change made.	
United Illuminating Northeast Utilities ISO New England, Inc. Central Maine Power Company	R4.3.2 Priority Comment - Traditionally transmission planners have assumed that generators would ride through low voltages associated with Planning Events which is generally adequate for non-wind generators. If this standard is going to require its incorporation into the assessments, there should be an MOD standard developed requiring the generators to provide the necessary information prior to its inclusion as a requirement in this standard. R4.5 Priority Comment ?We recommend that the requirement for Extreme Event testing be removed from this standard as there is no requirement to develop a Corrective Action Plan to address unacceptable consequences. Otherwise we recommend the following:- Extreme Event performance should be a consideration when developing Corrective Action Plans to address Planning Events- It should be clear that an evaluation does not require solution development for all Extreme Events- Change "an evaluation of possible actions"? to "where appropriate, reasonably practicable actions designed to reduce the likelihood or mitigate the consequences and adverse impacts of the event(s) shall be considered.
Response: R4.3.2: There is a reliability standard (PRC-024) under development which will require Generator Owners to provide information about the low voltage ride through capability of their generators based on relay settings. Requirement R4, part 4.3.2 requires you to include in the assessment how you analyzed voltage ride-through capability. If complete information on the ride-through capability is not available, then you should document your assumptions regarding ride-through capability for the assessment. The SDT has changed the wording of Requirement R4, part 4.3.2 to clarify this. **4.3.2** Trip generators where simulations show generator bus voltages or high side of the GSU voltages are less than known or assumed generator low voltage ride through capability. Include in the assessment any assumptions made. R4.5: The SDT considers extreme event testing to be an important part of the assessment and therefore will not delete it. The expectation for extreme event testing is that for major problems you will evaluate actions to reduce likelihood or mitigate consequences. The SDT believes the original words express this concept better	

Organization	Question 4 Comment
than your suggested words. No change made.	
System Protection and Transmission Planning Department	Comments under R1 apply here as well. The requirement to "utiliz[e] data provided in Requirement R1" is redundant with MOD-012, and should be moved to MOD-012. To conform with R1, we suggest a phrase be inserted that requires model data used in Stability Studies used for Annual Assessments be consistent with data submitted under MOD-012.
Response: R4: MOD-012 does not require the data to be used for an assessment of the Transmission System. Therefore, the requirement to utilize data provided under Requirement R1 is needed in this standard. No change made. R4: Because Requirement R1 references the data provided under MOD-012, there is no need for a reference to MOD-012 in Requirement R4. No change made.	
PPL Energy Plus	It should be pointed out that Breaker Failure (i.e. fail to open) and Breaker Fault (internal fault in breaker) are two different events.
Response: Breaker failure and breaker fault are two different events and that is reflected by having two different designations for these events in Table 1 (P2.3 and P4). No change made.	
PacifiCorp Deseret Generation & Transmission SRP Arizona Public Service Co Southern California Edison Company Western Area Power Administration Pacific Gas and Electric Co, Puget Sound Energy, Inc. NV Energy San Diego Gas and Electric Co Tucson Electric Power Company	As currently drafted, R4.3 is not a requirement. Without the statements in R4.3.1-R4.3.3, R4.3 is simply a phrase. Sub-Sub-Requirements R4.3.1 through R4.3.3 should be bullets under R4.3, with the language in R4.3 modified so that it becomes the requirement to conduct contingency analyses that address the three resulting bullets. R4.3.2 - it is not clear what is required to be modeled. Typically a generator may have 10 or more protective relays. Is the intent to model all relay protection? The existing commercial programs do not have sufficient models or capacity to do that for all generators in the system. R4.5 ? We disagree with the requirement to explain why remaining Extreme Contingencies would produce less severe System results than the ones selected for study. The first part of the requirement requires identification of events that produce more severe System impacts. The reason the others were not selected is because they were less severe or non-credible. In any case, theoretically, there can always be a more severe Extreme Contingency than the one selected for study. For example, if the Extreme Contingency studied were simultaneous loss of 3 transmission lines with failure of redundant RAS, then simultaneous loss of 4 lines with failure of 2 sets of redundant RAS would be more severe. Listing all possible extreme events could result in a limitless list.
NorthWestern Corporation NorthWestern Energy (NWE)	R4.3 is unclear. Requirements R4.3.1 through R4.3.3 should be bullets under R4.3, with R4.3 modified so that it becomes the requirement to conduct contingency analyses that address the three resulting bullets

Organization	Question 4 Comment
(NWMT)	R4.3.2 is unclear. It appears to be a broken sentence. Typically a generator may have 10 or more protective relays. Is the intent to model all relay protection? The existing commercial programs do not have sufficient models or capacity to do that for all generators in the system. It is our understanding that the voltage ride through standard is not complete at this time. R4.5 needs to be modified. It would be better to combine R4.2 and R4.5. The first part of the requirement requires identification of events that produce more severe System impacts. The presumed reason that the other contingencies were not selected is because they were less severe or non-credible. In any case, theoretically, there can always be examples of more severe Extreme Contingencies than the one selected for study. This can be achieved by simply choosing events that are even less credible. For example, if the Extreme Contingency studied was a simultaneous loss of 3 transmission lines with the failure of redundant RAS (SPS), then an event resulting in the simultaneous loss of 4 lines with the failure of 2 sets of redundant RASs would be even more severe. Listing all possible extreme events could result in a limitless list.
Response: R4.3: The SDT disagrees as these are mandatory elements of the Contingency analyses. Bullets are only used to identify the possible, but not all inclusive, elements of a menu. However, Requirement R4, part 4.3 has been modified to read more like a requirement as shown below. **4.3** Contingency analyses shall be performed and: R4.3.2: The intent of this requirement is to include in the assessment how voltage ride-through capability is analyzed in your studies. It does not require modeling of all relay protection. There is a reliability standard (PRC-024) under development which will require Generator Owners to provide information about the low voltage ride through capability of their generators based on relay settings. If complete information on the ride-through capability is not available, then you should document your assumptions regarding voltage ride-through capability for the assessment. The SDT has changed the wording of Requirement R4, part 4.3.2 to clarify this. **4.3.2** Trip generators where simulations show generator bus voltages or high side of the GSU voltages are less than known or assumed generator low voltage ride through capability. Include in the assessment any assumptions made. R4.5: Several industry commenters have indicated that an explanation of "why the remaining Contingencies would produce less severe System performance" should be deleted since the contingencies selected are already justified as those that produce more severe System performance. The SDT agrees and has deleted the requirement for an "explanation of why the remaining Contingencies would produce less severe System results".	
Western Area Power Administration	R4.3.3 need not include the operation of exciters and power system stabilizers as modeling of these parts of a generation system is already covered in Mod-12 & Mod-13 Standards and therefore are inherent in the dynamic analysis conducted using a program such as the GE PSLF or PTI power system simulation programs.
Response: R4.3.3: MOD-012 and MOD-013 do not require the data to be used for an assessment of the Transmission System. Therefore, the requirement to simulate the operation of exciters and stabilizers is needed in this standard. No change made.	
Tampa Electric	Clarification needed on modeling of protection system equipment.
Response: Requirement R4, parts 4.3.1 and 4.3.2 do not require modeling of Protection System equipment. It just requires you to have simulations which include the effect of Protection System equipment operation. You don't have to specifically model a relay to simulate the effect of clearing a fault at 3 cycles. No change made.	

Organization	Question 4 Comment
Florida Reliability Coordinating Council, Inc - Transmission Working Group	R4.3.1 - Please clarify, is the intent of this requirement to have every relay modeled? We suggest clarifying that the intent is that Protection System Equipment would be incorporated into the contingency list, and that modeling the Protection System equipment settings and logic would only be done for Protection Systems that could significantly impact stability response (e.g., out-of-step relaying) as deemed appropriate through engineering judgment, and that the intent would be to do this only for the Region under study and not the entire Interconnection (e.g., studies in Florida should not need to include relays in Canada). R4.4 & R4.5 - Does the intent of allowing this "More severe events" to establish actual study parameter extend between the planned events and extreme events (e.g. if a range of extreme events establishes that planning events performance requirements are met, would a redundant analysis of the planning events still be required)
Response: Requirement R4, part 4.3.1 does not require modeling of Protection System equipment. It just requires you to have simulations which include the effects of Protection System equipment operation. You don't have to specifically model a relay to simulate the effect of clearing a fault at 3 cycles. If you need to model a relay to capture its effect, then model that relay. And certainly engineering judgment should be used to determine which relay effects should be included in the simulations. No change made. R4.4 and R4.5: You can always demonstrate that performance requirements are met by meeting them for a more severe Contingency. It is possible that you could demonstrate that performance requirements are met for planning events by performing extreme events (e.g., using a three-phase fault with stuck breaker Contingency can demonstrate that performance requirements for a single phase fault plus stuck breaker contingency is met). No change made.	
FMPA	R4.2, see comment on R3.3 concerning how to model a hurricane event or other weather event. R4.3, contingency analysis ought to specifically exclude studying contingencies on neighboring systems since stability is more related to protection system and clearing times. R4.3.1, please clarify, is the intent of this requirement to have every distance relay in each Interconnect modeled? We suggest clarifying that the intent is that Protection System Equipment would be incorporated into Facility Ratings and the contingency list, and that modeling the Protection System equipment settings and logic would only be done for Protection Systems that could significantly impact stability response (e.g., out-of-step relaying) as deemed appropriate through engineering judgment, and that the intent would be to do this only for the Region under study and not the entire Interconnection (e.g., studies in Florida should not need to include relay models in Canada). R4.3.2, we assume that the intent of this requirement would be to help establish the magnitude and duration of acceptable post-transient voltage dips, presumable to meet the curve published in the PRC-023 standard under draft. Is this a correct assumption? We assume the drafting team does not expect models to be written for every generator to actually model potential loss of station service due to voltage dips and automatically model potential generator trips. R4.4 and R4.5, see comments on R3.4 and R3.5 about re-arranging these requirements.
Response: R4.2: There are no hurricane events or weather events in the extreme events for stability analysis. No change made. R4.3: The SDT disagrees. There may be some contingencies on external systems which can have a dynamic impact on the system under study. Part 4.4.1 has been added to Requirement R4 to address this possibility.	

Organization	Question 4 Comment
4.4.1 The Planning Coordinator and Transmission Planner shall coordinate with adjacent Planning Coordinators and Transmission Planners to ensure that Contingencies on adjacent Systems which may impact their Systems are included in the Contingency list. R4.3.1: Requirement R4, part 4.3.1 does not require modeling of Protection System equipment. It just requires you to have simulations which include the effects of Protection System equipment operation. Certainly engineering judgment should be used to determine which relay effects should be included in the simulations. No change made. R4.3.2: The intent of this requirement is to include in the Planning Assessment how voltage ride-through capability is analyzed in your studies. It does not require extensive modeling of a generating plant's distribution system. There is a reliability standard (PRC-024) under development which will require Generator Owners to provide information about the low voltage ride through capability of their generators based on relay settings. If complete information on the ride-through capability is not available, then you should document your assumptions regarding voltage ride-through capability for the Planning Assessment. The SDT has changed the wording of Requirement R4, part 4.3.2 to clarify this. **4.3.2** Trip generators where simulations show generator bus voltages or high side of the GSU voltages are less than known or assumed generator low voltage ride through capability. Include in the assessment any assumptions made. R4 and R5: The SDT does not agree that the requirements should be re-ordered. No change made.	
MidAmerican Energy Company	MidAmerican commends the SDT for its hard work on this standard. MidAmerican suggests that R4.5 be revised by changing "remaining Contingencies" to "remaining unselected Contingencies.
Response: R4.5: Several industry commenters have indicated that an explanation of "why the remaining Contingencies would produce less severe System performance" should be deleted since the contingencies selected are already justified as those that produce more severe System performance. The SDT agrees and has deleted the requirement for an "explanation of why the remaining Contingencies would produce less severe System results". **4.5** Those extreme events in Table 1 that are expected to produce more severe System impacts shall be identified and a list of those events to be evaluated for System performance in Requirement R4, part 4.2 created. The rationale for those Contingencies selected for evaluation shall be available as supporting information. If the analysis concludes there are cascading outages caused by the occurrence of extreme events, an evaluation of possible actions designed to reduce the likelihood or mitigate the consequences of the event(s) shall be conducted.	
SMUD	R4.3:R4.3.2 - The requirement is unclear. If it is to cover modeling issues, then it should be under MOD series. If it is to cover voltage ride through performance, then performance metrics should be provided. R4.5Listing all possible scenarios for studying extreme contingencies will result in a limitless list. Discretion should be given to the transmission planner on the selection of the contingencies without a requirement to list why other extreme contingencies have not been included.
Response: R4.3.2: The intent of this requirement is to include in the assessment how voltage ride-through capability is analyzed in your studies. It does not require extensive modeling of a generating plant's distribution system. There is a reliability standard (PRC-024) under development which will require Generator Owners to provide information about the low voltage ride through capability of their generators based on relay settings. If complete information on the ride-through capability is not available, then you should document your assumptions regarding voltage ride-through capability for the assessment. The SDT has changed the wording of Requirement R4, part 4.3.2 to clarify this.	

Organization	Question 4 Comment
4.3.2 Trip generators where simulations show generator bus voltages or high side of the GSU voltages are less than known or assumed generator low voltage ride through capability. Include in the assessment any assumptions made. R4.5: Several industry commenters have indicated that an explanation of "why the remaining Contingencies would produce less severe System performance" should be deleted since the contingencies selected are already justified as those that produce more severe System performance. The SDT agrees and has deleted the requirement for an "explanation of why the remaining Contingencies would produce less severe System results".	
Progress Energy Florida, Inc.	For R4.3.2, PEF assumes that the SDT understands that the extent of analyzing generation voltage ride-through capability does not extend to modeling of individual inductive loads on the Distribution side, as this does not fit the definition of the BES. Motor loads on the Distribution system do have an effect on generation voltage ride-through capability, however, and PEF therefore is perplexed as to what extent the SDT expects concerning analysis for this sub-requirement.
Response: R4.3.2: The intent of this requirement is to include in the assessment how voltage ride-through capability is analyzed in your studies. It does not require extensive modeling of a generating plant's distribution system. There is a reliability standard (PRC-024) under development which will require Generator Owners to provide information about the low voltage ride through capability of their generators based on relay settings. If complete information on the ride-through capability is not available, then you should document your assumptions regarding voltage ride-through capability for the assessment. The SDT has changed the wording of Requirement R4, part 4.3.2 to clarify this. **4.3.2** Trip generators where simulations show generator bus voltages or high side of the GSU voltages are less than known or assumed generator low voltage ride through capability. Include in the assessment any assumptions made.	
Xcel Energy	R4.3 - requires very labor intensive and detailed studies to be conducted; there are concerns about being able to accomplish the required studies within the 24 month implementation period; additionally, while there may be some reliability benefit to requiring these studies, have the costs of this requirement been studied?; an alternative could be some sort of phased implementation (x% completed by 24months, etc.) R4.3.3 - to what degree is generator relaying factored into the model/study?
Response: R4.3: The SDT believes that 24 months is sufficient to perform the additional studies. No change made. R4.3.3: Generator relaying is not a part of Requirement R4, part 4.3.3.	
Ameren	In Requirement R4.1, it is suggested that the word "contingency" be added to describe the lists created in R4.4Studies shall be performed to determine whether the BES meets the performance requirements in Table 1 based on the contingency lists created in Requirement R4.4. Regarding Requirement R4.4, it is suggested that a rewording be considered such as described below:For each category of the Planning Events in Table 1, those Planning Event Contingencies that are expected to produce more severe System impacts shall be identified, and a list of those Contingencies to be evaluated for System performance in Requirement R4.1 shall be created. The rationale for the Contingencies selected for evaluation shall be available as supporting information with an explanation of why the remaining Contingencies would produce less severe System results.

Organization	Question 4 Comment
	R4.3.2 requires that voltage ride through capability be analyzed. It is not clear what should be analyzed. e.g. auxiliary loads, generator protection, generator capability, etc. We would like to see more clarity on this requirement. It seems that the stuck breaker scenarios would always be more severe than the internal breaker failure scenario since they would be clearing in delayed clearing time and thus make P2.3 redundant. Are there is some question on whether P3 contingencies would be necessary for stability analysis. Revise wording in VSL from “categories” to “applicable categories”. e.g. some entities may not have common tower facilities and thus there would be no P7 category contingencies to evaluate. Footnote #3 needs to be revised to include Double-Line-To-Ground faults in addition to Three-Phase faults indicating that the SLG criteria is met.

Response: R4.1: The SDT agrees and has added the word "Contingency".

> **4.1** Studies shall be performed for planning events to determine whether the BES meets the performance requirements in Table 1 based on the Contingency list created in Requirement R4, part 4.4.

R4.4: The SDT agrees and has modified the wording similar to your suggested wording however - due to other stakeholder comments, the phrase requiring an explanation was deleted from the revised standard.

> **4.4** Those planning events in Table 1that are expected to produce more severe System impacts on its portion of the BES, shall be identified, and a list of those Contingencies to be evaluated for System performance in Requirement R4, part 4.1 created. The rationale for those Contingencies selected for evaluation shall be available as supporting information.

R4.3.2: The intent of this requirement is to include in the assessment how voltage ride-through capability is analyzed in your studies. It does not require extensive modeling of a generating plant's distribution system. There is a reliability standard (PRC-024) under development which will require Generator Owners to provide information about the low voltage ride through capability of their generators based on relay settings. If complete information on the ride-through capability is not available, then you should document your assumptions regarding voltage ride-through capability for the assessment. The SDT has changed the wording of Requirement R4, part 4.3.2 to clarify this.

> **4.3.2** Trip generators where simulations show generator bus voltages or high side of the GSU voltages are less than known or assumed generator low voltage ride through capability. Include in the assessment any assumptions made.

Stuck breaker comment: A stuck breaker scenario would not always be more severe than an internal breaker fault. Depending on the location of CTs and PTs, an internal fault could take longer to clear.

P3 comment: Fault induced delayed voltage recovery simulations could be more severe in a Load area when a generator is out of service. Therefore, P3 events are applicable to Stability analysis.

VSL: The SDT does not believe it is necessary to add the word "applicable" in front of "categories" in the VSL for Requirement R4. The requirement in Part 4.1 is to study the list (Part 4.4) of "Those planning event Contingencies in Table 1 that are expected to produce more severe System impacts". If you have no applicable events in one of the categories, then just state that in the Planning Assessment. This will not be considered as not performing a study for one of the categories.

Organization	Question 4 Comment			
R4 VSL	The responsible entity did not identify planning events as described in Requirement R4, part 4.4 or extreme events as described in Requirement R4, part 4.5.	The responsible entity did not perform studies as specified in Requirement R4, part 4.1 to determine that the BES meets the performance requirements for one of the categories (P1 through P7) in Table 1. OR The responsible entity did not perform studies as specified in Requirement R4, part 4.2 to assess the impact of extreme events. OR The responsible entity did not base its studies on computer simulation models using data provided in Requirement R1.	The responsible entity did not perform studies as specified in Requirement R4, part 4.1 to determine that the BES meets the performance requirements for two of the categories (P1 through P7) in Table 1. OR The responsible entity did not perform Contingency analysis as described in Requirement R4, part 4.3.	The responsible entity did not perform studies as specified in Requirement R4, part 4.1 to determine that the BES meets the performance requirements for three or more of the categories (P1 through P7) in Table 1.
Footnote #3 (now footnote #2): The SDT agrees and has modified the wording similar to your suggested wording. **Footnote 2** Unless specified otherwise, simulate Normal Clearing faults. Single line to ground (SLG) or three phase (3Ø) are the fault types, that must be evaluated in Stability simulations for the event described. A 3Ø or a double line to ground fault study indicating the criteria are being met is sufficient evidence that a SLG condition would also meet the criteria.				
Manitoba Hydro	R4.1: The requirement text should be changed to read “studies shall be performed for Planning Events to determine whether the BES meets the performance requirements in Table 1 based on the contingency lists of events created in Requirement R4.4. R4.2: Requirement wording should be similar to R4.4 for consistency. R4.3: We agree that consideration of generator voltage ride through is important. However, we also suggest that frequency ride through capability be analyzed. R4.4 & R4.5: The selection of the contingency list is based on the knowledge of the PC/TP. How do you produce “an explanation of why the remaining Contingencies would produce less severe System results. without proving this with a study” If the explanation is “that based on engineering judgment, the remaining contingencies would produce less severe system results” then the explanation is implied and not necessary.			

Organization	Question 4 Comment
Response: R4.1: The SDT agrees and has changed the wording similar to your suggestion. **4.1** Studies shall be performed for planning events to determine whether the BES meets the performance requirements in Table 1 based on the Contingency list created in Requirement R4, part 4.4. R4.2: The SDT does not understand this comment. No change made. R4.3: Frequency ride-through for generators would only be needed for a limited number of simulations, and therefore the SDT does not see the need to make a general requirement for this. No change made. R4.4 and R4.5: Several industry commenters have indicated that an explanation of "why the remaining Contingencies would produce less severe System performance" should be deleted since the contingencies selected are already justified as those that produce more severe System performance. The SDT agrees and has deleted the requirement for an "explanation of why the remaining Contingencies would produce less severe System results".	
LCRA Transmission Services Corporation	In R4.3.3, what is meant by the term "electrical system quantities"? Quantities is typically an amount and its use here would indicate that a term such as parameters would be better suited.
Response: "Electrical system quantities" are items such as voltage, current, power, etc. The SDT believes the use of this term is appropriate in Requirement R4, part 4.3.3 (now 4.3.4). No change made.	
National Grid	R4 Comment " "Planning Assessment" and "shall perform analysis" are contradictory. R4 and its sub-requirements, then reference study requirements. If this is an assessment, then the standard shouldn't be requiring a study. R4.1 Comment ? A. It is not clear what should be included in the list related to R4.4. Events P0 through P4 should include analysis of all facilities BES facilities for which the Transmission Planner is responsible. Events P5 and higher should be limited to contingency events that are deemed the most significant by the Transmission Planner. B. R4.1 refers to "lists". Is R4.4 creating one list or multiple lists? Suggest changing "lists" to "list" R4.2 Comment - Since R4.4 and R4.5 both require the responsible entity to create a list, the words in R4.2 be should be revised to be more similar to the words in R4.1. Suggest changing "Studies shall be performed to assess the impact of the Extreme Events identified in Requirement R4.5. " to "Studies shall be performed to assess the impact of the Extreme Events, which are identified by the list created in Requirement R4.5. R4.3.2 Priority Comment - Traditionally transmission planners have assumed that generators would ride through low voltages associated with Planning Events which is generally adequate for non-wind generators. If this standard is going to require its incorporation into the assessments, there should be an MOD standard developed requiring the generators to provide the necessary information prior to its inclusion as a requirement in this standard. R4.5 Priority Comment ?It is recommended that the requirement for Extreme Event testing be removed from this standard as there is no requirement to develop a Corrective Action Plan to address unacceptable consequences. If the requirement is not deleted, the following is recommended:- Extreme Event performance should be a consideration when developing Corrective Action Plans to address Planning Events. If not, it will be difficult to utilize the results to obtain projects approvals.- It should be clear that an evaluation does not require solution development for all Extreme Events- Change "an evaluation of possible

Organization	Question 4 Comment
	actions"? to "where appropriate, reasonably practicable actions designed to reduce the likelihood or mitigate the consequences and adverse impacts of the event(s) shall be considered. - The statement "and shall include an explanation of why the remaining Contingencies would produce less severe System results" is too open and should be deleted. Violation Severity Levels:R4.4 Since this is a binary requirement, should this have a Severe VS? R4.5 Since this is a binary requirement, should this have a Severe VSL?
Response: R4: The SDT does not see a contradiction. Requirement R4 is a study requirement. The assessment requirement for stability is Requirement R2, part 2.4 and requires the use of current or past studies. No change made. R4.1A: The SDT disagrees. P1 - P4 (P0 not applicable to Stability) should be run for those Contingencies expected to produce more severe results. It is not necessary to study faults on every line in the System. No change made. R4.1B: The SDT agrees and has changed "lists" to "list". **4.1** Studies shall be performed for planning events to determine whether the BES meets the performance requirements in Table 1 based on the Contingency list created in Requirement R4, part 4.4. R4.2: The SDT agrees and has changed to your suggested wording. **4.2** Studies shall be performed to assess the impact of the extreme events which are identified by the list created in Requirement R4, part 4.5. R4.3.2: There is a reliability standard (PRC-024) under development which will require Generator Owners to provide information about the low voltage ride through capability of their generators based on relay settings. Requirement R4, part 4.3.2 requires you to include in the assessment how you analyzed voltage ride-through capability. If complete information on the ride-through capability is not available, then you should document your assumptions regarding ride-through capability for the assessment. The SDT has changed the wording of Requirement R4, part 4.3.2 to clarify this. **4.3.2** Trip generators where simulations show generator bus voltages or high side of the GSU voltages are less than known or assumed generator low voltage ride through capability. Include in the assessment any assumptions made. R4.5: The SDT considers extreme event testing to be an important part of the assessment and therefore will not delete it. The expectation for extreme event testing is that for major problems you will evaluate actions to reduce likelihood or mitigate consequences. The SDT believes the original words express this concept better than your suggested words. No change made. R4.4 and R4.5 VSLs: The VSLs are based on taking Requirement R4 as a whole with Requirement R4, parts 4.4 and 4.5 being portions of that whole. The SDT does not think that failing to create a list of Contingencies should be a severe violation. When taking Requirement R4 as a whole, failing to create the list was deemed to be lower violations. No change made.	
Entergy Services, Inc	In R4.5 what would constitute "an evaluation of possible actions designed to reduce?"? R4.3.2 requires that voltage ride through capability be analyzed. It is not clear what should be analyzed (e.g. auxiliary loads, generator protection, generator capability, etc.) This requirement needs more clarity. " R4.3.2 " By in large, the industry does not have the input data or the methods to do this. It would seem necessary to have PRC-024 approved before this can be met.

Organization	Question 4 Comment
Response: R4.5: "An evaluation of actions designed to reduce" means looking for ways to reduce the probability of the event occurring or reducing the magnitude of the consequences of that event. For example, if a three phase fault with a bus differential failing to operate results in the collapse of a large Load area, a possible action would be to add a redundant bus differential relay. This reduces the probability of the event occurring. Or if a three phase fault with a stuck breaker results in a large area of the system pulling out of synchronism, an SPS could be used to trip a generator and keep the rest of the system in synchronism. This would reduce the magnitude of the consequences of the event. The evaluation would be comparing potential solutions and their cost with the consequences of the event to determine the best course of action to take (if any). R4.3.2: There is a reliability standard (PRC-024) under development which will require Generator Owners to provide information about the low voltage ride through capability of their generators based on relay settings. Requirement R4, part 4.3.2 requires you to include in the assessment how you analyzed voltage ride-through capability. If complete information on the ride-through capability is not available, then you should document your assumptions regarding ride-through capability for the assessment. The SDT has changed the wording of Requirement R4, part 4.3.2 to clarify this. **4.3.2** Trip generators where simulations show generator bus voltages or high side of the GSU voltages are less than known or assumed generator low voltage ride through capability. Include in the assessment any assumptions made.	
BC Hydro	Comments: Consider changing R4.3.2 to, “Confirm proper generator performance under anticipated conditions including low voltage ride-through capability” In R4.3.3, change “VAR” to “var”. The IEC has adopted the name var, var (volt ampere reactive power), for the coherent SI unit volt ampere for reactive power. (see: http://www.iec.ch/zone/si/si_elecmag.htm#si_rpo). Is there an overlap between R4.3.3 and the MOD standards? If so, perhaps R4.3.3 should be deleted. If not, perhaps the MOD standard should be expanded to include this. Consider adding R4.3.4, “not simulate any operator intervention”
Response: R4.3.2: The SDT has changed the wording of Requirement R4, part 4.3.2 for additional clarification. **4.3.2** Trip generators where simulations show generator bus voltages or high side of the GSU voltages are less than known or assumed generator low voltage ride through capability. Include in the assessment any assumptions made. R4.3.3: The SDT agrees and has changed "VAR" to "var". **4.3.4** Simulate the expected automatic operation of existing and planned devices designed to provide dynamic control of electrical system quantities when such devices impact the study area. These devices may include equipment such as generation exciter control and power system stabilizers, static var compensators, power flow controllers, and DC Transmission controllers. R4.3.3: MOD-012 and MOD-013 do not require the data to be used for an assessment of the Transmission System. Therefore, the requirement to simulate the operation of exciters and stabilizers is needed in this standard. No change made. R4.3.4: The SDT does not think it is necessary to add "not simulate any operator intervention". If operator intervention is appropriate in the time frame of the study, then simulate it. No change made.	
Midwest ISO	Opening Remarks. Specific Comments for Requirement 4:

Organization	Question 4 Comment
	A) Under R4, the Time Horizon of the TPL standards is intended for years one through 10; However the Time Horizon shown in R4 only says "Long-term Planning". By definition of Long-Term Transmission Planning Horizon this covers years 6 through 10 and beyond. Suggestion to change the Time Horizon to read: "Near-Term and Long-Term Transmission Planning".
Minnesota Power	Under R4, the Time Horizon of the TPL standards is intended for years one through 10; however, the Time Horizon shown in R4 only says "Long-term Planning". By definition of Long-Term Transmission Planning Horizon this covers years 6 through 10 and beyond. Suggestion to change the Time Horizon to read: "Near-Term and Long-Term Transmission Planning".

Response: The *Time Horizon* term at the end of the requirement deals with mitigation time periods (as shown below) and is not connected to the assessment time frames. Time Horizons are a consideration when there is a violation of a requirement – the impact to the BES of violating a requirement with a long-term planning horizon is not expected to be as severe as the impact associated with violating a requirement with a real-time operations time horizon. No change made.

Mitigation Time Horizon

The time horizons available for mitigating a violation to a requirement include the following:

- **Long-term Planning** — a planning horizon of one year or longer.
- **Operations Planning** — operating and resource plans from day-ahead up to and including seasonal.
- **Same-day Operations** — routine actions required within the timeframe of a day, but not real-time.
- **Real-time Operations** — actions required within one hour or less to preserve the reliability of the bulk electric system.
- **Operations Assessment** — follow-up evaluations and reporting of real time operations.

PJM	In R4, why require a Planning Coordinator AND a Transmission Planner to perform this analysis? Isn't this a duplication of effort? R4.4 should come before R4.1. You should never reference down in a standard. Please present the items in the order in which they should be performed/considered. Also in R4.1, a space is needed between "Requirement" and -R4.4-. R4.5 should come before R4.2. You should never reference down in a standard. Please present the items in the order in which they should be performed/considered. In R4.2.3, I question whether the existing dynamics models can evaluate voltage ride through. If you are just talking about modeling voltage protection of generators then maybe, but this protection information is presently not collected by the ERAG MMWG for the Eastern Interconnection. R4.4 should be broken into two requirements since two separate tasks need to be performed. R4.5 should be broken into three requirements since three separate tasks need to be performed.

Organization	Question 4 Comment
Response: R4: Requiring the Planning Coordinator AND the Transmission Planner to perform analysis should not result in a duplication of effort. Requirement R6 (now Requirement R7) requires the two entities to agree on their individual and joint responsibilities. No change made. R4.4 & R4.5: The SDT does not believe that re-ordering the requirements serves any purpose. No change made. R4.1: The SDT has revised the requirement. **4.1** Studies shall be performed for planning events to determine whether the BES meets the performance requirements in Table 1 based on the Contingency list created in Requirement R4, part 4.4. R4.2.3: The SDT assumes you meant Requirement R4.3.2: There is a reliability standard (PRC-024) under development which will require Generator Owners to provide information about the low voltage ride through capability of their generators based on relay settings. Requirement R4, part 4.3.2 requires you to include in the assessment how you analyzed voltage ride-through capability. If complete information on the ride-through capability is not available, then you should document your assumptions regarding ride-through capability for the assessment. The SDT has changed the wording of Requirement R4, part 4.3.2 to clarify this. **4.3.2** Trip generators where simulations show generator bus voltages or high side of the GSU voltages are less than known or assumed generator low voltage ride through capability. Include in the assessment any assumptions made. R4.4: The SDT disagrees that this requirement should be broken into two requirements. There are not two independent tasks in the requirement. The tasks are inherently correlated and will be assessed as part of the primary Requirement R4. No change made. R4.5: The SDT disagrees that this requirement should be broken into three requirements. There are not three independent tasks in the requirement. The tasks are inherently correlated and will be assessed as part of the primary Requirement R4. No change made.	
Brazos Electric Cooperative	Same general comment in 4.4 and 4.5 about the requirement to maintain documentation on why certain events would produce less severe results.
Response: Several industry commenters have indicated that an explanation of "why the remaining Contingencies would produce less severe System performance" should be deleted since the contingencies selected are already justified as those that produce more severe System performance. The SDT agrees and has deleted the requirement for an "explanation of why the remaining Contingencies would produce less severe System results".	
American Electric Power	The cross-referencing between R4.1 and R4.4, and between R4.2 and R4.5, seems to add unnecessary complexity and could be eliminated by merging each of these pairs of sub-requirements. Under the event column of Table 1 of the proposed TPL standard, considering entries P3 and P6, the option to apply either SLG or 3-phase fault types should be retained to be consistent with the existing TPL standards, which permit either SLG or 3-phase faults (see existing Table 1, Category B and Category C3). If the SDT decides not to make the requested change, then the SDT should give recognition to the unique characteristics of 765 kV lines where permanent 3-phase faults are virtually non-existent. AEP's 765 kV transmission facilities have been successfully planned and operated with only a SLG fault criterion. Therefore, Table 1 Planning Events P3 and P6 should permit application of SLG faults.
Response: The SDT does not see any harm in having the cross referencing. No change made.	

Organization	Question 4 Comment
Table 1: Requirement R1.3.1 in TPL-002-0a states that simulations should "Be performed and evaluated only for those Category B Contingencies that would produce the more severe System results or impacts." The SDT believes that the intent of the existing TPL standards is to simulate the worst case whether three phase or single-line-to-ground. The new standard is clarifying that three-phase is required for single Contingency events. No change made. Note that AEP may request an entity variance from this part of the standard.	
ITC Holdings	Comments: In R2.5.1, a limitation is identified for stability studies that are used to support the annual assessment be less than five calendar years old. Should this reference be included in R4??
Response: R4: Because the five year limitation is stated in Requirement R2, part 2.5.1, there is no need to repeat it in Requirement R4. No change made.	
LADWP	R4.5 See coments on R3.4 and 3.5
Response: See response to comments for Requirement R3, parts 3.4 and 3.5.	
Platte River Power Authority	R4.3.2. Delete this requirement as it is covered under MOD-013-1, R1.2 for RRO Dynamics Data requirements. When the generator is modeled accordingly the generator's performance will be simulated and analyzed in the stability studies. R4.3.3. Delete this requirement as it is covered under MOD-013-1, R1.2 and R1.3 for RRO Dynamics Data requirements. When the generator is modeled accordingly the generator's performance will be simulated and analyzed in the stability studies.
Response: R4.3.2: The SDT has changed the wording of Requirement R4, part 4.3.2 for additional clarification. This does not require the modeling of generator relays although that is one method that could be used to meet the requirement. **4.3.2** Trip generators where simulations show generator bus voltages or high side of the GSU voltages are less than known or assumed generator low voltage ride through capability. Include in the assessment any assumptions made. R4.3.3: MOD-013 does not require the data to be used for an assessment of the Transmission System. Therefore, the requirement to simulate the operation of exciters and stabilizers is needed in this standard. No change made.	
MAPPCOR	R4.3.2 - Traditionally transmission planners have assumed that generators would ride through low voltages associated with Planning Events which is generally adequate for non-wind generators. If this standard is going to require its incorporation into the assessments, there should be an MOD standard developed requiring the generators to provide the necessary information prior to its inclusion as a requirement in this standard. R4.5 -Recommend that the requirement for Extreme Event testing be removed from this standard as there is no requirement to develop a Corrective Action Plan to address unacceptable consequences. Otherwise we recommend the following:-Extreme Event performance should be a consideration when developing Corrective Action Plans to address Planning Events-It should be clear that an evaluation does not require solution development for all Extreme Events-Change “an evaluation of possible actions”? to “where appropriate, reasonably practicable actions designed to reduce the likelihood or mitigate the consequences and adverse impacts of the event(s) shall be considered.

Organization	Question 4 Comment
Response: R4.3.2: There is a reliability standard (PRC-024) under development which will require Generator Owners to provide information about the low voltage ride through capability of their generators based on relay settings. Requirement R4, part 4.3.2 requires you to include in the assessment how you analyzed voltage ride-through capability. If complete information on the ride-through capability is not available, then you should document your assumptions regarding ride-through capability for the assessment. The SDT has changed the wording of Requirement R4, part 4.3.2 to clarify this. **4.3.2** Trip generators where simulations show generator bus voltages or high side of the GSU voltages are less than known or assumed generator low voltage ride through capability. Include in the assessment any assumptions made. R4.5: The SDT considers extreme event testing to be an important part of the assessment and therefore will not delete it. The expectation for extreme event testing is that for major problems you will evaluate actions to reduce likelihood or mitigate consequences. The SDT believes the original words express this concept better than your suggested words. No change made.	
Orlando Utilities Commission	For Requirement 4.3.1 and 4.3.3 I suggest adding language similar to 3.3.2 and 3.3.3 establishing that "studies shall consider" rather then requiring every simulation precisely recreate this usually minor part of system performance. These devices generally do not respond except for a nearby event, and even then their response is rarely such that it would make the situation "worse". The effect of these devices must be considered, but mandating that every simulation faithfully reproduce the response of every device is not only an efficient way to do this, it actually provides a counter incentive to going above and beyond the standard requirements. Any simulation used to meet this standard that failed to precisely reproduce the performance of this equipment would be a violation of this requirement (as currently written). As such there is no incentive for an entity to include anything but the absolute minimum number of simulations required to meet the standard, since each extra simulation represents an opportunity to miss this requirement. Good planning is based on running a broad range of events against a broad range of conditions and evaluating those responses against a set of performance criteria. This is encouraged by requiring that studies consider the response of equipment to these events rather then mandating their precise reproduction in simulation. Requirement 4.4 and 4.5 establish that only those events that would cause the most severe system impacts should be studied. This is an excellent requirement since it focuses the large resource requirement in performing these studies on the events that will provide the best information. Does the intent of the "More severe events" to establish actual study parameter extend between the planned events (R4.4) and extreme events (R4.5)? Or phrased another way, if an entity selects a proper range of extreme events and establishes that planning event performance requirements are met, could that be used as evidence that R4.4 is met as well, or would R4.4 require the same conditions be reproduced in their less severe configuration.
Response: R4.3.1: The SDT believes you should simulate the removal of System elements that Protection System and other controls would remove, not just consider it. No change made. R4.3.3 (now Part 4.3.4): The SDT has clarified that the devices to be included in the study which provide dynamic control are those that impact the study area. R4.4 and R4.5: You can always demonstrate that performance requirements are met by meeting them for a more severe Contingency. It is possible that you could demonstrate that performance requirements are met for planning events by performing extreme events (e.g., using a three-phase fault with stuck breaker Contingency can demonstrate that performance requirements for a single phase fault plus stuck breaker Contingency is met).	
American Transmission	We propose the following comments for R4:Add R4.3.3 text to include relay loadability in the R4 (Stability) requirements to

Organization	Question 4 Comment
Company	parallel R3.3.3 in the R3 (Steady State) requirement which would more clearly relate to the specific requirements in PRC-023. We suggest this text: "Incorporate relay loadability per PRC-023 and identify how relay loadability is analyzed in the dynamic simulation. In R4.3.4, we propose limiting the scope to automatic devices and adding the notion of "including but not limited to". We suggest R4.3.4 text of: "Simulate the expected automatic operation of existing and planned control devices including but not limited to generation exciter control and power system stabilizers, static VAR compensators, power flow controllers, and DC Transmission controllers. Add R4.3.5. The obligation to consider only planned System adjustments that are executable should be a Requirement, rather than performance note "e" in the Planning Events, Steady State & Stability section of Table 1. We suggest this text that matches R3.3.5: "Consider planned System adjustments, such as Transmission configuration changes and redispatch of generation, that are executable within the time duration of the applicable Facility Ratings.
Response: R4.3.3: The SDT agrees with the general idea and has added Requirement R4, part 4.3.3. However, Requirement R4, part 4.3.3 requires that you "Simulate the impact of transient swings on Protection System operation for Transmission lines and transformers" rather than creating a Stability requirement for relay loadability. This requirement is more applicable to Stability studies than a relay loadability requirement would be. Relay loadability is more of a steady state issue than a dynamic issue. **4.3.3** Simulate the impact of transient swings on Protection System operation for Transmission lines and transformers. R4.3.4: The SDT has made the suggested changes. **4.3.4** Simulate the expected automatic operation of existing and planned devices designed to provide dynamic control of electrical system quantities when such devices impact the study area. These devices may include equipment such as generation exciter control and power system stabilizers, static var compensators, power flow controllers, and DC Transmission controllers. R4.3.5: Header note 'e' gives permission to use System adjustments under certain conditions. This is not a requirement and doesn't need to be included in Requirement R4. No change made.	
Idaho Power	R4.3.2 Generation protection system contain up to a dozen tripping functions functions. Is the intent to model all relay protection? The existing commercial programs do not have sufficient models or capacity to do that for all generators in the system.R4.5 ? Again I disagree with this requirement. It is the same as R3.5 and overly burdensome.
Response: R4.3.2: The intent of this requirement is to include in the assessment how voltage ride-through capability is analyzed in your studies. It does not require extensive modeling of all relay protection. There is a reliability standard (PRC-024) under development which will require Generator Owners to provide information about the low voltage ride through capability of their generators based on relay settings. If complete information on the ride-through capability is not available, then you should document your assumptions regarding voltage ride-through capability for the assessment. The SDT has changed the wording of Requirement R4, part 4.3.2 to clarify this. **4.3.2** Trip generators where simulations show generator bus voltages or high side of the GSU voltages are less than known or assumed generator low voltage ride through capability. Include in the assessment any assumptions made.	

Organization	Question 4 Comment
Duke Energy	Revise M4 to include a reference to R6, since the allocation of responsibilities will directly affect the evidence which is to be provided.
Response: M4: The SDT disagrees. No change made.	
California ISO	As currently drafted, R4.3 is not a requirement. Without the statements in R4.3.1-R4.3.3, R4.3 is simply a phrase. Sub-Sub-Requirements R4.3.1 through R4.3.3 should be bullets under R4.3, with the language in R4.3 modified so that it becomes the requirement to conduct contingency analyses that address the three resulting bullets. R4.3.2 it is not clear what is required to be modeled. Typically a generator may have 10 or more protective relays. Is the intent to model all relay protection? The existing commercial programs do not have sufficient models or capacity to do that for all generators in the system. R4.5 We disagree with the requirement to explain why remaining Extreme Contingencies would produce less severe System results than the ones selected for study. The first part of the requirement requires identification of events that produce more severe System impacts. The reason the others were not selected is because they were less severe or non-credible. In any case, theoretically, there can always be a more severe Extreme Contingency than the one selected for study. For example, if the Extreme Contingency studied were simultaneous loss of 3 transmission lines with failure of redundant RAS, then simultaneous loss of 4 lines with failure of 2 sets of redundant RAS would be more severe. Listing all possible extreme events could result in a limitless list.

Response: R4.3: The SDT disagrees as these are mandatory elements of the Contingency analyses. Bullets are only used to identify the possible, but not all inclusive, elements of a menu. However, Requirement R4, part 4.3 has been modified to read more like a requirement as shown below.

> **4.3** Contingency analyses shall be performed and:

R4.3.2: The intent of this requirement is to include in the assessment how voltage ride-through capability is analyzed in your studies. It does not require modeling of all relay protection. There is a reliability standard (PRC-024) under development which will require Generator Owners to provide information about the low voltage ride through capability of their generators based on relay settings. If complete information on the ride-through capability is not available, then you should document your assumptions regarding voltage ride-through capability for the assessment. The SDT has changed the wording of Requirement R4, part 4.3.2 to clarify this.

> **4.3.2** Trip generators where simulations show generator bus voltages or high side of the GSU voltages are less than known or assumed generator low voltage ride through capability. Include in the assessment any assumptions made.

R4.5: Several industry commenters have indicated that an explanation of "why the remaining Contingencies would produce less severe System performance" should be deleted since the Contingencies selected are those that produce more severe System performance. The SDT agrees and has deleted the requirement for an "explanation of why the remaining Contingencies would produce less severe System results".

> **4.5** Those extreme events in Table 1 that are expected to produce more severe System impacts shall be identified and a list of those events to be evaluated for System performance in Requirement R4, part 4.2 created. The rationale for those Contingencies selected for evaluation shall be available as supporting information. If the analysis concludes there are cascading outages caused by the occurrence of extreme events, an evaluation of possible actions designed to reduce the likelihood or mitigate the consequences of the event(s) shall be conducted.

Organization	Question 4 Comment
Independent Electricity System Operator	. Same comments as in R3, above, except our proposed wording on R4 will read:R4. The Stability analyses of the Near-Term Planning Assessment as stipulated in R2.4.2 shall be performed as follows:. since there are no detailed requirements stipulated for Stability analysis portion for the Long-Term Planning Assessment. However, the main requirement contains a condition for performing the Contingency analyses listed in Table 1. First of all, there are no VSLs for failing to meet this condition. Secondly, this duplicates with some of the subrequirements, e.g. R4.4, R4.5. Suggest to remove this condition from the main requirement. If the main requirement is to be revised in a similar fashion as suggested for R3, then this will become a non-issue. 2. Similar to R3, we agree with the VRF, Time Horizon and Measure for R4. However, we do have the same difficulty with the VSL based on our comments on the convoluted nature of the requirement as indicated above, especially on the Moderate VSL for The Transmission Planner or Planning Coordinator did not base its studies on computer simulations using models utilizing data provided in Requirement R1.
Response: R4: The SDT does not see any need for Requirement R4 to reference back to Requirement R2, part 2.4. No change made. R4 VSL: (1) The VSL for Requirement R4 does cover failing to perform the Contingency analysis in Table 1. Depending on how many Contingency categories are not addressed, the violation could be moderate, high, or severe. No change made. R4 VSL: (2) Requirement R4 provides the general requirement to perform the Contingency analysis in Table 1. The parts like Requirement R4, part 4.4 provide more details on what must be run. There is no duplication. No change made. R4.5: The SDT believes that Requirement R4, part 4.5 is a necessary part. No change made. R4 VSL: The SDT disagrees with this idea. No change made.	
Kansas City Power & Light	R4.3 requires very labor intensive and detailed studies to be conducted; there are concerns about being able to accomplish the required studies within the 24 month implementation period; additionally, while there may be some reliability benefit to requiring these studies have the costs of this reliability increase been studied?; an alternative could be some sort of phased implementation (x% completed by 24months, etc.) R4.3.3 to what degree is generator relaying factored into the model/study?
Response: R4.3: The SDT believes that 24 months is sufficient to perform the additional studies. No change made. R4.3.3: Generator relaying is not a part of Requirement R4, part 4.3.3.	
ReliabilityFirst Corporation	R4.3.2 – Requires simulating generator voltage ride through capability. This may require modeling generator protection schemes to existing Dynamic models. This falls under which again falls under Section 1600 of NERC Rules of Procedure.
Response: R4.3.2: The intent of this requirement is to include in the assessment how voltage ride-through capability is analyzed in your studies. It does not require modeling of generator protection schemes. There is a reliability standard (PRC-024) under development which will require Generator Owners to provide information	

Organization	Question 4 Comment
	about the low voltage ride through capability of their generators based on relay settings. If complete information on the ride-through capability is not available, then you should document your assumptions regarding voltage ride-through capability for the assessment. The SDT has changed the wording of Requirement R4, part 4.3.2 to clarify this. **4.3.2** Trip generators where simulations show generator bus voltages or high side of the GSU voltages are less than known or assumed generator low voltage ride through capability. Include in the assessment any assumptions made.

5. Requirement R5 – Please provide any specific comments on the requirement text, VRF, Time Horizon, measure associated with the requirement, data retention associated with the requirement, and/or the VSL associated with the requirement.

Summary Consideration: In response to industry comments, the SDT has deleted the word 'proxy' in favor of the terminology 'criteria or methodology' in Requirement R5 (now Requirement R6).

R6. Each Transmission Planner and Planning Coordinator shall define and document, within its Planning Assessment, any criteria or methodology used in its analysis to identify System instability for conditions such as cascading outages, voltage instability, or uncontrolled islanding.

Organization	Question 5 Comment
Dominion - Electric Transmission Tucson Electric Power Company	Use of Proxies: There is no requirement that the Planning Coordinator (PC) must use the same proxies as the Transmission Planner (TP). Since differences in proxy assumptions may lead to different study results, R5 should be revised to require the PC and TP to coordinate the use of proxies.
Hydro-Québec TransEnergie (HQT)	There is no requirement that the Planning Coordinator must use the same proxies as the Transmission Planner. Differences in proxy assumptions may lead to different study results. R5 needs to be modified to require coordination of proxies between Planning Coordinators and Transmission Planners.
Response: Criteria or methodologies will be fleshed out in peer review. No change made.	
OPUC	MRO NSRS proposes specifying that the proxy documentation be included in the Planning Assessment and add the rationale for the proxy. MRO NSRS suggests this text: "Each Transmission Planner and Planning Coordinator shall document within the Planning Assessment any proxies used in the analysis to identify System instability for conditions such as cascading outages, voltage instability, or uncontrolled islanding. The documentation will consist of the definition of each proxy used and the rationale for the proxies.
Response: The SDT has revised the requirement language to provide greater clarity as to the intent. **R6.** Each Transmission Planner and Planning Coordinator shall define and document, within its Planning Assessment, any criteria or methodology used in its analysis to identify System instability for conditions such as cascading outages, voltage instability, or uncontrolled islanding.	
Bonneville Power Administration	There is no requirement that the Planning Coordinator (PC) must use the same proxies as the Transmission Planner (TP). Since differences in proxy assumptions may lead to different study results, R5 should be revised to require the PC and TP to coordinate the use of proxies. M5 doesn't make any sense. Need to revise this Measure so that it fits the Requirement R5. Also need to revise the Data Retention discussion in Section 1.4 to align with R5. In the VSL associated with R5, we believe that failure to define and document one of the proxies should be a moderate VSL,

Organization	Question 5 Comment
	failure to define and document two proxies should me a high VSL, while failure to define and document three proxies should be a severe VSL. Otherwise failing to document only one proxy would result in a severe VSL.
Response: Criteria or methodologies will be fleshed out in peer review. The SDT has changed the language of Requirement R6 (formerly Requirement R5). **R6.** Each Transmission Planner and Planning Coordinator shall define and document, within its Planning Assessment, any criteria or methodology used in its analysis to identify System instability for conditions such as cascading outages, voltage instability, or uncontrolled islanding. The SDT does not agree and believes that the Measure appropriately addresses Requirement R6 (formerly Requirement R5). No change made. The SDT does not agree and believes that the Data Retention for this Requirement is in line with accepted Guidelines. No change made. The SDT appreciates your comment on the level of severity for this Requirement but still believes this is the appropriate level to apply. No change made.	
MRO MRO NERC Standards Review Subcommittee	We agree with the stated Requirement, Measure, VRF, Time-Horizon, Data Retention and VSL of requirement R5.
PacifiCorp	None - no concerns identified by the TWG
JEA	PEF does not presently have any concerns with R5.
Central Maine Power Company	We agree with the requirement, the VRF, Time Horizon, Measure and VSLs.
Response: Thank you for your response. However, due to other responses, some changes have been made. Please see the summary response.	
SRP	In R5 the term “proxy” needs to be defined. In addition, an example of a proxy should be given.
Gainesville Regional Utilities	R5:Guidelines for identifying proxies for unstable conditions would be helpful.
Progress Energy Florida, Inc.	The term proxy is unclear. Please provide an example or an explanation of proxy. If this is related to Note “i” in Table 1, it should be so stated. If it is related to assumptions or criteria, please state so.
Xcel Energy	Please clearify "Proxies"
Mississippi Delta Energy Agency	The term proxy is unclear. Please provide an example or an explanation of proxy. Perhaps a different term, such as metric, may better describe this requirement to more people.
Tenaska, Inc.	In R5, what is meant by the term “any proxies”? Please clarify. This comment also pertains to this terms use in the VSL as well.

Organization	Question 5 Comment
Manitoba Hydro	It is unclear as to what is meant by the term “proxy used in the analysis” used in this requirement. Is a “proxy” a “criteria”?
National Grid	Comments: The meaning of the word “proxies” in this context seems uncommon making the requirement unclear. Perhaps “proxies” should be replaced with “criteria” or “criteria or proxies”.
Northern Indiana Public Service Company	What is a proxy as related to transmission planning? The drafting team should not introduce "non-standard" terms in a Standard document.
San Diego Gas and Electric Co	R5. For clarification, please list examples of "proxies" that might be used.
Minnesota Power	an example of proxy may be helpful, not all entities use proxies.
ISO New England, Inc. Western Area Power Administration American Electric Power Great River Energy New York Independent System Operator Modesto Irrigation District Louisiana Energy and Power Authority City Utilities of Springfield, MO Duke Energy New Brunswick System Operator MidAmerican Energy Company	The term proxy is unclear. Please provide an example or an explanation of proxy.
California ISO NorthWestern Corporation NorthWestern Energy (NWE) (NWMT)	The term “proxies” is somewhat confusing; recommend the use of “assumptions” if that is an acceptable substitute.
Independent Electricity System	On page 13 under Section R5, can the term “proxies” be defined and clarified, and examples given, in this context ?

Organization	Question 5 Comment
Operator Northeast Power Coordinating Council	
Kansas City Power & Light	5. Requirement R5 Please provide any specific comments on the requirement text, VRF, Time Horizon, measure associated with the requirement, data retention associated with the requirement, and/or the VSL associated with the requirement.Comments:A: An example should be added for proxy use.
IRC Standards Review Committee	We recommend using an alternate term for proxies such as criteria, guidelines, etc. to clarify what is meant.
Pepco Holdings, Inc. - Affiliates	We recommend that the word “proxies” be changed to “criteria”.
Transmission Planning	5. Requirement R5 Please provide any specific comments on the requirement text, VRF, Time Horizon, measure associated with the requirement, data retention associated with the requirement, and/or the VSL associated with the requirement.Comments:A: An example should be added for proxy use.
TVA System Planning	It is unclear as to what is meant by the term “proxy used in the analysis” used in this requirement. Does this mean Planning Coordinator established practices, thresholds or guidelines used to gauge when simulations suggest an event such as cascading outages occurs? If so the language should state: R5. Each Transmission Planner and Planning Coordinator shall define and document, within their Planning Assessment, when established practices, thresholds or guidelines identify System instability for conditions such as cascading outages, voltage instability, or uncontrolled islanding.
United Illuminating	Please clarify how the term “Proxies” is used in this requirement.
PPL Energy Plus	Please define the term "proxies".
CPS Energy	Comments: It is unclear as to what is meant by the term “proxy used in the analysis” as it is used in this requirement. Does this mean Planning Coordinator established practices, thresholds, or guidelines used to gauge when simulations suggest an event such as cascading outages occurs? If so the language should state: R5. Each Transmission Planner and Planning Coordinator shall define and document, within their Planning Assessment, when established practices, thresholds or guidelines identify System instability for conditions such as cascading outages, voltage instability, or uncontrolled islanding.
Response: The SDT agrees with this comment and has changed the Requirement language to provide clarity as to intent. **R6.** Each Transmission Planner and Planning Coordinator shall define and document, within its Planning Assessment, any criteria or methodology used in its analysis to identify System instability for conditions such as cascading outages, voltage instability, or uncontrolled islanding.	
SERC Engineering Committee	In the VSL associated with R5, we believe that failure to define and document one of the proxies should be a moderate VSL,

Organization	Question 5 Comment
Reliability Review Subcommittee (RRS)	failure to define and document two proxies should me a high VSL, while failure to define and document three proxies should be a severe VSL. Otherwise failing to document only one proxy would result in a severe VSL. The word "proxies" in this context is confusing and subject to various interpretations. Recommend changing the word "proxies" to "criteria. There is no requirement that the Planning Coordinator (PC) must use the same proxies as the Transmission Planner (TP). Since differences in proxy assumptions may lead to different study results, R5 should be revised to require the PC and TP to coordinate the use of proxies.
Response: The SDT appreciates your comment on the level of severity for this Requirement but still believes this is the appropriate level to apply. No change made. The SDT agrees with this comment and has changed the Requirement language to provide clarity as to intent. **R6.** Each Transmission Planner and Planning Coordinator shall define and document, within its Planning Assessment, any criteria or methodology used in its analysis to identify System instability for conditions such as cascading outages, voltage instability, or uncontrolled islanding. The SDT does not see the need for a requirement to coordinate the use of proxies. No change made.	
FirstEnergy Corp	The determination of a failure to document a single proxy should not be categorized as "severe".
Response: The SDT appreciates your comment on the level of severity for this Requirement but still believes this is the appropriate level to apply. No change made.	
Southern Company	"Proxies" is not defined. We take "proxy" to mean a procedure used to model system response that is outside the capability of system modeling tools used in the analysis. For example, a powerflow model might not be able to model cascading events with built-in capabilities. As a proxy, the engineer would run follow-up studies that would mimic expected system response. Please define the term "proxy".
SMUD	It is unclear as to what is meant by the term "proxy used in the analysis" used in this requirement. Does this mean Planning Coordinator established practices, thresholds or guidelines used to gauge when simulations suggest an event such as cascading outages occurs? If so the language should state: R5. Each Transmission Planner and Planning Coordinator shall define and document, within their Planning Assessment, when established practices, thresholds or guidelines identify System instability for conditions such as cascading outages, voltage instability, or uncontrolled islanding.
Platte River Power Authority	We propose specifying that the proxy documentation be included in the Planning Assessment and add the rationale for the proxy. We suggest this text: "Each Transmission Planner and Planning Coordinator shall document within the Planning Assessment any proxies used in the analysis to identify System instability for conditions such as cascading outages, voltage instability, or uncontrolled islanding. The documentation will consist of the definition of each proxy used and the rationale for the proxies.

Organization	Question 5 Comment
Turlock Irrigation District	Comments: It is unclear as to what is meant by the term "proxy used in the analysis" used in this requirement. Does this mean Planning Coordinator established practices, thresholds or guidelines used to gauge when simulations suggest an event such as cascading outages occurs? If so the language should state: R5. Each Transmission Planner and Planning Coordinator shall define and document, within their Planning Assessment, when established practices, thresholds or guidelines identify System instability for conditions such as cascading outages, voltage instability, or uncontrolled islanding.
Response: The SDT agrees with this comment and has changed the Requirement language to provide clarity as to intent. **R6.** Each Transmission Planner and Planning Coordinator shall define and document, within its Planning Assessment, any criteria or methodology used in its analysis to identify System instability for conditions such as cascading outages, voltage instability, or uncontrolled islanding.	
Deseret Generation & Transmission	Please provide a definition of "cascading outages" since the FERC and NERC removed their approval of the definition. Or use the definition of "cascading" found in the NERC Glossary of Terms. This term is also used in R3.5, R4.5, and Table 1.a. without any definition provided. NOTE: On December 27,2007, the Federal Energy Regulatory Commission remanded the definition of" Cascading Outage" to NERC. On February 12, 2008, the NERC Board of Trustees withdrew its November 1, 2006 approval of that definition, without prejudice to the ongoing work of the FACstandards drafting team and the revised standards that are developed through the standardsdevelopment process. Therefore, the definition is no longer in effect. Please provide a definition of "voltage instability" since the NERC Glossary of Terms does not provide one. This term is also used in Table 1.a. without any definition provided. Please provide a definition of "uncontrolled islanding" since the NERC Glossary of Terms does not provide one. This term is also used in Table 1.a. without any definition provided.
Response: The SDT declines to provide definitions for the indicated terms.	
Puget Sound Energy, Inc.	Data Retention: The 5th bullet should refer to "proxies" instead of "studies".
Response: The SDT disagrees with your statement as the studies will reveal the Proxies (now criteria or methodology) used in the Planning Assessment. No change made.	
E.ON U.S.	M5 doesn't make any sense. Need to revise this Measure so that it fits the Requirement R5. Also need to revise the Data Retention discussion in Section 1.4 to align with R5. In the VSL associated with R5, we believe that failure to define and document the proxies should be a moderate VSL.
Response: The SDT does not agree and believes that the Measure appropriately addresses Requirement R6 (formerly Requirement R5). No change made. The SDT does not agree and believes that the Data Retention for this Requirement should be and is identical to the other Requirements. No change made. The SDT appreciates your comment on the level of severity for this Requirement but still believes this is the appropriate level to apply. No change made.	

Organization	Question 5 Comment
Entergy Services, Inc	Under R5, the Time Horizon of the TPL standards is intended for years one through 10; However the Time Horizon shown in R5 only says "Long-term Planning". By definition of Long-Term Transmission Planning Horizon this covers years 6 through 10 and beyond. Suggestion to change the Time Horizon to read: "Near-Term and Long-Term Transmission Planning".
ITC Holdings	Under R5, the Time Horizon of the TPL standards is intended for years one through 10; however, the Time Horizon shown in R5 only says "Long-term Planning". By definition of Long-Term Transmission Planning Horizon this covers years 6 through 10 and beyond. Suggestion to change the Time Horizon to read: "Near-Term and Long-Term Transmission Planning".

Response: The *Time Horizon* term at the end of the requirement deals with mitigation time periods (as shown below) and is not connected to the assessment time frames. Time Horizons are a consideration when there is a violation of a requirement – the impact to the BES of violating a requirement with a long-term planning horizon is not expected to be as severe as the impact associated with violating a requirement with a real-time operations time horizon. No change made.

Mitigation Time Horizon

The time horizons available for mitigating a violation to a requirement include the following:

- **Long-term Planning** — a planning horizon of one year or longer.
- **Operations Planning** — operating and resource plans from day-ahead up to and including seasonal.
- **Same-day Operations** — routine actions required within the timeframe of a day, but not real-time.
- **Real-time Operations** — actions required within one hour or less to preserve the reliability of the bulk electric system.

Operations Assessment — follow-up evaluations and reporting of real time operations.

Idaho Power	M5 doesn't make any sense. Need to revise this Measure so that it fits the Requirement R5. Also need to revise the Data Retention discussion in Section 1.4 to align with R5.

Response: The SDT does not agree and believes that the Measure appropriately addresses Requirement R6 (formerly Requirement R5). No change made.

6. Requirement R6 – Please provide any specific comments on the requirement text, VRF, Time Horizon, measure associated with the requirement, data retention associated with the requirement, and/or the VSL associated with the requirement.

Summary Consideration: Requirement R6 (now Requirement R7) is an overarching requirement that applies to the entire set of analysis required to meet the requirements of the TPL standard and to the Corrective Action Plan developed as part of the Planning Assessment. The intent of this requirement is to clarify that while the responsibilities for the TPL requirements are for both the Transmission Planner and Planning Coordinator, the individual tasks may be met through joint or shared analysis. Industry feedback indicates that it is important to minimize duplicative studies to the greatest extent possible. Coordinating and/or joint analysis does not alleviate the responsibility that all entities need to comply with the standard requirements. The SDT has made changes for clarity.

R7. Each Planning Coordinator, in conjunction with each of its Transmission Planners, shall determine and identify each entity's individual and joint responsibilities for performing the required studies for the Planning Assessment.

Organization	Question 6 Comment
Northeast Power Coordinating Council United Illuminating Northeast Utilities ISO New England, Inc. Central Maine Power Company	We do not feel that this requirement belongs in this standard and it should be deleted. The standard defines requirements for the assessment not who does what.
Response: The intent of this requirement is to clarify that TPL requirements can be meet through joint or shared analysis. Industry feedback indicates that it is important to minimize duplicative studies to the greatest extent possible. This requirement does not preclude any single entity from performing all the study work required to support an assessment. No change made.	
MRO NERC Standards Review Subcommittee	MRO NSRS is not clear if: 1) Each Transmission Planner is to meet all the requirements including doing all the studies and all Planning coordinators are to meet the requirements including doing all the studies.Or 2) If the Transmission Planner and Planning Coordinator are to work as a team to meet all the requirements including doing all the studies. Either one of them could do various parts of the required studies. For example, maybe the PC could do the stability part so all TP's would not necessarily have to buy that software if they did not need it for other planning purposes.In the first read of this standard, it appears that the intention was number 1, which sounds awfully duplicative. But then take a look at Requirement 6. R6. Each Transmission Planner and Planning Coordinator shall determine and identify individual and joint responsibilities for performing the required studies for the Planning Assessment. [Violation Risk Factor: Low] [Time Horizon: Long-term Planning]After reading R6, it appears that number 2 was intended. Perhaps R6 should be the very first requirement in the standard. The MRO NSRS requests that the NERC SDT clarify the responsibility of the requirements of this standard.

Organization	Question 6 Comment
Response: The requirement specifies that individual and joint responsibilities for performing the required studies be identified. Requirement R6 (now Requirement R7) is an overarching requirement that applies to the entire set of analysis required to meet all the requirements of the TPL. **R7**. Each Planning Coordinator, in conjunction with each of its Transmission Planners, shall determine and identify each entity's individual and joint responsibilities for performing the required studies for the Planning Assessment.	
SERC Engineering Committee Reliability Review Subcommittee (RRS)	In absence of these agreements, it is assumed that both Transmission Planners and Planning Coordinators would be responsible for performing the studies. How do the Corrective Action Plans get resolved between these entities if there is no agreement on the study results??Requirements R1, R2, R3, R4 and R5 should all be revised to include a reference to R6 regarding the determination of individual and joint responsibilities for performing the required studies. In the VSL associated with R6, we believe that failure to determine and identify one responsibility should be a moderate VSL, failure to determine and identify two responsibilities should me a high VSL, while failure to determine and identify three responsibilities should be a severe VSL. Otherwise failing to document only one responsibility would result in a severe VSL.
Response: Requirement R6 (now Requirement R7) is an overarching requirement that applies to the entire set of analysis required to meet all the requirements of the TPL and to the corrective action plan developed as part of the assessment. The proposed changes to the VSLs do not conform to Guideline 3 of the FERC VSL order. No change made to the VSL. **R7**. Each Planning Coordinator, in conjunction with each of its Transmission Planners, shall determine and identify each entity's individual and joint responsibilities for performing the required studies for the Planning Assessment.	
FirstEnergy Corp	We agree with the stated Requirement, Measure, VRF, Time-Horizon, Data Retention and VSL of requirement R6.
Progress Energy Florida, Inc.	PEF does not presently have any concerns with R6.
American Transmission Company	We agree with the revisions to R6.
Independent Electricity System Operator	We agree with the requirement, the VRF, Time Horizon, Measure and VSLs.
Response: Thank you for your response. However, please see changes indicated in the summary due to other industry comments.	
TVA System Planning	In the VSL associated with R6, we believe that failure to determine and identify one responsibility should be a moderate VSL, failure to determine and identify two responsibilities should me a high VSL, while failure to determine and identify three responsibilities should be a severe VSL. Otherwise failing to document only one responsibility would result in a severe VSL.
Response: The proposed changes to the VSL do not conform to Guideline 3 of the FERC VSL order. No change made	

Organization	Question 6 Comment
Florida Reliability Coordinating Council, Inc - Transmission Working Group	Please clarify that the phrase "individual and joint responsibilities" applies to entities (e.g., the TPs and PCs) and not specific individuals.R6 Please clarify if this requirement is intended for cases where a TP is not a PC and therefore is working "under" a PC? Or if this is intended to apply across neighboring PC's?
FMPA	Please clarify that the phrase "individual and joint responsibilities" applies to entities (e.g., the TPs and PCs) and not specific individuals.
Response: Thank you for pointing out a potential for misinterpretation of the intent of the requirement. The SDT has modified the language**.** **R7**. Each Planning Coordinator, in conjunction with each of its Transmission Planners, shall determine and identify each entity's individual and joint responsibilities for performing the required studies for the Planning Assessment.	
Xcel Energy	Why is this needed if both entities must comply with the standard?At a minimum the requirement should include language to state that the one party must provide to the other with enough notice to comply with a required study if there is a shift or assignment of a responsibility.
Ameren	In absence of these agreements, it is assumed that both Transmission Planners and Planning Coordinators would be responsible for performing the studies. It is not clear how the Corrective Action Plans get resolved between these entities if there is no agreement on the study results.
Duke Energy	Requirements R1, R2, R3, R4 and R5 should all be revised to include a reference to R6 regarding the determination of individual and joint responsibilities for performing the required studies.
Response: Requirement R6 (now Requirement R7) is an overarching requirement that applies to the entire set of analysis to meet all the requirements of the TPL. This includes the corrective action plan developed as part of the assessment. Coordinating and/or joint analysis does not alleviate the responsibility that all entities need to comply with the standard requirements. **R7**. Each Planning Coordinator, in conjunction with each of its Transmission Planners, shall determine and identify each entity's individual and joint responsibilities for performing the required studies for the Planning Assessment.	
Midwest ISO	A) Under R6, the Time Horizon of the TPL standards is intended for years one through 10; However the Time Horizon shown in R6 only says "Long-term Planning". By definition of Long-Term Transmission Planning Horizon this covers years 6 through 10 and beyond. Suggestion to change the Time Horizon to read: "Near-Term and Long-Term Transmission Planning".
Minnesota Power	Under R6, the Time Horizon of the TPL standards is intended for years one through 10; however, the Time Horizon shown in R6 only says "Long-term Planning". By definition of Long-Term Transmission Planning Horizon this covers years 6 through 10 and beyond. Suggestion to change the Time Horizon to read: "Near-Term and Long-Term Transmission Planning".
Response: The *Time Horizon* term at the end of the requirement deals with mitigation time periods (as shown below) and is not connected to the assessment time	

Organization	Question 6 Comment
frames. Time Horizons are a consideration when there is a violation of a requirement – the impact to the BES of violating a requirement with a long-term planning horizon is not expected to be as severe as the impact associated with violating a requirement with a real-time operations time horizon. No change made. **Mitigation Time Horizon** The time horizons available for mitigating a violation to a requirement include the following: • **Long-term Planning** — a planning horizon of one year or longer. • **Operations Planning** — operating and resource plans from day-ahead up to and including seasonal. • **Same-day Operations** — routine actions required within the timeframe of a day, but not real-time. • **Real-time Operations** — actions required within one hour or less to preserve the reliability of the bulk electric system. • **Operations Assessment** — follow-up evaluations and reporting of real time operations.	
Brazos Electric Cooperative	is there any other way to identify responsibilities between the parties than having an agreement? R6 seems to indicate an agreement of some sort must be in place. if that is the case then it could simply say an agreement must be in place.
Response: The requirement has been clarified in response to others' comments. The SDT did not want to imply that a separate agreement would be required for the purposes of the assessment. **R7**. Each Planning Coordinator, in conjunction with each of its Transmission Planners shall determine and identify each entity's individual and joint responsibilities for performing the required studies for the Planning Assessment.	
ITC Holdings	Comments: Should this requirement state that ?The Transmission Planner in conjunction with their Planning Coordinator shall determine and identify individual and joint responsibilities for performing the required studies for the Planning Assessment.
Response: The SDT has modified the language**.** **R7**. Each Planning Coordinator, in conjunction with each of its Transmission Planners, shall determine and identify each entity's individual and joint responsibilities for performing the required studies for the Planning Assessment.	
LADWP	R6: Does this requirement requires authors of the planning assessment report should be identified? If so, can we use plain English like "The authors of the Planning Assessment report shall be identified". If not, please explain what this requirement is all about.
Kansas City Power & Light	Why is this needed if both entities must comply with the standard?At a minimum the requirement should include language to state that the one party must provide to the other with enough notice to comply with a required study if there is a shift or assignment of a responsibility.

Organization	Question 6 Comment
Response: Requirement R6 (now Requirement R7) is an overarching requirement that applies to the entire set of analysis required to meet all the requirements of the TPL and to the corrective action plan developed as part of the assessment. The intent of this requirement is to clarify TPL requirements can be met through joint or shared analysis. Industry feedback indicates that it is important to minimize duplicative studies to the greatest extent possible. Coordinating and/or joint analysis does not alleviate the responsibility that all entities need to comply with the standard requirements. **R7**. Each Planning Coordinator, in conjunction with each of its Transmission Planners, shall determine and identify each entity's individual and joint responsibilities for performing the required studies for the Planning Assessment.	
Orlando Utilities Commission	R6: Is this requirement intended for cases where the TP is not also their PC, or is this between adjacent PC's?
Response: The intent of this requirement is to clarify TPL requirements can be meet through joint or shared analysis. Industry feedback indicates that it is important to minimize duplicative studies to the greatest extent possible. The requirement has been clarified in response to others' comments. **R7**. Each Planning Coordinator, in conjunction with each of itsTransmission Planners, shall determine and identify each entity's individual and joint responsibilities for performing the required studies for the Planning Assessment.	

7. Requirement R7 – Please provide any specific comments on the requirement text, VRF, Time Horizon, measure associated with the requirement, data retention associated with the requirement, and/or the VSL associated with the requirement.

Summary Consideration: Many commenters feel that the reference to FERC Order 890 is inappropriate, but most do not argue against the importance of sharing Planning Assessment information. There was also concern about the meaning of the phrase "coordinating of analysis of these results", and what was specifically required. The SDT believes sharing of information, understanding the impact on/from neighboring areas, peer review/feedback, and wide area assessment are important to effective Transmission planning. As a result of the comments several revisions have been made to TPL-001-1.

Revisions to Requirement R3, part R3.4 and Requirement R4, part 4.4 will clarify the expectation that Transmission Planner's and Planning Coordinator's analyze Table 1 events outside their System for reliability impacts to understand neighboring System impacts. The revised TPL-001-1 Requirement R8 (formerly Requirement R7) will ensure appropriate information is exchanged between Transmission Planner's and Planning Coordinator's for sharing of information, review, and coordination of plans in conformance with Order 693, paragraph 1755 and 1756 expectations by requiring distribution of Planning Assessments to neighboring Transmission Planners and Planning Coordinators, as well as entities with a reliability-related need. The NERC Rules and Procedures and delegation agreements cover existing TPL-005-0 & TPL-006-0 assessment requirements for regional and inter-regional assessments allowing for retirement of these two standards. The aggregate effect of the above items will be an overlapping assessment of BES reliability from each Transmission Planner area up through each Interconnection.

R8 Each Planning Coordinator and Transmission Planner shall distribute its Planning Assessment results to adjacent Planning Coordinators and Transmission Planners and to any functional entity that indicates a reliability related need for the Planning Assessment results.

R8.1 If a recipient of the Planning Assessment results provides documented comments on the results, the respective Planning Coordinator or Transmission Planner shall provide a documented response to that recipient within 90 calendar days of receipt of those comments.

M8 Each Planning Coordinator and Transmission Planner shall provide evidence, such as email notices, documentation of updated web pages, postal receipts showing recipient, date, and contents, or a demonstration of a public posting, that it has distributed its Planning Assessment results to adjacent Planning Coordinators and Transmission Planners and any functional entity who has indicated a reliability need and has provided a documented response to comments received on Planning Assessment results within 90 calendar days of receipt of those comments in accordance with Requirement R8.

R8 VSL	The responsible entity failed to distribute the results of its Planning Assessment to any one of its adjacent Transmission Planners and Planning Coordinators, respectively in accordance with Requirement R8.	N/A	The responsible entity failed to distribute the results of its Planning Assessment to its adjacent Transmission Planners and Planning Coordinators, respectively in accordance with Requirement R8.	The responsible entity failed to provide a documented response to a recipient of the Planning Assessment results who provided documented comments on the results within 90 calendar days of receipt of those comments in accordance with Requirement R8.

Organization	Question 7 Comment
Northeast Power Coordinating Council United Illuminating Northeast Utilities ISO New England, Inc. National Grid Central Maine Power Company	This standard should not be reiterating FERC Order 890. We do not feel that this requirement belongs in this standard and it should be deleted.
SERC Engineering Committee Planning Standards Subcommittee	FERC Order 890:The reference to FERC Order 890 as it is currently written makes it seem like a suggestion to follow Order 890. If Order 890 explicitly describes this process then the sentence should read "as described in FERC Order 890. If not, this should not be mentioned at all.
Bonneville Power Administration PacifiCorp Deseret Generation & Transmission SRP Arizona Public Service Co Western Area Power Administration Pacific Gas and Electric Co, Puget Sound Energy, Inc. NV Energy Southern California Edison Company San Diego Gas and Electric Co California ISO Tucson Electric Power Company	We believe that references to FERC Orders should not be included in requirements of standards. This comment also applies to M7.

Organization	Question 7 Comment
NorthWestern Corporation NorthWestern Energy (NWE) (NWMT)	In R7 the references to FERC Orders should not be included in requirements of standards. This comment also applies to M7.
Response: The SDT agrees that the standard should not reference Order 890 and the reference has been deleted. **R8** Each Planning Coordinator and Transmission Planner shall distribute its Planning Assessment results to adjacent Planning Coordinators and Transmission Planners and to any functional entity that indicates a reliability related need for the Planning Assessment results. **M8** Each Planning Coordinator and Transmission Planner shall provide evidence, such as email notices, documentation of updated web pages, postal receipts showing recipient, date, and contents, or a demonstration of a public posting, that it has distributed its Planning Assessment results to adjacent Planning Coordinators and Transmission Planners and any functional entity who has indicated a reliability need and has provided a documented response to comments received on Planning Assessment results within 90 calendar days of receipt of those comments in accordance with Requirement R8.	
MRO NERC Standards Review Subcommittee	MRO NSRS proposes expanding the scope of entities to consider, limit it to those entities that indicate a reliability need for coordination, and eliminate the direct reference to Order 890. MRO NSRS suggests this text: "Each Planning Coordinator shall establish a list of adjacent Planning Coordinators and any functional entity who has indicated a reliability need, distribute its Planning Assessment results to the listed entities and consider comments on the assumptions and results through an open and transparent peer review process.
Response: The scope of entities has been modified. Each Transmission Planner and Planning Coordinator shall distribute Planning Assessment results to adjacent Transmission Planners and Planning Coordinators, respectively; and to any functional entity that indicates a reliability-related need for the Planning Assessment results. An additional sub-requirement has been added to require that if a recipient of the Planning Assessment results provides documented comments on the results, the respective Transmission Planner or Planning Coordinator shall provide a documented response to that recipient within 90 calendar days of receipt of those comments. **R8.1** If a recipient of the Planning Assessment results provides documented comments on the results, the respective Planning Coordinator or Transmission Planner shall provide a documented response to that recipient within 90 calendar days of receipt of those comments.	
SERC Engineering Committee Reliability Review Subcommittee (RRS)	The reference to FERC Order 890 as it is currently written makes it seem like a suggestion to follow Order 890. If Order 890 explicitly describes this process then the sentence should read "as described in FERC Order 890. If not, this should not be mentioned at all. " Requirement R7 describes that the Planning Coordinator is to share Planning Assessments with adjacent Planning Coordinators. Does this need to be expanded for the Transmission Planners to share their Planning Assessments with the Planning Coordinators?? In the VSL associated with R7, we believe that the PC failing to coordinate analysis should be a moderate VSL, the PC failing to distribute should be a high VSL, and failing to do both of these tasks should be a severe VSL.

Organization	Question 7 Comment

Response: The SDT agrees that the standard should not reference Order 890 and the reference has been deleted.

The scope of entities has been modified. Each Transmission Planner and Planning Coordinator shall distribute Planning Assessment results to adjacent Transmission Planners and Planning Coordinators, respectively; and to any functional entity that indicates a reliability-related need for the Planning Assessment.

The VSL has been modified to reflect the changes to the requirement. The requirement no longer requires a coordinated analysis. The failure to distribute the results is a High VSL. Failure to respond to comments is a Severe VSL.

R8 Each Planning Coordinator and Transmission Planner shall distribute its Planning Assessment results to adjacent Planning Coordinators and Transmission Planners and to any functional entity that indicates a reliability related need for the Planning Assessment results.

R8 VSL	The Transmission Planner or Planning Coordinator failed to distribute the results of its Planning Assessment to any one of its adjacent Transmission Planners and Planning Coordinators, respectively in accordance with Requirement R8.	N/A	The Transmission Planner or Planning Coordinator failed to distribute the results of its Planning Assessment to its adjacent Transmission Planners and Planning Coordinators, respectively in accordance with Requirement R8.	The Transmission Planner or Planning Coordinator failed to provide a documented response to a recipient of the Planning Assessment results who provided documented comments on the results within 90 calendar days of receipt of those comments in accordance with Requirement R8.

FirstEnergy Corp	We agree with the stated Requirement, Measure, VRF, Time-Horizon, Data Retention and VSL of requirement R7.
Progress Energy Florida, Inc.	PEF does not presently have any concerns with R7.

Response: Thank you for your response. However, please note the changes made to Requirement R7, Measure R7, and the Requirement R7 VSL (now Requirement R8) due to a majority of industry commenters indicating that some changes were needed.

IRC Standards Review Committee	Is the PC expected to distribute the TP Planning Assessments as part of its coordination requirement?

Response: The term "coordinating analysis" has been deleted from the requirement and only distribution of assessments by the Transmission Planner and Planning Coordinator is required.

R8 Each Planning Coordinator and Transmission Planner shall distribute its Planning Assessment results to adjacent Planning Coordinators and Transmission Planners and to any functional entity that indicates a reliability related need for the Planning Assessment results.

Organization	Question 7 Comment			
TVA System Planning	In the VSL associated with R7, we believe that the PC failing to coordinate analysis should be a moderate VSL, the PC failing to distribute should be a high VSL, and failing to do both of these tasks should be a severe VSL.			
Response: The VSL has been modified to reflect the changes to the requirement. The requirement no longer requires a coordinated analysis. The failure to distribute the results is a High VSL. Failure to respond to comments is a Severe VSL. **R8** Each Planning Coordinator and Transmission Planner shall distribute its Planning Assessment results to adjacent Planning Coordinators and Transmission Planners and to any functional entity that indicates a reliability related need for the Planning Assessment results.				
R8 VSL	The Transmission Planner or Planning Coordinator failed to distribute the results of its Planning Assessment to any one of its adjacent Transmission Planners and Planning Coordinators, respectively in accordance with Requirement R8.	N/A	The Transmission Planner or Planning Coordinator failed to distribute the results of its Planning Assessment to its adjacent Transmission Planners and Planning Coordinators, respectively in accordance with Requirement R8.	The Transmission Planner or Planning Coordinator failed to provide a documented response to a recipient of the Planning Assessment results who provided documented comments on the results within 90 calendar days of receipt of those comments in accordance with Requirement R8.
Southern Company	We recommend the following wording for R7.Each Planning Coordinator shall coordinate the distribution of Planning Assessment results among adjacent Planning Coordinators and any functional entity who has indicated a reliability need. Each Planning Coordinator shall coordinate analysis of these results through an open and transparent peer review process such as described in FERC Order 890.			
Response: The SDT agrees and, in addition, the scope of entities has been modified. Each Transmission Planner and Planning Coordinator shall distribute Planning Assessment results to adjacent Transmission Planners and Planning Coordinators, respectively; and to any functional entity that indicates a reliability-related need for the Planning Assessment results. The VSL has been modified to reflect the changes to the requirement. The requirement no longer requires a coordinated analysis. The failure to distribute the results is a High VSL. Failure to respond to comments is a Severe VSL. **R8** Each Planning Coordinator and Transmission Planner shall distribute its Planning Assessment results to adjacent Planning Coordinators and Transmission Planners and to any functional entity that indicates a reliability related need for the Planning Assessment results.				
R8 VSL	The responsible entity failed to distribute the results of its Planning Assessment to any one of	N/A	The responsible entity failed to distribute the results of its Planning Assessment to its adjacent Transmission	The responsible entity failed to provide a documented response to a recipient of the Planning Assessment

Organization	Question 7 Comment			
	its adjacent Transmission Planners and Planning Coordinators, respectively in accordance with Requirement R8.		Planners and Planning Coordinators, respectively in accordance with Requirement R8.	results who provided documented comments on the results within 90 calendar days of receipt of those comments in accordance with Requirement R8.
System Protection and Transmission Planning Department	The phrase "coordinating analysis of these results" seems to indicate potential second-guessing by other entities. We suggest "coordinating REVIEW of these results" may be clearer. The term "such as described in FERC Order 890" allows non-jurisdictional utilities to establish an appropriate process. This is good. However, we still have the same misgivings about the term "such as" used here.			
Manitoba Hydro	It is unclear as to what is meant by “coordinating analysis of these results”? Does this imply an obligation to conduct joint studies or just an obligation to distribute the assessment and respond to feedback? We suggest that the wording “such as described in FERC Order 890” be replaced with “such as may be required by a regulator in its PC/TP area”. The SDT is posing several other questions for industry consideration not related to the specific requirement questions above.			
Response: The SDT agrees that the term “coordinating analysis” is unclear and has modified Requirement R7 (now Requirement R8) to only require distribution of planning assessments. The reference to Order 890 is no longer necessary. However, the SDT does believe it is appropriate to require a response if a recipient of the Planning Assessment results provides documented comments on the results. **R8** Each Planning Coordinator and Transmission Planner shall distribute its Planning Assessment results to adjacent Planning Coordinators and Transmission Planners and to any functional entity that indicates a reliability related need for the Planning Assessment results.				
PPL Energy Plus	Please continue to mention relevant FERC Orders (such as 890) in the standards since the FERC orders are the source of many of the planning standards. Planners need to acknowledge, respect, and design processes and systems around the FERC rulings.			
MidAmerican Energy Company	MidAmerican commends the SDT for its hard work on this standard. MidAmerican recommends changing R7 by changing “FERC Order 890” to “FERC Order No. 890”.			
Response: The majority of commenters had an opposite opinion of referencing FERC Orders in NERC standards and the reference to Order 890 has been deleted.				
Florida Reliability Coordinating Council, Inc - Transmission Working Group	The requirement as written requires that the results of the assessment are shared on a post assessment basis between entities in a manner similar to the Attachment K process. Please clarify whether:-Is this intended to be the end results? Or does this require the inviting of entities in at the very beginning and facilitating their participation throughout the process? -Is it intended that the process described in order 890 become essentially a NERC Standard that every sentence must be met in the most literal of sense? Or is this referencing the order as a general guideline on what should be expected but not as a literal			

Organization	Question 7 Comment
	checkmark of the process? Consider adding a footnote or other clarifications that failure of others to participate in the process is not a non compliance by the entity inviting them to the process. Otherwise non-responsiveness of a neighboring PC who may not have reliability need to participate and whose participation is beyond the control of the PC that initiated the process could trigger non-compliance.
Entergy Services, Inc	This requirement is addressed through FERC Order No. 890 (9 principles of transmission planning).
Platte River Power Authority	R7. Delete this requirement as it is the responsibility of the Transmission Provider under FERC Order 890.
American Transmission Company	We propose expanding the scope of entities to consider, limit it to those entities that indicate a reliability need for coordination, and eliminate the direct reference to FERC Order 890 and peer review. We suggest this text: "Each Planning Coordinator shall establish a list of adjacent Planning Coordinators and any functional entity who has indicated a reliability need, and distribute its Planning Assessment results to the listed entities and consider comments on the assumptions and results.
Response: The reference to Order 890 created confusion regarding process requirements and the reference has been deleted. The standard now requires each Transmission Planner and Planning Coordinator to distribute Planning Assessment results to adjacent Transmission Planners and Planning Coordinators, respectively; and to any functional entity that indicates a reliability-related need for the Planning Assessment results. In addition, if a recipient of the Planning Assessment results provides documented comments on the results, the respective Transmission Planner or Planning Coordinator shall provide a documented response to that recipient within 90 calendar days of receipt of those comments. This simplifies the process while achieving appropriate involvement of affected entities. **R8** Each Planning Coordinator and Transmission Planner shall distribute its Planning Assessment results to adjacent Planning Coordinators and Transmission Planners and to any functional entity that indicates a reliability related need for the Planning Assessment results. **R8.1** If a recipient of the Planning Assessment results provides documented comments on the results, the respective Planning Coordinator or Transmission Planner shall provide a documented response to that recipient within 90 calendar days of receipt of those comments.	
SMUD	Requirement R7 should end after the words '....who has indicated a reliability need'. R7:The requirement should not invoke another document for compliance. The words, ", coordinating analysis of these results through an open and transparent peer review process such as described in FERC Order 890', should be deleted. This comment also applies to M7.
Response: The reference to Order 890 created confusion regarding process requirements and the reference has been deleted. The standard now requires each Transmission Planner and Planning Coordinator to distribute Planning Assessment results to adjacent Transmission Planners and Planning Coordinators, respectively; and to any functional entity that indicates a reliability-related need for the Planning Assessment results. In addition, if a recipient of the Planning Assessment results provides documented comments on the results, the respective Transmission Planner or Planning Coordinator shall provide a documented response to that recipient within 90 calendar days of receipt of those comments. This simplifies the process while achieving appropriate involvement of affected entities. Conforming changes have been made to Measure M7 (now M8). **R8** Each Planning Coordinator and Transmission Planner shall distribute its Planning Assessment results to adjacent Planning Coordinators and	

Organization	Question 7 Comment
Transmission Planners and to any functional entity that indicates a reliability related need for the Planning Assessment results. **R8.1** If a recipient of the Planning Assessment results provides documented comments on the results, the respective Planning Coordinator or Transmission Planner shall provide a documented response to that recipient within 90 calendar days of receipt of those comments. **M8** Each Planning Coordinator and Transmission Planner shall provide evidence, such as email notices, documentation of updated web pages, postal receipts showing recipient, date, and contents, or a demonstration of a public posting, that it has distributed its Planning Assessment results to adjacent Planning Coordinators and Transmission Planners and any functional entity who has indicated a reliability need and has provided a documented response to comments received on Planning Assessment results within 90 calendar days of receipt of those comments in accordance with Requirement R8.	
Xcel Energy	Recommend deleting the portion of the requirement that states: "coordinating analysis of these results through an open and transparent review process such as described in FERC Order 890.
LADWP	FERC 890 stands on its own, why should a planning standard refers to a FERC Order? Does this imply that if a FERC Order is not referenced in the planning standard, we can ignor the order?
Independent Electricity System Operator	1. We question the need to mention FERC 890. If this meant to be an example for the US entities, we suggest this to be put into a footnote with indication that it is an example for the US entities only.2. We agree with the requirement, the VRF, Time Horizon, Measure and VSLs.
Response: The reference to Order 890 created confusion regarding process requirements and the reference has been deleted. **R8** Each Planning Coordinator and Transmission Planner shall distribute its Planning Assessment results to adjacent Planning Coordinators and Transmission Planners and to any functional entity that indicates a reliability related need for the Planning Assessment results.	
Ameren	Requirement R7 describes that the Planning Coordinator is to share Planning Assessments with adjacent Planning Coordinators. It is not clear whether this needs to be expanded for the Transmission Planners to share their Planning Assessments with the Planning Coordinators. The reference to FERC Order 890 as it is currently written makes it seem like a suggestion to follow Order 890. If Order 890 explicitly describes this process then the sentence should read "as described in FERC Order 890. If not, maybe this should not be mentioned at all.
Response: The scope of entities has been modified. Each Transmission Planner and Planning Coordinator shall distribute Planning Assessment results to adjacent Transmission Planners and Planning Coordinators, respectively; and to any functional entity that indicates a reliability-related need for the Planning Assessment results. The reference to Order 890 created confusion regarding process requirements and the reference has been deleted. **R8** Each Planning Coordinator and Transmission Planner shall distribute its Planning Assessment results to adjacent Planning Coordinators and Transmission Planners and to any functional entity that indicates a reliability related need for the Planning Assessment results.	
Midwest ISO	A) Under R7, the Time Horizon of the TPL standards is intended for years one through 10; However the Time Horizon shown in R7 only says "Long-term Planning". By definition of Long-Term Transmission Planning Horizon this covers years 6 through 10

Organization	Question 7 Comment
	and beyond. Suggestion to change the Time Horizon to read: "Near-Term and Long-Term Transmission Planning". B) The coordination of analysis of results through an open and transparent process is already a FERC requirement thus producing a double jeopardy for those entities that fall under the jurisdiction of FERC Order 890. We recommend striking the following language in the last sentence: ...coordinating analysis of these results through an open and transparent peer review process such as described in FERC Order 890. C) Under R7 only the Planning Coordinator is required to coordinate the distribution of Planning Assessment results among adjacent PCs and any functional entity who has indicated a reliability need, coordinating analysis of these results through an open and transparent peer review process such as described in FERC Order 890. Should the TP be added to this requirement? We propose the suggested language change: Each Transmission Planner and Planning Coordinator shall coordinate the distribution of Planning Assessment results among adjacent Transmission Planners and Planning Coordinators, respectfully, and to any functional entity who has indicated a reliability need, coordinating analysis of these results through an open and transparent peer review process such as described in FERC Order 890. D) Based on the comments above in (B) and (C), our suggested requirement language is as follows: Each Transmission Planner and Planning Coordinator shall coordinate analysis in support of assessments in accordance with applicable regulatory requirements. Each Planning Coordinator shall distribute its completed planning assessment results among adjacent Planning Coordinators and any functional entity who indicated in writing a reliability related need.

Response: The *Time Horizon* term at the end of the requirement deals with mitigation time periods (as shown below) and is not connected to the assessment time frames. No change made.

Mitigation Time Horizon

The time horizons available for mitigating a violation to a requirement include the following:

- **Long-term Planning** — a planning horizon of one year or longer.
- **Operations Planning** — operating and resource plans from day-ahead up to and including seasonal.
- **Same-day Operations** — routine actions required within the timeframe of a day, but not real-time.
- **Real-time Operations** — actions required within one hour or less to preserve the reliability of the bulk electric system.
- **Operations Assessment** — follow-up evaluations and reporting of real time operations.

The reference to "coordinating analysis" and Order 890 created confusion regarding process requirements and the requirement has been modified. The standard now requires each Transmission Planner and Planning Coordinator to distribute Planning Assessment results to adjacent Transmission Planners and Planning Coordinators, respectively; and to any functional entity that indicates a reliability-related need for the Planning Assessment results. In addition, if a recipient of the Planning Assessment results provides documented comments on the results, the respective Transmission Planner or Planning Coordinator shall provide a documented response to that recipient within 90 calendar days of receipt of those comments. This simplifies the process while achieving appropriate involvement of affected entities.

Organization	Question 7 Comment
R8 Each Planning Coordinator and Transmission Planner shall distribute its Planning Assessment results to adjacent Planning Coordinators and Transmission Planners and to any functional entity that indicates a reliability related need for the Planning Assessment results. **R8.1** If a recipient of the Planning Assessment results provides documented comments on the results, the respective Planning Coordinator or Transmission Planner shall provide a documented response to that recipient within 90 calendar days of receipt of those comments.	
PJM	R7 needs to be broken into two parts. First establish the list of entities that need to get the assessment results. Second would be to coordinate the results as mentioned. Are the results mentioned in R7 different from the Planning Assessment?
Response: The standard now requires each Transmission Planner and Planning Coordinator distribute Planning Assessment results to adjacent Transmission Planners and Planning Coordinators, respectively; and to any functional entity that indicates a reliability-related need for the Planning Assessment results. In addition, if a recipient of the Planning Assessment results provides documented comments on the results, the respective Transmission Planner or Planning Coordinator shall provide a documented response to that recipient within 90 calendar days of receipt of those comments. This simplifies the process while achieving appropriate involvement of affected entities. The reference to "results" in Requirement R7 (now Requirement R8) is to the Planning Assessment results. **R8** Each Planning Coordinator and Transmission Planner shall distribute its Planning Assessment results to adjacent Planning Coordinators and Transmission Planners and to any functional entity that indicates a reliability related need for the Planning Assessment results. **R8.1** If a recipient of the Planning Assessment results provides documented comments on the results, the respective Planning Coordinator or Transmission Planner shall provide a documented response to that recipient within 90 calendar days of receipt of those comments.	
Minnesota Power	Under R7, the Time Horizon of the TPL standards is intended for years one through 10; however, the Time Horizon shown in R7 only says "Long-term Planning". By definition of Long-Term Transmission Planning Horizon this covers years 6 through 10 and beyond. Suggestion to change the Time Horizon to read: "Near-Term and Long-Term Transmission Planning".
Response: The *Time Horizon* term at the end of the requirement deals with mitigation time periods (as shown below) and is not connected to the assessment time frames. Time Horizons are a consideration when there is a violation of a requirement – the impact to the BES of violating a requirement with a long-term planning horizon is not expected to be as severe as the impact associated with violating a requirement with a real-time operations time horizon. No change made. **Mitigation Time Horizon** The time horizons available for mitigating a violation to a requirement include the following: • **Long-term Planning** — a planning horizon of one year or longer. • **Operations Planning** — operating and resource plans from day-ahead up to and including seasonal. • **Same-day Operations** — routine actions required within the timeframe of a day, but not real-time. • **Real-time Operations** — actions required within one hour or less to preserve the reliability of the bulk electric system.	

Organization	Question 7 Comment
• **Operations Assessment** — follow-up evaluations and reporting of real time operations.	
MAPPCOR	Propose expanding the scope of entities to consider, limit it to those entities that indicate a reliability need for coordination, and eliminate the direct reference to Order 890. Suggest this text: "Each Planning Coordinator shall establish a list of adjacent Planning Coordinators and any functional entity who has indicated a reliability need, distribute its Planning Assessment results to the listed entities and consider comments on the assumptions and results through an open and transparent peer review process.
Response: The standard now requires each Transmission Planner and Planning Coordinator distribute Planning Assessment results to adjacent Transmission Planners and Planning Coordinators, respectively; and to any functional entity that indicates a reliability-related need for the Planning Assessment results. The reference to Order 890 created confusion regarding process requirements and the reference has been deleted. **R8** Each Planning Coordinator and Transmission Planner shall distribute its Planning Assessment results to adjacent Planning Coordinators and Transmission Planners and to any functional entity that indicates a reliability related need for the Planning Assessment results.	
Orlando Utilities Commission	The term "results of the assessment", is this is the final end result that is shared and analyzed? A requirement should not reference an order or another non NERC document. All the requirements and measures for performance should be covered in the standard or through reference to another NERC approved standard. The language used in other standards would be more appropriate and directly auditable. Require that the PC/TP to share assessment and support material with those requesting entities and respond to any of their specific comments. This will insure openness and transparency in a manner and can be directly audited.
Response: The reference to "coordinating analysis" and Order 890 created confusion regarding process requirements and the reference has been deleted. The standard now requires each Transmission Planner and Planning Coordinator distribute Planning Assessment results to adjacent Transmission Planners and Planning Coordinators, respectively; and to any functional entity that indicates a reliability-related need for the Planning Assessment results. In addition, if a recipient of the Planning Assessment results provides documented comments on the results, the respective Transmission Planner or Planning Coordinator shall provide a documented response to that recipient within 90 calendar days of receipt of those comments. This simplifies the process while achieving appropriate involvement of affected entities. **R8** Each Planning Coordinator and Transmission Planner shall distribute its Planning Assessment results to adjacent Planning Coordinators and Transmission Planners and to any functional entity that indicates a reliability related need for the Planning Assessment results. **R8.1** If a recipient of the Planning Assessment results provides documented comments on the results, the respective Planning Coordinator or Transmission Planner shall provide a documented response to that recipient within 90 calendar days of receipt of those comments.	
Turlock Irrigation District	In light of the fact that FERC has determined not to apply the Order No. 890 transmission planning processes requirement to non-public utilities, TID expresses concern over the reference to Order No. 890 in R7. TID recommends that this reference be replaced with a more direct instruction that details what exactly is meant by the requirement of "an open and transparent peer review process. R7 makes reference to the peer review process laid out in FERC Order No. 890. This reference to Order No. 890 is duplicative and vague and must be clarified. The peer review process set forth in Attachment K of Order No. 890, lays out nine different principles (Coordination, Openness, Transparency, Information Exchange, Comparability, Dispute Resolution,

Organization	Question 7 Comment
	Regional Participation, Economic Planning Studies, and Cost Allocation for New Projects). Most of these principles are inapplicable when placed in the context of NERC Reliability Standards. Subjecting NERC members to all of these vague and broad principles without specific guidance as to their application would be a significant burden. TID proposes that the reference to Order No. 890 be removed from R7 and replaced with a provision that expressly details the principles of openness and transparency that are contemplated in R7. Such an express provision would bring clarity to the requirement so that entities subject to R7 would know exactly what they are expected to do to comply with the requirements of R7. As it is now written, the broad reference to Order No. 890 is vague and confusing.TID is also concerned with the fact that the Violation Severity Levels for R7 now appear to run from High to Severe, with the potential of significant penalties being assessed on noncompliant entities. The High and Severe Violation Severity Levels for TLP-001-1 R7 are inappropriate given the already vague and conflicting guidance of R7, especially as R7 merely duplicates the Order No. 890 requirements. Once the reference to Order No. 890 is replaced with a provision that expressly provides specific guidance as to what is meant by the "open and transparent peer review process," the appropriate Violation Severity Level for R7 would be Low to Moderate.

Response: The reference to "coordinating analysis" and Order 890 created confusion regarding process requirements and the reference has been deleted. The standard now requires each Transmission Planner and Planning Coordinator distribute Planning Assessment results to adjacent Transmission Planners and Planning Coordinators, respectively; and to any functional entity that indicates a reliability-related need for the Planning Assessment results. In addition, if a recipient of the Planning Assessment results provides documented comments on the results, the respective Transmission Planner or Planning Coordinator shall provide a documented response to that recipient within 90 calendar days of receipt of those comments. This simplifies the process while achieving appropriate involvement of affected entities.

The VSL's have been modified based on the clarified Requirement R7 (now Requirement R8) for distribution of Planning Assessments, the importance of sharing planning information and being responsive to neighboring entities reliability related concerns.

R8 Each Planning Coordinator and Transmission Planner shall distribute its Planning Assessment results to adjacent Planning Coordinators and Transmission Planners and to any functional entity that indicates a reliability related need for the Planning Assessment results.

R8.1 If a recipient of the Planning Assessment results provides documented comments on the results, the respective Planning Coordinator or Transmission Planner shall provide a documented response to that recipient within 90 calendar days of receipt of those comments.

R8 VSL	The responsible entity failed to distribute the results of its Planning Assessment to any one of its adjacent Transmission Planners and Planning Coordinators, respectively in accordance with Requirement R8.	N/A	The responsible entity failed to distribute the results of its Planning Assessment to its adjacent Transmission Planners and Planning Coordinators, respectively in accordance with Requirement R8.	The responsible entity failed to provide a documented response to a recipient of the Planning Assessment results who provided documented comments on the results within 90 calendar days of receipt of those comments in accordance with Requirement R8.

New York Independent System	The Standards Drafting Team should clarify the standard as to whether the PC will be expected to distribute the TP Planning

Organization	Question 7 Comment
Operator	Assessments as part of its coordination requirement?
Response: The language has been clarified as to the responsibility of each Transmission Planner and Planning Coordinator. The standard now requires each Transmission Planner and Planning Coordinator distribute Planning Assessment results to adjacent Transmission Planners and Planning Coordinators, respectively; and to any functional entity that indicates a reliability-related need for the Planning Assessment results. **R8** Each Planning Coordinator and Transmission Planner shall distribute its Planning Assessment results to adjacent Planning Coordinators and Transmission Planners and to any functional entity that indicates a reliability related need for the Planning Assessment results.	
Kansas City Power & Light	Recommend deleting the portion of the requirement that states: “coordinating analysis of these results through an open and transparent review process such as described in FERC Order 890.
Response: The reference to “coordinating analysis” and Order 890 created confusion regarding process requirements and the reference has been deleted. **R8** Each Planning Coordinator and Transmission Planner shall distribute its Planning Assessment results to adjacent Planning Coordinators and Transmission Planners and to any functional entity that indicates a reliability related need for the Planning Assessment results.	

8. The SDT changed several definitions in response to industry comments to the second posting. Do you agree with these changes? If not, please clearly indicate which definition you disagree with and provide specific comments.

Summary Consideration: Many of the responders suggested that several of the definitions either be revised or deleted. As a result, the definitions for Supplemental Load Loss, Load Reduction, Planning Events and Extreme Events have been deleted and the definitions for Consequential Load Loss, Non-Consequential Load Loss and Year One have been revised.

In association with the changes in definitions, the SDT has also revised note 'b' and added note 'i' in the header to Table 1.

There were several requests to include comment on Under-frequency (UFLS) and Under-voltage load (UVLS) shedding. UVLS and UFLS are not precluded in the Corrective Action Plan for those events where controlled Load shedding is allowed. The Standard does not address the acceptability of the tools to be used for any Corrective Action Plan. As a result, no change was made.

There were some suggestions to include definitions and distinction between 'planned' and 'proposed'. The SDT tried to address the concepts of planned and proposed in a prior posting. The response from industry strongly discouraged the Standard from delving into the distinction. As a result, no change was made.

There were a couple of suggestions relative to adding back the examples of applications of Bus-tie Breakers or otherwise changing the definition. The SDT removed the statement on Bus-tie Breakers because comments were received to indicate that although the examples were true for most applications, it wasn't universal and examples were provided where Bus-tie Breakers were used between ring buses, etc. As a result, no change was made.

There was a suggestion to change the reference to 'Horizon'. "Horizon" is not something new and the SDT does not agree with changing it. As a result, no was change made.

There were a couple of requests to include new definitions for "cascading outages", "voltage instability", and "uncontrolled islanding". The SDT did not see a reason to define these terms in TPL-001-1. The requesters were invited to draft a SAR if they wanted to pursue having these terms defined. As a result, no change was made.

The following changes were made to definitions as a result of industry comments:

Consequential Load Loss: All Load that is no longer served by the Transmission System as a result of Transmission Facilities being removed from service by a Protection System operation designed to isolate the fault.

Non-Consequential Load Loss: Non-Interruptible Load loss other than Consequential Load Loss and the response of voltage sensitive Load including Load that is disconnected from the System by end-user equipment.

Year One: The first year that a Planning Coordinator or a Transmission Planner is responsible for assessing. This is further defined as the planning window that begins 12-18 months from the end of the current calendar year.

Header note 'b': Consequential Load Loss and consequential generation loss are acceptable as a consequence of any planning or extreme event excluding P0.

Header note 'i': The response of voltage sensitive Load including Load that is disconnected from the System by end-user equipment associated with an event shall not be used to meet steady state performance requirements.

Organization	Yes or No	Question 8 Comment
Northeast Power Coordinating Council	No	Revise the Load Reduction and Non-Consequential Load Loss definitions as follows.Load Reduction: Load that is still connected to the System, but is reduced due to lower voltage conditions resulting from following a Planning or Extreme Event. Non-Consequential Load Loss: Non-Interruptible Load loss other than Consequential Load Loss, Supplemental Load Loss, and Load Reduction. Intended post contingency loss of load (other than Interruptible Load, Supplemental Load or Load Reduction) caused by operator or SPS (RAS) action. (Priority Comment)For Drafting Team consideration: What types of non-interruptible load loss would be considered non-consequential load loss--manual load shedding for example? With this in mind, can the definition be simplified, maybe to read: Non-Consequential Load Loss: Operator action taken to deliberately remove load from service in response to adverse system conditions.
Response: The SDT has deleted the Load Reduction definition. The SDT has simplified the Non-Consequential Load Loss definition and has eliminated the references to Supplemental Load Loss and Load Reduction. The New definition is: **Non-Consequential Load Loss:** Non-Interruptible Load loss other than Consequential Load Loss and the response of voltage sensitive Load including Load that is disconnected from the System by end-user equipment.		
SERC Engineering Committee Planning Standards Subcommittee	No	Definitions: Revised Definitions are generally better than those from the previous version, but additional clarity could be provided. Load Reduction Please clarify whether this includes both load response and operator initiated action, such as in changes to transformer LTC. Supplemental Load Loss - From a utility perspective, this would be considered as load response. Please clarify how Supplemental Load Loss would be included in the stability analysis. Bus tie breaker A statement in the previous version which listed examples was removed from this version of the definition. The statement was helpful and should be re-inserted. The statement was: Substation configurations such as ring bus, breaker and a half, or double-bus double-breaker do not use bus tie breakers.
Response: The definitions for Load Reduction and Supplemental Load Loss have been deleted. The SDT has simplified the Non-Consequential Load Loss definition and has eliminated the references to Supplemental Load Loss and Load Reduction. The New definition is: **Non-Consequential Load Loss:** Non-Interruptible Load loss other than Consequential Load Loss and the response of voltage sensitive Load including Load that is disconnected from the System by end-user equipment. In association with the changes in definitions, the SDT has revised note 'b' and added note 'i' in the header to Table 1.		

Organization	Yes or No	Question 8 Comment
Header note 'b': Consequential Load Loss and consequential generation loss are acceptable as a consequence of any planning or extreme event excluding P0. **Header note 'i':** The response of voltage sensitive Load including Load that is disconnected from the System by end-user equipment associated with an event shall not be used to meet steady state performance requirements. The SDT removed the statement on Bus-tie Breakers because comments were received to indicate that although it was true for most applications, it wasn't universal and examples were provided where Bus-tie Breakers were used between ring buses, etc. No change made.		
Modesto Irrigation District	No	On page 2 under "Definitions of Terms Used in Standard", the red-lined out example used to clarify the definition of "Non-Consequential Load Loss" seems valuable to me, and I think they should not remove it but leave it in.
Response: The SDT has decided that it is inappropriate to include examples within a Standard's definition. The SDT is concerned that an example isn't all inclusive and it will create opportunities for loopholes. No change made.		
Bonneville Power Administration PacifiCorp Deseret Generation & Transmission SRP Xcel Energy Western Area Power Administration Southern California Edison Company San Diego Gas and Electric Co Idaho Power California ISO	No	Clarification is needed on the use of UVLS. Is it acceptable or not. Typically UVLS relays are modeled in the study. Not allowing any load shedding as a result of UVLS relays could result in very costly fixes for a very small amount of remote load. If the Non-Consequential Load Loss Allowed column is No, is load disconnecetd from the system by UVLS a violation? What about Supplemental Load Loss or UFLS?
Arizona Public Service Co	No	Claification is needed on the use of UVLS. Is it acceptable or not. Typically UVLS relays are modeled in the study. Not allowing any load shedding as a result of UVLS relays could result in very costly fixes for a very small amount of remote load. If the Non-Consequential Load Loss Allowed column has a No entry, is load disconnecetd from the system by UVLS a violation? What about Supplemental Load Loss or UFLS?

Organization	Yes or No	Question 8 Comment
Pacific Gas and Electric Co,	No	Claification is needed on the use of UVLS. Is it acceptable or not? We understand from the discussion in the webinar that in the proposed TPL-001-1, Table 1, if there is a "no" in the column for allowable load loss, you are still allowed to have UVLS set up to drop the load, but cannot plan on meeting the standard with the load shedding. Therefore, if the Non-Consequential Load Loss Allowed column is No, is load disconnecetd from the system by UVLS a violation, given that you can lose the load but cannot plan on it? Typically UVLS relays are modeled in the study. Not allowing any load shedding as a result of UVLS relays could result in very costly fixes for a very small amount of remote load. What about the treatment of Supplemental Load Loss or UFLS?
Puget Sound Energy, Inc.	No	Claification is needed on the use of UVLS. Is it acceptable or not. Typically UVLS relays are modeled in the study. Not allowing any load shedding as a result of UVLS relays could result in very costly fixes for a very small amount of remote load. If the Non-Consequential Load Loss Allowed column is No, is load disconnecetd from the system by UVLS a violation? What about Supplemental Load Loss or UFLS?Provide clear explanations of the load definitions.
NV Energy	No	Claification is needed on the use of UVLS. Is it acceptable or not. Typically UVLS relays are modeled in the study. Not allowing any load shedding as a result of UVLS relays could result in very costly fixes for a very small amount of remote load. If the Non-Consequential Load Loss Allowed column is No, is load disconnecetd from the system by UVLS a violation? What about Supplemental Load Loss or UFLS? We are also wondering how loads that have interruptible rates should be handled.
LADWP	No	UVLS should be an allowed mitigation for multiple contingencies, P3 and above. UVLS is an effective measure against voltage collapse, a system condition that if not mitigated in a timely fashion could lead to cascading events. Saqme with UFLS.
Response: UVLS and UFLS are not precluded in the Corrective Action Plan for those events where controlled load shedding is allowed. The Standard does not address the acceptability of the tools to be used for any Corrective Action Plan. No change made.		
Tucson Electric Power Company	No	Claification is needed on the use of UVLS. Is it acceptable or not? Typically UVLS relays are modeled in the study. Not allowing any load shedding as a result of UVLS relays could result in very costly fixes for a very small amount of remote load. If the Non-Consequential Load Loss Allowed column is No, is load disconnecetd from the system by UVLS a violation? What about Supplemental Load Loss or UFLS? Year One The use of calendar year is confusing. When does the 12-18 month window begin? We suggest "The year 18 months beyond the present month.
Response: UVLS and UFLS are not precluded in the Corrective Action Plan for those events where controlled load shedding is allowed. The Standard does not address the acceptability of the tools to be used for any Corrective Action Plan. No change made. The definition of Year One has been clarified. **Year One:** The first year that a Planning Coordinator or a Transmission Planner is responsible for assessing. This is further defined as the planning window that		

Organization	Yes or No	Question 8 Comment
begins 12-18 months from the end of the current calendar year.		
MRO NERC Standards Review Subcommittee	No	MRO NSRS suggests the following comments: Add a Consequential Generation Loss definition because both load and generation loss can be considered, but there is only Consequential Load Loss definition. MRO NSRS suggests text of: Consequential Generation Loss: All Generation that is no longer delivered to any Transmission Facilities as a result of the Transmission Facilities removal from service by the operation of the installed Protection Systems designed to isolate fault conditions or otherwise protect the Transmission Facilities from abnormal operating conditions. Expand the Consequential Load Loss definition to include protection for abnormal operating conditions. MRO NSRS suggests text of: Consequential Load Loss: All Load that is no longer served by any Transmission Facilities as a result of the Transmission Facilities removal from service by the operation of the installed Protection Systems designed to isolate fault conditions or otherwise protect the Transmission Facilities from abnormal operating conditions. Expand the Load Reduction definition to include consideration of TOP judgment and established protection schemes. MRO NSRS suggests text of: Load Reduction: The reduction of Load that is still connected to the System, but in the judgment of the Transmission Operator or through the previous established Special Protection Systems, Under-Frequency Load Shedding programs, Over-Frequency Load Shedding program, should be reduced to overcome to lower voltage conditions following a Planning or Extreme Event. Modify the Planning Assessment definition to more explicitly apply to the BES and the TPL-001 requirements. MRO NSRS suggests text of: Planning Assessment: Documented evaluation of future Transmission System performance and Corrective Action Plans to remedy identified deficiencies in the BES from the steady state and stability performance requirements set forth in the TPL-001 standard. Modify the Planning Events definition more explicitly apply to the TPL-001 requirements. MRO NSRS suggests text of: Planning Events: Events that are identified in the steady state and stability performance requirements set forth in the TPL-001 standard. Expand the Year One definition to include the PC, refer to the Planning Assessment, and refer to the current calendar year. MRO NSRS suggests text of: Year One: The first year that each Transmission Planner and Planning Coordinator is responsible for conducting a Planning Assessment. This is further defined as the planning window that begins 12-18 months from the current calendar year. MRO NSRS would like to delete the definition of "Year One". This is already being done and adding a planning window opens entities to noncompliance for conditions i.e. Model building outside of entities control.
Response: Requirement R2, part 2.7.1 allows for generation tripping and run-back, so a definition for Consequential Generation Loss is not required. The proposed change to expand Protection System operation to include abnormal operating conditions is too vague and is too broad. In addition it would create an overlap with the definition of Non-Consequential Load because Protection Systems used to protect abnormal operating conditions would include Special Protection System which could be used to trip Non-Consequential Load. No change made. The SDT has deleted the Load Reduction definition. UVLS and UFLS are not precluded in the Corrective Action Plan for those events where controlled load shedding is allowed. The Standard does not address the		

Organization	Yes or No	Question 8 Comment
acceptability of the tools to be used for any Corrective Action Plan. No change made. As stated in the "Purpose" the Standard establishes Transmission System planning performance for the BES. Repeating that within the Standard creates opportunities for confusion whenever it is not specifically noted. The SDT wants to minimize confusion by not repeating applicability throughout the document. Also the Planning Assessment involves more than remedying identified deficiencies. For example, it may also confirm that there are no deficiencies or it may evaluate the impacts of schedule changes in the Corrective Action Plans. No change made. The definition for Planning Events has been deleted. The SDT believes that a near term study requirement is a necessary part of the standard and that a definition for Year One is a necessary component to achieve that objective. The SDT has received several constructive comments on this and has made revisions to the definition. Although revisions fall short of your suggestion, the SDT hopes that additional clarity will help. The revised definition is: **Year One:** The first year that a Planning Coordinator or a Transmission Planner is responsible for assessing. This is further defined as the planning window that begins 12-18 months from the end of the current calendar year.		
SERC Engineering Committee Dynamics Review Subcommittee (DRS)	No	There is a need to add definitions to discriminate between planned and proposed projects. We propose the following definitions: Planned Facilities: Facilities that address the near-term deficiencies and have been approved with a financial commitment. Proposed Facilities: Facilities that address long-term deficiencies for which no commitment is required today since they may change based on future evaluation. We propose the following definitions for events: Planning Events: Events which are listed as Planning in Table 1 in Standard TPL-001-1. Extreme Events: Events which are listed as Extreme in Table 1 in Standard TPL-001-1. Bus-tie Breaker definition still seems somewhat generic and the use of 'configurations' causes uncertainty. We propose the following definition: Bus-tie Breaker: A circuit breaker whose intended purpose is to connect two individual substation buses. The definition of Supplemental Load Loss includes the phrase, "by end-user equipment", which could be understood to mean there are devices at the end-user location that remove this equipment (and conversely, load that is not disconnected "by" end-user equipment cannot be included). Also, the term "post-Contingency" can be confusing because in the case of faults, this phrase is not clear if it means conditions after the fault initiation itself or only after the clearing of the fault. We propose the following definition: Supplemental Load Loss: End-user Load that inherently disconnects from the System as a consequence of (or "in response") to the conditions created by the System event. Load Reduction: A decrease in the amount of connected Load caused by lower voltage conditions following a Planning or Extreme Event.
Response: The SDT tried to address the concepts of planned and proposed in a prior posting. The response from industry strongly discouraged the standard from delving into the distinction. No change made.		

Organization	Yes or No	Question 8 Comment
The definition for planning events has been deleted. The definition for extreme events has been deleted. The definition as proposed by SERC for a Bus-tie Breaker would apply to every breaker in any configuration. The definition in the Standard is trying to limit the application to a connection between configurations of buses, which could include flat buses, ring buses, breaker and a half, etc. The SDT is deliberately using the term configuration to avoid unintentionally excluding a particular configuration. No change made. The definition for Supplemental Load Loss has been deleted. The definition for Load Reduction has been deleted.		
SERC Engineering Committee Reliability Review Subcommittee (RRS)	No	Revised Definitions are generally better than those from the previous version, but additional clarity could be provided. Supplemental Load Loss - From a utility perspective, this would be considered as load response. Please clarify how Supplemental Load Loss would be included in the stability analysis. “Bus tie breaker “ A statement in the previous version which listed examples was removed from this version of the definition. The statement was helpful and should be re-inserted. The statement was: “Substation configurations such as ring bus, breaker and a half, or double-bus double-breaker do not use bus tie breakers. “Extreme Events definition references severity and probability. These terms should be included in the definition of Planning Events. Add a definition of Planned and Proposed facilities. Planned facilities address the near term deficiencies and have been approved with a financial commitment while proposed facilities address long term deficiencies for which no commitment is required today since they may change based on future evaluation. Consequential Load Loss - Is an SPS to trip load qualify as a planned protection system”? Load Reduction - Is this automatic as in a load response or is it operator initiated as in changes to transformer LTC? How would Supplemental Load Loss be included in the stability analysis? Table 1 suggests that it cannot be included to meet steady-state performance. Suggest that the following be added to the definition: Supplemental Load Loss associated with an event shall not be used to meet steady state performance requirements. “Where would interruptible load be included in these definitions” Bus-tie Breaker definitions still seems somewhat generic and the use of 'configurations' causes uncertainty. Revise Bus-tie Breaker to read, "A circuit breaker whose intended purpose is to connect two individual substation buses." "Bus-tie" is not capitalized in the Table. “Consequential Load Loss must include load that is lost due to the inherent response of the particular type of load. Some motors, lighting and processes will naturally trip during an event, although not as a result of the protection system. It may have been the intent of the SDT to include this phenomenon in the Supplemental Load Loss defintion. However, this definition includes the phrase, "by end-user equipment", and that makes one think that there are devices at the end-user location that is removing this equipment (and conversely, load that is not disconneted "by" end-user equipment cannot be

Organization	Yes or No	Question 8 Comment
		included). Also, the term "post-Contingency" can be confusing because in the case of faults, this phrase is not clear if it means conditions after the fault initiation itself or only after the clearing of the fault. Revise Supplemental Load Loss to read, "End-user Load that inherently disconnects from the System as a consequence of (or "in response") to the conditions created by the System event." SERC RRS suggests adding back the following to the Bus-tie breaker definition that was contained in Posting #2: ?Substations configurations such as ring bus, breaker and a half, or double bus double breaker protection schemes do not use bus tie breakers?. SERC Members believe that this additional wording helps explain this definition much more clearly. In Posting #2, undervoltage load shed, underfrequency load shed, and Special Protection Schemes were considered to be Non-Consequential Load Loss. Are these now no longer considered to be Non-Consequential Load Loss but instead now considered to be Load Reduction, Supplemental Load Loss, or something else? Should Supplemental Load Loss be further defined as load that is disconnected from the network by end-user equipment responding during duration of the fault as well as to post contingency system conditions? Also the definition of Supplemental Load Loss may benefit from some examples in the definition to further help clarify. The second sentence in the Year One definition is rather confusing. We would suggest changing “calendar year” to “date”. Otherwise it may be interpreted that Year One would begin 12 to 18 months from the end of the current calendar year. Suggest from “beginning”.

Response: The SDT has simplified the Non-Consequential Load Loss definition and has eliminated the references to Supplemental Load Loss and Load Reduction. The New definition is:

Non-Consequential Load Loss: Non-Interruptible Load loss other than Consequential Load Loss and the response of voltage sensitive Load including Load that is disconnected from the System by end-user equipment.

In association with the changes in definitions, the SDT has revised note ‘b’ and added note ‘i’ in the header to Table 1.

Header note ‘b’: Consequential Load Loss and consequential generation loss are acceptable as a consequence of any planning or extreme event excluding P0.

Header note ‘i’: The response of voltage sensitive Load including Load that is disconnected from the System by end-user equipment associated with an event shall not be used to meet steady state performance requirements.

The SDT removed the statement on Bus-tie Breakers because comments were received to indicate that although it was true for most applications, it wasn’t universal and examples were provided where bus tie breakers were used between ring buses, etc. No change made.

The SDT tried to address the concepts of planned and proposed in a prior posting. The response from industry strongly discouraged the standard from delving into the distinction. No change made.

An SPS does not qualify as a planned Protection System because it is not being used “to isolate the fault”, which is a condition of the statement. No change made.

The definition for Load Reduction has been deleted.

Interruptible load is either Consequential Load or Non-Consequential Load which is permitted to be lost for specific events and conditions defined in Table 1. No

Organization	Yes or No	Question 8 Comment
change made. The SDT removed the statement on Bus-tie Breakers because comments were received to indicate that although it was true for most applications, it wasn't universal and examples were provided where bus tie breakers were used between ring buses, etc. No change made. The definition for Supplemental Load Loss has been deleted. Bus-tie Breaker has been capitalized in the Table. The definition for Load Reduction has been deleted. The SDT removed the statement on Bus-tie Breakers because comments were received to indicate that although it was true for most applications, it wasn't universal and examples were provided where bus tie breakers were used between ring buses, etc. No change made. UVLS and UFLS are not precluded in the Corrective Action Plan for those events where controlled load shedding is allowed. The Standard does not address the acceptability of the tools to be used for any Corrective Action Plan. No change made. The SDT has decided that it is inappropriate to include examples within a Standard's definition. The SDT is concerned that an example isn't all inclusive and it will create opportunities for loop holes. The definition for Year One has been revised to add clarity. The revised definition is: **Year One:** The first year that a Planning Coordinator or a Transmission Planner is responsible for assessing. This is further defined as the planning window that begins 12-18 months from the end of the current calendar year.		
FirstEnergy Corp	No	A. Supplemental Load Loss: We disagree with newly proposed definition for "Supplemental Load Loss" which is introduced to address some stakeholders concerns related to a Load's response to transient conditions. Table 1 note "b" causes confusion indicating that Supplemental Load Loss is an acceptable consequence of a Planning Event or an Extreme Event but then goes on to say that Supplemental Load Loss can not be relied upon to meet steady state performance requirements. This seems to imply that it is permissible to use Supplemental Load Loss for stability analysis. It is not logical to allow its use in one time frame but not the other. The inclusion of the Supplemental Load Loss definition enters into a power quality issue at the end-user delivery point which is not the focus of the TPL-001-1 standard. FE suggests that this definition be removed. B. Load Reduction: The new proposed definition of "Load Reduction" while technically written correctly may not align with its common use throughout industry. Load Reduction is often thought of as an operator initiated response, rather than a natural system response to a contingency event. If the definition remains, the SDT should consider striking the text "following a Planning or Extreme Event" so that the definition can more generally apply to other areas of the standards if needed. However, as stated in question 9, we believe Load Reduction was inadvertently omitted in note "b" of the Table 1. If so, we would have similar concerns with the occasional use of Load Reduction in that it would be allowed in stability and excluded in steady-state FE suggests that this definition be removed.The "Load Reduction" definitional term brings into question what is an acceptable steady-state load model within the TPL-001-1 standard. The standard provides some prescriptive language in requirement R2.4.1 regarding dynamic stability load models but is silent on steady-state load modeling. Most transmission planners use a conservative approach of simulating constant power loads in the steady-state environment and therefore the "Load Reduction" definition would not apply. However, if a constant impedance load

Organization	Yes or No	Question 8 Comment
		model were used, Load Reduction would be reflected and less conservative outcomes would result. At a minimum, the standard should require the transmission planner to document its load modeling assumptions for steady-state simulations. [See above comment on Question 2 regarding a proposed new R2.1.1 requirement] C. Year One: We continue to oppose the Year One definition developed by the SDT. In our Draft 2 comments, FirstEnergy proposed a Year One definition of "The planning year that begins with the upcoming annual period under study". During the last comment period we indicated:"We believe the attempt to try and delineate between the near-term planning horizon and operational planning horizon is not needed within the TPL standard and that the near-term period should account for the upcoming annual study periods. If not revised, the need for two near-term studies on an annual basis is overly burdensome as many transmission planning organizations perform upcoming annual seasonal assessments for seasonal peak (summer/winter) periods. Requiring an additional two studies near-term does not provide significant benefit. Further reasoning for making the change is the allowance of operating procedures as part of Corrective Action plans. Operating procedures can easily be developed and implemented to mitigate projected performance violations prior to an upcoming seasonal period." The SDT's response from the Draft 2 comment period indicated "The standard does not require that studies are duplicated. If an operating study can be used to demonstrate an assessment for planning purposes, then the operating study would be sufficient."Since "Year One" is defined as "...a planning window that begins 12-18 months from the current calendar year" we would appreciate the SDT reconciling their Draft 2 response to the Year One definition and confirm whether or not it intends that a study of the next occurring seasonal peak period would suffice for meeting one of the current year Near-Term studies as required in requirement R2.1.1.A secondary concern with the Year One definition is its reference to the Transmission Planner with no mention of the Planning Coordinator. D. Planning Assessment: We suggest that the team consider an enhancement to the definition of "Planning Assessment". When read independently within the NERC Glossary of Terms a lay person should have a better understanding of the transmission Planning Assessment and it should set the foundational understanding that a Planning Assessment is not equivalent to a single study but rather a collection of studies. Additionally, the definition should more explicitly apply to the TPL-001-1 intended purpose. We propose a new definition based largely on the verbiage in requirement R2. "Planning Assessment: An annual documented evaluation of future Transmission System performance predicted over a minimum 10-year period, based on new or previously completed simulation studies and the Corrective Action Plans needed to satisfy steady-state, stability and short circuit performance requirements." E. Planning Event: We propose that the definition of "Planning Event" more explicitly apply to the TPL-001-1 standard and read as follows: "Planning Event: A contingency condition evaluated for its steady-state and stability impacts on the BES transmission System, requiring Corrective Action plans to remedy identified deficiencies" F. Consequential Load Loss: We suggest that the definition be revised to more closely align with the text stated in requirement R3.3.1. The proposed definition would read "Consequential Load Loss: All Load that is no longer served by any Transmission Facilities as a result of the removal of all elements that the Protection System and other automatic controls are expected to disconnect for a transmission System Contingency without operator intervention." If our proposed new definition is not acceptable, we suggest that the word "automatically" be added between "being removed" and replace "a planned" with "as designed".

Organization	Yes or No	Question 8 Comment
Response: The definition of Supplemental Load Loss has been deleted from the revised standard. In association with the changes in definitions, the SDT has revised note 'b' and added note 'i' in the header to Table 1. **Header note 'b':** Consequential Load Loss and consequential generation loss are acceptable as a consequence of any planning or extreme event excluding P0. **Header note 'i':** The response of voltage sensitive Load including Load that is disconnected from the System by end-user equipment associated with an event shall not be used to meet steady state performance requirements. The definition for Load Reduction has been deleted. The definition for Year One has been revised to reflect your comment. The revised definition is: **Year One:** The first year that a Planning Coordinator or a Transmission Planner is responsible for assessing. This is further defined as the planning window that begins 12-18 months from the end of the current calendar year. The SDT does not agree with combining the types of studies in the definition of Planning Assessment. No change made. The definition for planning event has been deleted. The definition of Consequential Load Loss has been revised however the SDT did not believe that it was necessary to insert 'automatically' in the definition. The revised definition is: **Consequential Load Loss:** All Load that is no longer served by the Transmission System as a result of Transmission Facilities being removed from service by a Protection System operation designed to isolate the fault .		
IRC Standards Review Committee New York Independent System Operator	No	The Year One definition is confusing. According to the definition, Year One can start any time between 12 and 18 months from a current calendar year. Is that January 1 of the current calendar year? Further, when does year 2, year 3, etc? start? Is this definition only applicable to the TP?
Progress Energy Carolina (PEC)	No	In this definition: "Year One: The first year that a Transmission Planner is responsible for assessing. This is further defined as the planning window that begins 12-18 months from the current calendar year" recommend that the '12-18 months' specification be removed. It is confusing.
E.ON U.S.	No	Year One: The calendar year contains 12 months. As written, Year One could start as early as January 2010 (1/1/2009 plus 12 months) or as late as July 2011 (12/31/2009 plus 18 months). E.ON U.S. believes that the statement should be modified to: read " that begins 12-18 months from the beginning of the current calendar year". This would limit the beginning of the current window to be January 2010 or July 2010.
Midwest ISO	No	Year One: At a minimum the SDT needs to address the applicability of this definition to include both the Transmission

Organization	Yes or No	Question 8 Comment
		Planner and Planning Coordinator. The Year One definition needs additional clarification with the current calendar year. According to the definition, Year One can start any time between 12 and 18 months from a current calendar year. Suggested definition for Year One: The first year that each Transmission Planner and Planning Coordinator is responsible for conducting a Planning Assessment. This is further defined as the planning window that begins at least 12-18 months from the end of the current calendar year.
BPA		Definition of terms - Year one: The current draft defines "year one" as "the planning window that begins 12-18 months from the current calendar year". However it's not clear: 1. When this 12-18 months should start to be counted. Is it counted from Jaunuary 1 of this calendar year, or Dec. 31 of this calendar year, or somewhere in the middle of the year depending on the planning entity's choice. 2. Does this calendar year refer to the year when the annual assessment report is submitted, or the calendar year when the annual assessment is started? For example, we may start to work on an annual assessment report in late 2009 but finally complete it in early 2010. In this case which year should be the "current calendar year" for the report? Each year in July BCTC receives a new load forecast, which covers the next 10 years with year 1 starting on April 1 of the next calendar year. If we determine the TPL "year one" by counting 12-18 months from the beginning of this calendar year, we are oke to use this new load forecast. If we determine the TPL year one by counting 12-18 months from the end of this calendar year, the new load forecast for year 1 and year 10 are already out-of-date by the time we receive them. Clarify which year is the "current calendar year" and when is the start of the 12-18 months.
Response: Rather than removing the specification, the SDT has revised the definition to clarify the reference point. The revised definition is: **Year One:** The first year that a Planning Coordinator or a Transmission Planner is responsible for assessing. This is further defined as the planning window that begins 12-18 months from the end of the current calendar year.		
TVA System Planning	No	TVA suggests adding back the following to the Bus-tie breaker definition that was contained in Posting #2: Substations configurations such as ring bus, breaker and a half, or double bus double breaker protection schemes do not use bus tie breakers. TVA believes that this additional wording helps explain this definition much more clearly. In Posting #2, undervoltage load shed, underfrequency load shed, and Special Protection Schemes were considered to be Non-Consequential Load Loss. Are these now no longer considered to be Non-Consequential Load Loss but instead now

Organization	Yes or No	Question 8 Comment
		considered to be Load Reduction, Supplemental Load Loss, or something else? Should Supplemental Load Loss be further defined as load that is disconnected from the network by end-user equipment responding during duration of the fault as well as to post contingency system conditions? Also the definition of Supplemental Load Loss may benefit from some examples in the definition to further help clarify. Please clarify how Supplemental Load Loss would be included in the stability analysis. The second sentence in the Year One definition is rather confusing. We would suggest changing “calendar year” to “date”. Otherwise it may be interpreted that Year One would begin 12 to 18 months from the end of the current calendar year. Suggest from “beginning”. Load Reduction ? Please clarify whether this includes both load response and operator initiated action, such as in changes to transformer LTC. Should definition also include that this load is continuing to be served? Consequential Load Loss must include load that is lost due to the inherent response of the particular type of load. Some motors, lighting and processes will naturally trip during an event, although not as a result of the protection system. It may have been the intent of the SDT to include this phenomenon in the Supplemental Load Loss defintion. However, this definition includes the phrase, "by end-user equipment", and that makes one think that there are devices at the end-user location that is removing this equipment (and conversely, load that is not disconneted "by" end-user equipment cannot be included). Also, the term "post-Contingency" can be confusing because in the case of faults, this phrase is not clear if it means conditions after the fault initiation itself or only after the clearing of the fault. Revise Supplemental Load Loss to read, "End-user Load that inherently disconnects from the System as a consequence of (or "in response") to the conditions created by the System event."

Response: The SDT removed the statement on Bus-tie Breakers because comments were received to indicate that although it was true for most applications, it wasn’t universal and examples were provided where bus tie breakers were used between ring buses, etc. No change made.

The definition of Non-Consequential Load Loss has been revised to provide greater clarity.

> **Non-Consequential Load Loss:** Non-Interruptible Load loss other than Consequential Load Loss and the response of voltage sensitive Load including Load that is disconnected from the System by end-user equipment.

The definition for Supplemental Load Loss has been deleted.

The definition for Year One has been revised to reflect your comment. The revised definition is:

> **Year One:** The first year that a Planning Coordinator or a Transmission Planner is responsible for assessing. This is further defined as the planning window that begins 12-18 months from the end of the current calendar year.

The definition for Load Reduction has been deleted.

In association with the changes in definitions, the SDT has revised note ‘b’ and added note ‘h’ in the header to Table 1.

Organization	Yes or No	Question 8 Comment
Header note 'b': Consequential Load Loss and consequential generation loss are acceptable as a consequence of any planning or extreme event excluding P0. **Header note 'i':** The response of voltage sensitive Load including Load that is disconnected from the System by end-user equipment associated with an event shall not be used to meet steady state performance requirements. The definition for Supplemental Load Loss has been deleted.		
Southern Company	No	We disagree with deleting the definition of system stability and generating unit stability. The proposed definition for Year One reads as follows Year One: The first year that a Transmission Planner is responsible for assessing. This is further defined as the planning window that begins 12-18 months from the current year. Please clarify if this refers to the first "calendar" year when a Transmission Planner becomes responsible for assessments. If so, then add the word "Calendar" so that it reads "Year One: The first calendar year ..... .
Response: The SDT deleted the difference between generator unit Stability and System Stability due to a majority of comments received from industry in a previous posting. No change made. The definition for Year One has been revised to reflect your comment. The revised definition is: **Year One:** The first year that a Planning Coordinator or a Transmission Planner is responsible for assessing. This is further defined as the planning window that begins 12-18 months from the end of the current calendar year.		
United Illuminating	No	Load Reduction: Load that is still connected to the System, but is reduced due to lower voltage conditions resulting from a Planning or Extreme Event. Non-Consequential Load Loss: Non-Interruptible Load loss other than Consequential Load Loss, Supplemental Load Loss, and Load Reduction. Intended post contingency loss of load (other than Interruptible Load, Supplemental Load or Load Reduction) caused by operator or SPS (RAS) action. (Priority Comment)
Northeast Utilities Central Maine Power Company	No	Refine load loss definitions as follows.Load Reduction: Load that is still connected to the System, but is reduced due to lower voltage conditions resulting from a Planning or Extreme Event. Non-Consequential Load Loss: Intended post contingency loss of load (other than Interruptible Load, Supplemental Load or Load Reduction) caused by operator or SPS (RAS) action. (Priority Comment)
ISO New England, Inc.	No	Refine load loss definitions as follows.Load Reduction: Load that is still connected to the System, but is reduced due to lower voltage conditions resulting from following a Planning or Extreme Event. Non-Consequential Load Loss: Non-Interruptible Load loss other than Consequential Load Loss, Supplemental Load Loss, and Load Reduction. Intended post contingency loss of load (other than Interruptible Load, Supplemental Load or Load Reduction) caused by operator or SPS (RAS) action. (Priority Comment)

Organization	Yes or No	Question 8 Comment
Response: The definition for Load Reduction has been deleted. The SDT has simplified the Non-Consequential Load Loss definition and has eliminated the references to Supplemental Load Loss and Load Reduction. The New definition is: **Non-Consequential Load Loss:** Non-Interruptible Load loss other than Consequential Load Loss and the response of voltage sensitive Load including Load that is disconnected from the System by end-user equipment.		
System Protection and Transmission Planning Department	Yes	We appreciate the effort of the SDT to clarify "Consequential load loss", and think references to this term are clearer in this draft. Proxies?, used in R5, should be defined. See R5 comments for our suggestion.
Response: See response to question 5 comments. The term, "proxies" is not used in the revised standard.		
MidAmerican Energy Company	No	MidAmerican commends the SDT for its hard work on this standard. MidAmerican believes the SDT improved several of the definitions and believes additional changes are needed: For the bus-tie definition, what does "individual substation bus configurations" mean?? The consequential load loss states that it is load that "removed from service by a planned Protection System operation to isolate fault conditions". This implies that a contingency that does not involve a fault could never have consequential load loss. MidAmerican suggests that the words "to isolate fault conditions" be replaced with "in response to a contingency event". Alternatively, consider using the words in R3.3.1 which defines the same information but without referring to fault conditions. The definition of Long-Term Transmission Planning Horizon is confusing because it is not clear which term the words "when required to accommodate any known longer lead time projects that may take longer than ten years to complete" are meant to modify. MidAmerican believes the intent is that these words only apply to the years ten or beyond and not the entire period years six to ten and beyond. Therefore, we recommend that the words be changed by starting a new sentence in the definition and putting it in parentheses "(Years beyond ten years are required to accommodate any known longer lead time projects that may take longer than ten years to complete.) MidAmerican commends the SDT for improving the Year One definition. MidAmerican still believes the Year One definition is too confining. It indicates that the first year is defined as the planning window that begins 12-18 months from the current calendar year. This means if the regional entity provides models during the current calendar year in April, the responsible entity cannot use those models in conducting planning until a year that begins in May of the next year. Why delay the start of Year One? What is gained by this delay? MidAmerican recommends that Year One NOT be a defined term. This definition clarifies a term that does NOT need to be clarified for any reason. MidAmerican believe this is a fix for a problem that does not exist. Does the SDT have evidence of lack of compliance in this regard?? Modify the Planning Assessment definition to more explicitly apply to the BES and the TPL-001 requirements. We suggest text of: Planning Assessment: Documented evaluation of future Transmission System performance and Corrective Action Plans to remedy identified deficiencies in the BES from the steady state and stability performance requirements set forth in

Organization	Yes or No	Question 8 Comment
		the TPL-001 standard. Modify the Planning Events definition more explicitly apply to the TPL-001 requirements. We suggest text of: Planning Events: Events that are identified in the steady state and stability performance requirements set forth in the TPL-001 standard.
Response: Bus configurations could include flat buses, ring buses, breaker and a half, etc. The reference to fault conditions was intentionally used to exclude SPS action. A Contingency without a fault would be an inadvertent or mis-operation, which is not directly addressed by this standard. No change made. The SDT did not recognize a benefit to the proposed wording change for the definition of Long-Term Transmission Planning Horizon. No change made. The SDT believes that a near term study requirement is a necessary part of the standard and that a definition for Year One is a necessary component to achieve that objective. The SDT has received several constructive comments on this and has made revisions to the definition. Although revisions fall short of your suggestion, the SDT hopes that additional clarity will help. The revised definition is: **Year One:** The first year that a Planning Coordinator or a Transmission Planner is responsible for assessing. This is further defined as the planning window that begins 12-18 months from the end of the current calendar year. As stated in the "Purpose" the Standard establishes Transmission System planning performance for the BES. Repeating that within the Standard creates opportunities for confusion whenever it is not specifically noted. The SDT wants to minimize confusion by not repeating applicability throughout the document. Also the Planning Assessment involves more than remedying identified deficiencies. For example, it may also confirm that there are no deficiencies or it may evaluate the impacts of schedule changes in the Corrective Action Plans. No change made. The definition for planning events has been deleted.		
Gainesville Regional Utilities	Yes	But as referenced in question 5, I believe you need a good definition for the following terms; "cascading outages", "voltage instability", and "uncontrolled islanding".
Response: The SDT sees no reason to define "cascading outages", "voltage instability", or "uncontrolled islanding" in TPL-001-1. If Gainsville wishes to pursue, please draft a SAR. No change made.		
Progress Energy Florida, Inc.	No	PEF continues to disagree strenuously with differentiating between Consequential Load Loss and Non-Consequential Load Loss. PEF does not believe that load loss has anything whatsoever to do with demonstrating the robustness of the BES. The approach the SDT is taking with TPL-001-1 is essentially "Feeder Reliability", rather than BES Reliability. Should the SDT decide that they must continue with this approach, PEF will explore options for expressing concern about this at the FERC level. PEF is perplexed by the definition of Supplemental Load Loss. PEF, as a Transmission Owner, considers its "end-user" to be the Distribution System. PEF would therefore use this definition to design Distribution-side controlled load curtailment schemes that essentially qualify as Consequential Load Loss. If this is not the intent of the SDT, PEF suggests that the

Organization	Yes or No	Question 8 Comment
		SDT modify this definition to make its meaning clearer.
Response: The SDT has revised the definitions and notes in the table, which should clarify the reference to the end-user. Pertinent revisions are: **Non-Consequential Load Loss:** Non-Interruptible Load loss other than Consequential Load Loss and the response of voltage sensitive Load including Load that is disconnected from the System by end-user equipment. **Header note 'b':** Consequential Load Loss and consequential generation loss are acceptable as a consequence of any planning or extreme event excluding P0. **Header note 'i':** The response of voltage sensitive Load including Load that is disconnected from the System by end-user equipment associated with an event shall not be used to meet steady state performance requirements.		
Ameren	No	Extreme Events definition references severity and probability. These terms should be included in the definition of Planning Events. Add a definition of Planned and Proposed facilities. Planned facilities address the near term deficiencies and have been approved with a financial commitment while proposed facilities address long term deficiencies for which no commitment is required today since they may change based on future evaluation. Revised Definitions are generally better than those from the previous version, but additional clarity could be provided. Consequential Load Loss ? Would an SPS to trip load qualify as a planned protection system? Load Reduction ? Please clarify whether this includes both load response and operator initiated action, as in changes to transformer LTC. Supplemental Load Loss - From a utility perspective, this would be considered as load response. Please clarify how Supplemental Load Loss would be included in the stability analysis. Table 1 suggests that it cannot be included to meet steady-state performance. Suggest that the following be added to the definition: Supplemental Load Loss associated with an event shall not be used to meet steady state performance requirements.
Response: The definitions for both extreme events and planning events have been deleted. The SDT tried to address the concepts of planned and proposed in a prior posting. The response from industry strongly discouraged the standard from delving into the distinction. No change made. An SPS does not qualify as a planned Protection System because it is not being used "to isolate the fault", which is a condition of the statement. The definition for Load Reduction has been deleted. In association with the changes in definitions, the SDT has revised note 'b' and added note 'i' in the header to Table 1. **Header note 'b':** Consequential Load Loss and consequential generation loss are acceptable as a consequence of any planning or extreme event excluding P0. **Header note 'i':** The response of voltage sensitive Load including Load that is disconnected from the System by end-user equipment associated with an		

Organization	Yes or No	Question 8 Comment
event shall not be used to meet steady state performance requirements.		
Manitoba Hydro	No	Consequential Load Loss: the wording "by a planned Protection System operation to isolate fault conditions" is awkward wording. The wording should be changed to "by a Protection System operation designed to isolate fault conditions". Load Reduction: This definition is not needed and load reduction is not prohibited in the standard. It will take some effort to even measure such a load reduction in simulation. Given that there are four load related definitions, the standard would be simplified by deleting this term. Any voltage dependent load will be reduced for a low voltage condition. In steady state (P0), load is normally modeled as constant MVA load so load is constant. In the steady state period after a contingency, transformer taps and voltage control devices will restore voltage, and consequently, any load modeled as voltage dependent will be restored to pre-contingency level. The term is not used anywhere in the requirements of the standard - it is only included in Table 1 Note b in the definition of Non-Consequential Load Loss. We do not think it is needed. Supplemental Load Loss: Why did the drafting team decide to include Supplemental load loss? In Table 1, it is stated under "note b" that Supplemental Load Loss cannot be used to meet steady state performance requirements. Does this imply that it is acceptable for "non-consequential" induction motor load to trip off as a result of undervoltage during the disturbance due to its protection setting? It is possible that this load loss during a stability simulation may avoid the need to add dynamic reactive support. Can the drafting team clarify the intent of the standard or delete Supplemental Load Loss. At minimum, the TP/PA should identify the minimum transient voltage that they are planning the system for. In that way, any load loss for unplanned events that cause lower transient voltages or load loss that occurs at a higher transient voltage wouldn't be a violation. Also, unless the end-user load is modeled in detail, or a proxy is used, the planner will not know if such load exists or would be lost in the simulation.
Response: The definition for Consequential Load Loss has been revised to reflect your comment. The revised definition is: **Consequential Load Loss:** All Load that is no longer served by the Transmission System as a result of Transmission Facilities being removed from service by a Protection System operation designed to isolate the fault . The definitions for Load Reduction and Supplemental Load Loss have been deleted. In association with the changes in definitions, the SDT has revised note 'b' and added note 'h' in the header to Table 1. **Header note 'b':** Consequential Load Loss and consequential generation loss are acceptable as a consequence of any planning or extreme event excluding P0. **Header note 'i':** The response of voltage sensitive Load including Load that is disconnected from the System by end-user equipment associated with an event shall not be used to meet steady state performance requirements.		
National Grid	No	Comments: Can the definitions of the "Planning Horizon" in the FAC, the "Long-term Planning" Time Horizon (italicized and in parentheses next to the Violation Risk Factor), and the "Near-Term" and "Long-Term Transmission Planning" be included in the definitions section to avoid confusion" Refine load loss definitions as follows. Consequential Load Loss: All Load that is no longer served by any Transmission

Organization	Yes or No	Question 8 Comment
		Facilities as a result of the Facilities being removed from service by a planned Protection System operation to isolate fault conditions. Comment It is not clear if Consequential load includes load that is connected to transmission within an island. Suggest revising the definition to "..load no longer served by the Transmission System (or perhaps by the BES?) as a result of Transmission Facilities being removed?" Load Reduction: Quantity of Load that is reduced due to lower voltage conditions resulting from a Planning or Extreme Event. Comment "Load Reduction" as written is the load remaining after the reduction. This should be rewritten to indicate it is the change in load from the previous value to that still connected. Also, the defined term "Load Reduction" is counter to what most engineers consider to be a load reduction and as written it does not seem necessary to define this term. Most engineers associate Load Reduction as a manual or automatic action by a customer to reduce demand. As defined it appears that Load Reduction refers only to the voltage sensitivity of load which should be captured in the system model if it is necessary to model this effect. Therefore the reference should be changed from "Load Reduction" to "Voltage Sensitive Load Loss". Non-Consequential Load Loss: Non-Interruptible Load loss other than Consequential Load Loss, Supplemental Load Loss, and Load Reduction. Comment The definition is indirect. Suggest to revise the definition to be direct by stating "Intended post contingency loss of load (other than Interruptible Load, Supplemental Load or Load Reduction) caused by operator or SPS (RAS) action. Planning Events: Events that require Transmission system performance requirements to be met.Comment - Suggest "Events for which Transmission system performance requirements shall be met". Supplemental Load Loss: Load that is disconnected from the network by end-user equipment responding to post-Contingency System conditions.Comment - Suggest rewording last phrase to "..responding to System Contingency conditions." - or perhaps just "..responding to System conditions." Year One: The first year that a Transmission Planner is responsible for assessing. This is further defined as the planning window that begins 12-18 months from the current calendar year. Comment - Suggest rewording second sentence to "This is further defined as beginning 12-18 months from the current calendar year." - This avoids the awkwardness in present draft of seeming to define Year One as a planning window as well as a particular year.

Response: The *Time Horizon* term at the end of the requirement deals with mitigation time periods (as shown below) and is not connected to the assessment time frames. Time Horizons are a consideration when there is a violation of a requirement – the impact to the BES of violating a requirement with a long-term planning horizon is not expected to be as severe as the impact associated with violating a requirement with a real-time operations time horizon. No change made.

Mitigation Time Horizon

The time horizons available for mitigating a violation to a requirement include the following:

- **Long-term Planning** — a planning horizon of one year or longer.
- **Operations Planning** — operating and resource plans from day-ahead up to and including seasonal.
- **Same-day Operations** — routine actions required within the timeframe of a day, but not real-time.

Organization	Yes or No	Question 8 Comment
• **Real-time Operations** — actions required within one hour or less to preserve the reliability of the bulk electric system. • **Operations Assessment** — follow-up evaluations and reporting of real time operations. The definition for Consequential Load Loss has been revised to reflect your comment. **Consequential Load Loss:** All Load that is no longer served by the Transmission System as a result of Transmission Facilities being removed from service by a Protection System operation designed to isolate the fault . The definitions for Load Reduction and Supplemental Load Loss have been deleted. The definition for Planning Event has been deleted. The definition for Year One has been revised to reflect your comment.. The revised definition is: **Year One:** The first year that a Planning Coordinator or a Transmission Planner is responsible for assessing. This is further defined as the planning window that begins 12-18 months from the end of the current calendar year.		
Entergy Services, Inc	No	Include a definition of "planned facilities": Facilities that address the near-term deficiencies and have been approved with a financial commitment. In Posting #2, undervoltage load shed, underfrequency load shed, and Special Protection Schemes were considered to be Non-Consequential Load Loss. Are these now no longer considered to be Non-Consequential Load Loss but instead now considered to be Load Reduction, Supplemental Load Loss, or something else?
Response: The SDT tried to address the concepts of planned and proposed in a prior posting. The response from industry strongly discouraged the standard from delving into the distinction. No change made. UVLS and UFLS are not precluded in the Corrective Action Plan for those events where controlled load shedding is allowed. The Standard does not address the acceptability of the tools to be used for any Corrective Action Plan. No change made.		
BC Hydro	No	Comments: In almost all instances, the word "horizon" should be changed to "period" in both the definitions and throughout the standard. The word horizon refers to the end of the period; it literally means, "the limit of one's mental outlook" and the horizon is normally the furthest we can see. A long-term horizon-year study would be a study of conditions expected in the last year of the long-term planning period (often the 10th or 20th year). A long-term horizon-year study would not be expected to refer to a series of studies of each year in the long-term planning period.
Response: The reference to 'Horizon' is not something new and the SDT does not agree with changing it. No change made.		
PJM	No	Planning Events and Extreme Events should refer to the lists in the tables since there is no other way to understand which contingency falls into what definition. The designation is deterministic and somewhat arbitrary but commonly accepted.

Organization	Yes or No	Question 8 Comment
Response: The definitions for planning events and extreme events have been deleted.		
American Electric Power	No	"Load Reduction" does not need to be retained as a defined term; in fact it only appears once in the draft standard at the top of Table 1. In addition, it is well understood that load is sensitive to voltage, so it seems unnecessary to call attention to it. Furthermore, the "Supplemental Load Loss" definition should also be removed. These definitions are not generally relevant to planning studies. Neither steady-state nor stability planning studies should acknowledge or rely on "Supplemental Load Loss" because it is simply unpredictable without detailed load device protection data. In fact, properly set minimum voltage limits should ensure that no appreciable load is tripped by customer equipment response as long as that equipment meets generally accepted equipment and design standards. For the same reason, steady-state planning studies should not rely on "Load Reduction" because the planning function is supposed to ensure that a designated forecasted load can be served under credible contingencies. However, it is okay that stability studies acknowledge and rely on load voltage sensitivity ("Load Reduction"), and in fact this is required due to the nature of the analysis and cannot be otherwise. Therefore, there is no need to call attention to it.Given the above comments, the remaining two load loss definitions should be further clarified, though not changed substantively, to read as noted below. Consequential Load Loss: All Load that is no longer served by any Transmission Facilities as a result of the Facilities being removed from service by a planned Protection System operation to isolate fault conditions. It excludes Load that is disconnected from the network by load internal protection or end-user equipment responding to post-Contingency System conditions. Also, it excludes Load that remains connected to the System, but that may be reduced due to lower voltage conditions as a consequence of a Planning or Extreme Event.Non-Consequential Load Loss: Any Load loss intentionally caused due to automatic system protective functions such as UVLS, special protection systems, or as the result of operating procedures. Finally, the lettered bullets at the top of Table 1 need to be modified as appropriate to reflect the above comments that load loss due to internal load protection or end-user equipment, what was called "Supplemental Load Loss", should NOT be permitted in complying with either steady-state or stability performance criteria. Load that remains connected to the System, but that may be reduced due to lower voltage, should NOT be permitted in complying with steady-state performance criteria, but should be allowed, by necessity, in complying with stability performance criteria.
Response: The definitions for Load Reduction and Supplemental Load Loss have been deleted. The definitions for Consequential and Non-Consequential Load loss have been revised **Consequential Load Loss:** All Load that is no longer served by the Transmission System as a result of Transmission Facilities being removed from service by a Protection System operation designed to isolate the fault . **Non-Consequential Load Loss:** Non-Interruptible Load loss other than Consequential Load Loss and the response of voltage sensitive Load including		

Organization	Yes or No	Question 8 Comment
Load that is disconnected from the System by end-user equipment. In association with the changes in definitions, the SDT has revised note 'b' and added note 'i' in the header to Table 1. **Header note 'b':** Consequential Load Loss and consequential generation loss are acceptable as a consequence of any planning or extreme event excluding P0. **Header note 'i':** The response of voltage sensitive Load including Load that is disconnected from the System by end-user equipment associated with an event shall not be used to meet steady state performance requirements. UVLS and UFLS are not precluded in the Corrective Action Plan for those events where controlled load shedding is allowed. The Standard does not address the acceptability of the tools to be used for any Corrective Action Plan. No change made.		
Northern Indiana Public Service Company	No	The definitions need clarification, especially if they will be extracted from the standard when approved and included in the NERC Glossary. The SDT should include a Technical Writer to clarify the proposed language.
Response: Thank you for your response.		
Platte River Power Authority	No	Non-Consequential Loss of Load - It is not clear in all the Load Loss definitions where planned load shedding or "controlled interruption of electric supply" belong. However, the NERC Webinar on June 30 was very helpful, and I make the following comment in line with the answer I heard to my question. A "Yes" in the last column of Table 1 means that planned load shedding or "controlled interruption of electric supply" is allowed for that Category of Contingencies. (For a P2.2 Bus Section Fault, SLG, HV, "Yes", one could choose to implement a planned load shedding procedure or scheme to meet system performance requirements.) Planned load shedding may be manual load shedding or automatic actions such as direct load tripping or UVLS for example. Therefore, please add mention of the planned load shedding or the "controlled interruption of electric supply" and list specific examples in the definition for "Non-Consequential Loss of Load."
Response: The SDT has decided that it is inappropriate to include examples within a Standard's definition. The SDT is concerned that an example isn't all inclusive and it will create opportunities for loopholes. No change made**.** UVLS and UFLS are not precluded in the Corrective Action Plan for those events where controlled load shedding is allowed. The Standard does not address the acceptability of the tools to be used for any Corrective Action Plan. No change made.		
American Transmission Company	No	We suggest the following comments: Add a Consequential Generation Loss definition because both load and generation loss can be considered, but there is only Consequential Load Loss definition. We suggest text of: "Consequential Generation Loss: All Generation that is no longer delivered to any Transmission Facilities as a result of the Transmission Facilities removal from service by the operation of the installed Protection Systems designed to isolate fault conditions or otherwise protect the Transmission Facilities from abnormal operating conditions.

Organization	Yes or No	Question 8 Comment
		Expand the Consequential Load Loss definition to include protection for abnormal operating conditions. We suggest text of: "Consequential Load Loss: All Load that is no longer served by any Transmission Facilities as a result of the Transmission Facilities removal from service by the operation of the installed Protection Systems designed to isolate fault conditions or otherwise protect the Transmission Facilities from abnormal operating conditions. Expand the Load Reduction definition to include consideration of TOP judgment and established protection schemes. We suggest text of: "Load Reduction: The reduction of Load that is still connected to the System, but in the judgment of the Transmission Operator or through the previous established Special Protection Systems, Under-frequency Load Shedding programs, Over-frequency Load Shedding program, should be reduced to overcome to lower voltage conditions following a Planning or Extreme Event. Modify the Planning Assessment definition to more explicitly apply to the BES and the TPL-001 requirements. We suggest text of: "Planning Assessment: Documented evaluation of future Transmission System performance and Corrective Action Plans to remedy identified deficiencies in the BES from the steady state and stability performance requirements set forth in the TPL-001 standard. Modify the Planning Events definition to more explicitly apply to the TPL-001 requirements. We suggest text of: "Planning Events: Events that are identified in the steady state and stability performance requirements set forth in the TPL-001 standard. Expand the Year One definition to include the PC, refer to the Planning Assessment, and refer to the current calendar year. We suggest text of: "Year One: The first year that each Transmission Planner and Planning Coordinator is responsible for conducting a Planning Assessment. This is further defined as the planning window that begins 12-18 months from the current calendar year.

Response: Requirement R2, part 2.7.1 allows for generation tripping and run-back, so a definition for Consequential Generation Loss is not required.

The definition for Consequential Load Loss has been revised to provide greater clarity.

> **Consequential Load Loss:** All Load that is no longer served by the Transmission System as a result of Transmission Facilities being removed from service by a Protection System operation designed to isolate the fault .

The definition for Load Reduction has been deleted.

UVLS and UFLS are not precluded in the Corrective Action Plan for those events where controlled load shedding is allowed. The Standard does not address the acceptability of the tools to be used for any Corrective Action Plan. No change made.

As stated in the "Purpose" the Standard establishes Transmission System planning performance for the BES. Repeating that within the Standard creates opportunities for confusion whenever it is not specifically noted. The SDT wants to minimize confusion by not repeating applicability throughout the document. Also the Planning Assessment involves more than remedying identified deficiencies. For example, it may also confirm that there are no deficiencies or it may evaluate the impacts of schedule changes in the Corrective Action Plans. No change made.

The definition of planning events has been deleted.

Organization	Yes or No	Question 8 Comment
The definition for Year One has been revised to reflect your comment. The revised definition is: **Year One:** The first year that a Planning Coordinator or a Transmission Planner is responsible for assessing. This is further defined as the planning window that begins 12-18 months from the end of the current calendar year.		
Duke Energy	No	Bus-tie Breaker definitions still seems somewhat generic and the use of 'configurations' causes uncertainty. Revise Bus-tie Breaker to read, "A circuit breaker whose intended purpose is to connect two individual substation buses." "Bus-tie" is not capitalized in the Table. Consequential Load Loss must include load that is lost due to the inherent response of the particular type of load. Some motors, lighting and processes will naturally trip during an event, although not as a result of the protection system. It may have been the intent of the SDT to include this phenomenon in the Supplemental Load Loss definition. However, this definition includes the phrase, "by end-user equipment", and that makes one think that there are devices at the end-user location that are removing this equipment (and conversely, load that is not disconnected "by" end-user equipment cannot be included). Also, the term "post-Contingency" can be confusing because in the case of faults, this phrase is not clear if it means conditions after the fault initiation itself or only after the clearing of the fault. Revise Supplemental Load Loss to read, "End-user Load that, due to its characteristics, disconnects from the System in response to the conditions created by the System event."
Response: The definition as proposed by Duke Energy for a Bus-tie Breaker would apply to every breaker in any configuration. The definition in the Standard is trying to limit the application to a connection between configurations of buses, which could include flat buses, ring buses, breaker and a half, etc. The SDT is deliberately using the term configuration to avoid unintentionally excluding a particular configuration. No change made. The table has been updated to capitalize the term, “Bus-tie Breaker” where used. The definition for Supplemental Load Loss has been deleted. The definition for Consequential Load Loss has been revised to reflect your comments. The revised definition is: **Consequential Load Loss:** All Load that is no longer served by the Transmission System as a result of Transmission Facilities being removed from service by a Protection System operation designed to isolate the fault .		
Independent Electricity System Operator	No	Is Year One intended to coincide with a calendar year or can it start in any month of the year? We suggest the following change to the definition. Insert “calendar” before “first” and “within” before “12” and change “from” to “of”. NERC should seek to reinstate a definition of “cascading outages” and create one for “uncontrolled islanding”.
Response: The definition for Year One has been revised to reflect your comment. The revised definition is: **Year One:** The first year that a Planning Coordinator or a Transmission Planner is responsible for assessing. This is further defined as the planning window that begins 12-18 months from the end of the current calendar year.		

Organization	Yes or No	Question 8 Comment
The SDT sees no reason to define “cascading outages” or “uncontrolled islanding” in TPL-001-1. If IESO wishes to pursue, please draft a SAR. No change made.		
Kansas City Power & Light	Yes	
Dominion - Electric Transmission	Yes	
Transmission Planning	Yes	
Pepco Holdings, Inc. - Affiliates	Yes	
Exelon Transmission Planning	Yes	
Western Area Power Administration	Yes	
Tampa Electric	Yes	
Florida Reliability Coordinating Council, Inc - Transmission Working Group	Yes	Excellent changes
FMPA	Yes	
CPS Energy	Yes	
JEA	Yes	
Brazos Electric Cooperative	Yes	
ITC Holdings	Yes	None

Organization	Yes or No	Question 8 Comment
Minnesota Power	Yes	
Orlando Utilities Commission	Yes	Good Job.
ReliabilityFirst Corporation	Yes No	It would have been nice if a red lined list of these changes is attached to the standard.
Response: Thank you for your response. However, due to other comments, several definitions have been changed as shown above.		

9. Do you agree with the changes in the performance elements and notes in Table 1? If not, please provide specific comments by note number, note alpha character, or performance category. Please note that footnotes 5 and 10 are handled separately in question 10.

Summary Consideration: While many comments were received from industry for this question, the vast majority of them were of a clarifying nature. While there were still a few questions on raising the bar for 300 kV, the actual performance elements now seem to have been honed to a point that is acceptable. The following changes were made due to industry comments:

Non-Consequential Load Loss: Non-Interruptible Load loss other than Consequential Load Loss and the response of voltage sensitive Load including Load that is disconnected from the System by end-user equipment.

R1 Each Transmission Planner and Planning Coordinator shall maintain System models within its respective area for performing the studies needed to complete its Planning Assessment. The models shall use the latest data consistent with that provided in accordance with the MOD-010 and MOD-012 standards, supplemented by other sources as needed, including items represented in the Corrective Action Plan, and shall represent projected System conditions.

R5 Each Transmission Planner and Planning Coordinator shall have criteria for acceptable System steady state voltage limits, post-Contingency voltage deviations, and the transient voltage response for its System. For transient voltage response, the criteria shall at a minimum, specify a voltage level and a maximum length of time that transient voltages may remain outside that level.

Header note 'a': BES Transmission voltage instability, cascading outages, and uncontrolled islanding shall not occur.

Header note 'c': Simulate the removal of all elements that Protection Systems and other controls are expected to automatically disconnect for each event.

Header note 'f': Facility Ratings shall not be exceeded.

Header note 'k': Transient voltage response shall be within acceptable limits established by the Planning Coordinator and the Transmission Planner.

P4: Loss of multiple elements caused by a stuck breaker [11](non-Bus-tie) attempting to clear a Fault on one of the following: & 6. Loss of multiple elements caused by a stuck breaker[10] (Bus-tie) attempting to clear a Fault on the associated bus

P7: Any two adjacent (vertically or horizontally) circuits on common structure

Extreme event 'a': Simulate the removal of all elements that Protection Systems and automatic controls are expected to disconnect for each Contingency

Extreme event steady state 1: Loss of a single generator, Transmission Circuit, single pole of a DC Line, shunt device, or transformer forced out of service followed by another single generator, Transmission Circuit, single pole of a different DC Line, shunt device, or transformer forced out of service prior to System adjustments.

Extreme event Stability 1: With an initial condition of a single generator, Transmission circuit, single pole of a DC line, shunt device, or transformer forced out of service, apply a 3Ø fault on another single generator, Transmission circuit, single pole of a different DC line, shunt device, or transformer prior to System adjustments.

Footnote 2: Unless specified otherwise, simulate Normal Clearing faults. Single line to ground (SLG) or three phase (3Ø) are the fault types, that must be evaluated in Stability simulations for the event described. A 3Ø or a double line to ground fault study indicating the criteria are being met is sufficient evidence that a SLG condition would also meet the criteria.

Footnote 3: Bulk Electric System (BES) level references include extra-high voltage (EHV) Facilities defined as greater than 300kV and high voltage (HV) Facilities defined as the 300kV and lower voltage Systems as defined by the Regional Entity. The designation of EHV and HV is used to distinguish between stated performance criteria allowances for interruptions of Firm Transmission Service and Non-Consequential Load.

Footnote 7: Opening breaker(s) without a fault on one end of a normally networked Transmission circuit such that the line is now open at that end and possibly serving Load radial from a single source point.

Footnote 10: A stuck breaker means that for a gang-operated breaker, all three phases of the breaker have remained closed. For an independent pole operated (IPO) or an independent pole tripping (IPT) breaker, only one pole is assumed to remain closed. A stuck breaker results in Delayed Fault Clearing .

Footnote 11: Excludes circuits that share a common structure or common Right-of-Way for 1 mile or less.

Organization	Yes or No	Question 9 Comment
Northeast Power Coordinating Council	No	For Steady State & Stability: Steady State & Stability: a. Transmission voltage instability, cascading outages, and uncontrolled islanding shall not occur. b. Consequential Load Loss, Supplemental Load Loss, Load Reduction, and consequential generation loss are acceptable as a consequence of any Planning or Extreme Event excluding P0. However, Supplemental Load Loss and Load Reduction associated with an event shall not be used to meet steady state performance requirementsP5 Priority Comment As written, this requirement is overly severe. This would require the simulation of a “dead” station if only one battery is present (use of NERC Glossary Protective System definition is too broad). The failure of the single protection system should be limited to certain aspects of the protection system. P7 Priority Comment Event 1 - This requirement requires the evaluation of the loss of two circuits on a multiple circuit tower. We recommend that this be modified so that only the loss of two adjacent (vertically or horizontally) circuits need be evaluated. We also recommend that the Planning Coordinator be allowed to evaluate and if appropriate exempt specific locations from this contingency based on acceptable risk. Comments on Extreme Events Table 1- We recommend renumbering the Extreme Events table to be Table 2. Stability Condition 2 Note a - Priority Comment - As written, this requirement is overly severe. This would require the simulation of a “dead” station if only one battery is present (use of NERC Glossary’s Protective System definition is too broad). The failure of the single protection system should be limited to certain aspects of the protection system. Stability Condition 2 Note h “ Eliminate this requirement or change to loss of station following three-phase fault. This note is confusing. Without providing a better defined scenario, it is unclear as to what clearing times should

Organization	Yes or No	Question 9 Comment
		be used in this simulation. Comments on Footnotes " Table 1- We recommend renumbering the Footnotes table to be Table 3. Footnote 1.a.i " Should clarify that this requirement refers to generator units that are connected to the BES system. Footnote 1.a.ii " Contingency Reserve is dependent on the generation on-line. We suggest changing the first sentence to say that you can't lose more than that permissible by the Planning Coordinator. Also change "pull out of synchronism" to "lose synchronism" in this sentence and in the second sentence. (Is "Lose synchronism" a more commonly used term?). Footnote 1.a.i, states "For Planning Event P1: No generating unit or units shall be allowed to pull out of synchronism." There is the potential for this requirement to be taken too far. Does this mean that someone's 4 kW generator at home needs to remain synchronized? Therefore, there needs to be some sort of qualifier on this requirement. Suggested wording: "For Planning Event P1: No generating unit or units greater than 20 MW and directly interconnected at 100 kV or above shall be allowed to lose synchronism. Note that synchronism applies to conventional synchronous generators and may not apply to other generation technology." Footnote 3 " We recommend revising the wording of the last sentence to "A three phase fault study indicating criteria are being met is sufficient evidence that a SLG condition would also meet criteria. Footnote 4 " We recommend that a lower bound be put on the HV electric systems (such as 100 kV), rather than just saying "and lower". As has been commented on in a previous draft, the Drafting Team should also consider not having a prescribed voltage definition of BES, be it called EHV or HV. Studies should determine what facilities should be part of the BES because of their impact on reliability. A proposal is to modify Footnote 4 to replace the phrase "?(EHV) Facilities defined as greater than 300 kV?? with "?(EHV) Facilities defined as having a significant impact on the reliability of the System, generally at voltages greater than 300 kV as determined by the Planning Coordinator?? In using such language, the more stringent requirements could apply to BES/EHV but not globally for Facilities operating at voltages greater than 300 kV. Using this methodology the extra investment required would go towards real improvement of the reliability of the System. EHV and HV should be added to the Definitions of Terms Used in Standard. Footnote 12 We recommend adding an alternative modifier to the end of the sentence, "or for 5 towers or less. This is consistent with NPCC criteria.
Response: NPCC suggested adding the word 'Transmission' to the beginning of header note 'a'. In TPL-001-1, draft 4, the SDT made a change to header note 'a' as suggested by the commenter but modified it to be 'BES Transmission'. **Header note 'a':** BES Transmission voltage instability, cascading outages, and uncontrolled islanding shall not occur. Additionally it is proposed to state in header note "b" that Load Reduction is not an acceptable means to meet steady state performance requirements. Regarding the		

Organization	Yes or No	Question 9 Comment
suggested change to header note 'b', no change was made as the standard does not prescribe a particular Load model such as constant power, constant impedance, etc. Depending on the assumptions used by the Transmission Planner, a Load Reduction could occur in the steady state analysis. In response to industry comments on TPL-001-1, draft 2, the SDT clarified that the P5 event is not intended to include an evaluation of individual components of the Protection System. The intent of P5 is to evaluate the failure of a Protection System design, and it is not based on any particular component of that design. Also, please see the Summary Considerations for Question 7 from the second posting comments; specifically item 3 on page 207. The suggested wording change to include 'adjacent' for the P7 planning event is accepted by the SDT and reflected in TPL-001-1, draft 4. The SDT does not accept the proposed provision for the Planning Coordinator to exempt locations for study of the P7 event beyond what is already exempted per footnote 11. **P7:** Any two adjacent (vertically or horizontally) circuits on common structure The suggested change to reference the extreme events as Table 2 was not accepted by the SDT. The team feels sufficient clarity is provided by the division breaks within the table. The table is to be viewed holistically as a single table stating performance requirements and reference notes for the TPL-001-1 standard. Regarding extreme event Stability item 2a, the response to your P5 comment above applies. No changes were made in regard to extreme event 2a. Regarding extreme event Stability item 2h, items 2f through 2h are deleted as this was a mis-interpretation of the existing table and are not required in the Stability timeframe. The suggested change to reference the Footnotes area as Table 3 was not accepted by the SDT. The team feels sufficient clarity is provided by the division breaks within the table. The table is to be viewed holistically as a single table stating performance requirements and reference notes for the TPL-001-1 standard. Footnote 1 has been deleted and moved into Requirement R4, parts 4.1.1 – 4.1.3. The indicated change was not made by the SDT as it was felt that it added no additional clarity. Regarding footnote 1.a.ii the SDT did not accept the proposed wording changes related to loss of synchronism. The change proposed was not substantive and the wording presently used, "pulling out of synchronism", is sufficient. Footnote 1 has been deleted and moved into Requirement R4, parts 4.1.1 – 4.1.3. No change made. Regarding the suggestion for the Planning Coordinator to establish the maximum allowable amount, the SDT has set a maximum and believes that it is the appropriate value. An entity can always set more stringent criteria. No change made. The comment on footnote 1.a.i is redundant and already addressed above. Footnote 1 has been deleted and moved into Requirement R4, parts 4.1.1 – 4.1.3. The SDT accepts the NPCC proposed change for footnote 3 (now footnote 2). **Footnote 2:** Unless specified otherwise, simulate Normal Clearing faults. Single line to ground (SLG) or three phase (3Ø) are the fault types, that must be evaluated in Stability simulations for the event described. A 3Ø or a double line to ground fault study indicating the criteria are being met is sufficient evidence that a SLG condition would also meet the criteria. Regarding footnote 4 (now footnote 3), the SDT does not accept the proposed change to establish a lower bound on the HV electric System. The lower bound is based on the BES definition established by a Regional Entity organization. While this is generally understood to be 100kV, it may vary throughout the North American footprint. The SDT has however modified footnote 3 for clarity. **Footnote 3:** Bulk Electric System (BES) level references include extra-high voltage (EHV) Facilities defined as greater than 300kV and high voltage (HV) Facilities defined as the 300kV and lower voltage Systems as defined by the Regional Entity. The designation of EHV and HV is used to distinguish		

Organization	Yes or No	Question 9 Comment
between stated performance criteria allowances for interruptions of Firm Transmission Service and Non-Consequential Load. Regarding footnote 4 (now footnote 3), the commenter suggest that the standard should not prescribe a voltage definition of BES, be it called EHV or HV and that studies are needed to determine BES Facility definitions. The BES definition is defined by the Regional Entity organization and studies are not generally relied upon for BES determination. The additional changes suggested in revising footnote 3 to limit the EHV definition to only those Facilities deemed significant to reliability as determined by the Planning Coordinator was not accepted by the SDT. Although not unanimous, the majority of the SDT and industry stakeholders believe the 300 kV and higher Systems (EHV) generally represent the backbone of many Systems in the various Interconnections and that the EHV breakpoint and the more stringent requirements are appropriately defined. The EHV and HV definitions are not being added to the NERC Glossary of Terms based on their limited use within the TPL standard. Regarding footnote 12 (now footnote 11), the 1 mile exception is more precise as span lengths can vary greatly between towers. No change was made.		
Transmission Planning	No	COMMENT: P2-1. Opening of Breaker(s) w/o fault Event: Does the modeling of this event require that the line remains energized up to the breakers" This will require adding a bus at each end with a zero impedance branch connection to "open" representation of breakers. Explicit modeling of a circuit breaker opening would require a substantial modeling effort and would not produce results more adverse than any of the other P2 contingencies. Why is this necessary? Recommend deletion of this planning event. The threshold of higher performance for facilities above 300 kV may wrongly influence decisions on project alternatives in favor of facilities with less stringent requirements. We do not agree that such a threshold is necessary or warranted.
Response: In Draft 3, footnote 8 (now footnote 7) was added to further clarify the need for the P2-1. There is no need to show a line energized up to the breakers that opened. The intent is simply to look for low voltage or thermal problems while supplying Load from one end of a normally networked line. The SDT does not believe the proposed higher performance requirements for the EHV will cause a disincentive for the EHV infrastructure. Although not unanimous, the majority of the SDT and industry stakeholders believe the 300 kV and higher Systems (EHV) generally represent the backbone of many Systems in the various Interconnections and that the EHV breakpoint and the more stringent requirements are appropriately defined. No change made.		
SERC Engineering Committee Planning Standards Subcommittee	No	Table 1 titles: The word "Requirements" needs to be added to the Table 1 titles in the existing tables. Table 1 " Steady State & Stability Performance Requirements Planning Events Table 1 " Steady State & Stability Performance Requirements Extreme Events Table 1 " Steady State & Stability Performance Requirements Footnotes (Planning Events and Extreme Events)Steady-state vs. stability analysis: We recommend that Table 1 be split back as was done in the previous draft to handle the 1) steady-state and 2) stability performance requirements. This is needed to provide clarity on which contingencies apply to steady-state and which apply to stability analysis. Table I, P7.1: It would not be likely to lose the two outside circuits on a vertically configured structure and not lose the middle circuit. Change the wording to: "Any two adjacent circuits on a common structure.
Response: The Table 1 title does not include the word requirements since the table is referenced by the requirements of the standard. For example, see		

Organization	Yes or No	Question 9 Comment
Requirements R3, parts 3.1 and 3.4 which require the Transmission Planner to develop Contingency lists for study based on the table performance requirements. The tables were combined for convenience since each Contingency event was the same in each table and based on stakeholder input. The Fault Type column adequately describes what fault type is required for study in the dynamic Stability timeframe. No change made. The suggested wording change to include "adjacent" for the P7 planning event is accepted by the SDT and reflected in Draft 4. **P7:** Any two adjacent (vertically or horizontally) circuits on common structure		
Duke Energy	No	Stability Extreme 2g needs a note like number 12 that excludes short distances. Stability Extreme 2h: Is this meant to be an event initiated by a 3LG fault or is it a catastrophic event that leaves all the elements at a station with a 3LG fault. If it is the former, then 2h needs a note to limit this to locations where actual events could lead to the loss of the entire station. There is no need to study this if there are no protection system events that lead to loss of the whole station (there would be no scenario to model). If 2h is meant to represent some catastrophe that causes all the elements at the site to experience a fault, then some clarification is needed to get consistent studies. Possibly rewrite 2h as, ?Assume all the buses at a single voltage level (one voltage level plus transformers) experience an event that results in a 3LG fault and disables local protection (fault must clear from remote stations or other side of transformer).
Response: The SDT agrees with the proposed addition of a footnote to address a threshold distance for circuits considered for study in loss of common Right-of-Way. The team has set the threshold at 1 mile or more, consistent with footnote 11. Footnote 11 (formerly footnote 12) was revised to account for both the common tower and common Right-of-Way exemption. Footnote 11 has been added to the extreme event Stability 2f and steady-state 2b. **Footnote 11:** Excludes circuits that share a common structure or common Right-of-Way for 1 mile or less Regarding extreme event Stability item 2h, items 2f through 2h are deleted as this was a mis-interpretation of the existing table and are not required in the Stability timeframe.		
Modesto Irrigation District	No	On page 20 under Table 1, why are "SLG" (i.e., single line to ground) type faults still specified when footnote 3 on page 24 indicates that analyzing three phase faults is sufficient ? On page 20 under Table 1 part f, changing "post transient" to "post Contingency" may be confusing to most analysts as post-transient is a well defined term that has been in use for many years, and is even referenced in Table W-1 of the WECC supplemental planning standard TPL - (001 thru 004) " WECC " 1 - CR. On page 20 under Table 1 part g, does that mean that for Planning Event P0 the analyst is not required to simulate a fault with normal clearing without a loss of any system element, in order to demonstrate system stability " On page 24 under Footnote 1 a ii, I would like to suggest that we add the phrase "(unless the relays are equipped with blinders and timers)" right after the phrase "must not pass through relay characteristics". This is because the blinders (i.e., straight line characteristic of a distance relay) and timers can be used to prevent distance relays from tripping when power angle swings cause the apparent impedance the distance relays see to cross into the distance relay's zone of protection.

Organization	Yes or No	Question 9 Comment
Response: When a SLG fault type is specified in Table 1, it is the fault that must be satisfied to meet performance criteria for the referenced planning event. Since 3-phase faults are simpler to simulate, a planner may simulate the 3-phase fault and if performance criteria are met then no further work is needed since the 3-phase fault has a greater BES impact than an SLG fault. However, if the 3-phase screening does not meet performance criteria, then the planner must perform the more labor intensive SLG analysis to determine whether or not performance criteria are being met. Please see footnote 2. The change from post-transient to post-Contingency was made in the last draft since the note refers to a steady-state timeframe. No change made. No stability review for the P0 event is required. Footnote 1 has been deleted and moved to Requirement R4, parts 4.1.1 – 4.1.3 but the indicated change was not made as the SDT does not feel that it would add any clarity.		
Pepco Holdings, Inc. - Affiliates	Yes	PHI does not disagree with the performance elements, but suggests that the table would be improved if a leading sentence were added to the definition section at the beginning of the table.
Response: Without a specific recommendation, the SDT is unable to make a change.		
MRO NERC Standards Review Subcommittee	No	MRO NSRS suggests the following changes:MRO NSRS believes reference to the use of Load Reduction to meet steady state performance requirement was omitted in Planning Events, Steady State and Stability, Item b. MRO NSRS suggests modifying the last sentence in Item b: However, Supplemental Load Loss and Load Reduction associated with an event shall not be used to meet steady state performance requirements. MRO NSRS proposes limiting the scope to automatic devices in Planning Events, Steady State and Stability, Item c. MRO NSRS suggests text of: c. Simulate the removal of all elements that Protection Systems and other Controls are expected to disconnect automatically for each Contingency?. Modify the P3 Category performance criteria to apply only to the loss of two generators because probability of the loss of two base load generators is an order of magnitude higher than the loss of a generator and any other transmission element. MRO NSRS suggests the listing of: the loss of transmission circuit, transformer, shunt device, and single pole of DC line be removed from the P3 Events column. The corresponding events be moved to the P6 Category by “1. Generator” to the listing in the Initial System Condition (Loss of . . .) column. Limit the scope of the simulations in Item 1 of the Extreme Events, Steady State and Stability section to automatic systems and controls. MRO NSRS suggests this text: 1. Simulate the removal of all elements that Protection Systems and controls are expected to disconnect automatically for each Contingency. Clarify the meaning of the loss of multiple circuits in Item 2.a of the Extreme Events, Steady State section by using wording similar to P7. MRO NSRS suggests this text: a. Loss of three or more circuits that share a common structure. Clarify the reference to actual, historical operating experience in Item 3.b of the Extreme Events, Steady State section. MRO NSRS suggests this text: b. Other events based upon actual operating experience that may result in wide area disturbances. Clarify the reference to actual, historical operating experience in Item 2.i of the Extreme Events, Stability State

Organization	Yes or No	Question 9 Comment
		section. MRO NSRS suggests this text that is similar to Steady State, Item 3.b: i. Other events based upon actual operating experience that may result in wide area disturbances. Further clarify the applicable shunt devices in Footnote 7 with this suggested text: 7. Requirements which are applicable to shunt devices, also apply to FACTS devices that are connected to ground, but not instrument voltage transformers or surge arresters.
Response: Regarding the suggested change to header note "b", no change was made as the standard does not prescribe a particular Load model such as constant power, constant impedance, etc. The SDT has added the suggested wording. **Header note 'c':** Simulate the removal of all elements that Protection Systems and other controls are expected to automatically disconnect for each event. The SDT disagrees with the proposed change to the P3 event. The loss of a generator is highly probable and the SDT and other stakeholders support the P3 requirement to meet the P1 criteria for the loss of a generator unit plus the loss of any other P1 element, not just another generator. No change made. The SDT has added the suggested wording. **Extreme event 'a':** Simulate the removal of all elements that Protection Systems and automatic controls are expected to disconnect for each Contingency The SDT disagrees that the proposed wording of extreme event 2a is needed since the proposed change is not substantive. The SDT disagrees that the proposed wording of extreme event 3b is needed since the proposed change is not substantive. Regarding the suggested change to footnote 7 (now footnote 6), the devices listed are not typically considered in a planning study. The SDT disagrees that the proposed change is needed for clarity. No change made.		
SERC Engineering Committee Dynamics Review Subcommittee (DRS)	No	P5 should not be a Planning Event. PRC Standards address protection system failures. The complexity associated with identifying and simulating such events is unknown and the defense of assumptions made and events simulated will lead to inconsistency in compliance and enforcement. Industry-accepted proxies for such events could be developed that would allow for efficient identification of areas needing further detailed study. Attempting to intermingle protection system operation with BES performance will be nearly impossible to implement given current technologies Stability Extreme 2g needs a note like number 12 that excludes short distances. Stability Extreme 2h: Is this meant to be an event initiated by a 3LG fault or is it a catastrophic event that leaves all the elements at a station with a 3LG fault. If it is the former, then 2h needs a note to limit this to locations where actual events could lead to the loss of the entire station. There is no need to study this if there are no protection system events that lead to loss of the whole station (there would be no scenario to model). If 2h is meant to represent some catastrophe that causes all the elements at the site to experience a fault, then some clarification is needed to get consistent studies. Possibly rewrite 2h as, "Assume all the buses at a single voltage level (one voltage level plus transformers) experience an event that results in a 3LG fault and disables local protection (fault must clear from remote stations or other side of transformer).

Organization	Yes or No	Question 9 Comment
Response: In P5 the event description was changed in Draft 3 to match what is stated in the currently approved TPL standards under Category C6 through C9. The intent of P5 is to evaluate a failure of a single Protection System design that introduces a delayed clearing mode that may also include additional electrical Facilities being removed when compared to normal fault clearing. The SDT agrees with the proposed addition of a footnote to address a threshold distance for circuits considered for study in loss of common Right-of-Way. The team has set the threshold at 1 mile or more, consistent with footnote 12 (now footnote 11). Footnote 11 was revised to account for both the common tower and common Right-of-Way exemption. Footnote 11 has been added to the extreme event Stability 2f and steady-state 2b. **Footnote 11:** Excludes circuits that share a common structure or common Right-of-Way for 1 mile or less Regarding extreme event Stability item 2h, items 2f through 2h are deleted as this was a mis-interpretation of the existing table and are not required in the Stability timeframe.		
SERC Engineering Committee Reliability Review Subcommittee (RRS)	No	"The word "Requirements" needs to be added to the Table 1 titles in the existing tables.oTable 1 ? Steady State & Stability Performance Requirements Planning Events Table 1 ? Steady State & Stability Performance Requirements Extreme Events Table 1 Steady State & Stability Performance Requirements? Footnotes (Planning Events and Extreme Events)? We recommend that Table 1 be split back as was done in the previous draft to handle the 1) steady-state and 2) stability performance requirements. This is needed to provide clarity on which contingencies apply to steady-state and which apply to stability analysis. Table I, P7.1: It would not be likely to lose the two outside circuits on a vertically configured structure and not lose the middle circuit. Change the wording to: Any two adjacent circuits on a common structure. The word "Requirements" needs to be added to the Table 1 titles in the existing tables.oTable 1 Steady State & Stability Performance Requirements Planning Events Table 1 Steady State & Stability Performance Requirements Extreme Events Table 1 Steady State & Stability Performance Requirements? Since it appears that the Table 1 cannot fit on a single page, it is suggested that multiple tables be developed to handle the 1) steady-state and 2) stability performance requirements. Footnotes may be included on a second page if needed. Comments were provided in early versions regarding the issues associated with raising the bar, and it was suggested that the marginal reliability benefits associated with these changes were not worth the marginal costs. We have not seen any significant changes from the earlier performance requirements. The question still remains, are we directing the resources where they need to be allocated to address and improve system reliability? So far the answer is believed to be "No". The existing TPL 002-0 allows for some local load to be dropped for a single contingency event as long as the Bulk system reliability was not impacted. However there is no such allowance any longer for losing such load for a single contingency in the proposed draft. It would be very expensive for SERC Members to fix all such events in several remote areas that would have very little impact on the overall reliability of the SERC Members? bulk system. SERC Members believe that the capital spent for these fixes could be used to better strengthen the overall bulk system in much better ways.

Organization	Yes or No	Question 9 Comment
		P5 should not be a planning event. PRC standards address protection system failures. The complexity associated with identifying and simulating such events is unknown and the defense of assumptions made and events simulated will lead to inconsistency in compliance and enforcement. Industry accepted proxies for such events could be developed that would allow for efficient identification of areas needing further study. Attempting to intermingle protection system operation with BES performance will be nearly impossible to implement given current technologies.
Response: The Table 1 title does not include the word requirements since the table is referenced by the requirements of the standard. For example, see Requirement R3, parts 3.1 and 3.4 which require the Transmission Planner to develop Contingency lists for study based on the table performance requirements. The tables were combined for convenience since each Contingency event was the same in each table and based on stakeholder input. The Fault Type column adequately describes what fault type is required for study in the dynamic Stability timeframe. The suggested wording change to include "adjacent" for the P7 planning event is accepted by the SDT and reflected in Draft 4. **P7:** Any two adjacent (vertically or horizontally) circuits on common structure In regards to proposed change to prohibit Non-Consequential Load shed in response to a single Contingency event. FERC, in Order 693, was clear in paragraph 1794 that interruption of Non-Consequential Load is not permitted for single Contingency events. This position was vetted in draft 1 of TPL-001-1 and most stakeholders and the majority of the SDT support this position. The use of an SPS design would be permitted for a single Contingency event if the SPS design interrupts service to customers involved in an interruptible Load contract arrangement. The suggestion for multiple tables was not accepted by the SDT. The team feels sufficient clarity is provided by the division breaks within the table. The table is to be viewed holistically as a single table stating performance requirements and reference notes for the TPL-001-1 standard. In P5 the event description was changed in Draft 3 to match what is stated in the currently approved TPL standards under Category C6 through C9. The intent of P5 is to evaluate a failure of a single Protection System design that introduces a delayed clearing mode that may also include additional electrical Facilities being removed when compared to normal fault clearing.		
FirstEnergy Corp	No	A. Note b: Please see comments in our response to Question #8 related to note b and the Supplemental Load definition. B. Note b: We believe the SDT inadvertently allowed the used of Load Reduction to meet Steady State performance requirements. We suggest text of: "However, Supplemental Load Loss and Load Reduction associated with an event shall not be used to meet steady state performance requirements." C. Note b: If our assumption is correct on item B above, we fail to see the need to define two terms Load Reduction and Supplemental Load Loss which are not permitted within the Table 1 performance requirements for steady-state nor mentioned and used within the requirement language. It appears that the Load Reduction and Supplemental Load Loss are permissible within the stability timeframe. It is not understood why it would be valid to account for these in the stability timeframe but not steady-state. D. Note i: What if the TP or PC has no criteria for transient voltage response? The standard should have a requirement that ensures that such a criteria is documented by the entity if it is intended to be used within the TPL-

Organization	Yes or No	Question 9 Comment
		001-1 standard. E. P2-3: It seems that footnote 10 should apply to the EHV criteria stated in the column titled "Interruption of Firm Transmission Service Allowed" since it applies for the P5-1 through P5-5 EHV criterion. F. P5: We agree with the change made in Draft 3 to remove the reference to "single component" of the Protection System. Additionally, the SDT clarified its intended purpose of the P5 event as stated in the Draft 2, Q7 Summary Considerations:"A number of commenters expressed concern related to Planning Event P5 Protection System Failure and the need to evaluate a single component failure of a BES Protection System; particularly a failure of a station battery. The SDT has revised the P5 Planning Event description to remove the reference to single component failure and the event description was changed to match what is stated in the currently approved TPL standards under Category C6 through C9. The intent of P5 is to evaluate a failure of a single Protection System design that introduces a delayed clearing mode that may also include additional electrical Facilities being removed when compared to normal fault clearing. A Protection System failure resulting in loss of the substation (one voltage level plus transformers) would not qualify as a P5 Planning Event since that event is considered an Extreme Event. A Standard Authorization Request (SAR) has been issued for industry comment (1/20/2009 through 2/18/2009) based on work completed by the System Protection and Controls Task Force (SPCTF). The proposed project will address the need for Protection System redundancy, based on an n-1 failure of individual components of the Protection System."It is suggested that a footnote be added the text Protection System as stated in the P5 Event Description. The footnote should read "Failure of a single Protection System design that introduces a delayed clearing mode that may also include additional electrical Facilities being removed when compared to normal fault clearing. This contingency is NOT based on failure of any particular single component of the Protection System design." This footnote will help clarify the intent without having to rely on the Comment record established during this standard development project. G. In the Extreme Event table we suggest event identifiers that are similar to those used in the Planning Events table. For Extreme Steady State we suggest ESS1, ESS2-1, ESS2-1... ESS2-5, ESS3-1 and ESS3-2. For the Extreme Stability we suggest ES1, ES2-1...ES2-9. This will provide a short-cut reference for industry when referring to a particular event.

Response:

A) Please see our comments related to the Supplemental Load definition in question 8.

B) Regarding the suggested change to header note “b”, no change was made as the standard does not prescribe a particular Load model such as constant power, constant impedance, etc.

C) Voltage sensitive Load loss is permitted in the transient Stability timeframe as it is common in Stability simulation tools to assume a certain percentage of Load is removed based on motor stalling. To the extent a Transmission Planner accounts for this within their analysis, the standard does not prohibit its use in the Stability timeframe. However, for steady-state thermal and voltage criteria reviews the use of voltage sensitive Load loss is prohibited. The definition of Load reduction has been deleted and the concept has been incorporated in the definition of Non-Consequential Load Loss.

D) The standard drafting team has added new Requirement R5 to explicitly require criteria for transient voltage criteria.

Organization	Yes or No	Question 9 Comment
R5 Each Transmission Planner and Planning Coordinator shall have criteria for acceptable System steady state voltage limits, post-Contingency voltage deviations, and the transient voltage response for their System. For transient voltage response, the criteria shall at a minimum, specify a voltage level and a maximum length of time that transient voltages may remain outside that level. E) Footnote 10 (now footnote 9) does not apply since P2-3 is classified as a single Contingency. F) In regards to the P5 event, in response to industry comments on Draft 2, the SDT clarified that the P5 event is not intended to include an evaluation of individual components of the Protection System. The intent of P5 is to evaluate a failure of a Protection System design, and not based on any particular component of the design. Please see the Summary Considerations area of Question 7 from the Draft 2 comments; specifically item 3 on page 207. Since the P5 event description says loss of a single Protection System and not single Protection System device or component, the SDT believes sufficient clarity is inherent in the P5 event description. The proposed footnote was not accepted by the SDT. **G)** Regarding the proposed short-cut references to the extreme events, the SDT disagrees. No change made.		
TVA System Planning	No	The existing TPL 002-0 allows for some local load to be dropped for a single contingency event as long as the Bulk system reliability was not impacted. However there is no such allowance any longer for losing such load for a single contingency in the proposed draft. It would be very expensive for TVA to fix all such events in several remote areas that would have very little impact on the overall reliability of the TVA bulk system. TVA believes that the capital spent for these fixes could be used to better strengthen the overall bulk system in much better ways. P5 should not be a planning event. PRC standards address protection system failures. The complexity associated with identifying and simulating such events is unknown and the defense of assumptions made and events simulated will lead to inconsistency in compliance and enforcement. Industry accepted proxies for such events could be developed that would allow for efficient identification of areas needing further study. Attempting to intermingle protection system operation with BES performance will be nearly impossible to implement given current technologies. Stability Extreme 2.g, and Steady State 2.b. both need a note like footnote number 12 that excludes short distances. Suggest footnote #12 be modified to include right-of-way in addition to structures.
Response: In regards to a proposed change to prohibit Non-Consequential Load shed in response to a single Contingency event, FERC, in Order 693, was clear in paragraph 1794 that interruption of Non-Consequential Load is not permitted for single Contingency events. This position was vetted in draft 1 of TPL-001-1 and most stakeholders and the majority of the SDT support this position. The use of an SPS design would be permitted for a single Contingency event if the SPS design interrupts service to customers involved in an interruptible Load contract arrangement. In P5 the event description was changed in Draft 3 to match what is stated in the currently approved TPL standards under Category C6 through C9. The intent of P5 is to evaluate a failure of a single Protection System design that introduces a delayed clearing mode that may also include additional electrical Facilities being removed when compared to normal fault clearing. The SDT agrees with the proposed addition of a footnote to address a threshold distance for circuits considered for study in loss of common Right-of-Way. The SDT has set the threshold at 1 mile or more, consistent with footnote 12 (now footnote 11). Footnote 11 was revised to account for both the common tower and common ROW exemption. Footnote 11 has been added to the extreme event steady-state 2b.		

Organization	Yes or No	Question 9 Comment
Footnote 11: Excludes circuits that share a common structure or common Right-of-Way for 1 mile or less		
Exelon Transmission Planning	No	Table 1 comments in general: Even after modification from the previous version, it is still not clear if the "BES Voltage Level" applies to the contingency element voltage leFRCCan overload on a 138 kV line, is non-consequential load loss allowed on the 138 kV system? There is a concern about the lack of definition related to the failure of a "single Protection System" this could be widely interpreted. Would over tripping for line faults fall into this definition?
Response: The BES Voltage Level column applies to the System voltage of the Facilities removed from service by the planning event studied. In the example provided by Exelon, Non-Consequential Load Loss would not be permitted since the outaged facility is at the EHV level. No, over tripping is mis-operation and that does not fall into this definition.		
United Illuminating	No	Steady State & Stability comments as follows: Steady State & Stability: a. Transmission voltage instability, cascading outages, and uncontrolled islanding shall not occur. b. Consequential Load Loss, Supplemental Load Loss, Load Reduction, and consequential generation loss are acceptable as a consequence of any Planning or Extreme Event excluding P0. However, Supplemental Load Loss and Load Reduction associated with an event shall not be used to meet steady state performance requirements P5 Priority Comment As written, this requirement is overly severe. This would require the simulation of a "dead" station if only one battery is present (use of NERC Glossary Protective System definition is too broad). The failure of the single protection system should be limited to certain aspects of the protection system. P7 Priority Comment Event 1 - This requirement requires the evaluation of the loss of two circuits on a multiple circuit tower. We recommend that this be modified so that only the loss of two adjacent (vertically or horizontally) circuits need be evaluated. We also recommend that the Planning Coordinator be allowed to evaluate and if appropriate exempt specific locations from this contingency based on acceptable risk. Comments on Extreme Events Table 1- We recommend renumbering the Extreme Events table to be Table 2. Stability Condition 2 Note a - Priority Comment - As written, this requirement is overly severe. This would require the simulation of a "dead" station if only one battery is present (use of NERC Glossary Protective System definition is too broad). The failure of the single protection system should be limited to certain aspects of the protection system. Stability Condition 2 Note h " Eliminate this requirement or change to loss of station following three phase fault. This note is confusing. Without providing a better defined scenario, it is unclear as to what clearing times should be used in this simulation. Note 1.a.ii " Contingency Reserve is dependent on the generation on-line. We suggest changing the first sentence to say that you can't lose more than that permissible by the Planning Coordinator. Also change "pull out of synchronism" to "lose synchronism" in this sentence and in the second sentence. (Is "Lose synchronism" a more

Organization	Yes or No	Question 9 Comment
		commonly used term?). Note 3 We recommend revising the wording of the last sentence to "A 3 phase fault study indicating criteria are being met is sufficient evidence that a SLG condition would also meet criteria. Note 4 " We recommend that a lower bound be put on the HV electric systems (such as 100 kV), rather than just saying "and lower".
Northeast Utilities	No	Steady State & Stability are as follows:Steady State & Stability: a. Transmission voltage instability, cascading outages, and uncontrolled islanding shall not occur. b. Consequential Load Loss, Supplemental Load Loss, Load Reduction, and consequential generation loss are acceptable as a consequence of any Planning or Extreme Event excluding P0. However, Supplemental Load Loss and Load Reduction associated with an event shall not be used to meet steady state performance requirements Non-Consequential Load Loss Allowed Comment (priority comment):We highly recommend that the standard as written should not allow non-consequential load loss to resolve any violation arising from the planning events in Table 1 (except when considering spare equipment strategy together with events P3 or P6). We believe that planning for reliable power should discourage load loss mitigation. Therefore, the column for the "Non-Consequential Load Loss Allowed" in Table 1 should all have entries of "No". P5 Priority Comment As written, this requirement is overly severe. This would require the simulation of a "dead" station if only one battery is present (use of NERC Glossary's Protective System definition is too broad). The failure of the single protection system should be limited to certain aspects of the protection system. P7 Priority Comment Event 1 - This requirement requires the evaluation of the loss of two circuits on a multiple circuit tower. We recommend that this be modified so that only the loss of two adjacent (vertically or horizontally) circuits need be evaluated. We also recommend that the Planning Coordinator be allowed to evaluate and, if appropriate, exempt specific locations from this contingency based on acceptable risk. Comments on Extreme Events Table 1- We recommend renumbering the Extreme Events table to be Table 2. Stability Condition 2 Note a - Priority Comment - As written, this requirement is overly severe. This would require the simulation of a "dead" station if only one battery is present (use of NERC Glossary's Protective System definition is too broad). The failure of the single protection system should be limited to certain aspects of the protection system. Stability Condition 2 Note h ? Eliminate this requirement or change to loss of station following three-phase fault. This note is confusing. Without providing a better defined scenario, it is unclear as to what clearing times should be used in this simulation. Comments on Footnotes Table 1- We recommend renumbering the Footnotes table to be Table 3. Note 1.a.i " Should clarify that this requirement refers to generator units that are connected to the BES system. Note 1.a.ii " Contingency Reserve is dependent on the generation on-line. We suggest changing the first sentence

Organization	Yes or No	Question 9 Comment
		to say that you can't lose more than that permissible by the Planning Coordinator. Also change "pull out of synchronism" to "lose synchronism" in this sentence and in the second sentence. (Is "Lose synchronism" a more commonly used term?). Note 3 We recommend revising the wording of the last sentence to "A three-phase fault study indicating criteria are being met is sufficient evidence that a SLG fault condition would also meet criteria. Note 4 " We recommend that a lower bound be put on the HV electric systems (such as 100 kV), rather than just saying "and lower".
Central Maine Power Company	No	Steady State & Stability comments as follows:Steady State & Stability: a. Transmission voltage instability, cascading outages, and uncontrolled islanding shall not occur. b. Consequential Load Loss, Supplemental Load Loss, Load Reduction, and consequential generation loss are acceptable as a consequence of any Planning or Extreme Event excluding P0. However, Supplemental Load Loss and Load Reduction associated with an event shall not be used to meet steady state performance requirements P5 Priority Comment As written, this requirement is overly severe. This would require the simulation of a ?dead? station if only one battery is present (use of NERC Glossary Protective System definition is too broad). The failure of the single protection system should be limited to certain aspects of the protection system. P7 Priority Comment Event 1 - This requirement requires the evaluation of the loss of two circuits on a multiple circuit tower. We recommend that this be modified so that only the loss of two adjacent (vertically or horizontally) circuits need be evaluated. We also recommend that the Planning Coordinator be allowed to evaluate and if appropriate exempt specific locations from this contingency based on acceptable risk. Comments on Extreme Events Table 1- We recommend renumbering the Extreme Events table to be Table 2. Extreme Event Stability Condition 2 Note a - Priority Comment - As written, this requirement is overly severe. This would require the simulation of a "dead" station if only one battery is present (use of NERC Glossary Protective System definition is too broad). The failure of the single protection system should be limited to certain aspects of the protection system. Extreme Event Stability Condition 2 Note h " Eliminate this requirement or change to loss of station following three phase fault. This note is confusing. Without providing a better defined scenario, it is unclear as to what clearing times should be used in this simulation. Footnote 1.a.ii " Contingency Reserve is dependent on the generation on-line. We suggest changing the first sentence to say that you can't lose more than that permissible by the Planning Coordinator. Also change "pull out of synchronism" to "lose synchronism" in this sentence and in the second sentence. (Is "Lose synchronism" a more commonly used term?). Footnote 1.a.i, states "For Planning Event P1: No generating unit or units shall be allowed to pull out of synchronism." There is the potential for this requirement to be taken too far. Does this mean that someone's 4 kW generator at home needs to remain synchronized" Therefore, there needs to be some sort of qualifier on this

Organization	Yes or No	Question 9 Comment
		requirement. Suggested wording: "For Planning Event P1: No generating unit or units greater than 20 MW and directly interconnected at 100 kV or above shall be allowed to lose synchronism. Note that synchronism applies to conventional synchronous generators and may not apply to other generation technology." Footnote 3 " We recommend revising the wording of the last sentence to "A three phase fault study indicating criteria are being met is sufficient evidence that a SLG condition would also meet criteria. Footnote 4 " We recommend that a lower bound be put on the HV electric systems (such as 100 kV), rather than just saying "and lower". Footnote 12 " We recommend adding an alternative modifier to the end of the sentence, "or for 5 towers or less. This is consistent with NPCC criteria.

Response: The stakeholders suggest adding the word "Transmission" to the beginning of header note "a". Additionally it is proposed to state in header note "b" that Load Reduction is not an acceptable means to meet steady state performance requirements. In Draft 4, the SDT made a change to header note "a" as suggested by the commenter but modified it to be "BES Transmission…". Regarding the suggested change to header note "b", no change was made as the standard does not prescribe a particular Load model such as constant power, constant impedance, etc. However, the load reduction definition has been deleted and incorporated in Non-Consequential Load.

Header note 'a': BES Transmission voltage instability, cascading outages, and uncontrolled islanding shall not occur.

The SDT agrees that Non-Consequential Load Loss should be discouraged, however, many of the events contained in Table 1 are very low probability events where intentionally dropping load to protect the integrity of the remainder of the BES may be an acceptable solution. Throughout the development process, the SDT has reviewed whether to allow Non-Consequential Load Loss for each event within Table 1 and has determined that "Yes" is the appropriate response where it is used within this column. No change made.

In regards to the P5 event, in response to industry comments on Draft 2, the SDT clarified that the P5 event is not intended to include an evaluation of individual components of the Protection System. The intent of P5 is to evaluate a failure of a Protection System design, and is not based on any particular component of the design. Please see the Summary Considerations area of Question 7 from the Draft 2 comments; specifically item 3 on page 207. Since the P5 event description says loss of a single Protection System and not single Protection System device or component, the SDT believes sufficient clarity is inherent in the P5 event description.

The suggested wording change to include "adjacent" for the P7 planning event is accepted by the SDT and reflected in Draft 4. The SDT does not accept the proposed provision for the Planning Coordinator to exempt locations for study of the P7 event beyond what is already exempted per footnote 12 (now footnote 11).

P7: Any two adjacent (vertically or horizontally) circuits on common structure

The suggested change to reference the extreme events as Table 2 was not accepted by the SDT. The team feels sufficient clarity is provided by the division breaks within the table. The table is to be viewed holistically as a single table stating performance requirements and reference notes for the TPL-001-1 standard.

Regarding extreme event Stability item 2a, our response to your P5 comment above applies. No changes were made in regard to the extreme event 2a.

Regarding extreme event Stability item 2h, items 2f through 2h are deleted as this was a mis-interpretation of the existing table and are not required in the Stability timeframe.

The suggested change to reference the Footnotes area as Table 3 was not accepted by the SDT. The team feels sufficient clarity is provided by the division breaks

Organization	Yes or No	Question 9 Comment
		within the table. The table is to be viewed holistically as a single table stating performance requirements and reference notes for the TPL-001-1 standard. Footnote 1 was deleted and moved to Requirement R4, parts 4.1.1 – 4.1.3 but the SDT did not make the suggested change as it felt that it didn't add any additional clarity. Regarding footnote 1.a.ii the SDT did not accept the proposed wording changes related to loss of synchronism. The change proposed was not substantive and the wording presently used, "pulling out of synchronism", is sufficient. No change made. Regarding the suggestion for the Planning Coordinator to establish the maximum allowable amount, the SDT has set a maximum and believes that it is the appropriate value. An entity can always set more stringent criteria. No change made. The comment on footnote 1.a.i is redundant and already addressed above. The SDT accepts the proposed change for footnote 3 (now footnote 2). **Footnote 2:** Unless specified otherwise, simulate Normal Clearing faults. Single line to ground (SLG) or three phase (3Ø) are the fault types, that must be evaluated in Stability simulations for the event described. A 3Ø or a double line to ground fault study indicating the criteria are being met is sufficient evidence that a SLG condition would also meet the criteria. Regarding footnote 4 (now footnote 3), the SDT does not accept the proposed change to establish a lower bound on the HV electric System. The lower bound is based on the BES definition established by a Regional Entity organization. While this is generally understood to be 100kV, it may vary throughout the North American footprint. The SDT has however modified footnote 3 for clarity. **Footnote 3:** Bulk Electric System (BES) level references include extra-high voltage (EHV) Facilities defined as greater than 300kV and high voltage (HV) Facilities defined as the 300kV and lower voltage Systems as defined by the Regional Entity. The designation of EHV and HV is used to distinguish between stated performance criteria allowances for interruptions of Firm Transmission Service and Non-Consequential Load. Regarding footnote 4 (now footnote 3), the commenter suggest that the standard should not prescribe a voltage definition of BES, be it called EHV or HV and that studies are needed to determine BES Facility definitions. The BES definition is defined by the Regional Entity organization and studies are not generally relied upon for BES determination. The additional changes suggested in revising footnote 3 to limit the EHV definition to only those facilities deemed significant to reliability as determined by the Planning Coordinator was not accepted by the SDT. Although not unanimous, the majority of the SDT and industry stakeholders believe the 300 kV and higher Systems (EHV) generally represent the backbone of many Systems in the various Interconnections and that the EHV breakpoint and the more stringent requirements are appropriately defined. The EHV and HV definitions are not being added to the NERC Glossary of Terms based on their limited use within the TPL standard. Regarding footnote 12 (now footnote 11), the 1 mile exception is more precise as span lengths can vary greatly between towers. No change was made.
System Protection and Transmission Planning Department	No	The order of scenarios listed in the table should reflect the relative probability of events. Did the SDT intend to order listed contingencies by relative severity? Could it do so" Planning Events - SLG fault simulation should not be required. They should only be performed if more severe than 3-phase faults. A SLG fault with delayed breaker clearing could have more system impact than a 3-phase fault. The "Extreme Events" portion of the table is confusing " partly because the form differs from the Planning Event portion. The difference between contingencies in the Planning portion and the Extreme portion is not clear.

Organization	Yes or No	Question 9 Comment
		Perhaps the Extreme Event portion could be a separate Table. Extreme Events / Stability section - Why specifically require "g. SLG fault on all Transmission lines on a common Right-of-Way. "
Response: The order is not based on probability. When a SLG fault type is specified in Table 1, it is the fault that must be satisfied to meet performance criteria for the referenced planning event. Since 3-phase faults are simpler to simulate a planner may simulate the 3-phase and if performance criteria are met, then no further work is needed since the 3-phase fault has a greater BES impact than a SLG fault. However, if the 3-phase screening does not meet criteria, then the planner must perform the more labor intensive SLG analysis to determine whether or not performance criteria are being met. See footnote 2. The extreme events area of the table has not been reformatted. The SDT believes the table clearly delineates what is required in regards to studies required for stability and those required for steady-state. Regarding the extreme events Stability item "g" retains consistency with what is currently in the approved TPL-004-0 standard as a NERC category D7 event.		
PPL Energy Plus	No	The WECC suggests P4 penalizes EHV and if this is true, please re-write P4 to eliminate the penalty.
Response: In regards to the EHV performance criteria for the P4 event, the EHV performance expectations remain as stated in Draft 3. P4 events pose higher risk and impact to the BES since there is no time for System adjustments for potential multiple Facility outages that can result from a single fault. Since the EHV is considered the backbone of the BES carrying large amounts of power between generation and Load and typically not directly servicing end-user customers the higher performance expectations for the high impact P4 events is warranted.		
Bonneville Power Administration PacifiCorp Deseret Generation & Transmission SRP Southern California Edison Company Western Area Power Administration Pacific Gas and Electric Co, NV Energy San Diego Gas and Electric Co	No	P4: Under the event column it should clarify and state language similar to that of P5 (Loss of multiple elements caused by a stuck breaker). In addition, this is a multiple contingency condition and may result in loss of more than 2 elements. As such, this is a low probability condition and loss of Non-Consequential load should be allowed for EHV. We disagree with raising the bar for EHV for P4.

Organization	Yes or No	Question 9 Comment
Idaho Power California ISO		
Xcel Energy	No	P4: Under the event column it should clarify and state language similar to that of P5 (Loss of multiple elements caused by a stuck breaker). In addition, this is a multiple contingency condition and may result in loss of more than 2 elements.
Puget Sound Energy, Inc.	No	P4: Under the event column it should clarify and state language similar to that of P5 (Loss of multiple elements caused by a stuck breaker).
Response: The SDT has added the introductory text proposed for the P4 "Event" column of the table to bring consistency with the P5 event. In regards to the EHV performance criteria for the P4 event, the EHV performance expectations remain as stated in Draft 3. P4 events pose higher risk and impact to the BES since there is no time for System adjustments for potential multiple Facility outages that can result from a single fault. Since the EHV is considered the backbone of the BES carrying large amounts of power between generation and Load and typically not directly servicing end-user customers the higher performance expectations for the high impact P4 events is warranted.		
Western Area Power Administration	Yes	There is information within the notes that is not required to correctly understand and apply the TPL Standard. Examples are: 1. Note 1.a.i " the 2nd sentence is not needed to say what is not an out-of-step occurrence. 2. Note 9 is not needed to clarify what "internal" means.
Response: The SDT believes the notes provided help clarify the performance criteria stated in Table 1. No changes were made in Draft 4.		
Florida Reliability Coordinating Council, Inc - Transmission Working Group		The table is significantly improved from the prior versions and provides superior clarification over the existing standards. However, please explain why there is a performance difference between P2.3 (breaker failure), P4 (stuck breaker) and P7 (2 circuits on a common tower) for EHV. We recommend consistant critera between P2.3, P4 and P7 that allow curtailment of firm service and loss of non-consequential load.
Response: The SDT appreciates your support in the overall table revisions. In the early stages of standard development, the SDT reviewed the various Contingency classifications for likelihood and impact. Single Contingency events were placed higher in the table than multiple Contingency events. The SDT determined that since the EHV System (300kV and above) was utilized to carry large amounts of power between generation and Load and typically not directly servicing end-user customers, higher performance expectations were appropriate for some higher impact events. The P2.3 (breaker failure) event poses a high risk and impact to the BES since it is a single Contingency event. The SDT raised the performance requirement on the P4 (stuck breaker) event for EHV to parallel that of the P2.3 event. The SDT considered that even though P4 is a multiple event, the design of the substation and Protection System can reduce the impact of events and the SDT believes that the standard should encourage designs that have a positive impact on the System's ability to serve Load. The SDT determined that the performance requirements for the P7 event for EHV should not be raised.		
FMPA	No	Table 1 seems to have lost the requirement to be within Facility Ratings for single and double contingencies (e.g., the change in note "f" of Table 1). Are we missing something? If not, is this change intentional?

Organization	Yes or No	Question 9 Comment
		Footnote 10 does not seem to adequately highlight that Facilities should be within applicable ratings for single and credible double contingencies. The table is significantly improved from the prior versions and provides superior clarification over the existing standards. However, please explain why there is a performance difference between P2.3 (breaker failure), P4 (stuck breaker) and P7 (2 circuits on a common tower) for EHV. Considering the frequency of these events in actual experience, it would seem that 2 circuits on a common tower should have a more restrictive or equal performance to a stuck breaker performance, yet the performance requirements are just the opposite. We recommend allowing curtailment of firm service and loss of non-consequential load for a stuck breaker or failed breaker.
Response: In Table 1, header note "f", the text "Facility Ratings shall not be exceeded" was inadvertently deleted in the Draft 3 standard and has been re-inserted in Draft 4. **Header note 'f':** Facility Ratings shall not be exceeded. Regarding footnote 10 (now footnote 9), the issue was addressed by adding Facility Ratings back in. The SDT appreciates your support in the overall table revisions. In the early stages of standard development, the SDT reviewed the various Contingency classifications for likelihood and impact. Single Contingency events were placed higher in the table than multiple Contingency events. The SDT determined that since the EHV System (300kV and above) was utilized to carry large amounts of power between generation and Load and typically not directly servicing end-user customers, higher performance expectations were appropriate for some higher impact events. The P2.3 (breaker failure) event poses a high risk and impact to the BES since it is a single Contingency event. The SDT raised the performance requirement on the P4 (stuck breaker) event for EHV to parallel that of the P2.3 event. The SDT considered that even though P4 is a multiple event, the design of the substation and Protection System can reduce the impact of events and the SDT believes that the standard should encourage designs that have a positive impact on the System's ability to serve Load. The SDT determined that the performance requirements for the P7 event for EHV should not be raised.		
Progress Energy Carolina (PEC)		PEC prefers having separate tables for steady-state and dynamic analyses. PEC believes the requirements were more clear in that format.
Response: The SDT consolidated the tables following several Draft 2 stakeholder comments to consolidate. The prior separate tables reflected the same planning events and the SDT agreed (although not unanimously) to consolidate for simplification. The column labeled "Fault Type" along with footnote 3 (now footnote 2) provides sufficient information regarding what is needed for the Stability analysis.		
City Utilities of Springfield, MO	No	City Utilities of Springfield, Missouri does not agree with the restrictions placed on the Category P3 contingencies. Since this will simulate a multiple contingency similar to a Category P4, loss of firm transmission service and/or loss of non-consequential load should be allowed. We suggest that the drafting team expand the allowable mitigating measures for a Category P3 to be consistent with a Category P4, where loss of firm transmission service and/or loss of non-consequential load is allowed for HV levels.
Response: The P3 Contingency (loss of a generator unit, followed by System adjustments follow by another N-1) was considered by the SDT as one of the more		

Organization	Yes or No	Question 9 Comment
likely planning events and therefore both the EHV and HV were kept to the more stringent planning performance criteria. No changes made for Draft 4.		
MidAmerican Energy Company	No	MidAmerican commends the SDT for its hard work on this standard. MidAmerican commends the SDT for most of the changes to Table 1. MidAmerican does have a few comments:? MidAmerican suggests that Footnote 11 be added to the sixth item under P4. The note 11 clarifies the meaning of a stuck breaker yet this footnote isn't applied to item 6 under P4 which is a stuck-breaker item. MidAmerican believes that it is confusing having a set of explanations for Extreme Events that are 1 through 3 under Steady State and 1 and 2 under Stability and yet have later footnotes listed that are 1 through 11. MidAmerican suggests that the items 1 through 3 under Steady State and 1 and 2 under Stability for Extreme Events be changed to some other designation such as bullets or letters so that it is easy to see that the numerical footnotes start after these explanations of the extreme events. ? Further clarify the applicable shunt devices in Footnote 7 with the suggested text 7. Requirements which are applicable to shunt devices also apply to FACTS devices that are connected to ground, but not instrument voltage transformers or surge arrestors.
Response: The SDT accepts the proposed change to add a reference to footnote 11 (now footnote 10) on planning event P4.6. The SDT believes that the formatting is correct and sufficiently clear. No change made. Regarding the suggested change to footnote 7 (now footnote 6), the devices listed are not BES Facilities typically considered in a planning study. The SDT disagrees that the proposed change is needed for clarity. No change made.		
JEA	No	Footnote 8 relative to P2.1 seems to imply that all of the single contingency assessments for circuits should include assessment of (1) both ends of the circuit disconnecting as in P1 and (2) either end of the circuit disconnceting as in P2. This results in 3 seperate single contingency assessments for the one circuit. I am not sure of the benefit other than trying to identify a high voltage situation or in the case of tap loads, a thermal loading issue. Recommend changing Footnote 8 to"For circuits with tapped load, a seperate analysis shall be performed for an outage of each end of the circuit where the load is tapped."
Response: The SDT did not change the footnote since there are other conditions that may need to be evaluated for an open ended line such as angular Stability and high voltage.		
NorthWestern Corporation NorthWestern Energy (NWE) (NWMT)	No	P6 on the table seems to be less severe than either P4 or P5, yet it allows loss of Firm Transmission Service and Non-consequential Load which are not allowed for EHV in P4 or P5. Interruption of Firm Transmission Service and Non-Consequential Load Loss should be allowed for P4, P5, and P6. Transmission lines should have the same requirements regardless of the voltage. Also, if not able to model Firm Transmission Service, how will one know if it is interrupted? The column labeled Interruption of Firm Transmission Service Allowed? should be eliminated since it is not a clearly defined test of

Organization	Yes or No	Question 9 Comment
		performance. It is not clear how to use the present definition of "Firm Transmission Service" for a planning horizon study. P4: Under the event column it should clarify and state language similar to that of P5 (Loss of multiple elements caused by a stuck breaker). In addition, this is a multiple contingency condition and may result in loss of more than 2 elements. As such, this is a low probability condition and loss of Non-Consequential load should be allowed for EHV.
Response: The P6 event is considered a lower impact event since it requires two separate faults to occur. Therefore, interruption of Firm Transmission Service and Non-Consequential Load Loss following the second event is permitted. Conversely, the P4 and P5 events are based on a single fault and an abnormal clearing mode. These events pose higher risk and impact to the BES since there is no time for System adjustments for the multiple Contingency Facility outcomes resulting from a single fault. Therefore, the EHV is held to higher performance criteria. The SDT disagrees with the proposed change. The higher expectation placed on the EHV, and therefore differing requirements for portions of the Transmission System, is due to the EHV being the backbone of the BES carrying large amounts of power between generation and Load and typically not directly servicing end-user customers. The numerous Firm Transmission Service contracts occurring on a short-term basis within the operating horizon are not the focus in TPL-001-1. It is expected that any long-term Firm Transmission Service agreements required for consideration within a Transmission planning horizon will be limited and well known by the responsible entity. This has been further clarified in draft 4 per the revisions made to the Requirement R1 modeling requirements. **R1** Each Transmission Planner and Planning Coordinator shall maintain System models within its respective area for performing the studies needed to complete its Planning Assessment. The models shall use the latest data consistent with that provided in accordance with the MOD-010 and MOD-012 standards, supplemented by other sources as needed, including items represented in the Corrective Action Plan, and shall represent projected System conditions. The SDT has added the introductory text proposed for the P4 "Event" column of the table to bring consistency with the P5 event. In regards to the EHV performance criteria for the P4 event, the EHV performance expectations remain as stated in Draft 3. P4 events pose higher risk and impact to the BES since there is no time for System adjustments for potential multiple Facility outages that can result from a single fault. Since the EHV is considered the backbone of the BES carrying large amounts of power between generation and Load and typically not directly servicing end-user customers the higher performance expectations for the high impact P4 events is warranted. **P4:** Loss of multiple elements caused by a stuck breaker [11](non-Bus-tie) attempting to clear a Fault on one of the following: & 6. Loss of multiple elements caused by a stuck breaker[10] (Bus-tie) attempting to clear a Fault on the associated bus		
SMUD	No	The allowed corrective actions in Table 1 to meet performance standards do not explicitly state how DSM solutions should be treated [there is a potential for 20% of national peak demand to be met by "demand response"] . If it is allowed to be used, and since this is a fairly significant amount, it would help if it is explicitly addressed in Table 1.
Response: The standard does not place a ceiling on DSM that can be utilized. No changes made in Draft 4.		
Progress Energy Florida, Inc.	No	PEF has multiple concerns with Table 1, the most fundamental of these concerns being that the existing Table in the existing TPL Standards is far superior to the new table. PEF suspects that the large blackout/brownout events in the Northeast and West have been the primary impetus behind devising a new Standard that will allegedly

Organization	Yes or No	Question 9 Comment
		improve BES reliability. PEF strongly feels that proper planning, operation and maintenance under existing NERC Standards could have prevented all of the aforementioned events, and thus a new TPL Standard and a new Table 1 is not necessary. PEF's specific concerns with Table 1 as it exists in this 3rd draft of TPL-001-1 are as follows: As a general concern, PEF, as has been stated already, does not believe that organizing a Reliability table according to whether or not loss of Firm Transmission Service or loss of Non-Consequential Load can occur is appropriate. The BES can be demonstrated to be robust and can even be continually improved under the existing TPL Standards. PEF fails to see how FERC's and NERC's desire to eliminate Footnote (b) as stated in the existing TPL Standards has anything to do with the desire to improve the reliability of the BES. Indeed, as TPL-001-1 exists at present, PEF suspects that many Transmission Owners will a) reduce posted ATC values to reduce risk of loss of Firm Transmission Service or b) remove breakers to convert Non-Consequential Load into Consequential Load. Both of these actions fly in the face of what FERC desires for the BES of the future. FERC certainly desires for power markets to open up further and thereby encourage lower energy prices, but at present TPL-001-1 and the accompanying Table 1 is in opposition to enhancing the power marketing industry. In addition, removing breakers is in opposition to reliability and customer service. An additional general concern involves the continued differentiation between HV and EHV. EHV by its very nature carries significantly larger amounts of power than HV, and therefore an EHV event inherently causes a greater disparity between Generation and Load than a HV event, making the loss of Firm Transmission Service or loss of Non-Consequential Load necessary for even a single contingency. Should all utilities be therefore required to make their EHV systems redundant? Such a suggestion is preposterous. Given this fact, and the fact that EHV events hardly ever occur (and, as outlined in the draft Table 1, have never occurred on PEF's system), PEF believes holding EHV to a higher standard is inappropriate, and will result in no more than a negligible reliability improvement at tremendous cost.Based on the above concerns, PEF believes for all event scenarios (P0 P7), analysis according to whether or not loss of Firm Transmission Service or loss of Non-Consequential Load can occur is inappropriate and should be deleted from the Standard. Concerning event P2-1, PEF assumes that "opening of breaker w/o fault" means opening breakers from both sides of the circuit. PEF therefore does not understand the difference between event P2-1 and events P1-1 through P1-4, and therefore suggests deleting P2-1 and combining the remainder of P2 with P1. Given the concerns above, voicing additional concerns about the Footnotes, short of reinstating the existing Footnote (b), is irrelevant.

Response: In regards to proposed change to prohibit Non-Consequential Load shed in response to a single Contingency event, FERC, in Order 693, was clear in paragraph 1794 that interruption of Non-Consequential Load is not permitted for single Contingency events. This position was vetted in draft 1 of TPL-001-1 and most stakeholders and the majority of the SDT support this position. The use of an SPS design would be permitted for a single Contingency event if the SPS design interrupts service to customers involved in an interruptible Load contract arrangement.

In Draft 3, footnote 8 (now footnote 7) was added to further clarify the need for the P2-1 event. The intent is simply to look for low voltage or thermal problems while supplying Load from one end of a normally networked line. In planning event P1-2, the network line would be opened at both ends and any Load tapped to the

Organization	Yes or No	Question 9 Comment
network line would be dropped. For planning event P2-1 for the same line, the Load would be studied being served from either end of the line.		
ISO New England, Inc.	No	Priority Comment As written, this requirement is overly severe. This would require the simulation of a "dead" station if only one battery is present (use of NERC Glossary Protective System definition is too broad). The failure of the single protection system should be limited to certain aspects of the protection system. Priority Comment Event 1 - This requirement requires the evaluation of the loss of two circuits on a multiple circuit tower. We recommend that this be modified so that only the loss of two adjacent (vertically or horizontally) circuits need be evaluated. We also recommend that the Planning Coordinator be allowed to evaluate and if appropriate exempt specific locations from this contingency based on acceptable risk. Comments on Extreme Events Table 1- We recommend renumbering the Extreme Events table to be Table 2. Stability Condition 2 Note h Eliminate this requirement or change to loss of station following three phase fault. This note is confusing. Without providing a better defined scenario, it is unclear as to what clearing times should be used in this simulation. Note 1.a.ii Contingency Reserve is dependent on the generation on-line. We suggest changing the first sentence to say that you can't lose more than that permissible by the Planning Coordinator. Also change "pull out of synchronism" to "lose synchronism" in this sentence and in the second sentence. (Is "Lose synchronism" a more commonly used term?). Note 3 We recommend revising the wording of the last sentence to ?A 3 phase fault study indicating criteria are being met is sufficient evidence that a SLG condition would also meet criteria. Note 4 We recommend that a lower bound be put on the HV electric systems (such as 100 kV), rather than just saying "and lower".
Response: In regards to the P5 event, in response to industry comments on Draft 2, the SDT clarified that the P5 event is not intended to include an evaluation of individual components of the Protection System. The intent of P5 is to evaluate a failure of a Protection System design, and not based on any particular component of the design. Please see the Summary Considerations area of Question 7 from the Draft 2 comments; specifically item 3 on page 207. Since the P5 event description says loss of a single Protection System and not single Protection System device or component, the SDT believes sufficient clarity is inherent in the P5 event description. The suggested wording change to include "adjacent" for the P7 planning event is accepted by the SDT and reflected in Draft 4. The SDT does not accept the proposed provision for the Planning Coordinator to exempt locations for study of the P7 event beyond what is already exempted per footnote 12 (now footnote 11).The suggested change to reference the extreme events as Table 2 was not accepted by the SDT. The team feels sufficient clarity is provided by the division breaks within the table. The table is to be viewed holistically as a single table stating performance requirements and reference notes for the TPL-001-1 standard. **P7:** Any two adjacent (vertically or horizontally) circuits on common structure The SDT believes that the table is formatted correctly and is sufficiently clear. No change made. Regarding extreme event Stability item 2h, items 2f through 2h are deleted as this was a mis-interpretation of the existing table and are not required in the Stability timeframe. Regarding footnote 1.a.ii the SDT did not accept the proposed wording changes related to loss of synchronism. The change proposed was not substantive		

Organization	Yes or No	Question 9 Comment
and the wording presently used, "pulling out of synchronism", is sufficient. Footnote 1 was deleted and moved to Requirement R4, parts 4.1.1 – 4.1.3. Regarding the suggestion for the Planning Coordinator to establish the maximum allowable amount, the SDT has set a maximum and believes that it is the appropriate value. An entity can always set more stringent criteria. No change made. The SDT accepts the proposed change for footnote 3 (now footnote 2). **Footnote 2:** Unless specified otherwise, simulate Normal Clearing faults. Single line to ground (SLG) or three phase (3Ø) are the fault types, that must be evaluated in Stability simulations for the event described. A 3Ø or a double line to ground fault study indicating the criteria are being met is sufficient evidence that a SLG condition would also meet the criteria. Regarding footnote 4 (now footnote 3), the SDT does not accept the proposed change to establish a lower bound on the HV electric System. The lower bound is based on the BES definition established by a Regional Entity organization. While this is generally understood to be 100kV, it may vary throughout the North American footprint. The SDT has however modified footnote 3 to include the text "defined by the applicable BES" to address the concern raised by the commenter. **Footnote 3:** Bulk Electric System (BES) level references include extra-high voltage (EHV) Facilities defined as greater than 300kV and high voltage (HV) Facilities defined as the 300kV and lower voltage Systems as defined by the Regional Entity. The designation of EHV and HV is used to distinguish between stated performance criteria allowances for interruptions of Firm Transmission Service and Non-Consequential Load.		
Arizona Public Service Co	No	P4: Under the event column it should clarify and state language similar to that of P5 (Loss of multiple elements caused by a stuck breaker). In addition, this is a multiple contingency condition and may result in loss of more than 2 elements. As such, this is a low probability condition and loss of Non-Consequential load should be allowed for EHV. We disagree with raising the bar for EHV for P4. We do not agree with Note "i" which requires establishing transient voltage response limits. There is no solid basis for such limits. In the past such limits were used as proxies for VAR margin and are not needed anymore. This will also result into non-uniform criteria throughout the interconnection. If such a limit were to be established, it should be based upon quantifiable reliably impact and should be supported by firm technical basis. Note 1b: Acceptable damping should not be defined by Planning coordinator and should be left to the Transmission Planner. Otherwise it would result into non-uniform criteria for the interconnections.
Response: The SDT has added the introductory text proposed for the P4 "Event" column of the table to bring consistency with the P5 event. In regards to the EHV performance criteria for the P4 event, the EHV performance expectations remain as stated in Draft 3. P4 events pose higher risk and impact to the BES since there is no time for System adjustments for potential multiple Facility outages that can result from a single fault. Since the EHV is considered the backbone of the BES carrying large amounts of power between generation and Load and typically not directly servicing end-user customers the higher performance expectations for the high impact P4 events is warranted. **P4:** Loss of multiple elements caused by a stuck breaker [11](non-Bus-tie) attempting to clear a Fault on one of the following: & 6. Loss of multiple elements caused by a stuck breaker[10] (Bus-tie) attempting to clear a Fault on the associated bus The SDT has added a Requirement R5 to explicitly require criteria for transient voltage criteria. **R5** Each Transmission Planner and Planning Coordinator shall have criteria for acceptable System steady state voltage limits, post-Contingency voltage deviations, and the transient voltage response for their System. For transient voltage response, the criteria shall at a minimum, specify a voltage level and a		

Organization	Yes or No	Question 9 Comment
		maximum length of time that transient voltages may remain outside that level. In regards to the comment on footnote 1b, as written it's based on the more restrictive criteria of the Planning Coordinator or the Transmission Planner. Since the Planning Coordinator has a wider area purview over the Transmission Planner, it is unclear why the commenter has a concern of Planning Coordinator criteria causing non-uniformity within the Interconnection. With fewer Planning Coordinators being involved there would be less disparity across an Interconnection if the Planning Coordinator's criteria were more restrictive than the Transmission Planner's criteria. No changes were made to this footnote in Draft 4.
Hydro-Québec TransEnergie (HQT)	No	Footnote 4 We recommend that a lower bound be put on the HV electric systems (such as 100 kV), rather than just saying "and lower". As has been commented on in a previous draft, the Drafting Team should also consider not having a prescribed voltage definition of BES, be it called EHV or HV. Studies should determine what facilities should be part of the BES because of their impact on reliability. A proposal is to modify Footnote 4 to replace the phrase "(EHV) Facilities defined as greater than 300 kV" with "(EHV) Facilities defined as having a significant impact on the reliability of the System, generally at voltages greater than 300 kV as determined by the Planning Coordinator"? In using such language, the more stringent requirements could apply to BES/EHV but not globally for Facilities operating at voltages greater than 300 kV. Using this methodology the extra investment required would go towards real improvement of the reliability of the System. EHV and HV should be added to the Definitions of Terms Used in Standard. Footnote 12 We recommend adding an alternative modifier to the end of the sentence, "or for 5 towers or less. This is consistent with NPCC criteria.
Response: Regarding footnote 4 (now footnote 3), the SDT does not accept the proposed change to establish a lower bound on the HV electric System. The lower bound is based on the BES definition established by a Regional Entity organization. While this is generally understood to be 100kV, it may vary throughout the North American footprint. The SDT has however modified footnote 3 to include the text "defined by the applicable BES" to address the concern raised by the commenter. **Footnote 3:** Bulk Electric System (BES) level references include extra-high voltage (EHV) Facilities defined as greater than 300kV and high voltage (HV) Facilities defined as the 300kV and lower voltage Systems as defined by the Regional Entity. The designation of EHV and HV is used to distinguish between stated performance criteria allowances for interruptions of Firm Transmission Service and Non-Consequential Load. Regarding footnote 4 (now footnote 3), the commenter suggests that the standard should not prescribe a voltage definition of BES, be it called EHV or HV and that studies are needed to determine BES Facility definitions. The BES definition is defined by the Regional Entity organization and studies are not generally relied upon for BES determination. The additional changes suggested in revising footnote 3 to limit the EHV definition to only those Facilities deemed significant to reliability as determined by the Planning Coordinator was not accepted by the SDT. Although not unanimous, the majority of the SDT and industry stakeholders believe the 300 kV and higher Systems (EHV) generally represent the backbone of many Systems in the various Interconnections and that the EHV breakpoint and the more stringent requirements are appropriately defined. The EHV and HV definitions are not being added to the NERC Glossary of Terms based on their limited use within the TPL standard. Regarding footnote 12 (now footnote 11), the 1 mile exception is more precise as span lengths can vary greatly between towers. No change was made.		

Organization	Yes or No	Question 9 Comment
Ameren	No	The word "Requirements" needs to be added to the Table 1 titles in the existing tables.Table 1 Steady State & Stability Performance RequirementsPlanning Events Table 1 Steady State & Stability Performance RequirementsExtreme Events Table 1 Steady State & Stability Performance RequirementsFootnotes (Planning Events and Extreme Events) Since it appears that the Table 1 cannot fit on a single page, it is suggested that multiple tables be developed to handle the 1) steady-state and 2) stability performance requirements. Footnotes may be included on a second page if needed. Comments were provided in early versions regarding the issues associated with raising the bar, and it was suggested that the marginal reliability benefits associated with these changes were not worth the marginal costs. We have not seen any significant changes from the earlier performance requirements. The question still remains, are we directing the resources where they need to be allocated to address and improve system reliability? So far the answer is believed to be "No".
Response: The Table 1 title does not include the word requirements since the table is referenced by the requirements of the standard. For example, see Requirement R3, parts 3.1 and 3.4 which require the Transmission Planner to develop Contingency lists for study based on the table performance requirements. The suggestion for multiple tables was not accepted by the SDT. The team feels sufficient clarity is provided by the division breaks within the table. The table is to be viewed holistically as a single table stating performance requirements and reference notes for the TPL-001-1 standard. Although not unanimous, the majority of the SDT and industry stakeholders believe the 300 kV and higher Systems (EHV) generally represent the backbone of many Systems in the various Interconnections and that the EHV breakpoint and the more stringent requirements are appropriately defined.		
Maine Public Advocate	No	P2, P3, P4, and P5 - The change allowing no load shedding or interruption of firm transmission service for the types of events and faults listed will lead to the construction and installation of more transmission plant. These expensive plant additions have not, however, been preceded or justified by any evidence that the reliability of the current system - using current planning standards which allow load shedding and interruption of firm transmission service - is lacking. The August 2003 blackout, to the extent utilities and other industry stakeholders have cited it for this purpose, was not caused by the lack of such planning standards; it was an event that should not have occured and would not have but for the utter failure of First Energy to pay attention to operations and vegetation management. The Joint US/Canada Report makes this clear. These proposed changes are not needed and will cause unreasonable increases in rates that are not justified by the putative increases in reliability.There is currently too much emphasis on reliability and not enough emphasis on costs. Utilities are spurred, of course, by the FERC's ROE incentive. NERC should not allow this incentive to influence the reasonalbeness of any of its standards, particularly this one which can only lead to unneeded redundancy in the high voltage transmission system and resulting higher costs.
Response: FERC, in Order 693, was clear in paragraph 1794 that interruption of Non-Consequential Load is not permitted for single Contingency events. This position was vetted in draft 1 of TPL-001-1 and most stakeholders and the majority of the SDT support this position. The use of an SPS design would be permitted for a single Contingency event if the SPS design interrupts service to customers involved in an interruptible Load contract arrangement.		

Organization	Yes or No	Question 9 Comment
The P2 events are common failure, single Contingency events therefore the criteria is properly set. Although not unanimous, the majority of the SDT and industry stakeholders believe the 300 kV and higher Systems (EHV) generally represent the backbone of many Systems in the various Interconnections and that the EHV breakpoint and the more stringent requirements are appropriately defined.		
Manitoba Hydro	No	Note b should be reworded to ?However, Supplemental Load Loss associated with a P2 through P5 event shall not be used to meet post-contingency steady-state performance requirements. Also we do not see a need for Load Reduction (see Q8 comment) Note b also implies that voltage dependent load is not permitted to be modeled for P0. This in turn means that the model must have all load represented as constant MVA. The load representation can change for categories P1 through P7. Is this the intent of the language? Note e: Are the planned System adjustments and redispatch allowed following all Planning Events if they result in curtailment of Firm Transmission Service? Should Note 10 also be referenced here? Footnote 7 applies to FACTS devices that are connected to ground. It is possible to have an ungrounded FACTS device (eg. Delta connected) or a series connected FACTS device (UPFC, SSSC, etc.). I would recommend deleting "that are connected to ground" so that the note is more general. Series connected FACTS will likely be separated via circuit breakers in a similar way as a transformer or phase shifter. Other series FACTS device, like a TCSC also typically self protect via a bypass breaker and should be considered as a separate element. Extreme Events:Steady State 1: Does the loss of a DC line refer to a bipole line? Steady State 2e: The loss of a large load could result from a Planning Event, perhaps even a P1 or P2 event - likely not an extreme event - compared to the loss of a major load center.
Response: The commenter provides no reasoning for the proposed limitation. No changes made. See our response to your Q8 comment. The standard does not prescribe a particular Load model such as constant power, constant impedance, etc. Footnote 10 (now footnote 9) does not apply globally to the entire table so it should not be reflected on header note “e”. No change made. The phrase “connected to ground” is appropriate since the focus is on shunt devices. No changes made. Loss of a bipolar line is covered as a P7 planning event. The reference to DC Line for the extreme event in question is intended to be loss of two independent single pole DC lines without time for System adjustments between each outage. The SDT has revised the extreme event descriptions for item 1 of steady state and Stability for clarity. **Extreme event steady state 1:** Loss of a single generator, Transmission Circuit, single pole of a DC Line, shunt device, or transformer forced out of service followed by another single generator, Transmission Circuit, single pole of a different DC Line, shunt device, or transformer forced out of service prior to System adjustments. **Extreme event Stability 1:** With an initial condition of a single generator, Transmission circuit, single pole of a DC line, shunt device, or transformer forced		

Organization	Yes or No	Question 9 Comment
out of service, apply a 3Ø fault on another single generator, Transmission circuit, single pole of a different DC line, shunt device, or transformer prior to System adjustments. While it is true that large amounts of Load could result from single Contingency planning events, the focus with the extreme event Steady State 2e item is different and intended to cover the complete loss of a major population center or urban area.		
E.ON U.S.		Table 1 Extreme Events CommentsSteady State2.bRight-of-Way should include a reference to footnote 1 2.2.d.Item 2.d. references loss of all generating units at a "station" but Item 3 references generating plants and nuclear power plants. It is unclear whether Item 2.d requires an outage of all generating units connected to a single transmission station (all voltages) or an outage of all generating units at a generating plant (although they may be connected to multiple transmission stations). 2.gRight-of-Way should include a reference to footnote 12. Footnotes12E ON U.S. suggests the definition be expanded to: Exclude circuits that share common structure for 1 mile or less and Transmission lines that share common Right-of-Way for 1 mile or less.
Response: The SDT does not believe a reference to footnote 1 is needed as suggested by the commenter. If the intent was to say a reference to footnote 12 (now footnote 11) as raised by other stakeholders, the SDT agrees with the proposed addition of a footnote to address a threshold distance for circuits considered for study in loss of common Right-of-Way. The team has set the threshold at 1 mile or more, consistent with footnote 11. Footnote 11 was revised to account for both the common tower and common Right-of-Way exemption. Footnote 11 has been added to the extreme event steady-state 2b. **Footnote 11:** Excludes circuits that share a common structure or common Right-of-Way for 1 mile or less Extreme event 2d and 3a are similar in that each covers the loss of all generating units at a single plant location. However, in 3a, two plants are reviewed. In each case, all units are to be outaged regardless of the BES voltage level to which they connect.		
National Grid	No	Steady State & Stability comments are as follows:Steady State & Stability: a. Transmission voltage instability, cascading outages, and uncontrolled islanding shall not occur. How does this apply to Steady State testing?b. Consequential Load Loss, Supplemental Load Loss, Load Reduction, and consequential generation loss are acceptable as a consequence of any Planning or Extreme Event excluding P0. However, Supplemental Load Loss and Load Reduction associated with an event shall not be used to meet steady state performance requirementsThe second sentence re: Supplemental Load Loss implies need to test without end-user's actions and then assess whether action of separating end-user needs to be taken by Transmission system? B. Event P2-3 and P4 have the same impact; also events P2-4 and P4-6 have the same impact. Can these be consolidated? P5 Priority Comment ? As written, this requirement is overly severe. This would require the simulation of a "dead" station if only one battery is present (use of NERC Glossary Protective System definition is too broad). The failure of the single protection system should be limited to certain aspects of the protection system. P7 Priority Comment Event 1 - This requirement requires the evaluation of the loss of two circuits on a multiple

Organization	Yes or No	Question 9 Comment
		circuit tower. We recommend that this be modified so that only the loss of two adjacent (vertically or horizontally) circuits need be evaluated. Or allow the Planning Coordinator to evaluate and if appropriate exempt specific locations from this contingency based on acceptable risk. Comments on Extreme Events Table 1- We recommend renumbering the Extreme Events table to be Table 2. Stability Condition 2 Note a - Priority Comment - As written, this requirement is overly severe. This would require the simulation of a "dead" station if only one battery is present (use of NERC Glossary Protective System definition is too broad). The failure of the single protection system should be limited to certain aspects of the protection system. Stability Condition 2 Note h Eliminate this requirement or change to loss of station following three phase fault. This note is confusing. Without providing a better defined scenario, it is unclear as to what clearing times should be used in this simulation. Note 1.a.i - For Planning Event P1: No generating unit or units shall be allowed to pull out of synchronism." There needs to be some sort of qualifier on this requirement. We suggest the following, "For Planning Event P1: No generating unit or units, directly interconnected at 100 kV or above, shall be allowed to lose synchronism." Note 1.a.ii " Contingency Reserve is dependent on the generation on-line. We suggest changing the first sentence to say that you can't lose more than that permissible by the Planning Coordinator. Also change "pull out of synchronism" to "lose synchronism" in this sentence and in the second sentence. (Is "Lose synchronism" a more commonly used term?). Note 3 We recommend revising the wording of the last sentence to "A 3 phase fault study indicating criteria are being met is sufficient evidence that a SLG condition would also meet criteria. Note 11. Reference is made to Independent Pole Operation (IPO) " Can this be clarified by referencing it as IPO or Independent Pole Trip (IPT) as opposed to single-pole switching. Note 4 ? We recommend that a lower bound be put on the HV electric systems (such as 100 kV), rather than just saying "and lower". Extreme Events:Steady State 3a - loss of two generating plants - This can be considered in two ways - one which results in loss of source (e.g. from fuel, cooling water, or nuke design shutdown) OR the second which could result in loss of stations including lines and breakers (e.g. from wildfires, weather, cyber attack, etc) - which is meant here? Both?

Response: The identification of Transmission voltage instability, cascading outages, and uncontrolled islanding is an appropriate expectation for steady state analysis. Steady state power flow analysis such as P-V or Q-V is suitable for screening, final System reinforcement decisions or operating limits are generally confirmed by more accurate time domain (dynamic) simulation. The TPL-001-1 standard in Requirement R5 requires the Transmission Planner and Planning Coordinator to define and document any criteria used to identify System instability such as cascading events, voltage instability or uncontrolled islanding.

The commenter suggests adding the word "Transmission" to the beginning of header note "a". Additionally it is proposed to state in header note "b" that Load Reduction is not an acceptable means to meet steady state performance requirements. In Draft 4, the SDT made a change to header note "a" as suggested by the

Organization	Yes or No	Question 9 Comment
commenter but modified it to be "BES Transmission…". Regarding the suggested change to header note "b", no change was made as the standard does not prescribe a particular Load model such as constant power, constant impedance, etc. However, the definition of Load reduction has been deleted as it is now contained within the definition of Non-Consequential Load Loss. The definition for Supplemental Load Loss was deleted and the definition of Non-Consequential Load Loss has been changed to reflect this. **Non-Consequential Load Loss:** Non-Interruptible Load loss other than Consequential Load Loss and the response of voltage sensitive Load including Load that is disconnected from the System by end-user equipment. The commenter proposes to consolidate planning events P2-3 & P4 as well as P2-4 & P4-6 indicating they will have the same result. Within the steady state timeframe, these events will result in common outcomes; however, considered with the transient Stability timeframe, different outcomes are expected due to the delayed clearing mode of the P4 events. No changes were made by the SDT in this regard. In regards to the P5 event, in response to industry comments on Draft 2, the SDT clarified that the P5 event is not intended to include an evaluation of individual components of the Protection System. The intent of P5 is to evaluate a failure of a Protection System design, and not based on any particular component of the design. Please see the Summary Considerations area of Question 7 from the Draft 2 comments; specifically item 3 on page 207. Since the P5 event description says loss of a single Protection System and not single Protection System device or component, the SDT believes sufficient clarity is inherent in the P5 event description. The suggested wording change to include "adjacent" for the P7 planning event is accepted by the SDT and reflected in Draft 4. The SDT does not accept the proposed provision for the Planning Coordinator to exempt locations for study of the P7 event beyond what is already exempted per footnote 12 (now footnote 11). **Footnote 11:** Excludes circuits that share a common structure or common Right-of-Way for 1 mile or less The suggested change to reference the extreme events as Table 2 was not accepted by the SDT. The team feels sufficient clarity is provided by the division breaks within the table. The table is to be viewed holistically as a single table stating performance requirements and reference notes for the TPL-001-1 standard. Regarding extreme event Stability item 2a, our response to your P5 comment above applies. No changes were made in regard to the extreme event 2a. Regarding extreme event Stability item 2h, items 2f through 2h are deleted as this was a mis-interpretation of the existing table and are not required in the Stability timeframe. The suggested change to reference the Footnotes area as Table 3 was not accepted by the SDT. The team feels sufficient clarity is provided by the division breaks within the table. The table is to be viewed holistically as a single table stating performance requirements and reference notes for the TPL-001-1 standard. Footnote 1 has been deleted and moved to Requirement R4, parts 4.1.1 – 4.1.3. No change was made to the requirement wording as this standard only applies to the BES. Regarding footnote 1.a.ii the SDT did not accept the proposed wording changes related to loss of synchronism. The change proposed was not substantive and that the wording presently used, "pulling out of synchronism", is sufficient. Regarding the suggestion for the Planning Coordinator to establish the maximum allowable amount, the SDT has set a maximum and believes that it is the appropriate value. An entity can always set more stringent criteria. No change made. The comment on footnote 1.a.i is redundant and already addressed above. The SDT accepts the proposed change for footnote 3 (now footnote 2). **Footnote 2:** Unless specified otherwise, simulate Normal Clearing faults. Single line to ground (SLG) or three phase (3Ø) are the fault types, that must be evaluated in Stability simulations for the event described. A 3Ø or a double line to ground fault study indicating the criteria are being met is sufficient		

Organization	Yes or No	Question 9 Comment
evidence that a SLG condition would also meet the criteria. Footnote 11 (now footnote 10) has been changed to address your concern. **Footnote 10:** A stuck breaker means that for a gang-operated breaker, all three phases of the breaker have remained closed. For an independent pole operated (IPO) or an independent pole tripping (IPT) breaker, only one pole is assumed to remain closed. A stuck breaker results in Delayed Fault Clearing Regarding footnote 4 (now footnote 3), the SDT does not accept the proposed change to establish a lower bound on the HV electric System. The lower bound is based on the BES definition established by a Regional Entity organization. While this is generally understood to be 100kV, it may vary throughout the North American footprint. The SDT has however modified footnote 3 to include the text "defined by the applicable BES" to address the concern raised by the commenter. **Footnote 3:** Bulk Electric System (BES) level references include extra-high voltage (EHV) Facilities defined as greater than 300kV and high voltage (HV) Facilities defined as the 300kV and lower voltage Systems as defined by the Regional Entity. The designation of EHV and HV is used to distinguish between stated performance criteria allowances for interruptions of Firm Transmission Service and Non-Consequential Load. Regarding footnote 12 (now footnote 11), the 1 mile exception is more precise as span lengths can vary greatly between towers. No change was made. For extreme event 3a, the minimum expectation is the loss of two entire generation plants due to some wide area event as described by the examples in roman numeral i through vi. The planner at its own discretion could simulate removal of Transmission lines, transformers, etc. for the initiating event scenario considered.		
Entergy Services, Inc	No	P2.1 should allow the shedding of load along the line that would be served radially to mitigate overloads or undervoltages on the radial line. Doing so would clearly not result in degradations to the BES but only the local area served by the radial line. P4.5 is an extremely unlikely occurrence and should be equivalent to P4.6. P5 should not be a planning event. PRC standards address Protection systems. The complexity associated with identifying and simulating such events is unknown and the defense of assumptions made and events simulated will lead to inconsistency in compliance and enforcement. Industry accepted proxies for such events could be developed that would allow for efficient identification of areas needing further detailed study. Attempting to intermingle protection system operation with BES performance will be nearly impossible to implement given current technologies. In general, the entire table should be reconciled, one way or another, with MOD standards governing ATC/AFC. If multiple contingencies, protection system failures, breaker failures, and other less likely events must be planned for, then ATC/AFC processes should be equally limited, at least for long term service. Any service granted on a simple N-1 basis should be Conditional Firm. Anything less than interconnection-wide application of more stringent AFC/ATC evaluation processes commensurate with the long term planning standards will result in the shifting of costs and risks from wholesale users to retail rate payers.
Response: FERC, in Order 693, was clear in paragraph 1794 that interruption of Non-Consequential Load is not permitted for single Contingency events. This position was vetted in draft 1 of TPL-001-1 and most stakeholders and the majority of the SDT support this position. The use of an SPS design would be permitted for a single Contingency event if the SPS design interrupts service to customers involved in an interruptible Load contract arrangement.		

Organization	Yes or No	Question 9 Comment
The likelihood of a bus fault is the same for each. However, the Bus-tie Breaker event (P4.6) has a lower risk simply because there are a limited set of Bus-tie Breakers compared to a entire population of BES breakers that could be in a stuck condition as in the P4.5 situation. No change was made in draft 4. The P5 the event description was changed in Draft 3 to match what is stated in the currently approved TPL standards under Category C6 through C9. The intent of P5 is to evaluate a failure of a single Protection System design that introduces a delayed clearing mode that may also include additional electrical Facilities being removed when compared to normal fault clearing. The comments made on the needed for reconciling the ATC standards are beyond the scope of this project. However, it is expected that conforming changes in other standards that currently reference the existing TPL standards will need to occur.		
Great River Energy	No	Why is the P needed in defining the category? They all have a P. Top note f and i should reference the Planning criteria established by the Planning Coordinator (or the Transmission Owner if more restrictive).The Transmission Owner is typically the one that sets the limits on their facilities. The Planner just works for the Owner.
Response: P is used as shorthand for "planning" event contingency as opposed to an extreme event Contingency. The Transmission Owner would establish the Facility Ratings, however, the Planning Coordinator and Transmission Planner establish the System criteria that must be met. Header notes 'f' and 'I' refer to established System parameters or criteria for voltage. No changes made.		
BC Hydro	No	Comments: Note "d": The term "Normal Clearing" is not well defined. Consider adding a definition in this standard or changing the NERC Glossary definition of "Normal Clearing" to read, "A protection system operates as designed and the fault is cleared in the maximum time that a properly functioning protection system would be expected to take to clear the fault, considering tolerances in normal protection operating times and circuit breaker interrupting times"No generating unit or units totaling more than the Contingency Reserve of the Balancing Authority (or Reserve Sharing Group if applicable) shall be disconnected from the System by a Special Protection System Note "e": Consider changing to, "For all Planning Events, planned System adjustments such as Transmission configuration changes and redispatch of generation are allowed if such adjustments are automatic (ie, implemented by a NERC-certified Special Protection System, SPS) and executable within the time duration applicable to the Facility Ratings. For P1 and P2 events, (a) generation shedding shall be limited to the normal level of Contingency Reserve of the Balancing Authority (or Reserve Sharing Group if applicable) that would be carried in the control area under the system conditions being studied and (b) no manual operator actions should be necessary to ensure Facility Ratings are not exceeded. Note that, in the operating time frame, the operator would immediately take whatever actions and system adjustments are needed to prepare for the next set of possible contingencies". It should be recognized that this will result in a higher transmission planning standard than the previous wording and that should be seen as a desirable outcome of updating the NERC standards since transmission system reliability (or lack of it) is the impetus for the whole Mandatory Reliability Standards (MRS) process. It should also be emphasized that PLANNING standards are necessarily conservative, simple and easy to apply since in the planning time frame all possible circumstances that might be encountered in the operating timeframe cannot be

Organization	Yes or No	Question 9 Comment
		assessed or nothing would ever get built. If operator action is permitted "if such adjustments are executable within the time duration applicable to the Facility Ratings", how will that be measured consistently to ensure the standard is met? One planner might count on five operators having nothing to distract them from adjusting the output levels of 10 plants to reduce the load on a line to below its 10-minute overload rating, whereas another might be more conservative and assume some of the operators may be busy with other things and be more conservative in estimating how much can be accomplished in 10 minutes. If no operator action is permitted, the standard is easily measured and a more secure system results, one of the main objectives of the MRS. The addition of the requirement that criteria are met without operator action is consistent with R3.3.1 that states "[Contingency analysis shall] simulate the removal of all elements that the Protection System and other automatic controls are expected to disconnect for each Contingency without operator intervention [emphasis added]". Performance Category P7: Consider changing the first event to, "All circuits on common structures" and consider changing the fault type to 3-phase. Extreme Events (Steady State): Consider changing item 1 to read, "With an initial condition of a single generator, Transmission Circuit, DC Line (one pole), shunt device or transformer forced out of service and prior to System adjustments, a second generator, Transmission Circuit, DC Line (one pole), shunt device or transformer is forced out of service. Extreme Events (Stability): Change item 1 to read, "With an initial condition of a single generator, Transmission Circuit, DC Line (one pole), shunt device or transformer forced out of service and prior to System adjustments, apply a 3" fault on a second generator, Transmission Circuit, DC Line (one pole), shunt device or transformer. Change item 2.g to read, "3" fault on all Transmission lines on a common Right-of-Way. Simultaneous 3" faults on all lines on a common right of way seems more likely (plane crash, avalanche, earth quake, wildfire) than simultaneous SLG faults. Footnote 1: Consider changing Item 1.a.I to read, "For Planning Events P1 and P2: No generating unit or units". And consider adding the following sentence, "No generating unit or units totaling more than the Contingency Reserve of the Balancing Authority (or Reserve Sharing Group if applicable) shall be disconnected from the System by a Special Protection System?. Footnote 8: Consider changing to, "Opening of Breaker(s) w/o fault in category P2 includes the situation in which one end of a normally networked Transmission circuit becomes open-ended, possibly resulting in voltage deviations outside acceptable limits especially at the open end of the line". Using the phrase "Opening of Breaker(s) w/o fault" that is used in the "event" column of category P2 will help people make the connection to the footnote.

Response: The SDT reviewed the existing NERC Glossary of Terms definition for Normal Clearing and found it sufficient for use in the TPL-001-1 standard. No changes were made.

Header note 'e' is not limited to automatic System adjustments. Manual operator initiated System adjustments are permitted so long as the applicable time limited rating is maintained during the adjustment. The proposed change was not accepted by the SDT.

Organization	Yes or No	Question 9 Comment
a) The standard does not place a ceiling on consequential generation tripping. b) Manual operator actions are permitted for all Contingencies. The ratings must always be adhered to. If a Contingency were to cause current flows to exceed a 24-hour Facility Rating but a 4-hour rating was not, then either natural Load reduction or System adjustments must occur within the 4-hour period. The standard permits manual System adjustments. Requirement R3, part 3.3.1 only refers to the initial System reaction to the event that the simulation program must accurately represent. The proposed changes to P7 were not accepted by the SDT. The situation described is covered as an extreme event under Steady State item 2a. The proposed change of "DC Line (one pole)" over the existing text "DC Line" was accepted by the SDT with a slight modification to read single pole. Changes were made to items 1 for both extreme event Steady State and Stability. **Extreme event steady state 1:** Loss of a single generator, Transmission Circuit, single pole of a DC Line, shunt device, or transformer forced out of service followed by another single generator, Transmission Circuit, single pole of a different DC Line, shunt device, or transformer forced out of service prior to System adjustments. **Extreme event Stability 1:** With an initial condition of a single generator, Transmission circuit, single pole of a DC line, shunt device, or transformer forced out of service, apply a 3Ø fault on another single generator, Transmission circuit, single pole of a different DC line, shunt device, or transformer prior to System adjustments. Regarding extreme event Stability item 2g, items 2f through 2h were deleted as this was a mis-interpretation of the existing table and are not required in the Stability timeframe. The change proposed is no longer required. The proposed change to footnote 1 was not accepted. Generation tripping by an SPS is permitted. Footnote 8 (now footnote 7) was changed for clarity. **Footnote 7:** Opening breaker(s) without a fault on one end of a normally networked Transmission circuit such that the line is now open at that end and possibly serving Load radial from a single source point.		
IRC Standards Review Committee Midwest ISO Minnesota Power New York Independent System Operator	Yes	The stability studies require significantly more computer time and a more detailed model. The standard should allow the PC/TP to use judgment to manage size and complexity of the study.
Response: The standard permits judgment on choosing those events that are "expected to produce more severe System impacts." See Requirement R3, part 3.4 and Requirement R4, part 4.4. Additionally, in this draft the SDT has removed extreme event Stability items 2f through 2h since this was a mis-interpretation of the existing table and are not required in the Stability timeframe.		
PJM	No	Table 1, Lead in Note I. The industry has not yet reached a consensus on appropriate Transient Voltage Limits.

Organization	Yes or No	Question 9 Comment
		It's not clear that reliability will be enhanced by requiring each entity to establish a Transient Voltage Limit. Table 1 footnote 1 - System stable means: a. Angular Stability:i. For Planning Event P1: No generating unit or units shall be allowed to pull out of synchronism. A generator being disconnected from the System by fault clearing action or by a Special Protection System is not considered pulling out of synchronism.This is not consistent with Loss of load whereby load can be lost due to a first contingency within contractual arrangements made with the load. This definition should be modified to read -A generator being disconnected from the System by fault clearing action or by a Special Protection System or prior arrangement?- as long as no other cascading outages occur. In Table 1, Extreme Events, Item 3a, i, ii, iii, iv and vi seem like events that would occur over long periods of time not in contingency simulation time frames. They seem more like sensitivities. Table 1 Delete P5 is the preferred option. If not deleted need to clarify that so that related or additional -faults in the vicinity of- are considered. As currently worded it can require all simultaneous N-2 combinations within some number of substation radius for which overtrips could occur. You would have to do all combinations since they are unpredictable. If the SDT means for the relay failure to be located at or very near to the initiating event, then perhaps the combinations are more manageable but still extremely burdensome.
Response: The SDT has added new Requirement R5 to explicitly require criteria for transient voltage criteria. This new requirement allows for the responsible entity to determine the acceptable limit for its System. **R5** Each Transmission Planner and Planning Coordinator shall have criteria for acceptable System steady state voltage limits, post-Contingency voltage deviations, and the transient voltage response for their System. For transient voltage response, the criteria shall at a minimum, specify a voltage level and a maximum length of time that transient voltages may remain outside that level. The proposed change for "or by prior agreement" was not accepted by the SDT since the addition of footnote 5 (now footnote 4) and the ability to shed Conditional Firm service should adequately cover the situation described. No change made. The intent of extreme event 3 'a' is simply to look at the loss of all units from two separate plants. Items i, ii, iii, iv and vi are merely explanatory to what could initiate this type of event. No change made. The P5 event description was changed in Draft 3 to match what is stated in the currently approved TPL standards under Category C6 through C9. The intent of P5 is to evaluate a failure of a single Protection System design that introduces a Delayed Clearing mode that may also include additional electrical Facilities being removed when compared to normal fault clearing.		
Brazos Electric Cooperative	No	For the most part Table 1 is acceptable but not entirely. The general 'feel' is that more studies are required. Requiring more studies is not going to provide additional reliability benefit but Brazos does not own many miles of transmission above 300 kV so the impact will be less for us than other larger TOs. We do not see the purpose of studying events where all forms of load loss is allowed. We understand upgrading the transmission system for these events is not required and is unneeded so why study certain events other than to insure that cascading outages don't occur? Without running a full set of studies it is a little hard to determine if Table 1 can be readily assessed or the true value of the additional studies.

Organization	Yes or No	Question 9 Comment
Response: More studies are being required in the sense that sensitivity studies are now required. However, the number of scenarios covered in the planning events and extreme events is comparable to the existing Category A, B, C and D items in use today. For events that permit the loss of Non-Consequential Load, a Transmission Planner could elect to impose stricter criteria on itself than the minimum expectations of the standard. However, the SDT believes an appropriate criterion has been established. Although not unanimous, the majority of the SDT and industry stakeholders believe the 300 kV and higher Systems (EHV) generally represent the backbone of many Systems in the various Interconnections and that the EHV breakpoint and the more stringent requirements are appropriately defined. The sensitivity studies are intended to broaden the knowledge of the Transmission Planner. If several sensitivities show a susceptibility to a particular planning event, a Transmission Planner may elect to act and include in their Corrective Action Plans based on the risk and likelihood.		
American Electric Power	No	Consider adding a Planning Event defined to address common mode outages of two generating units. The language could parallel that of P7, substituting “common system” for “common structure”. In the present draft, Planning Events P4 and P5 address single faults that may result in multiple contingencies. Most of these events can be expected to involve either multiple transmission facilities or a mix of generating units and transmission facilities. P7 covers common mode (structure) outages of transmission lines. There are no common mode generator contingencies specified. Define the term “common Right-of-Way” and/or modify the term to “common or adjacent Right(s)-of-Way”. In the absence of a definition, if two lines are built on opposite sides of some geographic boundary (such as a two-lane road) they may legally be completely separate, potentially with no overlap in the agreements between the Transmission Owner and landowners. However, from the standpoint of BES exposure to weather related outages, the lines clearly will simultaneously be exposed to similar conditions. Lines that follow geographically parallel routes for more than a minimum distance and are within some minimum separation should be considered to be on a common Right-of-Way. Suggestion for the minimum parallel distance would be 1 mile (based on footnote 12).
Response: The common mode event described is classified as an extreme event, see item 1 in steady state and Stability. The Transmission Planner could elect to impose a higher criteria on itself and consider a variation of the P3.1 event that would not include a System adjustment between the loss of two units, but it is not required by the standard. No change made. The commenter accurately describes the potential outcome of the P4 and the P5 events. As described above, the Transmission Planner could elect to evaluate the simultaneous loss of two units, but it was not identified by data reviewed by the SDT as being a highly likely event and therefore not included as a planning event. The SDT has made clarifying changes to Footnote 12 (now footnote 11). Footnote 11 has been added to the extreme event steady-state 2b. Extreme event Stability 2f has been deleted. **Footnote 11:** Excludes circuits that share a common structure or common Right-of-Way for 1 mile or less		
LADWP	No	Table 1 continues with discriminatory performance criteria required of 300kV and above facilities. This new "higher" criteria could lead to endless argument and litigations as to who did what to whom if implemented. Currently, all transmission facilities have same performance criteria; the impacts of each new facility are carefully evaluated and mitigations are included as part of the Plan of Service. This new, discriminatory requirement would

Organization	Yes or No	Question 9 Comment
		force everyone with EHV facilities to re-do its palnning studies and mitigate the impacts. Unfortunately, the real world is quite messy. For example, Company A has put in a 500KV line twenty years ago and since then, Companies B, C, and D have put in several underlying 230 kV, 115 kV lines. Is company A on hook now to mitigate all the problems for lines that came in later? Or is it required to re-create the conditions 20 years ago and mitigate only what would have been required. This is a very simplistic example to illustrate potential disagreements that would arise by this discriminatory criteria. If there is any engineering evidence to support this arbitrary requiremnts, it has yet to be presented. As I commented in the past, the last two major cyctme wide cascading event, both in WECC AND THE Eastern Interconnect, were both caused by 230kV systems.
Response: Although not unanimous, the majority of the SDT and industry stakeholders believe the 300 kV and higher Systems (EHV) generally represent the backbone of many Systems in the various Interconnections and that the EHV breakpoint and the more stringent requirements are appropriately defined. In the example provided, each company A, B, C and D is responsible for ensuring that criteria is met for its own facilities.		
Platte River Power Authority	No	At the top of Table 1 Planning Events, under "Stability Only:" regarding Note "i": Suggest deleting everything from "established" on to the end. (WECC establishes acceptable limits for transient voltage response.)
Response: The SDT has revised the referenced header note, now header note “k” in draft 4. The note now says both the Transmission Planner’s and the Planning Coordinator’s criteria must be met. **Header note ‘k’:** Transient voltage response shall be within acceptable limits established by the Planning Coordinator and the Transmission Planner.		
Orlando Utilities Commission	Yes	Comments: The table is significantly improved from the prior versions and provides superior clarification over the existing standards. In areas where an entity is the TSP and the PC, it is obvious that the Firm Service provided by the TSP falls within the performance requirements of the standard regarding curtailment. However if the firm service is provided by another TSP (a different PC) and causes a problem, who is responsible for insuring it does not have to be curtailed. As an example if System A has a firm transmission service agreement that under contingency causes a problem on System C, is system C in violation if the service has to be cut to protect their system, or is System A that granted and is responsible for the service?
Response: We appreciate your support of the TPL-001-1 standard and the revised Table 1. The Planning Coordinator or Transmission Planner is responsible for its portion of the BES and therefore is responsible for insuring there are no performance violations on its System. Further, the origin of the violation and the responsibility for curtailing service is not within the scope of the planning standards as it is an equity issue and not a reliability issue.		
American Transmission Company	No	We suggest the following changes:We believe reference to the use of Load Reduction to meet steady state performance requirement was omitted in Planning Events, Steady State and Stability, Item b. We suggest modifying the last sentence in Item b: However, Supplemental Load Loss and Load Reduction associated with an event shall not be used to meet steady state performance requirements. We propose limiting the scope to automatic devices in Planning Events, Steady State and Stability, Item c. We suggest text of: c. Simulate the removal of all elements that Protection Systems and other Controls are expected

Organization	Yes or No	Question 9 Comment
		to disconnect automatically for each Contingency?. Remove performance note ?e" in the Planning Events, Steady State & Stability section and replace it with R3.3.5 and R4.3.5, as suggested in the comments for R3 and R4. The qualification of allowable planned System adjustments should be a Requirement, rather than a performance note. Remove performance note "a" in the Planning Events, Steady State Only section, and replace it with R2.10, as suggested in the comments for R2. The obligation to identify and observe applicable steady state voltage and post-Contingency voltage deviations should be a Requirement, rather than a performance note. Remove performance note "b" in the Planning Events, Stability Only section and replace it with R2.10, as suggested in the comment for R2. The obligation to identify and observe applicable transient voltage response limits should be a Requirement, rather a performance note. Modify the P3 Category performance criteria to apply only to the loss of two generators because the probability of the loss of two base load generators is an order of magnitude greater than the loss of a generator and any other transmission element. We suggest the listing of: the loss of transmission circuit, transformer, shunt device, and single pole of DC line be removed from the P3 Events column. The corresponding events be moved to the P6 Category by "1. Generator" to the listing in the Initial System Condition (Loss of . . .) column.Limit the scope of the simulations in Item 1 of the Extreme Events, Steady State and Stability section to automatic systems and controls. We suggest this text: "1. Simulate the removal of all elements that Protection Systems and controls are expected to disconnect automatically for each Contingency. Clarify the meaning of the loss of multiple circuits in Item 2.a of the Extreme Events, Steady State section by using wording similar to P7. We suggest this text: "a. Loss of three or more circuits that share a common structure. Clarify the reference to actual, historical operating experience in Item 3.b of the Extreme Events, Steady State section. We suggest this text: "b. Other events based upon actual operating experience that may result in wide area disturbances. Clarify the reference to actual, historical operating experience in Item 2.i of the Extreme Events, Stability State section. We suggest this text that is similar to Steady State, Item 3.b: "i. Other events based upon actual operating experience that may result in wide area disturbances. Further clarify the applicable shunt devices in Footnote 7 with this suggested text: "7. Requirements which are applicable to shunt devices, also apply to FACTS devices that are connected to ground, but not instrument voltage transformers or surge arresters. ATC suggest that following change to Table 1, footnote 4. Existing language:"Bulk Electric System (BES) level references include extra-high voltage (EHV) Facilities defined as greater than 300kV and high voltage (HV) Facilities defined as the 300kV and lower voltage Systems."Suggested Modification:"Bulk Electric System (BES) level references include extra-high voltage (EHV) Facilities defined as greater than 300kV and high voltage (HV) Facilities defined as the 100kV through the 300kV Systems."

Organization	Yes or No	Question 9 Comment
Response: Regarding the suggested change to header note "b", no change was made as the standard does not prescribe a particular Load model such as constant power, constant impedance, etc. The proposed change to header note "c" has been made. **Header note 'c':** Simulate the removal of all elements that Protection Systems and other controls are expected to automatically disconnect for each event. The proposed deletion of header note "e" was not accepted. The note is explanatory describing something that is permitted rather than a requirement that shall be followed. The proposed change to move item header note 'e' to the requirements was not accepted. Additionally, under Requirement R3, part 3.1 and Requirement R4, part 4.1 the entire table is tied to a reliability requirement for both steady state and Stability. Regarding comments on header notes "a" and "b" - under Requirement R3, part 3.1 and Requirement R4, part 4.1 the entire table is tied to a reliability requirement for both steady state and Stability. The loss of a generator plus any other N-1 item was viewed as highly likely by the SDT. No change was made to the P3 and P6 events as proposed by the commenter. No change was made to the note as the SDT considered the present wording sufficient to describe the condition. No change was made to the note as the SDT considered the present wording sufficient to describe the condition. The proposed change to footnote 7 (now footnote 6) was not made as the SDT considers the present wording sufficient to describe the condition. The change to footnote 4 (now footnote 3) was not accepted although the SDT did make a clarifying change to the footnote. **Footnote 3:** Bulk Electric System (BES) level references include extra-high voltage (EHV) Facilities defined as greater than 300kV and high voltage (HV) Facilities defined as the 300kV and lower voltage Systems as defined by the Regional Entity. The designation of EHV and HV is used to distinguish between stated performance criteria allowances for interruptions of Firm Transmission Service and Non-Consequential Load.		
Omaha Public Power District	No	Header note 'f' under Planning Events: The redline version shows that the sentence "Facility Ratings shall not be exceeded" was removed from the beginning of header note "f" (header note "b" in the previous draft). This sentence needs to be reinserted at the beginning of header note "f". The requirement that Facility Ratings not be exceeded is a core principle of steady-state transmission-system assessment and needs to be explicitly stated somewhere in the standard. If this sentence is not reinserted, it could lead to a situation where different regions come up with different interpretations of the manner in which Facility Ratings need to be respected. Category P2: In the third column of the table, there is a dotted line that appears to be separating two parts of the description for event type P2.3. It appears that this dotted line should be removed. Category P3: In the fifth, sixth, and seventh columns of the table, there is one set of cells for event types P3.1 through P3.4 and another set of cells for event type P3.5. Since these two sets of cells are identical, they can be merged into one set that applies to event types P3.1 through P3.5. This would make the presentation of requirements for Category P3 consistent with that of Category P1. Category P7: Category P7 requires analyzing SLG faults on any two circuits on common structures. Add language to clarify whether SLG faults on both the same and different phases of the two circuits need to be

Organization	Yes or No	Question 9 Comment
		considered or whether it is sufficient to assume that the SLG faults occur on the same phase of the two circuits.
Response: In header note "f", the text "Facility Ratings shall not be exceeded" was inadvertently deleted in the Draft 3 standard and has been re-inserted in Draft 4. The dotted line separator is appropriate and is used to distinguish between the EHV and HV performance criteria of the P2.3 event. The suggested table format change for the P3 event was accepted. The standard does not specify. It's at each Planning Coordinator's or Transmission Planner's discretion.		
Tucson Electric Power Company	No	Clarify use of the term "single contingency" in P2 as P2-2 and P2-3 are labeled as single contingencies but multiple elements are effected. In the past loss of a branch or shunt element has been considered a single contingency but loss of a bus element could involve the loss of multiple branch or shunt elements. P4: Under the event column it should clarify and state language similar to that of P5 (Loss of multiple elements caused by a stuck breaker). In addition, this is a multiple contingency condition and may result in loss of more than 2 elements. As such, this is a low probability condition and loss of Non-Consequential load should be allowed for EHV. We disagree with raising the bar for EHV for P4.We also disagree with raising the bar for P5. This is a multiple contingency condition and may result in loss of more than 2 elements. We strongly disagree with elimination of load shed (of non-consequential load) for loss of multiple branch or shunt elements >300 kV.
Response: The P2-2 and P2-3 items are considered single Contingency since a single fault occurrence causes the event. While it is true that multiple elements are anticipated to trip, the event is still considered a single Contingency. TPL-001-1 differs from the existing standard in that it is clear that single branch outages that are not reflective of actual Protection Systems and controls design will not be acceptable. If a single fault can result in multiple elements being removed from service they must be simulated accordingly. The SDT has added the introductory text proposed for the P4 "Event" column of the table to bring consistency with the P5 event. In regards to the EHV performance criteria for the P4 event, the EHV performance expectations remain as stated in Draft 3. P4 events pose higher risk and impact to the BES since there is no time for System adjustments for potential multiple Facility outages that can result from a single fault. Since the EHV is considered the backbone of the BES carrying large amounts of power between generation and Load and typically not directly servicing end-user customers the higher performance expectations for the high impact P4 events is warranted. **P4:** Loss of multiple elements caused by a stuck breaker [11](non-Bus-tie) attempting to clear a Fault on one of the following: & 6. Loss of multiple elements caused by a stuck breaker[10] (Bus-tie) attempting to clear a Fault on the associated bus Although not unanimous, the majority of the SDT and industry stakeholders believe the 300 kV and higher Systems (EHV) generally represent the backbone of many Systems in the various Interconnections and that the EHV breakpoint and the more stringent requirements are appropriately defined. The Implementation Plan is intended to provide sufficient time to shift to the new expectations.		
Independent Electricity System Operator	No	"Single-phase-to-ground" faults should replace all occurrences of "single-line-to-ground" faults.

Organization	Yes or No	Question 9 Comment
		Events in P6 and P7 need more clarity for back to back installation where no DC line exists. In note footnote 11 we propose the following change. 11. A stuck breaker means that for a gang-operated breaker, all three phases of the breaker have remained closed. For an independent pole operated (IPO) breaker, only one pole is assumed to remain closed. A stuck breaker results in Delayed Fault Clearing. We do not agree with the removal of the provision to allow load rejection for 1 and 2 elements out of service under certain defined conditions as indicated in footnote "b" of Table I of the current TPL standards.
Response: The SLG fault description is a commonly understood term. No change was made. For back to back installations, each pole of the converter station would be treated the same as a DC line. No change made. The proposed change for footnote 11 (now footnote 10) was accepted. **Footnote 10:** A stuck breaker means that for a gang-operated breaker, all three phases of the breaker have remained closed. For an independent pole operated (IPO) or an independent pole tripping (IPT) breaker, only one pole is assumed to remain closed. A stuck breaker results in Delayed Fault Clearing In regards to proposed change to prohibit Non-Consequential Load shed in response to a single Contingency event, FERC, in Order 693, was clear in paragraph 1794 that interruption of Non-Consequential Load are not permitted for single Contingency events. This position was vetted in draft 1 of TPL-001-1 and most stakeholders and the majority of the SDT support this position. The use of an SPS design would be permitted for a single Contingency event if the SPS design interrupts service to customers involved in an interruptible Load contract arrangement.		
ReliabilityFirst Corporation	Yes	The term "stuck breaker" has been mis-understood, and additional text is needed to make it clear. "A stuck breaker is defined as a breaker that failed to open due to a mechanical failure internal to the breaker which prevents it from opening or protection system failures that failed to send a trip signal.
Response: The SDT agrees in part with your response. We concur that a stuck breaker is based on a mechanical failure of a single breaker. However, a Protection System failure could result in different outcomes depending on the design implemented. The SDT has partitioned the prior C6 through C9 contingencies into the P4 and P5 planning events to bring greater focus on this distinction.		
Kansas City Power & Light	Yes	
ReliabilityFirst Corporation	Yes	
Dominion - Electric Transmission	Yes	
Duke Energy	Yes	
ITC Holdings	Yes	None

Organization	Yes or No	Question 9 Comment
New Brunswick System Operator		No comment
Gainesville Regional Utilities	Yes	
CPS Energy	Yes	
Southern Company	Yes	
Tampa Electric	Yes	
Response: Thank you for your response.		

10. The changes to the Table include the addition/revision of footnotes 5 and 10 that address curtailment of Firm Transmission Service and conditional Firm Transmission Service. Do you agree with the footnotes? If not, please provide specific comments.

Summary Consideration: The majority of respondents were positive with their comments on the addition of the two footnotes. A number of clarifying questions were asked and the SDT has attempted to quell those questions with clarifications made to the footnotes. Please note that footnote 5 is now footnote 4 and footnote 10 is now footnote 9.

Footnote 4: Curtailment of Conditional Firm Transmission Service is allowed when the conditions and/or events being studied formed the basis for the Conditional Firm Transmission Service.

Footnote 9: Curtailment of Firm Transmission Service, when coupled with the appropriate re-dispatch of resources obligated to re-dispatch, is allowed both as a System adjustment (as identified in the column entitled 'Initial System Conditions') and a corrective action, where it can be demonstrated that Facilities remain within applicable Facility Ratings and those adjustments do not result in the shedding of any firm Demand. Where limited options for re-dispatch exist, sensitivities associated with the availability of those resources should be considered. Where Facilities external to the Transmission Planner's planning region are relied upon, Facility Ratings in those regions should also be respected.

Organization	Yes or No	Question 10 Comment
Dominion - Electric Transmission	No	Table 1 Interruption of Firm Transmission Service is not allowed for many of the events listed. Doesn't this imply that firm point-to-point service can't be interrupted even when the service is provided across points that are connected only by a radial facility? If so, does NERC have the authority to determine how transmission service providers calculate firm ATC? Dominion is also concerned that transmission service providers appear subject to "double jeopardy" I.E, NERC fine for violations of applicable reliability standard and FERC sanctions if OATT is violated.
Response: It is the SDT's opinion that the point-to-point service described is in essence; Conditional Firm Service based on the condition that the radial Facility is in service and could thus be interrupted under Footnote 5 (now footnote 4). No change made.		
Transmission Planning	No	It appears that the reference callout to footnote 5 should be placed on every "No" in the "Interruption of Firm Transmission Service column instead of in the header, as was done with reference callouts to footnote 10. In footnote 5 "conditional" should be capitalized since it refers to a specific product defined under the OATT. Also, this only covers the specific condition form of the product, but does not address the specified number of hours form of the product. If the second form of the product is the basis for the service and the transaction is modeled in the case, and curtailment will mitigate an overload, it should also be allowed. Footnote 10 is too long and subjective. There is no purpose in adding the phrase "when coupled with the appropriate re-dispatch of resources obligated to re-dispatch" because if there is an obligation to re-dispatch, it is done, and if there is no obligation to do so, then curtailment is the only alternative " no coupling necessary,

Organization	Yes or No	Question 10 Comment
		therefore, this phrase should be deleted. In addition, the last two sentences end in “must be considered”. What is the appropriate amount of “consideration” and what defines whether the consideration is acceptable or not? The last sentence should be a stand alone performance requirement in the Steady State and Stability notes at the top of Table 1 (in the list a through e) and should end in “must be adhered to” instead of “must be considered”.Suggested revision:10. Curtailment of firm transmission service is allowed both as a System adjustment (as identified in the column titled “Initial System Conditions”) and a corrective action, where it can be demonstrated that Facilities remain within applicable Facility Ratings and those adjustments do not result in the shedding of any firm Load.
Response: Footnote 5 (now footnote 4) is intended to apply to every row in the “Interruption of Firm Transmission Service Allowed” column while Footnote 10 (now footnote 9) does not. The placement of the footnotes is predicated on that premise. No change made. The SDT agrees with the capitalization of the word Conditional and has made the necessary corrections. **Footnote 4:** Curtailment of Conditional Firm Transmission Service is allowed when the conditions and/or events being studied formed the basis for the Conditional Firm Transmission Service. Curtailment of Conditional Firm Transmission Service is allowed when the conditions and/or events being studied formed the basis for the Conditional Firm Transmission Service. Footnote 5 (now footnote 4) states that “When the conditions and/or event(s) being studied form the basis for conditional Firm Transmission Service…” The word “conditions” is intended to address the ‘hours’ form of Conditional Firm service in that the hours a service may not be available should be based on System conditions that exist for those hours. No change made. Footnote 10 (now footnote 9) was added to address the disjoint between how some parties calculate ATC/AFC when assessing Long Term Firm Transmission Service and the currently proposed TPL-001-1 standard. TPL-001-1 requires Transmission Planners to plan their systems to meet multiple contingency events and some parties assess Long Term Firm Transmission Service on a first Contingency basis. Units obligated to re-dispatch, as contemplated in Footnote 9 are those units which are contractually bound to provide the service as well as those obligated to provide the service under Network Integrated Transmission Service, under FERC’s pro forma OATT. Under the pro forma OATT, units designated as network resources receiving NITS are obligated to re-dispatch as requested by the Transmission Provider pursuant to Section 33.2 to maintain reliability. The footnote is worded such that curtailment/re-dispatch cannot result in the loss of firm Load preserves the guidance given by FERC in Order 693 that no single Contingency result in the loss of firm Load. No change made**.** Where contractual agreements exist between entities allowing re-dispatch, and the curtailment of Firm Transmission Service associated with that re-dispatch is point-to-point, the point-to-point service curtailment would be allowed. In the case of units otherwise obligated, namely those resources with Network Integrated Transmission Service designated as network resources, curtailment of point-to-point service involving those resources would not be allowed. The SDT believes that applicable Facility Ratings noted throughout the standard cover all Facilities. No change made.		
SERC Engineering Committee Planning Standards Subcommittee	No	Footnote 5:Suggest rewording of footnote 5 to:Curtailment of conditional Firm Transmission Service is allowed when the conditions and/or events being studied formed the basis for the conditional Firm Transmission Service. Footnote 10: Footnote 10 is definitely an improvement from previous versions. It is suggested that the word "also" be added to the last line:Curtailment of firm transmission service, when coupled with the appropriate re-dispatch of

Organization	Yes or No	Question 10 Comment
		resources obligated to re-dispatch, is allowed both as a System adjustment (as identified in the column titled "Initial System Conditions") and a corrective action, where it can be demonstrated that Facilities remain within applicable Facility Ratings and those adjustments do not result in the shedding of any firm Load. Where limited options for re-dispatch exist, sensitivities associated with the availability of those resources must be considered. Where Facilities external to the Transmission Planner's planning region are relied upon, Facility Ratings in those regions must also be considered.
Ameren	No	Suggest rewording of footnote 5, though we do not use conditional firm service:Curtailment of conditional Firm Transmission Service is allowed when the conditions and/or events being studied formed the basis for the conditional Firm Transmission Service. Footnote 10 is definitely an improvement from previous versions. It is suggested that the word "also" be added to the last line:Curtailment of firm transmission service, when coupled with the appropriate re-dispatch of resources obligated to re-dispatch, is allowed both as a System adjustment (as identified in the column titled "Initial System Conditions") and a corrective action, where it can be demonstrated that Facilities remain within applicable Facility Ratings and those adjustments do not result in the shedding of any firm Load. Where limited options for re-dispatch exist, sensitivities associated with the availability of those resources must be considered. Where Facilities external to the Transmission Planner'splanning region are relied upon, Facility Ratings in those regions must also be considered.
Response: The SDT agrees with proposed re-wording of Footnote 5 (now footnote 4) and the additional wording in Footnote 10 (now footnote 9). **Footnote 4:** Curtailment of Conditional Firm Transmission Service is allowed when the conditions and/or events being studied formed the basis for the Conditional Firm Transmission Service.: **Footnote 9:** Curtailment of Firm Transmission Service, when coupled with the appropriate re-dispatch of resources obligated to re-dispatch, is allowed both as a System adjustment (as identified in the column entitled 'Initial System Conditions') and a corrective action, where it can be demonstrated that Facilities remain within applicable Facility Ratings and those adjustments do not result in the shedding of any firm Demand. Where limited options for re-dispatch exist, sensitivities associated with the availability of those resources should be considered. Where Facilities external to the Transmission Planner's planning region are relied upon, Facility Ratings in those regions must should also be respected. Curtailment of Conditional Firm Transmission Service is allowed when the conditions and/or events being studied formed the basis for the Conditional Firm Transmission Service. Curtailment of Firm Transmission Service, when coupled with the appropriate re-dispatch of resources obligated to re-dispatch, is allowed both as a System adjustment (as identified in the column entitled 'Initial System Conditions') and a corrective action, where it can be demonstrated that Facilities remain within applicable Facility Ratings and those adjustments do not result in the shedding of any firm Demand. Where limited options for re-dispatch exist, sensitivities associated with the availability of those resources must be considered. Where Facilities external to the Transmission Planner's planning region are relied upon, Facility Ratings in those regions should also be respected.		
SERC Engineering Committee Reliability Review Subcommittee	No	Suggest rewording of footnote 5 to: Curtailment of conditional Firm Transmission Service is allowed when the conditions and/or events being studied formed the basis for the conditional Firm Transmission Service.

Organization	Yes or No	Question 10 Comment
(RRS)		Footnote 10 is definitely an improvement from previous versions. It is suggested that the word "also" be added to the last line: Curtailment of firm transmission service, when coupled with the appropriate re-dispatch of resources obligated to re-dispatch, is allowed both as a System adjustment (as identified in the column titled "Initial System Conditions") and a corrective action, where it can be demonstrated that Facilities remain within applicable Facility Ratings and those adjustments do not result in the shedding of any firm Load. Where limited options for re-dispatch exist, sensitivities associated with the availability of those resources must be considered. Where Facilities external to the Transmission Planner's planning region are relied upon, Facility Ratings in those regions must also be considered.
Response: The SDT agrees with proposed re-wording of Footnote 5 (now footnote 4) and the additional wording in Footnote 10 (now footnote 9). **Footnote 4:** Curtailment of Conditional Firm Transmission Service is allowed when the conditions and/or events being studied formed the basis for the Conditional Firm Transmission Service. **Footnote 9:** Curtailment of Firm Transmission Service, when coupled with the appropriate re-dispatch of resources obligated to re-dispatch, is allowed both as a System adjustment (as identified in the column entitled 'Initial System Conditions') and a corrective action, where it can be demonstrated that Facilities remain within applicable Facility Ratings and those adjustments do not result in the shedding of any firm Demand. Where limited options for re-dispatch exist, sensitivities associated with the availability of those resources should be considered. Where Facilities external to the Transmission Planner's planning region are relied upon, Facility Ratings in those regions must should also be respected. Curtailment of Conditional Firm Transmission Service is allowed when the conditions and/or events being studied formed the basis for the Conditional Firm Transmission Service. Curtailment of Firm Transmission Service, when coupled with the appropriate re-dispatch of resources obligated to re-dispatch, is allowed both as a System adjustment (as identified in the column entitled 'Initial System Conditions') and a corrective action, where it can be demonstrated that Facilities remain within applicable Facility Ratings and those adjustments do not result in the shedding of any firm Demand. Where limited options for re-dispatch exist, sensitivities associated with the availability of those resources must be considered. Where Facilities external to the Transmission Planner's planning region are relied upon, Facility Ratings in those regions should also be respected.		
Southern Company	No	Footnote 10 should not be applied to P3. The curtailment of firm service should not be allowed for a unit out / line out contingency.
Response: Footnote 10 (now footnote 9) was added to address the disjoint between how some parties calculate ATC/AFC when assessing Long Term Firm Transmission Service and the currently proposed TPL-001-1 standard. TPL-001-1 requires Transmission Planners to plan their systems to meet multiple contingency events and some parties assess Long Term Firm Transmission Service on a first Contingency basis.. Units obligated to re-dispatch, as contemplated in Footnote 9 are those units which are contractually bound to provide the service as well as those obligated to provide the service under Network Integrated Transmission Service, under FERC's pro forma OATT. Under the pro forma OATT, units designated as network resources receiving NITS are obligated to re-dispatch as requested by the Transmission Provider pursuant to Section 33.2 to maintain reliability. The footnote is worded such that curtailment/re-dispatch cannot result in the loss of firm Load preserves the guidance given by FERC in Order 693 that no single Contingency result in the loss of firm Load. No change made**.**		
System Protection and Transmission Planning	Yes	These concepts seem too important to relegate to footnotes. Could this discussion of how to handle Firm transactions and redispatch be moved to a more prominent place? Perhaps these concepts should be removed

Organization	Yes or No	Question 10 Comment
Department		from this standard entirely. A more appropriate place for these concepts would be in ATC standards.
Response: While the SDT agrees that these are important concepts, given that the inclusion of all firm use of the BES, including the use created by Firm Transmission Service, is essential to meaningful Transmission Planning Assessments, The SDT therefore does not agree that the concepts can be removed entirely from the TPL standard. Ultimately Transmission planning engineers will be responsible for the study work done and the proposals to ensure each entity meets the requirements in the standard. The SDT believes that the tables will be the central point of reference and thus the most appropriate place for the provisions regarding how firm Transmission use can be handled. No change made.		
Florida Reliability Coordinating Council, Inc - Transmission Working Group	Yes	Excellent additionFootnote 10 is long and subjective. There is no purpose in adding the phrase "when coupled with the appropriate re-dispatch of resources obligated to re-dispatch" because if there is an obligation to re-dispatch, it is done, and if there is no obligation to do so, then curtailment is the only alternative " no coupling necessary. Suggested revision:10. Curtailment of firm transmission service is allowed both as a System adjustment (as identified in the column titled "Initial System Conditions") and as a corrective action, providing those adjustments do not result in the shedding of any firm Load.
Response: Footnote 10 (now footnote 9) was added to address the disjoint between how some parties calculate ATC/AFC when assessing Long Term Firm Transmission Service and the currently proposed TPL-001-1 standard. TPL-001-1 requires Transmission Planners to plan their systems to meet multiple contingency events and some parties assess Long Term Firm Transmission Service on a first Contingency basis.. Units obligated to re-dispatch, as contemplated in Footnote 9 are those units which are contractually bound to provide the service as well as those obligated to provide the service under Network Integrated Transmission Service, under FERC's pro forma OATT. Under the pro forma OATT, units designated as network resources receiving NITS are obligated to re-dispatch as requested by the Transmission Provider pursuant to Section 33.2 to maintain reliability. The footnote is worded such that curtailment/re-dispatch cannot result in the loss of firm Load preserves the guidance given by FERC in Order 693 that no single Contingency result in the loss of firm Load. No change made.		
FMPA	Yes	We disagree with how the performance criteria is applied to different contingencies, but agree that firm transmission can be curtailed post-contingency as a system adjustment, and especially as preparation for the next contingency.
NorthWestern Corporation NorthWestern Energy (NWE) (NWMT)	No	NWE has provided comments above concerning Firm Transmission Service and the foot notes should address the issues that we have raised above.
Progress Energy Florida, Inc.	No	Again, given the fundamental concerns that PEF has stated in previous Questions, PEF sees voicing detailed concerns for these footnotes as irrelevant, short of suggesting the reinstatement of the existing Footnote (b).
Response: The SDT thanks you for your comments.		
Progress Energy Carolina (PEC)	No	PEC believes that Footnote 10 should be clarified. The proposed wording "Where Facilities external to the Transmission Planner'splanning region are relied upon, Facility Ratings in those regions must be considered" is unclear. It is not clear what "relied upon" means. Also, thermal overloads on neighboring systems are generally

Organization	Yes or No	Question 10 Comment
		the neighboring system's responsibility to mitigate.
Response: The intent of Footnote 10 (now footnote 9) is to allow Transmission Planner's to use resources obligated to re-dispatch to meet reliability requirements. However, without due consideration to Facilities external to the Transmission Planner's study area, Facility Ratings could potentially be violated in those areas unbeknownst to the owners of those Facilities. Footnote 10 has been revised for clarity. **Footnote 9:** Curtailment of Firm Transmission Service, when coupled with the appropriate re-dispatch of resources obligated to re-dispatch, is allowed both as a System adjustment (as identified in the column entitled 'Initial System Conditions') and a corrective action, where it can be demonstrated that Facilities remain within applicable Facility Ratings and those adjustments do not result in the shedding of any firm Demand. Where limited options for re-dispatch exist, sensitivities associated with the availability of those resources should be considered. Where Facilities external to the Transmission Planner's planning region are relied upon, Facility Ratings in those regions must should also be respected.		
JEA	No	Footnote 10: First of all, the term firm Load is used instead of the term Non-Consequential load. Are these the same? If so, maybe we need to be consistent here. Assuming they are the same and in reference to previous comment on use of Non-Consequential load shedding. :"Propose establishing a cap on Non-Consequential Load Loss for all Corrective Action Plans where the Table 1 events currently do not allow at all. The cap could also be accompanied by an allowance of lag time (maybe 4-5 years)."To be consistent, some level of Non-Consequential load shedding should be allowed where Generation redispatch falls short for a few years until new planned generation is added to the system.
Response: The SDT does not see where any additional clarity would be added by the suggested change. No change made. The SDT has considered establishing a cap on Consequential and Non-Consequential Load Loss. Currently the SDT has elected not to do so, but instead to add reporting requirements in Requirement R2, Part 2.9 for a possible cap in the future. Curtailment of Firm Transmission Service, when coupled with the appropriate re-dispatch of resources obligated to re-dispatch, is allowed both as a System adjustment (as identified in the column entitled 'Initial System Conditions') and a corrective action, where it can be demonstrated that Facilities remain within applicable Facility Ratings and those adjustments do not result in the shedding of any firm Demand. Where limited options for re-dispatch exist, sensitivities associated with the availability of those resources must be considered. Where Facilities external to the Transmission Planner's planning region are relied upon, Facility Ratings in those regions must also be adhered to.		
SMUD	No	The allowed corrective actions in Table 1 to meet performance standards do not explicitly state how DSM solutions should be treated [there is a potential for 20% of national peak demand to be met by "demand response"] . If it is allowed to be used, and since this is a fairly significant amount, it would help if it is explicitly addressed in Table 1.
Response: The SDT agrees that DSM initiatives can impact TPL-001-1 assessments. It is the SDT's opinion that DSM initiatives would be reflected in the Load models. No change made.		
Pacific Gas and Electric Co,	Yes	We support the concept. However, we are unclear about the last sentence of Footnote 10, which reads "where

Organization	Yes or No	Question 10 Comment
		Facilities external to the Transmission Planner'splanning region are relied upon, Facility Ratings in those regions must be considered. For resources from areas external to the Transmission Planner'splanning regions, would identification of the need to, for example, increase System Operating Limits into the his/her Transmission Planning Area as part of the Corrective Action Plan be counted as having "considered" the "Facility Ratings in those impacted regions"? Otherwise, it may be difficult for the Transmission Planner to assess and identify all the Facility Ratings that may be impacted in a region external to his/her Transmission Planning Area.
Response: The SDT agrees and has strengthened the language in Footnote 10 (now footnote 9) **Footnote 9:** Curtailment of Firm Transmission Service, when coupled with the appropriate re-dispatch of resources obligated to re-dispatch, is allowed both as a System adjustment (as identified in the column entitled 'Initial System Conditions') and a corrective action, where it can be demonstrated that Facilities remain within applicable Facility Ratings and those adjustments do not result in the shedding of any firm Demand. Where limited options for re-dispatch exist, sensitivities associated with the availability of those resources should be considered. Where Facilities external to the Transmission Planner's planning region are relied upon, Facility Ratings in those regions must should also be respected. Curtailment of Firm Transmission Service, when coupled with the appropriate re-dispatch of resources obligated to re-dispatch, is allowed both as a System adjustment (as identified in the column entitled 'Initial System Conditions') and a corrective action, where it can be demonstrated that Facilities remain within applicable Facility Ratings and those adjustments do not result in the shedding of any firm Demand. Where limited options for re-dispatch exist, sensitivities associated with the availability of those resources must be considered. Where Facilities external to the Transmission Planner's planning region are relied upon, Facility Ratings in those regions must also be adhered to.		
Manitoba Hydro	Yes	Note 10: The drafting team is to be congratulated for including the ability to curtail Firm Transmission Service as long as generation is available to redispatch to prevent firm load loss. Note 5: Firm transmission service can also be curtailed when the service is conditioned on the element is being available (note 5). It is recommended to add note 10 to contingencies P1 and P2. This would allow for curtailment of Firm Transmission Service via redispatch without dropping load when re-adjusting the system following these single contingency events, or automatically adjusting the system via an SPS action initiated by the P1 or P2 event, consistent with note b of the existing TPL standards. The consequence of not including Note 10 could mean extensive new transmission line construction without any increase in transfer capability. In Note 10, the SDT is assuming that the Firm transmission Service is Network Service to load. Does Note 10 also apply if the Firm Transmission Service is firm point-to-point service?
Response: The SDT agrees that Footnote 10 (now footnote 9) all System adjustments. However, P1 and P2 do not include System Adjustments. While the SDT recognizes that firm service has been granted on radial Facilities it is the SDT's opinion that such service is, in essence, Conditional Firm Service based upon the condition that the radial Facility is in service. No change made. Footnote 10 (now footnote 9) was added to address the disjoint between how some parties calculate ATC/AFC when assessing Long Term Firm Transmission Service and the currently proposed TPL-001-1 standard. TPL-001-1 requires Transmission Planners to plan their systems to meet multiple contingency events and some parties assess Long Term Firm Transmission Service on a first Contingency basis. Units obligated to re-dispatch, as contemplated in Footnote 9 are those units which are contractually bound to provide the service as well as those obligated to provide the service under Network Integrated Transmission Service, under FERC's pro		

Organization	Yes or No	Question 10 Comment
forma OATT. Under the pro forma OATT, units designated as network resources receiving NITS are obligated to re-dispatch as requested by the Transmission Provider pursuant to Section 33.2 to maintain reliability. The footnote is worded such that curtailment/re-dispatch cannot result in the loss of firm Load preserves the guidance given by FERC in Order 693 that no single Contingency result in the loss of firm Load. No change made. Where contractual agreements exist between entities allowing re-dispatch, and the curtailment of Firm Transmission Service associated with that re-dispatch was point-to-point, the point-to-point service curtailment would be allowed. In the case of units otherwise obligated, namely those resources with Network Integrated Transmission Service designated as network resources, curtailment of point-to-point service involving those resources would not be allowed as there is no obligation to do so.		
National Grid Northeast Utilities	Yes	Capitalize "Firm Transmission Service" in footnote 10 and instead of saying firm Load use Firm Demand to be consistent with the NERC Glossary
Northeast Power Coordinating Council	No	Capitalize Firm Transmission Service in footnote 10 and instead of saying firm Load use Firm Demand to be consistent with the NERC Glossary.
Response: The SDT agrees with the proposed changes. **Footnote 9:** Curtailment of Firm Transmission Service, when coupled with the appropriate re-dispatch of resources obligated to re-dispatch, is allowed both as a System adjustment (as identified in the column entitled 'Initial System Conditions') and a corrective action, where it can be demonstrated that Facilities remain within applicable Facility Ratings and those adjustments do not result in the shedding of any firm Demand. Where limited options for re-dispatch exist, sensitivities associated with the availability of those resources should be considered. Where Facilities external to the Transmission Planner's planning region are relied upon, Facility Ratings in those regions must should also be respected.: Curtailment of Firm Transmission Service, when coupled with the appropriate re-dispatch of resources obligated to re-dispatch, is allowed both as a System adjustment (as identified in the column entitled 'Initial System Conditions') and a corrective action, where it can be demonstrated that Facilities remain within applicable Facility Ratings and those adjustments do not result in the shedding of any firm Demand. Where limited options for re-dispatch exist, sensitivities associated with the availability of those resources must be considered. Where Facilities external to the Transmission Planner's planning region are relied upon, Facility Ratings in those regions must also be adhered to.		
BC Hydro	No	Comments: Consider changing Footnote 10 to read, "Curtailment of firm Transmission Service, when coupled with the appropriate re-dispatch of resources obligated to re-dispatch, is allowed both as a System adjustment (as identified in the column entitled ["title" is a noun, not a verb and "titled" is an adjective meaning having a title, esp. of nobility] "Initial System Conditions") and a corrective action provided both are accomplished automatically by a NERC-certified SPS, where it can be demonstrated that Facilities remain within applicable Facility Ratings and those adjustments do not result in the shedding of any firm Load. Where limited options for re-dispatch exist, sensitivities associated with the availability of those resources must be considered. Where Facilities external to the Transmission Planner's planning region are relied upon, Facility Ratings in those regions must be considered.
Response: The SDT agrees with the proposed use of "entitled". **Footnote 9:** Curtailment of Firm Transmission Service, when coupled with the appropriate re-dispatch of resources obligated to re-dispatch, is allowed		

Organization	Yes or No	Question 10 Comment
both as a System adjustment (as identified in the column entitled 'Initial System Conditions') and a corrective action, where it can be demonstrated that Facilities remain within applicable Facility Ratings and those adjustments do not result in the shedding of any firm Demand. Where limited options for re-dispatch exist, sensitivities associated with the availability of those resources should be considered. Where Facilities external to the Transmission Planner's planning region are relied upon, Facility Ratings in those regions must should also be respected. Curtailment of Firm Transmission Service, when coupled with the appropriate re-dispatch of resources obligated to re-dispatch, is allowed both as a System adjustment (as identified in the column entitled 'Initial System Conditions') and a corrective action, where it can be demonstrated that Facilities remain within applicable Facility Ratings and those adjustments do not result in the shedding of any firm Demand. Where limited options for re-dispatch exist, sensitivities associated with the availability of those resources must be considered. Where Facilities external to the Transmission Planner's planning region are relied upon, Facility Ratings in those regions must also be adhered to. The SDT respectfully disagree that inclusion of language limiting the use of Footnote 10 (now footnote 9) to only those applications where an SPS is involved would further complicate the application of the footnote and would unduly limit its application. No change made.		
San Diego Gas and Electric Co		We agree that TPL-005 and TPL-006 appear to have been adequately covered in the draft TPL-001-1 as currently written. However, we will need to review this assessment after TPL-001-1 is finalized. In addition, there is no place to state our concerns for Section D. so we added it here. We question the "not applicable" entry under Section D 1.1.2. What does it mean when the reset period is not applicable? Does it mean there is no reset period, so all non-compliance in all prior years will be counted as prior violations when considering non-compliance in future years?
Response: The sanctions guidelines developed by the compliance program as part of the ERO start-up process eliminated the use of the concept of the "compliance reset period." The reason the heading "Compliance Monitoring and Reset Time" is still in the standards template is because some Standards Committee members felt that a change to the standard template couldn't be made without having the change go through full due process. Therefore, NERC staff agreed to always put, "Not applicable" under this heading until the next version of the manual is issued. This term will be eliminated in Version 8.		
LADWP	No	The use of the term"Firm Transmission Service" is problematic at best. See my comments on R1. The proper term is "Expected Transfer Level"
Response: Although Firm Transmission Service is a defined term in the NERC Glossary, it is recognized that some planning processes do not designate inter-area transfers as firm or non-firm. Re-dispatch of Designated Network Resources or resources contractually bound to participate in re-dispatch activities would in many cases result in changes in area interchange and thus would still be allowed in Footnote 10 (now footnote 9). Additionally, the proposed standard now requires sensitivities to be included in the Planning Assessment which may include expected transfers. No change made.		
Central Maine Power Company	Yes	
Independent Electricity System Operator	Yes	

Organization	Yes or No	Question 10 Comment
Kansas City Power & Light	Yes	
Pepco Holdings, Inc. - Affiliates	Yes	
MRO MRO NERC Standards Review Subcommittee	Yes	N/A
SERC Engineering Committee Dynamics Review Subcommittee (DRS)	Yes	None.
Platte River Power Authority	Yes	
American Transmission Company	Yes	
Idaho Power	Yes	
Minnesota Power	Yes	
Midwest ISO	Yes	
NV Energy	Yes	
PJM	Yes	
Brazos Electric Cooperative	Yes	no comment
American Electric Power	Yes	
ITC Holdings	Yes	Comments: We concur that footnote 10 should not apply to P0, P1 or P2 events.
Entergy Services, Inc	Yes	Units obligated to re-dispatch must include all Network Resources
ISO New England, Inc.	Yes	
New Brunswick System Operator		No comment

Organization	Yes or No	Question 10 Comment
Western Area Power Administration	Yes	
MidAmerican Energy Company	Yes	
Deseret Generation & Transmission	Yes	
Gainesville Regional Utilities	Yes	
Western Area Power Administration	Yes	
Tampa Electric	Yes	
IRC Standards Review Committee	Yes	
TVA System Planning	Yes	
Exelon Transmission Planning	Yes	
United Illuminating	Yes	
FirstEnergy Corp	Yes	We presently agree with the Footnote 5 and text.
Response: Thank you for your response.		

11. The SDT has provided an Implementation Plan as part of this posting. The plan includes the retirement of TPL-005-0 and TPL-006-0. Do you agree with the elements of the Plan? If not, please provide specific comments.

Summary Consideration: There were 3 main comments associated with this question.

Eleven commenters indicated that 60 months is not enough time to build major lines, especially if up to 24 months is needed to do the Planning Assessment and develop a Corrective Action Plan. The SDT considered this issue when TPL-001-1, draft 3 was prepared, and the SDT discussed its position in light of the comments received from this posting. The SDT believes that extending the 60 month implementation period would water down the standard by potentially delaying some corrective actions that could be implemented in 60 months or less. The third draft of TPL-001-1 does in fact recognize the distinct possibility that major construction projects could take more than 60 months, in which case Requirement R2, part 2.7.5 would apply.

The relevant portion of that requirement states: "If situations arise that are beyond the control of the Transmission Planner or Planning Coordinator that prevent the implementation of a Corrective Action Plan in the required timeframe, then the Transmission Planner or Planning Coordinator is permitted to utilize Non-Consequential Load Loss and curtailment of Firm Transmission Service to correct the situation that would normally not be permitted in Table 1, provided that the Transmission Planner or Planning Coordinator documents that they are taking prudent actions to resolve the situation. …." This provision could be applied when formulating the original Corrective Action Plan when it is known in advance that the permitting and construction process will require longer than 60 months or after the plan is formulated and unexpected delays arise outside the Transmission Planner's or Planning Coordinator's control.

Eight commenters indicated that more time is needed before dynamic Load modeling Requirement R2, part 2.4.1 becomes effective. However, Requirement R2, part 2.4.1 does not require a detailed dynamic Load model, only an aggregate System model. The SDT believes that such a model can be developed within the 24 month period before this requirement becomes effective.

Seven commenters raised concerns about the retirement of TPL-005-0 and TPL-006-0, regarding the requirements or lack thereof being placed on the Planning Coordinators and Transmission Planners to provide inputs to the Regional Entities so they can meet their obligations to NERC to prepare regional assessments. The SDT believes that the retirement of TPL-005-0 and TPL 006-0 have been adequately addressed by adding the Requirement R3, part 3.4.1, Requirement R4, part 4.4, and Requirement R8 with part 8.1 in the fourth draft of TPL-001-1 to ensure that Planning Coordinators and Transmission Planners will provide the necessary inputs to the Regions so that the Regions can fulfill their obligations to NERC in accordance with the NERC Rules of Procedure.

Changes were made to the following requirements due to industry comments:

3.4.1 The Planning Coordinator and Transmission Planner shall coordinate with adjacent Planning Coordinators and Transmission Planners to ensure that Contingencies on adjacent Systems which may impact their Systems are included in the Contingency list.

4.4.1 The Planning Coordinator and Transmission Planner shall coordinate with adjacent Planning Coordinators and Transmission Planners to ensure that Contingencies on adjacent Systems which may impact their Systems are included in the Contingency list.

R8 Each Planning Coordinator and Transmission Planner shall distribute its its Planning Assessment results to adjacent Planning Coordinators and Transmission Planners and to any functional entity that indicates a reliability related need for the Planning Assessment results.

8.1 If a recipient of the Planning Assessment results provides documented comments on the results, the respective Planning Coordinator or Transmission Planner shall provide a documented response to that recipient within 90 calendar days of receipt of those comments.

Organization	Yes or No	Question 11 Comment
Dominion - Electric Transmission	No	Dominion agrees with the retirement of TPL-005-0 and TPL-006-0. However, Dominion has some concern over the implementation period and believes that 60 months to implement corrective action plans may not be enough. This standard has more stringent requirements ("raising the bar") than the current TPL standards. Having to assess the system for these new standards as well as implementing corrective action plans within 60 months could be difficult to get approval to site and construct new transmission. Dominion suggests that an additional 12 to 24 months be given to allow time for the assessments to determine violations, solicit input from all stakeholders through RTO process (As required by FERC 890) to determine the most appropriate corrective action plans.
Response: The SDT considered the issues you raise on the sufficiency of a 60 month implementation window when TPL-001-1, draft 3 was prepared, and the SDT discussed its position in light of your comments and similar comments from others. The SDT believes that extending the 60 month implementation period would water down the standard by potentially delaying some corrective actions that could be implemented in 60 months or less. The third draft of TPL-001-1 does in fact recognize the distinct possibility that major construction projects could take more than 60 months, in which case Requirement R2, part 2.7.5 would apply. The relevant portion of that requirement states: "If situations arise that are beyond the control of the Transmission Planner or Planning Coordinator that prevent the implementation of a Corrective Action Plan in the required timeframe, then the Transmission Planner or Planning Coordinator is permitted to utilize Non-Consequential Load Loss and curtailment of Firm Transmission Service to correct the situation that would normally not be permitted in Table 1, provided that the Transmission Planner or Planning Coordinator documents that they are taking prudent actions to resolve the situation. …." This provision could be applied when formulating the original Corrective Action Plan when it is known in advance that the permitting and construction process will require longer than 60 months or after the plan is formulated and unexpected delays arise outside the Transmission Planner's or Planning Coordinator's control.		
Northeast Power Coordinating Council	No	Please clarify, since R2 through R6 should become effective before results could be distributed to adjacent Planning Coordinators and any functional entity. However, by the wording of the effective date of R1 and R7 it appears R7 becomes effective before R2 to R6. That is, 24 months are allowed by the standard to complete the planning assessments after regulatory approval. The results may not be ready for distribution by the planning coordinator after the first twelve months. As written, the Standard would become effective at different times in different jurisdictions. Requirement R7 requires coordination among adjacent Planning Coordinators and any Functional Entity that has indicated a reliability need. Such coordination cannot be granted until the Standard is effective for all involved jurisdictions. The term "Planning Coordinator" is not defined in the NERC Glossary of Terms used in Reliability Standards and, therefore, this standard should indicate whether this term is the same as the "Planning Authority" defined in the glossary. Otherwise the definition of the Planning Coordinator should be included in the NERC Glossary of Terms used in Reliability Standards. With regard to the many changes/modifications from the previous draft and from the previous TPL standards being replaced by TPL-001-1, another posting of this Standard will be necessary to fully evaluate the impact (on reliability and also cost of implementation) of such changes. The decision to allow the use of all type of RAS or SPS (particularly generator tripping and run-back) as a common practice for single contingency does not "raise the bar" in the planning standard, and should be reviewed. How can higher system performance be required that involves substantial infrastructure investment to prevent

Organization	Yes or No	Question 11 Comment
		events with a very low probability of occurrence, and allow use of a less reliable measure (SPS failure or misoperation having a higher probability of occurrence) to reduce the investment for more probable events?
Response: Distribution of Planning Assessments under Requirement R7 (now Requirement R8) is not limited to Planning Assessment results produced in conformance with the revised standard. Until such results are available, the SDT intended that Planning Assessments produced using the existing standards would be distributed. Planning Coordinator is listed as the new term for Planning Authority in the latest approved version of the Functional Model and is in the latest version of the NERC Glossary of Terms Used in Reliability Standards. No change made. The SDT agrees that another posting is required and has produced a fourth draft. The SDT's intent was to raise the bar where it was practical to do so and not lower the bar in any case. The allowance for the use of SPS and RAS in response to single Contingencies simply reflects the existing practice in many parts of North America. Where this has not been a common practice, individual Regional Entities, Planning Coordinators or Transmission Planners have the latitude to establish more stringent criteria.		
SERC Engineering Committee Planning Standards Subcommittee	No	Construction activities:60 months effective date seems acceptable for planning activities, but may not adequate for all construction activities. Typical times to construct a transmission line in various areas of SERC can range between 7 to 10 years. Accordingly, we recommend the effective date for construction projects be changed to at least 84 months.Dynamic load models:More time is needed for entities to determine the appropriate dynamic load model required by R2.4.1. We recommend at least 36 months before this requirement becomes effective.
Response: The SDT considered the issues you raise on the sufficiency of a 60 month implementation window when TPL-001-1, draft 3 was prepared, and the SDT discussed its position in light of your comments and similar comments from others. The SDT believes that extending the 60 month implementation period would water down the standard by potentially delaying some corrective actions that could be implemented in 60 months or less. The third draft does in fact recognize the distinct possibility that major construction projects could take more than 60 months, in which case Requirement R2, part 2.7.5 would apply. The relevant portion of that requirement states: "If situations arise that are beyond the control of the Transmission Planner or Planning Coordinator that prevent the implementation of a Corrective Action Plan in the required timeframe, then the Transmission Planner or Planning Coordinator is permitted to utilize Non-Consequential Load Loss and curtailment of Firm Transmission Service to correct the situation that would normally not be permitted in Table 1, provided that the Transmission Planner or Planning Coordinator documents that they are taking prudent actions to resolve the situation. …." This provision could be applied when formulating the original Corrective Action Plan when it is known in advance that the permitting and construction process will require longer than 60 months or after the plan is formulated and unexpected delays arise outside the Transmission Planner's or Planning Coordinator's control. Requirement R2, part 2.4.1 does not require a detailed dynamic Load model, only an aggregate System model. The SDT believes that such a model can be developed within the 24 month period before this requirement becomes effective.		
Bonneville Power Administration		We agree that TPL-005 and TPL-006 appear to have been adequately covered in the draft TPL-001-1 as currently written. However, we will need to review this assessment after TPL-001-1 is finalized. In addition, there is no place to state our concerns for Section D. so we've added it here. We question the "not applicable" entry under Section D 1.1.2. What does it mean when the reset period is not applicable? Does it mean there is no reset period, so all non-compliance in all prior years will be counted as prior violations when considering non-compliance in future years? OTHER COMMENTS:Would like to see TPL-001-1 more specifically address system performance required for radial load areas served by multiple transmission circuits (unequal capacity) from a single source substation. For

Organization	Yes or No	Question 11 Comment
		example, a radial load served by a single circuit 115-kV line and a single circuit 230-kV line. For a single contingency loss of the 230-kV circuit, cannot serve peak load area demand. Is this situation meant to be covered by Category P1 in TPL-001-1? I don't see anything similar to TPL-002-0a, Category B, Note b under Loss of Demand.
Response: The sanctions guidelines developed by the compliance program as part of the ERO start-up process eliminated the use of the concept of the "compliance reset period." The reason the heading "Compliance Monitoring and Reset Time" is still in the standards template is because some Standards Committee members felt that a change to the standard template couldn't be made without having the change go through full due process. Therefore, NERC staff agreed to always put, "Not applicable" under this heading until the next version of the manual is issued. This term will be eliminated in Version 8. The loss of Load served by a single Transmission line would be considered Consequential Load Loss which is permitted by the TPL-001-1 standard. However, as in your example, if a Load is served by 2 Transmission lines and one of the lines is not sufficient to supply the Load for the loss of the other, then it would be considered Non-Consequential Load Loss which is not permitted.		
MRO MRO NERC Standards Review Subcommittee	No	MRO NSRS offers the following comments.The last paragraph should be removed from the Effective Date section. This paragraph contains requirements and describes compliance procedures, rather than stating effective date details. If any requirements regarding Corrective Action Plans are included, then they should be placed in the R2 section. If descriptions of compliance procedures related to Corrective Action Plan implementation are deemed to be necessary, then they should be placed in NERC procedure documents. This standard should not contain any requirements regarding the implementation of Corrective Action Plans. The implementation of transmission system action plans depends on the actions (e.g. financing, regulatory approval, legal services, engineering, construction, commissioning) of many different entities, other than PCs or TPs. So, PCs and TPs should not be held responsible for the implementation of action plans since they have little or no control over the activities related to implementation. The standard could include requirements that obligate PCs and TPs to develop Corrective Action Plans that are executable (i.e. plans that are based on lead times that provide reasonable assurance that the planned facilities can be placed in service by the time that they are needed) or devise revised Corrective Action Plans when they learn that the actions plans are not expected to be implemented by the intended in-service date. The standard could also include requirements that obligate PCs and TPs to establish and apply project implementation lead time assumptions that are derived from historical experience and the implementation lead time projections from the applicable TOs, GOs, and DPs. Remove or modify the 60 month effective date statement because it's impractical and unreasonable. The effective date for performing analyses and developing subsequent Corrective Action Plans is 24 months. This leaves only 36 months to expect that the more stringent Corrective Action Plans would be implemented. It is improbable that all action plans related to BES facilities, especially above 300 kV could be implemented. Some EHV projects can take 5 to 10 years to implement depending on the size, complexity, and controversial nature of the project. MRO NSRS suggests that the effective date be stated in a more "implementation dependent" rather than a "fixed timeframe" manner. Consider wording such as "tripping of Non-Consequential Load or curtailment of Firm Transmission Service (in accordance with Requirement R2.6.4) is allowed until Corrective Action Plans based on TPL-001-1 analyses are implemented".
Response: The SDT disagrees that the last paragraph of the Effective Date should be removed. No change made.		

Organization	Yes or No	Question 11 Comment
The SDT disagrees with your view that the Corrective Action Plans should not include implementation requirements. A plan has no value unless it is implemented. No change made. The SDT considered the issues you raise on the sufficiency of a 60 month implementation window when TPL-001-1, draft 3 was prepared, and the SDT discussed its position in light of your comments and similar comments from others. The SDT believes that extending the 60 month implementation period would water down the standard by potentially delaying some corrective actions that could be implemented in 60 months or less. The third draft does in fact recognize the distinct possibility that major construction projects could take more than 60 months, in which case Requirement R2, part 2.7.5 would apply. The SDT considered your suggestion to change the language of Requirement 2.7.5 to make it more "implementation dependent" rather than using a "fixed timeframe" but we do not believe such a change is appropriate because it would make auditing of this requirement difficult.		
SERC Engineering Committee Dynamics Review Subcommittee (DRS)	No	More time is needed for entities to determine the appropriate dynamic load model required by R2.4.1. We recommend at least 36 months before this requirement becomes effective. A 60 month effective date seems acceptable for planning activities, but may not adequate for all construction activities. Typical times to construct a transmission line in various areas of SERC can range between 7 to 10 years. Accordingly, we recommend the effective date for construction projects be changed to at least 84 months.
Response: The SDT considered the issues you raise on the sufficiency of a 60 month implementation window when TPL-001-1, draft 3 was prepared, and the SDT discussed its position in light of your comments and similar comments from others. The SDT believes that extending the 60 month implementation period would water down the standard by potentially delaying some corrective actions that could be implemented in 60 months or less. The third draft does in fact recognize the distinct possibility that major construction projects could take more than 60 months, in which case Requirement R2, part 2.7.5 would apply. The relevant portion of that requirement states: "If situations arise that are beyond the control of the Transmission Planner or Planning Coordinator that prevent the implementation of a Corrective Action Plan in the required timeframe, then the Transmission Planner or Planning Coordinator is permitted to utilize Non-Consequential Load Loss and curtailment of Firm Transmission Service to correct the situation that would normally not be permitted in Table 1, provided that the Transmission Planner or Planning Coordinator documents that they are taking prudent actions to resolve the situation. …." This provision could be applied when formulating the original Corrective Action Plan when it is known in advance that the permitting and construction process will require longer than 60 months or after the plan is formulated and unexpected delays arise outside the Transmission Planner's or Planning Coordinator's control.		
SERC Engineering Committee Reliability Review Subcommittee (RRS)	No	60 months after effective date seems generally acceptable for planning activities, but may not adequate for all construction activities. Typical times to construct a transmission line in various areas of SERC can range between 7 to 10 years. Accordingly, we recommend the effective date for construction projects be changed to at least 84 months. More time is needed for entities to determine the appropriate dynamic load model required by R2.4.1. We recommend at least 36 months before this requirement becomes effective. Since breaker duty is a new "raising the bar" issue - should there also be a 5 or more year implementation plan for this as well? Also trying to construct enough facilities within the 5 year implementation period will result in multiple outages at same time - possibly affecting SERC member's bulk reliability during this construction period. Also SERC members are concerned that EHV equipment manufacturers will not be able to meet all the equipment orders that will be required to meet the "raising the bar" requirements. SERC members are also concerned that the costs to meet the new requirements contained in this TPL will amount to many billions of dollars with very little impact overall on the reliability of the Bulk transmission system. "When will the Implementation Plan be removed from the standard after it is officially approved" Will a revised

Organization	Yes or No	Question 11 Comment
		TPL standard need to be prepared to omit this implementation language?? If contingencies in one utility's system results in issues within another utility, who is responsible for studying the contingencies and who would be responsible for documenting the CAP?

Response: The SDT considered the issues you raise on the sufficiency of a 60 month implementation window when TPL-001-1, draft 3 was prepared, and the SDT discussed its position in light of your comments and similar comments from others. The SDT believes that extending the 60 month implementation period would water down the standard by potentially delaying some corrective actions that could be implemented in 60 months or less. This third draft does in fact recognize the distinct possibility that major construction projects could take more than 60 months, in which case Requirement R2, part 2.7.5 would apply.

The relevant portion of that requirement states: "If situations arise that are beyond the control of the Transmission Planner or Planning Coordinator that prevent the implementation of a Corrective Action Plan in the required timeframe, then the Transmission Planner or Planning Coordinator is permitted to utilize Non-Consequential Load Loss and curtailment of Firm Transmission Service to correct the situation that would normally not be permitted in Table 1, provided that the Transmission Planner or Planning Coordinator documents that they are taking prudent actions to resolve the situation. …." This provision could be applied when formulating the original Corrective Action Plan when it is known in advance that the permitting and construction process will require longer than 60 months or after the plan is formulated and unexpected delays arise outside the Transmission Planner's or Planning Coordinator's control.

Requirement R2, part 2.4.1 does not require a detailed dynamic Load model, only an aggregate System model. The SDT believes that such a model can be developed within the 24 month period before this requirement becomes effective.

The SDT does not view the breaker duty requirements as a raising of the bar. While these may be new requirements in NERC Standards, the SDT believes that most entities already follow these practices because they are safety related.

If manufacturers or other service providers can not meet increased demands for equipment and services, that would be an event outside the control of the Planning Coordinator or Transmission Planner. With respect to any additional capital requirements driven by the new standard, the SDT can not speculate regarding the magnitude of such requirements. However, the SDT strongly believes that the revised standard is necessary to ensure an adequate level of reliability for North America's Bulk Electric Systems.

The Implementation Plan is not a part of the Standard per se but will be balloted.

The SDT has modified the language in Requirement R3, part 3.4.1 and Requirement R4, part 4.4.1 as well as Requirement R8 with part 8.1 to clarify the handling of "cross border" Contingencies and performance violations.

3.4.1 The Planning Coordinator and Transmission Planner shall coordinate with adjacent Planning Coordinators and Transmission Planners to ensure that Contingencies on adjacent Systems which may impact their Systems are included in the Contingency list.

4.4.1 The Planning Coordinator and Transmission Planner shall coordinate with adjacent Planning Coordinators and Transmission Planners to ensure that Contingencies on adjacent Systems which may impact their Systems are included in the Contingency list.

R8 Each Planning Coordinator and Transmission Planner shall distribute its Planning Assessment results to adjacent Planning Coordinators and Transmission Planners and to any functional entity that indicates a reliability related need for the Planning Assessment results.

8.1 If a recipient of the Planning Assessment results provides documented comments on the results, the respective Planning Coordinator or Transmission Planner shall provide a documented response to that recipient within 90 calendar days of receipt of those comments.

TVA System Planning	No	TVA is concerned that the 5 year window for meeting the "raising the bar" requirements is still not adequate. For instance, it typically takes TVA 7 to 10 years to build a new 500-kV transmission line - including time required for such processes as federally mandated NEPA environmental reviews. Strongly suggest increasing this time

Organization	Yes or No	Question 11 Comment
		window to 10 years.Also trying to construct enough facilities within the 5 year implementation period will result in multiple outages at same time - possibly affecting TVA's bulk reliability during this construction period. Also TVA is concerned that EHV equipment manufacturers will not be able to meet all the equipment orders that will be required to meet the "raising the bar" requirements. Thus TVA believes that these additional concerns strengthen the need to have a 10 year implementation period. Since breaker duty is a new "raising the bar" issue - should there also be a 5 year implementation plan for this as well? TVA is also concerned that the costs to meet the new requirements contained in this TPL will amount to between $1 billion to $2 billion with very little impact overall on the reliability of the Bulk transmission system. TVA is also very concerned about the increase in rates that will be required to support these new facilities. When will the Implementation Plan be removed from the standard after it is officially approved? Will a revised TPL standard need to be prepared to omit this implementation language? If contingencies in one utility's system results in issues within another utility, who is responsible for studying the contingencies and who would be responsible for documenting the CAP? More time is needed for entities to determine the appropriate dynamic load model required by R2.4.1. We recommend at least 36 months before this requirement becomes effective.

Response: The SDT considered the issues you raise on the sufficiency of a 60 month implementation window when TPL-001-1, draft 3 was prepared, and the SDT discussed its position in light of your comments and similar comments from others. The SDT believes that extending the 60 month implementation period would water down the standard by potentially delaying some corrective actions that could be implemented in 60 months or less. This third draft does in fact recognize the distinct possibility that major construction projects could take more than 60 months, in which case Requirement R2, part 2.7.5 would apply.

The relevant portion of that requirement states: "If situations arise that are beyond the control of the Transmission Planner or Planning Coordinator that prevent the implementation of a Corrective Action Plan in the required timeframe, then the Transmission Planner or Planning Coordinator is permitted to utilize Non-Consequential Load Loss and curtailment of Firm Transmission Service to correct the situation that would normally not be permitted in Table 1, provided that the Transmission Planner or Planning Coordinator documents that they are taking prudent actions to resolve the situation. …." This provision could be applied when formulating the original Corrective Action Plan when it is known in advance that the permitting and construction process will require longer than 60 months or after the plan is formulated and unexpected delays arise outside the Transmission Planner's or Planning Coordinator's control.

If manufacturers or other service providers can not meet increased demands for equipment and services, that would be an event outside the control of the Planning Coordinator or Transmission Planner.

The SDT does not view the breaker duty requirements as a raising of the bar. While these may be new requirements in NERC Standards, the SDT believes that most entities already follow these practices because they are safety related.

With respect to any additional capital requirements driven by the new standard, the SDT can not speculate regarding the magnitude of such requirements. However, the SDT strongly believes that the revised standard is necessary to ensure an adequate level of reliability for North America's Bulk Electric Systems.

The Implementation Plan is not a part of the Standard per se but it will be balloted.

The SDT has modified the language in Requirement R3, part 3.4.1, Requirement R4, part 4.4.1, and Requirement R8 with part 8.1 to clarify the handling of "cross border" Contingencies and performance violations.

3.4.1 The Planning Coordinator and Transmission Planner shall coordinate with adjacent Planning Coordinators and Transmission Planners to ensure that

Organization	Yes or No	Question 11 Comment
Contingencies on adjacent Systems which may impact their Systems are included in the Contingency list. **4.4.1** The Planning Coordinator and Transmission Planner shall coordinate with adjacent Planning Coordinators and Transmission Planners to ensure that Contingencies on adjacent Systems which may impact their Systems are included in the Contingency list. **R8** Each Planning Coordinator and Transmission Planner shall distribute its Planning Assessment results to adjacent Planning Coordinators and Transmission Planners and to any functional entity that indicates a reliability related need for the Planning Assessment results. **8.1** If a recipient of the Planning Assessment results provides documented comments on the results, the respective Planning Coordinator or Transmission Planner shall provide a documented response to that recipient within 90 calendar days of receipt of those comments. Requirement R2, part 2.4.1 does not require a detailed dynamic Load model, only an aggregate System model. The SDT believes that such a model can be developed within the 24 month period before this requirement becomes effective.		
FirstEnergy Corp	No	We disagree with the proposed Implementation Plan. The implementation period for the TPL-001-1 transmission planning standard should be limited to the time needed to transition to the new study requirements. The proposed 5-year implementation for the "raise the bar" aspects of this standard delves into project management and review of capital construction progress which should remain outside the scope of this standard. The standard should only consider if an entity has completed the required studies and has developed Corrective Action Plans to ensure performance criteria is being maintained. The last paragraph of the Implementation Plan is not appropriate for the Implementation Plan as it discusses compliance enforcement information. This paragraph should be srtuck.
Response: The SDT disagrees with your view that the Corrective Action Plans should not include implementation requirements. A plan has no value unless it is implemented. No change made. The SDT disagrees that the last paragraph of the Effective Date should be removed. No change made.		
IRC Standards Review Committee	Yes	The 3rd draft states this will be addressed later in the project. Removal of these standards would not affect NERC and the RE's obligations to perform assessments. Will the PC/TP be obligated under NERC Rules of Procedure to provide Assessments to NERC and the Regions upon request?
Midwest ISO	Yes	The 3rd draft states that this will be addressed later in the project. Removal of these standards would not affect NERC and the RE's obligations to perform assessments. Will the PC/TP be obligated under NERC Rules of Procedure to provide Assessments to NERC and the Regions upon request?
New York Independent System Operator		The 3rd draft states the Plan will be addressed later in the project. Removal of these standards would not affect NERC and the RE's obligations to perform assessments. The Standards Drafting Team should clarify whether the PC/TP will be obligated under NERC Rules of Procedure to provide Assessments to NERC and the Regions upon request.
Response: Retirement of TPL-005-0 and TPL 006-0 have been addressed by adding the necessary requirements in the fourth draft of TPL-001-1 to ensure that Planning Coordinators and Transmission Planners will provide the necessary inputs to the Regions so that the Regions can fulfill their obligations to NERC in accordance with the NERC Rules of Procedure. **3.4.1** The Planning Coordinator and Transmission Planner shall coordinate with adjacent Planning Coordinators and Transmission Planners to ensure that		

Organization	Yes or No	Question 11 Comment
Contingencies on adjacent Systems which may impact their Systems are included in the Contingency list. **4.4.1** The Planning Coordinator and Transmission Planner shall coordinate with adjacent Planning Coordinators and Transmission Planners to ensure that Contingencies on adjacent Systems which may impact their Systems are included in the Contingency list. **R8** Each Planning Coordinator and Transmission Planner shall distribute its Planning Assessment results to adjacent Planning Coordinators and Transmission Planners and to any functional entity that indicates a reliability related need for the Planning Assessment results. **8.1** If a recipient of the Planning Assessment results provides documented comments on the results, the respective Planning Coordinator or Transmission Planner shall provide a documented response to that recipient within 90 calendar days of receipt of those comments.		
Southern Company	No	More time is needed for entities to determine the appropriate dynamic load model required by R2.4.1. We recommend at least 36 months before this requirement becomes effective.Other than that, the SDT has done a good job in allowing time for entities to get into compliance with the requirements where the bar has been raised.
Response: Requirement R2, part 2.4.1 does not require a detailed dynamic Load model, only an aggregate System model. The SDT believes that such a model can be developed within the 24 month period before this requirement becomes effective.		
Lafayette Utilities System	No	Lafayette is in the area which is impacted by Entergy transmission planning. Entergy is one of the few NERC transmission owners which has for some years now relied upon its interpretation of “footnote b” in the previous TPL-001-0, TPL-002-0a, TPL-003-0a and TPL-004-0 as permitting planning for the loss of Non-Consequential Load or interruption of firm transfers as a way of planning and building less transmission than other utilities would have considered themselves obligated to build for reliability. That Entergy interpretation, and the consequent lower investment in transmission planning and construction, has been a matter of some concern among Entergy regulators at both State and Federal levels, as well as Entergy transmission customers, and has been rejected by the SPP, which has been given the authority to develop the base plan for transmission additions on the Entergy system. It was the Entergy rejection of that base plan that most recently led to a day long technical conference among regulators at the recent SEARUC conference in Charleston, SC.The proposed Implementation Plan for TPL-001-1 is drafted to make the new standard, which the proposed Implementation Plan describes as one that “raises the bar in several areas,” effective only after the passage of 60 months from the first day of the first calendar quarter following applicable approval. That time for implementation is also embodied in A.5 of the proposed standard. This time lag is chosen, according to the proposed Implementation Plan, because of the “significant budget, siting, permitting, and construction impacts on many transmission owners. There are significant problems and costs for those whose electric service is dependent upon an inadequate transmission system, which would argue for a lesser period of time to reach compliance. This is especially true when the existing system is planned on an assumption as to the meaning of footnote b which assumption was clearly recognized as being controversial and a minority view. In recent years there have been repeated Entergy TLRs at quite high levels, which have repeatedly required emergency EEA-3s to keep firm load on line. And there has been an ongoing dispute between Entergy and the SPP as to footnote b and whether there should be limits on consequential load to be shed which has led the SPP (as the Entergy ICT) to have a complete base case for Entergy transmission construction already developed which is, by FERC direction, the basis for the Entergy construction plan. In its construction plan, however, Entergy dropped some 20 of the projects in the SPP base plan because of the Entergy view that it could go ahead and plan to drop non-consequential load as a means of remaining in compliance with Standards rather than building the transmission projects that would have been required in accordance with the

Organization	Yes or No	Question 11 Comment
		SPP base plan. While not all of the proposed changes embodied in TPL-001-1 may have been incorporated in the SPP base plan development, certainly the footnote b issues were. The costs of the failure of reliability and congestion resulting from the Entergy failure have been quite high, for Entergy retail customers as well as for others, and will continue to be high so long as there is no obligation to comply. Firm transmission obligations are simply not met while there is no obligation to comply. While it is certainly true that transmission cannot be planned and constructed overnight, it is also true that those who relied upon the minority interpretation of footnote b have been on notice for years both that that interpretation was challenged, and also that it was a minority viewpoint, as NERC itself advised FERC in its response to the NOPR that preceded Order 693.In 2007 FERC directed that NERC clarify the intended meaning of footnote b in its Order 693, and pointed out at that time that the interpretation permitting loss of load was "based largely on the matter of economics, not reliability. Id., P 1792. At that time, only Entergy and NIPSCO (certainly not "many" Transmission Owners" a word that appears twice in the draft Implementation Plan) would even admit to their interpretation of footnote b to weaken the grid. NERC agreed that such an interpretation was incorrect in its filings leading up to Order 693. In its June 26, 2006 Comments of North American Electric Reliability Council and North American Electric Reliability Corporation on Staff Preliminary Assessment, at p. 57-58, NERC noted that load shedding in a single contingency event is not acceptable: "footnote b to TPL-002-0 is intended to provide a limited exception to the general rule for serving load from a radial transmission line and should only be applied in unique circumstances, as described above. NERC recognizes that looped configurations are key to the reliable operation of the interconnection, and to meet reasonable expectations for reliable service to loads. . . . NERC standards, including footnote b, are not intended to endorse or approve planning the interconnection using radial configurations as a preferred method for reliably serving load, nor do NERC standards consider load shedding acceptable for single contingency events. It thus seems strange for NERC, an organization whose very existence was intended to assure the reliability of the grid, to reward those recalcitrant transmission owners who intentionally failed to expend the money and effort that the responsible transmission owners did expend, and at the expense of those who rely on the transmission system to do its basic job. Order 693, P 1794, "strongly discourage[d] an approach that reflects the lowest common denominator. Many of those transmission owners and planners for whom this change constitutes "raising the bar" presumably had plenty of time to consider what their options would be if their interpretation was incorrect, and should be expected to have reserve plans on hand pretty close to being ready to go when the dispute was lost. In the Entergy case, the plan has been in its hands for some time, and the fact that it has chosen to reject the SPP plan based on its own minority interpretation of footnote b is no one's fault but its own. And it certainly does not have to start from scratch to develop the plan; it consciously chose to reject the plan that the ICT developed for it.Lafayette asks that at least as to the changes tied to footnote b interpretation, and other excuses for dropping non-consequential load, the time for compliance be shortened to no more than two years following regulatory approval of the standard. R2.6 already provides for the development of a Corrective Action Plan, and it would not encourage reliability if five years were taken to develop a Corrective Action Plan, as opposed to complying with the standard. Second, Lafayette suggests that, whether or not NERC chooses to stick with its 5-year "lowering of the bar" to permit those entities which may have used a similar interpretation of footnote b to avoid building a sturdy grid, it not try to influence FERC and the courts as to legal questions that may develop during that period. We recognize that the changes made in what will be TPL-001-1 go well beyond the clarification of footnote b, so that for some changes there may be a reason for the 5 year phase in. But whether or not the 5 year phase in is going to be

Organization	Yes or No	Question 11 Comment
		applicable to all of those changes, we suggest that it would be improper to mischaracterize what is being done in a way that appears to have been drafted to influence legal questions that may come up.Specifically, as currently drafted, the descriptive modifier "many" should not be used in describing the entities which had chosen to use the lower bar interpretation of footnote b. While we recognize that a number of commenters have looked to one interpretation or another of footnote b in a few extreme situations, a review of comments does not show other transmission owners who have relied on the extreme interpretation used by Entergy on a systematic basis, And we think it inappropriate for the description in the paragraph beginning at the bottom of p.1 of that draft Implementation Plan to focus on the footnote b issue, as it now does. We suggest a modification which makes the description accurate, and which avoids the kind of misinterpretation which led to the footnote b controversy in the first place. We suggest that that first part of that paragraph be revised to read as follows:TPL-001-1 "raises the bar" in several areas where performance requirements have been changed in the new Standard versus those in existing TPL-001-0, TPL-002-0a, TPL-003-0a and TPL-004-0. Among other things, loss of Non-Consequential Load or interruption of firm transfers is no longer allowed for certain events, whereas the existing Standards were interpreted by some to allow such actions. As shown in Table 1 of TPL-001-1, the performance requirements associated with the following events represent "raising the bar"??
Louisiana Energy and Power Authority	No	LEPA is in the area which is impacted by Entergy transmission planning. Entergy is one of the few NERC transmission owners which has for some years now relied upon its interpretation of "footnote b" in the previous TPL-001-0, TPL-002-0a, TPL-003-0a and TPL-004-0 as permitting planning for the loss of Non-Consequential Load or interruption of firm transfers as a way of planning and building less transmission than other utilities would have considered themselves obligated to build for reliability. That Entergy interpretation, and the consequent lower investment in transmission planning and construction, has been a matter of some concern among Entergy regulators at both State and Federal levels, as well as Entergy transmission customers, and has been rejected by the SPP, which has been given the authority to develop the base plan for transmission additions on the Entergy system. It was the Entergy rejection of that base plan that most recently led to a day long technical conference among regulators at the recent SEARUC conference in Charleston, SC.The proposed Implementation Plan for TPL-001-1 is drafted to make the new standard, which the proposed Implementation Plan describes as one that "raises the bar in several areas," effective only after the passage of 60 months from the first day of the first calendar quarter following applicable approval. That time for implementation is also embodied in A.5 of the proposed standard. This time lag is chosen, according to the proposed Implementation Plan, because of the "significant budget, siting, permitting, and construction impacts on many transmission owners. There are significant problems and costs for those whose electric service is dependent upon an inadequate transmission system, which would argue for a lesser period of time to reach compliance. This is especially true when the existing system is planned on an assumption as to the meaning of footnote b which assumption was clearly recognized as being controversial and a minority view. In recent years there have been repeated Entergy TLRs at quite high levels, which have repeatedly required emergency EEA-3s to keep firm load on line. And there has been an ongoing dispute between Entergy and the ICT as to footnote b and whether there should be limits on consequential load to be shed which has led the SPP (as the Entergy ICT) to have a complete base case for Entergy transmission construction already developed which is, by FERC direction, the basis for the Entergy construction plan. In its construction plan, however, Entergy dropped some 20 of the projects in the ICT base plan because of the Entergy view that it could go ahead and plan to drop non-consequential load as a means of remaining in compliance with

Organization	Yes or No	Question 11 Comment
		Standards rather than building the transmission projects that would have been required in accordance with the ICT base plan. While not all of the proposed changes embodied in TPL-001-1 may have been incorporated in the SPP base plan development, certainly the footnote b issues were. The costs of the failure of reliability and congestion resulting from the Entergy failure have been quite high, for Entergy retail customers as well as for others, and will continue to be high so long as there is no obligation to comply. Firm transmission obligations are simply not met while there is no obligation to comply. While it is certainly true that transmission cannot be planned and constructed overnight, it is also true that those who relied upon the minority interpretation of footnote b have been on notice for years both that that interpretation was challenged, and also that it was a minority viewpoint, as NERC itself advised FERC in its response to the NOPR that preceded Order 693.In 2007 FERC directed that NERC clarify the intended meaning of footnote b in its Order 693, and pointed out at that time that the interpretation permitting loss of load was "based largely on the matter of economics, not reliability. Id., P 1792. At that time, only Entergy and NIPSCO would even admit to this less reliable interpretation of footnote b. NERC agreed that such an interpretation was incorrect in its filings leading up to Order 693. In its June 26, 2006 Comments of North American Electric Reliability Council and North American Electric Reliability Corporation on Staff Preliminary Assessment, at p. 57-58, NERC noted that load shedding in a single contingency event is not acceptable: "footnote b to TPL-002-0 is intended to provide a limited exception to the general rule for serving load from a radial transmission line and should only be applied in unique circumstances, as described above. NERC recognizes that looped configurations are key to the reliable operation of the interconnection, and to meet reasonable expectations for reliable service to loads. . . . NERC standards, including footnote b, are not intended to endorse or approve planning the interconnection using radial configurations as a preferred method for reliably serving load, nor do NERC standards consider load shedding acceptable for single contingency events. Hence, those recalcitrant transmission owners who intentionally failed to expend the money and effort that the responsible transmission owners did expend, have been rewarded at the expense of those who rely on the transmission system to do its basic job. Order 693, P 1794, "strongly discourage[d] an approach that reflects the lowest common denominator. Many of those transmission owners and planners for whom this change constitutes "raising the bar" presumably had plenty of time to consider what their options would be if their interpretation was incorrect, and should be expected to have reserve plans on hand pretty close to being ready to go when the dispute was lost. In the Entergy case, the plan has been in its hands for some time, and it has chosen to reject the ICT plan based on its own minority interpretation of footnote b. LEPA asks that at least as to the changes tied to footnote b interpretation, and other excuses for dropping non-consequential load, the time for compliance be shortened to no more than two years following regulatory approval of the standard. R2.6 already provides for the development of a Corrective Action Plan, and it would not encourage reliability if five years were taken to develop a Corrective Action Plan, as opposed to complying with the standard. Second, LEPA suggests that, whether or not NERC chooses to stick with its 5-year time period to permit those entities which may have used a similar interpretation of footnote b, it not try to influence FERC and the courts as to legal questions that may develop during that period. We recognize that the changes made in what will be TPL-001-1 go well beyond the clarification of footnote b, so that for some changes there may be a reason for the 5 year phase in. But whether or not the 5 year phase in is going to be applicable to all of those changes, we suggest that it would be improper to mischaracterize what is being done in a way that appears to have been drafted to influence legal questions that may come up.Specifically, as currently drafted, the descriptive modifier "many" should not be

Organization	Yes or No	Question 11 Comment
		used in describing the entities which had chosen to use the lower bar interpretation of footnote b. While we recognize that a number of commenters have looked to one interpretation or another of footnote b in a few extreme situations, a review of comments does not show other transmission owners who have relied on the extreme interpretation used by Entergy on a systematic basis, And we think it inappropriate for the description in the paragraph beginning at the bottom of p.1 of that draft Implementation Plan to focus on the footnote b issue, as it now does. We suggest a modification which makes the description accurate, and which avoids the kind of misinterpretation which led to the footnote b controversy in the first place. We suggest that that first part of that paragraph be revised to read as follows:"TPL-001-1 "raises the bar" in several areas where performance requirements have been changed in the new Standard versus those in existing TPL-001-0, TPL-002-0a, TPL-003-0a and TPL-004-0. Among other things, loss of Non-Consequential Load or interruption of firm transfers is no longer allowed for certain events, whereas the existing Standards were interpreted by some to allow such actions. As shown in Table 1 of TPL-001-1, the performance requirements associated with the following events represent "raising the bar""?
Mississippi Delta Energy Agency	No	MDEA is in the area which is impacted by Entergy transmission planning. Entergy is one of the few NERC transmission owners which has for some years now relied upon its interpretation of "footnote b" in the previous TPL-001-0, TPL-002-0a, TPL-003-0a and TPL-004-0 as permitting planning for the loss of Non-Consequential Load or interruption of firm transfers as a way of planning and building less transmission than other utilities would have considered themselves obligated to build for reliability. That Entergy interpretation, and the consequent lower investment in transmission planning and construction, has been a matter of some concern among Entergy regulators at both State and Federal levels, as well as Entergy transmission customers, and has been rejected by the SPP, which has been given the authority to develop the base plan for transmission additions on the Entergy system. It was the Entergy rejection of that base plan that most recently led to a day long technical conference among regulators at the recent SEARUC conference in Charleston, SC.The proposed Implementation Plan for TPL-001-1 is drafted to make the new standard, which the proposed Implementation Plan describes as one that "raises the bar in several areas," effective only after the passage of 60 months from the first day of the first calendar quarter following applicable approval. That time for implementation is also embodied in A.5 of the proposed standard. This time lag is chosen, according to the proposed Implementation Plan, because of the "significant budget, siting, permitting, and construction impacts on many transmission owners. There are significant problems and costs for those whose electric service is dependent upon an inadequate transmission system, which would argue for a lesser period of time to reach compliance. This is especially true when the existing system is planned on an assumption as to the meaning of footnote b which assumption was clearly recognized as being controversial and a minority view. In recent years there have been repeated Entergy TLRs at quite high levels, which have repeatedly required emergency EEA-3s to keep firm load on line. And there has been an ongoing dispute between Entergy and the SPP as to footnote b and whether there should be limits on consequential load to be shed which has led the SPP (as the Entergy ICT) to have a complete base case for Entergy transmission construction already developed which is, by FERC direction, the basis for the Entergy construction plan. In its construction plan, however, Entergy dropped some 20 of the projects in the SPP base plan because of the Entergy view that it could go ahead and plan to drop non-consequential load as a means of remaining in compliance with Standards rather than building the transmission projects that would have been required in accordance with the SPP base plan. While not all of the proposed changes embodied in TPL-001-1 may have been incorporated in the

Organization	Yes or No	Question 11 Comment
		SPP base plan development, certainly the footnote b issues were. The costs of the failure of reliability and congestion resulting from the Entergy failure have been quite high, for Entergy retail customers as well as for others, and will continue to be high so long as there is no obligation to comply. Firm transmission obligations are simply not met while there is no obligation to comply. While it is certainly true that transmission cannot be planned and constructed overnight, it is also true that those who relied upon the minority interpretation of footnote b have been on notice for years both that that interpretation was challenged, and also that it was a minority viewpoint, as NERC itself advised FERC in its response to the NOPR that preceded Order 693.In 2007 FERC directed that NERC clarify the intended meaning of footnote b in its Order 693, and pointed out at that time that the interpretation permitting loss of load was "based largely on the matter of economics, not reliability. Id., P 1792. At that time, only Entergy and NIPSCO (certainly not "many" Transmission Owners? a word that appears twice in the draft Implementation Plan) would even admit to their interpretation of footnote b to weaken the grid. NERC agreed that such an interpretation was incorrect in its filings leading up to Order 693. In its June 26, 2006 Comments of North American Electric Reliability Council and North American Electric Reliability Corporation on Staff Preliminary Assessment, at p. 57-58, NERC noted that load shedding in a single contingency event is not acceptable: "footnote b to TPL-002-0 is intended to provide a limited exception to the general rule for serving load from a radial transmission line and should only be applied in unique circumstances, as described above. NERC recognizes that looped configurations are key to the reliable operation of the interconnection, and to meet reasonable expectations for reliable service to loads. . . . NERC standards, including footnote b, are not intended to endorse or approve planning the interconnection using radial configurations as a preferred method for reliably serving load, nor do NERC standards consider load shedding acceptable for single contingency events. It thus seems strange for NERC, an organization whose very existence was intended to assure the reliability of the grid, to reward those recalcitrant transmission owners who intentionally failed to expend the money and effort that the responsible transmission owners did expend, and at the expense of those who rely on the transmission system to do its basic job. Order 693, P 1794, "strongly discourage[d] an approach that reflects the lowest common denominator. Many of those transmission owners and planners for whom this change constitutes "raising the bar" presumably had plenty of time to consider what their options would be if their interpretation was incorrect, and should be expected to have reserve plans on hand pretty close to being ready to go when the dispute was lost. In the Entergy case, the plan has been in its hands for some time, and the fact that it has chosen to reject the SPP plan based on its own minority interpretation of footnote b is no one's fault but its own. And it certainly does not have to start from scratch to develop the plan; it consciously chose to reject the plan that the ICT developed for it.MDEA asks that at least as to the changes tied to footnote b interpretation, and other excuses for dropping non-consequential load, the time for compliance be shortened to no more than two years following regulatory approval of the standard. R2.6 already provides for the development of a Corrective Action Plan, and it would not encourage reliability if five years were taken to develop a Corrective Action Plan, as opposed to complying with the standard. Second, MDEA suggests that, whether or not NERC chooses to stick with its 5-year "lowering of the bar" to permit those entities which may have used a similar interpretation of footnote b to avoid building a sturdy grid, it not try to influence FERC and the courts as to legal questions that may develop during that period. We recognize that the changes made in what will be TPL-001-1 go well beyond the clarification of footnote b, so that for some changes there may be a reason for the 5 year phase in. But whether or not the 5 year phase in is going to be applicable to all of those changes, we suggest that it would be improper to mischaracterize what is being done in a way that

Organization	Yes or No	Question 11 Comment
		appears to have been drafted to influence legal questions that may come up.Specifically, as currently drafted, the descriptive modifier "many" should not be used in describing the entities which had chosen to use the lower bar interpretation of footnote b. While we recognize that a number of commenters have looked to one interpretation or another of footnote b in a few extreme situations, a review of comments does not show other transmission owners who have relied on the extreme interpretation used by Entergy on a systematic basis, And we think it inappropriate for the description in the paragraph beginning at the bottom of p.1 of that draft Implementation Plan to focus on the footnote b issue, as it now does. We suggest a modification which makes the description accurate, and which avoids the kind of misinterpretation which led to the footnote b controversy in the first place. We suggest that that first part of that paragraph be revised to read as follows:TPL-001-1 "raises the bar" in several areas where performance requirements have been changed in the new Standard versus those in existing TPL-001-0, TPL-002-0a, TPL-003-0a and TPL-004-0. Among other things, loss of Non-Consequential Load or interruption of firm transfers is no longer allowed for certain events, whereas the existing Standards were interpreted by some to allow such actions. As shown in Table 1 of TPL-001-1, the performance requirements associated with the following events represent "raising the bar"??
Response: Thank you for the background which helps the SDT understands your concerns. The SDT believes that this revised Standard has clarified the intent of the old footnote 'b' as well as other areas of the original standard that were open to interpretation. Standards must apply equally to all, so the SDT has chosen what it believes to be a reasonable implementation timeline that balances a wide variety of interests and circumstances. Finally, please note that the Implementation Plan document provided with this posting of the draft Standard is neither a part of the Standard or the Standard Roadmap but will be balloted. Therefore the SDT sees no need to modify the language.		
System Protection and Transmission Planning Department	Yes	We concur with SDT intent to retire TPL-005 and TPL-006. As there is no comment form entry to accept comments on MEASURES, we add one note here, related to "such as" lists - as noted above for R1.1.2, R2.1.4, R2.5.2, R3.3.4, R4.3.3, and R5. As written now, all measures include "such as" lists. We strongly suggest you remove "such as electronic or hard copies" from all measure statements.
Response: Thank you for your response. The SDT believes that examples of evidence "such as electronic or hard copies" help clarify the intent of the measure. Since no other responses requested removal of those words, the SDT will retain them.		
PacifiCorp Deseret Generation & Transmission SRP Southern California Edison Company Western Area Power Administration Pacific Gas and Electric Co, Puget Sound Energy, Inc.		We agree that TPL-005 and TPL-006 appear to have been adequately covered in the draft TPL-001-1 as currently written. However, we will need to review this assessment after TPL-001-1 is finalized. In addition, there is no place to state our concerns for Section D. so we added it here. We question the "not applicable" entry under Section D 1.1.2. What does it mean when the reset period is not applicable? Does it mean there is no reset period, so all non-compliance in all prior years will be counted as prior violations when considering non-compliance in future years?

Organization	Yes or No	Question 11 Comment
California ISO		
NV Energy	No	We agree that TPL-005 and TPL-006 appear to have been adequately covered in the draft TPL-001-1 as currently written. However, we will need to review this assessment after TPL-001-1 is finalized. In addition, there is no place to state our concerns for Section D. so we added it here. We question the "not applicable" entry under Section D 1.1.2. What does it mean when the reset period is not applicable? Does it mean there is no reset period, so all non-compliance in all prior years will be counted as prior violations when considering non-compliance in future years? Why is this changing from an annual reset period in the current standards?
Response: The sanctions guidelines developed by the compliance program as part of the ERO start-up process eliminated the use of the concept of the "compliance reset period." The reason the heading "Compliance Monitoring and Reset Time" is still in the standards template is because some Standards Committee members felt that a change to the standard template couldn't be made without having the change go through full due process. Therefore, NERC staff agreed to always put, "Not applicable" under this heading until the next version of the manual is issued. This term will be eliminated in Version 8.		
Tampa Electric	Yes	Consider having all requirements go into effect at the same time.
Response: The SDT chose a phased approach for establishing effective dates for individual requirements to reflect the broad range of implementation time frames associated with different requirements. Rather than use a least common denominator, which would have led to a new standard that would not be implemented for 60 months, those requirements that needed less time were assigned earlier effective dates. No change made.		
Florida Reliability Coordinating Council, Inc - Transmission Working Group		Overall the plan is an improvement! Allowing for a 60 month phase in of the more restrictive performance requirements is useful, however consider applying the 60 month phase in (or some timeframe) to P1 events for extenuating circumstances, e.g. unable to obtain ROW, etc. Having R1 and R7 going into effect first do raise the concern of what TPL standards are in effect during the time frame. The implementation should also be more specific on what "going into effect" means. Assessments are not a one day event but are a year long effort that culminates in a final "report" that is the assessment. Most NERC standards effect ongoing activities, and the day they go into effect the utilities functions are expected to be compliant. In this case that rationale would require that in the prior year two assessments where performed, one compliant with the current standard and one compliant with then new standard, however we don't believe that was the intent. Perhaps a statement below the paragraph regarding the 60 month implementation plan for Corrective Action Plans to the effect of:"Once effective all future assessments shall upon completion be compliant with this standard. Assessments completed prior to the effective date shall be based on the TPL standards in effect at the time. The standard is not intended to require a retroactively compliant assessment be in effect when the standard becomes active, but instead that the next assessment be compliant with the revised standard"
Response: The SDT believes that extenuating circumstances are covered in Requirement R2, part 2.7.5. The relevant portion of that requirement states: "If situations arise that are beyond the control of the Transmission Planner or Planning Coordinator that prevent the implementation of a Corrective Action Plan in the required timeframe, then the Transmission Planner or Planning Coordinator is permitted to utilize Non-Consequential Load Loss and curtailment of Firm Transmission Service to correct the situation that would normally not be permitted in Table 1, provided that the Transmission Planner or Planning Coordinator documents that they are taking prudent actions to resolve the situation. …." This provision could be applied when formulating the original Corrective Action Plan when it is known in advance that the permitting and construction process will require longer than 60 months or after the plan is formulated and unexpected delays arise outside the Transmission Planner's		

Organization	Yes or No	Question 11 Comment
or Planning Coordinator's control. The SDT recognizes that assessments take a period of time to complete. The date on which the assessment was initiated would determine whether the current TPL standards or the revised TPL-001-1 would govern compliance requirements. No change made.		
FMPA	No	We suggest that the 60 month calendar apply to the HV system as well for all Categories. It is just as difficult, if not more difficult, to build a new 138 kV line in the Florida Keys as it is to build a 300+ kV line. The same time frame should apply to both. Also, as highlighted in the comments above to R2.1.4, P3 essentially causes utilities to build upgrades to N-3 planning criteria which may necessitate significant transmission upgrades if left unchanged. Hence, if left unchanged, P3 ought to have at least 5 years as well. The implementation plan ought to include an "out" for extenuating circumstances, e.g., unable to obtain ROW, etc. For instance, it is doubtful that another line in the Keys could ever get built without significant intervention and utilities that are unable to obtain ROW should not receive sanctions for something outside of their control. Consider changing the effective dates of R1 and R7 to take effect at the same time as R2 through R6 so you do not have to meet two standards during the same time period. Otherwise, clarify how the effective date impacts which version of the standard is to be used in an assessment before a scheduled compliance audit. The implementation should also be more specific on what "going into effect" means. Assessments are not a one day event but are a year long effort that culminates in a final "report" that is the assessment. Most NERC standards effect ongoing activities, and the day they go into effect the utilities functions are expected to be compliant. In this case that rationale would require that in the prior year two assessments were performed, one compliant with the current standard and one compliant with then new standard, however we don't believe that was the intent. Perhaps a statement below the paragraph regarding the 60 month implementation plan for Corrective Action Plans to the effect of:?Once effective all future assessments shall upon completion be compliant with this standard. Assessments completed prior to the effective date shall be based on the TPL standards in effect at the time. The standard is not intended to require a retroactively compliant assessment be in effect when the standard becomes active, but instead that the next assessment be compliant with the revised standard?
Response: The revised standard has raised the bar for certain planning events. In those cases, a 60 month effective date is permitted. The determination as to when the 60 month period applies is related to the Contingency and not the solution. Therefore, if a 138 kV line is proposed as a corrective action for one of the raising the bar events, 60 months would be provided to implement the construction of the 138 kV line. Regarding the impact of spare policies, the SDT does not agree with your premise that solutions to meet this requirement could take at least 5 years. Since the requirement addresses spare transmission equipment, and not generating equipment as your example suggests, one direct solution would be to purchase additional spare transmission equipment. In virtually all cases this could be accomplished in less than 5 years. The SDT believes that extenuating circumstances are covered in Requirement R2, part 2.7.5. The relevant portion of that requirement states: "If situations arise that are beyond the control of the Transmission Planner or Planning Coordinator that prevent the implementation of a Corrective Action Plan in the required timeframe, then the Transmission Planner or Planning Coordinator is permitted to utilize Non-Consequential Load Loss and curtailment of Firm Transmission Service to correct the situation that would normally not be permitted in Table 1, provided that the Transmission Planner or Planning Coordinator documents that they are taking prudent actions to resolve the situation. …." The SDT chose a phased approach for establishing effective dates for individual requirements to reflect the broad range of implementation time frames associated with		

Organization	Yes or No	Question 11 Comment
different requirements. Rather than use a least common denominator, which would have led to a new standard that would not be implemented for 60 months, those requirements that needed less time were assigned earlier effective dates. No change made. The SDT recognizes that assessments take a period of time to complete. The date on which the assessment was initiated would determine whether the current TPL standards or the revised TPL-001-1 would govern compliance requirements. No change made		
Progress Energy Carolina (PEC)	No	More time than 12 months is needed for modeling the complete effects of Relay Protection Systems and the effects of Relay Loadability. PEC suggests that this period of time be extended to 24 months or longer.
Response: The standard does not require detailed modeling of Relay Protection Systems. It only requires that the impacts of those systems be reflected in the modeling of Contingencies and the evaluation of the resulting System performance. This is no different than the current standards.		
MidAmerican Energy Company	No	MidAmerican commends the SDT for its hard work on this standard. MidAmerican does not support the paragraph that states "Any entity that cannot fully implement its Corrective Action Plan".shall self report itself?? MidAmerican believes that the Energy Policy Act of 2005 does not provide NERC or FERC the authority to require construction of facilities. Therefore, MidAmerican believes that this paragraph should be deleted in its entirety from the implementation plan as requiring responsibility to build facilities or else self report non-compliance. This is in direct contradiction to federal law.
Response: The Corrective Action Plan requirements do not necessarily result in construction of new Facilities, although it is understood that in some cases the only practical solution to a performance violation will require new or upgraded Facilities. Therefore, the SDT does not believe that these requirements contradict federal law and disagrees with your recommendation that the paragraph you mentioned should be removed.		
Northeast Utilities	Yes	Other Comments:Comment 1 Please clarify, since R2 through R6 should become effective before results could be distributed to adjacent Planning Coordinators and any functional entity. However, by the wording of the effective date of R1 and R7 it appears R7 becomes effective before R2 to R6. That is, 24 months are allowed by the standard to complete the planning assessments after regulatory approval. The results may not be ready for distribution by the planning coordinator after the first twelve months. Comment 2 The term "Planning Coordinator" is not defined in the NERC Glossary of Terms used in Reliability Standards and, therefore, this standard should indicate whether this term is the same as the "Planning Authority" defined in the glossary. Otherwise the definition of the Planning Coordinator should be included in the NERC Glossary of Terms used in Reliability Standards.
Progress Energy Florida, Inc.	No	While the Implementation Plan is extremely vague at present, making a specific enforcement date impossible to determine, PEF is concerned that the language at present will not allow enough time for Transmission Owners to prepare for the increased stringency.
Response: The SDT chose a phased approach for establishing effective dates for individual requirements to reflect the broad range of implementation time frames associated with different requirements. Rather than use a least common denominator, which would have led to a new standard that would not be implemented for 60 months, those requirements that needed less time were assigned earlier effective dates. No change made. Planning Coordinator is defined in the latest approved version of the Glossary.		
Hydro-Québec TransEnergie (HQT)	No	With regard to the many changes/modifications from the previous draft and from the previous TPL standards being replaced by TPL-001-1, another posting of this Standard will be necessary to fully evaluate the impact (on

Organization	Yes or No	Question 11 Comment
		reliability and also cost of implementation) of such changes. The decision to allow the use of all type of RAS or SPS (particularly generator tripping and run-back) as a common practice for single contingency does not "raise the bar" in the planning standard, and should be reviewed. How can higher system performance be required that involves substantial infrastructure investment to prevent events with a very low probability of occurrence, and allow use of a less reliable measure (SPS failure or misoperation having a higher probability of occurrence) to reduce the investment for more probable events?
Response: The SDT agrees that another posting is required and has produced a fourth draft. The SDT's intent was to raise the bar where it was practical to do so and not lower the bar in any case. The allowance for the use of SPS and RAS in repose to single contingencies simply reflects the practice in many parts of North America. Where this has not been a common practice, individual Regional Entities, Planning Coordinators or Transmission Planners have the latitude to establish more stringent criteria.		
Ameren	No	At least 36 months would be needed for R1 compliance, should inclusion of explicit modeling of protection system equipment be required in dynamic model representations, and if all breakers would need to be explicitly modeled. More time is needed for entities to determine the appropriate dynamic load model required by R2.4.1. We recommend at least 36 months before this requirement becomes effective. 60 months effective date seems acceptable for planning activities, but may not adequate for all construction activities. Typical times to construct a transmission line in various areas of SERC can range between 7 to 10 years. Accordingly, we recommend the effective date for construction projects be changed to at least 84 months. 12 months appears reasonable for R7.
Response: The standard does not require detailed modeling of Relay Protection Systems or circuit breakers. It only requires that the impacts of those systems be reflected in the modeling of Contingencies and the evaluation of the resulting System performance. This is no different than the current standards. Requirement R2, part 2.4.1 does not require a detailed dynamic Load model, only an aggregate System model. The SDT believes that such a model can be developed within the 24 month period before this requirement becomes effective. The SDT considered the issues you raise on the sufficiency of a 60 month implementation window when TPL-001-1, draft 3 was prepared, and the SDT discussed its position in light of your comments and similar comments from others. The SDT believes that extending the 60 month implementation period would water down the standard by potentially delaying some corrective actions that could be implemented in 60 months or less. The third draft does in fact recognize the distinct possibility that major construction projects could take more than 60 months, in which case Requirement R2, part 2.7.5 would apply. The relevant portion of that requirement states: "If situations arise that are beyond the control of the Transmission Planner or Planning Coordinator that prevent the implementation of a Corrective Action Plan in the required timeframe, then the Transmission Planner or Planning Coordinator is permitted to utilize Non-Consequential Load Loss and curtailment of Firm Transmission Service to correct the situation that would normally not be permitted in Table 1, provided that the Transmission Planner or Planning Coordinator documents that they are taking prudent actions to resolve the situation. …." This provision could be applied when formulating the original Corrective Action Plan when it is known in advance that the permitting and construction process will require longer than 60 months or after the plan is formulated and unexpected delays arise outside the Transmission Planner's or Planning Coordinator's control.		
Manitoba Hydro	No	TPL-005-0 is a Regional and Interregional Self-Assessment Reliability Report. Such an assessment is beyond the capability of an individual PC or TP. While the new TPL-001-1 can and should include a requirement on the PC and TP to include in their assessments the interconnections with their adjacent systems, it does not make sense to

Organization	Yes or No	Question 11 Comment
		mandate an individual TP or PC to conduct an interregional assessment. Consequently, TPL-005-0 should be retained and mandated on the regions via the NERC delegation agreements with the regions.
Response: The standard does not require an individual Planning Coordinator or Transmission Planner to conduct an interregional assessment. It would require Planning Coordinators to provide the necessary inputs and work with the Regional Entity to provide a regional assessment that would continue to satisfy NERC's needs. The filing of a Planning Assessment by the Regional Entity is no longer required by a standard because it is covered adequately in NERC's Rules of Procedure.		
Entergy Services, Inc	No	P1 events needs to be correctly classified as "raising the bar": P1 events should be included in the bulleted list of areas where the "bar was raised". The paragraph beginning at the bottom of page 2 of the Implementation Plan clearly states that the bar was raised "because loss of Non-Consequential Load or interruption of firm transfers is no longer allowed". Since P1 events in the existing standard allow this, the revised P1 events should be categorized as a raising of the bar. " Effective date needs to be extended: Additionally, in the areas where the bar has been raised, the effective date needs to be extended to at least 7 years. Siting (environment assessment and permitting, right-of-way acquition, regulatory approvals) alone for many of the facilities likely needed can take 3 years or more in some areas. Likely delays due to litigation and affected stakeholder intervention must be considered. In addition, while the SDT has collected some cursory estimates of the costs which may be passed on to end-use customers, no discussion of the intended or expected increase in reliability has been published. Other considerations that will have an impact on the effective date are construction outages on the bulk transmission system and competition of resources (human and material). " Effect on reliability is not adequately quantified: Since one of the SDTs objectives is to ensure that "requirements set at an appropriate level to ensure reliability,"what reliability metrics are expected to be impacted? By how much? What will the billions of dollars spent on transmission procure in terms of reliability to ratepayers? To what degree would the proposed standard decrease the probability of a blackout? If a blackout were to occur, would the proposed standard tend to decrease or increase the size and magnitude of the event?? More time is needed for entities to determine the appropriate dynamic load model required by R2.4.1. We recommend at least 36 months before this requirement becomes effective. Since breaker duty is a new "raising the bar" issue - should there also be a 5 or more year implementation plan for this as well? If a Transmission Planner has a Corrective Action Plan identified within the accepted time limitations but the facilities identified in the CAP cannot be implemented in time, would the TP be found non-compliant on the TPL-001-1?? If contingencies in one utility's system results in issues within another utility, who is responsible for studying the contingencies and who would be responsible for documenting the CAP?
Response: The SDT disagrees that P1 represents a raising of the bar. While the exiting standard was somewhat unclear about dropping firm Non-Consequential Load for P1 type events, there is little evidence to support that as a widespread practice. Therefore, the revised standard is simply a clarification of the intent of the earlier standards. The SDT considered the issues you raise on the sufficiency of a 60 month implementation window when TPL-001-1, draft 3 was prepared, and the SDT discussed its position in light of your comments and similar comments from others. The SDT believes that extending the 60 month implementation period would water down the		

Organization	Yes or No	Question 11 Comment
standard by potentially delaying some corrective actions that could be implemented in 60 months or less. The third draft does in fact recognize the distinct possibility that major construction projects could take more than 60 months, in which case Requirement R2, part 2.7.5 would apply. The relevant portion of that requirement states: "If situations arise that are beyond the control of the Transmission Planner or Planning Coordinator that prevent the implementation of a Corrective Action Plan in the required timeframe, then the Transmission Planner or Planning Coordinator is permitted to utilize Non-Consequential Load Loss and curtailment of Firm Transmission Service to correct the situation that would normally not be permitted in Table 1, provided that the Transmission Planner or Planning Coordinator documents that they are taking prudent actions to resolve the situation. …." This provision could be applied when formulating the original Corrective Action Plan when it is known in advance that the permitting and construction process will require longer than 60 months or after the plan is formulated and unexpected delays arise outside the Transmission Planner's or Planning Coordinator's control. With respect to any additional capital requirements driven by the new standard, the SDT can not speculate regarding the magnitude of such requirements. However, the SDT strongly believes that the revised standard is necessary to ensure an adequate level of reliability for North America's Bulk Electric Systems. Requirement R2.4.1 does not require a detailed dynamic Load model, only an aggregate System model. The SDT believes that such a model can be developed within the 24 month period before this requirement becomes effective. The SDT does not view the breaker duty requirements as a raising of the bar. While these may be new requirements in NERC Standards, the SDT believes that most entities already follow these practices because they are safety related. If a Transmission Planner has prepared an acceptable Corrective Action Plan within the required time limits, but the implementation of the plan cannot be completed in time for reasons that are beyond the control of the Transmission Planner, " then the Transmission Planner or Planning Coordinator is permitted to utilize Non-Consequential Load Loss and curtailment of Firm Transmission Service to correct the situation that would normally not be permitted in Table 1, provided that the Transmission Planner or Planning Coordinator documents that they are taking prudent actions to resolve the situation. …." In such a case, it is the intent of the SDT that the Transmission Planner would be compliant. The SDT has modified the language in Requirement R3, part 3.4.1, Requirement R4, part 4.4.1, and Requirement R8 with part 8.1 to clarify the handling of "cross border" Contingencies and performance violations. **3.4.1** The Planning Coordinator and Transmission Planner shall coordinate with adjacent Planning Coordinators and Transmission Planners to ensure that Contingencies on adjacent Systems which may impact their Systems are included in the Contingency list. **4.4.1** The Planning Coordinator and Transmission Planner shall coordinate with adjacent Planning Coordinators and Transmission Planners to ensure that Contingencies on adjacent Systems which may impact their Systems are included in the Contingency list. **R8** Each Planning Coordinator and Transmission Planner shall distribute its Planning Assessment results to adjacent Planning Coordinators and Transmission Planners and to any functional entity that indicates a reliability related need for the Planning Assessment results. **8.1** If a recipient of the Planning Assessment results provides documented comments on the results, the respective Planning Coordinator or Transmission Planner shall provide a documented response to that recipient within 90 calendar days of receipt of those comments.		
PJM	No	Removal of these standards will not affect NERC and the Regional Entity's obligations to perform assessments. Will the PC/TP be obligated under NERC Rules of Procedure to provide Assessments to NERC and the Regions upon request?
Response: The standard does not require an individual Planning Coordinator or Transmission Planner to conduct an interregional assessment. The filing of an		

Organization	Yes or No	Question 11 Comment
assessment by the Regional Entity is no longer required by a standard because it is covered adequately in NERC's Rules of Procedure.		
ITC Holdings	Yes	Comments: We generally concur. However, it would appear that there is no incentive to submit a mitigation plan for less than 60 months for the new requirements that raise the bar (those listed as bullet points). If "circumstances are within your control" to mitigate in less than 60 months, why not require it?
Response: While the SDT understands the basis for your suggestion, it would be cumbersome and possibly confusing to change the requirements to apply differently in different circumstances. The SDT believes that peer reviews of the Corrective Action Plan and compliance audits would incent completion of corrective actions as soon as practical. No change made.		
Northern Indiana Public Service Company	No	In A5, text appearing under "Effective Date" is not clear regarding application of the phrase, "(above 300 kV)", for the first and fourth dot points.
Response: For the first dot, the parenthetical "above 300 kV" applies only to P2-2 events. For the fourth dot, the parenthetical applies to all events P4-1 through P4-5		
LADWP	No	Cannot agree to something when this is not final.
Idaho Power	No	I would like to review this after completion of the standard.
Response: The SDT was simply asking whether you agree with the Implementation Plan as written.		
Orlando Utilities Commission	Yes	Overall the plan is excellent! Allowing for a 60 month phase in of the more restrictive performance requirements and an exception for those who need longer to meet them is an equitable and reliable practice. Having R1 and R7 go into effect first though raises the question of what TPL standard is in effect during that time frame? I recommend having the entire standard go into effect at the same time and avoid that issue. There is limited benefit to R1 and R7 going into effect early. The implementation should also be more specific on what "going into effect" means. Assessments are not a one day event but are a year long effort that culminates in a final "report" that is the assessment. Most NERC standards affect ongoing activities, and the day they go into effect the utilities functions are expected to be compliant, this is not however so clear when the "function" is the culmination of a year long effort. Perhaps a statement below the paragraph regarding the 60 month carve out to the effect of: Once this standard becomes effective all future assessments shall be compliant with this standard. Assessments completed prior to the effective date shall be judged by their compliance with TPL standards in effect at the time.
Response: The SDT chose a phased approach for establishing effective dates for individual requirements to reflect the broad range of implementation time frames associated with different requirements. Rather than use a least common denominator, which would have lead to a new standard that would not be implemented for 60 months, those requirements that needed less time were assigned earlier effective dates. The SDT recognizes that assessments take a period of time to complete. The date on which the assessment was initiated would determine whether the current TPL standards or the revised TPL-001-1 would govern compliance requirements.		
American Transmission Company	No	We offer the following comments.The proposed standard implies that the 24 and 60 month periods run in parallel rather than sequentially. As currently proposed, the effective date for performing analyses and developing subsequent Corrective Action Plans is 24 months. If the identification of new needs and action plans take 24 months, then only 36 months would be left to implement the new action plans. It may not be feasible to install some BES facilities, especially above 300 kV in less than 3 years. Some EHV projects can take 5 to 10 years to

Organization	Yes or No	Question 11 Comment
		implement depending on the size, complexity, and controversial nature of the project. We suggest that the effective date be stated in a more "implementation dependent" rather than a "fixed timeframe" manner. Consider wording such as "tripping of Non-Consequential Load or curtailment of Firm Transmission Service (in accordance with Requirement R2.6.4) is allowed until Corrective Action Plans that are based on TPL-001-1 analyses can be implemented".
Response: The SDT considered the issues you raise on the sufficiency of a 60 month implementation window when TPL-001-1, draft 3 was prepared, and the SDT discussed its position in light of your comments and similar comments from others. The SDT believes that extending the 60 month implementation period would water down the standard by potentially delaying some corrective actions that could be implemented in 60 months or less. This third draft does in fact recognize the distinct possibility that major construction projects could take more than 60 months, in which case Requirement R2, part 2.7.5 would apply. The relevant portion of that requirement states: "If situations arise that are beyond the control of the Transmission Planner or Planning Coordinator that prevent the implementation of a Corrective Action Plan in the required timeframe, then the Transmission Planner or Planning Coordinator is permitted to utilize Non-Consequential Load Loss and curtailment of Firm Transmission Service to correct the situation that would normally not be permitted in Table 1, provided that the Transmission Planner or Planning Coordinator documents that they are taking prudent actions to resolve the situation. …." This provision could be applied when formulating the original Corrective Action Plan when it is known in advance that the permitting and construction process will require longer than 60 months or after the plan is formulated and unexpected delays arise outside the Transmission Planner's or Planning Coordinator's control. The SDT considered your suggestion to change the language of Requirement R2, part 2.7.5 to make it more "implementation dependent" rather than using a "fixed timeframe" but we do not believe such a change is appropriate because it would make auditing of this requirement difficult.		
Duke Energy	No	Requirements R2 through R6 are proposed to become effective the first day of the first calendar quarter 24 months after applicable regulatory approval, and we agree with that. However, the standard also provides that for 60 months following the first day of the first calendar quarter following applicable regulatory approval, Corrective Action Plans applying to performance elements P2-1, P2-2 (above 300 kV), P2-3 (above 300 kV), P3-1 through P3-5, P4-1 through P4-5 (above 300 kV), and P5 (above 300 kV) are allowed to include tripping of Non-Consequential Load or curtailment of Firm Transmission Service (in accordance with Requirement R2.6.4) that would not otherwise be permitted by the requirements of TPL-001-1. Since the first 24 months following regulatory approval will be spent developing and validating new studies and methodologies needed to meet TPL-001-1, that would only leave 36 months to implement corrective actions. We propose that the 60 month clock start with the effective dates of Requirements R2 through R6, to allow sufficient time to implement corrective actions that are determined within the 24 month period, which could include system modifications that require long lead times. Also, the implementation plan contains the following wording regarding retirement of the existing TPL standards: TPL-001-0, TPL-002-0a, TPL-003-0a, and TPL-004-0 are being retired as they are replaced in their entirety by TPL-001-1. TPL-005-0 and TPL-006-0 are being retired because their requirements are adequately covered by the revised TPL-001-1 and NERC's Rules of Procedure, Section 800. TPL-001-1 should not be used as a vehicle for fulfilling any of the TPL-005-0 and 006-0 requirements because of the difference in focus and entities involved. In reality, the new TPL-001-1 does not appear to have incorporated any of the requirements of TPL-005-0 and 006-0. TPL-001-1 appropriately focuses on how PC's and TP's should perform studies and document assessments of their transmission facilities impact on BES reliability. TPL-005-0 and 006-0 focus on assessments of regional and inter-regional BES reliability, including other non-transmission issues as well. The NERC Rules of Procedure and existing FERC Order 890 efforts appear to be sufficient to cover the requirements of TPL-005-0 and 006-0.

Organization	Yes or No	Question 11 Comment
		Therefore, retirement of TPL-005-0 and 006-0 is still appropriate.
Response: The SDT considered the issues you raise on the sufficiency of a 60 month implementation window when TPL-001-1, draft 3 was prepared, and the SDT discussed its position in light of your comments and similar comments from others. The SDT believes that extending the 60 month implementation period would water down the standard by potentially delaying some corrective actions that could be implemented in 60 months or less. This third draft does in fact recognize the distinct possibility that major construction projects could take more than 60 months, in which case Requirement R2, part 2.7.5 would apply. The relevant portion of that requirement states: "If situations arise that are beyond the control of the Transmission Planner or Planning Coordinator that prevent the implementation of a Corrective Action Plan in the required timeframe, then the Transmission Planner or Planning Coordinator is permitted to utilize Non-Consequential Load Loss and curtailment of Firm Transmission Service to correct the situation that would normally not be permitted in Table 1, provided that the Transmission Planner or Planning Coordinator documents that they are taking prudent actions to resolve the situation. …." This provision could be applied when formulating the original Corrective Action Plan when it is known in advance that the permitting and construction process will require longer than 60 months or after the plan is formulated and unexpected delays arise outside the Transmission Planner's or Planning Coordinator's control. The SDT believes that this revised standard together with NERC's Rules of Procedure will completely address the regional assessment requirements covered in the existing standards.		
Tucson Electric Power Company		We agree that TPL-005 and TPL-006 appear to have been adequately covered in the draft TPL-001-1 as currently written. However, we will need to review this assessment after TPL-001-1 is finalized. In addition, there is no place to state our concerns for Section D. so we added it here. We question the "not applicable" entry under Section D 1.1.2. What does it mean when the reset period is not applicable? Does it mean there is no reset period, so all non-compliance in all prior years will be counted as prior violations when considering non-compliance in future years? We believe that 60 months is not sufficient to implement the Corrective Action Plan for the "raise the bar" requirements. Siting transmission lines can take longer than this window. We strongly recommend increasing the window to 120 months which is a more realistic estimate of the time required to bring an EHV transmission project from conception to construction.
Response: The sanctions guidelines developed by the compliance program as part of the ERO start-up process eliminated the use of the concept of the "compliance reset period." The reason the heading "Compliance Monitoring and Reset Time" is still in the standards template is because some Standards Committee members felt that a change to the standard template couldn't be made without having the change go through full due process. Therefore, NERC staff agreed to always put, "Not applicable" under this heading until the next version of the manual is issued. This term will be eliminated in Version 8. The SDT considered the issues you raise on the sufficiency of a 60 month implementation window when TPL-001-1, draft 3 was prepared, and the SDT reconsidered its position in light of your comments and similar comments from others. The SDT believes that extending the 60 month implementation period would water down the standard by potentially delaying some corrective actions that could be implemented in 60 months or less. This third draft does in fact recognize the distinct possibility that major construction projects could take more than 60 months, in which case Requirement R2, part 2.7.5 would apply. The relevant portion of that requirement states: "If situations arise that are beyond the control of the Transmission Planner or Planning Coordinator that prevent the implementation of a Corrective Action Plan in the required timeframe, then the Transmission Planner or Planning Coordinator is permitted to utilize Non-Consequential Load Loss and curtailment of Firm Transmission Service to correct the situation that would normally not be permitted in Table 1, provided that the Transmission Planner or Planning Coordinator documents that they are taking prudent actions to resolve the situation. …." This provision could be applied when formulating the original Corrective Action Plan when it is known in advance that the permitting and construction process will require longer than 60 months or after the plan is formulated and unexpected delays arise outside the Transmission Planner's or Planning Coordinator's control.		

Organization	Yes or No	Question 11 Comment
Kansas City Power & Light	No	Regional areas may be made up of multiple Planning Coordinators. It is important to maintain an assessment of an entire Regional Reliability Organizations area. TPL-005 and TPL-006 should not be replaced with this proposed TPL-001.
Response: The SDT recognizes that many of the Regional Entities have multiple Planning Coordinators within their boundaries. The filing of an assessment by the Regional Entity is no longer required by a standard because it is covered adequately in NERC's Rules of Procedure.		
ReliabilityFirst Corporation	Yes	
Transmission Planning	Yes	
Pepco Holdings, Inc. - Affiliates	Yes	
Exelon Transmission Planning	Yes	
United Illuminating	Yes	
Western Area Power Administration	Yes	
Gainesville Regional Utilities	Yes, Yes	,
ISO New England, Inc.	Yes	
National Grid	Yes	
Brazos Electric Cooperative	Yes	no comment at this time
American Electric Power	Yes	
Minnesota Power	Yes	
Central Maine Power Company	Yes	
Response: Thank you for your response.		

Consideration of Comments on Fourth Draft of Standard TPL-001-1 — Project 2006-02

The Assess Transmission Future Needs Standard Drafting Team thanks all commenters who submitted comments on the fourth draft of the TPL-001-1 standard. This standard was posted for a 30-day public comment period from September 16, 2009 through October 16, 2009. The stakeholders were asked to provide feedback on the standards through a special Electronic Comment Form. There were 67 sets of comments, including comments from more than 180 different people from over 85 companies representing all of the 10 Industry Segments as shown in the table on the following pages.

http://www.nerc.com/filez/standards/Assess-Transmission-Future-Needs.html

Due to industry comments, the SDT has made the following clarifying changes;

- Definition: Non-Consequential Load Loss
- Requirement R1, part 1.1.6
- Requirement R2, parts 2.1.3, 2.1.4, 2.1.5, 2.3, 2.4, 2.4.3 bullet #3, 2.5, 2.6.2, 2.7, 2.7.1 bullets #1 and #4, and 2.9
- Requirement R3, parts 3.3, 3.3.2, 3.3.3 and 3.6
- Requirement R4, parts 4.1.2, 4.3, and 4.5
- Requirement R5
- Requirement R6
- Requirement R8
- Measures M1, M6, M7, and M8
- Table 1, Header notes 'b', 'f', and 'g', footnotes 1, 2, 3, 5, and 7
- Data retention for Requirement R1, R3, R5, R6, and R8
- VSLs for Requirements R1 and R8

While the changes cited address the vast majority of comments received, the following minority viewpoints remain:

- Continued concern over the value of the "raising the bar" for EHV Facilities
- Continued concern with excessive study or documentation requirements
- Concerns that the Implementation Plan could be interpreted to require construction (contrary to the Energy Policy Act of 2005)

In addition, several commenters requested that workshops be conducted to explain the details of the new standard. To date, the SDT has conducted 3 webinars and presented the standard at 2 different NERC standards workshops. In addition, the NERC Planning Committee has had 2 presentations and several regional entities requested and received presentations from SDT members. If Regional Entities wish to conduct seminars on the standard, SDT members from that region could be made available as participants in the discussions.

The SDT does not feel that this standard requires field testing prior to ballot. The SDT has not made any substantive or contextual changes with this posting and has determined that this standard is ready to go to ballot.

If you feel that your comment has been overlooked, please let us know immediately. Our goal is to give every comment serious consideration in this process! If you feel there has been an error or omission, you can contact the Vice President and Director of Standards, Gerry Adamski, at 609-452-8060 or at gerry.adamski@nerc.net. In addition, there is a NERC Reliability Standards Appeals Process.[1]

[1] The appeals process is in the Reliability Standards Development Procedures: http://www.nerc.com/standards/newstandardsprocess.html.

Index to Questions, Comments, and Responses

1. Requirement R1 – Please provide any specific comments on the requirement text, VRF, Time Horizon, measure associated with the requirement, data retention associated with the requirement, and/or the VSL associated with the requirement. 12
2. Requirement R2 – Please provide any specific comments on the requirement text, VRF, Time Horizon, measure associated with the requirement, data retention associated with the requirement, and/or the VSL associated with the requirement. 38
3. Requirement R3 – Please provide any specific comments on the requirement text, VRF, Time Horizon, measure associated with the requirement, data retention associated with the requirement, and/or the VSL associated with the requirement. 105
4. Requirement R4 – Please provide any specific comments on the requirement text, VRF, Time Horizon, measure associated with the requirement, data retention associated with the requirement, and/or the VSL associated with the requirement. 131
5. Requirement R5 – Please provide any specific comments on the requirement text, VRF, Time Horizon, measure associated with the requirement, data retention associated with the requirement, and/or the VSL associated with the requirement. (Note – This is a new requirement.).....159
6. Requirement R6 – Please provide any specific comments on the requirement text, VRF, Time Horizon, measure associated with the requirement, data retention associated with the requirement, and/or the VSL associated with the requirement. 168
7. Requirement R7 – Please provide any specific comments on the requirement text, VRF, Time Horizon, measure associated with the requirement, data retention associated with the requirement, and/or the VSL associated with the requirement. 172
8. Requirement R8 – Please provide any specific comments on the requirement text, VRF, Time Horizon, measure associated with the requirement, data retention associated with the requirement, and/or the VSL associated with the requirement. 175
9. The SDT has revised the definitions in response to industry comments to the third posting. Do you agree with these definition changes? If not, please clearly indicate which definition you disagree with and provide specific comments. 193
10. Do you agree with the changes in the performance elements and notes in Table 1? If not, please provide specific comments by note number, note alpha character, or performance category. 212
11. The SDT has provided a revised Implementation Plan as part of this posting. Do you agree with the revisions to the Plan? If not, please provide specific comments. 252
12. Do you believe that this standard is ready to go to ballot? (if 'No' is checked here, the SDT will consider that comments raised on the other questions drove that decision.)267

The Industry Segments are:

1 — Transmission Owners
2 — RTOs, ISOs
3 — Load-serving Entities
4 — Transmission-dependent Utilities
5 — Electric Generators
6 — Electricity Brokers, Aggregators, and Marketers
7 — Large Electricity End Users
8 — Small Electricity End Users
9 — Federal, State, Provincial Regulatory or other Government Entities
10 — Regional Reliability Organizations, Regional Entities

		Commenter	Organization	Industry Segment									
				1	2	3	4	5	6	7	8	9	10
1.	Group	Bob Cummings	TIS	X	X		X	X				X	X

	Additional Member	Additional Organization	Region	Segment Selection
1.	Eric M. Mortenson (Chair)	Exelon Energy Delivery		
2.	Mark Byrd (Vice Chair)	Progress Energy Carolinas		
3.	Gary Brownfield	Ameren		
4.	Kenneth A. Donohoo	Oncor Electric Delivery		
5.	Patricia E. Metro	National Rural Electric Cooperative Association		
6.	I. Paul McCurley	National Rural Electric Cooperative Association		
7.	Scott M. Helyer	Tenaska, Inc.		
8.	Israel Melendez	Constellation Energy Commodities Group		
9.	Hari Singh	Siemens Power Technologies International		8
10.	John M. Simonelli	ISO New England, Inc.		2
11.	Digaunto Chatterjee	MISO		2
12.	Steve Corey	New York Independent System Operator		2
13.	Dana Walters	National Grid USA	NPCC	9
14.	Hai Quoc Le	Northeast Power Coordinating Council, Inc.	NPCC	9

	Commenter	Organization	Industry Segment									
			1	2	3	4	5	6	7	8	9	10
15. Bill Harm		PJM	RFC	9								
16. Wenchun Zhu		American Transmission Company	MRO	9								
17. Salva R. Andiappan		Midwest Reliability Organization	MRO	9								
18. Hector Sanchez		Florida Power & Light Co.	FRCC	9								
19. Pedro Modia		Midwest Reliability Organization	FRCC	9								
20. W. Perry Stowe		Southern Company Transmission Company	SERC	9								
21. Jay Caspary		Southwest Power Pool	SPP	9								
22. Wesley Woitt		CenterPoint Energy	ERCOT	9								
23. David Franklin		Southern California Edison Company	WECC	9								
24. Branden Sudduth		Western Electricity Coordinating Council	WECC	9								
25. Other Observers and NERC Staff												
2. Group	Ben Li	SRC of ISO/RTO (Comments submitted by Mark Westendorf of Midwest ISO on behalf of Ben Li)		X								

	Additional Member	Additional Organization	Region	Segment Selection
1.	Ben Li	IESO	NPCC	2
2.	Bill Phillips	MISO	MRO	2
3.	Mark Thompson	AESO	WECC	2
4.	Charles Yeung	SPP	SPP	2
5.	Steve Myers	ERCOT	ERCOT	2
6.	Patrick Brown	PJM	RFC	2
7.	James Castle	NYISO	NPCC	2

3. Group	Guy Zito	Northeast Power Coordinating Council--RSC										X

	Additional Member	Additional Organization	Region	Segment Selection
1.	Ralph Rufrano	New York Power Authority	NPCC	5
2.	Alan Adamson	New York State Reliability Council, LLC	NPCC	10
3.	Gregory Campoli	New York Independent System Operator	NPCC	2
4.	Roger Champagne	Hydro-Quebec TransEnergie	NPCC	2
5.	Kurtis Chong	Independent Electricity System Operator	NPCC	2

	Commenter	Organization	Industry Segment									
			1	2	3	4	5	6	7	8	9	10
6. Sylvain Clermont	Hydro-Quebec TransEnergie	NPCC 1										
7. Saurabh Saksena	National Grid	NPCC 1										
8. Chris de Graffenried	Consolidated Edison Co. of New York, Inc.	NPCC 1										
9. Brian D. Evans-Mongeon	Utility Services	NPCC 8										
10. Mike Garton	Dominion Resources Services, Inc.	NPCC 5										
11. Brian L. Gooder	Ontario Power Generation Incorporated	NPCC 5										
12. Kathleen Goodman	ISO - New England	NPCC 2										
13. David Kiguel	Hydro One Networks Inc.	NPCC 1										
14. Michael R. Lombardi	Northeast Utilities	NPCC 1										
15. Randy MacDonald	New Brunswick System Operator	NPCC 2										
16. Greg Mason	Dynegy Generation	NPCC 5										
17. Bruce Metruck	New York Power Authority	NPCC 6										
18. Chris Orzel	FPL Energy/NextEra Energy	NPCC 5										
19. Robert Pellegrini	The United Illuminating Company	NPCC 1										
20. Michael Schiavone	National Grid	NPCC 1										
21. Peter Yost	Consolidated Edison Co. of New York, Inc.	NPCC 3										
22. Gerry Dunbar	Northeast Power Coordinating Council	NPCC 10										
23. Lee Pedowicz	Northeast Power Coordinating Council	NPCC 10										
4. Group	Philip R. Kleckley	SERC Planning Standards Subcommittee			X							
Additional Member	**Additional Organization**	**Region Segment Selection**										
1. John Sullivan	Ameren Services Co.	SERC 1										
2. Charles Long	Entergy	SERC 1										
3. Scott Goodwin	Midwest Independent Transmission System Operator	SERC 1										
4. James Manning	North Carolina Electric Membership Corporation	SERC 3										
5. Jim Kelley	PowerSouth Energy Cooperative	SERC 1										
6. Pat Huntley	SERC Reliability Corporation	SERC 10										
7. Bob Jones	Southern Company Services, Inc.-Trans	SERC 1										
8. David Marler	Tenessee Valley Authority	SERC 1										
5. Group	Bob Cummings (Coordinator)	NERC System Protection and Control Subcommittee (SPCS)	X	X		X	X				X	X

	Commenter	Organization	Industry Segment									
			1	2	3	4	5	6	7	8	9	10

	Additional Member	Additional Organization	Region	Segment Selection
1.	John L. Ciufo	Hydro One, Inc	NPCC	1
2.	Jonathan Sykes	PG&E	WECC	1
3.	Michael McDonald	Ameren Services Company	SERC	1
4.	William J. Miller	Exelon Corporation	RFC	1
5.	Josh Wooten	Tennessee Valley Authority	SERC	9
6.	Sungsoo Kim	Ontario Power Generation Inc	NPCC	5
7.	Joe T. Uchiyama	U.S. Bureau of Reclamation	WECC	5
8.	Charles W. Rogers	Consumers Energy	RFC	4
9.	Joseph M Burdis	PJM Interconnection, L.L.C.	RFC	2
10.	Jim Ingleson	New York Independent System Operator	NPCC	2
11.	Bryan J Gwyn	National Grid	NPCC	1, 10
12.	Henry G Miller	AEP Service Corp	RFC	1, 10
13.	Richard P. Quest	Xcel Energy	MRO	1, 10
14.	John Mulhausen	Florida Power & Light Co	FRCC	1, 10
15.	Philip Winston	Georgia Power Company	SERC	10, 1
16.	Dean Sikes	Cleco Power LLC	SPP	1, 10
17.	Samuel Francis	Oncor Electric Delivery	ERCOT	1, 10
18.	Baj Agrawal	Arizona Public Service Co	WECC	1, 10
19.	Thomas Wiedman	Wiedman Power System Consulting Ltd		NA
20.	Robert W. Cummings	NERC		NA
21.	Philip J Tatro	NERC		NA

6.	Group	W. R. Schoneck	Florida Power and Light	X		X							

	Additional Member	Additional Organization	Region	Segment Selection
1.	John Shaffer		FRCC	
2.	Pedro Modia		FRCC	
3.	Carlos Candelaria		FRCC	
4.	Kiko Barredo		FRCC	

7.	Group	Richard Kafka	Pepco Holdings, Inc. - Affiliates PHI	X		X		X	X				

		Commenter	Organization	Industry Segment									
				1	2	3	4	5	6	7	8	9	10
Additional Member	**Additional Organization**	**Region**	**Segment Selection**										
1. Bill Mitchell	Delmarva Power & Light Co.	RFC	1										
2. John Radman	Potomac Electric Power Co.	RFC	1										
3. Carl Kinsley	Atlantic City Electric	RFC	1										
8.	Group	Rick Foster	SERC Dynamics Review Subcommittee (DRS)	X								X	X
Additional Member	**Additional Organization**	**Region**	**Segment Selection**										
1. John Sullivan	Ameren Services Company	SERC	1										
2. Anthony Williams	Duke Energy Carolinas	SERC	1										
3. Sujit Mandal	Entergy	SERC	1										
4. Venkat Kolluri	Entergy	SERC	1										
5. John O'Connor	Progress Energy Carolinas	SERC	1										
6. Bob Jones	Southern Company Services, Inc. - Trans	SERC	1										
7. Jonathan Glidewell	Southern Company Services, Inc. - Trans	SERC	1										
8. Robbie Bottoms	Tennessee Valley Authority	SERC	1, 9										
9. Tom Cain	Tennessee Valley Authority	SERC	1, 9										
10. Herb Schrayshuen	SERC Reliability Corporation	SERC	10										
11. Carter Edge	SERC Reliability Corporation	SERC	10										
9.	Group	Steve Hill	Modesto Irrigation District Transmission Planning	X		X		X					
Additional Member	**Additional Organization**	**Region**	**Segment Selection**										
1. Spencer Tacke	MID	WECC	NA										
10.	Group	Doug Hohlbaugh	FirstEnergy Corp	X		X	X	X	X				
Additional Member	**Additional Organization**	**Region**	**Segment Selection**										
1. Ed Baznik	FE	RFC	1										
2. John Stephens	FE	RFC	1										
3. Jeff Mackauer	FE	RFC	1										
4. Carl Bridenbaugh	FE	RFC	1										
5. Sam Ciccone	FE		1, 3, 4, 6										

		Commenter	Organization	Industry Segment									
				1	2	3	4	5	6	7	8	9	10
11.	Group	Denise Koehn	Bonneville Power Administration	X		X		X	X				

	Additional Member	Additional Organization	Region	Segment Selection
1.	Berhanu Tesema	BPA Transmission Planning	WECC	1
2.	Melvin Rodrigues	BPA Transmission Planning	WECC	1
3.	Chuck Matthews	BPA Transmission Planning	WECC	1
4.	Kyle Kohne	BPA Transmission Planning	WECC	1
5.	Larry Furumasu	BPA Transmission Planning	WECC	1

12.	Group	Carol Gerou	NERC Standards Review Subcommittee										X

	Additional Member	Additional Organization	Region	Segment Selection
1.	Neal Balu	WPS Corporation	MRO	3, 4, 5, 6
2.	Terry Bilke	Midwest ISO Inc.	MRO	2
3.	Jodi Jenson	Western Area Power Administration	MRO	1, 6
4.	Ken Goldsmith	Alliant Energy	MRO	4
5.	Alice Murdock	Xcel Energy	MRO	1, 3, 5, 6
6.	Dave Rudolph	Basin Electric Power Cooperative	MRO	1, 3, 5, 6
7.	Eric Ruskamp	Lincoln Electric System	MRO	1, 3, 5, 6
8.	Joseph Knight	Great River Energy	MRO	1, 3, 5, 6
9.	Joe DePoorter	Madison Gas & Electric	MRO	3, 4, 5, 6
10.	Scott Nickels	Rochester Public Utilties Address	MRO	4
11.	Terry Harbour	MidAmerican Energy Company	MRO	1, 3, 5, 6

13.	Individual	Frank Gaffney, Regulatory Compliance Officer	Florida Municipal Power Agency, and its Member Cities, Lakeland Electric and Fort Pierce Utility Authority	X		X	X	X	X	X			
14.	Individual	Travis Hyde	Oklahoma Gas & Electric	X									
15.	Individual	Hugh Francis	Southern Company	X		X		X					
16.	Individual	Richard	FRCC Transmission Working Group	X		X	X					X	X

		Commenter	Organization	Industry Segment									
				1	2	3	4	5	6	7	8	9	10
17.	Individual	Brent Ingebrigtson	E.ON U.S.	X		X		X	X				
18.	Individual	Eric Mortenson	Exelon Transmission Planning	X		X							
19.	Individual	Tom Mielnik	MidAmerican Energy Company	X		X		X	X				
20.	Individual	Pete Jones	Puget Sound Energy, Inc.	X									
21.	Individual	Baj Agrawal	Arizona Public Service Co.	X		X		X					
22.	Individual	Jay Teixeira	ERCOT ISO		X								X
23.	Individual	Milorad Papic	Idaho Power	X									
24.	Individual	James Tucker	Deseret Power	X		X		X					
25.	Individual	Adam Menendez	Portland General Electric Co.	X		X		X	X				
26.	Individual	Kasia Mihalchuk	Manitoba Hydro	X		X		X	X				
27.	Individual	Tim Ponseti, VP	TVA System Planning	X									
28.	Individual	Brian Keel	SRP	X									
29.	Individual	Vishal Patel	Southern California Edison (SCE)	X		X		X					
30.	Individual	John Collins	Platte River Power Authority	X		X			X				
31.	Individual	Gordon Rawlings	British Columbia Transmission Corp	X	X								
32.	Individual	James Starling	SCE&G	X		X		X	X				
33.	Individual	Catherine Mathews	NorthWestern Energy	X		X		X					
34.	Individual	Dilip Mahendra	Sacramento Municipal Utility District	X		X	X	X					

		Commenter	Organization	Industry Segment									
				1	2	3	4	5	6	7	8	9	10
35.	Individual	Thad Ness	American Electric Power	X		X		X	X				
36.	Individual	Bart White	Progress Energy Florida, Inc.	X		X							
37.	Individual	Terry Huval	Lafayette Utilities System										
38.	Individual	Jessica Rice	NV Energy	X									
39.	Individual	L. Earl Fair	Gainesville Regional Utilities	X		X		X					
40.	Individual	Phuong Tran	Lakeland Electric	X		X		X					
41.	Individual	Michael Ayotte	ITC Holdings	X									
42.	Individual	John Pearson	ISO New England		X								
43.	Individual	Darryl Curtis	Oncor Electric Delivery	X									
44.	Individual	Scott Goodwin	Midwest ISO		X								
45.	Individual	John Sullivan	Ameren	X		X		X	X				
46.	Individual	Saurabh Saksena	National Grid	X		X							
47.	Individual	Robert H. Easton	Western Area Power Adm - RMR	X								X	
48.	Individual	Roger Champagne	Hydro-Québec TransEnergie (HQT)	X									
49.	Individual	Greg Campoli	NYISO		X								
50.	Individual	Chifong Thomas	Pacific Gas and Electric Co.	X		X		X					
51.	Individual	Greg Rowland	Duke Energy	X		X		X	X				
52.	Individual	David M. Conroy	Central Maine Power Company	X									

		Commenter	Organization	Industry Segment									
				1	2	3	4	5	6	7	8	9	10
53.	Individual	Paul Rocha	CenterPoint Energy	X									
54.	Individual	Mark Byrd	Progress Energy Carolinas	X		X		X					
55.	Individual	Larry Brusseau	MAPP								X		
56.	Individual	Aaron Staley	Orlando Utilities Commission	X		X		X	X				
57.	Individual	Martin Bauer	US Bureau of Reclamation					X					
58.	Individual	Michael R. Lombardi	Northeast Utilities	X		X		X					
59.	Individual	Alice Murdock	Xcel Energy	X		X		X	X				
60.	Individual	David Wang	San Diego Gas & Electric Co	X									
61.	Individual	Dan Rochester	Independent Electricity System Operator		X								
62.	Individual	Jason Shaver	American Transmission Company	X									
63.	Individual	R. Peter Mackin	Utility System Efficiencies, Inc. (USE)										
64.	Individual	Mark Graham, on behalf of the Power System Planning Department	Tri-State Generation and Transmission Association	X		X		X	X				
65.	Individual	David Bradt	United Illuminating	X									
66.	Individual	John Mayhan	Omaha Public Power District	X		X		X	X				
67.	Individual	Mark Kuras	PJM										

1. **Requirement R1 – Please provide any specific comments on the requirement text, VRF, Time Horizon, measure associated with the requirement, data retention associated with the requirement, and/or the VSL associated with the requirement.**

Summary Consideration: The SDT has made several clarifying changes to Requirement R1, Measure M1, and to the VSLs for R1 based on industry comments.

Requirement R1, Part 1.1.6 has been clarified to reflect that this requirement may not be exclusively sources supplying load. As an example, Demand Side-Management (DSM) may be used.

The words "within its respective area" have been added after "that it is maintaining System models," to Measure M1 for additional clarification.

The words "responsible entity's" have been added after "OR The" under the Moderate and Severe VSLs for Requirement R1 for additional clarification as well.

R1, Part 1.1.6 - Resources (supply or demand side) required for Load

R3.3.3. Trip Transmission elements when relay loadability limits are exceeded

R6. Each Transmission Planner and Planning Coordinator shall define and document, within their Planning Assessment, any criteria or methodology used in the analysis to identify System instability for conditions such as Cascading , voltage instability, or uncontrolled islanding.

M1. Each Transmission Planner and Planning Coordinator shall provide evidence, in electronic or hard copy format, that it is maintaining System models within its respective area, using the latest data consistent with MOD-010 and MOD-012, including items represented in the Corrective Action Plan, representing projected System conditions, and that the models represent the required information in accordance with Requirement R1.

R1 VSL	The responsible entity's System model failed to represent one of the Requirement R1, parts 1.1.1 through 1.1.6.	The responsible entity's System model failed to represent two of the Requirement R1, parts 1.1.1 through 1.1.6. OR The responsible entity's System model did not use the latest data consistent with the data provided in accordance with the MOD-010 and MOD-012 standards and other	The responsible entity's System model failed to represent three of the Requirement R1, parts 1.1.1 through 1.1.6.	The responsible entity's System model failed to represent four or more of the Requirement R1, parts 1.1.1 through 1.1.6. OR The responsible entity's System model did not represent projected System conditions as described in Requirement R1.

		sources, including items represented in the Corrective Action Plan.		

Organization	Comments for Question 1
ERCOT ISO	* This requirement seems to be embedding information that should be contained in the MOD standards. Does this present double jeopardy? This requirement, measurement, and VSL are all about maintaining models a MOD standard revision may need to be included or recommended to allow the focus of the TPL standard to be on transmission planning studies, not modeling. * Requirement 1.1.2 should read "all known outages of generation or transmission facilities with a duration of at least six months as appropriate for the timeframe represented by the particular model" * The moderate VSL category states "the System model did not use" this is confusing as the model does not do anything. It should contain the latest data. We also want to ensure this is not implying that the studies must use the latest data data changes continuously, and a study may never be complete if the data must be continuously updated. * Will any agreements made in R7 override the "each TP and PC" requirement? To clarify this, the requirement could be rephrased: "In accordance to the responsibilities assigned in R7, the responsible Transmission Planners and Planning Coordinators shall maintain System models for performing the studies needed to complete the required Planning Assessments. The models shall contain the latest data consistent with MOD-010 and MOD-012? "
Response: 1. The SDT believes that additional modeling requirements not presently contained in the MOD standards are necessary for Transmission Planning purposes. The SDT has incorporated these additional requirements in the TPL standard with the intent that they will be removed from the TPL standard when they are incorporated into the MOD standards at a later date. As for the double jeopardy comment - From the ERO Rules of Procedure, Appendix 4B- Sanction Guidelines, Section 3.10 Multiple Violations: "Strictly speaking, NERC or the regional entity can determine and levy a separate penalty or sanction, or direct remedial action, upon a violator for each individual violation. However, in instances of multiple violations related to a single act or common incidence of noncompliance, NERC or the regional entity will generally determine and issue a single aggregate penalty, sanction, or remedial action directive bearing reasonable relationship to the aggregate of the related violations. The penalty, sanction, or remedial action will not be that determined individually for the least serious of the violations; it will generally be at least as large or expansive as what would be called for individually for the most serious of the violations." 2. The SDT does not believe that the proposed language adds any clarity. No change made. 3. The SDT does not believe that the proposed language adds any clarity. No change made. The system models should be updated per MOD-010 & MOD-012. 4. Requirement R7 identifies the individual and joint responsibilities for performing required studies only. The SDT believes that both the Transmission Planner and Planning Coordinator have this modeling responsibility. Therefore the SDT believes that the existing language is adequate and that no changes are required.	
Bonneville Power Administration	: R1.1.4 could be interpreted that the standard requires forecasting reactive load. However, most entities forecast demand (MW) and apply a power factor(s) to calculate reactive load. Therefore, please change "real and reactive load forecast" to "forecasted demand and power factor" so it is clear that forecasting reactive load is not required.

Organization	Comments for Question 1
	For R1.1.5 we suggest changing the wording from "Known commitments for Firm Transmission Service and Interchange" to "Known commitments for Firm Transmission Service or Interchange". It is difficult to distinguish between the two in future cases where not all contractual arrangements are known.
NorthWestern Energy	As written R1.1.4, "Real and reactive Load forecasts", could mean that both Real and Reactive Load forecasts are required. Since most entities only forecast Real (MW) and apply a power factor for reactive (MVAR), wording could be changed to " forecasted demand and power factor" to clarify that forecasting reactive load is not required. In R1.1.5 Change "Firm Transmission Service and Interchange" to "Firm Transmission Service or Interchange". This way the requirement can be satisfied by either one or the other.
Deseret Power	Comments: R1.1.4 could be interpreted that the standard requires forecasting reactive load. However, most entities forecast demand (MW) and apply a power factor(s) to calculate reactive load. Therefore, please change "real and reactive load forecast" to "forecasted demand and power factor" so it is clear that forecasting reactive load is not required. For R1.1.5 we suggest changing the wording from "Known commitments for Firm Transmission Service and Interchange" to "Known commitments for Firm Transmission Service or Interchange". It is difficult to distinguish between the two in future cases where not all contractual arrangements are known.
Idaho Power	R1.1.4 could be interpreted that the standard requires forecasting reactive load. However, most entities forecast demand (MW) and apply a power factor(s) to calculate reactive load. Therefore, please change "real and reactive load forecast" to "forecasted demand and power factor" so it is clear that forecasting reactive load is not required. For R1.1.5 I suggest changing the wording from "Known commitments for Firm Transmission Service and Interchange" to "Known commitments for Firm Transmission Service or Interchange". It is difficult to distinguish between the two in future cases where not all contractual arrangements are known.
Modesto Irrigation District Transmission Planning	R1.1.4 could be interpreted that the standard requires forecasting reactive load. However, most entities forecast demand (MW) and apply a power factor(s) to calculate reactive load. Therefore, please change "real and reactive load forecast" to "forecasted demand and power factor" so it is clear that forecasting reactive load is not required. R1.1.5 we suggest changing the wording from "Known commitments for Firm Transmission Service and Interchange" to "Known commitments for Firm Transmission Service or Interchange". It is difficult to distinguish between the two in future cases where not all contractual arrangements are known.
NV Energy	R1.1.4 could be interpreted that the standard requires forecasting reactive load. However, most entities forecast demand (MW) and apply a power factor(s) to calculate reactive load. Therefore, please change "real and reactive load forecast" to "forecasted demand and power factor" so it is clear that forecasting reactive load is not required. For R1.1.5 we suggest changing the wording from "Known commitments for Firm Transmission Service and Interchange" to "Known commitments for Firm Transmission Service or Interchange". It is difficult to distinguish between the two in future cases

Organization	Comments for Question 1
	where not all contractual arrangements are known.
Pacific Gas and Electric Co.	R1.1.4 could be interpreted that the standard requires forecasting reactive load. However, most entities forecast demand (MW) and apply a power factor(s) to calculate reactive load. Therefore, please change “real and reactive load forecast” to “forecasted demand and power factor” so it is clear that forecasting reactive load is not required. For R1.1.5 we suggest changing the wording from “Known commitments for Firm Transmission Service and Interchange” to “Known commitments for Firm Transmission Service or Interchange”. It is difficult to distinguish between the two in future cases where not all contractual arrangements are known.
Puget Sound Energy, Inc.	R1.1.4 could be interpreted that the standard requires forecasting reactive load. However, most entities forecast demand (MW) and apply a power factor(s) to calculate reactive load. Therefore, please change “real and reactive load forecast” to “forecasted demand and power factor” so it is clear that forecasting reactive load is not required. For R1.1.5 we suggest changing the wording from “Known commitments for Firm Transmission Service and Interchange” to “Known commitments for Firm Transmission Service or Interchange”. It is difficult to distinguish between the two in future cases where not all contractual arrangements are known.
San Diego Gas & Electric Co	R1.1.4 could be interpreted that the standard requires forecasting reactive load. However, most entities forecast demand (MW) and apply a power factor(s) to calculate reactive load. Therefore, please change “real and reactive load forecast” to “forecasted demand and power factor” so it is clear that forecasting reactive load is not required. R1.1.5 "firm transmission service agreements" should be removed the from the requirement. Firm transmission service agreements, "known" or otherwise, have no effect on reliable operation of the grid; power will flow where it wants, not where, or how, the firm transmission service agreement may specify. From a reliability perspective this information is of no use.
Southern California Edison (SCE)	R1.1.4 could be interpreted that the standard requires forecasting reactive load. However, most entities forecast demand (MW) and apply a power factor(s) to calculate reactive load. Therefore, please change “real and reactive load forecast” to “forecasted demand and power factor” so it is clear that forecasting reactive load is not required. For R1.1.5 we suggest changing the wording from “Known commitments for Firm Transmission Service and Interchange” to “Known commitments for Firm Transmission Service or Interchange”. It is difficult to distinguish between the two in future cases where not all contractual arrangements are known.
SRP	R1.1.4 could be interpreted that the standard requires forecasting reactive load. However, most entities forecast demand (MW) and apply a power factor(s) to calculate reactive load. Therefore, please change “real and reactive load forecast” to “forecasted demand and power factor” so it is clear that forecasting reactive load is not required. For R1.1.5 we suggest changing the wording from “Known commitments for Firm Transmission Service and Interchange” to “Known commitments for Firm Transmission Service or Interchange”. It is difficult to distinguish between the two in future cases where not all contractual arrangements are known.

Organization	Comments for Question 1
Western Area Power Adm - RMR	R1.1.4 could be interpreted that the standard requires forecasting reactive load. However, most entities forecast demand (MW) and apply a power factor(s) to calculate reactive load. Therefore, please change "real and reactive load forecast" to "forecasted demand and power factor" so it is clear that forecasting reactive load is not required. For R1.1.5, I suggest changing the wording from "Known commitments for Firm Transmission Service and Interchange" to "Known commitments for Firm Transmission Service or Interchange". It is difficult to distinguish between the two in future cases where not all contractual arrangements are known.
Response: 1. Requirement R1, part 1.1.4 states that a reactive forecast is required. Using a power factor is one method that may be used in calculating this reactive forecast. No change made. 2. The SDT believes that the existing language is adequate and no further change is required. If you do not have any known Firm Transmission Service as an example, then this fact should just be documented.	
Northeast Utilities	[R1.1.6] What is NERC's definition of "Resources required to supply load"?[Add R1.1.7] The standard is referring to requirements for sensitivity and other issues without a reference to base cases. There needs to be some direction provided on the initial conditions used in the assessment. This guidance should include a discussion as to whether or not generator forced outages are to be represented in the base cases. Additionally, the standard is also silent on the treatment of system transfers, both internal and external, as to how they should be modeled in the base cases. For some areas, their current practice is to include heavy system stresses in their base cases. It is unclear if this practice works within the purview of this standard. Therefore, it is recommended that each Region must have a document that defines what constitutes base case conditions.
Response: 1. "Resources required to supply load" is not a NERC defined term. "Facility" is a defined term and does include generators. The SDT has made a clarifying change to Requirement R1, part 1.1.6. **R1, part 1.1.6** - Resources (supply or demand side) required for Load **2.** The SDT believes that "base case conditions" should be defined by the entity performing the study. Sensitivity studies are performed to provide insight into the impacts of potential variations of assumptions in studies. The SDT therefore declines to make the change as suggested. Please note that Requirement R1, part 1.1.2 includes only known outages of generation with duration of at least 6 months. Requirement R1, part 1.1.5 includes known commitments for Firm Transmission Service and Interchange - while the sensitivity analysis under Requirement R2, parts 2.1.4 and 2.4.3 can include varying expected transfers by a sufficient amount to stress the System. The Standard will leave it up to each Region to further define their own base case documentation if they desire to have such a document.	
Progress Energy Florida, Inc.	As PEF is opposed to TPL-001-1 as a whole, PEF will have no further comment on this issue other than to encourage all appropriate parties to review PEF's previous comments to this effect.
Response: Throughout the drafting process, the SDT has carefully considered your comments as well comments from other industry members.	
American Electric Power	Because the revised transmission planning standard now explicitly references short circuit analysis, we believe that there is a

Organization	Comments for Question 1
	need for a parallel MOD standard to establish requirements for short circuit modeling and for a corresponding reference under R1, just as there are references made in R1 to MOD-010 (power flow models) and MOD-012 (stability models) . We recognize that such a MOD standard will not be addressed as part of this project, but we request that the SDT pass this comment on to NERC Staff.
Response: NERC has committed that it will update the appropriate MOD standards after the TPL revisions are finalized. A note has already been made in the official NERC issues database for a revision to the MOD standards based on the changes to TPL.	
CenterPoint Energy	CenterPoint Energy appreciates the SDT's efforts in revising R1 and generally agrees with the requirement except for verbiage and sub-requirements relating to modeling future transmission system projects, including projects identified in Corrective Action Plans. Specifically, CenterPoint Energy recommends that the SDT revise R1 by deleting the text "including items represented in the Corrective Action Plan" and delete part 1.1.3 in its entirety. Certainly, it is appropriate to model some limited subset of future projects, including projects included in Corrective Action Plans, which are reasonably "firm" or "committed". In previous drafts, the SDT tried to incorporate language to capture that concept but apparently abandoned the idea in response to industry comments. However, it remains true that many future "planned" projects, including projects in Corrective Action Plans, are tentative in nature and have a high degree of uncertainty due to uncertainty in forecasted system conditions. Because of this reality, and the fact that models are intended to be useful for identifying what future projects might be necessary, CenterPoint Energy believes many transmission planning organizations do not and should not model any and all new planned transmission facilities tentatively identified based upon studies and assessments of previous system models. Once the System model is updated with previously contemplated transmission projects, it is problematic to determine in future studies whether or not those projects are still needed, which is contrary to the intent of updating the model. If CenterPoint Energy's recommended changes are made, Transmission Planners and Planning Coordinators would not be precluded from incorporating future projects into their System models in accordance with their established practice but they would not be required to inappropriately model any and all previously contemplated projects.
Response: The SDT believes that the Corrective Action Plans and Requirement R1, part 1.1.3 are being correctly used in this planning standard. Please note that there are a variety of associated actions that can be used to achieve required System performance as noted in Requirement R2, part 2.7.1. The SDT agrees that systems can change over time which will result in some changes for the Corrective Action Plans. The SDT is not trying to "pin down" entities in regards to these plans but to ensure that entities are planning reliable Transmission Systems and have sufficient time to get needed plans in service to continue meeting the TPL 001-1 requirements. The SDT believes that these actions are needed in the planning horizons in order to have a reliable Bulk Electric System. No change made.	
Platte River Power Authority	Change R1.1.5 wording from "...Service and Interchange." to "...Service or Interchange."
Response: The SDT believes that the existing language is adequate and no further change is required. If you do not have any known Firm Transmission Service as an example, then this fact should just be documented.	
ITC Holdings	Comments: These requirements refer to new facilities which would include new generators. ITC requests clarification as to what constitutes a "new generator" that needs to be considered -- those in the queue, those with signed Interconnection Agreements, those under construction... What is the line of demarcation between what is in and what is out?

Organization	Comments for Question 1
	In addition to the above, ITC also requests clarification as to whether or not these requirements apply to new generators, who connect to the network as "Energy Only" resources and, are either, not required to construct facilities needed to meet reliability requirements or are allowed to operate as "Energy Only" until needed facilities are constructed. The CAP for these facilities is that they will be curtailed or other generation will be curtailed should "operating" violations occur. Under market mechanisms, these generators are allowed to operate if their energy prices are lower than other generators whose curtailment eliminates the violation, even though the curtailed generators have paid for the facilities needed to meet reliability requirements. As the standard is written, these requirements imply that all generators must be included in studies. Were we to do so, significant standards violations might result. Does the Transmission Owner have to study all violation scenarios or include all "Energy Only" generators in studies when the CAP is always the same: "Market redispatch". Please clarify study scenario requirements for "Energy Only" resources.
Response: 1. Requirement R1 is a modeling requirement which requires any expected operational Facilities to be modeled based on market and contractual obligations. 2. The SDT believes that the requirements under this standard do include "Energy Only" generators. Please note under Requirement R2, part 2.7.1 that manual and automatic generation runback/tripping is allowed as a response to single or multiple Contingencies to mitigate Steady State performance violations. Also automatic generation tripping is allowed for single and multiple Contingency events to mitigate Stability performance violations.	
FirstEnergy Corp	FirstEnergy believes the draft 4 version of requirement R1 is greatly improved over prior drafts. The team has correctly responded to industry stakeholders and arrived at an appropriate middle ground that should resolve most stakeholder concerns. The changes made in R1.1.2 stating modeling of known outages with a duration of 6-months or more helps clarify a requirement that was previous subjective and open for interpretation. The removal of the previously prescriptive "such as list" is also well received by FirstEnergy.Finally, the addition of the text "known commitments" in regards to Firm Transmission Service and Interchange resolves our prior concerns.
Gainesville Regional Utilities	I like the more simplified approach used in the requirement listing. As far as "using the latest data consistent with MOD-010 & MOD -012 data", I feel that unplanned or unknown system changes between the times when studies are actually ran for the long term planning process should not be an issue for any type of negative interpretation by a compliance auditor. I presently do not have a suggestion on how to guarantee such an understanding. Overall the revisions look good.
Tri-State Generation and Transmission Association	R1 - The changes to R1 seem good.
Response: Thank you for your comments.	
Utility System Efficiencies, Inc. (USE)	For R1.1.5 I suggest changing the wording from "Known commitments for Firm Transmission Service and Interchange" to "Known commitments for Firm Transmission Service or Interchange". It is difficult to distinguish between the two in future cases where not all contractual arrangements are known.
Response: The SDT believes that the existing language is adequate and no further change is required. If you do not have any known Firm Transmission Service as	

Organization	Comments for Question 1
an example, then this fact should just be documented.	
Orlando Utilities Commission	In general I support all the changes from the prior revision. I especially like the clarification that outages of 6 months or longer need attention in planning studies. Several questions on the details: R1 requires the maintenance of system models for the purpose of studies and establishes that these models should be updated with the latest data from various sources. Is this requiring that models should always be current, updated for the slightest change, even between studies? Or just that models are kept up to date in a more practical application such as monthly, quarterly or before their use in a study?R1 states that the model should be "..supplemented by other sources as needed, including items represented in the corrective action plan"? Read in context with the overall requirement this allows for projects that are in the corrective action plan to be added, but does not require that they are, is this the correct understanding? -R1 requires the model to represent Known Commitments for Firm Transmission Service, and also references load forecasts. The application of this requirement seems to be that the model should be based on the load forecast and include the appropriate known firm transmission service for the amount that would be used at that forecast level?
Response: 1. Yes, your understanding is correct. Thank you for your comments. 2. The SDT agrees that the model should be based on the load forecast. The SDT believes that the appropriate known Firm Transmission Service should also be included. Please note that Requirement R1, part 1.1.6 has been clarified to state that supply or demand side can be used for supplying Load. **R1, part 1.1.6** - Resources (supply or demand side) required for Load	
MAPP	1. It would be helpful to identify the relationship expected between the PC and the TP. It looks as if both PC and TP are expected to maintain the same models. We need to avoid duplicated effort. Does the standard really apply to "both", or could it be "either"? 2. Is a Corrective Action Plan being used correctly throughout this standard? It seems like the specifics of a CAP aren't appropriate for future planning years. Planning studies are only estimates of expected system growth, and the apparent problem might turn out to be different, or not exist at all. Will compliance people start going "over the top" examining CAPs? The current practice of summarizing possible problems in future years and identifying possible solutions seems more appropriate than pinning entities down to Corrective Action Plans. Corrective Action Plans seem appropriate only for the Operating horizon.R1 We interpret that "within their respective areas" refers the geographic footprint of the TP or PC transmission system. 3. We propose clarifying that "within their respective area" does not require the inclusion of remote generation or load (metering) buses that are within the declared Balancing Authority area, but may be outside and separate from the TP or PC geographic footprint. 4. M1 We recommend the bolded words be added to M1 to indicate that each responsible entity must provide evidence that "it is maintaining System models within its respective area, using the latest"? What does it mean to have a hardcopy of a system model? 5. R1.1.2 We suggest that this requirement be removed because the "known outage(s)" are only to be included in the models

Organization	Comments for Question 1
	when for P1 events are simulated, as specified in R2.1.3. We suggest that the intent can be more simply handled by stating in R2.1.3 that known outages be simulated along with P1 events for the System peak or Off-Peak conditions when the outages are scheduled to occur. 6. R1.1.3 Add the qualification of "for the years defined in R2". 7. R1.1.6 We interpret that "Resources required" allows the inclusion of fictional generators in the models when they are needed to make future normal system cases solve. If this is not the intended interpretation, then we suggest modifying the wording to make the desired interpretation more clear.
Response: 1. The SDT believes that both the Transmission Planner and Planning Coordinator have this modeling responsibility. Therefore the SDT believes that the existing language is adequate and that no changes are required. 2. The SDT believes that the Corrective Action Plans are being correctly used in this planning standard and is appropriate for all planning years. Please note that there are a variety of associated actions that can be used to achieve required System performance as noted in Requirement R2, part 2.7.1. The SDT agrees that Systems can change over time which will result in some changes for the Corrective Action Plans. The SDT cannot speculate on auditor's actions. The SDT is not trying to "pin down" entities in regards to these plans but to ensure that entities are planning reliable Transmission Systems and have sufficient time to get needed plans in service to continue meeting the TPL-001-1 requirements. The SDT believes that these actions are needed in the planning horizons in order to have a reliable Bulk Electric System. The SDT believes that "within their respective area" does refer to the Transmission Planner's or Planning Coordinator's geographic footprint. 3. The SDT believes agrees that the "within their respective area" terminology excludes remote generation and Load buses since they are not within the Transmission Planner's or Planning Coordinator's geographic footprint. The SDT believes that the existing language is adequate and no further change is required. 4. The SDT agrees that adding "within its respective area" would help clarify this measure. The SDT has modified Measure M1 to include this new language. An example of a hard copy of a System model is having printouts of each individual bus showing Load, Transmission line, generator, capacitors, etc., connected to that bus with associated impedances, ratings, etc. **M1**. Each Transmission Planner and Planning Coordinator shall provide evidence, in electronic or hard copy format, that it is maintaining System models within its respective area, using the latest data consistent with MOD-010 and MOD-012, including items represented in the Corrective Action Plan, representing projected System conditions, and that the models represent the required information in accordance with Requirement R1 5. The SDT disagrees since multiple outages may be taken during the same time period under Requirement R1, part 1.1.2. The SDT believes that all outages should be modeled to insure the System reliability during the outage duration. If a Transmission element outage occurs during a specified time, then the new base case for that time period would result with that element out of service pre-Contingency. See Requirement R2, part 2.1.3 for additional details concerning studies required with known outages. No change made. 6. The SDT does not believe that the proposed language adds any clarity. No change made. 7. The SDT believes that this requirement includes any fictional generators that may be needed to match up generation and Load. The SDT has made clarifying change to Requirement R1, part 1.1.6. **R1, part 1.1.6** - Resources (supply or demand side) required for Load	
MidAmerican Energy Company	MidAmerican recommends the words in all caps be added to M1 to indicate that each responsible entity must provide evidence

Organization	Comments for Question 1
	that "it is maintaining System models WITHIN ITS RESPECTIVE AREA, using the latest"?
Response: The SDT agrees that adding "within its respective area" would help clarify this measure. The SDT has modified Measure M1 to include this new language. **M1**. Each Transmission Planner and Planning Coordinator shall provide evidence, in electronic or hard copy format, that it is maintaining System models within its respective area, using the latest data consistent with MOD-010 and MOD-012, including items represented in the Corrective Action Plan, representing projected System conditions, and that the models represent the required information in accordance with Requirement R1.	
Florida Power and Light	No entity that we know of provides specific reactive load forecasts. From the auditor's perspective, what is expected and acceptable for System models representing reactive load forecasts? Suggested change: 1.1.4 Real Load forecasts and future reactive Load assumptions? Not all system models can represent all "Known commitments for Firm Transmission Service and Interchange". The SDT needs to add "that are expected to be utilized." to the requirement. 1.1.6 Recommend changing to "Resources expected to supply Load"The requirements seem to imply a difference in certainty between "known" and "planned". Known implies certainty, where planned implies less certainty, as in an assumption. Planned things can change but known things are much less subject to change. The drafting team should clarify the distinction between the two terms or be more specific in the requirement as to what is expected rather than leaving it for interpretation as to meaning and intent.
Response: 1. Requirement R1, part 1.1.4 states that a reactive forecast is required. Using a power factor is one method that may be used in calculating this reactive forecast. The SDT believes that the existing language is adequate. The SDT believes that all known commitments for Firm Transmission Service and Interchange should be modeled. The SDT does not believe that the proposed language adds any clarity. No change made. 2. The SDT has made clarifying change to Requirement R1, part 1.1.6 based on industry comments. Please note that the word "required" is used in Requirement R1, part 1.1.6. **R1, part 1.1.6** - Resources (supply or demand side) required for Load	
Independent Electricity System Operator	Please explain what is envisaged by the phrase "and shall represent projected System conditions." that is not already covered by the list in Requirement R1, part 1.1. We suggest removing the phrase. We do not have any comments on the, measure, VRF and Time Horizon. Consistent with our comment above, we believe that the 2nd condition under the Severe VSL is (a) vague, and (b) already covered by parts 1.1.1 to 1.1.6. This second condition is not needed.
Response: The goal is for the responsible entity to build a realistic simulation for the System models which may contain items not listed under Requirement R1, part 1.1. The SDT disagrees with the VSL comment and believes that the second condition under the Severe VSL covers additional items under Requirement R1 itself that are not covered under Requirement R1, parts 1.1.1 thru 1.1.6. No change made.	
NYISO	R1 - The NYISO would like to align itself with the comments of the ISO/RTO Council stating that the PC may begin model building using provisions from tariff or agreements such as its Transmission Owners agreement. While the data may be

Organization	Comments for Question 1
	consistent with that provided in Mod 10 and 12, there may not be a direct correlation. We, therefore, also suggest the following wording for R1."Each Transmission Planner and Planning Coordinator shall maintain System models within its respective area for performing the studies needed to complete its Planning Assessment. The models shall reflect data consistent with that provided in accordance with the MOD-010 and MOD-012 standards and/or data that is provided in accordance with tariff or transmission owner agreements. The models may be supplemented by other sources as needed including items represented in the Corrective Action Plan, and shall represent projected System conditions. "R1.1.2 - Outages of less than 12 months are generally coordinated by operations, not planning departments. In reference to system modeling, it doesn't make sense for outages of less than a year. We therefore recommend replacing "duration of at least six months" with duration of 12 months or more. R1.1.5 - Interchange should not be modeled in the base case system representation, unless their neutrality to system reliability has been clearly demonstrated. There are times that economic interchanges between New York and a neighbor may have an impact on one of the transmission systems that may, at times, pose reliability constraints on the operation of the New York system. R1.1.6 - Please define what is included in "resources required to supply load." It is unclear what is included or not included in this requirement. The NPCC definition of "resource" is inclusive.
Response: 1. The SDT believes the existing language is correct and that the suggested changes do not provide additional clarity. No change made. 2. The requirement does not refer to outages occurring within the next 6 months which the SDT agrees would be an operational issue and not a planning issue. The requirement is referring to outages in the planning horizon that have a duration of at least six months. The SDT believes that such outages should be incorporated into the Planning Assessment. No change made. 3. The SDT disagrees and believes that known firm transmission commitments and interchange should be modeled and can affect the transmission system reliability. No change made. 4. "Resources required to supply load" is not a NERC defined term. "Facility" is a defined term and does include generators. The SDT has made a clarifying change to Requirement R1, part 1.1.6. **R1, part 1.1.6** - Resources (supply or demand side) required for Load	
NERC Standards Review Subcommittee	R1 The MRO NSRS interprets that "within their respective areas" refers to the geographic footprint of the TP or PC transmission system. The MRO NSRS proposes clarifying that "within their respective area" does not require the inclusion of remote generation or load (metering) buses that are within the declared Balancing Authority area, but may be outside and separate from the TP or PC geographic footprint. M1 The MRO NSRS recommends that words be added to M1 to indicate that each responsible entity must provide evidence that "it is maintaining System models within its respective area, using the latest"?
Response: 1. The SDT believes agrees that the "within their respective area" terminology excludes remote generation and Load buses since they are not within the Transmission Planner's or Planning Coordinator's geographic footprint. The SDT believes that the existing language is adequate and no further change is required.	

Organization	Comments for Question 1
2. The SDT agrees that adding "within its respective area" would help clarify this measure. The SDT has modified M1 to include this new language. **M1**. Each Transmission Planner and Planning Coordinator shall provide evidence, in electronic or hard copy format, that it is maintaining System models within its respective area, using the latest data consistent with MOD-010 and MOD-012, including items represented in the Corrective Action Plan, representing projected System conditions, and that the models represent the required information in accordance with Requirement R1	
Central Maine Power Company	R1.1.1 Make this read "Existing Facilities and Resources" so that it will be a lead in to the changes proposed for 1.1.6. R1.1.2 This type of event is sufficiently addressed within the existing testing requirements (P6) and therefore should be eliminated , beyond that such outages are reviewed and approved on an operational basis and should not be included in a planning standard. During known outages for equipment upgrades or repairs there may be some increased exposure to load loss, which should be recognized as an acceptable exposure. In the event that this requirement is maintained please change six months to one year. 1.1.6 Resources may not be exclusively sources supplying load. Therefore the reference should not involve load. The focus should be on changes to resources and "resources required to supply load" should be replaced with "New planned Resources and changes to existing Resources"We suggest NERC develops a definition for "resource" or use the following definition found in NPCC Glossary of Terms, Document A-7: Resource - Resource refers to the total contributions provided by supply-side and demand-side facilities and/or actions. Supply-side facilities include utility and non-utility generation and purchases from neighboring systems. Demand-side facilities include measures for reducing load, such as conservation, demand management, and interruptible load. ADD 1.2 The standard is referring to requirements for sensitivity and other issues without a reference to base assumptions. The standard must describe base assumptions. M1 It is not practical to retain system model information in a hard copy form. This provision should be dropped. D.1.1.4 Data Retention: The Transmission Planner and the Planning Coordinator may not be using the same software. If both are required to store the data, do they both have to have the software to use the data? Can this be changed to an "or" such that one of them must retain the data and it can be up to them as to who is responsible for data retention.
ISO New England	1. R1.1.1 Make this read "Existing Facilities and Resources" so that it will be a lead in to the changes proposed for 1.1.6. 2. R1.1.2 This type of event is sufficiently addressed within the existing testing requirements (P6) and therefore should be eliminated , beyond that such outages are reviewed and approved on an operational basis and should not be included in a planning standard. During known outages for equipment upgrades or repairs there may be some increased exposure to load loss, which should be recognized as an acceptable exposure. In the event that this requirement is maintained please change six months to one year. 3. 1.1.6.. Resources may not be exclusively sources supplying load. Therefore the reference should not involve load. The focus should be on changes to resources and "resources required to supply load" should be replaced with "New planned Resources and changes to existing Resources"We suggest NERC develops a definition for "resource" or use the following definition found in NPCC Glossary of Terms, Document A-7: Resource Resource refers to the total contributions provided by supply-side and demand-side facilities and/or actions. Supply-side facilities include utility and non-utility generation and purchases

Organization	Comments for Question 1
	from neighboring systems. Demand-side facilities include measures for reducing load, such as conservation, demand management, and interruptible load. 4. ADD 1.2 The standard is referring to requirements for sensitivity and other issues without a reference to base assumptions. The standard must describe base assumptions. 5. M1It is not practical to retain system model information in a hard copy form. This provision could be dropped. 6. D.1.1.4 Data Retention: The Transmission Planner and the Planning Coordinator may not be using the same software. If both are required to store the data, do they both have to have the software to use the data? Can this be changed to an "or" such that one of them must retain the data and it can be up to them as to who it is.
Response: 1. The SDT believes that the "and Resources" is not needed as a lead in to Requirement R1, part 1.1.6 since both Requirement R1, parts 1.1.1 and 1.1.6 are directly under Requirement R1, part 1.1. No change made. 2. The SDT disagrees since multiple outages may be taken during the same time period under Requirement R1, part 1.1.2, thus this situation may be worse than only having two Contingencies as noted in P6. The SDT believes that all outages should be modeled to ensure the System reliability during the outage duration. If a Transmission element outage occurs during a specified time, then the new base case for that time period would result with that element out of service pre-Contingency. See Requirement R2, part 2.1.3 for additional details concerning studies required with known outages. No change made. 3. The SDT agrees that this requirement may not be exclusively sources supplying Load. As an example, Demand Side-Management (DSM) may be used. The SDT has made clarifying change to Requirement R1, part 1.1.6 based on industry comments. **R1, part 1.1.6** - Resources (supply or demand side) required for Load 4. The SDT believes that the "base case conditions" should be defined by the entity performing the study. Sensitivity studies are performed to provide insight into the impacts of potential variations of assumptions in studies. The SDT therefore declines to make the change as suggested. 5. Since Measure M1 states that either electronic OR hard copy format is required, the SDT believes that no changes are required since either of the formats is acceptable. 6. The SDT believes that both the Transmission Planner and Planning Coordinator have this responsibility. Therefore the SDT believes that the existing language is adequate and that no changes are required.	
United Illuminating	R1.1.1 Make this read "Existing Facilities and Resources" so that it will be a lead in to the changes proposed for 1.1.6. R1.1.2 This type of event is sufficiently addressed within the existing testing requirements (P6) and therefore should be eliminated , beyond that such outages are reviewed and approved on an operational basis and should not be included in a planning standard. During known outages for equipment upgrades or repairs there may be some increased exposure to load loss, which should be recognized as an acceptable exposure. In the event that this requirement is maintained please change six months to one year. 1.1.6.. Resources may not be exclusively sources supplying load. Therefore the reference should not involve load. The focus should be on changes to resources and "resources required to supply load" should be replaced with "New planned Resources and changes to existing Resources"We suggest NERC develops a definition for "resource" or use the following definition found

Organization	Comments for Question 1
	in NPCC Glossary of Terms, Document A-7: Resource Resource refers to the total contributions provided by supply-side and demand-side facilities and/or actions. Supply-side facilities include utility and non-utility generation and purchases from neighboring systems. Demand-side facilities include measures for reducing load, such as conservation, demand management, and interruptible load. ADD 1.2 The standard is referring to requirements for sensitivity and other issues without a reference to base assumptions. The standard must describe base assumptions.
Response: 1. The SDT believes that the "and Resources" is not needed as a lead in to Requirement R1, part 1.1.6 since both Requirement R1, parts 1.1.1 and 1.1.6 are directly under Requirement R1, part 1.1. No change made. 2. The SDT disagrees since multiple outages may be taken during the same time period under Requirement R1, part 1.1.2, thus this situation may be worse than only having two Contingencies as noted in P6. The SDT believes that all outages should be modeled to ensure the System reliability during the outage duration. If a Transmission element outage occurs during a specified time, then the new base case for that time period would result with that element out of service pre-Contingency. See Requirement R2, part 2.1.3 for additional details concerning studies required with known outages. No change made. 3. The SDT agrees that this requirement may not be exclusively sources supplying Load. As an example, Demand Side-Management (DSM) may be used. The SDT has made clarifying change to Requirement R1, part 1.1.6 based on industry comments. **R1, part 1.1.6** - Resources (supply or demand side) required for Load 4. The SDT believes that the "base case conditions" should be defined by the entity performing the study. Sensitivity studies are performed to provide insight into the impacts of potential variations of assumptions in studies. The SDT therefore declines to make the change as suggested.	
Ameren	R1.1.2: Inclusion of outages of generation or transmission facilities with a duration of at least 6 months in the models is too restrictive. An outage duration of 1 month would be more appropriate for inclusion in the seasonal peak and off-peak models. R1.1.5: It is not clear from the wording how Firm Transmission Service and Interchange schedules should be considered, or whether the status quo is adequate. A given generating facility may have transmission service commitments which exceed the facility's generating capability. VSL: Given the annual cycle of collecting, revising and submitting system model data under MOD-010 and MOD-012, there could be a lag of several months between receipt of updated data prior to having this data included in the next round of system models. The TP/PC should not be penalized for this.
Response: 1. The SDT believes that the 6 month outage duration required for modeling outages is sufficient. However a utility may exceed this requirement by having lower outage duration if they choose. The outages should be modeled in the appropriate cases whether the outages occur in the spring, summer, fall, winter, etc. 2. The Standard is requiring the modeling of known commitments for Firm Transmission Service and Interchange schedules as a means of stressing the transmission system pre-contingency. If a given generator is reserving transmission capability beyond the capability of the resources to deliver, then someone must have evaluated the system based on a set of assumptions that identified that the system is capable of delivering the service, which would be consistent with this requirement. 3 The System models should be updated in accordance with MOD-010 & MOD-012. No change made.	

Organization	Comments for Question 1
Xcel Energy	R1.1.4 could be interpreted that the standard requires forecasting reactive load. However, most entities forecast demand (MW) and apply a power factor(s) to calculate reactive load. Therefore, please change "real and reactive load forecast" to "forecasted demand and power factor" so it is clear that forecasting reactive load is not required.
Response: Requirement R1, part 1.1.4 states that a reactive forecast is required. Using a power factor is one method that may be used in calculating this reactive forecast.	
SERC Planning Standards Subcommittee	R1: MOD-010 and 012 are not directly applicability to the PC. References to other processes (e.g. tariff requirements or transmission owner agreements) that are utilized to provide this data may be desirable, but do not satisfy R1 as presently written.VSL: In the Moderate and Severe VSL, insert "responsible entity's" in front of the term "System model."
SERC Dynamics Review Subcommittee (DRS)	R1: MOD-010 and 012 are not directly applicable to the PC. References to other processes (e.g. tariff requirements or transmission owner agreements) that are utilized to provide this data may be desirable, but do not satisfy R1 as presently written.VSL: In the Moderate and Severe VSL, insert "responsible entity's" in front of the term "System model."

Response: The MOD-010 and MOD-012 standards are not directly applicable to the Planning Coordinator; however the Planning Coordinator has to utilize data provided by others such as that provided in accordance with MOD-010 and -012.

The SDT agrees and will insert this additional wording in the moderate and severe VSLs for Requirement R1.

R1 VSL	The responsible entity's System model failed to represent one of the Requirement R1, parts 1.1.1 through 1.1.6.	The responsible entity's System model failed to represent two of the Requirement R1, parts 1.1.1 through 1.1.6. OR The responsible entity's System model did not use the latest data consistent with the data provided in accordance with the MOD-010 and MOD-012 standards and other sources, including items represented in the Corrective Action Plan.	The responsible entity's System model failed to represent three of the Requirement R1, parts 1.1.1 through 1.1.6.	The responsible entity's System model failed to represent four or more of the Requirement R1, parts 1.1.1 through 1.1.6. OR The responsible entity's System model did not represent projected System conditions as described in Requirement R1.

Manitoba Hydro	Recommend removing "and shall represent projected System Conditions" from R1. This is already clearly contained in R1.1.1

Organization	Comments for Question 1
	through R1.1.6. If the drafting team knows of other projected system conditions then they should be listed in R1.1. "The System Model did not represent projected System Conditions as described in Requirement R1 should be removed from the severe VSL column. By failing to represent 4 or more of the requirements in 1.1.1 through 1.1.6, projected System Conditions are not represented.
Response: The SDT disagrees and believes that there may need to be additional information contained in the models that is not specifically noted under Requirement R1.1. The goal is for the responsible entity to build a realistic simulation for the System models. The SDT disagrees and believes that the second condition under the Severe VSL covers additional items under Requirement R1 itself that are not covered under Requirement parts 1.1.1 thru 1.1.6.	
Northeast Power Coordinating Council--RSC	1. Requirement 1.1.1: Replace "Existing Facilities" with "Existing Facilities and Resources" so that it will be a lead in to the changes proposed for 1.1.6. 2. Requirement 1.1.2 "Consideration of known outages should not be included in a planning assessment. Such outages are coordinated by operations and are only permitted if the system can be operated reliably, where assumptions may be different than those used in planning assessments. Including this as a requirement effectively means that the system must be designed to withstand three outages. In those cases where safety, or reliability, or both are a concern by long duration outages (e.g., more than one year), temporary Operating Protocols are implemented to mitigate their impact. During known outages for equipment upgrades or repairs there may be some increased exposure to load loss, which should be recognized as an acceptable exposure. If this requirement must be kept, the outages with duration in excess of a year should be considered, rather than those of six months. This type of event is sufficiently addressed within the existing testing requirements (P6) and therefore should be eliminated, beyond that such outages are reviewed and approved on an operational basis and should not be included in a planning standard. Known or "known planned" outages will not necessarily fall in the operations timeframe, and as such may not be subject to approval by operations departments. This is especially so given the fact that the earliest start date for Year One is 12 months beyond the current year. 3. Requirement 1.1.5 Interchange. Interchange usually refers to non-firm short-term economic transactions that often take place between Balancing Authorities to take advantage of their respective resources surplus (i.e. not needed for local reliability.) However, such transactions should not be modeled in the base case system representation, unless their neutrality to system reliability has been clearly demonstrated. For example, economic interchanges between New England and PJM through New York have an impact on the New York transmission system that may, at times, pose reliability constraints on the operation of the New York system. 4. Requirement 1.1.6 what are "resources required to supply load, gens, HVDC, tie lines? Resources may not be exclusively sources supplying load. The focus should be on changes to resources. "Resources required to supply Load" should be replaced with New planned Resources and changes to existing Resources. NPCC suggests NERC develops a definition for "resource" or use the following definition found in NPCC Glossary of Terms, Document A-7: Resource Resource refers to the total contributions provided by supply-side and demand-side facilities and/or actions. Supply-side facilities include utility and non-utility generation and purchases from neighboring systems. Demand-side facilities include measures for reducing load, such as conservation, demand management, and interruptible load.A

Organization	Comments for Question 1
	5. Requirement 1.2 should be added to address the base assumptions for sensitivity and other issues requirements. 6. For Measure M1: Elaborate on "hard copy format". Does that entail maintaining a hard copy of the system model? It is impractical to retain system model information in a hard copy format. This provision should be dropped.
Response: 1.The SDT believes that the "and Resources" is not needed as a lead in to Requirement R1, part 1.1.6 since both Requirement R1, parts 1.1.1 and 1.1.6 are directly under Requirement R1, part 1.1. 2. The SDT disagrees and believes that all outages should be modeled to ensure System reliability during the outage duration. Since multiple outages may be taken during the same time period under Requirement R1, part 1.1.2, this situation may be worse than only having two Contingencies as noted in P6. If a Transmission element outage occurs during a specified time, then the new base case for that time period would result with that element out of service pre-Contingency. See Requirement R2, part 2.1.3 for additional details concerning studies required with known outages. No change made. 3. The SDT disagrees and believes that known firm Transmission commitments and interchange should be modeled and can affect the Transmission System reliability. No change made. 4. The SDT agrees that this requirement may not be exclusively sources supplying Load. As an example, Demand Side-Management (DSM) may be used. The SDT has made a clarifying change to Requirement R1, part 1.1.6 based on industry comments. **R1, part 1.1.6** - Resources (supply or demand side) required for Load 5. The SDT believes that the "base case conditions" should be defined by the entity performing the study. Sensitivity studies are performed to provide insight into the impacts of potential variations of assumptions in studies. The SDT therefore declines to make the change as suggested. 6. Since Measure M1 states that either electronic OR hard copy format is required, the SDT believes that no changes are required since either of the formats is acceptable. An example of a hard copy of a System model is having printouts of each individual bus showing Load, Transmission line, generator, capacitors, etc., connected to that bus with associated impedances, ratings, etc.	
Hydro-Québec TransEnergie (HQT)	Requirement 1.1.2 Consideration of known outages should not be included in a planning assessment. Such outages are coordinated by operations and are only permitted if the system can be operated reliably, where assumptions may be different than those used in planning assessments. Including this as a requirement effectively means that the system must be designed to withstand three outages. In those cases where safety, or reliability, or both are a concern by long duration outages (e.g., more than one year), temporary Operating Protocols are implemented to mitigate their impact. If this requirement must be kept, the outages with duration in excess of a year should be considered, rather than those of six months. Requirement 1.1.5 Interchange. Interchange usually refers to non-firm short-term economic transactions that often take place between Balancing Authorities to take advantage of their respective resources surplus (i.e. not needed for local reliability.) However, such transactions should not be modeled in the base case system representation, unless their neutrality to system reliability has been clearly demonstrated. For example, economic interchanges between New England and PJM through New York have an impact on the New York transmission system that may, at times, pose reliability constraints on the operation of the New York system. Requirement 1.1.6 what are "resources required to supply load" " gens, HVDC, tie lines" HQT, as does NPCC, suggests NERC

Organization	Comments for Question 1
	develops a definition for "resource" or use the following definition found in NPCC Glossary of Terms, Document A-7: Resource - Resource refers to the total contributions provided by supply-side and demand-side facilities and/or actions. Supply-side facilities include utility and non-utility generation and purchases from neighboring systems. Demand-side facilities include measures for reducing load, such as conservation, demand management, and interruptible load.

Response: 1. The SDT disagrees and believes that all outages should be modeled to ensure System reliability during the outage duration. If a Transmission element outage occurs during a specified time, then the new base case for that time period would result with that element out of service pre-Contingency. See Requirement R2, part 2.1.3 for additional details concerning studies required with known outages.

The SDT believes that the 6 month duration is appropriate. No change made.

2. The SDT disagrees and believes that known firm Transmission commitments and interchange should be modeled and can affect the Transmission System reliability. No change made.

3. The SDT agrees that this requirement may not be exclusively sources supplying Load. As an example, Demand Side-Management (DSM) may be used. The SDT has made a clarifying change to Requirement R1, part 1.1.6 based on industry comments.

R1, part 1.1.6 - Resources (supply or demand side) required for Load

Midwest ISO	Requirement R1: The Planning Coordinator may begin model building using provisions from tariff and/or other agreements such as its Transmission Owners agreement. While the data may be consistent with that provided in Mod 10 and 12, there may not be a direct correlation between the two sets of data. This could become burdensome for a Planning Coordinator to make that correlation between the two. Suggest the following wording for R1.Each Transmission Planner and Planning Coordinator shall maintain System models within its respective area for performing the studies needed to complete its Planning Assessment. The models shall reflect data consistent with that provided in accordance with the MOD-010 and MOD-012 standards and/or data that is provided in accordance with tariff or transmission owner agreements. The models may be supplemented by other sources as needed including items represented in the Corrective Action Plan, and shall represent projected System conditions Requirement R1.1.5: In the Moderate and Severe VSL, insert "responsible entity's" in front of the term "System Models" so it reads as such: "The responsible entity's System model did not"

Response: 1. The SDT does not believe that the proposed language adds any clarity. No change made.

The SDT agrees and will insert this additional wording in the moderate and severe VSLs for Requirement R1.

R1 VSL	The responsible entity's System model failed to represent one of the Requirement R1, parts 1.1.1 through 1.1.6.	The responsible entity's System model failed to represent two of the Requirement R1, parts 1.1.1 through 1.1.6. OR	The responsible entity's System model failed to represent three of the Requirement R1, parts 1.1.1 through 1.1.6.	The responsible entity's System model failed to represent four or more of the Requirement R1, parts 1.1.1 through 1.1.6. OR

Organization	Comments for Question 1
	The responsible entity's System model did not use the latest data consistent with the data provided in accordance with the MOD-010 and MOD-012 standards and other sources, including items represented in the Corrective Action Plan. The responsible entity's System model did not represent projected System conditions as described in Requirement R1.
FRCC Transmission Working Group	Several questions on the details:- R1 requires the maintenance of system models for the purpose of studies and establishes that these models should be updated with the latest data from various sources. Read in context this seems to require that a PA/TP has models, and they are updated either on some sort of regular schedule, for example quarterly or before the start of a study, and use the latest information at the time they are updated. Is this a correct understanding of the requirement? - R1 states that the model should be "..supplemented by other sources as needed, including items represented in the corrective action plan"? Read in context with the overall requirement this allows for projects that are in the corrective action plan to be added to the model as needed, is this the correct understanding? -R1 requires the model to represent "projected system conditions" which include in the list below "Known Commitments for Firm Transmission Service" and "Load Forecast". This seems to require that your known firm transmission service commitments are matched to their corresponding customers load forecast and expected operation profile, relative to load level in the case. Or phrased another way, the model should represent the service and load as they would be expected to operate at the load level in the case. Is this a correct understanding? Comments: With regard to the Moderate Violation Severity Level, what if the entity does not have the "latest" data but the entity did include items in the corrective action plan? Should the "and" between MOD-010 and MOD-012 be an "OR" and have the "AND" be for the High VSL?Not all system models can represent all "Known commitments for Firm Transmission Service and Interchange". The SDT needs to add "that are expected to be utilized." to the requirement. 1.1.6 Recommend changing to "Resources expected to supply Load"

Response: 1. The SDT agrees with your understanding. The System models should be updated in accordance with MOD-010 & MOD-012.

2. Yes, this is the correct understanding. Items from the Corrective Action Plan should be included in the models as noted under Requirement R1.

3. The SDT agrees with your understanding.

4. If the entity does not have the latest data, but did include items in the Corrective Action Plan, then the SDT believes the entity would be in violation of a Moderate Severity level. The SDT believes that the existing language is correct. The SDT believes that all System models should represent all known commitments for Firm Transmission Service and Interchange. The SDT does not believe that the proposed language adds any clarity. No change made.

5 The SDT realizes that this requirement may not be exclusively sources supplying Load. As an example, Demand Side-Management (DSM) may be used. The SDT

Organization	Comments for Question 1
has made a clarifying change to Requirement R1, part 1.1.6 based on industry comments. **R1, part 1.1.6** - Resources (supply or demand side) required for Load	
National Grid	Sub-Requirement 1.1.1: Replace "Existing Facilities" with "Existing Facilities and Resources" so that it will be a lead in to the changes proposed for 1.1.6. Sub-Requirement 1.1.2: This type of event is sufficiently addressed within the existing testing requirements (P6) and therefore should be eliminated, beyond that such outages are reviewed and approved on an operational basis and should not be included in a planning standard. During known outages for equipment upgrades or repairs there may be some increased exposure to load loss, which should be recognized as an acceptable exposure. In the event that this requirement is maintained please change six months to one year. Sub-Requirement 1.1.6: Resources may not be exclusively sources supplying load. Therefore the reference should involve load. The focus should be on changes to resources. "Resources required to supply Load" should be replaced with "New planned Resources and changes to existing Resources"It is suggested that NERC develop a definition for "resource" or use the following definition found in NPCC Glossary of Terms, Document A-7: Resource - Resource refers to the total contributions provided by supply-side and demand-side facilities and/or actions. Supply-side facilities include utility and non-utility generation and purchases from neighboring systems. Demand-side facilities include measures for reducing load, such as conservation, demand management, and interruptible load. ADD 1.2 The standard is referring to requirements for sensitivity and other issues without a reference to base assumptions. The standard must describe base assumptions. Measure M1: Elaborate on "hard copy format". Does that entail maintaining a hard copy of the system model? It is impractical to retain system model information in a hard copy format. This provision should be dropped.
Response: 1 The SDT believes that the "and Resources" is not needed as a lead in to Requirement R1, part 1.1.6 since both Requirement R1, parts 1.1.1 and 1.1.6 are directly under Requirement R1, part 1.1. 2. The SDT disagrees since multiple outages may be taken during the same time period under Requirement R1, part 1.1.2, thus this situation may be worse than only having two Contingencies as noted in P6. The SDT believes that all outages should be modeled to ensure the System reliability during the outage duration. If a Transmission element outage occurs during a specified time, then the new base case for that time period would result with that element out of service pre-Contingency. See Requirement R2, part 2.1.3 for additional details concerning studies required with known outages. 3. The SDT agrees that this requirement may not be exclusively sources supplying Load. As an example, Demand Side-Management (DSM) may be used. The SDT has made a clarifying change to Requirement R1, part 1.1.6 based on industry comments. **R1, part 1.1.6** - Resources (supply or demand side) required for Load 4 The SDT believes that the "base case conditions" should be defined by the entity performing the study. Sensitivity studies are performed to provide insight into the impacts of potential variations of assumptions in studies. The SDT therefore declines to make the change as suggested. 5. Since Measure M1 states that either electronic OR hard copy format is required, the SDT believes that no changes are required since either of the formats is acceptable. An example of a hard copy of a System model is having printouts of each individual bus showing Load, Transmission line, generator, capacitors, etc.,	

Organization	Comments for Question 1
connected to that bus with associated impedances, ratings, etc.	
Lakeland Electric	Suggesting language "known planned" outages and in place of "known" outages Suggesting language "real & reactive resources" in place of "Resources" "within its respective area", how about ties?
Response: The SDT does not believe that the proposed language adds any clarity. No change made. The SDT has made clarifying change to Requirement R1, part 1.1.6 based on industry comments since this requirement may not be exclusively sources supplying Load. **R1, part 1.1.6** - Resources (supply or demand side) required for Load Tie Lines should be modeled as required to achieve conformance with the MOD standards.	
Exelon Transmission Planning	The feedback from Round 3 of comments is appreciated, but there is still a concern that the inclusion of known (or "expected") transfers is to be studied as a sensitivity. We believe that the base case should already contain the most likely ("expected") transfer scenario and a sensitivity case would be studied with a less likely transfer scenario. As written it appears that the standard would require that the base case would contain no transfers or some transfer level other than what is "expected". It is suggested the term "Expected transfers" be changed to "Additional transfers beyond base case conditions". The use of this term will provide clarity between what is to be modeled in the basecase and what is to be studied as a sensitivity case. There are a number of overlapping requirements with this standard and other standards in various stages of development, such as voltage stability criteria, protection system redundancy, relay loadability, and protection system contingencies that could cause non-compliance with several standards for a single infraction. Suggest removing overlapping requirements be removed from R6, P5 from Table 1, R3.3.3 and R3.3.1, respectively.
Response: 1. Requirement R1, part 1.1.5 requires that known commitments for Firm Transmission Service and Interchange be modeled. However the sensitivity analysis under Requirement R2, parts 2.1.4 and 2.4.3 require that at least one condition not already in the studies be varied by a sufficient amount in order to stress the System by a measurable change in performance. The SDT does not believe that the proposed language adds any clarity. No change made 2. As for the double jeopardy comment - From the ERO Rules of Procedure, Appendix 4B- Sanction Guidelines, Section 3.10 Multiple Violations: "Strictly speaking, NERC or the regional entity can determine and levy a separate penalty or sanction, or direct remedial action, upon a violator for each individual violation. However, in instances of multiple violations related to a single act or common incidence of noncompliance, NERC or the regional entity will generally determine and issue a single aggregate penalty, sanction, or remedial action directive bearing reasonable relationship to the aggregate of the related violations. The penalty, sanction, or remedial action will not be that determined individually for the least serious of the violations; it will generally be at least as large or expansive as what would be called for individually for the most serious of the violations." 3. The SDT believes that some overlap is necessary but the SDT has tried to minimize this as much as possible. Requirement R6 deals with defining and documenting certain items such as Cascading, voltage instability, and uncontrolled islanding. Note that Requirement R6 has been clarified to remove "outages" from "Cascading outages". P5 is a multiple Contingency caused by loss of a single Protection System. R3.3.1 deals with the removal of elements that the Protection System and other	

Organization	Comments for Question 1
automatic controls are expected to disconnect. However the SDT has clarified the relay loadability issue in Requirement R3, part 3.3.3 by stating how these are handled in the simulations when these limits are exceeded. **R3.3.3**. Trip Transmission elements when relay loadability limits are exceeded **R6**. Each Transmission Planner and Planning Coordinator shall define and document, within its Planning Assessment, any criteria or methodology used in the analysis to identify System instability for conditions such as Cascading , voltage instability, or uncontrolled islanding.	
Florida Municipal Power Agency, and its Member Cities	The MOD standards for load forecasts (e.g., MOD-016 through 021) do not require submission of a reactive load forecast from the LSEs and RPs; therefore, why is it expected that the TPs and PCs use a reactive forecast that is not provided? From the auditor's perspective, what is expected and acceptable for System models representing reactive load forecasts? Suggested change: 1.1.4 Real Load forecasts and future reactive Load assumptions? Not all system models can represent all "Known commitments for Firm Transmission Service and Interchange". The SDT needs to add "that are expected to be utilized." to the requirement.
Response: 1. Requirement R1, part 1.1.4 states that a reactive forecast is required. Using a power factor is one method that may be used in calculating this reactive forecast. The SDT cannot comment on what an auditor may find compliant or non-compliant. No change made. 2. The SDT believes that the existing language is adequate and no further change is required. If you do not have any known Firm Transmission Service as an example, then this fact should just be documented.	
SRC of ISO/RTO	The PC may begin model building using provisions from tariff or agreements such as its Transmission Owners agreement. While the data may be consistent with that provided in MOD 10 and 12, there may not be a direct correllation. The following wording is suggested for R1.R1. Each Transmission Planner and Planner Coordinator shall maintain System Models within its respective area for performing the studies needed to complete its Planning Assessment. The models shall reflect data consistent with that provided in accordance with the MOD-010 and MOD-012 standards and/or data that is provided in accordance with tariff or transmission owner agreements. The models may be supplemented by other sources as needed including items represented in Corrective Action Plans, and shall represent projected System conditions. AESO does not comment on VSLs or VRFs.
Response: 1. The SDT believes that this is adequate as long as the data remains consistent with that provided in MOD-010 and MOD-012.	
US Bureau of Reclamation	The requirement for the model is not clearly stated. Based on the requirement 2, the models must prove the Corrective Action Plan items developed in 2.7.1. The actions in 2.7.1 are developed by the Transmission Planner or Planning Authority ("List System deficiencies and associated actions needed to achieve required System performance"). Requirement 1 however requires that the model "shall represent projected System conditions". Is the intent of the modelling to demonstrate system performance based on changes proposed by the Tranmission Owners and Generator Owners. Or is it the intent to have the Transmission Planner and Planning Authority develop proposals through system studies that the Transmission Owners and Generator Owners must implement?

Organization	Comments for Question 1
Response: Requirement R1 requires that Corrective Action Plans be included in the models. Requirement R1 includes items represented in the Corrective Action Plans along with represented projected System conditions. The intent of the modeling is to ensure that entities are planning reliable Transmission Systems and have sufficient time to get needed plans in service to continue meeting the TPL-001-1 requirements. The SDT believes that these actions are needed in the planning horizons in order to have a reliable Bulk Electric System. No change made.	
Oncor Electric Delivery	The six month limitation of requirement 1.1.2. "Known outage(s) of generation or Transmission Facility(ies) with a duration of at least six months." is applicable to near-term and long-term Planning studies, but makes the new TPL-001 standard non-extendible to the near-term operational planning studies (next month, next week, or next day). During near-term operational planning periods, it is essential to include the impacts of ALL known outages in the operational analysis.It should be made clear that the TPL-001 Standard is not applicable to the Operational Planning Horizon. This non-applicability points out the need for a separate (but equal in scope) operational planning analysis standard.There appears to be a lack of clarity related to relay loadability and protection system redundancy. Relay loadability is handled in greater detail (as it should be) under the proposed PRC-023 standard, so any reference here should only be a placeholder. Similarly, the issues of redundancy are being addressed in more detail in a new proposed standard on protection system reliability. 1.1.2 ? The requirement will result in the need to evaluate construction sequence in planning studies. 1.1.6 ? What are "resources required to supply load gens, HVDC, tie lines" NPCC suggests NERC develops a definition for "resource" or use the following definition found in NPCC Glossary of Terms, Document A-7: Resource Resource refers to the total contributions provided by supply-side and demand-side facilities and/or actions. Supply-side facilities include utility and non-utility generation and purchases from neighboring systems. Demand-side facilities include measures for reducing load, such as conservation, demand management, and interruptible load.1.1.6 Resources are not serving load but are supporting network operations. ADD 1.1.7 The standard is referring to requirements for sensitivity and other issues without a reference to base cases. It is recommended that each Region have a document that defines what constitutes "base case" conditions. M1What does it mean to have a hardcopy of a system model? 1.4 Data Retention: The Transmission Planner and the Planning Coordinator may not be using the same software. If both are required to store the data, are they both required to have identical software to use the data? We recommend that the entities have an option to determine which of the two entities retains the information.
Response: 1. The SDT agrees that this standard does not apply to the operating planning horizon. Please see the NERC TOP standards, as an example, for additional information concerning operational planning. The SDT believes that relay redundancy is best handled in Project 2009-07: Reliability of Protection Systems. However, the SDT has clarified the relay loadability issue in Requirement R3, part 3.3.3 by stating how these are handled in the simulations when these limits are exceeded. **R3.3.3**. Trip Transmission elements when relay loadability limits are exceeded	

Organization	Comments for Question 1
2. The SDT agrees that evaluation of construction sequences would have to be performed in order to successfully model outages as required. 3. The SDT agrees that this requirement may not be exclusively sources supplying Load. As an example, Demand Side-Management (DSM) may be used. The SDT has made a clarifying change to Requirement R1, part 1.1.6 based on industry comments. **R1, part 1.1.6** - Resources (supply or demand side) required for Load 4. The SDT believes that the "base case conditions" should be defined by the entity performing the study. Sensitivity studies are performed to provide insight into the impacts of potential variations of assumptions in studies. The SDT therefore declines to make the change as suggested. 5. Since Measure M1 states that either electronic OR hard copy format is required, the SDT believes that no changes are required since either of the formats is acceptable. An example of a hard copy of a system model is having printouts of each individual bus showing Load, Transmission line, generator, capacitors, etc., connected to that bus with associated impedances, ratings, etc. 6. The SDT believes that both the Transmission Planner and Planning Coordinator have this responsibility. Therefore, the SDT believes that the existing language is adequate and that no changes are required.	
TIS	The six month limitation of requirement 1.1.2. "Known outage(s) of generation or Transmission Facility(ies) with a duration of at least six months." Is is applicable to near-term and long-term Planning studies, but makes the new TPL-001 standard non-extensible to the near-term operational planning studies (next month, next week, or next day). During near-term operational planning periods, it is essential to include the impacts of ALL known outages in the operational analysis.It should be made clear that the TPL-001 Standard is not applicable to the Operational Planning Horizon. This points out the need for a separate (but equal in scope) operational planning analysis standard. There appears to be a double-jeopardy issue related to relay loadability and protection system redundancy. Relay loadability is handled in greater detail (as it should be) under the proposed PRC-023 standard, so any reference here should only be a placeholder. Similarly, the issues of redundancy are being addressed in more detail in a new proposed standard on protection system reliability.
Response: 1. The SDT agrees that this standard does not apply to the operating planning horizon. See the NERC TOP standards, as an example, for additional information concerning operational planning. 2. As for the double jeopardy comment - From the ERO Rules of Procedure, Appendix 4B- Sanction Guidelines, Section 3.10 Multiple Violations: "Strictly speaking, NERC or the regional entity can determine and levy a separate penalty or sanction, or direct remedial action, upon a violator for each individual violation. However, in instances of multiple violations related to a single act or common incidence of noncompliance, NERC or the regional entity will generally determine and issue a single aggregate penalty, sanction, or remedial action directive bearing reasonable relationship to the aggregate of the related violations. The penalty, sanction, or remedial action will not be that determined individually for the least serious of the violations; it will generally be at least as large or expansive as what would be called for individually for the most serious of the violations." 3. The TPL draft is silent on the issue of redundancy. However the SDT has clarified the relay loadability issue in Requirement R3, part 3.3.3 by stating how these are handled in the simulations when these limits are exceeded. **R3.3.3**. Trip Transmission elements when relay loadability limits are exceeded	

Organization	Comments for Question 1
TVA System Planning	TVA agrees with the changes made in R1 - especially the minimum 6 month duration required for outages to be modeled.In R1.1.5, how should partial path transmission service be accounted for in the known commitments for firm transmission service and interchange? VSL: In the Moderate and Severe VSL, insert "responsible entity's" in front of the term "System model" after the "or".

Response: 1. The SDT believes that you should plan for known commitments. Therefore, the part of the partial path that is known should be modeled.

2. The SDT agrees and will insert this additional wording in the moderate and severe VSLs for R1.

R1 VSL	The responsible entity's System model failed to represent one of the Requirement R1, parts 1.1.1 through 1.1.6.	The responsible entity's System model failed to represent two of the Requirement R1, parts 1.1.1 through 1.1.6. OR The responsible entity's System model did not use the latest data consistent with the data provided in accordance with the MOD-010 and MOD-012 standards and other sources, including items represented in the Corrective Action Plan.	The responsible entity's System model failed to represent three of the Requirement R1, parts 1.1.1 through 1.1.6.	The responsible entity's System model failed to represent four or more of the Requirement R1, parts 1.1.1 through 1.1.6. OR The responsible entity's System model did not represent projected System conditions as described in Requirement R1.

American Transmission Company	We propose the following changes and questions: R1 We interpret that "within their respective areas" refers the geographic footprint of the TP or PC transmission system. We propose clarifying that "within their respective area" does not require the inclusion of remote generation or load (metering) buses that are within the declared Balancing Authority area, but may be outside and separate from the TP or PC geographic footprint. R1.1.2 We suggest that this requirement be removed because the "known outage(s)" are only to be included in the models when P1 events are simulated, as specified in R2.1.3. We suggest that the intent of this requirement can be more simply handled by stating in R2.1.3 that "known outages be simulated along with P1 events for the System peak or Off-Peak conditions when the outages are scheduled to occur". R1.1.3 Add the qualification of "for the years defined in R2". R1.1.6 We interpret that "Resources required" allows the inclusion of fictional generators in the models when they are needed to

Organization	Comments for Question 1
	make future normal system cases solve. If this is not the intended interpretation, then we suggest modifying the wording to make the desired interpretation more clear. M1 " Revise M1 to indicate that each responsible entity must provide evidence with the added qualification, ". . . it is maintaining System models within its respective area, using the latest . . ."
Response: 1. The SDT believes that the "within their respective area" does refer to the Transmission Planner's or Planning Coordinator's geographic footprint. The SDT does not believe that the proposed language adds any clarity. No change made. 2. The SDT disagrees since multiple outages may be taken during the same time period under Requirement R1, part 1.1.2. The SDT believes that all outages should be modeled to ensure the System reliability during the outage duration. If a Transmission element outage occurs during a specified time, then the new base case for that time period would result with that element out of service pre-Contingency. See Requirement R2, part 2.1.3 for additional details concerning studies required with known outages. 3. The requirements in TPL-001-1 are all inter-related so no change is required. 4. The SDT believes that this requirement includes any fictional generators that may be needed to match up generation and Load. The SDT has made a clarifying change to Requirement R1, part 1.1.6. **R1, part 1.1.6** - Resources (supply or demand side) required for Load 5. The SDT agrees that adding "within its respective area" would help clarify this measure. The SDT has modified Measure M1 to include this new language. **M1**. Each Transmission Planner and Planning Coordinator shall provide evidence, in electronic or hard copy format, that it is maintaining System models within its respective area, using the latest data consistent with MOD-010 and MOD-012, including items represented in the Corrective Action Plan, representing projected System conditions, and that the models represent the required information in accordance with Requirement R1.	
PJM	Consider rewording R1.1 to, -Consistent with the desired year and season a system model shall represent-. This removes some ambiguity about what to include in each model. Possible confusion existed about the multitude of models and what needed to be in each of them. These words deal with each model separately.
Response: The SDT does not believe that the proposed language adds any clarity. No change made.	

2. Requirement R2 – Please provide any specific comments on the requirement text, VRF, Time Horizon, measure associated with the requirement, data retention associated with the requirement, and/or the VSL associated with the requirement.

Summary Consideration: A number of Commenters requested clarification of on the use of past studies (Part 2.6) either as a supplement to or in place of the annual current year studies (in Parts 2.1 through 2.5). Many also requested that the requirements for Part 2.1 (Near-Term steady state studies) and Part 2.2 (Long-Term steady state studies) be changed from "annual current studies, supplemented by qualified past studies" to "annual current study or qualified past studies".

The SDT reviewed Requirement 2 and Parts 2.1 through 2.5. Only Parts 2.1 and 2.2 require "annual current year study, supplemented by qualified past studies". Parts 2.1 and 2.2 cover steady state studies in the Near-Term and the Long-Term planning horizon, respectively. While the SDT envisions that the standard is flexible enough to allow the use of qualified past studies, the planning assessment cannot be based entirely on past studies. Because steady state analysis is part of the basic planning process, the SDT believes that the steady state portion of the studies covering Year One or year two and year five for the Near-Term Planning Horizon and one of the years in the Long-Term Planning Horizon should be done annually. Qualified past studies can be used to supplement the studies for the remaining study years to support the assessment for the entire planning horizon. Making the change as requested can result in no current-year study being performed. Therefore, the SDT declines to make the change as suggested.

A number of Commenters questioned the need for two distinct study years to support the planning assessment for the Near Term planning horizon, especially in areas with very low Load growth. They requested reducing the requirements for annual current studies to one study to support the Near-Term planning horizon.

The SDT reviewed the requirements and declines to change to one Near-Term study. Load growth may not be the only determination factor for System performance; other examples are addition or retirement of generation. The SDT therefore, believes that, as a minimum to support reliability, Transmission plans are needed for the time frame just after operation planning (Year One or year two), as well as the time frame at the end of the Near-Term (year five) to allow implementation of solutions, which may require longer lead time.

Many Commenters requested clarification of the Load level(s) to be used in an "off-peak" case. One Commenter explained that the NERC glossary defines Off-Peak as those hours or other periods defined by NAESB business practices, contract, agreements, or guides as periods of lower electrical demand and On-Peak as those hours or other periods defined by NAESB business practices, contract, agreements, or guides as periods of higher electrical demand. Therefore, the Commenters pointed out that Off-peak can be ANY Load level less than peak, and, as such, can be confusing.

The SDT notes that the intent of Parts 2.1.2 and 2.4.2 is to assess those System conditions during periods with lower Load levels than peak when the System may show different potential problems than during periods with peak Load level. For example, during light Load conditions, there may be high voltage problems because of the charging in the lightly loaded lines. There could also be thermal overload problems for areas with more generation than Load. The System could have less damping and could result in potential Stability problems. For this reason, it would not be appropriate to eliminate the

requirement to investigate Off-Peak steady state conditions. At the same time, the standard should not be overly prescriptive; therefore, the exact System Off-Peak Load should be specified by the entity performing the study.

Commenters also questioned the need for Off-Peak studies because the System Off-Peak is more likely a Stability issue than a steady state issue, and if System Off-Peak becomes a steady state issue, it can be mitigated through generation re-dispatch. Three Commenters also suggest moving Part 2.1.2 to Part 2.1.4 and treating it as one of the sensitivity analyses.

Based on the need to assess System conditions during periods of lower Load, the SDT believes that it would not be appropriate to move the studies of Off-Peak Load conditions from Parts 2.1.2 or Part 2.4.2 to be included in the sensitivity studies required in Parts 2.1.4 or 2.4.3. Sensitivity studies only need to cover one of the six conditions included in the bullets, and this may not be the one selected by the entity, resulting in no study of Off-Peak conditions being performed.

Many Commenters suggested clarification that for Part 2.1.3 it must be clear that the reference to outage schedules as listed in Part 1.1.2 (which requires modeling of known outage(s) of generation or Transmission Facility(ies) with a duration of at least six months) must be limited to the planning horizon.

Part 2.1.3 is a sub-part of Part 2.1 which is limited by the Near-Term Transmission Planning Horizon so no change is made.

One Commenter suggested that Part 2.1.3 is not needed if the outages in Part 1.1.2 are properly built into the model. Three Commenters suggested clarifying changes.

Part 2.1.3 codifies studies needed to support the Planning Assessment. The SDT intends for Part 2.1.3 to cover known long duration outages, for example, taking a 230 kV Transmission line out of service to rebuild it to operate at 500 kV. These cases are to simulate System conditions with the Facility in question out of service as Category P0 (or N-0). For the next outage, the System performance will need to meet requirements for Category P1. This is not the same as requirements for Category P6, which assumes that the outage for the first Facility would be of shorter duration than 6 months. To provide greater clarity, Part 2.1.3 has been revised.

Many Commenters expressed concerns that the use of the words and phrases, “credible”, “sufficient”, “stressed” conditions and “measurable change” may be too vague for compliance. Many Commenters also state that to include and define sensitivity cases and simulations in the standard, the base case assumptions to be used in the assessments must also be defined.

The SDT notes that it envisions that “credible”, “sufficient”, “stressed” conditions and “measurable change” are to be defined by the responsible Planning Coordinator or Transmission Planner because each System is different. Likewise, the SDT believes that the “base case conditions”, on which to base the sensitivity cases should be defined by the entity performing the study. Sensitivity studies are performed to provide insight into the impacts of potential variations of assumptions in studies.

Some Commenters suggested removing the last bulleted item in the list under Part 2.1.4. (Duration or timing of planned Transmission outages).

The SDT declines to remove the last bullet in Part 2.1.4, "Duration or timing of planned Transmission outages" as a potential sensitivity. The intent of this bullet item is to cover unexpected changes in plans, for example, a potential delay in returning a Transmission line back to service after a planned outage of 6 months or more for rebuilding to a higher capacity line. In this case, the System with the equipment in question out of service would be modeled as P0 (or N-0). For the next outage, the System performance will need to meet requirements for Category P1 and not P6.

Many Commenters also asked whether the (bulleted) list of potential sensitivities in Parts 2.1.4 and 2.4.3 should be the same. Many also expressed concern that Part 2.1.4 (as well as Part 1.1.4) seems to require forecasting reactive Load when most entities forecast demand (MW) and apply a power factor(s) to calculate reactive Load.

The SDT reviewed Parts 2.1.4 and 2.4.3. The third bullet in Part 2.4.3 has been modified. The remaining differences between the two parts are intended. The SDT developed the lists contained within Parts 2.1.4 and 2.4.3 to address those situations which it believed were the most relevant for the steady state evaluations and Stability evaluations, respectively. Part 1.1.4 and Part 2.1.4 state that a reactive forecast is required. Using a power factor is one method that may be used in calculating this reactive forecast.

Two Commenters would like clarification that the sensitivity findings do not obligate the Planning Coordinator or Transmission Planner to establish Corrective Action Plans.

The SDT notes that Part 2.7 states, in part, that "Corrective Action Plan(s) do not need to be developed solely to meet the performance requirements for a single sensitivity run in accordance with Requirements R2, parts 2.1.4 and 2.4.3. In addition, Part 2.7.2 describes the requirement on Corrective Action Plans to "Include actions to resolve performance deficiencies identified in multiple sensitivity studies or provide a rationale for why actions were not necessary".

Some Commenters suggested clarifying changes to the first sentence in Parts 2.1.4 and Part 2.4.3 from "impact of changes to the basic assumptions used in the model for the list of items below", to "impact of change to the basic assumptions used in the model". For Part 2.4.3, a number of Commenters also suggested a workshop to clarify some of the requirements.

The SDT modified Parts 2.1.4 and 2.4.3. The SDT agrees that a workshop is a good idea. However, because of differences in each Region/Interconnection, the SDT encourages the Regions to hold workshops on issues specific to the Regions utilizing SDT members as participants in the discussions.

Some Commenters expressed concerns that Part 2.1.5 may require entities to have a spare equipment strategy, about the amount of added work, and that it may be redundant with Categories P2, P3, or P6 in Table 1. One Commenter was concerned that this requirement may be difficult for entities such as the Planning Coordinator, who may not own or manage the Transmission equipment or the spare strategy.

The SDT notes that Part 2.1.5 only requires that the Planning Coordinator and the Transmission Planner plan for the potential unavailability of long lead time major Transmission equipment in accordance with its spare equipment strategy. For example, if an entity's spare equipment strategy is to have a spare transformer on site, then the unavailability of a similar transformer

(due to outages) would be limited to the time it would take to energize the spare transformer. Assuming that this time is no more than that required to return a similar outaged transformer back to service, Part 2.1.5 can be satisfied without performing additional planning studies. If on the other hand, the transformer would have to be purchased, then it would take more than a year to replace. In this case, for Part 2.1.5, P0 should be modeled with the transformer in question out of service. The performance requirements in Table 1 will apply for the next single Contingency. This is not the same as P2 or P6; both of which are events starting from System intact condition as P0. It is also not the same as P3, which covers loss of a generator as the first event, and Part 2.1.5 covers loss of a piece of major Transmission equipment for which there is no spare. In addition, the Planning Coordinator does not have to own or manage the Transmission equipment or the strategies, it only needs to know the strategy and take it into account in selecting the appropriate Contingencies to study and plans for the potential unavailability of long lead time major Transmission equipment. It also does not preclude a Transmission Planner from coordinating its spare equipment strategy with others.

Some Commenters state that the requirement is not clear as to whether a Corrective Action Plan is required for those pieces of long lead time equipment without spares. Others believe that the Corrective Action Plans should allow actions such as, “out of merit dispatch”, “operational restrictions”, and “System reconfiguration” if the System cannot meet performance requirements without the facility in service.The SDT notes that Part 2.1.5 is part of Requirement 2, for which a Corrective Action Plan would be required. As stated in Part 2.1.5, the corrective actions should, as a minimum, allow reliable operations for categories P0, P1, and P2 during the times when the equipment is expected to be unavailable. The SDT also believes that the concern of allowing actions such as, “out of merit dispatch”, “operational restrictions”, and “System reconfiguration” to be part of the Corrective Action Plan has already been addressed. These actions are allowed in Part 2.7.1 on Corrective Actions.

One commenter seeks clarification on the study requirements for Part 2.1.5 during the time period in which the spare was put in service and no spare would be in place.

The SDT notes that Part 2.1.5 does not address the specific requirements of an individual plan. Since a Planning Assessment is required annually, the analysis required under Part 2.1.5 is an annual requirement. The answer to the specific example would depend on a variety of factors, including the timing of the failure, the length of time that it would take to replace the spare, your Operation Planning time horizon and the specifics of your individual spare equipment strategy. In addition, to provide greater clarity, the SDT has revised the first sentence of Part 2.1.5.

A number of Commenters suggested that Part 2.3 be modified to state that it is up to the planner to determine the year of study within the Near-Term Transmission Planning Horizon.

The SDT notes that Part 2.3 is silent on the year of study within the Near-Term Transmission Planning Horizon. Therefore, it is up to the Transmission Planner or Planning Coordinator to select the study years most suited to the System in question. In addition, Part 2.3 only requires an annual Planning Assessment, which is to be supported by annual current or qualified past studies.

A number of Commenters asked why there is no requirement stipulating short-circuit analysis for the long-term horizon. Another Commenter asked why there is no requirement for short circuit studies similar to Requirement R3 for steady state studies or Requirement R4 for Stability studies.

The SDT notes that Part 2.3 is for short circuit assessment of the System in general and is more suited for the near-term planning horizon, when Transmission plans are more certain. Lead time to implement a corrective action if found necessary can reasonably be expected to be completed in the near-term time frame. Short circuit study for the longer term planning horizon should be studied on a case by case basis associated with specific project(s). In addition, the SDT does not believe a requirement to cover short circuit studies similar to Requirement R3 or Requirement R4 is required. The SDT's intent was that while the standard requires short circuit results to be included in the assessment, it does not need to address the technical requirements for completing the short circuit study as that may be entity specific.

Some Commenters questioned the need for short circuit studies to be required in this standard since Short circuit analysis is a local issue. The reliability of the BES does not depend on the regular assessment of short circuit duty. In addition, the effects of the failure of over-stressed breakers are already included in the events listed in Table 1: for example, P2-3 and P2-4 (Internal Breaker Fault), and P4 (Stuck Breaker while attempting to clear a fault).

The SDT states that Part 2.3 is intended for the Planning Coordinator and/or Transmission Planner to assess whether circuit breakers supporting the BES have interrupting capability for Faults that they will be expected to interrupt. Even though the effects of short circuit capability are localized and may be related to new planned Facilities, it is important to BES reliability.

A number of Commenters requested that the SDT clarify Part 2.4.1 as to when "Load models considering induction motors" are required. They requested limits or thresholds to provide Load models based on areas that have Stability limits or issues and based on Loads capable of significantly impacting voltage Stability. This is so that areas that don't have large motors or Stability issues should not be required to add unnecessary Load modeling.

The SDT declines to add specifics on Load modeling requirements because such specificity needs to be determined by the entity performing the study. Part 2.4.1 allows the use of "an aggregate System Load model which represents the overall dynamic behavior of the Load". All areas including those that do not have large motors can use an appropriate aggregate System Load model.

One Commenter asked if Part 2.4.2 should include requirements for dynamic Load models, considering the behavior of induction motor Loads.

The SDT reviewed Parts 2.4.1 and 2.4.2. In Part 2.4.1 the SDT specifies the dynamic Load model representation for on peak because the System voltages are generally lower during on peak. The percentage of motor Load, e.g., in air conditioners, could significantly increase reactive power requirements especially when they stall due to low System voltage and can therefore impact dynamic System performance on-peak. However, motor Load would likely not pose the same problem during off-peak as the System voltages are usually higher. So, in Part 2.4.2, it can be left to the discretion of the Planning Coordinator or Transmission Planner whether the dynamic motor Load would need to be represented per the requirement in Part 2.4.1.

Some Commenters requested clarification as to whether the language in Part 2.5 "proposed generation additions and changes" should also include Transmission additions and changes.

The SDT intends for Part 2.5 to require investigation of Stability issues due to addition of generators, not system stability issues in general. The SDT does not believe that, in general, a Stability assessment is needed for the Long-Term Planning Horizon. The System model for that time frame is too uncertain for a meaningful assessment of the System's stability. However, for those situations where a specific generator is planned to be added in that time frame, the SDT believes that it will be appropriate to require that the generator's Stability impact be evaluated.

A number of Commenters request clarification on the phrase “material change”, which could impact whether a past study can be used to support a current-year assessment.

The SDT notes that Part 2.6.2 also allows an entity to rely on a past study with a material change if “a technical rationale can be provided to demonstrate that System changes do not impact the performance results in the study area”. Therefore, it is up to the entities performing the study to provide the rationale based on changes, such as Load growth.

Some Commenters requested clarification of the intent of the Corrective Action Plan and whether projects added in the Corrective Action Plan should be modeled in subsequent years when assessing System performances.

The SDT believes that Part 2.7 requires a Corrective Action Plan to be developed “when the analysis indicates an inability of the System to meet the performance requirements in Table 1”. Therefore, the intent is to address situations where simulation and the application of currently planned projects and procedures are insufficient to meet the performance requirements. If a project is added to the Corrective Action Plan, it should be included as part of the study assumptions based on the criteria Planning Coordinator’s and Transmission Planner’s use for inclusion of such planned projects, and clearly identified as an assumption for the annual assessment as required in Requirement R2 until it is in service or shown to be no longer needed. Two Commenters observed that Part 2.7 seems to have lost the reference to lead times for Corrective Action Plan(s) that were present in the existing TPL-001-0, TPL-002-0, and TPL-003-0 standards and requested to include in the standard some indication of when activity needs to start to implement the Corrective Action Plan. The SDT notes that the NERC Glossary of Terms defines Corrective Action Plan as “A list of actions and an associated timetable for implementation to remedy a specific problem. Also, Part 2.7.4 requires that the CAP be reviewed in subsequent annual Planning Assessments for continued validity and implementation status of identified System Facilities and Operating Procedures. By including the timing of needed action and requiring such reviews in subsequent assessments, any deficiencies, if not adequately addressed, will become violations. Therefore, the SDT believes that this concern has been addressed.

A majority of Commenters objected to the inclusion of Part 2.9 because it is not reliability related and does not address a performance oriented issue but is rather an information gathering exercise, and suggested that this requirement be deleted.

The SDT agrees with the Commenters as to the nature of the requirement. The SDT also reviewed FERC Order 693 and observed that it directs the ERO to consider including this effort in the standard development process. The SDT has tried through several postings but industry pushback is still significant that this doesn’t belong in a standard. The SDT decided that

this effort should best be continued through a NERC data gathering request. The data gathered can then be used in a future revision of this standard.

The following changes were made to the standard requirements due to industry comments:

Requirement R2, part 2.1.3: P1 events in Table 1 with known outages modeled, as in Requirement R1, part 1.1.2 under those System peak or Off-Peak conditions when known outages are scheduled.

Requirement R2, part 2.1.4: For each of the studies described in Requirement R2, parts 2.1.1 and 2.1.2, sensitivity case(s) shall be utilized to demonstrate the impact of changes to the basic assumptions used in the model. To accomplish this, the sensitivity analysis in the Planning Assessment must vary one or more of the following conditions not already included in the studies by a sufficient amount to stress the System within a range of credible conditions that demonstrate a measurable change in performance:

Requirement R2, part 2.1.5: When an entity's spare equipment strategy could result in the unavailability of major Transmission equipment that has a lead time of one year or more (such as a transformer), the impact of this possible unavailability on System performance shall be assessed. The Planning Assessment shall reflect the P0, P1, and P2 categories identified in Table 1 during the conditions that the System is expected to experience due to the possible unavailability of the long lead time equipment.

Requirement R2, part 2.3: The short circuit analysis portion of the Planning Assessment shall be conducted annually addressing the Near-Term Transmission Planning Horizon and can be supported by current or past studies as qualified in Requirement R2, part 2.6. The analysis shall be used to determine whether circuit breakers have interrupting capability for Faults that they will be expected to interrupt using the System short circuit model with any planned generation and Transmission Facilities in service which could impact the study area.

Requirement R2, part 2.4: The Near-Term Transmission Planning Horizon portion of the Stability analysis shall be assessed annually and be supported by current or past studies as qualified in Requirement R2, part2.6. The following studies are required:

Requirement R2, part 2.4.3: For each of the studies described in Requirement R2, parts 2.4.1 and 2.4.2, sensitivity case(s) shall be utilized to demonstrate the impact of changes to the basic assumptions used in the model. To accomplish this, the sensitivity analysis in the Planning Assessment must vary one or more of the following conditions not already included in the studies by a sufficient amount to stress the System within a range of credible conditions that demonstrate a measurable change in performance:

Requirement R2, part 2.4.3, bullet #1: Load level, Load forecast, or dynamic Load model assumptions

Requirement R2, part 2.4.3, **bullet #3**: Expected in service dates of new or modified Transmission Facilities

Requirement R2, part 2.5: The Long-Term Transmission Planning Horizon portion of the Stability analysis shall be assessed to address the impact of proposed generation additions or changes in that timeframe and be supported by current or past studies as qualified in Requirement R2, part 2.6.

Requirement R2, part 2.6.2: For steady state, short circuit, or Stability analysis: the System represented in the study shall not include any material changes unless a technical rationale can be provided to demonstrate that System changes do not impact the performance results in the study area.

Requirement R2, part 2.7: For planning events shown in Table 1, when the analysis indicates an inability of the System to meet the performance requirements in Table 1, the Planning Assessment shall include Corrective Action Plan(s) addressing how the performance requirements will be met. Revisions to the Corrective Action Plan(s) are allowed in subsequent Planning Assessments but the planned System shall continue to meet the performance requirements in Table 1. Corrective Action Plan(s) do not need to be developed solely to meet the performance requirements for a single sensitivity case analyzed in accordance with Requirements R2, parts 2.1.4 and 2.4.3. The Corrective Action Plan(s) shall:

Requirement R2, part 2.7.1, bullet #4: Installation or modification of manual and automatic generation runback/tripping as a response to a single or multiple Contingency to mitigate steady state performance violations.

Requirement R2, part 2.9:

Table 1, footnote 1: If the event analyzed involves BES elements at multiple System voltage levels, the lowest System voltage level of the element(s) removed for the analyzed event determines the stated performance criteria regarding allowances for interruptions of Firm Transmission Service and Non-Consequential Load Loss.

Requirement R2, data retention: The Planning Assessments performed since the last compliance audit in accordance with Requirement R2 and Measure M2.

Organization	Comments for Question 2
Independent Electricity System Operator	(1) Part 2.1.4: We do not believe the sentence: To accomplish this, the sensitivity analysis in the Planning Assessment must vary one or more of the following conditions not already included in the studies by a sufficient amount to stress the System within a range of credible conditions that demonstrate a measurable change in performance. is necessary or measurable. The first part of 2.1.4 already stipulates sufficient details for the responsible entity to conduct sensitivity analysis including the parameters to be varied. Adding the "how-to conduct" requirement is overly prescriptive and unnecessary, and the condition for "that demonstrate a measurable change in performance" is not measurable. It lacks a definitive target or direction for the responsible entity to determine (a) what conditions need to be attained to demonstrate a measurable change in performance, (b) what constitutes "measurable change in performance", and (c) what follow-up or corrective actions are needed to address the adverse performance as a result of stressing the system beyond the forecast conditions. In our comments on Draft 1, we disagreed with the requirement to conduct sensitivity testing. This is part of the analysis exercise that planners normally perform to help them identify critical parameters/conditions for consideration in planning assessments and in developing remedial plans. Having a reliability requirement to stipulate the details of sensitivity analysis is unnecessary but produces much increased work whose acts are difficult to measure and whose results are not taken any further to arrive at a useful outcome. Once again, we urge the SDT to consider dropping this requirement. (2) Part 2.3 stipulates the short-circuit assessment requirements for the near-term horizon. Unlike its steady-state and stability counterparts, there are no requirements stipulated for short-circuit analysis for the long-term horizon. Is this intentional? If so, we are unable to identify the rationale for this decision. If not, we suggest revising Part 2.3 to: The short circuit analysis portion of the Planning Assessment shall be conducted annually addressing the near-term and long-term Transmission Planning Horizons

Organization	Comments for Question 2
	and can be supported by. (3) R2.4.1: We believe that "considering the behavior of induction motors" is not necessary since the wording "a Load model which represents the dynamic behavior" already covers this. (4) In part 2.5, we recommend inserting the text "and Transmission Facilities" after "generation" to be consistent with the wording of part 2.3 (5) As drafted, the VLSs do not address missing certain combinations of parts of Requirement R2. For example, the condition assigning a Low, Moderate or High VSL is the failure of one of the parts listed under these columns. There is no assignment for failing more than one of the listed parts. We propose adding a second condition under the High VSL as follows: OR two or more of parts 2.3, 2.6, 2.8 and 2.9.. Also, part 2.5 is missing from the SEVERE VSL. We recommend including it. As written, it is possible to miss say parts 2.1 and 2.5 and still not be captured under the Severe VSL if that is the intent.
Response: For Part 2.1.4, The SDT envisions that stressed conditions and "measurable change" are to be defined by the responsible Planning Coordinator or Transmission Planner. Part 2.7 states, in part, that "Corrective Action Plan(s) do not need to be developed solely to meet the performance requirements for a single sensitivity run in accordance with Requirements R2, Parts 2.1.4 and 2.4.3. In addition, Part 2.7.2 describes the requirement on corrective action plans to "Include actions to resolve performance deficiencies identified in multiple sensitivity studies or provide a rationale for why actions were not necessary". No change made. Part 2.3 is for short circuit assessment of the System in general and is more suited for the near-term planning horizon, when Transmission plans are more certain. Lead time to implement corrective actions if found necessary can reasonably be expected to be completed in the near-term time frame. Short circuit studies for the longer term planning horizon should be studied on a case by case basis associated with specific project(s). Therefore the SDT declines to make the change as suggested. For Part 2.4.1, the clause "considering the behavior of induction motor Loads" is a clarification of the intent of this Requirement. Therefore, the SDT declines to make the change. Part 2.5 is intended for investigation of Stability issues due to addition of generators. The SDT does not believe that, in general, a Stability assessment is needed for the Long-Term Transmission Planning Horizon. The System model for that time frame is too uncertain for a meaningful assessment of the System's Stability. However, for those situations where a specific generator is planned to be added in that time frame, the SDT believes that it will be appropriate to require that the generator's Stability impact be evaluated. The SDT reviewed the VSL assignments and believes that as written they are as intended. In assigning the VSLs the SDT considers the potential lead time to implement the corrective action as well as the impact of non-compliance. Parts 2.1, 2.2, 2.4, and 2.7 cover the basics of planning activities and the lead time to implement the Corrective Action Plan can be longer than the near term planning horizon. As such, failure to comply with two of more of these parts can severely impact future System reliability. Part 2.5 covers long term Stability analysis, corrective actions would likely involve addition of dynamic voltage support, which can reasonably be expected to be implemented within the near term horizon.	
ERCOT ISO	* Requirement R2 (and throughout the standard) What is meant by "its portion of the BES"? Will any agreements made in R7 override the "each TP and PC" requirement? To clarify this, the requirement could be rephrased: "In accordance to the responsibilities assigned in R7, the responsible Transmission Planners and Planning Coordinators shall prepare?"* Requirement 2.1.3: This is not needed if these outages are properly built into the model.

Organization	Comments for Question 2
	* Requirement 2.1.4: This requirement applies to 2.1.1 and 2.1.2. Why does it omit 2.1.3? Should it be referring to 2.1.3 for P1 contingencies? * How will 2.1.4 be proven? What is the definition of “stress” in this context and what defines “sufficient” stress? What is “measureable change”? What is the expected response to the results of this analysis? For example, if the load forecast must double to “sufficiently” stress the system, is the expectation that facilities should be planned to respond to the stress? * Requirement 2.1.5: Including the spare equipment strategy will be difficult for a PC that doesn’t own or manage the transmission equipment or the strategies. But if this inclusion is only done by a TP, the benefits of coordinating with other TPs may not be realized. * Requirement 2.2: If each entity is responsible to study the System peak Load of its area, but a PC is responsible for multiple TP systems, then what System Peak Load is the PC responsible to study “ a model that includes the non-coincident peaks of all of the TP systems for which it is responsible or the coincident peak demand across the whole system for which the PC is responsible” * Requirements 2.4.1 and 2.4.2: These appear to have inconsistent references to defined terms. Should this be consistent? The NERC glossary states: "Off-Peak: Those hours or other periods defined by NAESB business practices, contract, agreements, or guides as periods of lower electrical demand.""On-Peak: Those hours or other periods defined by NAESB business practices, contract, agreements, or guides as periods of higher electrical demand.""System: A combination of generation, transmission, and distribution components."* Requirement 2.6.2: Reads as if a change is being made to an existing study. It is confusing. Possibly restate: "2.6.2 For steady state, short circuit, or stability analysis: previous studies can be used only if a material change to the system has not occurred or if a change that did occur does not impact the study area." * Requirement 2.7: in each case throughout the standard, replace “planning events” with “planning events as defined in Table 1” and “extreme events” with “extreme events as defined in Table 1” * Requirement 2.7.2: It would be good to clearly state here or in 2.1.4 that results from stressing the system do not always need to be resolved.

Response: BES can cover the entire region or Interconnection. “Its portion of the BES” limits the accountability to only the portion for which the Planning Coordinator or Transmission Planner is responsible. Requirement R7 requires that the Planning Coordinator and Transmission Planner’s coordinate and delineate their individual responsibilities within their portions of BES if there are any overlaps. Therefore the SDT declines to make the change.

Part 2.1.3 codifies studies needed to support the Planning Assessment and as such must be retained.

Parts 2.1.1 and 2.1.2 are “normal” System conditions. Part 2.1.3 covers P1 Contingencies with known long duration outage of a Facility included as Category P0. Therefore, the standard does not require sensitivity studies on top of P1 outage events as specified in Part 2.1.3. However, the standard does not preclude applying Part 2.1.4 to Part 2.1.3.

For Part 2.1.4, The SDT envisions that stressed conditions and “measurable change” are to be defined by the responsible Planning Coordinator or Transmission Planner.

For Part 2.1.5, the Planning Coordinator does not have to own or manage the Transmission equipment or the strategies, it only needs to know the strategy and take it

Organization	Comments for Question 2
	into account in selecting the appropriate Contingencies to study. Part 2.1.5 does not require that each entity has a spare equipment strategy; only that it plans for the potential unavailability of long lead time major Transmission equipment. It also does not preclude a Transmission Planner from coordinating its spare equipment strategy with others. For Part 2.2, the intent of the System peak Load case is to model the System conditions at the time of Peak Demand of the System for which an entity is responsible. Therefore, this case should model the coincidental peak of the System. However, the standard does not preclude the Planning Coordinator from also studying System conditions at higher Load levels, such as the non-coincident peak. For Parts 2.4.1 and 2.4.2, the NERC Glossary defines "Peak Demand" as: "1. The highest hourly integrated Net Energy For Load within a Balancing Authority Area occurring within a given period (e.g., day, month, season, or year). 2. The highest instantaneous demand within the Balancing Authority Area." NERC also defines Load as, "An end-use device or customer that receives power from the electric system." The draft Standard uses "System peak Load" to refer to the System conditions when the Load level is at the Peak Demand of the System being studied; and "Off-Peak Load" to refer to those System conditions when the Load level is lower. For assessing System performance, reasonably adverse System conditions should be modeled. Part 2.6.2 is governed by Part 2.6, which states: "Past studies may be used to support the Planning Assessment if they meet the following requirements". Therefore the SDT believes that the proposed change does not add clarity and has already been covered. Furthermore, the proposed change would introduce confusion in Part 2.6.1, which is also governed by Part 2.6. Planning event appears once in Requirement R2: Part 2.7 begins with "For planning events shown in Table 1". The SDT cannot find "extreme events" in requirement R2. Therefore, the SDT was not clear on the issues being raised. Since the language used has the same intent as the proposed change, no change was made. Part 2.7 states, in part, that "Corrective Action Plan(s) do not need to be developed solely to meet the performance requirements for a single sensitivity run in accordance with Requirements R2, Parts 2.1.4 and 2.4.3. In addition, Part 2.7.2 describes the requirement on Corrective Action Plans to "Include actions to resolve performance deficiencies identified in multiple sensitivity studies or provide a rationale for why actions were not necessary". The SDT believes that this concern is covered in the existing draft.
Bonneville Power Administration	: The wording in R2.1 is unclear as to whether new annual studies are required each year or whether qualified past studies are acceptable if no changes have been made. R2 reads "This Planning Assessment shall use current or past studies", while R2.1 implies current studies must be used but can be supplemented by past studies. We suggest changing the wording from "The Near-Term Transmission Planning Horizon portion of the steady state analysis shall be assessed annually and be supported by the following annual current studies, supplemented with qualified past studies" to "The Near-Term Transmission Planning Horizon portion of the steady state analysis shall be assessed annually and be supported by the following annual current studies, or qualified past studies " It is unclear if the drafting team intended the sensitivity studies identified by the bullets in R2.1.4 to align with the sensitivity studies identified by the bullets in R2.4.3. Both are for Near-Term studies but for steady state and stability respectively. If the intent is that they align, the wording should be modified to be the same. Also, similar to R1.1.4 above, R2.1.4 could be interpreted that the standard requires forecasting reactive load. However, most

Organization	Comments for Question 2
	entities forecast demand (MW) and apply a power factor(s) to calculate reactive load. Therefore, please change "real and reactive load forecast" to "forecasted demand and power factor" so it is clear that forecasting reactive load is not required.
Response: The SDT reviewed Requirement 2 and Parts 2.1 through 2.5. Only Parts 2.1 and 2.2 require "annual current year study, supplemented by qualified past studies". Parts 2.1 and 2.2 cover steady state studies in the Near-Term and the Long-Term Transmission Planning Horizons, respectively. While the SDT envisions the standard to be flexible enough to allow the use of qualified past studies, the Planning Assessment cannot be based entirely on past studies. Because steady state analysis is part of the basic planning process, the SDT believes that the steady state portion of the studies covering Year One or year two and year five for Near-Term Transmission Planning Horizon and one of the years in the Long-Term Transmission Planning Horizon should be done annually. Qualified past studies can be used to supplement the studies for the remaining study years to support the assessment for the entire planning horizon. Making the change as requested can result in no current-year study being performed. Therefore, the SDT declines to make the change as suggested. The SDT reviewed Parts 2.1.4 and 2.4.3. The third bullet in Part 2.4.3 has been modified. The remaining differences between the two parts are intended. The SDT developed the lists contained within Parts 2.1.4 and 2.4.3 to address those situations which it believed were the most relevant for the steady state evaluations and stability evaluations, respectively. **Requirement R2, part 2.4.3**, **bullet #3**: Expected in service dates of new or modified Transmission Facilities Parts 1.1.4 and 2.1.4 state that a reactive forecast is required. Using a power factor is one method that may be used in calculating this reactive forecast	
Northeast Utilities	[R2.1] The language of this requirement should be revised as follow: The Near-Term Transmission Planning Horizon portion of the steady state analysis shall be assessed annually and be supported by current or past studies as indicated in Requirement R2, part 2.6. The following studies are required: [R2.1.2] Please clarify the load level to be used for "System Off-Peak Load". [R2.1.4] To include and define sensitivity cases and simulations in the standard NERC must also define base cases to be used in the assessments. Refer to comment suggesting the addition of Requirement R1.1.7. [R2.1.5] It is not clear whether a corrective action plan should be developed for this requirement and if we are to develop an action plan should it be temporary and cover only the time period that the major Transmission equipment was unavailable? [R2.2] The language of this requirement should be revised as follow: The long-Term Transmission Planning Horizon portion of the steady state analysis shall be assessed annually and be supported by current or past studies as indicated in Requirement R2, part 2.6. The following studies are required: [R2.3] Please provide guidance as to what year should be represented when performing short circuit studies or is it up to the Planner to select a year for the study? [R2.5] There is no guidance on the load level that should be used for the long-term stability study as is required by Requirement R2.2.1 for the Steady State assessment. [R2.9] Why the need to report the largest Consequential Load Loss since the TPL Standard does not limit the amount of Consequential Load that could be allowed? We recommend that this requirement should be deleted.

Organization	Comments for Question 2
Response: The SDT reviewed Requirement 2 and Parts 2.1 through 2.5. Only Parts 2.1 and 2.2 require "annual current year study, supplemented by qualified past studies". Parts 2.1 and 2.2 cover steady state studies in the Near-Term and the Long-Term Transmission Planning Horizons, respectively. While the SDT envisions the standard to be flexible enough to allow the use of qualified past studies, the Planning Assessment cannot be based entirely on past studies. Because steady state analysis is part of the basic planning process, the SDT believes that the steady state portion of the studies covering Year One or year two and year five for Near-Term Transmission Planning Horizon and one of the years in the Long-Term Transmission Planning Horizon should be done annually. Qualified past studies can be used to supplement the studies for the remaining study years to support the assessment for the entire planning horizon. Making the change as requested can result in no current-year study will be performed. Therefore, the SDT declines to make the change as suggested. The intent of Part 2.1.2 is to assess those System conditions during periods with lower Load levels than peak when the System may show different potential problems than during periods with peak Load level. For example, during light Load conditions, there may be high voltage problems because of the charging in the lightly loaded lines. There could also be thermal overload problems for areas with more generation than Load. For this reason, it would not be appropriate to eliminate the requirement to investigate Off-Peak steady state or Stability conditions. At the same time, the standard is not intended to be prescriptive; therefore, the exact System Off-Peak Load can be specified by the entity performing the study. For Part 2.1.4, the SDT believes that the "base case conditions", on which to base the sensitivity cases should be defined by the entity performing the study. Sensitivity studies are performed to provide insight into the impacts of potential variations of assumptions in studies. The SDT therefore declines to make the change as suggested. The Corrective Action Plan is covered in Part 2.7 for planning events shown in Table 1 "when the analysis indicates an inability of the System to meet the performance requirements in Table 1". For Part 2.1.5, the corrective action should, as a minimum, allow reliable operations for categories P0, P1, and P2 during the times when the equipment is expected to be unavailable. For Part 2.2, while the SDT envisions that the standard is flexible enough to allow the use of qualified past studies; the Planning Assessment cannot be based entirely on past studies. Because steady state analysis is part of basic planning process, the SDT believes that the steady state portion of the studies should be done annually covering one of the years in the Long-Term Transmission Planning Horizon. Qualified past studies can be used to supplement the studies for the remaining study years to support the assessment for the entire Long-Term Transmission Planning Horizon. Making the change as requested in Part 2.2 can result in no current-year study being performed for the Long-Term Transmission Planning Horizon. Therefore, the SDT declines to make the change as suggested. Part 2.3 is silent on the year of study within the Near-Term Transmission Planning Horizon. Therefore, it is up to the Transmission Planner or Planning Coordinator to select the study years most suited to the System in question. In addition, Part 2.3 only requires an annual Planning Assessment, which is to be supported by annual current or qualified past studies. For Part 2.5, the stressed conditions for Stability are often System specific. The intent is to allow the entity performing the Stability study, which is most knowledgeable about its System, to determine the System conditions, including Load levels, on which to perform the assessment. Part 2.9 has been deleted as suggested.	
Central Maine Power Company	2.1.3 In the event that R1.1.2 is kept it must be clear that the reference to outage schedules as listed in part 1.1.2 must be limited to the Planning Horizon. Table 1 There is confusion in interpretation of the table 1 When the voltages class of the contingency element and the monitored element are different (one is HV and the other is EHV), to which voltage class is the allowance for shedding of non-consequential load applied. For example if the fault is on the 138-kV side of a 345/138-kV autotransformer, are you allowed to

Organization	Comments for Question 2
	shed load to keep the 345-kV from overloading? Conversely, if the fault is on the 345-kV side of a 345/138-kV autotransformer, are you allowed to shed load to keep the 138-kV from overloading? 2.1 Language should be revised similar to R2.4 as follows: The Near-Term Transmission Planning Horizon portion of the steady state analysis shall be assessed annually and be supported by current or past studies as indicated in Requirement R2, part 2.6. The following studies are required: 2.1.2 Should be moved to the list of sensitivities currently in 2.1.4. (Off-peak needs to be more specifically defined). 2.1.4 Consistent with the suggestion made for section 1.1.2 please remove the last bulleted item in the list under section 2.1.4. Duration or timing of planned Transmission outages. 2.2 The language in 2.2 should be revised to be similar to 2.4 as follows: The Long-Term Transmission Planning Horizon portion of the steady state analysis shall be assessed annually and be supported by current or past studies as indicated in Requirement R2, part 2.6. The following studies are required: 2.3 This should be modified to state that it is up to the Planner to determine the year of study within the Near Term Transmission Planning Horizon. 2.4.2 This should be deleted as it is covered under section 2.4.3. 2.4.3 To define a sensitivity, NERC must define base assumptions. 2.7 We suggest changing the word “run” to “condition” such that it reads “Corrective Action Plan(s) do not need to be developed solely to meet the performance requirements for a single sensitivity condition in accordance with Requirements R2, parts 2.1.4 and 2.4.3.” 2.9 The requirement to report the largest single consequential load loss under Requirement 2.9 should not be included in the standard. The TPL does not limit the size of the consequential load loss. If it remains, it must be made clear that it be applicable only to Year One or Year Two.
ISO New England	2.1.3: In the event that R1.1.2 is kept it must be clear that the reference to outage schedules as listed in part 1.1.2 must be limited to the Planning Horizon. Table 1 - There is confusion in interpretation of the table 1 When the voltages class of the contingency element and the monitored element are different (one is HV and the other is EHV), to which voltage class is the allowance for shedding of non-consequential load applied. For example if the fault is on the 138-kV side of a 345/138-kV autotransformer, are you allowed to shed load to keep the 345-kV from overloading? Conversely, if the fault is on the 345-kV side of a 345/138-kV autotransformer, are you allowed to shed load to keep the 138-kV from overloading 2.1 Language should be revised similar to R2.4 as follows: “The Near-Term Transmission Planning Horizon portion of the steady stateanalysis shall be assessed annually and be supported by current or past studies as indicated inRequirement R2, part 2.6. The following studies are required:”2.1.2 Should be moved to the list of sensitivities currently in 2.1.4. (Off-peak needs to be

Organization	Comments for Question 2
	more specifically defined). 2.1.4 Consistent with the suggestion made for section 1.1.2 please remove the last bulleted item in the list under section 2.1.4. "Duration or timing of planned Transmission outages." To define a sensitivity, NERC must define base assumptions. Refer to Comment on Proposal to add an item 1.22.2 The language in 2.2 should be revised to be similar to 2.4 as follows: "The Long-Term Transmission Planning Horizon portion of the steady stateanalysis shall be assessed annually and be supported by current or past studies as indicated inRequirement R2, part 2.6. The following studies are required:"2.3 This should be modified to state that it is up to the Planner to determine the year of study within the Near Term Transmission Planning Horizon. 2.4.2 This should be deleted as it is covered under section 2.4.3. 2.4.3 To define a sensitivity, NERC must define base assumptions. Requirement 2.7 We suggest changing the word "run" to "condition" such that it reads "Corrective Action Plan(s) do not need to be developed solely to meet the performance requirements for a single sensitivity condition in accordance with Requirements R2, parts 2.1.4 and 2.4.3." 2.9: The requirement to report the largest single consequential load loss under Requirement 2.9 should not be included in the standard. The TPL does not limit the size of the consequential load loss. If it remains, it must be made clear that it be applicable only to Year One or Year Two.
United Illuminating	2.1.3: In the event that R1.1.2 is kept it must be clear that the reference to outage schedules as listed in part 1.1.2 must be limited to the Planning Horizon. Table 1 - There is confusion in interpretation of the table 1 When the voltages class of the contingency element and the monitored element are different (one is HV and the other is EHV), to which voltage class is the allowance for shedding of non-consequential load applied. For example if the fault is on the 138-kV side of a 345/138-kV autotransformer, are you allowed to shed load to keep the 345-kV from overloading? Conversely, if the fault is on the 345-kV side of a 345/138-kV autotransformer, are you allowed to shed load to keep the 138-kV from overloading? 2.1 Language should be revised similar to R2.4 as follows: "The Near-Term Transmission Planning Horizon portion of the steady stateanalysis shall be assessed annually and be supported by current or past studies as indicated inRequirement R2, part 2.6. The following studies are required:"2.1.2 Should be moved to the list of sensitivities currently in 2.1.4. (Off-peak needs to be more specifically defined). 2.1.4 Consistent with the suggestion made for section 1.1.2 please remove the last bulleted item in the list under section 2.1.4. Duration or timing of planned Transmission outages. To define a sensitivity, NERC must define base assumptions. Refer to Comment on Proposal to add an item 1.22.2 The

Organization	Comments for Question 2
	language in 2.2 should be revised to be similar to 2.4 as follows: The Long-Term Transmission Planning Horizon portion of the steady stateanalysis shall be assessed annually and be supported by current or past studies as indicated inRequirement R2, part 2.6. The following studies are required: 2.3 This should be modified to state that it is up to the Planner to determine the year of study within the Near Term Transmission Planning Horizon. 2.4.2 This should be deleted as it is covered under section 2.4.3. 2.4.3 To define a sensitivity, NERC must define base assumptions. Requirement 2.7 We suggest changing the word "run" to "condition" such that it reads "Corrective Action Plan(s) do not need to be developed solely to meet the performance requirements for a single sensitivity condition in accordance with Requirements R2, parts 2.1.4 and 2.4.3." 2.9: The requirement to report the largest single consequential load loss under Requirement 2.9 should not be included in the standard. The TPL does not limit the size of the consequential load loss. If it remains, it must be made clear that it be applicable only to Year One or Year Two.

Response: Part 2.1.3 is a sub-part of Part 2.1 which is limited by the Near-Term Transmission Planning Horizon so no change is made.

The determination of when interrupting Non-Consequential Load and/or Firm Transmission Service is permitted to meet Table 1 performance requirements service is based solely on the lowest voltage level of Facilities disconnected by design for the planning event studied and not based on the monitored Facilities. For the example provided, the HV provisions would apply since a 345/138kV transformer is considered a HV facility that is removed from service regardless of where the fault originated. Changes were made to footnote 1 to better clarify the SDT's intent.

> **Table 1, footnote 1**: If the event analyzed involves BES elements at multiple System voltage levels, the lowest System voltage level of the element(s) removed for the analyzed event determines the stated performance criteria regarding allowances for interruptions of Firm Transmission Service and Non-Consequential Load Loss.

While the SDT envisions the standard to be flexible enough to allow the use of qualified past studies, the Planning Assessment cannot be based entirely on past studies. Because Near-Term steady state analysis as required in part 2.1 is part of the basic planning process, the SDT believes that the steady portion of the studies covering Year One or year two and year five for Near-Term Transmission Planning Horizon should be done annually. Qualified past studies can be used to supplement the studies for the remaining study years to support the assessment for the entire Near-Term Transmission Planning Horizon. Making the change as requested can result in no current-year study being performed. Therefore, the SDT declines to make the change as suggested.

The intent of Part 2.1.2 is to support the assessment of those System conditions during periods with lower Load levels than peak when the System may show different potential problems than during periods with peak Load level. For example, during light Load conditions, there may be high voltage problems because of the charging in the lightly loaded lines. There could also be thermal overload problems for areas with more generation than Load. The SDT therefore disagrees that studies of Off-Peak Load should be included in sensitivity studies. Sensitivity studies only need to cover one of the six conditions included in the bullets and may not be the one selected by the entity, resulting in no study of Off-Peak conditions being performed. The exact System Off-Peak Load should be specified by the entity performing the study.

The SDT declines to remove the last bullet in Part 2.1.4, "Duration or timing of planned Transmission outages" as a potential sensitivity. The intent is to cover unexpected changes in plans, for example, a potential delay in returning a Transmission line back to service after a planned outage of 6 months or more for rebuilding to

Organization	Comments for Question 2
	a higher capacity line. In this case, the System with the equipment in question out of service would be modeled as P0 (or N-0). For the next outage, the System performance will need to meet requirements for Category P1 and not P6. For Part 2.1.4, the SDT believes that the "base case conditions", on which to base the sensitivity cases, should be defined by the entity performing the study. Sensitivity studies are performed to provide insight into the impacts of potential variations of assumptions in studies. The SDT therefore declines to make the change as suggested. While the SDT envisions the standard to be flexible enough to allow the use of qualified past studies, the Planning Assessment cannot be based entirely on past studies. Because Long-Term steady state analysis as required in part 2.2 is part of the basic planning process, the SDT believes that the steady state portion of the studies covering one of the years in the Long-Term Transmission Planning Horizon should be done annually. Qualified past studies can be used to supplement the studies for the remaining study years to support the assessment for the entire Long-Term Transmission Planning Horizon. Making the change as requested can result in no current-year study being performed. Therefore, the SDT declines to make the change as suggested. Part 2.3 is silent on the year of study within the Near-Term Transmission Planning Horizon. Therefore, it is up to the Transmission Planner or Planning Coordinator to select the study years most suited to the System in question. In addition, Part 2.3 only requires an annual Planning Assessment, which is to be supported by annual current or qualified past studies. . The SDT declines to delete part 2.4.2 as it does not believe that Part 2.4.3 covers System conditions at Off-Peak Load level(s) as envisioned. The Sensitivity study only needs to cover one of the six conditions included in the bullets and may not be the one selected by the entity, resulting in no study of Off-Peak conditions. As in Part 2.1.4, for Part 2.4.3, the SDT believes that the "base case conditions" on which to base the sensitivity cases, should be defined by the entity performing the study. Sensitivity studies are performed to provide insight into the impacts of potential variations of assumptions in studies. Part 2.7 has been changed to address your concerns. **Requirement R2, part 2.7**: For planning events shown in Table 1, when the analysis indicates an inability of the System to meet the performance requirements in Table 1, the Planning Assessment shall include Corrective Action Plan(s) addressing how the performance requirements will be met. Revisions to the Corrective Action Plan(s) are allowed in subsequent Planning Assessments but the planned System shall continue to meet the performance requirements in Table 1. Corrective Action Plan(s) do not need to be developed solely to meet the performance requirements for a single sensitivity case analyzed in accordance with Requirements R2, parts 2.1.4 and 2.4.3. The Corrective Action Plan(s) shall: Part 2.9 has been deleted as suggested.
MAPP	2.1.3: It must be clear that the reference to outage schedules as listing in part 1.1.2 must be limited to the Planning Horizon. There is confusion in interpretation of the Table 1 When the voltages class of the contingency element and the monitored element are different (one is HV and the other is EHV), to which voltage class is the allowance for shedding of non-consequential load applied. For example if the fault is on the 138-kV side of a 345/138-kV autotransformer, are you allowed to shed load to keep the 345-kV from overloading? Conversely, if the fault is on the 345-kV side of a 345/138-kV autotransformer, are you allowed to shed load to keep the 138-kV from overloading? R2.1.4/R2.4.3 The terms "credible" and "measurable change" are ambiguous and not defined. Therefore, we suggest that these terms be defined or more clearly described to avoid the risk of different and possibly contradictory interpretations by TPs, PCs, and auditors.

Organization	Comments for Question 2
	R 2.1.5 - Spare equipment strategy. This appears to be more of a risk analysis than a simulation study requirement. If a simulation is required then it would appear that the PC/TP would need to rerun the entire system intact study with each "major transmission equipment "that is unavailable as a prior outage (i.e. for each generator, HVDC, SVC, XFMR) over the entire study parameters. How would this be evaluated? Is this not covered under P2 already? We also propose replacing the term "major Transmission" with "BES" because BES is a well defined term while "major Transmission" is not. R2.4.1 We recommend that the SDT clarify section 2.4.1 and when load models considering induction motors are required. The clarification should add limits or thresholds to provide load models based on areas that have stability limits or issues and to loads of substation size and having dynamic characteristic capable of significantly impacting voltage stability. Areas that don't have large motors or stability issues should not be required to add unnecessary load modeling. R2.6.2 Change "to demonstrate that System changes do no impact the performance results in the study area" to "to demonstrate that System changes do not significantly impact the performance results in the study area." 2.6.2 As written results in an unrealistic requirement to review every impact minor or large and determine which meets this item and which do not. The recommended change solves this problem. R 2.7 Corrective Action Plan: Is this not already apart of FERC Order 890? The PC may not be able to develop a CAP as they may not be the owners and would have no say about how a problem will be resolved. R 2.8.1 Suggest using a word other than "deficiencies" as it is associated with non-compliance. R2.9 ? We propose that this requirement be removed because annually stating the single, largest expected, Consequential Load Loss due to a P1 or P2 event in the TP or PC system is not needed to provide reliable BES performance or assure open and transparent Transmission planning peer review. In general, standards should not contain requirements that don't improve reliability.

Response: Part 2.1.3 is a sub-part of Part 2.1 which is limited by the Near-Term Transmission Planning Horizon so no change is made.

The determination of when interrupting Non-Consequential Load and/or Firm Transmission Service is permitted to meet Table 1 performance requirements service is based solely on the lowest voltage level of Facilities disconnected by design for the planning event studied and not based on the monitored Facilities. For the example provided, the HV provisions would apply since a 345/138kV transformer is considered a HV facility that is removed from service regardless of where the fault originated. Changes were made to footnote 1 to better clarify the SDT's intent and it now reads:

> **Table 1, footnote 1**: If the event analyzed involves BES elements at multiple System voltage levels, the lowest System voltage level of the element(s) removed for the analyzed event determines the stated performance criteria regarding allowances for interruptions of Firm Transmission Service and Non-Consequential Load Loss.

For Part 2.1.4, The SDT envisions that credible stressed conditions and "measurable change" are to be defined by the responsible Planning Coordinator or Transmission Planner.

Part 2.1.5 only requires that the Planning Coordinator or Transmission Planner plans for the potential unavailability of long lead time major Transmission equipment in accordance with its spare equipment strategy. For example, if an entity's spare equipment strategy is to have a spare transformer on site, then the unavailability of a

Organization	Comments for Question 2
similar transformer (due to outages) would be limited to the time it would take to energize the spare transformer. Assuming that this time is no more than that required to return a similar outaged transformer back to service, Part 2.1.5 can be satisfied without performing additional planning studies. If on the other hand, the transformer would have to be purchased, then it would take more than a year to replace. In this case, P0 should be modeled with the transformer in question out of service. This is not the same as P2. The SDT declines to replace the term "major Transmission equipment" with "BES equipment" because the intent is to investigate the unavailability of major pieces of equipment in the Transmission System. Transmission is defined in the NERC Glossary as, "An interconnected group of lines and associated equipment for the movement or transfer of electric energy between points of supply and points at which it is transformed for delivery to customers or is delivered to other electric systems". For Part 2.4.1, the SDT declines to add specifics, which includes "limits or thresholds to provide Load models based on areas that have Stability limits or issues and to Loads of substation size and having dynamic characteristic capable of significantly impacting voltage Stability" because such specificity needs to be determined by the entity performing the study. Part 2.4.1 allows the use of "an aggregate System Load model which represents the overall dynamic behavior of the Load". All areas including those that do not have large motors can use an appropriate aggregate System Load model. The SDT declines to make the change suggested in Part 2.6.2 because it did not add more clarity than the existing language. In Part 2.7, the responsibility for developing CAPs lies with both the Planning Coordinator & Transmission Planner regardless of ownership. A FERC Order is not a NERC Standard, and not subject to the NERC audit and enforcement procedures. The SDT declines to change the word "deficiencies" in Part 2.8.1. The SDT believes it is the most appropriate word to capture the SDT intent. Part 2.9 has been deleted as suggested.	
Oncor Electric Delivery	2.1.3: It must be clear that the reference to outage schedules listed in part 1.1.2 must be limited to the Planning Horizon. See the TIS comment tor R1. There is lack of clarity in the interpretation of certain rudiments of Table 1 When the voltage class of the contingency element and the monitored element are different (one is HV and the other is EHV), which voltage class is the allowance for shedding of non-consequential load applied? For example if the fault is on the 138-kV side of a 345/138-kV autotransformer, are there allowances to shed load to keep the 345-kV from exceeding its load rating. Conversely, if the fault is on the 345-kV side of a 345/138-kV autotransformer, would there be allowances to shed load to keep the 138-kV from exceeding its load rating 2.1 Language should be revised similar to R2.4 as follows: "The Near-Term Transmission Planning Horizon portion of the steady stateanalysis shall be assessed annually and be supported by current or past studies as indicated inRequirement R2, part 2.6. The following studies are required: 2.1.2 the term "off peak" is an issue. The definition just says less than peak. 2.1.4 Duration or timing of planned Transmission outages. In order to define a "sensitivity", NERC must define a base case. 2.1.5 There should be greater clarity to the fact that this is an assessment only, and not a solution. Actions such as "out of merit dispatch", "operational restrictions", "System reconfiguration" can be part of a Corrective Action Plan if the system cannot meet

Organization	Comments for Question 2
	performance requirements without the facility in service. 2.2 The language in 2.2 should be revised to be similar to 2.4 as follows: The Long-Term Transmission Planning Horizon portion of the steady state analysis shall be assessed annually and be supported by current or past studies as indicated inRequirement R2, part 2.6. The following studies are required:2.3 The standard does not indicate a year to study. Is this the discretion of the Transmission Planner? [Review last comment/why doesn't this apply to stability?] 2.4.2 There should be greater clarity to the term "Off peak" Should the Transmission Planner have more discretion in selecting load level. Is there a need for this requirement? 2.4.3 To define a "sensitivity" a base case must be defined for comparison. Requirement 2.7 suggest changing the term "run" to "condition" in "Corrective Action Plan(s) does not need to be developed solely to meet the performance requirements for a single sensitivity run(?) in accordance with Requirements R2, parts 2.1.4 and 2.4.3. 2.7.2 See previous comments on sensitivities. 2.9: The requirement to report the largest single consequential load loss under Requirement 2.9 should not be included in the standard. If it remains, provide greater clarity that there is applicability only to Year One. Furthermore, additional clarification is needed to ensure that the requirement to report consequential load loss (single number) is ONLY for the most severe contingencies studied for the P1 and P2 contingencies. 2.9 ? Why is it necessary to identify the largest consequential load loss if the TPL standard does not limit the size of the consequential load loss?

Response: Part 2.1.3 is a sub-part of Part 2.1 which is limited by the Near-Term Transmission Planning Horizon so no change is made.

The determination of when interrupting Non-Consequential Load and/or Firm Transmission Service is permitted to meet Table 1 performance requirements service is based solely on the lowest voltage level of Facilities disconnected by design for the planning event studied and not based on the monitored Facilities. For the example provided, the HV provisions would apply since a 345/138kV transformer is considered a HV facility that is removed from service regardless of where the fault originated. Changes were made to footnote 1 to better clarify the SDT's intent and it now reads:

> **Table 1, footnote 1**: If the event analyzed involves BES elements at multiple System voltage levels, the lowest System voltage level of the element(s) removed for the analyzed event determines the stated performance criteria regarding allowances for interruptions of Firm Transmission Service and Non-Consequential Load Loss.

Part 2.1 covers near-term steady state studies and Part 2.4 covers near-term Stability studies. While the SDT envisions the standard to be flexible enough to allow the use of qualified past studies, the Planning Assessment cannot be based entirely on past studies. Because steady state analysis is part of basic planning process, the SDT believes that the steady state portion of the studies covering Year One or year two and year five for Near-Term Transmission Planning Horizon should be done annually. Qualified past studies can be used to supplement the studies for the remaining study years to support the assessment for the entire Near-Term Transmission Planning Horizon. Making the change as requested can result in no current-year study being performed. Therefore, the SDT declines to make the change as suggested.

Organization	Comments for Question 2
	The intent of Part 2.1.2 is to assess those System conditions during periods with lower Load levels than peak when the System may show different potential problems than during periods with peak Load level. For example, during light Load conditions, there may be high voltage problems because of the charging in the lightly loaded lines. There could also be thermal overload problems for areas with more generation than Load. Since such conditions can be case specific, the standard should not be overly prescriptive; therefore, the exact System Off-Peak Load should be specified by the entity performing the study. The last bullet in Part 2.1.4, "Duration or timing of planned Transmission outages" is intended to cover unexpected changes in plans, for example, a potential delay in returning a Transmission line back to service after a planned outage of 6 months or more for rebuilding to a higher capacity line. The SDT believes that your concern on Part 2.1.5 has already been addressed. Part 2.7.1 Corrective Action can include, among other things: o Installation, modification, or removal of Protection Systems or Special Protection Systems o Installation or modification of automatic generation tripping as a response to a single or multiple Contingency to mitigate Stability performance violations. o Installation or modification of manual and automatic generation runback/tripping as a response to a single or multiple Contingency to mitigate Steady State performance violations. o Use of Operating Procedures specifying how long they will be needed as part of the Corrective Action Plan. o Use of rate applications, DSM, new technologies, or other initiatives. For Part 2.2, while the SDT envisions the standard to be flexible enough to allow the use of qualified past studies, the Planning Assessment cannot be based entirely on past studies. Because steady state analysis is part of basic planning process, the SDT believes that the long-term steady state portion of the studies in Part 2.2 should be done annually. Qualified past studies can be used to supplement the studies for the remaining study years to support the assessment for the entire long-term planning horizon. Making the change as requested can result in no current-year study being performed. Therefore, the SDT declines to make the change as suggested. Part 2.3 is silent on the year of study within the Near-Term Transmission Planning Horizon. Therefore, it is up to the Transmission Planner or Planning Coordinator to select the study years most suited to the System in question. In addition, Part 2.3 only requires an annual Planning Assessment, which is to be supported by annual current or qualified past studies. The NERC glossary states: "Off-Peak: Those hours or other periods defined by NAESB business practices, contract, agreements, or guides as periods of lower electrical demand." The intent is to assess those System conditions during periods with lower Load levels than peak when the System may show different potential problems than during periods with peak Load levels. For example, during light Load conditions, there may be high voltage problems because of the charging in the lightly loaded lines. There could also be thermal overload problems for areas with more generation than Load. The exact System Off-Peak Load should be specified by the entity performing the study. For part 2.4.3, the SDT believes that the "base case conditions" should be defined by the entity performing the study. Sensitivity studies are performed to provide insight into the impacts of potential variations of assumptions in studies involving long-term forecasts. Part 2.7 has been changed to address your concerns. **Requirement R2, part 2.7**: For planning events shown in Table 1, when the analysis indicates an inability of the System to meet the performance requirements in Table 1, the Planning Assessment shall include Corrective Action Plan(s) addressing how the performance requirements will be met. Revisions to the Corrective Action Plan(s) are allowed in subsequent Planning Assessments but the planned System shall continue to meet the performance requirements in Table 1. Corrective Action Plan(s) do not need to be developed solely to meet the performance requirements for a single sensitivity case analyzed in accordance with Requirements R2, parts 2.1.4 and 2.4.3. The Corrective Action Plan(s) shall: For Part 2.7.2, see the responses above to your other comments.

Organization	Comments for Question 2
Part 2.9 has been deleted as suggested.	
FirstEnergy Corp	A. FirstEnergy disagrees with requirement R2 sub-part 2.1.1 requiring the annual completion of two near-term steady-state studies. We believe that on a yearly basis completion of one near-term study and one long-term study is sufficient to interpolate and extrapolate the results needed to cover the entire planning horizon. The team should keep in mind that the overall assessment will include qualified past studies to supplement the results for a more refined view of anticipated conditions. We request that the team revise the near-term annual study requirements to require completion of only one near-term steady-state study and allow the TP/PC flexibility in choosing the appropriate study year. B. In requirement 2.7.1 the team should consider collapsing the 3rd and 4th bullets into a more succinct single bullet that says "Installation or modification of automatic generation runback/tripping". The use of "manual" generation run-back should be accounted for in an Operating Procedure (5th bulleted item). The additional text on the existing 3rd and 4th bullets discussing "single or multiple contingency" is not needed as the text stated in the parent R2.7 text is sufficient. C. We concur with the team's removal of the overly prescriptive requirements to include "initiation dates" and "in-service dates" from the Corrective Action Plans. However, the team may want to ensure some aspect of timing is identified in the Corrective Action Plans. It is recommended that the team revise the text of sub-part 2.7.1 that precedes the bulleted list to read "List system deficiencies, associated actions needed to achieve required System performance and the timing of when the actions are needed"
Response: For Part 2.1.1, the SDT declines to change to one near-term study because as a minimum to support reliability, Transmission plans are needed for the timeframe just after operation planning (Year One or year two), as well as the timeframe at the end of the near-term (year five) to allow implementation of solutions, which may require longer lead time. The SDT reviewed Requirement R2, part 2.7.1 and found that it is clear as written. The SDT therefore declines to make the change. For Requirement R2, part 2.7.1, the NERC Glossary of Terms defines Corrective Action Plan as "A list of actions and an associated timetable for implementation to remedy a specific problem. Therefore, the suggested change to include "timing" is not needed.	
NERC Standards Review Subcommittee	Add R2.7.1 Item #7 The MRO NSRS proposes the addition of the following bullet item to R2.7.1, "Planned System adjustments such as Transmission configuration changes and redispatch of generation are allowed if such adjustments are executable within the time duration of the Facility Ratings." because this explains what is allowed to be considered for Corrective Action Plan developments. [After bullet item #7 is added, Note "e" under "Steady State & Stability section of Table 1 should refer to R2.7.1.] R2.9" The MRO NSRS still proposes that this requirement be removed because annually stating the single, largest expected, Consequential Load Loss due to a P1 or P2 event in the TP or PC system is not needed to provide reliable BES performance or assure open and transparent Transmission planning peer review. In general, standards should not contain requirements that don't improve reliability. R2.4.1 The MRO NSRS recommends that the SDT clarify section 2.4.1 and when load models considering induction motors are required. The clarification should add limits or thresholds to provide load models based on areas that have stability limits or issues and to loads of substation size and having dynamic characteristic capable of significantly impacting voltage stability.

Organization	Comments for Question 2
	Areas that don't have large motors or stability issues should not be required to add unnecessary load modeling.
Response: Planned system adjustments could include Operating Plans such as re-dispatch. Requirement R2, part 2.7.1 is a list of examples, so it could include more items than listed, including Note e in Table 1. The SDT declines to make the suggested change. Part 2.9 has been deleted as suggested. For Part 2.4.1, the SDT declines to add specifics, which includes "limits or thresholds to provide Load models based on areas that have Stability limits or issues and to Loads of substation size and having dynamic characteristic capable of significantly impacting voltage Stability" because such specificity needs to be determined by the entity performing the study. Part 2.4.1 allows the use of "an aggregate System Load model which represents the overall dynamic behavior of the Load". Areas that do not have large motors can use an appropriate aggregate System Load model.	
Lakeland Electric	Agree with the changes made to the spare equipment strategy requirement
Response: The SDT thanks you for your comments**.**	
Progress Energy Florida, Inc.	As PEF is opposed to TPL-001-1 as a whole, PEF will have no further comment on this issue other than to encourage all appropriate parties to review PEF's previous comments to this effect.
Response: Throughout the drafting process, the SDT has carefully considered your comments as well as comments from other industry members.	
Florida Municipal Power Agency, and its Member Cities	As worded, 2.1 now seems to require power flow, short circuit and stability studies be done every year for the Near Term. Is this the intent of the SDT? There are smaller systems that do not require this (e.g., if a smaller system has nothing more change form year to year than a 1.5% load growth, and there is plenty of margin on various SOLs, why is another study needed?). FMPA suggests re-wording to: "The Near-Term Transmission Planning Horizon portion of the steady state analysis shall be assessed annually and be supported by the following annual current studies or by qualified past studies as indicated in Requirement R2, part 2.6" Since 2.2 only has one sub-bullet, 2.2.1 ought to be collapsed into 2.2. We think it would read less confusing as well, see below for suggested phrasing: "The Long-Term Transmission Planning Horizon portion of the steady state analysis shall be assessed annually and be supported by a current study of expected System peak Load conditions for one of the years in the Long-Term Transmission Planning Horizon and the rationale for why that year was selected, supplemented with qualified past studies as indicated in Requirement R2, part 2.6. The short circuit studies of 2.3 should not only assess the fault current interrupting capability of breakers, but also circuit switchers and the momentary current carrying capability of other equipment, such as switches and substation bus. We recommend changing the phrase to: "The analysis shall be used to determine whether the fault current is within the momentary current carrying capabilities and/or fault current interrupting capabilities of (Elements or Facilities) using ". Also, for the short circuit study of 2.3 (and 2.8), it is not necessary to study all of the contingencies, just P2. Taking other Facilities out in addition to the fault will only reduce fault current. Auditors may not be aware of that and maybe the standard

Organization	Comments for Question 2
	could say that only P2 needs to be studied to reduce future confusion. In 2.6, "material change" is ambiguous, especially in regards to load growth. How much load growth is allowed before it is "material"? Is the intent of the SDT to have 2.7 apply to all previous bullets in R2? If so, then it could be made clearer by starting 2.7 with " For the analyses discussed in 2.1 through 2.5, and for the planning events shown in Table 1, when the analyses indicate "? 2.7 seems to have lost the reference to lead times for Corrective Action Plan(s) that were present in the existing TPL-001-0, TPL-002-0 and TPL-003-0 standards, is that the intent of the SDT? Since only two of the years in the near term need to be studied, and one of the year's in the long term study, there ought to be some method to determine when a Corrective Action Plan is needed, the lead time of that Corrective Action Plan, to give an indication of when activity needs to start to implement the Corrective Action Plan. The Planning Coordinator and Transmission Planner should not be responsible in 2.7 for any repercussion of an entity not implementing the Corrective Action Plan. Bullet 2.7 ought to be reworded to developing the Corrective Action Plan only and not implementation. For instance, 2.7.4 requires review of Corrective Action Plans. If a Corrective Action Plan calls for a major transmission addition, then that addition usually is in the domain of the Transmission Owner. If the Transmission Owner decides not to build the transmission upgrade for a variety of reasons (e.g., budgets, etc.), then the Planning Coordinator and Transmission Planner could end up being in violation of the standards through no fault of their own (e.g., even though curtailment of firm service would then be allowed in 2.7.3, if such curtailment would not solve the problem, e.g., if there is not enough pre-contingency re-dispatch available, then the Planning Coordinator would be in violation).Implementation of the Corrective Action Plan, however, is very important. FMPA suggests that another requirement be added to require Transmission Owners, Generation Owners, Transmission Operators, Generation Operators (latter two if there are operating schemes involved) within the planning area of the Planning Coordinators and Transmission Planners to implement the plan as determined by the Planning Coordinators and Transmission Planners, with another requirement requiring that the entities agree on the Corrective Action Plan. This would mean expanding the applicability of the standard. This new requirement ought to have a VRF of High because not implementing the Corrective Action Plan could have high risks. What is the reliability purpose of 2.9? Is it to identify the largest potential supply / demand mismatch? If so, the largest loss of source, usually about 1000 MW, will overwhelm this number. FMPA does not understand the reliability purpose of providing this number, especially since the power flow models already capture most of this information (e.g., amount of load connected to tap substations or radial feeds). This seems to be an administrative item with no reliability purpose, especially since it only applies to P1 (why does it apply to P1 ? how can there be consequential load loss without a contingency, unless it's specific to 2.1.5?) and P2.
Response: The SDT reviewed Requirement R2, parts 2.1 through 2.5. Only Parts 2.1 and 2.2 require "annual current year study, supplemented by qualified past studies". Parts 2.1 and 2.2 cover steady state studies in the Near-Term and the Long-Term planning horizons, respectively. Short circuit studies (Part 2.3), near-term Stability studies (Part 2.4) and long-term Stability studies (Part 2.5) allow the use of current or qualified past studies. Therefore, as drafted the standard only requires annual steady state studies. While the SDT envisions the standard to be flexible enough to allow the use of qualified past studies, the Planning Assessment cannot be based entirely on past studies. Because steady state analysis is part of the basic planning process, the SDT believes that the steady state portion of the studies covering Year One or year two and year five for the Near-Term Transmission Planning Horizon and one of the years in the Long-Term Transmission Planning Horizon	

Organization	Comments for Question 2
	should be done annually. Qualified past studies can be used to supplement the studies for the remaining study years to support the assessment for the entire planning horizon. Making the change as requested can result in no current-year study being performed. Therefore, the SDT declines to make the change as suggested. In addition, the two study years are intended to cover both the timeframe just after operation planning (Year One or year two), as well as the timeframe to allow implementation of solutions, which may require a longer lead time. Load growth may not be the only determination factor on System performance; other examples are addition or retirement of generation. The suggested change for Parts 2.2 and 2.2.1 does not provide additional clarity. The SDT declines to make the change. Part 2.3 was changed in the previous posting to include circuit breakers only due to a preponderance of industry comments in draft 3. The SDT declines to make the suggested change. The SDT believe this concern on Part 2.3 is covered. The Transmission Planner or Planning Coordinator can provide an explanation of why the Contingencies selected would produce the more severe conditions. Note that Part 2.3 requires an annual Planning Assessment only. Part 2.6.2 allows an entity to rely on a past study with a material change if "a technical rationale can be provided to demonstrate that System changes do not impact the performance results in the study area". Therefore, it is up to the entities performing the study to provide the rationale based on changes, such as Load growth. The intent of Part 2.7 is to be applied to all "planning events shown in Table 1, when the analysis indicates an inability of the System to meet the performance requirements in Table 1". The SDT believes that the intent is clear. The SDT declines to make the suggested change. Part 2.7 requires that for all planning events in Table 1, the Planning Assessment includes a Corrective Action Plan(s) addressing how the performance requirements will be met. Revisions to the Corrective Action Plan(s) are allowed in subsequent Planning Assessments but the planned System shall continue to meet the performance requirements in Table 1. Also, Part 2.7.4 requires that the CAP be reviewed in subsequent annual Planning Assessments for continued validity and implementation status of identified System Facilities and Operating Procedures. For 2.7.1, the NERC Glossary of Terms defines Corrective Action Plan as "A list of actions and an associated timetable for implementation to remedy a specific problem. Therefore, your concerns have been addressed. The planners' responsibility is to always have a plan that meets the performance requirements during the planning horizon. If the original CAP can't be implemented, the planner must develop an alternate plan to meet the performance requirements. The definition of CAP includes a timing element as per the Glossary. For issues involving inability to implement a CAP, which is beyond the control of the Planning Coordinator or Transmission Planner, such as the example given, the Planning Coordinator or Transmission Planner can rely on Part 2.7.3 in addition to those actions already allowed tomeet performance requirements. Part 2.9 has been deleted to address your concerns.
Gainesville Regional Utilities	Combining 4 TPL standards into 1 standard makes for a situation that you will always be audited on all the covered functional areas instead of part of the functions in a given audit. Example, in 2009, TPL-004 was not part of the audit while the other 3 standards were part of the audit. Of course, you should always be current with all functional assessments. I use one assessment document to cover all the functional areas. I do like the added clarity on the time horizons for various studies. I find R2. part 2.1.5 to create a somewhat clearer focus on spare equipment strategy. But the created task could create a lot of

Organization	Comments for Question 2
	work for a utility depending on its configuration and redundancy.
Response: Combining TPL-001 through -006 into one standard was in response to comments from the industry and FERC Order 693. Part 2.1.5 only requires that the Planning Coordinator or Transmission Planner plans for the potential unavailability of long lead time major Transmission equipment in accordance with its spare equipment strategy. For example, if an entity's spare equipment strategy is to have a spare transformer on site, then the unavailability of a similar transformer (due to outages) would be limited to the time it would take to energize the spare transformer. Assuming that this time is no more than that required to return a similar outaged transformer back in service, Part 2.1.5 can be satisfied without performing additional planning studies. If on the other hand, the transformer would have to be purchased, then it would take more than a year to replace, and studies will likely needed to be done to plan for the potential unavailability.	
ITC Holdings	Comments: R2.1.1 Are two distinct study years necessary if a transmission owner can demonstrate that loads within their footprint have minimal growth over the 5 year period, defined to be less than X% of growth? Since the standard requires a relatively large number of studies to meet performance requirements, an initial set of studies along with studies demonstrating that "CAPs work" seems sufficient during periods of load stagnation. R2.1.4, R2.4.3 & R2.7.1. These requirements refer to new facilities which would include new generators. ITC requests clarification as to what constitutes a "new generator" that needs to be considered -- those in the queue, those with signed Interconnection Agreements, those under construction... What is the line of demarcation between what is in and what is out? In addition to the above, ITC also requests clarification as to whether or not these requirements apply to new generators, who connect to the network as "Energy Only" resources and, are either, not required to construct facilities needed to meet reliability requirements or are allowed to operate as "Energy Only" until needed facilities are constructed. The CAP for these facilities is that they will be curtailed or other generation will be curtailed should "operating" violations occur. Under market mechanisms, these generators are allowed to operate if their energy prices are lower than other generators whose curtailment eliminates the violation, even though the curtailed generators have paid for the facilities needed to meet reliability requirements. As the standard is written, these requirements imply that all generators must be included in studies. Were we to do so, significant standards violations might result. Does the Transmission Owner have to study all violation scenarios or include all "Energy Only" generators in studies when the CAP is always the same: "Market redispatch". Please clarify study scenario requirements for "Energy Only" resources.
Response: For Part 2.1.1, Load growth may not be the only determination factor on system performance; other examples are addition or retirement of generation. The two study years are intended to cover both the time frame just after operation planning (Year One or year two), as well as the time frame to allow implementation of solutions, which may require longer lead time. NERC Standards specify what the requirements are and not how to meet the requirements. The SDT therefore declines to specify how the studies are to be done. The intent of the standard is to allow the Planning Coordinator or the Transmission Planner performing the studies the discretion on the sensitivities (Parts 2.1.4 and 2.4.3) to investigate and the generators to be assumed in the Corrective Action Plan (Part 2.7.1). The SDT believes that the requirements under this draft do include "Energy Only" generators. Please note under Requirement R2, part 2.7.1 that manual and automatic generation runback/tripping is allowed as a response to single or multiple Contingencies to mitigate Steady State performance violations. Also automatic generation tripping is allowed for single and multiple Contingency events to mitigate Stability performance violations	

Organization	Comments for Question 2
Deseret Power	Comments: The wording in R2.1 is unclear as to whether new annual studies are required each year or whether qualified past studies are acceptable if no changes have been made. R2 reads "This Planning Assessment shall use current or past studies", while R2.1 implies current studies must be used but can be supplemented by past studies. We suggest changing the wording from "The Near-Term Transmission Planning Horizon portion of the steady state analysis shall be assessed annually and be supported by the following annual current studies, supplemented with qualified past studies" to "The Near-Term Transmission Planning Horizon portion of the steady state analysis shall be assessed annually and be supported by the following annual current studies, or qualified past studies" It is unclear if the drafting team intended the sensitivity studies identified by the bullets in R2.1.4 to align with the sensitivity studies identified by the bullets in R2.4.3. Both are for Near-Term studies but for steady state and stability respectively. If the intent is that they align, the wording should be modified to be the same. Also, similar to R1.1.4 above, R2.1.4 could be interpreted that the standard requires forecasting reactive load. However, most entities forecast demand (MW) and apply a power factor(s) to calculate reactive load. Therefore, please change "real and reactive load forecast" to "forecasted demand and power factor" so it is clear that forecasting reactive load is not required.
Response: The SDT reviewed Requirement R2, parts 2.1 through 2.5. Only Parts 2.1 and 2.2 require "annual current year study, supplemented by qualified past studies". Parts 2.1 and 2.2 cover steady state studies in the near-term and the long-term planning horizons, respectively. While the SDT envisions the standard to be flexible enough to allow the use of qualified past studies, the Planning Assessment cannot be based entirely on past studies. Because steady state analysis is part of the basic planning process, the SDT believes that the steady state portion of the studies covering Year One or year two and year five for the Near-Term Transmission Planning Horizon and one of the years in the Long-Term Transmission Planning Horizon should be done annually. Qualified past studies can be used to supplement the studies for the remaining study years to support the assessment for the entire planning horizon. Making the change as requested can result in no current-year study being performed. Therefore, the SDT declines to make the change as suggested. The SDT reviewed Parts 2.1.4 and 2.4.3. The third bullet in Part 2.4.3 has been modified. The remaining differences between the two parts are intended. The SDT developed the lists contained within Parts 2.1.4 and 2.4.3 to address those situations which it believed were the most relevant for the steady state evaluations and Stability evaluations, respectively. **Requirement R2, part 2.4.3**, **bullet #3**: Expected in service dates of new or modified Transmission Facilities Part 1.1.4 and Part 2.1.4 state that a reactive forecast is required. Using a power factor is one method that may be used in calculating this reactive forecast	
SCE&G	Does R.2.9 refer to customer load only or does it include pumped storage facility pumping loads?
Response: Part 2.9 has been deleted based on industry input.	
Orlando Utilities Commission	I like the clarification of "summarize results" compared to the wording in the prior edition. -It is obvious an attempt has been made to further define when past studies may be used, but I think it is still a bit confusing. Requirement 2.1, 2.2 appear to be saying that current studies must be used, but that additional information can be provided if desired and it meets certain requirements. Sub-Requirements 2.3, 2.4 and 2.5 seem to allow use of past studies that meet the

Organization	Comments for Question 2
	requirements of 2.6 in lieu of new work. If this is the correct understanding then I suggest the following: For 2.1 and 2.2 revise the statement to read "…and be supported by the following annual current studies. The analysis may also include other current and past studies in addition to the required annual current studies listed below. The reference to R2.6 is removed since including it invites confusion over when prior art can be used and if the material is solely supplemental, then there is no reliability advantage to limiting what can be incorporated a supplemental material. R2.6 should also be revised to read "Past studies may be used in lieu of current studies for R2.3, R2.4, R2.6 if they meet the following requirements:" This will insure that it is very obvious in both places when prior art may be used in lieu of new work. -R2.6.2 Consider revising "the study shall not include any material changes" to "the system represented in the study shall not include any material changes". Stating that "the study shall not include material changes" implies changes to the study from the time it was performed to the time it was used, like inserting or removing text, not changes in the underlying transmission system which is what I think you are really targeting. -R2.1.4 and 2.4.3: The statement "sufficient amount to stress the system…credible conditions…demonstrate a measurable change" implies that a sensitivity must meet three general criteria: (I will be using load forecast as an easy example, but obviously there is a range and combination of items that could be used) 1. That it is expected to increase stress, for example increasing the load forecast would general increase stress, where decreasing it would not. 2. That the increase should be substantial, for example growing the load at 2x the expected growth rate vs 1.01x the expected rate. 3. That the change doesn't have to exceed the bounds of credibility. If a 2x or 3x increase doesn't result in a stack of new constraints, it does not mean the sensitivity is inadmissible. Is this a correct understanding? -R2.7: Is the "Corrective Action Plan" intended to document all of an entities planned future reliability related transmission projects and operational procedures? Or is it intended to address situations where simulation and the application of currently planned projects and procedures are insufficient to meet the performance requirements? The next comment is very closely related to this one. -R2.7: If a project is added one year to the "Corrective Action Plan" but then in the subsequent year has been added to the model, resulting in simulation showing no performance violations, should it be removed from the Corrective Action Plan? Or should it be referenced in the plan each year until it is either in service or demonstrated to no longer be required?

Response: The SDT reviewed Requirement R2, parts 2.1 through 2.5. Only Parts 2.1 and 2.2 require "annual current year study, supplemented by qualified past studies". Parts 2.1 and 2.2 cover steady state studies in the near-term and the long-term planning horizons, respectively. While the SDT envisions the standard to be flexible enough to allow the use of qualified past studies, the Planning Assessment cannot be based entirely on past studies. Because steady state analysis is part of the basic planning process, the SDT believes that the steady state portion of the studies should be done annually covering Year One or year two and year five for Near-Term Transmission Planning Horizon and one of the years in the Long-Term Transmission Planning Horizon. Qualified past studies can be used to supplement the studies for the remaining study years to support the assessment for the entire planning horizon. The remaining requirements for Short circuit studies Part 2.3), near-term stability studies (Part 2.4) and long-term Stability studies (Part 2.5) can then be covered by current or past studies.

The SDT declines to change Part 2.6 to read "Past studies may be used in lieu of current studies for Requirement R2, parts 2.3, 2.4, and 2.6 if they meet the following requirements" because it does not add clarity.

Organization	Comments for Question 2
Part 2.6.2 has been revised to address your concerns. **Requirement R2, part 2.6.2**: For steady state, short circuit, or Stability analysis: the System represented in the study shall not include any material changes unless a technical rationale can be provided to demonstrate that System changes do not impact the performance results in the study area For Parts 2.1.4 and 2.4.3, the example you gave is a valid example for addressing "the sensitivity analysis in the Planning Assessment must vary one or more of the following conditions not already included in the studies by a sufficient amount to stress the System within a range of credible conditions that demonstrate a measurable change in performance". Part 2.7 requires a Corrective Action Plan to be developed "when the analysis indicates an inability of the System to meet the performance requirements in Table 1". Therefore, the intent is to address situations where simulation and the application of currently planned projects and procedures are insufficient to meet the performance requirements. If a project is added to the Corrective Action Plan, it should be included as part of the study assumptions based on that the criteria Planning Coordinator and Transmission Planner use for inclusion of such planned projects, and clearly identified as an assumption for the annual Assessment as required in Requirement R2, until it is in service or shown to be no longer needed.	
TVA System Planning	In R2.1.4 and R2.4.3, TVA is concerned about the use of the words "sufficient" and "measurable" from a compliance standpoint. TVA believes that these words should be deleted or at least better defined to clarify the actual intent from the SDT on what is technically required for these sensitivity studies. TVA agrees with limiting R2.1.5 spare equipment strategy to just the P0, P1, and P2 single contingency categories. In R2.7.3, both Non-Consequential Load Loss and curtailment of Firm Transmission Service can be permitted if situations arise that are beyond the control of the TP or PC. However these actions are not useful for stability related issues. TVA suggests that for stability related issues, if situations arise that are beyond the control of the Transmission Planner or Planning Coordinator that prevent the implementation of a Corrective Action Plan in the required timeframe, then the TP or PC is permitted to allow some generation to lose synchronism utilizing out of step relaying or other protection method to correct the situation that would normally not be permitted in Table 1. We appreciate the deletion of the previous requirement on non-Consequential Load Loss from the previous draft of TPL-001-1.R2.9: Recommend that this refers to customer loads only, and not to include utility loads such as pump-storage or compressed air generating plant pumping load.
Response: For Part 2.1.4, The SDT envisions that stressed conditions and "measurable change" are to be defined by the responsible Planning Coordinator or Transmission Planner. For Part 2.7.3, most of the situations that are beyond the control of the Transmission Planner or Planning Coordinator usually involve permitting or long lead time projects. If there is a Stability issue, there should be time to implement a CAP. No change made. Part 2.9 has been deleted in response to industry comments.	
Lafayette Utilities System	LUS is satisfied that the current version resolves the issues we raised as to R2.

Organization	Comments for Question 2
Response: The SDT thanks you for your comments.	
MidAmerican Energy Company	MidAmerican commends the SDT for their hard work on this standard. MidAmerican does have comments about this requirement though. MidAmerican recommends a minor editorial to 2.1.4. The subrequirement states that "To accomplish this, the sensitivity analysis in the Planning Assessment must vary one or more of the following conditions not already included in the studies, by a sufficient amount to" The subrequirement as written is not clear whether the condition to be varied is to be one not included in the base studies or a condition that is not varied as part of the sensitivity studies. MidAmerican recommends that this subrequirement be changed as follows: "To accomplish this, the sensitivity analysis in the Planning Assessment must vary one or more of the following conditions FOR WHICH VARIATION IS not already included in the studies, by a sufficient amount to"? The words in caps are words that MidAmerican suggests are added to this part of requirement 2. MidAmerican recommends that the SDT clarify section 2.4.1 and when load models considering induction motors are required. The clarification should add limits or thresholds to provide load models based on areas that have stability limits or issues and to loads of substation size and having dynamic characteristic capable of significantly impacting system damping. Areas that don't have large motors or stability issues should not be required to add unnecessary load modeling. MidAmerican recommends that the SDT modify 2.6.2 by changing "to demonstrate that System changes do no impact the performance results in the study area" to "to demonstrate that System changes do not SIGNIFICANTLY impact the performance results in the study area." The word that is in all caps is added. 2.6.2 as written results in an unrealistic requirement to review every impact minor or large and determine which meets this item and which do not. The recommended change solves this problem. MidAmerican recommends the data retention for R2 and M2 be revised to change "All" to "The". The word "All" is unnecessary and could encourage over-the-top compliance monitoring and enforcement. The revised data retention would read as follows: "THE Planning Assessments performed since". The word in all caps is a word suggested to be added.
Response: The SDT declines to make the change because it does not add clarity to the requirement. For Part 2.4.1, the SDT declines to add specifics, which includes "limits or thresholds to provide load models based on areas that have stability limits or issues and to loads of substation size and having dynamic characteristic capable of significantly impacting voltage stability" because such specificity needs to be determined by the entity performing the study. Part 2.4.1 allows the use of "an aggregate System Load model which represents the overall dynamic behavior of the Load". Areas that do not have large motors can use an appropriate aggregate System Load model. The SDT declines to make the change suggested in Part 2.6.2 because it did not add more clarity than the existing language. The SDT has made the suggested change. **Requirement R2, data retention**: The Planning Assessments performed since the last compliance audit in accordance with Requirement R2 and Measure M2.	
British Columbia Transmission Corp	none

Organization	Comments for Question 2
Response: The SDT thanks you for your comments.	
SERC Dynamics Review Subcommittee (DRS)	Part 2.1.4 and 2.4.3: delete the word "sufficient." We appreciate the deletion of the previous R2.9 on non-Consequential Load Loss from the previous draft of TPL-001-1.Bullet 1 of R.2.4.3: change "Dynamic Model" to "Dynamic Load Model". Part 2.9: Does this refer to customer loads only, or does it include pump-storage or compressed air generating plant pumping load.We recommend that the expected largest consequential load be limited to customer load, not utility load, i.e., pump-storage.
Response: For Part 2.1.4, The SDT envisions that credible sufficient stressed conditions are to be defined by the responsible Planning Coordinator or Transmission Planner. Bullet 1 of Requirement R2, part 2.4.3: has been revised to address your concerns. **Requirement R2, part 2.4.3, bullet #1:** Load level, Load forecast, or dynamic Load model assumptions Part 2.9 has been deleted in response to industry comments.	
SERC Planning Standards Subcommittee	Part 2.1.4 and 2.4.3: delete the word "sufficient." We appreciate the deletion of the previous R2.9 on non-Consequential Load Loss from the previous draft of TPL-001-1. Part 2.9: Does this refer to customer loads only, or does it include pump-storage or compressed air generating plant pumping load.
Response: The word "sufficient" is needed in Part 2.1.4 and Part 2.4.3 to ensure that the variations made to the assumptions to investigate sensitivity are large enough to be meaningful so they can demonstrate the impacts of the changes. The SDT envisions that credible sufficient stressed conditions are to be defined by the responsible Planning Coordinator or Transmission Planner. As such, the SDT declines to revise Parts 2.1.4 and 2.4.3 as suggested. Part 2.9 has been deleted in response to industry comments.	
CenterPoint Energy	Part 2.2: CenterPoint Energy recommends deleting part 2.2 since studies performed in the Long-Term Transmission Planning Horizon have dubious value for organizations whose longest lead time items take less than five years to construct. Even for organizations requiring longer than five years to build some projects, it should be noted that beyond the five year horizon, generation reserve margins have generally been exhausted, requiring speculation as to the location and size of future generating resources in developing system models. In recognition of this reality, the current set of TPL standards appropriately require that assessments be conducted beyond the five-year horizon only as needed to address identified marginal conditions that may require longer lead time solutions. Part 2.5: Part 2.5 appears to have been added in response to one comment to the 3rd draft. In fact, the commenter did not recommend or propose the requirement found in 2.5, but only asked about the SDT's intent regarding this matter. CenterPoint

Organization	Comments for Question 2
	Energy strongly disagrees that part 2.5 is necessary or advisable and recommends that it be deleted. We wholeheartedly agree that Transmission Planners should consider and selectively study potential stability concerns. However, we believe that Transmission Planners are already considering and selectively studying potential stability concerns, and deleting part 2.5 would not preclude the continuation of these practices. However, we oppose mandating stability analysis in the Long-Term Transmission Planning horizon of proposed generation additions or changes due to the uncertainty of where and how much generation will actually be constructed beyond the five year horizon, particularly since generation can be built much faster than five years and can easily invalidate any such assessment. Part 2.7: CenterPoint Energy recommends that part 2.7 be revised to add a reference to part 3.4 and part 4.4 as follows: For planning events shown in Table 1, selected in accordance with parts 3.4 and 4.4, when the analysis. This recommended change is to prevent possible ambiguity or conflicts between part 2.7 and parts 3.4 and 4.4. Part 2.9: CenterPoint Energy agrees with multiple commenters to the 3rd draft that part 2.9 (previously 2.8) should be deleted. Part 2.9 is an unnecessary reporting requirement that has no actual bearing on reliability. By continuing to insist on R2.9, the SDT seems to have inappropriately ignored industry comments to the previous draft while ironically inserting R2.5 into this draft in response to only one industry comment (which did not actually advocate that R2.5 was necessary). CenterPoint Energy urges the SDT to reconsider its dismissal of industry concerns regarding R2.9.
Response: For Part 2.2, the SDT believes there is value in taking a long range view in planning to assess the general trend. The effort can be useful even taking into consideration the uncertainty surrounding long-term planning studies. Since the Long-Term Transmission Planning Horizon is year 6 – year 10, the Planning Coordinator or Transmission Planner can for example, select year 6 or 7 in the Long-Term Transmission Planning Horizon and then use this study as the past study to supplement the near-term studies in the following year(s). For Part 2.5, The SDT believes it is important to evaluate Stability when the planners are evaluating new generation addition or changes which can be more than 5 years in the future, as required in NERC Standard FAC-001-0. Part 2.7 is the Corrective Action Plan resulting from the Planning Assessment. Part 3.4 covers the requirements for studies supporting the steady state portion of the assessment; and Part 4.4 covers the requirements for studies supporting the Stability portion. The SDT believes that Part 2.7 is clear as is and no change is needed. Part 2.9 has been deleted in response to industry comments.	
Progress Energy Carolinas	PEC believes that the language of R2.5 "proposed generation additions and changes" should be clarified as to whether transmission changes near generators are included or not. PEC believes that the requirement to report the largest single consequential load loss under Requirement 2.9 should not be included in the standard. If it remains, it must be made clear that it be applicable only to Year One, and there should be additional clarification that the requirement to report consequential load loss (single number) is ONLY for the most severe contingencies studied for the P1 and P2 contingencies.
Response: Part 2.5 is intended for investigation of Stability issues due to addition of generators. The SDT does not believe that, in general, a Stability assessment is needed for the Long-Term Transmission Planning Horizon. The System model for that timeframe is too uncertain for a meaningful assessment of the System's Stability. However, for those situations where a specific generator is planned to be added in that timeframe, the SDT believes that it will be appropriate to require that	

Organization	Comments for Question 2
the generator's Stability impact be evaluated. Part 2.9 has been deleted in response to industry comments.	
Portland General Electric Co.	PGE believes that the scope of the studies mandated by this requirement should be limited to elements energized at 200kV and above, elements included in generator interconnection, and elements included in interconnections with other utilities. PGE's 115kV system functions to provide "load service" rather than transmission and does not impact the grid in the same manner as the 230kV and 500kV elements that comprise PGE's transmission system. PGE further believes that the requirement to conduct off-peak studies should focus on the varied generation patterns and impact to recognized transmission paths (for WECC, those identified in the WECC Path Catalog) rather than including the full range of studies that are required for on-peak studies. PGE's transmission system is embedded within the larger regional transmission system of the Bonneville Power Administration, and studies of System Off-Peak Load will not reveal any meaningful data internal to PGE's system. Finally, PGE believes that the wording of R2.6.2 is so restrictive that the entire intent of the subrequirement would be negated. PGE believes that "material changes" is such a broad term that every past study would have to have such changes made to reflect the system as it currently exists. Therefore, a company seeking to use a past study to support its Planning Assessment would have to provide a "technical rationale" showing that the material changes do not impact performance results. An effort to demonstrate a technical rationale in a manner that would satisfy future auditors would in many cases be more burdensome than performing a new study.
Response: NERC Reliability Standards apply to BES elements as defined by each Regional Entity. No change made. The SDT believes that System Off-Peak Load studies are a valuable tool in proper planning. Therefore, your Planning Assessment needs to address the results for your System of an Off-Peak Load study regardless of whether you conduct the studies or you rely on studies done by others. No change made. The SDT does not agree that developing a 'technical rationale' is such an onerous task. One can utilize their professional judgment, point to past studies of similar conditions, etc. The key is to thoroughly explain your decisions. No change made.	
FRCC Transmission Working Group	Please further clarify the definition when past studies may be used. Requirement 2, bullets 2.1, 2.2 appear to say that current studies must be used, but that additional information can be provided if desired and it meets certain requirements. Sub-Requirements 2.3, 2.4 and 2.5 seem to allow use of past studies that meet the requirements of 2.6 in lieu of new work. If this is the correct understanding then I suggest the following:For 2.1 and 2.2 revise the statement to read "and be supported by the following annual current studies. The analysis may also include other current and past studies in addition to the annual current studies listed below. R2Bullet 2.6 should also be revised to read "Past studies may be used in lieu of current studies for Bullets 2.3, 2.4, 2.6 if they meet the following requirements: This will insure that it is very obvious the planner, when they may or may not use prior art in place of new work and it's specified in all places in the standard where this is referenced.For these supplemental or "above and beyond" studies, 2.6 should not be referenced. First of all it makes it confusing, since 2.6 is primarily concerned with prior art being used in lieu of new work. Also if the material is supplemental, then it's supplemental and setting requirements on it will

Organization	Comments for Question 2
	only reduce the material provided not improve the reliability of the system. -2.6.2 Consider revising "the study shall not include any material changes" to "the system represented in the study shall not include any material changes". Stating that "the study shall not include material changes" implies changes to the study from the time it was performed to the time it was used, not changes in the underlying transmission system which is what I think you are really targeting. -2.1.4 and 2.4.3: The statement "sufficient amount to stress the system"credible conditions"demonstrate a measurable change" implies that a sensitivity must meet three general criteria: (I will be using load forecast as an easy example, but obviously there is a range of items that could be used)1. That it is expected to increase stress, for example increasing the load forecast would general increase stress, where decreasing it would not.2. That increases should be substantial, for example growing the load at 2x the expected rate vs 1.01x the expected rate. 3. That the change doesn't have to exceed the bounds of credibility. If a 2x or 3x increase doesn't result in a stack of new constraints, it does not mean the increase has to go to 10x the forecast just to show extensive effects. Is this a correct understanding? , realizing that I'm only referencing load growth for simplicity, it not being the only sensitivity? -2.1.4 and 2.4.3: The first sentence "impact of changes to the basic assumptions used in the model for the list of items below", please consider changing to just "impact of change to the basic assumptions used in the model". Including the "list of items below" implies that all items must be addressed, which seems to conflict with the second sentence which specifically allows one or more. -2.7: Is the "Corrective Action Plan" intended to document all of an entities planned future reliability related transmission projects and operational procedures? Or is it intended to address situations where simulation and the application of currently planned projects and procedures are insufficient to meet the performance requirements? -2.7: If a project is added one year to the "Corrective Action Plan" but then in the subsequent year has been added to the model, resulting in simulation showing no performance violations, should it be removed from the Corrective Action Plan? Or should it be referenced in the plan each year until it is either in service or demonstrated to no longer be required? Comments: With regard to the Lower VSL, is 2.6 considered to be met if only one of two sub-requirements (2.6.1 or 2.6.2) is met? With regard to the Moderate VSL, is 2.8 considered to be met if only one of two sub-requirements (2.8.1 or 2.8.2) is met? Also, since 2.3 depends on 2.6, what happens if an entity does not meet R2.6 because it did not meet one of the sub-requirements of 2.6? With regard to the High and Severe VSL, if any one of the sub-requirements of 2.1, 2.2, 2.4 or 2.7 is not met, is the entire sub-requirement considered not met? (This question is generic throughout all VSL) Also, for the short circuit study of 2.3 (and 2.8), it is not necessary to study all of the contingencies, just P2. Taking other Facilities out in addition to the fault will only reduce fault current. Auditors may not be aware of that and maybe the standard could say that only P2 needs to be studied to reduce future confusion. Is the intent of the SDT to have 2.7 apply to all previous bullets in R2? If so, then it could be made clearer by starting 2.7 with

Organization	Comments for Question 2
	"For the analyses discussed in 2.1 through 2.5, and for the planning events shown in Table 1, when the analyses indicate " 2.7 seems to have lost the reference to lead times for Corrective Action Plan(s) that were present in the existing TPL-001-0, TPL-002-0 and TPL-003-0 standards, is that the intent of the SDT? Since only two of the years in the near term need to be studied, and one of the year's in the long term study, there ought to be some method to determine when a Corrective Action Plan is needed, the lead time of that Corrective Action Plan, to give an indication of when activity needs to start to implement the Corrective Action Plan. The requirement clearly states that "For the steady state portion of the Planning Assessment " it must perform simulations that show generator ride through voltage limitations under 3.3.2. However, ride through limitations are performed through stability simulations not steady state as required by R3. Please provide clarity. Additionally, 3.2 requires studies to be performed to assess the impact of the extreme events. Yet, 3.3 requires analyses shall be performed but does not specify the events intended to study. Suggested language for 3.3 should say "Contingency analyses shall be performed to assess the impact of the extreme events and:" Under 3.3.1 it states that the Planner must simulate the removal of all elements that the Protection System would be expected to disconnect. Language should be included to allow the Planner to provide a rationale to assess more severe system conditions without needing to simulate the effects of Protection Systems. The references within the requirements are very confusing. 3.1 refers to a contingency list created in 3.4 which refers back to 3.1. Similarly 3.2 refers to a contingency list created in 3.5 which refers back to 3.2. These should be combined into one sub-requirement.

Response: The SDT reviewed Requirement R2, parts 2.1 through 2.5. Only Parts 2.1 and 2.2 require "annual current year study, supplemented by qualified past studies". Parts 2.1 and 2.2 cover steady state studies in the near-term and the long-term planning horizons, respectively. While the SDT envisions the standard to be flexible enough to allow the use of qualified past studies, the Planning Assessment cannot be based entirely on past studies. Because steady state analysis is part of the basic planning process, the SDT believes that the steady state portion of the studies covering Year One or year two and year five for Near-Term Transmission Planning Horizon and one of the years in the Long-Term Transmission Planning Horizon should be done annually. Qualified past studies can be used to supplement the studies for the remaining study years to support the assessment for the entire planning horizon.

The SDT declines to make the suggested changes in Parts 2.1, 2.2, and 2.6 because they do not add clarity.

The SDT has revised Part 2.6.2 as suggested.

> **Requirement R2, part 2.6.2**: For steady state, short circuit, or Stability analysis: the System represented in the study shall not include any material changes unless a technical rationale can be provided to demonstrate that System changes do not impact the performance results in the study area.

For Parts 2.1.4 and 2.4.3, the example you gave is a valid example for addressing "the sensitivity analysis in the Planning Assessment must vary one or more of the following conditions not already included in the studies by a sufficient amount to stress the System within a range of credible conditions that demonstrate a measurable change in performance".

Part 2.1.4 and 2.4.3 have been revised as suggested.

> **Requirement R2, part 2.1.4**: For each of the studies described in Requirement R2, parts 2.1.1 and 2.1.2, sensitivity case(s) shall be utilized to demonstrate the impact of changes to the basic assumptions used in the model. To accomplish this, the sensitivity analysis in the Planning Assessment must vary one or more of the following conditions not already included in the studies by a sufficient amount to stress the System within a range of credible conditions that demonstrate a measurable change in performance:

Organization	Comments for Question 2
	Requirement R2, part 2.4.3: For each of the studies described in Requirement R2, parts 2.4.1 and 2.4.2, sensitivity case(s) shall be utilized to demonstrate the impact of changes to the basic assumptions used in the model. To accomplish this, the sensitivity analysis in the Planning Assessment must vary one or more of the following conditions not already included in the studies by a sufficient amount to stress the System within a range of credible conditions that demonstrate a measurable change in performance: Part 2.7 requires a Corrective Action Plan to be developed for "when the analysis indicates an inability of the System to meet the performance requirements in Table 1". Therefore, the intent is to address situations where simulation and the application of currently planned projects and procedures are insufficient to meet the performance requirements. If a project is added to the Corrective Action Plan, it should be included as part of the study assumptions (and clearly identified as such), based on the criteria that the Planning Coordinator and Transmission Planner use for inclusion of such planned projects, for the annual Assessment as required in requirement R2, until it is in service or shown to be no longer needed. For the VSL for Requirement 2, both Parts 2.6.1 and 2.6.2 as well as Parts 2.8.1 and 2.8.2 must be met for the requirements to be met. If an entity relied on a past study, which was not a qualified study in accordance with Part 2.6, then based on the standard, it would not meet the requirement in Part 2.3. The intent is that with regard to the High and Severe VSL, if any one of the sub-requirements of Parts 2.1, 2.2, 2.4, or 2.7 is not met, the entire sub-requirement will be considered not met. The SDT believes this concern on Part 2.3 is covered. The Transmission Planner or Planning Coordinator can provide an explanation for why the Contingencies selected would produce the more severe conditions. Part 2.3 requires annual Planning Assessment only. The intent of Part 2.7 is to be applied to all "planning events shown in Table 1, when the analysis indicates an inability of the System to meet the performance requirements in Table 1". Therefore, a reference to Parts 2.1 through 2.5 is not needed. For 2.7.1, NERC Glossary of Terms defines Corrective Action Plan as "A list of actions and an associated timetable for implementation to remedy a specific problem. Also, Part 2.7.4 requires that the CAP be reviewed in subsequent annual Planning Assessments for continued validity and implementation status of identified System Facilities and Operating Procedures. By including the timing of needed action and requiring such reviews in subsequent Assessments, any deficiencies, if not adequately addressed, will become violations. Therefore, the SDT believes that your concerns have been addressed. Part 3.3.2: Generator protections exist that can result in generator tripping for bus voltage below minimum generator steady state voltage limits. The SDT believes that the voltage ride through test is applicable in post-Contingency steady-state where the planner would know if post-Contingency bus voltage violates generator trip points. If a trip point is violated, Part 3.3.2 would require the planner to trip the generator in the post-Contingency case to assess if performance is met with the generator tripped. No change made. Part 3.2 & Part 3.3: The SDT revised the wording of Part 3.3 as shown below to make it clear that it applies to both planning and extreme events: **Requirement R3, part 3.3**: Contingency analyses for Requirement R3, Parts 3.1 & 3.2 shall: Part 3.3.1: The SDT disagrees with the comment as the intent of Requirement R3, part 3.3.1, consistent with Order 693, is to perform the simulation to reflect how the Protection System will operate in the real System for each Contingency without operator intervention. The requirement does not preclude the Planning Coordinator/Transmission Planner from studying more severe scenarios. No change made. Part 3.1/Part 3.4 & Part 3.2/Part 3.5: The SDT does not believe that combining the requirements would provide any significant advantage. No change made.

Organization	Comments for Question 2
American Electric Power	R 2.6.2, as written, may lead to misinterpretation. Following are two alternative suggestions to remedy this issue for the SDT's consideration: 1) "For steady-state, short-circuit, or Stability analysis: the study shall be rendered obsolete by any material changes unless?" or 2) "For steady-state, short-circuit, or Stability analysis: the system shall not include any material changes unless?" While R3 (steady-state studies) covers 2.1 and 2.2 (steady-state assessments), and R4 (stability studies) covers 2.4 and 2.5 (stability assessments), there does not appear to be a corresponding requirement (short circuit studies) to cover 2.3 (short circuit assessments). We recommend that a new requirement be established and numbered to align between existing requirements R3 and R4.
Response: Part 2.6.2 has been revised as suggested. **Requirement R2, part 2.6.2**: For steady state, short circuit, or Stability analysis: the System represented in the study shall not include any material changes unless a technical rationale can be provided to demonstrate that System changes do not impact the performance results in the study area. For Part 2.3, the SDT does not believe a requirement to cover short circuit studies similar to Requirement 3 or Requirement 4 is required. The SDT's intent is for the short circuit study results to be included in the assessment. It does not believe that the standard needs to address the technical requirements for completing the short circuit study as that may be entity specific. Therefore the SDT declines to make the change as suggested.	
NYISO	R2. - The NYISO tariff establishes a biennial "Comprehensive System Planning Process," Compliance with an "Annual Planning Assessment" will therefore be a simple repetition of data reported in the prior year assessment. Please clarify that this is acceptable. We believe that the use of "past studies" provides for this. R2.1 - "Steady state" should be defined upfront with other definitions. In defining "steady state" is "thermal voltage" the primary metric being measured? R2.1.1 - Again want to confirm that due to the NYISO biennial planning cycle, that use of "past studies" will be acceptable. R2.1.2 - Please define what is intended by "off peak." Our reading is that it is ANY load level less than peak. Also, consistent with our comments on the prior draft, system off-peak is more likely a stability issue than a steady state issue. If system off-peak becomes a steady state issue, it can be mitigated through generation redispatch. Accordingly, it appears that this requirement is not necessary for steady state analysis. R2.1.4 - This is just too vague to be a useful requirement. The sentence ? To accomplish this, the sensitivity analysis in the Planning Assessment must vary one or more of the following conditions not already included in the studies by a sufficient amount to stress the System within a range of credible conditions that demonstrate a measurable change in performance. is too subjective to be enforceable. Either definitions of phrases like "sufficient amount" "credible conditions" and "measurable change" are included, or the requirement needs to be written more clearly to state what is actually being required without such high level of subjectivity. Further, we believe that this sentence may not be necessary at all, as the first sentence in 2.1.4 provides sufficient detail to conduct sensitivity analysis without being overly prescriptive. R2.4.3 As much of this language is a repeat of language in 2.1.4, above, our comments there also apply to this section. R2.6 - "Past Studies may be used to support the Planning Assessment if they meet the following requirements" and the sub-

Organization	Comments for Question 2
	requirement R2.6.2 states that for SS, SC, or stability analysis the study shall not include any material changes, such unless a technical rationale can be provided to demonstrate that System changes do not impact the performance results in the study area. While this is better than the prior draft, the NYISO still would like more clarity on the definition of "material changes." Would the inclusion of a technical rationale satisfy ANY change, regardless of magnitude, in a past study. Or could we just invoke the usage of a statement such as "The NYISO feels this change does not constitute a "material change." to be compliant with this requirement? We recommend that the regional entity should have a process to determine whether changes are material that is similar to the NPCC's process for determining what level of annual transmission review should be conducted each year. Finally, does this only relate to, or is limited to, the LATEST PLANNING HORIZON system model R2.7 Recommend that in the sentence "Corrective Action Plan(s) do not need to be developed solely to meet the performance requirements for a single sensitivity" wording should be changed to "performance requirements for any single sensitivity" R2.7.1 Recommend changing phrase that leads into list to read "Such actions including, but not limited to:" R2.7.2 - Recommend consideration of striking this section. It is not clear how an entity can provide a rational for unnecessary actions. Further, if actions are not necessary, what limit would there be on a rational, so they would seemingly be useless? Finally, it is stated above, corrective action plans should not be required for sensitivity studies. R2.9 There does not seem to relate to any reliability need the NYISO is aware of for this requirement to remain.

Response: Regarding Requirement R2 and Part 2.1.1, the SDT believes that NYISO's current process is inconsistent with Parts 2.1 (covering near-term steady state studies) and 2.2 (covering long-term steady state studies) of the draft Standard. Both Parts 2.1 and 2.2 require an annual current year study. Because steady state analysis is part of the basic planning process, the SDT believes that the steady state portion of the studies covering Year One or year two and year five for the Near-Term Transmission Planning Horizon and one of the years in the Long-Term Transmission Planning Horizon should be done annually. Qualified past studies can be used to supplement the studies for the remaining study years to support the assessment for the entire planning horizon.

For part 2.1, the SDT does not believe a definition for steady state is needed as this is a well understood term. There is no 'primary' metric – see the Table 1 Header Notes for more details.

The intent of Part 2.1.2 is to assess those System conditions during periods with lower Load levels than peak when the System may show different potential problems than during periods with peak Load level. For example, during light Load conditions, there may be high voltage problems because of the charging in the lightly loaded lines. There could also be thermal overload problems for areas with more generation than Load. For this reason, it would be appropriate to investigate Off-Peak steady state conditions to ensure that System performance can meet requirements under all demand levels. At the same time, the standard should not be overly prescriptive; therefore, the exact System Off-Peak Load and System conditions should be specified by the entity performing the study.

For Parts 2.1.4 and 2.4.3, The SDT envisions that credible "sufficient" "stressed" conditions and "measurable change" are to be defined by the responsible Planning Coordinator or Transmission Planner because each System is different and the standard should not be overly prescriptive.

Part 2.6.2 allows an entity to rely on a past study with a material change if "a technical rationale can be provided to demonstrate that System changes do not impact the performance results in the study area". The intent is to assess system performance based on the latest available information. Therefore, it is up to the entities performing the study to provide the rationale based on changes, such as Load growth, generation or Transmission additions or modifications.

Part 2.7 has been changed to address your concerns.

Requirement R2, part 2.7: For planning events shown in Table 1, when the analysis indicates an inability of the System to meet the performance requirements

Organization	Comments for Question 2
in Table 1, the Planning Assessment shall include Corrective Action Plan(s) addressing how the performance requirements will be met. Revisions to the Corrective Action Plan(s) are allowed in subsequent Planning Assessments but the planned System shall continue to meet the performance requirements in Table 1. Corrective Action Plan(s) do not need to be developed solely to meet the performance requirements for a single sensitivity case analyzed in accordance with Requirements R2, parts 2.1.4 and 2.4.3. The Corrective Action Plan(s) shall: Part 2.7.1 is simply a list and an entity can always do more than what is required in the Standard. No change made. Part 2.7.2 provides for development of a Corrective Action Plan if a number of sensitivity studies result in the same potential problem. For example, if only one sensitivity study results in potential problems or if the probability of occurrences of the sensitivity scenarios is low, then this would be the rationale to state that a Corrective Action Plan would not be necessary. Part 2.9 has been deleted in response to industry comments.	
Xcel Energy	R2.1 The wording in R2.1 is unclear as to whether new annual studies are required each year or whether qualified past studies are acceptable if no changes have been made. R2 reads "This Planning Assessment shall use current or past studies", while R2.1 implies current studies must be used but can be supplemented by past studies. We suggest changing the wording from "The Near-Term Transmission Planning Horizon portion of the steady state analysis shall be assessed annually and be supported by the following annual current studies, supplemented with qualified past studies" to "The Near-Term Transmission Planning Horizon portion of the steady state analysis shall be assessed annually and be supported by the following annual current studies, or qualified past studies" R2.1.5 Does "The Planning Assessment shall reflect" mean that the entity must meet the performance requirements for categories P0,P1,and P2 during the equipment unavailability? R2.9 As commented in the previous draft, we do not believe this requirement contributes anything to improving BES reliability. Therefore, we strongly recommend deleting this requirement.
Response: The SDT reviewed Requirement R2, parts 2.1 through 2.5. Only Parts 2.1 and 2.2 require "annual current year study, supplemented by qualified past studies". Parts 2.1 and 2.2 cover steady state studies in the near-term and the long-term planning horizon, respectively. While the SDT envisions the standard to be flexible enough to allow the use of qualified past studies, the Planning Assessment cannot be based entirely on past studies. Because steady state analysis is part of the basic planning process, the SDT believes that the steady state portion of the studies covering Year One or year two and year five for Near-Term Transmission Planning Horizon and one of the years in the Long-Term Transmission Planning Horizon should be done annually. Qualified past studies can be used to supplement the studies for the remaining study years to support the assessment for the entire planning horizon. Making the change as requested can result in no current-year study being performed. Therefore, the SDT declines to make the change as suggested. For 2.1.5, your interpretation is correct. Part 2.1.5 requires that the Planning Coordinator or Transmission Planner plans for the potential unavailability of long lead time major Transmission equipment in accordance with its spare equipment strategy. If the spare equipment strategy can result in unavailability of long lead time equipment, the study will need to also be modeled with the piece of equipment out of service as P0. Part 2.9 has been deleted as suggested.	
Ameren	R2.1.3: The wording for this requirement needs clarification. It is suggested that the following language be submitted as a replacement: Known outages of generation or Transmission facilities should be included in the models representing those

Organization	Comments for Question 2
	System peak or Off-peak conditions when outages are scheduled. R2.1.4 and R2.4.3: The phrase "by a sufficient amount" should be modified to "by an amount". Also, in R2.4.3, "dynamic model assumptions" should be changed to "dynamic load model assumptions." R2.6.2: Recognition should be made of the fact that cancellation of generation or transmission projects, which may have been included in a previous study, would decrease fault levels, and would reduce or eliminate the need for short circuit analysis. R2.8: Would the Planning Coordinator be required to review, replicate, or validate short circuit studies? We appreciate the deletion of R2.9 from the previous draft of TPL-001-1 and eliminated the reporting of Non-Consequential Load Loss for each of the planning events. In R2.9, it is recommended that the largest Consequential Load Loss not include items such as pumped storage load or other utility load.
Response: Part 2.1.3 covers known long duration outages, for example, taking a 230 kV Transmission line out of service to rebuild it to operate at 500 kV. These cases are to simulate System conditions with the Facility in question out of service as Category P0 (or N-0). For the next outage, the System performance will need to meet requirements for Category P1. For Parts 2.1.4 and 2.4.3, the SDT envisions that "credible", "sufficient", "stressed" conditions and "measurable change" are to be defined by the responsible Planning Coordinator or Transmission Planner because each System is different. Part 2.4.3 has been revised as suggested. **Requirement R2, part 2.4.3, bullet #1:** Load level, Load forecast, or dynamic Load model assumptions For Part 2.6.2, the SDT agrees with the expectation concerning short circuit studies. For Part 2.8, as in other parts of this draft standard, the Planning Coordinator is responsible for its portion of the BES. It may delegate the work by agreement, it is, however, still responsible. Part 2.9 has been deleted in response to industry comments.	
Manitoba Hydro	R2.1.4.: The first sentence implies that all sensitivities should be studied. The second sentence refers to one or more. I suggest the following change to the first sentence: "....basic assumptions used in the model." (i.e. delete "for the list of items shown below." from the end of the first sentence.) R2.4.3: The exact same change as above in R2.1.4. R2.1.5: We assume the intent of the standard would be to perform an annual review of the inventory of spare equipment to determine if the spare strategy required updating. For example, if a transformer failed and the spare was moved into position, a new spare would be ordered to replace the failed one. During the period, when no spare was in place, additional assessments would be required to ensure meeting Table 1. Can the drafting team clarify? R2.5: The drafting team modified "material changes" to simply "changes" in R2.5. This does not add clarity. Given that R2.5 is

Organization	Comments for Question 2
	related to Stability Analysis, perhaps "changes" could be modified to "changes that could impact stability or voltage". R2.6: Recommend changing "the study" to "the past study" and "an older study" to "an older past study" to ensure no confusion could result from past and current studies. Can the drafting team explain how a past study can have material changes in R2.6.2? Perhaps R2.6.2 could be deleted. VSL: We would recommend moving R2.8's VSL from Moderate to both High and Severe. R2.8 requires a corrective plan to be developed when the short circuit duty of a circuit breaker is known to be exceeded. This is safety issue and a reliability issue.

Response: In Parts 2.1.4 and 2.4.3, the first sentence has been revised as suggested.

> **Requirement R2, part 2.1.4**: For each of the studies described in Requirement R2, parts 2.1.1 and 2.1.2, sensitivity case(s) shall be utilized to demonstrate the impact of changes to the basic assumptions used in the model. To accomplish this, the sensitivity analysis in the Planning Assessment must vary one or more of the following conditions not already included in the studies by a sufficient amount to stress the System within a range of credible conditions that demonstrate a measurable change in performance:
>
> **Requirement R2, part 2.4.3**: For each of the studies described in Requirement R2, parts 2.4.1 and 2.4.2, sensitivity case(s) shall be utilized to demonstrate the impact of changes to the basic assumptions used in the model. To accomplish this, the sensitivity analysis in the Planning Assessment must vary one or more of the following conditions not already included in the studies by a sufficient amount to stress the System within a range of credible conditions that demonstrate a measurable change in performance:

Part 2.1.5 does not address the specific requirements of an individual plan. Since a Planning Assessment is required annually, the analysis required under Part 2.1.5 is an annual requirement. The answer to the specific example would depend on a variety of factors, including the timing of the failure, the length of time that it would take to replace the spare, your Operation Planning time horizon and the specifics of your individual spare equipment strategy. The language in Part 2.1.5 states "the impact of this possible unavailability on System performance shall be assessed", which must be completed annually as a part of your Planning Assessment. The first year that a Planning Coordinator or a Transmission Planner is responsible for assessing (Year One) is defined as the planning window that begins 12-18 months from the end of the current calendar year. After the original spare is put to use, if a new spare can be made available before Year One in the next Planning Assessment, the time period during which no spare is available could then be covered in Operation Planning studies. Longer delivery times would impact the spare availability and an appropriate assessment would be expected in Year One by the Transmission Planner. In addition, to provide greater clarity, the SDT has revised the first sentence of Part 2.1.5 to read, "When an entity's spare equipment strategy could result in the unavailability of major Transmission equipment that has a lead time of one year or more (such as a transformer), the impact of this possible unavailability on System performance shall be assessed.

> **Requirement R2, part 2.1.5**: When an entity's spare equipment strategy could result in the unavailability of major Transmission equipment that has a lead time of one year or more (such as a transformer), the impact of this possible unavailability on System performance shall be assessed. The Planning Assessment shall reflect the P0, P1, and P2 categories identified in Table 1 during the conditions that the System is expected to experience due to the possible unavailability of the long lead time equipment.

Part 2.5, the SDT declines to make the change as suggested because the suggested change does not add clarity.

The SDT declines to make the change suggested in Part 2.6 because it did not add more clarity than the existing language.

The SDT has revised Part 2.6.2 to provide additional clarity.

> **Requirement R2, part 2.6.2**: For steady state, short circuit, or Stability analysis: the System represented in the study shall not include any material changes

Organization	Comments for Question 2
unless a technical rationale can be provided to demonstrate that System changes do not impact the performance results in the study area. While the SDT agrees that the short circuit analysis is important, Part 2.8 has been assigned a VSL based on its need to fulfill Requirement R2. Safety is covered in other venues.	
Tri-State Generation and Transmission Association	R2.2 What is an "annual current study"? Would this include previously performed studies that are still applicable?? R2.2. What is "qualified past studies"? We have no definitions for "qualifying" previous work. This might be remedied by inserting the term "qualified" in R2.6.? R2.1.4. Sensitivity cases could add much work to the existing process. However, the standard calls for "at least one" of the listed sensitivity studies to be performed. R2.2.1. The requirement to perform a "current study" assessing expected System peak Load conditions, for one of the years in the Long-Term Transmission Planning Horizon, is extra work if a valid/qualified study is available. If the intention here is to have a valid study for at least one of the years 6 to 10, then perhaps some simple rewording will solve the problem. We ascribe to the concept of requiring annual assessments, but not necessarily requiring repeated analysis if system changes do not warrant restudy. Hyphenate "in-service" R2.6.1 Change "the study shall be five calendar years old or less" to: "the study is five calendar years old or less" R2.6.2 change the phrase "shall not include any material changes" to "does not include any material changes" R2.6.2 it is not clear what is meant by "material changes" - different "Study conditions" or "changes that could cause different results for a particular study"?
Response: In Parts 2.2 & 2.2.1, an "annual current study" is one that must be done in the current assessment cycle. Previously performed studies can be used to supplement the current study, but not in place of it. Because steady state analysis is part of basic planning process, the SDT believes that the steady state portion of the studies covering one of the years in the Long-Term Transmission Planning Horizon should be done annually. Qualified past studies can be used to supplement the studies for the remaining study years to support the assessment for the entire Long-Term Transmission Planning Horizon. In Part 2.2, the "qualified past studies" are as indicated in Requirement R2, part 2.6. The SDT believes that the existing language is clear and changes are not needed. Part 2.1.4 – There is no question here so the SDT is unable to provide a specific response. For Part 2.6.1, the SDT declines to make the changes as suggested because they do not provide more clarity than the existing language. The SDT has revised Part 2.6.2 to address your concerns. Part 2.6.2 also allows an entity to rely on a past study with a material change if "a technical rationale can be provided to demonstrate that System changes do not impact the performance results in the study area". Therefore, it is up to the entities performing the study to provide the rationale based on changes, such as load growth. **Requirement R2, part 2.6.2**: For steady state, short circuit, or Stability analysis: the System represented in the study shall not include any material changes unless a technical rationale can be provided to demonstrate that System changes do not impact the performance results in the study area.	
Oklahoma Gas & Electric	R2.4.3 Not positive what this actually requires Transmission Planner to perform. Recommend compliance with requirement be

Organization	Comments for Question 2
	the responsibility of the Transmission Coordinator. R2.9 OG&E has not provided this information in the past. Different sets of load flow models will result in different data results. Do not see any merit with providing information.
Response: Part 2.4.3 is part of Requirement 2, which applies to both the Transmission Planner and the Planning Coordinator for their respective portion of the BES. So, both are responsible for meeting the requirements even though the actual work may be shared or delegated. Part 2.9 has been deleted in response to industry comments.	
Arizona Public Service Co.	R2.6.2: The wording "study shall not include" is confusing since it refers to the past studies.
Response: Part 2.6.2 has been to address your concerns. **Requirement R2, part 2.6.2**: For steady state, short circuit, or Stability analysis: the System represented in the study shall not include any material changes unless a technical rationale can be provided to demonstrate that System changes do not impact the performance results in the study area.	
Hydro-Québec TransEnergie (HQT)	Requirement 2.1 As written, it is not clear. HQT, as does NPCC, suggests revising language as in 2.4 as follows:"The Near-Term Transmission Planning Horizon portion of the steady state" analysis shall be assessed annually and be supported by current or past studies as indicated in? Requirement R2, part 2.6. The following studies are required: Requirement 2.1.2 The use of the term "off peak" is a concern. The definition for this term can be read to say that it is any load level less than peak. This does not provide enough clarity to guide the required assessments. Requirement 2.2 As written, it is not clear. HQT, as does NPCC, suggests revising language in 2.2 as in 2.4 as follows: The Long-Term Transmission Planning Horizon portion of the steady state" analysis shall be assessed annually and be supported by current or past studies as indicated in? Requirement R2, part 2.6. The following studies are required: Requirement 2.7 HQT,as does NPCC, suggests changing the word "run" to "condition" in "Corrective Action Plan(s) do not need to be developed solely to meet the performance requirements for a single sensitivity run in accordance with Requirements R2, parts 2.1.4 and 2.4.3." Requirement 2.9 It should not be necessary to identify the largest consequential load loss if the TPL standard does not limit the size of the consequential load loss. This requirement should be deleted.
Response: The SDT reviewed Requirement R2, parts 2.1 through 2.5. Only Parts 2.1 and 2.2 require "annual current year study, supplemented by qualified past studies". Parts 2.1 and 2.2 cover steady state studies in the near-term and the long-term planning horizon, respectively. While the SDT envisions the standard to be flexible enough to allow the use of qualified past studies, the Planning Assessment cannot be based entirely on past studies. Because steady state analysis is part of the basic planning process, the SDT believes the steady state portion of the studies covering Year One or year two and year five for Near-Term Transmission Planning Horizon and one of the years in the Long-Term Transmission Planning Horizon should be done annually. Qualified past studies can be used to supplement the studies for the remaining study years to support the assessment for the entire planning horizon. Making the change as requested can result in no current-year	

Organization	Comments for Question 2
	study being performed. Therefore, the SDT declines to make the change as suggested. The intent of Part 2.1.2 is to assess those System conditions during periods with lower Load levels than peak when the System may show different potential problems than during periods with peak Load level. For example, during light Load conditions, there may be high voltage problems because of the charging in the lightly loaded lines. There could also be thermal overload problems for areas with more generation than Load. For this reason, it would not be appropriate to eliminate the requirement to investigate Off-Peak steady state or Stability conditions. At the same time, the standard should not be overly prescriptive; therefore, the exact System Off-Peak Load should be specified by the entity performing the study. Part 2.7 has been changed to address your concerns. **Requirement R2, part 2.7**: For planning events shown in Table 1, when the analysis indicates an inability of the System to meet the performance requirements in Table 1, the Planning Assessment shall include Corrective Action Plan(s) addressing how the performance requirements will be met. Revisions to the Corrective Action Plan(s) are allowed in subsequent Planning Assessments but the planned System shall continue to meet the performance requirements in Table 1. Corrective Action Plan(s) do not need to be developed solely to meet the performance requirements for a single sensitivity case analyzed in accordance with Requirements R2, parts 2.1.4 and 2.4.3. The Corrective Action Plan(s) shall: Part 2.9 has been deleted as suggested.
Northeast Power Coordinating Council--RSC	Requirement R2 (second line): "This Planning Assessment shall use current or past studies," should be replaced with "This Planning Assessment shall use current studies or qualified past studies as indicated in Requirement R2, part 2.6," Requirements 2.1, 2.2, 2.3, and 2.4--As written, are not clear. It is suggested to revise the language as follows: "The Near-Term Transmission Planning Horizon portion of the steady stateanalysis shall be assessed annually and be supported by current studies or qualified past studies as indicated in Requirement R2, part 2.6. The following studies are required:"Requirement 2.1.2 The use of the term "off peak" is a concern. The definition for this term is not provided, and can be read to say that it is any load level less than peak. This does not provide enough clarity to guide the required assessments. Requirement 2.1.3: It must be clarified that the reference to outages as listed in Requirement R1, part 1.1.2 must be limited to Planning Horizon. Refer to Requirement 1.1.2 in the response to Question 1. Requirement 2.1.4: Consistent with the suggestion made for Requirment 1.1.2 remove the last bulleted item in the list under Requirement 2.1.4 "Duration or timing of planned Transmission outages." The standard is referring to requirements for sensitivity without a reference to base cases. Refer to Comment on Proposal to add an item 1.2 Requirement 2.1.5: It needs to be clear that this is only an assessment, not a solution. Actions such as out of merit dispatch, operational restrictions, System reconfiguration can be part of a Corrective Action Plan if the System cannot meet performance requirements without the Facility in service. It can be reworded as "an assessment of the impact of this possible unavailability on System performance shall be performed". Requirement 2.3: The requirement does not indicate a year to study. This should be modified to state that it is up to the Planner to determine the year of study within the Near Term Transmission Planning Horizon.

Organization	Comments for Question 2
	Requirement 2.4.2: Same as 2.1.2 Requirement 2.4.3: Refer to the Comment for Question 1 to add a Requirement 1.2 Requirement 2.5: Revise language as follows: be supported by current studies or qualified past studies as indicated in Requirement R2, part 2.6. Requirement 2.7 NPCC suggests changing the word "run" to "condition" so the wording will read Corrective Action Plan(s) do not need to be developed solely to meet the performance requirements for a single sensitivity condition in accordance with Requirements R2, parts 2.1.4 and 2.4.3. Requirement 2.9 It should not be necessary to identify the largest consequential load loss if the TPL standard does not limit the size of the consequential load loss. This requirement should be deleted. If it remains, it must be made clear that it be applicable only to Year One or Year Two.
National Grid	Requirement R2 (second line): This Planning Assessment shall use current or past studies, should be replaced with "This Planning Assessment shall use current studies or qualified past studies as indicated in Requirement R2, part 2.6," Sub-Requirements 2.1, 2,2, 2,3, and 2.4: Language to be revised to the following:"be supported by current studies or qualified past studies as indicated in Requirement R2, part 2.6. The following studies are required."Sub-Requirement 2.1.2: Definition of "off-peak" not provided and can be read to say that it is any load level less than peak. This does not provide enough clarity to guide the required assessments. Sub-Requirement 2.1.3: It must be clarified that the reference to outages as listed in Requirement R1, part 1.1.2 must be limited to Planning Horizon. Refer to Sub-Requirement 1.1.2 in Question 1.Sub-Requirement 2.1.4: Consistent with the suggestion made for section 1.1.2 please remove the last bulleted item in the list under section 2.1.4. "Duration or timing of planned Transmission outages." The standard is referring to requirements for sensitivity without a reference to base cases. Refer to Comment on Proposal to add an item 1.2 Sub-Requirement 2.1.5: It needs to be clear that this is only an assessment, not a solution. Actions such as out of merit dispatch, operational restrictions, System reconfiguration can be part of a Corrective Action Plan if the System cannot meet performance requirements without the Facility in service. It can be reworded as "an assessment of the impact of this possible unavailability on System performance shall be performed" Sub-Requirement 2.3: The requirement does not indicate a year to study. This should be modified to state that it is up to the Planner to determine the year of study within the Near Term Transmission Planning Horizon. Sub-Requirement 2.4.2: Same as 2.1.2Sub-Requirement 2.4.3: Refer to Comment on Proposal to add an item 1.2 Sub-Requirement 2.5: Revise language as follows:"be supported by current studies or qualified past studies as indicated in Requirement R2, part 2.6. Sub-Requirement 2.7: It is suggested to change the word "run" to "condition" such that it reads "Corrective Action Plan(s) do not

Organization	Comments for Question 2
	need to be developed solely to meet the performance requirements for a single sensitivity condition in accordance with Requirements R2, parts 2.1.4 and 2.4.3." Sub-Requirement 2.7.2: Refer to Comment on Proposal to add an item 1.2 Sub-Requirement 2.9: It should not be necessary to identify the largest consequential load loss if the TPL standard does not limit the size of the consequential load loss. This requirement should be deleted. If it remains, it must be made clear that it be applicable only to Year One or Year Two.

Response: The SDT reviewed Requirement R2, parts 2.1 through 2.5. Only Parts 2.1 and 2.2 require "annual current year study, supplemented by qualified past studies". Parts 2.1 and 2.2 cover steady state studies in the near-term and the long-term planning horizon, respectively. While the SDT envisions the standard to be flexible enough to allow the use of qualified past studies, the Planning Assessment cannot be based entirely on past studies. Because steady state analysis is part of basic planning process, the SDT believes that the steady state portion of the studies covering Year One or year two and year five for Near-Term Transmission Planning Horizon and one of the years in the Long-Term Transmission Planning Horizon should be done annually. Qualified past studies can be used to supplement the studies for the remaining study years to support the assessment for the entire planning horizon. Making the change as requested can result in no current-year study being performed. Therefore, the SDT declines to make the change as suggested.

The intent of Parts 2.1.2 and 2.4.2 is to support assessment of those System conditions during periods with lower Load levels than peak when the System may show different potential problems than during periods with peak Load level. For example, during light Load conditions, there may be high voltage problems because of the charging in the lightly loaded lines. There could also be thermal overload problems for areas with more generation than Load. The System could have less damping and could result in potential Stability problems. For this reason, it would not be appropriate to eliminate the requirement to investigate Off-Peak steady state or Stability conditions. At the same time, the standard should not be overly prescriptive; therefore, the exact System Off-Peak Load should be specified by the entity performing the study.

Part 2.1.2 – Off-Peak is a defined term in the NERC Glossary.

Part 2.1.3 is a sub-part of Part 2.1 which is limited by the Near-Term Transmission Planning Horizon so no change is made.

The SDT declines to remove the last bullet in Part 2.1.4, "Duration or timing of planned Transmission outages" as a potential sensitivity. The intent is to cover unexpected changes in plans, for example, a potential delay in returning a Transmission line back to service after a planned outage of 6 months or more for rebuilding to a higher capacity line. In this case, the System with the equipment in question out of service would be modeled as P0 (or N-0), the next outage would be, for example, P1 (N-1), and not covered in P6.

For Part 2.1.4, the SDT believes that the "base case conditions", on which to base the sensitivity cases, should be defined by the entity performing the study. Sensitivity studies are performed to provide insight into the impacts of potential variations of assumptions in studies. The SDT therefore declines to make the change as suggested.

The SDT believes that your concern on Part 2.1.5 has already been addressed. Part 2.7.1 - Corrective Action can include, among other things:

- Installation, modification, or removal of Protection Systems or Special Protection Systems
- Installation or modification of automatic generation tripping as a response to a single or multiple Contingency to mitigate Stability performance violations.
- Installation or modification of manual and automatic generation runback/tripping as a response to a single or multiple Contingency to mitigate Steady State performance violations.
- Use of Operating Procedures specifying how long they will be needed as part of the Corrective Action Plan.

Organization	Comments for Question 2
	o Use of rate applications, DSM, new technologies, or other initiatives. In addition, the first sentence of Part 2.1.5 has been revised. **Requirement R2, part 2.1.5**: When an entity's spare equipment strategy could result in the unavailability of major Transmission equipment that has a lead time of one year or more (such as a transformer), the impact of this possible unavailability on System performance shall be assessed. The Planning Assessment shall reflect the P0, P1, and P2 categories identified in Table 1 during the conditions that the System is expected to experience due to the possible unavailability of the long lead time equipment. The SDT believes that this concern has been addressed. Part 2.3 is silent on the year of study within the Near-Term Transmission Planning Horizon. Therefore, it is up to the Transmission Planner or Planning Coordinator to select the study years most suited to the System in question. In addition, Part 2.3 only requires an annual Planning Assessment, which is to be supported by annual current or qualified past studies. For Part 2.4.3, the SDT believes that the "base case conditions", on which to base the sensitivity cases, should be defined by the entity performing the study. Sensitivity studies are performed to provide insight into the impacts of potential variations of assumptions in studies. The SDT therefore declines to make the change as suggested. The existing language in Part 2.5 already allows the assessment to be supported by current or past studies. Therefore, the suggested change is not needed. Part 2.7 has been changed to address your concerns. **Requirement R2, part 2.7**: For planning events shown in Table 1, when the analysis indicates an inability of the System to meet the performance requirements in Table 1, the Planning Assessment shall include Corrective Action Plan(s) addressing how the performance requirements will be met. Revisions to the Corrective Action Plan(s) are allowed in subsequent Planning Assessments but the planned System shall continue to meet the performance requirements in Table 1. Corrective Action Plan(s) do not need to be developed solely to meet the performance requirements for a single sensitivity case analyzed in accordance with Requirements R2, parts 2.1.4 and 2.4.3. The Corrective Action Plan(s) shall: For response to comments on Part 2.7.2, please see previous response to proposal to add Part 1.2. Part 2.9 has been deleted due to industry comments.
Midwest ISO	Requirement R2.1.4: It should be made clear that the sensitivity findings do not obligate the PC or TP to establish Corrective Action Plans to address any needs identified in the sensitivity cases. Also, the use of the following two words "sufficient" and "measurable" are too vague and hard to quantify. This may require an auditor's opinion. Suggest at least removing the word "sufficient" from the requirements. Requirement R2.1.5: This requirement states that we need to perform prior outage analysis for P0, P1 and P2 events for all long-lead time (>1year) components without spares. This seems redundant with P3 and P6 which will answer whether those events are an issue. Need to be clear that loss of load is or is not allowed for these events. P2 still allows for some loss of load. Bottom line is that P2.1.5 seems duplicative. What is intent of requirement? Rather say the P3 and P6 should note if long-lead time items are involved without spares. Also, the Planning Coordinator could have an administrative burden demonstrating compliance with a spare equipment strategy for its entire footprint. Requirement R2.4.3: the use of the following two words "sufficient" and "measurable" are too vague and hard to quantify. This may require an auditor's opinion. Suggest at least removing the word "sufficient" from the requirements.

Organization	Comments for Question 2
	Requirement R2.7.2: As suggested in the comments above for R2.1.4, it should be clarified that corrective actions are not necessary for performance deficiencies identified by sensitivity studies. Request removing this requirement all together. If the SDT agrees to keep this requirement then we offer the following comments: It is not clear how an entity can provide rational for why actions were not necessary. Requirement R2.9: With regards to the largest consequential loss of loads for P1 and P2 events; if no action is required then why require the entities to provide this. Will it matter if 10MW or 100MW is tripped with the line? This is a system design issue which is not addressed by the standards, if this requirement is kept how is an entity expected to demonstrate compliance for this? This requirement is an administrative burden and we propose to remove R2.9 all together considering that there is not a reliability-related need for this information and it is unnecessary.
Response: The SDT believes that your concern on Part 2.1.4 is already covered in the existing draft. The existing Part 2.7 states, in part, that "Corrective Action Plan(s) do not need to be developed solely to meet the performance requirements for a single sensitivity case analyzed in accordance with Requirements R2, parts 2.1.4 and 2.4.3. In addition, Part 2.7.2 describes the requirement on Corrective Action Plans to "Include actions to resolve performance deficiencies identified in multiple sensitivity studies or provide a rationale for why actions were not necessary". For Parts 2.1.4 and 2.4.3, The SDT envisions that "credible", "sufficient", "stressed" conditions and "measurable change" are to be defined by the responsible Planning Coordinator or Transmission Planner because each System is different. Part 2.1.5 only requires that the Planning Coordinator or Transmission Planner plans for the potential unavailability of long lead time major Transmission equipment in accordance with its spare equipment strategy. For example, if an entity's spare equipment strategy is to have a spare transformer on site, then the unavailability of a similar transformer (due to outages) would be limited to the time it would take to energize the spare transformer. Assuming that this time is no more than that required to return a similar outaged transformer back in service, Part 2.1.5 can be satisfied without performing additional planning studies. If on the other hand, the transformer would have to be purchased, then it would take more than a year to replace. In this case, for Part 2.1.5, P0 should be modeled with the transformer in question out of service. The performance requirements in Table 1 will apply for the next single Contingency. This is not the same as P2 or P6; both of which are events starting from System intact condition as P0. It is also not the same as P3, which covers loss of a generator as the first event, and Part 2.1.5 covers loss of a piece of major Transmission equipment, for which there is no spare. The words "sufficient" and 'measurable' are needed in Part 2.4.3 to ensure that the variations made to the assumptions to investigate sensitivity are large enough to be meaningful so they can demonstrate the impacts of the changes. The SDT envisions that credible sufficient stressed conditions and measurable changes are to be defined by the responsible Planning Coordinator or Transmission Planner. As such, the SDT declines to revise Parts 2.1.4 and 2.4.3 as suggested. The SDT believes that your concern on Part 2.7 is covered in the existing draft. Part 2.7 states, in part, that "Corrective Action Plan(s) do not need to be developed solely to meet the performance requirements for a single sensitivity run in accordance with Requirements R2, Parts 2.1.4 and 2.4.3. In addition, Part 2.7.2 provides for development of a Corrective Action Plan if a number of sensitivity studies result in the same potential problem. For example, if only one sensitivity study results in potential problems or if the probability of occurrences of the sensitivity scenarios is low, then this could be the rationale to state that corrective action plan would not be necessary. Part 2.9 has been deleted as suggested.	
Duke Energy	Reword R2.1 as follows: The Near-Term Transmission Planning Horizon portion of the steady state analysis shall be assessed annually and be based on the following annual current studies, supplemented with qualified past studies that meet Requirement R2, part 2.6.

Organization	Comments for Question 2
	The following studies are required: We believe that using a past study for the Long Term Assessment is adequate, as long as the past study meets R2.6. Reword R2.2 as follows: The Long-Term Transmission Planning Horizon portion of the steady state analysis shall be assessed annually and be based on the following annual current study or qualified past study that meets Requirement R2, part 2.6. The following study is required: Reword R2.2.1 as follows: System peak Load conditions for one of the years in the Long-Term Transmission Planning Horizon and the rationale for why that year was selected. We believe that using past studies for the Near-Term Transmission Planning Horizon portion of the Stability analysis is adequate, as long as the past studies meet R2.6. Reword R2.4 as follows: The Near-Term Transmission Planning Horizon portion of the Stability analysis shall be assessed annually and be based on the following annual current studies or qualified past studies that meet Requirement R2, part2.6. The following studies are required: R2.5 Does the phrase "proposed generation additions or changes in that timeframe" refer only to generation changes, or does it also refer to transmission system changes?
Response: The SDT declines to make the change to Part 2.1 as suggested because it does not add more clarity than the existing language. The SDT declines to make this change to Part 2.2 and Part 2.2.1. While the SDT envisions the standard to be flexible enough to allow the use of qualified past studies, the Planning Assessment cannot be based entirely on past studies. Because steady state analysis is part of the basic planning process, the SDT believes that the steady state portion of the studies one of the years in the Long-Term Transmission Planning Horizon should be done annually. Qualified past studies can be used to supplement the studies for the remaining study years to support the assessment for the entire Long-Term Transmission Planning Horizon. Making the change as requested can result in no current-year study for the Long-Term Transmission Planning Horizon being performed. Therefore, the SDT declines to make the change as suggested. The SDT declines to make the change to Part 2.4 as suggested because it does not add more clarity than the existing language. Part 2.5 is intended for investigation of Stability issues due to addition of generators. The SDT does not believe that, in general, a Stability assessment is needed for the Long-Term Transmission Planning Horizon. The System model for that timeframe is too uncertain for a meaningful assessment of the System's Stability. However, for those situations where a specific generator is planned to be added in that timeframe, the SDT believes that it will be appropriate to require that the generator's Stability impact be evaluated.	
NorthWestern Energy	Short circuit analysis is a local issue. The reliability of the BES does not depend on the regular assessment of short circuit duty. Therefore, we believe short circuit analysis should be deleted from R2. The wording in R2.1 is unclear: Are new annual studies required each year or are qualified past studies acceptable if no changes have been made? R2 reads "This Planning Assessment shall use current or past studies", while R2.1 implies current studies must be used but can be supplemented by past studies. We suggest changing the wording from "The Near-Term Transmission Planning Horizon portion of the steady state analysis shall be assessed annually and be supported by the following annual current studies, supplemented with qualified past studies" to "The Near-Term Transmission Planning Horizon portion of the steady state analysis shall be assessed annually and be supported by the following annual current studies, or qualified past studies"

Organization	Comments for Question 2
	Are the sensitivity studies identified by the bullets in R2.1.4 to align with the sensitivity studies identified by the bullets in R2.4.3? Both are for Near-Term studies but for steady state and stability respectively. If they should align, the wording should be modified to be the same. As written R2.1.4, "Real and reactive Load forecasts", could mean that both Real and Reactive Load forecasts are required. Since most entities only forecast Real (MW) and apply a power factor for reactive (MVAR), wording could be changed to " forecasted demand and power factor" to clarify that forecasting reactive load is not required.
Response: Part 2.3 is intended for the Planning Coordinator and/or Transmission Planner to assess the whether circuit breakers supporting the BES have interrupting capability for Faults that they will be expected to interrupt. Even though the effects of short circuit capability are localized and may be related to new planned Facilities, it is important to BES reliability. Therefore, the SDT declines to delete the requirement for short circuit analysis from Requirement R2. The SDT reviewed Requirement 2 and Parts 2.1 through 2.5. Only Parts 2.1 and 2.2 require "annual current year study, supplemented by qualified past studies". Parts 2.1 and 2.2 cover steady state studies in the near-term and the long-term planning horizons, respectively. While the SDT envisions the standard to be flexible enough to allow the use of qualified past studies, the Planning Assessment cannot be based entirely on past studies. Because steady state analysis is part of the basic planning process, the SDT believes that the steady state portion of the studies covering Year One or year two and year five for the Near-Term Transmission Planning Horizon and one of the years in the Long-Term Transmission Planning Horizon should be done annually. Qualified past studies can be used to supplement the studies for the remaining study years to support the assessment for the entire planning horizon. Making the change as requested can result in no current-year study being performed. Therefore, the SDT declines to make the change as suggested. The SDT reviewed Parts 2.1.4 and 2.4.3. The third bullet in Part 2.4.3 has been modified. The remaining differences between the two parts are intended. The SDT developed the lists contained within Parts 2.1.4 and 2.4.3 to address those situations which it believed were the most relevant for the steady state evaluations and stability evaluations, respectively. **Requirement R2, part 2.4.3**, **bullet #3**: Expected in service dates of new or modified Transmission Facilities Part 2.1.4 states that a reactive forecast is required. Using a power factor is one method that may be used in calculating this reactive forecast.	
Sacramento Municipal Utility District	SMUD appreciates the diligence with which the SDT has responded to our earlier comments. SMUD offers the following comments on Draft #4 for the SDT's consideration: R2.1.4: To define a "sensitivity" case, the standard should first define a "base" case. If a sensitivity case is a more conservative scenario analysis than a base case, does an entity need to perform/document a Planning Assessment for both "base" and "sensitivity" or is a Planning Assessment that uses the "Sensitivity" case adequate? R2.1: The wording in R2.1 is unclear as to whether new annual studies are required each year or whether qualified past studies are acceptable if no changes have been made. R2 reads "This Planning Assessment shall use current or past studies", while R2.1 implies current studies must be used but can be supplemented by past studies. We suggest changing the wording from "The Near-Term Transmission Planning Horizon portion of the steady state analysis shall be assessed annually and be supported by the following annual current studies, supplemented with qualified past studies" to "The Near-Term Transmission Planning Horizon portion of the steady state analysis shall be assessed annually and be supported by the following annual current studies, or qualified past studies". R2.1.4 and R2.4.3: The words, "by a sufficient amount" should be removed as it does not provide any more clarity.

Organization	Comments for Question 2
	R2.1.5: The first part of the sentence calls for an analysis of the impact (of modeling the spare equipment strategy). The second part of the sentence that defines the applicable categories to study, starts with the words "The Planning Assessment". Use of the defined words "Planning Assessment", broadens the study to both an impact assessment and providing details of a "Corrective Action Plan". The intent of the requirement should be made clear in the first sentence. R2.4.3: Suggest deleting the words "in the Planning Assessment". Since a corrective action is not required for all sensitivities (see R2.7), use of the defined term in this paragraph can be confusing. R2.6.1: SMUD agrees with allowing a study older than five years to be considered if a technical rationale can be provided. R2.9: The requirement to report the largest single consequential load loss should not be included in the standard. If it remains, it must be made clear that it be applicable only to Year One, and there should be additional clarification that the requirement to report consequential load loss (single number) is ONLY for the most severe contingencies studied for the P1 and P2 contingencies. Table 1 P1.3 and associated Note 5: Is the purpose of the "reference voltage" to determine a valid transformer contingency (thereby, limiting the scope of R2.9)? R2.7 / Table 1, Notes e and i: Note (e) excludes references to load that is allowed to be dropped if it is NOT part of Non-Consequential Load Loss. This note should include such Load (if represented in the load forecast being studied as being part of the Demand Response) if it can be dropped within the time duration applicable to the Facility Ratings. Note (i): Since the definition of Non-CLL would allow interruptible load to be dropped, is note (i) stating that interruptible load cannot be dropped even if it meets the "executable within the time duration' requirement"

Response: For Part 2.1.4, the SDT believes that the "base case conditions" on which to base the sensitivity cases should be defined by the entity performing the study. Sensitivity studies are performed to provide insight into the impacts of potential variations of assumptions in studies. It is also up to the entity performing the study to determine the scenarios to be used for the Planning Assessment.

The SDT reviewed Requirement 2 and Parts 2.1 through 2.5. Only Parts 2.1 and 2.2 require "annual current year study, supplemented by qualified past studies". Parts 2.1 and 2.2 cover steady state studies in the near-term and the long-term planning horizons, respectively. While the SDT envisions the standard to be flexible enough to allow the use of qualified past studies, the Planning Assessment cannot be based entirely on past studies. Because steady state analysis is part of the basic planning process, the SDT believes that the steady state portion of the studies covering Year One or year two and year five for Near-Term Transmission Planning Horizon and one of the years in the Long-Term Transmission Planning Horizon should be done annually. Qualified past studies can be used to supplement the studies for the remaining study years to support the assessment for the entire planning horizon. Making the change as requested can result in no current-year study being performed. Therefore, the SDT declines to make the change as suggested.

For Parts 2.1.4 and 2.4.3, The SDT envisions that "credible", "sufficient", "stressed" conditions and "measurable change" are to be defined by the responsible Planning Coordinator or Transmission Planner because each System is different.

Part 2.1.5 is part of Requirement R2, which requires that each Transmission Planner and Planning Coordinator prepare an annual Planning Assessment of its portion of the BES, therefore, the use of Planning Assessment in Part 2.1.5 has not broadened the requirement. The first sentence of Part 2.1.5 has been revised to provide more clarity.

Requirement R2, part 2.1.5: When an entity's spare equipment strategy could result in the unavailability of major Transmission equipment that has a lead time of

Organization	Comments for Question 2
	one year or more (such as a transformer), the impact of this possible unavailability on System performance shall be assessed. The Planning Assessment shall reflect the P0, P1, and P2 categories identified in Table 1 during the conditions that the System is expected to experience due to the possible unavailability of the long lead time equipment. For Part 2.4.3, the SDT declines to delete "in the Planning Assessment" as suggested because Part 2.4.3 is part of Requirement R2, which covers the requirement of preparing an annual Planning Assessment. Part 2.9 has been deleted as suggested. Table 1, P1.3 and associated footnote 5: the term "reference voltage" is used in determining if a transformer is classified as EHV or HV for the BES. This classification then ties to footnote 1 in regards to provisions for the interruption of Firm Transmission Service and Non-Consequential Load Loss. For example, if a 345/138 kV transformer is outaged for the event studied the high-voltage (HV) allowances for interruption of Firm Transmission Service and loss of Non-Consequential Load would apply. The 138/66 kV transformer may not be classified as a BES Facility; your regional entity organization definition of the BES should be consulted for an official position. Note (e) in Table 1 refers to "planned System adjustments" and "Transmission configuration changes and re-dispatch of generation" are examples of "planned System adjustments". Table 1 note (i) is intended to clarify that even if it is known that an end-user who implements a more conservative practice than that of the Transmission Planner/Planning Coordinator regarding steady-state voltage criteria and chooses to interrupt its own Load, the end-use Load must still be represented in the steady-state timeframe. The Load tripping is permitted in a Stability review, however, it should be assumed that a customer will react quickly to restore its Load and therefore the standard requires the Load be represented in the steady-state timeframe. Only actions (manual or automatic) taken by the Transmission Planner/Planning Coordinator are permitted for consideration for a steady-state review.
US Bureau of Reclamation	The conflict is created in Section 2.5 in that only proposed generation additions or changes are assessed in "Long-Term planning Horizon portion of the Stability analysis. This Section should also address proposed transmission facility additoins or changes. Section 2.7 indicates that the Planning Assessment shall include Corrective Action Plan(s) addressing how performance requirements will addressed. This implies that the Corrective Action plans are not proposed generation or transmission additions or changes. If Corrective Action Plan items are developed through Planning Assessments, they should be clarified as proposals for consideration by Generator Owners and Transmission owners in developed future system modifications or additions.
Response: Part 2.5 is intended for investigation of Stability issues due to addition of generators. The SDT does not believe that, in general, a Stability assessment is needed for the Long-Term Transmission Planning Horizon. The System model for that timeframe is too uncertain for a meaningful assessment of the System's Stability. However, for those situations where a specific generator is planned to be added in that timeframe, the SDT believes that it will be appropriate to require that the generator's Stability impact be evaluated. However, the standard does not preclude investigation of addition of other Facilities, such as Transmission Facilities. Part 2.7 does not imply that "the Corrective Action plans are not proposed generation or transmission additions or changes". Part 2.7.2 includes a list of actions that can be included as part of a Corrective Action Plan, which the Transmission Planner and Planning Coordinator are required to prepare.	
TIS	The reference in R2.1.3 to the outage schedules as listing in part R1.1.2 must be recognized as a limitation to the standard to the Planning Horizon. See the TIS comment tor R1.

Organization	Comments for Question 2
	There is confusion in interpretation of the Table 1 When the voltage class of the contingency element and the monitored element are different (one is HV and the other is EHV), to which voltage class is the allowance for shedding of non-consequential load applied? For example if a SLG fault is on a 138-kV element or a 345/138-kV autotransformer, are you allowed to shed load to keep a345-kV element from overloading? Conversely, if the fault is on a 345-kV element, are you allowed to shed load to keep a 138-kV from overloading? It should be the voltage level of the overloaded element (not the outaged element) that determines whether or not non-consequential load shedding is allowed. The TIS believes that the requirement to report the largest single consequential load loss under Requirement 2.9 should not be included in the standard. If it remains, it must be made clear that it be applicable only to Year One, and there should be additional clarification that the requirement to report consequential load loss (single number) is ONLY for the most severe contingencies studied for the P1 and P2 contingencies.
Response: Part 2.1.3 is a sub-part of Part 2.1 which is limited by the Near-Term Transmission Planning Horizon so no change is made. The determination of when interrupting Non-Consequential Load and/or Firm Transmission Service is permitted to meet Table 1 performance requirements service is based solely on the lowest voltage level of Facilities disconnected by design for the planning event studied and not based on the monitored Facilities. For the example provided, the HV provisions would apply since a 345/138kV transformer is considered a HV facility that is removed from service regardless of where the fault originated. Changes were made to footnote 1 to better clarify the SDT's intent and it now reads: **Table 1, footnote 1**: If the event analyzed involves BES elements at multiple System voltage levels, the lowest System voltage level of the element(s) removed for the analyzed event determines the stated performance criteria regarding allowances for interruptions of Firm Transmission Service and Non-Consequential Load Loss. Part 2.9 has been deleted as suggested.	
Idaho Power	The wording in R2.1 is unclear as to whether new annual studies are required each year or whether qualified past studies are acceptable if no changes have been made. R2 reads "This Planning Assessment shall use current or past studies"?, while R2.1 implies current studies must be used but can be supplemented by past studies. I suggest changing the wording from "The Near-Term Transmission Planning Horizon portion of the steady state analysis shall be assessed annually and be supported by the following annual current studies, supplemented with qualified past studies"? to "The Near-Term Transmission Planning Horizon portion of the steady state analysis shall be assessed annually and be supported by the following annual current studies, or qualified past studies"? It is unclear if the drafting team intended the sensitivity studies identified by the bullets in R2.1.4 to align with the sensitivity studies identified by the bullets in R2.4.3. Both are for Near-Term studies but for steady state and stability respectively. If the intent is that they align, the wording should be modified to be the same. Also, similar to R1.1.4 above, R2.1.4 could be interpreted that the standard requires forecasting reactive load. However, most entities forecast demand (MW) and apply a power factor(s) to calculate reactive load. Therefore, please change "real and reactive load forecast" to "forecasted demand and power factor" so it is clear that forecasting reactive load is not required.
Response: The SDT reviewed Requirement 2 and Parts 2.1 through 2.5. Only Parts 2.1 and 2.2 require "annual current year study, supplemented by qualified past studies". Parts 2.1 and 2.2 cover steady state studies in the near-term and the long-term planning horizons, respectively. While the SDT envisions the standard to be	

Organization	Comments for Question 2
flexible enough to allow the use of qualified past studies, the Planning Assessment cannot be based entirely on past studies. Because steady state analysis is part of the basic planning process, the SDT believes that at least parts of the steady state portion of the studies covering Year One or year two and year five for Near-Term Transmission Planning Horizon and one of the years in the Long-Term Transmission Planning Horizon should be done annually. Qualified past studies can be used to supplement the studies for the remaining study years to support the assessment for the entire planning horizon. Making the change as requested can result in no current-year study being performed. Therefore, the SDT declines to make the change as suggested. The SDT reviewed Parts 2.1.4 and 2.4.3. The third bullet in Part 2.4.3 has been modified. The remaining differences between the two parts are intended. The SDT developed the lists contained within Parts 2.1.4 and 2.4.3 to address those situations which it believed were the most relevant for the steady state evaluations and stability evaluations, respectively. **Requirement R2, part 2.4.3**, **bullet #3**: Expected in service dates of new or modified Transmission Facilities Parts 1.1.4 and 2.1.4 state that a reactive forecast is required. Using a power factor is one method that may be used in calculating this reactive forecast.	
Modesto Irrigation District Transmission Planning	The wording in R2.1 is unclear as to whether new annual studies are required each year or whether qualified past studies are acceptable if no changes have been made. R2 reads “This Planning Assessment shall use current or past studies”, while R2.1 implies current studies must be used but can be supplemented by past studies. We suggest changing the wording from “The Near-Term Transmission Planning Horizon portion of the steady state analysis shall be assessed annually and be supported by the following annual current studies, supplemented with qualified past studies” to “The Near-Term Transmission Planning Horizon portion of the steady state analysis shall be assessed annually and be supported by the following annual current studies, or qualified past studies” It is unclear if the drafting team intended the sensitivity studies identified by the bullets in R2.1.4 to align with the sensitivity studies identified by the bullets in R2.4.3. Both are for Near-Term studies but for steady state and stability respectively. If the intent is that they align, the wording should be modified to be the same. Also, similar to R1.1.4 above, R2.1.4 could be interpreted that the standard requires forecasting reactive load. However, most entities forecast demand (MW) and apply a power factor(s) to calculate reactive load. Therefore, please change “real and reactive load forecast” to “forecasted demand and power factor” so it is clear that forecasting reactive load is not required.R2.1.4, R2.4.3 "... vary one or more of the following conditions not already included in the studies by a sufficient amount to stress the System within a range of credible conditions that demonstrate a measureable change in performance." Please define measureable. An example would certainly help. This would be a good workshop item to show how to perform. R2.6.2 The previous version defined material change. This current version eliminated the definition of material change, but still indicates the study shall not include any material changes.... This is unclear; please clarify.
Response: The SDT reviewed Requirement R2 and Parts 2.1 through 2.5. Only Parts 2.1 and 2.2 require “annual current year study, supplemented by qualified past studies”. Parts 2.1 and 2.2 cover steady state studies in the near-term and the long-term planning horizons, respectively. While the SDT envisions the standard to be flexible enough to allow the use of qualified past studies, the Planning Assessment cannot be based entirely on past studies. Because steady state analysis is part of the basic planning process, the SDT believes that the steady state portion of the studies covering Year One or year two and year five for Near-Term Transmission Planning Horizon and one of the years in the Long-Term Transmission Planning Horizon should be done annually. Qualified past studies can be used to supplement	

Organization	Comments for Question 2
the studies for the remaining study years to support the assessment for the entire planning horizon. Making the change as requested can result in no current-year study being performed. Therefore, the SDT declines to make the change as suggested. The SDT reviewed Parts 2.1.4 and 2.4.3. The third bullet in Part 2.4.3 has been modified. The remaining differences between the two parts are intended. The SDT developed the lists contained within Parts 2.1.4 and 2.4.3 to address those situations which it believed were the most relevant for the steady state evaluations and stability evaluations, respectively. **Requirement R2, part 2.4.3**, **bullet #3**: Expected in service dates of new or modified Transmission Facilities Parts 1.1.4 and 2.1.4 state that a reactive forecast is required. Using a power factor is one method that may be used in calculating this reactive forecast. For Part 2.4.3, the SDT envisions that "measurable change" is to be defined by the responsible Planning Coordinator or Transmission Planner because each System is different. The SDT agrees that a workshop is a good idea. However, because of differences in each Region/Interconnection, the SDT encourages the Regions to hold workshops on issues specific to the Regions utilizing SDT members as participants in the discussions. Part 2.6.2 allows an entity to rely on a past study with a material change if "a technical rationale can be provided to demonstrate that System changes do not impact the performance results in the study area". Therefore, it is up to the entities performing the study to provide the rationale based on changes, such as Load growth.	
NV Energy	The wording in R2.1 is unclear as to whether new annual studies are required each year or whether qualified past studies are acceptable if no changes have been made. R2 reads "This Planning Assessment shall use current or past studies", while R2.1 implies current studies must be used but can be supplemented by past studies. We suggest changing the wording from "The Near-Term Transmission Planning Horizon portion of the steady state analysis shall be assessed annually and be supported by the following annual current studies, supplemented with qualified past studies" to "The Near-Term Transmission Planning Horizon portion of the steady state analysis shall be assessed annually and be supported by the following annual current studies, or qualified past studies" It is unclear if the drafting team intended the sensitivity studies identified by the bullets in R2.1.4 to align with the sensitivity studies identified by the bullets in R2.4.3. Both are for Near-Term studies but for steady state and stability respectively. If the intent is that they align, the wording should be modified to be the same. Also, similar to R1.1.4 above, R2.1.4 could be interpreted that the standard requires forecasting reactive load. However, most entities forecast demand (MW) and apply a power factor(s) to calculate reactive load. Therefore, please change "real and reactive load forecast" to "forecasted demand and power factor" so it is clear that forecasting reactive load is not required.
Pacific Gas and Electric Co.	The wording in R2.1 is unclear as to whether new annual studies are required each year or whether qualified past studies are acceptable if no changes have been made. R2 reads "This Planning Assessment shall use current or past studies", while R2.1 implies current studies must be used but can be supplemented by past studies. We suggest changing the wording from "The Near-Term Transmission Planning Horizon portion of the steady state analysis shall be assessed annually and be supported by the following annual current studies, supplemented with qualified past studies" to "The Near-Term Transmission Planning Horizon portion of the steady state analysis shall be assessed annually and be supported by the following annual current studies, or qualified past studies"? It is unclear if the drafting team intended the sensitivity studies identified by the bullets in R2.1.4 to align with the sensitivity studies identified by the bullets in R2.4.3. Both are for Near-Term studies but for steady state and stability respectively. If the

Organization	Comments for Question 2
	intent is that they align, the wording should be modified to be the same. Also, similar to R1.1.4 above, R2.1.4 could be interpreted that the standard requires forecasting reactive load. However, most entities forecast demand (MW) and apply a power factor(s) to calculate reactive load. Therefore, please change "real and reactive load forecast" to "forecasted demand and power factor" so it is clear that forecasting reactive load is not required.
San Diego Gas & Electric Co	The wording in R2.1 is unclear as to whether new annual studies are required each year or whether qualified past studies are acceptable if no changes have been made. R2 reads "This Planning Assessment shall use current or past studies", while R2.1 implies current studies must be used but can be supplemented by past studies. We suggest changing the wording from "The Near-Term Transmission Planning Horizon portion of the steady state analysis shall be assessed annually and be supported by the following annual current studies, supplemented with qualified past studies" to "The Near-Term Transmission Planning Horizon portion of the steady state analysis shall be assessed annually and be supported by the following annual current studies, or qualified past studies"? It is unclear if the drafting team intended the sensitivity studies identified by the bullets in R2.1.4 to align with the sensitivity studies identified by the bullets in R2.4.3. Both are for Near-Term studies but for steady state and stability respectively. If the intent is that they align, the wording should be modified to be the same. Also, similar to R1.1.4 above, R2.1.4 could be interpreted that the standard requires forecasting reactive load. However, most entities forecast demand (MW) and apply a power factor(s) to calculate reactive load. Therefore, please change "real and reactive load forecast" to "forecasted demand and power factor" so it is clear that forecasting reactive load is not required.
SRP	The wording in R2.1 is unclear as to whether new annual studies are required each year or whether qualified past studies are acceptable if no changes have been made. R2 reads "This Planning Assessment shall use current or past studies", while R2.1 implies current studies must be used but can be supplemented by past studies. We suggest changing the wording from "The Near-Term Transmission Planning Horizon portion of the steady state analysis shall be assessed annually and be supported by the following annual current studies, supplemented with qualified past studies" to "The Near-Term Transmission Planning Horizon portion of the steady state analysis shall be assessed annually and be supported by the following annual current studies, or qualified past studies" It is unclear if the drafting team intended the sensitivity studies identified by the bullets in R2.1.4 to align with the sensitivity studies identified by the bullets in R2.4.3. Both are for Near-Term studies but for steady state and stability respectively. If the intent is that they align, the wording should be modified to be the same. Also, similar to R1.1.4 above, R2.1.4 could be interpreted that the standard requires forecasting reactive load. However, most entities forecast demand (MW) and apply a power factor(s) to calculate reactive load. Therefore, please change "real and reactive load forecast" to "forecasted demand and power factor" so it is clear that forecasting reactive load is not required.
Response: The SDT reviewed Requirement R2 and Parts 2.1 through 2.5. Only Parts 2.1 and 2.2 require "annual current year study, supplemented by qualified past studies". Parts 2.1 and 2.2 cover steady state studies in the near-term and the long-term planning horizons, respectively. While the SDT envisions the standard to be flexible enough to allow the use of qualified past studies, the Planning Assessment cannot be based entirely on past studies. Because steady state analysis is part of the basic planning process, the SDT believes that the steady state portion of the studies covering Year One or year two and year five for Near-Term Transmission	

Organization	Comments for Question 2
Planning Horizon and one of the years in the Long-Term Transmission Planning Horizon should be done annually. Qualified past studies can be used to supplement the studies for the remaining study years to support the assessment for the entire planning horizon. Making the change as requested can result in no current-year study being performed. Therefore, the SDT declines to make the change as suggested. The SDT reviewed Parts 2.1.4 and 2.4.3. The third bullet in Part 2.4.3 has been modified. The remaining differences between the two parts are intended. The SDT developed the lists contained within 2.1.4 and 2.4.3 to address those situations which it believed were the most relevant for the steady state evaluations and stability evaluations, respectively. **Requirement R2, part 2.4.3**, **bullet #3**: Expected in service dates of new or modified Transmission Facilities Parts 1.1.4 and 2.1.4 state that a reactive forecast is required. Using a power factor is one method that may be used in calculating this reactive forecast.	
Puget Sound Energy, Inc.	The wording in R2.1 is unclear as to whether new annual studies are required each year or whether qualified past studies are acceptable if no changes have been made. R2 reads "This Planning Assessment shall use current or past studies", while R2.1 implies current studies must be used but can be supplemented by past studies. We suggest changing the wording from "The Near-Term Transmission Planning Horizon portion of the steady state analysis shall be assessed annually and be supported by the following annual current studies, supplemented with qualified past studies" to "The Near-Term Transmission Planning Horizon portion of the steady state analysis shall be assessed annually and be supported by the following annual current studies, or qualified past studies" The wording in R2.1.1 is unclear as to whether two studies are required or only one. Should it read "year one or year two or year 5" as opposed to "year 1 or year 2 and year 5"? The language in 2.3, indicating that short circuit analysis be studied as part a BES transmission planning assessment should not be required. The effects of the failure of over-stressed breakers are already included in the Events listed in Table 1. Examples would include P2-3 and P2-4 (Internal Breaker Fault), and P4 (Stuck Breaker while attempting to clear a fault). The addition of short circuit analysis study does not add any additional reliability information. It is unclear if the drafting team intended the sensitivity studies identified by the bullets in R2.1.4 to align with the sensitivity studies identified by the bullets in R2.4.3. Both are for Near-Term studies but for steady state and stability respectively. If the intent is that they align, the wording should be modified to be the same. Also, similar to R1.1.4 above, R2.1.4 could be interpreted that the standard requires forecasting reactive load. However, most entities forecast demand (MW) and apply a power factor(s) to calculate reactive load. Therefore, please change "real and reactive load forecast" to "forecasted demand and power factor" so it is clear that forecasting reactive load is not required. R2.9 should be deleted (or not required for local load loss). The SDT indicated in the response to "Consideration of Comments on 3rd Draft of Standard TPL-001-1" that the requirement R2.9 is intended to "contribute to an open and transparent Transmission planning for peer review." And if the "largest Consequential Load Loss" is a local (intra-network) event? Would the documentation of such an event contribute to reliability in any way?
Response: The SDT reviewed Requirement R2 and Parts 2.1 through 2.5. Only Parts 2.1 and 2.2 require "annual current year study, supplemented by qualified past studies". Parts 2.1 and 2.2 cover steady state studies in the near-term and the long-term planning horizon, respectively. While the SDT envisions the standard to be flexible enough to allow the use of qualified past studies, the Planning Assessment cannot be based entirely on past studies. Because steady state analysis is part of	

Organization	Comments for Question 2
	the basic planning process, the SDT believes that the steady state portion of the studies covering Year One or year two and year five for Near-Term Transmission Planning Horizon and one of the years in the Long-Term Transmission Planning Horizon should be done annually. Qualified past studies can be used to supplement the studies for the remaining study years to support the assessment for the entire planning horizon. Making the change as requested can result in no current-year study being performed. Therefore, the SDT declines to make the change as suggested. Part 2.1.1 is intended to cover both the timeframe just after operation planning (Year One or year two), as well as the timeframe to allow implementation of solutions, which may require a longer lead time. Therefore, the "Year 1 or year 2 and year 5" in Part 2.1.1 is correct as written. Part 2.3 is intended for the Planning Coordinator and/or Transmission Planner to assess whether circuit breakers supporting the BES have interrupting capability for Faults that they will be expected to interrupt. Even though the effects of short circuit capability are localized and may be related to new planned Facilities, it is important to BES reliability. The SDT reviewed Parts 2.1.4 and 2.4.3. The third bullet in Part 2.4.3 has been modified. The remaining differences between the two parts are intended. The SDT developed the lists contained within 2.1.4 and 2.4.3 to address those situations which it believed were the most relevant for the steady state evaluations and stability evaluations, respectively. **Requirement R2, part 2.4.3**, **bullet #3**: Expected in service dates of new or modified Transmission Facilities Parts 1.1.4 and 2.1.4 state that a reactive forecast is required. Using a power factor is one method that may be used in calculating this reactive forecast. Part 2.9 has been deleted as suggested.
Southern California Edison (SCE)	The wording in R2.1 is unclear as to whether new annual studies are required each year or whether qualified past studies are acceptable if no changes have been made. R2 reads "This Planning Assessment shall use current or past studies", while R2.1 implies current studies must be used but can be supplemented by past studies. We suggest changing the wording from "The Near-Term Transmission Planning Horizon portion of the steady state analysis shall be assessed annually and be supported by the following annual current studies, supplemented with qualified past studies" to "The Near-Term Transmission Planning Horizon portion of the steady state analysis shall be assessed annually and be supported by the following annual current studies, or qualified past studies"? It is unclear if the drafting team intended the sensitivity studies identified by the bullets in R2.1.4 to align with the sensitivity studies identified by the bullets in R2.4.3. Both are for Near-Term studies but for steady state and stability respectively. If the intent is that they align, the wording should be modified to be the same. Also, similar to R1.1.4 above, R2.1.4 could be interpreted that the standard requires forecasting reactive load. However, most entities forecast demand (MW) and apply a power factor(s) to calculate reactive load. Therefore, please change "real and reactive load forecast" to "forecasted demand and power factor" so it is clear that forecasting reactive load is not required. Additionally, 2.4.2 is inconsistent with 2.4.1 with regards to language. It seems the intent of the Standards Drafting Team was to have the two consistent with each other. Specifically, the quote below, from section 2.4.1, is missing from section 2.4.2 (keeping in mind the word "peak" should be replaced with "Off-Peak"."System peak Load levels shall include a Load model which represents the dynamic behavior of Loads that could impact the study area, considering the behavior of induction motor Loads. An aggregate System Load model which represents the overall dynamic behavior of the Load is acceptable."

Organization	Comments for Question 2
Response: The SDT reviewed Requirement R2 and Parts 2.1 through 2.5. Only Parts 2.1 and 2.2 require "annual current year study, supplemented by qualified past studies". Parts 2.1 and 2.2 cover steady state studies in the near-term and the long-term planning horizons, respectively. While the SDT envisions the standard to be flexible enough to allow the use of qualified past studies, the Planning Assessment cannot be based entirely on past studies. Because steady state analysis is part of the basic planning process, the SDT believes that the steady state portion of the studies covering Year One or year two and year five for the Near-Term Transmission Planning Horizon and one of the years in the Long-Term Transmission Planning Horizon should be done annually. Qualified past studies can be used to supplement the studies for the remaining study years to support the assessment for the entire planning horizon. Making the change as requested can result in no current-year study being performed. Therefore, the SDT declines to make the change as suggested. The SDT reviewed Parts 2.1.4 and 2.4.3. The third bullet in Part 2.4.3 has been modified. The remaining differences between the two parts are intended. The SDT developed the lists contained within 2.1.4 and 2.4.3 to address those situations which it believed were the most relevant for the steady state evaluations and stability evaluations, respectively. **Requirement R2, part 2.4.3**, **bullet #3**: Expected in service dates of new or modified Transmission Facilities Parts 1.1.4 and 2.1.4 state that a reactive forecast is required. Using a power factor is one method that may be used in calculating this reactive forecast. In Part 2.4.1, the SDT specifies the dynamic Load model representation for on peak because the System voltages are generally lower during on peak. The percentage of motor Load, e.g., in air conditioners, could significantly increase reactive power requirements especially when they stall due to low System voltage and can therefore impact dynamic System performance on-peak. However, motor Load would likely not pose the same problem during Off-peak as the System voltages are usually higher. So, in Part 2.4.2, it can be left to the discretion of the Planning Coordinator or Transmission Planner whether the dynamic motor Load would need to be represented per the requirement in Part 2.4.1.	
Utility System Efficiencies, Inc. (USE)	The wording in R2.1 is unclear as to whether new annual studies are required each year or whether qualified past studies are acceptable if no changes have been made. R2 reads "This Planning Assessment shall use current or past studies", while R2.1 implies current studies must be used but can be supplemented by past studies. I suggest changing the wording from "The Near-Term Transmission Planning Horizon portion of the steady state analysis shall be assessed annually and be supported by the following annual current studies, supplemented with qualified past studies" to "The Near-Term Transmission Planning Horizon portion of the steady state analysis shall be assessed annually and be supported by the following annual current studies, or qualified past studies"? It is unclear if the drafting team intended the sensitivity studies identified by the bullets in R2.1.4 to align with the sensitivity studies identified by the bullets in R2.4.3. Both are for Near-Term studies but for steady state and stability respectively. If the intent is that they align, the wording should be modified to be the same.
Response: The SDT reviewed Requirement R2 and Parts 2.1 through 2.5. Only Parts 2.1 and 2.2 require "annual current year study, supplemented by qualified past studies". Parts 2.1 and 2.2 cover steady state studies in the near-term and the long-term planning horizons, respectively. While the SDT envisions the standard to be flexible enough to allow the use of qualified past studies, the Planning Assessment cannot be based entirely on past studies. Because steady state analysis is part of basic planning process, the SDT believes that the steady state portion of the studies covering Year One or year two and year five for the Near-Term Transmission Planning Horizon and one of the years in the Long-Term Transmission Planning Horizon should be done annually. Qualified past studies can be used to supplement the studies for the remaining study years to support the assessment for the entire planning horizon. Making the change as requested can result in no current-year study being performed. Therefore, the SDT declines to make the change as suggested.	

Organization	Comments for Question 2
The SDT reviewed Parts 2.1.4 and 2.4.3. The third bullet in Part 2.4.3 has been modified. The remaining differences between the two parts are intended. The SDT developed the lists contained within 2.1.4 and 2.4.3 to address those situations which it believed were the most relevant for the steady state evaluations and stability evaluations, respectively. **Requirement R2, part 2.4.3**, **bullet #3**: Expected in service dates of new or modified Transmission Facilities	
Western Area Power Adm - RMR	The wording in R2.1 is unclear as to whether new annual studies are required each year or whether qualified past studies are acceptable if no changes have been made. R2 reads "This Planning Assessment shall use current or past studies", while R2.1 implies current studies must be used but can be supplemented by past studies. I suggest changing the wording from "The Near-Term Transmission Planning Horizon portion of the steady state analysis shall be assessed annually and be supported by the following annual current studies, supplemented with qualified past studies" to "The Near-Term Transmission Planning Horizon portion of the steady state analysis shall be assessed annually and be supported by the following annual current studies, or qualified past studies"? It is unclear if the drafting team intended the sensitivity studies identified by the bullets in R2.1.4 to align with the sensitivity studies identified by the bullets in R2.4.3. Both are for Near-Term studies but for steady state and stability respectively. If the intent is that they align, the wording should be modified to be the same. Also, similar to R1.1.4 above, R2.1.4 could be interpreted that the standard requires forecasting reactive load. However, most entities forecast demand (MW) and apply a power factor(s) to calculate reactive load. Therefore, please change "real and reactive load forecast" to "forecasted demand and power factor" so it is clear that forecasting reactive load is not required. In R2.1.5 " the opening statement "When an entity's "spare equipment strategy" Does this imply an auditor would ask for this documentation as part of the review of this new TPL-001? Also " what other Standard requires the "spare equipment strategy"? I'm trying to determine what kind of documentation is required for this Requirement.
Response: The SDT reviewed Requirement R2 and Parts 2.1 through 2.5. Only Parts 2.1 and 2.2 require "annual current year study, supplemented by qualified past studies". Parts 2.1 and 2.2 cover steady state studies in the near-term and the long-term planning horizon, respectively. While the SDT envisions the standard to be flexible enough to allow the use of qualified past studies, the Planning Assessment cannot be based entirely on past studies. Because steady state analysis is part of basic planning process, the SDT believes that the steady state portion of the studies covering Year One or year two and year five for the Near-Term Transmission Planning Horizon and one of the years in the Long-Term Transmission Planning Horizon should be done annually. Qualified past studies can be used to supplement the studies for the remaining study years to support the assessment for the entire planning horizon. Making the change as requested can result in no current-year study being performed. Therefore, the SDT declines to make the change as suggested. The SDT reviewed Parts 2.1.4 and 2.4.3. The third bullet in Part 2.4.3 has been modified. The remaining differences between the two parts are intended. The SDT developed the lists contained within 2.1.4 and 2.4.3 to address those situations which it believed were the most relevant for the steady state evaluations and stability evaluations, respectively. **Requirement R2, part 2.4.3**, **bullet #3**: Expected in service dates of new or modified Transmission Facilities Parts 1.1.4 and 2.1.4 state that a reactive forecast is required. Using a power factor is one method that may be used in calculating this reactive forecast. Part 2.1.5 does not require a spare equipment strategy. It only requires that the Planning Coordinator or Transmission Planner plans for the potential unavailability of long lead time major Transmission equipment in accordance with its spare equipment strategy. For example, if an entity's spare equipment strategy is to have a spare	

Organization	Comments for Question 2
transformer on site, then the unavailability of a similar transformer (due to outages) would be limited to the time it would take to energize the spare transformer. Assuming that this time is no more than that required to return a similar outaged transformer back in service, Part 2.1.5 can be satisfied without performing additional planning study. If on the other hand, the transformer would have to be purchased, then it would take more than a year to replace. In this case, P0 should also be modeled with the transformer in question out of service. The SDT cannot comment on what documentation an auditor would need to support an audit.	
SRC of ISO/RTO	Under 2.1.4- It should be made clear that the sensitivity findings do not obligate the PC or TP to establish Corrective Action Plans to address any needs identified in the sensitivity cases. Specifically, we do not believe the sentence "To accomplish this, the sensitivity analysis in the Planning Assesment must vary one or more of the following conditions not already included in the studies by a sufficient amount to stress the System within a range of credible conditions that demonstrate a measurable change in performance." is measurable or necessary. The first part of 2.1.4 already stipulates sufficient details for the responsible entity to conduct sensitivity analysis including the parameters to be varied. Adding the "how-to-conduct" requirement is overly prescriptive and unnecessary, and the condition for "that demonstrate a measurable change in performance" is not measurable. It lacks a definitive target or direction for the responsible entity to determine (a) what conditions need to be attained to demonstrate a measurable change in performance, (b) what constitutes "measurable change in performance", and (c) what follow-up or corrective actions are needed to address the adverse performance as a result of stressing the system beyond the forecast conditions. Under 2.1.4 and 2.4.3 "sufficient" and "measurable" are too vague and hard to quantify. This may require an auditor's opinion. Suggest removing at least the word "sufficient" from the requirements. Under 2.3- Some PCs do not perform short circuit analysis. Is it the intent of the SDT to make the analysis standardized over a footprint? Alternatively, this could be a TP only responsibility. Further, Part 2.3 stipulates the short-circuit assessment requirements for the near-term horizon. Unlike its steady-state and stability counterparts, there are no requirements stipulated for short-circuit analysis for the long-term horizon. Is this intentional? If so, we are unable to identify the rationale for this decision. If not, we suggest revising Part 2.3 to: "The short circuit analysis portion of the Planning Assessment shall be conducted annually addressing the near-term and long-term Transmission Planning Horizons and can be supported by...". Under 2.7.2, it is not clear how an entity can provide rational for why actions are not necessary. If actions are not necessary, then no rationalizing is needed. Further, as stated above, corrective action plans should not be required for sensitivity studies. R2.7.2 should be struck. We propose to remove R2.9, since there is not a reliability need for this information and it is unnecessary. AESO does not comment on VSLs or VRFs.
Response: For Part 2.1.4, the requirement for Corrective Action Plans to address any needs identified in the sensitivity cases is included in Part 2.7. Part 2.7 states, in part, that “Corrective Action Plan(s) do not need to be developed solely to meet the performance requirements for a single sensitivity run in accordance with Requirements R2, Parts 2.1.4 and 2.4.3. In addition, Part 2.7.2 describes the requirement on Corrective Action Plans to “Include actions to resolve performance deficiencies identified in multiple sensitivity studies or provide a rationale for why actions were not necessary”. For Parts 2.1.4 and 2.4.3, the SDT envisions that “credible”, “sufficient”, “stressed” conditions and “measurable change” are to be defined by the responsible Planning Coordinator or Transmission Planner because each System is different.	

Organization	Comments for Question 2
Part 2.3 is intended for the Planning Coordinator and Transmission Planner to assess the whether circuit breakers supporting the BES have interrupting capability for Faults that they will be expected to interrupt. The standard allows the Planning Coordinator and Transmission Planner to coordinate on who would perform short circuit studies. But each is still responsible for meeting the requirements. Part 2.3 is for short circuit assessment of the system in general and is more suited for the Near-Term Transmission Planning Horizon, when Transmission plans are more certain. Lead time to implement corrective action if found necessary can reasonably be expected to be completed in the near-term timeframe. Short circuit study for the longer term planning horizon should be studied on a case by case basis associated with specific project(s). The SDT disagrees that Part 2.7.2 should be struck. Part 2.7.2 provides for development of a Corrective Action Plan if a number of sensitivity studies result in the same potential problem. For example, if only one sensitivity study results in potential problems or if the probability of occurrences of the sensitivity scenarios is low, then this could be the rationale to state that corrective action plan would not be necessary. Part 2.9 has been deleted as suggested.	
Exelon Transmission Planning	We believe that the Table 1 performance criteria should be based on the voltage level of potentially overloaded elements and not based on the voltage level of the element(s) removed from service. If a 100 kV line were overloaded for a 500 kV contingency, it does not make sense to us to treat it differently than if the same overload occurred for a 100 kV contingency since the severity of the event is the same in both cases. The availability of load shedding to reduce overloads on EHV equipment and not for overloads on HV equipment makes sense since typically a greater amount of load would need to be shed to unload an EHV facility than an HV facility. We disagree with the requirement to report the largest amount of consequential load loss. If this information is not used to meet a requirement adding to reliability, it is creating undo burden. If the requirement is kept, it should be made clear as to which case or cases the requirement pertains. The Planning Assessment will contain extremely sensitive information. The threshold that it must be supplied to ANY functional entity is too low. There should be a CEII or other process to ensure that this information is adequately protected.
Response: The determination of when interrupting Non-Consequential Load and/or Firm Transmission Service is permitted to meet Table 1 performance requirements service is based solely on the lowest voltage level of Facilities disconnected by design for the planning event studied and not based on the monitored Facilities. Although not unanimous, the majority of the SDT and industry stakeholders believe the 300 kV and higher Systems (EHV) generally represent the backbone of many Systems in the various Interconnections and that the EHV breakpoint and the more stringent requirements are appropriately defined. Changes were made to footnote 1 to better clarify the SDT's intent and it now reads: **Table 1, footnote 1**: If the event analyzed involves BES elements at multiple System voltage levels, the lowest System voltage level of the element(s) removed for the analyzed event determines the stated performance criteria regarding allowances for interruptions of Firm Transmission Service and Non-Consequential Load Loss. Part 2.9 has been deleted based on industry responses.	
American Transmission Company	We propose the following changes and following questions:New R2.1 We suggest that R2.6 be relocated to the R2.1 position to allow the preferred style of backward references to text that occurs earlier in a document, rather than forward references to text that appears later in a document.

Organization	Comments for Question 2
	R2.1.3 As noted above, we suggest that R1.1.2 be removed and that R2.1.3 be revised to state that "Known outages of generation or Transmission Facilities with a duration of at least six months be simulated along with P1 events for the System peak or Off-Peak conditions when the outages are scheduled to occur." We interpret that simulation of known outages of at least six months should refer only to individual outages with duration of six months or more have to be simulated and not a set of sequential (back-to-back) outages where each individual outage is less than six months, but the composite duration of the set is more than six months. We also interpret that if two or more known outages with duration of at least six months are overlapping that the outage would be simulated as simultaneous for the System peak or Off-Peak conditions when the overlapping outages are scheduled to occur. R2.1.4 The terms of "credible" and "measurable change" are ambiguous and not defined. Therefore, we suggest that these terms be defined or more clearly described to avoid the risk of different and possibly contradictory interpretations by TPs, PCs, and auditors.R2.1.4 bullet items We suggest that the number and description of the bullet items in R2.1.4 match the bullet points in R2.4.3. Otherwise, please explain the reasons for any differences between the bullet items in R2.1.4 and R2.4.3. R2.1.4 bullet #2 & # 5 We suggest that the wording of bulletin #2 be changed to "Expected transfers and other generation dispatch scenarios". This modification would put the transfer and dispatch element, which are complementary, together in the same bullet item, rather than grouping the "generation dispatch" (operating level) element together with the generation capacity elements in bullet item #5. R2.1.4 bullet #7 We propose replacing the adjective "planned" with "known" for consistency with R2.1.3 and any other "known" references in the standard. R2.1.5 We propose replacing the term "major Transmission" with "BES" because BES is a well defined term, while "major Transmission" is not. New R2.3.1 We suggest the addition of new R2.3.1 to emulate the distinction between the requirement to perform a short circuit assessment and conduct required studies or analysis to support the assessment (e.g. R2.1/R2.1.1 and R2.2/R2.2.1). We propose wording such as, "Perform an analysis for at least one year in the Near Term Transmission Planning Horizon." This requirement would set an expectation that an analysis should be conducted to at least one or more years in the near-term planning horizon, rather than imply that an analysis of all five years in the near-term planning horizon must be conducted. R2.4.1 - The terms of "study area" and "represents" are ambiguous and not defined. Therefore, we suggest that these terms be more clearly described to avoid the risk of different and possibly contradictory interpretations by TPs, PCs, and auditors. R2.4.3 The terms of "credible" and "measurable change" are ambiguous and not defined. Therefore, we suggest that these terms be defined or more clearly described to avoid the risk of different and possibly contradictory interpretations by TPs, PCs, and auditors.R2.4.3 bullet items We suggest that the number and description of the bullet items in R2.1.4 match the bullet points in R2.1.4. Otherwise, please explain the reasons for any differences. R2.4.3 bullet #2 & # 5 We suggest that the wording of bulletin #2 be changed to "Expected transfers and other generation dispatch scenarios". This would place these similar items in the same bullet item #2, rather than having the "other generation dispatch" in bullet item #5.

Organization	Comments for Question 2
	R2.4.3 bullet #3 We suggest that the wording of "new or modified Transmission Facilities" to agree with the wording in bulletin #3 of R2.1.4. R2.6 As noted earlier, we suggest that the numbering of this requirement be changing it to R2.1 to avoid the style of forward references. Add R2.7.1 Item #7 - We propose the addition of the following bullet item to R2.7.1 because any requirement in the head notes or foot motes of Table 1 should occur within the body of standard. Item #7 could read, "Planned System adjustments such as Transmission configuration changes and redispatch of generation are allowed if such adjustments are executable within the time duration of the Facility Ratings." Note "e" in the Planning Events, Steady State & Stability section is stated in the form of a Requirement (e.g. use the verb "shall"), but all requirements should be included in the Requirements section and not introduced (and basically hidden) in the performance notes of Table 1. [After bullet item #7 is added, Note "e" under "Steady State & Stability section of Table 1 should refer to R2.7.1] R2.7.2 " We suggest using the term, "mitigation actions", to more clearly distinguish that this requirement is not asking for the development of "Corrective Action Plans", such as those that are needed for inability to meet base case performance requirements.R2.7.6 We suggest that the wording of R2.7.6 be the same as R.2.8.2. Otherwise, we propose that R2.7.6 and R2.8.2 be revised with wording like, ". . . implementation status of identified Corrective Action Plans for System Facilities and Operating Procedures." to clarify that the identified system facilities and operating procedures refer only to those that were in the previous year's Corrective Action Plans. R2.9 We still propose that this requirement be removed because annually stating the single, largest expected, Consequential Load Loss due to a P1 or P2 event in the TP or PC system is not needed to provide reliable BES performance or assure open and transparent Transmission planning peer review.

Response: The SDT reviewed the order of Parts 2.1 and 2.6 and declines to modify it as suggested because it does not add additional clarity.

Part 2.1.3 covers known long duration outages, for example, taking a 230 kV Transmission line out of service to rebuild it to operate at 500 kV. These cases are to simulate System conditions with the Facility in question out of service as Category P0 (or N-0). For the next outage, the System performance will need to meet requirements for Category P1. This is not the same as requirements for Category P6, which assumes that the outage for the first Facility would be of shorter duration than 6 months. Part 2.1.3 has been revised to read "P1 events in Table 1 with known outages modeled, as in Requirement R1, part 1.1.2 under those System peak or Off-Peak conditions when known outages are scheduled" to provide more clarity. The SDT agrees that if two or more known outages with duration of at least six months are overlapping that the outage should be simulated as simultaneous for the conditions when the overlapping outages are scheduled to occur. This is consistent with the requirement to simulate the System conditions as it is expected to operate.

For Parts 2.1.4 and 2.4.3, the SDT envisions that "credible", "sufficient", "stressed" conditions and "measurable change" are to be defined by the responsible Planning Coordinator or Transmission Planner because each System is different. The SDT reviewed Parts 2.1.4 and 2.4.3. The third bullet in Part 2.4.3 has been modified. The remaining differences between the two parts are intended. The SDT developed the lists contained within Parts 2.1.4 and 2.4.3 to address those situations which it believed were the most relevant for the steady state evaluations and Stability evaluations, respectively.

Requirement R2, part 2.4.3, **bullet #3**: Expected in service dates of new or modified Transmission Facilities

Organization	Comments for Question 2
	The SDT declines to change the second and fifth bullets in Part 2.4.3 because the existing arrangement will keep the generator scenarios together. Expected transfers are not always associated with generation dispatch. In Part 2.1.4, bullet #7, the SDT declines to replace "planned" with "known" as suggested in "Duration or timing of planned Transmission outages". Part 2.1.4 covers sensitivity scenarios and reflects uncertainty in planning assumptions. The intent of this bullet is to cover unexpected changes in plans, for example, a potential delay in returning a Transmission line back to service after a planned outage of 6 months or more for rebuilding to a higher capacity line. If the outage is "known", then there would not be any need to perform this study as a sensitivity. In Part 2.1.5, the SDT declines to replace the term "major Transmission equipment" with "BES equipment" because the intent is to investigate the unavailability of major pieces of equipment in the Transmission System. Transmission is defined in the NERC Glossary as, "An interconnected group of lines and associated equipment for the movement or transfer of electric energy between points of supply and points at which it is transformed for delivery to customers or is delivered to other electric systems". Part 2.3 is silent on the year of study within the Near-Term Transmission Planning Horizon. Therefore, it is up to the Transmission Planner or Planning Coordinator to select the study years most suited to the System in question. In addition, Part 2.3 only requires an annual Planning Assessment, which is to be supported by annual current or qualified past studies. As such, the SDT believes it is inappropriate to make the change as suggested Part 2.4.1: The SDT believes that the terms of "study area" and "represents" should be defined by the Planning Coordinator or Transmission Planner performing the study, and should be part of the coordination between the entities. For Parts 2.1.4 and 2.4.3, The SDT envisions that "credible", "sufficient", "stressed" conditions and "measurable change" are to be defined by the responsible Planning Coordinator or Transmission Planner because each System is different. The SDT reviewed Parts 2.1.4 and 2.4.3. The third bullet in Part 2.4.3 has been modified. The remaining differences between the two parts are intended. The SDT developed the lists contained within Parts 2.1.4 and 2.4.3 to address those situations which it believed were the most relevant for the steady state evaluations and stability evaluations, respectively. **Requirement R2, part 2.4.3**, **bullet #3**: Expected in service dates of new or modified Transmission Facilities The SDT declines to change the second and fifth bullets in Part 2.4.3 because the existing arrangement will keep the generator scenarios together. Expected transfers are not always associated with generation dispatch. The SDT reviewed the order of Part 2.1 and Part 2.6 and declines to modify it as suggested because it does not add additional clarity. Note e in Table 1 is a condition for allowance of planned System adjustments, which could include Operating Plans such as re-dispatch. Part 2.7.1 is a list of examples, so it could include more items than listed, including Note e in Table 1. The SDT declines to make the suggested change. Part 2.7.2 provides for development of a Corrective Action Plan if a number of sensitivity studies result in the same potential problem. For example, if only one sensitivity study results in potential problems or if the probability of occurrences of the sensitivity scenarios is low, then this could be the rationale to state that corrective action plan would not be necessary. Part 2.9 has been deleted as suggested.
PJM	R2 should use the term –dynamics analysis- instead of –stability analysis-. A dynamics study is used to determine stability like a power flow study is used to determine overloads or voltage violations. In R2.1.1 is -System peak Load- seasonal peak load or the peaking season of that region? For example, if I'm a summer peaking

Organization	Comments for Question 2
	region, must I do a summer peak study and a winter peak study or just a summer peak study? In R2.1.3, change -for known outages, as modeled in- to –with known outages modeled, as required in-. R2.1.5 should be made clear that only one piece of equipment should be taken out at a time for each sensitivity. No matter what FERC says, this requirement should be deleted because this analysis serves no purpose. If a spare equipment strategy is required, please tell us so in a spare equipment standard, not hidden here in a performance standard. R2.4.3 – Please delete the words -for the list of items shown below- at the end of the first sentence. There is an implication in this sentence, as originally worded, that a sensitivity must be performed for the entire list of sensitivities instead of how it is explained in the second sentence. R2.6.2 – Please reword -the study shall not include any material changes- to –a study with material changes shall not be used- The old sentence sounded like you just exclude the material changes and you are good to go. R2.7.1 – Please change -List System deficiencies- to –List performance deficiencies-. R2.7.1 – 3rd Bullet – I would lump this under Special Protection Systems, also why is runback not allowed for dynamics problems, seems there are some restrictions buried here. R2.7.1 – 6th Bullet – What is a –rate application-? R2.7.2 – This is pushing us to plan the system for scenarios that may never happen. Pushing us to some higher level of reliability will cost significant money. Should the ratepayers be burdened with this excess? I say no, remove this requirement. R2.8.1 – Change -List System deficiencies- to –List short circuit deficiencies-.

Response: The SDT declines to replace "Stability analysis" with "dynamic analysis" because it does not add additional clarity.

The intent of Part 2.1.1 is to assess those System conditions under peak Load conditions when the System is reasonably stressed. It is envisioned that the Planning Coordinator or Transmission Planner will determine the System conditions for its planning studies.

Part 2.1.3 has been revised as suggested.

> **Requirement R2, part 2.1.3**: P1 events in Table 1 with known outages modeled, as in Requirement R1, part 1.1.2 under those System peak or Off-Peak conditions when known outages are scheduled.

Part 2.1.5 only requires that the Planning Coordinator or Transmission Planner plans for the potential unavailability of long lead time major Transmission equipment in accordance with its spare equipment strategy. For example, if an entity's spare equipment strategy is to have a spare transformer on site, then the unavailability of a similar transformer (due to outages) would be limited to the time it would take to energize the spare transformer. Assuming that this time is no more than that required to return a similar outaged transformer back in service, Part 2.1.5 can be satisfied without performing additional planning studies. If on the other hand, the transformer would have to be purchased, then it would take more than a year to replace. In this case, P0 should be modeled with the transformer in question out of service.

Part 2.4.3 has been revised as suggested.

> **Requirement R2, part 2.4.3**: For each of the studies described in Requirement R2, parts 2.4.1 and 2.4.2, sensitivity case(s) shall be utilized to demonstrate the impact of changes to the basic assumptions used in the model. To accomplish this, the sensitivity analysis in the Planning Assessment must vary one or more of

Organization	Comments for Question 2
	the following conditions not already included in the studies by a sufficient amount to stress the System within a range of credible conditions that demonstrate a measurable change in performance: Part 2.6.2 has been revised as suggested. **Requirement R2, part 2.6.2**: For steady state, short circuit, or Stability analysis: the System represented in the study shall not include any material changes unless a technical rationale can be provided to demonstrate that System changes do not impact the performance results in the study area. The SDT declines to revise Part 2.7.1 as suggested because it does not add additional clarity. The SDT declines to combine the third bullet with Special Protection Schemes (SPS) because automatic generation tripping does not always have to be part of an SPS. In any case, this list contains examples only. It is envisioned that run-back would take a longer time period and would not fit in the transient Stability study period. Part 2.7.1, sixth bullet, “rate application” can be regulatory incentives, such as demand response, distributed generation, etc. Part 2.7.2 provides for development of a Corrective Action Plan if a number of sensitivity studies result in the same potential problem. For example, if only one sensitivity study results in potential problems or if the probability of occurrences of the sensitivity scenarios is low, then this could be the rationale to state that corrective action plan would not be necessary. In addition, Part 2.7.1 allows the use of lower cost alternatives, such as operating procedures, among other things to correct potential performance deficiencies identified. The SDT declines to revise Part 2.8.1 because the language as written is clear.

3. Requirement R3 – Please provide any specific comments on the requirement text, VRF, Time Horizon, measure associated with the requirement, data retention associated with the requirement, and/or the VSL associated with the requirement.

Summary Consideration: The SDT has modified the wording of several parts of Requirement R3 to increase clarity as requested by many industry comments and shown below. Requirement R3, part 3.6 was deleted in response to industry comments as it is not a performance oriented requirement.

Requirement R3, part 3.3: Contingency analyses for Requirement R3, Parts 3.1 & 3.2 shall:

Requirement R3, part 3.3.2: Trip generators where simulations show generator bus voltages or high side of the GSU voltages are less than known or assumed minimum generator steady state or ride through voltage limitations. Include in the assessment any assumptions made.

Requirement R3, part 3.3.3: Trip Transmission elements when relay loadability limits are exceeded.

Requirement R3, part 3.5: Those extreme events in Table 1 that are expected to produce more severe System impacts shall be identified and a list of those events to be evaluated for System performance in Requirement R3, part 3.2 created. The rationale for those Contingencies selected for evaluation shall be available as supporting information. If the analysis concludes there is Cascading caused by the occurrence of extreme events, an evaluation of possible actions designed to reduce the likelihood or mitigate the consequences and adverse impacts of the event(s) shall be conducted.

Requirement R3, part 3.6:

Requirement R3, data retention: The studies performed in support of its Planning Assessments since the last compliance audit in accordance with Requirement R3 and Measure M3.

Organization	Comments for Question 3
Independent Electricity System Operator	(1) R3 has become more of a “how to” requirement than a “what” requirement, as illustrated below. (a) Part 3.3 is overly prescriptive. A requirement that says contingency analysis shall be performed which reflect proper operation of all Protection Systems and actions of all automatic devices would suffice. If necessary, some examples such as those listed in Part 3.3.4 may be added as illustration. (b) The parts that ask for creating a list of contingencies and having rationale available as supporting information, in Part 3.4 for example, are overly prescriptive and unnecessary. These are documentation requirements, not reliability requirements. If one asked the question: will reliability be adversely affected if the responsible entity failed to document the list and the rationale for choosing this list? If the answer is no, then they don’t rise up to a reliability standard. To meet the intent of Part 3.4, a simple requirement that asks the responsible entity to demonstrate acceptable system performance for the applicable planning events in Table 1 would suffice. Table 1 already stipulates the events that must be considered in the analysis. We do not see the need to go into such details as “some events are expected to produce more severe impacts”, and the need to ask the planners to

Organization	Comments for Question 3
	create a list of these more impactive contingencies for subsequent evaluation. Similar observation is made for Part 3.5 on the extreme event list and for Part 3.6 for the amount of generation loss, and the rationale. (2) We have no comments on the measure, VRF and Time Horizon. However, there is no VSL for Part 3.6.
Response: R3: The SDT disagrees with the comment. The parts of Requirement R3 specify the components required for a compliant study. No change made. Part 3.4 & Part 3.5: Require the planning entity to identify which Contingencies are chosen to be simulated in the study, and explain why these are chosen. The SDT assumes that the Planning Coordinator/Transmission Planner, applying experience of past studies and knowledge of its System, is in the best position to determine which Contingencies in Table 1 are most relevant, as it is impossible to study all Contingencies especially the multiple Contingency events. No change made. Part 3.6: The SDT has deleted Requirement R3, part 3.6 in response to industry comments as it is not a performance oriented requirement affecting the reliability of the BES. VSL for Part 3.6: The SDT has deleted Part 3.6.	
ERCOT ISO	* Will any agreements made in R7 override the “each TP and PC” requirement? To clarify this, the requirement could be rephrased: "In accordance to the responsibilities assigned in R7, the responsible Transmission Planners and Planning Coordinators shall perform?. "* Section 3.1 and 3.4 appear to be related. Confusing references can be eliminated by combining them and removing 3.4 as follows: "3.1. Those planning events in Table 1 that are expected to produce more severe System impacts on its portion of the BES shall be identified and studies shall be performed for planning events to determine whether the BES meets the performance requirements in Table 1. A list of those Contingencies and the rationale for those Contingencies selected for evaluation shall be available as supporting information".* Similarly, Section 3.2 and 3.5 appear to be related. Confusing references can be eliminated by combining them and removing 3.5: "3.2. Those extreme events in Table 1 that are expected to produce more severe System impacts shall be identified and studies shall be performed to assess the impact of the extreme events. If the analysis concludes there are cascading outages caused by the occurrence of extreme events, an evaluation of possible actions designed to reduce the likelihood or mitigate the consequences and adverse impacts of the event(s) shall be conducted A list of the events and the rationale for those Contingencies selected for evaluation shall be available as supporting information."
Response: R7: The agreements required by Requirement R7 are intended to clarify the responsibilities among the Planning Coordinator and Transmission Planner. The SDT believes this is clear in the existing language. No change made. Parts 3.1 & 3.4: The SDT does not believe that combining the requirements provides any significant advantage. No change made. Parts 3.2 & 3.5: The SDT does not believe that combining the requirements provides any significant advantage. No change made.	
Northeast Utilities	[R3.3.2] Traditionally, transmission planners have assumed that generators would ride through low voltages associated with Planning Events, which is generally adequate for non-wind generators. If this standard is going to require its incorporation into the assessments, there should be a MOD standard developed requiring the generator owners to provide the necessary

Organization	Comments for Question 3
	information prior to its inclusion as a requirement in this standard. [R3.3.3] This requirement is already addressed in NERC Standard PRC-023 and reflected in facility ratings and therefore, should be removed from TPL-001-1. [R3.5] This requirement needs clarification as to what is specifically required for the "evaluation of possible actions". Otherwise the following is recommended: It should be clear that an evaluation does not require solution development for all Extreme Events. Change "an evaluation of possible actions" to "where appropriate, reasonably practicable actions designed to reduce the likelihood or mitigate the consequences and adverse impacts of the event(s) shall be considered." [R3.6] Why the need to report the amount of "Consequential Generation Loss" since TPL-001-1 does not impose any limit or reliability consequence? We recommend that this requirement be deleted from the standard.
Response: Part 3.3.2: Where test data is not available, the SDT believes that most Transmission Planners/Planning Coordinators currently assume generators ride through low voltage based on extensive field experience. There is a project (Project 2007-09 — Generator Verification) that will provide the required generator data to validate the assumptions. For this standard, all that is required is to identify the assumptions concerning voltage limitations of the unit and ensure that the simulation models the generator response as it will react in the real world. If voltage ride through limits would cause a generator to trip in the real world, the study must determine if the performance requirements are met for the initiating event and subsequent generator trip. No change made for this comment. Part 3.3.3: The SDT changed the wording to further clarify the action required when relay loadability limits are exceeded. The SDT believes this wording change should alleviate any perceived conflicts with the relay loadability standard. **Requirement R3, part 3.3.3**: Trip Transmission elements when relay loadability limits are exceeded Part 3.5: The requirement is to evaluate possible actions which, if implemented, could reduce the likelihood or mitigate the consequences of an extreme event. The SDT believes that what these "possible actions" are should be left to the judgment of the Planning Coordinator/Transmission Planner who has knowledge of their System. Part 3.6: The SDT has deleted Requirement R3, part 3.6 in response to industry comments as it is not a performance oriented requirement affecting the reliability of the BES.	
Central Maine Power Company	3.2 Item 3.2 should be deleted. The requirements for sensitivity analysis already address issues going beyond what is expected to meet reliability requirements. Requiring extreme event analysis is requiring two layers of event analysis beyond what is required and there is no requirement for corrective action if anything is identified. Therefore Extreme Event analysis no longer provides any value in this standard. 3.3.2 This requirement is not practical unless a MOD is created so that known minimum generator steady state or ride through voltage limitations are used instead of assumed values. To create a MOD, collect the data, and incorporate the information into the studies will take time, which necessitates the need for an implementation period. Absent accepting this suggestion with respect to creating an MOD, please provide assumed minimum generator steady state or ride through voltage limitations as a standard reference for this analysis. 3.3.3 There appears to be a compliance double-jeopardy issue related to relay loadability. Relay loadability is handled in

Organization	Comments for Question 3
	greater detail (as it should be) under the proposed PRC-023 standard, so any reference here should be deleted. 3.4 It is suggested that this requirement is made a sub-bullet of Requirement 3.1 to keep the related requirements together. 3.5 and 4.5 Both of these requirements need clarification as to what is specifically required for the "evaluation of possible actions." 3.5 It is suggested that this be made a sub-bullet of Requirement 3.2 to keep the related requirements together. 3.6 Item 3.6 should be deleted since there is no limit defined in the standard.
ISO New England	3.2 Item 3.2 should be deleted. The requirements for sensitivity analysis already address issues going beyond what is expected to meet reliability requirements. Requiring extreme event analysis is requiring two layers of event analysis beyond what is required and there is no requirement for corrective action if anything is identified. Therefore Extreme Event analysis no longer provides any value in this standard. 3.3.2 This requirement is not practical unless a MOD is created so that known minimum generator steady state or ride through voltage limitations are used instead of assumed values. To create a MOD, collect the data, and incorporate the information into the studies will take time, which necessitates the need for an implementation period. Absent accepting this suggestion with respect to creating an MOD, please provide assumed minimum generator steady state or ride through voltage limitations as a standard reference for this analysis. 3.3.3 There appears to be a compliance double-jeopardy issue related to relay loadability. Relay loadability is handled in greater detail (as it should be) under the proposed PRC-023 standard, so any reference here should be deleted. 3.4 It is suggested that this requirement is made a sub-bullet of Requirement 3.1 to keep the related requirements together. 3.5 and 4.5 Both of these requirements need clarification as to what is specifically required for the "evaluation of possible actions." 3.5 It is suggested that this be made a sub-bullet of Requirement 3.2 to keep the related requirements together. 3.6 Item 3.6 should be deleted since there is no limit defined in the standard.
United Illuminating	3.2 Item 3.2 should be deleted. The requirements for sensitivity analysis already address issues going beyond what is expected to meet reliability requirements. Requiring extreme event analysis is requiring two layers of event analysis beyond what is required and there is no requirement for corrective action if anything is identified. Therefore Extreme Event analysis no longer provides any value in this standard. 3.3.2 This requirement is not practical unless a MOD is created so that known minimum generator steady state or ride through voltage limitations are used instead of assumed values. To create a MOD, collect the data, and incorporate the information into the studies will take time, which necessitates the need for an implementation period. Absent accepting this suggestion with respect to creating an MOD, please provide assumed minimum generator steady state or ride through voltage limitations as a standard reference for this analysis. 3.3.3 There appears to be a compliance double-jeopardy issue related to relay loadability. Relay loadability is handled in

Organization	Comments for Question 3
	greater detail (as it should be) under the proposed PRC-023 standard, so any reference here should be deleted. 3.4 It is suggested that this requirement is made a sub-bullet of Requirement 3.1 to keep the related requirements together. 3.5 and 4.5 Both of these requirements need clarification as to what is specifically required for the "evaluation of possible actions." 3.5 It is suggested that this be made a sub-bullet of Requirement 3.2 to keep the related requirements together. 3.6 Item 3.6 should be deleted since there is no limit defined in the standard.
Response: Part 3.2: The SDT disagrees and believes there is value in running extreme event analysis to test the robustness of the System. No change made. Part 3.3.2: Where test data is not available, the SDT believes that most Transmission Planners/Planning Coordinators currently assume generators ride through low voltage based on extensive field experience. There is a project (Project 2007-09 — Generator Verification) that will provide the required generator data to validate the assumptions. For this standard, all that is required is to identify the assumptions concerning voltage limitations of the unit and ensure that the simulation models the generator response as it will react in the real world. If voltage ride through limits would cause a generator to trip in the real world, the study must determine if the performance requirements are met for the initiating event and subsequent generator trip. No change made. Part 3.3.3: The SDT changed the wording to further clarify the action required when relay loadability limits are exceeded. The SDT believes this wording change should alleviate any perceived conflicts with the relay loadability standard. **Requirement R3, part 3.3.3**: Trip Transmission elements when relay loadability limits are exceeded Part 3.4: The SDT does not believe that combining the requirements provides any significant advantage. No change made. Parts 3.5 & 4.5 The requirement is to evaluate possible actions which, if implemented, could reduce the likelihood or mitigate the consequences of an extreme event. The SDT believes that what these "possible actions" are should be left to the judgment of the Planning Coordinator/Transmission Planner whose has knowledge of their System. Part 3.5: The SDT does not believe that combining the requirements provides any significant advantage. No change made. Part 3.6: Part 3.6: The SDT has deleted part 3.6 in response to industry comments as it is not a performance oriented requirement affecting the reliability of the BES.	
Florida Municipal Power Agency, and its Member Cities	3.3.1, is the intent of the SDT that extreme events that may cause loading beyond relay trip settings (especially Zone 3) be simulated? There is no need for 3.3.3 since the Facility Ratings should already take this into account (FAC-008, R1.2.1 The scope of equipment addressed shall include, but not be limited to, " relay protective devices, "). This adds unneeded burden to transmission planners in developing evidence for this that already exists elsewhere. In other words, by respecting Facility Ratings, we respect relay loadability.
Response: Part 3.3.1: The intent of the SDT is for the planner to simulate the Protection System operation so that all elements that the Protection System is designed to remove (breaker to breaker) are removed in the simulation for the list of Contingencies the planner has developed in Requirement R3, parts 3.4 (planning events)	

Organization	Comments for Question 3
and 3.5 (extreme events). Part 3.3.3: The SDT changed the wording to further clarify the action required when relay loadability limits are exceeded. The SDT believes this wording change should alleviate any perceived conflicts. **Requirement R3, part 3.3.3**: Trip Transmission elements when relay loadability limits are exceeded.	
Oncor Electric Delivery	3.3.2 Do we want to be able to trip gen? 3.3.3 Relay loadability covered in PRC-023 3.6 Why is this information reported if there is no limit or reliability consequence. 3.3.3 This requirement is already addressed in NERC Standard PRC-023 and reflected in the facility's rating and should be removed from TPL-001-1. 3.4 It is strongly suggested that this requirement is made a sub-bullet of Requirement 3.1 to keep the related requirements together. 3.5 and 4.5 Both of these requirements need clarification as to what is specifically required for the "evaluation of possible actions." 3.5 It is strongly suggested that this be made a sub-bullet of Requirement 3.2 to keep the related requirements together. 3.6 It is recommended that the "consequential generation" loss is excluded from the amount documented. [Why?]
Response: Part 3.3.2: In order to ensure performance requirements are met in cases where System conditions could cause a generator to trip, Requirement R3, part 3.3.2 requires that the entity trip a generator at locations where bus voltages in the simulation fall below known or assumed generator steady state or ride through voltage limits. No change made. Part 3.3.3: The SDT changed the wording to further clarify the action required when relay loadability limits are exceeded. The SDT believes this wording change should alleviate any perceived conflicts with the relay loadability standard. **Requirement R3, part 3.3.3**: Trip Transmission elements when relay loadability limits are exceeded. Part 3.4: The SDT does not believe that combining the requirements provides any significant advantage. No change made. Parts 3.5 & 4.5 The requirement is to evaluate possible actions which, if implemented, could reduce the likelihood or mitigate the consequences of an extreme event. The SDT believes that what these "possible actions" are should be left to the judgment of the Planning Coordinator/Transmission Planner who has knowledge of their System. Part 3.5: The SDT does not believe that combining the requirements provides any significant advantage. No change made. Part 3.6: The SDT has deleted Requirement R3, part 3.6 in response to industry comments as it is not a performance oriented requirement affecting the reliability of the BES.	

Organization	Comments for Question 3
FirstEnergy Corp	A. The inclusion of sub-part 3.3.3 of Requirement R3 that reads "Ensure relay loadability limits are respected" is not needed as it is duplicative with standard PRC-023, and indirectly redundant with the facility rating standards FAC-008 and FAC-009. Additionally, the introductory notes of performance Table 1 item "f" is clear that Facility Ratings shall not be exceeded and PRC-023 makes it clear that relay loadability must be accounted for in Facility Ratings. In NERC's three-year assessment, Attachment 2 it clearly indicates that one goal of NERC's standards development work plan is " ...retiring redundant requirements ..." (Please reference page 4, the 6th bullet under plan objectives). To that end, we should not knowingly create redundant requirements that lead to double jeopardy issues for industry stakeholders. If a "belts and suspenders" is the goal here, it's suggested that a footnote be added to item "f" of the introductory notes that would clarify that PRC-023 must be adhered to with regard to Facility ratings. B. If the generator bus is modeled at the generator voltage, then this should be the reference voltage point. If the generator is modeled directly connected to the BES, then the transmission voltage should be the reference voltage. Either way, the reference point should be consistent. In addition, 3.3.2 requires the unit to be tripped. It should be noted that the minimum voltage point may be overly-conservative, since the minimum voltage that a unit can stay on line is MVA output dependent. For base load units, determining a generator minimum voltage should be relatively straightforward, however, peaking and regulating units, not so. Our experience has been that generating units at manned locations generally do not have undervoltage protection or alarms, so FE is not certain how this Requirement to trip those units matches the "real world". C. We suggest the team discontinue the use of "Coordinate with adjacent transmission planners" in regards to sub-part 3.4.1 related to the inclusion of contingencies from adjacent systems. The "coordination" type of requirements creates a need to develop compliance evidence such as e-mail correspondence, meeting minutes etc that serve no real reliability purpose. The requirement should simply be that the TP shall include adjacent System contingencies expected to produce the more severe System impacts on their system. In fact, sub-part 3.4 already includes that language. We suggest the team append the sentence "The planning event contingencies shall include:" to the end of sub-part 3.4 followed by two bullets that indicate 1) events within the TP's system and 2) events on adjacent transmission Systems.
Response: Part 3.3.3: The SDT changed the wording to further clarify the action required when relay loadability limits are exceeded. The SDT believes this wording change should alleviate any perceived conflicts with the relay loadability standard. **Requirement R3, part 3.3.3**: Trip Transmission elements when relay loadability limits are exceeded. Part 3.3.2: Where test data is not available, the SDT believes that most Transmission Planners/Planning Coordinators currently assume generators ride through low voltage based on extensive field experience. There is a project (Project 2007-09 — Generator Verification) that will provide the required generator data to validate the assumptions. For this standard, all that is required is to identify the assumptions concerning voltage limitations of the unit and ensure that the simulation models the generator response as it will react in the real world. If voltage ride through limits would cause a generator to trip in the real world, the study must determine if the performance requirements are met for the initiating event and subsequent generator trip. No change made. Part 3.4.1: SDT believes that it is necessary for the planner to coordinate with adjacent planners to identify contingencies in adjacent systems that could impact the planners system. No change made.	
Progress Energy Florida, Inc.	As PEF is opposed to TPL-001-1 as a whole, PEF will have no further comment on this issue other than to encourage all

Organization	Comments for Question 3
	appropriate parties to review PEF's previous comments to this effect.
Response: Throughout the drafting process, the SDT has carefully considered your comments as well as comments from other industry members.	
CenterPoint Energy	CenterPoint Energy recommends references to "Long-Term Transmission Planning Horizon" be revised to contain comparable language as in the existing TPL standards that limit Long-Term studies to marginal system conditions requiring longer lead times. See CenterPoint Energy's comments regarding part 2.2 for the rationale behind this recommendation. CenterPoint Energy also recommends deleting part 3.4.1 as being overly prescriptive and difficult to demonstrate in an audit.
Response: Long-Term Transmission Planning Horizon: The SDT believes there is value in taking a long range view in planning to assess the general trend. Since the Long-Term planning horizon is year 6 – year 10, the Planning Coordinator or Transmission Planner can for example, select year 6 in the Long-Term Planning Horizon and then use this study as the past study to supplement the Near-Term year 5 study requirement the following year. No change made. Part 3.4.1: SDT believes that it is necessary for the planner to coordinate with adjacent planners to identify Contingencies in adjacent Systems that could impact the planners System. No change made**.**	
ITC Holdings	Comments: Assumptions regarding Low Voltage Ride Through (LVRT) capability are risky and not well understood. If the SDT feels this is a critical requirement that merits corrective action then we believe LVRT characteristics for various machine types should be developed through a NERC process. Without such "standards", it will be difficult to justify CAPs based on LVRT assumptions. For example, would the Transmission Owner (TO) or Generator Owner be responsible for the cost of VAR CAPs if an LVRT assumption were violated. Can a TO require an LSE to install automatic load shedding for an LVRT assumption when cascade or local load loss result from an LVRT assumption? In addition, as the SDT has already indicated, the industry is still in a learning curve regarding the dynamic behavior of certain loads. If LVRT capability is considered as a critical requirement, then what about High Voltage Ride Through (HVRT) capability? The violation of HVRT could also cause certain damages to the system. R3.4.1 (contingency list coordination with neighbors) It's unclear as to the "measure" for this requirement. Do you give your neighbor a list of "contingencies" in your area. Should it include all categories (p1 thru p7 for example)? Does your neighbor have to study a cascade situation in his system caused by an outage in your system? Are joint studies merited? More importantly, if an outage in a neighboring system requires a CAP, who's responsible, particularly if the CAP involves the neighboring system. Does the neighbor have to have a CAP, according to this standard, if the violation is in your system, and the CAP is in his? Who pays? Are you putting a study burden on your neighbor when you do this? Do you include additional contingencies to ensure that you do not miss a contingency that might impact your neighbors system to avoid any potential compliance implication on you?
Response: Part 3.3.2: Where test data is not available, the SDT believes that most Transmission Planners/Planning Coordinators currently assume generators ride through low voltage based on extensive field experience. There is a project (Project 2007-09 — Generator Verification) that will provide the required generator data to validate the assumptions. For this standard, all that is required is to identify the assumptions concerning voltage limitations of the unit and ensure that the simulation models the generator response as it will react in the real world. If voltage ride through limits would cause a generator to trip in the real world, the study must determine	

Organization	Comments for Question 3
if the performance requirements are met for the initiating event and subsequent generator trip. No change made. If tripping of a generator results in performance which does not meet the requirements in Table 1, Requirement R2, part 2.6 requires the planner to develop a Corrective Action Plan. The allocation of costs to implement such a plan is beyond the scope of this standard. The SDT has decided not to include a requirement for high voltage ride through. Part 3.4.1: SDT believes that it is necessary for the planner to coordinate with adjacent planners to identify Contingencies in adjacent Systems that could impact the planners System. No change made. The SDT believes that the methodology for determining the appropriate Contingencies in the adjacent Systems is best left to the judgment of each planner. This could include Contingencies from all planning event categories (P1 to P7) if it is judged they could have an impact. Similarly, the neighboring System would select categories in adjacent Systems to study. The requirement does not mandate joint studies. If a performance deficiency is found in the planner's System due to a Contingency in an adjacent System, it is up to the planner in whose System the deficiency exists to develop the CAP. Cost allocation for the CAP is beyond the scope of this standard.	
FRCC Transmission Working Group	Comments: With regard to the Moderate VSL, consider deleting "utilizing data" in order to avoid penalizing twice for failing to meet R1. Please provide clarity to 3.3.2 which states that a Planning Assessment "it must perform simulation that show generator ride through voltage limitation". However, ride through is only performed through stability simulation.The references within the requirements are very confusing. 3.1 refers to a contingency list created in 3.4 which refers back to 3.1. Similarly 3.2 refers to a contingency list created in 3.5 which refers back to 3.2. These should be combined into one requirement bullet. Please provide clarity to 3.3.1. Is the intent of the drafting team that extreme events that may cause loading beyond relay trip settings (zone 3) be simulated?
Response: VSL: Requirement R1 requires you to maintain System models. Requirement R4 requires you to use that model data for your Stability studies. These are two different things requiring two VSLs. No change made. Part 3.3.2: Generators can trip when bus voltage drops below minimum generator steady state voltage limits. The SDT believes that the voltage ride through test is applicable in post-Contingency steady-state where the planner would know if post-contingency bus voltage violates generator trip points. If a trip point is violated, Requirement R3, part 3.3.2 would require the planner to remove the generator in the post-Contingency case to assess if performance is met with the generator removed. No change made. Parts 3.1 & 3.4; 3.2 & 3.5: The SDT does not believe that combining the requirements provides any significant advantage. No change made. Part 3.3.1: The intent of the SDT is for the planner to simulate the Protection System operation so that all elements that the Protection System is designed to remove (breaker to breaker) are removed in the simulation for the list of Contingencies the planner has developed in Requirement R3, parts 3.4 (planning events) and 3.5 (extreme events). Requirement R3, Part 3.3 wording has been modified to add to clarify the intent. **Requirement R3, part 3.3**: Contingency analyses for Requirement R3, parts 3.1 & 3.2 shall:	
Gainesville Regional Utilities	Even though I do assess my portion of the BES, I do so, not in an isolated, detached vacuum, but in light of its active connection to the rest of the FRCC Region and how, if at all possible, my small system could in any way be determined at the region level

Organization	Comments for Question 3
	to have any impact in any of the functional areas of the entire region. So the requirements in this section are considered and assessed as "a part of the whole".
Response: As you have not referenced a specific section, the SDT can not provide a response.	
Utility System Efficiencies, Inc. (USE)	For clarity I suggest that the wording in R3.3.3 be changed to "Ensure the power flows in the simulations are no higher than actual relay loadability limits.
Bonneville Power Administration	For clarity we suggest that the wording in R3.3.3 be changed to "Ensure the power flows in the simulations are no higher than actual relay loadability limits.
Idaho Power	For clarity we suggest that the wording in R3.3.3 be changed to "Ensure the power flows in the simulations are no higher than actual relay loadability limits.
NV Energy	For clarity we suggest that the wording in R3.3.3 be changed to "Ensure the power flows in the simulations are no higher than actual relay loadability limits."
San Diego Gas & Electric Co	For clarity we suggest that the wording in R3.3.3 be changed to "Ensure the power flows in the simulations are no higher than actual relay loadability limits.
Southern California Edison (SCE)	For clarity we suggest that the wording in R3.3.3 be changed to "Ensure the power flows in the simulations are no higher than actual relay loadability limits."
SRP	For clarity we suggest that the wording in R3.3.3 be changed to "Ensure the power flows in the simulations are no higher than actual relay loadability limits."
Western Area Power Adm - RMR	For clarity, I suggest that the wording in R3.3.3 be changed to "Ensure the power flows in the simulations are no higher than actual relay loadability limits."
Deseret Power	Comments: For clarity we suggest that the wording in R3.3.3 be changed to "Ensure the power flows in the simulations are no higher than actual relay loadability limits.
Response: Part 3.3.3: The SDT changed the wording to further clarify the action required when relay loadability limits are exceeded. The SDT believes this wording change should alleviate any perceived conflicts with the relay loadability standard. **Requirement R3, part 3.3.3**: Trip Transmission elements when relay loadability limits are exceeded.	
TVA System Planning	In R3.3.3, TVA believes that relay loadability is already covered in PRC-023. TVA is concerned that including this requirement could result in possible double jeopardy if a utility was found non compliant with PRC-023. Is the SDT proposing that relay

Organization	Comments for Question 3
	loadability be covered for all BES facilities or just those facilities identified in PRC-023?
Response: Part 3.3.3: The SDT changed the wording to further clarify the action required when relay loadability limits are exceeded. The SDT believes this wording change should alleviate any perceived conflicts with the relay loadability standard. **Requirement R3, part 3.3.3**: Trip Transmission elements when relay loadability limits are exceeded. The SDT intent is that Requirement R3, part 3.3.3 applies to those BES elements where relay loadability limit is defined by PRC-023.	
Modesto Irrigation District Transmission Planning	For clarity we suggest that the wording in R3.3.3 be changed to "Ensure the power flows in the simulations are no higher than actual relay loadability limits. Also please define relay loadability limit.
Response: Part 3.3.3: The SDT changed the wording to further clarify the action required when relay loadability limits are exceeded. The SDT believes this wording change should alleviate any perceived conflicts with the relay loadability standard. **Requirement R3, part 3.3.3**: Trip Transmission elements when relay loadability limits are exceeded. R3.3.3: Relay loadability is defined in PRC-023-1.	
MidAmerican Energy Company	MidAmerican commends the SDT for their hard work on this standard. MidAmerican does have comments about this requirement though. MidAmerican recommends the data retention for R3 and M3 be revised to change "All" to "The". The word "All" is unnecessary and could encourage over-the-top compliance monitoring and enforcement. The revised data retention would read as follows: "THE studies performed in support". The word in all caps is a word suggested to be added.
Response: Data Retention: The SDT agrees with your suggestion. The wording in "data retention" for R3 has been changed. Measure M3 already use the word "the". **Requirement R3, data retention:** The studies performed in support of its Planning Assessments since the last compliance audit in accordance with Requirement R3 and Measure M3.	
Progress Energy Carolinas	PEC believes that R3.3.3 "Ensure relay loadability limits are respected" is unnecessary. The requirement to stay within Facility Limits is much more bounding. Several footnote references from Table 1 to the footnotes are incorrect.
Response: Part 3.3.3: The SDT changed the wording to further clarify the action required when relay loadability limits are exceeded. The SDT believes this wording change should alleviate any perceived conflicts with the relay loadability standard. **Requirement R3, part 3.3.3**: Trip Transmission elements when relay loadability limits are exceeded Table1: The SDT has corrected the footnote references.	

Organization	Comments for Question 3
Oklahoma Gas & Electric	R 3.4, R3.5 There appear to be no standards of directions on identifying severe or extreme system impacts. OG&E does not like being held accountable to nebulas standards. Need more specific information.
Response: Parts 3.4 & 3.5: The SDT assumes that the Planning Coordinator/Transmission Planner applying experience of past studies and knowledge of its System is in the best position to determine which Contingencies in Table 1 are most relevant, as it is impossible to study all Contingencies especially the multiple Contingencies. No changes made.	
SRC of ISO/RTO	R3 has become more of a "how to" requirement than a "what" requirement as illustrated below. (a) Part 3.3 is overly prescriptive. A requirement that says contingency analysis shall be performed which reflect proper operation of all Protection Systems and actions of all automatic devices would suffice. If necessary, some examples such as those listed in Part 3.3.4 may be added as illustration. (b) The parts that ask for creating a list of contingencies and having rationale available as supporting information, in Part 3.4 for example, are overly prescriptive and unnecessary. These are documentation requirements, not reliability requirements. If one ask the question: Will reliability be adversely affected if the responsible entity failed to document the list and teh rationale for choosing the list? and the answer is no, then the requirement does not rise up to a reliability standard. To meet the intent of Part 3.4, a simple requirement that asks the responsible entity to demonstrate acceptable system performance for the applicable planning event in Table 1 would suffice. Table 1 already stipulates the event that must be considered in the analysis. We do not see the need to go into such details as "some events are expected to produce more severe impacts...", and the need to ask the planners to create a list of these more impactive contingencies for subsequent evaluation. Similar observation is made for Part 3.5 on the extreme event list and for Part 3.6 for the amount of generation loss, and the rationale. AESO does not comment on VSLs or VRFs>
Response: R3: The SDT disagrees with the comment. The parts of Requirement R3 specify the components required for a compliant study. No change made. Part 3.4 & Part 3.5: Require the planning entity to identify which contingencies are chosen to be simulated in the study, and explain why these are chosen. The SDT assumes that the Planning Coordinator/Transmission Planner, applying experience of past studies and knowledge of its System, is in the best position to determine which Contingencies in Table 1 are most relevant, as it is impossible to study all Contingencies especially the multiple Contingency events. No change made. Part 3.6: The SDT has deleted Requirement R3, part 3.6 in response to industry comments as it is not a performance oriented requirement affecting the reliability of the BES. VSL: The SDT does not understand the reference to AESO.	
Manitoba Hydro	R3.2: Recommend changing “the list” to “the Contingency list” to add clarity and consistency.
Response: Part 3.2: SDT does not believe clarity is improved by adding the word "contingency" to the word "list". No change made.	

Organization	Comments for Question 3
MRO NERC Standards Review Subcommittee	R3.3.1 Revise the wording to add, ". . . including the simulation of transmission circuit loadability protection." The Protection System actions should be included in this requirement regarding proper Protection System simulation, rather than as a separate requirement in R3.3.3. Otherwise there would be in double jeopardy of violating R3.3.1. and R3.3.3 when circuit loadability protection is not properly simulated. R3.3.2 The MRO NSRS suggests that this requirement be removed because it is premature to requirement Transmission Planners to simulate under voltage tripping until the MOD standards require it. If the drafting team does not remove this requirement the MRO NSRS proposes revised wording to qualify which generating units to consider and which voltage limits to simulate, "Trip generating units that are connected to the BES when actual or assumed minimum generator steady state or ride through voltage limits are known and simulations show voltages may fall below the voltage limit. If assumed voltage limits are used, then they should be included in the assessment". The requirement should not apply to all relevant generating units until one of the MOD standards requires all Generator Owners to provide their minimum generating unit voltage limits to the TP and PC. If the wording of R3.3.2 must be different from its counterpart, R4.3.2, then please explain the reasons for any differences. R3.3.3 As noted above, The MRO NSRS suggests that R3.3.3 be removed and this System Protection simulation requirement should be included in R3.3.1, which is the requirement to properly simulate Protection System actions. Add R3.3.5 The MRO NSRS suggests the addition of R3.3.5, "Applicable System Operating Limits for the planning horizon shall not be exceeded." because Note "a" and "b" under "Steady State Only" at the beginning of Table 1 are stated in the form of a Requirement (e.g. uses the verb, "shall") and all Requirements should be explicitly stated under Requirements and not be introduced (and hidden) in the performance notes of Table 1. [After R3.3.5 is added, Note "a" should be revised and refer to R3.3.5.] Add R3.3.6 The MRO NSRS suggests the addition of R3.3.6, "The response of voltage sensitive Load including Load that is disconnected from the System by end-user equipment associated with an event shall not be used to steady state voltage requirements." because Note "d" under "Steady State Only" at the beginning of Table 1 is stated in the form of a Requirement (e.g. uses the verb, "shall") and all Requirements should be explicitly stated under Requirements and not be introduced (and hidden) in the performance notes of Table 1. [After R3.3.6 is added, Note "d" should be revised to refer to R3.3.6.] R3.4.1 The MRO NSRS suggests that the word "coordinate" and the reference to the Transmission Planner be removed and offer the following revised text, "the Planning Coordinator shall provide the list of contingencies that are simulated in the adjacent Planning Coordinator area to the respective Planning Coordinator for review and feedback.". Standard Drafting Teams are generally instructed not to use the word "coordinate". The MRO NSRS suggests that this requirement apply to the PC because the PC would share with any affected Transmission Planners. R3.6 The MRO NSRS suggests the wording of this requirement be revised to, "Manual or automatic generation runback or tripping is permitted to meet steady state performance requirements for planning events P1 through P7 in Table 1." because Reliability Standard PRC-015-1 already includes requirements regarding the review and approval of Special Protection Systems. Therefore, the Planning Assessment does not need to duplicate description of the design and intent of the Special Protection System. M3 & R3 Data Retention - The MRO NSRS proposes that the wording in these elements be revised to change "All" to "The". The word "All" is unnecessary and could encourage over-the-top compliance monitoring and enforcement. The revised data

Organization	Comments for Question 3
	retention would read as follows: "The studies performed in support".?
Response: Part 3.3.1: The intent of this requirement is to remove elements that the Protection System would remove to clear a fault (breaker-to-breaker). The Transmission circuit loadability protection could trip un-faulted lines due to the post fault System loadings. Adding the suggested wording "including the simulation of transmission circuit loadability protection." would change the intent of Requirement R3, part 3.1.1. No change made. Part 3.3.2: Where test data is not available, the SDT believes that most Transmission Planners/Planning Coordinators currently assume generators ride through low voltage based on extensive field experience. There is a project (Project 2007-09 — Generator Verification) that will provide the required generator data to validate the assumptions. For this standard, all that is required is to identify the assumptions concerning voltage limitations of the unit and ensure that the simulation models the generator response as it will react in the real world. If voltage ride through limits would cause a generator to trip in the real world, the study must determine if the performance requirements are met for the initiating event and subsequent generator trip. No change made. The SDT added the phrase "or high side of the GSU voltages" to make Requirement R3, part 3.3.2 consistent with Requirement R4, part 4.3.2. Part 3.3.3: The SDT changed the wording to further clarify the action required when relay loadability limits are exceeded. The SDT believes this wording change should alleviate any perceived conflicts with the relay loadability standard. **Requirement R3, part 3.3.3**: Trip Transmission elements when relay loadability limits are exceeded Part 3.3.5 Proposed: The SDT believes that a new requirement is not needed. Requirement R3, part 3.1 states "Studies shall be performed for planning events to determine whether the BES meets the performance requirements in Table 1." Header notes are part of Table 1 and therefore included in Requirement R3. Part 3.3.6 Proposed: The SDT believes that a new requirement is not needed. Requirement R3, part 3.1 states "Studies shall be performed for planning events to determine whether the BES meets the performance requirements in Table 1.". Header notes are part of Table 1 and therefore included in Requirement R3. Part 3.4.1: The SDT believes that it is necessary for the planner to coordinate with adjacent planners to identify Contingencies in adjacent systems that could impact the planners System. Both the Transmission Planner and Planning Coordinator have this responsibility. No change made. Part 3.6: The SDT has deleted Requirement R3, part 3.6 in response to industry comments as it is not a performance oriented requirement affecting the reliability of the BES. Data Retention: The SDT agrees with your suggestion. The wording in "data retention" for Requirement R3 has been changed. Measure M3 already uses the word "the". **Requirement R3, data retention:** The studies performed in support of its Planning Assessments since the last compliance audit in accordance with Requirement R3 and Measure M3.	
SERC Dynamics Review Subcommittee (DRS)	R3.3.1: We propose to add "permanently" before "disconnect".
Response: Part 3.3.1: The SDT believes that adding the word "permanently" has no significance for the steady state simulation of fault clearing. No change made.	
MAPP	R3.3.2 - We suggest that this requirement be removed because it is premature to require Transmission Planners to simulate under voltage tripping until the MOD standards require it. If the drafting team does not remove this requirement we propose revised wording to qualify which generating units to consider and which voltage limits to simulate, "Trip generating units that are

Organization	Comments for Question 3
	connected to the BES when actual or assumed minimum generator steady state or ride through voltage limits are known and simulations show voltages may fall below the voltage limit. If assumed voltage limits are used, then they should be included in the assessment". 3.3.3 We suggest that R3.3.3 be removed and this System Protection simulation requirement should be included in R3.3.1, which is the requirement to properly simulate Protection System actions Add R3.3.5 We suggest the addition of R3.3.5, Applicable System Operating Limits for the planning horizon shall not be exceeded. because Note "a" and "b" under "Steady State Only" at the beginning of Table 1 are stated in the form of a Requirement (e.g. uses the verb, "shall") and all Requirements should be explicitly stated under Requirements and not be introduced (and hidden) in the performance notes of Table 1. [After R3.3.5 is added, Note "a" should be revised and refer to R3.3.5.] Add R3.3.6 We suggest the addition of R3.3.6, ?The response of voltage sensitive Load including Load that is disconnected from the System by end-user equipment associated with an event shall not be used to steady state voltage requirements. because Note "d" under "Steady State Only" at the beginning of Table 1 is stated in the form of a Requirement (e.g. uses the verb, "shall") and all Requirements should be explicitly stated under Requirements and not be introduced (and hidden) in the performance notes of Table 1. [After R3.3.6 is added, Note "d" should be revised to refer to R3.3.6.] R3.4.1: Remove the Transmission Planner and change "coordinate" to "provide" information to adjacent PC. We are working on other standards to remove "coordinate" and we should avoid it here. Coordinate requires interaction between two entities (or more), so if one does not respond, the other could be found to be non-compliant for something they cannot control.

Response: Part 3.3.2: Where test data is not available, the SDT believes that most Transmission Planners/Planning Coordinators currently assume generators ride through low voltage based on extensive field experience. There is a project (Project 2007-09 — Generator Verification) that will provide the required generator data to validate the assumptions. For this standard, all that is required is to identify the assumptions concerning voltage limitations of the unit and ensure that the simulation models the generator response as it will react in the real world. If voltage ride through limits would cause a generator to trip in the real world, the study must determine if the performance requirements are met for the initiating event and subsequent generator trip. No change made

Part 3.3.3: The SDT changed the wording to further clarify the action required when relay loadability limits are exceeded.

Requirement R3, part 3.3.3: Trip Transmission elements when relay loadability limits are exceeded

The intent of Requirement R3, part 3.3.1 is to remove elements that the Protection System would remove to clear a fault (breaker-to-breaker). The Transmission circuit loadability protection could trip unfaulted lines due to the post fault System loadings. Adding the suggested wording "including the simulation of transmission circuit loadability protection." would change the intent of Requirement R3, part 3.1.1. No change made.

Part 3.3.5 Proposed: The SDT believes that a new requirement is not needed. Requirement R3, part 3.1 states "Studies shall be performed for planning events to determine whether the BES meets the performance requirements in Table 1.". Header notes are part of Table 1 and therefore included in Requirement R3.

Part 3.3.6 Proposed: The SDT believes that a new requirement is not needed. Requirement R3, part 3.1 states "Studies shall be performed for planning events to determine whether the BES meets the performance requirements in Table 1.". Header notes are part of Table 1 and therefore included in Requirement R3.

Part 3.4.1: SDT believes that it is necessary for the planner to coordinate with adjacent planners to identify contingencies in adjacent systems that could impact the

Organization	Comments for Question 3
planners system. Both the Transmission Planner and Planning Coordinator have this responsibility. No change made.	
NYISO	R3.3.3 This requirement is already addressed in NERC Standard PRC-023 and reflected in the facility's rating and should be removed. R3.5. - The Extreme Events testing in Table 1 should be removed from this standard since there is no requirement to develop a Corrective Action Plan to address unacceptable consequences and the requirements are very general or vague. At a minimum, testing should only be required for EHV facilities or facilities specified by the Regional Entity for example, NPCC designates facilities that can have consequences outside an area as bulk power system facilities. If this remains, the NYISO requests that the phrase "evaluation of possible actions" be greatly clarified. R3.6 The NYISO seeks greater clarification of the phrase "consequential generation."
Response: Part 3.3.3: The SDT changed the wording to further clarify the action required when relay loadability limits are exceeded. The SDT believes this wording change should alleviate any perceived conflicts with the relay loadability standard. **Requirement R3, part 3.3.3**: Trip Transmission elements when relay loadability limits are exceeded Part 3.5: The SDT believes, and the majority of the industry agrees as seen in the comments, that continuing to study these possible scenarios is a valuable planning exercise. The requirement is to evaluate possible actions which, if implemented, could reduce the likelihood or mitigate the consequences of an extreme event. No change made. Part 3.6: The term "consequential generation" is not used in Requirement R3, part 3.6. The SDT has deleted Requirement R3, part 3.6 in response to industry comments as it is not a performance oriented requirement affecting the reliability of the BES.	
Xcel Energy	R3.3.3 Xcel does not believe that relay loadability limits is a valid system planning performance criterion because we are unsure how transmission relay loadability settings developed in accordance with PRC-023 can be more limiting than the Facility Ratings. Note that the purpose of PRC-023 standard is "Protective relay settings shall not limit transmission loadability" and it requires that the relay settings be higher than the "highest seasonal Facility Rating of a circuit". If relay settings limit the transmission loadability below its Facility Rating, then it is a violation of PRC-023. Requirements R3.4 and R3.5 appear to be related to and set the limits for R3.1 and R3.2 respectively. Suggest moving both Requirements R3.4 and R3.5 into R3.1 and R3.2, allowing these sub-Requirements (R3.4 and 3.5) to be deleted. R3.3 It is unclear from the wording in R3.3 whether the Contingency analyses need to be performed for all planning events or the more severe events referenced in R3.1 and R3.2. Please clarify the wording of R3.3.
Response: Part 3.3.3: The SDT changed the wording to further clarify the action required when relay loadability limits are exceeded. The SDT believes this wording change should alleviate any perceived conflicts with the relay loadability standard. **Requirement R3, part 3.3.3**: Trip Transmission elements when relay loadability limits are exceeded The SDT agrees that relay loadability limits would exceed Facility ratings except in cases where exceptions to the loadability standard exist.	

Organization	Comments for Question 3
Part 3.4: The SDT does not believe that combining the requirements provides any significant advantage. No change made. Part 3.5: The SDT does not believe that combining the requirements provides any significant advantage. No change made. Part 3.3: The SDT revised the wording of Part 3.3 as shown below to make it clear that it applies to both planning and extreme events: **Requirement R3, part 3.3**: Contingency analyses for Requirement R3, parts 3.1 & 3.2 shall:	
Sacramento Municipal Utility District	R3.3.3: To implement this requirement, the standard appears to call for one more facility rating which is based on Relay Loadability. Is the intent to also model the protection system actions if this limit is violated? Should such a requirement be moved to the MOD or FAC standard with conformance subject to Note (f) of Table 1 (Facility ratings shall not be exceeded) and R3.3.1 (simulate the removal of all elements that the Protection System and other " are expected to disconnect")?
Response: Part 3.3.3: The SDT changed the wording to further clarify the action required when relay loadability limits are exceeded. The SDT believes this wording change should alleviate any perceived conflicts with the relay loadability standard. **Requirement R3, part 3.3.3**: Trip Transmission elements when relay loadability limits are exceeded Part 3.3.1: The intent of this requirement is to remove elements that the Protection System would remove to clear a fault (breaker-to-breaker). The Transmission circuit loadability protection could trip un-faulted lines due to the post fault System loadings. Adding the suggested wording "including the simulation of transmission circuit loadability protection." would change the intent of Requirement R3, part 3.1.1.	
Puget Sound Energy, Inc.	R3.41 requires clarification. With respect to these "Contingencies on adjacent systems," the responsibility of listing and analyzing these events needs to be clarified. Should the event simulation be the responsibility of the "neighboring" system (where the event would occur) or the adjacent system that may feel the impact of this event? Per the developed rationale from R3.4, the neighboring system may determine that a particular event is "less severe" and hence not studied, even though this event may potentially impact a neighbor. Further, for these "Contingencies on adjacent systems" that result in system performance outside one's own operating limits, it is unclear who is responsible for mitigating these contingencies. It is potentially awkward in that one entity may be planning another entity's system improvements.
Response: R3.4.1: The intent is for the Planning Coordinator/ Transmission Planner to include in their Contingency lists Contingencies from adjacent Systems which may impact their System, and to run these Contingencies. The Planning Coordinator/Transmission Planner is responsible for mitigation of performance deficiencies in their System caused by Contingencies on their list, including the Contingencies from adjacent Systems.	
Duke Energy	R3.5 includes the phrase "cascading outages". We believe that the word "cascading" should be the capitalized NERC-defined term "Cascading".
Response: R3.5: The SDT agrees. The phrase "cascading outages" has been changed to "Cascading" to align with the NERC Glossary of Terms. **Requirement R3, part 3.5**: Those extreme events in Table 1 that are expected to produce more severe System impacts shall be identified and a list of those events to be evaluated for System performance in Requirement R3, part 3.2 created. The rationale for those Contingencies selected for evaluation shall be	

Organization	Comments for Question 3
available as supporting information. If the analysis concludes there is Cascading caused by the occurrence of extreme events, an evaluation of possible actions designed to reduce the likelihood or mitigate the consequences and adverse impacts of the event(s) shall be conducted.	
Northeast Power Coordinating Council--RSC	Requirement 3.2: This requirement should be deleted. The requirements for sensitivity analysis already address issues going beyond what is expected to meet reliability requirements. Requiring extreme event analysis is requiring two layers of event analysis beyond what is required and there is no requirement for corrective action if anything is identified. Therefore Extreme Event analysis no longer provides any value in this standard. Requirement 3.3.3: This requirement is already addressed in NERC Standard PRC-023 and reflected in the facility's rating and should be removed from TPL-001-1 since the standard already requires observance of facility ratings. Relay Loadability is handled in greater detail (as it should be) under the proposed PRC-023 standard, so no reference should be made in this standard, thereby introducing a double jeopardy issue. Requirement 3.4: It is strongly suggested that this requirement is made a sub-bullet of Requirement 3.1 to keep the related requirements together. Requirements 3.5--This requirement needs clarification as to what is specifically required for the "evaluation of possible actions." The list associated with Requirement 2. part 2.7.1 provides examples of possible actions, and leaving "evaluation" undefined offers the Planning Coordinator and Transmission Planner the leeway to use judgment in making their evaluations. Requirement 3.5 NPCC strongly suggests making this a sub-bullet of Requirement 3.2 to keep the related requirements together.Provide clarification as to what is specifically required for the "evaluation of possible actions". Requirement 3.6 Currently this requirement is not clear, and does not address any reliability issue. Clarification should be added that the "consequential generation" loss be excluded from the amount documented. Without the clarification, the Requirement should be deleted.
Response: Part 3.2: The SDT disagrees and believes there is value in running extreme event analysis to test the robustness of the System. No change made. Part 3.3.3: The SDT changed the wording to further clarify the action required when relay loadability limits are exceeded. The SDT believes this wording change should alleviate any perceived conflicts with the relay loadability standard. **Requirement R3, part 3.3.3**: Trip Transmission elements when relay loadability limits are exceeded Part 3.4: The SDT does not believe that combining the requirements provides any significant advantage. No change made. Part 3.5 The requirement is to evaluate possible actions which, if implemented, could reduce the likelihood or mitigate the consequences of an extreme event. The SDT believes that what these "possible actions" are should be left to the judgment of the Planning Coordinator/Transmission Planner who has knowledge of their System. Part 3.5: The SDT does not believe that combining the requirements provides any significant advantage. No change made. Part 3.6: The SDT has deleted Requirement R3, part 3.6 in response to industry comments as it is not a performance oriented requirement affecting the reliability of the BES.	
Midwest ISO	Requirement R3.6: With regards to the Generation Runback MW reporting; if no action is required then why require the entities

Organization	Comments for Question 3
	to provide this. Will it matter if 10MW or 100MW is part of the generation runback scheme tripped with the line? This is a system design issue which is not addressed by the standards, if this requirement is kept how is an entity expected to demonstrate compliance for this? This requirement is an administrative burden and we propose to remove R3.6 all together considering that there is not a reliability-related need for this information and it is unnecessary.
Response: Part 3.6: The SDT has deleted Requirement R3, part 3.6 in response to industry comments as it is not a performance oriented requirement affecting the reliability of the BES**.**	
Hydro-Québec TransEnergie (HQT)	Requirements 3.5 and 4.5 Both of these requirements need clarification as to what is specifically required for the "evaluation of possible actions." Requirement 3.3.3 This requirement is already addressed in NERC Standard PRC-023 and reflected in the facility's rating and should be removed from TPL-001-1 since the standard already requires observance of facility ratings. Requirement 3.4 HQT, as does NPCC, strongly suggests making this requirement a sub-bullet of Requirement 3.1 to keep the related requirements together. Requirement 3.5 HQT, as does NPCC, strongly suggests making this a sub-bullet of Requirement 3.2 to keep the related requirements together. Requirement 3.6 ?Currently this requirement is not clear. HQT, as does NPCC, recommends clarification be added that the "consequential generation" loss is excluded from the amount documented.
Response: Part 3.5 The requirement is to evaluate possible actions which, if implemented, could reduce the likelihood or mitigate the consequences of an extreme event. The SDT believes that what these "possible actions" are should be left to the judgment of the Planning Coordinator/Transmission Planner whose has knowledge of their System. Part 3.3.3: The SDT changed the wording to further clarify the action required when relay loadability limits are exceeded. The SDT believes this wording change should alleviate any perceived conflicts with the relay loadability standard. **Requirement R3, part 3.3.3**: Trip Transmission elements when relay loadability limits are exceeded Part 3.4: The SDT does not believe that combining the requirements provides any significant advantage. No change made. Part 3.5: The SDT does not believe that combining the requirements provides any significant advantage. No change made. Part 3.6: The SDT has deleted Requirement R3, part 3.6 in response to industry comments as it is not a performance oriented requirement affecting the reliability of the BES.	
Pacific Gas and Electric Co.	Requirements R3.4 and R3.5 appear to be related to and set the limits for R3.1 and R3.2 respectively. Suggest moving both Requirements R3.4 and R3.5 into R3.1 and R3.2, allowing these sub-Requirements (R3.4 and 3.5) to be deleted. It is unclear from the wording in R3.3 whether the Contingency analyses need to be performed for all planning events or the more severe events referenced in R3.1 and R3.2. Please clarify the wording of R3.3.

Organization	Comments for Question 3
	For clarity we suggest that the wording in R3.3.3 be changed to "Ensure the power flows in the simulations are no higher than actual relay loadability limits.
Response: Part 3.4: The SDT does not believe that combining the requirements provides any significant advantage. No change made. Part 3.5: The SDT does not believe that combining the requirements provides any significant advantage. No change made. Part 3.3: The SDT revised the wording of Requirement R3, part 3.3 as shown below to make it clear that it applies to both planning and extreme events: **Requirement R3, part 3.3**: Contingency analyses for Requirement R3, parts 3.1 & 3.2 shall: Part 3.3.3: The SDT changed the wording to further clarify the action required when relay loadability limits are exceeded. **Requirement R3, part 3.3.3**: Trip Transmission elements when relay loadability limits are exceeded	
National Grid	Sub-Requirement 3.2: This requirement should be deleted. The requirements for sensitivity analysis already address issues going beyond what is expected to meet reliability requirements. Requiring extreme event analysis is requiring two layers of event analysis beyond what is required and there is no requirement for corrective action if anything is identified. Therefore Extreme Event analysis no longer provides any value in this standard. Sub-Requirement 3.3.3: Relay Loadability is handled in greater detail (as it should be) under the proposed PRC-023 standard, so no reference should be made in this standard. It indicates a double jeopardy. Sub-Requirement 3.4: It is strongly suggested that this requirement is made a sub-bullet of Requirement 3.1 to keep the related requirements together. Sub-Requirement 3.5: It is strongly suggested that this requirement is made a sub-bullet of Requirement 3.2 to keep the related requirements together. Provide clarification as to what is specifically required for the "evaluation of possible actions." Sub-Requirement 3.6: This requirement does not address any reliability issue should be deleted. If it is to be kept, it is recommended that the "consequential generation" loss be excluded from the amount documented.
Response: Part 3.2: The SDT disagrees and believes there is value in running extreme event analysis to test the robustness of the System. No change made. Part 3.3.3: The SDT changed the wording to further clarify the action required when relay loadability limits are exceeded. The SDT believes this wording change should alleviate any perceived conflicts with the relay loadability standard. **Requirement R3, part 3.3.3**: Trip Transmission elements when relay loadability limits are exceeded Part 3.4: The SDT does not believe that combining the requirements provides any significant advantage. No change made. Part 3.5: The SDT does not believe that combining the requirements provides any significant advantage. No change made. Part 3.5: The requirement is to evaluate possible actions which, if implemented, could reduce the likelihood or mitigate the consequences of an extreme event. The SDT believes that determining these "possible actions" should be left to the judgment of the Planning Coordinator/Transmission Planner who has knowledge of their	

Organization	Comments for Question 3
System. Part 3.6: The SDT has deleted Requirement R3, part 3.6 in response to industry comments as it is not a performance oriented requirement affecting the reliability of the BES.	
Tri-State Generation and Transmission Association	Thank you for removing the requirement to explain why "non-studied contingencies" would produce less severe results." Don't say "R3, part 3.4". Instead, for much easier referencing of sections, just say "R3.4". This applies throughout the entire Standard." R3.5 In the phrase "extreme events in Table 1 that are expected to produce more severe System impacts", the term "extreme events" seems redundant with "more severe". If Extreme Events were capitalized, it would be apparent that the TP should choose more severe events typified by details listed in the Extreme Events section of Table 1.
Response: R3, part 3.4: NERC has directed that the new terminology be adopted for all parts of a requirement. No changes made. R3.5: The SDT disagrees that the suggested changes add clarity. No change made. R3.5: The extreme events are listed in Table 1. Some of these events will have a greater impact than others on a given System. The SDT's expectation is that the planner knows his system and would use judgment to select the extreme events that would have a more severe impact on his System. No change made.	
Ameren	The readability of R3.3 could be improved with the following wording changes:3.3 Contingency analyses shall be performed: 3.3.1 To simulate the removal? 3.3.2 To simulate tripping generators where simulations show? 3.3.3 And results reviewed to ensure relay loadability limits? 3.3.4 To simulate the expected? Requirement R3.3.1 needs to include language regarding the automatic restoration of facilities. The following language is suggested: To simulate the removal of all elements that the Protection System is expected to disconnect and the restoration of all elements that the automatic controls are expected to restore for each Contingency without operator intervention. Requirement R3.6: What is the purpose of this Requirement? We do not see how the reporting of this information adds to system reliability, and believe that this is more of a market issue. For those systems that are planned based on a single contingency, it is believed that numerous generation facilities would be impacted by the N-2 planning events and particularly those involving transmission facilities in the vicinity of power plant switchyards. Documenting manual or automatic generation runback or tripping of generation for the proposed P1 and P2 events is not unreasonable, but it is expected that developing runback or tripping schemes for the proposed P3-P7 events and reporting those contingencies and the amount of generation curtailed on an annual basis is of little value. Further, what information is to be reported for the P6 events for R3.6? As P6 events allow system adjustment following the first contingency (P1 event) to prepare for the second contingency (P1 event), is the runback information to be reported the generation that is to be curtailed after the first event (which should already be reported for the P1 category), after the second

Organization	Comments for Question 3
	event, or after both events? In real-time operations, security constrained economic redispatch continually adjusts generation to maintain transmission facility loadings within ratings anticipating the next single contingency event. Does the Standards Drafting Team intend for the industry to report the amount of curtailed generation in anticipation of the next P1 event?
Response: Part 3.3: The SDT has not adopted your suggested wording, but has made wording revisions to improve clarity as follows: **Requirement R3, part 3.3**: Contingency analyses for Requirement R3, parts 3.1 & 3.2 shall: Part 3.3.3: The SDT changed the wording to further clarify the action required when relay loadability limits are exceeded. The SDT believes this wording change should alleviate any perceived conflicts with the relay loadability standard. **Requirement R3, part 3.3.3**: Trip Transmission elements when relay loadability limits are exceeded. Part 3.3.1: The reference to “other automatic controls” is intended to include other tripping means such as cross-tripping and not automatic restoration devices. No change made. Part 3.6: The SDT has deleted Requirement R3, part 3.6 in response to industry comments as it is not a performance oriented requirement affecting the reliability of the BES.	
Florida Power and Light	The requirement clearly states that "For the steady state portion of the Planning Assessment" it must perform simulations that show generator ride through voltage limitations under 3.3.2. However, ride through limitations are performed through stability simulations not steady state as required by R3. This is confusing as currently drafted, please provide clarity. Additionally, 3.2 requires studies to be performed to assess the impact of the extreme events. Yet, 3.3 requires analyses shall be performed but does not specify the events intended to study. Suggested language for 3.3 should say "Contingency analyses shall be performed to assess the impact of the extreme events and:" Under 3.3.1 it states that the Planner must simulate the removal of all elements that the Protection System would be expected to disconnect. Language should be included to allow the Planner to provide a rationale to assess more severe system conditions without needing to simulate the effects of Protection Systems. This would capture the intent of this requirement.
Response: Part 3.3.2: Generators can trip when bus voltage drops below minimum generator steady state voltage limits. The SDT believes that the voltage ride through test is applicable in post-contingency steady-state where the planner would know if post-Contingency bus voltage violates generator trip points. If a trip point is violated, Requirement R3, part 3.3.2 would require the planner to remove the generator in the post-Contingency case to assess if performance is met with the generator removed. No change made. Part 3.3: The SDT revised the wording of Requirement R3, part 3.3 as shown below to make it clear that it applies to both planning and extreme events: **Requirement R3, part 3.3**: Contingency analyses for Requirement R3, parts 3.1 & 3.2 shall: Part 3.3.1: Consistent with FERC Order 693, the intent of the SDT is for the planner to simulate the Protection System operation so that all elements that the Protection System is designed to remove (breaker to breaker) are removed in the simulation for the list of Contingencies the planner has developed in Requirement R3, parts 3.4 (planning events) and 3.5 (extreme events). The requirement does not preclude the Planning Coordinator/Transmission Planner from studying more severe scenarios. No change made.	

Organization	Comments for Question 3
NorthWestern Energy	The wording in R3.3.3 should be changed to "Ensure the power flows in the simulations are no higher than actual relay loadability limits. In R3.3.3 The term "loadability" needs to be defined. R3.5 needs to be modified. It would be better to combine R3.2 with R3.5. The first part of the requirement requires identification of events that produce more severe System impacts. The presumed reason that the other contingencies were not selected is because they were deemed to be less severe or non-credible. In any case, theoretically, there can always be examples of more severe Extreme Contingencies than the one selected for study. This can be achieved by simply choosing events that are even less credible. For example, if the Extreme Contingency studied was a simultaneous loss of 3 transmission lines with the failure of a redundant RAS (SPS), then an event resulting in the simultaneous loss of 4 lines with the failure of 2 sets of redundant RASs would be even more severe. Listing all possible extreme events could result in a limitless list.
Response: Part 3.3.3: The SDT changed the wording to further clarify the action required when relay loadability limits are exceeded. The SDT believes this wording change should alleviate any perceived conflicts with the relay loadability standard. **Requirement R3, part 3.3.3**: Trip Transmission elements when relay loadability limits are exceeded Part 3.3.3: Relay loadability is defined in NERC Standard PRC-023-1. R3.5: The SDT agrees that there could be an endless list of possible extreme events, The requirement has been written to allow the Planning Coordinator/Transmission Planner to use experience and the knowledge of their System to select relevant extreme events that have some reasonable probability of occurring. The SDT does not believe that combining Requirement R3, part 3.5 with Requirement R3, part 3.2 provides any significant advantage. No change made.	
American Transmission Company	We propose the following changes and questions: R3.3.1 The term of "controls" is ambiguous and not defined, unlike the term, "Protection Systems", which is defined. Therefore, we suggest that this item be defined or more clearly described to avoid the risk of different and possibly contradictory interpretations by TPs, PCs, and auditors. R3.3.1 Add the wording, ". . . including the simulation of transmission circuit loadability protection." to this requirement, rather than have a separate R3.3.3 requirement for recognizing overload protection. Overload protection is simply one of the types of automatic Protection System that may remove one or more elements from service. R3.3.2 - We suggest qualifying which generating units to consider and which voltage limits to simulate with revised wording like, "Trip generating units that are connected to the BES when actual or assumed minimum generator steady state or ride through voltage limits are known and simulations show voltages may fall below the voltage limit. If assumed voltage limits are used, then they should be included in the assessment". The requirement should not apply to all relevant generating units until one of the MOD standards requires all Generator Owners to provide their minimum generating unit voltage limits to the TP and PC. If the wording of R3.3.2 must be different from its counterpart, R4.3.2, then please explain the reasons for any differences. R3.3.3 As noted above, we suggest that R3.3.3 be removed and that this System Protection loadability simulation requirement is included in R3.3.1 because overload protection is simply one type of automatic Protection System actions.

Organization	Comments for Question 3
	Add R3.3.5 We suggest the addition of R3.3.5 because any requirement in the head notes or foot notes of Table 1 should occur within the body of standard. The text of R3.3.5 should read, "Applicable System Operating Limits for the planning horizon shall not be exceeded." Presently, Note "a" and "b" under "Steady State Only" at the beginning of Table 1 are stated in the form of a Requirement (e.g. uses the verb, "shall") and all Requirements should be explicitly stated under Requirements and not be introduced (and basically hidden) in the performance notes of Table 1. [After R3.3.5 is added, Note "a" should be revised and refer to R3.3.5.] Add R3.3.6 ? We suggest the addition of R3.3.6 because any requirement in the head notes or foot motes of Table 1 should occur within the body of standard. The text of R3.3.6 should read, "The response of voltage sensitive Load including Load that is disconnected from the System by end-user equipment associated with an event shall not be used to steady state voltage requirements." because Note "d" under "Steady State Only" at the beginning of Table 1 is stated in the form of a Requirement (e.g. uses the verb, "shall") and all Requirements should be explicitly stated under Requirements and not be introduced (and basically hidden) in the performance notes of Table 1. [After R3.3.6 is added, Note "d" should be revised to refer to R3.3.6.] R3.5 - We interpret that R3.5 requires the TP and PC to conduct an evaluation of possible actions to reduce the likelihood or impact of extreme events, which produce the more severe impacts, if cascading outages may occur. Does the drafting team intend for the TP and PC to fulfill this requirement for at least one event in each of the five categories (i.e. 3 steady state and 2 stability) or in each of the 21 categories/sub-categories (i.e. 14 steady state and 7 stability). Also, if the resulting cascading outages do not result in any overloads, under-voltages, voltage collapse, or loss of generator synchronization, then should the evaluation of possible actions to reduce likelihood or impact be required? R3.6 We suggest the wording of this requirement be revised to, "Manual or automatic generation runback or tripping is permitted to meet steady state performance requirements for planning events P1 through P7 in Table 1." because Reliability Standard PRC-015-1 already includes requirements regarding the review and approval of Special Protection Systems. Therefore, the Planning Assessment does not need to duplicate description of the design and intent of the Special Protection System.

Response: Part 3.3.1: The SDT believes that the meaning of "controls" is clear in the context it is used - "Protection Systems and Other automatic controls" (such as a cross-trip scheme) that disconnect elements to clear a fault". No change made.

Part 3.3.1: The intent of this requirement is to remove elements that the Protection System would remove to clear a fault (breaker-to-breaker). The Transmission circuit loadability protection could trip un-faulted lines due to the post fault system loadings. Adding the suggested wording "including the simulation of transmission circuit loadability protection." would change the intent of Requirement R3, part 3.1.1. No change made.

Part 3.3.2: Where test data is not available, the SDT believes that most Transmission Planners/Planning Coordinators currently assume generators ride through low voltage based on extensive field experience. There is a project (Project 2007-09 — Generator Verification) that will provide the required generator data to validate the assumptions. For this standard, all that is required is to identify the assumptions concerning voltage limitations of the unit and ensure that the simulation models the generator response as it will react in the real world. If voltage ride through limits would cause a generator to trip in the real world, the study must determine if the performance requirements are met for the initiating event and subsequent generator trip. No change made.

The phrase "or high side of the GSU voltages" was added to Requirement R3, part 3.3.2 to make the wording in Requirement R3, part 3.3.2 the same as in Requirement R4, part 4.3.2.

Requirement R3, part 3.3.2: Trip generators where simulations show generator bus voltages or high side of the GSU voltages are less than known or assumed

Organization	Comments for Question 3
	minimum generator steady state or ride through voltage limitations. Include in the assessment any assumptions made. Part 3.3.3: The SDT changed the wording to further clarify the action required when relay loadability limits are exceeded. The SDT believes this wording change should alleviate any perceived conflicts with the relay loadability standard. Combining Requirement R3, part 3.3.3 with Requirement R3, part 3.3.1 would change the intent of Requirement R3, part 3.3.1. **Requirement R3, part 3.3.3**: Trip Transmission elements when relay loadability limits are exceeded Part 3.3.5 Proposed: The SDT believes that a new requirement is not needed. Requirement R3, part 3.1 states "Studies shall be performed for planning events to determine whether the BES meets the performance requirements in Table 1.". Header notes are part of Table 1 and therefore included in Requirement R3. Part 3.3.6 Proposed: The SDT believes that a new requirement is not needed. Requirement R3, part 3.1 states "Studies shall be performed for planning events to determine whether the BES meets the performance requirements in Table 1." Header notes are part of Table 1 and therefore included in Requirement R3. Part 3.5: Requires the planning entity to identify which contingencies are chosen to be simulated in the study, and explain why these are chosen. The SDT assumes that the Planning Coordinator/Transmission Planner, applying experience of past studies and knowledge of its System, is in the best position to determine which Contingencies in Table 1 are most relevant, as it is impossible to study all Contingencies especially the multiple Contingency events. Requirement R3, part 3.5 requires "an evaluation of possible actions designed to reduce the likelihood or mitigate the consequences and adverse impacts" if cascading outages - the trigger for evaluation of possible mitigating actions is cascading outages, not "overloads, under-voltages, voltage collapse, or loss of generator synchronization". No change made. Part 3.6: The SDT has deleted Requirement R3, part 3.6 in response to industry comments as it is not a performance oriented requirement affecting the reliability of the BES. The SDT notes that generator runback or tripping is not prohibited by the standard.
PJM	In R3.3.2, low voltage protection, like practically all generator protection, is not commonly collected, at least by MMWG, and will take a great deal of time and effort to gather. R3.3.3 – Relay loadability should not be evaluated in a performance standard. A separate line rating and protection setting evaluation can determine if relay loadability is exceeded. If kept, this protection information, is not commonly collected, at least by MMWG, and will take a great deal of time and effort to gather. R3.5 – Needs a 3.5.1 similar to 3.4.1. R3.6 needs some words about sending up a red flag is the generation tripped or runback is greater than the largest single contingency. Like –The Reliability Coordinator, Transmission Operator and Balancing Authority must be notified if the planned generation tripped or runback scheme is greater than the largest single contingency.-
Response: Part 3.3.2: Where test data is not available, the SDT believes that most Transmission Planners/Planning Coordinators currently assume generators ride through low voltage based on extensive field experience. There is a project (Project 2007-09 — Generator Verification) that will provide the required generator data to validate the assumptions. For this standard, all that is required is to identify the assumptions concerning voltage limitations of the unit and ensure that the simulation models the generator response as it will react in the real world. If voltage ride through limits would cause a generator to trip in the real world, the study must determine if the performance requirements are met for the initiating event and subsequent generator trip. No change made. Part 3.3.3: The SDT changed the wording to further clarify the action required when relay loadability limits are exceeded.	

Organization	Comments for Question 3
	Requirement R3, part 3.3.3: Trip Transmission elements when relay loadability limits are exceeded Part 3.5.1 Proposed: The SDT has not included a requirement on the Planning Coordinator/ Transmission Planner to coordinate with adjacent Systems to identify extreme Contingencies in these adjacent Systems that would impact the Planning Coordinator/Transmission Planner's System. Part 3.6: The SDT has deleted Requirement R3, part 3.6 in response to industry comments as it is not a performance oriented requirement affecting the reliability of the BES.

4. Requirement R4 – Please provide any specific comments on the requirement text, VRF, Time Horizon, measure associated with the requirement, data retention associated with the requirement, and/or the VSL associated with the requirement.

Summary Consideration: Many commenters expressed concerns that the new "relaying" requirements that were added to draft 4 would essentially require modeling every zone 3 relay in each Interconnection. The requirements do not necessarily require modeling of specific relays. Some dynamic simulation programs include a generic relay model which can easily be applied to every branch in the simulation. If this model shows impedance swings in a branch element, then one can either take action according to the generic model results or investigate the characteristics of the relays actually used on that branch.

In response to several commenters, Part 4.1.2 was modified to no longer require tripping of out-of-step generators in the simulations.

Clarifications to the requirements were made as follows:

Requirement R3, part 3.3.2 - Trip generators where simulations show generator bus voltages or high side of the GSU voltages are less than known or assumed minimum generator steady state or ride through voltage limitations. Include in the assessment any assumptions made.

Requirement R4, part 4.1.2 - For planning events P2 through P7: When a generator pulls out of synchronism in the simulations, the resulting apparent impedance swings shall not result in the tripping of any Transmission system elements other than the generating unit and its directly connected Facilities.

Requirement R4, part 4.3 - Contingency analyses for Requirement R4, Parts 4.1 and 4.2 shall :

Requirement R4, part 4.5 - Those extreme events in Table 1 that are expected to produce more severe System impacts shall be identified and a list of those events to be evaluated for System performance in Requirement R4, part 4.2 created. The rationale for those Contingencies selected for evaluation shall be available as supporting information. If the analysis concludes there is Cascading caused by the occurrence of extreme events, an evaluation of possible actions designed to reduce the likelihood or mitigate the consequences of the event(s) shall be conducted.

Organization	Comments for Question 4
Independent Electricity System Operator	(1) Part 4.3: Similar comments on Part 3.3 provided under Q3 also apply here. (2) Parts 4.4 and 4.5: similar comments on Parts 3.4 and 3.5 provided under Q3 also apply here.(3) We do not have any comments on the measure, VRF, Time Horizon and VSLs.
SRC of ISO/RTO	1. Part 4.3: Similar comments as for Part 3.3 (i.e. overly prescriptive, etc...) provided under question 3 also apply here. 2. Parts 4.4 and 4.5: Similar comments on Part 3.4 and 3.5 provided under question 3 also apply here.

Organization	Comments for Question 4
	AESO does not comment on VSLs or VRFs.
Response: See response to your comments on Requirement R3, part 3.3. See response to your comments on Requirement R3, parts 3.4 and 3.5.	
ERCOT ISO	* Will any agreements made in R7 override the "each TP and PC" requirement? To clarify this, the requirement could be rephrased: "In accordance to the responsibilities assigned in R7, the responsible Transmission Planners and Planning Coordinators shall perform?. "* Similar to comments provided in R3, Section 4.1 and 4.4 appear to be related. Confusing references can be eliminated by combining them and removing 4.4: "4.1. Those planning events in Table 1that are expected to produce more severe System impacts on its portion of the BES, shall be identified and studies shall be performed for planning events to determine whether the BES meets the performance requirements in Table 1. A list of those Contingencies and the rationale for those Contingencies selected for evaluation shall be available as supporting information. "* Similarly, Section 4.2 and 4.5 appear to be related. Confusing references can be eliminated by combining them and removing 4.5: "4.2. Those extreme events in Table 1 that are expected to produce more severe System impacts shall be identified and studies shall be performed to assess the impact of the extreme events. If the analysis concludes there are cascading outages caused by the occurrence of extreme events, an evaluation of possible actions designed to reduce the likelihood or mitigate the consequences of the event(s) shall be conducted. A list of those events and the rationale for those Contingencies selected for evaluation shall be available as supporting information. "
Response: The agreements required by Requirement R7 are intended to clarify the responsibilities among the Planning Coordinator and Transmission Planners. The SDT believes this is clear in the existing language. Requirement R4, parts 4.1 & 4.4: The SDT does not believe that combining the requirements serves any purpose. No change made. Requirement R4, parts 4.2 & 4.5: The SDT does not believe that combining the requirements serves any purpose. No change made.	
Northeast Utilities	[R4.1.1] This requirement needs better clarification. Does it mean that a generator that trips on any other condition apart from tripping on out-of-synchronism is acceptable? Example if the generator is not able to ride through a low voltage condition created by a fault. We recommend that this requirement is dropped from TPL-001-1 standard. [R4.1.2] This approach will require a different modeling technique from current practice and will require an implementation period. [R4.3.2] Refer to comment for Requirement R3.3.2. [R4.5] This requirement needs clarification as to what is specifically required for the "evaluation of possible actions". Otherwise the following is recommended:" It should be clear that an evaluation does not require solution development for all Extreme Events" Change "an evaluation of possible actions" to "where appropriate, reasonably practicable actions designed to reduce the likelihood or mitigate the consequences and adverse impacts of the event(s) shall be considered."

Organization	Comments for Question 4
Response: Part 4.1.1: The requirement will not be dropped. The requirement states that for event P1, no generating unit shall pull out of synchronism. If the event results in a unit tripping due to fault clearing action or due to an SPS action, this is acceptable. Low voltage ride-through is handled in a separate requirement (Requirement R4, part 4.3.2). Part 4.1.2: Tripping the generator is no longer required. The SDT has modified Requirement R4, part 4.1.2. **Requirement R4, part 4.1.2** - For planning events P2 through P7: When a generator pulls out of synchronism in the simulations, the resulting apparent impedance swings shall not result in the tripping of any Transmission system elements other than the generating unit and its directly connected Facilities. Part 4.3.2: See response to your comment on Requirement R3, part 3.3.2. Part 4.5: The requirement is to evaluate possible actions which could reduce the likelihood or mitigate the consequences of the event. The standard should not prescribe those actions. It is up to your judgment what those possible actions could be. No change made.	
Central Maine Power Company	4.1.1 This should be revised to only be applicable to generators interconnected to the BES. This may need an implementation period as not all existing units are interconnected in accordance with the standard as proposed. As written this applies to small generators and doesn't necessarily reflect reliability of the network. 20 MW is a recommended generator minimum size. 4.1.2 This will require implementation period. 4.2 Item 4.2 should be deleted. The requirements for sensitivity analysis already address issues going beyond what is expected to meet reliability requirements. Requiring extreme event analysis is requiring two layers of event analysis beyond what is required and there is no requirement for corrective action if anything is identified. Therefore Extreme Event analysis no longer provides any value in this standard. 4.4 It is suggested that this requirement is made a sub-bullet of Requirement 4.1 to keep the related requirements together. 4.5 It is suggested that this requirement is made a sub-bullet of Requirement 4.2 to keep the related requirements together.
ISO New England	4.1.1 This should be revised to only be applicable to generators interconnected to the BES. This may need an implementation period as not all existing units are interconnected in accordance with the standard as proposed. As written this applies to small generators and doesn't necessarily reflect reliability of the network. 20 MW is a recommended generator minimum size. 4.1.2 This will require implementation period. 4.2 Item 4.2 should be deleted. The requirements for sensitivity analysis already address issues going beyond what is expected to meet reliability requirements. Requiring extreme event analysis is requiring two layers of event analysis beyond what is required and there is no requirement for corrective action if anything is identified. Therefore Extreme Event analysis no longer provides any value in this standard. 4.4 It is suggested that this requirement is made a sub-bullet of Requirement 4.1 to keep the related requirements together. 4.5 It is suggested that this requirement is made a sub-bullet of Requirement 4.2 to keep the related requirements together.
United Illuminating	4.1.1 This should be revised to only be applicable to generators interconnected to the BES. This may need an implementation

Organization	Comments for Question 4
	period as not all existing units are interconnected in accordance with the standard as proposed. As written this applies to small generators and doesn't necessarily reflect reliability of the network. 20 MW is a recommended generator minimum size. 4.1.2 This will require implementation period. 4.2 Item 4.2 should be deleted. The requirements for sensitivity analysis already address issues going beyond what is expected to meet reliability requirements. Requiring extreme event analysis is requiring two layers of event analysis beyond what is required and there is no requirement for corrective action if anything is identified. Therefore Extreme Event analysis no longer provides any value in this standard. 4.4 It is suggested that this requirement is made a sub-bullet of Requirement 4.1 to keep the related requirements together. 4.5 It is suggested that this requirement is made a sub-bullet of Requirement 4.2 to keep the related requirements together.
Response: Part 4.1.1: The standard applies only to the BES and therefore, without revision, does not place this requirement on generators not directly connected to the BES. The SDT believes that generators smaller than 20 MW also need to be stable for single Contingencies (P1). No change made. Part 4.1.2: Tripping the generator is no longer required. The SDT has modified Requirement R4, part 4.1.2. **Requirement R4, part 4.1.2** - For planning events P2 through P7: When a generator pulls out of synchronism in the simulations, the resulting apparent impedance swings shall not result in the tripping of any Transmission system elements other than the generating unit and its directly connected Facilities. Part 4.2: The SDT disagrees and believes there is value in running extreme event analysis. No change made. Part 4.4: The SDT does not believe that combining the requirements serves any purpose. No change made. Part 4.5: The SDT does not believe that combining the requirements serves any purpose. No change made.	
Florida Municipal Power Agency, and its Member Cities	4.1.1, suggest rewording "(a) generator being disconnected from the Bulk Electric System ", system as defined in the Glossary includes distribution, and we do not believe that is the intent of the SDT. 4.1.2, 4.3.1 and 4.3.3 essentially require modeling every Zone 3 (or higher, such as Zone 5) relay in each Interconnection (or at least in the Region under study and adjacent regions) because, in order to simulate the impact of a power swing on a distance relay, one would need to know the characteristics of the distance relay and how long the transient swing remains within that characteristic, which means modeling the relay. Is that the intent of the SDT? If so, FMPA suggests limiting these bullets to Facilities 230 kV and higher.
Response: Part 4.1.1: The standard applies only to the BES and therefore, without revision, does not place this requirement on generators not directly connected to the BES. No change made. Parts 4.1.2, 4.3.1, & 4.3.3: This does not necessarily require modeling of specific relays. Some dynamic simulation programs include a generic relay model which can easily be applied to every branch in the simulation. If this model shows impedance swings in a branch element, then either take action according to the generic model results or investigate the characteristics of the relays actually used on that line. No change made.	

Organization	Comments for Question 4
Xcel Energy	4.3 Does the requirement allow it to be optional as to whether an entity chooses to include generator exciter controls, PSS, etc.? To what degree must a device impact the study area, in order for it to be required to be included in the simulation? Requirements R4.4 and R4.5 appear to be related to and set the limits for R4.1 and R4.2 respectively. Suggest moving both Requirements R4.4 and R4.5 into R4.1 and R4.2, allowing these sub-Requirements (R4.4 and 4.5) to be deleted. R4.3 It is unclear from the wording in R4.3 whether the Contingency analyses need to be performed for all planning events or the more severe events referenced in R4.1 and R4.2. Please clarify the wording of R4.3. R4.3.1 appears to require an assessment of both successful and unsuccessful high-speed reclosing. Successful reclosing is a much less severe event, so it seems unnecessary to assess both. If it is the intent to require that entities assess both, we suggest including the assessment in the list of sensitivities.
Response: Part 4.3: If generator exciter controls and PSS do not affect the study area, it is not necessary to model them. However, most Transmission Planners will have them in their simulations because these controls are already included in their model. It is up to your judgment as to what control devices have an impact on the study area. Parts 4.4 & 4.5: The SDT does not believe that combining the requirements serves any purpose. No change made. Part 4.3: The Contingency analyses in Requirement R4, part 4.3 refer to the studies in Requirement R4, parts 4.1 and 4.2. However, for additional clarity, Requirement R4, part 4.3 has been modified. **Requirement R4, part 4.3** - Contingency analyses for Requirement R4, parts 4.1 and 4.2 shall : Part 4.3.1: The Standard requires you to study only the events which produce more severe System impacts. If two Systems are swinging apart, then successful high speed reclosing could show a more severe impact. However, if successful reclosing is not expected to produce a more severe impact, you are not required to study it. No change made.	
FirstEnergy Corp	A. The SDT should bring consistency to the text used for sub-part 4.3.2 of R4 and sub-part 3.3.2 of R3. In R4 it indicates "generator bus voltages or high-side of GSU" as the reference voltage point whereas 3.3.2 only indicates "generator bus voltage" as the point of reference. If the generator bus is modeled at the generator voltage, then this should be the reference voltage point. If the generator is modeled directly connected to the BES (no transformer is explicitly modeled), then the transmission voltage should be the reference voltage. B. Requirement R4, sub-part 4.3.2 is well intentioned, but problematic for those performing dynamic simulations. Does a Guide or Practice exist to determine the dynamic undervoltage capability of a synchronous machine? Most excitation systems contain "field forcing" functions to maintain stability through fault conditions (1 second or so of capability), but FE is not aware of any published, readily available quantities or formulas that can be used to determine this highly time dependent function. Application of the steady state minimum voltage is grossly over-conservative. FE questions why low voltage limits should even be considered in dynamic simulations, since the primary concern for generating equipment during events of this nature and duration are metallurgical, not thermal (voltage). C. Requirement R3 sub-part 4.3.3 is troublesome since the modeling detail needed for Protection Systems within traditional stability programs is not available. It is expected that software adjustments will be needed from the software vendors before this

Organization	Comments for Question 4
	requirement can be met. The implementation plan of 24 months may be insufficient in regards to 4.3.3. In draft 3 Progress Energy and Ameren in the Q11 comments indicated that more time is needed for Protection System modeling required by TPL-001-1. The SDT responded "The standard does not require detailed modeling of Relay Protection Systems. It only requires that the impacts of those systems be reflected in the modeling of Contingencies and the evaluation of the resulting System performance. This is no different than the current standards." The inclusion of sub-part 4.3.3 in Draft 4 does not appear to align with this response. Please clarify the intent of 4.3.3 and respond regarding FE's belief that more time is needed for software improvements. D. We suggest the team discontinue the use of "Coordinate with adjacent transmission planners" in regards to sub-part 4.4.1 related to the inclusion of contingencies from adjacent systems. The "coordination" type of requirements creates a need to develop compliance evidence such as e-mail correspondence, meeting minutes etc that serve no real reliability purpose. The requirement should simply be that the TP shall include adjacent contingencies expected to produce the more severe System impacts on their systems. In fact, sub-part 4.4 already includes that language. We suggest the team append the sentence "The planning event contingencies shall include:" to the end of sub-part 4.4 followed by two bullets that indicate 1) events within the TP's system and 2) events on adjacent transmission Systems.
Response: A. Part 4.3.2: To be consistent with Requirement R4, part 4.3.2., Requirement R3, part 3.3.2 has been modified to also allow the use of voltages on the high side of the GSU. The use of voltages on the high side of the GSU allows greater flexibility in applying voltage ride-through capability of generators - some of which are defined on the high side of the GSU. **Requirement R3, part 3.3.2** - Trip generators where simulations show generator bus voltages or high side of the GSU voltages are less than known or assumed minimum generator steady state or ride through voltage limitations. Include in the assessment any assumptions made. B. Part 4.3.2: The purpose of Requirement R4, part 4.3.2 is to take into account the low voltage ride-through capability of generators in the studies. There is a reliability standard (PRC-024) under development which will require Generator Owners to provide information about the low voltage ride through capability of their generators based on relay settings. Requirement R4, part 4.3.2 requires you to include in the assessment how you analyzed voltage ride-through capability. If complete information on the ride-through capability is not available, then you should document your assumptions regarding ride-through capability for the assessment. No change made. C. Part 4.3.3: This does not necessarily require modeling of specific relays. Some dynamic simulation programs include a generic relay model which can easily be applied to every branch in the simulation. If this model shows impedance swings in a branch element, then either take action according to the generic model results or investigate the characteristics of the relays actually used on that line. Therefore, the SDT does not believe that more time is needed in the Implementation Plan. No change made. D. Part 4.4.1: The SDT strongly disagrees with your suggestion. It is much easier to coordinate with adjacent Transmission Planners for Stability simulations. A requirement to study Contingencies on adjacent Systems creates an enormous burden for Stability simulations which have to take into account substation configurations and relaying times. A much better method is to coordinate with neighbors as to which Contingencies on their System could impact your System and then study only those Contingencies on the neighbor's System. No change made.	
Gainesville Regional Utilities	As generation and transmission elements are added to our small system, we evaluate the stability impact as part of its feasibility and impact studies. After installation and in each year of a critical conditions study at the regional level, our elements are considered in the regional priority listings to determine if any stability issues need additional or continuous evaluation. Again, as a "part of the whole" our elements are considered and our assessment is based on these and other findings. Again, this revision

Organization	Comments for Question 4
	seems to add clarity to this requirement and its parts. Good Job!
Response: Thanks for your comment.	
Progress Energy Florida, Inc.	As PEF is opposed to TPL-001-1 as a whole, PEF will have no further comment on this issue other than to encourage all appropriate parties to review PEF's previous comments to this effect.
Response: Throughout the drafting process, the SDT has carefully considered your comments as well as comments from other industry members.	
CenterPoint Energy	CenterPoint Energy recommends deleting part 4.4.1 as being overly prescriptive and difficult to demonstrate in an audit.
Response: Part 4.4.1: The SDT disagrees that this requirement is prescriptive and difficult to demonstrate compliance. There is a need to consider Contingencies on a neighbor's System which may impact your System. It is much easier to coordinate with adjacent Transmission Planners for Stability simulations than to study them all yourself. A requirement to study Contingencies on adjacent Systems creates an enormous burden for Stability simulations which have to take into account substation configurations and relaying times. A much better method is to coordinate with neighbors as to which Contingencies on their System could impact your System and then study only those Contingencies on the neighbor's System. For the audit you should show documentation where you asked and received these Contingencies from your neighbors. No change made.	
Deseret Power	Comments: Requirements R4.4 and R4.5 appear to be related to and set the limits for R4.1 and R4.2 respectively. Suggest moving both Requirements R4.4 and R4.5 into R4.1 and R4.2, allowing these sub-Requirements (R4.4 and 4.5) to be deleted. It is unclear from the wording in R4.3 whether the Contingency analyses need to be performed for all planning events or the more severe events referenced in R4.1 and R4.2. Please clarify the wording of R4.3. R4.3.1 appears to require an assessment of both successful unsuccessful high-speed reclosing. Successful reclosing is a much less severe event, so it seems unnecessary to assess both. If the intent is to make entities assess both we suggest including the assessment in the list of sensitivities.
Response: Parts 4.4 & 4.5: The SDT does not believe that combining the requirements serves any purpose. No change made. Part 4.3: The Contingency analyses in Requirement R4, part 4.3 refer to the studies in Requirement R4, parts 4.1 and 4.2. However, for additional clarity, Requirement R4, part 4.3 has been modified. **Requirement R4, part 4.3** - Contingency analyses for Requirement R4, parts 4.1 and 4.2 shall : Part 4.3.1: The Standard requires you to study only the events which produce more severe System impacts. If two Systems are swinging apart, then successful high speed reclosing could show a more severe impact. However, if successful reclosing is not expected to produce a more severe impact, you are not required to study it. No change made.	
ITC Holdings	Comments:On R4.3.2:Assumptions regarding Low Voltage Ride Through (LVRT) capability are risky and not well understood. If the SDT feels this is a critical requirement that merits corrective action then we believe LVRT characteristics for various machine types should be developed through a NERC process. Without such "standards", it will be difficult to justify CAPs based on LVRT

Organization	Comments for Question 4
	assumptions. For example, would the Transmission Owner (TO) or Generator Owner be responsible for the cost of VAR CAPs if an LVRT assumption were violated. Can a TO require an LSE to install automatic load shedding for an LVRT assumption when cascade or local load loss result from an LVRT assumption? In addition, as the SDT has already indicated, the industry is still in a learning curve regarding the dynamic behavior of certain loads. If LVRT capability is considered as a critical requirement, then what about High Voltage Ride Through (HVRT) capability? The violation of HVRT could also cause certain damages to the system. R4.4.1 - (contingency list coordination with neighbors) It's unclear as to the "measure" for this requirement. Do you give your neighbor a list of "contingencies" in your area. Should it include all categories (p1 thru p7 for example)? Does your neighbor have to study a cascade situation in his system caused by an outage in your system? Are joint studies merited? More importantly, if an outage in a neighboring system requires a CAP, who's responsible, particularly if the CAP involves the neighboring system. Does the neighbor have to have a CAP, according to this standard, if the violation is in your system, and the CAP is in his? Who pays? Are you putting a study burden on your neighbor when you do this? Do you include additional contingencies to ensure that you do not miss a contingency that might impact your neighbors system to avoid any potential compliance implication on you?
Response: Part 4.3.2: There is a reliability standard (PRC-024) under development which will require Generator Owners to provide information about the low voltage ride through capability of their generators based on relay settings. Requirement R4, part 4.3.2 requires you to include in the assessment how you analyzed voltage ride-through capability. If complete information on the ride-through capability is not available, then you should document your assumptions regarding ride-through capability for the assessment. And yes, you can make System improvements based on reasonable assumptions. The SDT does not believe that high voltage ride through of generators has been an issue in past events like low voltage ride through has been. Thus, there is no need to include it in the standard. Part 4.4.1: The intent of the requirement is to give your neighbor a list of Contingencies (P1-P7) for which you have observed an impact to the neighbor's System. Your neighbor will then study those Contingencies. Joint studies are not required. If a Contingency on a neighbor's System causes a problem on your System, you must find a solution and the reverse situation is the same.	
TVA System Planning	For R4.1.2. Suggested change: For planning events P2 through P7: A generator that pulls out of synchronism shall be considered in the simulations and the resulting apparent impedance swings shall not result in the tripping of any Transmission System elements other than the generating unit and its directly connected Facilities." [Since often tripping a out of step generator reduces impedance swings, if the simulation shows acceptable impedance swings and voltage levels without tripping the generator, why would we be required to determine the tripping time and simulate tripping in each of the simulations that we have to run for these event categories? Without the suggested change involving the word "considered", significant extra effort would be required to perform simulations for small generators with no added benefit in achieving the purpose of assuring that impedance swings from generators are not passing through lines on the Bulk Electric System for events P2-P7. 4.3.3. Suggested change: Simulate the impact of transient swings on Protection System operation for Transmission lines and transformers when such devices impact the study area. Without this change, a significant amount of effort would be required (with no added benefit) to evaluate protection systems all over the grid that have little or no impact on the study area.

Organization	Comments for Question 4
	R4.3.1: add "if reclosing is actually used as part of a protection system" to the end of the sentence.
Response: Part 4.1.2: The SDT agrees with the concern and has modified Requirement R4, part 4.1.2. **Requirement R4, part 4.1.2** - For planning events P2 through P7: When a generator pulls out of synchronism in the simulations, the resulting apparent impedance swings shall not result in the tripping of any Transmission system elements other than the generating unit and its directly connected Facilities Part 4.3.3: This does not necessarily require modeling of specific relays all over the grid. Some dynamic simulation programs include a generic relay model which can easily be applied to every branch in the simulation. If this model shows impedance swings in a branch element, then either take action according to the generic model results or investigate the characteristics of the relays actually used on that line. Therefore, the SDT does not see a need to add words that specifically limit the simulation of these impacts to the study area. No change made. Part 4.3.1: The requirement is to consider the impact of high speed reclosing. This does not mean that you need to study high speed reclosing if you are not using it. No change made.	
SERC Dynamics Review Subcommittee (DRS)	It is not clear as to the expectations of standard drafting team for dynamic modeling of relays. Parts 4.1.2 and 4.3.3 imply that all transmission relays may need to be explicitly modeled in the dynamic simulations. Is this the team's intent, please clarify? For R4.1.2. Suggested change: Replace word "tripped" with "considered". Reasoning: Since often tripping an out-of-step generator reduces impedance swings, if the simulation shows acceptable impedance swings and voltage levels without tripping the generator, why would we be required to determine the tripping time and simulate tripping in each of the simulations that we have to run for these event categories? Without the suggested change involving the word "considered", significant extra effort would be required to perform simulations for small generators with no added benefit in achieving the purpose of assuring that impedance swings from generators are not passing through lines on the Bulk Electric System for events P2-P7. Part 4.3.1: add "when used as part of a protection system" to the end of the sentence. Part 4.3.3: add "when such devices affect the study area" to the end of the sentence. Part 4.4: place a space between words "Table 1" and "that".
Response: Parts 4.1.2 & 4.3.3: This does not necessarily require modeling of specific relays. Some dynamic simulation programs include a generic relay model which can easily be applied to every branch in the simulation. If this model shows impedance swings in a branch element, then either take action according to the generic model results or investigate the characteristics of the relays actually used on that line. Part 4.1.2: The SDT agrees with the concern and has modified Requirement R4, part 4.1.2. **Requirement R4, part 4.1.2** - For planning events P2 through P7: When a generator pulls out of synchronism in the simulations, the resulting apparent impedance swings shall not result in the tripping of any Transmission system elements other than the generating unit and its directly connected Facilities Part 4.3.1: The requirement is to consider the impact of high speed reclosing. This does not mean that you need to study high speed reclosing if you are not using it. No change made. Part 4.3.3: As stated above, a generic relay model can be used to meet this requirement. Therefore, the SDT does not see a need to add words that specifically limit the simulation of these impacts to the study area. No change made.	

Organization	Comments for Question 4
Part 4.4: The typo has been corrected.	
SERC Planning Standards Subcommittee	It is not clear as to the expectations of standard drafting team for dynamic modeling of relays. Parts 4.1.2 and 4.3.3 imply that transmission relays may need to be explicitly modeled in the dynamic simulations. Is this the team's intent, please clarify? Part 4.3.1: add "when used as part of a protection system" to the end of the sentence. Part 4.3.3: add "when such devices affect the study area" to the end of the sentence.
Response: Parts 4.1.2 & 4.3.3: This does not necessarily require modeling of specific relays. Some dynamic simulation programs include a generic relay model which can easily be applied to every branch in the simulation. If this model shows impedance swings in a branch element, then either take action according to the generic model results or investigate the characteristics of the relays actually used on that line. Part 4.3.1: The requirement is to consider the impact of high speed reclosing. This does not mean that you need to study high speed reclosing if you are not using it. No change made. Part 4.3.3: As stated above, a generic relay model can be used to meet this requirement. Therefore, the SDT does not see a need to add words that specifically limit the simulation of these impacts to the study area. No change made.	
Ameren	It is not clear as to the expectations of the standard drafting team for dynamic modeling of relays. Requirements 4.1.2 and 4.3.3 imply that transmission relays may need to be explicitly modeled in the dynamic simulations. Is this the team's intent? If so, has the team given consideration to the availability of relay models in the commonly used Power System simulation software programs, and considered the cost and effort required for such implementation versus the expected benefits? Is there any historical experience that would imply that such modeling is crucial to the reliability of the BES? It is suggested that generators that pull out of synchronism be given consideration for their effects on the system, without requiring simulation of generator tripping in R4.1.2. Requirement R4.3.1 needs to include some additional language regarding the automatic restoration of facilities and allowance of high-speed reclosing. The following language is suggested: Simulate the removal of all elements that the Protection System is expected to disconnect and the restoration of all elements that the automatic controls are expected to restore for each Contingency without operator intervention while also considering the impact of successful or unsuccessful high-speed reclosing, if high-speed reclosing is employed. R4.3.3: Suggested wording addition: "for those devices relevant to the study area." A space needs to be added between "Table 1" and "that" in Requirement 4.4.
Response: Parts 4.1.2 & 4.3.3: This does not necessarily require modeling of specific relays. Some dynamic simulation programs include a generic relay model which can easily be applied to every branch in the simulation. If this model shows impedance swings in a branch element, then either take action according to the generic model results or investigate the characteristics of the relays actually used on that line. Part 4.1.2: The SDT agrees with the concern and has modified 4.1.2.	

Organization	Comments for Question 4
Requirement R4, part 4.1.2 - For planning events P2 through P7: When a generator pulls out of synchronism in the simulations, the resulting apparent impedance swings shall not result in the tripping of any Transmission system elements other than the generating unit and its directly connected Facilities Part 4.3.1: The SDT does not see the need for the standard to specify other automatic controls. No change made. Part 4.3.3: As stated above, a generic relay model can be used to meet this requirement. Therefore, the SDT does not see a need to add words that specifically limit the simulation of these impacts to the study area. No change made. Part 4.4: The typo has been corrected.	
Utility System Efficiencies, Inc. (USE)	It is unclear from the wording in R4.3 whether the Contingency analyses need to be performed for all planning events or the more severe events referenced in R4.1 and R4.2. Please clarify the wording of R4.3. R4.3.1 appears to require an assessment of both successful unsuccessful high-speed reclosing. Successful reclosing is a much less severe event, so it seems unnecessary to assess both. If the intent is to make entities assess both we suggest including the assessment in the list of sensitivities.
Response: Part 4.3: The Contingency analyses in Requirement R4, part 4.3 refer to the studies in Requirement R4, parts 4.1 and 4.2. However, for additional clarity, Requirement R4, part 4.3 has been modified. **Requirement R4, part 4.3** - Contingency analyses for Requirement R4, Parts 4.1 and 4.2 shall : Part 4.3.1: The Standard requires you to study only the events which produce more severe System impacts. If two Systems are swinging apart, then successful high speed reclosing could show a more severe impact. However, if successful reclosing is not expected to produce a more severe impact, you are not required to study it.	
MidAmerican Energy Company	MidAmerican commends the SDT for their hard work on this standard. MidAmerican does have comments about this requirement though. MidAmerican urges that the SDT delete 4.1.1 which requires that no generating unit shall pull out of synchronism during a stability analysis. A generating unit pulling out of synchronism does not necessarily result in thermal, voltage, or stability violations and does not necessarily result in cascading, instability, or uncontrolled separation. The loss of synchronism and tripping of a generator is in effect no different than tripping due to mechanical issues such as tube leaks. Present electric grid design that allows tripping for out-of-synchronism is reliable and secure. Adding the requirement that no unit may pull out of synchronism goes well beyond current grid design practices. MidAmerican believes that 4.1.2 and 4.3.3 as written would require responsible entities in the industry to add additional modeling of relaying in dynamic stability models of our system. MidAmerican suggests that 4.3.3 be limited to transient swings on facilities 345 kV and above so as to limit this part of requirement 4 to those situations that are most likely to result in cascading. If the SDT determines not to add such a limitation, MidAmerican asks that the implementation time for R4 to be increased. MidAmerican believes that many responsible entities would need 3 years to add these relaying models to system stability models so that the fourth year additional transmission planning analysis in this respect is conducted. MidAmerican urges that the SDT increase the implementation time for R4 from 2 years to 4 years. (MidAmerican also made this comment under Question 11.)? 4.3.1 indicates that for stability contingency analysis shall be performed to “Simulate the removal of all elements that the

Organization	Comments for Question 4
	Protection System and other automatic controls are expected to disconnect for each Contingency without operator intervention while also considering the impact of successful or unsuccessful high speed reclosing." MidAmerican believes that it is over-kill to provide this as a general requirement as written. In such a case, such successful or unsuccessful high speed reclosing analysis conceivably would need to be performed for numerous unnecessary situations given the generally wide spread use of high speed reclosing on transmissions systems. MidAmerican urges the SDT to revise this requirement to only require the study of successful and unsuccessful high speed reclosing where high speed reclosing has been added to resolve a specific stability issue such as a breaker closing angle issue." 4.5 MidAmerican believes that the extreme events that should be studied are the more credible ones. The credible events are those that the planner considers credible when considering both how severe the event is and how likely it is. For example, while a tornado might be the most severe event, its likelihood of hitting key facilities is low. It is more likely to have a severe thunderstorm that hits key facilities but causes less impact on the system. The planner should plan for the severe thunderstorm but perhaps should not plan for the tornado. MidAmerican recommends that 4.5 be revised to indicate that a list of those events that "produce more severe System impacts AND ARE MORE LIKELY" (the words in all caps are suggested words to be added) be studied as being more credible events. Then the purpose of the last sentence in 4.5 is clearer in that possible actions that reduce the likelihood or mitigate the consequences of the events shall be reviewed for those contingencies where likelihood in combination with consequences justify such evaluation. MidAmerican recommends the data retention for R4 and M4 be revised to change "All" to "The". The word "All" is unnecessary and could encourage over-the-top compliance monitoring and enforcement. The revised data retention would read as follows: "THE studies performed in support". The word in all caps is a word suggested to be added.

Response: Part 4.1.1: The SDT disagrees. A unit's pulling out of synchronism for a normally cleared fault is an indication of a weak Transmission System or insufficient relaying. A corrective action should be developed. No change made.

Parts 4.1.2 & 4.3.3: This does not necessarily require modeling of specific relays. Some dynamic simulation programs include a generic relay model which can easily be applied to every branch in the simulation. If this model shows impedance swings in a branch element, then either take action according to the generic model results or investigate the characteristics of the relays actually used on that line.

Part 4.3.3: As stated above, a generic relay model can be used to meet this requirement. Therefore, the SDT does not see a need to add words that specifically limit the simulation of these impacts to only high voltage lines. No change made.

Part 4.3.3: Because this requirement does not necessarily require modeling of specific relays (as described directly above), the SDT does not agree that a longer time is needed in the Implementation Plan. No change made.

Part 4.3.1: The SDT disagrees. The requirement is to consider the impact of high speed reclosing. This does not mean that you need to study high speed reclosing if you are not using it. If you are using it, then it should be covered in the studies. No change made.

Part 4.5: The extreme events for Stability analysis cover Contingencies like 3-phase fault with stuck breaker or a 3-phase fault after an element has gone out of service prior to System adjustments. These events are less likely to occur than the Planning Events. The SDT does not see any need to add the suggested qualifier "are more likely" because by definition none of the extreme events are more likely.

The SDT agrees and has made the suggested change.

Organization	Comments for Question 4
TIS	Nowhere in the stability requirements is it necessary for evaluating the loss of all generators in a station; it is included in the steady state requirements. The standard should require examination of all units in a generating station where single line-to-ground faults on generation station buses could cause the clearing of the entire station. Further, single phase faults with delayed clearing (or stuck breaker) are not included. Often, such exclusion of stability analysis for loss of all generators at a station these are things that happen!
Response: The SDT excluded loss of all units at a generating station as an extreme event for Stability. In general there are no Contingencies that could cause this to happen in a Stability time frame of interest. If there are faults or faults with breaker failure which could cause the loss of all generators at a plant, then that event is required to be studied under the other planning or extreme events. Single phase faults with stuck breaker are included in planning event P4.	
Southern Company	Part 4.3.1: add "when used on the system" to the end of the sentence. This is needed to clarify that you don't have to study high speed reclosing if you don't utilize it.
Response: Part 4.3.1: The requirement is to consider the impact of high speed reclosing. This does not mean that you need to study high speed reclosing if you are not using it. No change made**.**	
Oklahoma Gas & Electric	R4 OG&E believes the Transmission Coordinator be held accountable for R4. The Transmission Coordinator should coordinate this type of study with the Transmission Planner for a regional look of the whole system. For example Southwest Power Pool should coordinate this type of study with the members of the Southwest Power Pool to better examine the entire region of the Southwest Power Pool. We do not see the need to duplicate the work. R4.4 & R4.5 There appear to be no standards of directions on identifying severe or extreme system impacts. OG&E does not like being held accountable to nebulas standards. Need more specific information.
Response: R4: The SDT assumes you meant to say Planning Coordinator rather than Transmission Coordinator (which is not in the Functional Model). Requirement R7 requires the Planning Coordinator and Transmission Planner to work out who will be conducting what studies. Parts 4.4 & 4.5: Use your engineering judgment to determine which Contingencies could produce more severe results. For example, it could be argued that faults close in to generating plants would be more severe than faults two busses away from the plant.	
MAPP	R4.1.1 & R4.1.2 - We propose that these sub-requirements be removed. The generating unit loss of synchronism does not necessary result in a thermal, voltage, or stability violations. R4.3.2 We suggest that this requirement be removed because it is premature to require Transmission Planners to simulate under voltage tripping until the MOD standards require it. If the drafting team does not remove this requirement we propose wording like, "Trip generating units that are connected to the BES when actual or assumed minimum generator transient voltage limits are known and simulations show voltages may fall below the voltage limit. If assumed voltage limits are used, then they should be included in the assessment". The requirement should not apply to all relevant generating units until one of the MOD standards

Organization	Comments for Question 4
	requires all Generator Owners to provide their minimum generating unit voltage limits to the TP and PC. If the wording of R4.3.2 must be different from its counterpart, R3.3.2, then please explain the reasons for any differences. Add R4.3.5 We suggest the addition of R4.3.5, "Applicable System Operating Limits for the planning horizon shall not be exceeded." because Note "a" and "b" under "Stability Only" at the beginning of Table 1 are stated in the form of a Requirement (e.g. uses the verb, "shall") and all Requirements should be explicitly stated under Requirements and not be introduced (and hidden) in the performance notes of Table 1. [After R4.3.5 is added, Note "a" should revised and refer to R4.3.5.]
Response: Parts 4.1.1 & 4.1.2: The SDT disagrees. A unit's pulling out of synchronism for a normally cleared fault is an indication of a weak Transmission System or insufficient relaying. A corrective action should be developed. The SDT sees no reason to delete Requirement R4, parts 4.1.1 and 4.1.2. Part 4.3.2: The purpose of Requirement R4, part 4.3.2 is to take into account the low voltage ride-through capability of generators in the studies. There is a reliability standard (PRC-024) under development which will require Generator Owners to provide information about the low voltage ride through capability of their generators based on relay settings. Requirement R4, part 4.3.2 requires you to include in the assessment how you analyzed voltage ride-through capability. If complete information on the ride-through capability is not available, then you should document your assumptions regarding ride-through capability for the assessment. Your proposed wording is not significantly different from the existing wording. No change made. Part 4.3.2: To be consistent with Requirement R4, part 4.3.2, Requirement R3, part 3.3.2 has been modified to also allow the use of voltages on the high side of the GSU. The use of voltages on the high side of the GSU allows greater flexibility in applying voltage ride-through capability of generators - some of which are defined on the high side of the GSU. **Requirement R3, part 3.3.2** - Trip generators where simulations show generator bus voltages or high side of the GSU voltages are less than known or assumed minimum generator steady state or ride through voltage limitations. Include in the assessment any assumptions made. Part 4.3.5: The SDT does not see a need for making these header notes into requirements. These apply more directly as qualifiers for the results of the simulations and therefore, they fit better as header notes to the Table. No change made.	
NERC Standards Review Subcommittee	R4.1.1 & R4.1.2 The MRO NSRS proposes that these sub-requirements be removed. The generating unit loss of synchronism does not necessary result in a thermal, voltage, or stability violations.R4.1.1 - Wording from R4.1.1 about no generating unit pulling out of synchronism should be deleted. The simple loss of synchronism of a unit or even multiple units does not necessarily result in thermal, voltage, or stability. All standards and requirements should demonstrate a reliability related basis. There is no direct reliability or security requirement that prevents a unit from loosing synchronism. The loss of a unit from synchronism is no different than the regular loss of the unit for mechanical reasons, therefore this requirement unnecessarily results in FERC directing utilities to build infrastructure beyond what is needed for system security. R4.1.3 The MRO NSRS proposes that this sub-requirement be removed because there are no NERC power system damping standards. R.4.3.2 The MRO NSRS suggests that this requirement be removed because it is premature to requirement Transmission Planners to simulate under voltage tripping until the MOD standards require it. If the drafting team does not remove this requirement the MRO NSRS proposes wording like, "Trip generating units that are connected to the BES when actual or assumed minimum generator transient voltage limits are known and simulations show voltages may fall below the voltage limit. If assumed voltage limits are used, then they should be included in the assessment". The requirement should not apply to all relevant

Organization	Comments for Question 4
	generating units until one of the MOD standards requires all Generator Owners to provide their minimum generating unit voltage limits to the Transmission Planner and Planning Coordinator. If the wording of R4.3.2 must be different from its counterpart, R3.3.2, then please explain the reasons for any differences. R4.3.3 Every dynamic event simulation involves power system transient swings. What are the size and scope of the transient swings and what is the scope of the system to be examined, to which this requirement is referring? Please reword this requirement to give the industry a better understanding of what is intended. As written R4.3.3, it might be interpreted to require responsible entities to add the modeling of all relaying instead of just pertinent. Perhaps, R4.3.3 should be limited to transient swings on facilities 345 kV and above so as to limit this part of requirement 4 to those situations that are most likely to result in cascading. If the SDT determines not to add such a limitation, the MRO NSRS proposes that the implementation time for R4 to be increased. The MRO NSRS believes that many responsible entities would need 3 years to add these relaying models to system stability models so that the fourth year additional transmission planning analysis in this respect is conducted. The MRO NSRS urges that the SDT increase the implementation time for R4 from 2 years to 4 years. When it may actually respond or triggered. R 4.3.1 This requirement refers to high speed reclosing and the MRO NSRS presumes that this is special high speed reclosing that is completed in several cycles, rather than the normal high speed reclosing that is completed in a number of seconds. The MRO NSRS recommends that the term high speed reclosing be defined for this sub-requirement with an angular stability component. R4.5 - The MRO NSRS believes that the extreme events that should be studied are the more credible ones. The credible events are those that the planner considers credible when considering both how severe the event is and how likely it is. For example, while a tornado might be the most severe event, its likelihood of hitting key facilities is quite low. It is more likely to have a severe thunderstorm that hits key facilities but causes less impact on the system. The planner should plan for the severe thunderstorm but perhaps should not plan for the tornado. The MRO NSRS recommends that 4.5 be revised to indicate that a list of those events that "produce more severe System impacts and are more likely" (the bolded words are suggested words to be added) be studied as being more credible events. Then the purpose of the last sentence in 4.5 is clearer in that possible actions that reduce the likelihood or mitigate the consequences of the events shall be reviewed for those contingencies where likelihood in combination with consequences justify such evaluation.
Response: Parts 4.1.1 & 4.1.2: The SDT disagrees. A unit's pulling out of synchronism for a normally cleared fault is an indication of a weak Transmission System or insufficient relaying. A corrective action should be developed. The SDT sees no reason to delete Requirement R4, parts 4.1.1 and 4.1.2. Part 4.1.3: Requirement R4, part 4.1.3 requires the Planning Coordinator and Transmission Planner to use their engineering judgment on what constitutes acceptable damping. The SDT did not think it appropriate to prescribe what acceptable damping is. Most Planning Coordinator's and Transmission Planner's should already have this kind of criteria for their systems. No change made. Part 4.3.2: The purpose of Requirement R4, part 4.3.2 is to take into account the low voltage ride-through capability of generators in the studies. There is a reliability standard (PRC-024) under development which will require Generator Owners to provide information about the low voltage ride through capability of their generators based on relay settings. Requirement R4, part 4.3.2 requires you to include in the assessment how you analyzed voltage ride-through capability. If complete information on the ride-through capability is not available, then you should document your assumptions regarding ride-through capability for the assessment. Your proposed	

Organization	Comments for Question 4
wording is not significantly different from the existing wording. No change made. Part 4.3.2: To be consistent with Requirement R4, part 4.3.2., Requirement R3, art 3.3.2 has been modified to also allow the use of voltages on the high side of the GSU. The use of voltages on the high side of the GSU allows greater flexibility in applying voltage ride-through capability of generators - some of which are defined on the high side of the GSU. **Requirement R3, part 3.3.2** - Trip generators where simulations show generator bus voltages or high side of the GSU voltages are less than known or assumed minimum generator steady state or ride through voltage limitations. Include in the assessment any assumptions made. Part 4.3.3: This does not necessarily require modeling of specific relays. Some dynamic simulation programs include a generic relay model which can easily be applied to every branch in the simulation. If this model shows impedance swings in a branch element, then either take action according to the generic model results or investigate the characteristics of the relays actually used on that line. Therefore, the SDT does not believe this should be limited to only high voltage lines. Because this requirement does not necessarily require modeling of specific relays, the SDT also does not agree that a longer time is needed in the Implementation Plan. Part 4.3.1: The SDT believes that there is general understanding in the industry that reclosing that is accomplished in a number of seconds is not high speed reclosing. It is just known as reclosing. High speed reclosing would occur within a second after fault clearing. Part 4.5: The extreme events for Stability analysis cover Contingencies like 3-phase fault with stuck breaker or a 3-phase fault after an element has gone out of service prior to System adjustments. These events are less likely to occur than the planning events. The SDT does not see any need to add the suggested qualifier "are more likely" because by definition none of the extreme events are more likely.	
Sacramento Municipal Utility District	R4.1.1: There appears to be a conflict between what is not allowed for a generator in R4.1.1 and what is allowed in Note (b) of Table 1 (consequential generation loss " which is an undefined term " and hence can be interpreted as one sees fit). R4.3.3: It is unclear what is expected from this requirement. Are Protection personnel to take the results of the transient stability simulation and determine its impact on the Protection System? Or, is it that the Protection System should be properly modeled in stability simulations? If it is the latter, this requirement is already covered by R4.3.1 (simulate the removal of all elements). R4.3.2: If done right, this requirement should be already complied with under R4.3.1. If it needs to be spelled out, a better place may be in the MOD Standards. R4.4 and R4.5: Requirements R4.4 and R4.5 appear to be related to and set the limits for R4.1 and R4.2 respectively. Suggest moving both Requirements R4.4 and R4.5 into R4.1 and R4.2, allowing these sub-Requirements (R4.4 and 4.5) to be deleted. It is unclear from the wording in R4.3 whether the Contingency analyses need to be performed for all planning events or the more severe events referenced in R4.1 and R4.2. Please clarify the wording of R4.3.R4.3.1 appears to require an assessment of both successful and unsuccessful high-speed reclosing. Successful reclosing is a much less severe event, so it seems unnecessary to assess both. If the intent is to make entities assess both, we suggest including the assessment in the list of sensitivities.
Response: Part 4.1.1: The generation loss referred to in note b is the generation that is disconnected from the System by fault clearing action. This is completely different from a generator pulling out of synchronism. Part 4.3.3: The requirement is to take into account the impact of transient swings. This does not necessarily require modeling of specific relays. Some dynamic	

Organization	Comments for Question 4
simulation programs include a generic relay model which can easily be applied to every branch in the simulation. If this model shows impedance swings in a branch element, then either take action according to the generic model results or investigate the characteristics of the relays actually used on that line. Part 4.3.2: Requirement R4, part 4.3.1 requires simulating the removal of elements which must be removed to clear the fault. Requirement R4, part 4.3.2 involves generator low voltage ride-through and tripping the generator when voltages are too low. These are two completely different things. Parts 4.4 & 4.5: The SDT does not believe that combining the requirements serves any purpose. No change made. Part 4.3: The Contingency analyses in Requirement R4, part 4.3 refer to the studies in Requirement R4, parts 4.1 and 4.2. However, for additional clarity, Requirement R4, part 4.3 has been modified. **Requirement R4, part 4.3** - Contingency analyses for Requirement R4, parts 4.1 and 4.2 shall : Part 4.3.1: The Standard requires you to study only the events which produce more severe System impacts. If two Systems are swinging apart, then successful high speed reclosing could show a more severe impact. However, if successful reclosing is not expected to produce a more severe impact, you are not required to study it.	
Manitoba Hydro	R4.1.2: For P2 events, a generator that pulls out of synchronism must be tripped. Tripping of the generator could result in Interruption of Firm Transmission Service unless redispatch is allowed - Footnote 9 should be allowed. R4.1.3 states that “power oscillation shall exhibit acceptable damping as established by the PC and TP”. There is no requirement for the PC or TP to develop criteria for acceptable damping. Requirement R5 or R6 should be expanded to require the PC and TP to establish criteria for acceptable power oscillation damping. R4.2: Recommend changing “the list” to “the Contingency list” to add clarity and consistency.
Response: The SDT agrees and has changed Table 1 so that footnote 9 applies to planning event P2. Part 4.1.3: There doesn't have to be a specific requirement for the Planning Coordinator and Transmission Planner to establish damping criteria. Most should already have such a criteria. No change made. Part R4.2: The SDT does not see any value in adding the word "Contingency" to the word "list". No change made.	
Duke Energy	R4.3.3 must be clarified regarding what method is to be used for assessing the impact of transient swings on Protection System operation. For example, how is this to be included in models, is this referring to a post simulation evaluation comparing results to actual relay settings, etc?? R4.5 includes the phrase “cascading outages”. We believe that the word “cascading” should be the capitalized NERC-defined term “Cascading”.
Response: Part 4.3.3: The requirement is to take into account the impact of transient swings. This does not necessarily require modeling of specific relays. Some dynamic simulation programs include a generic relay model which can easily be applied to every branch in the simulation. If this model shows impedance swings in a branch element, then either take action according to the generic model results or investigate the characteristics of the relays actually used on that line. Part 4.5: The SDT has modified Requirement R4, part 4.5 to use the term "Cascading" rather than "cascading outages."	

Organization	Comments for Question 4
Requirement R4, part 4.5 - Those extreme events in Table 1 that are expected to produce more severe System impacts shall be identified and a list of those events to be evaluated for System performance in Requirement R4, part 4.2 created. The rationale for those Contingencies selected for evaluation shall be available as supporting information. If the analysis concludes there is Cascading caused by the occurrence of extreme events, an evaluation of possible actions designed to reduce the likelihood or mitigate the consequences of the event(s) shall be conducted.	
NorthWestern Energy	R4.4 and R4.5 appear to be related to and set the limits for R4.1 and R4.2 respectively. We suggest moving both R4.4 and R4.5 into R4.1 and R4.2, then R4.4 and R4.5 could be deleted. R4.3 is unclear whether the Contingency analyses need to be performed for all planning events or only the more severe events referenced in R4.1 and R4.2. R4.3 needs clarification. R4.3.1 requires considering the impact of both successful and unsuccessful high-speed reclosing. Since successful reclosing is a much less severe event, it seems unnecessary to assess both. If entities need to assess both, the assessment could be in the list of sensitivities. R4.5 needs to be modified. It would be better to combine R4.2 and R4.5. The first part of the requirement requires identification of events that produce more severe System impacts. The presumed reason that the other contingencies were not selected is because they were less severe or non-credible. In any case, theoretically, there can always be examples of more severe Extreme Contingencies than the one selected for study. This can be achieved by simply choosing events that are even less credible. For example, if the Extreme Contingency studied was a simultaneous loss of 3 transmission lines with the failure of redundant RAS (SPS), then an event resulting in the simultaneous loss of 4 lines with the failure of 2 sets of redundant RASs would be even more severe. Listing all possible extreme events could result in a limitless list.
Response: Parts 4.4 & 4.5: The SDT does not believe that combining the requirements serves any purpose. No change made. Part 4.3: The Contingency analyses in Requirement R4, part 4.3 refer to the studies in Requirement R4, parts 4.1 and 4.2. However, for additional clarity, Requirement R4, part 4.3 has been modified. **Requirement R4, part 4.3** - Contingency analyses for Requirement R4, parts 4.1 and 4.2 shall : Part 4.3.1: The Standard requires you to study only the events which produce more severe System impacts. If two Systems are swinging apart, then successful high speed reclosing could show a more severe impact. However, if successful reclosing is not expected to produce a more severe impact, you are not required to study it. Part 4.5: Requirement R4, Part 4.5 refers to the Contingency events listed in the extreme event Stability section of Table 1. Your example does not fall into the events listed. For this analysis you don't just keep adding more and more outaged elements. You only have to do the ones listed in the Table that would be expected to produce more severe results.	
Northeast Power Coordinating Council--RSC	Requirement 4.1.1: This should be revised to only be applicable to generators interconnected to the BES. This may need an implementation period as not all existing units are interconnected in accordance with the standard as proposed. As written this applies to small generators and doesn't necessarily reflect reliability of the network. 20 MW is a recommended generator minimum size. Requirement 4.1.2: Simulating the tripping of a generator that pulls out of synchronism is presently not modeled and will require

Organization	Comments for Question 4
	an implementation period. Requirement 4.2: This requirement should be deleted. The requirements for sensitivity analysis already address issues going beyond what is expected to meet reliability requirements. Requiring extreme event analysis is requiring two layers of event analysis beyond what is required and there is no requirement for corrective action if anything is identified. Therefore Extreme Event analysis no longer provides any value in this standard. Requirement 4.4 NPCC strongly suggests making this requirement a sub-bullet of Requirement 4.1 to keep the related requirements together. Requirement 4.5 NPCC strongly suggests making this requirement a sub-bullet of Requirement 4.2 to keep the related requirements together. This requirement needs clarification as to what is specifically required for the "evaluation of possible actions." The list associated with Requirement 2. part 2.7.1 provides examples of possible actions, and leaving "evaluation" undefined offers the Planning Coordinator and Transmission Planner the leeway to use judgment in making their evaluations.
Response: Part 4.1.1: The standard applies only to the BES as defined by your Region.. No change made. Part 4.1.2: Tripping the generator is no longer required. The SDT has modified Requirement R4, part 4.1.2. **Requirement R4, part 4.1.2** - For planning events P2 through P7: When a generator pulls out of synchronism in the simulations, the resulting apparent impedance swings shall not result in the tripping of any Transmission system elements other than the generating unit and its directly connected Facilities. Part 4.2: The SDT disagrees and believes there is value in running extreme event analysis. No change made. Part 4.4: The SDT does not believe that combining the requirements serves any purpose. No change made. Part 4.5: The SDT does not believe that combining the requirements serves any purpose. No change made. The requirement is to evaluate possible actions which could reduce the likelihood or mitigate the consequences of the event. The standard should not prescribe those actions. It is up to your judgment what those possible actions could be.	
Midwest ISO	Requirement R4.3.1: Please consider adding the following language to the end of the sentence "when used as part of a protection system". Requirement R4.3.1: Please consider adding the following language to the end of the sentence "when such devices affect the study area".
Response: Part 4.3.1: The requirement is to consider the impact of high speed reclosing. This does not mean that you need to study high speed reclosing if you are not using it. No change made. Part 4.3.1: High speed reclosing would be considered only for the line you are studying. Therefore, it always impacts the study area. No change made.	
Hydro-Québec TransEnergie	Requirements 3.5 and 4.5 Both of these requirements need clarification as to what is specifically required for the "evaluation of

Organization	Comments for Question 4
(HQT)	possible actions." Requirement 4.4 HQT, as does NPCC, strongly suggests making this requirement a sub-bullet of Requirement 4.1 to keep the related requirements together. Requirement 4.5 HQT, as does NPCC, strongly suggests making this requirement a sub-bullet of Requirement 4.2 to keep the related requirements together.
Response: Part 4.5: "An evaluation of actions designed to reduce" means looking for ways to reduce the probability of the event occurring or reducing the magnitude of the consequences of that event. For example, if a three phase fault with a bus differential failing to operate results in the collapse of a large Load area, a possible action would be to add a redundant bus differential relay. This reduces the probability of the event occurring. Or if a three phase fault with a stuck breaker results in a large area of the System pulling out of synchronism, an SPS could be used to trip a generator and keep the rest of the System in synchronism. This would reduce the magnitude of the consequences of the event. The evaluation would be comparing potential solutions and their cost with the consequences of the event to determine the best course of action to take (if any). Part 4.4: The SDT does not believe that combining the requirements serves any purpose. No change made. Part 4.5: The SDT does not believe that combining the requirements serves any purpose. No change made.	
Bonneville Power Administration	Requirements R4.4 and R4.5 appear to be related to and set the limits for R4.1 and R4.2 respectively. Suggest moving both Requirements R4.4 and R4.5 into R4.1 and R4.2, allowing these sub-Requirements (R4.4 and 4.5) to be deleted. It is unclear from the wording in R4.3 whether the Contingency analyses need to be performed for all planning events or the more severe events referenced in R4.1 and R4.2. Please clarify the wording of R4.3. R4.3.1 appears to require an assessment of both successful unsuccessful high-speed reclosing. Successful reclosing is a much less severe event, so it seems unnecessary to assess both. If the intent is to make entities assess both we suggest including the assessment in the list of sensitivities.
Idaho Power	Requirements R4.4 and R4.5 appear to be related to and set the limits for R4.1 and R4.2 respectively. Suggest moving both Requirements R4.4 and R4.5 into R4.1 and R4.2, allowing these sub-Requirements (R4.4 and 4.5) to be deleted. It is unclear from the wording in R4.3 whether the Contingency analyses need to be performed for all planning events or the more severe events referenced in R4.1 and R4.2. Please clarify the wording of R4.3. R4.3.1 appears to require an assessment of both successful and unsuccessful high-speed reclosing. Successful reclosing is a much less severe event, so it seems unnecessary to assess both. If the intent is to make entities assess both we suggest including the assessment in the list of sensitivities.
Modesto Irrigation District Transmission Planning	Requirements R4.4 and R4.5 appear to be related to and set the limits for R4.1 and R4.2 respectively. Suggest moving both Requirements R4.4 and R4.5 into R4.1 and R4.2, allowing these sub-Requirements (R4.4 and 4.5) to be deleted. It is unclear from the wording in R4.3 whether the Contingency analyses need to be performed for all planning events or the more

Organization	Comments for Question 4
	severe events referenced in R4.1 and R4.2. Please clarify the wording of R4.3. R4.3.1 appears to require an assessment of both successful unsuccessful high-speed reclosing. Successful reclosing is a much less severe event, so it seems unnecessary to assess both. If the intent is to make entities assess both we suggest including the assessment in the list of sensitivities.
NV Energy	Requirements R4.4 and R4.5 appear to be related to and set the limits for R4.1 and R4.2 respectively. Suggest moving both Requirements R4.4 and R4.5 into R4.1 and R4.2, allowing these sub-Requirements (R4.4 and 4.5) to be deleted. It is unclear from the wording in R4.3 whether the Contingency analyses need to be performed for all planning events or the more severe events referenced in R4.1 and R4.2. Please clarify the wording of R4.3. R4.3.1 appears to require an assessment of both successful unsuccessful high-speed reclosing. Successful reclosing is a much less severe event, so it seems unnecessary to assess both. If the intent is to make entities assess both we suggest including the assessment in the list of sensitivities.
Pacific Gas and Electric Co.	Requirements R4.4 and R4.5 appear to be related to and set the limits for R4.1 and R4.2 respectively. Suggest moving both Requirements R4.4 and R4.5 into R4.1 and R4.2, allowing these sub-Requirements (R4.4 and 4.5) to be deleted. It is unclear from the wording in R4.3 whether the Contingency analyses need to be performed for all planning events or the more severe events referenced in R4.1 and R4.2. Please clarify the wording of R4.3. R4.3.1 appears to require an assessment of both successful unsuccessful high-speed reclosing. Successful reclosing is a much less severe event, so it seems unnecessary to assess both. If the intent is to make entities assess both we suggest including the assessment in the list of sensitivities.
Puget Sound Energy, Inc.	Requirements R4.4 and R4.5 appear to be related to and set the limits for R4.1 and R4.2 respectively. Suggest moving both Requirements R4.4 and R4.5 into R4.1 and R4.2, allowing these sub-Requirements (R4.4 and 4.5) to be deleted. It is unclear from the wording in R4.3 whether the Contingency analyses need to be performed for all planning events or the more severe events referenced in R4.1 and R4.2. Please clarify the wording of R4.3. R4.41 requires clarification. With respect to these “Contingencies on adjacent systems,” the responsibility of listing and analyzing these events needs to be clarified. Should the event simulation be the responsibility of the “neighboring” system (where the event would occur) or the adjacent system that may feel the impact of this event? Per the developed rationale from R4.4, the neighboring system may determine that a particular event is “less severe” and hence not studied, even though this event may potentially impact a neighbor. Further, for these “Contingencies on adjacent systems” that result in system performance outside one’s own operating limits, it is unclear who is responsible for mitigating these contingencies. It is potentially awkward in that one entity may be planning another entity’s system improvements.
San Diego Gas & Electric Co	Requirements R4.4 and R4.5 appear to be related to and set the limits for R4.1 and R4.2 respectively. Suggest moving both Requirements R4.4 and R4.5 into R4.1 and R4.2, allowing these sub-Requirements (R4.4 and 4.5) to be deleted.

Organization	Comments for Question 4
	It is unclear from the wording in R4.3 whether the Contingency analyses need to be performed for all planning events or the more severe events referenced in R4.1 and R4.2. Please clarify the wording of R4.3. R4.3.1 appears to require an assessment of both successful unsuccessful high-speed reclosing. Successful reclosing is a much less severe event, so it seems unnecessary to assess both. If the intent is to make entities assess both we suggest including the assessment in the list of sensitivities.
Southern California Edison (SCE)	Requirements R4.4 and R4.5 appear to be related to and set the limits for R4.1 and R4.2 respectively. Suggest moving both Requirements R4.4 and R4.5 into R4.1 and R4.2, allowing these sub-Requirements (R4.4 and 4.5) to be deleted. t is unclear from the wording in R4.3 whether the Contingency analyses need to be performed for all planning events or the more severe events referenced in R4.1 and R4.2. Please clarify the wording of R4.3. R4.3.1 appears to require an assessment of both successful unsuccessful high-speed reclosing. Successful reclosing is a much less severe event, so it seems unnecessary to assess both. If the intent is to make entities assess both we suggest including the assessment in the list of sensitivities.
SRP	Requirements R4.4 and R4.5 appear to be related to and set the limits for R4.1 and R4.2 respectively. Suggest moving both Requirements R4.4 and R4.5 into R4.1 and R4.2, allowing these sub-Requirements (R4.4 and 4.5) to be deleted. It is unclear from the wording in R4.3 whether the Contingency analyses need to be performed for all planning events or the more severe events referenced in R4.1 and R4.2. Please clarify the wording of R4.3. R4.3.1 appears to require an assessment of both successful unsuccessful high-speed reclosing. Successful reclosing is a much less severe event, so it seems unnecessary to assess both. If the intent is to make entities assess both we suggest including the assessment in the list of sensitivities.
Western Area Power Adm - RMR	Requirements R4.4 and R4.5 appear to be related to and set the limits for R4.1 and R4.2, respectively. I Suggest moving both Requirements R4.4 and R4.5 into R4.1 and R4.2, allowing these sub-Requirements (R4.4 and 4.5) to be deleted. It is unclear from the wording in R4.3 whether the Contingency analyses need to be performed for all planning events or the more severe events referenced in R4.1 and R4.2. Please clarify the wording of R4.3. R4.3.1 appears to require an assessment of both successful and unsuccessful high-speed reclosing. Successful reclosing is a much less severe event, so it seems unnecessary to assess both.

Response: Parts 4.4 & 4.5: The SDT does not believe that combining the requirements serves any purpose. No change made.

Part 4.3: The Contingency analyses in Requirement R4, part 4.3 refer to the studies in Requirement R4, parts 4.1 and 4.2. However, for additional clarity, Requirement R4, part 4.3 has been modified.

Requirement R4, part 4.3 - Contingency analyses for Requirement R4, parts 4.1 and 4.2 shall :

Part 4.3.1: The Standard requires you to study only the events which produce more severe System impacts. If two Systems are swinging apart, then successful high

Organization	Comments for Question 4
speed reclosing could show a more severe impact. However, if successful reclosing is not expected to produce a more severe impact, you are not required to study it. No change made.	
National Grid	Sub-Requirement 4.1.1: This should be revised to only be applicable to generators interconnected to the BES. This may need an implementation period as not all existing units are interconnected in accordance with the standard as proposed. As written this applies to small generators and doesn't necessarily reflect reliability of the network. 20 MW is a recommended generator minimum size. Sub-Requirement 4.1.2: Simulating the tripping of a generator that pulls out of synchronism is presently not modeled and will require implementation period. Sub-Requirement 4.2: This requirement should be deleted. The requirements for sensitivity analysis already address issues going beyond what is expected to meet reliability requirements. Requiring extreme event analysis is requiring two layers of event analysis beyond what is required and there is no requirement for corrective action if anything is identified. Therefore Extreme Event analysis no longer provides any value in this standard. Sub-Requirement 4.4: It is strongly suggested that this requirement is made a sub-bullet of Requirement 4.1 to keep the related requirements together. Sub-Requirement 4.5: It is strongly suggested that this requirement is made a sub-bullet of Requirement 4.2 to keep the related requirements together. Provide clarification as to what is specifically required for the "evaluation of possible actions."
Response: Part 4.1.1: The standard applies only to the BES as defined by your Region. No change made. Part 4.1.2: Tripping the generator is no longer required. The SDT has modified Requirement R4, part 4.1.2. **Requirement R4, part 4.1.2** - For planning events P2 through P7: When a generator pulls out of synchronism in the simulations, the resulting apparent impedance swings shall not result in the tripping of any Transmission system elements other than the generating unit and its directly connected Facilities. Part 4.2: The SDT disagrees and believes there is value in running extreme event analysis. No change made. Part 4.4: The SDT does not believe that combining the requirements serves any purpose. No change made. Part 4.5: The SDT does not believe that combining the requirements serves any purpose. No change made. Part 4.5: "An evaluation of actions designed to reduce" means looking for ways to reduce the probability of the event occurring or reducing the magnitude of the consequences of that event. For example, if a three phase fault with a bus differential failing to operate results in the collapse of a large Load area, a possible action would be to add a redundant bus differential relay. This reduces the probability of the event occurring. Or if a three phase fault with a stuck breaker results in a large area of the system pulling out of synchronism, an SPS could be used to trip a generator and keep the rest of the system in synchronism. This would reduce the magnitude of the consequences of the event. The evaluation would be comparing potential solutions and their cost with the consequences of the event to determine the best course of action to take (if any).	
Tri-State Generation and	The standard needs to use the term "Dynamic Stability", not just "Stability", to differentiate between dynamic and voltage stability

Organization	Comments for Question 4
Transmission Association	considerations. R4.1 contains the phrase "based on the Contingency list created in Requirement R4.4". The contingency list is referred to in R4.4 (and R3.4), but is not created there. In R4.3.1 the requirement for additional evaluation of "successful or unsuccessful high speed reclosing" is an additional performance requirement. Whether this refers to the possibility of reclosing mechanism failure, or the effectiveness of reclosing operations (there is some ambiguity here). The reference to high speed reclosing in R4.3.1 is a good addition. For ease in auditing, it should be listed as a separate requirement (or sub-requirement).
Response: The SDT does not see any need to use that term as it does not provide any needed clarity. No change made. Parts 4.1 & 4.4: The Contingency list is created in Requirement R4, part 4.4. The SDT does not understand your comment. Part 4.3.1: The SDT does not see any value in making this a separate requirement. No change made.	
American Transmission Company	We propose the following changes and pose the following questions: R4.1.1 We suggest that there should be some qualification of which generating units are referred to in this requirement. We propose that the requirement say, "No generating unit connected to the BES shall pull out of synchronism." For example, some utilities include smaller generation units that are connected at voltages below 100 kV and even down to distribution voltage in their base cases. R4.1.2 We propose that the wording of this requirement be revised to reflect the same BES qualification of the generating unit that we noted in R4.1.1 above. 4.3.1 This requirement refers to high speed reclosing and we presume that this is special high speed reclosing that is completed in several cycles, rather than the normal high speed reclosing that is completed in a number of seconds. We recommend that the term high speed reclosing be defined for this sub-requirement.R. 4.3.2 We suggest qualifying which generating units to consider and which voltage limits to simulate with revised wording like, "Trip generating units that are connected to the BES when actual or assumed minimum generator transient voltage limits are known and simulations show voltages may fall below the voltage limit. If assumed voltage limits are used, then they should be included in the assessment". The requirement should not apply to all relevant generating units until one of the MOD standards requires all Generator Owners to provide their minimum generating unit voltage limits to the TP and PC. If the wording of R4.3.2 must be different from its counterpart, R3.3.2, then please explain the reasons for any differences. R4.3.3 Every dynamic event simulation involves power system transient swings. What are the size and scope of the transient swings and what is the scope of the system to be examined, to which this requirement is referring? Please reword this requirement to give the industry a better understanding of what is intended. Add R4.3.5 We suggest the addition of R4.3.5, "Applicable System Operating Limits for the planning horizon shall not be exceeded." Note "a" and "b" under "Stability Only" at the beginning of Table 1 are stated in the form of a Requirement (e.g. uses the verb, "shall") and all Requirements should be explicitly stated under Requirements and not be introduced (and basically

Organization	Comments for Question 4
	hidden) in the performance notes of Table 1. [After R4.3.5 is added, Note "a" should be revised and refer to R4.3.5.] Add R4.3.5 We suggest the addition of R4.3.5, "Applicable System Operating Limits for the planning horizon shall not be exceeded." because Note "a" and "b" under "Steady State Only" at the beginning of Table 1 is stated in the form of a Requirement (e.g. note usage of the verb, "shall") and all Requirements should be clearly included in the body of the standard and not be introduced (and basically hidden) in the performance notes of Table 1. [After R3.3.5 is added, Note "a" should allude to R3.3.5.]
Response: Part 4.1.1: The standard applies only to the BES as defined by your Region. No change made. Part 4.1.2: The standard applies only to the BES as defined by your region. No change made. Part 4.3.1: The SDT believes that there is general understanding in the industry that reclosing that is accomplished in a number of seconds is not high speed reclosing. It is just known as reclosing. High speed reclosing would occur within a second after fault clearing. Part 4.3.2: The purpose of Requirement R4, part 4.3.2 is to take into account the low voltage ride-through capability of generators in the studies. There is a reliability standard (PRC-024) under development which will require Generator Owners to provide information about the low voltage ride through capability of their generators based on relay settings. Requirement R4, part 4.3.2 requires you to include in the assessment how you analyzed voltage ride-through capability. If complete information on the ride-through capability is not available, then you should document your assumptions regarding ride-through capability for the assessment. Your proposed wording is not significantly different from the existing wording. No change made. Part 4.3.2: To be consistent with Requirement R4, part 4.3.2, Requirement R3, part 3.3.2 has been modified to also allow the use of voltages on the high side of the GSU. The use of voltages on the high side of the GSU allows greater flexibility in applying voltage ride-through capability of generators - some of which are defined on the high side of the GSU. **Requirement R3, part 3.3.2** - Trip generators where simulations show generator bus voltages or high side of the GSU voltages are less than known or assumed minimum generator steady state or ride through voltage limitations. Include in the assessment any assumptions made. Part 4.3.3: The requirement is to take into account the impact of transient swings. This does not necessarily require modeling of specific relays. Some dynamic simulation programs include a generic relay model which can easily be applied to every branch in the simulation. If this model shows impedance swings in a branch element, then either take action according to the generic model results or investigate the characteristics of the relays actually used on that line. Part 4.3.5: The SDT does not see a need for making these header notes into requirements. These apply more directly as qualifiers for the results of the simulations and therefore, they fit better as header notes to the Table.	
American Electric Power	We recommend inserting "unstable" in the requirement language as follows: "Simulate the impact of unstable transient swings on Protection System operation?" Our perception is that the wording of 4.3.3 is almost certain to require the representation of impedance relay characteristics on both ends of all lines in a study area in order to satisfy an audit, and would eventually require representation on both ends of all BES lines as all areas would be studied at some point. This sub-requirement would place a huge burden on transmission planning and protection engineering staff. Experience has shown that tripping of transmission lines or transformers on stable swings is extremely rare. The burden this sub-requirement would cause as presently worded is not commensurate with the expected benefit.
Response: Part 4.3.3: The requirement is to take into account the impact of transient swings. This does not necessarily require modeling of specific relays. Some dynamic simulation programs include a generic relay model which can easily be applied to every branch in the simulation. If this model shows impedance swings in a	

Organization	Comments for Question 4
branch element, then either take action according to the generic model results or investigate the characteristics of the relays actually used on that line. The SDT does not agree to insert the word "unstable" before "transient swings" because some stable swings can get into relay characteristics.	
FRCC Transmission Working Group	With regard to the Moderate VSL, consider deleting “utilizing data” in order to avoid penalizing twice for failing to meet R1. 4.1.1, suggest rewording “(a) generator being disconnected from the Bulk Electric System “, system as defined in the Glossary includes distribution, and we do not believe that is the intent of the SDT. 4.1.2, 4.3.1 and 4.3.3 essentially requirerequires modeling every Zone 3 (or higher, such as Zone 5) relay in each Interconnection (or at least in the Region under study and adjacent regions) because, in order to simulate the impact of a power swing on a distance relay, one would need to know the characteristics of the distance relay and how long the transient swing remains within that characteristic, which means modeling the relay. Is that the intent of the SDT?
Response: Requirement R1 requires you to maintain System models. Requirement R4 requires you to use that model data for your Stability studies. These are two different things requiring two VSLs. No change made. Part 4.1.1: The standard applies only to the BES as defined by your Region. No change made. Parts 4.1.2, 4.3.1, & 4.3.3: This does not necessarily require modeling of specific relays. Some dynamic simulation programs include a generic relay model which can easily be applied to every branch in the simulation. If this model shows impedance swings in a branch element, then either take action according to the generic model results or investigate the characteristics of the relays actually used on that line.	
E.ON U.S.	With respect to Category P6, a Multiple Contingency event (the overlapping occurrence of two or more single events) allows Non-Consequential Load Loss. The "System adjustments" do not list yet do not exclude Load Shedding. E.ON U.S believes that Load Shedding should be included as an option in similar manner to Curtailment of Firm Transmission Service. If the SDT disagrees with this recommendation, then E.ON U.S. suggests that the SDT clearly state the allowed use of Load Shedding. E.ON U.S. observes that in the case of Extreme Events the SDT provided the following response to a previous comment:Extreme event 2d and 3a are similar in that each covers the loss of all generating units at a single plant location. However, in 3a, two plants are reviewed. In each case, all units are to be outaged regardless of the BES voltage level to which they connect.E.ON U.S. recommends that the word "station" in event 2d to be changed "plant".
Response: In Event P6 the term System adjustments has a reference to footnote 9. This footnote clearly states that System adjustments do not include the shedding of firm Demand. The allowable loss of Non-Consequential Load for event P6 refers to after the second Contingency has occurred. The SDT agrees that there needs to be consistency and has changed the word "plants" to "stations" in extreme event 3a.	
Oncor Electric Delivery	Within “stability requirements” there is no requirement for evaluating the loss of all generators in a station; it is included in the steady state requirements. We recommend that the standard require examination of all units in a generating station where single line-to-ground faults on generation station buses could result in clearing of the entire station. Furthermore, single phase faults with delayed clearing (or stuck breaker) are not included. Often, such exclusion of stability

Organization	Comments for Question 4
	analysis for loss of all generators at a station these are things that happen! 4.1.1 This should be dropped. As written, this applies to small generators and doesn't necessarily reflect reliaiblity of the network. 4.1.2 This is not presently modeled and will require implementation period 4.2 Why do we need to do study extreme events? The requirements for sensitivity analysis already address issues going beyond what is expected to meet reliability requirements. Requiring extreme event analysis is requiring two layers of event analysis beyond what is required and there is no requirement for corrective action if anything is identified. 4.4 It is strongly suggested that this requirement is made a sub-bullet of Requirement 4.1 to keep the related requirements together. 4.5 It is strongly suggested that this requirement is made a sub-bullet of Requirement 4.2 to keep the related requirements together.
Response: The SDT excluded loss of all units at a generating station as an extreme event for Stability. In general there are no Contingencies that could cause this to happen in a Stability time frame of interest. If there are faults or faults with breaker failure which could cause the loss of all generators at a plant, then that event is required to be studied under the other planning or extreme Events. No change made. Single phase faults with stuck breaker are included in planning event P4. Part 4.1.1: The SDT believes that Part 4.1.1 is required for BES reliability. The standard applies only to the BES as defined by your Region. The SDT believes that all generators directly connected to the BES need to be stable for single Contingencies (P1). No change made. Part 4.1.2: Tripping the generator is no longer required. The SDT has modified Requirement R4, part 4.1.2. **Requirement R4, part 4.1.2** - For planning events P2 through P7: When a generator pulls out of synchronism in the simulations, the resulting apparent impedance swings shall not result in the tripping of any Transmission system elements other than the generating unit and its directly connected Facilities. Part 4.2: The SDT disagrees and believes there is value in running extreme event analysis. No change made. Part 4.4: The SDT does not believe that combining the requirements serves any purpose. No change made. Part 4.5: The SDT does not believe that combining the requirements serves any purpose. No change made.	
PJM	in R4.1.2 – It should be made clear when the unit should be tripped. Timing is important in dynamics studies. Actual protection made need to be modeled to cover this item completely. In R4.3.3 - This protection information, is not commonly collected, at least by MMWG, and will take a great deal of time and effort to gather. R4.5 – Needs a 4.5.1 similar to 4.4.1.
Response: Part 4.1.2: Tripping the generator is no longer required. The SDT has modified Requirement R4, part 4.1.2. **Requirement R4, part 4.1.2** - For planning events P2 through P7: When a generator pulls out of synchronism in the simulations, the resulting apparent	

Organization	Comments for Question 4
	impedance swings shall not result in the tripping of any Transmission system elements other than the generating unit and its directly connected Facilities Part 4.3.3: This does not necessarily require modeling of specific relays. Some dynamic simulation programs include a generic relay model which can easily be applied to every branch in the simulation. If this model shows impedance swings in a branch element, then either take action according to the generic model results or investigate the characteristics of the relays actually used on that line. The SDT believes the time allotted in the Implementation Plan is appropriate. Part 4.5: The SDT does not agree that a similar requirement is needed for extreme events. No change made.

5. Requirement R5 – Please provide any specific comments on the requirement text, VRF, Time Horizon, measure associated with the requirement, data retention associated with the requirement, and/or the VSL associated with the requirement. (Note – This is a new requirement.)

Summary Consideration: Several commenters expressed concern with potential double jeopardy between this standard and the VAR standards. From the ERO Rules of Procedure, Appendix 4B- Sanction Guidelines, Section 3.10 Multiple Violations: "Strictly speaking, NERC or the regional entity can determine and levy a separate penalty or sanction, or direct remedial action, upon a violator for each individual violation. However, in instances of multiple violations related to a single act or common incidence of noncompliance, NERC or the regional entity will generally determine and issue a single aggregate penalty, sanction, or remedial action directive bearing reasonable relationship to the aggregate of the related violations. The penalty, sanction, or remedial action will not be that determined individually for the least serious of the violations; it will generally be at least as large or expansive as what would be called for individually for the most serious of the violations." The existing VAR standards (VAR-001-1a and VAR-002-1b) address the operational time horizon but do not address the planning horizon. NERC Standards Project 2008-1 is under development and the SAR addresses the planning horizon. As this project moves forward, the Standards Drafting Team for Project 2008-1 will more fully develop the requirements for reactive planning and will evaluate whether those requirements should reside in the TPL standard or the VAR standards.

Several commenters expressed concern that the requirement to develop a transient voltage response criterion was not limited to establishing a low voltage threshold. The SDT clarified that the minimum requirement for establishing a transient voltage response criterion was to establish a low voltage level and the maximum length of time that the transient voltages may remain below that level. To clarify the SDT's intent, the wording of R5 has been modified as follows:

R5. Each Transmission Planner and Planning Coordinator shall define and document, within its Planning Assessment, criteria for acceptable System steady state voltage limits, post-Contingency voltage deviations, and the transient voltage response for its System. For transient voltage response, the criteria shall at a minimum, specify a low voltage level and a maximum length of time that transient voltages may remain below that level.

Requirement R5 data retention: The documentation specifying the criteria since the last compliance audit in accordance with Requirement R5 and Measure M5.

Organization	Comments for Question 5
Independent Electricity System Operator	(1) We do not have any concern with the requirement as written, but suggest the SDT consider adding "and associated reactive power requirements" after "acceptable System steady state voltage limits" to take care of the concern raised in the recently posted SAR for a new VAR standard. We do not think a new standard is required for stipulating reactive power requirements as they are best addressed in the planning assessment criteria and the SOL/IROL determination requirements. (2) We do not have any comments on the measure, VRF, Time Horizon and VSL.
Response: 1) The SDT declines to add "and associated reactive power requirements". The Voltage and Reactive Planning and Control Project (2008-1) will more	

Organization	Comments for Question 5
fully develop the requirements for reactive planning and will evaluate whether those requirements should reside in the TPL standard or the VAR standards. 2) Thank you.	
MAPP	A voltage criterion is addressed by the VAR standards where they are applicable to TOs and TOPs. Including a voltage requirement in the planning standards appears to be creating a double-jeopardy exposure.
Response: As for the double jeopardy comment - From the ERO Rules of Procedure, Appendix 4B- Sanction Guidelines, Section 3.10 Multiple Violations: "Strictly speaking, NERC or the regional entity can determine and levy a separate penalty or sanction, or direct remedial action, upon a violator for each individual violation. However, in instances of multiple violations related to a single act or common incidence of noncompliance, NERC or the regional entity will generally determine and issue a single aggregate penalty, sanction, or remedial action directive bearing reasonable relationship to the aggregate of the related violations. The penalty, sanction, or remedial action will not be that determined individually for the least serious of the violations; it will generally be at least as large or expansive as what would be called for individually for the most serious of the violations." The existing VAR standards (VAR-001-1a and VAR-002-1b) address the operational time horizon but do not address the planning horizon. NERC Standards Project 2008-1 is under development and the SAR addresses the planning horizon. As this project moves forward, the Standards Drafting Team for Project 2008-1 will more fully develop the requirements for reactive planning and will evaluate whether those requirements should reside in the TPL standard or the VAR standards.	
NERC Standards Review Subcommittee	A. The MRO NSRS recommends the data retention for R5 and M5 be revised to change "All" to "The". The word "All" is unnecessary and could encourage over-the-top compliance monitoring and enforcement. The revised data retention would read as follows: "The documentation specifying the criteria since". B. This requirement should not include the criterion, "post-Contingency voltage deviation", because this criterion is not used widely enough in the industry to be a well established criterion.
Response: A. The SDT has modified the data retention for Requirement R5 to strike the word "All" and has replaced it with the word "The". **Requirement R5 data retention**: The documentation specifying the criteria since the last compliance audit in accordance with Requirement R5 and Measure M5. B. The SDT believes that the reference to 'post-Contingency voltage deviation' is widely used and is an acceptable reference in the standard. No change made.	
Progress Energy Florida, Inc.	As PEF is opposed to TPL-001-1 as a whole, PEF will have no further comment on this issue other than to encourage all appropriate parties to review PEF's previous comments to this effect.
Response: Throughout the drafting process, the SDT has carefully considered your comments as well comments from other industry members.	
Idaho Power	As worded R5 is unclear. I interpret R5 to require entities to specify minimum voltage levels that must not be exceeded for more than a specific period of time. High transient voltages are typically not a problem. I suggest changing the second sentence of R5 to read: "For transient voltage response, the criteria shall at a minimum, specify a voltage level and a maximum length of time that transient voltage may remain below that level."

Organization	Comments for Question 5
Bonneville Power Administration	As worded R5 is unclear. We interpret R5 to require entities to specify minimum voltage levels that must not be exceeded for more than a specific period of time. High transient voltages are typically not a problem. We suggest changing the second sentence of R5 to read: "For transient voltage response, the criteria shall at a minimum, specify a voltage level and a maximum length of time that transient voltage may remain below that level."
NV Energy	As worded R5 is unclear. We interpret R5 to require entities to specify minimum voltage levels that must not be exceeded for more than a specific period of time. High transient voltages are typically not a problem. We suggest changing the second sentence of R5 to read: "For transient voltage response, the criteria shall at a minimum, specify a voltage level and a maximum length of time that transient voltage may remain below that level."
Pacific Gas and Electric Co.	As worded R5 is unclear. We interpret R5 to require entities to specify minimum voltage levels that must not be exceeded for more than a specific period of time. High transient voltages are typically not a problem. We suggest changing the second sentence of R5 to read: "For transient voltage response, the criteria shall at a minimum, specify a voltage level and a maximum length of time that transient voltage may remain below that level."
Puget Sound Energy, Inc.	As worded R5 is unclear. We interpret R5 to require entities to specify minimum voltage levels that must not be exceeded for more than a specific period of time. High transient voltages are typically not a problem. We suggest changing the second sentence of R5 to read: "For transient voltage response, the criteria shall at a minimum, specify a voltage level and a maximum length of time that transient voltage may remain below that level."
Sacramento Municipal Utility District	As worded R5 is unclear. We interpret R5 to require entities to specify minimum voltage levels that must not be exceeded for more than a specific period of time. High transient voltages are typically not a problem. We suggest changing the second sentence of R5 to read: "For transient voltage response, the criteria shall at a minimum, specify a voltage level and a maximum length of time that transient voltage may remain below that level."
San Diego Gas & Electric Co	As worded R5 is unclear. We interpret R5 to require entities to specify minimum voltage levels that must not be exceeded for more than a specific period of time. High transient voltages are typically not a problem. We suggest changing the second sentence of R5 to read: "For transient voltage response, the criteria shall at a minimum, specify a voltage level and a maximum length of time that transient voltage may remain below that level."
Southern California Edison (SCE)	As worded R5 is unclear. We interpret R5 to require entities to specify minimum voltage levels that must not be exceeded for more than a specific period of time. High transient voltages are typically not a problem. We suggest changing the second sentence of R5 to read: "For transient voltage response, the criteria shall at a minimum, specify a voltage level and a maximum length of time that transient voltage may remain below that level."
SRP	As worded R5 is unclear. We interpret R5 to require entities to specify minimum voltage levels that must not be exceeded for more than a specific period of time. High transient voltages are typically not a problem. We suggest changing the second sentence of R5 to read: "For transient voltage response, the criteria shall at a minimum, specify a voltage level and a maximum

Organization	Comments for Question 5
	length of time that transient voltage may remain below that level."
Western Area Power Adm - RMR	As worded, R5 is unclear. I interpret R5 to require entities to specify minimum voltage levels that must not be exceeded for more than a specific period of time. High transient voltages are typically not a problem. I suggest changing the second sentence of R5 to read: "For transient voltage response, the criteria shall at a minimum, specify a voltage level and a maximum length of time that transient voltage may remain below that level."
Response: The SDT clarified that the minimum for establishing a transient voltage response criterion was to establish a low voltage level and the maximum length of time that the transient voltages may remain below that level. **R5**. Each Transmission Planner and Planning Coordinator shall define and document, within its Planning Assessment, criteria for acceptable System steady state voltage limits, post-Contingency voltage deviations, and the transient voltage response for its System. For transient voltage response, the criteria shall at a minimum, specify a low voltage level and a maximum length of time that transient voltages may remain below that level.	
CenterPoint Energy	CenterPoint Energy is not familiar with the phrase "post-Contingency voltage deviations" and recommends that this phrase be deleted. Alternatively, the text should be revised to read "steady state post-contingency voltage limits." Including both phrases is unnecessary and confusing.
American Transmission Company	R5 This requirement should not include the criteria item, "post-Contingency voltage deviation", because this criteria is not used widely enough in the industry to be a well established criteria.
Response: The SDT believes that the term is widely used and believes that it is appropriate for inclusion in this standard. No change made.	
Deseret Power	Comments: As worded R5 is unclear. We interpret R5 to require entities to specify minimum voltage levels that must not be exceeded for more than a specific period of time. High transient voltages are typically not a problem. We suggest changing the second sentence of R5 to read: "For transient voltage response, the criteria shall at a minimum, specify a voltage level and a maximum length of time that transient voltage may remain below that level."
Response: The SDT clarified that the minimum for establishing a transient voltage response criterion was to establish a low voltage level and the maximum length of time that the transient voltages may remain below that level. **R5**. Each Transmission Planner and Planning Coordinator shall define and document, within its Planning Assessment, criteria for acceptable System steady state voltage limits, post-Contingency voltage deviations, and the transient voltage response for its System. For transient voltage response, the criteria shall at a minimum, specify a low voltage level and a maximum length of time that transient voltages may remain below that level.	
Omaha Public Power District	In the first sentence of the requirement text, change "voltage limits" to "voltage".
Response: The SDT believes that the use of "voltage limits" is correct. No change made.	

Organization	Comments for Question 5
TVA System Planning	In the VSL associated with R5, we believe that failure to define and document one of the criteria should be a moderate VSL, failure to define and document two criteria should me a high VSL, while failure to define and document three criteria should be a severe VSL. Otherwise failing to document only one criteria would result in a severe VSL.
Response: The SDT believes that establishing the criteria for acceptable voltage deviations should be a binary VSL. No change made.	
MidAmerican Energy Company	MidAmerican commends the SDT for their hard work on this standard. MidAmerican does have comments about this requirement though. MidAmerican recommends the data retention for R5 and M5 be revised to change "All" to "The". The word "All" is unnecessary and could encourage over-the-top compliance monitoring and enforcement. The revised data retention would read as follows: "THE documentation specifying the criteria since". The word in all caps is a word suggested to be added.
Response: The SDT has modified the data retention for R5 to strike the word "All" and has replaced it with the word "The". **Requirement R5 data retention**: The documentation specifying the criteria since the last compliance audit in accordance with Requirement R5 and Measure M5.	
NorthWestern Energy	R5 could be interpreted to address both high voltage and low voltage criteria. We suggest changing the second sentence of R5 to read: "For transient voltage response, the criteria shall at a minimum, specify a voltage level and a maximum length of time that transient voltage may remain below that level." This way high voltage is definitely excluded.
Modesto Irrigation District Transmission Planning	R5 is unclear. We interpret R5 to require entities to specify minimum voltage levels that must not be exceeded for more than a specific period of time. High transient voltages are typically not a problem. We suggest changing the second sentence of R5 to read: For transient voltage response, the criteria shall at a minimum, specify a voltage level and a maximum length of time that transient voltage may remain below that level.
Response: The SDT clarified that the minimum for establishing a transient voltage response criterion was to establish a low voltage level and the maximum length of time that the transient voltages may remain below that level. **R5**. Each Transmission Planner and Planning Coordinator shall define and document, within its Planning Assessment, criteria for acceptable System steady state voltage limits, post-Contingency voltage deviations, and the transient voltage response for its System. For transient voltage response, the criteria shall at a minimum, specify a low voltage level and a maximum length of time that transient voltages may remain below that level.	
Oklahoma Gas & Electric	R5 OG&E believes the Transmission Coordinator be held accountable for the transient voltage response portion of R5. The Transmission Coordinator should coordinate this type of voltage criteria with the Transmission Planner for a regional look of the whole system. For example Southwest Power Pool should coordinate this type of study with a stakeholder developed voltage criteria within the members of the Southwest Power Pool to better examine the entire region of the Southwest Power Pool. We do not see the need to duplicate the work.
Response: The SDT disagrees that only the transmission coordinator should be responsible for having a transient voltage response. Every planner, whether a	

Organization	Comments for Question 5
Transmission Planner or Planning Coordinator, needs to have a transient voltage response criterion to fully evaluate its portion of the BES.	
Midwest ISO	Requirement R5: Not all Transmission Planners have delta voltage criteria which this requirement will now require them to have. Looks like this requirement is not a one shoe fits all requirement.
Response: The SDT agrees that voltage criteria may not be a "one size fits all" criteria. This requirement requires each Transmission Planner and Planning Coordinator to have criteria for acceptable voltage limits.	
SERC Dynamics Review Subcommittee (DRS)	The content in the severe VSL column should be split among the lower, moderate, and high categories, with failure to include one element as Moderate and two elements as High. It is stated that the Transmission Planner and Planning Coordinator shall have criteria specifying voltage limits, post-contingency voltage deviations, and transient voltage response. How would an nteraction with a third party system be handled? For example a contingency causes a voltage deviation on one system that is within thevoltage deviation criteria, but causes a voltage deviation violation on a neighboring system that has a more stringent criterion.
SERC Planning Standards Subcommittee	The content in the severe VSL column should be split among the lower, moderate, and high categories, with failure to include one element as Moderate and two elements as High. It is stated that the Transmission Planner and Planning Coordinator shall have criteria specifying voltage limits, post-Contingency voltage deviations, and transient voltage response. How would an interaction with a third party system be handled? For example a contingency that occurs on a system that is within their voltage deviation criteria, but causes a voltage deviation violation on a neighboring system that has a more stringent criteria.
Response: The SDT believes that establishing the criteria for acceptable voltage deviations should be a binary VSL. No change made. This standard places the requirement for performance on each entity's portion of the BES (Requirement R2). In addition, Requirement R3, part 3.4.1 and Requirement R4, part 4.4.1 require the coordination of the Contingencies and Requirement R8 requires the distribution of the Planning Assessment. These requirements will ensure that third party impacts are identified.	
Lafayette Utilities System	The modified version resolves the confusion noted by several commenters in the earlier draft.
Response: Thank you.	
US Bureau of Reclamation	The requirement in Table 1 is for Planning Authority and Transmission Planner to establish accceptable voltage deviations and limits. The requirement only indicates the that each shall have a criteria. That does not imply an agreement on a single limit or deviation allowable under a System Steady State post-contingency condition.
Response: The SDT agrees with your statement.	
Progress Energy Carolinas	There appears to be a double-jeopardy issue related to voltage performance criteria related to the VAR Standards. The voltage and var criteria will also be required in VAR-001 and 002.

Organization	Comments for Question 5
TIS	There appears to be a double-jeopardy issue related to voltage performance criteria related to the VAR Standards.
National Grid	Voltage criteria are addressed by the VAR standards. Including a voltage requirement in the planning standards appears to be creating a double-jeopardy exposure. Also, implementing transient voltage criteria will require time.Replace "Each Transmission Planner and Planning Coordinator" with "Each Transmission Planner OR Planning Coordinator".
Northeast Power Coordinating Council--RSC	Voltage criteria are addressed by the VAR standards. Including a voltage requirement in the planning standards appears to be creating a double-jeopardy exposure. Also, implementing transient voltage criteria will require time.Replace "Each Transmission Planner and Planning Coordinator" with "Each Transmission Planner OR Planning Coordinator".
Response: As for the double jeopardy comment - From the ERO Rules of Procedure, Appendix 4B- Sanction Guidelines, Section 3.10 Multiple Violations: "Strictly speaking, NERC or the regional entity can determine and levy a separate penalty or sanction, or direct remedial action, upon a violator for each individual violation. However, in instances of multiple violations related to a single act or common incidence of noncompliance, NERC or the regional entity will generally determine and issue a single aggregate penalty, sanction, or remedial action directive bearing reasonable relationship to the aggregate of the related violations. The penalty, sanction, or remedial action will not be that determined individually for the least serious of the violations; it will generally be at least as large or expansive as what would be called for individually for the most serious of the violations." The existing VAR standards (VAR-001-1a and VAR-002-1b) address the operational time horizon but do not address the planning horizon. NERC Standards Project 2008-1 is under development and the SAR addresses the planning horizon. As this project moves forward, the Standards Drafting Team for Project 2008-1 will more fully develop the requirements for reactive planning and will evaluate whether those requirements should reside in the TPL standard or the VAR standards.	
Gainesville Regional Utilities	Voltage considerations can get lost in the various studies. This requirement brings focus to the voltage component which it rightly deserves.
Response: Thank you.	
Central Maine Power Company	Voltage criteria is addressed by the VAR standards. Including a voltage requirement in the planning standards appears to be creating a double-jeopardy exposure.R5. Change to Read "Each Transmission Planner OR Planning Coordinator " Need time to implement transient voltage criteria.
ISO New England	Voltage criteria is addressed by the VAR standards. Including a voltage requirement in the planning standards appears to be creating a double-jeopardy exposure.R5. Change to Read "Each Transmission Planner OR Planning Coordinator " Need time to implement transient voltage criteria.
United Illuminating	Voltage criteria is addressed by the VAR standards. Including a voltage requirement in the planning standards appears to be creating a double-jeopardy exposure.R5. Change to Read "Each Transmission Planner OR Planning Coordinator " Need time to implement transient voltage criteria.

Organization	Comments for Question 5
Response: As for the double jeopardy comment - From the ERO Rules of Procedure, Appendix 4B- Sanction Guidelines, Section 3.10 Multiple Violations: "Strictly speaking, NERC or the regional entity can determine and levy a separate penalty or sanction, or direct remedial action, upon a violator for each individual violation. However, in instances of multiple violations related to a single act or common incidence of noncompliance, NERC or the regional entity will generally determine and issue a single aggregate penalty, sanction, or remedial action directive bearing reasonable relationship to the aggregate of the related violations. The penalty, sanction, or remedial action will not be that determined individually for the least serious of the violations; it will generally be at least as large or expansive as what would be called for individually for the most serious of the violations." The existing VAR standards (VAR-001-1a and VAR-002-1b) address the operational time horizon but do not address the planning horizon. NERC Standards Project 2008-1 is under development and the SAR addresses the planning horizon. As this project moves forward, the Standards Drafting Team for Project 2008-1 will more fully develop the requirements for reactive planning and will evaluate whether those requirements should reside in the TPL standard or the VAR standards. The implementation Plan allows 24 months before Requirement R5 becomes effective.	
Oncor Electric Delivery	Voltage criteria is addressed within the VAR standards. This appears to be redundant.
Response: The existing VAR standards (VAR-001-1a and VAR-002-1b) address the operational time horizon but do not address the planning horizon. NERC Standards Project 2008-1 is under development and the SAR addresses the planning horizon. As this project moves forward, the Standards Drafting Team for Project 2008-1 will more fully develop the requirements for reactive planning and will evaluate whether those requirements should reside in the TPL standard or the VAR standards to ensure that it is not a redundant requirement.	
American Electric Power	We believe that it is appropriate to eliminate the reference to transient voltage response as it is duplicative and unnecessary. System stability is already better addressed by other performance requirements defined in this standard.
Response: The SDT believes that a criterion should be established for transient voltage response by each Transmission Planner and Planning Coordinator and that it is complementary to the other performance requirements in this standard, not duplicative.	
FirstEnergy Corp	We concur with the inclusion of R5 and the criteria needed for steady-state voltage limits, post-contingency deviations and the transient voltage response for its System. In regards to the transient voltage criteria, its our understanding that the this criteria is for planning purposes only and not intended for operation time horizon evaluations being performed by the TOP.
Response: The SDT agrees that the requirement for criteria for transient voltage responses is for planning studies and does not address operating studies since they are outside the scope of this standard.	
Ameren	With respect to specifying a voltage level and maximum duration for transient voltage response, does it make sense for each Transmission Planner to have their own criteria? Should we be meeting an industry standard such as the ITI (CBEMA) Curve published by the Technical Committee 3 (TC3) of the Information Technology Industry Council (ITI, formerly known as the Computer & Business Equipment manufacturer's Association) and available at www.itic.org? Meeting any of the criteria to be developed for Requirement R5 will depend on the load model assumptions used.It is stated that the Transmission Planner and Planning Coordinator shall have criteria specifying voltage limits, pos-Contingency voltage deviations, and transient voltage response. How would an interaction with a third party be handled, particularly if one entity has more stringent criteria?

Organization	Comments for Question 5
	The content in the severe VSL column should be split among the lower, moderate, and high categories.
Response: The SDT believes that each Transmission Planner and Planning Coordinator should have a criteria and has not placed bounds on how to establish the criteria. This standard places the requirement for performance on each entity's portion of the BES (Requirement R2). In addition, Requirement R3, part 3.4.1 and Requirement R4, part 4.4.1 require the coordination of the Contingencies and Requirement R8 requires the distribution of the Planning Assessment. These requirements will ensure that third party impacts are identified. The SDT believes that establishing the criteria for acceptable voltage deviations should be a binary VSL. No change made.	
PJM	Remove any mention of transient voltage response. Very few entities can perform this type of analysis.
Response: The SDT believes that a criterion should be established for transient voltage response by each Transmission Planner and Planning Coordinator and disagrees with the assertion that very few entities have the capability to complete this type of analysis. No change made.	

6. Requirement R6 – Please provide any specific comments on the requirement text, VRF, Time Horizon, measure associated with the requirement, data retention associated with the requirement, and/or the VSL associated with the requirement.

Summary Consideration: The SDT has made clarifying changes based on industry comments as follows: **R6**. Each Transmission Planner and Planning Coordinator shall define and document, within their Planning Assessment, any criteria or methodology used in the analysis to identify System instability for conditions such as Cascading , voltage instability, or uncontrolled islanding**M6**. Each Transmission Planner and Planning Coordinator shall provide evidence, such as electronic or hard copies of documentation specifying any criteria or methodology used in the analysis to identify System instability that was utilized in preparing the Planning Assessment in accordance with Requirement R6. **Requirement R6, data retention** - The documentation specifying any criteria or methodology utilized in support of its Planning Assessments since the last compliance audit in accordance with Requirement R6 and Measure M6.

Organization	Comments for Question 6
Progress Energy Florida, Inc.	As PEF is opposed to TPL-001-1 as a whole, PEF will have no further comment on this issue other than to encourage all appropriate parties to review PEF's previous comments to this effect.
Response: Throughout the drafting process, the SDT has carefully considered your comments as well as comments from other industry members.	
Florida Municipal Power Agency, and its Member Cities	FMPA suggests adding the word "potential" into " identify the potential for System instability". The criteria and methodology may be used to determine if further analysis is warranted, e.g., if steady state voltages fall below 0.9 per unit, then do a voltage stability study, or something like that. Going below 0.9 does not mean voltage collapse, but, it may be an indicator to study it; hence, the word "potential".
FRCC Transmission Working Group	For R6 please consider the following revision: "Each TP and PC shall define and document within their planning assessment any criteria or methodology used in their analysis to identify system instability /deleted/ for /deleted/ conditions such as cascading outages, voltage instability, or uncontrolled islanding." As written originally it could be taken to be the methods for determining if you have instability during a cascading outage, rather then the methods for determining if you are at risk for instability like a cascading outage. the word "potential" into "identify the potential for System instability ". The criteria and methodology may be used to determine if further analysis is warranted, e.g., if steady state voltages fall below 0.9 per unit, then duedo a voltage stability study. Going below 0.9 does not mean voltage collapse, but, it may be an indicator to study it; hence, the word "potential".
Response: The SDT disagrees with your suggestion of adding the term 'potential' in Requirement R6. The Standard does not preclude the application of criteria or methodology to determine potential instability. No change made.	
Orlando Utilities Commission	For R6 please consider the following revision: "Each TP and PC shall define and document within their planning assessment any criteria or methodology used in <<their>> analysis to identify system instability //for// conditions such as cascading outages, voltage instability, or uncontrolled islanding." Adding the text in <<>> and deleting the text in ////. As written originally it could

Organization	Comments for Question 6
	be taken to be the methods for determining if you have instability during a cascading outage, rather then the methods for determining if you are at risk for instability like a cascading outage.
Response: The SDT disagrees with your assessment that the language of "… criteria or methodology used in the analysis to identify System instability for conditions such as cascading outages, voltage instability, or uncontrolled islanding" is misleading. The System instability applies to the cascading outages, voltage instability, OR uncontrolled islanding, not just to cascading outages. No change made.	
Gainesville Regional Utilities	I believe that this requirement is better defined and documented at the regional level with all involved parties contributing. If consensus is not achievable, then the exception utilities can create their own knowing that they need technically valid references to support their position.
Response: The SDT disagrees as it is better to allow the individual a Transmission Planner or Planning Coordinator to determine this versus the region as the region could be quite varied. The Requirement does not preclude the region from doing as you suggest with coordination in the region. No change made.	
FirstEnergy Corp	If an entity is required to adhere to its Facility Ratings, how is it feasible that a cascade violation would occur? FirstEnergy questions the need for this review based on Table 1 performance requirements and the need to adhere to Facility Ratings.
Response: This may not be an issue in the application of this criteria or methodology for planning events P0 through P7, however, this needs to be available when evaluating System response when applying extreme events.	
Arizona Public Service Co.	It is not clear who this applies to. Is it both TP and PC individually, or one of the two, or both jointly?
Response: The requirement is for both.	
American Electric Power	M6 does not appear to align with the content of R6. M6 needs to be reworded to reference documentation of criteria or methodology rather than studies. Corresponding changes will also need to be made to the corresponding bullet under Data Retention.
Manitoba Hydro	The R6 text does not match the Data Retention 6th bullet text "studies performed". The Retention 6th bullet text should be updated to reflect the R6 text "criteria or methodology used in the analysis to identify System instability".The R6 text does not match the M6 text. The M6 text should be revised as follows: replace "studies utilized in preparing the Planning Assessment" with "criteria and methodology to identify System instability used within its analysis".
Response: The SDT agrees and has changed the language of Measure M6 and also the language for Data Retention. **M6**. Each Transmission Planner and Planning Coordinator shall provide evidence, such as electronic or hard copies of documentation specifying any criteria or methodology used in the analysis to identify System instability that was utilized in preparing the Planning Assessment in accordance with Requirement R6. **Requirement R6, data retention** - The documentation specifying any criteria or methodology utilized in support of its Planning Assessments since the last	

Organization	Comments for Question 6
compliance audit in accordance with Requirement R6 and Measure M6.	
Ameren	M6: The wording on this measure appears to have been copied from M3 or M4 but is not appropriate since R6 addresses criteria and methodology and not a study.
SERC Dynamics Review Subcommittee (DRS)	M6: The wording on this measure appears to have been copied from M3 or M4 but is not appropriate since R6 addresses criteria and methodology but not a study.
Southern Company	M6: The wording on this measure appears to have been copied from M3 or M4 but is not appropriate since R6 addresses criteria and methodology and not a study. Replace the word "studies" with "criteria or methodology".
TVA System Planning	M6: The wording on this measure appears to have been copied from M3 or M4 but is not appropriate since R6 addresses criteria and methodology and not a study.
SERC Planning Standards Subcommittee	Comments: M6: The wording on this measure appears to have been copied from M3 or M4 but is not appropriate since R6 addresses criteria and methodology and not a study.
Response: The SDT agrees and has changed the language of Measure M6. **M6**. Each Transmission Planner and Planning Coordinator shall provide evidence, such as electronic or hard copies of documentation specifying any criteria or methodology used in the analysis to identify System instability that was utilized in preparing the Planning Assessment in accordance with Requirement R6.	
MidAmerican Energy Company	MidAmerican commends the SDT for their hard work on this standard. MidAmerican does have comments about this requirement though. MidAmerican recommends the data retention for R6 and M6 be revised to change “All” to “The”. The word “All” is unnecessary and could encourage over-the-top compliance monitoring and enforcement. The revised data retention would read as follows: “THE studies performed in support”. The word in caps is a word suggested to be added.
NERC Standards Review Subcommittee	The MRO NSRS recommends the data retention for R6 and M6 be revised to change “All” to “The”. The word “All” is unnecessary and could encourage over-the-top compliance monitoring and enforcement. The revised data retention would read as follows: “The studies performed in support”.
Response: The SDT agrees with your suggestion of changing the “All” to “The” in the data retention section for Requirement R6 and Measure M6. **M6**. Each Transmission Planner and Planning Coordinator shall provide evidence, such as electronic or hard copies of documentation specifying any criteria or methodology used in the analysis to identify System instability that was utilized in preparing the Planning Assessment in accordance with Requirement R6. **Requirement R6, data retention** - The documentation specifying any criteria or methodology utilized in support of its Planning Assessments since the last compliance audit in accordance with Requirement R6 and Measure M6.	
Duke Energy	R6 includes the phrase “cascading outages”. We believe that the word “cascading” should be the capitalized NERC-defined

Organization	Comments for Question 6
	term "Cascading".
Response: The SDT agrees with your suggestion of changing "cascading" to Cascading". **R6**. Each Transmission Planner and Planning Coordinator shall define and document, within their Planning Assessment, any criteria or methodology used in the analysis to identify System instability for conditions such as Cascading , voltage instability, or uncontrolled islanding.	
Oklahoma Gas & Electric	R6 OG&E believes the Transmission Coordinator be held accountable for R6. The Transmission Coordinator should coordinate this type of study/documentation with the Transmission Planner for a regional look of the whole system. For example Southwest Power Pool should coordinate this type of study/documentation with the members of the Southwest Power Pool to better examine the entire region of the Southwest Power Pool. We do not see the need to duplicate the work.
Response: The SDT assumes that you mean Planning Coordinator. The requirement is for both entities.	
Tri-State Generation and Transmission Association	R6 seems OK but check M6. Should this refer to R2 and not R6?
Independent Electricity System Operator	We do not have any comments on the requirement, VRF, Time Horizon and the VSL. However, Measure M6 (which refers to "studies utilized in preparing the Planning Assessment") does not seem to be relevant to Requirement R6, which deals with defining and documenting the criteria and methodology used in the analysis to identify System instability.
Response: The SDT agrees and has changed the language of Measure M6. **M6**. Each Transmission Planner and Planning Coordinator shall provide evidence, such as electronic or hard copies of documentation specifying any criteria or methodology used in the analysis to identify System instability that was utilized in preparing the Planning Assessment in accordance with Requirement R6.	
MAPP	Suggest removing "Transmission Planner" since the PC performs the assessment.
Response: The SDT disagrees with your comment as both entities should be documenting their criteria.	

7. Requirement R7 – Please provide any specific comments on the requirement text, VRF, Time Horizon, measure associated with the requirement, data retention associated with the requirement, and/or the VSL associated with the requirement.

Summary Consideration: The SDT modified Measure M7 to clarify the supporting documentation used to establish the individual and joint responsibilities for performing the required studies. The SDT also clarified the data retention associated with Requirement R7. Measure M7 and the data retention associated with Requirement R7 now read:

M7. Each Planning Coordinator, in conjunction with each of its Transmission Planners, shall provide dated documentation on roles and responsibilities, such as meeting minutes, agreements, and e-mail correspondence that identifies that agreement has been reached on individual and joint responsibilities for performing the required studies and Assessments in accordance with Requirement R7.

Requirement R7 data retention: The current, in force documentation for the agreement(s) on roles and responsibilities, as well as all such documentation for the agreements in force since the last compliance audit, in accordance with Requirement R7 and Measure M7.

Organization	Comments for Question 7
ERCOT ISO	* Will any agreements made in R7 override the "each TP and PC" requirement? Would it be appropriate to say: "Each Planning Coordinator, in conjunction with each of its Transmission Planners, shall determine and identify each entity's individual and joint responsibilities for performing the required studies and assessments."* What kind of documentation will be acceptable to demonstrate "each entity's individual and joint responsibilities"?
Response: The SDT sees no additional clarity being provided by your suggested wording. No change made. To address your concerns the SDT has changed Measure M7 to clarify the type of supporting documentation that could be used to establish individual and joint responsibilities for performing the required studies. **M7.** Each Planning Coordinator, in conjunction with each of its Transmission Planners, shall provide dated documentation on roles and responsibilities, such as meeting minutes, agreements, and e-mail correspondence that identifies that agreement has been reached on individual and joint responsibilities for performing the required studies and Assessments in accordance with Requirement R7.	
American Transmission Company	Revise part of the requirement text to read, ". . . identify each entity's individual and joint responsibilities . . ." to provide better clarity. Perhaps this requirement should be listed at the beginning of the Requirements section, instead being mentioned near the end of this section.
Response: The SDT sees no additional clarity being provided by your suggested wording. No change made. The SDT discussed the change and based on industry input decided not to change the order of the requirements.	

Organization	Comments for Question 7
Progress Energy Florida, Inc.	As PEF is opposed to TPL-001-1 as a whole, PEF will have no further comment on this issue other than to encourage all appropriate parties to review PEF's previous comments to this effect.
Response: Throughout the drafting process, the SDT has carefully considered your comments as well as comments from other industry members.	
CenterPoint Energy	CenterPoint Energy believes R7 relates to matters best addressed through registration, such as JROs or delegation agreements. If other commenters agree, CenterPoint Energy recommends that R7 be deleted.
Response: This requirement was inserted to address industry concern regarding the potential for duplication of work. No change made.	
TVA System Planning	In the VSL associated with R7, we believe that failure to determine and identify one responsibility should be a moderate VSL, failure to determine and identify two responsibilities should me a high VSL, while failure to determine and identify three responsibilities should be a severe VSL. Otherwise failing to document only one responsibility would result in a severe VSL.
Response: The SDT believes that procedurally, Requirement R7 is binary. No change made.	
MidAmerican Energy Company	MidAmerican commends the SDT for their hard work on this standard. MidAmerican does have comments about this requirement though. MidAmerican recommends the data retention for R7 and M7 be revised to delete "All". The word "All" is unnecessary and could encourage over-the-top compliance monitoring and enforcement. The revised data retention would read as follows: "The current, in force agreement on identified responsibilities, as well as such agreements in force".
NERC Standards Review Subcommittee	The MRO NSRS recommends the data retention for R7 and M7 be revised to delete "All". The word "All" is unnecessary and could encourage over-the-top compliance monitoring and enforcement. The revised data retention would read as follows: "The current, in force agreement on identified responsibilities, as well as such agreements in force".
Response: The SDT agrees that the proposed change to Measure M7 and the data retention removes the potential for an unintended interpretation. **M7.** Each Planning Coordinator, in conjunction with each of its Transmission Planners, shall provide dated documentation on roles and responsibilities, such as meeting minutes, agreements, and e-mail correspondence that identifies that agreement has been reached on individual and joint responsibilities for performing the required studies and Assessments in accordance with Requirement R7. **Requirement R7 data retention:** The current, in force documentation for the agreement(s) on roles and responsibilities, as well as all such documentation for the agreements in force since the last compliance audit, in accordance with Requirement R7 and Measure M7.	
Tri-State Generation and Transmission Association	R7 - Duties of the Planning Coordinator are being created and changed as we go along, like changing rules of a flag football game as it is played. Is there any requirement that every TP have a PC? As far as we know, the PC was introduced as an additional authority level for regional or inter-utility study work. Previous R7 wording asked PCs and TPs to work together. The present wording implies that every TP must have a PC which is a separate entity, and that PC would dictate study responsibilities. The wording of R4.4.1 seems much better in this regard.

Organization	Comments for Question 7
Response: It does not create the requirement that each Transmission Planner report to a Planning Coordinator, that relationship is defined in the Functional Model This requirement specifies that, if there is a relationship between a Transmission Planner and Planning Coordinator there is no need for duplicate analysis if each entity agrees on the delegation of work. No change made.	
NYISO	R7. - The NYISO requests clarification as to whether the PC will be expected to distribute the TP Planning Assessments as part of its coordination requirement?
Response: This standard does not require the Planning Coordinator to distribute the individual Transmission Planner assessments.	
MAPP	Suggest moving this requirement to the head of the list. It's a basis for the rest of this standard.
Response: The SDT discussed the change and based on industry input decided not to change the order of the requirements.	
Orlando Utilities Commission	The intent is much clearer, thank you for revising this.
Oklahoma Gas & Electric	We agree that it should be clearly stated who does what between the Transmission Planner and the Planning Coordinator. We feel like this will eliminate duplication of work and create a better overall regional examination of the electric grid.
Gainesville Regional Utilities	Looks good.
Response: Thank you.	
Florida Municipal Power Agency, and its Member Cities	The Measure and Data Retention for R7 is ambiguous. While the measure could be interpreted as not requiring a contract, the data retention uses the words "in force agreement" which implies a formal contract, where roles and responsibilities could very well be assigned in regional planning committee minutes and ensuing e-mail correspondence. Suggest changing the words to "Documentation of agreement on roles and responsibilities, such as meeting minutes, agreements, and e-mail correspondence" in both locations.
Response: The SDT agrees that the proposed changes to Measure M7 and the data retention remove the potential for an unintended interpretation. Measure M7 and the data retention associated with Requirement R7 now read: **M7.** Each Planning Coordinator, in conjunction with each of its Transmission Planners, shall provide dated documentation on roles and responsibilities, such as meeting minutes, agreements, and e-mail correspondence that identifies that agreement has been reached on individual and joint responsibilities for performing the required studies and Assessments in accordance with Requirement R7. **Requirement R7 data retention:** The current, in force documentation for the agreement(s) on roles and responsibilities, as well as all such documentation for the agreements in force since the last compliance audit, in accordance with Requirement R7 and Measure M7.	

8. Requirement R8 – Please provide any specific comments on the requirement text, VRF, Time Horizon, measure associated with the requirement, data retention associated with the requirement, and/or the VSL associated with the requirement.

Summary Consideration: The SDT believes revisions to Requirement R3, parts 3.4 and Requirement R4, part 4.4 will clarify the expectation that Transmission Planners and Planning Coordinators analyze Table 1 events outside their Systems for reliability impacts. The proposed, new Requirement R8 (old Requirement R7) requirement (below), will ensure appropriate information is exchanged between Transmission Planners and Planning Coordinators for sharing of information, review, and coordination of plans in conformance with Order 693 paragraph 1755 and 1756 expectations. The SDT believes the NERC Rules and Procedures and delegation agreements cover existing TPL-005 & -006 assessment requirements for regional and inter-regional assessments. The aggregate effect of the above items will be an overlapping assessment of BES reliability from each Transmission Planner area up through each Interconnection.

R8. Each Planning Coordinator and Transmission Planner shall distribute its Planning Assessment results to adjacent Planning Coordinators, adjacent Transmission Planners, and any functional entity that has a reliability related need and submits a written request for the information.

R8 data retention. Three calendar years of the notices and other documentation employed in accordance with Requirement R8 and Measure M8

R8 VSL	The responsible entity failed to distribute the results of its Planning Assessment to one of its adjacent Transmission Planners or adjacent Planning Coordinators, and to one functional entity that has a reliability related need and has submitted a written request for the information, respectively in accordance with Requirement R8.	N/A	The responsible entity failed to distribute the results of its Planning Assessment to its adjacent Transmission Planners or adjacent Planning Coordinators, and to any functional entity that has a reliability related need and has submitted a written request for the information, respectively in accordance with Requirement R8.	The responsible entity failed to provide a documented response to a recipient of the Planning Assessment results who provided documented comments on the results within 90 calendar days of receipt of those comments in accordance with Requirement R8.

Organization	Comments for Question 8
Independent Electricity System Operator	(1) No comments on the requirement, measure, VRF and Time Horizon. 3) VSLs:(a) We do not agree with the Severe VSL condition. In our view, distributing planning assessment results is the intent of the requirement; it is more important to share results than to field questions from recipients of the results. Assigning a Severe VSL for failing Part 8.1 puts the driver at the wrong place.(b) The condition under Low and High seems to be the same. In the Low, failing to distribute the results to ANY ONE of the TPs and PCs means none, which is the same as the condition for High unless the condition under Low really means failing to distribute the results to ONE of the TPs and PCs whereas the High really means failing to distribute the results to two or more of the TPs and PCs. If this is the proper interpretation, then we'd suggest the VSLs be revised as follows:Low: failing to respond to comments within 90 daysHigh: failing to distribute the results to one of the TPs and PCsSevere: failing to distribute the results to two or more of the TPs and PCs.Alternatively, a Moderate can be added to capture the condition for failing to distribute the results to two of the TPs and PCs, while the Severe can become failure to distribute the results to three of the TPs and PCs.

Response: The SDT disagrees because the requirement's focus is on coordination of planning. If questions/concerns are not responded to, coordination of planning is not being accomplished. The VSLs related to failing to distribute results are appropriate. However, the SDT agrees that the Lower VSL is unclear and will make a change to delete the word "any". In addition, the SDT has modified the Lower and High VSL wording to be clearer.

R8 VSL	The responsible entity failed to distribute the results of its Planning Assessment to one of its adjacent Transmission Planners or adjacent Planning Coordinators, and to one functional entity that has a reliability related need and has submitted a written request for the information, respectively in accordance with Requirement R8.	N/A	The responsible entity failed to distribute the results of its Planning Assessment to its adjacent Transmission Planners or adjacent Planning Coordinators, and to any functional entity that has a reliability related need and has submitted a written request for the information, respectively in accordance with Requirement R8.	The responsible entity failed to provide a documented response to a recipient of the Planning Assessment results who provided documented comments on the results within 90 calendar days of receipt of those comments in accordance with Requirement R8.

ERCOT ISO	* Will any agreements made in R7 override the "each TP and PC" requirement? To clarify this, the requirement could be rephrased: "In accordance to the responsibilities assigned in R7, the responsible Transmission Planners and Planning Coordinators shall distribute?. "* Include "within the interconnection" such as: "distribute its Planning Assessment results to adjacent Planning Coordinators and Transmission Planners within the interconnection and to any functional entity that indicates a reliability related need for the Planning Assessment results"* Should "reliability related need" be defined? This appears in multiple standards.

Response: No, the agreements made in Requirement R7 pertain to performance of the required studies and will not override the Planning Coordinator and Transmission Planner's responsibilities under Requirement R8 relating to distribution of Planning Assessments.

Organization	Comments for Question 8
The SDT does not believe the suggested language adds any clarity. No change made. A definition is not required. The present wording is in other approved standards and is sufficiently clear based on experience to date. No change made.	
Northeast Utilities	[R8.1] There is no statute of limitation for comments, nor is there a limit on the number of comments. There is also potential conflict with the deadline for completing a study and when comments may be submitted. If this requirement is retained the following is suggested: "Each Planning Coordinator and Transmission Planner shall distribute its Planning Assessment results to their adjacent Planning Coordinators and Transmission Planners, respectively, and to the functional entities that the Planning Coordinator recognizes as having a reliability need for the Planning Assessment results".
Response: The SDT disagrees that there should be a statute of limitation for asking questions related to coordination of planning and believes parties will act appropriately. The SDT disagrees that there should be a limit to the number of questions allowed related to coordination of planning and believes parties will act appropriately. The requirement is to distribute the results of the completed Planning Assessments associated with this standard therefore all related supporting studies are complete and there is no potential conflict. The word "indicates" has been changed to "has" to be clearer. This revised wording has the same meaning as the suggested wording and is sufficiently clear. Both the Transmission Planner and Planning Coordinator may be asked for their Planning Assessment by an entity with a reliability related need. Therefore the statement must apply to both the Transmission Planner and Planning Coordinator. **R8**. Each Planning Coordinator and Transmission Planner shall distribute its Planning Assessment results to adjacent Planning Coordinators, adjacent Transmission Planners, and any functional entity that has a reliability related need and submits a written request for the information.	
Oncor Electric Delivery	8.1 This requirement should be removed because it appears redundant to FERC 890. (suggest having one statement or the other) However, if it isn't, then the Term "documented" in R8.1 the term documented needs to be defined. Suggest adding the qualifier "written " i.e., "If a recipient of the Planning Assessment results provides "documented written" comments on the results, the respective Planning Coordinator or Transmission Planner shall provide a "documented written" response to that recipient within 90 calendar days of receipt of those comments. The requirement to distribute reports to entities with "need" has very significant CEII implications. This should be tightened to a "bona fide reliability need" for the information, requiring CEII or confidential material handling procedures. R8, 8.1, and Measurement M8 There is no statute of limitation for comments (Suggest clarifying what we mean here assume we are note referring to the NERC Standards Commenting Process), nor is there a limit on the number of comments. There is also potential conflict with the deadline for completing a study and when comments may be submitted (e.g. comments are received the day before the study is to be completed. If this requirement is retained the following is suggested: Each Planning Coordinator and Transmission Planner shall distribute its Planning Assessment results to their adjacent Planning Coordinators and Transmission Planners, respectively, and to functional entities that demonstrated a reliability need with concurrence from their planning coordinator for the Planning Assessment results. [I think there are issues still with this language. I think it needs to say "and to the functional entities that the Planning Coordinator recognizes as having a reliability need for the Planning Assessment results."]

Organization	Comments for Question 8
	Compliance 1.4 Data Retention, last bullet - this relates back to Requirements R8, 8.1, and Measurement M8. This seems to be a nuisance requirement to get in trouble for. [Requirement is to keep 3 years of notifications related to R8 & 8.1.]
Response: The SDT seeks to retire the existing TPL-005 & -006 while continuing to meet the purpose of their requirements. FERC Order 693 and 890 each provide expectations and direction to the ERO regarding enhancement of regional coordination and planning. The SDT believes the inclusion of Requirement R8 in the standard and performance of the regional assessments required under NERC delegation agreements will meet these objectives. The present wording is in other approved standards and is sufficiently clear based on experience to date. Bona fide does not add significant clarity. Control of CEII and control of competitive market information per Standards of Conduct are a fundamental expectation of all industry participants and is not required in the standard. The SDT disagrees that there should be a statute of limitation for asking questions related to coordination of planning and believes parties will act appropriately. The SDT also disagrees that there should be a limit to the number of questions allowed related to coordination of planning and believes parties will act appropriately. The requirement is to distribute the results of the completed Planning Assessments associated with this standard therefore all related supporting studies are complete and there is no potential conflict. The SDT agrees the wording is somewhat unclear and will clarify by adding “adjacent” before Transmission Planner. The word "indicates" has been changed to “has” to be clearer. This revised wording has the same meaning as the suggested wording and is sufficiently clear. **R8**. Each Planning Coordinator and Transmission Planner shall distribute its Planning Assessment results to adjacent Planning Coordinators, adjacent Transmission Planners, and any functional entity that has a reliability related need and submits a written request for the information. The SDT believes that retaining the documentation for 3 years is consistent with other standards and appropriate for audit purposes. No change made.	
Progress Energy Florida, Inc.	As PEF is opposed to TPL-001-1 as a whole, PEF will have no further comment on this issue other than to encourage all appropriate parties to review PEF’s previous comments to this effect.
Response: Throughout the drafting process, the SDT has carefully considered your comments as well as comments from other industry members.	
CenterPoint Energy	CenterPoint Energy believes R8 is over-reaching and recommends deleting it. CenterPoint Energy is particularly concerned about requiring assessments to be distributed to “any functional entity that indicates a reliability related need”. There is already a process in place for entities to request and receive the FERC Form 715 submittals of other entities. FERC’s process appropriately recognizes and addresses CEII issues and imposes a requirement that the entity demonstrate need for the information and that the industry complies with certain security-related requirements. Beyond CEII matters, transmission planning information can have implications for market entities bidding on congestion rights in competitive energy markets. Therefore, the dissemination of transmission planning information may be governed by the regulatory authority having jurisdiction over the market functions, which is not necessarily FERC in all cases. In any case, given the availability of the FERC 715 process, there is no need for a somewhat duplicative requirement in this standard. Accordingly, CenterPoint Energy recommends that R8 be deleted in its entirety.
Response: Requirement R8 is necessary to ensure that appropriate coordination of planning occurs and supports regional assessments performed under NERC delegation agreements. Control of CEII is a fundamental expectation of all industry participants and the "reliability related need" restriction ensures only appropriate parties must be given	

Organization	Comments for Question 8
planning assessments. Control of competitive market information per Standards of Conduct is a fundamental expectation of all industry participants and the "reliability related need" restriction ensures only appropriate parties must be given planning assessments. The SDT seeks to retire the existing TPL-005 & -006 while continuing to meet the purpose of their requirements. FERC Orders 693 and 890 each provide expectations and direction to the ERO regarding enhancement of regional coordination and planning. The SDT believes the inclusion of Requirement R8 in the standard and performance of the regional assessments required under NERC delegation agreements will meet these objectives. FERC 715 is not adequate to achieve these objectives. No change made.	
Bonneville Power Administration	Clarity is needed in the phrase functional entity in R8. Is this referring to the entities identified in the Functional Model or something else?
Modesto Irrigation District Transmission Planning	Clarity is needed in the phrase functional entity in R8. Is this referring to the entities identified in the Functional Model or something else?
NV Energy	Clarity is needed in the phrase functional entity in R8. Is this referring to the entities identified in the Functional Model or something else?
Pacific Gas and Electric Co.	Clarity is needed in the phrase functional entity in R8. Is this referring to the entities identified in the Functional Model or something else?
Puget Sound Energy, Inc.	Clarity is needed in the phrase functional entity in R8. Is this referring to the entities identified in the Functional Model or something else?
Sacramento Municipal Utility District	Clarity is needed in the phrase functional entity in R8. Is this referring to the entities identified in the Functional Model or something else?
San Diego Gas & Electric Co	Clarity is needed in the phrase functional entity in R8. Is this referring to the entities identified in the Functional Model or something else?
Southern California Edison (SCE)	Clarity is needed in the phrase functional entity in R8. Is this referring to the entities identified in the Functional Model or something else?
SRP	Clarity is needed in the phrase functional entity in R8. Is this referring to the entities identified in the Functional Model or something else?
Utility System Efficiencies, Inc. (USE)	Clarity is needed in the phrase functional entity in R8. Is this referring to the entities identified in the Functional Model or something else?

Organization	Comments for Question 8
Western Area Power Adm - RMR	Clarity is needed in the phrase functional entity in R8. Is this referring to the entities identified in the Functional Model or something else?
Deseret Power	Comments: Clarity is needed in the phrase functional entity in R8. Is this referring to the entities identified in the Functional Model or something else?
Response: Yes - The NERC Reliability Functional Model defines the meaning of the term "functional entity".	
SERC Planning Standards Subcommittee	Comments: R8: It is not clear whether the assessment results must be distributed to all parties of interest, or if it would be sufficient to post the assessment at a central location, and distribute information to access the information. Also, FERC Standards of Conduct issues would come into play in assuring that the information is available only to appropriate personnel. R8: It is not clear if the requirement to provide assessment results to adjacent PCs and TPs is required, or only upon a reliability related request.R8: The PC and TP responsibilities should be stated separately for clarity. Part 8.1: It is not clear what the form of the response to the comments should be " would an acknowledgement be sufficient, or would it be necessary to pursue a process of examining comments in detail and revising and reissuing the corresponding assessment"The requirement needs to be revised to make the above points clear.
Response: The standard does not specify the mechanics of distribution of the information, only that it must occur. The method proposed would be acceptable as long as it met Measure M8 and Section 1.4 under compliance monitoring. Control of competitive market information per Standards of Conduct is a fundamental expectation of all industry participants and the "reliability related need" restriction ensures only appropriate parties must be given planning assessments. The SDT agrees and will clarify by adding "adjacent" before Transmission Planner and added wording requiring a written request. The word "indicates" has been changed to "has" to be clearer. **R8**. Each Planning Coordinator and Transmission Planner shall distribute its Planning Assessment results to adjacent Planning Coordinators, adjacent Transmission Planners, and any functional entity that has a reliability related need and submits a written request for the information. The standard should not specify the means of providing and responding to comments, but ensures that appropriate communication is initiated. No change made.	
Orlando Utilities Commission	Excellent requirement, thank you for revising this
Response: Thank you.	
Southern Company	For additional clarity in who should receive the assessment, we recommend replacing "indicates" with "has" and adding words to the end of the sentence so that it states the following: "and to any functional entity that has a reliability related need for the Planning Assessment results and provides a written request." For Part 8.1, we do not believe the intent is for casual emails to be documented and formally responded to. And we do not believe that anyone who happens to receive the assessment should be able to comment. Therefore, we recommend the following wording: "If one of the above named entities provides formal written comments on the results, the respective Planning Coordinator or

Organization	Comments for Question 8
	Transmission Planner shall provide a documented response to that recipient within 90 calendar days of receipt of those comments." If these recommendations are accepted, then the wording of M8 would have to change accordingly.
Response: The SDT agrees and will clarify by adding "adjacent" before Transmission Planner and added wording requiring a written request. **R8**. Each Planning Coordinator and Transmission Planner shall distribute its Planning Assessment results to adjacent Planning Coordinators, adjacent Transmission Planners, and any functional entity that has a reliability related need and submits a written request for the information. The standard should not specify the means of providing and responding to comments, but ensures that appropriate communication is initiated. The SDT has altered the wording of Requirement R8 to provide clarity and to attempt to alleviate your concern.	
Manitoba Hydro	Is there a need to retain comments and responses to comments for Requirement R8?
Response: Yes, see Measure M8 and the following changes to 1.4 Data Retention**.** **R8 data retention**. Three calendar years of the notices and other documentation employed in accordance with Requirement R8 and Measure M8	
SCE&G	It is not clear if the requirement to provide assessment results to adjacent Planning Coordinators and Transmission Planners is always required or only upon a reliability related request.
Response: The SDT considers the distribution to Planning Coordinators and Transmission Planners as mandatory and has changed the wording of Requirement R8 to address the wording for other functional entities. **R8**. Each Planning Coordinator and Transmission Planner shall distribute its Planning Assessment results to adjacent Planning Coordinators, adjacent Transmission Planners, and any functional entity that has a reliability related need and submits a written request for the information.	
MidAmerican Energy Company	MidAmerican commends the SDT for their hard work on this standard. MidAmerican does have comments about this requirement though. MidAmerican asks that the SDT revise R8 to limit the need to provide the Planning Assessment as follows “adjacent Planning Coordinators and ADJACENT Transmission Planners and to any REGISTERED functional entity”? The words in all caps are words that MidAmerican suggests are added to the requirement to clarify that the word adjacent also applies to Transmission Planners and to clarify that the functional entity must be registered in order for the requirement to provide the Planning Assessment to apply. MidAmerican asks that the low VSL for R8 be revised to delete the word “any” from the requirement so that the requirement will read “The responsible entity failed to distribute the results of its Planning Assessment to one of its adjacent Transmission Planners”.
Response: The SDT agrees and will clarify by adding "adjacent" before Transmission Planner, but the SDT believes adding “registered” is unnecessary because it is understood that it relates to NERC Reliability Standards. **R8**. Each Planning Coordinator and Transmission Planner shall distribute its Planning Assessment results to adjacent Planning Coordinators, adjacent Transmission Planners, and any functional entity that has a reliability related need and submits a written request for the information.	

Organization	Comments for Question 8

The SDT agrees and will make change to delete the word "any".

R8 VSL	The responsible entity failed to distribute the results of its Planning Assessment to one of its adjacent Transmission Planners or adjacent Planning Coordinators, and to one functional entity that has a reliability related need and has submitted a written request for the information, respectively in accordance with Requirement R8.	N/A	The responsible entity failed to distribute the results of its Planning Assessment to its adjacent Transmission Planners or adjacent Planning Coordinators, and to any functional entity that has a reliability related need and has submitted a written request for the information, respectively in accordance with Requirement R8.	The responsible entity failed to provide a documented response to a recipient of the Planning Assessment results who provided documented comments on the results within 90 calendar days of receipt of those comments in accordance with Requirement R8.

Progress Energy Carolinas	Need to define "adjacent" Planning Coordinators. Does this mean a neighbor with at least one joint interconnection? The requirement to provide the Planning Assessment "to any functional entity that indicates a reliability related need" should be made subject to applicable confidentiality and CEII provisions.

Response: The SDT believes "adjacent" is an understood term and would apply to any neighbor with a joint Interconnection. No change made.

Control of CEII is a fundamental expectation of all industry participants and the "reliability related need" restriction ensures only appropriate parties must be given planning assessments**.** No change made**.**

Tri-State Generation and Transmission Association	R8 - We find that web-site posting would be sufficient distribution if it were not for the need for auditability. Please consider a way to qualify web-posting as an acceptable distribution method.

Response: The standard does not specify the mechanics of distribution of the information, only that it must occur. The method proposed would be acceptable as long as it met Measure M8 and 1.4 under compliance monitoring. No change made.

NYISO	R8- It should be made clear that a TP should not be required to send their assessment to adjacent PCs. Likewise the PCs should not be required to send their assessment to TPs not in their footprint. R8.1: This should not be required until the Assessment is complete and posted. Additionally, this could be an administratively intense task to respond to each and every comment and document that a response is made within 90 days. Is there any room for an extension to this requirement?

Response: The SDT disagrees, the broader communication is necessary to achieve appropriate coordination. No change made.

The requirement is to distribute the results of completed Planning Assessments, then respond to comments. Therefore the assessment is posted and complete before

Organization	Comments for Question 8
comments can be received and responded to. The SDT recognizes this fact and believes 90 days should be sufficient to develop a response. No change made.	
Oklahoma Gas & Electric	R8 OG&E believes the Transmission Coordinator be held accountable for R8 and coordinate this type of data exchange to ensure a regional coordination effort is achieved.
Response: The SDT believes you were referring to Planning Coordinator in your comment. The SDT believes both the Transmission Planner and Planning Coordinator must distribute their assessments to meet the overall intent of Requirement R8 and achieve appropriate coordination. No change made.	
Xcel Energy	R8 Xcel Energy appreciates the language stating "reliability need" however it is unclear as to what constitutes this or who would make that determination. Please clarify so as to avoid future disputes on providing or obtaining the information.
Response: The present wording is in other approved standards and is sufficiently clear based on experience to date. No change made.	
Central Maine Power Company	R8, 8.1, and Measurement M8 This standard should not be used to remedy deficiencies in meeting the coordination requirements of FERC Order 890. Therefore these should be deleted. If this requirement is retained the following is suggested:"Each Planning Coordinator and Transmission Planner shall distribute its Planning Assessment results to their adjacent Planning Coordinators and Transmission Planners, respectively, and to the functional entities that the Planning Coordinator and Transmission Planner recognizes as having a reliability need for the Planning Assessment results." Additionally, there is no deadline for comments. There is also potential conflict with the deadline for completing a study and when comments may be submitted (e.g. comments are received the day before the study is to be completed.) These issues must be addressed. 1.4 Data Retention: The last bullet is unnecessary and should be deleted from the standard.
ISO New England	R8, 8.1, and Measurement M8 This standard should not be used to remedy deficiencies in meeting the coordination requirements of FERC Order 890. Therefore these should be deleted. If this requirement is retained the following is suggested: Each Planning Coordinator and Transmission Planner shall distribute its Planning Assessment results to their adjacent Planning Coordinators and Transmission Planners, respectively, and to the functional entities that the Planning Coordinator and Transmission Planner recognizes as having a reliability need for the Planning Assessment results. Additionally, there is no statute of limitation for comments. There is also potential conflict with the deadline for completing a study and when comments may be submitted (e.g. comments are received the day before the study is to be completed.) These issues must be addressed. 1.4 Data Retention: The last bullet is unnecessary and should be deleted from the standard.
Response: The SDT seeks to retire the existing TPL-005 & -006 while continuing to meet the purpose of their requirements. FERC Orders 693 and 890 each provide expectations and direction to the ERO regarding enhancement of regional coordination and planning. The SDT believes the inclusion of Requirement R8 in the standard	

Organization	Comments for Question 8
and performance of the regional assessments required under NERC delegation agreements will meet these objectives. No change made. This revised wording has the same meaning as the suggested wording and is sufficiently clear. The SDT disagrees that there should be a statute of limitation for asking questions related to coordination of planning and believes parties will act appropriately. The requirement is to distribute the results of the completed Planning Assessments associated with this standard therefore all related supporting studies are complete and there is no potential conflict. No change made. The SDT believes that data retention is a necessary function as outlined in the guidelines. No change made.	
United Illuminating	R8, 8.1, and Measurement M8 This standard should not be used to remedy deficiencies in meeting the coordination requirements of FERC Order 890. Therefore these should be deleted. If this requirement is retained the following is suggested:"Each Planning Coordinator and Transmission Planner shall distribute its Planning Assessment results to their adjacent Planning Coordinators and Transmission Planners, respectively, and to the functional entities that the Planning Coordinator and Transmission Planner recognizes as having a reliability need for the Planning Assessment results." Additionally, there is no statute of limitation for comments. There is also potential conflict with the deadline for completing a study and when comments may be submitted (e.g. comments are received the day before the study is to be completed.) These issues must be addressed. Measures M1:It is not practical to retain system model information in a hard copy form. This provision could be dropped. Compliance: D 1.1.4 Data Retention: The Transmission Planner and the Planning Coordinator may not be using the same software. If both are required to store the data, do they both have to have the software to use the data? Can this be changed to an "or" such that one of them must retain the data and it can be up to them as to who it is. Also, the last bullet is unnecessary and should be deleted from the standard.
Response: The SDT seeks to retire the existing TPL-005 & -006 while continuing to meet the purpose of their requirements. FERC Orders 693 and 890 each provide expectations and direction to the ERO regarding enhancement of regional coordination and planning. The SDT believes the inclusion of Requirement R8 in the standard and performance of the regional assessments required under NERC delegation agreements will meet these objectives. No change made. This revised wording has the same meaning as the suggested wording and is sufficiently clear. No change made. The SDT disagrees that there should be a statute of limitation for asking questions related to coordination of planning and believes parties will act appropriately. No change made. The requirement is to distribute the results of the completed Planning Assessments associated with this standard therefore all related supporting studies are complete and there is no potential conflict. Since Measure M1 states that either electronic OR hard copy format is required, the SDT believes that no changes are required since either of the formats is acceptable. An example of a hard copy of a system model is having printouts of each individual bus showing Load, Transmission line, generator, capacitors, etc., connected to that bus with associated impedances, ratings, etc. The SDT believes that both the Transmission Planner and Planning Coordinator have this responsibility for the data retention. Therefore the SDT believes that the	

Organization	Comments for Question 8
existing language is adequate and that no changes are required. The SDT believes that both should have the necessary software for using the data.	
Ameren	R8: It is not clear whether the assessment results must be distributed to all parties of interest, or if it would be sufficient to post the assessment at a central location, and distribute information to access the information. Also, FERC Standards of Conduct issues would come into play in assuring that the information is available only to appropriate personnel. R8.1: It is not clear what the form of the response to the comments should be " would an acknowledgement be sufficient, or would it be necessary to pursue a process of examining comments in detail and revising and reissuing the corresponding assessment" The audience of those able to provide comments to the assessments should be appropriately limited, and not open to anyone who wishes to comment.
Response: The standard does not specify the mechanics of distribution of the information, only that it must occur. The method proposed would be acceptable as long as it met Measure M8 and Section 1.4 under compliance monitoring. Control of competitive market information per Standards of Conduct is a fundamental expectation of all industry participants and the "reliability related need" restriction ensures only appropriate parties must be given planning assessments. The standard should not specify the means of providing and responding to comments, but ensures that appropriate communication is initiated. The SDT believes that the requirement limiting distribution to adjacent Planning Coordinator/Transmission Planner's and other functional entities with a reliability related need who request it appropriately limits those commenting. No change made.	
SERC Dynamics Review Subcommittee (DRS)	R8: It is not clear whether the assessment results must be distributed to all parties of interest, or if it would be sufficient to post the assessment at a central location, and distribute information to access the information. Also, FERC Standards of Conduct issues would come into play in assuring that the information is available only to appropriate personnel. For additional clarity in who should receive the assessment, we recommend replacing "indicates" with "has" and adding words to the end of the sentence so that it states the following: "and to any functional entity that has a reliability related need for the Planning Assessment results and provides a written request. "R8: The PC and TP responsibilities should be stated separately for clarity. Part 8.1: It is not clear what the form of the response to the comments should be. Would an acknowledgement be sufficient, or would it be necessary to pursue a process of examining comments in detail and revising and reissuing the corresponding assessment? The requirement needs to be revised to make the above point clear.? For Part 8.1, we do not believe the intent is for casual emails to be documented and formally responded to. And we do not believe that anyone who happens to receive the assessment should be able to comment. Therefore, we recommend the following wording: "If one of the above named entities provides formal written comments on the results, the respective Planning Coordinator or Transmission Planner shall provide a documented response to that recipient within 90 calendar days of receipt of those comments." If these recommendations are accepted, then the wording of M8 would have to change accordingly.

Organization	Comments for Question 8
Response: The standard does not specify the mechanics of distribution of the information, only that it must occur. The method proposed would be acceptable as long as it met Measure M8 and Section 1.4 under compliance monitoring. Control of competitive market information per Standards of Conduct is a fundamental expectation of all industry participants and the "reliability related need" restriction ensures only appropriate parties must be given planning assessments. The word "indicates" has been changed to “has” to be clearer. The other revised wording has the same meaning as the suggested wording and is sufficiently clear. **R8**. Each Planning Coordinator and Transmission Planner shall distribute its Planning Assessment results to adjacent Planning Coordinators, adjacent Transmission Planners, and any functional entity that has a reliability related need and submits a written request for the information. The standard should not specify the means of providing and responding to comments, but ensures that appropriate communication is initiated. The SDT believes that the requirement limiting distribution to adjacent Planning Coordinator/Transmission Planner's and other functional entities with a reliability related need who request it appropriately limits those commenting. The revised wording has the same meaning as the suggested wording which is sufficiently clear.	
MAPP	R8: Remove Transmission Planners: Each PC shall distribute it Planning Assessment to adjacent PC and to any registered function entity that indicates a reliability need for the Planning Assessment results. R8.1 Remove Transmission Planners from subrequirement.
Response: The SDT believes both the Transmission Planner and Planning Coordinator must distribute their assessments and respond to comments to meet the overall intent of Requirement R8 and achieve appropriate coordination. No change made.	
Midwest ISO	Requirement R8- It should be made clear that a TP should not be required to send their assessment to adjacent PCs. Likewise the PCs should be required to send their assessment to TPs not in their footprint. Please consider the following language change for R8:Each Planning Coordinator shall distribute its planning assessment results to adjacent Planning Coordinators and to any other Planning Coordinators who indicate they have a reliability related need for the planning assessment results. Each Transmission Planner shall distribute its planning assessment results to adjacent Transmission Planner and to any other Transmission Planner who indicates they have a reliability related need for the planning assessment results. Requirement R8.1: This should be clarified such that this requirement is only required on Assessments that are completed and posted as final. If not, this could be an administratively burdensome task for an entity to have to respond to each and every comment and then document that they did respond within 90 days. Please consider the following language changes for R8.1If a recipient of the Planning Assessment’s final results provides documented comments on the results, the respective Planning Coordinator or Transmission Planner shall provide a documented response to that recipient within 90 calendar days of receipt of those comments.
Response: The SDT disagrees with the suggested limitations and believes both the Transmission Planner and Planning Coordinator must distribute their assessments to the applicable entities cited in the requirement to meet the overall intent of Requirement R8 and achieve appropriate coordination. No change made. The Requirement R8 requirement is to distribute Planning Assessment results associated with this standard. Therefore Requirement R8, part 8.1 only requires response to comments on the applicable assessment results. No change in wording is necessary.	

Organization	Comments for Question 8
Northeast Power Coordinating Council--RSC	Requirements R8, 8.1, and Measure M8--There are a number of concerns with these requirements. There needs to be a specified time period upon which comments must be received. As written, there is no sunset on when comments may be made and therefore they must be responded to. Additionally, it is not clear if the 90-day response time may extend beyond the end of the year to maintain and maintain annual compliance. R8 also causes redundancy of distribution of assessments. There is no statute of limitation for comments. There is also potential conflict with the deadline for completing a study and when comments may be submitted (e.g. comments are received the day before the study is to be completed.) These issues must be addressed. This standard should not be used to remedy deficiencies in meeting the requirements of FERC Order 890. Therefore these should be deleted. If this requirement is retained the following revision to Requirement 8 is suggested:"Each Planning Coordinator and Transmission Planner shall distribute its Planning Assessment results to their adjacent Planning Coordinators and Transmission Planners, respectively, and to the functional entities that the Planning Coordinator and Transmission Planner recognize as having a reliability need for the Planning Assessment results." Compliance: 1.4 Data Retention: The Transmission Planner and the Planning Coordinator may not be using the same software. If both are required to store the data, do they both have to have the software to use the data? Can this be changed to an "or" such that one of them must retain the data and it can be up to them as to who it is? 1.4 Data Retention, last bullet - this relates back to Requirements R8, 8.1, and Measure M8. "Three calendar years of the notifications" seems to be an unnecessary requirement, and should be deleted. As an alternative to deletion, the implementation of a rolling three calendar years of notifications could be considered.

Response: The SDT disagrees that there should be a statute of limitation for asking questions related to coordination of planning and believes parties will act appropriately. The SDT's intent is that compliance would be judged by whether the comment was responded to in the required 90 days.

The SDT disagrees, this communication is necessary to achieve appropriate coordination.

The SDT disagrees that there should be a statute of limitation for asking questions related to coordination of planning and believes parties will act appropriately. The requirement is to distribute the results of the completed Planning Assessments associated with this standard therefore all related supporting studies are complete and there is no potential conflict.

The SDT seeks to retire the existing TPL-005 & -006 while continuing to meet the purpose of their requirements. FERC Orders 693 and 890 each provide expectations and direction to the ERO regarding enhancement of regional coordination and planning. The SDT believes the inclusion of Requirement R8 in the standard and performance of the regional assessments required under NERC delegation agreements will meet these objectives. No change made.

The SDT agrees the wording could be clearer and will clarify by adding "adjacent" before Transmission Planner. The word "indicates" has been changed to "has" to be clearer. The other revised wording has the same meaning as the suggested wording.

R8. Each Planning Coordinator and Transmission Planner shall distribute its Planning Assessment results to adjacent Planning Coordinators, adjacent

Organization	Comments for Question 8
Transmission Planners, and any functional entity that has a reliability related need and submits a written request for the information. The SDT believes that both the Transmission Planner and Planning Coordinator have the responsibility for data retention. Therefore, the SDT believes that the existing language is adequate and that no changes are required. The SDT believes that both should have the necessary software for using the data. The SDT believes that retaining the documentation for 3 years is consistent with other standards and appropriate for audit purposes.	
Hydro-Québec TransEnergie (HQT)	Requirements R8, 8.1, and Measurement M8 There are a number of concerns with these requirements. There needs to be a specified time period upon which comments must be received. As written, there is no sunset on when comments may be made and therefore they must be responded to. Additionally, it is not clear if the 90-day response time may extend beyond the end of the year to maintain and maintain annual compliance. R8 also causes redundancy of distribution of assessments.Suggested revised Requirement R8 to say: Each Planning Coordinator and Transmission Planner shall distribute its Planning Assessment results to their adjacent Planning Coordinators and Transmission Planners, respectively, and to functional entities that demonstrated a reliability need with concurrence from their planning coordinator for the Planning Assessment results.
Response: The SDT disagrees that there should be a statute of limitation for asking questions related to coordination of planning and believes parties will act appropriately. The SDT's intent is that compliance would be judged by whether the comment was responded to in the required 90 days. The SDT believes both the Transmission Planner and Planning Coordinator must distribute their assessments to meet the overall intent of Requirement R8 and achieve appropriate coordination. No change made.	
US Bureau of Reclamation	Results of the Planning Assessments should be coordinated with all owner entities who all share in system reliability. Any owner that may choose to implement a Corrective ACtion Plan item should have access to the basis for the need.
Response: The SDT agrees and believes Requirement R8 facilitate the necessary interaction between reliability related entities. No change made.	
TIS	Term “document” in R8.1 the term documented needs to be defined. TIS suggests using the term “written “ i.e., “If a recipient of the Planning Assessment results provides documented written comments on the results, the respective Planning Coordinator or Transmission Planner shall provide a documented written response to that recipient within 90 calendar days of receipt of those comments. ”The requirement to distribute reports to entities with “need” has very significant CEII implications. This should be tightened to a “bona fide reliability need” for the information, requiring CEII or confidential material handling procedures. Other general comments:1. Footnotes on P3 and P4 (101 & 19) should be 9 and 10, respectively. This merely appears to be a typo in the latest draft.
Response: The present wording is in other approved standards and is sufficiently clear based on experience to date. Control of CEII is a fundamental expectation of all industry participants and the "reliability related need" restriction ensures only appropriate parties must be given	

Organization	Comments for Question 8
planning assessments. Several footnote reference errors were reflected in Table 1 when migrating from Draft 3 to Draft 4 that led to unfortunate confusion. In Draft 5, the SDT has corrected the footnote references and a detailed explanation of the changes required is summarized in the Summary Considerations for Question 10.	
NERC Standards Review Subcommittee	The MRO NSRS asks that the SDT revise R8 to limit the need to provide the Planning Assessment as follows "adjacent Planning Coordinators and adjacent Transmission Planners and to any registered functional entity"? This MRO NSRS suggestion is added to the requirement to clarify that the word adjacent also applies to Transmission Planners and to clarify that the functional entity must be registered in order for the entity to be applicable to the requirement.
Response: The SDT agrees and will clarify by adding "adjacent" before Transmission Planner, but the SDT believes adding "registered" is unnecessary because it is understood as it relates to NERC Reliability Standards. **R8**. Each Planning Coordinator and Transmission Planner shall distribute its Planning Assessment results to adjacent Planning Coordinators, adjacent Transmission Planners, and any functional entity that has a reliability related need and submits a written request for the information.	
Florida Power and Light	The requirement to distribute the Planning Assessment should not mandate distribution of a document but should be more flexible and allow for making the Planning Assessment available, such that those entities that need the information can have it readily available. R8 should be modified as follows: Each Planning Coordinator and Transmission Planner shall make available its Planning Assessment results to adjacent Planning Coordinators and Transmission Planners and to any functional entity that indicates a reliability related need for the Planning Assessment results.
Response: The SDT believes Requirement R8 must be a standards requirement and ensures communication of information necessary for regional assessments**.** No change made**.**	
NorthWestern Energy	The term "functional entity" needs to be defined.
Response: The NERC Reliability Functional Model defines the term "functional entity".	
Gainesville Regional Utilities	The wording could be a little better to indicate that the PC and TP should always get each others planning assessments, but other entities need to indicate a reliability related need to get the same. I suggest making a second sentence and eliminating the word "and".
Response: The SDT agrees that the wording could be a little better and will clarify by adding "adjacent" before Transmission Planner. **R8**. Each Planning Coordinator and Transmission Planner shall distribute its Planning Assessment results to adjacent Planning Coordinators, adjacent Transmission Planners, and any functional entity that has a reliability related need and submits a written request for the information.	
National Grid	This standard should not be used to remedy deficiencies in meeting the requirements of FERC Order 890. Therefore these should be deleted.

Organization	Comments for Question 8
	If this requirement is retained the following is suggested: Each Planning Coordinator and Transmission Planner shall distribute its Planning Assessment results to their adjacent Planning Coordinators and Transmission Planners, respectively, and to the functional entities that the Planning Coordinator and Transmission Planner recognizes as having a reliability need for the Planning Assessment results. Additionally, there is no statute of limitation for comments. There is also potential conflict with the deadline for completing a study and when comments may be submitted (e.g. comments are received the day before the study is to be completed.) These issues must be addressed. Compliance: 1.4 Data Retention: The Transmission Planner and the Planning Coordinator may not be using the same software. If both are required to store the data, do they both have to have the software to use the data? Can this be changed to an "or" such that one of them must retain the data and it can be up to them as to who is it. 1.4 Data Retention, last bullet - this relates back to Requirements R8, 8.1, and Measurement M8. "Three calendar years of notification" seems to be a nuisance requirement to get in trouble for. This is unnecessary and should be deleted.
Response: The SDT seeks to retire the existing TPL-005 & -006 while continuing to meet the purpose of their requirements. FERC Orders 693 and 890 each provide expectations and direction to the ERO regarding enhancement of regional coordination and planning. The SDT believes the inclusion of Requirement R8 in the standard and performance of the regional assessments required under NERC delegation agreements will meet these objectives. No change made. The SDT agrees and will clarify by adding "adjacent" before Transmission Planner. The word "indicates" has been changed to "has" to be clearer. The other revised wording has the same meaning as the suggested wording which is sufficiently clear. **R8**. Each Planning Coordinator and Transmission Planner shall distribute its Planning Assessment results to adjacent Planning Coordinators, adjacent Transmission Planners, and any functional entity that has a reliability related need and submits a written request for the information. The SDT disagrees that there should be a statute of limitation for asking questions related to coordination of planning and believes parties will act appropriately. No change made. The requirement is to distribute the results of the completed Planning Assessments associated with this standard therefore all related supporting studies are complete and there is no potential conflict. The SDT believes that both the Transmission Planner and Planning Coordinator have this responsibility for the data retention. Therefore the SDT believes that the existing language is adequate and that no changes are required. The SDT believes that both should have the necessary software for using the data. No change made. The SDT believes that retaining the documentation for 3 years is consistent with other standards and appropriate for audit purposes.	
TVA System Planning	TVA believes that the TP and PC are unnecessarily duplicating work as shown in R8 and in M8. TVA believes that just the PC should be responsible for this coordination. R8: It is not clear whether the assessment results must be distributed to all parties of interest, or if it would be sufficient to post the assessment at a central location, and distribute information necessary to access the results. Also, FERC Standards of Conduct issues would come into play in assuring that the information is available only to appropriate

Organization	Comments for Question 8
	personnel. R8.1: It is not clear what the form of the response to the comments should be " would an acknowledgement be sufficient, or would it be necessary to pursue a process of examining comments in detail and revising and reissuing the corresponding assessment"
Response: The SDT believes both the Transmission Planner and Planning Coordinator must distribute their assessments to meet the overall intent of Requirement R8 and achieve appropriate coordination. The standard does not specify the mechanics of distribution of the information, only that it must occur. The method proposed would be acceptable as long as it met Measure M8 and Section 1.4 under compliance monitoring. Control of competitive market information per Standards of Conduct is a fundamental expectation of all industry participants and the "reliability related need" restriction ensures only appropriate parties must be given planning assessments. The standard should not specify the means of providing and responding to comments, but ensures that appropriate communication is initiated. No change made.	
SRC of ISO/RTO	Under R8 it should be made clear that a TP should not be required to send their assessment to adjacent PCs and that PCs should not be required to send their assessments to TPs not in their footprint. Under R8.1: If a recipient of the Planning Assessment results provides documented comments on the results, the respective Planning Coordinator or Transmission Planner shall provide a documented response to that recipient within 90 calendar days of receipt of those comments.This should not be required until the Assessment is final and could be an administrative intense task. The following wording is suggested for R8:R8. Each Planning Coordinator shall distribute its planning assessment results to adjacent Planning Coordinators and to any Planning Coordinator who indicates a reliability related need for the planning assessment results. Each Transmission Planner shall distribute its planning assessment results to adjacent Transmission Planners and to any other Transmission Planner who indicates they have a reliability need for the planning assessment results. R8.1 If a recipient of the Planning Assessment final results provides documented comments on the results, the respective Planning Coordinator or Transmission Planner shall provide a documented response to such recipient within 90 calendar days of receipt of those comments. AESO does not comment on VSLs or VRFs.
Response: The SDT believes both the Transmission Planner and Planning Coordinator must broadly distribute their assessments to meet the overall intent of Requirement R8 and achieve appropriate coordination. No change made. The requirement is to distribute the results of the completed Planning Assessments associated with this standard therefore all related supporting studies are complete and there is no potential conflict. The SDT recognizes this fact and believes 90 days should be sufficient to develop a response. The SDT disagrees with the suggested limitations and believes both the Transmission Planner and Planning Coordinator must distribute their assessments to the applicable entities cited in the requirement to meet the overall intent of Requirement R8 and achieve appropriate coordination. No change made.	
Pepco Holdings, Inc. - Affiliates	While the SDT has stated in the Description of Current Draft that the issues of TPL-005 and TPL-006 have been addressed. It is not clear to PHI Affiliates that this is true. It is not evident how wide area planning is performed. Requirement 2 states Each

Organization	Comments for Question 8
PHI	Transmission Planner and Planning Coordinator shall prepare an annual Planning Assessment of its portion of the BES.

Response: The SDT seeks to retire the existing TPL-005 & -006 while continuing to meet the purpose of their requirements. FERC Orders 693 and 890 each provide expectations and direction to the ERO regarding enhancement of regional coordination and planning. The SDT believes the inclusion of Requirement R8 in the standard and performance of regional assessments will meet these objectives.

FRCC Transmission Working Group	With regards to the High VSL, what about entities that indicate a reliability related need for the Planning Assessment? Should this be part of the High VSL? Consider changing the requirement to distribute the Planning Assessment to become more flexible and allow for making the Planning Assessment available to those entities that indicates a need. Consider revising as follows:Each Planning Coordinator and Transmission Planner shall make available its Planning Assessment results to adjacent Planning Coordinators and Transmission Planners and to any functional entity that indicates a reliability related need for the Planning Assessment results. The definition of "Known Commitments" should explain how that would diferentiate between Planned Commitments

Response: The SDT agrees and will add those with a reliability related need to the Lower and High VSL.

R8 VSL	The responsible entity failed to distribute the results of its Planning Assessment to one of its adjacent Transmission Planners or adjacent Planning Coordinators, and to one functional entity that has a reliability related need and has submitted a written request for the information, respectively in accordance with Requirement R8.	N/A	The responsible entity failed to distribute the results of its Planning Assessment to its adjacent Transmission Planners or adjacent Planning Coordinators, and to any functional entity that has a reliability related need and has submitted a written request for the information, respectively in accordance with Requirement R8.	The responsible entity failed to provide a documented response to a recipient of the Planning Assessment results who provided documented comments on the results within 90 calendar days of receipt of those comments in accordance with Requirement R8.

The proposed revised wording is essentially the same as the current wording and does not provide any additional clarity. No change made.

The SDT believes that the existing language regarding known commitments is adequate and no further change is required.

9. The SDT has revised the definitions in response to industry comments to the third posting. Do you agree with these definition changes? If not, please clearly indicate which definition you disagree with and provide specific comments.

Summary Consideration: The SDT received several comments on definitions. The following summarizes the questions and response on the definitions. Planning Assessment: The SDT considered the comment, but feels that a Corrective Action Plan includes the 'do nothing' option, which would address the concern and decided not to change the definition.

Non-Consequential Load Loss: To improve clarity, the SDT has revised the definition.

The SDT believes the exclusion of voltage sensitive load belongs in the Non-Consequential Load Loss definition because it is not Non-Consequential load.

Consequential Load Loss: Due to comments in prior postings, the SDT has elected to define Consequential Load specific to Load that is lost due to a fault. Non-Consequential Load has been defined to be all else, except as noted. That which has been noted is excluded from coverage by the standard. So it is not necessary to include the noted exclusions from the Non-Consequential Load Loss definition in the Consequential Load Loss definition.

Planning Horizon: The only location where planning horizon didn't specify Near-Term or Long-Term was in the 'Purpose'. The SDT didn't feel that this reference needed to be specific or was sufficient to warrant a definition. No changes have been made.

Year One: The SDT believes the definition will capture both a summer and winter peak and is necessary to provide a clear starting point for the planning horizon.

Year One is not considered to be the immediate year following the current year, as suggested by some, because if the study were completed at the end of the year, then there would be no time to implement a Corrective Action Plan. Also, that following year is in the Operational Planning time frame.

The SDT doesn't see a problem with entities having slightly different study periods. This situation exists under the current TPL Standards.

With regards to any possible inconsistencies within the practices of any entity, the SDT believes that the requirements as defined are required for a Planning Assessment. How these requirements are met is beyond the scope of this standard and should be discussed within the responsible entities.

Consequential Generation Loss: Generation run-back and tripping is acceptable. It is up to the Planning Coordinator and the Transmission Planner to determine how many units or cumulative MW may be interrupted due to either a consequential or non-consequential action. Therefore it isn't necessary for the SDT to define Consequential Generation Loss.

Note 'b' has been revised to clarify the issue. Consequential Load Loss as well as generation loss is acceptable as a consequence of any planning or extreme event excluding P0.

Bus-Tie Breaker: The SDT has elected to define a Bus-Tie Breaker. If the SDT were to also define what is not a Bus-Tie Breaker, then anything that was missed would not be defined. To be comprehensive, the SDT has to limit the definition to what a Bus-Tie Breaker is to avoid further complexity.

Steady State: 'Steady State' was changed to 'steady state', so no definition is required.

The following definition was changed for clarity due to industry comments:

Non-Consequential Load Loss: Non-Interruptible Load loss that does not include: (1) Consequential Load Loss, (2) the response of voltage sensitive Load, or (3) Load that is disconnected from the System by end-user equipment.

Note 'b': Consequential Load Loss as well as generation loss is acceptable as a consequence of any planning or extreme event excluding P0.

Organization	Yes or No	Comments for Question 9
FRCC Transmission Working Group		Consider the following definition for clarification: Planning Assessment: Documented evaluation of (1) studies of future Transmission System performance and (2) Corrective Action Plans (included in studies) to remedy identified deficiencies. Non-Consequential Load Loss: Non-Interruptible Load loss that does not include: (1) Consequential Load Loss, or (2) the response of voltage sensitive Load that is disconnected from the System by end-user equipment.
Response: Planning Assessment: The SDT considered the comment, but feels that a Corrective Action Plan includes the 'do nothing' option, which would address the concern and decided not to change the definition. Non-Consequential Load Loss: To improve clarity, the SDT has revised the definition for Non-Consequential Load Loss. **Non-Consequential Load Loss:** Non-Interruptible Load loss that does not include: (1) Consequential Load Loss, (2) the response of voltage sensitive Load, or (3) Load that is disconnected from the System by end-user equipment.		
ERCOT ISO	No	* Planning horizon is not formally defined but used many times throughout the standards. If there is a need to define the Near- and Long-term Transmission Planning Horizons, then the transmission planning horizon itself also should be defined. Additional confusion on this issue is the use of Long-term Planning as a planning horizon of one year or longer, also not formally defined. We finally found this referenced in the NERC Drafting Team guideline, which is not an obvious place to look for a definition. * Year One is only used two times " once to define Near-term Transmission Planning Horizon and once in the TPL standard. If this is not used throughout the NERC standards, it should not be defined. As an alternative, the transmission planning horizon could be formally defined, with Near- and Long-term Transmission Planning Horizons defined as subsets of the main definition. This would eliminate the need for a formal definition of Year One. If Year One stays as a new definition, it seems to be too broad, potentially allowing for omission of a peak season in the study. For example, if Year One is the period 12 to 18 months from the end of 2009, then Year One is currently 2011. Why is the year 2010 not considered to be Year One.*

Organization	Yes or No	Comments for Question 9
		Non-Consequential Load Loss is confusing " due to the base word "consequence". Consequential Load Loss is intended to be a load loss that is a result, or consequence, of the isolation. Non-Consequential Load Loss seems intended to imply it was not a consequence of the isolation. Although the standard attempts to define the term, this definition does not agree with the common English definition of the term. "Non-consequential" (or "Inconsequential") implies that the load loss is unimportant, minor or insignificant. This is the opposite intent of how this term is used in the standard, where it is used to mean the load that it is unacceptable to lose for a particular event. Alternatives could be "Direct Load loss" and "Indirect Load loss" to replace the two concepts that are included as Consequential and Non-Consequential respectively.
Response: Planning Horizon: The only location where planning horizon didn't specify Near-Term or Long-Term was in the 'Purpose'. The SDT didn't feel that this reference needed to be specific or was sufficient to warrant a definition. No changes have been made. Year One: Year One is not considered to be the immediate year following the current year because if the study were completed at the end of the year, then there would be no time to implement a Corrective Action Plan. Also, that following year is in the Operational Planning time frame. No changes have been made. As you have indicated, the terms 'consequential' and 'non-sequential' can be interpreted consistent with the intent of the SDT. Further the use has been accepted by NERC and seems to have been accepted by the industry in the multiple postings to date. By changing 'Non-consequential' (or not-consequential) to 'inconsequential' you have changed the meaning. The SDT is content with the terms and has focused on the clarity of the definition, which also seems to be the focus of the comments from the industry. The SDT has decided to stay with the existing terms rather than changing them as this late date. No changes have been made.		
Northeast Utilities	No	[Comment on Year One Definition] This still defines Year One as both a particular year AND a window. It cannot be both. We suggest rewording the second sentence to read: "This is further defined as the beginning 12-18 months from the end of the current year".
Hydro-Québec TransEnergie (HQT)	No	Definitions " Year One " This still defines Year One as both a particular year AND a window. It cannot be both. Suggest rewording the second sentence to read: "This is further defined as beginning 12-18 months from the end of the current year."
Response: The SDT does not agree that there is an issue and has not changed the definition.		
Platte River Power Authority	No	1. Please make the definition for Non-Consequential Load Loss simple and straightforward. For example, Non-Consequential Load Loss: The planned shedding of firm load.(Note that phrases "firm load" and "firm load shedding" are used frequently in a dozen other standards.) 2. Move the remainder of the sentence about "the response of voltage sensitive Load including...by end-user equipment." from the Non-Consequential Load Loss definition to the Consequential Load Loss definition.
Response: Non-Consequential Load Loss; Due to comments received in earlier postings, the SDT believes that the definition can not be that simple. The SDT believes the exclusion of voltage sensitive load belongs in the Non-Consequential Load Loss definition because it is not Non-Consequential Load. Therefore, any reduction in load due to sensitivity to low voltage would not result in a compliance violation. No change made.		

Organization	Yes or No	Comments for Question 9
To improve clarity, the SDT has revised the definition for Non-Consequential Load Loss. **Non-Consequential Load Loss:** Non-Interruptible Load loss that does not include: (1) Consequential Load Loss, (2) the response of voltage sensitive Load, or (3) Load that is disconnected from the System by end-user equipment.		
NERC Standards Review Subcommittee	No	A. Add a Consequential Generation Loss definition, which would be a complement to the Consequential Load Loss definition. Both consequential load loss and consequential generation loss are referred to in note "b" of the Steady State & Stability section of Table 1, but only consequential load loss is defined. The MRO NSRS suggests text of: Consequential Generation Loss: All Generation that is no longer delivered to any Transmission Facilities as a result of the Transmission Facilities removal from service by the operation of the installed Protection Systems designed to isolate fault conditions or otherwise protect the Transmission Facilities from abnormal operating conditions. B. The MRO NSRS offers the following comment to one of the proposed definitions of TPL-001. Non-Consequential Load Loss: Non-Interruptible Load loss other than Consequential Load Loss that is the result of the response of voltage sensitive Load including Load that is disconnected from the System by end-user equipment. C. Add a Planning Horizon definition. This term is used in this proposed standard, in the FAC-010-2 standard, and possibly in other future standards, but it has not been defined yet. D. The SDT is to be commended for working on the Year one definition, however, concerns exist that if the standard is adopted as written, it is incompatible with the eastern interconnection wide ERAG model process. E. If the SDT intends to change the planning processes and model building processes throughout NERC in this regard, then the SDT should explain the benefits of changing this process and verify that it does not sabotage the normal model building and study process.
Response: A. Generation run-back and tripping is acceptable. It is up to the Planning Coordinator and the Transmission Planner to determine how many units or cumulative MW may be interrupted due to either a consequential or non-consequential action. Therefore it isn't necessary for the SDT to define Consequential Generation Loss. Note 'b' has been revised to clarify the issue. **Note 'b':** Consequential Load Loss as well as generation loss is acceptable as a consequence of any planning or extreme event excluding P0. B. To improve clarity, the SDT has revised the definition for Non-Consequential Load Loss. **Non-Consequential Load Loss:** Non-Interruptible Load loss that does not include: (1) Consequential Load Loss, (2) the response of voltage sensitive Load, or (3) Load that is disconnected from the System by end-user equipment C. The only location where planning horizon didn't specify Near-Term or Long-Term was in the 'Purpose'. The SDT didn't feel that this reference needed to be specific or was sufficient to warrant a definition. No changes have been made. D & E. With regards to any possible inconsistencies within the practices of any entity, the SDT believes that the requirements as defined are required for a Planning		

Organization	Yes or No	Comments for Question 9
Assessment. How these requirements are met is beyond the scope of this standard and should be discussed within the responsible entities.		
MAPP	No	Add a Consequential Generation Loss definition, which would be a complement to the Consequential Load Loss definition. Both consequential load loss and consequential generation loss are referred to in note "b" of the Steady State & Stability section of Table 1, but only consequential load loss is defined. We suggest text of: "Consequential Generation Loss: All Generation that is no longer delivered to any Transmission Facilities as a result of the Transmission Facilities removal from service by the operation of the installed Protection Systems designed to isolate fault conditions or otherwise protect the Transmission Facilities from abnormal operating conditions. Add a Planning Horizon definition. This term is used in this proposed standard, in the FAC-010-2 standard, and possibly in other future standards, but it has not been defined yet.
Response: Consequential Generation Loss: Generation run-back and tripping is acceptable. It is up to the Planning Coordinator and the Transmission Planner to determine how many units or cumulative MW may be interrupted due to either a consequential or non-consequential action. Therefore it isn't necessary for the SDT to define Consequential Generation Loss. Note 'b' has been revised to clarify the issue. **Note 'b':** Consequential Load Loss as well as generation loss is acceptable as a consequence of any planning or extreme event excluding P0. Planning Horizon: The only location where planning horizon didn't specify Near-Term or Long-Term was in the 'Purpose'. The SDT didn't feel that this reference needed to be specific or was sufficient to warrant a definition. No changes have been made.		
United Illuminating	No	As currently defined "Non-Consequential Load Loss" could allow widespread or cascading motor stall. The language in the definition cannot be this generic. The text is broad enough that it could allow a voltage collapse, the definition is incompatible with Table 1a (BES Transmission voltage instability, cascading outages, and uncontrolled islanding shall not occur). The definition for the non-consequential load loss combined with Table 1 would prohibit any customer from tripping its own load for contingencies that indicate 'no' in the non-consequential load loss column. This is not practical and appears to be an unintended consequence of the change in definition. This requires a change in the definition or the table.We suggest clearly defining exactly what Non-Consequential Load Loss is as "intended post-Contingency loss of load caused by operator or SPS (RAS) action."
Central Maine Power Company	No	As currently defined Non-Consequential Load Loss could allow widespread or cascading motor stall. The language in the definition cannot be this generic. The text is broad enough that it could allow a voltage collapse; the definition is incompatible with Table 1a (BES Transmission voltage instability, cascading outages, and uncontrolled islanding shall not occur). The definition for the non-consequential load loss combined with Table 1 would prohibit any customer from tripping its own load for contingencies that indicate 'no' in the non-consequential load loss column. This is not practical and appears to be an unintended consequence of the change in definition. This requires a change in the definition or the table.We suggest defining Non-

Organization	Yes or No	Comments for Question 9
		Consequential Load Loss as "intended post-Contingency loss of load caused by operator or SPS (RAS) action."
ISO New England	No	As currently defined Non-Consequential Load Loss could allow widespread or cascading motor stall. The language in the definition cannot be this generic. The text is broad enough that it could allow a voltage collapse, the definition is incompatible with Table 1a (BES Transmission voltage instability, cascading outages, and uncontrolled islanding shall not occur). The definition for the non-consequential load loss combined with Table 1 would prohibit any customer from tripping its own load for contingencies that indicate 'no' in the non-consequential load loss column. This is not practical and appears to be unintended consequencetof the change in definition. This requires a change in the definition or the table.We suggest defining Non-Consequential Load Loss as "intended post-Contingency loss of load caused by operator or SPS (RAS) action."
National Grid	No	As currently defined Non-Consequential Load Loss could allow widespread or cascading motor stall. The language in the definition cannot be this generic. The text is broad enough that it could allow a voltage collapse, the definition is incompatible with Table 1a (BES Transmission voltage instability, cascading outages, and uncontrolled islanding shall not occur). The definition for the non-consequential load loss combined with Table 1 would prohibit any customer from tripping its own load for contingencies that indicate 'no' in the non-consequential load loss column. This is not practical and appears to be unintended consequent of the change in definition. This requires a change in the definition or the table.It is suggested to redefine Non-Consequential Load Loss as "intended post-Contingency loss of load caused by operator or SPS (RAS) action."
Response: The SDT added Requirement R5 to require that every Transmission Planner and Planning Coordinator has a voltage criteria. The voltage criteria should prevent the exposure to widespread or cascading motor stall and should limit any potential misinterpretation that the Non-Consequential Load Loss would allow such events. Table 1a (BES Transmission voltage instability, Cascading, and uncontrolled islanding shall not occur) supports Requirement R5 and reinforces the point that the definition for Non-Consequential Load Loss should not be read so broadly as to allow for unacceptable events. The definition for the Non-Consequential Load Loss excludes end-user actions, which disconnect the Load from the system. So Table 1 does not apply to such Load. The proposed definition is too narrow and would only capture anticipated Load losses for predefined conditions. It would not capture unanticipated loss of Load, which still needs to be accounted for within the definition. To improve clarity, the SDT has revised the definition for Non-Consequential Load Loss. **Non-Consequential Load Loss:** Non-Interruptible Load loss that does not include: (1) Consequential Load Loss, (2) the response of voltage sensitive Load, or (3) Load that is disconnected from the System by end-user equipment		
Progress Energy Florida, Inc.	No	As PEF is opposed to TPL-001-1 as a whole, PEF will have no further comment on this issue other than to encourage all appropriate parties to review PEF's previous comments to this effect.
Response: Throughout the drafting process, the SDT has carefully considered your comments as well as comments from other industry members.		

Organization	Yes or No	Comments for Question 9
Deseret Power	No	Comments: The definition of Non-Consequential Load is in need of clarification. As written, it could be interpreted that load that is disconnected from the System by end-user equipment would not be allowed for certain contingencies. Suggested revision to the language follows Non-Interruptible Load loss other than: "Consequential Load Loss" the response of voltage sensitive Load ? Load that is disconnected from the System by end-user equipment. This version uses the same wording but clarifies that the term "other than" applies to all three things.
Response: Non-Consequential Load Loss: To improve clarity, the SDT has revised the definition for Non-Consequential Load Loss **Non-Consequential Load Loss:** Non-Interruptible Load loss that does not include: (1) Consequential Load Loss, (2) the response of voltage sensitive Load, or (3) Load that is disconnected from the System by end-user equipment.		
Sacramento Municipal Utility District	No	Definition of Non-Consequential Load (Non-CLL): This definition excludes from the "Non-Consequential Load" only the "Interruptible" portion of Demand Response. The last SDT response to a comment on Draft #3 stated that there is no ceiling on the amount of DSM that can be utilitized (see Reference 1 below). Since Demand Response is more than just "Interruptible" demand, it is recommended that the exclusion in the definition for Non-CLL be broadened to include other relevant categories (see Reference 2 below) of Demand Response / DSM that is acceptable. Reference 1: pdf page 310, 337: SDT response related to DSM at http://www.nerc.com/docs/standards/sar/ATFNSDT_third_posting_comment_responses_2009Sept16.pdf Reference 2: http://www.nerc.com/docs/pc/drdtf/DADS_Phase_III_Final_090109.pdf, Figure 3 at pdf page 16, block under Capacity; and, associated definitions in Appendix III at pdf page 46 Use of the defined term "Planning Assessment" throughout the standard: Since the definition includes both performance evaluation (assessment) and corrective action to remedy identified deficiencies, its usage throughout the standard should be reviewed to ensure that it does not mandate corrective actions where the minimum requirement may be calling only for an assessment. The SDT should consider including a definition for "Spare Equipment Strategy". The SDT's comments on "spare equipment strategy" (at pdf page 122 of Consideration of Comments on 3rd Draft) state that it is based on a directive from FERC Order 693. Directives that impact reliability should be translated in to a requirement in a Standard. Even the proposed scope of MOD-010-0 (reference http://www.nerc.com/files/2010-2012_RS-Development-Plan_Volume-I_II.pdf page 223) makes a reference to the strategy, but does not require it.
Response: DSM: The SDT believes that any Load that is interruptible should be so under an agreement or tariff provision, which excludes it from the constraints of the TPL standard. No changes have been made. Non-Consequential Load Loss: To improve clarity, the SDT has revised the definition for Non-Consequential Load Loss. **Non-Consequential Load Loss:** Non-Interruptible Load loss that does not include: (1) Consequential Load Loss, (2) the response of voltage sensitive Load, or (3) Load that is disconnected from the System by end-user equipment Planning Assessment: The SDT considered the comment, but feels that a Corrective Action Plan includes the 'do nothing' option, which would address the concern		

Organization	Yes or No	Comments for Question 9
and decided not to change the definition. Spare equipment strategy: The SDT believes that spare equipment strategy can be managed by individual Transmission Owners and that the term does not have to be defined in the Standard. The SDT further believes it has satisfied the intent of the directive of FERC Order 693 by including Requirement R2, part 2.1.5. No changes have been made.		
Midwest ISO	No	Definition Section: The definition for "Bus Tie Breaker" should be revised to clarify whether a breaker in a standard ring bus or breaker and one-half scheme should be considered a "bus tie breaker". Definition Section: We believe that the "Year One" definition changes have clarified what is intended. Definition Section: We suggest having the following definition of Consequential Generation Loss added to the definition section. Consequential Generation Loss - All generation that is no longer connected to the transmission system as a result of Transmission Facilities being removed from service by a Protection System operation designed to isolate the fault.
Response: Bus-Tie Breaker: The SDT has elected to define a Bus-Tie Breaker. If the SDT were to also define what is not a Bus-Tie Breaker, then anything that was missed would not be defined. To be comprehensive, the SDT has to limit the definition to what a Bus-Tie Breaker is to avoid further complexity. No changes have been made. Consequential Generation Loss: Generation run-back and tripping is acceptable. It is up to the Planning Coordinator and the Transmission Planner to determine how many units or cumulative MW may be interrupted due to either a consequential or non-consequential action. Therefore it isn't necessary for the SDT to define Consequential Generation Loss. Note 'b' has been revised to clarify the issue. Consequential Load Loss as well as generation loss is acceptable as a consequence of any planning or extreme event excluding P0. **Note 'b':** Consequential Load Loss as well as generation loss is acceptable as a consequence of any planning or extreme event excluding P0.		
Northeast Power Coordinating Council--RSC	No	Definitions " Year One " This still defines Year One as both a particular year AND a window. It cannot be both. Suggest rewording the second sentence to read: "This is further defined as beginning 12-18 months from the end of the current year." As currently defined Non-Consequential Load Loss could allow widespread or cascading motor stall. The language in the definition cannot be this generic. The text is broad enough that it could allow a voltage collapse. The definition is incompatible with Table 1a (BES Transmission voltage instability, cascading outages, and uncontrolled islanding shall not occur). The definition for the non-consequential load loss combined with Table 1 would prohibit any customer from tripping its own load for contingencies that indicate 'no' in the non-consequential load loss column. This is not practical and appears to be an unintended consequence of the change in definition. This requires a change in the definition or the table.It is suggested to redefine Non-Consequential Load Loss as "intended post-Contingency loss of load caused by operator or SPS (RAS) action."

Organization	Yes or No	Comments for Question 9
Response: Year One: The SDT does not agree that there is an issue and has not changed the definition. No change made. Non-Consequential Load Loss: The SDT added Requirement R5 to require that every Transmission Planner and Planning Coordinator has a voltage criteria. The voltage criteria should prevent the exposure to widespread or cascading motor stall and should limit any potential misinterpretation that the Non-Consequential Load Loss would allow such events. Table 1a (BES Transmission voltage instability, Cascading, and uncontrolled islanding shall not occur) supports Requirement R5 and reinforces the point that the definition for Non-Consequential Load Loss should not be read so broadly as to allow for unacceptable events. The definition for the Non-Consequential Load Loss excludes end-user actions, which disconnect the Load from the system. So Table 1 does not apply to such Load. The proposed definition is too narrow and would only capture anticipated Load losses for predefined conditions. It would not capture unanticipated loss of Load, which still needs to be accounted for within the definition. To improve clarity, the SDT has revised the definition for Non-Consequential Load Loss. **Non-Consequential Load Loss:** Non-Interruptible Load loss that does not include: (1) Consequential Load Loss, (2) the response of voltage sensitive Load, or (3) Load that is disconnected from the System by end-user equipment.		
Gainesville Regional Utilities	No	I still find the Non-Consequential Load Loss definition vague. But, I presently do not have anything better to offer and thus I can live with it.
Response: Thank you for your response.		
SRC of ISO/RTO	No	In note b of the steady state and stability section of Table 1, consequential generation loss is referenced; however, there is no definition of such. A definition of consequential generation loss that is defined similar to "consequential load loss" should be added. The definition for "Bus Tie Breaker" should be revised to clarify whether a breaker in a standard ring bus or breaker and one-half scheme should be considered a "bus tie breaker". "year one" definition changes have clarified what is intended. AESO does not comment on VSLs or VRFs.
Response: Consequential Generation Loss: Generation run-back and tripping is acceptable. It is up to the Planning Coordinator and the Transmission Planner to determine how many units or cumulative MW may be interrupted due to either a consequential or non-consequential action. Therefore it isn't necessary for the SDT to define Consequential Generation Loss. Note 'b' has been revised to clarify the issue. **Note 'b':** Consequential Load Loss as well as generation loss is acceptable as a consequence of any planning or extreme event excluding P0. Bus Tie Breaker: The SDT has elected to define a Bus Tie Breaker. If the SDT were to also define what is not a Bus Tie Breaker, then anything that was missed would not be defined. To be comprehensive the SDT has to limit the definition to what a Bus Tie Breaker is to avoid further complexity.		

Organization	Yes or No	Comments for Question 9
The SDT does not see the difference between what is in the draft and what is proposed and does not agree that there is an issue. No change has been made to the definition.		
TVA System Planning	No	Is the 12-18 months referenced in the Year One definition actually from the start of the TA or the anticipated completion date of the same TA? Suggest revising the Non-Consequential Load Loss definition: Non-Interruptible Load loss other than (1) Consequential Load Loss, (2) the response of voltage sensitive Load including Load that is disconnected from the System by end-user equipment, and (3) utility loads such as pump storage loads, compressed air generating pumping loads, and scrubber loads, etc when such loads do not result in tripping of a generating unit.
Response: Year One: Year One begins 12-18 months from the end of the calendar year. No change made. Non-Consequential Load Loss: To improve clarity, the SDT has revised the definition for Non-Consequential Load Loss. **Non-Consequential Load Loss:** Non-Interruptible Load loss that does not include: (1) Consequential Load Loss, (2) the response of voltage sensitive Load, or (3) Load that is disconnected from the System by end-user equipment. The SDT interpreted utility loads such as pump storage loads, compressed air generating pumping loads, and scrubber loads as interruptible loads, which don't need to be highlighted separately. As a result, no changes were made to include this list.		
NYISO	No	Question # 9 The SDT has revised the definitions in response to industry comments to the third posting. Do you agree with these definition changes? If not, please clearly indicate which definition you disagree with and provide specific comments. No. Need to define "Steady State" and "Consequential Load" as well as other phrases included throughout the NYISO's response.
Response: 'Steady State' was changed to 'steady state', so no definition is required. No change made. No instances of 'Consequential Load' were identified in the draft standard. All of the references were to 'Consequential Load Loss', which is defined. No change made.		
Oklahoma Gas & Electric	No	R 3.4, R3.5, R4.4 & R4.5 There appear to be no standards of directions on identifying severe or extreme system impacts. This may need to be defined. Extreme events evaluated (last page of Table 1) OG&E needs more specific information on what is defined to be an extreme event before offering support. It appears the number of possible combinations and permutations that could be run make any compressive study overwhelming to perform and would provide very limited benefits. This needs to be clarified.
Response: Extreme event: The SDT agrees that extreme event analysis could be overwhelming if all possible combinations and permutations were evaluated. However that is not the expectation. Requirement R3, part 3.5 of the standard requires only those extreme events "that are expected to produce more severe System Impacts". Therefore this is a judgment call with a corollary expectation that one can provide an explanation of the thoughts behind the judgment for selecting the events.		

Organization	Yes or No	Comments for Question 9
Duke Energy	No	Reword the definition of Non-Consequential Load Loss as follows: Non-Interruptible Load loss other than Consequential Load Loss and other than the response of voltage sensitive Load including Load that is disconnected from the System by end-user equipment.
Response: Non-Consequential Load Loss: To improve clarity, the SDT has revised the definition for Non-Consequential Load Loss. **Non-Consequential Load Loss:** Non-Interruptible Load loss that does not include: (1) Consequential Load Loss, (2) the response of voltage sensitive Load, or (3) Load that is disconnected from the System by end-user equipment.		
Florida Power and Light	No	The definition of "Known Commitments" should explain how that would differentiate between Planned Commitments Planning Assessment definition should be clarified as follows: Planning Assessment: Documented evaluation of (1) studies of future Transmission System performance and (2) Corrective Action Plans (included in studies) to remedy identified deficiencies. Non-Consequential Load Loss definition should be clarified as follows: Non-Consequential Load Loss: Non-Interruptible Load loss that does not include: (1) Consequential Load Loss, or (2) the response of voltage sensitive Load that is disconnected from the System by end-user equipment. The SDT should do a search through the document (and Table 1) on “cascading” and capitalize the “C” and delete “outages” where it appears after “Cascading”.
Response: Known Commitments: The SDT believes that the existing language is adequate and no further change is required. If you do not have any known Firm Transmission Service as an example, then this fact should just be documented. Planning Assessment: The SDT considered the comment, but feels that a Corrective Action Plan includes the ‘do nothing’ option, which would address the concern and decided not to change the definition. Non-Consequential Load Loss: To improve clarity, the SDT has revised the definition for Non-Consequential Load Loss. **Non-Consequential Load Loss:** Non-Interruptible Load loss that does not include: (1) Consequential Load Loss, (2) the response of voltage sensitive Load, or (3) Load that is disconnected from the System by end-user equipment. The SDT did change, “cascading outages” to “Cascading” throughout the standard as suggested.		
Ameren	No	The definition of Bus-tie Breaker is unclear. This definition needs to be made clearer to remove issues regarding P2 and P5 planning events. We suggest the following additional language: A breaker in a standard breaker-and-a-half or ring bus configuration is not a Bus-tie Breaker. Suggest rewording Non-Consequential Load Loss definition: Non-Interruptible Load loss other than Consequential Load Loss. Non-Consequential Load Loss does not include the response of voltage sensitive

Organization	Yes or No	Comments for Question 9
		Load or Load that is disconnected from the System by end-user equipment.
Response: Bus-Tie Breaker: The SDT has elected to define a Bus-Tie Breaker. If the SDT were to also define what is not a Bus-Tie Breaker, then anything that was missed would not be defined. To be comprehensive the SDT has to limit the definition to what a Bus-Tie Breaker is to avoid further complexity. Non-Consequential Load Loss: To improve clarity, the SDT has revised the definition for Non-Consequential Load Loss. **Non-Consequential Load Loss:** Non-Interruptible Load loss that does not include: (1) Consequential Load Loss, (2) the response of voltage sensitive Load, or (3) Load that is disconnected from the System by end-user equipment.		
Arizona Public Service Co.	No	The definition of Non-Consequential Load is confusing. It is not clear whether the response of voltage sensitive load and the load that is disconnected by the end user is included or not included. It is suggested that all items that are excluded be itemized and that there be no ambiguity.
Response: Non-Consequential Load Loss: To improve clarity, the SDT has revised the definition for Non-Consequential Load Loss. **Non-Consequential Load Loss:** Non-Interruptible Load loss that does not include: (1) Consequential Load Loss, (2) the response of voltage sensitive Load, or (3) Load that is disconnected from the System by end-user equipment.		
Bonneville Power Administration	No	The definition of Non-Consequential Load is in need of clarification. As written, it could be interpreted that load that is disconnected from the System by end-user equipment would not be allowed for certain contingencies. Suggested revision to the language followsNon-Interruptible Load loss other than: " Consequential Load Loss " the response of voltage sensitive Load " Load that is disconnected from the System by end-user equipment.This version uses the same wording but clarifies that the term "other than" applies to all three things.
Idaho Power	No	The definition of Non-Consequential Load is in need of clarification. As written, it could be interpreted that load that is disconnected from the System by end-user equipment would not be allowed for certain contingencies. Suggested revision to the language followsNon-Interruptible Load loss other than: " Consequential Load Loss " the response of voltage sensitive Load ? Load that is disconnected from the System by end-user equipment.This version uses the same wording but clarifies that the term "other than" applies to all three things.
Modesto Irrigation District Transmission Planning	No	The definition of Non-Consequential Load is in need of clarification. As written, it could be interpreted that load that is disconnected from the System by end-user equipment would not be allowed for certain contingencies. Suggested revision to the language followsNon-Interruptible Load loss other than: " Consequential Load Loss " the response of voltage sensitive Load " Load that is disconnected from the System by end-user equipment.This version uses the same wording but clarifies that the term "other than" applies to all three things.
NV Energy	No	The definition of Non-Consequential Load is in need of clarification. As written, it could be interpreted that load that is disconnected from the System by end-user equipment would not be allowed for certain contingencies. Suggested revision to the language followsNon-Interruptible Load loss other than: " Consequential Load Loss " the response of voltage sensitive Load ? Load that is disconnected from the System by end-user

Organization	Yes or No	Comments for Question 9
		equipment.This version uses the same wording but clarifies that the term “other than” applies to all three things.
Pacific Gas and Electric Co.	No	The definition of Non-Consequential Load is in need of clarification. As written, it could be interpreted that load that is disconnected from the System by end-user equipment would not be allowed for certain contingencies. Suggested revision to the language followsNon-Interruptible Load loss other than: “ Consequential Load Loss “ the response of voltage sensitive Load ? Load that is disconnected from the System by end-user equipment.This version uses the same wording but clarifies that the term “other than” applies to all three things.
Puget Sound Energy, Inc.	No	The definition of Non-Consequential Load is in need of clarification. As written, it could be interpreted that load that is disconnected from the System by end-user equipment would not be allowed for certain contingencies. Suggested revision to the language followsNon-Interruptible Load loss other than: “ Consequential Load Loss “ the response of voltage sensitive Load ? Load that is disconnected from the System by end-user equipment.This version uses the same wording but clarifies that the term “other than” applies to all three things.
San Diego Gas & Electric Co	No	The definition of Non-Consequential Load is in need of clarification. As written, it could be interpreted that load that is disconnected from the System by end-user equipment would not be allowed for certain contingencies. Suggested revision to the language followsNon-Interruptible Load loss other than: “ Consequential Load Loss “ the response of voltage sensitive Load ? Load that is disconnected from the System by end-user equipment.
Southern California Edison (SCE)	No	The definition of Non-Consequential Load is in need of clarification. As written, it could be interpreted that load that is disconnected from the System by end-user equipment would not be allowed for certain contingencies. Suggested revision to the language followsNon-Interruptible Load loss other than: “ Consequential Load Loss “ the response of voltage sensitive Load ? Load that is disconnected from the System by end-user equipment.This version uses the same wording but clarifies that the term “other than” applies to all three things.
SRP	No	The definition of Non-Consequential Load is in need of clarification. As written, it could be interpreted that load that is disconnected from the System by end-user equipment would not be allowed for certain contingencies. Suggested revision to the language followsNon-Interruptible Load loss other than: “ Consequential Load Loss “ the response of voltage sensitive Load ? Load that is disconnected from the System by end-user equipment.This version uses the same wording but clarifies that the term “other than” applies to all three things.
Utility System Efficiencies, Inc. (USE)	No	The definition of Non-Consequential Load is in need of clarification. As written, it could be interpreted that load that is disconnected from the System by end-user equipment would not be allowed for certain contingencies. Suggested revision to the language followsNon-Interruptible Load loss other than: “ Consequential Load Loss “ the response of voltage sensitive Load ? Load that is disconnected from the System by end-user equipment.This version uses the same wording but clarifies that the term “other than” applies to all three things.
Western Area Power Adm - RMR	No	The definition of Non-Consequential Load is in need of clarification. As written, it could be interpreted that load that is disconnected from the System by end-user equipment would not be allowed for certain contingencies.

Organization	Yes or No	Comments for Question 9
		Suggested revision to the language follows:Non-Interruptible Load loss other than: " Consequential Load Loss " the response of voltage sensitive Load ? Load that is disconnected from the System by end-user equipment.This version uses the same wording but clarifies that the term "other than" applies to all three things.
Xcel Energy	No	The definition of Non-Consequential Load is in need of clarification. As written, it could be interpreted that load that is disconnected from the System by end-user equipment would not be allowed for certain contingencies. Suggested revision to the language followsNon-Interruptible Load loss other than: " Consequential Load Loss " the response of voltage sensitive Load ? Load that is disconnected from the System by end-user equipment.This version uses the same wording but clarifies that the term "other than" applies to all three things.
NorthWestern Energy	No	The definition of Non-Consequential Load needs clarification. A possible revision is to list bulleted items in the definition: Non-Interruptible Load loss other than: " Consequential Load Loss " the response of voltage sensitive Load ? Load that is disconnected from the System by end-user equipment.This way "other than" applies to all three bullets.
Response: Non-Consequential Load Loss: To improve clarity, the SDT has revised the definition for Non-Consequential Load Loss. **Non-Consequential Load Loss:** Non-Interruptible Load loss that does not include: (1) Consequential Load Loss, (2) the response of voltage sensitive Load, or (3) Load that is disconnected from the System by end-user equipment.		
Omaha Public Power District	No	The definition of Non-Consequential Load Loss is not clear. It's not clear whether "the response of voltage sensitive Load including Load that is disconnected from the System by end-user equipment" is considered to be Non-Consequential Load Loss or not. Based on previous drafts, it appears that the SDT's intent is that "the response of voltage sensitive Load including Load that is disconnected from the System by end-user equipment" is considered to be a special type of Consequential Load Loss--a type that transmission-planning entities are not allowed to rely upon to meet steady-state performance requirements. Comments on this fourth draft from one commenter seemed to indicate that he was interpreting the definition of Non-Consequential Load Loss to mean that "the response of voltage sensitive Load including Load that is disconnected from the System by end-user equipment" is considered to be Non-Consequential Load Loss. Consider breaking the definition of Non-Consequential Load Loss into two or more sentences to prevent misinterpretation and confusion. Also consider including a reference to "the response of voltage sensitive Load including Load that is disconnected from the System by end-user equipment" in the definition of Consequential Load Loss if this type of load loss is considered to be a special type of Consequential Load Loss. If this type of load loss is considered to be a special type of Consequential Load Loss, add the following sentence to the end of Note "b" at the top of Table 1: However, see Note "i" for a restriction that applies to steady state performance.
Response: Non-Consequential Load Loss: To improve clarity, the SDT has revised the definition for Non-Consequential Load Loss. **Non-Consequential Load Loss:** Non-Interruptible Load loss that does not include: (1) Consequential Load Loss, (2) the response of voltage sensitive Load, or (3) Load that is disconnected from the System by end-user equipment.		

Organization	Yes or No	Comments for Question 9
The SDT believes the reference to exclude voltage sensitive load belongs in the Non-Consequential Load Loss definition because this is neither Consequential nor Non-Consequential. No change was made to Note 'b' or 'i' for this issue.		
NERC System Protection and Control Subcommittee (SPCS)	No	The Drafting Team should change the definition of Consequential Load Loss to clarify that load lost due to operation of remote backup protection is not Consequential Load Loss. Operation of remote backup protection is not Normal Clearing for a fault.Consequential Load Loss: All Load that is no longer served by the Transmission System as a result of Transmission Facilities being removed from service by Normal Clearing initiated by the a Protection System operation designed to isolate the fault.
Response: Consequential Load Loss considering operation of remote backup protection: For the purpose of the Transmission Planning Standard the remote backup protection is still operating to isolate the fault and the SDT is interpreting the subsequent loss of Load to be Consequential Load Loss. No change was made.		
MidAmerican Energy Company	No	The SDT is to be commended for working on the Year One definition, however, MidAmerican continues to be concerned that if the standard is adopted with the Year One definition as written, it is incompatible with the eastern interconnection wide ERAG model process.The definition as currently provided in the draft standard states that Year One of analysis should begin 12-18 months from the end of the current calendar year. This contradicts the time frames that models are currently made available in the MRO as a result of the process for building models through the ERAG. For example, the models developed through the MRO and ERAG model building process in 2009 include cases for the years 2010, 2011, 2015, and 2020. According to the definition of Year One, the 2011 cases in the 2009 series models would be representative of Year One during the 2009 calendar year. However the ERAG models are not provided until late 2009, and some data sets may not be available until early 2010. With this Year One definition, there would be limited or no time where the ERAG model series would include cases representing Year One as defined in the draft standard. MidAmerican urges the SDT to delete the Year One definition altogether. Since the development of regional models are tied to ERAG models and since ERAG model timing is set at the interconnection-wide level, it is likely that nearly all Transmission Planners and Planning Coordinators are working with similar models that are available at similar times. It seems to MidAmerican that this detail on what Year One is can be easily controlled interconnection-wide through the ERAG and which models they provide when.However, if the SDT believes that the Year One definition is necessary, MidAmerican urges the SDT to revised the Year One definition from stating "12-18 months from the end of the current calendar year" to stating "0-18 months from the end of the current calendar year". This revised definition would be at least compatible with the current ERAG process.
Response: Year One: The SDT believes the definition will capture both a summer and winter peak and is necessary to provide a clear starting point for the planning horizon. With regards to any possible inconsistencies within the practices of any entity, the SDT believes that the requirements as defined are required for a Planning Assessment. How these requirements are met is beyond the scope of this standard and should be discussed within the responsible entities. No changes were made.		
Tri-State Generation and Transmission Association	No	The SDT removed definitions of Extreme Events and Load Reduction. We still need to have some scale to differentiate N-1 from less likely but possibly higher impact events. However, we do understand that such a

Organization	Yes or No	Comments for Question 9
		criteria will take some time to develop, and should perhaps be a separate subject addressed by a new SAR. Year One has a flexible definition. It does not seem very intuitive. We can't say whether this is good or bad, although one entity's year one could overlap with another's year two.
Response: The SDT doesn't see a problem with entities having slightly different study periods. This situation exists under the current TPL Standards.		
US Bureau of Reclamation	No	The term "Consequential Load Loss" and "Planning Assessment" contain the terms "Transmission System" and/or "Transmission Facilities". The terms "Transmission System and Transmission Facilities are not defined in the NERC Glossary of Terms. The terms should either be in lower case or a definition added. The Term "Non-Consequential Load Loss" refers to a "Non-Interruptible Load" loss which is other than Consequential Load Loss. There is no mention in the Consequential Load Loss definition of the type of load (interruptible or non-interruptible). This adds confusion to what appears to be the distinction in the differences between the two, that one was the result of a fault and the other was the result of voltage.
Response: Transmission system: The SDT was unable to find a reference to 'Transmission System'. The SDT believes the references to 'Transmission system' were used correctly and no change was made. Transmission Facility: 'Facility' is a defined term in the NERC Glossary. The SDT believes the references to 'Transmission Facilities' are used correctly and no change was made. Non- Interruptible Load: Consequential Load Loss can be either interruptible or Non-Interruptible, so the distinction is not required. Non-Consequential is not a concern if it is interrupting interruptible load, but is a concern if it is inappropriately interrupting Non-Interruptible load. So the definition for Non-Consequential Load Loss is specific to Non-Interruptible load. The SDT disagrees with your statement that the loss of Non-Consequential load is the result of voltage. Load Loss as a result of voltage sensitivity is excluded from Non-Consequential Load Loss by the definition. No changes have been made.		
American Transmission Company	No	We suggest the following changes: Add a Consequential Generation Loss definition, which would be a complement to the Consequential Load Loss definition. Both consequential load loss and consequential generation loss are referred to in note "b" of the Steady State & Stability section of Table 1, but only consequential load loss is defined. We suggest text of: "Consequential Generation Loss: All Generation that is no longer delivered to any Transmission Facilities as a result of the Transmission Facilities removal from service by the operation of the installed Protection Systems designed to isolate fault conditions or otherwise protect the Transmission Facilities from abnormal operating conditions. Revise the Consequential Load Loss definition to include protection for abnormal operating conditions. We suggest text of: "Consequential Load Loss: All Load that is no longer served by any Transmission Facilities as a result of the Transmission Facilities removal from service by the operation of the installed Protection Systems designed to isolate fault conditions or otherwise protect the Transmission Facilities from abnormal operating conditions."Revise the Planning Assessment definition to more explicitly apply to the BES and the TPL-001 requirements. We suggest text of: "Planning Assessment: Documented evaluation of future Transmission System performance and Corrective Action Plans to remedy identified deficiencies in the BES from the steady

Organization	Yes or No	Comments for Question 9
		state and stability performance requirements set forth in the TPL-001 standard." Add a Planning Horizon definition. This term is used in this proposed standard, in the FAC-010-2 standard, and possibly in other future standards, but it has not been defined yet.
Response: Consequential Generation Loss: Generation run-back and tripping is acceptable. It is up to the Planning Coordinator and the Transmission Planner to determine how many units or cumulative MW may be interrupted due to either a consequential or non-consequential action. Therefore it isn't necessary for the SDT to define Consequential Generation Loss. Note 'b' has been revised to clarify the issue. Consequential Load Loss as well as generation loss is acceptable as a consequence of any planning or extreme event excluding P0. **Note 'b':** Consequential Load Loss as well as generation loss is acceptable as a consequence of any planning or extreme event excluding P0. Consequential Load Loss: The SDT disagrees with your proposed revision to the definition for Consequential Load Loss because it would provide for the use of an SPS or RAS to trip Consequential Load for an undefined 'abnormal condition', which is not an acceptable definition. No change is made. Applicability to BES: It is stated in the Purpose that the Standard applies to the BES. Therefore, the SDT doesn't see the need to have to repeat that throughout the document. Therefore no change is made. Planning Horizon: The only location where planning horizon didn't specify Near-Term or Long-Term was in the 'Purpose'. The SDT didn't feel that this reference needed to be specific or was sufficient to warrant a definition. No changes have been made.		
SERC Dynamics Review Subcommittee (DRS)	No	With the simplified definition for Bus-tie Breaker, would a breaker in a standard ring bus or breaker-and-a-half scheme be considered a Bus-tie Breaker? Request the definition be revised to clarify as follows: Add this sentence to the end of the definition: "A breaker in a standard breaker"and-a-half or ring bus configuration is not a Bus-tie Breaker. Suggest revising the Non-Consequential Load Loss definition to: Non-Interruptible Load loss other than (1) Consequential Load Loss and (2) the response of voltage sensitive Load including Load that is disconnected from the System by end-user equipment.
SERC Planning Standards Subcommittee	No	With the simplified definition for Bus-tie Breaker, would a breaker in a standard ring bus or breaker-and-a-half scheme be considered a Bus-tie Breaker? Request the definition be revised to clarify this. Suggest revising the Non-Consequential Load Loss definition: Non-Interruptible Load loss other than (1) Consequential Load Loss and (2) the response of voltage sensitive Load including Load that is disconnected from the System by end-user equipment.
Response: Bus-Tie Breaker: A breaker in a ring bus or a breaker-and-a half scheme would not be considered Bus-tie breakers. The SDT has elected to define a Bus-Tie Breaker. If the SDT were to also define what is not a Bus-Tie Breaker, then anything that was missed would not be defined. To be comprehensive the SDT has to limit the definition to what a Bus-Tie Breaker is to avoid further complexity. Non-Consequential Load Loss: To improve clarity, the SDT has revised the definition for Non-Consequential Load Loss.		

Organization	Yes or No	Comments for Question 9
Non-Consequential Load Loss: Non-Interruptible Load loss that does not include: (1) Consequential Load Loss, (2) the response of voltage sensitive Load, or (3) Load that is disconnected from the System by end-user equipment.		
American Electric Power	Yes	
British Columbia Transmission Corp	Yes	
Exelon Transmission Planning	Yes	
FirstEnergy Corp	Yes	
Florida Municipal Power Agency, and its Member Cities	Yes	
Independent Electricity System Operator	Yes	
Manitoba Hydro	Yes	
Pepco Holdings, Inc. - Affiliates PHI	Yes	
Progress Energy Carolinas	Yes	
SCE&G	Yes	
TIS	Yes	
Orlando Utilities Commission	Yes	I agree, but that is based on not having seen any proposed changes from others that might change my mind.
Lafayette Utilities System	Yes	LUS generally supports the changes to the definitions and the changes to the rest of the standard. We appreciate the efforts of the SDT in responding to the many comments that were filed in response to version 3, and in crafting what appears to LUS to be a reasonable attempt to attain a consensus position, at least as we understand the result.
ITC Holdings	Yes	None

Organization	Yes or No	Comments for Question 9
PJM	Yes	
Response: Thank you.		
Oncor Electric Delivery	Yes	(Motor stall should not be included in this section) The language in the definition cannot be this generic. This becomes open to interpretation in Table 1. Localized load may not be an issue, but the text is broad enough that it could allow a voltage collapse.
Response: Non-Consequential Load Loss: The SDT added Requirement R5 to require that every Transmission Planner and Planning Coordinator has a voltage criteria. The voltage criteria should prevent the exposure to widespread or cascading motor stall and should limit any potential misinterpretation that the Non-Consequential Load Loss would allow such events. Table 1a (BES Transmission voltage instability, Cascading, and uncontrolled islanding shall not occur) supports Requirement R5 and reinforces the point that the definition for Non-Consequential Load Loss should not be read so broadly as to allow for unacceptable events. The definition for the Non-Consequential Load Loss excludes end-user actions, which disconnect the Load from the system. So Table 1 does not apply to such Load. To improve clarity, the SDT has revised the definition for Non-Consequential Load Loss. **Non-Consequential Load Loss:** Non-Interruptible Load loss that does not include: (1) Consequential Load Loss, (2) the response of voltage sensitive Load, or (3) Load that is disconnected from the System by end-user equipment.		
Southern Company	Yes	Suggest revising the Non-Consequential Load Loss definition for additional clarity to the following: Non-Interruptible Load loss other than (1) Consequential Load Loss and (2) the response of voltage sensitive Load including Load that is disconnected from the System by end-user equipment.
Response: Non-Consequential Load Loss: To improve clarity, the SDT has revised the definition for Non-Consequential Load Loss. **Non-Consequential Load Loss:** Non-Interruptible Load loss that does not include: (1) Consequential Load Loss, (2) the response of voltage sensitive Load, or (3) Load that is disconnected from the System by end-user equipment.		

10. Do you agree with the changes in the performance elements and notes in Table 1? If not, please provide specific comments by note number, note alpha character, or performance category.

Summary Consideration: Several footnote reference errors were reflected in Table 1 when migrating from Draft 3 to Draft 4 that led to unfortunate confusion. Final edits failed to correctly show footnote renumbering needed for removal of the Draft 3 footnote 1 which was moved to Requirement R4. All references to the prior Draft 3 footnote 1 should have been removed in Draft 4 and the remaining footnote references as shown in Draft 3 should have been decremented by a value of one. In Draft 5, the SDT has corrected the footnote references and the changes made are summarized as follows:

Table Area Reference	Footnote Reference Errors in Draft 4	Comment
Header notes	Yes	For item "j" the footnote reference to footnote "1" is now removed.
Title Row, Planning Events	No	All footnote references were shown correctly in Draft 4. No changes required in Draft 5.
Planning Event P0	No	No footnote references are used in this row in Draft 4. No changes required in Draft 5.
Planning Event P1	No	All footnote references were shown correctly in Draft 4. No changes required in Draft 5.
Planning Event P2	No	All footnote references were shown correctly in Draft 4. No changes required in Draft 5.
Planning Event P3	Yes	Footnote references to "19" should have been "9".
Planning Event P4	Yes	In the column titled "Category" the footnote reference to "101" should have been "10". In the column titled "Interruption of Firm Transmission Service Allowed" the footnote reference to "10" should have been "9."
Planning Event P5	Yes	In the column titled "Interruption of Firm Transmission Service Allowed" the footnote reference to "19" should have been "9".
Planning Event P6	No	All footnote references were shown correctly in Draft 4. No changes required in Draft 5.
Planning Event P7	No	All footnote references were shown correctly in Draft 4. No changes required in Draft 5.
Extreme Events Steady-State 2a & 2b	Yes	Footnote references to "12" should have been "11".

Table Area Reference	Footnote Reference Errors in Draft 4	Comment
Extreme Events Stability 2a, 2b, 2c, 2d	Yes	Footnote references to "11" should have been "10".
Extreme Events Stability 2e	Yes	Footnote references to "11" should have been removed.

A number of commenters indicated that some planning events will result in the same elements being removed from service and sought clarification on whether or not each event required analysis. The SDT acknowledges that different initiating events may result in identical Facilities being removed by protection action. While there may be some overlap in the steady-state timeframe, care must be taken to ensure proper reviews are made in the Stability timeframe where warranted due to delayed clearing modes that may result from the initiating event. For example, a bus fault and a stuck breaker may each clear a bus; however, the stuck breaker will have different reaction times due to the delayed clearing mode and therefore may warrant a review in a Stability environment. The standard allows the Transmission Planner and Planning Coordinator flexibility in using engineering judgment for the Table 1 events it studies for both the steady-state and Stability environments. Both Requirements R3 (steady-state study) and R4 (Stability study) include text indicating the Transmission Planner and Planning Coordinator are to study those events "…that are expected to produce more severe System impacts on its portion of the BES, shall be identified and a list of those Contingencies to be evaluated for System performance …" If a Transmission Planner/Planning Coordinator can justify that certain events are duplicative for a given timeframe then at their discretion they may elect to limit their Contingency list so long as their entire Contingency list covers the events that "produce the more severe impacts" for their System. Planning event P2-1 was renamed to "Opening of a line section w/o a fault" to better clarify the SDT's intended analysis. This was in response to some commenters who remained confused by the P2-1 event and felt a detailed breaker model may be necessary. The drafting team clarifies here that a detailed breaker model is not needed. Conforming changes were also made to footnote 7 to make clear the intent of this planning event.

The P5 Protection System Failure event description was changed in support of stakeholders who indicated that multiple element outages may not always result from a P5 event and that it may only result in Delayed Fault Clearing of the faulted Transmission element/Facility. The P5 event now states "Failure of a single Protection System that results in Delayed Fault Clearing on one of the following:"

Footnote 9 is now applied to all "No" items for the column "Interruption of Firm Transmission Service Allowed". Footnote 9 clarifies that Firm Transmission Service can be interrupted so long as appropriate re-dispatch of resources are available and obligated to re-dispatch without any firm Load loss and that Facility ratings are maintained.

Some commenters expressed confusion on whether or not an event is classified as an EHV or HV event. This is an important concept to understand as it directly relates to the stated Table 1 criteria for Interruption of Firm Transmission Service and Non-Consequential Load Loss. The event is classified as EHV or HV based on the lowest nominal system voltage level of all the Facilities removed by the event studied and regardless of the fault location. For example, a fault that removes a 345/138kV

transformer is classified as a high-voltage (HV) event and the HV criteria apply. Changes to footnotes 1 and 5 were made to aid understanding in this regard.

Note changes are as follows:

Header note 'f': Applicable Facility Ratings shall not be exceeded.

Header note 'g': System steady state voltages and post-Contingency voltage deviations shall be within acceptable limits as established by the Planning Coordinator and the Transmission Planner.

Footnote 1 - If the event analyzed involves BES elements at multiple System voltage levels, the lowest System voltage level of the element(s) removed for the analyzed event determines the stated performance criteria regarding allowances for interruptions of Firm Transmission Service and Non-Consequential Load Loss.

Footnote 2 - Unless specified otherwise, simulate Normal Clearing of faults. Single line to ground (SLG) or three phase (3Ø) are the fault types that must be evaluated in Stability simulations for the event described. A 3Ø or a double line to ground fault study indicating the criteria are being met is sufficient evidence that a SLG condition would also meet the criteria.

Footnote 3 - Bulk Electric System (BES) level references include extra-high voltage (EHV) Facilities defined as greater than 300kV and high voltage (HV) Facilities defined as the 300kV and lower voltage Systems. The designation of EHV and HV is used to distinguish between stated performance criteria allowances for interruption of Firm Transmission Service and Non-Consequential Load Loss.

Footnote 5 - For non-Generator Step Up transformer outage events, the reference voltage, as used in footnote 1, applies to the low-side winding (excluding tertiary windings). For generator and Generator Step Up transformer outage events, the reference voltage applies to the BES connected voltage (high-side of the Generator Step Up transformer). Requirements which are applicable to transformers also apply to variable frequency transformers and phase shifting transformers.

Footnote 7 - Opening one end of a line section without a fault on a normally networked Transmission circuit such that the line is possibly serving Load radial from a single source point.

In addition, the definition of Non-Consequential Load Loss was revised to provide greater clarity:

Non-Consequential Load Loss: Non-Interruptible Load loss that does not include: (1) Consequential Load Loss, (2) the response of voltage sensitive Load, or (3) Load that is disconnected from the System by end-user equipment.

Organization	Yes or No	Comments for Question 10
FRCC Transmission Working Group		Please clearly indicate for P3 and P5 that note 1 and note 9 apply. Consider using a comma, not a note 19 that does not exist. The P2-1 event needs to be clarified with its intent. In the SDT Consideration of Comments to the 3rd DRAFT posting, the response to Transmission Planning clarified that "There is no need to show a line energized up to the

Organization	Yes or No	Comments for Question 10
		breakers that opened. The intent is simply to look for low voltage or thermal problems while supplying Load from one end of a normally networked line." This could be accomplished by adding this to footnote 7 or re-naming the event "Opening of a Line Section w/o fault".
Response: Several footnote reference errors were reflected in Table 1 when migrating from Draft 3 to Draft 4 that led to unfortunate confusion. In Draft 5, the SDT has corrected the footnote references and a detailed explanation of the changes required is summarized in the above Summary Considerations for Question 10. The SDT has accepted the commenter's suggestion to better clarify the P2-1 planning event. The Event description in Table 1 for the P2-1 planning event has been re-titled "Opening of a line section w/o a Fault[7]" and the corresponding footnote number 7 has been revised to read as follows: **Footnote 7** - Opening one end of a line section without a fault on a normally networked Transmission circuit such that the line is possibly serving Load radial from a single source point.		
SRP	No	: As currently drafted, several outages identified in Categories P2, P4, and P5 appear to potentially result in the same elements being removed from service, so therefore the same event, even though the initiating event is different. We believe that the drafting team needs to conduct a workshop prior to balloting to educate the industry on what outages are required to be simulated for which Categories. Additionally there are footnotes numbered 12, 19, and 101, which do not relate to any foot note in the document, and some other footnotes seem to be misplaced. We encourage the drafting team to carefully review all footnotes to ensure accuracy prior to balloting this standard.
Response: The SDT agrees that some planning events will result in the same elements being removed from service. However, the similarities may only be valid from a steady-state view point and care must be taken to review the events in the Stability timeframe due to delayed clearing modes that may result from the initiating event. For example, a bus fault and a stuck breaker may each clear a bus; however, the stuck breaker will have different reaction times due to the delayed clearing mode and therefore may warrant a review in a Stability environment. The standard allows the Transmission Planner and Planning Coordinator flexibility in using engineering judgment for the Table 1 events in which it studies for both the steady-state and Stability environments. Both Requirements R3 (steady-state study) and R4 (Stability study) include text indicating the Transmission Planner and Planning Coordinator are to study those events "…that are expected to produce more severe System impacts on its portion of the BES, shall be identified and a list of those Contingencies to be evaluated for System performance …" If a Transmission Planner/Planning Coordinator can justify that certain events are duplicative for a given timeframe then at their discretion they may elect to limit their Contingency list so long as their entire Contingency list covers the events that "produce the more severe impacts" for their System. At this time the SDT does not plan to conduct a workshop as suggested by the commenter. If Regional Entities wish to conduct seminars on the standard, SDT members from that region could be made available as participants in the discussions. Several footnote reference errors were reflected in Table 1 when migrating from Draft 3 to Draft 4 that led to unfortunate confusion. In Draft 5, the SDT has corrected the footnote references and a detailed explanation of the changes required is summarized in the above Summary Considerations for Question 10.		
Northeast Utilities	No	[Comment on Non-Consequential Load Allowed for certain Planning Events] We recommend that the standard as written should not allow non-consequential load loss to be used to resolve violations arising from the planning events in Table 1. We believe that planning for a reliable power system should discourage mitigation by load loss. Therefore, Non-Consequential Load Loss should not be allowed in a future looking system plan.

Organization	Yes or No	Comments for Question 10
		[Comment on Table 1 Item e, under Steady State & Stability] Our understanding here is that we should be able to redispatch after the first contingency (using fast start generation) to secure the system in anticipation of a second contingency and not redispatch to fix first contingency violations. Is this interpretation correct?Further, this standard doesn't specify which units can be adjusted following the contingency. This seems to stress the fact that the standard needs to address the definition of what is a base case. Also, the standard should be clear on whether we can or cannot rely on generation redispatch after the first contingency, i.e., should the failure of a fast start generator to start up be included in the contingency, or is this another level of contingency? [Comments on Footnotes] Footnotes 1, 10, 11, 19 and 101 need to be fixed. They are either mislabeled or do not point to any item.
Response: The SDT disagrees with the commenter's view related to disallowing Non-Consequential Load Loss for any planning event. The SDT believes they have made the appropriate expectations in not permitting its use for some Contingency planning events involving EHV Facilities. A Transmission Planner/Planning Coordinator may implement a more conservative planning approach beyond what TPL-001-1 requires if they believe one is warranted. The standard in Requirement R2, sub-part 2.7.1 (Corrective Action Plans) indicates that generation curtailment, tripping and re-dispatch are permissible Corrective Action Plans for both single and multiple Contingency events. Therefore, the SDT does not agree with Northeast Utilities view in this regard. The standard does not include prescriptive expectations for a "base case" conditions and allows flexibility to the TP/PC in this regard. See requirement R1 for initial model (P0 starting conditions) requirements. Starting of a "fast-start" generation unit appears to be viewed in the context of a Corrective Action solution to a studied planning event. There may situations like this that lend themselves to sensitivity analysis as required by the TPL-001-1 standard. Several footnote reference errors were reflected in Table 1 when migrating from Draft 3 to Draft 4 that led to unfortunate confusion. In Draft 5, the SDT has corrected the footnote references and a detailed explanation of the changes required is summarized in the above Summary Considerations for Question 10.		
British Columbia Transmission Corp	No	1. Table 1 event indicates loss of one of the equipment. It appears to be silent on the event classification regarding multiple equipments within the same protection zone. Is this considered as a single contingency or multiple contingencies? Please clarify. 2. Table 1 P5 refers to the event on loss of multiple elements caused by the failure of a single protection system while clearing a fault on one contingency. For systems equipped with dual or redundant protections, is a protection failure still a valid concern? Shouldn't this contingency analysis be excluded from the requirement? Please clarify. 3. Table 1 Extreme Events under Stability section, there is a reference to protection failure during fault clearing. Again for systems equipped with dual or redundant protections the requirement should be reconsidered. Please confirm. 4. Table 1 Extreme Events under both Steady State and Stability sections, there is a reference to loss of transmission lines on a common right-of-way. Please consider adding a Footnote to define the common right-of-way using minimum length similar to the one used for circuits on common structure (Footnote 12).

Organization	Yes or No	Comments for Question 10
		5. Performance Table 1 Footnote Item 1 on definition of angular stability, it states "For Planning Event P1: No generating unit or units shall be allowed to pull out of synchronism." o The requirement of no unit pull out of sync is not clear. Does this apply to small generators connected to distribution or lower voltage class lines? Or this is only applicable to generators connected to BEC (i.e. 100kV and above) without intermediary transmission voltage line connections? 6. Table 1 Footnote Item 6 refers to the "reference voltage" for transformers. What is the purpose of a reference voltage? Is this used to determine a valid transformer contingency? If so, according to the present definition a 3 phase fault on the 138kV side of a 138/66kV transformer is not considered a valid contingency to be assessed. Is this the intent?
Response: 1. The P1 Event is a single Contingency condition. A P1 Event may or may not remove other BES Facilities with it depending on the Protection System design. For example, a fault on a Transmission line (single Contingency) may also remove a BES transformer if no high-side transformer protection device is installed. 2. A P5 Event with a redundant Protection System will be covered by the analogous single Contingency event from a steady-state view. However, even with redundant Protection System designs there may be a delayed clearing mode that may need to be considered with the Stability timeframe. The standard allows the Transmission Planner and Planning Coordinator flexibility in using engineering judgment for the Table 1 events in which it studies for both the steady-state and Stability environments. Both Requirements R3 (steady-state study) and R4 (Stability study) include text indicating the Transmission Planner and Planning Coordinator are to study those events "…that are expected to produce more severe System impacts on its portion of the BES, shall be identified and a list of those Contingencies to be evaluated for System performance …" If a Transmission Planner/Planning Coordinator can justify that certain events are duplicative for a given timeframe then at their discretion they may elect to limit their Contingency list so long as their entire Contingency list covers the events that "produce the more severe impacts" for their System. 3. See response to item 2. 4. The commenter appears to have referenced a Draft 3 version of the standard. The change requested was included in Draft 4. Footnote 11 in draft 4 reads as follows: "Excludes circuits that share a common structure or common Right-of-Way for 1 mile or less". 5. The commenter appears to have referenced a Draft 3 version of the standard as the former Draft 3 footnote 1 was moved to Requirement R4, part 4.1.1 in draft 4. The applicability of the NERC Reliability Standards unless otherwise stated is the Bulk Electric System and Part 4.1.1 applies only to BES generating units. **6.** The commenter appears to have referenced a Draft 3 version of the standard and the question is related to footnote 5 of the Draft 4 standard. The term "reference voltage" is used in determining if a transformer is classified as EHV or HV for the BES. This classification then ties to footnote 1 in regards to provisions for the interruption of Firm Transmission Service and Non-Consequential Load Loss. For example, if a 345/138 kV TR is outaged for the Event studied, the high-voltage (HV) allowances for interruption of Firm Transmission Service and loss of Non-Consequential Load would apply. The 138/66 kV transformer may not be classified as a BES Facility, your Regional Entity definition of the BES should be consulted for an official position.		
NERC Standards Review Subcommittee	No	A. P3 Modify the P3 Category performance criteria to apply only to the loss of two generators because the probability of the loss of two base load generators is an order of magnitude greater than the loss of a generator and any other transmission element. The MRO NSRS suggests the listing of: the loss of transmission circuit, transformer, shunt device, and single pole of DC line be removed from the P3 Events column. Move the

Organization	Yes or No	Comments for Question 10
		"generator + another element" events to the P6 Category by adding "1. Generator" to the listing in the Initial System Condition (Loss of . . .) column. B. The SDT should be commended for the changes that were made to Table 1. However, the MRO NSRS does recommend a few editorial changes. On page 16 under the Steady State and Stability heading is item d. Simulate Normal Clearing unless otherwise specified. This is also listed as footnote 2 to the table. The MRO NSRS recommends that item d under the Steady State and Stability heading be deleted. C. Why is there a footnote 1 indicator to note j. under Stability only? The MRO NSRS suggests that this footnote 1 indicator be deleted. D. Item i. under Steady State only states that "the response of voltage sensitive Load that is disconnected from the System by end-user equipment" is not to be used to meet steady state requirements. However, the non-consequential load loss says yes meaning it is allowed for some events in the table and non-consequential load loss definition includes the "response of voltage sensitive Load that is disconnected from the System by end-user equipment." This seems to be a direct contradiction. The MRO NSRS suggests that Item i. under steady state only be deleted. E. The MRO NSRS does not understand why there is a footnote 19 indicator for P3 and P5 EHV in the table when no footnote 19 exists. Perhaps the SDT meant footnotes 1 and 9 but The MRO NSRS recommends that this be corrected.F. The MRO NSRS does not understand why there is a footnote 12 indicator for Item 2 a and 2 b. on page 19. Perhaps the SDT meant footnotes 1 and 2 apply but The MRO NSRS recommends that this be corrected.

Response:

A. The SDT disagrees with the proposed adjustment of moving select generator Contingency outages to new planning event designations. The Table 1 planning event order regarding outage probability is somewhat subjective and the SDT believes appropriate expectations were made for generation outages within the P3 event. No changes made.

B. The SDT appreciates the support for changes made. The SDT decided to keep both references to "simulate normal clearing unless otherwise specified". While redundant, we believe it is important information and should aid to ensure industry is aware of the intent.

C. The reference to footnote 1 in Table note "j" should have been deleted in Draft 4. The SDT has fixed a number of footnote reference errors in Draft 5.

D. The Draft 4 definition of Non-Consequential Load Loss confused some stakeholders in that some thought the voltage sensitive Load was "inclusive" to this type of Load. The definition was changed to better clarify the SDT's intent that customer sensitive Load and Load disconnected by the end-user is not included within the definition. With that change the perception of a conflict is now resolved.

> **Non-Consequential Load Loss:** Non-Interruptible Load loss that does not include: (1) Consequential Load Loss, (2) the response of voltage sensitive Load, or (3) Load that is disconnected from the System by end-user equipment.

E. Several footnote reference errors were reflected in Table 1 when migrating from Draft 3 to Draft 4 that led to unfortunate confusion. In Draft 5, the SDT has corrected the footnote references and a detailed explanation of the changes required is summarized in the above Summary Considerations for Question 10.

Organization	Yes or No	Comments for Question 10
Bonneville Power Administration	No	As currently drafted, several outages identified in Categories P2, P4, and P5 appear to potentially result in the same elements being removed from service, so therefore the same event, even though the initiating event is different. We believe that the drafting team needs to conduct a workshop prior to balloting to educate the industry on what outages are required to be simulated for which Categories. Additionally there are footnotes numbered 12, 19, and 101, which do not relate to any foot note in the document, and some other footnotes seem to be misplaced. We encourage the drafting team to carefully review all footnotes to ensure accuracy prior to balloting this standard. Table 1, the second to last column: Please clarify what is meant by "Interruption of Firm Transmission Service." Planning studies do not differentiate firm and non-firm transmission services. Planning studies model a load forecast, a generation dispatch, and the system topography. Interruption of firm transmission service is a commercial issue and is not related to assessing reliability of the system. If an assumed transfer is interrupted in a power flow case due to a contingency, and if no consequential load loss were allowed and all criteria were met, the system would still be exhibiting reliable performance. We believe interruption of firm transmission service should be allowed for all planning events P1 through P5 when assessing the reliability of the transmission system. At a minimum, footnote 9 in Table 1 should apply to all events in category's P1 through P5 that do not allow interruption of firm transmission service.The NERC definition of Firm Transmission Service states "highest quality of service offered to customers under a filed rate schedule that anticipates no planned interruption." Planning events required to be evaluated in Table 1 are unplanned interruptions by nature since they are studied to determine mitigation should they occur unexpectedly. This is inconsistent with the definition Table 1, P1.4, P3.4, P4.4, P5.4, and P6.3: Shunt devices are not required to be in service at all times. It does not make sense to include it in the events column. How would you assess it while several of these devices are not deployed because they are not needed for the conditions studied? Table 1, P1 & P2: What is the rational for having two categories for single contingency? Table 1, P2.1 (Opening of a breaker without a fault): Please clarify what constitutes opening a breaker without a fault mean? Planning for these events will be time consuming (modeling every breaker position open) and expensive to mitigate for events that occur solely due to human error and should be removed for the table. Table 1, P2.2, P2.3, and P2.4: These are not single contingency events and should be moved to P3.

Response: The SDT agrees that some planning events will result in the same elements being removed from service. However, the similarities may only be valid from a steady-state view point and care must be taken to review the events in the Stability timeframe due to delayed clearing modes that may result from the initiating event. For example, a bus fault and a stuck breaker may each clear a bus; however, the stuck breaker will have different reaction times due to the delayed clearing mode and therefore may warrant a review in a Stability environment. The standard allows the Transmission Planner and Planning Coordinator flexibility in using engineering judgment for the Table 1 events in which it studies for both the steady-state and Stability environments. Both Requirements R3 (steady-state study) and R4 (Stability study) include text indicating the Transmission Planner and Planning Coordinator are to study those events "…that are expected to produce more severe System impacts on its portion of the BES, shall be identified and a list of those Contingencies to be evaluated for System performance …" If a Transmission

Organization	Yes or No	Comments for Question 10
Planner/Planning Coordinator can justify that certain events are duplicative for a given timeframe then at their discretion they may elect to limit their Contingency list so long as their entire Contingency list covers the events that "produce the more severe impacts" for their System. At this time the SDT does not plan to conduct a workshop as suggested by the commenter. As an alternative, the SDT will ask WECC area SDT member(s) to discuss this matter via appropriate WECC technical committees utilizing SDT members as participants in the discussions. Several footnote reference errors were reflected in Table 1 when migrating from Draft 3 to Draft 4 that led to unfortunate confusion. In Draft 5, the SDT has corrected the footnote references and a detailed explanation of the changes required is summarized in the above Summary Considerations for Question 10. The SDT agreed with the commenter regarding the Table 1 performance requirements related to the Interruption of Firm Transmission Service. The team has applied footnote 9 to all Events that indicated "No" in this column. The Firm Transmission Service within the context of a planning horizon are long-term service arrangements from one Balancing Authority area to another that should be reflected within the planning model and net-interchange. The standard allows engineering judgment and flexibility to exclude certain Contingencies that may not be pertinent for the conditions studied. Both Requirements R3 (steady-state study) and R4 (Stability study) include text indicating the Transmission Planner and Planning Coordinator are to study those events "…that are expected to produce more severe System impacts on its portion of the BES, shall be identified and a list of those Contingencies to be evaluated for System performance …" If a Transmission Planner/Planning Coordinator can justify that certain events not pertinent for a given study then at their discretion they may elect to limit their Contingency list so long as their entire Contingency list covers the events that "produce the more severe impacts" for their System. The two Contingency categories are used to delineate between higher ranked P1 single Contingencies and the lower ranked, yet high impact P2 single Contingency events. In P2, the team chose to differentiate between the EHV and HV in regards to performance expectations whereas in P1 the performance requirements for both EHV and HV are the same. The SDT believes the P2.1 event is important for review and it remains in Draft 5. Inadvertent relay operation that trips a breaker(s) is the primary reason forced outage cause for a P2.1 event. The condition could also be a planned (maintenance) event. The P2.1 event has been renamed "opening of a line section w/o a fault" to better align with the team's intent. Additionally, footnote 7 was revised to better clarify the need to study the P2.1 event. Footnote 7 now reads: **Footnote 7** - Opening one end of a line section without a fault on a normally networked Transmission circuit such that the line is possibly serving Load radial from a single source point. The P2.2, P2.3, and P2.4 planning events are less likely yet higher impact single Contingency events. While its true that these events will likely result in multiple elements being disconnected from the System they are classified as single Contingency since they are a common mode event resulting from a single fault with normal Protection System clearing. As stated above, the SDT does not treat the P2 events in the same manner as P1 events and there are unique expectations in performance for P2 events that result in HV element outages versus solely EHV element outages.		
Idaho Power	No	As currently drafted, several outages identified in Categories P2, P4, and P5 appear to potentially result in the same elements being removed from service, so therefore the same event, even though the initiating event is different. I believe that the drafting team needs to conduct a workshop prior to balloting to educate the industry on what outages are required to be simulated for which Categories. Additionally there are footnotes numbered 12, 19, and 101, which do not relate to any foot note in the document, and some other footnotes seem to be misplaced. We encourage the drafting team to carefully review all footnotes

Organization	Yes or No	Comments for Question 10
		to ensure accuracy prior to balloting this standard.
Southern California Edison (SCE)	No	As currently drafted, several outages identified in Categories P2, P4, and P5 appear to potentially result in the same elements being removed from service, so therefore the same event, even though the initiating event is different. We believe that the drafting team needs to conduct a workshop prior to balloting to educate the industry on what outages are required to be simulated for which Categories. Additionally there are footnotes numbered 12, 19, and 101, which do not relate to any foot note in the document, and some other footnotes seem to be misplaced. We encourage the drafting team to carefully review all footnotes to ensure accuracy prior to balloting this standard.
Utility System Efficiencies, Inc. (USE)	No	As currently drafted, several outages identified in Categories P2, P4, and P5 appear to potentially result in the same elements being removed from service. Simulations of these outages would then be the same, even though the initiating event is different. I believe that the drafting team needs to conduct a workshop prior to balloting to educate the industry on what outages are required to be simulated for which Categories. Additionally there are footnotes numbered 12, 19, and 101, which do not relate to any footnote in the document, and some other footnotes seem to be misplaced. I would encourage drafting team to carefully review all footnotes to ensure accuracy prior to balloting this standard.
Western Area Power Adm - RMR	No	As currently drafted, several outages identified in Categories P2, P4, and P5 appear to potentially result in the same elements being removed from service, so therefore the same event, even though the initiating event is different. I believe that the drafting team needs to conduct a workshop prior to balloting to educate the industry on what outages are required to be simulated for which Categories. Additionally there are footnotes numbered 12, 19, and 101, which do not relate to any footnote in the document, and some other footnotes seem to be misplaced.I encourage the drafting team to carefully review all footnotes to ensure accuracy prior to balloting this standard.
Response: The SDT agrees that some planning events will result in the same elements being removed from service. However, the similarities may only be valid from a steady-state view point and care must be taken to review the events in the Stability timeframe due to delayed clearing modes that may result from the initiating event. For example, a bus fault and a stuck breaker may each clear a bus; however, the stuck breaker will have different reaction times due to the delayed clearing mode and therefore may warrant a review in a Stability environment. The standard allows the Transmission Planner and Planning Coordinator flexibility in using engineering judgment for the Table 1 events in which it studies for both the steady-state and Stability environments. Both Requirements R3 (steady-state study) and R4 (Stability study) include text indicating the Transmission Planner and Planning Coordinator are to study those events "…that are expected to produce more severe System impacts on its portion of the BES, shall be identified and a list of those Contingencies to be evaluated for System performance …" If a Transmission		

Organization	Yes or No	Comments for Question 10
Planner/Planning Coordinator can justify that certain events are duplicative for a given timeframe then at their discretion they may elect to limit their Contingency list so long as their entire Contingency list covers the events that "produce the more severe impacts" for their System. At this time the SDT does not plan to conduct a workshop as suggested by the commenter. As an alternative, the SDT will ask WECC area SDT member(s) to discuss this matter via appropriate WECC technical committees utilizing SDT members as participants in the discussions. Several footnote reference errors were reflected in Table 1 when migrating from Draft 3 to Draft 4 that led to unfortunate confusion. In Draft 5, the SDT has corrected the footnote references and a detailed explanation of the changes required is summarized in the above Summary Considerations for Question 10.		
Modesto Irrigation District Transmission Planning	No	As currently drafted, several outages identified in Categories P2, P4, and P5 appear to potentially result in the same elements being removed from service, so therefore the same event, even though the initiating event is different. We believe that the drafting team needs to conduct a workshop prior to balloting to educate the industry on what outages are required to be simulated for which Categories. Additionally there are footnotes numbered 12, 19, and 101, which do not relate to any foot note in the document, and some other footnotes seem to be misplaced. We encourage the drafting team to carefully review all footnotes to ensure accuracy prior to balloting this standard. please define "post contingency" and "post transient" Why was the previous version footnote 1 defining "angular stability eliminated?
Response: The SDT agrees that some planning events will result in the same elements being removed from service. However, the similarities may only be valid from a steady-state view point and care must be taken to review the events in the Stability timeframe due to delayed clearing modes that may result from the initiating event. For example, a bus fault and a stuck breaker may each clear a bus; however, the stuck breaker will have different reaction times due to the delayed clearing mode and therefore may warrant a review in a Stability environment. The standard allows the Transmission Planner and Planning Coordinator flexibility in using engineering judgment for the Table 1 events in which it studies for both the steady-state and Stability environments. Both Requirements R3 (steady-state study) and R4 (Stability study) include text indicating the Transmission Planner and Planning Coordinator are to study those events "…that are expected to produce more severe System impacts on its portion of the BES, shall be identified and a list of those Contingencies to be evaluated for System performance …" If a Transmission Planner/Planning Coordinator can justify that certain events are duplicative for a given timeframe then at their discretion they may elect to limit their Contingency list so long as their entire Contingency list covers the events that "produce the more severe impacts" for their System. At this time the SDT does not plan to conduct a workshop as suggested by the commenter. As an alternative, the SDT will ask WECC area SDT member(s) to discuss this matter via appropriate WECC technical committees utilizing SDT members as participants in the discussions. Several footnote reference errors were reflected in Table 1 when migrating from Draft 3 to Draft 4 that led to unfortunate confusion. In Draft 5, the SDT has corrected the footnote references and a detailed explanation of the changes required is summarized in the above Summary Considerations for Question 10. The SDT did not receive a substantial appeal from industry to define the terms proposed by the commenter and these terms are widely used and accepted in the industry. The proposed definitions were not added in Draft 5. The prior footnote 1 regarding angular stability was moved into the requirements section of the standard under Requirement R4 per the request of various		

Organization	Yes or No	Comments for Question 10
stakeholders in prior drafts.		
NV Energy	No	As currently drafted, several outages identified in Categories P2, P4, and P5 appear to potentially result in the same elements being removed from service, so therefore the same event, even though the initiating event is different. We believe that the drafting team needs to conduct a workshop prior to balloting to educate the industry on what outages are required to be simulated for which Categories. Additionally there are footnotes numbered 12, 19, and 101, which do not relate to any foot note in the document, and some other footnotes seem to be misplaced. We encourage the drafting team to carefully review all footnotes to ensure accuracy prior to balloting this standard.
Pacific Gas and Electric Co.	No	As currently drafted, several outages identified in Categories P2, P4, and P5 appear to potentially result in the same elements being removed from service, so therefore the same event, even though the initiating event is different. We believe that the drafting team needs to conduct a workshop prior to balloting to educate the industry on what outages are required to be simulated for which Categories. Additionally there are footnotes numbered 12, 19, and 101, which do not relate to any foot note in the document, and some other footnotes seem to be misplaced. We encourage the drafting team to carefully review all footnotes to ensure accuracy prior to balloting this standard.
Puget Sound Energy, Inc.	No	As currently drafted, several outages identified in Categories P2, P4, and P5 appear to potentially result in the same elements being removed from service, so therefore the same event, even though the initiating event is different. We believe that the drafting team needs to conduct a workshop prior to balloting to educate the industry on what outages are required to be simulated for which Categories. Additionally there are footnotes numbered 12, 19, and 101, which do not relate to any foot note in the document, and some other footnotes seem to be misplaced. We encourage the drafting team to carefully review all footnotes to ensure accuracy prior to balloting this standard.
Deseret Power	No	Comments: As currently drafted, several outages identified in Categories P2, P4, and P5 appear to potentially result in the same elements being removed from service, so therefore the same event, even though the initiating event is different. We believe that the drafting team needs to conduct a workshop prior to balloting to educate the industry on what outages are required to be simulated for which Categories. Additionally there are footnotes numbered 12, 19, and 101, which do not relate to any foot note in the document,

Organization	Yes or No	Comments for Question 10
		and some other footnotes seem to be misplaced. We encourage the drafting team to carefully review all footnotes to ensure accuracy prior to balloting this standard.
NorthWestern Energy	No	Several outages identified in Categories P2, P4, and P5 seem to result in the same elements being removed from service, even though the initiating event is different. Thus, the same scenario is evaluated more than once. Also, the footnote numbering is not correct. We would like the drafting team to conduct a workshop before this standard goes to ballot to educate the industry on what outages are required to be simulated for which Categories.
Response: The SDT agrees that some planning events will result in the same elements being removed from service. However, the similarities may only be valid from a steady-state view point and care must be taken to review the events in the Stability timeframe due to delayed clearing modes that may result from the initiating event. For example, a bus fault and a stuck breaker may each clear a bus; however, the stuck breaker will have different reaction times due to the delayed clearing mode and therefore may warrant a review in a Stability environment. The standard allows the Transmission Planner and Planning Coordinator flexibility in using engineering judgment for the Table 1 events in which it studies for both the steady-state and Stability environments. Both Requirements R3 (steady-state study) and R4 (Stability study) include text indicating the Transmission Planner and Planning Coordinator are to study those events "…that are expected to produce more severe System impacts on its portion of the BES, shall be identified and a list of those Contingencies to be evaluated for System performance …" If a Transmission Planner/Planning Coordinator can justify that certain events are duplicative for a given timeframe then at their discretion they may elect to limit their Contingency list so long as their entire Contingency list covers the events that "produce the more severe impacts" for their System. At this time the SDT does not plan to conduct a workshop as suggested by the commenter. If Regional Entities wish to conduct seminars on the standard, SDT members from that region could be made available as participants in the discussions. Several footnote reference errors were reflected in Table 1 when migrating from Draft 3 to Draft 4 that led to unfortunate confusion. In Draft 5, the SDT has corrected the footnote references and a detailed explanation of the changes required is summarized in the above Summary Considerations for Question 10.		
Sacramento Municipal Utility District	No	As currently drafted, several outages identified in Categories P2, P4, and P5 appear to potentially result in the same elements being removed from service, so therefore the same event, even though the initiating event is different. Comments on notes have been provided with associated requirements.
San Diego Gas & Electric Co	No	As currently drafted, several outages identified in Categories P2, P4, and P5 appear to potentially result in the same elements being removed from service, so therefore the same event, even though the initiating event is different.
Response: The SDT agrees that some planning events will result in the same elements being removed from service. However, the similarities may only be valid from a steady-state view point and care must be taken to review the events in the Stability timeframe due to delayed clearing modes that may result from the initiating event. For example, a bus fault and a stuck breaker may each clear a bus; however, the stuck breaker will have different reaction times due to the delayed clearing mode and therefore may warrant a review in a Stability environment. The standard allows the Transmission Planner and Planning Coordinator flexibility in using engineering judgment for the Table 1 events in which it studies for both the steady-state and Stability environments. Both Requirements R3 (steady-state study) and R4 (Stability study) include text indicating the Transmission Planner and Planning Coordinator are to study those events "…that are expected to produce more severe		

Organization	Yes or No	Comments for Question 10
System impacts on its portion of the BES, shall be identified and a list of those Contingencies to be evaluated for System performance …" If a Transmission Planner/Planning Coordinator can justify that certain events are duplicative for a given timeframe then at their discretion they may elect to limit their Contingency list so long as their entire Contingency list covers the events that "produce the more severe impacts" for their System.		
Progress Energy Florida, Inc.	No	As PEF is opposed to TPL-001-1 as a whole, PEF will have no further comment on this issue other than to encourage all appropriate parties to review PEF's previous comments to this effect.
Response: Throughout the drafting process, the SDT has carefully considered your comments as well as comments from other industry members.		
Pepco Holdings, Inc. - Affiliates PHI	No	Category P5 should be more appropriately titled DELAYED CLEARING OR Loss of multiple elements caused by the failure of a single Protection System while clearing a fault on one of the following....A protection system failure does not necessarily lead to loss of multiple power system elements. Sometimes it may just be delayed clearing of the faulted element. The recommended change is based on the SDT's response to comments submitted to Draft #2 of the standard? -A number of commenters expressed concern related to Planning Event P5 "Protection System Failure" and the need to evaluate a single component failure of a BES Protection System; particularly a failure of a station battery. The SDT has revised the P5 Planning Event description to remove the reference to "single component failure" and the event description was changed to match what is stated in the currently approved TPL standards under Category C6 through C9. --The intent of P5 is to evaluate a failure of a single Protection System design that introduces a delayed clearing mode that may also include additional electrical Facilities being removed when compared to normal fault clearing.-- A Protection System failure resulting in loss of the substation (one voltage level plus transformers) would not qualify as a P5 Planning Event since that event is considered an Extreme Event. Also, the phrase "failure of a single Protection System" should be defined. Draft #1 language used the term -single component failure- of a protection system. Based on a number of comments that were received, that term was subsequently replaced with the term -failure of a single Protection System-. To avoid confusion, this term needs to be defined within this standard and / or examples provided. If not, there will be confusion on how to study this category of events. This issue has been raised by numerous commenters throughout the standard development process. That fact that it continues to be expressed through numerous drafts indicates a lack of clarity as to exactly what protection system failures are to be studied.For example - Assume there are two protection systems on a facility (Scheme A and Scheme B). Assume one publishes a clearing time for Scheme A, and a slower clearing time for Scheme B. The TPL standard, as written, could imply that for a P5 failure of a single Protection System (scheme A or B fails) you would study the event assuming the worst case clearing time (i.e., using the slower clearing time for Scheme B.) Is that what is intended? If so, it should be so stated. However, that interpretation assumes the failure of a single Protection System would not effect the operation of the second Protection System. In other words it would not address single component points of failure, which could disable both Scheme A and Scheme B. Suppose both schemes were fed from the same set of CT's, VT's, battery, etc. Since the phrase "single component failure of the protection system" was eliminated, does this mean failure of both schemes due to a single component failure is not required to be studied under the P5 category? The standard must be very clear as to what contingency (i.e., what kind of protection system failure) is

Organization	Yes or No	Comments for Question 10
		to be studied. It should not be silent on this point, nor should it refer to another standard for guidance on what contingencies to study.
Response: The SDT agrees with points raised by the commenter and has changed the event description of the P5 planning event to better clarify the intent of simulating this Contingency. The SDT did not agree with the proposal to add a definition for the phrase "failure of a single Protection System". The SDT believes the description modification in the Event column of Table 1 suffices in this regard. The P5 planning event remains unchanged in the study work intended by the SDT and the description modifications are aimed only at clarifying our intent. The SDT confirms that the intent of P5 is not to study the loss of both Scheme A and Scheme B for the example provided by the commenter and that the expectation would be the study of the slower clearing time scheme (Scheme B).		
Oklahoma Gas & Electric	No	Category P7 OG&E supports as long as footnote 11 is included. Category P6 is an N-2 situation. OG&E does not support the wholesale study of every N-2 combination of contingencies even though one is allowed for the interruption of firm transmission service and non-consequential load loss. Establishing and maintaining operating guides associated with every N-2 set of contingencies is oppressive and would provide limited value. OG&E understands the need for targeted N-2 contingency studies; such as breaker failure. Category P5 Need more specific description of "Protection System failure" before receiving OG&E's support. Category P4 OG&E supports performing studies. OG&E also supports the differentiation between "DHV" and "HV". OG&E does not support developing operating guides for every voltage or overload issue discovered. Category P3 OG&E is concerned about the value of P3. Information about the expected value of performing studies for the category is needed before receiving OG&E support. Category P2 OG&E supports even though there are a few minor issues. Category P1 OG&E supportsOG&E will need every bit of the 60 months time mentioned on page 3 under "Effective Date" to implement all indicated upgrades. There is benefit in hardening the OG&E electrical system for such protection system failures, such as P4 & P5, but it may not be cost effective. Comments Stability AnalysisStability Analysis Recommend Planning Coordinator will be responsible for running the stability analysis to assure NERC compliance. The Planning Coordinator and Transmission Planner should work together to prepare the data.
Response: In P7, footnote 11 remains, thanks for your support. In P6 not every possible combination would be expected to be studied, especially for a Transmission Planner/Planning Coordinator covering a very large geographic footprint. The standard allows engineering judgment and flexibility to exclude certain Contingencies that may not be pertinent for the conditions studied. Both Requirements R3 (steady-state study) and R4 (Stability study) include text indicating the Transmission Planner and Planning Coordinator are to study those events "…that are expected to produce more severe System impacts on its portion of the BES, shall be identified and a list of those Contingencies to be evaluated for System performance …" If a Transmission Planner/Planning Coordinator can justify that certain events are not pertinent for a given study then at their discretion they may		

Organization	Yes or No	Comments for Question 10
elect to limit their Contingency list so long as their entire Contingency list covers the events that "produce the more severe impacts" for their System. Based on feedback from some commenters the SDT made changes to the P5 planning event description as shown in Table 1. The changes are not substantive, do not alter the team's prior intent and aimed at clarification only. Regarding the comments provided on P4. The SDT appreciates the commenter's support in regard to the bifurcated approach of performance expectations related to the BES. The SDT believes all performance deficiencies related to thermal ratings and voltage ratings require corrective actions and the standard provides the Transmission Planner/Planning Coordinator a wide range of alternatives, including but not limited to Operating Procedures. As stated above, the Contingencies studied are expected to be those that have the most severe impact on a particular Facility and not necessarily every possible scenario. The SDT's review of outage events associated with various System conditions revealed that the potential for a generating unit outage being coincident with a variety of other Contingency conditions requires close evaluation. Again, study of some your largest units in combination with other events may suffice to cover the "more severe" conditions for your System and flexibility is afforded to the Transmission Planner to ensure proper coverage without the needed to study each and every combination. We appreciate your support on planning event P1 & P2 expectations. Regarding the proposal for Stability to be covered by the Planning Coordinator. The standard in P7 requires the Transmission Planner and Planning Coordinator to determine and identify individual or joint responsibilities for performing required studies. The Transmission Planner may rely on work being preformed by its Planning Coordinator but each is responsible for showing auditable compliance for the TPL-001-1 study requirements including Stability.		
SERC Planning Standards Subcommittee	No	Comments: Some of the footnote superscripts do not appear to have a corresponding reference in the footnotes, in the case of number 19 at several locations in the Firm Transmission Service column, and number 101 in the P4 cell in the Category column.
Southern Company	Yes	Some of the footnote superscripts do not appear to have a corresponding reference in the footnotes, in the case of number 19 at several locations in the Firm Transmission Service column (should be 9), and number 101 in the P4 cell in the Category column (should be 10). In header note j, the reference to footnote 1 should be removed. In steady state extreme events 2a and 2b, the reference to footnote 12 should be to footnote 11. In stability extreme events 2a through 2e, the reference to footnote 11 should be to footnote 10.
Lafayette Utilities System	Yes	While LUS remains concerned as to the way in which what is now footnote 9 may be followed in operation in areas where there have been historic problems with the old "footnote b", we appreciate the clarifications that have been made, and recognize that this may be the best way to resolve an issue for the industry. Please note that there remains what appears to be a typographical error in Table 1, Category P3, under "Initial System Condition" in that the footnote reference is to footnote 19, which does not exist. The reference was to footnote 10 in v.3 and we assume that the correct reference here is to footnote 9, which used to be footnote 10.
Response: Several footnote reference errors were reflected in Table 1 when migrating from Draft 3 to Draft 4 that led to unfortunate confusion. In Draft 5, the SDT		

Organization	Yes or No	Comments for Question 10
has corrected the footnote references and a detailed explanation of the changes required is summarized in the above Summary Considerations for Question 10.		
US Bureau of Reclamation	No	Consequential Load Loss was defined, however, consequential generator loss was not. It may be easier to define "consequential loss" and let it apply to either.
Response: The SDT does not believe a definition to differentiate between consequential or non-consequential generation loss is needed since generation tripping and re-dispatch is permitted as a corrective action for all planning events as stated in Requirement R2, part 2.7.1.		
Tri-State Generation and Transmission Association	No	Extreme Events detailed at the end of Table 1 should be itemized in the same way as for so-called "Planning Events" at the beginning of Table 1. Steady State Extreme Event 1 would be EP1, Dynamic Stability Extreme Event 1 would be ED1, etc. Also, please use the term Dynamic Stability, not just Stability, as explained above. It would be helpful if descriptions had unique identifiers, for example Dynamic Extreme Event 1 could be called N-1-1. For Dynamic Extreme Event 1, the phrase "With an initial condition" conflicts with the phrase "prior to System adjustments" at the end of the sentence. The term "initial condition" suggests a maintenance outage, or at least an outage that has sustained long enough for the system to have responded/adjusted. Footnote text does not line-up with the body text in the Extreme Event Table. It seems to us that a bus-tie breaker would have the same chance of failure as another breaker. Therefore differentiation is not needed in Table 1.
Response: The SDT recognizes a minority position to label the extreme events in a manner similar to the planning events for a short-hand notation. However, based on lack of a significant majority objection to the extreme event table layout the team determined no changes were needed in this regard. The SDT believes the references to Stability in the extreme events portion of the table are sufficient. No changes made. The SDT does not believe that a conflict exists for extreme event 1 in regards to "With an initial condition" and "prior to system adjustment". No changes made. Several footnote reference errors were reflected in Table 1 when migrating from Draft 3 to Draft 4 that led to unfortunate confusion. In Draft 5, the SDT has corrected the footnote references and a detailed explanation of the changes required is summarized in the above Summary Considerations for Question 10. The SDT agrees that any breaker has an equal chance for failure due to a fault. However, when lumped together with all the BES line breakers and transformer breakers, the Bus-tie Breaker application is much less prevalent within the BES when considering all beaker fault possibilities. The SDT recognizes that Bus-tie Breaker applications are used to lessen the impact of a bus fault outage (P2.2). Therefore, in regards to meeting the single Contingency breaker fault condition, the SDT felt it was necessary to differentiate between performance expectations between bus-tie and non bus-tie breakers. See P2.3 and P2.4 planning events.		
Omaha Public Power District	No	If "the response of voltage sensitive Load including Load that is disconnected from the System by end-user equipment" is considered to be a special type of Consequential Load Loss, add the following sentence to the end

Organization	Yes or No	Comments for Question 10
		of Note "b": However, see Note "i" for a restriction that applies to steady state performance. In Note "g", change "voltage limits" to "voltages". In Note "j", it appears that the reference to Footnote 1 is not needed. For Category P3, should the reference to Footnote 19 in the second column be a reference to Footnote 9? For Categories P3, P4, and P5, in the column labeled "Interruption of Firm Transmission Service Allowed", are the references to Footnotes 19 and 10 needed? For Category P4, should the reference to Footnote 101 in the first column be a reference to Footnote 10? For Category P4, should the reference to Footnote 11 in the third column be a reference to Footnote 10? In Items 2a and 2b of the "Steady State" subsection of the "Extreme Events" section, should the references to Footnote 12 be references to Footnote 11? In Footnote 1, change "loss of Non-Consequential Load" to either "Non-Consequential loss of Load" or "Non-Consequential Load Loss". (The point here is that the adjective "Non-Consequential" applies to the word "loss" rather the word "Load".) In the first sentence of Footnote 2, change "Normal Clearing faults" to "Normal Clearing of faults". In the second sentence of Footnote 2, remove the comma following the word "types". In Footnote 3, change "Non-Consequential Load" to either "Non-Consequential loss of Load" or "Non-Consequential Load Loss". (The point here is that the adjective "Non-Consequential" applies to the word "loss" rather the word "Load".) In the second sentence of Footnote 5, change "generator Step Up" to "Generator Step Up" to be consistent with the rest of the footnote.

Response: Load removed by end-user action or voltage sensitive Load that trips while the Transmission Planner/Planning Coordinator transient voltage criteria is being met is NOT a special case on Consequential Load Loss. No changes made.

The SDT agrees with the proposed change to note "g" in Table 1.

> **Header note 'g'**: System steady state voltages and post-Contingency voltage deviations shall be within acceptable limits as established by the Planning Coordinator and the Transmission Planner.

Several footnote reference errors were reflected in Table 1 when migrating from Draft 3 to Draft 4 that led to unfortunate confusion. In Draft 5, the SDT has corrected the footnote references and a detailed explanation of the changes required is summarized in the above Summary Considerations for Question 10.

The SDT agrees with the proposed wording change to footnote 1. The SDT also made other changes to footnote 1 for clarity and it now reads:

> **Footnote 1 -** If the event analyzed involves BES elements at multiple System voltage levels, the lowest System voltage level of the element(s) removed for the analyzed event determines the stated performance criteria regarding allowances for interruptions of Firm Transmission Service and Non-Consequential Load

Organization	Yes or No	Comments for Question 10
Loss. The SDT agrees with the proposed wording change to footnote 2. **Footnote 2** - Unless specified otherwise, simulate Normal Clearing of faults. Single line to ground (SLG) or three phase (3Ø) are the fault types that must be evaluated in Stability simulations for the event described. A 3Ø or a double line to ground fault study indicating the criteria are being met is sufficient evidence that a SLG condition would also meet the criteria. The SDT agrees with the proposed wording change to footnote 3. The team also made other changes to footnote 3 for clarity and it now reads: **Footnote 3** - Bulk Electric System (BES) level references include extra-high voltage (EHV) Facilities defined as greater than 300kV and high voltage (HV) Facilities defined as the 300kV and lower voltage Systems. The designation of EHV and HV is used to distinguish between stated performance criteria allowances for interruption of Firm Transmission Service and Non-Consequential Load Loss. The SDT agrees with the proposed wording change to footnote 5. Footnote 5 now indicates: **Footnote 5** - For non-Generator Step Up transformer outage events, the reference voltage, as used in footnote 1, applies to the low-side winding (excluding tertiary windings). For generator and Generator Step Up transformer outage events, the reference voltage applies to the BES connected voltage (high-side of the Generator Step Up transformer). Requirements which are applicable to transformers also apply to variable frequency transformers and phase shifting transformers.		
TVA System Planning	No	In Header note j - the reference to footnote #1 should be removed. Are batteries included as part of Protection System for P5 events? P3 reference to footnote #19 under Initial System Condition and for Interruption of Firm Transmission Service Allowed should actually be footnote #9. P5 reference to footnote #19 for Interruption of Firm Transmission Service Allowed should actually be footnote #9. The reference to footnote #101 in the P4 category should actually be to #10. For Steady State notes under Extreme Events, events 2a and 2b should reference footnote #11 instead of #12. For Stability notes, event 2 should refer to footnote #10 instead of #11.In footnote #3, should there be an "or" before "as defined by the Regional Entity"?
Response: Several footnote reference errors were reflected in Table 1 when migrating from Draft 3 to Draft 4 that led to unfortunate confusion. In Draft 5, the SDT has corrected the footnote references and a detailed explanation of the changes required is summarized in the above Summary Considerations for Question 10. The P5 event is not a review of individual Protection System components but rather evaluates the loss of a "single Protection System" scheme or design. It is acceptable to simulate that a local (at the same substation) alternate Protection System scheme is still operational when performing a P5 review. The SDT chose this language to align with the SAR titled: Reliability of Protection Systems (Project 2009-7). The SDT believes that the individual component level evaluation of Protection Systems and redundancy requirements should be covered under the PRC standards and has only addressed a single protection scheme failure in the Planning Assessment required for the TPL standard. A Protection System component failure (i.e., battery) that removes multiple Protection System schemes is beyond the P5		

Organization	Yes or No	Comments for Question 10
planning event. Based on feedback from some commenters, the SDT made changes to the P5 planning event description as shown in Table 1. The changes are not substantive, do not alter the team's prior intent, and are aimed at clarification only.		
Arizona Public Service Co.	No	Note a: It would be helpful if there was a clear understanding of what constitutes voltage instability for the purpose of this standard. Is TP expected to have its own criteria for voltage stability? Are the dynamic and angle stabilities intentionally excluded? P3 refers to foot note 19 but there is no foot note 19. P4 refers to foot note 11, but the foot note does not seem to be applicable. Foot notes in second to last column of the table are confusing.
Response: In Requirement R5 the Transmission Planner/Planning Coordinator is expected to have documented its criteria for transient voltage response. It is expected that this criteria would reflect what would be considered voltage instability. Related to the question on dynamic and angle stabilities, the standard provides a requirement for what is considered a stable System in Requirement R4, part 4.1. Several footnote reference errors were reflected in Table 1 when migrating from Draft 3 to Draft 4 that led to unfortunate confusion. In Draft 5, the SDT has corrected the footnote references and a detailed explanation of the changes required is summarized in the above Summary Considerations for Question 10.		
Lakeland Electric	No	Recommended the following changes to the HV definition:Bulk Electric System (BES) level references include extra-high voltage (EHV) Facilities defined as greater than 300kV and high voltage (HV) Facilities defined as the 300kV and lower voltage Systems, per the Regional Entity's BES criteria/definition. Bulk Electric System (BES) level references include extra-high voltage (EHV) Facilities defined as greater than 300kV and high voltage (HV) Facilities defined as the 300kV and lower voltage Systems, per the Regional Entity's BES criteria/definition.
Response: The SDT has retained the same delineation of the Bulk Electric System (EHV and HV) in Draft 5. No changes made.		
Duke Energy	No	Reword Steady State Only: f. as follows: "Applicable Facility Ratings shall not be exceeded." P3 Initial System Conditions footnote should be 9, not 19. Also, P4 footnote should not be 101. Please check all footnote references.
Response: The SDT agrees with the proposed wording change to header note "f" and it now reads: **Header note 'f':** Applicable Facility Ratings shall not be exceeded. Several footnote reference errors were reflected in Table 1 when migrating from Draft 3 to Draft 4 that led to unfortunate confusion. In Draft 5, the SDT has corrected the footnote references and a detailed explanation of the changes required is summarized in the above Summary Considerations for Question 10.		

Organization	Yes or No	Comments for Question 10
Ameren	No	Some of the footnote superscripts do not appear to have a corresponding reference in the footnotes, in the case of number 19 at several locations in the Firm Transmission Service column, which should be changed to number 9, and numbers 11 and 101 in the P4 cell in the Category column that should be changed to 10. Table 1 - Steady State and Stability Performance - Planning Events, note c., and Table 1 - Steady State & Stability Performance - Extreme Events, note a. will need to be revised to address the restoration of facilities as described above in comments to Questions 3 and 5. A header is needed on the third page of Table 1 Steady State & Stability Performance. Table 1 Steady State and Stability Performance Extreme Events - Steady State: Superscripts on items 2a and 2b should be 11 rather than 12. Similarly, for the Extreme Events - Stability items 2a through 2f, the superscript should be 10 rather than 11.
Response: Several footnote reference errors were reflected in Table 1 when migrating from Draft 3 to Draft 4 that led to unfortunate confusion. In Draft 5, the SDT has corrected the footnote references and a detailed explanation of the changes required is summarized in the above Summary Considerations for Question 10. As stated in the SDT's response to comments made by Ameren in Question 3, in Requirement R3, part 3.3.1 the reference to "other automatic controls" is intended to include other tripping means such as cross-tripping and not automatic restoration devices. No change made. Ameren comments to Question 5 do not appear pertinent to "automatic restoration" of facilities. No change made. The SDT agrees that an appropriate page header is needed on for each page of the Table and has worked with NERC staff to correct this in Draft 5.		
SERC Dynamics Review Subcommittee (DRS)	No	Some of the footnote superscripts do not appear to have a corresponding reference in the footnotes, in the case of: Table 1 Planning Events P3 superscripts should be 9 and not 19. Table 1 P5 superscript 19 should also be 9. Table 1 Planning Events P4 superscript 101 should be 10, superscript 11 should also be 10. Table 1 Extreme Events steady state items 2A and 2B superscript should be 11, not 12. Table 1 Extreme Events stability items 2A-2F superscript should be 10, not 11. No header on third page of Table 1 Planning Events. Table 1, Planning Events, wherever it says "no" in the "interruptions of firm transmission service" column, generation tripping by fault clearing action should be allowed.
Response: Several footnote reference errors were reflected in Table 1 when migrating from Draft 3 to Draft 4 that led to unfortunate confusion. In Draft 5, the SDT has corrected the footnote references and a detailed explanation of the changes required is summarized in the above Summary Considerations for Question 10. The SDT agrees that an appropriate page header is needed on for each page of the Table and has worked with NERC staff to correct this in Draft 5. The SDT agrees with the commenter regarding the suggestion to permit generation re-dispatch when a "No" is indicated in the Table 1 column titled "Interruption of		

Organization	Yes or No	Comments for Question 10
Firm Transmission Service Allowed" and footnote 9 is now reflected on each occurrence.		
SRC of ISO/RTO	No	Table 1 should appear right after the requirements and before the VSLs. AESO does not comment on VSLs or VRFs.
Response: The SDT agrees with the commenter's recommendation to move Table 1 within the standard so that it follows directly after the requirements. This change was made in Draft 5.		
ERCOT ISO	No	The references to the footnotes need commas there are several references to footnote 19 and at least one to footnote 101.
Several footnote reference errors were reflected in Table 1 when migrating from Draft 3 to Draft 4 that led to unfortunate confusion. In Draft 5, the SDT has corrected the footnote references and a detailed explanation of the changes required is summarized in the above Summary Considerations for Question 10.		
MidAmerican Energy Company	No	The SDT should be commended for the changes that were made to Table 1. However, MidAmerican does recommend a few editorial changes. On page 16 under the Steady State and Stability heading is item d. Simulate Normal Clearing unless otherwise specified. This is also listed as footnote 2 to the table. MidAmerican recommends that item d under the Steady State and Stability heading be deleted. Why is there a footnote 1 indicator to note j. under Stability only? MidAmerican suggests that this footnote 1 indicator be deleted.? Item i. under Steady State only states that "the response of voltage sensitive Load that is disconnected form the System by end-user equipment" is not to be used to meet steady state requirements. However, the non-consequential load loss says yes meaning it is allowed for some events in the table and non-consequential load loss definition includes the "response of voltage sensitive Load that is disconnected from the System by end-user equipment." This seems to be a direct contradiction. MidAmerican suggest that Item i. under steady state only be deleted. MidAmerican does not understand why there is a footnote 19 indicator for P3 and P5 EHV in the table when no footnote 19 exists. Perhaps the SDT meant footnotes 1 and 9 but MidAmerican recommends that this be corrected. MidAmerican does not understand why there is a footnote 12 indicator for Item 2 a and 2 b. on page 19. Perhaps the SDT meant footnotes 1 and 2 apply but MidAmerican recommends that this be corrected.
Response: While the SDT agrees that the phrase appears twice, it does not create any confusion or unnecessary redundancy. Footnote 2 is just a more detailed explanation of what needs to be done in Stability studies. No change made. The footnote 1 indication has been deleted as suggested.		

Organization	Yes or No	Comments for Question 10
The definition of Non-Consequential Load Loss has been revised to provide greater clarity as to the SDT's intent. **Non-Consequential Load Loss:** Non-Interruptible Load loss that does not include: (1) Consequential Load Loss, (2) the response of voltage sensitive Load, or (3) Load that is disconnected from the System by end-user equipment. Several footnote reference errors were reflected in Table 1 when migrating from Draft 3 to Draft 4 that led to unfortunate confusion. In Draft 5, the SDT has corrected the footnote references and a detailed explanation of the changes required is summarized in the above Summary Considerations for Question 10.		
Xcel Energy	No	There are references to footnote 12 on page 19, and footnote 101 on page 17, yet no such footnotes exist on page 20. Some of the other footnotes seem to be misplaced. Please review and validate all footnote references.
Midwest ISO	No	Table 1 Steady State & Stability Performance Planning Events, Note "b": It states that consequential generation loss is acceptable; however, there is no definition of this in the definition section. We suggest having the following definition of Consequential Generation Loss added to the definition section. Table 1 There appears to be a few typos on P3, P4 and P5 note references because there are no Note 19 nor Note 101. Please clarify this. Table 1 Steady State & Stability Performance Planning Events: We believe that this table should appear right after the requirements but before the VSLs.
Response: It appears the commenter intended to suggest a definition for consequential generation loss but neglected to include its proposed definition. Regardless, the SDT considered the need for such a definition and concluded no definition was needed. No change made. Several footnote reference errors were reflected in Table 1 when migrating from Draft 3 to Draft 4 that led to unfortunate confusion. In Draft 5, the SDT has corrected the footnote references and a detailed explanation of the changes required is summarized in the above Summary Considerations for Question 10. The SDT agrees with the commenter's recommendation to move Table 1 within the standard so that it follows directly after the requirements. This change was made in Draft 5.		
Florida Municipal Power Agency, and its Member Cities	No	Table 1, under Steady State & Stability, "a" states: "BES Transmission voltage instability, cascading outages and uncontrolled islanding shall not occur." There are small portions of the grid where there may be three long lines feeding a load, and if two of those two lines were lost (P6 for instance), the remaining line would go into voltage collapse losing a few hundred MWs of consequential load with no impact to the BES. FMPA suggests that the wording be appended by: "BES Transmission voltage instability, cascading outages and uncontrolled islanding shall not occur for P0 through P2. BES Transmission voltage instability, cascading outages and uncontrolled islanding causing a supply / demand mismatch of more than the largest single loss of source shall not occur." FMPA does not understand why a bus-tie breaker would be treated differently than another breaker. They both have the same chance of failure.
Response: The SDT considered the proposed change to note "a" but did not accept the proposed change. For the situation described, System adjustments are permitted between the outages of a P6 event to minimize the impact. Additionally, following the second outage the use of an SPS could be used to further minimize		

Organization	Yes or No	Comments for Question 10
the impact and avoid an unstable System condition. The team agrees that any breaker has an equal chance for failure due to a fault. However, when lumped together with all the BES line breakers and transformer breakers, the Bus-tie Breaker application is much less prevalent within the BES when considering all beaker fault possibilities. The SDT recognizes that Bus-tie Breaker applications are used to lessen the impact of a bus fault outage (P2.2). Therefore, in regards to meeting the single Contingency breaker fault condition the SDT felt it was necessary to differentiate between performance expectations between bus-tie and non bus-tie breakers. See P2.3 and P2.4 planning events.		
Manitoba Hydro	No	Table 1:1. When two (or more) footnotes apply simultaneously they should be separated by commas; ot are these typos? 2. The P2 contingency "opening of a breaker without a fault" could be moved up to a P1 contingency. This is a higher probability event then a bus section fault. 3. P4, Event column: The 11 superscript, after the phrase "Loss of multiple elements....", should be a 10. In P3, should 19 be 9? 4. Footnote 9: The drafting team clearly permits generator redispatch coupled with curtailment of firm transmission service for multiple contingencies (P3-P5). We believe generator redispatch is appropriate for P1 and P2 as well. R2.7.1 lists several actions that are permitted to be used as corrective plans including Special Protection Systems, automatic generator tripping or manual generator runback to respond to both single and multiple contingencies. Any loss of generation will require redispatch to ensure emergency generation reserves are replenished and the system is ready for the next contingency. For contingency P1, loss of generator, load will not be lost because there are generation reserves, however redispatch will be required to restore these reserves. Footnote 9 should apply to P1 and P2 contingencies. 5. Footnote 11: This note is a reference for a common tower outage. I think the words "or common Right-of-Way" should be deleted from the sentence. It is obvious that circuits on a common tower must be on a common Right-of-Way. 6. Note b: Consequential generation loss could use a definition similar to consequential and non-consequential load loss to add clarity. The standard as written in R4.1.2 permits cascade tripping of generators due to pulling out of synchronism. Typically this has been defined as instability or cascade tripping and not permitted in the past. 7. Note i: note i implies that any voltage sensitive load or load dropped by end-user equipment shall not be used to meet steady-state performance requirements. However, given that this note is not included under the stability portion, does this mean that voltage sensitive load or load that is dropped by end-user equipment can be used to meet the TC and PC planning criteria established in R5? Induction motors could trip in the stability analysis if the transient voltage is low enough (non-consequential load loss). The R5 criteria will be met as long as the load is manually switched back in and the post-disturbance steady state loading is acceptable. Can the drafting team

Organization	Yes or No	Comments for Question 10
		clarify the intent of Note i?

Response:

1. Several footnote reference errors were reflected in Table 1 when migrating from Draft 3 to Draft 4 that led to unfortunate confusion. In Draft 5, the SDT has corrected the footnote references and a detailed explanation of the changes required is summarized in the above Summary Considerations for Question 10.
2. The SDT did not accept the proposed change for the placement of the P2.1 planning event into the P1 group.
3. As noted above, errors in reference to various Table 1 footnotes are recognized by the SDT and have been corrected in Draft 5.
4. The SDT agreed with the commenter and footnote 9 was added to the P1 and P2 events in regard to the column titled "Interruption of Firm Transmission Service Allowed"
5. Common structure may be interpreted as common ROW but Common ROW does not necessarily equate to common structure. Since the wording is 'or', it covers both circumstances. No change made.
6. The SDT does not believe a definition to differentiate between consequential or non-consequential generation loss is needed since generation tripping and re-dispatch is permitted as a corrective action for all planning events as stated in Requirement R2, part 2.7.1.
7. Table 1, note "i" is intended to clarify that even if it is known that an end-user who implements a more conservative practice than that of the Transmission Planner/Planning Coordinator regarding steady-state voltage criteria and chooses to interrupt its own Load, the end-use Load must still be represented in the steady-state timeframe. The Load tripping is permitted in a Stability review, however, it should be assumed that a customer will react quickly to restore its Load and therefore the standard requires the Load be represented in the steady-state timeframe. Only actions (manual or automatic) taken by the Transmission Planner/Planning Coordinator are permitted for consideration for a steady-state review.

NERC System Protection and Control Subcommittee (SPCS)	No	The Drafting Team should modify the P5 Category column in Table 1 to read "P5 Multiple Contingency (Fault plus Protection System failure to operate). "This addition will focus the P5 Category on the overall Protection System failure to operate." The Drafting Team should include requirements in P5 of Table 1 for simulating both single-phase and 3-phase fault types for Protection System failures to operate.P4 and P5 call for simulations with SLG faults. Prolonged clearing times that result from breaker failures or Protection System failures to operate increase the probability that the fault may evolve from single-phase to multi-phase, and that probability further increases in EHV substations due to the closer clearances of bus work and equipment.Whereas Breaker Failure times are more likely to be known and mitigated through Breaker Failure Protection Systems, the clearing times associated with Protection System failures to operate may be much longer, increasing the probability of evolving in to multi-phase faults. The phrase "or a protection system failure" should be removed from items 2a through 2e in the Extreme Event table following Table 1.If the initializing event is the SLG fault, its evolution to a multi-phase fault alone (due to a Protection System failure to operate) should not be considered an Extreme Event for stability analysis.

Response: While the SDT did not accept the proposed P5 description change a change has been made for clarity. Based on feedback from some commenters the

Organization	Yes or No	Comments for Question 10
SDT made changes to the P5 planning event description as shown in Table 1. The changes are not substantive, do not alter the team's prior intent, and are aimed at clarification only. In regards to include both a SLG and 3-phase for the P5 planning event the SDT respectfully disagrees with the commenter. Based on the SDT's review of historical outage data the SDT believes that a SLG event evolving to a 3-phase item is less likely and that 3-phase fault with Protection System failure is appropriately treated with the standard as an extreme event under extreme event Stability item 2a through 2d. No change made.		
Florida Power and Light	No	The P2-1 event needs to be clarified with its intent. In the SDT Consideration of Comments to the 3rd DRAFT posting, the response to Transmission Planning clarified that "There is no need to show a line energized up to the breakers that opened. The intent is simply to look for low voltage or thermal problems while supplying Load from one end of a normally networked line." This could be accomplished by adding this to footnote 7 or re-naming the event "Opening of a Line Section w/o fault".
Response: The SDT agrees with comments in regard to the P2-1 planning event. A relay mis-operation that inadvertently trips a breaker is the primary reason forced outage cause for a P2.1 event. The condition could also be a planned (maintenance) event. P2.1 has been renamed "opening of a line section w/o a fault" to better align with the teams intent. Additionally, footnote 7 was revised to better clarify the need to study the P2.1 event. Footnote 7 now reads: **Footnote 7** - Opening one end of a line section without a fault on a normally networked Transmission circuit such that the line is possibly serving Load radial from a single source point.		
MAPP	No	The table needs to match the stated requirements in R3 & R4
Response: The standard explicitly references Table 1 in both Requirements R3 and R4 regarding the need to address the planning events and extreme events from both a steady-state (Requirement R3) and stability (Requirement R4) timeframe. The standard is written in a manner where both the standard requirements and Table 1 work jointly together to describe study expectations. In short, Table 1 is part and parcel to the standard.		
Hydro-Québec TransEnergie (HQT)	No	There is confusion in interpretation of the Table 1 When the voltages class of the contingency element and the monitored element are different (one is HV and the other is EHV), to which voltage class is the allowance for shedding of non-consequential load applied. For example if the fault is on the 138-kV side of a 345/138-kV autotransformer, are you allowed to shed load to keep the 345-kV from overloading? Conversely, if the fault is on the 345-kV side of a 345/138-kV autotransformer, are you allowed to shed load to keep the 138-kV from overloading? Footnotes on P3 and P4 (101 & 19) should be 9 and 10, respectively. This merely appears to be a typo in the latest draft. Other footnotes appear to be mislabeled as well. If Extreme Events are not deleted from the standard, then a different number for the table for Extreme Events should be used. Extreme Events 2a need to define towerline. Add language to replace towerline with structure. Table 1 Footnotes require a close editorial review. There are two number ones, and multiple items pointing to the

Organization	Yes or No	Comments for Question 10
		wrong footnote or footnotes that don't exist (19, 101), etc. Several instances are discussed below but this is not an exhaustive list. Table 1 Steady State & Stability Performance Planning Events - Note (a) this note is placed under "Steady State & Stability" but issues of voltage instability, cascading outages, and uncontrolled islanding apply only to stability. NPCC suggests this note be relocated to "Stability Only." Table 1 Steady State & Stability Performance Planning Events - Note (i) this indicates that one cannot meet steady state requirements by depending on end-user owned equipment. Please clarify the purpose and performance requirement on this note with respect to end-user schemes and possible arrangements already in place to trip end-user equipment. Table 1, P4 footnote reference in Category column needs to change from 101 to 10. Footnote reference in Event column lead-in description needs to change from 11 to 10. Table 1, P5 As written, this requirement replicates a fault causing a loss of station anywhere that there is only one protection system. This is overly severe and would lead to the requirement for fully redundant protection systems at many stations. The use of the term "Protection System" in P5 is unacceptably inconsistent with the NERC definition of Protection System because it does not exclude the battery and its associated series elements. Battery systems should not be included. Table 1, P7 for Event 1 (the loss of two adjacent circuits), this needs to specify if these are the same phase or different phases.Table 1 Steady State & Stability Performance Extreme Events It appears that for Steady state, item 2, that item (a) is encompassed by (b). It if is not, what makes it different? Table 1, footnote #2 typo there is an erroneous comma in the phrase "are the fault types, that must be evaluated." Please remove said comma. Table 1, footnote #3, HQT, as does NPCC, has asked NERC to put a lower bound on the HV but it seems that this remains unaddressed.More stringent performance requirements should be applied to Facilities that represent the backbone of the electric power grid and act as the medium for moving large amounts of power from production to various Load centers, rather than to those Facilities that directly serve end-use Load customers. However, as had been commented in preceding postings, the EHV breakpoint for these more stringent requirements, defined in note 3 of table 1 as "all Facilities greater than 300 kV", is not appropriately defined and should be reviewed. A uniform voltage-level threshold has not been shown to adequately cover all of the different power systems in North America, and significant additional costs will be incurred without proportional or measurable reliability benefits if this definition is not changed.The following is a proposed modification to the EHV definition "all Facilities greater than 300 kV" :"Facilities representing the backbone of the System, generally operating at voltages greater than 300 kV, as determined by the Planning Coordinator and approved by Regional Entity." In using such language, we believe that the extra investment required would go towards real improvement of the reliability of the Interconnected System. Furthermore, HQT believe that untill the BES/BPS definition debate is settled at NERC and FERC level, the proposed definition permits the use of the performance base methodology to determine the BPS element subjected to this standard. The way the standard is actually

Organization	Yes or No	Comments for Question 10
		written, it can be interpreted as 300 kV and above, wheter it is part of BPS or not. HQT believe it is overly prescriptive and leaves no leeway.

Response: The determination of when interrupting Non-Consequential Load and/or Firm Transmission Service is permitted to meet Table 1 performance requirements service is based solely on the lowest voltage level of Facilities disconnected by design for the planning event studied and not based on the monitored Facilities. For the example provided, the HV provisions would apply since a 345/138kV transformer is considered a HV Facility that is removed from service regardless of where the fault originated. Changes were made to footnote 1 to better clarify the SDT's intent and it now reads:

> **Footnote 1 -** If the event analyzed involves BES elements at multiple System voltage levels, the lowest System voltage level of the element(s) removed for the analyzed event determines the stated performance criteria regarding allowances for interruptions of Firm Transmission Service and Non-Consequential Load Loss.

Several footnote reference errors were reflected in Table 1 when migrating from Draft 3 to Draft 4 that led to unfortunate confusion. In Draft 5, the SDT has corrected the footnote references and a detailed explanation of the changes required is summarized in the above Summary Considerations for Question 10.

The SDT has retained extreme events and believe it is important to review the extreme events for potential Cascading and if identified complete an evaluation of possible actions designed to reduce the likelihood or mitigate the consequences and adverse impacts of the extreme event(s). The SDT retained the same table reference area for extreme events.

The SDT believes that towerline is a commonly understood term and that the use of "structure" over "tower line" is not a substantive change. No change made in Draft 5 in this regard.

As noted above, errors in reference to Table 1 footnotes are recognized by the SDT and have been corrected in Draft 5.

The SDT disagrees with the commenter's view that Table 1 note "a" is not valid for the steady-state timeframe. The standard in Requirement R6 requires a Transmission Planner/Planning Coordinator to define and document, within their Planning Assessment, any criteria or methodology used in the analysis to identify System instability for conditions such as Cascading, voltage instability, or uncontrolled islanding. A steady-state review is not prohibited by the standard and may be included within the criteria used.

Table 1 note "i" is intended to clarify that even if it is known that an end-user who implements a more conservative practice than that of the Transmission Planner/Planning Coordinator regarding steady-state voltage criteria and chooses to interrupt its own Load, the end-use Load must still be represented in the steady-state timeframe. The Load tripping is permitted in a Stability review, however, it should be assumed that a customer will react quickly to restore its Load and therefore the standard requires the Load be represented in the steady-state timeframe. Only actions (manual or automatic) taken by the Transmission Planner/Planning Coordinator are permitted for consideration for a steady-state review.

As noted above, errors in reference to Table 1 footnotes are recognized by the SDT and have been corrected in Draft 5.

The P5 event is not a review of individual Protection System components but rather evaluates the loss of a "single Protection System" scheme or design. It is acceptable to simulate that a local (at the same substation) alternate Protection System scheme is still operational when performing a P5 review. The SDT chose this language to align with the SAR titled: Reliability of Protection Systems (Project 2009-7). The SDT believes that the individual component level evaluation of Protection Systems and redundancy requirements should be covered under the PRC standards and has only addressed a single protection scheme failure in the Planning Assessment required for the TPL standard. A Protection System component failure (i.e., battery) that removes multiple Protection System schemes is beyond the P5 planning event. Based on feedback from some commenters, the SDT made changes to the P5 planning event description as shown in Table 1. The P5 is now described as shown below. The changes are not substantive, do not alter the team's prior intent and aimed at clarification only.

Organization	Yes or No	Comments for Question 10
The standard does not specify common or different phase for the P7 planning event and is left to the engineering judgment of the Transmission Planner/Planning Coordinator. No change made. Extreme event 2a does not cover 2b when two or more tower lines are contained in the same Right-of-Way. Extreme event item "2a" is 3 or more circuits on the same tower line or structure. Extreme event item "2b" considers loss of multiple Transmission lines located on a different tower line but within the same the same Right-of-Way. The erroneous comma in footnote 2 has been removed as suggested by the commenter. The SDT has retained the same delineation of the Bulk Electric System (EHV and HV) in Draft 5. No changes made.		
National Grid	No	There is confusion in interpretation of the Table 1 When the voltages class of the contingency element and the monitored element are different (one is HV and the other is EHV), to which voltage class is the allowance for shedding of non-consequential load applied. For example if the fault is on the 138-kV side of a 345/138-kV autotransformer, are you allowed to shed load to keep the 345-kV from overloading? Conversely, if the fault is on the 345-kV side of a 345/138-kV autotransformer, are you allowed to shed load to keep the 138-kV from overloading? Footnotes on P3 and P4 (101 & 19) should be 9 and 10, respectively. This merely appears to be a typo in the latest draft. Other footnotes appear to be mislabeled as well. If Extreme Events are not deleted from the standard, then a different number for the table for Extreme Events should be used. Table 1, P5: The use of the term "Protection System" in P5 is unacceptably inconsistent with the NERC definition of Protection System because it does not exclude the battery and its associated series elements. Extreme Events 2a need to define towerline. Add language to replace towerline with structure. Table 1, footnote #3, change Regional Entity to Regional Reliability Organization.
Response: The determination of when interrupting Non-Consequential Load and/or Firm Transmission Service is permitted to meet Table 1 performance requirements service is based solely on the lowest voltage level of Facilities disconnected by design for the planning event studied and not based on the monitored Facilities. For the example provided, the HV provisions would apply since a 345/138kV transformer is considered a HV Facility that is removed from service regardless of where the fault originated. Changes were made to footnote 1 to better clarify the SDT's intent and it now reads: **Footnote 1 -** If the event analyzed involves BES elements at multiple System voltage levels, the lowest System voltage level of the element(s) removed for the analyzed event determines the stated performance criteria regarding allowances for interruptions of Firm Transmission Service and Non-Consequential Load Loss. Several footnote reference errors were reflected in Table 1 when migrating from Draft 3 to Draft 4 that led to unfortunate confusion. In Draft 5, the SDT has corrected the footnote references and a detailed explanation of the changes required is summarized in the above Summary Considerations for Question 10. The SDT has retained extreme events and believe it is important to review the extreme events for potential Cascading and if identified complete an evaluation of possible actions designed to reduce the likelihood or mitigate the consequences and adverse impacts of the extreme event(s). The SDT retained the same table		

Organization	Yes or No	Comments for Question 10
reference area for extreme events. The P5 event is not a review of individual Protection System components but rather evaluates the loss of a "single Protection System" scheme or design. It is acceptable to simulate that a local (at the same substation) alternate Protection System scheme is still operational when performing a P5 review. The SDT chose this language to align with the SAR titled: Reliability of Protection Systems (Project 2009-7). The SDT believes that the individual component level evaluation of Protection Systems and redundancy requirements should be covered under the PRC standards and has only addressed a single protection scheme failure in the Planning Assessment required for the TPL standard. A Protection System component failure (i.e., battery) that removes multiple Protection System schemes is beyond the P5 planning event Based on feedback from some commenters, the SDT made changes to the P5 planning event description as shown in Table 1. The changes are not substantive, do not alter the team's prior intent and aimed at clarification only. The SDT disagrees with the commenter that the P5 event is a misuse of the defined Protection System term. The SDT believes that tower line is a commonly understood term and that the use of "structure" over "tower line" is not a substantive change. No change made in Draft 5 in this regard. The SDT concluded that the use of Regional Entity is not necessary. Other changes have been made to footnote for clarity based on other comments. **Footnote 3** - Bulk Electric System (BES) level references include extra-high voltage (EHV) Facilities defined as greater than 300kV and high voltage (HV) Facilities defined as the 300kV and lower voltage Systems. The designation of EHV and HV is used to distinguish between stated performance criteria allowances for interruption of Firm Transmission Service and Non-Consequential Load Loss.		
Northeast Power Coordinating Council--RSC	No	There is confusion in interpretation of the Table 1 When the voltages class of the contingency element and the monitored element are different (one is HV and the other is EHV), to which voltage class is the allowance for shedding of non-consequential load applied. For example if the fault is on the 138-kV side of a 345/138-kV autotransformer, are you allowed to shed load to keep the 345-kV from overloading? Conversely, if the fault is on the 345-kV side of a 345/138-kV autotransformer, are you allowed to shed load to keep the 138-kV from overloading? Footnotes on P3 and P4 (101 & 19) should be 9 and 10, respectively. This merely appears to be a typo in the latest draft. Other footnotes appear to be mislabeled as well. If Extreme Events are not deleted from the standard, then a different number for the table for Extreme Events should be used. Extreme Events 2a need to define towerline. Add language to replace towerline with structure. Table 1 Footnotes require a close editorial review. There are two number ones, and multiple items pointing to the wrong footnote or footnotes that don't exist (19, 101), etc. Several instances are discussed below but this is not an exhaustive list. Table 1 Steady State & Stability Performance Planning Events - Note (a) this note is placed under "Steady State & Stability" but issues of voltage instability, cascading outages, and uncontrolled islanding apply only to stability. NPCC suggests this note be relocated to "Stability Only." Table 1 Steady State & Stability Performance Planning Events - Note (i) this indicates that one cannot meet steady state requirements by depending on end-user owned equipment. Please clarify the purpose and performance requirement on this note with respect to end-user schemes and possible arrangements already in

Organization	Yes or No	Comments for Question 10
		place to trip end-user equipment. Table 1, P4 footnote reference in Category column needs to change from 101 to 10. Footnote reference in Event column lead-in description needs to change from 11 to 10. Table 1, P5 As written, this requirement replicates a fault causing a loss of station anywhere that there is only one protection system. This is overly severe and would lead to the requirement for fully redundant protection systems at many stations. The use of the term "Protection System" in P5 is unacceptably inconsistent with the NERC definition of Protection System because it does not exclude the battery and its associated series elements. Battery systems should not be included. Table 1, P7 for Event 1 (the loss of two adjacent circuits), this needs to specify if these are the same phase or different phases. Table 1 Steady State & Stability Performance Extreme EventsIt appears that for Steady state, item 2, that item (a) is encompassed by (b). It if is not, what makes it different? Table 1, footnote #2 typo there is an erroneous comma in the phrase "are the fault types, that must be evaluated." Please remove said comma. Table 1, footnote #3, NPCC has asked NERC to put a lower bound on the HV but it seems that this remains unaddressed.More stringent performance requirements should be applied to Facilities that represent the backbone of the electric power grid and act as the medium for moving large amounts of power from production to various Load centers, rather than to those Facilities that directly serve end-use Load customers. However, as had been commented in preceding postings, the EHV breakpoint for these more stringent requirements, defined in note 3 of table 1 as "all Facilities greater than 300 kV", is not appropriately defined and should be reviewed. A uniform voltage-level threshold has not been shown to adequately cover all of the different power systems in North America, and significant additional costs will be incurred without proportional or measurable reliability benefits if this definition is not changed.The following is a proposed modification to the EHV definition "all Facilities greater than 300 kV"?: "Facilities representing the backbone of the System, generally operating at voltages greater than 300 kV, as determined by the Planning Coordinator and approved by Regional Entity." In using such language, we believe that the extra investment required would go towards real improvement of the reliability of the Interconnected System.

Response: The determination of when interrupting Non-Consequential Load and/or Firm Transmission Service is permitted to meet Table 1 performance requirements service is based solely on the lowest voltage level of Facilities disconnected by design for the planning event studied and not based on the monitored facilities. For the example provided, the HV provisions would apply since a 345/138kV transformer is considered a HV Facility that is removed from service regardless of where the fault originated. Changes were made to footnote 1 to better clarify the SDT's intent and it now reads:

> **Footnote 1 -** If the event analyzed involves BES elements at multiple System voltage levels, the lowest System voltage level of the element(s) removed for the analyzed event determines the stated performance criteria regarding allowances for interruptions of Firm Transmission Service and Non-Consequential Load Loss.

Several footnote reference errors were reflected in Table 1 when migrating from Draft 3 to Draft 4 that led to unfortunate confusion. In Draft 5, the SDT has corrected

Organization	Yes or No	Comments for Question 10
		the footnote references and a detailed explanation of the changes required are summarized in the above Summary Considerations for Question 10. The SDT has retained extreme events and believe it is important to review the extreme events for potential Cascading and if identified complete an evaluation of possible actions designed to reduce the likelihood or mitigate the consequences and adverse impacts of the extreme event(s). The SDT retained the same table reference area for extreme events. The SDT believes that tower line is a commonly understood term and that the use of "structure" over "tower line" is not a substantive change. No change made. As noted above, errors in reference to Table 1 footnotes are recognized by the SDT and have been corrected in Draft 5. The SDT disagrees with the commenter's view that Table 1 note "a" is not valid for the steady-state timeframe. The standard in requirement R6 requires a Transmission Planner/Planning Coordinator to define and document, within their Planning Assessment, any criteria or methodology used in the analysis to identify System instability for conditions such as Cascading outages, voltage instability, or uncontrolled islanding. A steady-state review is not prohibited by the standard and may be included within the criteria used. Table 1 note "i" is intended to clarify that even if it is known that an end-user who implements a more conservative practice than that of the TP/PC regarding steady-state voltage criteria and chooses to interrupt its own Load, the end-use Load must still be represented in the steady-state timeframe. The Load tripping is permitted in a Stability review, however, it should be assumed that a customer will react quickly to restore its Load and therefore the standard requires the Load be represented in the steady-state timeframe. Only actions (manual or automatic) taken by the Transmission Planner/Planning Coordinator are permitted for consideration for a steady-state review. As noted above, errors in reference to Table 1 footnotes are recognized by the SDT and have been corrected in Draft 5. The P5 event is not a review of individual Protection System components but rather evaluates the loss of a "single Protection System" scheme or design. It is acceptable to simulate that a local (at the same substation) alternate Protection System scheme is still operational when performing a P5 review. The SDT chose this language to align with the SAR titled: Reliability of Protection Systems (Project 2009-7). The SDT believes that the individual component level evaluation of Protection Systems and redundancy requirements should be covered under the PRC standards and has only addressed a single protection scheme failure in the Planning Assessment required for the TPL standard. A Protection System component failure (i.e., battery) that removes multiple Protection System schemes is beyond the P5 planning event Based on feedback from some commenters, the SDT made changes to the P5 planning event description as shown in Table 1. The changes are not substantive, do not alter the team's prior intent and aimed at clarification only. The standard does not specify common or different phase for the P7 planning event and is left to the engineering judgment of the Transmission Planner/Planning Coordinator. No changes made. Extreme event 2a does not cover 2b when two or more tower lines are contained in the same Right-of-Way. Extreme event item "2a" is 3 or more circuits on the <u>same tower line or structure.</u> Extreme event item "2b" considers loss of multiple Transmission lines located on a different tower line but within the same the same Right-of-Way. The erroneous comma in footnote 2 has been removed as suggested by the commenter. The SDT has retained the same delineation of the Bulk Electric System (EHV and HV) in Draft 5. No change made.
ISO New England	No	We generally agree with the table however our issues are as follows:Footnotes on P3 and P4 (101 & 19) should be 9 and 10, respectively. This merely appears to be a typo in the latest draft. Other footnotes appear to be mislabeled as well.

Organization	Yes or No	Comments for Question 10
		If Extreme Events are not deleted from the standard, then a different number for the table for Extreme Events should be used. There is confusion in interpretation of the Table 1 When the voltages class of the contingency element and the monitored element are different (one is HV and the other is EHV), to which voltage class is the allowance for shedding of non-consequential load applied. For example if the fault is on the 138-kV side of a 345/138-kV autotransformer, are you allowed to shed load to keep the 345-kV from overloading? Conversely, if the fault is on the 345-kV side of a 345/138-kV autotransformer, are you allowed to shed load to keep the 138-kV from overloading"P5 "The use of the term "Protection System" in P5 is unacceptably inconsistent with the NERC definition of Protection System because it does not exclude the battery and its associated series elements. Extreme Events 2a need to define tower line. Add language to replace "tower line" with "structure". Table 1, footnote #3, change Regional Entity to Regional Reliability Organization.
United Illuminating	No	We generally agree with the table however our issues are as follows:Footnotes on P3 and P4 (101 & 19) should be 9 and 10, respectively. This merely appears to be a typo in the latest draft. Other footnotes appear to be mislabeled as well. If Extreme Events are not deleted from the standard, then a different number for the table for Extreme Events should be used. There is confusion in interpretation of the Table 1 When the voltages class of the contingency element and the monitored element are different (one is HV and the other is EHV), to which voltage class is the allowance for shedding of non-consequential load applied. For example if the fault is on the 138-kV side of a 345/138-kV autotransformer, are you allowed to shed load to keep the 345-kV from overloading? Conversely, if the fault is on the 345-kV side of a 345/138-kV autotransformer, are you allowed to shed load to keep the 138-kV from overloading?P5 The use of the term "Protection System" in P5 is unacceptably inconsistent with the NERC definition of Protection System because it does not exclude the battery and its associated series elements. Extreme Events 2a need to define tower line. Add language to replace "tower line" with "structure". Table 1, footnote #3, change Regional Entity to Regional Reliability Organization.
Central Maine Power Company	No	We generally agree with the table, however our issues are as follows:Footnotes on P3 and P4 (101 & 19) should be 9 and 10, respectively. This merely appears to be a typo in the latest draft. Other footnotes appear to be mislabeled as well. If Extreme Events are not deleted from the standard, then a different number for the table for Extreme Events should be used. There is confusion in interpretation of the Table 1 When the voltages class of the contingency element and the monitored element are different (one is HV and the other is EHV), to which voltage class is the allowance for shedding of non-consequential load applied. For example if the fault is on the 138-kV side of a 345/138-kV

Organization	Yes or No	Comments for Question 10
		autotransformer, are you allowed to shed load to keep the 345-kV from overloading? Conversely, if the fault is on the 345-kV side of a 345/138-kV autotransformer, are you allowed to shed load to keep the 138-kV from overloading?P5 The use of the term "Protection System" in P5 is unacceptably inconsistent with the NERC definition of Protection System because it does not exclude the battery and its associated series elements. Extreme Events 2a need to define tower line. Add language to replace "tower line" with "structure". Table 1, footnote #3 change Regional Entity to Regional Reliability Organization.
Response: Several footnote reference errors were reflected in Table 1 when migrating from Draft 3 to Draft 4 that led to unfortunate confusion. In Draft 5, the SDT has corrected the footnote references and a detailed explanation of the changes required is summarized in the above Summary Considerations for Question 10. The SDT has retained extreme events and believe it is important to review the extreme events for potential Cascading and if identified complete an evaluation of possible actions designed to reduce the likelihood or mitigate the consequences and adverse impacts of the extreme event(s). The SDT retained the same table reference area for extreme events The determination of when interrupting Non-Consequential Load and/or Firm Transmission Service is permitted to meet Table 1 performance requirements service is based solely on the lowest voltage level of Facilities disconnected by design for the planning event studied and not based on the monitored Facilities. For the example provided, the HV provisions would apply since a 345/138kV transformer is considered a HV Facility that is removed from service regardless of where the fault originated. Changes were made to footnote 1 to better clarify the SDT's intent and it now reads: **Footnote 1 -** If the event analyzed involves BES elements at multiple System voltage levels, the lowest System voltage level of the element(s) removed for the analyzed event determines the stated performance criteria regarding allowances for interruptions of Firm Transmission Service and Non-Consequential Load Loss. The SDT believes that tower line is a commonly understood term and that the use of "structure" over "tower line" is not a substantive change. No change made in Draft 5 in this regard. The SDT concluded that the use of Regional Entity in footnote 3 is not necessary. No change made to reflect the proposed Regional Reliability Organization as proposed by the commenter**.** **Footnote 3** - Bulk Electric System (BES) level references include extra-high voltage (EHV) Facilities defined as greater than 300kV and high voltage (HV) Facilities defined as the 300kV and lower voltage Systems. The designation of EHV and HV is used to distinguish between stated performance criteria allowances for interruption of Firm Transmission Service and Non-Consequential Load Loss.		
American Transmission Company	No	We suggest the following changes:Note "e" in the Planning Events, Steady State & Stability section – After bulletin item #7 is added to R2.7.1 as proposed above, refer to this bulletin item with wording like, ". . . applicable to the Facility Ratings (as noted in R2.7.1).". Note "a" and Note "b" in the Planning Events, Steady State Only section Both of these notes are stated in the form of a Requirement (e.g. use the verb "shall"), but all requirements should be included in the Requirements section and not introduced (hidden) in the performance notes of Table 1. After R3.3.5 is added as proposed above, replace Note "a" and "b" with wording from R3.3.5, "Applicable System

Organization	Yes or No	Comments for Question 10
		Operating Limits for the planning horizon shall not be exceeded, as stated in R3.3.5.". Note "a" and "b" can be combined and replaced with a single Note because the observance of System Operating Limits related to steady state conditions covers both items. Note "d" in the Planning Events, Steady State Only section This note is stated in the form of a Requirement (e.g. use the verb "shall"), but all requirements should be included in the Requirements section and not introduced in the performance notes of Table 1. After R3.3.6 is added as proposed above, replace Note "d" with wording from R3.3.6, The response of voltage sensitive Load including Load that is disconnected from the System by end-user equipment associated with an event shall not be used to steady state voltage requirements, as stated in R3.3.6. Note "a" and Note "b" in the Planning Events, Stability Only section Both of these notes are stated in the form of a Requirement (e.g. use the verb "shall"), but all requirements should be included in the Requirements section and not introduced in the performance notes of Table 1. After R4.3.5 is added as proposed above, replace Note "a" and "b" with wording from R4.3.5, "Applicable System Operating Limits for the planning horizon shall not be exceeded, as stated in R4.3.5.". Note "a" and "b" can be combined and replaced with a single Note because the observance of System Operating Limits related to stability covers both items P3 Modify the P3 Category performance criteria to apply only to the loss of two generators because the probability of the loss of two base load generators is an order of magnitude greater than the loss of a generator and any other transmission element. We suggest the listing of: the loss of transmission circuit, transformer, shunt device, and single pole of DC line be removed from the P3 Events column. Move the "generator + another element" events to the P6 Category by adding "1. Generator" to the listing in the Initial System Condition (Loss of . . .) column. Item 2.a in the Extreme Events, Steady State section Clarify the meaning of the loss of multiple circuits in Item 2.a by using wording similar to P7. We suggest this text: "a. Loss of three or more circuits that share a common tower." Item 3.b of the Extreme Events, Steady State section " Clarify the reference to actual, historical operating experience in Item 3.b. We suggest this text: "b. Other events based upon actual operating experience that may result in wide area disturbances." Item 2.i of the Extreme Events, Stability State section " Clarify the reference to actual, historical operating experience in Item 2.i. We suggest this text that is similar to Steady State, Item 3.b: "i. Other events based upon actual operating experience that may result in wide area disturbances." Extreme Event sections are not updated to reflect the new footnote numbering (for instance Item 2a and Item 2b of the Steady State column). Footnote 6 " Further clarify the applicable shunt devices in Footnote 6 with this suggested text: "6. Requirements

Organization	Yes or No	Comments for Question 10
		which are applicable to shunt devices, also apply to FACTS devices that are connected to ground, but not instrument voltage transformers or surge arresters."
Response: The SDT in ATC's Q2 comments declined to add the suggested 7th bullet to Requirement R2, part 2.7.1. The list in Requirement R2, part 2.7.1 provides examples of potential corrective actions and includes references to the use of generation tripping/runback when used to meet steady-state or Stability performance requirements. The note "e" in Table 1 is a condition for allowance of planned System adjustments, which could include Operating Plans such as re-dispatch and qualifies that the operating actions must be achievable with the timeframe of an applicable ratings. No change made. The Table 1 performance requirements are tied to the standard through Requirements R3 and R4. For example in Requirement R3, part 3.1 the requirement indicates "Studies shall be performed for planning events to determine whether the BES meets the performance requirements in Table 1..". Header notes are part of Table 1 and therefore included in part 3.1 of requirement R3. No change made. The proposed Requirement R3, part 3.3.5 was not adopted by the SDT. No change made. Regarding note "d" comment - the Table 1 performance requirements are tied to the standard through Requirements R3 and R4. The proposed Requirement R3, part 3.3.6 was not adopted by the SDT. No change made. There are no notes "a" and "b" in the Stability only section. The correct reference is "j" and "k". The Table 1 performance requirements are tied to the standard through Requirements R3 and R4. No change made. The SDT disagrees with the proposed adjustment of moving select generator Contingency outages to new planning event designations. The Table 1 planning event order is somewhat subjective and the SDT believes appropriate expectations were made for generation outages within the P3 event. No changes made. Item 2.a in the Extreme Events, steady-state the language as shown in Draft 4 already indicates the text requested by the commenter. It's possible that an earlier draft of TPL-001-1 was referenced when making the comment. No change required. Item 3b in the Extreme Events, steady-state the language as shown in Draft 4 already indicates the text requested by the commenter. It's possible that an earlier draft of TPL-001-1 was referenced when making the comment. No change required. Item 2i in the Extreme Events, Stability language was revised to "2f" in Draft 4 and already indicates the text requested by the commenter. It's possible that an earlier draft of TPL-001-1 was referenced when making the comment. No change required. Several footnote reference errors were reflected in Table 1 when migrating from Draft 3 to Draft 4 that led to unfortunate confusion. In Draft 5, the SDT has corrected the footnote references and a detailed explanation of the changes required is summarized in the above Summary Considerations for Question 10. Regarding footnote 6, the SDT believes the footnote is sufficient. Based on lack of support for the proposed change from other stakeholders the SDT determined no change was needed.		
Oncor Electric Delivery	Yes	Errata Changes - Footnotes on P3 and P4 (101 & 19) should be 9 and 10, respectively. Other Footnotes appear to be mislabeled as well. There is lack of clarity in the interpretation of Table 1 When the voltages class of the contingency element and the monitored element are different (one is HV and the other is EHV), to which voltage class is the allowance for shedding of non-consequential load applied. For example if the fault is on the 138-kV side of a 345/138-kV autotransformer, are you allowed to shed load to keep the 345-kV from exceeding its load rating? Conversely, if

Organization	Yes or No	Comments for Question 10
		the fault is on the 345-kV side of a 345/138-kV autotransformer, are you allowed to shed load to keep the 138-kV from exceeding its load rating? Table I, item "e" ?It doesn't specify which units can be adjusted following the contingency. This seems to be similar to the fact that the standard doesn't address the base case. Should the standard be clear that you can or cannot rely on generation redispatch? Should failure of a fast start generator to start up be included in the contingency, or is this another level of contingency? Table I, non-consequential load loss under no circumstance is it acceptable to shed non-consequential load to address issues in a future looking system plan. Table 1 Steady State & Stability Performance Planning Events - Note (i) this indicates that one cannot meet steady state requirements by depending on end-user owned equipment. Please clarify the purpose and performance requirement on this note with respect to end-user UVLS scheme and possible contractual arrangement already in place to trip end-user equipment. Table 1, P7 for the DCT, are these the same phase? Table 1 Steady State & Stability Performance Extreme EventsSteady state, item 2, isn't (a) covered by (b) Table 1, footnote #3, NPCC has asked NERC to put a lower bound on the HV but it seems that this remains unaddressed. P5 This test is overly severe since it could assume the total protection system failure and the system would have to rely on remote end clearing. Part of the problem seems to be that the battery is part of the protection system. The intent seems to have been to fail part of one system, not the battery. If the battery is to be excluded, then it should be clearly stated. Extreme Events 2a The term "towerline" should be defined. We agree with the SDT that more stringent performance requirements be applied for the Facilities that do not directly serve end-use load but rather represent the backbone of the electric power grid and act as the medium for moving large amounts of power from production to various load centers.However, as HQT commented on previous draft, we strongly believe that the EHV breakpoint for these more stringent requirements, defined in note 3 of table 1 as "all Facilities greater than 300 kV" is not appropriately defined and should be reviewed. The SDT have not demonstrated that a uniform voltage-level threshold could adequately covers all different power system types in North America and we strongly believe that significant, additional costs will be incurred without proportional or measurable reliability benefits if this definition is not changed.We propose to modify EHV definition "all Facilities greater than 300 kV" by the following " Facilities representing the backbone of the System, generally at voltage greater than 300 kV, as determined by the Planning Coordinator and approved by Regional Entity." In using such a language, we believe that the additional investment required would facilitate real improvement of the reliability of the interconnected System.
Response: Several footnote reference errors were reflected in Table 1 when migrating from Draft 3 to Draft 4 that led to unfortunate confusion. In Draft 5, the SDT		

Organization	Yes or No	Comments for Question 10
		has corrected the footnote references and a detailed explanation of the changes required is summarized in the above Summary Considerations for Question 10. The determination of when interrupting Non-Consequential Load and/or Firm Transmission Service is permitted to meet Table 1 performance requirements service is based solely on the lowest voltage level of Facilities disconnected by design for the planning event studied and not based on the monitored Facilities. For the example provided, the HV provisions would apply since a 345/138kV transformer is considered a HV Facility that is removed from service regardless of where the fault originated. Changes were made to footnote 1 to better clarify the SDT's intent and it now reads: **Footnote 1 -** If the event analyzed involves BES elements at multiple System voltage levels, the lowest System voltage level of the element(s) removed for the analyzed event determines the stated performance criteria regarding allowances for interruptions of Firm Transmission Service and Non-Consequential Load Loss. Regarding the note "e" reference to re-dispatch. The re-dispatch of any generation permissible for re-dispatch having impact on the Transmission Planner/Planning Coordinator area. The SDT believes that the standard is clear in Requirement R2, sub-part 2.7.1 (Corrective Action Plans) that generation curtailment, tripping and re-dispatch are permissible Corrective Action Plans for both single and multiple Contingency events. Starting of a "fast-start" generation unit appears to be viewed in the context of a corrective action solution to a studied planning event. There may situations like this that lend themselves to sensitivity analysis as required by the TPL-001-1 standard. The SDT respectfully disagrees with the commenter's view related to disallowing Non-Consequential Load Loss for any planning event. The SDT believes they have made the appropriate expectations in not permitting its use for some Contingency planning events involving EHV facilities. A Transmission Planner/Planning Coordinator may implement a more conservative planning approach beyond what TPL-001-1 requires if they believe one is warranted. Table 1 note "i" is intended to clarify that even if it is known that an end-user who implements a more conservative practice than that of the TP/PC regarding steady-state voltage criteria and chooses to interrupt its own Load, the end-use Load must still be represented in the steady-state timeframe. The Load tripping is permitted in a Stability review, however, it should be assumed that a customer will react quickly to restore its Load and therefore the standard requires the Load be represented in the steady-state timeframe. Only actions (manual or automatic) taken by the Transmission Planner/Planning Coordinator are permitted for consideration for a steady-state review. Interruptible Load agreements are permissible and the Load dropped through contractual arrangements with the end-user can be reflected in the steady-state analysis. The standard does not specify common or different phase for the P7 planning event and is left to the engineering judgment of the Transmission Planner/Planning Coordinator. No change made. Extreme event 2a does not cover 2b when two or more tower lines are contained in the same Right-of-Way. Extreme event item "2a" is 3 or more circuits on the <u>same tower line or structure.</u> Extreme event item "2b" considers loss of multiple Transmission lines located on a different tower line but within the same the same Right-of-Way. The SDT believes that tower line is a commonly understood term and that the use of "structure" over "tower line" is not a substantive change. No change made in Draft 5 in this regard. The SDT has retained the same delineation of the Bulk Electric System (EHV and HV) in Draft 5. No changes made.
TIS	Yes	Footnotes on P3 and P4 (101 & 19) should be 9 and 10, respectively. This merely appears to be a typo in the latest draft. There is confusion in interpretation of the Table 1 When the voltages class of the contingency element and the

Organization	Yes or No	Comments for Question 10
		monitored element are different (one is HV and the other is EHV), to which voltage class is the allowance for shedding of non-consequential load applied?. Please see additional comments provided for R2.
Response: Several footnote reference errors were reflected in Table 1 when migrating from Draft 3 to Draft 4 that led to unfortunate confusion. In Draft 5, the SDT has corrected the footnote references and a detailed explanation of the changes required is summarized in the above Summary Considerations for Question 10. The determination of when interrupting Non-Consequential Load and/or Firm Transmission Service is permitted to meet Table 1 performance requirements service is based solely on the lowest voltage level of Facilities disconnected by design for the planning event studied and not based on the monitored Facilities. For the example provided, the HV provisions would apply since a 345/138kV transformer is considered a HV Facility that is removed from service regardless of where the fault originated. Changes were made to footnote 1 to better clarify the SDT's intent and it now reads: **Footnote 1 -** If the event analyzed involves BES elements at multiple System voltage levels, the lowest System voltage level of the element(s) removed for the analyzed event determines the stated performance criteria regarding allowances for interruptions of Firm Transmission Service and Non-Consequential Load Loss. See the SDT's response to your comments provided for Requirement R2.		
Platte River Power Authority	Yes	If clarity is given for the "Non-Consequential Load Loss Allowed" column of Yes/No that it refers to the planned shedding of firm load. (see my comment on Definition)
Response: See the SDT's response to your comment in Q9.		
American Electric Power	Yes	In Table 1, footnotes 19 and 101 should probably read 9 and 10. Also, we suggest adding table borders in P4 to more clearly align the columns that correspond to Event 6 (similar use of table borders as was done in P2).
Response: Several footnote reference errors were reflected in Table 1 when migrating from Draft 3 to Draft 4 that led to unfortunate confusion. In Draft 5, the SDT has corrected the footnote references and a detailed explanation of the changes required is summarized in the above Summary Considerations for Question 10. The SDT has made changes to the table borders for the P4 planning event per your recommendation.		
Orlando Utilities Commission	Yes	Note 2 regarding three phase faults being sufficient evidence for SLG faults is an excellent addition, thank you. For P3 and P5 it should be made clearer that note 1 AND note 9 apply, maybe by using a comma in-between, not a note 19 that I wasn't able to locate. For Note 9, reading the context it applies only to P3, P5 and P6, but not to P1. To apply this to actual study methodology, in responding to a P1 event Note 9 can not be applied when returning the system to a continuous (sustainable) state. However after those adjustments are made if additional adjustments are needed to make the system "secure", that is prepared for the next event in the P3 or P6 contingency, then note 9 can be applied? Is

Organization	Yes or No	Comments for Question 10
		this a correct understanding?
Response: Several footnote reference errors were reflected in Table 1 when migrating from Draft 3 to Draft 4 that led to unfortunate confusion. In Draft 5, the SDT has corrected the footnote references and a detailed explanation of the changes required is summarized in the above Summary Considerations for Question 10. Footnote 9 is now applied to all "No" items for the column "Interruption of Firm Transmission Service Allowed". Footnote 9 clarifies that Firm Transmission Service can be interrupted so long as appropriate re-dispatch of resources are available and obligated to re-dispatch without any firm Load loss and that Facility ratings are maintained. Planning events P0, P1, and P2 now also include footnote 9 and is allowed both as a System adjustment to prepare for the next event and as a corrective action to the event studied. Please refer to the footnote for more details.		
NYISO	Yes	Question #10. Do you agree with the changes in the performance elements and notes in Table 1? If not, please provide specific comments by note number, note alpha character, or performance category. Yes
Exelon Transmission Planning	Yes	
FirstEnergy Corp	Yes	
Gainesville Regional Utilities	Yes	
Independent Electricity System Operator	Yes	
Progress Energy Carolinas	Yes	
SCE&G	Yes	
PJM	Yes	
ITC Holdings	Yes	none
Response: Thank you for your support of the SDT's work.		

11. The SDT has provided a revised Implementation Plan as part of this posting. Do you agree with the revisions to the Plan? If not, please provide specific comments.

Summary Consideration: There were 5 main comments associated with this question.

1. Thirteen commenters requested clarification to better define the 60 month effective date for certain "raising the bar" performance requirements. The SDT believes that the current language in Section A. 5 of the Standard, with a minor change that the SDT will incorporate in the next draft, is clear. That section, as modified, will state that the five year period starts "beginning on the first day of the first calendar quarter following applicable regulatory approval" of the revised standard.

2. Four commenters indicated that 60 months is not enough time to build major lines, especially if up to 24 months is needed to do the Planning Assessment and develop a Corrective Action Plan. The SDT considered this issue when TPL-001-1, draft 3 was prepared, and the SDT again discussed its position in light of the comments received from this posting. The SDT continues to believe that extending the 60 month implementation period would water down the standard by potentially delaying some corrective actions that could be implemented in 60 months or less. The current draft of TPL-001-1 does in fact recognize the distinct possibility that major construction projects could take more than 60 months, in which case Requirement R2, part 2.7.3 would apply.

3. The relevant portion of that requirement states: "If situations arise that are beyond the control of the Transmission Planner or Planning Coordinator that prevent the implementation of a Corrective Action Plan in the required timeframe, then the Transmission Planner or Planning Coordinator is permitted to utilize Non-Consequential Load Loss and curtailment of Firm Transmission Service to correct the situation that would normally not be permitted in Table 1, provided that the Transmission Planner or Planning Coordinator documents that they are taking actions to resolve the situation. …." This provision could be applied when formulating the original Corrective Action Plan when it is known in advance that the permitting and construction process will require longer than 60 months or after the plan is formulated and unexpected delays arise outside the Transmission Planner's or Planning Coordinator's control.
   Four commenters believe that it is inappropriate or in violation of Energy Policy Act 2005 for the revised standard to require building new facilities and some also question the requirement to self-report inability to meet Corrective Action Plan requirements. The Corrective Action Plan, however, does not require construction of facilities per se and, therefore, the SDT does not believe that the language in the current draft violates the Energy Policy Act of 2005. Other choices available as part of the Corrective Action Plan besides constructing new facilities include use of interruptible Load contracts, implementation of Demand Side Management programs, and the addition of generation. The SDT understands that there may be certain circumstances where the only viable solution to a performance deficiency is to add a new Transmission Facility. This is no different than situations that Transmission Planners have faced under the current TPL standards as well as voluntary criteria that have existed for many years. The SDT also points out that should a Transmission Planner or Planning Coordinator find that they can not meet the performance requirements by the end of the 60 month transition period, they would need to submit a mitigation plan to their Regional Entity. As long as an acceptable mitigation plan is offered, the intent of the SDT is that the reporting entity will not be subject to penalties.

3. Four commenters pointed out a typographical error that reversed the numbering of Requirements R7 and R8 in the Implementation Plan. The implementation plan has been corrected to reflect the SDT's original intent that Requirements R1 and R7 (not Requirement R8) become effective 12 months after approval and Requirements R2 through R6 plus Requirement R8 (not Requirement R7), with the noted exceptions, become effective 24 months after approval.

4. Three commenters asked for clarification of the parenthetical language applicable to Events P1-2 and P1-3. The parenthetical phrase related to P1-2 and P1-3 is intended to limit the application of the 60 calendar month exception to those situations where footnote b of the existing standards was interpreted to mean that controlled interruption of electric supply to local network customers connected to or supplied by the faulted element is permitted. The SDT took this position in recognition of the fact that a significant number of entities interpret footnote 'b' in this manner and, therefore, the revised standard represents a "raising of the bar" for them.

Organization	Yes or No	Comments for Question 11
Lafayette Utilities System		LUS remains concerned as to the length of time permitted for implementation, and believes that it should be shorter, but would not oppose adoption of version 4, as it has now been clarified, if that is the only issue of concern. There may be ways, outside the standard development process, to limit the financial harms caused to others as a result of the failure to meet the clarified standard during the implementation period.
Response: Many industry entities have expressed concern that the stated implementation period may not be sufficient, particularly for major projects. The SDT believes it has struck the right balance between the differing views, and does not plan to shorten the time permitted for implementation as you have suggested.		
FRCC Transmission Working Group		The implementation plan needs to be clarified that during the first year the existing TPL standards are still in effect. As written it appears that only R1 and R8 are in effect and the existing TPL standards are not.Assessments are a year long process and are based on a year or more worth of studies, the study work and assessment are not executed in a single day. R2 through R7 is unclear what "coming into effect means". Please consider adding the following paragraph:"Entities are not required to alter their annual schedule based on the R2-R7 requirements going into place or have duplicate efforts at assessments in the year the old and new standard overlap. Therefore any assessment performed prior to R2-R7 going into effect shall meet R1, R8 and the prior TPL standards; an assessment under the revised standard is not required until the following annual cycle. An assessment performed after R2-R7 are in effect shall meet these new TPL Standard. The date the assessment is "performed" for the purposes of this phase in, shall be determined by the date the entity began formally sharing results with its neighbors under R8." Please clarify the parenthetical for P1-2 and P1-3. Is the intent of this parenthetical referring to Consequential Load Loss that is allowed for P1 events?
Response: The Implementation Plan has been corrected to reflect the SDT's original intent that Requirements R1 and R7 (not Requirement R8) become effective 12		

Organization	Yes or No	Comments for Question 11
months after approval and Requirements R2 through R6 plus Requirement R8 (not Requirement R7), with the noted exceptions, become effective 24 months after approval. The SDT does not believe that a clarification, as you suggested, is needed to cover the one-year period for months 13 through 24. The NERC standards process is clear that an existing standard that is being revised remains in force until the revised standard becomes effective. The SDT has reviewed your suggested addition to the paragraph that addresses the effective date for Requirements R2 through R6 plus Requirement R8. The SDT does not believe that your suggestion provides further clarification and the SDT has determined that no further change is warranted. The parenthetical phrase related to P1-2 and P1-3 is intended to limit the application of the 60 calendar month exception to those situations where footnote b of the existing standards was interpreted to mean that controlled interruption of electric supply to local network customers connected to or supplied by the Faulted element is permitted. The SDT took this position in recognition of the fact that a significant number of entities interpret footnote b in this manner and, therefore, the revised standard represents a "raising of the bar" for them.		
ERCOT ISO	No	* The implementation plan references revisions to the MOD standards. Should the team submit a SAR for the revision of the MOD standards to ensure TPL needs are considered? As stated in the comments for R1 " if the MOD standards are properly updated, there is no need to state MOD requirements in TPL-001.* Definition comments from Question 9 apply to implementation plan.* The Implementation Plan references R1 and R8 to be effective within 12 months of regulatory approval. R8 per the implementation plan state that the responsibilities of the PC and TP will be defined. This appears to be R7 of Draft 4 and the requirement language does not align. Conversely, the Effective Date should be revised to ensure the references to the requirements align properly. As written it states the assessment should be available before the assessment is complete. * During the 24 month transition period, any entity that can prove compliance with the revised TPL-001 should not have to prove compliance to the old TPL-001 through TPL-004. * The SAR should state that TPL-005 and TPL-006 are to be retired. The only place this has been found is within the implementation plan. It is not an intuitive place to find this information.
Response: The SDT referenced revisions to the MOD standards to establish a record of the need to fill a gap in the overall coordination among the Reliability Standards. The SDT does not intend to submit a SAR; rather the expectation is that NERC will take the necessary action to follow through to address this need at the appropriate point in time. See the SDT's response to your definition comments in Question 9. The Implementation Plan has been corrected to reflect the SDT's original intent that Requirements R1 and R7 (not Requirement R8) become effective 12 months after approval and Requirements R2 through R6 plus Requirement R8 (not Requirement R7), with the noted exceptions, become effective 24 months after approval. The SDT disagrees with your comment regarding demonstration of compliance during the 24 month transition period. At any point in time, one and only one set of TPL related requirements will be in force. It is those requirements that the Planning Coordinator and Transmission Planner must comply with and not future requirements that have not yet become effective. The SDT assumes that in your last comment the reference to SAR should have been Standard (or more precisely "Standard Development Roadmap"). (A Supplemental SAR was posted for comment and added to this project that does address the possibility of retiring TPL-005 and TPL-006.) The SDT agrees with your		

Organization	Yes or No	Comments for Question 11
suggestion, and the Roadmap has been modified to state: "TPL-005 & -006 issues are addressed in the fourth draft and those standards will also be replaced by TPL-001-1. (See page 1, last sentence of section titled "Proposed Action Plan and Description of Current Draft:" In addition, the "Version History" has been updated to indicate that requirements from TPL-005-0 and TPL-006-0 have been incorporated into TPL-001-1.		
NERC Standards Review Subcommittee	No	A. In the implementation plan, the provision which indicates if an entity doesn't construct in time that entity has to report itself as noncompliant. This is a violation of the energy policy act. Since FERC can't force an entity to built, this provision should be deleted. B. This standard does not contain any requirements regarding the implementation of the Corrective Action Plans. So, the wording in this section of "Any entity that cannot fully implement . . . ", should be replaced with wording like, "If the Corrective Action Plans to eliminate the need . . . can not be implemented within 60 calendar months . . . then the Transmission Planner and Planning Authority should work with the applicable Transmission Owner (s) and Regional entity(s) to develop mitigation plans for revised Corrective Action Plans until the implementation issue is resolved". C. The proposed standard implies that the 24 month time period (for R2-R7) and 60 month time period (for specific allowances for selected event categories) run in parallel rather than sequentially. As currently proposed, the effective date for performing analyses and developing subsequent Corrective Action Plans is 24 months. If the identification of new needs and action plans take 24 months, then only 36 months would be left to implement the new corrective action plans. It may not be feasible to install some BES facilities, especially above 300 kV, in less than 3 years. Some EHV projects can take 5 to 10 years to implement depending on the size, complexity, and controversial nature of the project. D. The MRO NSRS suggests that the effective date be stated in more "implementation dependent" terms for this "one time" transient period, rather than specific and possibly inappropriate "fixed timeframe" terms. Consider wording such as "tripping of Non-Consequential Load or curtailment of Firm Transmission Service (in accordance with Requirement R2, part 2.7.5) is allowed until Corrective Action Plans that are based on TPL-001-1 analyses can be implemented".
Response: A. The SDT disagrees with your characterization of the Corrective Action Plan. The Corrective Action Plan does not require construction of facilities per se and, therefore, the SDT does not believe that the language in the current draft violates the Energy Policy Act of 2005. Other choices available as part of the Corrective Action Plan besides constructing new facilities include use of interruptible load contracts, implementation of Demand Side management programs, and the addition of generation. The SDT understands that there may be certain circumstances where the only viable solution to a performance deficiency is to add a new transmission facility. This is no different than situations that Transmission Planners have faced under the current TPL standards as well as voluntary criteria that have existed for many years. The SDT also points out that should a Transmission Planner or Planning Coordinator find that they can not meet the performance requirements by the end of the 60 month transition period, they would need to submit a mitigation plan to their Regional Entity. As long as an acceptable mitigation plan is offered, the intent of the SDT is that the reporting entity will not be considered non-compliant nor will penalties be imposed. The SDT has modified the Implementation Plan to clarify the wording. B. The SDT believes that the requirement language is clear that the Corrective Action Plan shall be implemented. In Requirement 2, part 2.7.5 reference is made to "implementation of a Corrective Action Plan," and in Requirement R2, part 2.7.6 there is a requirement to review "implementation status."		

Organization	Yes or No	Comments for Question 11
C. Your interpretation that the 24 month and 60 month time periods run in parallel is correct. The SDT understands that some large projects that are part of the Corrective Action Plan may take more than 60 months to complete. However, the SDT also believes that some time limit must be placed on the Corrective Action Plan and 60 months was chosen to strike a balance between those commenters who requested more time and those who would like to see corrective actions completed sooner. The SDT also provided a procedure for mitigation in those situations where 60 months was insufficient. It is the intent of the SDT that the development of an acceptable mitigation plan will avoid penalties. D. The SDT considered your suggested restatement of effective dates during the transition period. The SDT does not believe that such a change would materially improve the standard language. In fact, your specific example would be problematic because Requirement R2, part 2.7.5 applies universally not just to the transition period.		
Progress Energy Florida, Inc.	No	As PEF is opposed to TPL-001-1 as a whole, we cannot comment on the details of the Implementation Plan, other than to say that given the fundamental inadequacies of TPL-001-1, PEF does not believe the Standard should be implemented at all.Given that the wording of Question 12 appears to imply that any general comments made in the Question 12 comments section would be unwelcome and disregarded, PEF would respectfully like to make the following comments regarding our overall position on TPL-001-1:PEF filed extensive comments for the 1st, 2nd and 3rd drafts of TPL-001-1 and voiced serious concerns about the consequences that Transmission Owners and ratepayers will undoubtedly face if TPL-001-1 were to be implemented. PEF respectfully asks the SDT to review PEFs previous comments, particularly from the perspective of the ratepayers. The average ratepayer in the U.S. is already experiencing high electricity bills based on fuel pass-through charges and electric utilities? needs to raise rates to successfully operate and maintain the system. Furthermore, the ratepayers have not been involved in this Standard drafting process, and indeed have not even been informed at even the most cursory level. PEF has pointed this out in previous comments, and the SDTs response has been inadequate. Given the erroneous approach of Table 1 in TPL-001-1 to gauge reliability based on whether or not firm transmission service or non-consequential load will be curtailed, implementation of the Standard will dramatically increase ratepayers? already-high rates with little or no appreciable reliability improvement. Additionally, Transmission Owners will be forced to reduce ATC in order to prevent compliance violations, thus shutting out Power Marketers and potentially resulting in construction of more new generation than is really needed. Another major conflict that TPL-001-1 will cause is a rift between the FERC/NERC regulatory environment and the various states? Public Service Commissions (PSC). The major transmission projects that TPL-001-1 will mandate (especially those mandated due to the overly burdensome and unnecessary > 300 kV section) will have to be approved for permitting and funding through Determination of Need hearings at the PSC. When questioned by the PSC on the need for such projects, Transmission Owners will be obligated to admit that the projects really aren't needed but for NERC's new TPL-001-1 Standard, which will undoubtedly result in the PSCs denial of approval. PEF also would like to note that the SDT still has not provided sufficient reason for the need to implement a new TPL Standard. PEF and its fellow members in FRCC have historically demonstrated excellent reliability while performing long-term Transmission Planning under the existing TPL Standards. There simply is no practical reason for improvement on the existing Standards. PEF is aware of the history of the drafting of a new TPL

Organization	Yes or No	Comments for Question 11
		Standard, however, having reviewed FERCs direction to NERC in this matter. Regarding this, PEF feels that NERC should have pointed out the likely consequences to merely following FERCs directions in their entirety; instead, NERC formed a SDT which proceeded to draft a new TPL Standard that satisfied each and every direction FERC had given. This approach has resulted in a draft Standard that is much too stringent, not conducive to significant reliability improvement and prohibitively expensive to implement.In conclusion, PEF strenuously opposes TPL-001-1, and feels the implementation of TPL-001-1 is unfair, irresponsible and unnecessary. PEF furthermore feels that it has sufficiently proven this in previous comments, and will continue to seek additional avenues to ensure that said comments are given proper consideration. TPL-001-1 is thus not in a condition to go to ballot, and it would be highly inappropriate to send this Standard to ballot given the major concerns that PEF and numerous other utilities within NERC have raised.
Response: The wording in Question 12 has created confusion among many commenters and was not intended to imply that if you checked the YES box, the SDT would not consider your comments. The SDT is obligated to consider all comments, make changes in the drafts that the SDT, as representatives of the entire industry, believe need to be made and provide responses to all comments. The SDT has carefully considered the PEF comments throughout the drafting process and has made changes to the drafts based on your comments and those received from the other commenters. Throughout the process, the SDT has been attempting to iterate toward a standard that the industry, as a whole, can support. The SDT, FERC, and the majority of the industry (through their comments) support the need to improve the TPL standards.		
Florida Power and Light	No	Do not understand the parenthetical for P1-2 and P1-3. The language is confusing and needs to be clarified. Isn't it referring to Consequential Load Loss that is allowed for P1 events?
Response: The parenthetical phrase related to P1-2 and P1-3 is intended to limit the application of the 60 calendar month exception to those situations where footnote b of the existing standards was interpreted to mean that controlled interruption of electric supply to local network customers connected to or supplied by the Faulted element is permitted. The SDT took this position in recognition of the fact that a significant number of entities interpret footnote b in this manner and, therefore, the revised standard represents a "raising of the bar" for them.		
MidAmerican Energy Company	No	MidAmerican commends the SDT for changes that improved the Implementation Plan, however, MidAmerican does have a comment about the plan. MidAmerican urges the SDT to modify the implementation plan where it is indicated that any "entity which cannot fully implement their Corrective Action Plan to eliminate the need to trip Non-Consequential Load or curtail Firm Transmission Service for these performance elements by that date shall self report themselves as being unable to meet the performance requirements of the Reliability Standard." This is essentially requiring an entity to self report for failing to build facilities. The Energy Policy Act of 2005 did not give FERC and therefore, NERC, the authority to require construction of electric facilities. Therefore, this implementation plan is implying an authority that is not given to FERC or NERC. This provision of the implementation plan should be completely deleted from the standard, the provision to state that one is non-compliant for this should be deleted from the standard, or there should be a statement that such a requirement is subject to limitations of the Energy Policy Act of 2005. This is a deal-killer for MidAmerican with regard to voting on this standard. MidAmerican believes that 4.1.2 and 4.3.3 as written would require responsible entities in the industry to add

Organization	Yes or No	Comments for Question 11
		additional modeling of relaying in dynamic stability models of our system. MidAmerican suggests that 4.3.3 be limited to transient swings on facilities 345 kV and above so as to limit this part of requirement 4 to those situations that are most likely to result in cascading. If the SDT determines not to add such a limitation, MidAmerican asks that the implementation time for R4 to be increased. MidAmerican believes that many responsible entities would need 3 years to add these relaying models to system stability models so that the fourth year additional transmission planning analysis in this respect is conducted. MidAmerican urges that the SDT increase the implementation time for R4 from 2 years to 4 years. (MidAmerican may this comment in response to Question 4 as well.)
Response: The SDT disagrees with your characterization of the Corrective Action Plan. The Corrective Action Plan does not require construction of facilities per se and, therefore, the SDT does not believe that the language in the current draft violates the Energy Policy Act of 2005. Other choices available as part of the Corrective Action Plan besides constructing new facilities include use of interruptible load contracts, implementation of Demand Side management programs, and the addition of generation. The SDT understands that there may be certain circumstances where the only viable solution to a performance deficiency is to add a new transmission facility. This is no different than situations that Transmission Planners have faced under the current TPL standards as well as voluntary criteria that have existed for many years. The SDT also points out that should a Transmission Planner or Planning Coordinator find that they can not meet the performance requirements by the end of the 60 month transition period, they would need to submit a mitigation plan to their Regional Entity. As long as an acceptable mitigation plan is offered, the intent of the SDT is that the reporting entity will not be considered non-compliant nor will penalties be imposed. The SDT has modified the Implementation Plan to clarify the wording. Requirement R4, parts 4.1.2 and 4.3.3 do not necessarily require modeling of specific relays. Commercially available software includes a generic relay model which can easily be applied to every branch in the simulation. This generic relay includes assumed zone 1, 2, and 3 characteristics based on the branch impedance. If this model shows impedance swings in a branch element, then the Transmission Planner or Planning Coordinator can either take action according to the generic model results or investigate the characteristics of the relays actually used on that line. The SDT agrees that studying the impact of swings should be limited to the study area. However, the SDT does not believe this should be limited to only high voltage lines. Because Requirement R4, part 4.3.3 does not necessarily require modeling of specific relays (as described directly above), the SDT does not agree that a longer time is needed in the Implementation Plan.		
Oklahoma Gas & Electric	No	OG&E will need every bit of the 60 months time mentioned on page 3 under “Effective Date” to implement all indicated upgrades. There is benefit in hardening the OG&E electrical system for such protection system failures, such as P4 & P5, but it may not be cost effective.
Response: Thank you for your comment.		
Manitoba Hydro	No	Requirement R8, as the standard is currently written, doesn't match the language on page 2 of the discussion provided by the drafting team (i.e. related to determining individual and joint assessments). The drafting team should flip Requirements R7 and R8 so that the implementation plan matches the intent or modify the implementation plan.
Response: The implementation plan has been corrected to reflect the SDT’s original intent that Requirements R1 and R7 (not Requirement R8) become effective 12 months after approval and Requirements R2 through R6 plus Requirement R8 (not Requirement R7), with the noted exceptions, become effective 24 months after approval.		

Organization	Yes or No	Comments for Question 11
Bonneville Power Administration	No	Revisions are necessary to the Effective Date language to clarify the 60 calendar months language for Corrective Action Plans. It is unclear if the entity has five years from the day they identify the problem or five years from the modeled year or five years from the effective date of this standard.
Idaho Power	No	Revisions are necessary to the Effective Date language to clarify the 60 calendar months language for Corrective Action Plans. It is unclear if the entity has five years from the day they identify the problem or five years from the modeled year or five years from the effective date of this standard.
Modesto Irrigation District Transmission Planning	No	Revisions are necessary to the Effective Date language to clarify the 60 calendar months language for Corrective Action Plans. It is unclear if the entity has five years from the day they identify the problem or five years from the modeled year or five years from the effective date of this standard.
NV Energy	No	Revisions are necessary to the Effective Date language to clarify the 60 calendar months language for Corrective Action Plans. It is unclear if the entity has five years from the day they identify the problem or five years from the modeled year or five years from the effective date of this standard.
Pacific Gas and Electric Co.	No	Revisions are necessary to the Effective Date language to clarify the 60 calendar months language for Corrective Action Plans. It is unclear if the entity has five years from the day they identify the problem or five years from the modeled year or five years from the effective date of this standard.
Puget Sound Energy, Inc.	No	Revisions are necessary to the Effective Date language to clarify the 60 calendar months language for Corrective Action Plans. It is unclear if the entity has five years from the day they identify the problem or five years from the modeled year or five years from the effective date of this standard.
Sacramento Municipal Utility District	No	Revisions are necessary to the Effective Date language to clarify the 60 calendar months language for Corrective Action Plans. It is unclear if the entity has five years from the day they identify the problem or five years from the modeled year or five years from the effective date of this standard.
San Diego Gas & Electric Co	No	Revisions are necessary to the Effective Date language to clarify the 60 calendar months language for Corrective Action Plans. It is unclear if the entity has five years from the day they identify the problem or five years from the modeled year or five years from the effective date of this standard.
Southern California Edison (SCE)	No	Revisions are necessary to the Effective Date language to clarify the 60 calendar months language for Corrective Action Plans. It is unclear if the entity has five years from the day they identify the problem or five years from the modeled year or five years from the effective date of this standard.
SRP	No	Revisions are necessary to the Effective Date language to clarify the 60 calendar months language for Corrective Action Plans. It is unclear if the entity has five years from the day they identify the problem or five

Organization	Yes or No	Comments for Question 11
		years from the modeled year or five years from the effective date of this standard.
Western Area Power Adm - RMR	No	Revisions are necessary to the Effective Date language to clarify the 60 calendar months language for Corrective Action Plans. It is unclear if the entity has five years from the day they identify the problem or five years from the modeled year or five years from the Effective Date of this standard.
Xcel Energy	No	Revisions are necessary to the Effective Date language to clarify the 60 calendar months language for Corrective Action Plans. It is unclear if the entity has five years from the day they identify the problem, or five years from the modeled year, or five years from the effective date of this standard.
Deseret Power	No	Comments: Revisions are necessary to the Effective Date language to clarify the 60 calendar months language for Corrective Action Plans. It is unclear if the entity has five years from the day they identify the problem or five years from the modeled year or five years from the effective date of this standard.
NorthWestern Energy	No	In the Effective Date section, 60 calendar months is allowed for Corrective Action Plans. When does the 60 month period start? From the day the problem is identified? From the modeled year? Or from the effective date of the standard?
Response: The SDT believes that the current language in Section A. 5 of the Standard, with a minor change that the SDT will incorporate in the next draft, is clear. That section, as modified, will state that the five year period begins "on the first day of the first calendar quarter following applicable regulatory approval" of the revised standard.		
MAPP	No	The last part of the Effective Date section deals with the requirement to submit a Corrective Action Plan, and then to submit a mitigation plan to be approved by the Regional Entity and NERC. Failure do get those done would result in the initiation of "settlement proceedings." This means that entities may be found non-compliant for failure to build facilities. That seems to fly in the face of the EPAct of 2005.
Response: The SDT disagrees with your characterization of the Corrective Action Plan. The Corrective Action Plan does not require construction of facilities per se and, therefore, the SDT does not believe that the language in the current draft violates the Energy Policy Act of 2005. Other choices available as part of the Corrective Action Plan besides constructing new facilities include use of interruptible load contracts, implementation of Demand Side management programs, and the addition of generation. The SDT understands that there may be certain circumstances where the only viable solution to a performance deficiency is to add a new transmission facility. This is no different than situations that Transmission Planners have faced under the current TPL standards as well as voluntary criteria that have existed for many years. The SDT also points out that should a Transmission Planner or Planning Coordinator find that they can not meet the performance requirements by the end of the 60 month transition period, they would need to submit a mitigation plan to their Regional Entity. As long as an acceptable mitigation plan is offered, the intent of the SDT is that the reporting entity will not be considered non-compliant nor will penalties be imposed.		
SERC Dynamics Review Subcommittee (DRS)	No	There is a concern about the last paragraph in the Implementation Plan. It is easy to interpret this language to state that the entity is noncompliant if the performance requirements are not completed within 5 years. The concern is that the 5 year window for meeting the "raising the bar" requirements is still not adequate. For

Organization	Yes or No	Comments for Question 11
		instance, it typically takes 7 to 10 years to build a new 500-kV transmission line - including time required for such processes as federally mandated NEPA environmental reviews. We strongly suggest increasing this time window to 10 years.
Response: The SDT understands that some large projects that are part of the Corrective Action Plan may take more than 60 months to complete. However, the SDT also believes that some time limit must be placed on the Corrective Action Plan and 60 months was chosen to strike a balance between those commenters who requested more time and those who would like to see corrective actions completed sooner. The SDT also provided a procedure for mitigation in those situations where 60 months was insufficient. It is the intent of the SDT that the development of an acceptable mitigation plan will avoid penalties.		
TVA System Planning	No	TVA agrees with the inclusion of P1-2 and P1-3 in the 60 month implementation window. However TVA also strongly suggests that all Planning Events be included in the same implementation window where local load was allowed to be dropped in the past in footnotes b and c of the existing TPL standards. In the first bullet under Effective Date, both Non-Consequential Load Loss and curtailment of Firm Transmission Service can be permitted for certain events up to 60 months. However these actions are not useful for stability related issues. TVA suggests that out of step relaying or other protection method be allowed in for stability related issues when situations do arise that are beyond the control of the TP or PC. TVA is very concerned about the last paragraph in the Implementation Plan. TVA interprets this language to state that the entity is basically noncompliant if the mentioned Corrective Action Plans are not implemented within 60 calendar months. Due to the large amount of work that some utilities will have to meet these new requirements, TVA strongly suggests that the utilities be found compliant if the utilities are still putting a good faith effort forward in trying to meet the new standards, such as for constructing a long 500-kV transmission line that may take at least 10 years to construct TVA still believes that since breaker duty was not included in the previous TPL standards, this should also have a 60 month implementation window as well due to this now becoming a new TPL compliance issue. TVA noted this same comment in Posting #3; however, TVA requests that this be reconsidered due to being a new official TPL requirement like the other new requirements have with the 60 month implementation window. TVA is concerned that the 60 calendar month window for meeting the “raising the bar” requirements is still not adequate. For instance, it typically takes TVA 7 to 10 years to build a new 500-kV transmission line - including time required for such processes as federally mandated NEPA environmental reviews. Strongly suggest increasing this time window to 10 years.
Response: The SDT believes that footnote ‘c’ conditions in the current TPL standards are adequately addressed in the revised standard. The SDT disagrees that Non-Consequential Load Loss is not useful for Stability related issues. The tripping of such Load as part of an SPS could be accomplished quickly enough to improve Stability margins. Furthermore, there is nothing in the revised standard that precludes the use of out of step relaying. The SDT believes that your interpretation of the last paragraph of the Implementation Plan is incorrect. Should a Transmission Planner or Planning Coordinator find that they can not meet the performance requirements by the end of the 60 month transition period, they would need to provide a mitigation plan to their Regional		

Organization	Yes or No	Comments for Question 11
Entity. Although the SDT agrees that the breaker duty requirement is new to this revision of the standard, the SDT does not believe that there is a need to allow a 60 month transition period for this requirement to become effective. Replacing over-dutied circuit breakers can often be accomplished within the 24 month period provided by the effective date of the requirement. In those cases where the replacement could take longer, there are other approaches available to mitigate the over-duty condition. The SDT understands that some large projects that are part of the Corrective Action Plan may take more than 60 months to complete. However, the SDT also believes that some time limit must be placed on the Corrective Action Plan and 60 months was chosen to strike a balance between those commenters who requested more time and those who would like to see corrective actions completed sooner.		
Ameren	No	We appreciate that the Standards Drafting Team has proposed delayed effective dates to allow tripping of Non-Consequential Load or curtailment of Firm Transmission Service for a number of categories of contingency events to allow more time to become compliant. However, we do not look forward to having to self-report non-compliance because the industry and the government changed the planning rules in the middle of the game.
Response: Please note that should a Transmission Planner or Planning Coordinator find that they can not meet the performance requirements by the end of the 60 month transition period, they would need to submit a mitigation plan to their Regional Entity. It is the intent of the SDT that the development of an acceptable mitigation plan will avoid penalties.		
FirstEnergy Corp	No	We disagree with the proposed Implementation Plan. The implementation period for the TPL-001-1 transmission planning standard should be limited to the time needed to transition to the new study requirements. The proposed 5-year implementation for the "raise the bar" aspects of this standard delves into project management and review of capital construction progress which should remain outside the scope of this standard. The standard should only consider if an entity has completed the required studies and has developed Corrective Action Plans to ensure performance criteria is being maintained.Implementation of transmission system action plans depends on the actions of many other functional entities, other than PCs or TPs. PCs and TPs should not be held responsible for the implementation of action plans since they have little or no control over the activities related to implementation. For example, an RTO/ISO may act as both the PC and the TP for its transmission owner or transmission operator membership, however, the RTO/ISO should not be subject to compliance sanctions for incomplete projects that it does not have direct responsibility.FirstEnergy suggests that a new TPL standard is required to successfully accomplish the vision and endpoint that this drafting team has in mind. It is our opinion that the TO, TOP, DP and GO are needed as applicable entities to bring to fruition the capital enforcement projects or operating procedures that are identified by the PC/TP. This TPL-001-1 standard should stop at the conclusion of studies, assessments and development of Corrective Action Plans and a new TPL standard should be developed to address implementation of Corrective Action Plans.
Response: The SDT has considered your position and still believes that the requirement to implement the Corrective Action Plan is appropriate. Furthermore, the SDT does not believe that the standard should apply to additional entities beyond the Transmission Planner and Planning Coordinator. In fact, doing so would tend to make implementation of the Corrective Action Plan more difficult by reducing clarity as to who is the responsible entity. Where the Transmission Planner or Planning Coordinator is an RTO, agreements between the RTO and its members, which typically include the entities you describe, require those members to implement plans		

Organization	Yes or No	Comments for Question 11
developed by the RTO. Where the Transmission Planner or Planning Coordinator is not an RTO, in most cases, they are a vertically integrated utility that includes all of the entities that you describe. In other cases, the Transmission Planner and Planning Coordinator can establish agreements with the entities for which they are providing those services to specify responsibilities for implementation of the Corrective Action Plan.		
American Transmission Company	No	We offer the following comments.This standard does not contain any requirements regarding the implementation of the Corrective Action Plans. So, the wording in this section of "Any entity that cannot fully implement . . . ", should be replaced with wording like, "If the Corrective Action Plans to eliminate the need . . . can not be implemented within 60 calendar months . . . then the TP and PA should work with the applicable TO(s) and Re(s) to develop mitigation plans for revised Corrective Action Plans until the implementation issue is resolved". The proposed standard implies that the 24 month time period (for R2-R7) and 60 month time period (for specific allowances for selected event categories) run in parallel rather than sequentially. As currently proposed, the effective date for performing analyses and developing subsequent Corrective Action Plans is 24 months. If the identification of new needs and action plans take 24 months, then only 36 months would be left to implement the new corrective action plans. It may not be feasible to install some BES facilities, especially above 300 kV, in less than 3 years. Some EHV projects can take 5 to 10 years to implement depending on the size, complexity, and controversial nature of the project. We suggest that the effective date be stated in more "implementation dependent" terms for this "one time" transient period, rather than specific and possibly inappropriate "fixed timeframe" terms. Consider wording such as "tripping of Non-Consequential Load or curtailment of Firm Transmission Service (in accordance with Requirement R2, part 2.7.5) is allowed until Corrective Action Plans that are based on TPL-001-1 analyses can be implemented".The "implementation dependent" approach may allow the removal of all or part of the text on implementation exceptions and mitigation procedures that do not appear to be suitable in an Effective Date section.
Response: The SDT believes that the requirement language is clear that the Corrective Action Plan shall be implemented. In Requirement 2, part 2.7.3 reference is made to "implementation of a Corrective Action Plan," and in Requirement R2, part 2.7.4 there is a requirement to review "implementation status." Your interpretation that the 24 month and 60 month time periods run in parallel is correct. The SDT understands that some large projects that are part of the Corrective Action Plan may take more than 60 months to complete. However, the SDT also believes that some time limit must be placed on the Corrective Action Plan and 60 months was chosen to strike a balance between those commenters who requested more time and those who would like to see corrective actions completed sooner. The SDT also provided a procedure to submit a mitigation plan to their Regional Entity where 60 months was insufficient. It is the intent of the SDT that the development of an acceptable mitigation plan will avoid penalties. The SDT has modified the Implementation Plan to clarify the wording. The SDT also considered your suggested restatement of effective dates during the transition period. The SDT does not believe that such a change would materially improve the standard language. In fact, your specific example would be problematic because Requirement R2, part 2.7.5 applies universally not just to the transition period.		
Tri-State Generation and Transmission Association	No	Yes and No. We see some potential problems.12 months after BOT adoption, R1 maintain system models - becomes effective. Why delay Also 12 months after adoption, R8 distribute planning assessment results - becomes effective. As an assessment cannot be distributed before it is completed, this must be coordinated with R2.24 months after BOT adoption R2 Annual Planning Assessment - timing must coordinate with R8 above.

Organization	Yes or No	Comments for Question 11
Response: The SDT attempted to strike a balance between those commenters who requested more time and those who would like to see some requirements become effective earlier. In the case of Requirement R1, the SDT saw little value in making this requirement effective before 12 months. Furthermore, doing so would break the standard effective dates into yet another time period possibly leading to confusion as to which portions of the revised and old standards are in effect. The implementation plan has been corrected to reflect the SDT's original intent that Requirements R1 and R7 (not Requirement R8) become effective 12 months after approval and Requirements R2 through R6 plus Requirements R8 (not Requirement R7), with the noted exceptions, become effective 24 months after approval.		
American Electric Power	Yes	
British Columbia Transmission Corp	Yes	
Central Maine Power Company	Yes	
Exelon Transmission Planning	Yes	
Florida Municipal Power Agency, and its Member Cities	Yes	
Gainesville Regional Utilities	Yes	
Hydro-Québec TransEnergie (HQT)	Yes	
Independent Electricity System Operator	Yes	
ISO New England	Yes	
Northeast Power Coordinating Council--RSC	Yes	
Northeast Utilities	Yes	
Oncor Electric Delivery	Yes	
Pepco Holdings, Inc. - Affiliates PHI	Yes	

Organization	Yes or No	Comments for Question 11
Progress Energy Carolinas	Yes	
SCE&G	Yes	
SERC Planning Standards Subcommittee	Yes	
Southern Company	Yes	
SRC of ISO/RTO	Yes	
TIS	Yes	
United Illuminating	Yes	
US Bureau of Reclamation	Yes	
Utility System Efficiencies, Inc. (USE)	Yes	
ITC Holdings	Yes	none
National Grid	Yes	None.
NYISO	Yes	Question #11 The SDT has provided a revised Implementation Plan as part of this posting. Do you agree with the revisions to the Plan? If not, please provide specific comments. Yes
Response: Thank you for your input.		
Orlando Utilities Commission	Yes	The phasing in of the higher performance criteria is a very reasonable approach. The implementation plan needs to be painfully clear that during the first year the existing TPL standards are still in effect, and that R1 and R8 are in effect in addition. Most NERC standards have one revision take effect on a specific date, make the old version out of date. In this case however if TPL 001 retires the prior standards, then only R1 and R8 would need to be performed in the first year, which I do not believe that is the intent. In addition to this, further clarification may be needed for the application of R2-R7, even if they were to come into effect the first year. Assessments are a year long process and published once a annually. As an example many entities "publish" or finish the Assessment in December, that being the culmination of months of work. If R2-R7 are effective on June 2011 then the intended application seems to be that the assessment in Dec 2011 should comply with the new

Organization	Yes or No	Comments for Question 11
		standard. Is that the intent, or would there need to be a valid assessment based on the new standard available the day the standard is in effect? Maybe phrasing to this effect. "Entities are not required to alter there annual schedule based on the R2-R7 requirements going into place or have duplicate efforts at assessments in the annual period the old and new standard overlap. Any assessment completed (as determined by the date that the entity formally shared results under R8) after the effective date for R2-R7 shall comply with those requirements."
Response: First, it should be noted that the Implementation Plan has been corrected to reflect the SDT's original intent that Requirements R1 and R7 (not Requirement R8) become effective 12 months after approval and Requirements R2 through R6 plus Requirement R8 (not Requirement R7), with the noted exceptions, become effective 24 months after approval. The SDT does not believe that a clarification is needed to cover the one-year period for months 13 through 24 when Requirements R1 and R7 plus the existing standard will be in effect because Requirements R1 and R7 are new requirements that do not replace any requirements in the existing standards. The NERC standards process is clear that an existing standard that is being revised remains in force until replaced by revised standard requirements becomes effective. The SDT believes that sufficient flexibility was provided in the definition of Year One to permit Transmission Planners and Planning Coordinators to maintain their current assessment schedule if they desire. It is the SDT's expectation that any assessment initiated 24 months or more after the effective date of Requirements R2 through R6 plus Requirement R8 would adhere to the revised standard requirements.		
Duke Energy	Yes	Yes, however we don't understand the meaning of this phrase which follows P1-2 and P1-3: "for controlled interruption of electric supply to local network customers connected to or supplied by the Faulted element".
Response: The parenthetical phrase related to P1-2 and P1-3 is intended to limit the application of the 60 calendar month exception to those situations where footnote b of the existing standards was interpreted to mean that controlled interruption of electric supply to local network customers connected to or supplied by the Faulted element is permitted. The SDT took this position in recognition of the fact that a significant number of entities interpret footnote b in this manner and, therefore, the revised standard represents a "raising of the bar" for them.		
PJM	No	The timeframe to gather additional protection and dynamic load modeling data is too short. Millions of pieces of new data will need to be collected and validated before valid models will be available. Extend the period to 24 months.
Response: The SDT does not intend that detailed protection and dynamic Load models will be required for all Transmission elements and Loads in the System models used for the assessments. In particular, Requirement R2, part 2.4.1 states that "An aggregate System Load model which represents the overall dynamic behavior of the Load is acceptable." Furthermore, there is no explicit requirement in Requirement R1 for representation of protection schemes. To the extent such detail is needed, it would apply to the Stability studies required as part of Requirement R4. Requirements R2 and R4 are already specified to be effective in 24 months following regulatory approval.		

12. Do you believe that this standard is ready to go to ballot? (if 'No' is checked here, the SDT will consider that comments raised on the other questions drove that decision.)

Summary Consideration: The initial response of the majority of the commenters was that this standard is not ready to go to ballot. The reasons for the negative responses included: 1) a desire to have a sample detailed Planning Assessment, 2) concern over the value of the "raising the bar" for EHV Facilities, 3) concern with excessive study or documentation requirements, 4) concern that the Implementation Plan could be interpreted to require construction (contrary to the Energy Policy Act of 2005), and 5) concern that some of the requirements are not clear and contain ambiguous language. The SDT learned that some commenters voted 'No' to ensure that their comments would be reviewed and considered by the SDT. Other commenters stated that this draft was ready to go to ballot and the remaining commenters stated that it was ready for ballot with favorable consideration of the comments provided.

The SDT has responded to all of these concerns in the responses to the comments. The majority of the issues raised about unclear and ambiguous language were clarified without material changes to the draft. The SDT evaluated the comments provided in response to this draft and has determined that the majority of the remaining 'No' votes are because the commenters disagree with the position(s) taken by the SDT and not because the standard is unclear or unenforceable. The issues that were raised about increased performance requirements, increased study requirements, and increased documentation have been vetted by the industry and the SDT through four posting periods over the last 3 years.

The SDT has posted this standard for four posting periods over the last 3 years. In the previous three postings, the SDT has developed more than 1300 pages of comments and responses. The form of the main requirements and sub-parts has changed in response to industry comment, but the substance of the main requirements and sub-parts has not changed substantially in the last two postings.

The SDT has not made any substantive or contextual changes with this posting and has determined that this standard is ready to go to ballot.

Organization	Yes or No	Comments for Question 12
Sacramento Municipal Utility District		The SDT should develop a detailed sample assessment prior to balloting so that the SDT's hard work can be voted on by an informed ballot pool.
Platte River Power Authority	No	No, not until there is some form of common understanding, among the people reading this draft, of how to interpret from Table 1 (Planned and Extreme) all the contingency scenarios that will be required to demonstrate full compliance with the standard. It would be helpful if the Drafting Team spearheaded some workshops to walk us through how this might be done.
Response: The SDT agrees that it is important to have an informed ballot pool; however, the SDT does not plan to develop a sample assessment prior to balloting. The SDT has taken several steps to inform the industry and will continue those outreach efforts.		

Organization	Yes or No	Comments for Question 12
FRCC Transmission Working Group		We the FRCC TWG feel that the standard is very close to ballot, but the drafting team still needs to address several issues raised in the comments before balloting.
CenterPoint Energy	No	CenterPoint Energy is well aware of the diligence of the SDT in preparing this major consolidation and rewrite of the existing TPL standards. CenterPoint Energy believes this latest version is almost ready for ballot. CenterPoint Energy respectfully requests consideration by the SDT of the refinements to this latest draft proposed by CenterPoint Energy.
FirstEnergy Corp	No	FirstEnergy does not believe the proposed TPL-001-1 standard is ready for ballot until our primary concern with the Implementation Plan as identified in our comment to Q11 is addressed. Additionally, our most pressing secondary concern is the modeling required for Protection Systems related to 4.3.3. Finally, we believe the standard is overly burdensome related to the annual near-term study requirements as stated in 2.1.1 as noted by our Q2 comments.
SERC Dynamics Review Subcommittee (DRS)	No	If the revisions recommended above are adopted, the standard would then be ready for ballot. We commend the drafting team for their efforts in preparing this draft standard for ballot.
SERC Planning Standards Subcommittee	No	If the revisions recommended above are adopted, the standard would then be ready for ballot. We commend the drafting team for their efforts in preparing this draft standard for ballot.
Midwest ISO	No	Only if the proposed changes and questions are adequately addressed.
NorthWestern Energy	No	Since the definition section needs to be changed, some wording in the requirements needs to be modified, and the footnote numbering in Table 1 need to be corrected, we believe another draft should be issued before taking this standard to ballot.
US Bureau of Reclamation	No	The definitions require revisions. Additional work is required to clarify Corrective Action plan items, agreement on votlage limits and acceptable deviations, as well as coordination of Planning Assessment results with owner entities.
SRC of ISO/RTO	No	The proposed changes and comments need to be adequately addressed before any ballot.
Independent Electricity System Operator	No	The standard has become overly prescriptive and unnecessary (see our comments under Q2, Q3 and Q4 on Part 2.1.4, Parts 3.3 to 3.6, Parts 4.3 to 4.5. Much work is needed to condense or remove these requirements.
Hydro-Québec TransEnergie (HQT)	No	There are still issues as indicated in the submitted comments that need to be addressed before this standard should go to ballot.
Northeast Power Coordinating	No	There are still issues as indicated in the submitted comments that need to be addressed before this standard

Organization	Yes or No	Comments for Question 12
Council--RSC		should go to ballot.
Orlando Utilities Commission	Yes	I have not seen all the comments of other entities, so there may be some comments that would require the standard be reposted. Assuming I have correctly read the standard, all of my comments would improve the communication of the existing intent, not alter the requirement.
American Electric Power	Yes	The SDT has done an exceptional job working through complex issues and varying perspectives to arrive at this solid draft. This version has significantly improved the standard and has raised the bar where appropriate to do so. With favorable consideration of comments from this round, the revised draft should be ready for ballot.
Duke Energy	Yes	Yes, assuming our comments are addressed effectively.
American Transmission Company	Yes	Yes, if the proposed changes and questions are adequately addressed.
Response: Please see the comment responses for each question to see how the SDT addressed the issues raised in your comments.		
Xcel Energy	No	As currently drafted, several outages identified in Categories P2, P4, and P5 appear to potentially result in the same elements being removed from service, so therefore the same event, even though the initiating event is different.
Response: The SDT agrees that some planning events will result in the same elements being removed from service. However, the similarities may only be valid from a steady-state view point and care must be taken to review the events in the Stability timeframe due to delayed clearing modes that may result from the initiating event. For example, a bus fault and a stuck breaker may each clear a bus; however, the stuck breaker will have different reaction times due to the delayed clearing mode and therefore may warrant a review in a Stability environment. The standard allows the Transmission Planner and Planning Coordinator flexibility in using engineering judgment for the Table 1 events in which it studies for both the steady-state and Stability environments. Both Requirements R3 (steady-state study) and R4 (Stability study) include text indicating the Transmission Planner and Planning Coordinator are to study those events "…that are expected to produce more severe System impacts on its portion of the BES, shall be identified and a list of those Contingencies to be evaluated for System performance …" If a Transmission Planner/Planning Coordinator can justify that certain events are duplicative for a given timeframe then at their discretion they may elect to limit their Contingency list so long as their entire Contingency list covers the events that "produce the more severe impacts" for their System.		
SCE&G	No	As per our comments.
British Columbia Transmission Corp	No	
Florida Power and Light	No	
Manitoba Hydro	No	

Organization	Yes or No	Comments for Question 12
Northeast Utilities	No	
Pepco Holdings, Inc. - Affiliates PHI	No	
Progress Energy Florida, Inc.	No	
United Illuminating	No	
PJM	No	
Bonneville Power Administration	No	Based on the unclear or ambiguous language identified in the comments above as well as the confusion noted in the Table 1 regarding outages and footnotes, we believe modifications are necessary prior to taking this standard to ballot.
Idaho Power	No	Based on the unclear or ambiguous language identified in the comments above as well as the confusion noted in the Table 1 regarding outages and footnotes, I believe modifications are necessary prior to taking this standard to ballot.
Modesto Irrigation District Transmission Planning	No	Based on the unclear or ambiguous language identified in the comments above as well as the confusion noted in the Table 1 regarding outages and footnotes, we believe modifications are necessary prior to taking this standard to ballot.
NV Energy	No	Based on the unclear or ambiguous language identified in the comments above as well as the confusion noted in the Table 1 regarding outages and footnotes, we believe modifications are necessary prior to taking this standard to ballot.
Pacific Gas and Electric Co.	No	Based on the unclear or ambiguous language identified in the comments above as well as the confusion noted in the Table 1 regarding outages and footnotes, we believe modifications are necessary prior to taking this standard to ballot.
Puget Sound Energy, Inc.	No	Based on the unclear or ambiguous language identified in the comments above as well as the confusion noted in the Table 1 regarding outages and footnotes, we believe modifications are necessary prior to taking this standard to ballot.
San Diego Gas & Electric Co	No	Based on the unclear or ambiguous language identified in the comments above as well as the confusion noted in the Table 1 regarding outages and footnotes, we believe modifications are necessary prior to taking this standard to ballot.

Organization	Yes or No	Comments for Question 12
Southern California Edison (SCE)	No	Based on the unclear or ambiguous language identified in the comments above as well as the confusion noted in the Table 1 regarding outages and footnotes, we believe modifications are necessary prior to taking this standard to ballot.
Utility System Efficiencies, Inc. (USE)	No	Based on the unclear or ambiguous language identified in the comments above as well as the confusion noted in the Table 1 regarding outages and footnotes, I believe additional modifications are necessary prior to taking this standard to ballot.
Western Area Power Adm - RMR	No	Based on the unclear or ambiguous language identified in the comments above as well as the confusion noted in the Table 1 regarding outages and footnotes, I believe modifications are necessary prior to taking this standard to ballot.
Deseret Power	No	Comments: Based on the unclear or ambiguous language identified in the comments above as well as the confusion noted in the Table 1 regarding outages and footnotes, we believe modifications are necessary prior to taking this standard to ballot.
SRP	No	: Based on the unclear or ambiguous language identified in the comments above as well as the confusion noted in the Table 1 regarding outages and footnotes, we believe modifications are necessary prior to taking this standard to ballot.
Response: Please see the comment responses for each question to see how the SDT addressed the issues raised in your comments, including the clarifications that the SDT made concerning the Table 1 outages and footnotes.		
Ameren	No	Certainly the proposed assessment and documentation requirements are more comprehensive and the performance standards are more rigorous than the existing TPL-001 through TPL-004 reliability standards. But, by performing the proposed additional required studies and documenting the results, how much additional reliability will be provided to the System? None, but we will be auditably compliant. More planning engineers will need to be hired to perform the studies and develop the assessments, more librarians will need to be hired to keep track of all the paperwork and computer file storage, and more trees will be killed printing the paper to send to all those that need to review the documents and provide comments. Is this the most effective way to improve transmission system reliability from a planning perspective? What measurable benefits are to be accrued for providing an EHV system that would not result in the loss of non-consequential load for P2-2, P2-3, P4 1-5, and P5 1-5 planning events, all of which are rare and infrequent? What is the estimated cost for this incremental "improvement" to cover the System's short-comings? The EHV system is already the most reliable portion of the BES with an availability of approximately 99% and can withstand extreme events without widespread outages.
Response: The SDT believes that the added clarity of the proposed standard is very important to ensure that entities can clearly understand the requirements. Even though EHV outages are less frequent than outages of lower voltage Transmission Facilities, the SDT believes that there should not be Non-Consequential Load Loss		

Organization	Yes or No	Comments for Question 12
for the single Contingencies in P2 and for the failure of a circuit breaker or Protection Systems in the P4 and P5 events.		
ITC Holdings	No	Comments: In addition to our other comments, ITC offers the following feedback. The requirements are rather complex, yet the measures seem extremely simple. Have they been discussed in any detail and are they sufficiently described to insure and understanding of just what is expected (ie., Are the requirements sufficient as measures in and of themselves?) R2.1.5 for example discusses "spare equipment strategy for long-lead time facilities". If I have a 2p.u. xfmr, can I assume it spares all similar category transformers or would I have to study P0,P1 and P2 contingencies if it replaces a 3 p.u. xfmr. If I don't have a spare and can't meet P0,P1 or P2 contingencies without load shedding, do I need a CAP. See also our comments under R3.4.1. We haven't reviewed all requirements and all measures in this fashion but suggest the SDT do so.
Response: The SDT has reviewed the measures and believe that they are sufficient to measure compliance with the requirements. The issues raised about transformer assumptions are System specific and are, therefore, not addressed by the standard. If you do not have a spare for a piece of equipment with a long lead time and your System cannot meet the performance requirements without that piece of equipment, you must have a Corrective Action Plan to address that deficiency. Part 3.4.1: See response to Q3.		
ERCOT ISO	No	ERCOT recognizes that much effort has been put into this standard. However, a lot of effort will be required to ensure documentation for the standard is sufficient, yet the benefit of the additional documentation effort required is marginal. For a standard like this, stating every possible issue and studying every possible scenario is not realistic and potentially will lead to complacency very little planning outside the scope of this standard will be done regardless of the system needs.
Response: The SDT has attempted to clarify areas where the existing standard is ambiguous. In this effort to clarify, the SDT has introduced new areas where documentation is required; however, in most instances, this documentation was already implicitly required. The SDT believes that it has limited the documentation requirements to the minimum required to ensure thorough evaluation of BES reliability. While the SDT has expanded the scenario analysis required with additional study year requirements and sensitivity requirements, the SDT has not developed an exhaustive list of studies or analysis that the planner must conduct. The SDT believes that the requirements contained within the standard are the minimum requirements necessary to evaluate BES reliability, while continuing to give the planner latitude in the portfolio of studies that the planner will conduct.		
NERC System Protection and Control Subcommittee (SPCS)	No	Inclusion of the changes proposed by the System Protection and Control Subcommittee (SPCS) drove the belief that the standard is not ready to go to ballot. Such changes would be substantial enough to invoke another round of comments by the Industry.
Response: Please see the comment responses for each question to see how the SDT addressed the issues raised in your comments. The SDT has not made substantial changes based on the comments.		
Central Maine Power Company	No	It is closer, but there are still some unacceptable issues that need to be addressed.

Organization	Yes or No	Comments for Question 12
ISO New England	No	It is closer, but there are still some unacceptable issues that need to be addressed. The single most important comment is to define the base assumptions for use in studies.
National Grid	No	It is closer, but there are still some unacceptable issues that need to be addressed.
Response: The SDT has made changes based on the comments. Please see the individual comment responses to see how the SDT addressed the issues raised in your comments.		
MAPP	No	MAPPCOR urges the SDT to modify the effective date where it is indicated that any "entity that cannot fully implement its Corrective Action Plan to eliminate the need to trip Non-Consequential Load or curtail Firm Transmission Service for the above listed performance elements within 60 calendar months of the compliance date for Requirements R2 through R4 shall self report itself as being unable to meet the performance requirements of this Reliability Standard." This is essentially requiring an entity to self report for failing to build facilities. The Energy Policy Act of 2005 did not give FERC and therefore, NERC, the authority to require construction of electric facilities. Therefore, this implementation plan is implying an authority that is not given to FERC or NERC. This provision of the effective date should be completely deleted from the standard, the provision to state that one is non-compliant for this should be deleted from the standard, or there should be a statement that such a requirement is subject to limitations of the Energy Policy Act of 2005.
Response: The SDT has modified the language in the Implementation Plan to address this concern. Additionally, the last paragraph of the effective date section of the standard was eliminated to address this concern.		
NERC Standards Review Subcommittee	No	More discussion is needed pertaining to this standard.
Response: The SDT believes with the clarifications made in Draft 5 that the standard is ready for ballot.		
Portland General Electric Co.	No	PGE believes that this standard should not go to ballot without revisions to restrict the scope of the standard as outlined above.
Response: The SDT has not restricted the standard to Facilities >200 kV, as proposed in your comment to Q2. The Facilities that make up the Bulk Electric System (BES) are defined by each Regional Entity and this standard must address all of the BES Facilities to ensure reliability of the BES.		
NYISO	No	Question #12 Do you believe that this standard is ready to go to ballot? (if "No" is checked here, the SDT will consider that comments raised on the other questions drove that decision.) No. Too many significant questions and key definitions remain unanswered.

Organization	Yes or No	Comments for Question 12
		Table 1 - General comment - Footnotes needs significant clean-up Page 16 Note (a) this note is placed under "Steady State & Stability" but issues of voltage instability, cascading outages, and uncontrolled islanding apply only to stability Note (f) Does this refer to "Normal Ratings"? Please provide clarity. Note (g) "System steady state" should be defined by applicable regional entity. Note (i) indicates that one cannot meet steady state requirements by depending on end-user owned equipment. Please clarify the purpose and performance requirement on this note with respect to end-user schemes and possible arrangements already in place to trip end-user equipment. Page 17 P5 As written, this requirement replicates a fault causing a loss of station anywhere that there is only one protection system. This is overly severe and would lead to the requirement for fully redundant protection systems at many stations. Page 18 P7 for Event 1 (the loss of two adjacent circuits), this needs to specify if these are the same phase or different phasesPage 19How could any system planner reasonably and accurately portray what contingencies might occur from any single or combination of extreme events listed? PAGE 20 Is the one mile exclusion in footnote 14 a contiguous mile, or a total of one mile for the entire length of the lines? (i.e. Are multiple instances of common towers or common rights of way exempt if each instance is less than a mile?)General Comment:The NYISO would like to align itself in supporting the following comment submitted by the NPCC: We agree with the SDT that more stringent performance requirements be applied for Facilities that do not directly serve end-use Load customers but rather represent the backbone of the electric power grid and act as the medium for moving large amounts of power from production to various Load centers.However, as HQT commented on previous draft, we strongly believe that the EHV breakpoint for these more stringent requirements, defined in note 3 of table 1 as "all Facilities greater than 300 kV" is not appropriately defined and should be reviewed. The SDT have not demonstrated that a uniform voltage-level threshold could adequately covers all different power system types in North America and we strongly believe that significant additional costs will be incurred without proportional or measurable reliability benefits if this definition is not changed.We propose to modify EHV definition "all Facilities greater than 300 kV" by the following "Facilities representing the backbone of the System, generally at voltage greater than 300 kV, as determined by the Planning Coordinator and approved by Regional Entity." In using such a language, we believe that the extra investment required would go towards real improvement of the reliability of the interconnected System.

Response: Footnote references were corrected.

The SDT does not agree that Header Note "a" should only apply in the Stability section, since these conditions should not be allowed to occur in any timeframe.

Header Note "f" is not limited to normal ratings. Facility Ratings are defined in the NERC Glossary as: The maximum or minimum voltage, current, frequency, or real or reactive power flow through a facility that does not violate the applicable equipment rating of any equipment comprising the facility. Since these ratings are time

Organization	Yes or No	Comments for Question 12
dependent, a rating higher than a normal rating can be utilized, as long as Header Note "e" is maintained. Header Note "g" – The SDT believes that it is appropriate for each Transmission Planner and Planning Coordinator to define the acceptable Steady state voltages. Header Note "i" – The purpose of the restriction is to ensure that the planner develops the System so that all of the Load, including voltage sensitive Load, can be served after an event. The P5 event is a Category C event in the existing Table, and the SDT changed the requirement for >300 kV so that Non-Consequential Load Loss is not acceptable. For the P7 event, it is the responsibility of the planner to evaluate the loss of adjacent circuits as the planner believes is appropriate for their System. For footnote 14, the SDT intends to limit the exposure for multiple circuits to less than 1 mile total. It does not matter whether the exposure is contiguous or not. The SDT declines to add "generally" to the requirements that apply to Facilities operated at greater than 300 kV as that would make the requirements unmeasurable.		
Lakeland Electric	No	The effective section needs more clarification:The assessment and supporting studies in accordance with the new standard is not effective until two years after this new standard is approved, however, it is required (R8) that PCs and TPs distribute its planning Assessment and results to adjacent PCs and TPs one year after the standard is effective. Which standard does the SDT intend for the (the old TPL standards or the new TPL standard) PCs and TPs to use to assess their system during the first year after the standard is approved? R2 thru R7 (assessments and studies) becomes effective 2 yrs after regulatory approval. That means that utilities have three years left to build/upgrade the projects identified in the studies/assessment (which was not effective until the 2nd year). Three years might not be enough to build long EHV or HV lines to meet the standard requirement.What happens between year 5 and year 7? After year 5, utilities are not allowed to trip Non-Consequential Load or curtailment of Firm Transmission Service for those specific contingency listed. However, the utilities do not have to self report until year 7 ("60 months of the compliance date for R2 through R4")
Response: A number of commenters pointed out a typographical error that reversed the numbering of Requirements R7 and R8 in the Implementation Plan. The implementation plan has been corrected to reflect the SDT's original intent that Requirements R1 and R7 (not Requirement R8) become effective 12 months after approval and Requirements R2 through R6 plus Requirement R8 (not Requirement R7), with the noted exceptions, become effective 24 months after approval. Changes were made to the Standard and the Implementation Plan document. Consequently, the revised assessment requirements and Requirement R8 are all effective 24 months after applicable regulatory approval. During the one-year period after Requirements R1 and R7 become effective and before the remaining requirements become effective, Transmission Planners and Planning Coordinators should conduct their assessments based on the current requirements. The SDT considered the concerns of a number of commenters as to whether 60 months will be sufficient to complete major projects when TPL-001-1, draft 3 was prepared, and the SDT again discussed its position in light of the comments received from this posting. The SDT continues to believe that extending the 60 month implementation period would water down the standard by potentially delaying some corrective actions that could be implemented in 60 months or less. The current draft of TPL-001-1 does in fact recognize the distinct possibility that major construction projects could take more than 60 months, in which case Requirement R2, part 2.7.3 would apply. The relevant portion of that requirement states: "If situations arise that are beyond the control of the Transmission Planner or Planning Coordinator that prevent the implementation of a Corrective Action Plan in the required timeframe, then the Transmission Planner or Planning Coordinator is permitted to utilize Non-Consequential Load Loss and curtailment of Firm Transmission Service to correct the situation that would normally not be permitted in Table 1, provided that the		

Organization	Yes or No	Comments for Question 12
Transmission Planner or Planning Coordinator documents that they are taking actions to resolve the situation. ….” This provision could be applied when formulating the original Corrective Action Plan when it is known in advance that the permitting and construction process will require longer than 60 months or after the plan is formulated and unexpected delays arise outside the Transmission Planner’s or Planning Coordinator’s control. All parts of the revised standard will be in effect 60 months after applicable regulatory approval, so there are no unique requirements that exist only between year 5 and year 7.		
Tri-State Generation and Transmission Association	No	The SDT needs to look at the Measures section more closely. Please consider: In what jurisdiction could it be developed, and would it be possible to develop estimates of costs to meet the new requirements contained in this draft TPL by Reliability Area, then have utilities examine whether there will be a corresponding increase in Bulk Transmission System reliability?The primary directive of NERC Reliability Standards is to improve system reliability and thus minimize potential cascading of the Bulk Electric System. This developing TPL Standard will provide some needed clarification and perhaps better uniformity of Planning Study work. Any Standard that would move us toward the primary goal should be attended to meticulously. The SDT must endeavor to ensure this standard moves us in that direction and does not simply give us more structure. That said, please use this guiding test as we put final touches on this standard: Will each Requirement decrease the potential of cascading outages and increase service reliability?
Response: Throughout the development process, the SDT has been cognizant of the changes in the requirements and their potential impact on BES reliability. The SDT believes that all of the requirements and their sub-parts contained in this standard address the NERC directive of ensuring Bulk Electric System reliability.		
Oklahoma Gas & Electric	No	This document needs to be cyrstal clear because of compliance requirements. It still needs some work to clarify some definitions and address duplication of work (between the Transmission Planner and Planning Coordinator).
Response: The SDT has worked diligently to make the requirements very clear and unambiguous. See responses to Q9 for changes made to the definitions in this draft. The SDT has written the standard such that each Transmission Planner and each Planning Coordinator is responsible for each requirement and its sub-parts.		
TVA System Planning	No	TVA is very concerned about the tremendous amount of additional work that has been proposed for both the steady state and for stability analysis. TVA believes that there will be very little payoff for these additional studies. TVA is concerned that the costs to meet the new requirements contained in this draft TPL will amount to between $1 billion to $2 billion with very little impact overall on the reliability of the Bulk transmission system. TVA is also very concerned about the increase in customer rates that will be required to support these new facilities.
Response: The SDT has made efforts to ensure that new study requirements in the proposed standard contribute to the completeness of Planning Assessments and remove the ambiguity in the existing standards. The SDT believes that the higher performance requirements are necessary to ensure a reliable BES.		
Gainesville Regional Utilities	Yes	
Oncor Electric Delivery	Yes	

Organization	Yes or No	Comments for Question 12
Progress Energy Carolinas	Yes	
Southern Company	Yes	
TIS	Yes	
Exelon Transmission Planning	Yes	Concern is with the issues raised in Question 2. Performance requirements should be based on the voltage level of the overloaded element.
Response: Please see the comment responses for Q2 to see how the SDT addressed the issues raised in your comments. The SDT disagrees that the voltage level of the overloaded element should be used to determine acceptable performance.		
Lafayette Utilities System	Yes	LUS believes that the current draft of the standard is a significant improvement on the previous draft, and that the standard is ready to go to ballot. While there are elements of the standard which we consider to be short of the ideal, we recognize that this has been a consensus-building process and that the version 4, as explained and clarified, is a compromise which may be the best attainable for the industry at the moment.
Response: Thank you for your comment.		

Consideration of Comments on Initial Ballot — Assess Transmission Future Needs (Project 2006-02)

Summary Consideration: Due to industry comments, the SDT has made a number of changes to the standard as shown below. In making these changes, the SDT has attempted to be responsive to the information provided in the initial ballot comments while continuing to be responsive to the FERC Order 693 directives. Please note that footnote 12 on non-consequential load loss is currently being utilized as a placeholder. The resolution of this issue will be provided in Project 2010-11. When that resolution is reached, the content will be copied to TPL-001-2.

Year One: The first twelve month period that a Planning Coordinator or a Transmission Planner is responsible for assessing. For the Planning Assessment started in a given calendar year, Year One must include the forecasted peak Load period for one of the following two calendar years. For example, if a Planning Assessment was started in 2011, then Year One must include the forecasted peak Load period for either 2012 or 2013.

Requirement R1 - Each Transmission Planner and Planning Coordinator shall maintain System models within its respective area for performing the studies needed to complete its Planning Assessment. The models shall use the latest data consistent with that provided in accordance with the MOD-010 and MOD-012 standards, supplemented by other sources as needed, including items represented in the Corrective Action Plan, and shall represent projected System conditions. This establishes the normal system condition in Table 1.

Requirement R2 - Each Transmission Planner and Planning Coordinator shall prepare an annual Planning Assessment of its portion of the BES. This Planning Assessment shall use current or qualified past studies, document assumptions, summarize documented results, and cover steady state analyses, short circuit analyses, and Stability analyses.

Requirement R2, part 2.1 - The Near-Term Transmission Planning Horizon portion of the steady state analysis shall be assessed annually and be supported by current annual studies or qualified past studies as indicated in Requirement R2, part 2.6, as follows:

Requirement R2, part 2.1.4 - For each of the studies described in Requirement R2, parts 2.1.1 and 2.1.2, sensitivity case(s) shall be utilized to demonstrate the impact of changes to the basic assumptions used in the model. To accomplish this, the sensitivity analysis in the Planning Assessment must vary one or more of the following conditions by a sufficient amount to stress the System within a range of credible conditions that demonstrate a measurable change in performance:

Requirement R2, part 2.1.5 - When an entity's spare equipment strategy could result in the unavailability of major Transmission equipment that has a lead time of one year or more (such as a transformer), the impact of this possible unavailability on System performance shall be studied. The studies shall be performed for the P0, P1, and P2 categories identified in Table 1 with the conditions that the System is expected to experience during the possible unavailability of the long lead time equipment.

Requirement R2, part 2.4.1 - System peak Load for one of the five years. System peak Load levels shall include a Load model which represents the expected dynamic behavior of Loads that could impact the study area, considering the behavior of induction motor Loads. An aggregate System Load model which represents the overall dynamic behavior of the Load is acceptable.

Requirement R2, part 2.4.3 - For each of the studies described in Requirement R2, parts 2.4.1 and 2.4.2, sensitivity case(s) shall be utilized to demonstrate the impact of changes to the basic assumptions used in the model. To accomplish this, the sensitivity analysis in the Planning Assessment must vary one or more of the following conditions by a sufficient amount to stress the System within a range of credible conditions that demonstrate a measurable change in performance:

Requirement R2, part 2.5 - The Long-Term Transmission Planning Horizon portion of the Stability analysis shall be assessed to address the impact of proposed material generation additions or changes in that timeframe and be supported by current or past studies as qualified in Requirement R2, part2.6. The technical rationale for determining material changes shall be documented.

Requirement R3, part 3.3.1 - Simulate the removal of all elements that the Protection System and other automatic controls are expected to disconnect for each Contingency without operator intervention. The analyses shall include the impact of subsequent:

- Tripping of generators where simulations show generator bus voltages or high side of the Generation Step Up (GSU) voltages are less than known or assumed minimum generator steady state or ride through voltage limitations. Include in the assessment any assumptions made.
- Tripping of Transmission elements where relay loadability limits are exceeded.

Requirement R3, part 3.5 - Those extreme events in Table 1 that are expected to produce more severe System impacts shall be identified and a list created of those events to be evaluated in Requirement R3, part 3.2. The rationale for those Contingencies selected for evaluation shall be available as supporting information. If the analysis concludes there is Cascading caused by the occurrence of extreme events, an evaluation of possible actions designed to reduce the likelihood or mitigate the consequences and adverse impacts of the event(s) shall be conducted.

Requirement R4, part 4.3.1 - Simulate the removal of all elements that the Protection System and other automatic controls are expected to disconnect for each Contingency without operator intervention. The analyses shall include the impact of subsequent:

- Successful high speed reclosing and unsuccessful high speed reclosing into a Fault.
- Tripping of generators where simulations show generator bus voltages or high side of the GSU voltages are less than known or assumed generator low voltage ride through capability. Include in the assessment any assumptions made.
- Tripping of Transmission lines and transformers where transient swings cause Protection System operation based on generic or actual relay models.

Requirement R4, part 4.4 - Those planning events in Table 1 that are expected to produce more severe System impacts on its portion of the BES, shall be identified, and a list created of those Contingencies to be evaluated in Requirement R4, part 4.1. The rationale for those Contingencies selected for evaluation shall be available as supporting information.

Requirement R4, part 4.5 - Those extreme events in Table 1 that are expected to produce more severe System impacts shall be identified and a list created of those events to be evaluated in Requirement R4, part 4.2. The rationale for those Contingencies selected for evaluation shall be available as supporting information. If the analysis concludes there is Cascading caused by the occurrence of extreme events, an evaluation of possible actions designed to reduce the likelihood or mitigate the consequences of the event(s) shall be conducted.

Header note 'a': The System shall remain stable. Cascading and uncontrolled islanding shall not occur.

Header note 'b': Consequential Load Loss as well as generation loss is acceptable as a consequence of any event excluding P0.

Header note 'e': Planned System adjustments such as Transmission configuration changes and re-dispatch of generation are allowed if such adjustments are executable within the time duration applicable to the Facility Ratings.

P5. Delayed Fault Clearing due to the failure of a relay[13] protecting the Faulted element to operate as designed, for a Fault on one of the following:

Extreme event 2d. Loss of all generating units at a generating station.

11. Excludes circuits that share a common structure (Planning event P7, Extreme event steady state 2a) or common Right-of-Way (Extreme event, steady state 2b) for 1 mile or less.

12. Note: Non-Consequential Load Loss is being decided in Project 2010-11. When that project is finalized, the resolution will be copied here.

13. Applies to the following relay functions or types: pilot (#85), distance (#21), differential (#87), current (#50, 51, and 67), voltage (#27 & 59), directional (#32, & 67), and tripping (#86, & 94).

M6. Each Transmission Planner and Planning Coordinator shall provide evidence, such as electronic or hard copies of documentation specifying any criteria or methodology used in the analysis to identify System instability for conditions such as Cascading, voltage instability, or uncontrolled islanding that was utilized in preparing the Planning Assessment in accordance with Requirement R6.

M8. Each Planning Coordinator and Transmission Planner shall provide evidence, such as email notices, documentation of updated web pages, postal receipts showing recipient and date; or a demonstration of a public posting, that it has distributed its Planning Assessment results to adjacent Planning Coordinators, adjacent Transmission Planners, and any functional entity who has indicated a reliability need and that functional entity has provided a documented response to comments received on Planning Assessment results within 90 calendar days of receipt of those comments in accordance with Requirement R8.

R8 VSL	The responsible entity failed to distribute the results of its Planning Assessment to one of its adjacent Transmission Planners, one adjacent Planning Coordinator, or to one functional entity that has a reliability related need and that has submitted a written request for the information, respectively in accordance with Requirement R8.	N/A	The responsible entity failed to distribute the results of its Planning Assessment to more than one of its adjacent Transmission Planners, adjacent Planning Coordinators, or functional entities that have a reliability related need and that have submitted a written request for the information, respectively in accordance with Requirement R8.	The responsible entity failed to provide a documented response to a recipient of the Planning Assessment results who provided documented comments on the results within 90 calendar days of receipt of those comments in accordance with Requirement R8.

If you feel that the drafting team overlooked your comments, please let us know immediately. Our goal is to give every comment serious consideration in this process. If you feel there has been an error or omission, you can contact the Vice President and Director of Standards, Herbert Schrayshuen, at 609-452-8060 or at herb.schrayshuen@nerc.net. In addition, there is a NERC Reliability Standards Appeals Process.[1]

[1] The appeals process is in the Reliability Standards Development Procedure: http://www.nerc.com/files/RSDP_V6_1_12Mar07.pdf.

Voter	Entity	Segment	Vote	Comment
Kent Kujala	Detroit Edison Company	3	Abstain	Document is overly complex.
Daniel Herring	Detroit Edison Company	4	Abstain	I don't believe this end product from the consolidation of the TPL standards into one standard turned out the way the industry was hoping it would. This standard is long, complex, and difficult to follow.
Response: The standard covers a number of complex issues and problems. The SDT has made every attempt to avoid unnecessary complexity. No change made.				
Paul Rocha	CenterPoint Energy	1	Negative	CenterPoint Energy believes the proposed standard has strayed far from its original intent as indicated in the 2002 Version 1 SAR and that this proposed standard is now overly prescriptive. CenterPoint Energy also will not support the proposed expansion of mandatory, auditable long term planning requirements beyond the requirements found in the existing TPL standards and the intent reflected in the 2002 version 1 SAR. This concern is exacerabated by the expansion of stability studies and corrective action plan requirements applied to the long term planning horizon.
Response: The SDT is providing clarity around all of the requirements consistent with the intent of the existing standards, the approved 2002 SAR, and the approved 2006 Supplemental SAR. No change made.				
Gregory L. Pieper	Xcel Energy	1	Negative	No comment.
Response: Without any specific comments to address, the SDT is unable to further address your concerns. No change made.				
Charles Locke	Kansas City Power & Light Co.	3	Negative	The standards are overly prescriptive and will increase industry costs substantially without materially improving customer service or reliability, and I believe they go significantly beyond the original standard. If the reason for a new standard is to clarify interpretation problems with Table I performance, that should be addressed without all the additional requirements that are added in the new standard.
Thomas Saitta	Kansas City Power & Light Co.	6	Negative	
Response: The SDT is providing clarity around all of the requirements consistent with the intent of the existing standards. The SDT has attempted to balance				

Voter	Entity	Segment	Vote	Comment
reliability versus cost based on responses to comments in previous postings. No change made.				
Saurabh Saksena	National Grid	1	Affirmative	1. An annual study shouldn't be required for all areas. A documented assessment based on past studies should be adequate for some areas. 2. Years 5 and 10 need to be defined. It appears that the difference between Year One and year 5 is only 3 years. 3. In Table 1, event P5 is not clear enough to communicate that it doesn't include the failure of a single element such as a battery, which is included in the NERC glossary definition for a Protection System. 4. Part 2.7.2 should include Runback or tripping of HVDC in the list of possible actions. 5. Parts 2.1.4 & 2.4.3 should be revised from ' … the sensitivity analysis in the Planning Assessment must vary one or more of the following conditions not already included in the studies ….' to ' … the sensitivity analysis in the Planning Assessment must vary one or more of the following original conditions in the studies ….'. This will provide a reference similar to a Base Case definition as a reference for the sensitivities and will eliminate the implication of infinitely adding one more sensitivity to the list of sensitivities. 6. The implementation window for part 2.4.1needs to be increased from 24 to 36 months.
Michael Schiavone	Niagara Mohawk (National Grid Company)	3	Affirmative	
Response: 1. The intent of the SDT wasn't that annual studies are required but that an annual Planning Assessment is required. However, the SDT agrees that the words may have been somewhat confusing. Therefore, the SDT has clarified the wording of Requirement R2 and Part 2.1. **Requirement R2** - Each Transmission Planner and Planning Coordinator shall prepare an annual Planning Assessment of its portion of the BES. This Planning Assessment shall use current or qualified past studies, document assumptions, summarize documented results, and cover steady state analyses, short circuit analyses, and Stability analyses. **Requirement R2, part 2.1.4 -** For each of the studies described in Requirement R2, parts 2.1.1 and 2.1.2, sensitivity case(s) shall be utilized to demonstrate the impact of changes to the basic assumptions used in the model. To accomplish this, the sensitivity analysis in the Planning Assessment must vary one or more of the following conditions by a sufficient amount to stress the System within a range of credible conditions that demonstrate a measurable change in performance: **Requirement R2, part 2.4.3 -** For each of the studies described in Requirement R2, parts 2.4.1 and 2.4.2, sensitivity case(s) shall be utilized to demonstrate the impact of changes to the basic assumptions used in the model. To accomplish this, the sensitivity analysis in the Planning Assessment must vary one or more of the following conditions by a sufficient amount to stress the System within a range of credible conditions that demonstrate a measurable change in performance:				

Voter	Entity	Segment	Vote	Comment
2. The SDT believes that this concern is alleviated by the revised definition for Year One. **Year One:** The first twelve month period that a Planning Coordinator or a Transmission Planner is responsible for assessing. For the Planning Assessment started in a given calendar year, Year One must include the forecasted peak Load period for one of the following two calendar years. For example, if a Planning Assessment was started in 2011, then Year One must include the forecasted peak Load period for either 2012 or 2013. Then Year 5 would be four years after Year One and Year 10 would be nine years after Year One. Using the example in the definition of Year One, Year 5 would be the 12 month period that includes the forecasted peak load period of either 2016 or 2017, respectively, and Year 10 would be 2021 or 2022, respectively. 3. The SDT has changed the text for the P5 event and added a footnote 13 as a result of your (and others') comments to address these concerns. **P5**. Delayed Fault Clearing due to the failure of a relay[13] protecting the Faulted element to operate as designed, for a Fault on one of the following: **13**. Applies to the following relay functions or types: pilot (#85), distance (#21), differential (#87), current (#50, 51, and 67), voltage (#27 & 59), directional (#32, & 67), and tripping (#86, & 94). 4. The SDT assumes that you meant Requirement R2, Part 2.7.1. As stated, the list is not all inconclusive but a list of possible actions. The SDT agrees that runback or tripping of HVDC would be allowable actions. No change made. 5. The SDT agrees that the current wording may be confusing and has made a change to promote clarity in this area. **Requirement R2** - Each Transmission Planner and Planning Coordinator shall prepare an annual Planning Assessment of its portion of the BES. This Planning Assessment shall use current or qualified past studies, document assumptions, summarize documented results, and cover steady state analyses, short circuit analyses, and Stability analyses. **Requirement R2, part 2.1.4 -** For each of the studies described in Requirement R2, parts 2.1.1 and 2.1.2, sensitivity case(s) shall be utilized to demonstrate the impact of changes to the basic assumptions used in the model. To accomplish this, the sensitivity analysis in the Planning Assessment must vary one or more of the following conditions by a sufficient amount to stress the System within a range of credible conditions that demonstrate a measurable change in performance: **Requirement R2, part 2.4.3 -** For each of the studies described in Requirement R2, parts 2.4.1 and 2.4.2, sensitivity case(s) shall be utilized to demonstrate the impact of changes to the basic assumptions used in the model. To accomplish this, the sensitivity analysis in the Planning Assessment must vary one or more of the following conditions by a sufficient amount to stress the System within a range of credible conditions that demonstrate a measurable change in performance: 6. The SDT has reviewed similar comments from earlier drafts and believes that the implementation timeframe for this item is appropriate. Without any further specific reasons, the SDT is unable to address your concerns. No change made.				

Voter	Entity	Segment	Vote	Comment
Linda Brown	San Diego Gas & Electric	1	Affirmative	1. The new standard is supposed to be a performance based standard, but goes beyond performance by suggesting solutions (2.7.1). 2. The new standard is an overly wordy and poorly organized version of the original four TPLs. In order to understand a requirement, the reader must jump to different sections in the document. 3. The new standard is poorly written making it confusing. For example, R2.1.1 says "System peak Load for either Year One or year two, and for year five". I think it means, "study the system as it may exists 5 years from now and as it may exist either one year from now, or two years from now." 4. Section R2.1.4 of the new standard requires Real and Reactive forecasted load. This makes no sense. To my knowledge, no one forecasts reactive load. They assume a power factor and using the real power load and the assumed power factor, they calculate the reactive load. 5. The load modeling requirement may take some time to achieve. 6. It asks for sensitivities that assume generation that may never be built. 7. The Corrective Action Plan doesn't define who gets the plan. It just says to make one. 8. The new standard makes requirements out of practices. For example, section 3.3.3 requires relay loading actions to be part of the analysis. Any competent transmission planning engineer does this.

Response: 1. The proposed standard clarifies allowable solutions but doesn't mandate any particular solution without deviating from performance-based requirements. No change made.

2. Without any specific comments to address, the SDT is unable to further address your concerns. No change made.

3. The SDT does not think the requirement is poorly worded nor are there other comments about this particular wording. Your assumption is correct but does not add any additional clarity. No change made.

4. Since the reactive Load is based on a forecast of the real Load, the SDT chose to characterize both real and reactive Loads as forecasts. No change made.

5. The SDT assumes that you are referring to the induction motor Load modeling required for Stability studies. The standard permits an aggregate model assumption that can be applied for a given system that is not substation specific. The SDT believes that 24 months is an adequate time period to accomplish this task. No change made.

6. The SDT has made a change to the requirements to promote clarity in this area. Generation is just one of the examples of what could be studied.

> **Requirement R2** - Each Transmission Planner and Planning Coordinator shall prepare an annual Planning Assessment of its portion of the BES. This Planning Assessment shall use current or qualified past studies, document assumptions, summarize documented results, and cover steady state analyses, short circuit analyses, and Stability analyses.

Voter	Entity	Segment	Vote	Comment
				Requirement R2, part 2.1.4 - For each of the studies described in Requirement R2, parts 2.1.1 and 2.1.2, sensitivity case(s) shall be utilized to demonstrate the impact of changes to the basic assumptions used in the model. To accomplish this, the sensitivity analysis in the Planning Assessment must vary one or more of the following conditions by a sufficient amount to stress the System within a range of credible conditions that demonstrate a measurable change in performance: **Requirement R2, part 2.4.3 -** For each of the studies described in Requirement R2, parts 2.4.1 and 2.4.2, sensitivity case(s) shall be utilized to demonstrate the impact of changes to the basic assumptions used in the model. To accomplish this, the sensitivity analysis in the Planning Assessment must vary one or more of the following conditions by a sufficient amount to stress the System within a range of credible conditions that demonstrate a measurable change in performance: 7. The Corrective Action Plan isn't delivered separately as it is part of the Planning Assessment. Requirement R8 specifies availability of Planning Assessments. No change made. 8. The SDT wrote the requirements for the proposed standard based on reliability-based needs for a continent-wide standard for transmission planning purposes and have been vetted through multiple industry comment periods. Requirements are often based on existing practices. No change made.
Dana Cabbell	Southern California Edison Co.	1	Affirmative	1. We recommend moving the EHV and HV definition from the Performance Table footnote to "Definitions of Terms used in Standard" section. 2. While draft 5 of this proposed standard is a substantial improvement over the previous drafts and the existing TPL standards, there are still areas where additional clarity is needed. We believe that a workshop, after FERC approval of the standard, where issues can be discussed and clarified will go a long way towards smooth implementation of this proposed standard. Some of the areas that require additional clarification are: o Application of consequential and non-consequential load and the EHV and HV voltage levels o Discussion on what is needed to study the various Planning Events. One example is P5, which involves "failure of a single protection system." 3. We recommend the following slight modification to the specified subrequirements of R2 to include clarifying references to R3 and R4 as follows: o 2.1. The Near-Term Transmission Planning Horizon portion of the steady state analysis shall be assessed annually and be supported by the following annual current studies in accordance with R3, supplemented with qualified past studies as indicated in Requirement R2, part 2.6: o 2.2. The Long-Term Transmission Planning Horizon portion of the steady state analysis shall be assessed annually and be supported by the following annual current study in accordance with R3, supplemented with qualified past studies as indicated in Requirement R2, part 2.6:

Voter	Entity	Segment	Vote	Comment
				o 2.4. The Near-Term Transmission Planning Horizon portion of the Stability analysis shall be assessed annually and be supported by current or past studies as qualified in Requirement R2, part 2.6. The following studies are required in accordance with R4: o 2.5. The Long-Term Transmission Planning Horizon portion of the Stability analysis shall be assessed to address the impact of proposed generation additions or changes in that timeframe and be supported in accordance with R4 by current or past studies as qualified in Requirement R2, part 2.6
Response: 1. The EHV/HV differentiation is not meant to be a definition in that it only applies to this standard. No change made. 2. The SDT has held several webinars on this project and may well hold another before the project is complete. In addition, the SDT has performed numerous outreach activities to regional entities, sub-committees, etc., on the details of the standard. The project has been presented several times at the NERC Standards Workshops. Once the standard is approved by FERC, the SDT ceases to exist. Therefore, any activities subsequent to that approval would be under general NERC jurisdiction. The SDT suggests that you broach this idea with NERC staff. Also, the SDT has clarified P5 in this revision. 2.1 & 2.2 – The SDT feels that the linkage between requirements is properly cited in Requirement R3 going back to Requirement R2 and the additional language suggested is not necessary and does not add clarity. No change made. 2.4 – Part 2.4 is already part of Requirement R2 so no additional reference is required. No change made. 2.5 - The SDT feels that the linkage between requirements is properly cited in Requirement R4 going back to Requirement R2 and the additional language suggested is not necessary and does not add clarity. No change made.				
Thomas J. Bradish	RRI Energy	5	Affirmative	I support the WECC position paper on this subject. Namely: 1. While draft 5 of this proposed standard is a substantial improvement over the previous drafts and the existing TPL standards, there are still areas where additional clarity is needed. We believe that a workshop, after FERC approval of the standard, where issues can be discussed and clarified will go a long way towards smooth implementation of this proposed standard. Some of the areas that require additional clarification are: o Application of consequential and non-consequential load and the EHV and HV voltage levels o Discussion on what is needed to study the various Planning Events. One example is P5, which
Scott Kinney	Avista Corp.	1	Affirmative	
Dennis Malone	El Paso Electric Company	1	Affirmative	

Voter	Entity	Segment	Vote	Comment
Richard J. Padilla	Pacific Gas and Electric Company	5	Affirmative	involves "failure of a single protection system." 2. We recommend the following slight modification to the specified subrequirements of R2 to include clarifying references to R3 and R4 as follows: o 2.1. The Near-Term Transmission Planning Horizon portion of the steady state analysis shall be assessed annually and be supported by the following annual current studies in accordance with R3, supplemented with qualified past studies as indicated in Requirement R2, part 2.6: o 2.2. The Long-Term Transmission Planning Horizon portion of the steady state analysis shall be assessed annually and be supported by the following annual current study in accordance with R3, supplemented with qualified past studies as indicated in Requirement R2, part 2.6: o 2.4. The Near-Term Transmission Planning Horizon portion of the Stability analysis shall be assessed annually and be supported by current or past studies as qualified in Requirement R2, part 2.6. The following studies are required in accordance with R4: o 2.5. The Long-Term Transmission Planning Horizon portion of the Stability analysis shall be assessed to address the impact of proposed generation additions or changes in that timeframe and be supported in accordance with R4 by current or past studies as qualified in Requirement R2, part 2.6
Response: 1. The SDT has held several webinars on this project and may well hold another before the project is complete. In addition, the SDT has performed numerous outreach activities to regional entities, sub-committees, etc., on the details of the standard. The project has been presented several times at the NERC Standards Workshops. Once the standard is approved by FERC, the SDT ceases to exist. Therefore, any activities subsequent to that approval would be under general NERC jurisdiction. The SDT suggests that you broach this idea with NERC staff. 2.1 & 2.2 – The SDT feels that the linkage between requirements is properly cited in Requirement R3 going back to Requirement R2 and the additional language suggested is not necessary and does not add clarity. No change made. 2.4 – Part 2.4 is already part of Requirement R2 so no additional reference is required. No change made. 2.5 - The SDT feels that the linkage between requirements is properly cited in Requirement R4 going back to Requirement R2 and the additional language suggested is not necessary and does not add clarity. No change made.				
Chifong L. Thomas	Pacific Gas and Electric Company	1	Affirmative	1. While draft 5 of this proposed standard is a substantial improvement over the previous drafts and the existing TPL standards, there are still areas where additional clarity is needed. We believe that a workshop, after FERC approval of the standard, where issues can be discussed and clarified will go a long way towards smooth implementation of this proposed standard.

Voter	Entity	Segment	Vote	Comment
				Some of the areas that require additional clarification are: o Application of consequential and non-consequential load and the EHV and HV voltage levels o Discussion on what is needed to study the various Planning Events. One example is P5, which involves "failure of a single protection system." 2. We recommend the following slight modification to the specified sub-requirements of R2 to inserting "in accordance with R3" or "in accordance with R4" to clarify references to R3 and R4, respectively, as follows: o 2.1. The Near-Term Transmission Planning Horizon portion of the steady state analysis shall be assessed annually and be supported by the following annual current studies in accordance with R3, supplemented with qualified past studies as indicated in Requirement R2, part 2.6: o 2.2. The Long-Term Transmission Planning Horizon portion of the steady state analysis shall be assessed annually and be supported by the following annual current study in accordance with R3, supplemented with qualified past studies as indicated in Requirement R2, part 2.6: o 2.4. The Near-Term Transmission Planning Horizon portion of the Stability analysis shall be assessed annually and be supported by current or past studies as qualified in Requirement R2, part 2.6. The following studies are required in accordance with R4: o 2.5. The Long-Term Transmission Planning Horizon portion of the Stability analysis shall be assessed to address the impact of proposed generation additions or changes in that timeframe and be supported in accordance with R4 by current or past studies as qualified in Requirement R2, part 2.6 3. As proposed, Non-Consequential Load Loss is defined as "Non-Interruptible Load loss that does not include: (1) Consequential Load Loss, (2) the response of voltage sensitive Load, or (3) Load that is disconnected from the System by end-user equipment". As voltage at the fault goes to zero, and voltages in the parts of the system near the fault become very low, some voltage sensitive Loads may be tripped, and, as a result may not "ride through" the fault. Would this types of Load loss be covered under item (2), "the response of voltage sensitive Load" during the transient dynamic study, as long as the TP and PC model these Loads as connected to the system in the post-contingency steady state power flow representation?
Response: 1. The SDT has held several webinars on this project and may well hold another before the project is complete. In addition, the SDT has performed numerous outreach activities to regional entities, sub-committees, etc., on the details of the standard. The project has been presented several times at the NERC Standards Workshops. Once the standard is approved by FERC, the SDT ceases to exist. Therefore, any activities subsequent to that approval would be under				

Voter	Entity	Segment	Vote	Comment
general NERC jurisdiction. The SDT suggests that you broach this idea with NERC staff. 2.1 & 2.2 – The SDT feels that the linkage between requirements is properly cited in Requirement R3 going back to Requirement R2 and the additional language suggested is not necessary and does not add clarity. No change made. 2.4 – Part 2.4 is already part of Requirement R2 so no additional reference is required. No change made. 2.5 - The SDT feels that the linkage between requirements is properly cited in Requirement R4 going back to Requirement R2 and the additional language suggested is not necessary and does not add clarity. No change made. Yes, your assumptions are correct.				
Timothy VanBlaricom	California ISO	2	Affirmative	2.1 The Near-Term Transmission Planning Horizon portion of the steady state analysis shall be assessed annually and be supported by current or past studies as qualified in Requirement R2, part 2.6: 2.2 The Long-Term Transmission Planning Horizon portion of the steady state analysis shall be assessed annually and be supported by current or past studies as qualified in Requirement R2, part 2.6:
Response: 2.1 & 2.2 – The SDT feels that the linkage between requirements is properly cited in Requirement R3 going back to Requirement R2 and the additional language suggested is not necessary and does not add clarity. No change made.				
Paul B. Johnson	American Electric Power	1	Affirmative	AEP appreciates the extensive efforts by the SDT to develop the version of this standard that is presently before the industry for ballot. The proposed version addresses much of the confusion that exists with the current standards that it will replace. The SDT should be commended for having gone to great lengths to explain the interpretation of this revised standard as part of its reply to industry comments. Adherence to this standard should result in a sufficiently reliable system by narrowing the broad interpretations that have been made of the requirements in the existing standards. AEP believes that the SDT has satisfied enough of FERC's concerns so that FERC will approve this standard if passed by the industry. Therefore, AEP supports approval of this standard. AEP would like to make a suggestion that any future revision of TPL-001-1 should place appropriate restrictions on the use of Special Protection Systems as a permanent solution in the Corrective Action Plan. While AEP recognizes that there are acceptable applications of SPS on a permanent basis, we are concerned that in highly interconnected portions of the grid the use of multiple SPS can cause complex interactions that would be difficult to predict and could lead to unintended consequences. AEP also recognizes that an SPS may be the only practical option on an interim basis.
Raj Rana	American Electric Power	3	Affirmative	
Brock Ondayko	AEP Service Corp.	5	Affirmative	
Edward P. Cox	AEP Marketing	6	Affirmative	

Voter	Entity	Segment	Vote	Comment
Response: Thank you for your response. The SDT will enter a comment in the official NERC issues database on your concern about permanent SPS solutions. That will assure that a future drafting team will address your concern.				
George R. Bartlett	Entergy Corporation	1	Affirmative	Entergy appreciates the work of the drafting team and recognizes the challenges associated with complexities of this effort. Entergy is voting "Affirmative" on the proposed standard but would appreciate the SDT consideration of the following comments in any further efforts to improve the standard: 1. The implementation plan is simply too aggressive. Locating and building transmission facilities continues to become more time consuming. Even lower voltage facilities can take 5 to 7 years to navigate through the various technical and regulatory challenges associated with building these facilities. Entergy would propose extending the implementation plan to 7 years for 230 kV and below, and 10 years for above 230 kV where transmission lines must be constructed. While the SDT has the intent that no penalties be imposed where facilities can not be constructed by the end of the implementation plan, we are concerned that ambiguity may exist may lead to issues should enforcement be left to interpret what is "beyond the control of the Transmission Planner or Planning Coordinator" in R2.7.3 2. 2. P5 in the new table is simply not defined to the extent that a consistent analysis method can be applied throughout the industry. While the process of identifying single points of failure will be time consuming and manpower intensive, it is feasible to complete. However, the consequences of those single points of failure can not be defined with consistency across the industry. Consequences of protection system failures are dependent on fault types, initial system conditions, and other factors which are not and can not be tracked in traditional planning tools. The ambiguities associated with P5 will almost certainly lead to additional standards needs and numerous requests for interpretation. Entergy would propose industry standardized proxies be allowed in lieu of detailed analysis of the interface between protection systems and the delivery aspects of the BES. Proxies could be developed to ensure the industry identifies and avoids events which have recently been associated with single points of failure in a protection system. 3. Entergy believes that more clarity is needed in R2.1.4 and R2.7 concerning sensitivity studies. The determination of when sensitivity study results should warrant mitigation should be left to the Transmission Planner and/or Planning Coordinator. The requirement to document the studies and their results will proved transparency and allow for transmission improvements through normal stakeholder and regulatory processes.

Voter	Entity	Segment	Vote	Comment
Response: 1. The SDT has changed the majority of the implementation timeframe from 60 to 84 months as per your (and others') suggestion. Since problems may not be seen until after the assessments are completed and there is a 24 month implementation for assessments, the total time for items P2-1, P2-2 and P2-3 (above 300 kV), P3-1 through P3-5, P4-1 through P4-5 (above 300 kV), and P5 (above 300 KV) has been increased to 84 months. P1-2 and P1-3 were not increased since they are already being covered by the implementation plan for Project 2010-11: TPL Table 1 Order. Requirement R2, part 2.7.3 - If an entity can demonstrate that they have made a best faith effort to implement the planned solution then there should not be a concern. The wording of the requirement allows an entity this flexibility. 2. The SDT has changed the text for the P5 event as a result of your (and others) comments to address these concerns. **P5**. Delayed Fault Clearing due to the failure of a relay[13] protecting the Faulted element to operate as designed, for a Fault on one of the following: **13**. Applies to the following relay functions or types: pilot (#85), distance (#21), differential (#87), current (#50, 51, and 67), voltage (#27 & 59), directional (#32, & 67), and tripping (#86, & 94). 3. The SDT did not receive any other comments in this regard and believes that the wording is clear. No change made.				
Robert Martinko	FirstEnergy Energy Delivery	1	Affirmative	FirstEnergy appreciates the dedication of the Assess Transmission and Future Needs Standards Drafting Team commends the group for their hard work to bring the proposed TPL-001-1 standard to industry for consideration. The TPL-001-1 standard provides greater compliance clarity than what presently exists in vague and open for interpretation TPL standards. The project appropriately consolidates six existing TPL standards into a single standard, while driving the industry to needed robust planning reviews. The team has carefully considered the industry feedback during the standards development and made many adjustments to better clarify the requirement language. The team is also commended for the improvements made to the Performance Table describing steady-state and stability performance expectations and creating the distinction between Planning Events and Extreme Events. FirstEnergy is voting to AFFIRM the standard and offers the following suggestions to the standards drafting team for areas of improvement and a more appropriate transition to the TPL-001-1 standard. 1) YearOne Definition: FirstEnergy requests that the team consider a change so that Year One is the planning window that begins 12-18 months from the "start" of the current calendar year, and not
Kevin Querry	FirstEnergy Solutions	3	Affirmative	
Douglas Hohlbaugh	Ohio Edison Company	4	Affirmative	
Kenneth Dresner	FirstEnergy Solutions	5	Affirmative	

Voter	Entity	Segment	Vote	Comment
Mark S Travaglianti	FirstEnergy Solutions	6	Affirmative	from the "end" of the calendar year. This change is needed so that minimal adjustments are needed to the ERAG MMWG model building process, which is the basis for planning models used by many within the Eastern Interconnection. The change would still meet the team's intent of requiring the industry to plan beyond current year load periods which are appropriately considered an operating timeframe in the context of TPL-001-1. If the team does not agree to this change for use in the TPL-001-1 standard, we ask the team to consider adding an Entity Variance that would permit the proposed change within the Eastern Interconnection. 2) Implementation Plan: The 60-month transition, as reflected in the team's Implementation Plan, may not be sufficient time for completion of new transmission facilities that may be needed as part of a Corrective Action Plan. The Implementation Plan calls for a 60-month period that is in parallel to the 24-month transition period for completing new model and study expectations per the TPL-001-1 standard. The proposed standard raises study expectations in a number of areas such as removing load shedding for n-1 conditions, more detailed load modeling regarding induction motor loads, developing and documenting transient voltage criterion, etc. FirstEnergy believes it is more appropriate for the 60-month transition for completed Corrective Action Plans to be sequential to the 24-month transitional items. It will take industry some time to transition to the new model and study expectations and industry should be allotted a full 60 months for the completion of major transmission infrastructure that may be included in Corrective Action Plans. 3) Two Near-Term Studies: FirstEnergy supports a need for "fresh" annual steady-state studies being completed for both the Near-Term and Long-Term planning horizons as reflected in requirement 2.1 which states "... be supported by the following annual current studies ...". However, we continue to stress that the need for two studies in the Near-Term horizon (requirement R2.1.1) creates unnecessary burden on industry resources, especially in light that sensitivity analyses are required for each study year. The focus should be that the Transmission Planner needs to cover the entire planning horizon through past and present (current annual) studies and allow the Transmission Planner more latitude to pick the current annual studies. A single present year study within the Near-term and Long-Term planning horizons, supplemented with past studies should be sufficient to effectively interpolate and extrapolate results to cover the entire planning horizon. To the extent a past study remains a qualified past study (as described in the standard in R2.6) we believe the transmission planner should still have discretion to continue to use those studies as their study time period moves forward.

Response: 1. Based on your comment and those of others, the SDT has revised the definition of Year One.

Year One: The first twelve month period that a Planning Coordinator or a Transmission Planner is responsible for assessing. For the Planning Assessment started in a given calendar year, Year One must include the forecasted peak Load period for one of the following two calendar years. For

Voter	Entity	Segment	Vote	Comment
example, if a Planning Assessment was started in 2011, then Year One must include the forecasted peak Load period for either 2012 or 2013. 2. The SDT has changed the majority of the implementation timeframe from 60 to 84 months as per your (and others') suggestion. Since problems may not be seen until after the assessments are completed and there is a 24 month implementation for assessments, the total time for items P2-1, P2-2 and P2-3 (above 300 kV), P3-1 through P3-5, P4-1 through P4-5 (above 300 kV), and P5 (above 300 KV) has been increased to 84 months. P1-2 and P1-3 were not increased since they are already being covered by the implementation plan for Project 2010-11: TPL Table 1 Order. 3. The intent of the SDT wasn't that annual studies are required but that an annual Planning Assessment is required. However, the SDT agrees that the words may have been somewhat confusing. Therefore, the SDT has clarified the wording of Requirement R2 and part 2.1. **Requirement R2** - Each Transmission Planner and Planning Coordinator shall prepare an annual Planning Assessment of its portion of the BES. This Planning Assessment shall use current or qualified past studies, document assumptions, summarize documented results, and cover steady state analyses, short circuit analyses, and Stability analyses. **Requirement R2, part 2.1 -** The Near-Term Transmission Planning Horizon portion of the steady state analysis shall be assessed annually and be supported by current annual studies or qualified past studies as indicated in Requirement R2, part 2.6, as follows:				
William L. Thompson	Dominion Virginia Power	1	Affirmative	o Effective Date - For those raising the bar standards, corrective action plans must be implemented by 60 calendar months. We believe as we have commented previously that for new EHV facilities, this may be difficult to achieve. Our recommendation was to add an additional 24 months to that timeframe. However, they have added Requirement R2.7.3 which allows for situations out of our control to use non-consequential load loss to temporarily resolve violations until the corrective action plans are implemented. Although this does cover us as long as we have a legitimate reason, it does leave to the interpretation of the auditor that the reason is "valid". We therefore still believe more time should be allowed. o Requirement R3.3.2 - Dominion does not agree that the low voltage ride through is a steady-state issue as included in requirement R3.3.2. We foresee demonstrating compliance for this requirement as a difficult if not impossible task hence subjecting the industry to undue non-compliance risk. Furthermore, we believe that low voltage ride through is a dynamic modeling issue covered in requirement R4.3.2. o Assessment time and documentation - Although we do see the need and improvements in the standard, it is clear to Planning that more assessments and documentation will be the end result. It is difficult to determine how much time and resource requirements this will take until we begin implementing the standard. Planning does have a concern that additional resources will be required and have heard this from others in the industry.
Jalal (John) Babik	Dominion Resources, Inc.	3	Affirmative	
Mike Garton	Dominion Resources, Inc.	5	Affirmative	
Louis S Slade	Dominion Resources, Inc.	6	Affirmative	

Voter	Entity	Segment	Vote	Comment
Response: The SDT has changed the majority of the implementation timeframe from 60 to 84 months as per your (and others') suggestion. Since problems may not be seen until after the assessments are completed and there is a 24 month implementation for assessments, the total time for items P2-1, P2-2 and P2-3 (above 300 kV), P3-1 through P3-5, P4-1 through P4-5 (above 300 kV), and P5 (above 300 KV) has been increased to 84 months. P1-2 and P1-3 were not increased since they are already being covered by the implementation plan for Project 2010-11: TPL Table 1 Order. Requirement R2, part 2.7.3 - If an entity can demonstrate that they have made a best faith effort to implement the planned solution then there should not be a concern. The wording of the requirement allows an entity this flexibility. The SDT voltage ride through is not confined to the dynamic period. There are protection requirements that could result in generator tripping and that must be considered in the steady-state analysis. The SDT has clarified the wording of the requirement. **Requirement R3, part 3.3.1 -** Simulate the removal of all elements that the Protection System and other automatic controls are expected to disconnect for each Contingency without operator intervention. The analyses shall include the impact of subsequent: • Tripping of generators where simulations show generator bus voltages or high side of the generation step up (GSU) voltages are less than known or assumed minimum generator steady state or ride through voltage limitations. Include in the assessment any assumptions made. • Tripping of Transmission elements where relay loadability limits are exceeded. The SDT is sensitive to this issue and that is why there is a staggered Implementation Plan. The timeframes are designed to allow entities time to catch up to the new requirements and were derived from a specific question asked of the industry.				
Kim Warren	Independent Electricity System Operator	2	Affirmative	On page 3 of the Implementation Plan it is stated: "For 60 months after the first day of the first calendar quarter following applicable regulatory approval, Corrective Action Plans..." It is unclear how this should be interpreted in those jurisdictions where no regulatory approval is required. For consistency, we recommend the following wording: "For 60 months after the first day of the first calendar quarter following applicable regulatory approval, or, in those jurisdictions where no regulatory approval is required, 60 months after the first day of the first calendar quarter following Board of Trustees adoption, Corrective Action Plans..."
Response: As pointed out in the comment, the wording on page 3 of the Implementation Plan should agree with the wording on page 2. The SDT has made this change. However, due to other comments, the 60 month period has been changed to 84 months. For 84 months after the first day of the first calendar quarter following applicable regulatory approval, or in those jurisdictions where no regulatory approval is required on the first day of the first calendar quarter, 84 months after Board of Trustees adoption, Corrective Action Plans applying to performance elements...				

Voter	Entity	Segment	Vote	Comment
Tom Bowe	PJM Interconnection, L.L.C.	2	Affirmative	PJM is supports the standard because it helps to remove the ambiguity in the existing TPL standards and it promotes actions that will result in an improvement in the reliability of the Bulk Electric System. PJM believes that the draft standard addresses the issues raised in the SAR and by FERC orders 672 and 693. The industry wide webinars conducted during the drafting process were particularly helpful in providing the industry with an additional vehicle to better understand the proposed modifications to the TPL standards and provided an additional avenue for industry feedback to the Standard Drafting Team. While supportive of the standard PJM believes additional clarifying language should be added to the following requirements: R 2.1. The Near-Term Transmission Planning Horizon portion of the steady state analysis shall be assessed annually and be supported by the following annual current studies, supplemented with qualified past studies as indicated in Requirement R2, part 2.6: R 2.1.1. System peak Load for either Year One or year two, and for year five. It should be made clear the intent of the requirement for a "Year One or year two" assessment is to "dovetail" with the operational horizon in order to assess the steady state impact of changes from the system as planned. As currently written, the intent and required depth of the additional "Year One or year two" study is ambiguous.
Response: Part 2.1 is already part of Requirement R2 so no additional reference is required. No change made. Based on your comment and those of others, the SDT has revised the definition of Year One. **Year One:** The first twelve month period that a Planning Coordinator or a Transmission Planner is responsible for assessing. For the Planning Assessment started in a given calendar year, Year One must include the forecasted peak Load period for one of the following two calendar years. For example, if a Planning Assessment was started in 2011, then Year One must include the forecasted peak Load period for either 2012 or 2013.				
Ronald D. Schellberg	Idaho Power Company	1	Affirmative	Recommend the following slight modification to the specified subrequirements of R2 to include clarifying references to R3 and R4 as follows: o 2.1. ...by the following annual current studies in accordance with R3, ... o 2.2. ...by the following annual current study in accordance with R3, ... o 2.4. ... The following studies are required in accordance with R4: o 2.5. ...and be supported in accordance with R4 by current or past studies ...

Voter	Entity	Segment	Vote	Comment
Response: 2.1 & 2.2 – The SDT feels that the linkage between requirements is properly cited in Requirement R3 going back to Requirement R2 and the additional language suggested is not necessary and does not add clarity. No change made. 2.4 – Part 2.4 is already part of Requirement R2 so no additional reference is required. No change made. 2.5 - The SDT feels that the linkage between requirements is properly cited in Requirement R4 going back to Requirement R2 and the additional language suggested is not necessary and does not add clarity. No change made.				
Jason L. Murray	Alberta Electric System Operator	2	Affirmative	While voting affirmative on this standard we agree with the following WECC comments: 1. While draft 5 of this proposed standard is a substantial improvement over the previous drafts and the existing TPL standards, there are still areas where additional clarity is needed. We believe that a workshop, after FERC approval of the standard, where issues can be discussed and clarified will go a long way towards smooth implementation of this proposed standard. Some of the areas that require additional clarification are: o Application of consequential and non-consequential load and the EHV and HV voltage levels o Discussion on what is needed to study the various Planning Events. One example is P5, which involves "failure of a single protection system." 2. We recommend the following slight modification to the specified subrequirements of R2 to include clarifying references to R3 and R4 as follows: o 2.1. The Near-Term Transmission Planning Horizon portion of the steady state analysis shall be assessed annually and be supported by the following annual current studies in accordance with R3, supplemented with qualified past studies as indicated in Requirement R2, part 2.6: o 2.2. The Long-Term Transmission Planning Horizon portion of the steady state analysis shall be assessed annually and be supported by the following annual current study in accordance with R3, supplemented with qualified past studies as indicated in Requirement R2, part 2.6: o 2.4. The Near-Term Transmission Planning Horizon portion of the Stability analysis shall be assessed annually and be supported by current or past studies as qualified in Requirement R2, part 2.6. The following studies are required in accordance with R4: o 2.5. The Long-Term Transmission Planning Horizon portion of the Stability analysis shall be assessed to address the impact of proposed generation additions or changes in that timeframe and be supported in accordance with R4 by current or past studies as qualified in Requirement R2, part 2.6.

Voter	Entity	Segment	Vote	Comment
				The AESO would also like to add that due to provincial acts, regulations, policies and market structure in Alberta, the AESO and Alberta entities involved in the standards process will consider modifications to this standard when adopting it as an Alberta Reliability Standard. In particular we may need to consider rewording the requirements concerning the use of RAS as mitigation for single and multiple contingencies.
Response: 1. The SDT has held several webinars on this project and may well hold another before the project is complete. In addition, the SDT has performed numerous outreach activities to regional entities, sub-committees, etc., on the details of the standard. The project has been presented several times at the NERC Standards Workshops. Once the standard is approved by FERC, the SDT ceases to exist. Therefore, any activities subsequent to that approval would be under general NERC jurisdiction. The SDT suggests that you broach this idea with NERC staff. 2.1 & 2.2 – The SDT feels that the linkage between requirements is properly cited in Requirement R3 going back to Requirement R2 and the additional language suggested is not necessary and does not add clarity. No change made. 2.4 – Part 2.4 is already part of Requirement R2 so no additional reference is required. No change made. 2.5 - The SDT feels that the linkage between requirements is properly cited in Requirement R4 going back to Requirement R2 and the additional language suggested is not necessary and does not add clarity. No change made. Thank you for this information.				
Richard Jones	South Carolina Electric & Gas Co.	5	Negative	"SCE&G appreciates the efforts of the Standard Drafting Team and believes this version of the TPL standard has addressed most of the significant issues found in previous versions. However, SCE&G believes there are several significant issues that need modification or further explanation. 1. SCE&G agrees with other submitted comments that the requirement to complete new transmission construction to meet new performance requirements within 60 months is too short. SCE&G believes that 84 months is more reasonable. 2. SCE&G agrees with comments submitted by Duke Energy that the requirement prohibiting loss of non-consequential load for P1, P2.1 and P3 events is an overreach by the standard into local load quality of service issues, does not provide any real benefit to Bulk Electric System (BES) reliability, and may have unintended negative consequences on reliability and service quality. In many

Voter	Entity	Segment	Vote	Comment
Matt H Bullard	South Carolina Electric & Gas Co.	6	Negative	instances, it may be in the best interest of all involved parties from an overall cost/benefit point of view to allow loss of non-consequential load. The standard should continue to allow Transmission Planners to use discretion regarding loss of non-consequential load, such that Transmission Planners, customers, and local regulators jointly control the decision making when BES reliability is not an issue. 3. SCE&G believes there are still different interpretations of Consequential and Non-Consequential Load loss and how each should be applied or not applied. The Standard drafting team should provide several examples in its response to these comments showing how to apply and not apply Consequential and Non-Consequential Load Loss. Without clear examples, SCE&G believes many request for interpretation will be submitted to NERC by the industry."
Response: 1. The SDT has changed the majority of the implementation timeframe from 60 to 84 months as per your (and others') suggestion. Since problems may not be seen until after the assessments are completed and there is a 24 month implementation for assessments, the total time for items P2-1, P2-2 and P2-3 (above 300 kV), P3-1 through P3-5, P4-1 through P4-5 (above 300 kV), and P5 (above 300 KV) has been increased to 84 months. P1-2 and P1-3 were not increased since they are already being covered by the implementation plan for Project 2010-11: TPL Table 1, footnote b order. 2. The SDT has added footnote #12 to P1, P2-1, and P3 to address your and others' concerns in this area. 12. Note: Non-Consequential Load Loss is being decided in Project 2010-11. When that project is finalized, the resolution will be copied here. 3. The SDT has clarified the issue of Non-Consequential Load Loss as shown above. Providing examples here of what is Non-Consequential Load Loss versus Consequential Load Loss would have no bearing. The words are what matter and the SDT feels that the clarification provided should alleviate your concern.				
Randi Woodward	Minnesota Power, Inc.	1	Negative	1. Requirement 2 - This requirement states that Stability analyses must be performed as part of the annual Planning Assessments. We would like to see the term "Stability analysis" more clearly defined as there are several different types of stability related analysis that can be performed for power systems including: transient stability, voltage stability and small signal stability. 2. Requirement 2.5 - This requirement states that "Stability analysis shall be assessed to address the impact of proposed generation additions or changes." We would like to see the term "proposed generation" more clearly defined. It is our opinion that only planned generation should be included in the Long-Term Transmission Planning Horizon assessment. In most generation queues there is a very large amount of proposed generation which would be impractical to study. These proposed generation additions are typically included in a System Impact Study which ultimately determines the transmission upgrades required for interconnection. 3. Requirement 2.1.5 - This requirement states that potential impact of the unavailability of major Transmission equipment be assessed annually for equipment (such as transformers) with long

Voter	Entity	Segment	Vote	Comment
				delivery lead times. We believe that it should be acceptable for a Transmission Owner to maintain a spare equipment plan that includes a reliability assessment. This plan would be reviewed and updated annually. We don't believe that a detailed assessment, as part of the Near-Term Transmission Planning Horizon assessment is warranted. 4. Requirement 4.1.2 - This requirement states that apparent impedance swings resulting from generator loss of synchronism shall not result in the tripping of any Transmission System elements. We believe that this requirement, as worded, precludes the use of transmission line out-of-step tripping relays to effectively island or isolate larger blocks of generation that have lost synchronism with the BES. 5. Requirement 4.3.3 - This requirement states that the assessments should simulate the impact of transient swings on Protection System operation. This would imply that detailed models of all transmission protection elements be included in the stability analysis. We believe that this is impractical due to the large number of relays that would need to be modeled. The standard should state that the use of a relay scanning model is an acceptable alternative to using detailed relay models. A scanning model typically monitors the apparent impedance for an established set of transmission lines and flags when the apparent impedances encroach on a classical 3-zone set of distance relay characteristics based on the monitored line impedance.

Response: 1. The SDT intended for the term Stability analysis to include system Stability and unit Stability analyses. These analyses could include all three aspects of Stability that you mentioned. It is left up to the judgment of the Planning Coordinator/Transmission Planner to decide which aspects of Stability may produce more severe results and therefore, must be analyzed. No change made.

2. Each Transmission Planner is governed by rules for when and how proposed generation units will be included in analyses. The current wording of the requirement is to allow for this degree of flexibility to remain part of the planning process. No change made.

3. The SDT has clarified the requirement based on your comments and those of others.

> **Requirement R2, part 2.1.5** - When an entity's spare equipment strategy could result in the unavailability of major Transmission equipment that has a lead time of one year or more (such as a transformer), the impact of this possible unavailability on System performance shall be studied. The studies shall be performed for the P0, P1, and P2 categories identified in Table 1 with the conditions that the System is expected to experience during the possible unavailability of the long lead time equipment.

4. Requirement R4, part 4.1.2 – The SDT agrees that you can't use an out-of-step relay and that the situation you described is a system Stability issue and is considered an application for an SPS which is allowed by the standard. No change made.

5. The SDT has revised Requirement R4, part 4.3.1, bullet #3 to address this concern.

> **Requirement R4, part 4.3.1 -** Simulate the removal of all elements that the Protection System and other automatic controls are expected to disconnect

Voter	Entity	Segment	Vote	Comment
for each Contingency without operator intervention. The analyses shall include the impact of subsequent: • Successful high speed reclosing and unsuccessful high speed reclosing into a Fault. • Tripping of generators where simulations show generator bus voltages or high side of the GSU voltages are less than known or assumed generator low voltage ride through capability. Include in the assessment any assumptions made. • Tripping of Transmission lines and transformers where transient swings cause Protection System operation based on generic or actual relay models.				
Robert Pellegrini	United Illuminating Co.	1	Negative	1. Section 2 of the standard requires annual assessment of the system regardless of whether system conditions are essentially unchanged from year to year. This creates unnecessary study work and must be changed in order for UI to support the standard. 2. In Table 1 - Steady State & Stability Performance Planning Events, Category P5 wording for the EHV contingency continues to call for no loss of load in the event of the loss of a single protection system. This requirement as currently worded goes well beyond the intent of the Standard Committee as stated in response to comments as follows: "A Protection System component failure (i.e., battery) that removes multiple Protection System schemes is beyond the P5 planning event". It is UI's opinion that similar language excluding battery system failures should be incorporated into this requirement. 3. UI is concerned that the standard is completely silent regarding base case assumptions and stress levels (loads and interface transfers). The standard should provide some direction or statement of objective regarding base case development and sensitivity testing requirements. For example, the standard should include some statement(s) such as, "base cases(and/or) sensitivity testing must include consideration of reasonable unplanned and planned generation outages". On the other hand UI does not suggest trying to precisely describe the number of generators that should be assumed out of service in this national standard.
Response: 1. The intent of the SDT wasn't that annual studies are required but that an annual Planning Assessment is required. However, the SDT agrees that the words may have been somewhat confusing. Therefore, the SDT has clarified the wording of Requirement R2 and part 2.1. **Requirement R2** - Each Transmission Planner and Planning Coordinator shall prepare an annual Planning Assessment of its portion of the BES. This Planning Assessment shall use current or qualified past studies, document assumptions, summarize documented results, and cover steady state analyses, short circuit analyses, and Stability analyses. **Requirement R2, part 2.1 -** The Near-Term Transmission Planning Horizon portion of the steady state analysis shall be assessed annually and be supported by current annual studies or qualified past studies as indicated in Requirement R2, Part 2.6, as follows:				

Voter	Entity	Segment	Vote	Comment
2. The SDT has changed the text for the P5 event as a result of your (and others) comments to address these concerns. **P5**. Delayed Fault Clearing due to the failure of a relay[13] protecting the Faulted element to operate as designed, for a Fault on one of the following: **13**. Applies to the following relay functions or types: pilot (#85), distance (#21), differential (#87), current (#50, 51, and 67), voltage (#27 & 59), directional (#32, & 67), and tripping (#86, & 94). 3. The SDT is trying to provide guidance without being overly prescriptive. Projected System conditions as well as the types of sensitivities that need to be studied are described. No change made.				
Dan R. Schoenecker	Midwest Reliability Organization	10	Negative	1. Section 2.5 proposed generation is too broad and overly inclusive. It should be replaced with planned or committed. 2. We have a concern that the timeframe of 60-month (5 year) for implementing Corrective Action Plans (CAP), is insufficient. We believe that the implementation timeframe must be extended to seven (7) years. We are aware of Requirement 2.7.3, which covers situations that arise beyond the control of the Transmission Planner (TP) or Planning Coordinator (PC), but believes that the proposed language is ambiguous and maybe problematic for compliance. 3. We believe the spare equipment language doesn't belong in the standard. Whether a Transmission Owner has spare equipment is a risk for that Transmission Owner to evaluate and then take responsibility for the decision. For the Planning Coordinator, inclusion of the spare equipment language would mean that for each Transmission Owner's piece of equipment that cannot be replaced within one year 3 more base cases would need to be run for each season and load level, which may lead to an excessive amount of base case development with little resulting benefit to reliability.
Response: 1. Each Transmission Planner is governed by rules for when and how proposed generation units will be included in analyses. The current wording of the requirement is to allow for this degree of flexibility to remain part of the planning process. No change made. 2. The SDT has changed the majority of the implementation timeframe from 60 to 84 months as per your (and others') suggestion. Since problems may not be seen until after the assessments are completed and there is a 24 month implementation for assessments, the total time for items P2-1, P2-2 and P2-3 (above 300 kV), P3-1 through P3-5, P4-1 through P4-5 (above 300 kV), and P5 (above 300 KV) has been increased to 84 months. P1-2 and P1-3 were not increased since they are already being covered by the implementation plan for Project 2010-11: TPL Table 1 Order. Requirement R2, part 2.7.3 - If an entity can demonstrate that they have made a best faith effort to implement the planned solution then there should not be a concern. The wording of the requirement allows an entity this flexibility. 3. The SDT has clarified the requirement based on your comments and those of others. **Requirement R2, part 2.1.5** - When an entity's spare equipment strategy could result in the unavailability of major Transmission equipment that has a				

Voter	Entity	Segment	Vote	Comment
lead time of one year or more (such as a transformer), the impact of this possible unavailability on System performance shall be studied. The studies shall be performed for the P0, P1, and P2 categories identified in Table 1 with the conditions that the System is expected to experience during the possible unavailability of the long lead time equipment.				
Roger C Zaklukiewicz	Roger C Zaklukiewicz	8	Negative	1. There does not appear to be a resolution to the issue of BES definition 2. A concern that too many years are required to be studied annually. Are this many studies required especially if there are no substantial transmission infrastructure additions or modifications and virtually no generation resource additions or retirements. 3. At state siting hearings, the Standard has to address the appropriate use of 90/10 or 50/50 peak load forecasts, the requirement to maintain established intra- and inter-transfer limit levels under stressed conditions. Also, more specific requirements regarding appropriate generation dispatches for area studies and large area or regional load flow and voltage studies. 4. Re-think the need or justification for modeling loads dynamically. Simulations of actual system disturbances have represented past actual system responses with a high degree of accuracy.

Response: 1. The SDT does not believe that it needs to define BES. In their March 18th orders, FERC suggested a continent-wide definition of BES. No change made.

2. The intent of the SDT wasn't that annual studies are required but that an annual Planning Assessment is required. However, the SDT agrees that the words may have been somewhat confusing. Therefore, the SDT has clarified the wording of Requirement R2 and part 2.1.

> **Requirement R2** - Each Transmission Planner and Planning Coordinator shall prepare an annual Planning Assessment of its portion of the BES. This Planning Assessment shall use current or qualified past studies, document assumptions, summarize documented results, and cover steady state analyses, short circuit analyses, and Stability analyses.
>
> **Requirement R2, part 2.1 -** The Near-Term Transmission Planning Horizon portion of the steady state analysis shall be assessed annually and be supported by current annual studies or qualified past studies as indicated in Requirement R2, part 2.6, as follows:

3. The SDT is trying to provide guidance without being overly prescriptive. Projected System conditions as well as the types of sensitivities that need to be studied are described. No change made.

4. Dynamic load modeling is important for correct dynamic simulations. Industry has acknowledged the need for accurate Load modeling and the SDT has codified this need in the proposed standard. No change made.

Voter	Entity	Segment	Vote	Comment
James Tucker	Deseret Power	1	Negative	1. While draft 5 of this proposed standard is a substantial improvement over the previous drafts and the existing TPL standards, there are still areas where additional clarity is needed. We believe that a workshop, after FERC approval of the standard, where issues can be discussed and clarified will go a long way towards smooth implementation of this proposed standard. Some of the areas that require additional clarification are: o Application of consequential and non-consequential load and the EHV and HV voltage levels o Discussion on what is needed to study the various Planning Events. One example is P5, which involves "failure of a single protection system." 2. We recommend the following slight modification to the specified subrequirements of R2 to include clarifying references to R3 and R4 as follows: o 2.1. The Near-Term Transmission Planning Horizon portion of the steady state analysis shall be assessed annually and be supported by the following annual current studies in accordance with R3, supplemented with qualified past studies as indicated in Requirement R2, part 2.6: o 2.2. The Long-Term Transmission Planning Horizon portion of the steady state analysis shall be assessed annually and be supported by the following annual current study in accordance with R3, supplemented with qualified past studies as indicated in Requirement R2, part 2.6: o 2.4. The Near-Term Transmission Planning Horizon portion of the Stability analysis shall be assessed annually and be supported by current or past studies as qualified in Requirement R2, part 2.6. The following studies are required in accordance with R4: o 2.5. The Long-Term Transmission Planning Horizon portion of the Stability analysis shall be assessed to address the impact of proposed generation additions or changes in that timeframe and be supported in accordance with R4 by current or past studies as qualified in Requirement R2, part 2.6 3. Table 1-P5 Multiple Contingencies (Fault plus Protection System failure to operate) Normal System. There is a significant change in the system normal performance required for EHV systems from the current performance required in TPL-003 (Category C). This TPL-001-1 version does not allow any Non-Consequential load loss (table 1) or firm Demand (note 9) for EHV systems in the event of protection system failure and delayed clearing. This performance requirement would thus preclude use of existing protection systems that rely on remote clearing of interconnected EHV lines or stations if they provide local load service. As written the standard essentially now requires Category B performance rather than Category C performance for multiple contingencies. It is Deseret's opinion

Voter	Entity	Segment	Vote	Comment
				that loss of Non-Consequential load or firm Demand should be allowed for the rare event involving multiple contingencies stated in P5 as long at the load or firm Demand loss is contained and controlled in the local load service area and the event does not impact other interconnected utilities or their loads. 4) Table 1 - Steady State & Stability Performance Planning Events Category P5 (Multiple Contingency (Fault plus Protection System failure to operate). Category P5 requires responsible entities to study the Event titled Failure of a single Protection System that results in Delayed Fault Clearing on one of the following: Generator, Transmission Circuit, Transformer, Shunt Device, or Bus Section. It appears that this requirement is an indication that multiple protection system failure is not allowed under the proposed TPL-001-1. This appears to be a requirement for redundant protection systems for all possible events on all voltage levels of the transmission system. It also appears that this requirement is attempting to define what comprises an adequate protection system. As the draft standard is presently written it appears that multiple protection system failures are not included in this part or any part of the draft TPL-001-1 standard. As written, it is Deseret's view that any multiple protection system failure would be categorized as an Extreme Event under the draft TPL-001-1 standard. Deseret contends that the many and varied issues associated with designing appropriate protection systems should be done in the context of the development of a protection system standard and not in the context of TPL-001-1. In fact, there is currently a proposed standard going through the NERC standards development process which goal is exactly that. If the standards drafting team intends to require responsible entities to have 100% redundant protection systems on all of its BES facilities, Deseret contends that this fact should be stated up front in the standard so that all interested parties may become aware of this requirement and provide informed comment. Deseret believes that it is appropriate to wait until the current protection system redundancy standard under development proceeds through the SAR process and approval system, given that this in an important generic issue that affects the entire industry. Notwithstanding the inappropriateness of raising the protection system issue in the context of a planning standard, Deseret believes that any planning requirement that includes the failure of a single protection system that results in delayed fault clearing must have a very clear definition of the terms "single protection system" and "delayed fault clearing" in or for entities to determine what compliance with the standard requires. The draft TPL-001-1 standard does not have clear definitions of these terms, leaving room for considerable latitude for interpretation by various responsible entities, auditors, and compliance enforcement authorities. Clear, specific, and technically defensible language is needed for these terms.
Response: 1. The SDT has held several webinars on this project and may well hold another before the project is complete. In addition, the SDT has performed numerous outreach activities to regional entities, sub-committees, etc., on the details of the standard. The project has been presented several times at the NERC Standards Workshops. Once the standard is approved by FERC, the SDT ceases to exist. Therefore, any activities subsequent to that approval would be under				

Voter	Entity	Segment	Vote	Comment
general NERC jurisdiction. The SDT suggests that you broach this idea with NERC staff. The SDT feels that the linkage between requirements is properly cited in Requirement R3 going back to Requirement R2 and the additional language suggested is not necessary and does not add clarity. No change made. Part 2.4 is already part of Requirement R2 so no additional reference is required. No change made. The SDT feels that the linkage between requirements is properly cited in Requirement R4 going back to Requirement R2 and the additional language suggested is not necessary and does not add clarity. No change made. The SDT agrees that the bar has been raised for the EHV system in that no planned Load shedding (Non-Consequential Load Loss) is permitted for the P5 condition beyond Protection System clearing that responds to the studied P5 event. All Load removed by the Protection System isolating the Fault is Consequential Load Loss for the event. The SAR for this standard recognized FERC orders which indicated a need to "raise the bar" for the industry. The SDT agrees with this premise and is attempting to do this in a reasonable fashion. No change made. The SDT has changed the text for the P5 event as a result of your (and others) comments to address these concerns. **P5**. Delayed Fault Clearing due to the failure of a relay[13] protecting the Faulted element to operate as designed, for a Fault on one of the following: **13**. Applies to the following relay functions or types: pilot (#85), distance (#21), differential (#87), current (#50, 51, and 67), voltage (#27 & 59), directional (#32, & 67), and tripping (#86, & 94).				
Bernard Pelletier	Hydro-Quebec TransEnergie	1	Negative	The reason for the No vote cast by HQT is that HQT still believe that the EHV and HV threshold defined as a fixed voltage (300 kV) on footnote 3 of Table 1 is too prescriptive, and unnecessary, for NPCC Members using a performance base methodology to determine elements of the BPS. HQT believes that if the 300 kV threshold was introduced as a necessity to reduce the BES portion of the system subject to the Standard in some region with a 100 kV bright line definition of BES so that entities in these regions do not incur prohibitive spending to respect this Standard, there should also be a way to accommodate NPCC Member's use of a performance methodology to determine on which elements to apply the Standards without having entities guessing the way Compliance will be implemented for this Standard in regard to specific voltage threshold. For HQT's system, EHV should correspond to 735 kV since more than half of our 315 kV substations directly supply load. The SDT gave this answer as the rational for choosing the 300 kV threshold when they replied to HQT concerns about the EHV voltage definition as 300 kV and over, in the first posting of the Standard : Â« Systems operated above 300 kV generally do not directly serve end-use Load customers but rather act as the medium for moving large amounts of power from production to various Load centers where the energy is then delivered by other Transmission or sub-Transmission Systems to end use customers... Obviously the intent of the SDT when choosing a 300 kV threshold do not correspond to the reality of HQTs system characteristic. HQT agrees with the intent of the SDT to raise the bar in that important Standard but disagree with having to systematically apply the

Voter	Entity	Segment	Vote	Comment
				Standard to all 300 kV and above system. One way to clarify the Standard would be to mentioned in the footnote 3 that :`` In the region where there is a performance base methodology to determine BES element, these BES elements would be subject to the Standard; in other region, the 300 kV threshold would apply.
Response: This standard applies to the BES. If there are areas of your system that are not BES, then the standard doesn't apply to them. This would be true even if those elements are above 300 kV. No change made.				
Donald Gilbert	JEA	5	Negative	Although this proposed standard places additional burden of proof upon JEA's Transmission Planning process, JEA finds the overall direction of the standard requirements prudent. JEA appreciates the allowance of Non-Consequential Load Loss afforded in provision 2.7.3 where documented circumstances outside the control of the TP or PC suffice; however, JEA is concerned that there are some limited prudent cases where consumers, local jurisdictions, and state jurisdictions may find it prudent to plan on some Non-Consequential Load Loss in order to defer building transmission infrastructure (just for the purpose to serve speculative load growth) for the overall benefit of the consumer. Therefore, concerning the prohibition of Non-Consequential Load Loss, JEA proposes the addition to the standard that allows the use of Non-Consequential Load Loss for local area load for planning events where it is not presently allowed. In Â¶1794 of Order 693, FERC stated "Regarding the comments of Entergy and Northern Indiana that the Reliability Standard should allow entities to plan for the loss of firm service for a single contingency, the Commission finds that their comments may be considered through the Reliability Standards development process. However, we strongly discourage an approach that reflects the lowest common denominator." Clearly, FERC did not direct NERC to eliminate "all" use of Non-Consequential Load Loss for single contingencies, but rather stated that its use should be "considered through the Reliability Standards development process". Therefore, the SDT should define "local area" where load loss is allowed and either set limits on how much load can be lost or a reporting requirement to ensure transparency concerning this planning practice. I propose that the standard should define "local area" as the load that is located on a single loop between two BES sources and limit the Non-Consequential Load Loss to the amount of Consequential Load Loss that would occur if the networked loop of load serving stations were sectionalized such that the loop operated as two radial circuits. The Standard could further require the TP or PC to document the results of both simulations with and without the sectionalization of the loop comparing the levels of Non-Consequential Load Loss to the level of Consequential load loss." This approach would clearly not be "a least common denominator approach", but rather a practical manner to allow the balance between transmission expansion costs and the limited risk to the local load within an area.

Voter	Entity	Segment	Vote	Comment
Response: The SDT has added footnote #12 to P1, P2-1, and P3 to address your and others concerns in this area. 12. Note: Non-Consequential Load Loss is being decided in Project 2010-11. When that project is finalized, the resolution will be copied here.				
Kirit S. Shah	Ameren Services	1	Negative	Ameren appreciates the diligence and dedication of the Standard Drafting Team and commends the group for their hard work to bring the proposed standard TPL-001-1 to this level. We have seen considerable improvements to the proposed standard from earlier versions and note the positive changes to many of the requirements. We also recognize that the overall language of the standard has improved to enhance its readability and the language and format of the Tables now provides a clear understanding of acceptable System performance for the various Planning Events. However, inasmuch as the proposed Standard has improved, we cannot support the approval of this document at this time. 1. We disagree with the proposed definition of Year One. We believe that Year One should be the planning window that begins 12-18 months from the start of the current calendar year, and not from the end of the calendar year. We believe that following this modification to the definition would require minimal adjustments to the ERAG MMWG model building process, which we all use as the basis for our planning models. Following the proposed definition would require additional models to be built by the MMWG or lead to holes in the model building effort for both the operating and planning horizons. 2. We do not believe that 60 months is a reasonable time period to build transmission facilities to meet the new performance requirements. Building a transmission line in Illinois is estimated to take 7 years (84 months) from the time the project is authorized. Though requirement R2.7.3 is included to address situations beyond the control of the Transmission Planner, it leaves to the interpretation of the auditor whether the appropriate actions are being taken to resolve the issue that would continue to allow dropping of Non-Consequential Load or curtailment of Firm Transmission Service. 3. We have concerns for including induction motor representations in the load models without any study or bench-marking activities to meet the requirements of R2.4.1. Although the proposed standard offers that an aggregate System Load model which represents the overall dynamic behavior of the Load is acceptable (to relieve the burden of trying to develop specific induction motor load representation at each load bus), we believe that the modeled System response will be considerably different compared to the actual System response in some parts of the System which will open up the industry to additional scrutiny, such as the Compliance Inquiry (CIQ) and/or Compliance Violation Investigation (CVI). 4. We do not agree that low voltage ride-through is a steady-state issue as included in requirement

Voter	Entity	Segment	Vote	Comment
				R3.3.2. We believe that low voltage ride-through is a dynamic modeling issue as correctly included in requirement R4.3.2. 5. We have concerns that the dynamics models cannot support the additional data requirements to include actual impedance relay models for all transmission facilities to meet the requirements of R4.1.2 and R4.3.3. In an attempt to relieve our concerns, the SERC presenters indicated that generic PSS/E impedance relay models could be included in the dynamics models. However, we also have concerns for using generic PSS/E impedance relay models as the actual impedance relays may be set differently than the generic PSS/E relay models which will open up the industry to additional scrutiny, such as the Compliance Inquiry (CIQ) and/or Compliance Violation Investigation (CVI).

Response: 1. Based on your comment and those of others, the SDT has revised the definition of Year One.

> **Year One:** The first twelve month period that a Planning Coordinator or a Transmission Planner is responsible for assessing. For the Planning Assessment started in a given calendar year, Year One must include the forecasted peak Load period for one of the following two calendar years. For example, if a Planning Assessment was started in 2011, then Year One must include the forecasted peak Load period for either 2012 or 2013.

2. The SDT has changed the majority of the implementation timeframe from 60 to 84 months as per your (and others') suggestion. Since problems may not be seen until after the assessments are completed and there is a 24 month implementation for assessments, the total time for items P2-1, P2-2 and P2-3 (above 300 kV), P3-1 through P3-5, P4-1 through P4-5 (above 300 kV), and P5 (above 300 KV) has been increased to 84 months. P1-2 and P1-3 were not increased since they are already being covered by the implementation plan for Project 2010-11: TPL Table 1 Order. Requirement R2, part 2.7.3 - If an entity can demonstrate that they have made a best faith effort to implement the planned solution then there should not be a concern. The wording of the requirement allows an entity this flexibility.

3. The SDT assumes that you are referring to the induction motor Load modeling required for Stability studies. The standard permits an aggregate model assumption that can be applied for a given system that is not substation specific. The SDT believes that 24 months is an adequate time period to accomplish this task. Dynamic load modeling is important for correct dynamic simulations. Industry has acknowledged the need for accurate Load modeling and the SDT has codified this need in the proposed standard. No change made.

4. The SDT voltage ride through is not confined to the dynamic period. There are protection requirements that could result in generator tripping and that must be considered in the steady-state analysis. The SDT has clarified the wording of the requirement.

> **Requirement R3, part 3.3.1 -** Simulate the removal of all elements that the Protection System and other automatic controls are expected to disconnect for each Contingency without operator intervention. The analyses shall include the impact of subsequent:
>
> - Tripping of generators where simulations show generator bus voltages or high side of the generation step up (GSU) voltages are less than known or assumed minimum generator steady state or ride through voltage limitations. Include in the assessment any assumptions made.
> - Tripping of Transmission elements where relay loadability limits are exceeded.

Voter	Entity	Segment	Vote	Comment
5. 4.3.3 - The SDT has revised Requirement R4, part 4.3.1, bullet #3 to address this concern. **Requirement R4, part 4.3.1 -** Simulate the removal of all elements that the Protection System and other automatic controls are expected to disconnect for each Contingency without operator intervention. The analyses shall include the impact of subsequent: • Successful high speed reclosing and unsuccessful high speed reclosing into a Fault. • Tripping of generators where simulations show generator bus voltages or high side of the GSU voltages are less than known or assumed generator low voltage ride through capability. Include in the assessment any assumptions made. • Tripping of Transmission lines and transformers where transient swings cause Protection System operation based on generic or actual relay models.				
Robert D Smith	Arizona Public Service Co.	1	Negative	APS proposes that the standard allows the use of Non-Consequential Load Loss for local area load for P1 events. The current requirements may pose significant burden without appropriate benefits. As currently written APS does not believe that 60 months is a reasonable time period to build transmission facilities to meet the new performance requirements. Building a transmission line can often take more than 5 years to complete from the time the project is authorized. Though requirement R2.7.3 is included to address situations beyond the control of the Transmission Planner, it leaves to the interpretation of the audit whether the appropriate actions are being taken to resolve the issue. APS proposes that the requirement be changed to 84 months.
Response: The SDT has added footnote #12 to P1, P2-1, and P3 to address your and others concerns in this area. 12. Note: Non-Consequential Load Loss is being decided in Project 2010-11. When that project is finalized, the resolution will be copied here. The SDT has changed the majority of the implementation timeframe from 60 to 84 months as per your (and others') suggestion. Since problems may not be seen until after the assessments are completed and there is a 24 month implementation for assessments, the total time for items P2-1, P2-2 and P2-3 (above 300 kV), P3-1 through P3-5, P4-1 through P4-5 (above 300 kV), and P5 (above 300 KV) has been increased to 84 months. P1-2 and P1-3 were not increased since they are already being covered by the implementation plan for Project 2010-11: TPL Table 1 Order. Requirement R2, part 2.7.3 - If an entity can demonstrate that they have made a best faith effort to implement the planned solution then there should not be a concern. The wording of the requirement allows an entity this flexibility.				
John Tolo	Tucson Electric Power Co.	1	Negative	As currently written it is believed that 60 months is not a reasonable time period to build transmission facilities to meet the new performance requirements. Regional and local planning and review process, permitting, siting, legal challenges, routing, and system path rating process can often take more than 5 years to complete from the time the project is authorized. Category P2 requires responsible entities to study the opening of a line section without a fault. The

Voter	Entity	Segment	Vote	Comment
				standard as written states that the opening of this line section will not result in consequential load loss and no voltage or thermal violations will occur on the BES. This requirement should not be applicable to all HV facilities. From a reliability perspective, a more effective and efficient method would be a bifurcated functional requirement rather than a voltage requirement. This TPL-001-1 version does not allow any Non-Consequential load loss (table 1) or firm Demand (note 9) for EHV systems in the event of protection system failure and delayed clearing. This performance requirement would thus preclude use of existing protection systems that rely on remote clearing of interconnected EHV lines or stations if they provide local load service. Category P5 requires responsible entities to study the Event titled Failure of a single Protection System that results in Delayed Fault Clearing on one of the following: Generator, Transmission Circuit, Transformer, Shunt Device, or Bus Section. It appears that this requirement is an indication that multiple protection system failure is not allowed under the proposed TPL-001-1. This appears to be a requirement for redundant protection systems for all possible events on all voltage levels of the transmission system. It also appears that this requirement is attempting to define what comprises an adequate protection system. Many and varied issues associated with designing appropriate protection systems should be done in the context of the development of a protection system standard and not in the context of TPL-001-1. TPL-001-1 has added requirement 2.1.5 discussing spare equipment and lead times and inclusion in the "Planning Assessment". The standard in this section is not performance based requirement but an activity based requirement as currently stated under R2 2.1.5. The standard should be revised and 2.1.5 removed as it does not directly improve the systems performance requirements nor compliance stated in Table 1.

Response: The SDT has changed the majority of the implementation timeframe from 60 to 84 months as per your (and others') suggestion. Since problems may not be seen until after the assessments are completed and there is a 24 month implementation for assessments, the total time for items P2-1, P2-2 and P2-3 (above 300 kV), P3-1 through P3-5, P4-1 through P4-5 (above 300 kV), and P5 (above 300 KV) has been increased to 84 months. P1-2 and P1-3 were not increased since they are already being covered by the implementation plan for Project 2010-11: TPL Table 1 Order.

The SDT believes that the addition of footnote 12 (when it is finalized) will address your concern.

The SDT has added footnote #12 to P1, P2-1, and P3 to address your and others concerns in this area.

12. Note: Non-Consequential Load Loss is being decided in Project 2010-11. When that project is finalized, the resolution will be copied here.

The SDT has clarified the requirement based on your comments and those of others.

Requirement R2, part 2.1.5 - When an entity's spare equipment strategy could result in the unavailability of major Transmission equipment that has a lead time of one year or more (such as a transformer), the impact of this possible unavailability on System performance shall be studied. The studies shall

Voter	Entity	Segment	Vote	Comment
be performed for the P0, P1, and P2 categories identified in Table 1 with the conditions that the System is expected to experience during the possible unavailability of the long lead time equipment.				
Brandy A Dunn	Western Area Power Administration	1	Negative	As drafted the standard TPL-001-1 has added requirement 2.1.5 discussing spare equipment strategy and lead times and inclusion in the “Planning Assessment”. The standard in this section is not a performance based requirement but an activity based requirement as currently stated under R2 2.1.5. We recommend that the standard be revised and 2.1.5 removed as it does not directly improve the systems performance requirements nor compliance stated in Table 1.
Joseph S. Stonecipher	Beaches Energy Services	1	Negative	We believe that requirement 2.1.5 on spare equipment strategy is discriminatory for smaller entities. For many smaller entities, having a spare transformer is not a practical solution and makes far less sense and has significantly more customer rate impacts than for a larger utility. Yes, it may be possible to arrange an agreement with a neighboring entity for use of their spare, but that assumes that the neighboring entity's transformer specifications are similar enough for use as a spare, which may not be the case. Order 693 states at Paragraph 1725: "... the Commission directs the ERO to modify the planning Reliability Standards to require the assessment of planned outages consistent with the entity’s spare equipment strategy". The standard oversteps this direction by not including a consideration of planned outages versus forced outages in requirement 2.1.5, in other words, if an entity has no plans for a long term outage of a transformer, it should be excluded from the assessment of 2.1.5. Such a condition would allow an entity to assess things like gas in oil analysis to predict when a long term outage might be planned, and the flexibility between start and end dates of that planned outage.
Bruce Merrill	Lincoln Electric System	3	Negative	Requirement 2.1.5 should only address known planned outages of major Transmission equipment that has a lead time of one year or more. As currently drafted requirement 2.1.5 does not specify whether it includes both forced outages and planned outages. Requirement 2.1.5 also does not specify that system adjustments are allowed since adjustments are not allowed in categories P0, P1, and P2. Without system adjustments the requirement 2.1.5 would always produce more severe System impacts than the categories P0, P1, and P2 in Table 1. Allowing System adjustments would make requirement 2.1.5 (P1) match category P6, yet requirement 2.1.5 (P2) would still result in more
Dennis Florom	Lincoln Electric System	5	Negative	

Voter	Entity	Segment	Vote	Comment
Eric Ruskamp	Lincoln Electric System	6	Negative	severe System impacts than currently contemplated in the TPL-001-1 Standard. It appears that requirement 2.1.5 would greatly increase the study work by requiring a new base case for each unique Transmission equipment and repeating the associated contingency analysis. Would Correction Action Plans be required for requirement 2.1.5, whereas, they do not need to be developed solely to meet the performance requirements for a single sensitivity?
Response: The SDT has clarified the requirement based on your comments and those of others. **Requirement R2, part 2.1.5** - When an entity's spare equipment strategy could result in the unavailability of major Transmission equipment that has a lead time of one year or more (such as a transformer), the impact of this possible unavailability on System performance shall be studied. The studies shall be performed for the P0, P1, and P2 categories identified in Table 1 with the conditions that the System is expected to experience during the possible unavailability of the long lead time equipment.				
Elizabeth Howell	ITC Transmission	1	Negative	As written, the balloted standard is a significant advancement over the past planning standards. It raises the bar for the EHV system (>300kV) and is a significant step forward toward the desired improvement in the North American electric grid. The detailed requirements along with the Table 1 performance expectations for Planning Events should result in Corrective Action Plans that improve the electric grid in measurable ways. The additional specifications to insure that load will not be lost, intentionally or otherwise, during relatively routine system outages reinforces the value of reliability standards. While ITC recognizes the significant improvement in the Planning Standard and applauds the Standard Drafting Team (SDT) for constructing this new document, we believe minor changes are still needed to provide clarity to the standard to avoid possible miss-interpretation of the intent of the SDT during compliance audits and the potential for unnecessary duplication of study effort in areas if differences between the studies conditions are relatively small. Minimally, ITC feels additional guidelines need to be supplied for some of the decisions left to engineering judgment, such as in R2.5 where it is clear as to the need for studies of "new" generation, no "minimum" size is indicated. Additional guidelines should be added to the standard and the Reliability Standard Audit Worksheet (RSAW) should be completed prior to balloting the standard. ITC is concerned about the mandatory need for the three distinct studies as required in R2.1 and R2.2 if the differences between the prevalent conditions are projected to be small. For example, if a systems load changes are insignificant between years 1 or 2 and year 5, and other conditions changes such as generation additions, power flow patterns and other are small for the system under study. The same issue may exist between year 5 and years 6 through 10 Under such conditions these studies may not be prudent and necessary to thoroughly evaluate the systems performance. ITC

Voter	Entity	Segment	Vote	Comment
				agrees with the SDT that the three studies make sense and are prudent when a system's conditions are changing. A review of how this section in the standard might be warranted. While a spare equipment strategy is a good idea, R2.1.5, the requirement should be clear to avoid compliance violations for the implications of a major piece of equipment failure with or without spare equipment. Until this is clearer for both Planners and auditors or an RSAW is available, there is a greater likelihood for compliance issues. ITC also has concerns regarding requirements R3.3.2 and R4.3.2 regarding Low Voltage Ride Through (LVRT). Both require tripping of generators when "voltages are less than known or assumed generator low voltage ride through capability". This means the planner either knows the limit or assumes one. For ITC, we only trip for "known" limits, such as those for wind generators. Our policy is to not "assume" LVRT. A concern is if a LVRT is not assumed for all plants will a transmission company be found not compliant. This should be made clearer either in the standard or in an RSAW. For these reasons, ITC is voting no at this time. ITC would like to see the SDT add clarity to the sections identified above or develop a Reliability Standard Audit Worksheet to accompany the standard being ballotted. Please feel free to contact us if you have questions regarding our comments.

Response: The SDT has clarified the requirement wording to address your concern.

> **Requirement R2, part 2.5 -** The Long-Term Transmission Planning Horizon portion of the Stability analysis shall be assessed to address the impact of proposed material generation additions or changes in that timeframe and be supported by current or past studies as qualified in Requirement R2, part2.6. The technical rationale for determining material changes shall be documented.

The intent of the SDT wasn't that annual studies are required but that an annual Planning Assessment is required. However, the SDT agrees that the words may have been somewhat confusing. Therefore, the SDT has clarified the wording of Requirement R2 and part 2.1.

> **Requirement R2** - Each Transmission Planner and Planning Coordinator shall prepare an annual Planning Assessment of its portion of the BES. This Planning Assessment shall use current or qualified past studies, document assumptions, summarize documented results, and cover steady state analyses, short circuit analyses, and Stability analyses.

> **Requirement R2, part 2.1 -** The Near-Term Transmission Planning Horizon portion of the steady state analysis shall be assessed annually and be supported by current annual studies or qualified past studies as indicated in Requirement R2, part 2.6, as follows:

The SDT has clarified the requirement based on your comments and those of others.

> **Requirement R2, part 2.1.5** - When an entity's spare equipment strategy could result in the unavailability of major Transmission equipment that has a lead time of one year or more (such as a transformer), the impact of this possible unavailability on System performance shall be studied. The studies shall be performed for the P0, P1, and P2 categories identified in Table 1 with the conditions that the System is expected to experience during the possible

Voter	Entity	Segment	Vote	Comment
unavailability of the long lead time equipment The SDT voltage ride through is not confined to the dynamic period. There are protection requirements that could result in generator tripping and that must be considered in the steady-state analysis. The SDT has clarified the wording of the requirement. **Requirement R3, part 3.3.1 -** Simulate the removal of all elements that the Protection System and other automatic controls are expected to disconnect for each Contingency without operator intervention. The analyses shall include the impact of subsequent: • Tripping of generators where simulations show generator bus voltages or high side of the Generation Step Up (GSU) voltages are less than known or assumed minimum generator steady state or ride through voltage limitations. Include in the assessment any assumptions made. • Tripping of Transmission elements where relay loadability limits are exceeded. The development of an RSAW is more properly the purview of the Compliance Dept. No change made.				
Jason Shaver	American Transmission Company, LLC	1	Negative	ATC believes that the Standard is moving in the right direction, but has identified the following concern which is preventing us from voting "affirmative". Our concern is that the timeframe of 60-month (5 year) for implementing Corrective Action Plans (CAP), is insufficient. We believe that the implementation timeframe must be extended to seven (7) years. ATC is aware of Requirement 2.7.3, which covers situations that arise beyond the control of the Transmission Planner (TP) or Planning Coordinator (PC), but believes that the proposed language is ambiguous. Clarity needed (R 2.7.3): 1) An auditor could identify many things that could reasonably be within the "control" of a TP or PC but are not covered by NERC standards or a TP / PC's process, procedures or criteria. This wide area of discretion leaves entities open to possible non-compliance violation based on an auditor's perception of what they believe should be in the TP / PC's control. 2) In addition, we believe that the concept of "control" must be limited to an entities compliance obligation as a Transmission Planner and/or Planning Coordinator. In other words entities must be allowed the ability identify situation which fall under its "control" as a Transmission Owner, Transmission Operator, Generator Owner or Generator Operator etc. but is beyond the responsibility of its Transmission Planner or Planning Coordinator functions. . Suggested footnote: A TP or PC is in compliance with this requirement if the situation being documented is not covered in its internal processes, procedures or criteria required for NERC/Regional compliance obligations assigned to the TP or PC functions. Transmission Planners and Planning Coordinators are responsible for the identification of a CAP but it is the Transmission Owner that is ultimately responsible for implementing the CAP.
Gregory J Le Grave	Wisconsin Public Service Corp.	3	Negative	

Voter	Entity	Segment	Vote	Comment
				Additional areas of concern: ATC requested that the SDT re-examine the following concerns which we have been previously identified: 1. R1.1.2 "known outages of at least six months in duration" - The present wording in inconsistent between R1.1.2 and R2.1.3. We suggest that this requirement be removed because the “known outage(s)” are only to be included in the models when P1 events are simulated, as specified in R2.1.3. We suggest that the intent of this requirement can be more simply handled by stating in R2.1.3 that “known outages be simulated along with P1 events for the System peak or Off-Peak conditions when the outages are scheduled to occur”. 2. R2.1.4 & R2.4.3 "range of credible conditions that demonstrate a measurable change in performance" - We suggest that the terms "credible" and "measurable" be define or use words that more definitively describe the requirement. 3. Table 1 - Requirements are “buried” in the Performance Table, rather than being included in the Requirement Section - a. Add R2.7.5 - We believe that all requirements should appear in the Requirements section and not be "buried" in the performance tables. We propose the addition of the following bullet item to R2.7.5. It could read, “Planned System adjustments such as Transmission configuration changes and redispatch of generation are allowed if such adjustments are executable within the time duration of the Facility Ratings.” Note “e” in the Planning Events, Steady State & Stability section is stated in the form of a Requirement (e.g. use the verb “shall”), but all requirements should be included in the Requirements section and not introduced (and basically hidden) in the performance notes of Table 1. [After bullet item #7 is added, Note “e” under “Steady State & Stability section of Table 1 should refer to R2.7.5] b. Add R3.3.5 - We believe that all requirements should appear in the Requirements section and not be "buried" in the performance tables. We suggest the addition of R3.3.5. The text of R3.3.5 should read, “Applicable System Operating Limits for the planning horizon shall not be exceeded.” Presently, Note “a” and “b” under “Steady State Only” at the beginning of Table 1 are stated in the form of a Requirement (e.g. uses the verb, “shall”) and all Requirements should be explicitly stated under Requirements and not be introduced (and basically hidden) in the performance notes of Table 1. [After R3.3.5 is added, Note “a” should be revised and refer to R3.3.5.] c. Add R3.6 - We believe that all requirements should appear in the Requirements section and not be "buried" in the performance tables. We suggest the addition of R3.3.6. The text of R3.3.6 should read, “The response of voltage sensitive Load including Load that is disconnected from the System by end-user equipment associated with an event shall not be used to steady state voltage requirements.” because Note “d” under “Steady State Only” at the beginning of Table 1 is stated in the form of a Requirement (e.g. uses the verb, “shall”) and all Requirements should be explicitly

Voter	Entity	Segment	Vote	Comment
				stated under Requirements and not be introduced (and basically hidden) in the performance notes of Table 1. [After R3.3.6 is added, Note "d" should be revised to refer to R3.3.6.] 4. R2.7.2 - "include actions to resolve performance deficiencies identified in multiple sensitivity studies" - We do not think that mitigation plans should be required for deficiencies found in multiple sensitivity studies because the conditions in some sensitivity studies are more extreme and less likely than base case conditions. Some of the sensitivity study conditions are not credible or plausible enough to warrant the implementation of mitigation measures. What is the interpretation of multiple studies - more than one or a majority of the number that were studied? 5. R3.5 - We interpret that R3.5 requires the TP and PC to conduct an evaluation of possible actions to reduce the likelihood or impact of extreme events, which produce the more severe impacts, if cascading outages may occur. Does the drafting team intend for the TP and PC to fulfill this requirement for at least one event in each of the five categories (i.e. 3 steady state and 2 stability) or in each of the 21 categories/sub-categories (i.e. 14 steady state and 7 stability). Also, if the resulting cascading outages do not result in any overloads, under-voltages, voltage collapse, or loss of generator synchronization, then should the evaluation of possible actions to reduce likelihood or impact still be required?

Response: The SDT has changed the majority of the implementation timeframe from 60 to 84 months as per your (and others') suggestion. Since problems may not be seen until after the assessments are completed and there is a 24 month implementation for assessments, the total time for items P2-1, P2-2 and P2-3 (above 300 kV), P3-1 through P3-5, P4-1 through P4-5 (above 300 kV), and P5 (above 300 KV) has been increased to 84 months. P1-2 and P1-3 were not increased since they are already being covered by the implementation plan for Project 2010-11: TPL Table 1 Order. Requirement R2, part 2.7.3 - If an entity can demonstrate that they have made a best faith effort to implement the planned solution then there should not be a concern. The wording of the requirement allows an entity this flexibility.

The SDT believes the existing wording is clear and that the suggested wording is equivalent without providing any additional clarity. No change made.

Requirement R2, part 2.1.4 is part of Requirement R2 which mandates that an entity must document all assumptions utilized in the Planning Assessment. No change made.

The suggested change would move header note 'e to new Requirement R2, part 2.7.5 on the premise that it is a buried requirement. The phrasing of header note 'e' does not indicate that it is a mandatory requirement. It is a statement of allowed actions consistent with other notes. No change made.

The SDT does not believe that the items mentioned are buried requirements; rather they are statements of system performance that are better placed in the performance table. Requirements R3 & R4 specifically refer to the table which makes the table part and parcel of the requirements. No change made.

The SDT believes that it is more effective to state this as a header note instead of repeating it multiple times throughout the table. It is not a buried requirement but a description of what is utilized in the simulation. No change made.

Voter	Entity	Segment	Vote	Comment
Requirement R2, part 2.7.2 already states that an entity must supply the rationale for when actions were not necessary so the SDT believes that your concerns have already been addressed. No change made. The requirement states that an entity must supply the rationale for those events selected so the SDT believes that your concern has already been addressed. It provides the necessary guidance while allowing needed flexibility and not being overly prescriptive. No change made.				
Larry E Watt	Lakeland Electric	1	Negative	Below are some proposed changes and requests for clarification concerning the new TPL-001-1 standard. R2.6.2 The phrase "material changes" is not explicitly defined, and it is unclear what changes constitute a "material" change. It is asked that more precise wording or a definition of the word "material change" be provided. R3.3.2 The words "...known or assumed minimum generator steady state or ride through voltage limitations..." could be (and were) read as a series, with "known", "assumed minimum generator steady state", and "ride through voltage limitations" interpreted as three items in the series. For clarity, it is suggested that the standard be rewritten as such: Trip generators where simulations show generator bus voltages or high side of the Generation Step Up (GSU) transformer voltages are less than the known or assumed minimum generator steady state, or the known or assumed ride through voltage limitations. Include in the assessment any assumptions made. Here, the comma separates the two items in the series, with the words "known" and "assumed" modifying each of the items. R4.3.2 Following the changes made to requirement 3.3.2, it is suggested that requirement 4.3.2 be changed to the following: Trip generators where simulations show generator bus voltages or high side of the Generation Step Up (GSU) transformer voltages are less than the known or assumed minimum generator low voltage ride through capability. Include in the assessment any assumptions made. R4.3.3 An issue has been raised as to whether the word "simulate" denotes the modeling of all relays that protect transmission lines and transformers within a power flow/transiant simulator. It is suggested that this word be changed to "assess," to clarify that this requirement does not compel the Planning Coordinator and Transmission Planner to conduct PSS/E simulations to study the above conditions. The revised requirement can read: Assess the impact of transient swings on Protection System operation for Transmission lines and transformers. R4.4.1 There are two concerns with this requirement. The first is that this requirement makes no provision for the adjacent Planning Coordinator (PC) and Transmission Planner (TP) with a System Contingency to notify the PC and TP of the impacted System. Instead, the responsibility falls on the

Voter	Entity	Segment	Vote	Comment
				PC and TP of the impacted System to confer with each of their adjacent PCs and TPs to verify if a contingency on an adjacent System impacts the formers System. Or, it can cause the PC and TP to perform exhaustive contingency analyses (P0-P7) on all adjacent systems to determine which contingency/contingencies can impact their system to include them in their Contingency list. The second is that the term "impact" is not defined. A concern is should a Contingency cause a line on an adjacent System to load from 99% to 101% of its SOL rating, does this 2% constitute an "impact"? Conversely, would a Contingency that causes a significant increase to an adjacent System's line of 5% or more, without violating that line's SOL rating, be considered as having "impacted" the adjacent System? The proposed change to this requirement is: Adjacent Planning Coordinators and adjacent Transmission Planners will coordinate the identification of those Contingencies within their Systems and determine which, if any, impact the adjacent System. Those identified Contingencies may then be added to the adjacent Planning Coordinators and Transmission Planners' Contingency List. With this change, PCs and TPs of both Systems are responsible for coordinating their efforts, and the definition of "impact" is left to the coordinating PCs and TPs to decide. R8 It is unclear whether the adjacent Planning Coordinators and adjacent Transmission Planners must submit a written request for the information, or if the written request applies only to the functional entity that has a reliability related need. If the adjacent Planning Coordinators and adjacent Transmission Planners do not need to submit a written request, should the Planning Assessment be sent to them automatically?

Response: Material change is system specific and difficult to define on a continent-wide basis and is left to engineering judgment with a documented technical rationale as stated in the requirement. No change made.

The SDT does not see any real difference in the suggested wording from what is already there. No change made.

The SDT does not see any real difference in the suggested wording from what is already there. No change made.

The SDT has clarified the requirement to address your concerns.

Requirement R4, part 4.3.1 - Simulate the removal of all elements that the Protection System and other automatic controls are expected to disconnect for each Contingency without operator intervention. The analyses shall include the impact of subsequent:

- Successful high speed reclosing and unsuccessful high speed reclosing into a Fault.
- Tripping of generators where simulations show generator bus voltages or high side of the GSU voltages are less than known or assumed generator low voltage ride through capability. Include in the assessment any assumptions made.
- Tripping of Transmission lines and transformers where transient swings cause Protection System operation based on generic or actual

Voter	Entity	Segment	Vote	Comment
				relay models. Since the requirement is written for each Planning Coordinator and Transmission Planner, it covers the exchange of information on critical Contingencies and their impacts among all Planning Coordinators and Transmission Planners and thus distributes the responsibility and work load. No change made. The SDT does not see any real difference in the suggested wording from what is already there. No change made. The requirement clearly states that the entity must have a reliability-based need for the information so that unauthorized requests won't be made and the request for the information must be in writing. No change made.
Eric Egge	Black Hills Corp	1	Negative	BHC does not believe that 60 months is a reasonable time period to build transmission facilities to meet the new performance requirements. Building a transmission line varies significantly in regional and local planning and review process, permitting, siting, legal challenges, routing, and system path rating process can often take more than 5 years to complete from the time the project is authorized. Though requirement R2.7.3 is included to address situations beyond the control of the Transmission Planner, it leaves to the interpretation of the audit whether the appropriate actions are being taken to resolve the issue that would continue to allow dropping of Non-Consequential Load or curtailment of Firm Transmission Service. As drafted the standard TPL-001-1 has added requirement 2.1.5 discussing spare equipment and lead times and inclusion in the "Planning Assessment". The standard in this section is not performance based requirement but an activity based requirement as currently stated under R2 2.1.5. PacifiCorp recommends that the standard should be revised and 2.1.5 removed as it does not directly improve the systems performance requirements nor compliance stated in Table 1.
Response: The SDT has changed the majority of the implementation timeframe from 60 to 84 months as per your (and others') suggestion. Since problems may not be seen until after the assessments are completed and there is a 24 month implementation for assessments, the total time for items P2-1, P2-2 and P2-3 (above 300 kV), P3-1 through P3-5, P4-1 through P4-5 (above 300 kV), and P5 (above 300 KV) has been increased to 84 months. P1-2 and P1-3 were not increased since they are already being covered by the implementation plan for Project 2010-11: TPL Table 1 Order. Requirement R2, part 2.7.3 - If an entity can demonstrate that they have made a best faith effort to implement the planned solution then there should not be a concern. The wording of the requirement allows an entity this flexibility. Requirement R2, part 2.7.3 requires an entity to document their actions. Therefore, it is up to the entity to ensure that the documentation sufficiently explains their position. No change made. The SDT has clarified the requirement based on your comments and those of others. **Requirement R2, part 2.1.5** - When an entity's spare equipment strategy could result in the unavailability of major Transmission equipment that has a lead time of one year or more (such as a transformer), the impact of this possible unavailability on System performance shall be studied. The studies shall				

Voter	Entity	Segment	Vote	Comment
be performed for the P0, P1, and P2 categories identified in Table 1 with the conditions that the System is expected to experience during the possible unavailability of the long lead time equipment.				
Janelle Marriott	Tri-State G & T Association Inc.	3	Negative	Definitions section- Add a definition to this standard, which would revise the definition of "Stability" in the NERC glossary to read: "Stability: Unless qualified specifically as Voltage Stability, the term Stability shall mean the ability of system generators to maintain angular equilibrium, also known as Dynamic stability." Definitions section- The definition for Year One is vague. If the definition is intended to capture both a summer and winter season and is necessary to provide a clear starting point for the planning horizon, then this should be stated explicitly in the definition. We recommend inserting the phrase "12-month" before the phrase "planning window" R2.1 The word "current" can mean either "electrical current" - a physical measure of electron movement, or "at the present time" - most recent or up-to-date. If you must use the term "current" in R2.1, say "current annual studies" rather than "annual current studies". R2.1.4 Part 2.1.4 should be removed from the requirement. The benefits of requiring one or more of these is unclear. Which of the listed conditions does an entity choose? There are no criteria for selection of one of the listed sensitivity topics as most-significant to a particular system. It is not apparent how particular sensitivities would increase BES reliability. If this part is not deleted, we recommend removing the phrase "not already included in the studies". Also, this requirement must state how one could determine validity of chosen sensitivity conditions. R2.1.5 We suggest adding the word "individually" to the end of the first sentence of part R2.1.5: "impact of this possible unavailability on System performance shall be assessed individually." In R2.4.1, it is left to the utility what level of load modeling detail is used. This is good because it gives the utility flexibility to select and use appropriate models. However, is it not clear what behavior of induction motors is targeted here. We recommend deleting the phrase "considering the behavior of induction motor loads", or else please specify what behavior is of concern. Part 2.4.3 should be removed from the requirement. As commented in our response to part 2.1.4, the benefit of requiring one or more of these is unclear - which of the listed conditions does an entity choose? There are no criteria for selection of one of the listed sensitivity topics as most-significant to a particular system. It is not apparent how this would increase BES reliability. If this part is not deleted, we recommend removing the phrase "not already included in the studies". Also, this requirement must state how one could determine validity of chosen sensitivity conditions. R2.6.2 We suggest that 2.6.2 be modified to read: "the System represented in the study has not
Keith V. Carman	Tri-State G & T Association Inc.	1	Negative	

Voter	Entity	Segment	Vote	Comment
				materially changed, or a technical rationale can be given that the changes do not impact performance in the study area." If 2.1.4 and 2.4.3 are removed as we suggest, then this sentence in part 2.7 should be removed: "Corrective Action Plan(s) do not need to be developed solely to meet the performance requirements for a single sensitivity case analyzed in accordance with Requirement R2, parts 2.1.4 and 2.4.3." In part 2.7.1, remove the second sentence and all bullets. These are not measurable performance criteria. R3.5 asks for evaluation of actions designed to reduce the likelihood of potential cascading caused by extreme events, but 1) does not require documentation of results, and 2) does not require that the evaluation show that proposed actions would affect or limit cascading. R4.1 Insert "compliance with" in R4.1 text, which will then read "based on the Contingency list created in compliance with Requirement R4, part 4.4." There is no list in part 4.4. Part 4.4 requires a list of more severe contingencies (Table 1 planning events) to be created. R4.1.2 is unrealistic. Utilities implement out-of-step tripping schemes to limit the extent of impacts of such events that cause out-of-step conditions. Some of these occurrences can be mitigated better by tripping transmission elements and not generation. The decision to trip either transmission or generation should not be predetermined in the standard. We recommend that part 4.1.2 be reworked. R4.1.3 Does this preclude the regional reliability organization from choosing to establish damping criteria at some time in the future? R4.3.1 It is unclear whether this refers to the possibility of reclosing system failure, or the impacts of reclosing into a still-faulted system. R4.3.2 This is an admirable goal, and we applaud the SDT's vision. However, modeling all Protection Systems may be beyond the capabilities of presently used dynamic modeling tools. The number of impedance and overcurrent relays that would need to be included for lines and transformers would likely overwhelm these programs. We are concerned that the programs in use may not have the capability to model important relay characteristics such as load encroachment or out-of-step operating characteristics. R4.3.4 The phrase "of electrical system quantities" is unclear and can be removed without changing the intent of the requirement. R6 Remove the "for conditions such as ..." list.

Voter	Entity	Segment	Vote	Comment
				Does Table 1, Category P5, require consideration of clearing from all remote terminals and evaluating those time delays assuming no tripping is available locally? Table 1 Extreme Events List- In the Stability section of the Table 1 Extreme Events List, use the term Dynamic Stability, not just Stability - or insert a revised Stability definition as noted above. M8, part 1.4 Simplify by changing "current, in force documentation" to "operative documentation". "Current" is redundant with "in force". Table 1 - Headnotes to Planning Events o Table 1, Headnote b - Delete “or extreme” since this headnote is for Planning Events. o Table 1, Headnote e - You may omit the phrase “For all planning events,” since this headnote is for Planning Events. o Table 1, Headnote i - It is unclear what is meant by “end-user equipment associated with an event”. o Table 1, Headnote h -We suggest this be moved to a footnote for P0: “Planning Event Category P0 is applicable to steady state only. No Dynamic Stability Analysis is required.” o Headnote j - It is not clear why this falls under “Stability Only”, and suggest that “dynamic stability” be included with headnote “a” Table 1 - Footnotes o Table 1, Footnote 2 - We suggest this footnote is not needed. R2.3 covers this sufficiently. o Table 1, new footnote- We suggest a footnote be added to the column labeled “Initial System Condition” indicating that “Normal System means all transmission elements are in service and all portions of the BES within the study area are performing within specified operating limits”. Table 1 - Planning Events o Event P2 is categorized as ‘Single Contingency’; however the listed events would typically result in the loss of more than one element. In other words, Category P2 contingencies are those in which a single system element is removed from service due to one of the listed initiating events. We are concerned because it appears that all events listed for the single-contingency Category P2 are not covered under other multiple-contingency Categories. For example, a faulted Bus Section. o Events P2 and P5 are described in terms of the elements initiating a fault, while the others are in terms of number of elements out-of-service due to a contingency. Event P4 is described in terms of

Voter	Entity	Segment	Vote	Comment
				both - the elements lost and the initiating fault. It would be helpful to have additional notes explaining the apparent inconsistent wording of Planning Events. o The distinction between 'Single Contingency' and 'Multiple Contingency' Category classifications for an event must be clear. Categories A through D have worked well for the industry to this point, and it would be helpful if the transitio

Response: The SDT feels that the current definition fits the intent of the standard. Modifying the definition could have unintended consequences on other standards. No change made.

Based on your comment and those of others, the SDT has revised the definition of Year One.

> **Year One:** The first twelve month period that a Planning Coordinator or a Transmission Planner is responsible for assessing. For the Planning Assessment started in a given calendar year, Year One must include the forecasted peak Load period for one of the following two calendar years. For example, if a Planning Assessment was started in 2011, then Year One must include the forecasted peak Load period for either 2012 or 2013.

The SDT agrees and has made the change.

> **Requirement R2, part 2.1 -** The Near-Term Transmission Planning Horizon portion of the steady state analysis shall be assessed annually and be supported by current annual studies or qualified past studies as indicated in Requirement R2, part 2.6, as follows:

The SDT has deleted the suggested phrase.

> **Requirement R2, part 2.1.4 -** For each of the studies described in Requirement R2, parts 2.1.1 and 2.1.2, sensitivity case(s) shall be utilized to demonstrate the impact of changes to the basic assumptions used in the model. To accomplish this, the sensitivity analysis in the Planning Assessment must vary one or more of the following conditions by a sufficient amount to stress the System within a range of credible conditions that demonstrate a measurable change in performance:

The SDT has clarified the requirement based on your comments and those of others although the term 'individually' was not added as the SDT did not see that it added any clarity.

> **Requirement R2, part 2.1.5** - When an entity's spare equipment strategy could result in the unavailability of major Transmission equipment that has a lead time of one year or more (such as a transformer), the impact of this possible unavailability on System performance shall be studied. The studies shall be performed for the P0, P1, and P2 categories identified in Table 1 with the conditions that the System is expected to experience during the possible unavailability of the long lead time equipment

The SDT has clarified the requirement.

> **Requirement R2, part 2.4.1** - System peak Load for one of the five years. System peak Load levels shall include a Load model which represents the

Voter	Entity	Segment	Vote	Comment
				expected dynamic behavior of Loads that could impact the study area, considering the behavior of induction motor Loads. An aggregate System Load model which represents the overall dynamic behavior of the Load is acceptable. The SDT has deleted the suggested phrase. **Requirement R2, part 2.4.3 -** For each of the studies described in Requirement R2, parts 2.4.1 and 2.4.2, sensitivity case(s) shall be utilized to demonstrate the impact of changes to the basic assumptions used in the model. To accomplish this, the sensitivity analysis in the Planning Assessment must vary one or more of the following conditions by a sufficient amount to stress the System within a range of credible conditions that demonstrate a measurable change in performance: The SDT does not see that the suggested change adds clarity. No change made. Parts 2.1.4 or 2.4.3 were not removed so no change is needed here. The listed items are simply that – a list of actions that would be included. This is an allowable and encouraged format for Reliability Standards. No change made. Requirement R3, part 3.5 is part of Requirement R3 which links back to Requirement R2 where the documentation is required. No change made. The SDT believes that the present wording is correct. No change made. Requirement R4, part 4.1.2, deals with a single generator pulling out of synchronism. The situation you described is a system Stability issue and is considered an application for an SPS which is allowed by the standard. No change made. Nothing in this standard precludes a region from adopting an additional requirement in the future. No change made. The SDT modified the language of the requirement to address your concern. **Requirement R4, part 4.3.1 -** Simulate the removal of all elements that the Protection System and other automatic controls are expected to disconnect for each Contingency without operator intervention. The analyses shall include the impact of subsequent: • Successful high speed reclosing and unsuccessful high speed reclosing into a Fault. • Tripping of generators where simulations show generator bus voltages or high side of the GSU voltages are less than known or assumed generator low voltage ride through capability. Include in the assessment any assumptions made. • Tripping of Transmission lines and transformers where transient swings cause Protection System operation based on generic or actual relay models. The SDT believes that your comment is for requirement R4, part 4.3.3. The SDT has modified the wording of this requirement to address your concern. **Requirement R4, part 4.3.1 -** Simulate the removal of all elements that the Protection System and other automatic controls are expected to disconnect for each Contingency without operator intervention. The analyses shall include the impact of subsequent: • Successful high speed reclosing and unsuccessful high speed reclosing into a Fault.

Voter	Entity	Segment	Vote	Comment
				• Tripping of generators where simulations show generator bus voltages or high side of the GSU voltages are less than known or assumed generator low voltage ride through capability. Include in the assessment any assumptions made. • Tripping of Transmission lines and transformers where transient swings cause Protection System operation based on generic or actual relay models. The SDT does not see any reason to delete the phrase as it is not causing any confusion. No change made. The SDT believes that the present wording is appropriate. No change made. You need to model the way that Protective System is expected to operate; if there is no local backup, then remote clearing will have to be simulated. No change made. All aspects of Stability are to be considered. No change made. The present language is common in many standards and the SDT sees no reason to change it here. There may be a difference between 'current' and 'in force' due to effective dates. No change made. The SDT has made a clarifying change to the note. **Header note 'b':** Consequential Load Loss as well as generation loss is acceptable as a consequence of any event excluding P0. The SDT agrees and has modified the note accordingly. **e**. Planned System adjustments such as Transmission configuration changes and re-dispatch of generation are allowed if such adjustments are executable within the time duration applicable to the Facility Ratings. End-user equipment is that equipment owned and operated by an end-user over which an entity has no control. No change made. This is simply a matter of preference as the suggested change would not alter the meaning or intent. No change made. The SDT agrees and has deleted header note 'j'. Dynamic stability is covered in the requirements and no reference is needed in the header notes. This footnote is referring to Stability studies and not short circuit analysis. No change made. System normal, or P0, is the starting system condition for the projected study conditions per the model developed in accordance with Requirement R1. The SDT has adjusted Requirement R1 to provide this clarity. **Requirement R1 -** Each Transmission Planner and Planning Coordinator shall maintain System models within its respective area for performing the studies needed to complete its Planning Assessment. The models shall use the latest data consistent with that provided in accordance with the MOD-010 and MOD-012 standards, supplemented by other sources as needed, including items represented in the Corrective Action Plan, and shall represent projected System conditions. This establishes the normal system condition in Table 1. The category descriptions are meant to characterize the events. A single event may remove more than one element from service and that has been addressed in Header note 'c'. The SDT does not believe that there are inconsistencies within the table. The P2 category describes single events that may result in multiple

Voter	Entity	Segment	Vote	Comment
elements being removed from service. The P2 events differ from the multiple event categories which consider two or more sequential events. No change made. The SDT agrees that the structure of the descriptions are different because they are describing dissimilar types of events but the SDT does not feel that they are inconsistent or causing any confusion. No change made. The change was made since the table is now event based and because the four existing standards were consolidated into one standard. The industry has supported these changes. No change made.				
Fred Frederick	Southern Indiana Gas and Electric Co.	3	Negative	Definitions, Year One - Vectren disagrees with the proposed definition of Year One. Vectren believes that Year One should be the planning window that begins 12-18 months from the start of the current calendar year, and not from the end of the calendar year. Section 5 - Effective Date, the allowance of 60 calendar months for Corrective Action Plan implementation is too short. Recommend this be extended to 84 months to allow for proper planning, budgeting, right-of-way acquisition and construction. R2.4.1 - System peak Load levels shall include a Load model which represents the dynamic behavior of Loads that could impact the study area, considering the behavior of induction motor Loads. An aggregate System Load model which represents the overall dynamic behavior of the Load is acceptable. Vectren has concern with this requirement. The concern is that Vectren will be held to strict interpretation of this standard with regard to an actual event occurring that was not exactly reproduced by the Vectren model. R2.7.2 - The term "include actions to resolve performance deficiencies identified in multiple sensitivity studies" causes concern. Mitigation plans should not necessarily be required for deficiencies found in multiple sensitivity studies because the conditions in some sensitivity studies are typically extreme and less likely than base case conditions. Some of the sensitivity study conditions may not be credible or plausible enough to warrant the implementation of mitigation plans. Also, what is the interpretation of multiple studies? Is that more than one, a majority, 2/3 of the number that were studied, or some other number? R2.7.3 - The term “beyond the control of the Transmission Planner or Planning Coordinator” needs to be better defined. An auditor could interpret a situation to be within the “control” of a TP or PC but are not covered by NERC standards or a TP / PC’s process, procedures or criteria. This leaves entities open to possible non-compliance violations based on an auditor’s perception of what they believe should be in the TP / PC’s control. Also, Vectren is not in agreement that Non-Consequential Load Loss should not be allowed for any case. There may be cases, especially future year studies that indicate a need for building transmission infrastructure, to serve speculative load growth. In these cases the consumers, local

Voter	Entity	Segment	Vote	Comment
				jurisdictions, and state jurisdictions may find it a prudent plan to assume some Non-Consequential Load Loss in order to defer building transmission infrastructure. R3.3.3 - Trip Transmission elements when relay loadability limits are exceeded. Vectren has concerns that system models (or software applications) cannot support the requirements of R3.3.3. Another concern is that Vectren will be held to strict interpretation of this standard with regard to an actual event occurring that was not exactly reproduced by the Vectren model. R4.1.3 - For planning events P1 through P7: Power oscillations shall exhibit acceptable damping as established by the Planning Coordinator and Transmission Planner. Vectren has concerns with this requirement. What if the PC and the TP cannot reach an agreement in the definition of "acceptable damping"? R4.1.2 - When a generator pulls out of synchronism in the simulations, the resulting apparent impedance swings shall not result in the tripping of any Transmission system elements other than the generating unit and its directly connected Facilities. Vectren has concerns that dynamics models (or software applications) cannot support the requirements of R4.1.2. Another concern is that Vectren will be held to strict interpretation of this standard with regard to an actual event occurring that was not exactly reproduced by the Vectren model. R4.3.3 - Simulate the impact of transient swings on Protection System operation for Transmission lines and transformers. Vectren has concerns that dynamics models (or software applications) cannot support the requirements of R4.3.3. Another concern is that Vectren will be held to strict interpretation of this standard with regard to an actual event occurring that was not exactly reproduced by the Vectren model. Table 1 - Steady State & Stability Performance, Planning Events, k. Transient voltage response shall be within acceptable limits established by the Planning Coordinator and the Transmission Planner. What if the PC and the TP cannot reach an agreement in the definition of "acceptable limits"? Table 1 - Steady State & Stability Performance, Extreme Events, V. A successful cyber attack. This requirement is too vague. It could be interpreted in any number of ways.

Response: Based on your comment and those of others, the SDT has revised the definition of Year One.

> **Year One:** The first twelve month period that a Planning Coordinator or a Transmission Planner is responsible for assessing. For the Planning Assessment started in a given calendar year, Year One must include the forecasted peak Load period for one of the following two calendar years. For example, if a Planning Assessment was started in 2011, then Year One must include the forecasted peak Load period for either 2012 or 2013.

The SDT has changed the majority of the implementation timeframe from 60 to 84 months as per your (and others') suggestion. Since problems may not be seen

Voter	Entity	Segment	Vote	Comment
until after the assessments are completed and there is a 24 month implementation for assessments, the total time for items P2-1, P2-2 and P2-3 (above 300 kV), P3-1 through P3-5, P4-1 through P4-5 (above 300 kV), and P5 (above 300 KV) has been increased to 84 months. P1-2 and P1-3 were not increased since they are already being covered by the implementation plan for Project 2010-11: TPL Table 1 Order. Requirement R2, part 2.7.3 - If an entity can demonstrate that they have made a best faith effort to implement the planned solution then there should not be a concern. The wording of the requirement allows an entity this flexibility. 2.4.1 – The SDT has added the word 'expected' to the text to alleviate your concern. Planning models are based on the best information available to the planners at the time of the study and it is well understood that they may not exactly represent actual conditions at any given time. The results of on-going benchmarking and model development activities can be incorporated when those activities yield more representative results. **Requirement R2, part 2.4.1** - System peak Load for one of the five years. System peak Load levels shall include a Load model which represents the expected dynamic behavior of Loads that could impact the study area, considering the behavior of induction motor Loads. An aggregate System Load model which represents the overall dynamic behavior of the Load is acceptable. Requirement R2, part 2.7.2 already states that an entity must supply the rationale for when actions were not necessary so the SDT believes that your concerns have already been addressed. No change made. If an entity can demonstrate that they have made a best faith effort to implement the planned solution then there should not be a concern. The wording of the requirement allows an entity this flexibility. No change made. The SDT has added footnote #12 to P1, P2-1, and P3 to address your and others concerns in this area. 12. Note: Non-Consequential Load Loss is being decided in Project 2010-11. When that project is finalized, the resolution will be copied here. The expectation of this requirement is that relay tripping would be handled consistent with their PRC-023 expectations. Planning models are based on the best information available to the planners at the time of the study and it is well understood that they may not exactly represent actual conditions at any given time. No change made. Requirement R4, part 4.1.3 does not state that the criteria are set jointly. If such an item became an issue, the SDT believes that it is covered in Requirement R7. No change made. The SDT believes that the necessary tools are readily available. Planning models are based on the best information available to the planners at the time of the study and it is well understood that they may not exactly represent actual conditions at any given time. No change made. The table does not state that the limits are set jointly. If such an item became an issue, the SDT believes that it is covered in Requirement R7. No change made. The event is the loss of two generating stations. A successful cyber attack is simply an example of a cause of the event. No change made.				
Liam Noailles	Xcel Energy, Inc.	5	Negative	Xcel Energy appreciates the hard work of the Standard Drafting Team and commends the group for making substantial improvements in every successive draft of the TPL-001-1 standard to bring it to the proposed version for balloting. However, in as much as the proposed TPL-001-1 standard has

Voter	Entity	Segment	Vote	Comment
Michael Ibold	Xcel Energy, Inc.	3	Negative	improved, we cannot support its approval at this time for the following reasons: 1. Implementation Plan: Xcel Energy does not believe that 60 months is a reasonable time period to build transmission facilities to meet the new "raise-the bar" performance requirements. Building a transmission line in Xcel Energy's service area spanning eight-states (and two RTO's) varies significantly in regional and local planning and review process, regulatory approval process, permitting and routing process, legal challenges, etc. These processes can often take more than 5 years to complete from the time the project is conceived as a proposed solution. Though requirement R2.7.3 is included in the standard to address situations beyond the control of the Transmission Planner, we are concerned that it leaves to the interpretation and judgment of the auditor whether the Transmission Planner is taking appropriate actions to resolve the situation and consequently whether the interim solution of dropping Non-Consequential Load or curtailment of Firm Transmission Service is acceptable. Xcel Energy will be comfortable supporting the standard if the 60 months time-frame is increased to 84 months. 2. Intended Scope of Planning Event P5: Xcel Energy is unsure of what comprises the scope of "Failure of a single Protection System" - does it imply studying the failure to operate of the relay or communication channel utilized in the primary protection scheme for an equipment (e.g. transmission line), or does it also include studying the failure of other single Protection System components such as current/voltage transformer or station battery? Note that the former interpretation will result in delayed clearing of the faulted transmission element only, consistent with operation of the local backup protection (typically zone 2 operation of line distance relays). On the other hand, the failure of current/voltage transformer or station battery could compromise the operation of both primary and local backup protection schemes for the faulted equipment, thus requiring the remote backup protection to clear the fault, which results in longer-duration delayed clearing and the loss of more than one transmission element. In Table 1, characterizing P5 as a multiple contingency event (like P4 or P7) also contributes to the scope confusion. As discussed above, a primary protection relay failure will typically result in the loss of a single (faulted) element only, not the outage of multiple elements (that always occurs in P4 or P7 events). Then, should the P5 event be construed to study the failure of CT/PT and/or station battery which, as discussed above, will typically result in the loss of multiple elements? If yes, isn't the standard implicitly requiring redundant CTs/PTs or station batteries to enable meeting the EHV performance requirement? If no, shouldn't the P5 event description reflect the intended scope more clearly? This may presumably be achieved by modifying P5 to read "Failure of primary protective relay that results in Delayed Fault Clearing on one of the following:" 3. Steady-state Performance of Planning Event P5 versus P1: Assuming that the intent of the P5 event is to study the operation failure of primary protection scheme (failure of the relay or its communication channel), the delayed clearing time associated with local backup protection scheme is
David F. Lemmons	Xcel Energy, Inc.	6	Negative	

Voter	Entity	Segment	Vote	Comment
				only relevant to the stability performance. If the post-contingency outcome for P5 consists of the loss of the faulted transmission element only, can the post-contingency steady state system condition for event P5 be any different than for event P1? We contend that both events will result in the same post-contingency steady-state system condition since the only difference is the normal versus delayed clearing time. If so, should the steady-state performance requirements for event P5 be any different than for event P1? For steady-state analysis, the HV level performance requirements for P5 in Table 1 become contradictory to those for P1. This is another example of why the intended scope of P5 event needs to be specified more clearly. 4. Ambiguities and Inconsistencies: Xcel Energy is providing the following editorial comments for your consideration to improve the consistency and clarity of the standard. Several, but not all, of the ambiguities and/or inconsistencies are confusing enough to qualify as show-stoppers since they prevent the standard's intent and scope to come across clearly. 4.1 Table 1 - Headnotes to Planning Events o Headnote b - At a minimum, delete "or extreme" since it is out of place in this headnote. Consider truncating at "... generation loss is acceptable." since the headnote is by default applicable to all planning events, and P0 exclusion is implicit in the context. o Headnote e - Consider omitting the phrase "For all planning events," since the headnote is by default applicable to all planning events. o Headnote i - Consider re-wording to remove the unintended association of equipment with event being implied at "...by end-user equipment associated with an event...". Suggest deleting the redundant phrase "associated with an event" since the headnote is by default applicable to all planning events. Alternatively, modify to read as follows: "Load loss resulting from an event due to the response of voltage sensitive Load or due to Load that is disconnected from the System by end-user equipment shall not be used to meet steady state performance requirements." o Headnote h - Unlike other headnotes, this does not describe a system performance but offers a clarification on applicability. Therefore, like other clarifications/qualifications, it belongs in the footnotes - suggest changing it to footnote assigned to P0. o Headnote j - It is not clear why this falls under Stability Only, and it also lacks specificity in expected stability performance. Note that the generic 'stable' is an umbrella term that includes all types of system (in)stability including voltage (in)stability, frequency (in)stability and cascading facility outages, not simply angular (in)stability. Considering that headnote 'a' includes most varieties of system (in)stability, we suggest adding "angular instability" in headnote "a" and deleting this

Voter	Entity	Segment	Vote	Comment
				headnote. 4.2 Table 1 - Footnotes Footnote 2 - Suggest deletion of “Unless specified otherwise, simulate normal clearing of faults” since it is redundant with Headnote ‘d’ for Planning Events and Headnote ‘b’ for Extreme Events. Alternatively, delete both Headnotes and do not change Footnote 2. 4.3 Table 1 - Planning Events - Column 2 - Initial System Condition - Normal System What are the attributes of Normal System? Is this term intended to be synonymous with “system intact” or N-0 system topology? Is the event P0 intended to be identical to the existing Category A? The intent is not clear and needs to be explicitly stated. We suggest that the first occurrence of the term be modified as follows: “Normal System (all Facilities in service)” to explicitly convey the intent. Note that the qualifier in parenthesis is the verbiage for Category A used in the existing TPL standards. However, we also note that if P0 is intended to be synonymous with “system intact”, then it does not appear that the base case system model built as per Requirement R1, part 1.1, will always be compatible with P0 - due to the known outages to be included in the model (part 1.1.2). Does the standard envisage P0 and “system intact” to connote “All Facilities in service minus the known outages”? If so, this must be clearly stated. .4 Table 1 - Planning Events - Column 1 - Category What is the significance of ‘Single Contingency’ or ‘Multiple Contingency’ qualifier for an event? Is it intended to characterize the number of elements outaged due to the initiating event, or is it intended to convey the number of equipment failures/faults comprising the initiating event? The NERC glossary definition of Contingency “The unexpected failure or outage of a system component, such as a generator, transmission line, circuit breaker, switch or other electrical element.” does not help remove this ambiguity. Regardless of the chosen interpretation, inconsistency arises for the following events: Event P2 - Wouldn’t initiating events P2-2, P2-3 and P2-4 typically result in the loss of more than one element? So qualifying P2 as single contingency appears to correspond with the equipment fault/failure description in the Event column but does not correspond to the total number of elements outaged due to the initiating event. Event P3 - Per the description in the Event column, the events P3-1 to P3-5 result in the loss of one element. So qualifying P3 as a multiple contingency appears to correspond with the total number of elements outaged, after including the (overlapping) prior outage. But the multiple contingency qualification is not consistent with the initiating event description in the Event column. Event P6 - Same comment as P3. Event P1 - Can the loss of only one element be presumed as an outcome of normal clearing of a fault, which appears to be the implicit initiating event here? How about the case of a normally cleared fault on a transformer-terminated line that is not breakered at the transformer end? Or the case of a normally cleared fault on a line-connected shunt reactor that is not breakered to the line? The resulting loss of two elements is not consistent

Voter	Entity	Segment	Vote	Comment
				with the event description. And by characterizing the event in terms of loss of one element, it is also inconsistent with headnote c that requires removal of all elements expected to automatically disconnect for each event. 4.5 Table 1 - Planning Events - Column 3 - Event Descriptions for events P1, P3, P6 and P7 are in terms of number of elements (one or multiple) outaged due to the contingency, whereas events P2 and P5 are described in terms of the initiating fault only. The exception is event P4 which is described in terms of both - the elements lost and the initiating fault. Is there a good reason why the event descriptions are not consistently worded? We note that the contingency descriptions in column 2 of the existing Table I are expressed in terms of "Initiating Event(s) and Contingency Element(s)." We think this issue is closely correlated to the previous comment on the apparent lack of consistency between the contingency terminology in column 1 and the event description in column 3.

Response: 1. The SDT has changed the majority of the implementation timeframe from 60 to 84 months as per your (and others') suggestion. Since problems may not be seen until after the assessments are completed and there is a 24 month implementation for assessments, the total time for items P2-1, P2-2 and P2-3 (above 300 kV), P3-1 through P3-5, P4-1 through P4-5 (above 300 kV), and P5 (above 300 KV) has been increased to 84 months. P1-2 and P1-3 were not increased since they are already being covered by the implementation plan for Project 2010-11: TPL Table 1 Order. Requirement R2, part 2.7.3 - If an entity can demonstrate that they have made a best faith effort to implement the planned solution then there should not be a concern. The wording of the requirement allows an entity this flexibility.

2. The SDT has changed the text for the P5 event as a result of your (and others) comments to address these concerns.

> **P5**. Delayed Fault Clearing due to the failure of a relay[13] protecting the Faulted element to operate as designed, for a Fault on one of the following:
>
> **13**. Applies to the following relay functions or types: pilot (#85), distance (#21), differential (#87), current (#50, 51, and 67), voltage (#27 & 59), directional (#32, & 67), and tripping (#86, & 94).

3. A P5 event is different and will not duplicate a P1 event for steady state if the entity does not have fully redundant Protection Systems. No change made.

The SDT agrees and has made a clarifying change.

> **Header note 'b':** Consequential Load Loss as well as generation loss is acceptable as a consequence of any event excluding P0.

The SDT agrees and has modified the note accordingly.

> **Header note 'e'**. Planned System adjustments such as Transmission configuration changes and re-dispatch of generation are allowed if such adjustments are executable within the time duration applicable to the Facility Ratings.

While technically correct, the suggested change does not create additional clarity and the existing wording doe not cause any confusion in the eyes of the SDT. No change made.

Voter	Entity	Segment	Vote	Comment
This is simply a matter of preference as the suggested change would not alter the meaning or intent. No change made. The SDT agrees and has deleted header note 'j'. This is simply a matter of preference. While somewhat duplicative, it may add clarity and hasn't seemed to cause any confusion. No change made. System normal is the starting system condition for the projected study conditions per the model developed in accordance with Requirement R1. The SDT has adjusted Requirement R1 to provide this clarity. **Requirement R1 -** Each Transmission Planner and Planning Coordinator shall maintain System models within its respective area for performing the studies needed to complete its Planning Assessment. The models shall use the latest data consistent with that provided in accordance with the MOD-010 and MOD-012 standards, supplemented by other sources as needed, including items represented in the Corrective Action Plan, and shall represent projected System conditions. This establishes the normal system condition in Table 1. The category descriptions are meant to characterize the events. A single event may remove more than one element from service and that has been addressed in Header note 'c'. The SDT does not believe that there are inconsistencies within the table. No change made. The SDT agrees that the structure of the descriptions are different because they are describing dissimilar types of events but the SDT does not feel that they are inconsistent or causing any confusion. No change made.				
Henry Ernst-Jr	Duke Energy Carolina	3	Negative	Duke appreciates the hard work that has been done by the Standard Drafting Team to get the standard to this point. Duke is supportive of the standard as it helps to remove some of the 'grey' in the existing TPL standards, as well as driving actions that will improve the reliability of the Bulk Electric System. However, Duke believes that two areas in the standard need to be improved in order for Duke to vote to approve the standard. 1. Duke does not believe that 60 months is a reasonable time period to build transmission facilities to meet the new performance requirements. In an email to the registered ballot body, Ameren stated " Building a transmission line in Illinois is estimated to take 7 years (84 months) from the time the project is authorized." Duke agrees with the point that Ameren is making that building of a new EHV transmission line can be a very lengthy process. Duke thinks that a more appropriate time frame would be 84 months. 2. Duke believes that the requirement prohibiting loss of non-consequential load for P1, P2.1 and P3 events is an overreach by the standard into local load quality of service issues, does not provide any real benefit to Bulk Electric System (BES) reliability, and may have unintended negative consequences on reliability. Often, corrective actions to mitigate these events are local in nature and only require minor additional loss of local load to avoid major projects. In many instances, it may be in the best interest of all involved parties from an overall cost/benefit point of view to allow loss of non-consequential load. The standard should continue to allow Transmission Planners to use

Voter	Entity	Segment	Vote	Comment
				discretion regarding loss of non-consequential load, such that Transmission Planners, customers, and local regulators jointly control the decision making when BES reliability is not an issue. The transparency requirements of the new standard facilitate this type of decision making. In addition, the prohibition on non-consequential load loss for these events creates an incentive for Transmission Planners to remove lines serving load from network (serve the loads radially) so that they are characterized as consequential load. The unintended consequence of the standard would be a reduction in reliability for service to local load.
Response: 1. The SDT has changed the majority of the implementation timeframe from 60 to 84 months as per your (and others') suggestion. Since problems may not be seen until after the assessments are completed and there is a 24 month implementation for assessments, the total time for items P2-1, P2-2 and P2-3 (above 300 kV), P3-1 through P3-5, P4-1 through P4-5 (above 300 kV), and P5 (above 300 KV) has been increased to 84 months. P1-2 and P1-3 were not increased since they are already being covered by the implementation plan for Project 2010-11: TPL Table 1 Order. 2. The SDT has added footnote #12 to P1, P2-1, and P3 to address your and others concerns in this area. 12. Note: Non-Consequential Load Loss is being decided in Project 2010-11. When that project is finalized, the resolution will be copied here.				
Charles A. Freibert	Louisville Gas and Electric Co.	3	Negative	E.ON U.S. suggests that Extreme Event 2e be clarified by adding: if generating was added in front of station, "Loss of all generating units at a generating station." This would distinguish from a loss of all units at a transmission station. Also, it is consistent with 3a, "Loss of two generating stations ...". E.ON U.S. objects to the modification of P2-1 to only include "Opening of a line section w/o a fault". Footnote 7 indicates that this is to ensure that radial load that would have tripped with a fault can be served. This is a new criteria that opens a line without an actual fault and may result in converting some of these lines to radials to comply with this requirement which could decrease overall reliability.
Charlie Martin	Louisville Gas and Electric Co.	5	Negative	
Daryn Barker	Louisville Gas and Electric Co.	6	Negative	
Response: The SDT assumes that you meant 2d and of so, agrees and has made the change. **Extreme event 2d.** Loss of all generating units at a generating station. This is not a new criterion as this is exactly what was in TPL-002-0, Table 1, Category B "Loss of an Element without a Fault." No change made.				
Luther E. Fair	Gainesville Regional Utilities	1	Negative	Even though I am voting negative on this version of the standard, I want to acknowledge the considerable effort that the SDT has put into developing this change to the NERC Standard TPL-001, Transmission System Planning Performance Requirements. I do consider it, in most part, an improvement to the existing standard, but I feel it falls short by not providing more clarity and less ambiguity. As a very small utility that happens to have chosen a 138 kV loop to circle its city to serve

Voter	Entity	Segment	Vote	Comment
				its citizens, we feel unreasonably burdened at times to accomplish the documentation task at hand. I offer the following as a few examples of concern: GRU believes that requirement 2.1.5 on spare equipment strategy is discriminatory for smaller entities. For many smaller entities, having a spare transformer is not a practical solution and makes far less sense and has significantly more customer rate impacts than for a larger utility. Yes, it may be possible to arrange an agreement with a neighboring entity for use of their spare, but that assumes that the neighboring entity's transformer specifications are similar enough for use as a spare, which may not be the case. Order 693 states at Paragraph 1725: "... the Commission directs the ERO to modify the planning Reliability Standards to require the assessment of planned outages consistent with the entity's spare equipment strategy". Next, Requirement 3.3.3 as written would require modeling of nearly every phase distance relay, especially when studying extreme events. The requirement ought to have the flexibility afforded in 3.3.2 where the planner can use a conservative assumption and screening methods (e.g., the proposed curves of PRC-024) for relay loadability (e.g., the requirements of PRC-023). Requirement 4.3.1 would also require modeling of nearly every phase distance relay in the Interconnection, again because it applies to extreme events and we will not know ahead of time where the power swings will traverse distance relay characteristics. I look forward to the next generation of this standard's development. L. Earl Fair

Response: The SDT has clarified the requirement based on your comments and those of others.

> **Requirement R2, part 2.1.5** - When an entity's spare equipment strategy could result in the unavailability of major Transmission equipment that has a lead time of one year or more (such as a transformer), the impact of this possible unavailability on System performance shall be studied. The studies shall be performed for the P0, P1, and P2 categories identified in Table 1 with the conditions that the System is expected to experience during the possible unavailability of the long lead time equipment

The SDT agrees that a planner should be able to utilize conservative assumptions and screening methods and doesn't believe that there is anything in the requirement that precludes an entity from doing so. The SDT disagrees that the modeling of phase distance relays is required. No change made.

The SDT has revised Requirement R4, part 4.3.1, bullet #3 to address this concern.

> **Requirement R4, part 4.3.1 -** Simulate the removal of all elements that the Protection System and other automatic controls are expected to disconnect for each Contingency without operator intervention. The analyses shall include the impact of subsequent:
>
> - Successful high speed reclosing and unsuccessful high speed reclosing into a Fault.
> - Tripping of generators where simulations show generator bus voltages or high side of the GSU voltages are less than known or assumed generator low voltage ride through capability. Include in the assessment any assumptions made.

Voter	Entity	Segment	Vote	Comment
• Tripping of Transmission lines and transformers where transient swings cause Protection System operation based on generic or actual relay models.				
Daniel Brotzman	Commonwealth Edison Co.	1	Negative	Exelon is concerned with the use of the term 'Protection System' in Category P5 of the Table 1 performance criteria. 'Protection System' is a defined term in the NERC Glossary (Protection System - Protective relays, associated communication systems, voltage and current sensing devices, station batteries and DC control circuitry). Thus, a potential interpretation of the standard as currently proposed would be that the loss of a station battery is to be included in analysis as a valid single contingency. We understand that the SDT response to previous comments on this issue indicates that the battery contingency was not intended to be part of the P5 contingencies. However, no changes or clarifications were subsequently made to the proposed Standard to clarify the requirements and exclude this interpretation. This leaves open the potential for multiple interpretations of the Standard and creates ambiguity for the functional entities that will have to implement the revised Standard. Additionally, Exelon is concerned that performance criteria in the draft Standard is based on the voltage level of the contingency element rather than the monitored element.
Response: The SDT has changed the text for the P5 event as a result of your (and others) comments to address these concerns. **P5**. Delayed Fault Clearing due to the failure of a relay[13] protecting the Faulted element to operate as designed, for a Fault on one of the following: **13**. Applies to the following relay functions or types: pilot (#85), distance (#21), differential (#87), current (#50, 51, and 67), voltage (#27 & 59), directional (#32, & 67), and tripping (#86, & 94). The SDT placed greater emphasis on the facility being removed than the monitored remaining intact Facilities. The outage of an EHV Facility will typically be of greater concern for the potential of transferring power flow to lower voltage parallel paths than the reverse. No change made.				
Pat G. Harrington	BC Hydro and Power Authority	3	Negative	File: NERC_Std_TPL-001_Draft05_Ballot_Comments_BCH20100226.doc A. GENERAL COMMENTS The standard needs to better define the pre- and post-contingency generation dispatch conditions and stipulate that the worst-case combination of possible load levels and generation dispatch must be studied. For example, the portion of a transmission network connecting a “generation-rich” region (ie, a region with much more generating capacity than local load) to the rest of the BES, should be able to operate within normal voltage level limits without overloading any elements under normal system conditions (N-0). If there are intermittent resources like wind parks or run-of-the-river hydro plants that the system is not depending on to supply dependable generating capacity (or at least not to the full nameplate rating of those resources), generation shedding or run-back can be permitted for single-contingencies (N 1 situation). The amount of generation shedding should be limited to the difference between the aggregate maximum generating capacity of the region and the aggregate

Voter	Entity	Segment	Vote	Comment
				dependable generating capacity of the region and there should be further limits defined for generation shedding/run-back as described below. Add the following definitions: o 1. Consequential Generation Loss: All Generation that is no longer served by the Transmission system as a result of Transmission Facilities being removed from service by a Protection System operation designed to isolate the fault. o 2. Non-Consequential Generation Loss: Dependable Generating Capacity Loss that does not include: (1) Consequential Generation Loss, (2) Generation loss due to low voltage or (3) Generation loss due to protective relays of the generating unit or its step-up transformer. o 3. Dependable Generating Capacity: The level of generating capacity of a plant or unit that the system operator can count on to serve Non-Interruptible Load by virtue of the plant or unit's fuel supply being available to provide that level of generating capacity more than 97% of the time. "EHV" and "HV" need to be defined because they are not defined in the NERC Glossary (NERC Glossary (use "Edit, Find on this page..." and look for "Glossary": http://www.nerc.com/elibrary.php?doc_class=&doc_dept=&submit=Filter) B. SPECIFIC COMMENTS R2, 2.2.1: The system configuration of the last year of the planning period should be studied as well as at least one other year that is most-likely to fail to meet planning criteria with an explanation for why that year is considered the worst case. As it is written, it would be quite acceptable for the TP and/or TC to simply study the year immediately following a major system upgrade with the rationale being that it would likely be the least likely system condition to fail any reliability standards. As it is written, there is no requirement that the rationale provided be logical or reasonable. R2, 2.4: "Stability analysis" does not cover all of the dynamic criteria that need to be met. A more general term, like "Stability and dynamic simulation studies" should be used. "Stability" is defined by NERC as just, "The ability of an electric system to maintain a state of equilibrium during normal and abnormal conditions or disturbances", but the assessments done in what people term "Stability" studies involve more than a check on the electromechanical stability (equilibrium) of the system. Voltage sags and swells, frequency deviations and short term overloading of equipment (eg, transient and dynamic current fluctuations through series capacitors that would provide an indication of the voltage stress across the capacitor dielectric) are usually included in "Stability" studies. R2, 2.4.1: "...for one of the five years" should be changed to "...for the most critical year of the 5 year Near-Term planning period". R2, 2.4.2: This requirement needs to be better defined. Is this requirement meant to demonstrate acceptable system performance during maintenance outages over the daily peak load periods of the off-peak season (ie, summertime for a winter-peaking region) or is this intended to address light-load

Voter	Entity	Segment	Vote	Comment
				issues like over-voltages and frequency deviations? R3, 3.2 The performance requirements for extreme events need to be defined in more detail. The criteria for acceptable system performance for extreme events seems to be only described vaguely in R3 item 3.5. R3, 3.5: Change "Those extreme events in Table 1 that are expected to produce more severe System impacts shall be identified and a list of those events to be evaluated for System performance in Requirement R3, part 3.2 created" to, "Those extreme events in Table 1 that are expected to produce more severe System impacts most likely to cause Cascading,, equipment damage or pose a significant risk to public or worker safety [needs to be further defined] shall be identified and a list of those events to be evaluated for System performance in Requirement R3, part 3.2 created" Also, simply providing "an evaluation of possible actions designed to reduce the likelihood or mitigate the consequences of the event(s)" is inadequate. One or more SPSs should be defined and studies should demonstrate that they prevent cascading outages and isolate, in a pre-planned controlled manner, the portion of the system experiencing the extreme event to minimize the extent of the disturbance. If necessary, an SPS should be provided that isolates the control area experiencing the extreme event from the rest of the interconnected system. R4, 4.1.1: Add (referring to the additional text suggested below for Note e of Table 1), "The amount of generating capacity disconnected or "run-back" by a Special Protection Scheme (SPS) shall be limited in accordance with Note e of Table 1". R4, 4.1.2: Add, "Studies shall be conducted to demonstrate that all circuit breakers that may be called upon to trip for an out-of-step condition (180 degrees across the open breaker) are properly rated for this duty considering the worst case voltage on any isolated transmission circuits due to trapped charge." R4, 4.1.3: Acceptable damping should be defined (eg, "studies must show that any oscillations are damped to less than 10% of their initial magnitude within 30 seconds") [or develop a different specific requirement that can be measured]. R4. 4.5" Change "Those extreme events in Table 1 that are expected to produce more severe System impacts shall be identified and a list of those events to be evaluated for System performance in Requirement R4, part 4.2 created" to, "Those extreme events in Table 1 that are expected to produce more severe System impacts most likely to cause Cascading, equipment damage or pose a significant risk to public or worker safety [needs to be further defined] shall be identified and a list of those events to be evaluated for System performance in Requirement R4, part 4.2 created".

Voter	Entity	Segment	Vote	Comment
				Also, simply providing "an evaluation of possible actions designed to reduce the likelihood or mitigate the consequences of the event(s)" is inadequate. One or more SPSs should be defined and studies should demonstrate that they prevent cascading outages and isolate, in a pre-planned controlled manner, the portion of the system experiencing the extreme event to minimize the extent of the disturbance. If necessary, an SPS should be provided that isolates the control area experiencing the extreme event. R5 & R6: Shouldn't the Load Serving Entities (LSEs) define system performance criteria instead of the Transmission Planner or the Planning Coordinator? The LSEs have an obligation to their customers and must demonstrate to their regulators that they are providing acceptable system performance and reliability of supply to their customers. The Transmission Planner and Planning Coordinator have less incentive to provide high levels of system performance. Due to regulatory difficulties in getting approvals for transmission system upgrades, there

Response: The standard requires a normal System model, P0, be developed that projects anticipated conditions for the period under study. Any additional stress of the System prior to loss of an element would be handled through sensitivity analysis as required in Requirement R2. In addition, the SDT explored the possibility of placing limits on the amount of generation runback and the industry clearly indicated in comments that they did not support such limits. No change made.

The EHV/HV differentiation is not meant to be a definition in that it only applies to this standard. No change made.

One can always study additional years if so desired. The SDT believes that "rationale" implies logic and reason. No change made.

The SDT intended for the term Stability analysis to include system Stability and unit Stability analyses. These analyses could include all aspects of Stability that you mentioned. It is left up to the judgment of the Planning Coordinator/Transmission Planner to decide which aspects of Stability may produce more severe results and therefore, must be analyzed. No change made.

The critical year can only be determined after reviewing the entire portfolio of current and past studies and is not a pre-determined condition. The SDT expectation is that an entity is building a portfolio over time that covers the entire planning horizon and thus determines any critical periods. No change made.

The requirement was intended to cover all conditions that could occur during Off-Peak periods. No change made.

Requirement R3, part 3.2 contains no performance obligations. It is simply a requirement to assess the impacts. No change made.

The SDT made a clarifying change to the requirement.

> **Requirement R3, part 3.5 -** Those extreme events in Table 1 that are expected to produce more severe System impacts shall be identified and a list created of those events to be evaluated in Requirement R3, part 3.2. The rationale for those Contingencies selected for evaluation shall be available as supporting information. If the analysis concludes there is Cascading caused by the occurrence of extreme events, an evaluation of possible actions designed to reduce the likelihood or mitigate the consequences and adverse impacts of the event(s) shall be conducted.

Voter	Entity	Segment	Vote	Comment
Due to the complexity associated with extreme events, the SDT believes it is inappropriate to require any more than a list of possible actions. An SPS could be a solution but it is not the only one. No change made. The SDT explored the possibility of placing limits on the amount of generation runback and the industry clearly indicated in comments that they did not support such limits. No change made. This standard is not intended to address engineering specifications such as proposed here. No change made. There is no single definition; the SDT has left it up to each Planning Coordinator or Transmission Planner to define. No change made. The SDT has made a clarifying change to the requirement. **Requirement R4, part 4.5 -** Those extreme events in Table 1 that are expected to produce more severe System impacts shall be identified and a list created of those events to be evaluated in Requirement R4, part 4.2. The rationale for those Contingencies selected for evaluation shall be available as supporting information. If the analysis concludes there is Cascading caused by the occurrence of extreme events, an evaluation of possible actions designed to reduce the likelihood or mitigate the consequences of the event(s) shall be conducted. Due to the complexity associated with extreme events, the SDT believes it is inappropriate to require any more than a list of possible actions. An SPS could be a solution but it is not the only one. No change made. These are System requirements for the BES and properly belong to the Planning Coordinator and Transmission Planner. No change made.				
Paul Shipps	Lakeland Electric	6	Negative	Five years is not enough time in many circumstances to build significant new transmission lines.
Joseph G. DePoorter	Madison Gas and Electric Co.	4	Negative	Our concern is that the timeframe of 60-month (5 year) for implementing Corrective Action Plans (CAP), is insufficient. We believe that the implementation timeframe must be extended to seven (7) years.
Response: The SDT has changed the majority of the implementation timeframe from 60 to 84 months as per your (and others') suggestion. Since problems may not be seen until after the assessments are completed and there is a 24 month implementation for assessments, the total time for items P2-1, P2-2 and P2-3 (above 300 kV), P3-1 through P3-5, P4-1 through P4-5 (above 300 kV), and P5 (above 300 KV) has been increased to 84 months. P1-2 and P1-3 were not increased since they are already being covered by the implementation plan for Project 2010-11: TPL Table 1 Order.				

Voter	Entity	Segment	Vote	Comment
W. R. Schoneck	Florida Power & Light Co.	3	Negative	FPL Comments on TPL-001-1 Standard FPL believes the Standard requirements need to be clear and unambiguous. The SDT has addressed many of the gray areas of Draft four in their consideration of comments however these comments are not part of the Standard that is currently out for ballot. Incorporating these types of clarifing comments with the use of footnotes in the Standard to help clarify the intent would be a significant improvement for anyone interpreting the Standard including an auditor or investigator. The definition of Year One is an unnecessary departure from the planning practices used in most of the Eastern Interconnection. It is recommended the phrase end of the current calendar year be changed to the current calendar year. This change will allow PAs to begin their near term analysis with either next year or the year after as deemed appropriate. The performance requirements of Table 1 do not allow the loss of non-consequential load for single and multiple contingency events. The disallowance of load loss does not provide any real benefit to the reliability of the BES and is an unnecessary overreach into local quality of service issues that are best addressed by State, Provincial or Municipal authorities. There may be circumstances such as high local transmission costs or local opposition to transmission construction where prohibition of non-consequential load loss represents a poor cost/benefit or quality of life tradeoff. Providing a quantitative cap in non-consequential load loss such as 100 MW may be rationale compromise in the goal of limiting load loss for the more probable outage events. Our preference would be to retain the capability of limited non-consequential load loss. Absent this, the 60 calendar month phase in period described in the Introduction section is too short for transmission facilities rated above 300 kV. Approval and permitting of EHV transmission lines is extremely difficult and time consuming in most parts of the Eastern Interconnection. The phrase any material changes used in requirement R.2.6.2 will effectively cause all Planning Authorities to run all studies every year regardless of minor changes in the model. The overwhelming majority of PAs use a 10 year set of planning models developed annually by Regions or Subregions. These annual sets of planning models will always have some changes. The annual study requirement is especially problematic for Stability and Short circuit studies that require much more engineering time to complete and are mush less likely to have results impacted by minor model changes such as different load forecasts. Uncertainty with audit review of technical rationale documentation will serve to focus Transmission Planning engineering resources on short term compliance to an extent that is counter productive. Requirement 2.5 represents a significant expansion of Stability Studies into the Long Term horizon. In many cases the stability issue in long term scenarios will be with the response of new generating plants to fault scenarios such as a breaker failure event. The protection upgrades needed to mitigate performance issues are easily

Voter	Entity	Segment	Vote	Comment
				accomplished in the short term. The uncertainty of compliance judgement of rationale documentation will force a tremendous amount of unnecessary study work. It is recommend Requirement 2.5 be removed. We concur with the SDT's opinion expressed in the most recent consideration of comments that the individual component level evaluation of protection systems and redundancy requirements should be covered under the PRC standards and that the intent of the protection failure contingencies specified in Table 1 is to simulation the failure of a single protection scheme. The event description for the P5 contingency was revised in draft 5 but it continues to reflect a range of protection component failures that greatly exceed the intent of the SDT. The term Protection System is in direct conflict with the intent of the SDT, as it is defined in the Glossary to include components such as station batteries. The term Protection System should be replaced with Protection Scheme in Table 1. Requirement 4.3.1 can be interpreted to require dynamic simulation analysis of multiple fault event scenarios for transmission lines with high speed reclosing enabled. This additional analysis may be advisable for certain rare special situations but is unnecessary and burdensome as a general requirement for transmission planning contingency analysis. As such, requirement 4.3.1 will discourage application of high speed reclosing. This would be an unfortunate outcome given the benefits of high speed reclosing both for transmission reliability and customer power quality. It is recommended that 4.3.1 be reworded as follows; Simulate the operation of Protection Systems and other automatic controls as they would be expected for each contingency. The SDT has indicated in their responses to previous comments on requirement R4.3.3 that generic relay models could be used for screening purposes. While we agree with this as a practical method, the language of R4.3.3 could be interpreted to require explicit modeling of all protection and controls which is neither practicable nor an effective use of engineering resources. It is recommended that R4.3.3 be deleted.

Response: Based on your comment and those of others, the SDT has revised the definition of Year One.

> **Year One:** The first twelve month period that a Planning Coordinator or a Transmission Planner is responsible for assessing. For the Planning Assessment started in a given calendar year, Year One must include the forecasted peak Load period for one of the following two calendar years. For example, if a Planning Assessment was started in 2011, then Year One must include the forecasted peak Load period for either 2012 or 2013.

The SDT has added footnote #12 to P1, P2-1, and P3 to address your and others concerns in this area.

> 12. Note: Non-Consequential Load Loss is being decided in Project 2010-11. When that project is finalized, the resolution will be copied here.

Material change is system specific and difficult to define on a continent-wide basis and is left to engineering judgment with a documented technical rationale as

Voter	Entity	Segment	Vote	Comment

stated in the requirement. No change made.

The SDT has clarified the requirement to address your concern.

> **Requirement R2, part 2.5 -** The Long-Term Transmission Planning Horizon portion of the Stability analysis shall be assessed to address the impact of proposed material generation additions or changes in that timeframe and be supported by current or past studies as qualified in Requirement R2, part2.6. The technical rationale for determining material changes shall be documented.

The SDT has changed the text for the P5 event as a result of your (and others) comments to address these concerns.

> **P5**. Delayed Fault Clearing due to the failure of a relay[13] protecting the Faulted element to operate as designed, for a Fault on one of the following:
>
> **13**. Applies to the following relay functions or types: pilot (#85), distance (#21), differential (#87), current (#50, 51, and 67), voltage (#27 & 59), directional (#32, & 67), and tripping (#86, & 94).

The SDT has revised Requirement R4, part 4.3.1, bullet #3 to address this concern.

> **Requirement R4, part 4.3.1 -** Simulate the removal of all elements that the Protection System and other automatic controls are expected to disconnect for each Contingency without operator intervention. The analyses shall include the impact of subsequent:
>
> - Successful high speed reclosing and unsuccessful high speed reclosing into a Fault.
> - Tripping of generators where simulations show generator bus voltages or high side of the GSU voltages are less than known or assumed generator low voltage ride through capability. Include in the assessment any assumptions made.
> - Tripping of Transmission lines and transformers where transient swings cause Protection System operation based on generic or actual relay models.

4.3.3 - The SDT has revised Requirement R4, part 4.3.1, bullet #3 to address this concern.

> **Requirement R4, part 4.3.1 -** Simulate the removal of all elements that the Protection System and other automatic controls are expected to disconnect for each Contingency without operator intervention. The analyses shall include the impact of subsequent:
>
> - Successful high speed reclosing and unsuccessful high speed reclosing into a Fault.
> - Tripping of generators where simulations show generator bus voltages or high side of the GSU voltages are less than known or assumed generator low voltage ride through capability. Include in the assessment any assumptions made.
> - Tripping of Transmission lines and transformers where transient swings cause Protection System operation based on generic or actual relay models.

Voter	Entity	Segment	Vote	Comment
Thomas W. Richards	Fort Pierce Utilities Authority	4	Negative	FPUA believes that 5 years is not enough time in many circumstances to build significant new transmission lines. Seven years is a more appropriate lead time for the implementation plan / effective date. FPUA believes that requirement 2.1.5 on spare equipment strategy is discriminatory for smaller entities. For many smaller entities, having a spare transformer is not a practical solution and makes far less sense and has significantly more customer rate impacts than for a larger utility. Order 693 states at Paragraph 1725: "... the Commission directs the ERO to modify the planning Reliability Standards to require the assessment of planned outages consistent with the entity's spare equipment strategy". The standard oversteps this direction by not including a consideration of planned outages versus forced outages in requirement 2.1.5, in other words, if an entity has no plans for a long term outage of a transformer, it should be excluded from the assessment of 2.1.5. Such a condition would allow an entity to assess things like gas in oil analysis to predict when a long term outage might be planned, and the flexibility between start and end dates of that planned outage. Requirement 3.3.3 as written would require modeling of nearly every phase distance relay, especially when studying extreme events. The requirement ought to have the flexibility afforded in 3.3.2 where the planner can use a conservative assumption (e.g., the proposed curves of PRC-024) for relay loadability (e.g., the requirements of PRC-023). Requirement 4.3.1 would also require modeling of nearly every phase distance relay in the Interconnection, again because it applies to extreme events and we will not know ahead of time where the power swings will traverse distance relay characteristics. FPUA agrees with Ameren's concerns about the ability of the programs to actually be able to model this requirement and FPUA fears that we are setting ourselves up for failure. We suppose that "generic" relays could be modeled to observe what distance relay characteristics are actually crossed by power swings and then, for that simulation, go back and individually model the actual relays for that specific simulation, but, that is a labor intensive process, not to mention the level of effort that would be required to maintain an interconnection wide database of relay settings. FPUA believes that the SDT ought to evaluate the perceived increase in accuracy that is intended with these requirements. It is FPUA's belief that the expected increase in accuracy is lost when considering other simulation inaccuracies that we really cannot improve (e.g., load modeling, load level modeled, dispatch modeled, etc., versus what would happen in an actual event) until much more work is done on improving our understanding of dynamic load behavior, benchmarking the model to actual system events, and possibly improvements on the ability to perform "real-time" stability analyses so that we have more practical operating experience to insert into our planning processes. Let's be practical in understanding the level of accuracy we can reasonably achieve in our simulations and model in accordance with that level of accuracy.

Voter	Entity	Segment	Vote	Comment
Response: The SDT has changed the majority of the implementation timeframe from 60 to 84 months as per your (and others') suggestion. The SDT has clarified the requirement based on your comments and those of others. **Requirement R2, part 2.1.5** - When an entity's spare equipment strategy could result in the unavailability of major Transmission equipment that has a lead time of one year or more (such as a transformer), the impact of this possible unavailability on System performance shall be studied. The studies shall be performed for the P0, P1, and P2 categories identified in Table 1 with the conditions that the System is expected to experience during the possible unavailability of the long lead time equipment The SDT agrees that a planner should be able to utilize conservative assumptions and screening methods and doesn't believe that there is anything in the requirement that precludes an entity from doing so. No change made. The SDT has revised Requirement R4, part 4.3.1, bullet #3 to address this concern. **Requirement R4, part 4.3.1 -** Simulate the removal of all elements that the Protection System and other automatic controls are expected to disconnect for each Contingency without operator intervention. The analyses shall include the impact of subsequent: • Successful high speed reclosing and unsuccessful high speed reclosing into a Fault. • Tripping of generators where simulations show generator bus voltages or high side of the GSU voltages are less than known or assumed generator low voltage ride through capability. Include in the assessment any assumptions made. • Tripping of Transmission lines and transformers where transient swings cause Protection System operation based on generic or actual relay models.				
Harold Taylor, II	Georgia Transmission Corporation	1	Negative	Georgia Transmission Corporation (GTC) supports the efforts of the study team and believes that their efforts to improve the Standard are moving in the right direction. However, we have identified the following concerns which prevent us from voting "affirmative". 1. GTC echoes ATC's concerns with the use of the word "control" in R2.7.3. (ref. ATC email; From: Shaver, Jason To: Gilbert, Don C. Manager, Electric System Planning ; bp-2006-02_ATFNSDT_TPL_in@nerc.com Sent: Wed Feb 24 09:43:11 2010 Subject: RE: Comments on TPL-001-1, Project 2006-02) An auditor could identify many things that may reasonably be within the "control" of a TP or PC, that are not covered by NERC standards or a TP / PC's process, procedures or criteria. This wide area of discretion leaves entities open to findings of possible non-compliance based solely on an auditor's perception of what he or she believes should be in the TP / PC's control. In addition, the concept of "control" must be limited to an entity's compliance obligation as a Transmission Planner and/or Planning Coordinator. In other words, an entity must be allowed the ability to identify situations which fall under its "control" as a Transmission Owner, Transmission Operator, Generator Owner or Generator Operator etc. but is beyond the responsibility of its

Voter	Entity	Segment	Vote	Comment
				Transmission Planner or Planning Coordinator functions. 2. R2.7.2 - "include actions to resolve performance deficiencies identified in multiple sensitivity studies" - Mitigation plans should not be required for deficiencies found in multiple sensitivity studies because the conditions in some sensitivity studies are more extreme and less likely than base case conditions. Some of the sensitivity study conditions are not credible or plausible enough to warrant the implementation of mitigation measures. It is not clear if the interpretation of multiple studies is more than one or a majority of the number that were studied. 3. Throughout the Standard there are circular references that make the interpretation confusing. We recommend that all references should refer back to previous sections and not to future sections, thereby avoiding circular references. 4. We disagree with the proposed definition of Year One. Year One should be the planning window that begins 12-18 months from the start of the calendar year, and not from the end of the calendar year. This would require minimal adjustments to the ERAG MMWG model building process. The proposed definition would force additional models to be built by the MMWG. 5. We agree with others that the timeframe of 60-month (5 year) for implementing Corrective Action Plans (CAP), is insufficient. We believe that the implementation timeframe must be extended to seven (7) years. GTC is aware of Requirement 2.7.3, which covers situations that arise beyond the control of the Transmission Planner (TP) or Planning Coordinator (PC), but believes that the proposed language is ambiguous. 6. We have concerns for including induction motor representations in the load models without any study or bench-marking activities to meet the requirements of R2.4.1. This information should be supplied by the LSE as part of the MOD standard. We understand that the proposed standard will accept an aggregate system load model which represents the overall dynamic behavior of the load to relieve the burden of trying to develop specific induction motor load representation at each load bus. However this modeled system response will be considerably different compared to the actual system response which will open up the industry to unwarranted scrutiny and possible compliance violation investigations. 7. We disagree with the inclusion of low voltage ride-through in requirement R3.3.2. Low voltage ride-through is a dynamic modeling issue as correctly included in requirement R4.3.2. 8. "EHV" and "HV" need to be defined in the NERC Glossary. 9. Requirement R2.4.2 needs to be better defined. It is not clear if this requirement is meant to demonstrate acceptable system performance during maintenance outages over the daily peak load

Voter	Entity	Segment	Vote	Comment
				periods of the off-peak season or intended to address light-load issues like over-voltages and frequency deviations. 10. A better definition for Consequential Load Loss is needed. The Non-Consequential Load Loss definition conflicts with the Consequential Load Loss definition. The Response of Voltage Sensitive Load exception under the Non-Consequential Load definition is a circular reference. It is not clear whether Voltage Sensitive Load is Consequential Load Loss or Non-Consequential Load Loss. 11. It is not clear if Consequential Load Loss is intended to be limited to: a) Load between two open (breaker/switches) protective devices and b) Protective devices (breakers/switches) for radial load. 12. Requirement R1.1.5 states that the system model shall represent "Known commitments for Firm Transmission Service and Interchange". GTC requests clarification of how to represent "Known commitments" whose collective magnitude can exceed the Load requirements.

Response: 1. If an entity can demonstrate that it has made a best faith effort to implement the planned solution then there should not be a concern. The wording of the requirement allows an entity this flexibility.

2. Requirement R2, part 2.7.2 already states that an entity must supply the rationale for when actions were not necessary so the SDT believes that your concerns have already been addressed. No change made.

3. The SDT has made every attempt to make the standard as easy to follow as possible and believes that all references cited in the standard are correct. No change made.

4. Based on your comment and those of others, the SDT has revised the definition of Year One.

> **Year One:** The first twelve month period that a Planning Coordinator or a Transmission Planner is responsible for assessing. For the Planning Assessment started in a given calendar year, Year One must include the forecasted peak Load period for one of the following two calendar years. For example, if a Planning Assessment was started in 2011, then Year One must include the forecasted peak Load period for either 2012 or 2013.

5. The SDT has changed the majority of the implementation timeframe from 60 to 84 months as per your (and others') suggestion. Since problems may not be seen until after the assessments are completed and there is a 24 month implementation for assessments, the total time for items P2-1, P2-2 and P2-3 (above 300 kV), P3-1 through P3-5, P4-1 through P4-5 (above 300 kV), and P5 (above 300 KV) has been increased to 84 months. P1-2 and P1-3 were not increased since they are already being covered by the implementation plan for Project 2010-11: TPL Table 1 Order. Requirement R2, part 2.7.3 - If an entity can demonstrate that they have made a best faith effort to implement the planned solution then there should not be a concern. The wording of the requirement allows an entity this flexibility.

6. The SDT does not disagree that the Load Serving Entity may provide the initial information but someone needs to be responsible for adapting the model accordingly and that entity has to be the Transmission Planner or Planning Coordinator. No change made.

7. The SDT voltage ride through is not confined to the dynamic period. There are protection requirements that could result in generator tripping and that must be

Voter	Entity	Segment	Vote	Comment
considered in the steady-state analysis. The SDT has clarified the wording of the requirement. **Requirement R3, part 3.3.1 -** Simulate the removal of all elements that the Protection System and other automatic controls are expected to disconnect for each Contingency without operator intervention. The analyses shall include the impact of subsequent: • Tripping of generators where simulations show generator bus voltages or high side of the Generation Step Up (GSU) voltages are less than known or assumed minimum generator steady state or ride through voltage limitations. Include in the assessment any assumptions made. • Tripping of Transmission elements where relay loadability limits are exceeded. 8. The EHV/HV differentiation is not meant to be a definition in that it only applies to this standard. No change made. 9. The requirement was intended to cover all conditions that could occur during Off-Peak periods. No change made. 10. The definitions are not in conflict as the definition of Non-Consequential Load Loss specifically states that it doesn't include Consequential Load Loss. The response of Load to voltage is not classified as Consequential or Non-Consequential Load Loss. This standard articulates how voltage sensitive Load should be treated during different time periods of a simulation. No change made. 11. Both examples provided are Consequential Load Loss per the definition. 12. The SDT does not believe that a continent-wide standard should proscribe a single approach. Requirement R1 states that an entity must document its assumptions. No change made.				
Gordon Pietsch	Great River Energy	1	Negative	GRE recommends the following revision to the wording in subrequirement 2.5: "…the impact of proposed generation additions that have made a commitment to interconnect with the Bulk Electric System…" In addition, it appears that the drafting team has inadvertently included additional compliance requirements in the language of Table 1. The net result of this is that these requirements are effectively buried in the Table 1 language. GRE does not take exception to these additional requirements but believes that they should be included in the Requirements section of the Standard. Having the Table 1 language written as it is presents additional risks for non-compliance that would not otherwise be there if these requirements would be included in the Requirements section.
Response: The SDT has clarified this requirement based on industry comments. **Requirement R2, part 2.5 -** The Long-Term Transmission Planning Horizon portion of the Stability analysis shall be assessed to address the impact of proposed material generation additions or changes in that timeframe and be supported by current or past studies as qualified in Requirement R2, part2.6. The technical rationale for determining material changes shall be documented.				

Voter	Entity	Segment	Vote	Comment
Without any specific comments to address, the SDT is unable to further address your concerns. No change made.				
Jacquie Smith	ReliabilityFirst Corporation	10	Negative	In R1.1.6 is OR the proper desciption of resources? Shouldn't this be AND? Resources are both supply AND demand side. Is R4.1.2 too stringent. At the least, shouldn't there be an exception for Special Protection Systems and Remedial Action Schemes to trip for apparent impedance swings? In 4.3.1 shouldn't the analysis be for both successful high speed reclosing and for unsuccessful high speed reclosing, (AND instead of OR) In Measure 8, the mixture of OR and AND is confusing. As presently written, as long as no entity makes a written request for the information they pass the test. Thus, as long as your neighbors do not complain about not receiving the information an entity is compliant. Better wording would be: The responsible entity failed to distribute the results of its Planning Assessment to one of its adjacent Transmission Planners, or one of its adjacent Planning Coordinators, or to one functional entity ..... The responsible entity failed to distribute the results of its Planning Assessment to two or more of its adjacent Transmission Planners, adjacent Planning Coordinators, functional entity ..... Also, I think failure to distribute results is more severe than failing to respond to comments. Failing to give their neighbors an opportunity to comment is less severe than failing to acknowledge comments. I presume that the documented response to comments can be nothing more than "Thank you for your comments." All of the above are minor compared to this next problem. (I believe this needs to be addressed before we can vote yes.) The level of detail of Planning Assessment results is missing from the requirements. Is a message to your neighbors stating that you have performed a Planning Assessment and everything is OK, enough to meet the requirement, or does it need to be more detailed? The minimum contents of the Planning Assessment results shared with Transmission Planners, Planning Authorities, and other functional entities needs to be clearly stated. Also, the RRO is not a functional entity. As written, can this standard be used as justification for not sending detailed Reliability Assessment information to the ReliabilityFirst? Would requiring sharing with Stakeholders with a reliability need be better than limiting the required sharing to functional entities?
Response: The SDT believes that ‘or’ is appropriate. This allows for an entity to model supply or demand or both as appropriate. No change made. Requirement R4, part 4.1.2, deals with a single generator pulling out of synchronism. The situation you described is a system Stability issue and is considered an				

Voter	Entity	Segment	Vote	Comment

application for an SPS which is allowed by the standard. No change made.

The SDT has clarified the language of Requirement 4, part 4.3.1, bullet #1 to address your concerns and those of others.

> **Requirement R4, part 4.3.1 -** Simulate the removal of all elements that the Protection System and other automatic controls are expected to disconnect for each Contingency without operator intervention. The analyses shall include the impact of subsequent:
>
> - Successful high speed reclosing and unsuccessful high speed reclosing into a Fault.
> - Tripping of generators where simulations show generator bus voltages or high side of the GSU voltages are less than known or assumed generator low voltage ride through capability. Include in the assessment any assumptions made.
> - Tripping of Transmission lines and transformers where transient swings cause Protection System operation based on generic or actual relay models.

Measure M8 had a typo which has been corrected. The remainder of the comment seems to be directed to VSLs and the SDT reviewed the VSLs and has made a clarifying change.

> **M8**. Each Planning Coordinator and Transmission Planner shall provide evidence, such as email notices, documentation of updated web pages, postal receipts showing recipient and date; or a demonstration of a public posting, that it has distributed its Planning Assessment results to adjacent Planning Coordinators, adjacent Transmission Planners, and any functional entity who has indicated a reliability need and that functional entity has provided a documented response to comments received on Planning Assessment results within 90 calendar days of receipt of those comments in accordance with Requirement R8.

R8 VSL	The responsible entity failed to distribute the results of its Planning Assessment to one of its adjacent Transmission Planners, one adjacent Planning Coordinator, or to one functional entity that has a reliability related need and that has submitted a written request for the information, respectively in accordance with Requirement R8.	N/A	The responsible entity failed to distribute the results of its Planning Assessment to more than one of its adjacent Transmission Planners, adjacent Planning Coordinators, or functional entities that have a reliability related need and that have submitted a written request for the information, respectively in accordance with Requirement R8.	The responsible entity failed to provide a documented response to a recipient of the Planning Assessment results who provided documented comments on the results within 90 calendar days of receipt of those comments in accordance with Requirement R8.

The definition of Planning Assessment details what must be exchanged. No change made.

Voter	Entity	Segment	Vote	Comment
Any functional entity such as a Regional Entity or Reliability Assurer would qualify which would allow RFC to get the information. No change made.				
Kathleen Goodman	ISO New England, Inc.	2	Negative	ISO New England is submitting a negative vote on the TPL-001 standard, because: 1. Section 2 of the standard requires annual assessment of the system regardless of whether system conditions are essentially unchanged from year to year. This creates unnecessary study work and must be changed in order for ISO NE to support the standard. 2. In Table 1 - Steady State & Stability Performance Planning Events, Category P5 wording for the EHV contingency continues to call for no loss of load in the event of the loss of a single protection system. This requirement as currently worded goes well beyond the intent of the Standard Committee as stated in response to comments as follows: "A Protection System component failure (i.e., battery) that removes multiple Protection System schemes is beyond the P5 planning event". It is ISO New England's opinion that similar language to the comment response should be incorporated into this requirement. 3. ISO New England has additional reservations about the standard that should be addressed in subsequent revisions however items 1 and 2 here must be addressed for ISO New England to support the standard.

Response: 1. The intent of the SDT wasn't that annual studies are required but that an annual Planning Assessment is required. However, the SDT agrees that the words may have been somewhat confusing. Therefore, the SDT has clarified the wording of Requirement R2 and part 2.1.

> **Requirement R2** - Each Transmission Planner and Planning Coordinator shall prepare an annual Planning Assessment of its portion of the BES. This Planning Assessment shall use current or qualified past studies, document assumptions, summarize documented results, and cover steady state analyses, short circuit analyses, and Stability analyses.
>
> **Requirement R2, part 2.1 -** The Near-Term Transmission Planning Horizon portion of the steady state analysis shall be assessed annually and be supported by current annual studies or qualified past studies as indicated in Requirement R2, part 2.6, as follows:

2. The SDT has changed the text for the P5 event as a result of your (and others) comments to address these concerns.

> **P5**. Delayed Fault Clearing due to the failure of a relay[13] protecting the Faulted element to operate as designed, for a Fault on one of the following:
>
> **13**. Applies to the following relay functions or types: pilot (#85), distance (#21), differential (#87), current (#50, 51, and 67), voltage (#27 & 59), directional (#32, & 67), and tripping (#86, & 94).

3. Without any specific comments to address, the SDT is unable to further address your concerns at this time. No change made.

Voter	Entity	Segment	Vote	Comment
Brian Conroy	Central Maine Power Company	1	Negative	Issues with TPL-001-1 draft 5 in ballot: R 1 & 2 - There is insufficient direction/specification regarding base case development and sensitivity testing. Only "known outage(s) of generation" is specified. R2.1.1 - Year One or year two are operating time frame studies. Year five, particularly with additional load from load growth, is appropriate for system planning. There should not be a requirement for any more than one short-term and one long-term steady-state assessment. 2.1.5 - The 'spare equipment strategy' requirement effectively amounts to a N-1-1 analysis, but without the system adjustment between contingencies. A N-1-1 analysis should be sufficient. R2 - An annual assessment of the system is required regardless of whether system conditions are essentially unchanged from year to year. Note that R2.6 is only for 'support' and are 'supplementation.' This creates unnecessary study work and must be changed in order for ISO NE to support the standard. R2.4.1 - The dynamic load model must consider the behavior of induction motor Loads in the stability assessment. The behavior of customers' induction motor loads is not known. Table 1, Category P5, EHV - loss of load in the event of a fault plus the loss of a protection system, should be allowed. This requirement as currently worded goes well beyond the intent of the Standard Committee as stated in response to comments as follows: "A Protection System component failure (i.e., battery) that removes multiple Protection System schemes is beyond the P5 planning event". The draft standard is too prescriptive in some areas and too open to various interpretations in others.

Response: System normal, or P0, is the starting system condition for the projected study conditions per the model developed in accordance with Requirement R1. Requirement R1 contains more than just 'known outages of generation' that need to be considered. The SDT has adjusted Requirement R1 to provide this clarity. The SDT believes that sufficient direction on sensitivities is in the requirement but the SDT has made a slight clarifying change to the requirement.

> **Requirement R1 -** Each Transmission Planner and Planning Coordinator shall maintain System models within its respective area for performing the studies needed to complete its Planning Assessment. The models shall use the latest data consistent with that provided in accordance with the MOD-010 and MOD-012 standards, supplemented by other sources as needed, including items represented in the Corrective Action Plan, and shall represent projected System conditions. This establishes the normal system condition in Table 1.

The SDT has changed the definition of Year One to more clearly show the SDT's intent. The SDT believes that two near-term studies are necessary in order to calibrate the planning assumptions against operations (Year One or year two) and to provide an additional data point for interpolation (Year One or year two and

Voter	Entity	Segment	Vote	Comment
year five). **Year One:** The first twelve month period that a Planning Coordinator or a Transmission Planner is responsible for assessing. For the Planning Assessment started in a given calendar year, Year One must include the forecasted peak Load period for one of the following two calendar years. For example, if a Planning Assessment was started in 2011, then Year One must include the forecasted peak Load period for either 2012 or 2013. The SDT has clarified the requirement based on your comments and those of others. **Requirement R2, part 2.1.5** - When an entity's spare equipment strategy could result in the unavailability of major Transmission equipment that has a lead time of one year or more (such as a transformer), the impact of this possible unavailability on System performance shall be studied. The studies shall be performed for the P0, P1, and P2 categories identified in Table 1 with the conditions that the System is expected to experience during the possible unavailability of the long lead time equipment An annual Planning Assessment is required but it can be supported by current or past studies. The SDT has clarified Requirement R2, part 2.1 accordingly. **Requirement R2, part 2.1 -** The Near-Term Transmission Planning Horizon portion of the steady state analysis shall be assessed annually and be supported by current annual studies or qualified past studies as indicated in Requirement R2, part 2.6, as follows: The SDT has changed Requirement R2, part 2.1 as indicated above to address your concern. 2.4.1 The standard permits an aggregate model assumption that can be applied for a given system that is not substation specific. No change made. The SDT disagrees that Non-Consequential Load Loss should be allowed for EHV. The SDT feels that it was appropriate to raise the bar on situations that would impact the reliability and performance of the System and considered above 300 kV as the backbone of the System and thus needs to be extremely reliable and was an appropriate place for raising of the bar. The SDT has changed the text for the P5 event as a result of comments. **P5**. Delayed Fault Clearing due to the failure of a relay[13] protecting the Faulted element to operate as designed, for a Fault on one of the following: **13**. Applies to the following relay functions or types: pilot (#85), distance (#21), differential (#87), current (#50, 51, and 67), voltage (#27 & 59), directional (#32, & 67), and tripping (#86, & 94).				

Voter	Entity	Segment	Vote	Comment
Lorees Tadros	Omaha Public Power District	1	Negative	It's unclear what the intent of the SDT was in Requirement R6, especially when R6 is considered in conjunction with Measurement M6. R6 includes the phrase "for conditions such as Cascading, voltage instability, or uncontrolled islanding", while M6 does not. R6 and M6 should use parallel language, similar to the way R5 and M5 use parallel language. Additionally, why is "System instability" mentioned in R6 for conditions such as Cascading, voltage instability, or uncontrolled islanding, when in Note "a" at the top of Table 1, the requirement that Cascading, voltage instability, and uncontrolled islanding not occur applies to both steady-state and stability analysis? In Note "f" at the top of Table 1, the word "applicable" was inserted in front of the term "Facility Ratings". The word "applicable" is unnecessary and should be struck. Inclusion of it could lead to certain Planning Coordinators and Transmission Planners interpreting it in ways that were never intended by the SDT. The word "applicable" should also be struck from Footnote 9 of Table 1. A reference to Footnote 9 was added to each occurrence of the word "No" in the second-to-last column of Table 1. This is confusing, because a "No" in this column means that interruption of firm transmission service is not allowed, while Footnote 9 says that curtailment of firm transmission service is allowed. This needs to be clarified.

Response: The SDT agrees and has revised the wording accordingly.

> **M6.** Each Transmission Planner and Planning Coordinator shall provide evidence, such as electronic or hard copies of documentation specifying any criteria or methodology used in the analysis to identify System instability for conditions such as Cascading, voltage instability, or uncontrolled islanding that was utilized in preparing the Planning Assessment in accordance with Requirement R6.

Requirement R6 is documentation for criteria and methodology for risk exposure to those items. The SDT does not believe it is in conflict with header note 'a'. This is parallel to using thermal ratings to determine if lines become overloaded during the analysis. No change made.

The word 'applicable' is correct as ratings vary over time and the standard must accommodate this situation. No change made.

As a general rule, curtailment is not allowed. The footnote sets out exceptions to that as long as the conditions in the footnote are met. The SDT believes that this is the proper method to present the concept. No change made.

Voter	Entity	Segment	Vote	Comment
Garry Baker	JEA	3	Negative	JEA is concerned that there are some limited prudent cases where consumers, local jurisdictions, and state jurisdictions may find it prudent to plan on some Non-Consequential Load Loss in order to defer building transmission infrastructure for the overall benefit of the consumer. Therefore, JEA proposes the addition to the standard that allows the use of Non-Consequential Load Loss for local area planning.
Brad Chase	Orlando Utilities Commission	1	Negative	OUC appreciates that hard work of the STD and of the industry in reviewing and commenting on these standards. The STD has worked hard to try to address the concerns of the industry. OUC is voting against these standards. The proposed standard raise the bar in terms of study and performance requirements, an increase that will result in a non trivial increase in costs for utilities to meet the standards. The change in the standard did address some ambiguities in the old standard, but also introduced some new ones. Reviewing the new standard against the old OUC finds that our cost and that of our neighbors will increase to meet these standards. However OUC does not believe there will be a real increase in reliability on either the bulk system or at the individual user level due to these increased costs. In the current environment the direction from our customers is to keep rates as low as possible, and from our regulatory agency it is to have as little environmental impact as possible. The customers and regulatory agency do look at outages, but transmission is very rarely a contributor to those outages and funds expended can be better spent elsewhere, like on the distribution system or hurricane hardening, then on studying and constructing redundant transmission facilities that provide little to no increase in the end user's reliability. The standard also reduces the range of circumstances where non-consequential load loss is acceptable. OUC does not generally rely on consequential load loss for these circumstances, but this is a choice made based on feedback from our customers and local regulatory authorities. Consequential load loss, when confined to a limited area, is not a Bulk Electric System reliability issue. It is an issue best addressed locally where the cost in terms of capital facilities, condemnation, environmental impacts, probability of event and severity of event can be evaluated and a decision made that addresses these issues. A miniscule decrease in the risk of an outage would often be desirable to the community due to the subsequent rate increase and the impact of constructing power lines through their wetlands, scenic and urban areas. Since such an outage is not even noticeable at a regional scale, the choice should be left to those impacted, not mandated by NERC.
Richard Kinas	Orlando Utilities Commission	5	Negative	
Ballard Keith Mutters	Orlando Utilities Commission	3	Negative	
Kimberly J. Jones	North Carolina Utilities Commission	9	Negative	The NC Utilities Commission is concerned that the requirement prohibiting loss of non-consequential load for events in Table 1 of TPL-001-1 is an inappropriate overreach into service issues that are more appropriately addressed by state regulatory commissions. This requirement does not provide any benefit to reliability of the bulk electric system and could undermine state efforts to balance

Voter	Entity	Segment	Vote	Comment
				reliability issues with cost of service issues. Requiring remediation by a date certain could frustrate the coordinated siting of new lines with other planned infrastructure upgrades such as highways or bridges. The standard should continue to allow Transmission Planners to use discretion regarding loss of non-consequential load, understanding that state commissions are positioned to force electric utilities to address service quality issues on an expedited basis, should it be necessary and in the public interest.
Response: The SDT has added footnote #12 to P1, P2-1, and P3 to address your and others concerns in this area. 12. Note: Non-Consequential Load Loss is being decided in Project 2010-11. When that project is finalized, the resolution will be copied here.				
Mike Laney	Luminant Generation Company LLC	5	Negative	Luminant supports the concept of a more robust transmission planning criteria as described in TPL-001-1, but has serious concerns about the timeline being proposed. The 60-month implementation timeframe associated with the elimination of non-consequential load loss does not have any mechanisms to respect the base level of construction activity already underway in the various NERC regions that may materially impact compliance with a 60-month timeline. In ERCOT, the Public Utility Commission of Texas (PUCT) has mandated the construction of over 4,400 circuit miles of transmission within the next five years to support over 18,000 MW of wind generation. The PUCT Competitive Renewable Energy Zones (CREZs) build out plan requires the ERCOT 345 kV transmission network to be expanded by ~51% (in terms of total circuit miles), necessitating complex coordination of transmission clearances for construction of new lines, making it difficult to economically operate in a secure manner. These new CREZ transmission facilities are scheduled for completion by 2014 (i.e., within the next 5 years). The concurrent implementation of TPL-001-01 will compete with the CREZ build-outs and other on-going transmission upgrades needed to support load growth in the ERCOT region, which has historically experienced higher load growth rates than other parts of the country. Given that these major activities (including CREZ) reflect the most aggressive transmission build out plan in the history of ERCOT and that the implementation of TPL-001-1 will only add to that, Luminant is concerned that adding the implementation of TPL-001-1 on top of these activities will not provide adequate clearance windows to economically or reliably implement this plan within the proposed 60-month implementation window. In light of these concerns, Luminant proposes a 120 month implementation timeline of TPL001-1 for the ERCOT region Additionally, Luminant would like to see safeguards added to TPL-001-1 that acknowledge that each NERC region must complete all of the identified transmission upgrades associated with implementation of TPL-001-1 before NERC regions are required to begin operating with this level of security constraints enforced. Given that it is not possible to operate a NERC region any more securely than it is planned to be operated, this type of safeguard may readily apparent, but explicitly

Voter	Entity	Segment	Vote	Comment
				stating it would still be helpful. With the modifications outlined above, Luminant could support TPL-001-1. Thanks for the opportunity to comment.
Response: The SDT has changed the majority of the implementation timeframe from 60 to 84 months as per your (and others') suggestion. Since problems may not be seen until after the assessments are completed and there is a 24 month implementation for assessments, the total time for items P2-1, P2-2 and P2-3 (above 300 kV), P3-1 through P3-5, P4-1 through P4-5 (above 300 kV), and P5 (above 300 KV) has been increased to 84 months. P1-2 and P1-3 were not increased since they are already being covered by the implementation plan for Project 2010-11: TPL Table 1 Order. The SDT has extended the implementation plan as described above and that Requirement R2, part 2.7.3 provides sufficient latitude for entities to accommodate your concern. No change made.				
Terry Harbour	MidAmerican Energy Co.	1	Negative	MidAmerican find P5 confusing. What analysis is required? Does P5 specify the analysis of individual components of a System Protection system, the entire protection system as a whole, or something else? Do the benefits justify the requirement?
Response: The SDT has changed the text for the P5 event as a result of your (and others) comments to address these concerns. **P5**. Delayed Fault Clearing due to the failure of a relay[13] protecting the Faulted element to operate as designed, for a Fault on one of the following: **13**. Applies to the following relay functions or types: pilot (#85), distance (#21), differential (#87), current (#50, 51, and 67), voltage (#27 & 59), directional (#32, & 67), and tripping (#86, & 94).				
John Canavan	NorthWestern Energy	1	Negative	NorthWestern Energy Rationale for our Vote NO: Below are NorthWestern's Comments on TPL-001-1 Draft 5: January 6, 2010: While this document has improved slightly with each successive draft, there are still several flaws that persist that NorthWestern finds to be unacceptable: 1. The definition of a Bus-tie Breaker is vague. As a practical matter any breaker could qualify. 2. The definition of Non-Consequential Load Loss doesn't fit its name. 3. The idea of a Planning Assessment (developed throughout the document) is loose enough that it seems always to be asking the Transmission Planner to "do another comprehensive study anyway just to be sure you won't get sanctioned". There were numerous discussions about this, but the Drafting team has not cleaned up the language on this. The original idea was that a TP whose comprehensive study was not rendered unusable by the developments of a single year could perform an Assessment, and reasonably re-use the results of that study for the following year. The language in R2.1 contains the language: "The Near-Term Transmission Planning Horizon portion of the steady state analysis shall be assessed annually and be supported by the following current studies, supplemented with qualified past studies as indicated in Requirement R2, part 2.6:" This language

Voter	Entity	Segment	Vote	Comment
				convinces any Transmission Planning person that an annual analytical study complete with power flow simulations is required. This requirement is onerous, since there is a significant waste of manpower and resources involved in conducting such a study when for most years a bi-annual study program would clearly be sufficient. NorthWestern considers that this one issue is worthy of a NO vote based on the excessive nature of the requirement. 4. The language in R2.3 requires a short circuit analysis to be conducted annually. As with our comment 3 above, we find this excessive. This level of vigilance is not commensurate with the potential threat of a situation where fault duty could exceed breaker interrupting capability. 5. The stricter requirements in the table for EHV lines certainly "raise the bar" for these facilities. They are also likely to reduce the enthusiasm for building such facilities. The outcome of this may be unintended consequences that are far more onerous to society that the amount of load loss that is avoided by the standard. It is not clear that this addition to the standard is well reasoned. 6. NorthWestern is concerned about the potential for uneven treatment by various auditors as they follow this standard. While there is some risk of this for any standard, we believe the language in this standard is still weak. 7. The 60 month time limit for implementing Corrective Action Plans may be quite unrealistic in the Montana transmission line environment. It really is not clear what is in the Transmission Planner's "control" in this arena. 8. The definition of "year one" is problematic. Presently the WECC does not produce base cases that are well suited to this choice. We would like to encourage the Drafting Team to work to "tighten up" the language in the standard. This particular standard is so important to the general reliability of the transmission system (BES) that it deserves an extra effort at clarity, conciseness, and thoughtful language to achieve truly beneficial practices in the design of the BES. We believe that a "NO" vote is our best recourse to promote this extra effort. We understand that this standard has been a "long time in the making". That is because it is truly a difficult drafting challenge, not because of a poor effort.

Response: 1. The definition has been iterated several times based on industry comments in the past and seems to have been accepted by the overwhelming majority of the industry to date. No change made.

2. The use of non-consequential is in line with the previously used term 'consequential' and doesn't imply that it isn't important. No change made.

3. The intent of the SDT wasn't that annual studies are required but that an annual Planning Assessment is required. However, the SDT agrees that the words may have been somewhat confusing. Therefore, the SDT has clarified the wording of Requirement R2 and part 2.1.

Voter	Entity	Segment	Vote	Comment
				Requirement R2 - Each Transmission Planner and Planning Coordinator shall prepare an annual Planning Assessment of its portion of the BES. This Planning Assessment shall use current or qualified past studies, document assumptions, summarize documented results, and cover steady state analyses, short circuit analyses, and Stability analyses. **Requirement R2, part 2.1 -** The Near-Term Transmission Planning Horizon portion of the steady state analysis shall be assessed annually and be supported by current annual studies or qualified past studies as indicated in Requirement R2, part 2.6, as follows: 4. Past studies are allowed as long as they qualify as per Requirement R2, part 2.6 and that should alleviate your concern. No change made. 5. There are many other factors over and above this standard that will determine what entities build in the future. The SDT and many stakeholders believe that it is important to raise the bar for reliability. No change made. 6. The SDT has made every attempt to make this standard clear, unambiguous, and enforceable. Without any specific comments to address, the SDT is unable to further address your concerns. No change made. 7. The SDT has changed the majority of the implementation timeframe from 60 to 84 months as per your (and others') suggestion. Since problems may not be seen until after the assessments are completed and there is a 24 month implementation for assessments, the total time for items P2-1, P2-2 and P2-3 (above 300 kV), P3-1 through P3-5, P4-1 through P4-5 (above 300 kV), and P5 (above 300 KV) has been increased to 84 months. P1-2 and P1-3 were not increased since they are already being covered by the implementation plan for Project 2010-11: TPL Table 1 Order. 8. Based on your comment and those of others, the SDT has revised the definition of Year One. **Year One:** The first twelve month period that a Planning Coordinator or a Transmission Planner is responsible for assessing. For the Planning Assessment started in a given calendar year, Year One must include the forecasted peak Load period for one of the following two calendar years. For example, if a Planning Assessment was started in 2011, then Year One must include the forecasted peak Load period for either 2012 or 2013.
David H. Boguslawski	Northeast Utilities	1	Negative	NU votes to oppose TPL-001-1 with the following comments: Northeast Utilities (NU) is very appreciative of the effort of the SDT in preparing TPL-001-1. NU believes that this effort has resulted in a new TPL standard that shows improvement over the existing TPL standards. However, there are still some important concerns that NU believes should be addressed prior to the adoption of TPL-001-1. Therefore, in its present state NU can not vote for the acceptance of the draft standard and votes to REJECT the proposed standard (TPL-001-1). NU would like the SDT to re-visit and address the concerns listed below: 1. The use of Non-Consequential Load Loss to mitigate violations arising from certain planning events: NU has objected to this requirement in comments submitted for previous drafts of TPL-001-1. NU believes that Non-Consequential Load Loss should not be considered for P1 to P7 events to achieve the level of reliability needed when planning the electric power system. The amount of load that could be shed is open ended in TPL-001-1 and this will lead to different interpretations which can be detrimental to the stakeholders. To put it simply the standard as currently drafted will lead to

Voter	Entity	Segment	Vote	Comment
				confusion as Transmission Owners, Regional Reliability Organizations, along with state and federal agencies will need to come to agreement on what the standard allows and what it doesn't. Ultimately, a standard that does not have clear measurable criteria will lead to difficulty in developing and obtaining approval for projects to achieve the required level of reliability. If the SDT and NERC believe that allowing the use of Non-Consequential Load Loss for multiple element contingencies (e.g., N-1-1 or P6 planning events) is necessary in achieving system reliability then NERC should specify that the amount should be minimal, such as less than 100 MW. 2. The use of past study reports to satisfy Requirement R2, parts R2.1 and R2.2: The language of Requirement R2, parts R2.1, R2.2 and R2.6 is confusing and will lead to different interpretations from different stakeholders. While Requirements R2.1 and R2.2 indicate that annual studies should be conducted and to be supplemented by past studies, Requirement R2.6 seems to suggest that past studies could be used instead. The SDT's response to NU's comment on this issue supports the assertion that annual studies should always be conducted even if there are no changes in the system conditions and past studies should be used for the years within the assessment period but not called out by the standard. If studies are conducted every year then why the need to use past studies. This creates unnecessary study work and should be changed. 3. Table 1 - Steady State & Stability Performance Planning Events, Category P5 Events: This requirement as currently worded goes well beyond the intent of the Standard Committee as stated in response to comments as follows: "A Protection System component failure (i.e., battery) that removes multiple Protection System schemes is beyond the P5 planning event". It is NU's opinion that similar language to the comment response should be incorporated into this requirement to avoid any confusion. 4. Base case initial conditions: NU believes that a great deal of confusion and uncertainty will be eliminated or reduced if the standard attempts to define the nature of initial base cases that should be used in planning studies. As it stands now this issue is left to interpretation, which can lead to confusion when determining appropriate planning projects to achieve a reliable power system. Depending upon the interpretation of the base case dispatches and the level of interface flows (level of stress) they may reveal reliability violations in the power system. Non-uniformity in developing base cases for an area or region may mask real reliability problems in the system. This is one of the primary weaknesses of the existing TPL standards. 5. Items 1, 2, 3 and 4 are Northeast Utilities primary concerns which should be addressed prior to NU accepting the standard. NU has additional reservations about the standard that should be addressed in subsequent revisions. 6. NU also supports the comments from other transmission owners that 60 months may not be

Voter	Entity	Segment	Vote	Comment
				sufficient to complete construction of transmission facilities.

Response: 1. The SDT has added footnote #12 to P1, P2-1, and P3 to address your and others' concerns in this area.

12. Note: Non-Consequential Load Loss is being decided in Project 2010-11. When that project is finalized, the resolution will be copied here.

2. The intent of the SDT wasn't that annual studies are required but that an annual Planning Assessment is required. However, the SDT agrees that the words may have been somewhat confusing. Therefore, the SDT has clarified the wording of Requirement R2 and part 2.1.

Requirement R2 - Each Transmission Planner and Planning Coordinator shall prepare an annual Planning Assessment of its portion of the BES. This Planning Assessment shall use current or qualified past studies, document assumptions, summarize documented results, and cover steady state analyses, short circuit analyses, and Stability analyses.

Requirement R2, part 2.1 - The Near-Term Transmission Planning Horizon portion of the steady state analysis shall be assessed annually and be supported by current annual studies or qualified past studies as indicated in Requirement R2, part 2.6, as follows:

3. The SDT has changed the text for the P5 event as a result of your (and others') comments to address these concerns.

P5. Delayed Fault Clearing due to the failure of a relay[13] protecting the Faulted element to operate as designed, for a Fault on one of the following:

13. Applies to the following relay functions or types: pilot (#85), distance (#21), differential (#87), current (#50, 51, and 67), voltage (#27 & 59), directional (#32, & 67), and tripping (#86, & 94).

4. The SDT is trying to provide guidance without being overly prescriptive. Projected System conditions as well as the types of sensitivities that need to be studied are described. No change made.

5. Without any specific comments to address, the SDT is unable to further address your concerns. No change made.

6. The SDT has changed the majority of the implementation timeframe from 60 to 84 months as per your (and others') suggestion. ince problems may not be seen until after the assessments are completed and there is a 24 month implementation for assessments, the total time for items P2-1, P2-2 and P2-3 (above 300 kV), P3-1 through P3-5, P4-1 through P4-5 (above 300 kV), and P5 (above 300 KV) has been increased to 84 months. P1-2 and P1-3 were not increased since they are already being covered by the implementation plan for Project 2010-11: TPL Table 1 Order.

Henry G. Masti	New York State Electric & Gas Corp.	1	Negative	NYSEG supports the NYISO comments and also offer: The standard requires that dynamic load models be used that take into account induction motor effects. This information is generally not available and therefore it would be unworkable to develop an accurate model. The standard requires relays be modeled into the dynamic simulation. While standard mho, distance, or reactance distance relay model may exist, manufacturer-specific relay models often do not. Since this modeling is generally not available, it would be unworkable to develop an accurate dynamic model to test relay loadabilitiy.

Voter	Entity	Segment	Vote	Comment
Response: The standard permits an aggregate model assumption that can be applied for a given system that is not substation specific so this is not unworkable. No change made. The SDT has clarified Requirement R4, part 4.3.1, bullet #3 to address your concerns. **Requirement R4, part 4.3.1 -** Simulate the removal of all elements that the Protection System and other automatic controls are expected to disconnect for each Contingency without operator intervention. The analyses shall include the impact of subsequent: • Successful high speed reclosing and unsuccessful high speed reclosing into a Fault. • Tripping of generators where simulations show generator bus voltages or high side of the GSU voltages are less than known or assumed generator low voltage ride through capability. Include in the assessment any assumptions made. • Tripping of Transmission lines and transformers where transient swings cause Protection System operation based on generic or actual relay models.				
Marvin E VanBebber	Oklahoma Gas and Electric Co.	1	Negative	Oklahoma Gas & Electric (OG&E) Comments on Proposed NERC TPL-001-1 1.) OG&E feels that the effective dates of R1 and R7 shall become effective 18 months and not 12 months. Some entities budgeting cycles may not be based on 12 months and expenditures may be required by some to be compliant. 2.) OG&E feels that the effective dates of R2 through R6 shall become effective 30 months and not 24 months. This will allow entities adequate time to budget (personnel & tools), train, and perform the required studies. 3.) As others have mentioned, OG&E would like the 60 months extended to 84 months. 4.) Further examination should be conducted to evaluate the feasibility of performing the stability analysis every two years and not annually. 5.) OG&E has concerns for including induction motor representations in the load models without any study or bench-marking activities to meet the requirements of R2.4.1. 6.) The abbreviations of HV and EHV used in Table 1 shall be defined in the “Definitions of Terms Used in Standard” section. 7.) Although Table 1 has been improved, further work is needed to make Table 1 more intuitive. The notes at the beginning and ending of Table 1 seem awkward within the document.
Response: 1. The SDT believes that 12 months is sufficient. This isn’t a completely new requirement – entities should be doing this work now for the existing TPL				

Voter	Entity	Segment	Vote	Comment
standards. No change made. 2. The SDT believes that 24 months is sufficient. This isn't a completely new requirement – entities should be doing this work now for the existing TPL standards. No change made. 3. The SDT has changed the majority of the implementation timeframe from 60 to 84 months as per your (and others') suggestion. Since problems may not be seen until after the assessments are completed and there is a 24 month implementation for assessments, the total time for items P2-1, P2-2 and P2-3 (above 300 kV), P3-1 through P3-5, P4-1 through P4-5 (above 300 kV), and P5 (above 300 KV) has been increased to 84 months. P1-2 and P1-3 were not increased since they are already being covered by the implementation plan for Project 2010-11: TPL Table 1 Order. 4. The requirement is for an annual assessment and past studies can be used if qualified as per Requirement R2, part 2.6. No change made. 5. The standard permits an aggregate model assumption that can be applied for a given system that is not substation specific. No change made. 6. The EHV/HV differentiation is not meant to be a definition in that it only applies to this standard. No change made. 7. Without any specific comments to address, the SDT is unable to further address your concerns. No change made.				
Mark Sampson	PacifiCorp	1	Negative	PacifiCorp appreciates the diligence and dedication of the Standard Drafting Team and commends the group for their hard work to bring the proposed standard TPL-001-1 to this level. PacifiCorp believes the overall language of the standard has improved to enhance its readability and the language and format of the Tables now provides some improvement in the understanding of acceptable System performance for the various Planning Events. However, inasmuch as the proposed Standard has improved, we cannot support the approval of this document at this time. The following comments and suggestions are provided in support of a no vote on the TPL-001-1 standard as currently proposed proposed. 1) As currently written our Company does not believe that 60 months is a reasonable time period to build transmission facilities to meet the new performance requirements. Building a transmission line in PacifiCorp's 6 state service areas varies significantly in regional and local planning and review process, permitting, siting, legal challenges, routing, and system path rating process can often take more than 5 years to complete from the time the project is authorized. Though requirement R2.7.3 is included to address situations beyond the control of the Transmission Planner, it leaves to the interpretation of the auditor whether the appropriate actions are being taken to resolve the issue that would continue to allow dropping of Non-Consequential Load or curtailment of Firm Transmission Service. Table 1 - Steady State & Stability Performance Planning Events Category P2 (Single Contingency). Category P2 requires responsible entities to study the opening of a line section without a fault. The standard as written states that the opening of this line section will not result in consequential load
John Apperson	PacifiCorp	3	Negative	
Sandra L. Shaffer	PacifiCorp	5	Negative	
Gregory D Maxfield	PacifiCorp	6	Negative	

Voter	Entity	Segment	Vote	Comment
				loss and no voltage or thermal violations will occur on the BES. . This requirement is applicable to EHV (above 300 kV) and HV (100-300 kV) facilities. PacifiCorp believes that this requirement should not be applicable to all HV facilities. From a reliability perspective, a more effective and efficient method would be a bifurcated functional requirement rather than a voltage requirement. In PacifiCorp's system, and in much of the Western Interconnection, a breaker that opens without a fault in the 115/138 kV system almost never has the potential to cause impacts beyond the local area. In most cases this extremely rare event (the unplanned opening of a breaker without a fault) cannot impact the EHV Bulk Electric System. As such, this requirement (P2-1) is not appropriate at the HV voltage levels. A more appropriate requirement for P2-1 would be to require this performance level only for the EHV portion of the BES and the HV facilities that perform a transmission service in addition to local load service. This should not be a requirement for HV facilities that only provide local load service. 2) Table 1-P5 Multiple Contingencies (Fault plus Protection System failure to operate) Normal System. There is a significant change in the system normal performance required for EHV systems from the current performance required in TPL-003 (Category C). This TPL-001-1 version does not allow any Non-Consequential load loss (table 1) or firm Demand (note 9) for EHV systems in the event of protection system failure and delayed clearing. This performance requirement would thus preclude use of existing protection systems that rely on remote clearing of interconnected EHV lines or stations if they provide local load service. As written the standard essentially now requires Category B performance rather than Category C performance for multiple contingencies. It is PacifiCorp's opinion that loss of Non-Consequential load or firm Demand should be allowed for the rare event involving multiple contingencies stated in P5 as long at the load or firm Demand loss is contained and controlled in the local load service area and the event does not impact other interconnected utilities or their loads. 3) Table 1 - Steady State & Stability Performance Planning Events Category P5 (Multiple Contingency (Fault plus Protection System failure to operate). Category P5 requires responsible entities to study the Event titled Failure of a single Protection System that results in Delayed Fault Clearing on one of the following: Generator, Transmission Circuit, Transformer, Shunt Device, or Bus Section. It appears that this requirement is an indication that multiple protection system failure is not allowed under the proposed TPL-001-1. This appears to be a requirement for redundant protection systems for all possible events on all voltage levels of the transmission system. It also appears that this requirement is attempting to define what comprises an adequate protection system. As the draft standard is presently written it appears that multiple protection system failures are not included in this part or any part of the draft TPL-001-1 standard. As written, it is PacifiCorp's view that any multiple protection system failure would be categorized as an Extreme Event under the draft TPL-001-1

Voter	Entity	Segment	Vote	Comment
				standard. PacifiCorp contends that the many and varied issues associated with designing appropriate protection systems should be done in the context of the development of a protection system standard and not in the context of TPL-001-1. In fact, there is currently a proposed standard going through the NERC standards development process which goal is exactly that. If the standards drafting team intends to require responsible entities to have 100% redundant protection systems on all of its BES facilities, PacifiCorp contends that this fact should be stated up front in the standard so that all interested parties may become aware of this requirement and provide informed comment. PacifiCorp believes that it is appropriate to wait until the current protection system redundancy standard under development proceeds through the SAR process and approval system, given that this in an important generic issue that affects the entire industry. Notwithstanding the inappropriateness of raising the protection system issue in the context of a planning standard, PacifiCorp believes that any planning requirement that includes the failure of a single protection system that results in delayed fault clearing must have a very clear definition of the terms "single protection system" and "delayed fault clearing" in or for entities to determine what compliance with the standard requires. The draft TPL-001-1 standard does not have clear definitions of these terms, leaving room for considerable latitude for interpretation by various responsible entities, auditors, and compliance enforcement authorities. Clear, specific, and technically defensible language is needed for these terms. 4) As drafted the standard TPL-001-1 has added requirement 2.1.5 discussing spare equipment and lead times and inclusion in the "Planning Assessment". The standard in this section is not performance based requirement but an activity based requirement as currently stated under R2 2.1.5. PacifiCorp recommends that the standard should be revised and 2.1.5 removed as it does not directly improve the systems performance requirements nor compliance stated in Table 1.

Response: The SDT has changed the majority of the implementation timeframe from 60 to 84 months as per your (and others') suggestion. Since problems may not be seen until after the assessments are completed and there is a 24 month implementation for assessments, the total time for items P2-1, P2-2 and P2-3 (above 300 kV), P3-1 through P3-5, P4-1 through P4-5 (above 300 kV), and P5 (above 300 KV) has been increased to 84 months. P1-2 and P1-3 were not increased since they are already being covered by the implementation plan for Project 2010-11: TPL Table 1 Order. Requirement R2, part 2.7.3 - If an entity can demonstrate that they have made a best faith effort to implement the planned solution then there should not be a concern. The wording of the requirement allows an entity this flexibility.

The SDT believes that the addition of footnote 12 (when it is finalized) will address your concern.

The SDT has added footnote #12 to P1, P2-1, and P3 to address your and others concerns in this area.

12. Note: Non-Consequential Load Loss is being decided in Project 2010-11. When that project is finalized, the resolution will be copied here.

The SDT has changed the text for the P5 event as a result of your (and others) comments to address these concerns.

Voter	Entity	Segment	Vote	Comment
				P5. Delayed Fault Clearing due to the failure of a relay[13] protecting the Faulted element to operate as designed, for a Fault on one of the following: **13**. Applies to the following relay functions or types: pilot (#85), distance (#21), differential (#87), current (#50, 51, and 67), voltage (#27 & 59), directional (#32, & 67), and tripping (#86, & 94). The SDT has clarified the requirement based on your comments and those of others. **Requirement R2, part 2.1.5** - When an entity's spare equipment strategy could result in the unavailability of major Transmission equipment that has a lead time of one year or more (such as a transformer), the impact of this possible unavailability on System performance shall be studied. The studies shall be performed for the P0, P1, and P2 categories identified in Table 1 with the conditions that the System is expected to experience during the possible unavailability of the long lead time equipment
John C. Collins	Platte River Power Authority	1	Negative	Platte River appreciates the efforts and perseverance of the Drafting Team on this important standard. A "no" vote is cast because the following requirements are not clear and have RISKS for different interpretations that could result in non-compliance. (1) Table 1 Planning Events, column for Initial System Condition. Does "Loss of" refer to a planned outage or forced outage? (2) Table 1, Extreme Events, column for Stability. In Stability Event 1, what is the fault type for the first forced outage? (The second forced outage is specified as 3-phase.) (3) Contingency lists required for Planning Events in Table 1. The required scope of contingency analysis for each Category is not clear. P1. Create a list of Contingencies only for the more severe P1 type, or create lists for each of P1-1 through P1-5 types? P2. Create a list of Contingencies only for the more severe P2 type, or create lists for each of P2-1 through P2-4 types? P3. Create a list of Contingencies only for the more severe P3 type, or create lists for each of P3-1 through P3-5 types? P4. Create a list of Contingencies only for the more severe P4 type, or create lists for each of P4-1 through P4-6 types? P5. Create a list of Contingencies only for the more severe P5 type, or create lists for each of P5-1 through P5-5 types? P6. Create a list of Contingencies only for the more severe P6 type, or create lists for each of P6-1-1 through P6-4-4 types, 16 possible combinations? P7. Create a list of Contingencies only for the more severe P7 type, or create lists for each of P7-1 through P7-2 types? (4) Contingency lists required for Extreme Events in Table 1. The required scope of contingency analysis for each Steady State and Stability columns is not clear. Create a list of Contingencies only for the more severe type, or create lists for each of the "such as" types? (5) Table 1, compare footnotes 1, 3, and 5. Does a P4-3 or P5-3 contingency involving an EHV-HV transformer and causing deficiencies on the EHV allow Non-Consequential Load Loss to correct since

Voter	Entity	Segment	Vote	Comment
				the HV is the lowest voltage and override the "No" in the column for Non-Consequential Load Loss Allowed for EHV? (6) What is a "sufficient amount" and how much is a "measurable change" for sensitivity case stressing? See parts 2.1.4 and 2.4.3. (7) Are the actions associated with single vs. multiple sensitivity studies in part 2.7.2 Corrective Action Plans? (8) Are Long-term stability analyses required only if there are generation additions or changes in the long-term horizon? See part 2.5.
Response: 1. Planned outages of six months or more should be incorporated into the P0 condition as per the requirements. The events cited are forced outages. 2. It doesn't matter what type of Fault creates the first outage condition as it is the second outage that is studied. 3. The SDT believes that an entity only needs a list for those types of events that are more severe for your study area. 4. An entity doesn't need a list for each 'such as'. The rationale for those selected must be documented as stated in the requirements. 5. For an outage of an EHV/HV transformer, performance requirements specified as HV must be met. 6. Requirement R2, part 2.1.4 is part of Requirement R2 which mandates that an entity must document all assumptions utilized in the Planning Assessment. No change made. 7. Requirement R2, part 2.7.2 is for multiple sensitivities. Requirement R2, part 2.7 states that Corrective Action Plans are not required for single sensitivities. 8. Yes, it is required only if there are additions or changes in the long term.				
Christopher L de Graffenried	Consolidated Edison Co. of New York	1	Negative	Reword Table 1 Note (i) as follows: The response of voltage sensitive load that is disconnected from the system by end-user equipment associated with an event shall not be used to meet steady state performance requirements Reword Requirement R 1.1.5 as follows: Known commitments for Firm Transmission Service, and, additionally, other types of transactions provided they have been demonstrated to not violate existing reliability constraints
Nickesha P Carrol	Consolidated Edison Co. of New York	6	Negative	
Peter T Yost	Consolidated Edison Co. of New York	3	Negative	

Voter	Entity	Segment	Vote	Comment
Response: The header note is not just for disconnections by end-user equipment but would also cover the natural response of Load for voltage reduction. The suggested wording changes the intent of the SDT. No change made. The SDT believes that the defined term 'Interchange' covers other transfers as described in your comment. No change made.				
Henry Delk, Jr.	SCE&G	1	Negative	SCE&G appreciates the efforts of the Standard Drafting Team and believes this version of the TPL standard has addressed most of the significant issues found in previous versions. However, SCE&G believes there are several significant issues that need modification or further explanation. 1. SCE&G agrees with other submitted comments that the requirement to complete new transmission construction to meet new performance requirements within 60 months is too short. SCE&G believes that 84 months is more reasonable. 2. SCE&G agrees with comments submitted by Duke Energy that the requirement prohibiting loss of non-consequential load for P1, P2.1 and P3 events is an overreach by the standard into local load quality of service issues, does not provide any real benefit to Bulk Electric System (BES) reliability, and may have unintended negative consequences on reliability and service quality. In many instances, it may be in the best interest of all involved parties from an overall cost/benefit point of view to allow loss of non-consequential load. The standard should continue to allow Transmission Planners to use discretion regarding loss of non-consequential load, such that Transmission Planners, customers, and local regulators jointly control the decision making when BES reliability is not an issue. 3. SCE&G believes there are still different interpretations of Consequential and Non-Consequential Load loss and how each should be applied or not applied. The Standard drafting team should provide several examples in its response to these comments showing how to apply and not apply Consequential and Non-Consequential Load Loss. Without clear examples, SCE&G believes many request for interpretation will be submitted to NERC by the industry.
Hubert C. Young	South Carolina Electric & Gas Co.	3	Negative	
Response: The SDT has changed the majority of the implementation timeframe from 60 to 84 months as per your (and others') suggestion. Since problems may not be seen until after the assessments are completed and there is a 24 month implementation for assessments, the total time for items P2-1, P2-2 and P2-3 (above 300 kV), P3-1 through P3-5, P4-1 through P4-5 (above 300 kV), and P5 (above 300 KV) has been increased to 84 months. P1-2 and P1-3 were not increased since they are already being covered by the implementation plan for Project 2010-11: TPL Table 1 Order. The SDT has added footnote #12 to P1, P2-1, and P3 to address your and others concerns in this area. 12. Note: Non-Consequential Load Loss is being decided in Project 2010-11. When that project is finalized, the resolution will be copied here. The SDT has clarified the issue of Non-Consequential Load Loss as shown above. Providing examples here of what is Non-Consequential Load Loss versus				

Voter	Entity	Segment	Vote	Comment
Consequential Load Loss would have no bearing on eventual compliance findings. The words are what matter and the SDT feels that the clarification provided should alleviate your concern.				
Charles H Yeung	Southwest Power Pool	2	Negative	SPP recommends the standards drafting team review the IRC SRC comments submitted in Oct 2009 and reassess those concerns.
Response: The SDT addressed the comments of the IRC SRC in its responses to the last posting which were captured in the Consideration of Comments report. Without any new specific comments to address, the SDT is unable to further address your concerns. No change made.				
James L. Jones	Southwest Transmission Cooperative, Inc.	1	Negative	SWTC Comments: The SDT has done a lot of good work in developing the TPL 001 standard. However, I agree with the comments of others and suggest that another draft should be produced before the standard is sent to a ballot. SWTC forsees a problem with manpower and the cost of studies for small entities such as ourselves. This will be an extra burden and costs that will ultimately be borne by the consumer who is already not very happy lately. In part 2.7.1, remove the second sentence and all bullets. These are not measurable performance criteria. EHV" and "HV" need to be defined because they are not defined in the NERC Glossary. R4.3.2 This is an admirable goal, and we applaud the SDT's vision. However, modeling all Protection Systems may be beyond the capabilities of presently used dynamic modeling tools. The number of impedance and overcurrent relays that would need to be included for lines and transformers would likely overwhelm these programs. We are concerned that the programs in use may not have the capability to model important relay characteristics such as load encroachment or out-of-step operating characteristics. R5 & R6: Shouldn't the Load Serving Entities (LSEs) define system performance criteria instead of the Transmission Planner or the Planning Coordinator? The LSEs have an obligation to their customers and must demonstrate to their regulators that they are providing acceptable system performance and reliability of supply to their customers. The Transmission Planner and Planning Coordinator have less incentive to provide high levels of system performance. Due to regulatory difficulties in getting approvals for transmission system upgrades, there may be a tendency on the part of TPs and TCs to avoid proposing transmission upgrades, letting system performance degrade instead by abandoning traditional planning criteria and defining less stringent standards for themselves. R6 Remove the "for conditions such as ..." list.

Voter	Entity	Segment	Vote	Comment
Response: The SDT has clarified Requirement R2 and part 2.1 to make it clearer that qualified past studies can be utilized. **Requirement R2** - Each Transmission Planner and Planning Coordinator shall prepare an annual Planning Assessment of its portion of the BES. This Planning Assessment shall use current or qualified past studies, document assumptions, summarize documented results, and cover steady state analyses, short circuit analyses, and Stability analyses. **Requirement R2, part 2.1 -** The Near-Term Transmission Planning Horizon portion of the steady state analysis shall be assessed annually and be supported by current annual studies or qualified past studies as indicated in Requirement R2, part 2.6, as follows: The listed items are simply that – a list of actions that would be included. This is an allowable and encouraged format for Reliability Standards. No change made. The EHV/HV differentiation is not meant to be a definition in that it only applies to this standard. No change made. The SDT believes that your comment is for Requirement R4, part 4.3.3. The SDT has modified the wording of this requirement to address your concern. **Requirement R4, part 4.3.1 -** Simulate the removal of all elements that the Protection System and other automatic controls are expected to disconnect for each Contingency without operator intervention. The analyses shall include the impact of subsequent: • Successful high speed reclosing and unsuccessful high speed reclosing into a Fault. • Tripping of generators where simulations show generator bus voltages or high side of the GSU voltages are less than known or assumed generator low voltage ride through capability. Include in the assessment any assumptions made. • Tripping of Transmission lines and transformers where transient swings cause Protection System operation based on generic or actual relay models. These are System requirements for the BES and properly belong to the Planning Coordinator and Transmission Planner. No change made.				
Donald S. Watkins	Bonneville Power Administration	1	Negative	The Bonneville Power Administration (BPA) acknowledges and appreciates the hard work and diligence of the Standards Drafting team on such a large effort. BPA respectfully submits the following comments.

Voter	Entity	Segment	Vote	Comment
Rebecca Berdahl	Bonneville Power Administration	3	Negative	1. Requirement R1.1.2: BPA recommends that system models should only represent outages with a duration of one year or more. The planning horizon should not cover an outage less than one year because there is not adequate time for developing and implementing any necessary mitigation plan. Known outages with duration less than one year should be dealt with in the Operations horizon. In addition, the near term steady state studies represent year one or year two and year five as required by R2.1.1. Therefore it is not consistent with the rest of the standard to require modeling outages less than one year. 2. Requirement R3.5: BPA recommends removing the requirement to evaluate possible actions designed to reduce the likelihood or mitigate the consequences and adverse impacts of the extreme events. o This is more stringent than the existing requirement without providing any increased reliability benefit. The new standard already requires a significant increase of study cases and this additional requirement results in an undue study burden on utilities without adding any benefit. o In addition, Table 1, Extreme Events, should be reduced to a more prudent list of possible events to evaluate risks and consequences. It is obvious that several of the events, especially under item 3 (Wide Area Events), would cause cascading and it is not practical to evaluate possible mitigation plans for such extreme events. 3. Table 1: The category P2 Single Contingency should be removed. o Events P2.2, P2.3 and P2.4 should be moved to category P4 since these events are not single contingencies. P2 is a single contingency category, which by definition takes one system component out of service. Bus section faults and bus-tie breaker faults are multiple contingencies since they are events that take multiple system components out of service. o Event P2.1 “opening of a line section w/o a fault” should not be included in the planning standard. At a minimum Event P2.1 should be moved to Category P1 since it is a single contingency and it should allow Interruption of Firm Transmission Service and Non-Consequential Load Loss for the HV ((<300 kV) BES level. Many of the HV (115-kV) lines have taps that serve loads and are designed to remove all elements that the protection system and other automatic controls are expected to disconnect. This is consistent with Requirement 3.3.1 which states “Simulate the removal of all elements that the Protection System and other automatic controls are expected to disconnect for each Contingency without operator intervention.” Inadvertent opening of one end of an HV line section without a fault almost never has the potential to cause impacts beyond the local area, yet has a low probability of occurrence and would be very costly in some cases to mitigate. 4. Footnote 11: BPA recommends removing the reference to common Right-of-Way. This could be mis-interpreted that a common Right-of-Way longer than 1mile should be planned for under Category
Francis J. Halpin	Bonneville Power Administration	5	Negative	
Brenda S. Anderson	Bonneville Power Administration	6	Negative	

Voter	Entity	Segment	Vote	Comment
				P7. The NERC standards only include common Right-of-Way under extreme events and in this footnote. So, it would be consistent with the rest of the standard to remove this reference from the footnote and possibly make a specific reference in the Extreme Events category where it applies. 5. Requirement R2.4.1: BPA agrees with other commenter's concerns that requiring Load models that consider the behavior of induction motor Loads is premature without adequate development and benchmarking efforts. In addition, specific types of models and data required for analysis should not be mentioned here, but should be specified and submitted through the appropriate MOD Standard's. 6. Requirement R4.3.3: BPA agrees with other commenter's concerns regarding simulating the impact of transient swings on Protection System operation for Transmission lines and transformers. It would be an extremely burdensome task to model relay impedance characteristics for all elements with little or no benefit, and it is questionable whether the simulation programs would support this effort.

Response: 1. The time frame is for future outages in the planning horizon and last for at least six months. No change made.

2. The SDT disagrees as this is effectively the same requirement as presently stated in TPL-004. No change made.

The SDT does not agree that these conditions obviously will create Cascading. The SDT reminds the commenter that not all events must be studied. No change made.

3. The category descriptions are meant to characterize the events. A single event may remove more than one element from service and that has been addressed in Header note 'c'. The SDT does not believe that there are inconsistencies within the table. The P2 category describes single events that may result in multiple elements being removed from service. The P2 events differ from the multiple event categories which consider two or more sequential events. No change made.

4. The SDT has revised the footnote to provide additional clarity based on your comment.

> **11.** Excludes circuits that share a common structure (Planning event P7, Extreme event steady state 2a) or common Right-of-Way (Extreme event, steady state 2b) for 1 mile or less.

5. The standard permits an aggregate model assumption that can be applied for a given system that is not substation specific. No change made.

6. The SDT has revised Requirement R4, part 4.3.1, bullet #3 to address this concern.

> **Requirement R4, part 4.3.1 -** Simulate the removal of all elements that the Protection System and other automatic controls are expected to disconnect for each Contingency without operator intervention. The analyses shall include the impact of subsequent:
>
> - Successful high speed reclosing and unsuccessful high speed reclosing into a Fault.
> - Tripping of generators where simulations show generator bus voltages or high side of the GSU voltages are less than known or assumed generator low voltage ride through capability. Include in the assessment any assumptions made.
> - Tripping of Transmission lines and transformers where transient swings cause Protection System operation based on generic or actual

Voter	Entity	Segment	Vote	Comment
relay models.				
Ralph Frederick Meyer	Empire District Electric Co.	1	Negative	The Empire District Electric Company appreciates the dedication of the Standards Drafting Team Empire cannot support the approval of the proposed standard as written. Empire finds exception to the proposed standards in the following areas: 1) We disagree with the proposed requirement 2.1.5 on spare equipment strategy in that it is discriminatory for smaller entities like Empire. Having a spare transformer is not practical and makes far less sense for a smaller entity but yet has a significant rate impact to our customers. 2) We disagree with requirement 3.3.3 as written would require modeling of nearly every phase distance relay, especially when studying extreme events. The requirement deserves flexibility as allowed in requirement 3.3.2 3) We do not believe 60 months is a reasonable time period to build transmission facilities to meet the new performance requirements. Our suggestion to the drafting team would be some amount of time greater than 7 years (84 months).

Response: The SDT has clarified the requirement based on your comments and those of others.

> **Requirement R2, part 2.1.5** - When an entity's spare equipment strategy could result in the unavailability of major Transmission equipment that has a lead time of one year or more (such as a transformer), the impact of this possible unavailability on System performance shall be studied. The studies shall be performed for the P0, P1, and P2 categories identified in Table 1 with the conditions that the System is expected to experience during the possible unavailability of the long lead time equipment

The SDT agrees that a planner should be able to utilize conservative assumptions and screening methods and doesn't believe that there is anything in the requirement that precludes an entity from doing so. No change made.

The SDT has changed the majority of the implementation timeframe from 60 to 84 months as per your (and others') suggestion. Since problems may not be seen until after the assessments are completed and there is a 24 month implementation for assessments, the total time for items P2-1, P2-2 and P2-3 (above 300 kV), P3-1 through P3-5, P4-1 through P4-5 (above 300 kV), and P5 (above 300 KV) has been increased to 84 months. P1-2 and P1-3 were not increased since they are already being covered by the implementation plan for Project 2010-11: TPL Table 1 Order.

Voter	Entity	Segment	Vote	Comment
Frank Gaffney	Florida Municipal Power Agency	4	Negative	The Florida Municipal Power Agency (FMPA) appreciates the hard work of the SDT, but, we believe there are significant issues that remain with the standard. FMPA believes that 5 years is not enough time to build significant new transmission lines and believes that 7 years is a more appropriate lead time. FMPA believes that the requirement prohibiting loss of non-consequential load for P1, P2.1 and P3 events is an overreach by the standard into local quality of service issues and does not provide any real benefit to BES reliability. The standard ought to separate what an entity chooses to do for the benefit of its own customers and the impacts it may on the reliability of the BES. FMPA believes that an entity has the right to choose to utilize the existing footnote "b" in the version 0 standards if that choice does not detrimentally impact the ability to provide transmission service to others. FMPA believes that requirement 2.1.5 on spare equipment strategy is discriminatory to smaller entities. Also, Order 693 at Paragraph 1725 states: "... the Commission directs the ERO to modify the planning Reliability Standards to require the assessment of planned outages consistent with the entity's spare equipment strategy". The standard oversteps this direction by not including a consideration of planned outages versus forced outages. Requirements 3.3.3 and 4.3.1 would require modeling of nearly every phase distance relay in the Interconnection. It is questionable whether we have the software tools to do so, and this would require a huge level of effort to maintain an interconnection wide database of relay settings for questionable benefit. FMPA believes that the SDT ought to evaluate the perceived increase in accuracy that is intended with these requirements. It is FMPA's belief that the expected increase in accuracy is lost when considering other simulation inaccuracies that we really cannot improve (e.g., load modeling) until much more work is done on improving our understanding of dynamic load behavior and benchmarking the model to actual system events.

Response: The SDT has changed the majority of the implementation timeframe from 60 to 84 months as per your (and others') suggestion. Since problems may not be seen until after the assessments are completed and there is a 24 month implementation for assessments, the total time for items P2-1, P2-2 and P2-3 (above 300 kV), P3-1 through P3-5, P4-1 through P4-5 (above 300 kV), and P5 (above 300 KV) has been increased to 84 months. P1-2 and P1-3 were not increased since they are already being covered by the implementation plan for Project 2010-11: TPL Table 1 Order.

The SDT has added footnote #12 to P1, P2-1, and P3 to address your and others concerns in this area.

12. Note: Non-Consequential Load Loss is being decided in Project 2010-11. When that project is finalized, the resolution will be copied here.

The SDT has clarified the requirement based on your comments and those of others.

Requirement R2, part 2.1.5 - When an entity's spare equipment strategy could result in the unavailability of major Transmission equipment that has a

Voter	Entity	Segment	Vote	Comment
lead time of one year or more (such as a transformer), the impact of this possible unavailability on System performance shall be studied. The studies shall be performed for the P0, P1, and P2 categories identified in Table 1 with the conditions that the System is expected to experience during the possible unavailability of the long lead time equipment The SDT agrees that a planner should be able to utilize conservative assumptions and screening methods and doesn't believe that there is anything in the requirement that precludes an entity from doing so. No change made. The SDT has revised Requirement R4, part 4.3.1, bullet #3 to address this concern. **Requirement R4, part 4.3.1 -** Simulate the removal of all elements that the Protection System and other automatic controls are expected to disconnect for each Contingency without operator intervention. The analyses shall include the impact of subsequent: • Successful high speed reclosing and unsuccessful high speed reclosing into a Fault. • Tripping of generators where simulations show generator bus voltages or high side of the GSU voltages are less than known or assumed generator low voltage ride through capability. Include in the assessment any assumptions made. • Tripping of Transmission lines and transformers where transient swings cause Protection System operation based on generic or actual relay models.				
Alden Briggs	New Brunswick System Operator	2	Negative	The NBSO applauds the efforts of the Drafting Team on this very important TPL standard. However, we feel that it is not quit ready for acceptance but with a few tweeks and some much needed clarity it would be. NBSO believes the BES versus BPS needs resolution as we much prefer standards that applicable to the bulk power system based on an impact assessment opposed to an arbitrary voltage level. The standard should be more flexible allowing for any trade off between temporarily shedding small amounts of load to recover from a single contingency where the alternative which may force significant transmission upgrades. The standard gives preference to a single line feeding a local area versus two lines, where the loss of one of two under high loading conditions should allow for portions of load to be shed to maintain voltage. The standard considers demand side management as an option but no allowance for instantaneous and temporary load loss that could be required before DSM could be activated. The standard should be clear that if in agreement with a distribution provider some portions of the distribution load (non-consequential load loss) may be shed for a single contingency for undervoltage and underfrequency conditions. The requirements for load models should be clarified so capture dynamic behaviour within reason.

Voter	Entity	Segment	Vote	Comment
				There should be a Q&A guide to allow for examples to clarify the requirements.
Response: The SDT does not believe that it needs to define BES. In its March 18th order, FERC suggested a continent-wide definition of the BES. No change made. The SDT has added footnote #12 to P1, P2-1, and P3 to address your and others concerns in this area. **12.** Note: Non-Consequential Load Loss is being decided in Project 2010-11. When that project is finalized, the resolution will be copied here. DSM is permitted because it is pre-arranged with the customer. For transmission systems, DSM is expected to be used in anticipation of the next transmission system Contingency, not in response to the transmission system Contingency. UVLS & UFLS are intended safety nets for operations and should not be relied upon in transmission planning. No change made. The standard permits an aggregate model assumption that can be applied for a given system that is not substation specific. Dynamic load modeling is important for correct dynamic simulations. Industry has acknowledged the need for accurate Load modeling and the SDT has codified this need in the proposed standard. No change made. While a Q&A providing examples may be helpful it would have no official bearing and such an effort is not in the project schedule.				
Gregory Campoli	New York Independent System Operator	2	Negative	The New York Independent System Operator (NYISO) believes this proposed standard is moving in the right direction with the right intentions, and while we truly appreciate the expertise and hard work that the standards drafting team (SDT) has consistently exhibited throughout this lengthy process, we have voted no on the adoption of this balloted version of the proposed NERC Standard TPL-001-1 for the following reasons: 1. The proposed Standard would significantly, and unnecessarily, shift responsibilities away from the Transmission Owner (TO). The proposal would require that for the Bulk Electric System (BES) throughout the New York Control Area (NYCA) the NYISO would annually evaluate: specified contingency events, all corrective action plans, and all spare equipment strategies. As we are not a BES facility owner, we believe that facility specific requirements should stay with facility owners. 2. The proposed Standard requires that Corrective Action Plans are included in each Planning Assessment and states “Such actions may include...” followed by a list of actions. Restricting allowable actions, and excluding runback/tripping of HVDC would have a direct impact on multiple existing facilities in New York and would adversely impact the reliability planning of the NYCA. 3. The proposed Standard would require the PC & TP to assess the impact and probability of the possible unavailability of any piece of equipment with a lead time of one year or more. Such an evaluation of spare equipment strategies would require significant additional resources and data, but

Voter	Entity	Segment	Vote	Comment
				provide no benefit to system reliability, as it is redundant to the existing N-1-1 contingency requirement (P6). 4. The proposed Standard would require an "annual" assessment of the system in order for it to be considered "current." The NYISO has a biennial reliability planning process and does not find it necessary to perform all studies annually in order to be current. We see no reliability benefit to requiring this to be done annually; in fact, dilution of planning efforts and resources is in itself a reliability risk. 5. The proposed Standard lacks a clear definition of the first year of the planning horizon. It is defined as the planning window that begins 12-18 months from the end of the current calendar year. If "Year One" is two calendar years out, what is year two? year five? This ambiguity poses an unacceptable risk to compliance. 6. For steady-state and stability analysis, the proposed Standard creates a limited list of required sensitivities, and may require sensitivities with no useful objective. The Standard should instead provide a list of suggested sensitivities to allow the planning entity to use its judgment to study sensitivities pertinent to its system. Furthermore, in the absence of a definition of base case conditions, it is difficult to determine, from a compliance standpoint, what is a "stressed" system. 7. The proposed Standard requires stability models to represent the dynamic behavior of loads, including the consideration of the behavior of induction motor loads. The NYISO, along with many other systems, has not determined a need to model dynamic loads, and therefore has not benchmarked any such models. The NYISO recommends that prior to this requirement being in place, a modeling standard should exist that is specific to dynamic loads.

Response: 1. Planning the system is the responsibility of the Planning Coordinator and Transmission Planner as per the Functional Model. The Planning Coordinator or Transmission Planner simply needs to account for those strategies and facility specific items that are passed to them by asset owners. No change made.

2. The list is not all inconclusive but a list of possible actions. The SDT agrees that runback or tripping of HVDC would be allowable actions. No change made.

3. The SDT has clarified the requirement based on your comments and those of others.

> **Requirement R2, part 2.1.5** - When an entity's spare equipment strategy could result in the unavailability of major Transmission equipment that has a lead time of one year or more (such as a transformer), the impact of this possible unavailability on System performance shall be studied. The studies shall be performed for the P0, P1, and P2 categories identified in Table 1 with the conditions that the System is expected to experience during the possible unavailability of the long lead time equipment

4. The intent of the SDT wasn't that annual studies are required but that an annual Planning Assessment is required. However, the SDT agrees that the words

Voter	Entity	Segment	Vote	Comment
may have been somewhat confusing. Therefore, the SDT has clarified the wording of Requirement R2 and part 2.1. **Requirement R2** - Each Transmission Planner and Planning Coordinator shall prepare an annual Planning Assessment of its portion of the BES. This Planning Assessment shall use current or qualified past studies, document assumptions, summarize documented results, and cover steady state analyses, short circuit analyses, and Stability analyses. **Requirement R2, part 2.1 -** The Near-Term Transmission Planning Horizon portion of the steady state analysis shall be assessed annually and be supported by current annual studies or qualified past studies as indicated in Requirement R2, part 2.6, as follows: 5. Based on your comment and those of others, the SDT has revised the definition of Year One. **Year One:** The first twelve month period that a Planning Coordinator or a Transmission Planner is responsible for assessing. For the Planning Assessment started in a given calendar year, Year One must include the forecasted peak Load period for one of the following two calendar years. For example, if a Planning Assessment was started in 2011, then Year One must include the forecasted peak Load period for either 2012 or 2013. 6. The SDT has made clarifying changes to Requirements R1 and R2, part 2.1.4 to address your concerns. **Requirement R1 -** Each Transmission Planner and Planning Coordinator shall maintain System models within its respective area for performing the studies needed to complete its Planning Assessment. The models shall use the latest data consistent with that provided in accordance with the MOD-010 and MOD-012 standards, supplemented by other sources as needed, including items represented in the Corrective Action Plan, and shall represent projected System conditions. This establishes the normal system condition in Table 1. **Requirement R2, part 2.1.4 -** For each of the studies described in Requirement R2, parts 2.1.1 and 2.1.2, sensitivity case(s) shall be utilized to demonstrate the impact of changes to the basic assumptions used in the model. To accomplish this, the sensitivity analysis in the Planning Assessment must vary one or more of the following conditions by a sufficient amount to stress the System within a range of credible conditions that demonstrate a measurable change in performance: 7. The standard permits an aggregate model assumption that can be applied for a given system that is not substation specific. Dynamic load modeling is important for correct dynamic simulations. Industry has acknowledged the need for accurate Load modeling and the SDT has codified this need in the proposed standard. No change made.				

Voter	Entity	Segment	Vote	Comment
Alan Adamson	New York State Reliability Council	10	Negative	The New York State Reliability Council (NYSRC) appreciates the hard work and time the drafting team has devoted during its preparation this standard. The present version represents a significant improvement over the present transmission planning TPL standards. However, the TPL-001-1 standard needs further improvement in several areas before the NYSRC can vote to approve the standard, as follows: 1. The standard requires annual assessment of the system regardless of whether system conditions are essentially unchanged from year to year. This may require unnecessary study work. 2. Testing requirements are rigidly defined in the standard, but specifically what is to be tested is loosely defined. 3. The standard requires analyses of a specific list of sensitivities. Instead, the standard should provide a list of suggested sensitivities and allow the planning entity to use its judgment to study those sensitivities that may be more pertinent to its system. 4. The standard requires stability models to represent the dynamic behavior of loads, considering the behavior of induction motor loads. New York has not modeled dynamic loads, and such modeling has never been benchmarked. For many years, simulations of actual system disturbances have been represented with excellent accuracy, without modeling loads dynamically. 5. The definition of BES (100kv bright line) is uncertain at this time. Therefore, until this definition and its application is resolved, it is not possible to know - without a clarifying provision in the standard - which portion of a system that presently has a performance based methodology, such as the New York State Power System, is subject to the TPL-001-1 standard.

Response: 1. The intent of the SDT wasn't that annual studies are required but that an annual Planning Assessment is required. However, the SDT agrees that the words may have been somewhat confusing. Therefore, the SDT has clarified the wording of Requirement R2 and part 2.1.

> **Requirement R2** - Each Transmission Planner and Planning Coordinator shall prepare an annual Planning Assessment of its portion of the BES. This Planning Assessment shall use current or qualified past studies, document assumptions, summarize documented results, and cover steady state analyses, short circuit analyses, and Stability analyses.
>
> **Requirement R2, part 2.1 -** The Near-Term Transmission Planning Horizon portion of the steady state analysis shall be assessed annually and be supported by current annual studies or qualified past studies as indicated in Requirement R2, part 2.6, as follows:

2. What needs to be tested is the transmission system that is under the purview of the Planning Coordinator or Transmission Planner.

3. The SDT has made clarifying changes to Requirement R2, part 2.1.4 to address your concerns.

> **Requirement R2, part 2.1.4 -** For each of the studies described in Requirement R2, parts 2.1.1 and 2.1.2, sensitivity case(s) shall be utilized to

Voter	Entity	Segment	Vote	Comment
demonstrate the impact of changes to the basic assumptions used in the model. To accomplish this, the sensitivity analysis in the Planning Assessment must vary one or more of the following conditions by a sufficient amount to stress the System within a range of credible conditions that demonstrate a measurable change in performance: 4. The SDT assumes that you are referring to the induction motor Load modeling required for Stability studies. The standard permits an aggregate model assumption that can be applied for a given system that is not substation specific. Dynamic load modeling is important for correct dynamic simulations. Industry has acknowledged the need for accurate Load modeling and the SDT has codified this need in the proposed standard. No change made. 5. The SDT does not believe that it needs to define BES. In its March 18th orders, FERC suggested a continent-wide definition of BES. No change made.				
James Armke	Austin Energy	1	Negative	The proposed TPL-001-1 Standard needs to be revised regarding the comments submitted by Ameren, Duke, and JEA.
Response: Please see responses to Ameren, Duke, and JEA.				
Silvia P Mitchell	Florida Power & Light Co.	6	Negative	The SDT has addressed many of the gray areas of Draft four in their consideration of comments however these comments are not part of the Standard that is currently out for ballot. Incorporating these type of clarifying comments in the Standard with the use of footnotes to clarify the intent would be a significant improvement for anyone interpreting the Standard including an auditor or investigator. The definition of Year One is an unnecessary departure from the planning practices used in most of the Eastern Interconnection. It is recommended the phrase end of the current calendar year be changed to the current calendar year. This change will allow PAs to begin their near term analysis with either next year or the year after as deemed appropriate. The performance requirements of Table 1 do not allow the loss of non-consequential load for single and multiple contingency events. The disallowance of load loss does not provide any real benefit to the reliability of the BES and is an unnecessary overreach into local quality of service issues that are best addressed by State, Provincial or Municipal authorities. There may be circumstances such as high local transmission costs or local opposition to transmission construction where prohibition of non-consequential load loss represents a poor cost/benefit or quality of life tradeoff. Providing a quantitative cap in non-consequential load loss such as 100 MW may be rationale compromise in the goal of limiting load loss for the more probable outage events. Our preference would be to retain the capability of limited non-consequential load loss. Absent this, the 60 calendar month phase in period described in the Introduction section is too short for transmission facilities rated above 300 kV. Approval and permitting of EHV transmission lines is

Voter	Entity	Segment	Vote	Comment
				extremely difficult and time consuming in most parts of the Eastern Interconnection. The phrase any material changes used in requirement R.2.6.2 will effectively cause all Planning Authorities to run all studies every year regardless of minor changes in the model. The overwhelming majority of PAs use a 10 year set of planning models developed annually by Regions or Subregions. These annual sets of planning models will always have some changes. The annual study requirement is especially problematic for Stability and Short circuit studies that require much more engineering time to complete and are much less likely to have results impacted by minor model changes such as different load forecasts. Uncertainty with audit review of technical rationale documentation will serve to focus Transmission Planning engineering resources on short term compliance to an extent that is counterproductive. Requirement 2.5 represents a significant expansion of Stability Studies into the Long Term horizon. In many cases the stability issue in long term scenarios will be with the response of new generating plants to fault scenarios such as a breaker failure event. The protection upgrades needed to mitigate performance issues are easily accomplished in the short term. The uncertainty of compliance judgment of rationale documentation will force a tremendous amount of unnecessary study work. It is recommend Requirement 2.5 be removed. We concur with the SDT's opinion expressed in the most recent consideration of comments that the individual component level evaluation of protection systems and redundancy requirements should be covered under the PRC standards and that the intent of the protection failure contingencies specified in Table 1 is to simulation the failure of a single protection scheme. The event description for the P5 contingency was revised in draft 5 but it continues to reflect a range of protection component failures that greatly exceed the intent of the SDT. The term Protection System is in direct conflict with the intent of the SDT, as it is defined in the Glossary to include components such as station batteries. The term Protection System should be replaced with Protection Scheme in Table 1. Requirement 4.3.1 can be interpreted to require dynamic simulation analysis of multiple fault event scenarios for transmission lines with high speed reclosing enabled. This additional analysis may be advisable for certain rare special situations but is unnecessary and burdensome as a general requirement for transmission planning contingency analysis. As such, requirement 4.3.1 will discourage application of high speed reclosing. This would be an unfortunate outcome given the benefits of high speed reclosing both for transmission reliability and customer power quality. It is recommended that 4.3.1 be reworded as follows; Simulate the operation of Protection Systems and other automatic controls as they would be expected for each contingency. The SDT has indicated in their responses to previous comments on requirement R4.3.3 that generic relay models could be used for screening purposes. While we agree with this as a practical method,

Voter	Entity	Segment	Vote	Comment
				the language of R4.3.3 could be interpreted to require explicit modeling of all protection and controls which is neither practicable nor an effective use of engineering resources. It is recommended that R4.3.3 be deleted.

Response: The SDT has made every attempt to fully clarify the intent of the requirements in response to official specific comments. Without specific references, the SDT is unable to act on your comment. No change made.

Based on your comment and those of others, the SDT has revised the definition of Year One.

> **Year One:** The first twelve month period that a Planning Coordinator or a Transmission Planner is responsible for assessing. For the Planning Assessment started in a given calendar year, Year One must include the forecasted peak Load period for one of the following two calendar years. For example, if a Planning Assessment was started in 2011, then Year One must include the forecasted peak Load period for either 2012 or 2013.

The SDT has added footnote #12 to P1, P2-1, and P3 to address your and others concerns in this area.

> 12. Note: Non-Consequential Load Loss is being decided in Project 2010-11. When that project is finalized, the resolution will be copied here.

The SDT has changed the majority of the implementation timeframe from 60 to 84 months as per your (and others') suggestion. Since problems may not be seen until after the assessments are completed and there is a 24 month implementation for assessments, the total time for items P2-1, P2-2 and P2-3 (above 300 kV), P3-1 through P3-5, P4-1 through P4-5 (above 300 kV), and P5 (above 300 KV) has been increased to 84 months. P1-2 and P1-3 were not increased since they are already being covered by the implementation plan for Project 2010-11: TPL Table 1 Order.

Material change is system specific and difficult to define on a continent-wide basis and is left to engineering judgment with a documented technical rationale as stated in the requirement. No change made.

The SDT has clarified Requirement R2, part 2.5 to address your concerns.

> **Requirement R2, part 2.5 -** The Long-Term Transmission Planning Horizon portion of the Stability analysis shall be assessed to address the impact of proposed material generation additions or changes in that timeframe and be supported by current or past studies as qualified in Requirement R2, part2.6. The technical rationale for determining material changes shall be documented.

The SDT has changed the text for the P5 event as a result of your (and others) comments to address these concerns.

> **P5**. Delayed Fault Clearing due to the failure of a relay[13] protecting the Faulted element to operate as designed, for a Fault on one of the following:
>
> **13**. Applies to the following relay functions or types: pilot (#85), distance (#21), differential (#87), current (#50, 51, and 67), voltage (#27 & 59), directional (#32, & 67), and tripping (#86, & 94).

The SDT has revised Requirement R4, part 4.3.1, bullet #3 to address this concern.

> **Requirement R4, part 4.3.1 -** Simulate the removal of all elements that the Protection System and other automatic controls are expected to disconnect for each Contingency without operator intervention. The analyses shall include the impact of subsequent:

Voter	Entity	Segment	Vote	Comment
				• Successful high speed reclosing and unsuccessful high speed reclosing into a Fault. • Tripping of generators where simulations show generator bus voltages or high side of the GSU voltages are less than known or assumed generator low voltage ride through capability. Include in the assessment any assumptions made. • Tripping of Transmission lines and transformers where transient swings cause Protection System operation based on generic or actual relay models. 4.3.3 - The SDT has revised Requirement R4, part 4.3.1, bullet #3 to address this concern. **Requirement R4, part 4.3.1 -** Simulate the removal of all elements that the Protection System and other automatic controls are expected to disconnect for each Contingency without operator intervention. The analyses shall include the impact of subsequent: • Successful high speed reclosing and unsuccessful high speed reclosing into a Fault. • Tripping of generators where simulations show generator bus voltages or high side of the GSU voltages are less than known or assumed generator low voltage ride through capability. Include in the assessment any assumptions made. • Tripping of Transmission lines and transformers where transient swings cause Protection System operation based on generic or actual relay models.
Christopher Plantev	Integrys Energy Group, Inc.	4	Negative	The Standard is moving in the right direction, but the following concern is preventing us from voting "affirmative". The timeframe of 60-months (5 year) for implementing Corrective Action Plans (CAP), is insufficient. We believe that the implementation timeframe must be extended to seven (7) years. Requirement 2.7.3, which covers situations that arise beyond the control of the Transmission Planner (TP) or Planning Coordinator (PC), but the proposed language is ambiguous. An auditor could identify many things that could reasonably be within the "control" of a TP or PC but are not covered by NERC standards or a TP / PC's process, procedures or criteria. This discretion leaves entities open to possible non-compliance violation based on an auditor's perception of what they believe should be in the TP / PC's control. In addition, the concept of "control" must be limited to an entities' compliance obligation as a Transmission Planner and/or Planning Coordinator. In other words entities must be allowed the ability identify situations which fall under its "control" as a Transmission Owner, Transmission Operator, Generator Owner or Generator Operator etc. but is beyond the responsibility of its Transmission Planner or Planning Coordinator functions.
Response: The SDT has changed the majority of the implementation timeframe from 60 to 84 months as per your (and others') suggestion. Since problems may not be seen until after the assessments are completed and there is a 24 month implementation for assessments, the total time for items P2-1, P2-2 and P2-3 (above 300 kV), P3-1 through P3-5, P4-1 through P4-5 (above 300 kV), and P5 (above 300 KV) has been increased to 84 months. P1-2 and P1-3 were not increased since they are already being covered by the implementation plan for Project 2010-11: TPL Table 1 Order. Requirement R2, part 2.7.3 - If an entity can				

Voter	Entity	Segment	Vote	Comment
demonstrate that they have made a best faith effort to implement the planned solution then there should not be a concern. The wording of the requirement allows an entity this flexibility. If an entity can demonstrate that it has made a best faith effort to implement the planned solution then there should not be a concern. The wording of the requirement allows an entity this flexibility.				
Thomas J Trickey	Lakeland Electric	5	Negative	The timeframe of 60-month (5 year) for implementing Corrective Action Plans (CAP), is insufficient, recomend that the implementation timeframe be extended to seven (7) years.
Response: The SDT has changed the majority of the implementation timeframe from 60 to 84 months as per your (and others') suggestion. Since problems may not be seen until after the assessments are completed and there is a 24 month implementation for assessments, the total time for items P2-1, P2-2 and P2-3 (above 300 kV), P3-1 through P3-5, P4-1 through P4-5 (above 300 kV), and P5 (above 300 KV) has been increased to 84 months. P1-2 and P1-3 were not increased since they are already being covered by the implementation plan for Project 2010-11: TPL Table 1 Order.				
Greg Lange	Public Utility District No. 2 of Grant County	3	Negative	There appears to be many questions about the correct planning long-term horizon. This alone is enough to vote no and ask the drafting team to reconsider that language and their thought process. Grant also has an issue with section 2.1.5. We are struggling with the phrase "major Transmission equipment" and the example of "a transformer". We think it is very important for equipment that is necessary for bulk transfers on the system or one that if lost would cause harm to a neighboring system to be considered in this planning standard. We don't believe a BPS standard should force prescriptive behavior onto an entity, for customer service issues. If the loss of a transformer only impacts local load, this standard should not contemplate or prescribe what the local entity should do. This leaves to much interpretation up to the auditor. The standard could easily become. "You must have spare transformers in inventory to pass compliance with this requirement". Grant is aware that this standard in version zero addressed customer load. Shame on us for not being more proactive and correcting that issue then. We have a new opportunity to correct it now and we would like to see it done. This and all standards should leave local customer service issues alone and concentrate on performance of the major transfers between generation and large load centers. This is not to say that our utilites will choose to leave load off for a year, just that the decision for how to solve this local problem should remain local.
Response: The SDT is unaware of many questions being raised on the long term horizon. Without specific comments, the SDT is unable to address your concern. No change made. The SDT has clarified the requirement based on your comments and those of others.				

Voter	Entity	Segment	Vote	Comment
Requirement R2, part 2.1.5 - When an entity's spare equipment strategy could result in the unavailability of major Transmission equipment that has a lead time of one year or more (such as a transformer), the impact of this possible unavailability on System performance shall be studied. The studies shall be performed for the P0, P1, and P2 categories identified in Table 1 with the conditions that the System is expected to experience during the possible unavailability of the long lead time equipment FERC has been quite clear that this standard needs to address the issue of Non-Consequential Load Loss. The SDT has added footnote 12 to address your concerns. 12. Note: Non-Consequential Load Loss is being decided in Project 2010-11. When that project is finalized, the resolution will be copied here.				
Mace Hunter	Lakeland Electric	3	Negative	There are two requirements in this Standard that could be interpreted in many different ways and will greatly complicate dynamic simulation studies. 4.3.1. Simulate the removal of all elements that the Protection System and other automatic controls are expected to disconnect for each Contingency without operator intervention while also considering the impact of successful or unsuccessful high speed reclosing. 4.3.3. Simulate the impact of transient swings on Protection System operation for Transmission lines and transformers. Most problematic is 4.3.3 which can be interpreted as requiring discrete models of all relays protecting transmission lines and transformers. This is an impossible task. Developing explicit relay models for simulations of even a small subset of BES equipment would be an enormous engineering effort with little or no benefit. The SDT's response to this criticism is, "This does not necessarily require modeling of specific relays. Some dynamic simulation programs include a generic relay model which can easily be applied to every branch in the simulation. If this model shows impedance swings in a branch element, then either take action according to the generic model results or investigate the characteristics of the relays actually used on that line." There are two problems with this response. First, if the SDT wishes to allow for the use of screening methods then this allowance needs to be part of the Standard language. The Standard development comments and responses have no standing once the Standard is approved by FERC as law. A narrow, strict interpretation of the Standard based on requirement language is to be expected from auditors and investigators. A second problem with the above SDT response is that applicability of generic models is subject to technical challenge. The generic model available within PSS/E sets up circular characteristics for each branch element that are fixed percentages of the branch impedance. These fixed, non adjustable percentages are 46% for zone A, 75% for zone B and 110% for zone C. These generic reaches are significantly smaller than loadability limits allowed under the PRC-023-1. The intent of Requirement 4.3.3 would be better served if reworded as follows; "R4.3.3 Consider the impact of dynamic swings on protection systems and model protection operation where appropriate" Requirement 4.3.1 can be

Voter	Entity	Segment	Vote	Comment
				interpreted to require dynamic simulation analysis of multiple fault event scenarios for transmission lines with high speed reclosing enabled. This additional analysis may be advisable for certain rare special situations but is unnecessary and burdensome as a general requirement for transmission planning contingency analysis. As such, requirement 4.3.1 will discourage application of high speed reclosing. This would be an unfortunate outcome given the benefits of high speed reclosing both for transmission reliability and customer power quality. It is recommended that 4.3.1 be reworded as follows; "4.3.1 Simulate the removal of all elements that the Protection System and other automatic controls are expected to disconnect for each contingency."

Response: The SDT has modified the requirement to address your concern.

Requirement R4, part 4.3.1 - Simulate the removal of all elements that the Protection System and other automatic controls are expected to disconnect for each Contingency without operator intervention. The analyses shall include the impact of subsequent:

- Successful high speed reclosing and unsuccessful high speed reclosing into a Fault.
- Tripping of generators where simulations show generator bus voltages or high side of the GSU voltages are less than known or assumed generator low voltage ride through capability. Include in the assessment any assumptions made.
- Tripping of Transmission lines and transformers where transient swings cause Protection System operation based on generic or actual relay models.

The SDT has revised Requirement R4, part 4.3.1, bullet #3 to address this concern.

Requirement R4, part 4.3.1 - Simulate the removal of all elements that the Protection System and other automatic controls are expected to disconnect for each Contingency without operator intervention. The analyses shall include the impact of subsequent:

- Successful high speed reclosing and unsuccessful high speed reclosing into a Fault.
- Tripping of generators where simulations show generator bus voltages or high side of the GSU voltages are less than known or assumed generator low voltage ride through capability. Include in the assessment any assumptions made.
- Tripping of Transmission lines and transformers where transient swings cause Protection System operation based on generic or actual relay models.

Voter	Entity	Segment	Vote	Comment
Larry Akens	Tennessee Valley Authority	1	Negative	TVA appreciates the work of the ATFN drafting team over the last several years in drafting this new standard. TVA does have concerns on several issues that need to be corrected as we move forward with this standard. Therefore TVA is voting “Negative” on this proposed standard due to the following issues: 1. TVA believes that the 5 year implementation plan allowed for “Raising the bar” facilities does not allow sufficient time for TVA to construct the required new facilities. TVA average time for constructing a new 500-kV line is approximately 7 to 10 years, given the lead time on ROW and following all NEPA requirements. If the 5 year implementation plan is not increased, TVA is also concerned about the extensive outages that must take in upgrading 500-kV facilities in order to meet the 5 year requirement. This would require multiple 500-kV outages in the same timeframe which could have a detrimental effect on the overall Bulk Electric System reliability during this construction phase. TVA does understand that the team has added language regarding the TP or PC inability to get the projects completed through no fault of its own; however, there is no guarantee that TVA will be found compliant if all the work cannot be accomplished in this time frame. 2. TVA believes that the footnotes b and c that allow for local load drop in the current TPL standards should still be allowed. TVA understands that this is addressed in FERC Order 693; however, the capital improvements to fix many of these issues will have no overall reliability gain for the Bulk Electric System. 3. TVA is concerned that no generating unit shall pull out of synchronism for Planning Event P1, while the standard does allow generator runback/tripping for the same event. TVA believes that this requirement is overly burdensome without providing any material improvement in system reliability. Additionally, R4.1.1 directly conflicts with Table 1, Note a (applicable to both Steady State & Stability) which states "Consequential Load as well as generation loss is acceptable as a consequence of any planning event ... excluding P0." TVA strongly suggests that this loss of synchronism be allowed for P1 or at least add the ability to trip these units for this P1 event by out of step relaying - since other means of tripping the units are allowed - such as thru the use of other actions including Special Protection Schemes as long as the instability does not spread beyond a local area. 4. TVA is concerned with the inclusion of battery failures being included in event P5. P5 states “Multiple Contingency Fault plus Protection System failure to operate”. TVA understands that the drafting team believes that batteries are not intended to be included in this event; however, station batteries are presently included in the NERC Glossary definition of “Protection Systems.” TVA believes that specific language excluding batteries is required for this P5 event in order to prevent future compliance issues regarding this.
George T. Ballew	Tennessee Valley Authority	5	Negative	
Marjorie S. Parsons	Tennessee Valley Authority	6	Negative	

Voter	Entity	Segment	Vote	Comment
Response: 1. The SDT has changed the majority of the implementation timeframe from 60 to 84 months as per your (and others') suggestion. Since problems may not be seen until after the assessments are completed and there is a 24 month implementation for assessments, the total time for items P2-1, P2-2 and P2-3 (above 300 kV), P3-1 through P3-5, P4-1 through P4-5 (above 300 kV), and P5 (above 300 KV) has been increased to 84 months. P1-2 and P1-3 were not increased since they are already being covered by the implementation plan for Project 2010-11: TPL Table 1 Order. 2. The SDT has added footnote #12 to P1, P2-1, and P3 to address your and others concerns in this area. 12. Note: Non-Consequential Load Loss is being decided in Project 2010-11. When that project is finalized, the resolution will be copied here. 3. The SDT believes that if an entity has a known condition that identifies a generation unit(s) is prone to trip for a single Contingency event then the entity should proactively trip the unit(s) rather than relying on out-of-step protection to trip the unit. The SDT takes this position because of the concern of the possible detrimental effects of loss of synchronism on the overall reliability of the BES. No change made. 4. The SDT has changed the text for the P5 event as a result of your (and others) comments to address these concerns. **P5**. Delayed Fault Clearing due to the failure of a relay[13] protecting the Faulted element to operate as designed, for a Fault on one of the following: **13**. Applies to the following relay functions or types: pilot (#85), distance (#21), differential (#87), current (#50, 51, and 67), voltage (#27 & 59), directional (#32, & 67), and tripping (#86, & 94).				
Lee Schuster	Florida Power Corporation	3	Negative	We appreciate the challenging and time-consuming work that has been done by the Standard Drafting Team (SDT) to draft TPL-001-1 according to the specific requests made by FERC in Order 693. We are supportive of planning, constructing, operating and maintaining the most reliable Bulk Electric System (BES) that is reasonably feasible. We believe that collectively the industry has exhibited excellent BES reliability under existing NERC TPL Standards. For this reason and for others detailed below, we will vote "no" on the proposed standard. 1. We do not believe that 60 months is a reasonable time period to build transmission facilities to meet the new performance requirements. This is especially true of EHV projects. Ameren recently stated in an email to the RBB that "[b]uilding a transmission line in Illinois is estimated to take 7 years (84 months) from the time the project is authorized." In our own experience, we have been limited by permitting and local government processes to the extent that even 69 kV, 115 kV and 230 kV line projects are taking longer than 60 months. We therefore agree with Ameren's point that building of a new EHV transmission line can be a very lengthy process. We think that a more
Sam Waters	Progress Energy Carolinas	3	Negative	

Voter	Entity	Segment	Vote	Comment
Wayne Lewis	Progress Energy Carolinas	5	Negative	appropriate time frame would be 84 months, with provisions to limit or waive fines if a Transmission Owner can demonstrate that the implementation process was unavoidably impeded by permitting, environmental or governmental processes. 2. As has been stated in all four commenting periods by Progress as well as certain other registered entities, we believe that the requirement prohibiting loss of non-consequential load for events in Table 1 of TPL-001-1 is an inappropriate overreach by the standard into local load quality of service issues that are already adequately regulated by states' Public Service/Utility Commissions, and does not provide any benefit to BES reliability. The approach of prohibiting the shedding of even a single distribution feeder amounts to feeder reliability rather than BES reliability. This approach, if allowed to be in the Standard, may result in unintended negative results in BES reliability. We therefore appeal to the SDT to discuss this issue with NERC and FERC given the numerous utilities that share this concern. The standard should continue to allow Transmission Planners to use discretion regarding loss of non-consequential load. 3. Requirement R4.1.1 states in part that "for planning event P1: No generating unit shall pull out of synchronism." This requirement is overly burdensome without providing any material improvement in system reliability. Additionally, R4.1.1 directly conflicts with Table 1, Note (a) (applicable to both Steady State & Stability) which states "Consequential Load as well as generation loss is acceptable as a consequence of any planning event ... excluding P0." Clearly, the intent the TPL-001-1 standard is to maintain the integrity and reliability of the overall grid, not any particular element. In other words, throughout the standard it is acceptable to lose any generator, load, line or other element as long as more wide reaching consequences are precluded (i.e., cascading outages, non-consequential load loss, etc. is not allowed). As written, R4.1.1 would not allow the use of out of step protective relaying as a solution to trip an unstable generator for a P1 event. It does allow tripping of the same generator due to "fault clearing action" (such as for a fault on the generator terminals) or "by a Special Protection System". Therefore the loss of the generator itself must be acceptable. The notion that preventing loss of synchronism events is the only acceptable means of also precluding more widespread (and unacceptable) consequences resulting from the effect of stability swings is not valid. For some generating units (particularly small, remotely located units) these other unacceptable consequences may not even occur. Also, other means, such as out of step blocking of transmission lines applied in conjunction with out of step generator tripping, may be an effective solution. Any of these solutions is allowed for events P2 through P7 in requirement R4.1.2. We recommend that Requirement R4.1.1 be deleted and R.4.1.2 be revised to include events P1 through P7. Given the concerns raised above, we respectfully request that the SDT make the suggested improvements to TPL-001-1 and continue the process toward approval of the Standard.

Voter	Entity	Segment	Vote	Comment
Response: The SDT has changed the majority of the implementation timeframe from 60 to 84 months as per your (and others') suggestion. Since problems may not be seen until after the assessments are completed and there is a 24 month implementation for assessments, the total time for items P2-1, P2-2 and P2-3 (above 300 kV), P3-1 through P3-5, P4-1 through P4-5 (above 300 kV), and P5 (above 300 KV) has been increased to 84 months. P1-2 and P1-3 were not increased since they are already being covered by the implementation plan for Project 2010-11: TPL Table 1 Order. The SDT has added footnote #12 to P1, P2-1, and P3 to address your and others concerns in this area. 12. Note: Non-Consequential Load Loss is being decided in Project 2010-11. When that project is finalized, the resolution will be copied here. 3. The SDT believes that if an entity has a known condition that identifies a generation unit(s) is prone to trip for a single Contingency event then the entity should proactively trip the unit(s) rather than relying on out-of-step protection to trip the unit. The SDT takes this position because of the concern of the possible detrimental effects of loss of synchronism on the overall reliability of the BES. No change made.				
Jason L Marshall	Midwest ISO, Inc.	2	Negative	We are voting negative for several reasons. 1. We believe Requirement 2, Part 2.1.5 is an administrative requirement that is not consistent with the NERC BOT approved results/performance based standards effort. Furthermore, the additional reliability benefit is not clear to us. 2. We believe that Requirement 2, Part 2.3 should only be implemented when there is another requirement in the PRC standards for Transmission Owners and Generation Owners to supply the necessary protection information. 3. We believe that that Requirement 2, Part 2.4.1 needs to be further clarified that the dynamic behavior of load model is an estimate only based on engineering assumptions. As written now, it is not clear how much deviation is allowed from actual system operation. 4. We believe Requirement 4, Part 4.3.2 should not be implemented until there is a requirement for the Generator Owners/Operators to supply their generator low voltage ride through capability. 5. We believe Requirement 4, Part 4.3.3 should be further refined to clarify that the purpose is to screen zone 3 relay issues. As written now, it appears that zone 3 relays must be modeled in detail because it is not clear that the intent is to only screen potential problems. We are basing our comments on the drafting team's responses to previous comments that they view using generic zone 3 relay models in PSS/E is acceptable.
Response: 1. The SDT disagrees that this is an administrative requirement as it does not state that you must develop a strategy; it states that you must consider the strategy in your planning. Therefore, it has a direct bearing on the reliability of the BES. No change made. 2. This standard describes what must be done and not how to do it. The SDT expects that the information cited could be obtained through several different				

Voter	Entity	Segment	Vote	Comment
mechanisms such as delegation agreements or data requests. No change made. 3. The SDT has added the word 'expected' to the text to alleviate your concern. Planning models are based on the best information available to the planners at the time of the study and it is well understood that they may not exactly represent actual conditions at any given time. The results of on-going benchmarking and model development activities can be incorporated when those activities yield more representative results. **Requirement R2, part 2.4.1** - System peak Load for one of the five years. System peak Load levels shall include a Load model which represents the expected dynamic behavior of Loads that could impact the study area, considering the behavior of induction motor Loads. An aggregate System Load model which represents the overall dynamic behavior of the Load is acceptable. 4. This standard describes what must be done and not how to do it. The SDT expects that the information cited could be obtained through several different mechanisms such as delegation agreements or data requests. No change made. 5. In the summary considerations in draft 4 of this project, the SDT indicated that generic relay models can be applied. If this model shows impedance swings in a branch element, then one can either take action according to the generic model results or investigate the characteristics of the relays actually used on that branch. In this draft, the SDT has clarified the requirement for the use of generic relay models. **Requirement R4, part 4.3.1 -** Simulate the removal of all elements that the Protection System and other automatic controls are expected to disconnect for each Contingency without operator intervention. The analyses shall include the impact of subsequent: • Successful high speed reclosing and unsuccessful high speed reclosing into a Fault. • Tripping of generators where simulations show generator bus voltages or high side of the GSU voltages are less than known or assumed generator low voltage ride through capability. Include in the assessment any assumptions made. • Tripping of Transmission lines and transformers where transient swings cause Protection System operation based on generic or actual relay models.				
Brenda L Truhe	PPL Electric Utilities Corp.	1	Negative	We are voting 'no' on this ballot as this revision proposes to expand contingency requirements beyond traditional planning levels (example - stuck breaker AND protection failure).
Mark A. Heimbach	PPL Generation LLC	5	Negative	
Response: The SDT agrees that new expectations are contained within the requirements aimed at improving BES reliability. An implementation plan has been created to allow for the industry to comply with the new requirements.				
Terry L. Blackwell	Santee Cooper	1	Negative	We disagree with the proposed definition of Year One. We believe that Year One should be the planning window that begins 12-18 months from the start of the current calendar year, and not from

Voter	Entity	Segment	Vote	Comment
Zack Dusenbury	Santee Cooper	3	Negative	the end of the calendar year. We believe that following this modification to the definition would require minimal adjustments to the ERAG MMWG model building process, which we all use as the basis for our planning models. Following the proposed definition would require additional models to be built by the MMWG or lead to holes in the model building effort for both the operating and planning horizons. SCPSA does not believe that 60 months is a reasonable time period to build transmission facilities to meet the new performance requirements. In an email to the registered ballot body, Ameren stated " Building a transmission line in Illinois is estimated to take 7 years (84 months) from the time the project is authorized." SCPSA agrees with the point that Ameren is making that building of a new EHV transmission line can be a very lengthy process. SCPSA thinks that a more appropriate time frame would be 84 months. SCPSA believes that the requirement prohibiting loss of non-consequential load for P1, P2.1 and P3 events is an overreach by the standard into local load quality of service issues, does not provide any real benefit to Bulk Electric System (BES) reliability, and may have unintended negative consequences on reliability. Often, corrective actions to mitigate these events are local in nature and only require minor additional loss of local load to avoid major projects. The standard should continue to allow Transmission Planners to use discretion regarding loss of non-consequential load, such that Transmission Planners, customers, and local regulators jointly control the decision making when BES reliability is not an issue. The transparency requirements of the new standard facilitate this type of decision making. In addition, the prohibition on non-consequential load loss for these events creates an incentive for Transmission Planners to remove lines serving load from network (serve the loads radially) so that they are characterized as consequential load. The unintended consequence of the standard would be a reduction in reliability for service to local load.
Suzanne Ritter	Santee Cooper	6	Negative	

Response: Based on your comment and those of others, the SDT has revised the definition of Year One.

> **Year One:** The first twelve month period that a Planning Coordinator or a Transmission Planner is responsible for assessing. For the Planning Assessment started in a given calendar year, Year One must include the forecasted peak Load period for one of the following two calendar years. For example, if a Planning Assessment was started in 2011, then Year One must include the forecasted peak Load period for either 2012 or 2013.

The SDT has changed the majority of the implementation timeframe from 60 to 84 months as per your (and others') suggestion. Since problems may not be seen until after the assessments are completed and there is a 24 month implementation for assessments, the total time for items P2-1, P2-2 and P2-3 (above 300 kV), P3-1 through P3-5, P4-1 through P4-5 (above 300 kV), and P5 (above 300 KV) has been increased to 84 months. P1-2 and P1-3 were not increased since they are already being covered by the implementation plan for Project 2010-11: TPL Table 1 Order.

The SDT has added footnote #12 to P1, P2-1, and P3 to address your and others concerns in this area.

Voter	Entity	Segment	Vote	Comment
12. Note: Non-Consequential Load Loss is being decided in Project 2010-11. When that project is finalized, the resolution will be copied here.				
Thomas C. Mielnik	MidAmerican Energy Co.	3	Negative	We find P5, Multiple Contingency (Fault plus Protection System failure to operate) to be confusing. What analysis is required for this? Analysis of individual Protection System component failures or something else? Do the benefits justify this requirement?
Response: The SDT has changed the text for the P5 event as a result of your (and others) comments to address these concerns. **P5**. Delayed Fault Clearing due to the failure of a relay[13] protecting the Faulted element to operate as designed, for a Fault on one of the following: **13**. Applies to the following relay functions or types: pilot (#85), distance (#21), differential (#87), current (#50, 51, and 67), voltage (#27 & 59), directional (#32, & 67), and tripping (#86, & 94).				
Ajay Garg	Hydro One Networks, Inc.	1	Negative	We thank the Standard Drafting Team for their long and dedicated effort to develop this standard. At this time, Hydro One has decided to cast a negative vote with the following comments: 1. Note 3 in Table 1 refers to EHV Facilities (above 300 kV) and HV (300 kV and lower voltage systems) The standards uses this threshold to distinguish between stated performance criteria allowances for interruption of Firm Transmission Service and Non-Consequential Load Loss. We suggest the following be added to this note: "In the region(s) or area where there is a performance based methodology in place to determine Bulk Electric System (BES) elements (e.g. NPCC), only the BES portion of the system is subject to the Standard." 2. The Standard repeatedly uses the capitalized term "Firm Transmission Service (FTS)." The NERC Glossary of Terms defines FTS as "The highest quality (priority) service offered to customers under a filed rate schedule that anticipates no planned interruption." We believe that the use of this term and that of "Transmission Service" in TPL-001-1 should be revised as they do not have the same meaning in all jurisdictions. A clarification within the standard will eliminate this confusion. 3. The Effective Date Section in the proposed standard gives a time of 60 months to implement certain Corrective Actions. We believe this Standard should not explicitly define timelines (5 years in this case) for transmission projects. Regulatory approvals for new or modified transmission systems may take a significant time in some jurisdictions. We suggest changing the wording to say that Transmission mitigation measures for the reliability of the Bulk Electric System must be implemented as soon as practical exercising due diligence. Progress of and/or delays associated with critical project(s) impacting BES reliability should be submitted to the respective regions and NERC. We recognize that Requirement 2.7.3 covers situations that arise beyond the control of the Transmission Planner (TP) or Planning Coordinator (PC), but we believe that the proposed 60 months timeline
Michael D. Penstone	Hydro One Networks, Inc.	3	Negative	

Voter	Entity	Segment	Vote	Comment
				should be removed.
Response: This standard applies to the BES. If there are areas of your system that are not BES, then the standard doesn't apply to them. This would be true even if those elements are above 300 kV. No change made. The SDT reviewed the use of Firm Transmission Service and believes that the term is used correctly in the standard. No change made. The SDT has changed the majority of the implementation timeframe from 60 to 84 months as per your (and others') suggestion. Since problems may not be seen until after the assessments are completed and there is a 24 month implementation for assessments, the total time for items P2-1, P2-2 and P2-3 (above 300 kV), P3-1 through P3-5, P4-1 through P4-5 (above 300 kV), and P5 (above 300 KV) has been increased to 84 months. P1-2 and P1-3 were not increased since they are already being covered by the implementation plan for Project 2010-11: TPL Table 1 Order. Requirement R2, part 2.7.3 - If an entity can demonstrate that they have made a best faith effort to implement the planned solution then there should not be a concern. The wording of the requirement allows an entity this flexibility.				
Mark Ringhausen	Old Dominion Electric Coop.	4	Negative	While the SDT has made progress in their changes from the first draft, there are still some areas that need to be clarified. Others are proving more specific comments (PJM) so look for their comments and address.
Response: Please see response to PJM.				

Voter	Entity	Segment	Vote	Comment
Richard Salgo	Sierra Pacific Power Co.	1	Negative	While we greatly appreciate the work of the SDT, and feel that this Standard has achieved significant improvement, there are a number of issues precluding our approval as written: Spare Equipment: need a clarification on what the "assessment" of the impact of equipment availability entails. For instance, is the assessment a simple narrative of the necessary operational mitigation, engineering analysis of the impact, or on the other extreme, is it a full repeat of the NERC study work for all potential permutations of long lead-time equipment? We have difficulty accepting the language regarding the loss of non-consequential load. As written, this creates a disincentive for the implementation of incremental reliability improvements in the network; ie, creation of a parallel path that does not fully provide redundancy to load service would drive a violation of the requirement. Lastly, the treatment of firm transmission service from the standpoint that it cannot be curtailed under various contingencies is problematic. As written, it would appear that the single-contingency loss of a contract transmission path would require continuance of the firm transmission service via some alternate parallel path. Such methodology would require all such paths to have redundancy via parallel transmission or result in dramatic reductions in transfer ratings.

Response: The SDT has clarified the wording of the requirement and believes that this will address your concern.

> **Requirement R2, part 2.1.5** - When an entity's spare equipment strategy could result in the unavailability of major Transmission equipment that has a lead time of one year or more (such as a transformer), the impact of this possible unavailability on System performance shall be studied. The studies shall be performed for the P0, P1, and P2 categories identified in Table 1 with the conditions that the System is expected to experience during the possible unavailability of the long lead time equipment.

The SDT has added footnote #12 to P1, P2-1, and P3 to address your and others concerns in this area.

> 12. Note: Non-Consequential Load Loss is being decided in Project 2010-11. When that project is finalized, the resolution will be copied here.

Footnote 9 states the conditions for when Firm Transmission Service may be curtailed. If what you are describing is actually Conditional Firm, then see footnote 4. No change made.

Informal Comments on Assess Transmission Future Needs – Project 2006-02.

The TPL-001-2 standard for Assess Transmission Future Needs (Project 2006-02) Drafting Team thanks all commenters who submitted comments on the fifth draft overview. These standards were posted for a 30-day public comment period from August 3, 2010 through September 2, 2010. The stakeholders were asked to provide feedback on the standards through a special Electronic Comment Form. There were 7 sets of comments, including comments from 77 different people from approximately 69 companies representing 6 of the 10 Industry Segments as shown in the table on the following pages.

http://www.nerc.com/filez/standards/Assess-Transmission-Future-Needs.html

The SDT has completed the review of the informal comments from industry for Project 2006-02: Assess Transmission Future Needs. Each and every comment was reviewed and considered by the SDT regardless of whether there is a formal written response shown. The majority of the cases where the SDT did not make a change or provide a written response was because the SDT had already responded to the issue or the SDT did not believe that the proposed revision added clarity or otherwise improved the quality of the proposed standard.

The SDT made a number of changes due to the comments received from industry and drafting team discussions arising from those comments as highlighted below:

- Year One definition – deleted 'must'
- Conforming changes to the language in the Effective Date – made language consistent with the Implementation Plan
- Requirement R1 and M1 – changed, ". . . the latest data consistent with . . ." to "data consistent with. . . " and established P0 as normal System condition in Table 1
- Requirement R2, part 2.1.4 – replaced 'performance' with 'System response' and changed last bullet from ". . . planned Transmission outages" to ". . . known Transmission outages"
- Requirement R2, part 2.6.2 – require documentation explaining material changes
- Requirement R2, part 2.7.1 – made it clear that statement is not all inclusive
- Requirement R2, part 2.8.2 – made language consistent with Requirement R2, part 2.7.4
- Requirement R4, part 4.3.1, bullet #1 – added qualifier for high speed reclosing
- Requirement R6 and M6 and data retention for R6 – changed 'any' to 'the'
- Table 1, header note 'i' – deleted 'including Load'
- Table 1, P0 – delete superscript in column 6
- Table 1, P2 – added 'Breaker' to description
- Table 1, P4 – added 'Breaker' to description
- Table 1, P5: added 'non-redundant'
- Table 1, extreme events – Stability: made language consistent with Table 1, P5
- Measure M8 – spelled out the functional entity involved
- Data retention for Requirement R7 – deleted 'all such'
- Changed, "Initial System Conditions" to "Initial Conditions" in column heading of Table 1 and Table 1 Note 9
- Deleted section, "Compliance Monitoring and Reset Timeframe as this is no longer included in the standard template.

The SDT believes that with these changes, the industry concerns have been addressed except for Footnote 12 (content of existing footnote b). Until the issues with footnote 'b' in Project 2010-11: TPL Table 1 are resolved, the SDT will not request the Standards Committee to move the project to the ballot phase. This could mean that Project 2006-02 may sit in limbo for several months pending the outcome of the Project 2010-11 deliberations. So that industry can see what has transpired with regard to their comments on Project 2006-02, the SDT is requesting that the consideration of comments document, along with the redlined version of TPL-001-2 corresponding to those comment responses be posted immediately. In this way, the industry can see what the SDT has decided in response to comments while the content of the comments is still fresh in the minds of the commenters. The SDT encourages anyone reading the posted documents to reach out to members of the SDT for informal discussions of posted documents.

Once Project 2010-11 is resolved, the wording for footnote 'b' will be essentially copied to TPL-001-2. The SDT realizes that this cannot be a simple cut and paste due to format differences between the old standard and the revised TPL-001-2 and will take appropriate actions to make things fit correctly. Once this has been accomplished, the SDT expects to ask the Standards Committee to move Project 2006-02 to the ballot stage.

If you feel that your comment has been overlooked, please let us know immediately. Our goal is to give every comment serious consideration in this process! If you feel there has been an error or omission, you can contact the Vice President and Director of Standards, Herb Schrayshuen, at 609-452-8060 or at herb.schrayshuen@nerc.net. In addition, there is a NERC Reliability Standards Appeals Process.[1]

[1] The appeals process is in the Reliability Standards Development Procedures: http://www.nerc.com/standards/newstandardsprocess.html.

Index to Questions, Comments, and Responses

1. The SDT has revised the Implementation Plan based on industry comments to the initial ballot. Do you support this change? If you do not support this change, please specify why you disagree and include specific alternative language to resolve your concern. 10

2. The SDT has revised the definition of Year One based on industry comments to the initial ballot. Do you support this change? If you do not support this change, please specify why you disagree and include specific alternative language to resolve your concern. 20

3. The SDT has revised the Requirements language based on industry comments to the initial ballot. Do you support these changes? If you do not support these changes, please specify why you disagree and include specific alternative language to resolve your cncern. 28

3.1 Requirement R2 and Part 2.1 – past studies..... 36

3.2 Requirement R2, Parts 2.1.4 & 2.4.3 – sensitivity analysis:..... 47

3.3 Requirement R2, Part 2.4.1 – dynamic load models: 57

3.4 Requirement R2, Part 2.5 – material clarification: 64

4. The SDT has revised the header notes based on industry comments to the initial ballot. If you do not support these changes, please specify why you disagree and include specific alternative language to resolve your concern. 70

5. The SDT has revised the performance table (including the list of extreme events and footnotes) based on industry comments to the initial ballot. If you do not support these changes, please specify why you disagree and include specific alternative language to resolve your concern. 78

6. The SDT has revised the Measures based on industry comments to the initial ballot. If you do not support these changes, please specify why you disagree and include specific alternative language to resolve your concern. 95

7. The SDT has revised the Requirement R8 VSL based on industry comments to the initial ballot. If you do not support these changes, please specify why you disagree and include specific alternative language to resolve your concern. 102

The Industry Segments are:

1 — Transmission Owners
2 — RTOs, ISOs
3 — Load-serving Entities
4 — Transmission-dependent Utilities
5 — Electric Generators
6 — Electricity Brokers, Aggregators, and Marketers
7 — Large Electricity End Users
8 — Small Electricity End Users
9 — Federal, State, Provincial Regulatory or other Government Entities
10 — Regional Reliability Organizations, Regional Entities

Group/Individual		Commenter	Organization	Registered Ballot Body Segment									
				1	2	3	4	5	6	7	8	9	10
1.	Group	Mallory Huggins	NERC Staff										
2.	Group	Philip Kleckley	SERC Planning Standards Subcommittee	X		X		X					
3.	Group	Guy Zito	Northeast Power Coordinating Council										X
4.	Group	David Kiguel	Hydro One Networks Inc.	X		X							
5.	Group	Bob Cummings	Transmission Issues Subcommittee										
6.	Group	Robert Jones	SERC Dynamics Review Subcommittee	X									X
7.	Group	Carol Gerou	MRO's NERC Standards Review Subcommittee										X
8.	Group	Richard Kafka	Pepco Holdings, Inc - Affiliates	X		X		X	X				
9.	Group	Ben Li	IRC Standards Review Committee		X								

Group/Individual		Commenter	Organization	Registered Ballot Body Segment									
				1	2	3	4	5	6	7	8	9	10
10.	Group	Denise Koehn	Bonneville Power Administration	X		X		X	X				
11.	Individual	Eric Mortenson	Exelon Transmission Planning	X									
12.	Individual	Andy Tillery	Southern Company	X		X							
13.	Individual	Steve Rueckert	Western Electricity Coordinating Council										X
14.	Individual	Jana Van Ness, Director Regulatory Compliance	Arizona Public Service Company	X		X		X					
15.	Individual	Brent.Ingebrigtson@eon-us.com	E.ON U.S.	X		X		X	X				
16.	Individual	Richard Becker	Florida Reliability Coordinating Council, Inc - Transmission Working Group	X	X	X	X						X
17.	Individual	Brandy A. Dunn	Western Area Power Administration	X					X				
18.	Individual	Sandra Shaffer	PacifiCorp	X		X		X	X				
19.	Individual	Ray Mason	ReliabilityFirst										X
20.	Individual	Greg Rowland	Duke Energy	X		X		X	X				
21.	Individual	Catherine Mathews	NorthWestern Energy (NWMT)	X									
22.	Individual	Phuong Tran	Lakeland Electric	X		X		X					
23.	Individual	Tom Duane	PNM	X		X							

Group/Individual		Commenter	Organization	Registered Ballot Body Segment									
				1	2	3	4	5	6	7	8	9	10
24.	Individual	Doug Hohlbaugh	FirstEnergy	X		X	X	X	X				
25.	Individual	John Collins	Platte River Power Authority	X		X			X				
26.	Individual	Aaron Staley	Orlando Utilities Commission	X									
27.	Individual	Kasia Mihalchuk	Manitoba Hydro	X		X		X	X				
28.	Individual	Randi Woodward	Minnesota Power	X									
29.	Individual	Martin Bauer	US Bureau of Reclamation					X					
30.	Individual	Paul Rocha	CenterPoint Energy	X									
31.	Individual	Tim Ponseti, VP	TVA Transmission Planning & Compliance									X	
32.	Individual	Dan Rochester	Independent Electricity System Operator		X								
33.	Individual	Dilip Mahendra	SMUD	X		X	X	X					
34.	Individual	RoLynda Shumpert	South Carolina and Gas	X		X		X	X				
35.	Individual	Brian Keel	SRP	X									
36.	Individual	Darcy O'Connell	California ISO		X								
37.	Individual	Scott Inglebritson	Seattle City Light	X		X	X	X		X			
38.	Individual	Ean O'Neill	California Energy Commission									X	
39.	Individual	Kathleen Goodman	ISO New England Inc.		X								

Group/Individual		Commenter	Organization	Registered Ballot Body Segment									
				1	2	3	4	5	6	7	8	9	10
40.	Individual	Oscar Herrera	Los Angeles Department of Water and Power	X		X		X	X				
41.	Individual	Orlando A Ciniglio	Idaho Power Co	X		X							
42.	Individual	David Bradt	United Illuminating	X		X							
43.	Individual	John Sullivan	Ameren	X		X		X	X				
44.	Individual	Si Truc PHAN	Hydro-Quebec TransEnergie	X									
45.	Individual	Sergio Garza	LCRA TSC	X									
46.	Individual	Saurabh Saksena	National Grid	X		X							
47.	Individual	Charles Lawrence	American Transmission Company	X									
48.	Individual	Thad Ness	American Electric Power (AEP)	X		X		X	X				
49.	Individual	Bill Middaugh	Tri-State Generation & Transmission	X									
50.	Individual	David Miller	Lakeland Electric	X		X		X					
51.	Individual	Steve Stafford	GTC	X									
52.	Individual	Chifong Thomas	Pacific Gas and Electric Company	X		X		X					
53.	Individual	Michael R. Lombardi	Northeast Utilities	X		X		X					
54.	Individual	Christopher L. de	Consolidated Edison Co. of New York, Inc.	X									

Group/Individual		Commenter	Organization	Registered Ballot Body Segment									
				1	2	3	4	5	6	7	8	9	10
		Graffenried											
55.	Individual	Spencer Tacke	Modesto Irrigation District			X	X						
56.	Individual	Alex Rost	NBSO		X								
57.	Individual	Curtis A. Beveridge	Central Maine Power Company	X									
58.	Individual	Darryl Curtis	Oncor Electric Delivery	X									
59.	Individual	Jeffrey McKinney	New York State Electric & Gas Corp	X									
60.	Individual	Bart White	Progress Energy	X		X		X	X				
61.	Group	L Zotter, M Morais, J Billo, J Conto, S Jue, JC Culberson, J Teixeira, G Gnanam, S Myers	ERCOT ISO		X								
62.	Individual	Gary Trent	Tucson Electric Power Company	X		X		X					
63.	Individual	Gregory Campoli	New York Independent System Operator		X								
64.	Individual	Claudiu Cadar	GDS Associates, Inc.	X									
65.	Individual	Terry Harbour	MidAmerican Energy	X									
66.	Individual	Catherine Koch	Puget Sound Energy	X									
67.	Individual	Joe Tarantino	Sacramento Municipal Utility District	X		X	X	X					

Group/Individual		Commenter	Organization	Registered Ballot Body Segment									
				1	2	3	4	5	6	7	8	9	10
68.	Individual	Patrick Farrell	Southern California Edison Company	X		X		X	X				
69.	Individual	John Mayhan	Omaha Public Power District	X		X		X	X				
70.	Individual	Jon Kapitz	Xcel Energy	X		X		X	X				

1. **The SDT has revised the Implementation Plan based on industry comments to the initial ballot. Do you support this change? If you do not support this change, please specify why you disagree and include specific alternative language to resolve your concern.**

Summary Consideration:

The majority of respondents agree with the changes to the Implementation Plan and no further changes to the Implementation Plan are deemed necessary.

The SDT fully realizes that Project 2010-11 (Table 1 - footnote "b") must reach resolution prior to finalizing TPL-001-2 and stated the same in the information attached with the fifth posting of Project 2006-02.

The SDT reviewed the comment on consistency of language in the Implementation Plan and the Roadmap and agrees with the comment. The paragraph under Effective Date in the standard has been changed accordingly.

> For 84 calendar months beginning the first day of the first calendar quarter following applicable regulatory approval, or in those jurisdictions where no regulatory approval is required on the first day of the first calendar quarter 84 months after Board of Trustees adoption, Corrective Action Plans applying to the following categories of Contingencies and events identified in TPL-001-2, Table 1 are allowed to include Non-Consequential Load Loss and curtailment of Firm Transmission Service (in accordance with Requirement R2, Part 2.7.3.) that would not otherwise be permitted by the requirements of TPL-001-2:

The SDT did not pose questions for items that were not redlined, i.e., changed, in this posting since those items not redlined were considered by the SDT as sufficiently vetted by the industry through the various phases of the project to date. However, the SDT has reviewed all comments regardless of whether specific questions were asked and has considered the comments. In many of the cases relating to the comments, the SDT has already responded to similar comments and those responses are quoted here for convenience:

1.1.5 – "The SDT believes that the base cases should include any area interchange that is planned between utilities." In addition, non-firm transactions are not required to be modeled.

2.1.5 – "When a piece of long lead-time Equipment is unavailable, System adjustments will need to be made. The System, after it is adjusted to accommodate that piece of Equipment out of service will be treated as the "normal" (P0) condition in Table 1 and the rest of Table 1 will be applied as stated. This requirement is intended for the Planning Coordinator and/or Transmission Planner to take into account its spare equipment strategy for long lead time Equipment when assessing the performance of its System. If the loss of a piece of major Equipment can be replaced within a reasonable period of time, planning studies for the following year can assume that that piece of Equipment will be replaced. If not, its impact of unavailability would need to be assessed. Actions such as out of merit dispatch, operational restrictions, System reconfiguration can be part of a Corrective Action Plan if the System cannot meet performance requirements without the Facility in service."

2.3/2.8 – "is intended for the Planning Coordinator and/or Transmission Planner to assess whether circuit breakers supporting the BES have interrupting capability for Faults that they will be expected to interrupt. Even though the effects of short circuit capability are localized and may be related to new planned Facilities, it is important to BES reliability."

3.4.1/4.4.1 – "The SDT has determined that it is necessary for the Planning Coordinator and Transmission Planner to coordinate with adjacent Planning Coordinators and Transmission Planners to ensure that Contingencies on adjacent Systems which may impact their Systems are included in the Contingency list created." In addition, the SDT wants to make it clear that an entity is responsible for corrective actions on its own System.

4.3.1 – "does not require modeling of Protection System equipment. It just requires you to have simulations which include the effects of Protection System equipment operation. You don't have to specifically model a relay to simulate the effect of clearing a fault at 3 cycles. If you need to model a relay to capture its effect, then model that relay. And certainly engineering judgment should be used to determine which relay effects should be included in the simulations."

References to TPL-001-1 are a typo and will be cleaned up. The correct reference, as pointed out, is TPL-001-2.

Organization	Yes or No	Question 1 Comment
Northeast Power Coordinating Council Consolidated Edison Co. of New York, Inc	No	Requirement R1 Part 1.1 and following states "System models shall represent:... 1.1.5. Known commitments for firm Transmission Service and Interchange. It was commented during a previous posting that 1.1.5 should be reworded to read: Known commitments for Firm Transmission Service, and, additionally, other types of transactions provided they have been demonstrated to not violate existing reliability constraints. The response was that "The SDT believes that the defined term 'Interchange' covers other transfers as described in your comment. No change made."It is agreed that known Interchanges should be modeled. However, it is imperative that existing reliability constraints not be violated in the process. That is, Interchange relating to economic transactions should not drive planning studies. Reliability related investments should not be driven by congestion related to economic transactions incorporated into planning models. Following is a preferred/revised wording: o 1.1.5. Known commitments for firm Transmission Service and Interchange. Interchange is meant to refer to energy transactions other than firm Transmission Service. While rigorous planning studies have been conducted to permit the uninterrupted implementation of firm Transmission Service without jeopardizing the reliable operation of the Interconnected System, other types of energy transaction only take place whenever system conditions permit them. They are usually of very short duration relative to planning assessment periods (usually spanning for a few hours to a few days) and deemed highly interruptible subject to reliability issues that may arise during operation of the system. In other words, the term Interchange refers to economic transactions that are permitted when the system is secure and there are reasonable reliability margins to effect dispatch changes to lower operating costs. As such, Interchange should not be reflected in system representation meant to assess system reliability in adherence to reliability criteria delineated in documents such as TPL-001.

Organization	Yes or No	Question 1 Comment
GDS Associates, Inc.	No	We disagree with the Implementation Plan and we suggest changes as follows:- The title should read "Implementation Plan for TPL-001-2"- With regards to the Prerequisite Approvals, NERC project #2010-11 still in progress (Table 1, Footnote 'b') must be implemented before this current TPL-001-2 standard gets implemented. However, while the 2010-11 NERC project does not define any of the new terms such as consequential / non-consequential load, the footnote 'b' cannot be just copied into the new standard (see TPL-001-2 standard Table 1, note 12). Note 'b' may further change to reflect the verbiage in the TPL-001-2 standard.- Not sure what is the intent of the last paragraph. While the proposed changes to Table 1, footnote 'b' are quite precise, are we still open a door to those entities that will continue to trip Non-Consequential Load and curtail Firm Transmission Service? If no penalties for such practices while the proposed standard allows a sufficient time frame to correct any deficiencies, then what is the point to all the effort behind the development of a new TPL standard?
SMUD		R2.7.1, last bullet: Please provide specifics on the types of acceptable 'Corrective Actions' covered by 'rate applications and DSM' and the planning horizon for which they are considered acceptable. As an alternative, NERC should develop a process by which what is considered acceptable is published and continuously updated. (With due apologies for not raising this point earlier).
Western Electricity Coordinating Council	Yes	We commend the SDT for its work to continue the improvement on the proposed TPL-001-1. We were not able to find a place to include comment on various requirements not identified in the questions below; therefore, we have included our comments here: Requirement and 2.6 and 2.6.1: A study that is five years old is very likely to be out of date. The entity's BES may have not changed much in five years but the entity cannot be certain whether or not their neighbor's system may have changed. Changes outside the immediate entity's system can impact results of studies within their system. Suggest that two years is a maximum that past studies should be allowed. Requirement 3.4.1 and 4.4.1 require PCs and TPs to coordinate with adjacent PCs and TPs to ensure that Contingencies on adjacent Systems which may impact their Systems are included in the Contingency list. Please clarify whether this means that a PC or TP must coordinate with others to identify contingencies on other Systems that the PC or TP must now include on their Contingency list to simulate and address any performance violations on their own System, or does it mean that the PC or TP must coordinate with others to identify contingencies on their System that the PC or TP must now include on their Contingency list to simulate and address any performance violations on other Systems. In either case, the standard does not seem to clearly state what must be done, or whose responsibility it is to mitigate, if a contingency in one System causes a performance violation in another System. Requirement R4.3.1, bullet point 3 requires the stability analyses to include the impact of subsequent "[t]ripping

Organization	Yes or No	Question 1 Comment
		of Transmission lines and transformers where transient swings cause Protection System operation based on generic or actual relay models". As written, this bullet could be interpreted as requiring the inclusion of these relay models in stability data bases. We do not have generic or actual relay models in our dynamics data bases for tripping line faults on lines and transformers represented. We represent actual relay response and tripping times of relays, communications, and breakers to faults in tripping transmission lines and transformers. Requiring the inclusion of generic or actual relay models for all relays that can trip lines and transformers would add a large burden to the development and maintenance of accurate dynamics model files that would add little or no benefit. Please change this bullet to read: "Tripping of Transmission lines and transformers where transient swings cause Protection System operation based on known Protection System response".
Tucson Electric Power Company	Yes	We commend the SDT for its work to continue the improvement on the proposed TPL-001-1. We have included additional comments here since we were not able to find a place to include comments on the following: Requirement R4; Requirement, Parts 2.1.5, 2.3, and 2.8; Requirement 3, Part 3.3.2; and Requirement 4, Parts 4.3.1and Part 4.3.2 Requirement 2, Part 2.1.5:The spare equipment strategy does not improve reliability performance. If an outage of a long lead time piece of equipment occurs, the system should still be able to operate in a reliable manner that meets the performance measures of Categories P3 and P6. If an entity cannot meet its performance requirements under this standard, a capital project is indicated. Spare equipment being available would not mitigate this need it only increases expenses until the item is needed. Requirement 2, Parts 2.3 and 2.8:Short circuit fault duty is a localized phenomena that is mainly impacted by the addition of new generation or transmission facilities. Due to proprietary concerns of generation and transmission interconnection requests, short circuit studies are performed in forums outside the annual Planning Assessment. Normally, these studies will be conducted before the projects can be included in regional base cases. As such, short circuit analysis should not be included in this Standard since it would provided limited benefit. Requirement 3, Part 3.3.2 and Requirement 4, Part 4.3.2Steady state response of dynamic control devices should also be included in the Part 3.3.2. and the list of possible devices included should be removed from Part 3.3.2 and 4.3.2. Section R4.3.1, bullet point 3 requires the stability analyses to include the impact of subsequent "[t]ripping of Transmission lines and transformers where transient swings cause Protection System operation based on generic or actual relay models". As written, this bullet could be interpreted as requiring the inclusion of these relay models in stability data bases. We do not have generic or actual relay models in our dynamics data bases for tripping line faults on lines and transformers represented. We represent actual relay response and tripping times of relays, communications, and breakers to faults in tripping transmission lines and transformers. Requiring

Organization	Yes or No	Question 1 Comment
		the inclusion of generic or actual relay models for all relays that can trip lines and transformers would add a large burden to the development and maintenance of accurate dynamics model files that would add little or no benefit. Please change this bullet to read: “Tripping of Transmission lines and transformers where transient swings cause Protection System operation based on known Protection System response”.
Western Area Power Administration	Yes	The whole bullet point section in the Effective Date section referring to Corrective Action Plans could be deleted and instead captured by Requirement R2.7.3. A seven year grace period is probably not favorable to FERC, and a better solution could be developed to meet industry needs. In R2.7.3, a possible example of "beyond the control of the Transmission Planner" could be that the physics of a significant percentage of induction motors in low inertia air-conditioning loads would tend to pull out for certain N-1 events. This may in significant part occur because such motors may have nearly no dynamic stability margin to withstand such N-1 events as close-in 3-phase faults with normal clearing during peak load conditions. So until the Transmission Planner has been able to institute changes in the industry to address the basic physics of such loads, this Requirement 2.7.3 would permit the use of such "Non-Consequential" Load Loss and curtailment of Firm Transmission Service. In this example, it may take longer than a seven year time period to fix the problem. On the other hand, some examples of Non-Consequential Load Loss could perhaps be mitigated in a shorter timeframe. Provided that an entity has a good technical justification and defined margin for “Non-Consequential” Load Loss or curtailment of Firm Transfers, then it may be acceptable. Requirement R2.7.3 seems to move in this direction. Section R4.3.1, bullet point 3 requires the stability analyses to include the impact of subsequent “[t]ripping of Transmission lines and transformers where transient swings cause Protection System operation based on generic or actual relay models”. As written, this bullet could be interpreted as requiring the inclusion of these relay models in stability data bases. We do not have generic or actual relay models in our dynamics data bases for tripping line faults on lines and transformers represented. We represent actual relay response and tripping times of relays, communications, and breakers to faults in tripping transmission lines and transformers. Requiring the inclusion of generic or actual relay models for all relays that can trip lines and transformers would add a large burden to the development and maintenance of accurate dynamics model files that would add little or no benefit. Please change this bullet to read: “Tripping of Transmission lines and transformers where transient swings cause Protection System operation based on known Protection System response”.
NERC staff	Yes	NERC staff supports the change to allow Corrective Action Plans to include tripping of Non-Consequential Load and curtailment of Firm Transmission Service for 7 years. This seems long, but staff understands the stakeholder concern that it could take that long to plan, site, and construct facilities required for compliance with the standard.
SERC Dynamics Review	Yes	“The comments expressed herein represent a consensus of the views of the above named members of the SERC Engineering Committee Dynamics Review Subcommittee only and should not be construed as the

Organization	Yes or No	Question 1 Comment
Subcommittee		position of SERC Reliability Corporation, its board or its officers."
Lakeland Electric	Yes	Shouldn't the "Implementation Plan for TPL-001-1" document be for TPL-001-2? Also, "TPL-001-1" is referenced throughout the document.
FirstEnergy	Yes	We appreciate the effort of the standard drafting team and the changes reflected in the current draft of the TPL-001-1 standard. The changes are improvements that should move the standard towards greater industry consensus. The extended Implementation Plan aligns with suggestions in FE's prior ballot comments. We support the Implementation Plan change made by the team.
US Bureau of Reclamation	Yes	With exception of the definitions.
TVA Transmission Planning & Compliance	Yes	TVA supports the change from five years to seven years for the implementation plan period.
Independent Electricity System Operator	Yes	We agree with this change. We further suggest that this change and the additional wording: "or in those jurisdictions where no regulatory approval is required on the first day of the first calendar quarter, 84 months after Board of Trustees adoption" be added to P. 3 of the standard that starts with "For 84 calendar months..." to be totally consistent.
Pacific Gas and Electric Company	Yes	We commend the SDT for its work to continue the improvement on the proposed TPL-001-1. We were not able to find a place to include comment on Requirement R3 or R4; therefore, we have included our comments here: Section R4.3.1, bullet point 3 requires the stability analyses to include the impact of subsequent "[t]ripping of Transmission lines and transformers where transient swings cause Protection System operation based on generic or actual relay models". As written, this bullet could be interpreted as requiring the inclusion of these relay models in stability data bases. We do not have generic or actual relay models in our dynamics data bases for tripping line faults on lines and transformers represented. We represent actual relay response and tripping times of relays, communications, and breakers to faults in tripping transmission lines and transformers. Requiring the inclusion of generic or actual relay models for all relays that can trip lines and transformers would add a large burden to the development and maintenance of accurate dynamics model files that would add little or no benefit. Please change this bullet to read: "Tripping of Transmission lines and transformers where transient swings cause Protection System operation based on known Protection System response". Section 3.4.1 and 4.4.1 require PCs and TPs to coordinate with adjacent PCs and TPs to ensure that Contingencies on adjacent Systems which may impact their Systems are included in the Contingency list. Please clarify whether this means 1) that a PC or TP must coordinate with others to identify contingencies on other

Organization	Yes or No	Question 1 Comment
		Systems that the PC or TP must now include on their Contingency list to simulate and address any performance violations on their own System, or 2) that the PC or TP must coordinate with others to identify contingencies on their System that this PC or TP must now include on their Contingency list to simulate and address any performance violations on the other Systems. In either case, the standard does not seem to clearly state what must be done, or whose responsibility it is to develop the corrective action plan, if a contingency in one System causes a performance violation in another System.
Puget Sound Energy Sacramento Municipal Utility District Modesto Irrigation District Los Angeles Department of Water and Power Idaho Power Co California Energy Commission SRP Platte River Power Authority PNM Arizona Public Service Company	Yes	We commend the SDT for its work to continue the improvement on the proposed TPL-001-1. We were not able to find a place to include comment on Requirement R4; therefore, we have included our comments here: Section R4.3.1, bullet point 3 requires the stability analyses to include the impact of subsequent "[t]ripping of Transmission lines and transformers where transient swings cause Protection System operation based on generic or actual relay models". As written, this bullet could be interpreted as requiring the inclusion of these relay models in stability data bases. We do not have generic or actual relay models in our dynamics data bases for tripping line faults on lines and transformers represented. We represent actual relay response and tripping times of relays, communications, and breakers to faults in tripping transmission lines and transformers. Requiring the inclusion of generic or actual relay models for all relays that can trip lines and transformers would add a large burden to the development and maintenance of accurate dynamics model files that would add little or no benefit. Please change this bullet to read: "Tripping of Transmission lines and transformers where transient swings cause Protection System operation based on known Protection System response".
SERC Planning Standards Subcommittee	Yes	
Hydro One Networks Inc.	Yes	
MRO's NERC Standards Review Subcommittee	Yes	
Pepco Holings, Inc - Affiliates	Yes	
IRC Standards Review	Yes	

Organization	Yes or No	Question 1 Comment
Committee		
Bonneville Power Administration	Yes	
Exelon Transmission Planning	Yes	
Southern Company	Yes	
Florida Reliability Coordinating Council, Inc - Transmission Working Group	Yes	
PacifiCorp	Yes	
Duke Energy	Yes	
NorthWestern Energy (NWMT)	Yes	
Orlando Utilities Commission	Yes	
Manitoba Hydro	Yes	
Minnesota Power	Yes	
South Carolina and Gas	Yes	
California ISO	Yes	
Seattle City Light	Yes	
ISO New England Inc.	Yes	
United Illuminating	Yes	

Organization	Yes or No	Question 1 Comment
Ameren	Yes	
Xcel Energy	Yes	
Hydro-Quebec TransEnergie	Yes	
National Grid	Yes	
American Transmission Company	Yes	
American Electric Power (AEP)	Yes	
Tri-State Generation & Transmission	Yes	
Lakeland Electric	Yes	
GTC	Yes	
Northeast Utilities	Yes	
NBSO	Yes	
Central Maine Power Company	Yes	
Oncor Electric Delivery	Yes	
New York State Electric & Gas Corp	Yes	
Progress Energy	Yes	
ERCOT ISO	Yes	

Organization	Yes or No	Question 1 Comment
New York Independent System Operator	Yes	
MidAmerican Energy	Yes	
Southern California Edison Company	Yes	

2. The SDT has revised the definition of Year One based on industry comments to the initial ballot. Do you support this change? If you do not support this change, please specify why you disagree and include specific alternative language to resolve your concern.

Summary Consideration:

The majority of respondents agree with the changes to the Year One definition but there was one change made due to industry comments for consistency of terminology.

> **Year One:** The first twelve month period that a Planning Coordinator or a Transmission Planner is responsible for assessing. For the Planning Assessment started in a given calendar year, Year One ~~must~~ includes the forecasted peak Load period for one of the following two calendar years. For example, if a Planning Assessment was started in 2011, then Year One ~~must~~ includes the forecasted peak Load period for either 2012 or 2013.

The SDT acknowledges the concerns expressed by a minority of commenters on ambiguity of wording, embedding the definition in the requirements, and use of operating horizon studies. However, the SDT believes that the definition has been vetted through numerous industry comment periods and that it now represents a reasonable definition for a continent-wide standard while still providing a level of flexibility for the planner.

The SDT did not pose questions for items that were not redlined, i.e., changed, in this posting since those items not redlined were considered by the SDT as sufficiently vetted by the industry through the various phases of the project to date. However, the SDT has reviewed all comments regardless of whether specific questions were asked and has considered the comments.

Organization	Yes or No	Question 2 Comment
Northeast Power Coordinating Council	No	The definition of Year One could be eliminated, and its wording used in place of Year One within the text of the requirement. The proposed definition has now added ambiguity with respect to “year two” and “year five” which are not defined. Year two could be deleted and R.2.1.1 modified as follows: System peak Load representing a point in time 12-24 months and another point in time 48-65 months into the future from the time the study is initiated. Define Year Five as the twelve month period 4 to 6 calendar years from the date of the Planning Assessment.
ISO New England Inc.	No	The definition of Year One could be deleted and used in place of Year One within the text of the requirement. The proposed definition has now added ambiguity with respect to “year two” and “year five” which are not defined. Year two could be deleted and R.2.1.1 modified as follows: System peak Load representing a point in time 12-24 months and another point in time 48-65 months into the future from the time the study is initiated.

Organization	Yes or No	Question 2 Comment
Western Electricity Coordinating Council	No	We recognize that the drafting team made changes to the definition of Year One based on industry comments. However, we believe that the revised language could allow for a situation where an entity could use its next season's operating study as its Year One planning study. For example, if the entity does its study in the fall of 2011, the proposed definition would allow the entity to use its summer 2012 operating study as its Year One study. This is a very short period to address any issued identified. Suggest working into the requirement that Planning Studies must look out at least 12 months beyond when the study is performed. This would still allow for the provision in the current definition example ("if a Planning Assessment was started in 2011, then Year One must include the forecasted peak Load period for either 2012 or 2013) because the entity would be able to use their 2013 Load period, but it would prevent the entity from using the 2012 Load period if they started the assessment late in 2011.
E.ON U.S.	No	Comments: 2.2.1. A current study assessing expected System peak Load conditions for one of the years in the Long-Term Transmission Planning Horizon and the rationale for why that year was selected. E.ON U.S. believes the scope of the 'current study' should be defined. It is not clear whether the scope is the same as outlined in section 2.1.
Florida Reliability Coordinating Council, Inc - Transmission Working Group	No	No, because it is worded to be dependent upon when an assessment is started rather than when the assessment is completed and valid. Assessments don't typically include a "start date". An assessment completed on a calendar date should include (be valid for) the forecasted peak load for a timeframe that begins no more than 24 months from the date that the assessment was completed.
Lakeland Electric	No	"the latest" is not needed from the second sentence of R1, since the sentence already ended with "..shall represent projected System conditions". R1 Part 1.1.2 Suggest adding this clarification at the end "... six months during the period under study". This language addition helps clarify the point that if an outage occurs during the summer and the entity's system peak occurs in the winter, then the system peak Load study case (model) does not have to include this particular outage.
Seattle City Light	No	The definition of Year One is now too flexible and does not meet the intent of the standard. For example, our system peak is generally in January of the year. If I perform TPL studies in November 2011, studying the peak in January 2012 is acceptable according to the new definition. This is only two months from the date of the study. The intent of the TPL standard should be that entities must study and plan for inadequacies found in the studies. A one- or two-month lead time is not adequate to address any problems identified. Year One should be the year containing the first peak 12 months or more from the current date. Otherwise, TPL studies become merely seasonal operational studies, not planning studies. Alternative Language: "For the Planning Assessment started in a given year, Year One should contain the first system peak that occurs twelve months or more after the date

Organization	Yes or No	Question 2 Comment
		of the Planning Assessment."
US Bureau of Reclamation	No	The language implies a requirement. The language "Year One must include the forecasted peak Load period for one of the following two calendar years" is a requirement and not a statement of clarification. If the definition is that “Year One” can also be the period used for forecast peak load, then it should be stated so. It is suggested that either the language in the definition is modified or the language is deleted from the definition and moved to the body of the standard.
United Illuminating	No	Year One should be used within the text of the requirement. Do not have a definition for Year One.
National Grid	No	Year One should be used within the text of the requirement. Do not have a definition for Year One. Year two could be deleted and R.2.1.1 modified as follows: For the Planning Assessment started in a given calendar year, the first year that is studied must include the forecasted peak Load period for one of the following two calendar years. An additional Near-term study must be performed that is four calendar years beyond the first year that is studied.
Tri-State Generation & Transmission	No	Comments: The Year One definition is somewhat clearer now, but there is still some ambiguity. We recommend the removal of the term “Year One, year two, and year five” from R2.1.1. and deletion of the Year One definition (definitions are not required for year two and year five, for instance). The Year One concept can be integrated into the definition of Near-Term Transmission Planning Horizon, which we suggest changing to “The period beginning with the first year following the operating horizon, as determined by the Transmission Planner or Planning Coordinator, through the fifth year.” Then, rather than say “Year One, year two, and year five”, we can use the phrase “at least one of the first two years of the Near-Term Transmission Planning Horizon, and the fifth year”.This will require corresponding changes in R2.1.1 and R2.1.2.
Lakeland Electric	No	While the definition of Year One addresses the time span this year occupies, it does not address when that time span begins. The example which was added to the definition suggests that Year One begins twelve months from the start of the Planning Assessment, but it does not appear to be specifically stated. The following language is recommended: "The first twelve month period that a Planning Coordinator or a Transmission Planner is responsible for assessing, beginning twelve months from the planned completion date of the Planning Assessment."
Northeast Utilities Consolidated Edison Co. of New York, Inc.	No	NU does not support the revised definition of Year One as we believe it leads to confusion. Our suggestion is that Year One should be the Peak Load Year after the study is initiated. The subsequent years should be counted from Year One (e.g., a study that is started in year 2010 with peak load in 2011 will have Year One as

Organization	Yes or No	Question 2 Comment
		2011 and Year Two as 2012, etc.).
Modesto Irrigation District	No	The definition as it is in the current standards is fine. The new proposed definition is unclear.
NBSO	No	To avoid confusion, the formal definition for Year One should be eliminated and wording used to describe Year One be placed within the appropriate requirement. For example, R2.1.1 could be re-written to state: System peak Load representing a point in time 12-24 months and another point in time 48-65 months into the future from the time the study is initiated.
Central Maine Power Company New York State Electric & Gas Corp New York Independent System Operator	No	The added clarification to the definition of Year One serves to remove most ambiguity with respect to Year One. However, the revision has added further ambiguity to the terms “year two” and “year five” which are not defined. For the Planning Assessment started in a given calendar year, the first year that is studied must include the forecasted peak Load period for one of the following two calendar years. An additional Near-term study must be performed that is four calendar years beyond the first year that is studied. We recommend defining Year Five as the twelve month period 4 to 6 calendar years from the date of the Planning Assessment. We further recommend revising R2.1.1 as follows: “System peak Load for Year One and for Year Five.”Alternatively, the definition of Year One could be eliminated and described within the text of the requirements.
Tucson Electric Power Company	No	A seasonal reference should be included in the example. Alternative language beginning with the second sentence: For the Planning Assessment started in a given calendar year, Year One must include the forecasted peak load period for the forecasted peak load season that is between 12 and 24 months into the future from the current season. For example, if a Planning Assessment was started in 2011 prior to the forecasted peak season, then Year One must include the forecasted peak load for 2012. If the Planning Assessment was started in 2011 during or after the forecasted peak season, then Year One must include the forecasted peak load for 2013.
GDS Associates, Inc.	No	The definition it seem both incomplete and exhaustive:- If taken out of the planning assessment context, the definition is missing the matter that is supposed to identify. We suggest changing the first sentence such as “The first twelve month period to which the functional entity is responsible for the assessment of Transmission System Planning performance.”- While it will be a burdensome task to define each year that follows Year One, the definition of Year One may include a sentence that define the rule for the following years such as “All of the twelve months period following Year One shall commence immediately after the end of the preceding twelve months period.”- The definition should not include examples.
Pacific Gas and Electric Company		We recognize that the drafting team made changes to the definition of Year One based on industry comments. However, we believe that the revised language could allow for a situation where an entity could use its next season’s operating study as its Year One planning study. For example, if the entity does its study in the fall of

Organization	Yes or No	Question 2 Comment
		2011, the proposed definition would allow the entity to use its summer 2012 operating study as its Year One study. This is a very short period to address any issued identified. Suggest working into the requirement that Planning Studies must look out at least 12 months beyond when the study is performed. This would still allow for the provision in the current definition example ("if a Planning Assessment was started in 2011, then Year One must include the forecasted peak Load period for either 2012 or 2013) because the entity would be able to use their 2013 Load period, but it would prevent the entity from using the 2012 Load period if they started the assessment late in 2011.
NERC staff	Yes	NERC staff supports the revisions to the definition of Year One. However, we believe an associated change should be made where this term is used in part 2.1.1 of Requirement 2 which requires modeling of "System peak Load for either Year One or year two, and for year five." It seems the new definition of Year One would negate the need to refer to year two. NERC staff recommends that part 2.1.1 be changed to "System peak Load for Year One and for year five."
Western Area Power Administration	Yes	Yes, this clarification helps. The drafting team could also define "year five".
FirstEnergy	Yes	The change in the Year One definition provides greater flexibility for the industry and also addresses a prior FE comment during the 1st ballot. We appreciate the team's careful consideration of the industry feedback and support the change.
TVA Transmission Planning & Compliance	Yes	TVA supports the change in the Year One definition - but would suggest that the word "started" should be changed to "completed" since a Planning Assessment may be started in one calendar year and finished in the next calendar year.
SERC Planning Standards Subcommittee	Yes	
Hydro One Networks Inc.	Yes	
SERC Dynamics Review Subcommittee	Yes	
MRO's NERC Standards Review Subcommittee	Yes	

Organization	Yes or No	Question 2 Comment
Pepco Holings, Inc - Affiliates	Yes	
IRC Standards Review Committee	Yes	
Bonneville Power Administration	Yes	
Exelon Transmission Planning	Yes	
Southern Company	Yes	
Arizona Public Service Company	Yes	
PacifiCorp	Yes	
Duke Energy	Yes	
NorthWestern Energy (NWMT)	Yes	
PNM	Yes	
Platte River Power Authority	Yes	
Orlando Utilities Commission	Yes	
Manitoba Hydro	Yes	
Minnesota Power	Yes	
Independent Electricity System Operator	Yes	
South Carolina and Gas	Yes	

Organization	Yes or No	Question 2 Comment
SRP	Yes	
California ISO	Yes	
California Energy Commission	Yes	
Los Angeles Department of Water and Power	Yes	
Idaho Power Co	Yes	
Ameren	Yes	
Hydro-Quebec TransEnergie	Yes	
LCRA TSC	Yes	
American Transmission Company	Yes	
American Electric Power (AEP)	Yes	
GTC	Yes	
Oncor Electric Delivery	Yes	
Progress Energy	Yes	
ERCOT ISO	Yes	
MidAmerican Energy	Yes	
Puget Sound Energy	Yes	

Organization	Yes or No	Question 2 Comment
Sacramento Municipal Utility District	Yes	
Xcel Energy	Yes	
Southern California Edison Company	Yes	

3.

The SDT has revised the Requirements language based on industry comments to the initial ballot. Do you support these changes? If you do not support these changes, please specify why you disagree and include specific alternative language to resolve your concern.

Summary Consideration:

Due to various industry comments, the SDT made the following clarifying change to Requirement R1:

> **R1**. Each Transmission Planner and Planning Coordinator shall maintain System models within its respective area for performing the studies needed to complete its Planning Assessment. The models shall use ~~the latest~~ data consistent with that provided in accordance with the MOD-010 and MOD-012 standards, supplemented by other sources as needed, including items represented in the Corrective Action Plan, and shall represent projected System conditions. This establishes P0 as the normal ~~s~~System condition in Table 1.

The SDT believes that 6 months is the correct number in Requirement R1, Part 1.1.2 because the planner is evaluating longer term periods, and shorter duration outages, which have scheduling flexibility, are addressed by Operations Planning. Outages six months or longer will typically be over the study periods (peak and Off-Peak) addressed in Requirement R2, Part 2.1.3.

Requirement R1, Part 1.1.6 – An issue was raised that resources could be used for export to other areas. The SDT did not make a change to the requirement since exports to other areas are covered in Requirement R1, Part 1.1.5.

The majority of respondents agree with the posted changes to these requirements and no other changes have been made based on stakeholder comments.

The SDT did not pose questions for items that were not redlined, i.e., changed, in this posting since those items not redlined were considered by the SDT as sufficiently vetted by the industry through the various phases of the project to date. However, the SDT has reviewed all comments regardless of whether specific questions were asked and has considered the comments.

Organization	Yes or No	Question 3 Comment
NERC staff	No	NERC staff suggests that the added sentence in R1 be deleted and “Normal System” in Table 1 be replaced with “No unplanned Element outages.” We have a problem with R1 establishing “normal system condition.” “Normal” is not defined, but the system condition that most people would define as “normal” is the System operating within its limits. There are no checks required on the projected system conditions to guarantee “operation within limits.” Staff realizes that if this were the case, the categories tested would all pass their respective tests. (In other words, the category tests may define operating limits that in turn define “normal” from a planning perspective.) Thus, the added sentence in R1 should be deleted. In Table 1, the use of the term “Normal System” in the column “Initial System Condition” really means “No unplanned Element outages.” All Elements that do not have a planned outage are assumed in-service (for transmission Elements) or available for dispatch (for generators).

Organization	Yes or No	Question 3 Comment
		Contrast the term “Normal System” with categories P3 and P6, which have the loss of an Element (which is unplanned) followed by the loss of a second Element (also unplanned). “Normal System” should be replaced with “No unplanned Element outages.”
SERC Planning Standards Subcommittee Southern Company Ameren	No	The definition does not adequately address normal (pre-contingency) operating procedures or system configurations. Language should be added to the requirement (perhaps as R1.1.7) to include normal operating procedures or system configurations in place prior to any contingency occurring.
Bonneville Power Administration	No	Please clarify R1.1.2 to state “Known outage(s) of generation or Transmission Facility(ies) during the Planning Horizon with a duration of of at least six months.”
E.ON U.S.	No	In the statement: “the Planning Coordinator and Transmission Planner shall coordinate with adjacent Planning Coordinators and Transmission Planners to ensure that Contingencies on adjacent Systems which may impact their Systems are included in the Contingency list.”E.ON U.S. believes that the use of the pronoun “their” in the quoted section above is confusing. “Their” could be read as applying to the adjacent Planning Coordinators and not to the Planning Coordinator to whom the standard applies. E.ON U.S. recommends that the word “their” should be changed to “the Planning Coordinator’s and Transmission Planner’s” in order to make it clear.
Florida Reliability Coordinating Council, Inc - Transmission Working Group	No	No, Since “the latest” data may become available after the study is complete, a planner may not be able to ever complete a study. Please consider removing “the latest” from the second sentence.
Western Area Power Administration	No	It’s difficult to tell whether Requirement R1 is intended to require only one base case or whether it was intended to require creation of separate models for each possible N-0 condition (“normal system condition”) under a variety of stressing scenarios. The inserted language does not seem to provide additional clarity. Suggested language may be “This establishes the initial 'Normal System' condition corresponding to category P0 in Table 1.” Also, in Requirement R1.1.5, how are the Firm Transmission Service commitments supposed to be modeled in Power Flow Cases? Are they just to be modeled as loads, generation, and control area interchanges? Suppose a POR or POD is not at a generator or load bus. What selection of generation and load would represent the projected system conditions for this Firm Transmission Service commitment?
CenterPoint Energy	No	The SDT did not incorporate CenterPoint Energy's previous comment regarding R1; therefore, CenterPoint Energy's concerns remain.

Organization	Yes or No	Question 3 Comment
United Illuminating National Grid Central Maine Power Company New York State Electric & Gas Corp	No	For R1 Ambiguity regarding base case assumptions, in combination with lack of clarity and clear direction of purpose regarding the sensitivity analysis, undermines the objectives of the standard; R1.1 Part 1.1.2. With respect to known outages, there needs to be greater flexibility in the standards (e.g. more tolerance to non-consequential load shedding or limitations to the contingencies that need to be considered (e.g. P0, P1, & P2)). Regional allowances for load shedding under this condition should be approved. Duration of known outages should be increased from six months to one year; R1.1 Part 1.1.6 Delete "required for Load". Resources may also be used for export to other areas, not just internal load.
ISO New England Inc.	No	R1.1 Part 1.1.2. With respect to known outages, there needs to be greater flexibility in the standards (e.g. more tolerance to non-consequential load shedding or limitations to the contingencies that need to be considered (e.g. P0, P1, & P2)). Regional allowances for load shedding under this condition should be approved. Duration of known outages should be increased from six months to one year; R1.1 Part 1.1.6 Delete "required for Load". Resources may also be used for export to other areas, not just internal load.
American Transmission Company	No	We propose the following changes and questions: R1 - We offer the minor suggestion of replacing the wording of “maintain System models within their respective areas” with “maintain System models of elements that are interconnected to any portion of the BES that is owned or operated by the TP or PC”. This wording would avoid the ambiguity that can occur when a BA that is associated primarily with one TP declares ownership of a bus in another TP’s geographic area, but expects its primary TP to maintain the BA’s model data for the remote generation or load. R1.1.2 - We request a SDT opinion on how two individual outages should be modeled if they are both in excess of six months duration and they overlap by less than six months. Should the overlapping condition only be modeled if the condition is expected to last more than six months?
Tri-State Generation & Transmission	No	We suggest changing the added sentence to “This establishes the Category P0, No Contingency, Initial System Conditions in Table 1.”
Lakeland Electric	No	Consider removing “...the latest...” from R1 and changing R1.1.2 to state “...six months during the period of

Organization	Yes or No	Question 3 Comment
		study."
Northeast Utilities	No	NU believes that the Normal System Conditions as stated in Requirement R1 should establish the base case conditions to be used for the assessment studies. More guidelines for developing base cases should be addressed in the requirements. What the statement in Requirement R1 lacks is the manner of creating generation dispatches and the level of interface flows (level of stress), which are central to any base case to be used to assess the reliability of the electric power network. Depending upon how the base case dispatches and the level of interface flows are created, a study may reveal reliability violations in the power system. This is a weakness of the existing TPL standards. NU, however, will support the idea of developing regional guidelines in regard to the nature of the base cases to be used for the NERC reliability studies. Comment on Requirement R1.1, Part 1.1.2: With respect to known outages NU requests that the six month duration listed by the requirement should be changed to one year duration. Requirement R1.1 Part 1.1.6: The phrase "required for Load" should be deleted as this confuses the issue [since resources may also be used for export to other areas and not just internal load].
NBSO	No	R1 should have some language to state that base case assumptions should be made such that they appropriately stress the system to be tested and are in accordance with good engineering practice.
Tucson Electric Power Company	No	Proposed changes1.1.1 Existing Facilities that will not be changed before the study year 1.1.3 New planned Facilities and planned changes to existing facilities
GDS Associates, Inc.	No	The Time Horizon should be for both Near-Term and Long-Term Planning.
MidAmerican Energy	No	There are concerns over the FERC outstanding March order on TPL and how FERC interprets "normal" or base case conditions and "assuming" an entities primary protection system is out of service and must rely on its backup protection system to operate. This concept combined with the new tables cannot be perpetuated.
Xcel Energy	No	Although we support the change conceptually, we believe the sentence added in R1 needs more specificity to ensure a better correlation to the relevant portions of Table 1. Please make it clear that the system model created as per R1 corresponds to Category P0 by explicitly referring to it. Suggested language is: 'This establishes the "Normal System" initial condition corresponding to category P0 in Table 1.' Further, consider omitting the word "System" in Table 1 Column 2 heading by calling it "Initial Condition" – the redundancy produced by its usage in both heading and entry does not appear to provide any

Organization	Yes or No	Question 3 Comment
		value. Alternative suggested language is: 'This establishes the "Normal" initial system condition corresponding to category P0 in Table 1." This alternative approach envisages changing the Column 2 entries to "Normal" since the word "System" is now retained in the heading.
MRO's NERC Standards Review Subcommittee	Yes	We propose the following changes and questions:R1 - We offer the minor suggestion of replacing the wording of "maintain System models within their respective areas" with "maintain System models of elements that are interconnected to any portion of the BES that is owned or operated by the TP or PC". This wording would avoid the ambiguity that can occur when a BA that is associated primarily with one TP declares ownership of a bus in another TP's geographic area, but expects its primary TP to maintain the BA's model data for the remote generation or load. R1.1.2 - We request the SDT opinion on how two individual outages should be modeled if they are both in excess of six months duration and they overlap by less than six months. Should the overlapping condition only be modeled if the condition is expected to last more than six months?
Northeast Power Coordinating Council	Yes	
Hydro One Networks Inc.	Yes	
Transmission Issues Subcommittee	Yes	
SERC Dynamics Review Subcommittee	Yes	
Pepco Holings, Inc - Affiliates	Yes	
IRC Standards Review Committee	Yes	
Exelon Transmission Planning	Yes	

Organization	Yes or No	Question 3 Comment
Western Electricity Coordinating Council	Yes	
Arizona Public Service Company	Yes	
PacifiCorp	Yes	
Duke Energy	Yes	
NorthWestern Energy (NWMT)	Yes	
PNM	Yes	
FirstEnergy	Yes	
Platte River Power Authority	Yes	
Orlando Utilities Commission	Yes	
Manitoba Hydro	Yes	
Minnesota Power	Yes	
US Bureau of Reclamation	Yes	
TVA Transmission Planning & Compliance	Yes	
Independent Electricity System Operator	Yes	
South Carolina and Gas	Yes	
SRP	Yes	

Organization	Yes or No	Question 3 Comment
California ISO	Yes	
Seattle City Light	Yes	
California Energy Commission	Yes	
Los Angeles Department of Water and Power	Yes	
Idaho Power Co	Yes	
Hydro-Quebec TransEnergie	Yes	
LCRA TSC	Yes	
American Electric Power (AEP)	Yes	
GTC	Yes	
Pacific Gas and Electric Company	Yes	
Consolidated Edison Co. of New York, Inc.	Yes	
Modesto Irrigation District	Yes	
Oncor Electric Delivery	Yes	
Progress Energy	Yes	
ERCOT ISO	Yes	
New York Independent System	Yes	

Organization	Yes or No	Question 3 Comment
Operator		
Puget Sound Energy	Yes	
Sacramento Municipal Utility District	Yes	
Southern California Edison Company	Yes	

3.1 Requirement R2 and Part 2.1 – past studies

Summary Consideration:

The majority of respondents agree with the changes to these requirements and only the changes to these requirements noted below have been made.

The SDT believes that the supposed inconsistencies mentioned in the language are not inconsistencies at all but necessary qualifiers. No change made.

Based on comments received, the SDT has modified Requirement R2, part 2.6.2 as follows to provide additional clarity:

> **2.6.2** For steady state, short circuit, or Stability analysis: no material changes have occurred to the System represented in the study. ~~shall not include any material changes unless a technical rationale can be provided to demonstrate that System changes do not impact the performance results in the study area.~~ Documentation to support the technical rationale for determining material changes shall be included.

The following change was made to clarify that the list following the statement is not all inclusive:

> **2.7.1** List System deficiencies and the associated actions needed to achieve required System performance. Examples of ~~S~~such actions ~~may~~ include:

The SDT did not pose questions for items that were not redlined, i.e., changed, in this posting since those items not redlined were considered by the SDT as sufficiently vetted by the industry through the various phases of the project to date. However, the SDT has reviewed all comments regardless of whether specific questions were asked and has considered them. In some of the cases relating to the above comments, the SDT has already responded to similar comments and those responses are quoted here for convenience:

2.1.5 – "When a piece of long lead-time Equipment is unavailable, System adjustments will need to be made. The System, after it is adjusted to accommodate that piece of Equipment out of service will be treated as the "normal" (P0) condition in Table 1 and the rest of Table 1 will be applied as stated. This requirement is intended for the Planning Coordinator and/or Transmission Planner to take into account their spare equipment strategy for long lead time Equipment when assessing the performance of their System. If the loss of a piece of major Equipment can be replaced within a reasonable period of time, planning studies for the following year can assume that that piece of Equipment will be replaced. If not, its impact of unavailability would need to be assessed. Actions such as out of merit dispatch, operational restrictions, System reconfiguration can be part of a Corrective Action Plan if the System cannot meet performance requirements without the Facility in service."

Organization	Yes or No	Question 4 Comment
Northeast Power Coordinating Council Consolidated Edison Co. of New York, Inc.	No	The revisions made to Requirement R2 Part 2.1 appear to resolve the concern that past studies could not be used to comply with the short-term steady state study requirements. This revision must be carried through to other sections (R2.2, 2.2.1). However, the language of Requirement R2 Part 2.2 still seems to suggest that current annual studies are always required for the long-term steady state assessment to be compliant. This may have been an oversight, for consistency Requirement R2 Part 2.2 should be modified to similarly read as Requirement R2, Part 2.1. Regarding R2.2, the language should be consistent with 2.1. For example, use "current or qualified past studies" instead of "the following annual current study". Revisions made to Requirement R2.1.5 have made it worse than was originally drafted. This would require the PC & TP to study (meaning performing a technical analysis) of the impact and probability of the possible unavailability of any piece of equipment with a lead time of one year or more. Such an evaluation of spare equipment strategies would require significant additional resources and data, but provide no benefit to system reliability, as it is redundant to the existing N-1-1 contingency requirement (P6). R2.7 requires that Corrective Action Plans are included in each Planning Assessment and states “Such actions may include...” followed by a list of actions. Restricting allowable actions, and excluding runback/tripping of HVDC would have a direct impact on multiple existing facilities in New York and would adversely impact the reliability planning of the NYCA. Runback/tripping of HVDC must be added to the list, and also suggest revising to “Such actions may include but not be limited to:”.
Florida Reliability Coordinating Council, Inc - Transmission Working Group	No	No, Please consider removing R.2.6.2. The overwhelming majority of PAs use a 10 year set of planning models developed annually by Regions or Subregions. These annual sets of planning models will always have some changes. The annual study requirement is especially problematic for Stability and Short circuit studies that require much more engineering time to complete and are much less likely to have results impacted by minor model changes such as different load forecasts. Uncertainty with audit review of technical rationale documentation will serve to focus Transmission Planning engineering resources on short term compliance to an extent that is counter productive.
Western Area Power Administration	No	R 2.1.5: The issue in this Requirement is studied in the Operations next-day; next-week; next-month studies required under the TOP Standards; and are also covered by processes such as the Operational Transfer Capability Policy Committee (OTCPC) seasonal study process within the WECC. It would be quite onerous to run a complete power flow simulation on separate base cases for each transformer (or other equipment with long lead time) initially out of service. The revision in language from “Planning Assessment” to “studies” does not clarify that a power flow simulation is not necessarily required for each situation. A valid assessment could include other methods such as using sound technical reasoning to relate the initial out-of-service

Organization	Yes or No	Question 4 Comment
		condition to a condition that has already been studied. This condition may have taken place in previous operational studies. The language in the standard could be improved to make this clarification - perhaps reference R2.6. Additionally, this Requirement still needs further clarification. Currently the scope of equipment applicable to the requirement could be misinterpreted as larger than that contemplated by FERC. The standard as written seems to say that the responsible entity needs to study the spare equipment strategy for all "major transmission equipment" with long lead times. In the directive to include this requirement, FERC used the term "critical facilities". In the NOPR to Order No. 693 they stated, "Critical facilities are those facilities that impact IROLs and deliverability of generation to firm load" (P1081). In Order No. 693 FERC also said, "if an entity's spare equipment strategy for the permanent loss of a transformer is to use a 'hot spare' or to relocate a transformer from another location in a timely manner, the outage of the transformer need not be assessed under peak system conditions" (P1725).Finally, the drafting team could clarify if this requirement applies to radial branches (such as generator step-ups or step-down to load). Such branches may be construed as "critical facilities" but the impediment to deliverability of generation to firm load is consequential to the initial outage.
Lakeland Electric	No	Please consider removing R.2.6.2
Platte River Power Authority	No	I like that you have requirements for qualifying past studies, but Part 2.6.2 is confusing. Please change Part 2.6.2 to read something like: "For steady state, short circuit or Stability analysis: no material changes have occurred to the System represented in the study or, if material changes have occurred, a technical rationale can be provided to explain that the changes do not impact the performance results in the study area."
Orlando Utilities Commission	No	Allowing the use of past studies in lieu of new studies for part or all of an assessment when the underlying system hasn't changed in a signficant change if very prudent. However the wording in 2.6.2 of "unless a technical rationale can be provided to demonstrate that System changes do not impact the performance results in the study area" is of concern. By this wording is it intended that the planner must demonstrate that every material change has no impact? In essence doing more work to prove that a study isn't required then the study would take? Or that the planner must essentially have a technical rationale (overarching) for determining when a material change is "material enough" to impact system perofrmance?
Minnesota Power	No	Requirement 2 - This requirement states that Stability analyses be performed as part of the annual Planning Assessments. Minnesota Power would like to see the term "Stability analysis" more clearly defined as there are several different types of stability related analysis that can be performed for power systems including: transient stability, voltage stability and small signal stability.
US Bureau of Reclamation	No	The question is misleading in that R2 also include current studies. The overall structure of the standard

Organization	Yes or No	Question 4 Comment
		could be greatly improved if the standard were segmented into Near Term and Long Term with sub segments for each specific type of analysis to be performed. Second, the standard does not use consistent terms. The Planning Assessment is to include Near Term and Long Term portions which must have steady state analysis, short circuit analysis, and stability analysis (ref. R2). Requirement R 2.1 introduces sensitivity analysis for the Near Term portion, and then refers to the Planning Analysis which is in reality both Near Term and Long Term portions. That implies that sensitivity analysis must be required for both? The standard repeats the requirement for annual stability studies in 2.4 which was already a requirement for Planning Assessments. The requirement 2.1.5 is one the most problematic requirements in this standard. This requirement implies that an entity must have spare equipment and a strategy to employ it. That is beyond the scope of the Energy Policy Act 2005. Spare equipment is not on-line and does not contribute to the reliability of the existing system. The Energy Policy Act of 2005 specifically prohibits the requirement to enhance or modify the system. The use, application, or requirement to have spare equipment violates that prohibition. This section should be removed. In addition, this requirement suffers from an ability to implement. In the first case, the requirement is invoked if the spare equipment strategy could result in unavailability of transmission equipment. How is that determined? There is no nexus to that determination. The unavailability may have already occurred once the transmission equipment has failed. The only way to avoid unavailability if the transmission equipment that fails has a hot stand-by with automatic fail-over. The presence or not of a suitable replacement will still result in unavailability by virtue of the failure o the first piece of transmission equipment. Next problem, who will second guess the owner of the replacement. Where is the requirement to make the replacement strategy available? The standard should focus on system performance with existing equipment to meet current and future loads.
CenterPoint Energy	No	The SDT did not incorporate CenterPoint Energy's previous comments regarding R2; therefore, CenterPoint Energy's concerns remain.
ISO New England Inc. United Illuminating National Grid	No	We can agree with R2.1 however with respect to R2.2 Language should be consistent with 2.1 for example - use "current or qualified past studies" instead of "the following annual current study."
Northeast Utilities	No	The revisions made to Requirement R2 Part 2.1 appear to resolve the concern that past studies could not be used to comply with the short-term steady state study requirements. However, the language of Requirement R2 Part 2.2 still seems to suggest that current annual studies are always required for the long-term steady state assessment to be compliant. This may have been an oversight, for consistency Requirement R2 Part

Organization	Yes or No	Question 4 Comment
		2.2 should be modified to similarly read as Requirement R2, Part 2.1.
Hydro-Quebec TransEnergie	No	Requirement R2 Part 2.2 should be modified to read as 2.1 (not impose current annual studies as the only requirement for assessment)
American Transmission Company	No	R2.1.3 - We offer the minor suggestion of revising R2.1.3 to state, "Known outages of generation or Transmission Facilities with a duration of at least six months be simulated along with P1 events for the System peak or Off-Peak conditions when the outages are scheduled to occur." We interpret that the requirement should only call for the simulation of individual outages with duration of six months or more and not imply the simulation of sequential (back-to-back) outages where each individual outage is less than six months, but the composite duration of the back-to-back outages is more than six months. We also interpret that if two or more known outages with duration of at least six months are overlapping, then the overlapping outage condition would only be simulated for the conditions when the overlapping outages are scheduled to occur if the duration of the overlapping condition is at least six months.
Tri-State Generation & Transmission	No	2.1.5 - Change "shall be performed for" to "shall have been performed for."
Lakeland Electric	No	No, the phrase any material changes used in requirement R.2.6.2 will effectively cause all Planning Authorities to run all studies every year regardless of minor changes in the model. The overwhelming majority of PAs use a 10 year set of planning models developed annually by Regions or Subregions. These annual sets of planning models will always have some changes. The annual study requirement is especially problematic for Stability and Short circuit studies that require much more engineering time to complete and are much less likely to have results impacted by minor model changes such as different load forecasts. Uncertainty with audit review of technical rationale documentation will serve to focus Transmission Planning engineering resources on short term compliance to an extent that is counter productive. Please consider removing R.2.6.2
NBSO	No	NBSO agrees with the language for R2.1, but the language with R2.2 should be changed to be consistent with R2.1. NBSO disagrees with the revisions to R2.1.5. Requiring PAs to study instead of assess the possible unavailability of equipment with a lead time of a year or more will result in significant demand on resources with little impact on system reliability. NBSO also questions what additional value such studies will bring in addition to the N-1-1 requirements (P6).

Organization	Yes or No	Question 4 Comment
Central Maine Power Company New York State Electric & Gas Corp	No	We completely agree with the revision to R2.1, but this revision must be carried through to other sections (R2.2, 2.2.1) and R2.2 language should be consistent with 2.1 for example - use "current or qualified past studies" instead of "the following annual current study". Revisions made to Requirement R2.1.5 have made it worse than as originally drafted. This would require the PC & TP to study, or in other words perform technical analysis of, the impact and probability of the possible unavailability of any piece of equipment with a lead time of one year or more. Such an evaluation of spare equipment strategies would require significant additional resources and data, but provide no benefit to system reliability, as it is redundant to the existing N-1-1 contingency requirement (P6).
Progress Energy	No	While PE does not disagree with the basic premise of 2.1, PE disagrees with the language to the extent that 2.1 is qualified by language in 2.6 and 2.6.2. The issue of managing modeling of case data is already adequately handled in MOD Standards. Furthermore, PE does not feel that the term “material” can be defined with any mutually agreed-upon boundaries, and could be construed to require any and all Transmission Planners and/or Planning Authorities to make multiple revisions of base cases each year. PE therefore appeals to the SDT to remove the language referring to R2 Part 2.6.2 and furthermore appeals for the deletion of R2.6.2. Furthermore, PE appeals to the SDT to modify R2.6.1 to say “For steady state, short circuit, or Stability analysis: the study shall be five calendar years old or less, unless a technical rationale can be provided to demonstrate the validity of the results of any studies older than five years or any studies using cases containing major modeling differences from other submitted studies.”
ERCOT ISO	No	Previous Comment unaddressed: Requirement 2.1.5: Including the spare equipment strategy will be difficult for a PC that doesn’t own or manage the transmission equipment or the strategies. This requirement should only be applicable to TP. Furthermore, R7 should be deleted and the responsibilities of each entity should be explicitly stated within the specific requirements.
New York Independent System Operator	No	NYISO completely agrees with the revision to R2.1, but this revision must be carried through to other sections (R2.2, 2.2.1). Revisions made to Requirement R2.1.5 have made it worse than as originally drafted. This would require the PC & TP to study, or in other words perform technical analysis of, the impact and probability of the possible unavailability of any piece of equipment with a lead time of one year or more. Such an evaluation of spare equipment strategies would require significant additional resources and data, but provide no benefit to system reliability, as it is redundant to the existing N-1-1 contingency requirement (P6).

Organization	Yes or No	Question 4 Comment
		R2.7 requires that Corrective Action Plans are included in each Planning Assessment and states "Such actions may include..." followed by a list of actions. Restricting allowable actions, and excluding runback/tripping of HVDC would have a direct impact on multiple existing facilities in New York and would adversely impact the reliability planning of the NYCA. Runback/tripping of HVDC must be added to the list.
Xcel Energy	No	Specifically, the phrase "as follows" at the end of Part 2.1 does not appear to be an appropriate lead-in for the sub-parts under 2.1. Please consider re-wording Part 2.1 consistent with Part 2.4 to use the lead-in "The following studies are required:" Why is it essential to use the qualifier "annual" for "current studies" in Part 2.1? Can a study be considered current if it is conducted less frequently than once every year? Note that Parts 2.3, 2.4 and 2.5 do not use the "annual" qualifier, nor does Requirement R2. Recommend deleting this apparently non-essential qualifier in both 2.1 and 2.2 to improve consistency. In Part 2.5, should "annually" be inserted after "shall be assessed" to make it consistent with Parts 2.1, 2.2, 2.3 and 2.4? If the omission is intentional in 2.5, please explain why. To improve semantics and consistency, please modify 2.2.1 as follows to make it consistent with 2.1.1 and 2.4.1 "System peak Load for one of the years in the…" We are unable to appreciate why the wording in Part 2.3 is not consistent with that in Part 2.1, 2.2, 2.4 or 2.5. Note that the semantics of the wording "… (steady state / stability) analysis shall be assessed annually…" can be interpreted to be much different than the semantics of the Part 2.3 wording "The short circuit analysis…. shall be conducted annually …". The former requires the analysis to be *assessed* annually but 2.3 requires the analysis to be *conducted* annually without explicitly requiring it be assessed –- is the usage of "conducted" instead of 'assessed" consistent with the intent? It is unclear why the stipulation to use "current or qualified past studies" needs to be repeated in each of the Parts 2.1, 2.2, 2.3, 2.4 and 2.5 when it is already specified in Requirement R2 at the highest hierarchy level. Suggest eliminating redundant usage by deleting from the parts under R2. In Part 2.6.2, the intent is awkwardly conveyed within the phrase "…the System represented in the study shall not include any material changes unless…". In the context of a *past* study, how can the System represented possibly include any material changes (that would have presumably occurred after the study)? Suggest modifying Part 2.6.2 to read "For steady state, short circuit or Stability analysis: no material changes have occurred in the System represented in the study or, if material changes have occurred, a technical rationale shall be provided to explain why they do not significantly impact the study results." In Parts 2.6.1 and 2.6.2, the lead-in phrase "For steady state, short circuit or Stability analysis:" does not appear to be essential. Even in the absence of this phrase, wouldn't these two attributes of a qualified past study apply (by default) to all types of analysis? Suggest deleting this seemingly redundant phrase in both 2.6.1 and 2.6.2.

Organization	Yes or No	Question 4 Comment
		Perhaps this comment is more persuasive when considered together with the next comment. Recommend moving Part 2.6 to the first part under R2 (Part 2.1) because it defines the qualified past studies which are applicable to all types of analysis (steady state, stability and short circuit) that are detailed in the subsequent parts.
MRO's NERC Standards Review Subcommittee	Yes	R2.1.3 - We offer the minor suggestion of revising R2.1.3 to state, “Known outages of generation or Transmission Facilities with a duration of at least six months be simulated along with P1 events for the System peak or Off-Peak conditions when the outages are scheduled to occur.” We interpret that the requirement should only call for the simulation of individual outages with duration of six months or more and not imply the simulation of sequential (back-to-back) outages where each individual outage is less than six months, but the composite duration of the back-to-back outages is more than six months. We also interpret that if two or more known outages with duration of at least six months are overlapping, then the overlapping outage condition would only be simulated for the conditions when the overlapping outages are scheduled to occur if the duration of the overlapping condition is at least six months. R2.1.5 - We offer a major suggestion regarding the phrase “could result in the unavailability of major transmission equipment” because this phrase is ambiguous and not defined. So, there is a significant risk of different and possibly contradictory interpretations by TPs, PCs, and auditors. We proposed adding that the TP and PC “shall provide documentation to support the technical rationale for defining unavailability of major transmission equipment” similar to R2.5.
NERC staff	Yes	NERC staff supports the use of qualified past studies for the Near Term horizon.
American Electric Power (AEP)	Yes	R2, Part 2.1 - idicates that ‘qualified’ past studies can be utilized. This is an ambiguous term and we suggest the SDT consider the implications.
SERC Planning Standards Subcommittee	Yes	
Hydro One Networks Inc.	Yes	
SERC Dynamics Review Subcommittee	Yes	
Pepco Holings, Inc - Affiliates	Yes	

Organization	Yes or No	Question 4 Comment
IRC Standards Review Committee	Yes	
Bonneville Power Administration	Yes	
Exelon Transmission Planning	Yes	
Southern Company	Yes	
Western Electricity Coordinating Council	Yes	
Arizona Public Service Company	Yes	
PacifiCorp	Yes	
Duke Energy	Yes	
NorthWestern Energy (NWMT)	Yes	
PNM	Yes	
FirstEnergy	Yes	
Manitoba Hydro	Yes	
TVA Transmission Planning & Compliance	Yes	
Independent Electricity System Operator	Yes	
South Carolina and Gas	Yes	

Organization	Yes or No	Question 4 Comment
SRP	Yes	
California ISO	Yes	
Seattle City Light	Yes	
California Energy Commission	Yes	
Los Angeles Department of Water and Power	Yes	
Idaho Power Co	Yes	
Ameren	Yes	
LCRA TSC	Yes	
GTC	Yes	
Pacific Gas and Electric Company	Yes	
Modesto Irrigation District	Yes	
Oncor Electric Delivery	Yes	
Tucson Electric Power Company	Yes	
GDS Associates, Inc.	Yes	
MidAmerican Energy	Yes	
Puget Sound Energy	Yes	

Organization	Yes or No	Question 4 Comment
Sacramento Municipal Utility District	Yes	
Southern California Edison Company	Yes	

3.2 Requirement R2, Parts 2.1.4 & 2.4.3 – sensitivity analysis:

Summary Consideration:

The SDT intent is that multiple condition sensitivities will be assessed since you are required to run the cases for peak and Off-peak conditions, multiple years, etc. If the problem exists in two or more of these cases, it would be an indication of 'multiple' problems. No change made.

The SDT understands that running sensitivities may require additional work for some entities. The sensitivities studied should be used to compare system response to different conditions to provide a broader perspective for the planner and the SDT believes that this is important enough to justify the additional work.

The SDT has made a clarifying change to the words in Requirement R2, part 2.1.4 based on comments received:

> **2.1.4** For each of the studies described in Requirement R2, Parts 2.1.1 and 2.1.2, sensitivity case(s) shall be utilized to demonstrate the impact of changes to the basic assumptions used in the model. To accomplish this, the sensitivity analysis in the Planning Assessment must vary one or more of the following conditions by a sufficient amount to stress the System within a range of credible conditions that demonstrate a measurable change in System response~~performance~~:

The SDT has made the language in Requirement R2, part 2.7, bullet 7 consistent with the other parts of the standard as follows:

- List System deficiencies and the associated actions needed to achieve required System performance. Examples of ~~S~~such actions ~~may~~ include:

The majority of respondents agree with the changes to these requirements and only the changes to the requirements noted above have been made in response to stakeholder comments.

The SDT did not pose questions for items that were not redlined, i.e., changed, in this posting since those items not redlined were considered by the SDT as sufficiently vetted by the industry through the various phases of the project to date. However, the SDT has reviewed all comments regardless of whether specific questions were asked and has considered the comments.

Organization	Yes or No	Question 5 Comment
Northeast Power Coordinating Council Consolidated Edison Co. of New York, Inc.	No	Part 2.1.4, requires an entity to vary one or more conditions to demonstrate a change in performance. If the cases were initially stressed, this may force an entity to simulate conditions with less severe stresses. At this point, there is limited to no value to this additional workload. Having a requirement to test at least one sensitivity as a blanket requirement may not be informative by itself and is more unclear since sensitivities are being required on an undefined base set of conditions. If an entity does a case with a stressed set of assumptions, is it

Organization	Yes or No	Question 5 Comment
		necessary to do a non-stressed case? Additionally, our concern involves wording under 2.1.4 and 2.4.3 that sensitivities are required varying one or more conditions. Subsequently, in requirement 2.7.2 corrective action plans need to be developed to resolve performance deficiencies "only" if identified in multiple conditions or require a rationalization why no corrective action plan is necessary. Multiple conditions sensitivities under 2.1.4 and 2.4.3 are necessary to satisfy requirement 2.7.2. Requirement 2.7.2 adds ambiguity and should be removed. If not, a suggested revision to Requirement 2.7.2 as follows:2.7.2. Corrective Action Plans are not required for performance deficiencies identified in a sensitivity analysis. In general, the scope of this requirement is too broad and non-specific, and only results in undue study burden. Is it necessary for sensitivity analysis to be included in requirements since in accordance with good engineering practices a conservative approach should be used in studies? The standard is referring to requirements for sensitivity and other issues without a reference to base assumptions as commented in issue #3. The standard must describe base assumptions. To define a sensitivity condition, NERC must define base assumptions.
Hydro One Networks Inc.	No	The scope of this requirement is too broad and non-specific and only results in undue study burden.
MRO's NERC Standards Review Subcommittee	No	R2.1.4 & R2.4.3 - We offer a major suggestion regarding the terms of 'credible' and 'measurable change" because these terms are ambiguous and not defined. So, there is a significant risk of different and possibly contradictory interpretations by TPs, PCs, and auditors. We proposed adding that the TP and PC "shall provide documentation to support the technical rationale for determining the range of credible conditions and measurable change in performance" similar to R2.5. R2.1.4 & R2.4.3 bullet items - We offer the minor suggestion that the number and description of the bullet items in R2.1.4 match the bullet points in R2.4.3. Otherwise, please explain the reasons for any differences between the bullet items in R2.1.4 and R2.4.3. R2.1.4 bullet #2 & # 5 - We suggest that the wording in bullet #2 be changed to "Expected transfers and other generation dispatch scenarios". This modification would put the transfer and dispatch element, which are complementary, together in the same bullet item, rather than grouping the 'generation dispatch' (operating level) element together with the generation capacity elements in bullet item #5. R2.1.4 bullet #7 - We offer the minor suggestion that the term "planned" be replaced with "known" to be consistent with R1.1.2 and R2.1.3. Besides the term "planned outage" has a specific meaning in the Reliability Standards that are specific to the Operating horizon. R2.7.2 - With regard to "include actions to resolve performance deficiencies identified in multiple sensitivity

Organization	Yes or No	Question 5 Comment
		studies", we do not think that mitigation plans should be required for deficiencies found in multiple sensitivity studies because the conditions in some sensitivity studies are more extreme and less likely than base case conditions. It's impractical to require corrective actions for longer term horizon sensitivities due to how fast the electric grid changes. We believe sensitivity analyses are valuable to improving the development of mitigation plans to address base case performance limit concerns. Some of the sensitivity study conditions are not credible or plausible enough to warrant the implementation of mitigation measures. What is the interpretation of multiple sensitivity studies - more than one or a majority of the number that were studied?
IRC Standards Review Committee	No	The primary concern involves wording under 2.1.4 and 2.4.3 that sensitivities are required by varying one or more conditions. Subsequently, in requirement 2.7.2 corrective action plans need to be developed to resolve performance deficiencies "only" if identified in multiple conditions or require a rationalization why no corrective action plan is necessary. Multiple conditions sensitivities under 2.1.4 and 2.4.3 are necessary to satisfy requirement 2.7.2. Requirement 2.7.2 adds ambiguity and should be removed. Alternatively, Requirement 2.7.2 could be revised as follows:2.7.2. Corrective Action Plans are not required for performance deficiencies identified in a sensitivity analysis. If a Planning Coordinator includes Corrective Action Plans to resolve performance deficiencies identified in multiple sensitivity analysis, the Planning Coordinator shall provide documentation to support those Plans.
Florida Reliability Coordinating Council, Inc - Transmission Working Group	No	This change does not clarify the required sensitivity analysis. A measureable change in performance is unclear? Instead of a measurable change in performance, a measureable change in contingency response of the Bulk Electric System would be more appropriate. A change in performance implies not meeting one of the performance requirements as specified in Table 1.
Lakeland Electric	No	A "measureable change in performance" can be interpreted as not meeting one of the performance requirements as specified in Table 1 in order for the condition to be selected as a sensitivity. This will cause utilities to perform sensitivity analysis for all system conditions listed in R2.1.4 to determine which one fails to meet one of the performance requirements in Table 1, as one may not be able to tell performance impact until after the studies are performed. Suggested change: "...one of the following conditions by a sufficient amount...system conditions that may demonstrate a measurable change in system response."
Orlando Utilities Commission	No	What is meant by "measurable change in performance"? Is this a measure that the sensistivty should move the system from meeting the performance requirements to not meeting the performance requirements? Or just a measurable change in system response, IE the loading was 45% on this corridor but is now 76%.
US Bureau of Reclamation	No	Sensitivity analysis is not included in R2. This gets back to the structure of the standard. There should a clear indication of the studies that are to be included in the Near-Term and Long-Term portions of the Planning

Organization	Yes or No	Question 5 Comment
		Assessments.
CenterPoint Energy	No	The SDT did not incorporate CenterPoint Energy's previous comments regarding R2; therefore, CenterPoint Energy's concerns remain.
California ISO	No	Requirement 2.7.2 could be revised as follows:2.7.2. Corrective Action Plans are not required for performance deficiencies identified in a sensitivity analysis. If a Planning Coordinator includes Corrective Action Plans to resolve performance deficiencies identified in multiple sensitivity analysis, the Planning Coordinator shall provide documentation to support those Plans.
ISO New England Inc.	No	Part 2.1.4, requires an entity to vary one or more conditions to demonstrate a change in performance. If the cases were initially stressed, this may force an entity to simulate conditions with less severe stresses. At this point, there is limited to no value to this additional workload. Having a requirement to test at least one sensitivity as a blanket requirement may not be informative by itself and is more unclear since sensitivities are being required on an undefined base set of conditions Additionally, our concern involves wording under 2.1.4 and 2.4.3 that sensitivities are required varying one or more conditions. Subsequently, in requirement 2.7.2 corrective action plans need to be developed to resolve performance deficiencies “only” if identified in multiple conditions or require a rationalization why no corrective action plan is necessary. Multiple conditions sensitivities under 2.1.4 and 2.4.3 are necessary to satisfy requirement 2.7.2. Requirement 2.7.2 adds ambiguity and should be removed. Requirement 2.7.2 should be revised as follows:2.7.2. Corrective Action Plans are not required for performance deficiencies identified in a sensitivity analysis.
United Illuminating National Grid	No	If an entity does a stressed set of assumptions do they always need to do a non-stressed case?
Hydro-Quebec TransEnergie	No	It is questionable that sensitivity analysis be included in Requirements since a conservative approach should already be used in studies, in accordance with good engineering practices.
American Transmission Company	No	R2.1.4 & R2.4.3 - We offer a major suggestion regarding the terms of ‘credible’ and ‘measurable change” because these terms are ambiguous and not defined. So, there is a significant risk of different and possibly contradictory interpretations by TPs, PCs, and auditors. We proposed adding that the TP and PC “shall provide documentation to support the technical rationale for determining the range of credible conditions and measurable change in performance” similar to R2.5. R2.1.4 & R2.4.3 bullet items - We offer the minor suggestion that the number and description of the bullet items in R2.1.4 match the bullet points in R2.4.3. Otherwise, please explain the reasons for any differences between

Organization	Yes or No	Question 5 Comment
		the bullet items in R2.1.4 and R2.4.3. R2.1.4 bullet #7 - We offer the minor suggestion that the term “planned” be replaced with “known” to be consistent with R1.1.2 and R2.1.3. Besides the term “planned outage” has a specific meaning in the Reliability Standards that are specific to the Operating horizon. R2.7.2 - With regard to "include actions to resolve performance deficiencies identified in multiple sensitivity studies", we do not think that mitigation plans should be required for deficiencies found in multiple sensitivity studies because the conditions in sensitivity studies are more extreme and less likely than base case conditions. Some sensitivity study conditions are not credible or plausible enough to warrant the implementation of mitigation measures. What is the SDT interpretation of multiple studies - more than one or a majority of the sensitivities that were studied?
Lakeland Electric	No	It is recommended that the phrase “...measureable change in performance...” be changed to “...measurable change in system response...” A change in performance is unclear, and could suggest that a sensitivity study is valid only if the System is stressed to the point that it no longer performs within the criteria established by Table 1. In addition, it is recommended that the following text appear after the last sentence of 2.4.3: “The condition or conditions to be varied shall be left to the discretion of the Transmission Planner or Planning Coordinator, provided they are selected from the list below.”
Northeast Utilities	No	The standard is referring to requirements for sensitivity and other issues without a reference to base assumptions as commented in Question #3. The standard must describe base assumptions. To define a sensitivity condition, NERC must define base assumptions.
Modesto Irrigation District	No	This new requirement will expand the scope of the study work beyond a reasonable extent.
NBSO	No	Base case assumptions should be made such that they appropriately stress the system to be tested and are in accordance with good engineering practice. If the base cases are already stressed, the requirement to study sensitivity cases may result in the study of less severe conditions, and thus require additional time and resources while providing little additional value to the overall assessment.
Central Maine Power Company New York State Electric & Gas	No	These sensitivities need to be considered if not already included in the base case assumptions.

Organization	Yes or No	Question 5 Comment
Corp		
Progress Energy	No	PE does not have concerns in general with either 2.1.4 or 2.4.3. PE does, however, disagree with the wording at the end of the main paragraph of 2.4.3. Whether or not analysis qualifies as sensitivity analysis should not be predicated upon the end results; rather, it should be based upon major case modeling differences. PE therefore recommends that the phrase "...that demonstrate a measurable change in performance" be removed so that the last sentence in the main paragraph read "...by a sufficient amount to stress the System within a range of credible conditions."
ERCOT ISO	No	The stress test requirements should be deleted. The purpose of this proposed Standard is to establish planning performance standards that support reliable operation. This is achieved by imposing performance requirements relative to specific conditions and contingencies. Compliance with the performance metrics within these boundaries is presumably indicative of a reliable system. It is unclear what value is added by stress testing the system in accordance with undefined, vague parameters, as required by Requirements 2.1.4 and 2.4.3. The criteria in the relevant requirements that govern the stress testing are defined by the following ambiguous phrase: 1) "by a sufficient amount"; 2) "range of credible conditions"; and 3) "measurable change of performance". Application of these criteria introduces uncertainty for both the regulated community and the relevant compliance enforcement authorities, which, in turn, creates audit risks for regulated entities. Furthermore, there is no reliability value because the stress test requirements do not establish objective criteria and do not prescribe any actions based on the stress test results. Reliability Standards should set specific obligations that are readily discernible and achievable on a consistent basis. The existing Standard does this by setting specific performance obligations relative to specific conditions and contingencies. Conversely, the stress test requirements introduce ambiguity and uncertainty with no reliability benefit; the only apparent effect is unnecessary audit liability risk for regulated entities. Accordingly, ERCOT believes that these requirements should be deleted.
Tucson Electric Power Company	No	TEP agrees with removing the phrase "not already included in the studies." However, TEP does not understand the purpose of sensitivity studies. TEP is concerned that imposing additional sensitivity studies could lead to requirements that exceed the proposed standards. TEP recommends removing sesnitivity analysis from the standard.
New York Independent System Operator	No	Our concern involves wording under 2.1.4 and 2.4.3 that sensitivities are required varying one or more conditions. Subsequently, in requirement 2.7.2 corrective action plans need to be developed to resolve performance deficiencies "only" if identified in multiple conditions or require a rationalization why no corrective action plan is necessary. Multiple conditions sensitivities under 2.1.4 and 2.4.3 are necessary to satisfy requirement 2.7.2.

Organization	Yes or No	Question 5 Comment
		Requirement 2.7.2 adds ambiguity and should be removed. Requirement 2.7.2 should be revised as follows:2.7.2. Corrective Action Plans are not required for performance deficiencies identified in a sensitivity analysis.
GDS Associates, Inc.	No	The requirements are extremely burdensome. We recommend changing the last sentence of 2.1.4 requirement by removing "by a sufficient amount to stress the System within a range of credible conditions that demonstrate a measurable change in performance:" because there are instances where listed conditions may not result in measurable changes in performance (Ex. An increase in load in a well built system may not cause any measurable changes in performance because there is sufficient transmission capacity to serve the load).
SMUD		What is the significance of changing the wording for section R2.1.5 from 'assessed' to 'studied' and 'Planning Assessments' to 'studies'?
Western Area Power Administration	Yes	In Requirement 2.1.4, "Sensitivity Analysis". How much change does it take in any of the modeling assumptions (load, generation, voltage support, topology, etc.) to significantly stress the system within a range of credible condition? As this Requirement relates to R2.7, Would it be necessary to have Corrective Action Plan(s) if needed to meet all the Sensitivity Cases? How many Sensitivities before must have Corrective Action Plan? Also - why is it essential to use the qualifier "annual" for "current studies" in Part 2.1? Can a study be considered current if it is conducted less frequently than once per year? Note that Parts 2.3, 2.4 and 2.5 do not use the "annual" qualifier, nor does Requirement R2. Recommend deleting this apparently non-essential qualifier in both R2.1 and R2.2. We are unable to appreciate why the wording in Part 2.3 is not consistent with that in Part 2.1, 2.2, 2.4 or 2.5. Note that the semantics of the wording "... (steady state / stability) analysis shall be assessed annually..." can be interpreted to be much different than the semantics of the Part 2.3 wording "The short circuit analysis.... shall be conducted annually ...". The former requires the analysis to be *assessed* annually but 2.3 requires the analysis to be *conducted* annually without explicitly requiring it be assessed -- is the usage of "conducted" instead of 'assessed" consistent with the intent? In Part 2.6.2, the intent is awkwardly conveyed within the phrase "...the System represented in the study shall not include any material changes unless...". In the context of a *past* study, how can the System represented possibly include any material changes (that would have presumably occurred after the study)? Suggest modifying Part 2.6.2 to read "For steady state, short circuit or Stability analysis: no material changes have occurred in the System represented in the study or, if material changes have occurred, a technical rationale shall be provided to explain why they do not significantly impact the study results."

Organization	Yes or No	Question 5 Comment
NERC staff	Yes	NERC staff supports removing the phrase “not already included in the studies” from the parts 2.1.4 and 2.4.3 of Requirement R2. We believe that the requirement is more clear and less subject to interpretation without this phrase.
MidAmerican Energy	Yes	R2.1.4 bullet #7 - Replace the adjective “planned” with “known” for consistency with R1.1.2 and R2.1.3.R2.3 Replace “conducted” with “assess” for consistency with R1.1.2 and R2.1.3.R2.4 Replace “current or past studies as qualified” with “current or qualified past studies as indicated” for consistency with R2
SERC Planning Standards Subcommittee	Yes	
SERC Dynamics Review Subcommittee	Yes	
Pepco Holings, Inc - Affiliates	Yes	
Bonneville Power Administration	Yes	
Exelon Transmission Planning	Yes	
Southern Company	Yes	
Western Electricity Coordinating Council	Yes	
Arizona Public Service Company	Yes	
PacifiCorp	Yes	
Duke Energy	Yes	
NorthWestern Energy (NWMT)	Yes	
PNM	Yes	

Organization	Yes or No	Question 5 Comment
FirstEnergy	Yes	
Platte River Power Authority	Yes	
Manitoba Hydro	Yes	
Minnesota Power	Yes	
TVA Transmission Planning & Compliance	Yes	
Independent Electricity System Operator	Yes	
South Carolina and Gas	Yes	
SRP	Yes	
Seattle City Light	Yes	
California Energy Commission	Yes	
Los Angeles Department of Water and Power	Yes	
Idaho Power Co	Yes	
Ameren	Yes	
LCRA TSC	Yes	
American Electric Power (AEP)	Yes	
Tri-State Generation &	Yes	

Organization	Yes or No	Question 5 Comment
Transmission		
GTC	Yes	
Pacific Gas and Electric Company	Yes	
Oncor Electric Delivery	Yes	
Puget Sound Energy	Yes	
Sacramento Municipal Utility District	Yes	
Xcel Energy	Yes	
Southern California Edison Company	Yes	

3.3 Requirement R2, Part 2.4.1 – dynamic load models:

Summary Consideration:

The majority of respondents agree with the changes to these requirements and no changes to these requirements have been made in response to stakeholder comments.

The SDT does not intend that detailed dynamic Load models will be required for Loads in the System models used for the assessments. In particular, Requirement R2, part 2.4.1 states that an aggregate System Load model which represents the overall dynamic behavior of the Load is acceptable.

The SDT has placed this requirement in TPL standards because it is not presently covered in MOD standards.

Organization	Yes or No	Question 6 Comment
NERC staff	No	NERC staff understands why the SDT has inserted the word “expected” before “dynamic behavior of Loads,” but we have concerns with this addition. We understand that a PC or TP that models the best current industry understanding of load behavior should not need to worry about compliance if that model does not match actual load response for all possible system conditions. However, we are concerned that this change to part 2.4.1 of Requirement R2 may be too accommodating. If a PC or TP has unrealistic expectations about load behavior, would this permit the use of unrealistic models? While we have struggled to develop an alternative proposal, we hope that the SDT will identify a way to address this concern.
Northeast Power Coordinating Council	No	There is insufficient information and experience regarding dynamic load modeling. It may also be included as a “sensitivity” analysis in 3.2, rather than requiring and expecting accurate representation of a dynamic load model. If this requirement is kept, a modeling standard must be written that is specific to dynamic loads. Change belongs in a modeling standard, not in TPL-001.
Hydro One Networks Inc.	No	There is insufficient information and experience regarding dynamic load modeling. Hence, this should not be a requirement but a guide or an item to be considered to the extent possible. It may also be included as a “sensitivity” analysis in 3.2, rather than requiring and expecting accurate representation of dynamic load model.
Transmission Issues Subcommittee	No	TIS believes that the term “expected” leaves the question as to “whose expectation.” It should be stated as to “expected...by the Transmission Planner.”

Organization	Yes or No	Question 6 Comment
Exelon Transmission Planning	No	There is not an industry consensus around best practices for modeling the dynamic behavior or characteristics of load. It is premature to make this a requirement in an enforceable standard which would be held to this degree of subjective auditing.
Manitoba Hydro	No	The last two sentences "System peak Load levels shall include a Load model which represents the expected dynamic behavior of Loads that could impact the study area, considering the behavior of induction motor Loads. An aggregate System Load model which represents the overall dynamic behavior of the Load is acceptable." belong in the MOD standards. They are not required in TPL-001-2.
US Bureau of Reclamation	No	Not included in R2. See response to Question 3.2
CenterPoint Energy	No	The SDT did not incorporate CenterPoint Energy's previous comments regarding R2; therefore, CenterPoint Energy's concerns remain.
Ameren	No	Industry needs guidance regarding how to provide reasonable induction motor representation as opposed to generic models.
Hydro-Quebec TransEnergie	No	There is insufficient data available to accurately model system wide motor loads.
LCRA TSC	No	The first bullet item in Section 3.3.1 should be the same as the second bullet in Section 4.3.1. The wording is somewhat confusing in both. Also, the wording as proposed does not recognize that a high voltage limit could also be violated. Edits to the item as shown below are suggested. Tripping of generators where simulations show generation bus voltages or high side generation step up (GSU) voltages are outside known limits, or assumed to be outside generator steady state limits, or have reached the generator ride through voltage limit. Include in the assessment any assumptions made.
Tri-State Generation & Transmission	No	Rather than specifically call out induction motor loads, we recommend changing the second sentence to "Stability analysis shall include models that represent the expected dynamic behavior of system elements that could impact the study area."
GTC	No	We have concerns for including induction motor representations in the load models without any study or bench-marking activities to meet the requirements of R2.4.1. This information should be supplied by the LSE as part of the MOD standard. We understand that the proposed standard will accept an aggregate system load model which represents the overall dynamic behavior of the load to relieve the burden of trying to develop specific induction motor load representation at each load bus. However this modeled system response will be considerably different compared to the actual system response which will open up the

Organization	Yes or No	Question 6 Comment
		industry to unwarranted scrutiny and possible compliance violation investigations.
Consolidated Edison Co. of New York, Inc.	No	There is insufficient information and experience regarding dynamic load modeling. It may also be included as a "sensitivity" analysis in 3.2, rather than requiring and expecting accurate representation of a dynamic load model. If this requirement is kept, a modeling standard should be written that is specific to dynamic loads. This change belongs in a modeling standard, not in TPL-001.
NBSO	No	By implication, the response of induction motor load would need to be considered when modeling the expected dynamic behaviour of loads that could impact the study area. NBSO suggests re-wording parts of R2.4.1 as follows: System peak load levels shall include a model which represents the expected dynamic behaviour of loads that could impact the study area. An aggregate system load model which represents the overall expected dynamic behaviour of load is acceptable.
Central Maine Power Company New York State Electric & Gas New York Independent System Operator	No	We have not determined a need to model dynamic loads, and therefore have not benchmarked any such models. We recommend that prior to this requirement being in place, a modeling standard should exist that is specific to dynamic loads.
ERCOT ISO	No	ERCOT ISO suggests adding "best available" as a descriptor to load models. Distribution Providers (DPs)/Load Serving Entities (LSEs) are the appropriate NERC functional entities to provide dynamic load data. Accordingly, Planning Coordinators (PCs) and Transmission Planners (TPs) must rely on those entities for that data. Despite reliance on DPs/LSEs for this data, the Standard proposes to impose an obligation on PCs and TPs to include a load model representative of "expected" dynamic behavior. Simply put, PCs and TPs do not have this information and should not be subject to compliance liability risk for an issue that is beyond their control. This change will still accomplish the goal of reflecting dynamic data in the relevant models, while mitigating PC/TP compliance risk by basing their compliance on information that is within their control - i.e. the "best available" information. Based on this change, the language should read - "System peak Load levels shall include best available Load models which represent the expected dynamic behavior of Loads that could impact the study area, considering the behavior of induction motor Loads". This language is also a more accurate reflection of the Consideration of Comments by the Standard Drafting Team after the March 2010 comment period.To address this issue in the most appropriate manner, the Standard should be revised to establish an appropriate process for collection, reporting and use of dynamic data based on assigning obligations to the appropriate functional entities. In essence, DPs/LSEs should be required to collect the data and report it to TPs. Because TP models are the basis for PC models, the dynamic data will be included in PC models as part of the process. However, DPs and TPs should still only be required to use the "best available" data. Continued use of this language will mitigate the liability risk associated with a

Organization	Yes or No	Question 6 Comment
		requirement related to data that is within the control of a third party. Even under a construct where DPs/LSEs are required to collect and report dynamic data, there is no guarantee they will do so and PCs/TPs should not be held accountable in those circumstances. Accordingly, PC/TP compliance risk will be mitigated by use of a "best available" standard.
GDS Associates, Inc.	No	We disagree with the content of this requirement based on several facts:- We believe that the dynamic behavior of the load cannot be accurately estimated beyond current time. We are concern about the effort required to ascertain the dynamic response of the load- The requirement references "Loads that could impact the study area" without specifying how an entity will identify these loads. Perhaps the standard should provide guidelines to determine which loads would impact the study area.
MidAmerican Energy	No	MidAmerican questions if the widespread use of composite load models really provides significant benefits to additional dynamic analyses over generic load conversion assumptions which have been historically used. The use of composite load models may result in more precise individual load models, but no more accurate dynamic simulations. This poorly worded requirement should be deleted in its entirety as providing additional burden without any additional reliability benefits. If the composite load model requirement must be kept, it should be modified to include the following bolded text:"...System peak Load levels shall include a Load model which represents the expected dynamic behavior of Loads that could impact the study area, considering the behavior of induction motor Loads, but without requiring a detailed load survey be conducted..."
Platte River Power Authority	Yes	For consistency, use the qualifier "expected" in the second sentence of Part 2.4.1 also, such that it reads "...represents the overall expected dynamic behavior..."
Xcel Energy	Yes	For consistency, use the qualifier "expected" in the second sentence of Part 2.4.1 also, such that it reads "...represents the overall *expected* dynamic behavior..."
SERC Planning Standards Subcommittee	Yes	
SERC Dynamics Review Subcommittee	Yes	
MRO's NERC Standards Review Subcommittee	Yes	

Organization	Yes or No	Question 6 Comment
Pepco Holings, Inc - Affiliates	Yes	
IRC Standards Review Committee	Yes	
Bonneville Power Administration	Yes	
Southern Company	Yes	
Western Electricity Coordinating Council	Yes	
Arizona Public Service Company	Yes	
Florida Reliability Coordinating Council, Inc - Transmission Working Group	Yes	
Western Area Power Administration	Yes	
PacifiCorp	Yes	
Duke Energy	Yes	
NorthWestern Energy (NWMT)	Yes	
Lakeland Electric	Yes	
PNM	Yes	
FirstEnergy	Yes	
Orlando Utilities Commission	Yes	

Organization	Yes or No	Question 6 Comment
Minnesota Power	Yes	
TVA Transmission Planning & Compliance	Yes	
Independent Electricity System Operator	Yes	
South Carolina and Gas	Yes	
SRP	Yes	
California ISO	Yes	
Seattle City Light	Yes	
California Energy Commission	Yes	
ISO New England Inc.	Yes	
Los Angeles Department of Water and Power	Yes	
Idaho Power Co	Yes	
United Illuminating	Yes	
National Grid	Yes	
American Transmission Company	Yes	
American Electric Power (AEP)	Yes	

Organization	Yes or No	Question 6 Comment
Lakeland Electric	Yes	
Pacific Gas and Electric Company	Yes	
Northeast Utilities	Yes	
Modesto Irrigation District	Yes	
Oncor Electric Delivery	Yes	
Progress Energy	Yes	
Tucson Electric Power Company	Yes	
Puget Sound Energy	Yes	
Sacramento Municipal Utility District	Yes	
Southern California Edison Company	Yes	

3.4 Requirement R2, Part 2.5 – material clarification:

Summary Consideration:

The majority of respondents agree with the changes to these requirements and no changes to these requirements have been made based on stakeholder comments.

The SDT discussed defining 'material change' but did not believe that such a definition was appropriate in a continent-wide standard. With the wide variety in sizes and types of systems, the number of parameters that need to be considered, etc., there are too many variables involved. With the inclusion of Requirement R8 and the sharing of information, there is an opportunity for open discussion on such matters.

The SDT notes that Part 2.6.2 allows an entity to rely on a past study with a material change if "a technical rationale can be provided to demonstrate that System changes do not impact the performance results in the study area". Therefore, it is up to the entities performing the study to provide the rationale based on changes, such as Load growth.

The SDT did not pose questions for items that were not redlined, i.e., changed, in this posting since those items not redlined were considered by the SDT as sufficiently vetted by the industry through the various phases of the project to date. However, the SDT has reviewed all comments regardless of whether specific questions were asked and has considered the comments.

Organization	Yes or No	Question 7 Comment
Exelon Transmission Planning	No	The term 'material changes' is subjective. It is very difficult to determine a base case to study combinations of generator additions on a changing transmission network in the 6 to 10 year time period to be used for dynamic simulations. Dynamic studies should be performed whenever new generator interconnections are proposed and it is at that time where meaningful calculations can be performed. The long term six to ten year out dynamic studies for groupings of potential units should be done at a high level, if at all.
Florida Reliability Coordinating Council, Inc - Transmission Working Group	No	This change does not clarify material. Material should be quantified somehow. We recommend changing the phrase "material generation additions or changes" to "generation in the vicinity with additions of changes larger than 200 MW".
Lakeland Electric	No	Please consider removing R2.6.2. The "any material change" language can cause utilities perform studies due to material changes outside of and remote to its system.

Organization	Yes or No	Question 7 Comment
Orlando Utilities Commission	No	I agree with what I think is the intent. The word "Material" is meant to allow for changes in model to occur that are "small" relative to the TP/PC. For example the 400 MW generator that might be built in 10 years by another utility over a hundred miles, several dozen buses and generators away to not force new study work. However as written in 2.5 it requires you to define what a material change is, and could be applied to mean every change must be identified and explained rather then an overarching rationale that would only have you looking for changes that meet the material criteria. But then in 2.6.2 the word material is used with no obligation to explain what material is, only to explain if a material change would not impact the results in a study area. I recommend leaving the term material, but setting a requirement, measure, or definition that requires the TP/PC to define what they consider material specific to their system and circumstance. Since this will by the hetreogenous nature of the grid be different for each it may not be reasonable to pre-define what is reliable. Just as was done with many items in the ATC (MOD) standards, require that it be documented and questions on that rationale be answered. If a specific level of technical oversight is desired, consider requiring that description to be on file with the regional entity and approved by their planning committee. I think the team is heading in a good direction, it's just how the words will be applied that concern me. This may be a case where an Example or two would go a long way towards providing guidance to entities and auditors.
Manitoba Hydro	No	Adding the word “material” does not clarify Part 2.5. The word “material” can be interpreted in many ways and is subjective. In order to have a consistent approach by all TPs, the drafting team should add a definition of the term “material”. One TP may consider a new 200 MW unit as not being material because there are several larger units in the TPs system.
US Bureau of Reclamation	No	The term "material" is arbitrary. It is suggested that a specific value be used to trigger the assessment.
CenterPoint Energy	No	The SDT did not incorporate CenterPoint Energy's previous comments regarding R2; therefore, CenterPoint Energy's concerns remain.
Progress Energy	No	PE agrees in general with the changes made to R2.5. PE disagrees, however, with the language stipulating that current and past studies be qualified by the language in R2.6 Part 2.6.2 (see notes for Question 3.1 regarding recommending changes with regard to R2.6.2).
Tucson Electric Power Company	No	If a material change (generator addition/retirement, new generator models based on unit testing, or transmission line or non-distribution transformer addition) is not planned for the longer-term planning horizon, do the longer-term stability studies need to be performed? TEP's agreement/disagreement with Part 2.4.1 is

Organization	Yes or No	Question 7 Comment
		dependent on the response to this question. If the answer is the studies do not need to be performed, then TEP supports these changes.
GDS Associates, Inc.	No	We are not sure what will be included in these "material generation additions or changes". Perhaps the standard should provide guidelines to determine what are these material changes or additions?
Xcel Energy	No	It appears that the requirement appended at the end of Part 2.5 "…and shall include documentation to support the technical rationale for determining material changes." is duplicative of Part 2.6.2. Please address this apparent redundancy.
NERC staff	Yes	NERC staff supports inserting the word "material" in the reference to assessing the impact of proposed generation. We have some concern that this change leaves this part of the requirement open to interpretation, but we also understand the need to permit some degree of engineering judgment to be applied. It would not be appropriate to require that every potential generation addition be included in the assessment where some proposed additions may by inspection be deemed to be immaterial due to size and/or interconnection location.
IRC Standards Review Committee	Yes	However, the requirement infers that a subjective judgment from a compliance auditor will be required.
Bonneville Power Administration	Yes	It should be noted that if there is more generation proposed in an area than there load and export capability, all proposed material generation additions would not be represented. Determining what future generation additions to include in the Long-Term Transmission Planning Horizon may be based on a non-technical rationale rather than a technical rationale.
Western Area Power Administration	Yes	The drafting team could provide guidance on what is "material". In Part 2.5, should "annually" be inserted after "shall be assessed" to make it consistent with Parts 2.1, 2.2, 2.3 and 2.4? If the omission is intentional in 2.5, please explain why.
Platte River Power Authority	Yes	I like the flexibility you give the PC and TP to define what 'material' means in their 'documentation to support the technical rationale for determining material changes.' In Part 2.5 this rationale will decide whether or not any Long-Term Stability studies are required for the Planning Assessment. And in Part 2.6.2 this rationale will be a factor in qualifying a past study.
Independent Electricity System	Yes	We do not have a concern with this change but we don't think it is necessary. It is not a requirement, and

Organization	Yes or No	Question 7 Comment
Operator		appropriate wording in the Measures can take care of it.
SERC Planning Standards Subcommittee	Yes	
Northeast Power Coordinating Council	Yes	
Hydro One Networks Inc.	Yes	
SERC Dynamics Review Subcommittee	Yes	
MRO's NERC Standards Review Subcommittee	Yes	
Pepco Holings, Inc - Affiliates	Yes	
Southern Company	Yes	
PacifiCorp	Yes	
Duke Energy	Yes	
NorthWestern Energy (NWMT)	Yes	
FirstEnergy	Yes	
Minnesota Power	Yes	
TVA Transmission Planning & Compliance	Yes	
South Carolina and Gas	Yes	

Organization	Yes or No	Question 7 Comment
SRP	Yes	
California ISO	Yes	
Seattle City Light	Yes	
California Energy Commission	Yes	
ISO New England Inc.	Yes	
Los Angeles Department of Water and Power	Yes	
Idaho Power Co	Yes	
United Illuminating	Yes	
Ameren	Yes	
Hydro-Quebec TransEnergie	Yes	
LCRA TSC	Yes	
National Grid	Yes	
American Transmission Company	Yes	
American Electric Power (AEP)	Yes	
Tri-State Generation & Transmission	Yes	
Lakeland Electric	Yes	

Organization	Yes or No	Question 7 Comment
GTC	Yes	
Northeast Utilities	Yes	
Consolidated Edison Co. of New York, Inc.	Yes	
NBSO	Yes	
Central Maine Power Company	Yes	
Oncor Electric Delivery	Yes	
New York State Electric & Gas Corp	Yes	
ERCOT ISO	Yes	
New York Independent System Operator	Yes	
MidAmerican Energy	Yes	
Sacramento Municipal Utility District	Yes	
Southern California Edison Company	Yes	

4. The SDT has revised the header notes based on industry comments to the initial ballot. If you do not support these changes, please specify why you disagree and include specific alternative language to resolve your concern.

Summary Consideration:

The SDT clarified the language of header note 'i' as a result of comments received as follows:

i. The response of voltage sensitive Load ~~including Load~~ that is disconnected from the System by end-user equipment associated with an event shall not be used to meet steady state performance requirements.

The majority of respondents agree with the changes to the header notes and no other changes to the header notes have been made based on stakeholder comments.

Requirements cannot be 'hidden' in the Table because the Table is specifically cited in the requirements text and is thus part of the requirements.

The SDT did not pose questions for items that were not redlined, i.e., changed, in this posting since those items not redlined were considered by the SDT as sufficiently vetted by the industry through the various phases of the project to date. However, the SDT has reviewed all comments regardless of whether specific questions were asked and has considered the comments.

Organization	Yes or No	Question 8 Comment
Northeast Power Coordinating Council	No	Header note (i) in the first Table 1 (p. 10) could imply that voltage-varying load shall not be used to meet steady state performance requirements. Steady state load models in use include voltage-varying loads. The explicit representation of (voltage-dependent) load models is perfectly consistent with the requirements defined in R1 (which calls for a comprehensive representation of system components and their expected operating status in the planning assessment period) and the impetus to the creation of more specific load models in dynamic assessments found Requirement 2.4 of this draft of TPL-001-2. It is a known that depressed voltage conditions cause certain system elements to perform below their rated capacity. For example, capacitors provide less voltage support and voltage controlling transformers are impeded by their finite tap range to direct VAR flow into areas affected by low voltage conditions. Certain load types, on the other hand, provide a self-compensating relief to depressed voltage by naturally decreasing demand in a manner proportional to their characteristics, without operator intervention. Choosing to negate the voltage-dependence of one of these system elements (load, in our case) results in an inaccurate system representation that, in turn, may lead to erroneous assessments of the reliability state of the interconnected system and, potentially, to the implementation of unwarranted system upgrades. This note should be revised

Organization	Yes or No	Question 8 Comment
		to only reference loads which are disconnected due to voltage.
Transmission Issues Subcommittee	No	Delete the word "voltage" from the last header note J concerning Stability Only. All types of transient stability must be observed.
LCRA TSC	No	The third bullet of 4.3.1 requires the addition of relay models for stability studies. This type of analysis is performed today by scripting the tripping of multiple lines due to breaker failure events. The inclusion of relay models into the stability study will result in added complexity and an over reliance on relay models for system stability assessment. The stability assessment should assess stability resulting from the operation of relays as opposed to reliance on a relay model for proper system representations. Assurance of the proper operation of relays results from the analysis performed to set relays not from stability studies. From Section 4.3.1:"Tripping of Transmission lines and transformers where transient swings cause Protection System operation based on generic or actual relay models." Section 4.5 requires that "The rationale for those Contingencies selected for evaluation shall be available as supporting information." This will have to be developed. Requirement R5 requires the establishment of criteria for transient voltage response of the system. This seems unnecessary given the proposed changes to Table 1. The proposed changes to table 1 seem to make clear the type of system response that is allowable through its specification of what is allowable in terms of interruptions to Firm Transmission and Non-Consequential loads. R5 states: "Each Transmission Planner and Planning Coordinator shall have criteria for acceptable System steady state voltage limits, post-Contingency voltage deviations, and the transient voltage response for its System. For transient voltage response, the criteria shall at a minimum, specify a low voltage level and a maximum length of time that transient voltages may remain below that level."
Consolidated Edison Co. of New York, Inc.	No	o Header note (i) in the first Table 1 (p. 10) The explicit representation of (voltage-dependent) load models is perfectly consistent with the requirements defined in R1 (which calls for a comprehensive representation of system components and their expected operating status in the planning assessment period) and the impetus to the creation of more specific load models in dynamic assessments found Requirement 2.4 of this draft of TPL-001-2. It is a known that depressed voltage conditions cause certain system elements to perform below their rated capacity. For example, capacitors provide less voltage support and voltage controlling transformers are impeded by their finite tap range to direct VAR flow into areas affected by low voltage conditions. Certain load types, on the other hand, provide a self-compensating relief to depressed voltage by naturally decreasing demand in a manner proportional to their characteristics, without operator intervention. Choosing to negate the voltage-dependence of one of these system elements (load, in this case) results in an inaccurate system representation that, in turn, may lead to erroneous assessments of the reliability state of the interconnected

Organization	Yes or No	Question 8 Comment
		system and, potentially, to the implementation of unwarranted system upgrades.
Central Maine Power Company New York State Electric & Gas Corp New York Independent System Operator	No	Header note (i) in the first Table 1 could imply that voltage-varying load shall not be used to meet steady state performance requirements. NYISO steady state load models include voltage-varying loads. This note should be revised to only reference loads which are disconnected due to voltage.
MidAmerican Energy	No	The reference to BES should be placed back into Note a in the header above table 1.
Xcel Energy	No	Although we support the revised header notes, we believe that the following additional changes are needed to enhance clarity and improve consistency: We are unable to see the compelling need and/or the value of separating the header notes in three categories. Since the applicability of each header to either one or both steady-state and stability performance is obvious from its respective verbiage, we suggest eliminating the categorization. This will also allow the header notes to be reordered/regrouped as per related functionality, thus improving the Table 1 readability. Following is a suggested re-ordering of header notes: a. Applicable Facility Ratings shall not be exceeded. The System shall remain stable. Cascading and uncontrolled islanding shall not occur. b. Planning event P0 is applicable to steady state only. c. Consequential Load Loss as well as generation loss is acceptable as a consequence of any event except P0. d. The response of voltage sensitive Load including Load that is disconnected from the System by end-user equipment as a consequence of any event shall not be used to meet steady state performance requirements. e. System steady state voltages and post-Contingency voltage deviations shall be within acceptable limits established by the Planning Coordinator and Transmission Planner. f. Transient voltage response shall be within acceptable limits as established by the Planning Coordinator and Transmission Planner. g. Planned System adjustments such as Transmission configuration changes and re-dispatch of generation are allowed if such adjustments are executable within the time duration applicable to the Facility Ratings. h. Simulate the removal of all elements that Protection Systems and other controls are expected

Organization	Yes or No	Question 8 Comment
		to automatically disconnect for each event. Simulate Normal Clearing unless otherwise specified.
MRO's NERC Standards Review Subcommittee American Transmission Company	Yes	We offer the major suggestion that Requirements not be created in the Performance Table and be absent from the Requirement section. Requirements should only be referred to in the Performance Table after they already exist in the Requirement section. a. Notes “f” and “g” under “Steady State Only” section in the Table 1 header create requirements (e.g. use the verb, “shall”) that do not appear in the Requirements section. We suggest adding R3.3.5, which could read, “Applicable System Operating Limits for the planning horizon shall not be exceeded.” [After R3.3.5 is added, Notes “f” and “g” should be revised and refer to R3.3.5.]. b. Note “i” under “Steady State Only” section in the Table 1 header creates a requirement (e.g. use the verb, “shall”) that does not appear in the Requirements section. We suggest adding R3.3.6, which could read, “The response of voltage sensitive Load including Load that is disconnected from the System by end-user equipment associated with an event shall not be used to meet steady state voltage requirements.” [After R3.3.6 is added, Note “d” should be revised to refer to R3.3.6. c. Note “j” under the “Stability Only” section in the Table 1 header creates a requirement (e.g. use the verb, “shall”) that does not appear in the Requirements section. We suggest adding R4.1.4, which could read, “Transient voltage response shall be within acceptable limits established by the Planning Coordinator and the Transmission Planner”. [After R4.1.4 is added, Note “j” should be revised to refer to R4.1.4.]
Western Area Power Administration	Yes	Following is a suggested re-ordering of header notes to replace of the three categories concept - same information: a. Applicable Facility Ratings shall not be exceeded. The System shall remain stable. Cascading and uncontrolled islanding shall not occur. b. Planning event P0 is applicable to steady state only. c. Consequential Load Loss as well as generation loss is acceptable as a consequence of any event except P0. d. The response of voltage sensitive Load including Load that is disconnected from the System by end-user equipment as a consequence of any event shall not be used to meet steady state performance requirements. e. System steady state voltages and post-Contingency voltage deviations shall be within acceptable limits established by the Planning Coordinator and Transmission Planner. f. Transient voltage response shall be within acceptable limits as established by the Planning Coordinator and Transmission Planner. g. Planned System adjustments such as Transmission configuration changes and re-dispatch of generation are allowed if such adjustments are executable within the time duration applicable to the Facility Ratings. h. Simulate the removal of all elements that Protection Systems and other controls are expected to automatically disconnect for each event. Simulate Normal Clearing unless otherwise specified.
NERC staff	Yes	NERC staff supports the changes to the header notes in Table 1.

Organization	Yes or No	Question 8 Comment
Florida Reliability Coordinating Council, Inc - Transmission Working Group	Yes	We support the changes to the performance tables.
Platte River Power Authority	Yes	I like the flexibility you give the PC and TP in Requirements R3 and R4 to develop their rationale for the Contingencies they select for evaluation.
Orlando Utilities Commission	Yes	I am assuming you mean the header notes on the performance table
Progress Energy	Yes	PE assumes the term “header notes” is referring to the “Planning Performance Events” at the top of Table 1. If this is the case, PE has no concerns with the present language.
SERC Planning Standards Subcommittee	Yes	
Hydro One Networks Inc.	Yes	
SERC Dynamics Review Subcommittee	Yes	
Pepco Holings, Inc - Affiliates	Yes	
IRC Standards Review Committee	Yes	
Bonneville Power Administration	Yes	
Exelon Transmission Planning	Yes	
Southern Company	Yes	
Western Electricity Coordinating Council	Yes	

Organization	Yes or No	Question 8 Comment
Arizona Public Service Company	Yes	
PacifiCorp	Yes	
Duke Energy	Yes	
NorthWestern Energy (NWMT)	Yes	
Lakeland Electric	Yes	
PNM	Yes	
FirstEnergy	Yes	
Manitoba Hydro	Yes	
Minnesota Power	Yes	
CenterPoint Energy	Yes	
TVA Transmission Planning & Compliance	Yes	
Independent Electricity System Operator	Yes	
South Carolina and Gas	Yes	
SRP	Yes	
California ISO	Yes	
Seattle City Light	Yes	

Organization	Yes or No	Question 8 Comment
California Energy Commission	Yes	
ISO New England Inc.	Yes	
Los Angeles Department of Water and Power	Yes	
Idaho Power Co	Yes	
United Illuminating	Yes	
Ameren	Yes	
Hydro-Quebec TransEnergie	Yes	
National Grid	Yes	
American Electric Power (AEP)	Yes	
Tri-State Generation & Transmission	Yes	
Lakeland Electric	Yes	
GTC	Yes	
Pacific Gas and Electric Company	Yes	
Northeast Utilities	Yes	
Modesto Irrigation District	Yes	
NBSO	Yes	

Organization	Yes or No	Question 8 Comment
Oncor Electric Delivery	Yes	
ERCOT ISO	Yes	
Tucson Electric Power Company	Yes	
GDS Associates, Inc.	Yes	
Puget Sound Energy	Yes	
Sacramento Municipal Utility District	Yes	
Southern California Edison Company	Yes	

5.

The SDT has revised the performance table (including the list of extreme events and footnotes) based on industry comments to the initial ballot. If you do not support these changes, please specify why you disagree and include specific alternative language to resolve your concern.

Summary Consideration:

The SDT has made the following clarifying changes to address concerns raised in the comments:

- P0 – delete superscript 9 in column 6: No[9]
- P5 event description: Delayed Fault –Clearing —due to the failure of a non-redundant relay[13] protecting the Faulted element to operate as designed, for one of the following:
- Extreme events language for Stability events has been made consistent with P5.
- Added 'Breaker' to the Bus-tie and non-Bus-tie phrases in P2 and P4

No other changes were made to the Performance Table based on stakeholder comments.

The SDT fully realizes that Project 2010-11 must reach resolution prior to finalizing TPL-001-2 and stated same in the information attached with the fifth posting of Project 2006-02.

The SDT has made the language in Requirement R2, part 2.8.2 consistent with that in Requirement R2, part 2.7.4:

> **2.8.2** Be reviewed in subsequent annual Planning Assessments for continued validity and implementation status of identified System Facilities and Operating Procedures.

The SDT did not pose questions for items that were not redlined, i.e., changed, in this posting since those items not redlined were considered by the SDT as sufficiently vetted by the industry through the various phases of the project to date. However, the SDT has reviewed all comments regardless of whether specific questions were asked and has considered the comments.

Organization	Yes or No	Question 9 Comment
NERC staff		NERC staff is concerned with P5 and footnote 9 and thus cannot support these changes in their entirety. First, a revision to the Draft 4 definition of P5 should be used in lieu of the current Draft 5 version: "Loss of multiple elements caused by the Fault clearing consistent with failure of a single Protection System while clearing a fault on one of the following: . . ."After reviewing the P5 contingency throughout various drafts of this standard, along with existing Table 1 for TPL-001 through TPL-004, NERC staff's primary concern is that this most recent version is going in the wrong direction by becoming too limiting regarding which Protection System component failures are covered. Draft 5 is an improvement because it removes the reference to loss of

Organization	Yes or No	Question 9 Comment
		multiple elements in Draft 4 (which defined P5 as “Loss of multiple elements caused by the failure of a single Protection System while clearing a fault on one of the following: . . .”). Draft 5 takes a step backward, however, by referring to Delayed Fault Clearing. The advantage of not referring to Delayed Fault Clearing is that for cases where redundant protection systems are provided, the fault clearing may not be delayed even when a single Protection System failure occurs. Ideally, NERC staff believes that P5 should refer to “failure of any component of a Protection System,” but NERC staff recognizes that we cannot get there until the term Protection System is redefined and Project 2009-07-Reliability of Protection Systems is underway. Until that change is possible, NERC staff encourages the SDT to use the revised version of P5 proposed above. A second concern is with footnote 9, which is used numerous times in Table 1. System adjustments may be used in two different settings: the first is to address the aftermath of a particular Contingency; the second is to prepare for the next Contingency.Staff suggests that the current footnote 9 have this language added: “Post-Contingency Ccurtailment of Firm Transmission Service to address the simulated contingency, when coupled with ....” Footnote 9 is used in the column labeled “Interruption of Firm Transmission Service Allowed” whenever a “No” is provided. The footnote 9 in this column has to do with System adjustments that address the aftermath of the Contingency that is being simulated. Therefore, no footnote 9 appears appropriate for category P0 (No Contingency). The reference in footnote 9 to no load loss and staying within applicable Facility rating, including those on a neighboring system, is sufficient for addressing the aftermath of the Contingency being simulated. To address next Contingency, an additional footnote is needed in the “Initial System Condition” column for category P3 and category P6. The following is suggested: “System adjustments to prepare for the next Contingency must be completed within 30 minutes.” Footnote 9 is used in the column labeled “Initial System Condition” for category P3 and category P6, and these two categories define the loss of an Element “followed by System adjustments” and then followed by the loss of a second Element. It is unclear whether the intent in footnote 9 in these two cases is meant to address the same issue referenced above (i.e. the aftermath of the Contingency being simulated) or whether it is intended to address the next Contingency. Thus, both situations need to be addressed using the suggestions indicated above.
Northeast Power Coordinating Council Consolidated Edison Co. of New York, Inc.		To support the change to P5, other items need to also be modified. In Table 1 - Steady State & Stability Performance Extreme Events (p. 12), in the Stability Section, the language should be made similar to wording in P5. Protection System should be removed and replaced with the words “relay failure”. This change should be made for 2a through 2d:2. Local or wide area events affecting the Transmission System such as: a. 3Ã˜ fault on generator with stuck breaker10 or a relay failure resulting in Delayed Fault Clearing. b. 3Ã˜ fault on Transmission circuit with stuck breaker10 or a relay failure resulting in Delayed Fault Clearing. c. 3Ã˜ fault on transformer with stuck breaker10 or a relay failure resulting in Delayed Fault Clearing. d. 3Ã˜ fault on bus section with stuck breaker10 or a relay failure resulting in Delayed Fault Clearing.

Organization	Yes or No	Question 9 Comment
		Note 11 (p. 14) needs clarification as shown: Excludes circuits that share a common structure (Planning event P7, Extreme event steady state 2a) or common Right-of-Way (Extreme event, steady state 2b) for a total of 1 mile or less. There are two tables labeled “Table 1”. Suggest that the extreme events table be renamed “Table 2”.
MRO's NERC Standards Review Subcommittee		We offer the major suggestion that the P3 Category performance criteria be modified to apply only to the loss of two generators. The SDT properly recognizes that generator outages are significantly more probable than line or transformer outages and should be “higher” in the category list. However given the clearly higher probability of generator outages, the probability of the loss of two generators is clearly higher than the loss of a generator and line or the loss of a generator and transformer. Therefore, if the loss of two generators is in the P3 category, then the loss of a generator and line or transformer should be clearly “lower” in the category list. We suggest the listing of: the loss of a generator and some other element (e.g. transmission circuit, transformer, shunt device, and single pole of DC line) be moved to a lower event category, such as the P6 Category by adding “1. Generator” to the listing in the Initial System Condition (Loss of . . .) column. Item 2.a in the Extreme Events, Steady State section - Clarify the meaning of the loss of multiple circuits in Item 2.a by using wording similar to P7. We suggest this text: “a. Loss of three or more circuits that share a common structure.” Footnote 6 - Further clarify the applicable shunt devices in Footnote 6 with this suggested text: “6. Requirements which are applicable to shunt devices, also apply to FACTS devices that are connected to ground, but not instrument voltage transformers or surge arresters.”
Bonneville Power Administration		Table 1, P5 currently requires the study of “[d]elayed Fault Clearing due to the failure of a relay13 protecting the Faulted element to operate as designed”. As written, this requirement does not recognize the use of redundant relays for primary protection. In some cases side by side relays are used to provide primary fault tripping if one relay fails to operate. Per the requirement as stated, the redundant relay would provide no value in meeting this requirement. Please revise to acknowledge backup relays: “Single failure of a protection relay13 protecting the Faulted element to operate as designed, resulting in backup relay actions or Delayed Fault Clearing, for one of the following”. In Table 1, P2 and P3, the last column “Non-Consequential Load Loss Allowed” where the requirement "No12" appears, and in footnote 12, the standard as proposed does not allow for any Non-Consequential Load Loss. When the Non-Consequential Load Loss (footnote b) issue is clarified in Project 2010-11 this requirement may be changed. Therefore the proposed footnote 12 should include a provision to default to the existing footnote “b” in TPL-002-0 until Project 2010-11 is decided. Please revise footnote 12 to read, “Note: Non-Consequential Load Loss is being decided in Project 2010-11. When that project is finalized, the resolution will be copied here. In the interim, planned or controlled interruption of electric supply to radial

Organization	Yes or No	Question 9 Comment
		customers or some local Network customers, connected to or supplied by the Faulted element or by the affected area, may occur in certain areas without impacting the overall reliability of the interconnected transmission systems. To prepare for the next contingency, system adjustments are permitted, including curtailments of contracted Firm (non-recallable reserved) electric power Transfers."
Exelon Transmission Planning		Comments: The term 'HV' in the performance table should be defined as 'Bulk Electric System elements up to 300 kV, not simply all elements 'below 300 kV'. Footnote 12 should be clarified to specifically state the requirements before voting takes place. The performance criteria should be based on the voltage level of the element experiencing stress due to the contingency, not based on the voltage level of the outaged element. It does not seem to make sense that the loss of a 500 kV bus would not allow for any non-consequential load shedding unless the bus contained a 500 to 230 kV transformer, in which case additional load shedding would be allowed. If outages on a 230 kV system, such as bus fault with stuck breaker, were to cause overloads on a 500 kV network it is acceptable to shed load, but if the outages were on the 500 kV system originally it would not be acceptable to shed additional load. It seems as if it should be the severity of the situation and the elements involved that would dictate allowable remedial actions and not the initial cause of the disturbance. If, for example, there was a 500 kV contingency outage that caused problems on the 230 kV system there would be a problem that may require load shedding on the 230 kV system. If there were a 230 kV contingency or series of contingencies that caused overloads on the 500 kV system, it would be more difficult to find enough lower voltage load to shed to bring the 500 kV system back to applicable ratings or conditions. The inability to shed non-consequential load could theoretically be resolved by hanging a small EHV / HV transformer on a particular bus, or by tapping a EHV line with an auto transformer.
Southern Company		NO. We wish to make a comment on the stability extreme event table: Changes were made in planning event P5 to narrow the focus to specific relay failures. The same changes are needed for stability extreme event 2a, 2b, 2c, and 2d.
Western Electricity Coordinating Council Arizona Public Service Company PNM SRP California Energy Commission Los Angeles Department of		Table 1, P5 currently requires the study of "[d]elayed Fault Clearing due to the failure of a relay13 protecting the Faulted element to operate as designed". As written, this requirement does not recognize the use of redundant relays for primary protection. In some cases side by side relays are used to provide primary fault tripping if one relay fails to operate. Per the requirement as stated, the redundant relay would provide no value in meeting this requirement. Please revise to acknowledge backup relays: "Single failure of a protection relay13 protecting the Faulted element to operate as designed, resulting in backup relay actions or Delayed Fault Clearing, for one of the following". In Table 1, P2 and P3, the last column "Non-Consequential Load Loss Allowed" where the requirement "No12" appears, and in footnote 12, the standard as proposed does not allow for any Non-Consequential

Organization	Yes or No	Question 9 Comment
Water and Power Pacific Gas and Electric Company Modesto Irrigation District Puget Sound Energy Sacramento Municipal Utility District		Load Loss. When the Non-Consequential Load Loss (footnote b) issue is clarified in Project 2010-11 this requirement may be changed. Therefore, if this proposed Standard is enforced before Project 2010-11 is completed, entities will be required to meet this No Non-Consequential Load Loss requirement without the exception allowed in the existing TPL-002-0, footnote “b”. This will require immediate redesigns to meet this particular requirement. The unintended consequence could be that operators of local systems that are currently networked may opt to begin operation as radial systems, and future designs for local systems may be radial, at any voltage level. We suggest that the proposed footnote 12 include a provision to default to the existing footnote “b” in TPL-002-0 until Project 2010-11 is decided. Please revise footnote 12 to read, “Note: Non-Consequential Load Loss is being decided in Project 2010-11. When that project is finalized, the resolution will be copied here. In the interim, planned or controlled interruption of electric supply to radial customers or some local Network customers, connected to or supplied by the Faulted element or by the affected area, may occur in certain areas without impacting the overall reliability of the interconnected transmission systems. To prepare for the next contingency, system adjustments are permitted, including curtailments of contracted Firm (non-recallable reserved) electric power Transfers.” Timing of this project and project 2010-11 is critical. It would be very difficult to vote to approve the proposed TPL-001-2 prior to knowing the outcome of Project 2010-11 (footnote b issue).
E.ON U.S.		E.ON U.S. believes that Table 1 should be formatted to avoid having the tables split by page breakers. In addition, tables spanning across multiple pages should have headers at the top of each page.
Florida Reliability Coordinating Council, Inc - Transmission Working Group		Footnote 12 performance requirements of Table 1 should allow the loss of non-consequential load for all contingency categories except for P0. The disallowance of load loss does not provide any real benefit to the reliability of the BES and is an unnecessary overreach into local quality of service issues that are best addressed by State, Provincial or Municipal authorities. There may be circumstances such as high local transmission costs or local opposition to transmission construction where prohibition of non-consequential load loss represents a poor cost/benefit or quality of life tradeoff. Having a provision at the regional level that a PA or TP can have a certain amount of non-consequential load loss designed or planned in to its system that would be reasonable if it is acceptable to the RE and does not have an adverse impact on the remaining BES. In lieu of such a RE provision, providing a quantitative cap in non-consequential load loss such as 100 MW may be rationale compromise in the goal of limiting load loss for the more probable outage events. Our preference would be to retain the capability of limited non-consequential load loss. Footnote 9 should also be under consideration as part of Project 2010-11 and should be noted as such for clarification.
Western Area Power Administration		In footnotes 9 and 12, two critical issues are being addressed in large part via these "clarifying" footnotes. These are curtailment of "Firm Transmission Service" (which seems primarily to be a contract/scheduling issue) and the loss of "Non-Consequential Load." Perhaps these issues should receive more attention in the

Organization	Yes or No	Question 9 Comment
		actual requirements. In P5 the term “Protection System” was removed and replaced with “relay”. How are protection system elements other than relays accounted for? In studying a multiple contingency event with a communication system or control circuitry failure would it be necessary demonstrate P1 performance levels? These details could become critical as industry deals with issues such as FERC’s interpretation of TPL-002-0 Requirement R1.3.10 (RM10-6-000). In Table 1 - Extreme Events - Stability - Items 2a-2d, change “Protection System failure” to “relay failure” to be consistent with changes in P5. Table 1, P5 currently requires the study of “[d]elayed Fault Clearing due to the failure of a relay13 protecting the Faulted element to operate as designed”. As written, this requirement does not recognize the use of redundant relays for primary protection. In some cases side by side relays are used to provide primary fault tripping if one relay fails to operate. Per the requirement as stated, the redundant relay would provide no value in meeting this requirement. Please revise to acknowledge backup relays: “Single failure of a protection relay13 protecting the Faulted element to operate as designed, resulting in backup relay actions or Delayed Fault Clearing, for one of the following”. Footnote 13 - Delete “voltage (#27, #59)” since the under/over voltage relays are not called upon to provide the primary protection for fault clearing on Transmission elements. Suggest modifying Event P4 description to be more consistent with Event P5 description by including Delayed Fault Clearing in the description in lieu of “Loss of multiple elements”. Suggested Event P4 description is: “Delayed Fault Clearing caused by a stuck non Bus-tie Breaker attempting to clear a fault on one of the following:” In Table 1, P2 and P3, the last column “Non-Consequential Load Loss Allowed” where the requirement "No12" appears, and in footnote 12, the standard as proposed does not allow for any Non-Consequential Load Loss. When the Non-Consequential Load Loss (footnote b) issue is clarified in Project 2010-11 this requirement may be changed. Therefore, if this proposed Standard is enforced before Project 2010-11 is completed, entities will be required to meet this No Non-Consequential Load Loss requirement without the exception allowed in the existing TPL-002-0, footnote “b”. This will require immediate redesigns to meet this particular requirement. The unintended consequence could be that operators of local systems that are currently networked may opt to begin operation as radial systems, and future designs for local systems may be radial, at any voltage level. We suggest that the proposed footnote 12 include a provision to default to the existing footnote “b” in TPL-002-0 until Project 2010-11 is decided. Please revise footnote 12 to read, “Note: Non-Consequential Load Loss is being decided in Project 2010-11. When that project is finalized, the resolution will be copied here. In the interim, planned or controlled interruption of electric supply to radial customers or some local Network customers, connected to or supplied by the Faulted element or by the

Organization	Yes or No	Question 9 Comment
		affected area, may occur in certain areas without impacting the overall reliability of the interconnected transmission systems. To prepare for the next contingency, system adjustments are permitted, including curtailments of contracted Firm (non-recallable reserved) electric power Transfers." Timing of this project and project 2010-11 is critical. It would be very difficult to vote to approve the proposed TPL-001-2 prior to knowing the outcome of Project 2010-11 (footnote b issue).
PacifiCorp		Under Category P2 (Single Contingency) and Normal System Conditions, the performance table indicates that, for both HV and EHV, interruption of firm transmission service and non-consequential load loss are not allowed following the opening of a line section without a fault. This section of the performance table should distinguish between EHV and HV - performance requirements following the opening of a line section without a fault should be the same as those for a bus section fault. As with the bus section fault, interruption of firm transmission service and non-consequential load loss should be allowed for HV.
NorthWestern Energy (NWMT) Idaho Power Co		Table 1, P5 currently requires the study of "[d]elayed Fault Clearing due to the failure of a relay13 protecting the Faulted element to operate as designed". As written, this requirement does not recognize the use of redundant relays for primary protection. In some cases side by side relays are used to provide primary fault tripping if one relay fails to operate. Per the requirement as stated, the redundant relay would provide no value in meeting this requirement. Please revise to acknowledge backup relays: "Single failure of a protection relay13 protecting the Faulted element to operate as designed, resulting in backup relay actions or Delayed Fault Clearing, for one of the following". In Table 1, P2 and P3, the last column "Non-Consequential Load Loss Allowed" where the requirement "No12" appears, and in footnote 12, the standard as proposed does not allow for any Non-Consequential Load Loss. When the Non-Consequential Load Loss (footnote b) issue is clarified in Project 2010-11 this requirement may be changed. Therefore, if this proposed Standard is enforced before Project 2010-11 is completed, entities will be required to meet this No Non-Consequential Load Loss requirement without the exception allowed in the existing TPL-002-0, footnote "b". This will require immediate redesigns to meet this particular requirement. The unintended consequence could be that operators of local systems that are currently networked may opt to begin operation as radial systems, and future designs for local systems may be radial, at any voltage level. We suggest that the proposed footnote 12 include a provision to default to the existing footnote "b" in TPL-002-0 until Project 2010-11 is decided. Please revise footnote 12 to read, "Note: Non-Consequential Load Loss is being decided in Project 2010-11. When that project is finalized, the resolution will be copied here. In the interim, planned or controlled interruption of electric supply to radial customers or some local Network customers, connected to or supplied by the Faulted element or by the affected area, may occur in certain areas without impacting the overall reliability of the interconnected transmission systems. To prepare for the next contingency, system adjustments are permitted, including curtailments of contracted Firm (non-recallable reserved) electric power Transfers."

Organization	Yes or No	Question 9 Comment
Lakeland Electric		The performance requirements of Table 1 do not allow the loss of non-consequential load for single and multiple contingency events. The disallowance of load loss does not provide any real benefit to the reliability of the BES and is an unnecessary overreach into local quality of service issues that are best addressed by State, Provincial or Municipal authorities. There may be circumstances such as high local transmission costs or local opposition to transmission construction where prohibition of non-consequential load loss represents a poor cost/benefit or quality of life tradeoff. Having a provision at the regional level that a PA or TP can have a certain amount of non-consequential load loss designed or planned in to its system that would be reasonable if it is acceptable to the RE and does not have an adverse impact on the remaining BES. In lieu of such a RE provision, providing a quantitative cap in non-consequential load loss such as 100 MW may be rationale compromise in the goal of limiting load loss for the more probable outage events. Our preference would be to retain the capability of limited non-consequential load loss. It is our understanding that footnote 9 is under consideration as part of Project 2010-11 and should be noted as such for clarification.
FirstEnergy		Table 1, P5 currently requires the study of "[d]elayed Fault Clearing due to the failure of a relay (footnote 13) protecting the Faulted element to operate as designed". To the extent fully redundant relaying exists with no expected delay in Fault Clearing its understood that the P5 event would not be a concern for the redundant system design. The drafting team has taken appropriate steps within the TPL standard to focus on relaying failures to provide clarity in what is required for P5 planning event.
Platte River Power Authority		No. Table 1, P5 currently requires the study of "[d]elayed Fault Clearing due to the failure of a relay13 protecting the Faulted element to operate as designed". As written, this requirement does not recognize the use of redundant relays for primary protection. In some cases side by side relays are used to provide primary fault tripping if one relay fails to operate. Per the requirement as stated, the redundant relay would provide no value in meeting this requirement. Please revise to acknowledge backup relays: "Single failure of a protection relay13 protecting the Faulted element to operate as designed, resulting in backup relay actions or Delayed Fault Clearing, for one of the following". In Table 1, P2 and P3, the last column "Non-Consequential Load Loss Allowed" where the requirement "No12" appears, and in footnote 12, the standard as proposed does not allow for any Non-Consequential Load Loss. When the Non-Consequential Load Loss (footnote b) issue is clarified in Project 2010-11 this requirement may be changed. Therefore, if this proposed Standard is enforced before Project 2010-11 is completed, entities will be required to meet this No Non-Consequential Load Loss requirement without the exception allowed in the existing TPL-002-0, footnote "b". This will require immediate redesigns to meet this particular requirement. The unintended consequence could be that operators of local systems that are currently networked may opt to begin operation as radial systems, and future designs for local systems may be radial, at any voltage level. We suggest that the proposed footnote 12 include a provision to default to the existing footnote "b" in TPL-002-0 until Project 2010-11 is decided. Please revise footnote 12 to read, "Note:

Organization	Yes or No	Question 9 Comment
		Non-Consequential Load Loss is being decided in Project 2010-11. When that project is finalized, the resolution will be copied here. In the interim, planned or controlled interruption of electric supply to radial customers or some local Network customers, connected to or supplied by the Faulted element or by the affected area, may occur in certain areas without impacting the overall reliability of the interconnected transmission systems. To prepare for the next contingency, system adjustments are permitted, including curtailments of contracted Firm (non-recallable reserved) electric power Transfers." Timing of this project and project 2010-11 is critical. It would be very difficult to vote to approve the proposed TPL-001-2 prior to knowing the outcome of Project 2010-11 (footnote b issue). In Table 1 - Planning Events - Suggest changing the description for Events P2-3, P2-4, P4 and P4-6 to use the term 'Bus-tie Breaker' or 'non-Bus-tie Breaker' as applicable. In Table 1 - Extreme Events - Stability - Items 2a-2d, do you mean 'Protection System failure' here, or do you want to change to 'relay failure' to be consistent with changes in P5?
Orlando Utilities Commission		I generally agree with the direction the team has gone. Footnote 9 should also be highlighted as being part of the project 2010-11 discussion just as footnote 12 is.
Manitoba Hydro		In point g, violations are noted in terms of post-Contingency voltage deviations rather than post-Contingency voltage limits. This may lead to confusion, as some utilities evaluate performance based on a post-Contingency voltage deviation criterion while other utilities evaluate performance based on post-Contingency voltage limits. This same comment applies to Requirement R5.Suggested rewording for point g:System steady state voltages and post-Contingency voltages or voltage deviations shall be within acceptable limits as established by the Planning Coordinator and the Transmission Planner. Suggested rewording for the first sentence in Requirement R5:Each Transmission Planner and Planning Coordinator shall have criteria for acceptable System steady state voltage limits, post-Contingency voltages or voltage deviations, and the transient voltage response for its System. Note 12 states that an outstanding issue related to non-consequential load loss is being discussed. This will create a lot of uncertainty. Manitoba Hydro could not support this standard unless the resolution of Note B is known.
CenterPoint Energy		CenterPoint Energy appreciates the effort put forth by the SDT in revising the performance table. The current draft of P5 is preferable to previous versions.
TVA Transmission Planning & Compliance		TVA is concerned about footnote 12 (known as footnote b in existing TPL standards). TVA believes that utilities should be given some freedom in dropping local load in response to N-1 events as long as overall

Organization	Yes or No	Question 9 Comment
		BES reliability is not impacted. Otherwise significant capital improvements will be required that will have no overall reliability gain for the Bulk Electric System. TVA does agree with the revisions made specifically to the P5 event. TVA wishes to make a comment on the stability extreme event table: Changes were made in planning event P5 to narrow the focus to specific relay failures. The same changes are needed for stability extreme event 2a, 2b, 2c, and 2d.
SMUD		For the Western Interconnection, the performance level for a Bus-tie breaker fault under TPL-001-2, Table 1, Item P2-4, Notes (a) and (f), requires no thermal overloads and no cascading. While, FAC-010-2.1, R1.2, R2.5-R2.6, as modified by E1.1, E1.1.7, E1.3, and E1.3.1 requires a different performance level of no cascading. Please explain why this regional variance is not included under TPL-001-2, Item E.
California ISO		We support these changes, although we suggest that the proposed footnote 12 include an interim provision to default to the existing footnote “b” in TPL-002-0 until Project 2010-11 is decided. Please revise footnote 12 to read, “Note: Non-Consequential Load Loss is being decided in Project 2010-11. When that project is finalized, the resolution will be copied here. In the interim, planned or controlled interruption of electric supply to radial customers or some local Network customers, connected to or supplied by the Faulted element or by the affected area, may occur in certain areas without impacting the overall reliability of the interconnected transmission systems. To prepare for the next contingency, system adjustments are permitted, including curtailments of contracted Firm (non-recallable reserved) electric power Transfers.”
Seattle City Light		Table 1, P5 does not recognize the existence of redundant (or backup) relays. These are an integral part of the protection system design and should be considered in analysis of SLG faults. The TPL standard should encourage redundant, fail-safe systems, not ignore them. In Table 1, P2 and P3, we have a concern about not allowing non-consequential load loss. Project 2010-11 is deciding on this issue, but is not completed (see footnote 12). Should the standard become effective before this project is completed, no non-consequential load loss would be allowed, requiring many transmission additions and reconfigurations. Please change the "NO" in the last column to "YES" until the completion of Project 2010-11.
ISO New England Inc.		We are supportive of the change to P5. However, in making this modification, other items need to also be changed. In Table 1 - Stability, the language should be made similar to wording in P5. Protection System should be removed and replaced with the words “relay failure”. This change should be made for 2a through 2d:2. Local or wide area events affecting the Transmission System such as: a. 3Ã˜ fault on generator with stuck breaker10 or a relay failure resulting in Delayed Fault Clearing. b. 3Ã˜ fault on Transmission circuit with

Organization	Yes or No	Question 9 Comment
		stuck breaker10 or a relay failure resulting in Delayed Fault Clearing. c. 3Ã˜ fault on transformer with stuck breaker10 or a relay failure resulting in Delayed Fault Clearing. d. 3Ã˜ fault on bus section with stuck breaker10 or a relay failure resulting in Delayed Fault Clearing. We also believe that Note 11 needs clarifying wording as shown below:"Excludes circuits that share a common structure (Planning event P7, Extreme event steady state 2a) or common Right-of-Way (Extreme event, steady state 2b) for a total of 1 mile or less"
United Illuminating National Grid Central Maine Power Company New York State Electric & Gas Corp		In Table 1 - Stability, Make language similar to wording in P5. "Protection System" should be removed and replaced with the words "relay failure". This would avoid future interpretation issues about the intent of this requirement (as we understand it) to exclude more severe though less likely failures such as battery systems. This change should be made for 2a through 2d on page 12).In Note 11 (page 14) ADD the wording shown in "quotes" below: Excludes circuits that share a common structure (Planning event P7, Extreme event steady state 2a) or common Right-of-Way (Extreme event, steady state 2b) for "a total of" 1 mile or less.
Hydro-Quebec TransEnergie		In table 1 on page 12 (Stability section), Relay failure should replace Protection System
LCRA TSC		An important footnote to Table 1 is omitted from this proposed revision. This omission prevents adequate evaluation of the footnote. Footnote 12 in Table 1 is no longer applied to P2.1, P2.2, P2.3, P4, and P5. The footnote states: “Non-Consequential Load Loss is being decided in Project 2010-11. When that project is finalized, the resolution will be copied here.” The footnote should be removed from the proposed revision until Project 2010-11 is concluded.
American Transmission Company		We offer the major suggestion that the P3 Category performance criteria be modified to apply only to the loss of two generators. The SDT properly recognizes that generator outages are significantly more probable than line or transformer outages and should be “higher” in the category list. However given the clearly higher probability of generator outages, the probability of the loss of two generators is clearly higher than the loss of a generator and line or the loss of a generator and transformer. Therefore, if the loss of two generators is in the P3 category, then the loss of a generator and line or transformer should be clearly “lower” in the category list. We suggest the listing of: the loss of a generator and some other element (e.g. transmission circuit, transformer, shunt device, and single pole of DC line) be moved to a lower event category, such as the P6 Category by adding “1. Generator” to the listing in the Initial System Condition (Loss of . . .) column. We offer the minor suggestion that Item 2.a in the Extreme Events, Steady State section - Clarify the meaning of the loss of multiple circuits in Item 2.a by using wording similar to P7. We suggest this text: “a. Loss of three or more circuits that share a common structure.”

Organization	Yes or No	Question 9 Comment
		We offer the minor suggestion that Footnote 6 - Further clarify the applicable shunt devices in Footnote 6 with this suggested text: "6. Requirements which are applicable to shunt devices, also apply to FACTS devices that are connected to ground, but not instrument voltage transformers or surge arresters." ATC has significant concerns with Q3.2 (R2.1.4 & R2.4.3), Q4 (Table requirements) and Q5 (P3 scope), as noted above. In addition, ATC offers the following suggestions to promote proper Reliability Standard quality and content. (1.) Revise the Planning Assessment definition to more explicitly apply to the BES and the TPL-001 requirements. We suggest text of: "Planning Assessment: Documented evaluation of future Transmission System performance and Corrective Action Plans to remedy identified deficiencies in the BES from the steady state and stability performance requirements set forth in the TPL-001 standard." 2.) R2.1.5 - We propose replacing the term 'major Transmission' with "BES" because BES is a well defined term, while the term 'major Transmission' is not. (3.) Add R2.3.1 - We suggest the addition of a R2.3.1 requirement to emulate the distinction between the requirement to perform a short circuit assessment and conduct required studies or analysis to support the assessment (e.g. R2.1/R2.1.1 and R2.2/R2.2.1). We propose wording such as, "Perform an analysis for at least one year in the Near Term Transmission Planning Horizon." This requirement would set an expectation that an analysis should be conducted to at least one or more years in the near-term planning horizon, rather than imply that an analysis of all five years in the near-term planning horizon must be conducted. 4.) R2.7.4 - We suggest that the wording of R2.7.4 be the same as R.2.8.2. Otherwise, we propose that R2.7.4 and R2.8.2 be revised with wording like, ". . . implementation status of identified Corrective Action Plans for System Facilities and Operating Procedures." to clarify that the identified system facilities and operating procedures refer only to those that were in the previous year's Corrective Action Plans. (5.) R3.3.1 - The term of 'controls' is ambiguous and not defined, unlike the term, 'Protection Systems', which is defined. Therefore, we suggest that this item be defined or more clearly described to avoid the risk of different and possibly contradictory interpretations by TPs, PCs, and auditors. (6.) R3.3., bullet #1 - We suggest qualifying which generating units to consider and which voltage limits to simulate with revised wording like, "Trip generating units that are connected to the BES when actual or assumed minimum generator steady state or ride through voltage limits are known and simulations show voltages may fall below the voltage limit. If assumed voltage limits are used, then they should be included in the assessment". The requirement should not apply to all relevant generating units until one of the MOD standards requires all Generator Owners to provide their minimum generating unit voltage limits to the TP and PC. If the wording of R3.3.1, bullet #1 must be different from its counterpart, R4.3.1, then please explain the reasons for any differences.

Organization	Yes or No	Question 9 Comment
		(7.) R3.4.1 - Compliance with the requirement "to coordinate" is problematic and non-measurable. We suggest replacing it with the requirement "to communicate". 8.) R3.5 - We interpret that R3.5 requires the TP and PC to conduct an evaluation of possible actions to reduce the likelihood or impact of extreme events, which produce the more severe impacts, if cascading outages may occur. Does the drafting team intend for the TP and PC to fulfill this requirement for at least one event in each of the five categories (i.e. 3 steady state and 2 stability) or in each of the 21 categories/sub-categories (i.e. 14 steady state and 7 stability). Also, if the resulting cascading outages do not result in any overloads, under-voltages, voltage collapse, or loss of generator synchronization, then should the evaluation of possible actions to reduce likelihood or impact be required? (9.) R4.1.1 - We suggest that there should be some qualification of which generating units are referred to in this requirement. We propose that the requirement say, "No generating unit connected to the BES shall pull out of synchronism." For example, some utilities include smaller generation units that are connected at voltages below 100 kV and even down to distribution voltage in their base cases. (10.) R4.1.2 - We propose that the wording of this requirement be revised to reflect the same BES qualification of the generating unit that we noted in R4.1.1 above. (11.) R4.3.1 - This requirement refers to high speed reclosing and we presume that this is special high speed reclosing that is completed in several cycles, rather than the normal high speed reclosing that is completed in a number of seconds. We recommend that the term high speed reclosing be more clearly defined for this sub-requirement. (12.) R5 - We propose removing the criteria item, "post-Contingency voltage deviation", because this criterion has not been developed and used widely enough in the industry to be introduced into the standards. (13.) R7 - Revise part of the requirement text to read, ". . . identify each entity's individual and joint responsibilities . . ." to provide better clarity. Perhaps this requirement should be listed at the beginning of the Requirements section, instead being mentioned near the end of this section. (14.) Change the forward referencing to backward referencing. We agree with R2.6, R3.1, R3.5, R4.1, and 4.2. However, we suggest that the requirements be ordered so that all of the references refer back to earlier text, rather later text to be consistent with the rest of this standard and other referencing in this standard (e.g. R2.1.3, R2.1.4, R2.4.3, R3, R3.3, R3.5, R4, R4.3, R4.4, R4.5), as well as other standards.
Tri-State Generation & Transmission		Table 1, P5 does not seem to account for redundant relays in the Protection System to mitigate potential relay failure. We recommend changing the "Event" to "Delayed Fault Clearing due to the failure of a relay to operate as designed, if that is the only relay protecting the Faulted element, for one of the following:" In Table 1, P2 and P3, the last column "Non-Consequential Load Loss Allowed" where the requirement

Organization	Yes or No	Question 9 Comment
		"No12" appears, and in footnote 12, the standard as proposed does not allow for any Non-Consequential Load Loss. When the Non-Consequential Load Loss (footnote b) issue is clarified in Project 2010-11 this requirement may be changed. Therefore, if this proposed Standard is enforced before Project 2010-11 is completed, entities will be required to meet this No Non-Consequential Load Loss requirement without the exception allowed in the existing TPL-002-0, footnote "b". This will require immediate redesigns to meet this particular requirement. The unintended consequence could be that operators of local systems that are currently networked may opt to begin operation as radial systems, and future designs for local systems may be radial, at any voltage level. We suggest that the proposed footnote 12 include a provision to default to the existing footnote "b" in TPL-002-0 until Project 2010-11 is decided. Please revise footnote 12 to read, "Note: Non-Consequential Load Loss is being decided in Project 2010-11. When that project is finalized, the resolution will be copied here. In the interim, planned or controlled interruption of electric supply to radial customers or some local Network customers, connected to or supplied by the Faulted element or by the affected area, may occur in certain areas without impacting the overall reliability of the interconnected transmission systems. To prepare for the next contingency, system adjustments are permitted, including curtailments of contracted Firm (non-recallable reserved) electric power Transfers." Timing of this project and project 2010-11 is critical. It would be very difficult to vote to approve the proposed TPL-001-2 prior to knowing the outcome of Project 2010-11 (footnote b issue). Second, we are unclear why voltage relays are included in footnote 13 and think they can be removed. Third, in the Extreme Events - Stability section of Table 1, items 2a-2d "Protection System failure" should be changed to "relay failure" to be consistent with Table 1, Category P5.
Lakeland Electric		The performance requirements of Table 1 do not allow the loss of non-consequential load for single and multiple contingency events. The disallowance of load loss does not provide any real benefit to the reliability of the BES and is an unnecessary overreach into local quality of service issues that are best addressed by State, Provincial or Municipal authorities. There may be circumstances such as high local transmission costs or local opposition to transmission construction where prohibition of non-consequential load loss represents a poor cost/benefit or quality of life tradeoff. Having a provision at the regional level that a PA or TP can have a certain amount of non-consequential load loss designed or planned in to its system that would be reasonable if it is acceptable to the RE and does not have an adverse impact on the remaining BES. In lieu of such a RE provision, providing a quantitative cap in non-consequential load loss such as 100 MW may be rationale compromise in the goal of limiting load loss for the more probable outage events. Our preference would be to retain the capability of limited non-consequential load loss.It is our understanding that footnote 9 is under consideration as part of Project 2010-11 and should be noted as such for clarification.
NBSO		For consistency, 'Protection System' should be replaced with 'relay' on Table 1 (p12) Stability Section, items

Organization	Yes or No	Question 9 Comment
		2a-2d.
Progress Energy		PE remains concerned with the present draft of TPL-001-2 regarding the presence or absence of footnotes in particular events. PE believes that, for all events in Table 1 except P0, any "No" designation in the "Non-Consequential Load Loss allowed" column should have Footnote 12 appended to it. Several events do append footnote 12 to a "No" answer, but several do not. PE does not see why certain events should be denied the use of Footnote 12 as long as Footnote 12 is worded in a manner such that the BES will not be adversely affected.PE has additional concerns regarding two Footnotes. Footnote 9 contains language regarding firm transmission service that is very similar to language presently under review in NERC Project 2010-11. PE feels that Footnote 9 should have had a statement at the end similar to that of Footnote 12, such as "Note: Firm Transmission Service is being decided in Project 2010-11. When that project is finalized, the resolution will be copied into Footnote 9." Without such a statement, PE cannot understand why the Firm Transmission language in footnote (b) under Project 2010-11 is being reviewed, while it is apparently no longer being reviewed in Project 2006-02.Footnote 12 contains the following language as a place holder: "Note: Non-Consequential Load Loss is being decided in Project 2010-11. When that project is finalized, the resolution will be copied here." PE has filed substantial comments on the footnote (b) issue in previous drafts, pointing out that disallowance of curtailment of non-consequential load is a local load issue and not a BES concern. PE therefore cannot make any positive determination as to whether the draft Standard, TPL-001-2, and its associated Table 1, will be a viable Standard until the language in Footnote 12 is resolved via Project 2010-11. Given the potential for unresolved and confusing issues regarding the parallel development of Project 2006-02 and 2010-11, PE encourages NERC to resolve all issues within Project 2010-11 before taking the draft Standard TPL-001-2 to ballot in Project 2006-02.
Tucson Electric Power Company		Table 1, P5 currently requires the study of "[d]elayed Fault Clearing due to the failure of a relay13 protecting the Faulted element to operate as designed". As written, this requirement does not recognize the use of redundant relays for primary protection. In some cases side by side relays are used to provide primary fault tripping if one relay fails to operate. Per the requirement as stated, the redundant relay would provide no value in meeting this requirement. Please revise to acknowledge backup relays: "Single failure of a protection relay13 protecting the Faulted element to operate as designed, resulting in backup relay actions or Delayed Fault Clearing, for one of the following". In Table 1, P2 and P3, the last column "Non-Consequential Load Loss Allowed" where the requirement "No12" appears, and in footnote 12, the standard as proposed does not allow for any Non-Consequential Load Loss. When the Non-Consequential Load Loss (footnote b) issue is clarified in Project 2010-11 this requirement may be changed. Therefore, if this proposed Standard is enforced before Project 2010-11 is completed, entities will be required to meet this No Non-Consequential Load Loss requirement without the exception allowed in the existing TPL-002-0, footnote "b". This will require immediate redesigns to meet this

Organization	Yes or No	Question 9 Comment
		particular requirement. The unintended consequence could be that operators of local systems that are currently networked may opt to begin operation as radial systems, and future designs for local systems may be radial, at any voltage level. We suggest that the proposed footnote 12 include a provision to default to the existing footnote “b” in TPL-002-0 until Project 2010-11 is decided. Please revise footnote 12 to read, “Note: Non-Consequential Load Loss is being decided in Project 2010-11. When that project is finalized, the resolution will be copied here. In the interim, planned or controlled interruption of electric supply to radial customers or some local Network customers, connected to or supplied by the Faulted element or by the affected area, may occur in certain areas without impacting the overall reliability of the interconnected transmission systems. To prepare for the next contingency, system adjustments are permitted, including curtailments of contracted Firm (non-recallable reserved) electric power Transfers.” Timing of this project and project 2010-11 is critical. It would be very difficult to vote to approve the proposed TPL-001-2 prior to knowing the outcome of Project 2010-11 (footnote b issue).Non-Consequential Load Loss and curtailment of Firm Transmission Service should be allowed for loss of EHV BES elements for Category P4 and P5 events.
New York Independent System Operator		There are two tables labeled “Table 1”. The extreme events table should be renamed “Table 2”.
MidAmerican Energy		Voting "no" - Footnote 6 - Further clarify the applicable shunt devices in Footnote 6 with this suggested text: 6. Requirements which are applicable to shunt devices, also apply to FACTS devices that are connected to ground, but not instrument voltage transformers or surge arresters
Southern California Edison Company		SCE supports the revised performance table.
Omaha Public Power District		Why is Footnote 12 used for some occurrences of the word "No" in the last column of Table 1 but not other occurrences of the word "No"?
Hydro One Networks Inc.		No selection boxes in this question. Yes, we support.
SERC Dynamics Review Subcommittee		Yes. The SERC DRS supports the revisions.
Duke Energy		We support the changes.

Organization	Yes or No	Question 9 Comment
South Carolina and Gas		Yes
Xcel Energy		The defined term "Bus-tie Breaker" is not used per se anywhere in the Requirements or in Table 1. Suggest changing the description for Events P2-3, P2-4, P4 and P4-6 to use the term Bus-tie Breaker or non-Bus-tie Breaker, as applicable. Existing P5 event description needs improvement since the phrase "…failure of relay protecting the Faulted element to operate as designed…" reads awkwardly and also includes some superfluous verbiage that can be omitted. For example, isn't "protecting the faulted element" the basic function of every protective relay? Also, isn't "(failure) to operate as designed" inherent in the definition of Delayed Fault Clearing? Suggested P5 event description is: "Delayed Fault Clearing due to the operation failure of a primary protection relay[13] when attempting to clear a fault on one of the following:" Footnote 13 – Delete "voltage (#27, #59)" since the under/over voltage relays are not called upon to provide the primary protection for fault clearing on Transmission elements. In Table 1 – Extreme Events – Stability – Items 2a-2d, change "Protection System failure" to "relay failure" to be consistent with changes in P5. Suggest modifying Event P4 description to be more consistent with Event P5 description by including Delayed Fault Clearing in the description in lieu of "Loss of multiple elements". Suggested Event P4 description is: "Delayed Fault Clearing caused by a stuck non Bus-tie Breaker attempting to clear a fault on one of the following:"

6. The SDT has revised the Measures based on industry comments to the initial ballot. If you do not support these changes, please specify why you disagree and include specific alternative language to resolve your concern.

Summary Consideration:

The SDT has made the following changes due to industry comments:

M1. Each Transmission Planner and Planning Coordinator shall provide evidence, in electronic or hard copy format, that it is maintaining System models within their respective area, using ~~the latest~~ data consistent with MOD-010 and MOD-012, including items represented in the Corrective Action Plan, representing projected System conditions, and that the models represent the required information in accordance with Requirement R1.

R6. Each Transmission Planner and Planning Coordinator shall define and document, within their Planning Assessment, ~~any~~ the criteria or methodology used in the analysis to identify System instability for conditions such as Cascading, voltage instability, or uncontrolled islanding.

M8. Each Planning Coordinator and Transmission Planner shall provide evidence, such as email notices, documentation of updated web pages, postal receipts showing recipient and date; or a demonstration of a public posting, that it has distributed its Planning Assessment results to adjacent Planning Coordinators, adjacent Transmission Planners, and any functional entity who has indicated a reliability need and that the ~~functional entity~~ Planning Coordinator or Transmission Planner has provided a documented response to comments received on Planning Assessment results within 90 calendar days of receipt of those comments in accordance with Requirement R8.

Data retention for R7 - The current, in force documentation for the agreement(s) on roles and responsibilities, as well as ~~all such~~ documentation for the agreements in force since the last compliance audit, in accordance with Requirement R7 and Measure M7.

Conforming changes were made to M6 and the data retention for R6/M6. Conforming changes were made to R1 to eliminate the phrase, “the latest.” The majority of respondents agree with the changes to the Measures and no other changes to the Measures have been made based on stakeholder comments.

The SDT did not pose questions for items that were not redlined, i.e., changed, in this posting since those items not redlined were considered by the SDT as sufficiently vetted by the industry through the various phases of the project to date. However, the SDT has reviewed all comments regardless of whether specific questions were asked and has considered the comments.

Organization	Yes or No	Question 10 Comment

Organization	Yes or No	Question 10 Comment
Florida Reliability Coordinating Council, Inc - Transmission Working Group	No	It appears that there is a disagreement between R8 and M8, regarding public posting. We Agree with M8 posting option.
NorthWestern Energy (NWMT)	No	Measure M6 is too vague. It is unclear how to identify the conditions of Cascading, voltage instability, or uncontrolled islanding. The Glossary of Terms defines Cascading as "The uncontrolled successive loss of system elements triggered by an incident at any location. Cascading results in widespread electric service interruption that cannot be restrained from sequentially spreading beyond an area predetermined by studies." Does the loss of system elements have to extend beyond the Control Area to be considered "Cascading"? Is there a Megawatt threshold that must be satisfied? Is there a time duration involved? Also, "cascading outages" needs to be defined. In addition, "voltage instability" and "uncontrolled islanding" should both be defined.
Lakeland Electric	No	please consider remove "the latest" from M1
Ameren	No	For measurements M3 and M4, there is some question as to what is to be provided as evidence of a study. Would the study results alone provide sufficient evidence, or does the entire powerflow, stability, or short circuit effort need to be documented in a formal study report? There are no measures for the creation and coordination of contingency lists that are to be developed in R3.4, R3.5, R4.4, and R4.5. Are these contingency lists required to be a documented part of the study?
MidAmerican Energy	No	Revise measures to be consistent with requirements. 1. R6 Delete "any". The use of the word any in standards should not be allowed. 2. Revise the Planning Assessment definition to more explicitly apply to the BES and the TPL-001 requirements. We suggest text of: "Planning Assessment: Documented evaluation of future Transmission System performance and Corrective Action Plans to remedy identified deficiencies in the BES from the steady state and stability performance requirements set forth in the TPL-001 standard." 3. R2.1.5 - We propose replacing the term 'major Transmission' with "BES" because BES is a well defined term, while the term, 'major Transmission', is not. 4. Add R2.3.1 - We suggest the addition of a R2.3.1 requirement to emulate the distinction between the requirement to perform a short circuit assessment and conduct required studies or analysis to support the assessment (e.g. R2.1/R2.1.1 and R2.2/R2.2.1). We propose wording such as, "Perform an analysis for at least one year in the Near Term Transmission Planning Horizon." This requirement would set an expectation

Organization	Yes or No	Question 10 Comment
		that an analysis should be conducted to at least one or more years in the near-term planning horizon, rather than imply that an analysis of all five years in the near-term planning horizon must be conducted. 5. R2.7.2 - Delete 2.7.2. With regard to "include actions to resolve performance deficiencies identified in multiple sensitivity studies", mitigation plans should not be required for deficiencies found in multiple sensitivity studies because the conditions in some sensitivity studies are more extreme and less likely than base case conditions. Some of the sensitivity study conditions are not credible. 6. R2.7.4 - We suggest that the wording of R2.7.4 be the same as R.2.8.2. 7. R3.5 - We interpret that R3.5 requires the TP and PC to conduct an evaluation of possible actions to reduce the likelihood or impact of extreme events, which produce the more severe impacts, if cascading outages may occur. Does the drafting team intend for the TP and PC to fulfill this requirement for at least one event in each of the five categories (i.e. 3 steady state and 2 stability) or in each of the 21 categories/sub-categories (i.e. 14 steady state and 7 stability). Also, if the resulting cascading outages do not result in any overloads, under-voltages, voltage collapse, or loss of generator synchronization, then should the evaluation of possible actions to reduce likelihood or impact be required? 8. R4.1.1 - We suggest that there should be some qualification of which generating units are referred to in this requirement. We propose that the requirement say, “No generating unit with a Point of Interconnection connected to the BES shall pull out of synchronism.” For example, some utilities include smaller generation units that are connected at voltages below 100 kV and even down to distribution voltage in their base cases. 9. R4.1.2 - We propose that the wording of this requirement be revised to reflect the same BES qualification of the generating unit that we noted in R4.1.1 above. 10. R4.3.1 - This requirement refers to high speed reclosing and we presume that this is special high speed reclosing that is completed in several cycles, rather than the normal high speed reclosing that is completed in a number of seconds. We recommend that the term high speed reclosing be more clearly defined for this sub-requirement. 11. R.4.3.2 - We suggest qualifying which generating units to consider and which voltage limits to simulate with revised wording like, “Trip generating units that are connected to the BES when actual or assumed minimum generator transient voltage limits are known and simulations show voltages may fall below the voltage limit. If assumed voltage limits are used, then they should be included in the assessment”. The requirement should not apply to all relevant generating units until one of the MOD standards requires all Generator Owners to provide their minimum generating unit voltage limits to the TP and PC. If the wording of R4.3.2 must be different from its counterpart, R3.3.2, then please explain the reasons for any differences. 12. R5 - This requirement should allow the applicable entity (such as the TOP / TO) to define a “Post-Contingency Voltage Deviation” as this criteria is not used widely enough in the industry to be a well

Organization	Yes or No	Question 10 Comment
		established criteria. 13. Revise R8 to limit the need to provide the Planning Assessment as follows “adjacent Planning Coordinators and adjacent Transmission Planners and to any registered functional entity...” 14. Data Retention for R3, R5, R6, & R7 - The MRO NSRS proposes that the wording in these elements be revised to change “All” to “The”. The word “All” is unnecessary and could encourage over-the-top compliance monitoring and enforcement. The revised data retention would read as follows: “The studies performed in support....”
NERC staff	Yes	NERC staff supports the changes to the Measures.
SERC Planning Standards Subcommittee	Yes	
Northeast Power Coordinating Council	Yes	
Hydro One Networks Inc.	Yes	
SERC Dynamics Review Subcommittee	Yes	
MRO's NERC Standards Review Subcommittee	Yes	
Pepco Holings, Inc - Affiliates	Yes	
IRC Standards Review Committee	Yes	
Exelon Transmission Planning	Yes	
Southern Company	Yes	
Western Area Power	Yes	

Organization	Yes or No	Question 10 Comment
Administration		
PacifiCorp	Yes	
Duke Energy	Yes	
FirstEnergy	Yes	
Platte River Power Authority	Yes	
Orlando Utilities Commission	Yes	
Manitoba Hydro	Yes	
Minnesota Power	Yes	
TVA Transmission Planning & Compliance	Yes	
Independent Electricity System Operator	Yes	
South Carolina and Gas	Yes	
California ISO	Yes	
Seattle City Light	Yes	
ISO New England Inc.	Yes	
Los Angeles Department of Water and Power	Yes	
Idaho Power Co	Yes	

Organization	Yes or No	Question 10 Comment
United Illuminating	Yes	
Hydro-Quebec TransEnergie	Yes	
National Grid	Yes	
American Transmission Company	Yes	
American Electric Power (AEP)	Yes	
Tri-State Generation & Transmission	Yes	
GTC	Yes	
Pacific Gas and Electric Company	Yes	
Northeast Utilities	Yes	
Consolidated Edison Co. of New York, Inc.	Yes	
NBSO	Yes	
Central Maine Power Company	Yes	
Oncor Electric Delivery	Yes	
New York State Electric & Gas Corp	Yes	
Progress Energy	Yes	

Organization	Yes or No	Question 10 Comment
ERCOT ISO	Yes	
Tucson Electric Power Company	Yes	
New York Independent System Operator	Yes	
Xcel Energy	Yes	
Southern California Edison Company	Yes	

7. The SDT has revised the Requirement R8 VSL based on industry comments to the initial ballot. If you do not support these changes, please specify why you disagree and include specific alternative language to resolve your concern.

Summary Consideration:

The SDT made the following clarification due to industry comments:

> **4.3.1, bullet #1**: Successful high speed (less than one second) reclosing and unsuccessful high speed reclosing into a Fault where high speed reclosing is utilized.

The VSL was not changed as the majority response was that the industry is in general agreement with the VSL.

The SDT did not pose questions for items that were not redlined, i.e., changed, in this posting since those items not redlined were considered by the SDT as sufficiently vetted by the industry through the various phases of the project to date. However, the SDT has reviewed all comments regardless of whether specific questions were asked and has considered the comments.

Organization	Yes or No	Question 11 Comment
Northeast Power Coordinating Council Consolidated Edison Co. of New York, Inc.	No	Requirement 8 is an administrative burden to TPs and PCs that adds no value to Bulk Power System reliability. PCs should be including TPs, neighboring PCs and interested parties in its planning processes when developing the Planning Assessments. Therefore, the inclusion of a set of VSLs for Requirement 8 is unnecessary. Should the VSLs for Requirement 8 remain, Requirement 8.1 should be revised to reflect that comments only to the final Assessment (not drafts developed during a process) need a response as follows:If a recipient of the planning assessment final results provides documented comments on the results, the respective Planning Coordinator or Transmission Planner shall provide a documented response to such recipient within 90 calendar days of receipt of those comments.If Requirement 8 and 8.1 are retained, they should be revised to reflect that comments only to the final Assessment (not drafts developed during a process) need a response and there should be a limit on the comment period as follows:If a recipient of the planning assessment final results provides documented comments on the results within 90 days of receipt, the respective Planning Coordinator or Transmission Planner shall provide a documented response to such recipient within 90 calendar days of receipt of those comments. Other comments not addressed by this Comment Form as follows: Section 3.3 - The last sentence of 3.3.1 should be removed. This is addressed in PRC-023. Line ratings are addressed in PRC-023. PRC-023 requires coordination with the Reliability Coordinator. Remove “Tripping of Transmission elements where relay loadability limits are exceeded.” Section 4.3 - High speed reclosing is not defined, and to help eliminate any confusion that it may introduce

Organization	Yes or No	Question 11 Comment
		into the standard it will be worthwhile for the SDT to define this term. Several specific examples from previous comments on sensitivity analysis and guidance for base case assumptions: The requirements for sensitivity analysis already address issues going beyond what is expected to meet reliability requirements. Requiring extreme event analysis is requiring two layers of event analysis beyond what is required and there is no requirement for corrective action if anything is identified. The standard is referring to requirements for sensitivity and other issues without a reference to base assumptions. The standard must describe base assumptions. To define a sensitivity condition, NERC must define base assumptions. As for allowing con-consequential load loss for Categories P1 through P5, suggest approval at the Regional level, with a concept of allowing it in a "local area" that does not impact BPS reliability. All references to 300 kV in document should be replaced with EHV (for example in the Introduction, Section 5).The first phrase of Note 3 on p. 14 should be revised as follows: "Bulk Electric System (BES) level references include extra-high voltage (EHV) Facilities defined as those representing the backbone of the System, generally at voltage greater than 300 kV, and high voltage (HV) Facilities defined as those not representing the backbone of the System, as determined by the Planning Coordinator and approved by Regional Entity."
IRC Standards Review Committee	No	(AESO is not a party to the following comments since its VSLs are set by the Alberta regulatory authority.)Requirement 8 is an administrative burden to TPs and PCs that adds no value to reliability. PCs should be including TPs, neighboring PCs and interested parties in its planning processes when developing the Planning Assessments. Therefore, the inclusion of a set of VSLs for Requirement 8 is unnecessary.Should the SDT decide to leave the VSLs for Requirement 8, Requirement 8.1 should be revised to reflect that comments only to the final Assessment (not drafts developed during a process) need a response as follows: 8.1 If a recipient of the planning assessment final results provides documented comments on the results, the respective Planning Coordinator or Transmission Planner shall provide a documented response to such recipient within 90 calendar days of receipt of those comments.For a Planning Coordinator (PC) who distributes the Planning Assessment to many different entities (to adjacent PCs, TPs, and other functional entities), a concern regarding the Requirement R8 VSL is that it is overly restrictive to apply a violation for failing to distribute the results of its Planning Assessment to only one PC, TP, or functional entity (and to apply a High VSL for failing to distribute to more than one entity), particularly since an entity's contact is subject to change over time, and since Measure M8 allows for publicly posting the results of its Planning Assessment to its website. Should the SDT decide to include the VSLs for Requirement 8, we would recommend revising to use a percentage approach rather than applying a violation to a Planning

Organization	Yes or No	Question 11 Comment
		Coordinator who fails to provide the results of its Planning Assessment to one PC, TP, or other functional entity (or applying a High VSL for failing to distribute to more than one entity.) Recommend applying a similar percentage approach to the VSLs drafted by NERC Staff for Project #2007-23 VSLs (e.g., for FAC-013-1) to be considered for the TPL-001-2 R8 VSLs. For example, o Lower VSL: The responsible entity failed to provide the Planning Assessment final results to 5% or less of the required entities. o Moderate VSL: The responsible entity failed to provide the Planning Assessment final results to more than 5% up to (and including) 10% of the required entities. o High VSL: The responsible entity failed to provide the Planning Assessment final results to more than 10% up to (and including) 15% of the required entities. o Severe VSL: The responsible entity failed to provide the Planning Assessment final results to more than 15% of the required entities OR [the existing language for the Severe VSL].Explanation: The VSLs were modified for consistency with other standards and VSLs.Reference: Link to VSLs drafted by NERC Staff for Project #2007-23 VSLs (e.g., for FAC-013-1):http://www.nerc.com/docs/standards/sar/Staff_Proposed_VSLs_2010July27.pdf
Southern Company	No	We wish to make a comment on R4.3.1: it appears that this requires stability simulations of both successful and unsuccessful high-speed reclosing for all contingency simulations regardless of whether high-speed reclosing is used on the faulted line. We suggest the following wording be used to replace the first bullet: "Successful high-speed reclosing and unsuccessful high-speed reclosing onto a fault, where such reclosing is applied, and where such additional simulations are deemed appropriate by the PC or TP." Also, we wish to make a comment on footnote #13 of Table 1. 13. Applies to any of the following relay functions or types: pilot (#85), distance (#21), differential (#87), current (#50, 51, & 67), voltage (#27 & 59), directional (#32 & 67), and associated tripping (#86 & 94) relays.
Florida Reliability Coordinating Council, Inc - Transmission Working Group	No	The requirement to distribute the Planning Assessment should be more flexible and allow for making the Planning Assessment available, such that those entities that desire the information can have it readily available. R8 should be modified to replace distribute with "make available:, so the new requirement would read as follows: Each Planning Coordinator and Transmission Planner shall make available its Planning Assessment results to adjacent Planning Coordinators and Transmission Planners and to any functional entity that indicates a reliability related need for the Planning Assessment results.
PacifiCorp	No	The language for Requirement R8 is ambiguous with regard to which adjacent entities must request in writing the results of the Planning Assessment. The language should be clarified to read: "Upon request made in

Organization	Yes or No	Question 11 Comment
		writing, each Planning Coordinator and Transmission Planner shall distribute its Planning Assessment results to adjacent Planning Coordinators, adjacent Transmission Planners, and any other functional entity that has a reliability related need." The Requirement R8 VSL language should also be revised accordingly.
ReliabilityFirst	No	TPL-001-2 Draft 5 is much better than Draft 4.There is still one significant concern, that I do not believe the drafting team adequately addressed. It is unclear as to what "Planning Assessment results" and "results of its Planning Assessment" entail. The Draft 5 response that "Planning Assessment" is a defined term does not fully address this concern. "Planning Assessment results" or "results of its Planning Assessment" is not necessarily the same thing as "Planning Assessment". As written, "Planning Assessment results" or "results of its Planning Assessment" could be anything from a single sentence, to a few brief high level paragraphs, to a detailed and technically complete Planning Assessment. The Standard needs to more clearly state what is required in the report to other entities. Based on the drafting team response in Draft 4, it seems that replacement of "Planning Assessment results" or "results of its Planning Assessment" with the term "Planning Assessment" or "its Planning Assessment" would be appropriate. Violation Severity Levels: R8The failure to provide documented responses to documented comments to "Planning Assessment results" is deemed to be a higher severity level than failing to distribute "results of its Planning Assessment". Failure to distribute denies functional entities an opportunity to comment, and could prevent coordinated planning, and thus should be deemed to be more severe than failing to provide documented responses to documented comments.
Lakeland Electric	No	The requirement to distribute the Planning Assessment should be more flexible and allow for making the Planning Assessment available, such that those entities that desire the information can have it readily available. R8 should be modified as follows: Each Planning Coordinator and Transmission Planner shall make available its Planning Assessment results to adjacent Planning Coordinators and Transmission Planners and to any functional entity that indicates a reliability related need for the Planning Assessment results.
Orlando Utilities Commission	No	R8 should require that the PC and TP make available it's planning assessment results when requested, rather then requring the preemptive transmittal. There is no reliablity purpose served by providing unsolicited information.
US Bureau of Reclamation	No	The language implies that the responsible entity may choose to not distribute it is feels the entity making the request does not have a "reliability related need". It is not clear why that distinction is being made?
California ISO	No	Requirement 8 is an administrative burden to TPs and PCs that adds no value to reliability. PCs should be including TPs, neighboring PCs and interested parties in its planning processes when developing the

Organization	Yes or No	Question 11 Comment
		Planning Assessments. Therefore, the inclusion of a set of VSLs for Requirement 8 is unnecessary.Should the SDT decide to leave the VSLs for Requirement 8, Requirement 8.1 should be revised to reflect that comments only to the final Assessment (not drafts developed during a process) need a response as follows: 8.1 If a recipient of the planning assessment final results provides documented comments on the results, the respective Planning Coordinator or Transmission Planner shall provide a documented response to such recipient within 90 calendar days of receipt of those comments.For a Planning Coordinator (PC) who distributes the Planning Assessment to many different entities (to adjacent PCs, TPs, and other functional entities), a concern regarding the Requirement R8 VSL is that it is overly restrictive to apply a violation for failing to distribute the results of its Planning Assessment to only one PC, TP, or functional entity (and to apply a High VSL for failing to distribute to more than one entity), particularly since an entity's contact is subject to change over time, and since Measure M8 allows for publicly posting the results of its Planning Assessment to its website.Should the SDT decide to include the VSLs for Requirement 8, would recommend revising to use a percentage approach rather than applying a violation to a Planning Coordinator who fails to provide the results of its Planning Assessment to one PC, TP, or other functional entity (or applying a High VSL for failing to distribute to more than one entity.) Recommend applying a similar percentage approach to the VSLs drafted by NERC Staff for Project #2007-23 VSLs (e.g., for FAC-013-1) to be considered for the TPL-001-2 R8 VSLs. For example, o Lower VSL: The responsible entity failed to provide the Planning Assessment final results to 5% or less of the required entities. o Moderate VSL: The responsible entity failed to provide the Planning Assessment final results to more than 5% up to (and including) 10% of the required entities. o High VSL: The responsible entity failed to provide the Planning Assessment final results to more than 10% up to (and including) 15% of the required entities. o Severe VSL: The responsible entity failed to provide the Planning Assessment final results to more than 15% of the required entities OR [the existing language for the Severe VSL].Explanation: The VSLs were modified for consistency with other standards and VSLs.Reference: Link to VSLs drafted by NERC Staff for Project #2007-23 VSLs (e.g., for FAC-013-1):http://www.nerc.com/docs/standards/sar/Staff_Proposed_VSLs_2010July27.pdf
Ameren	No	The sharing issues of requirement R8 are still not clear, therefore the R8 VSL is not clear. It is not clear if the intent of the SDT is for the PC to share the assessments with PCs and TPs are to share the assessments with TPs, or whether the intent is for the TP to share its assessments with its PC. Will posting the assessment to a secure web-site meet the intent of the requirement? Although the comment form is not designed to allow for such, we need to comment on R4.3.1: As written, it appears that this requires stability simulations of both successful and unsuccessful high-speed reclosing for all contingency simulations, regardless of whether high-speed reclosing is actually implemented. A suggested wording change for the first bullet: "Successful high-speed reclosing and unsuccessful high-speed reclosing onto a fault, where such reclosing is applied, and where such additional simulations are deemed appropriate by the PC or TP."

Organization	Yes or No	Question 11 Comment
		Another comment needs to be made regarding the stability extreme event table: Changes were made in planning event P5 to concentrate on specific relay failures. The same changes need to be made for stability extreme events 2a, 2b, 2c, and 2d.The proposed standard will significantly increase the amount of work required to develop more detailed and complex system models, to perform and document the engineering studies to meet the performance requirements, and to develop the assessments necessary for compliance. All of these increased engineering activities are perceived to provide marginal benefit to the reliability of the bulk electric system, but will require significant increases in manpower across the industry. Further, the manpower is presently not available to develop these more detailed models and to perform these studies with any reasonable assuredness. It will be a continuing challenge to the industry to obtain and keep the engineering talent needed to perform these compliance activities for such marginal benefits.
Central Maine Power Company New York State Electric & Gas Corp	No	Requirement 8 is an administrative burden to TPs and PCs that adds no value to reliability. PCs should be including TPs, neighboring PCs and interested parties in its planning processes when developing the Planning Assessments. Therefore, the inclusion of a set of VSLs for Requirement 8 is unnecessary.Furthermore, the requirement lacks a specified time frame to receive comments, thereby implying that TPs and PCs would be required to reply to comments forever following the finalization of a Planning Assessment. The NYISO proposes a limit of six months.Should the SDT decide to leave the VSLs for Requirement 8, Requirement 8.1 should be revised to reflect that comments only to the final Assessment (not drafts developed during a process) need a response as follows:If a recipient of the planning assessment final results provides documented comments on the results within 180 calendar days of the issuance of those final results, the respective Planning Coordinator or Transmission Planner shall provide a documented response to such recipient within 90 calendar days of receipt of those comments. We also have other comments not addressed by this Comment Form as follows - Section 2.7, Section 3.3, Section 4.3, and overall:Section 2.7 requires that Corrective Action Plans are included in each Planning Assessment and states “Such actions may include...” followed by a list of actions. Restricting allowable actions, and excluding runback/tripping of HVDC would have a direct impact on multiple existing facilities in New York and would adversely impact the reliability planning of the NYCA. Runback/tripping of HVDC must be added to the list. Section 3.3 - We feel that the last sentence of 3.3.1 should be removed. This is handled by PRC-023. Line ratings are addressed by PRC-023. PRC-023 requires coordination with the Reliability Coordinator. Remove “Tripping of Transmission elements where relay loadability limits are exceeded.” Section 4.3 - High speed reclosing is not defined.Overall - We have previously made comments which have not been addressed in the current version of the proposed standard. Support for the standard can at most be limited without addressing comments.

Organization	Yes or No	Question 11 Comment
		We have previously commented on sensitivity analysis and guidance for base case assumptions. Also, extreme event analysis should not be mandated in this standard as no corrective action is required. The requirements for sensitivity analysis already address issues going beyond what is expected to meet reliability requirements. Requiring extreme event analysis is requiring two layers of event analysis beyond what is required, and there is no requirement for corrective action if anything is identified. The standard is referring to requirements for sensitivity and other issues without a reference to base assumptions. The standard must describe base assumptions. To define a sensitivity condition, NERC must define base assumptions.
New York Independent System Operator	No	Requirement 8 is an administrative burden to TPs and PCs that adds no value to reliability. PCs should be including TPs, neighboring PCs and interested parties in its planning processes when developing the Planning Assessments. Therefore, the inclusion of a set of VSLs for Requirement 8 is unnecessary.Furthermore, the requirement lacks a specified time frame to receive comments, thereby implying that TPs and PCs would be required to reply to comments forever following the finalization of a Planning Assessment. The NYISO proposes a limit of six months.Should the SDT decide to leave the VSLs for Requirement 8, Requirement 8.1 should be revised to reflect that comments only to the final Assessment (not drafts developed during a process) need a response as follows:If a recipient of the planning assessment final results provides documented comments on the results within 180 calendar days of the issuance of those final results, the respective Planning Coordinator or Transmission Planner shall provide a documented response to such recipient within 90 calendar days of receipt of those comments.
NERC staff	Yes	NERC staff supports the changes to the VSL for Requirement R8.
SERC Planning Standards Subcommittee	Yes	Comments: We wish to make a comment on R4.3.1: it appears that this requires stability simulations of both successful and unsuccessful high-speed reclosing for all contingency simulations regardless of whether high-speed reclosing is used on the faulted line. We suggest the following wording be used to replace the first bullet: “Successful high-speed reclosing and unsuccessful high-speed reclosing onto a fault, where such reclosing is applied, and where such additional simulations are deemed appropriate by the PC or TP.” We wish to make a comment on the stability extreme event table: Changes were made in planning event P5 to narrow the focus to specific relay failures. The same changes are needed for stability extreme event 2a, 2b, 2c, and 2d.
Hydro One Networks Inc.	Yes	Requirement 8 is an administrative burden and adds little or no value to the BPS reliability. Therefore, the inclusion of a set of VSLs for Requirement 8 is unnecessary.
SERC Dynamics Review	Yes	We wish to make a comment on R4.3.1: it appears that this requires stability simulations of both successful

Organization	Yes or No	Question 11 Comment
Subcommittee		and unsuccessful high-speed reclosing for all contingency simulations regardless of whether high-speed reclosing is used on the faulted line. We suggest the following wording be used to replace the first bullet: “Successful high-speed reclosing and unsuccessful high-speed reclosing onto a fault, where such reclosing is applied."We wish to make a comment on the stability extreme event table: Changes were made in planning event P5 to narrow the focus to specific relay failures. The same changes are needed for stability extreme event 2a, 2b, 2c, and 2d.
MRO's NERC Standards Review Subcommittee	Yes	Other Comments:1. How are backup relays handled (TPL-002-0, R1.3.10 & TPL-001-2 R1 & P5)? What does FERC construe as normal system for a protection system. The TPL-001-2 R1 & P5, this standard doesn’t appear to address primary protection and how this handled. 2. Revise the Planning Assessment definition to more explicitly apply to the BES and the TPL-001 requirements. We suggest text of: “Planning Assessment: Documented evaluation of future Transmission System performance and Corrective Action Plans to remedy identified deficiencies in the BES from the steady state and stability performance requirements set forth in the TPL-001 standard.” 3. R2.1.5 - We propose replacing the term ‘major Transmission’ with “BES” because BES is a well defined term, while the term, ‘major Transmission’, is not. 4. Add R2.3.1 - We suggest the addition of a R2.3.1 requirement to emulate the distinction between the requirement to perform a short circuit assessment and conduct required studies or analysis to support the assessment (e.g. R2.1/R2.1.1 and R2.2/R2.2.1). We propose wording such as, “Perform an analysis for at least one year in the Near Term Transmission Planning Horizon.” This requirement would set an expectation that an analysis should be conducted to at least one or more years in the near-term planning horizon, rather than imply that an analysis of all five years in the near-term planning horizon must be conducted. 5. R2.7.4 - We suggest that the wording of R2.7.4 be the same as R.2.8.2. Otherwise, we propose that R2.7.4 and R2.8.2 be revised with wording like, “. . . implementation status of identified Corrective Action Plans for System Facilities and Operating Procedures.” to clarify that the identified system facilities and operating procedures refer only to those that were in the previous year’s Corrective Action Plans. 6. R3.3.1 - The term of ‘controls’ is ambiguous and not defined, unlike the term, ‘Protection Systems’, which is defined. Therefore, we suggest that this item be defined or more clearly described to avoid the risk of different and possibly contradictory interpretations by TPs, PCs, and auditors. 7. R3.3.1, bullet #1 - We suggest qualifying which generating units to consider and which voltage limits to simulate with revised wording like, “Trip generating units that are connected to the BES when actual or assumed minimum generator steady state or ride through voltage limits are known and simulations show voltages may fall below the voltage limit. If assumed voltage limits are used, then they should be included in the assessment”. The requirement should not apply to all relevant generating units until one of the MOD

Organization	Yes or No	Question 11 Comment
		standards requires all Generator Owners to provide their minimum generating unit voltage limits to the TP and PC. If the wording of R3.3.1 bullet #1 must be different from its counterpart, R4.3.1 bullet #2, then please explain the reasons for any differences. 8. R3.4.1 - Compliance with the requirement “to coordinate” is problematic and non-measureable We suggest replacing it with the requirement “to communicate”. 9. R3.5 - We interpret that R3.5 requires the TP and PC to conduct an evaluation of possible actions to reduce the likelihood or impact of extreme events, which produce the more severe impacts, if cascading outages may occur. Does the drafting team intend for the TP and PC to fulfill this requirement for at least one event in each of the five categories (i.e. 3 steady state and 2 stability) or in each of the 21 categories/sub-categories (i.e. 14 steady state and 7 stability). Also, if the resulting cascading outages do not result in any overloads, under-voltages, voltage collapse, or loss of generator synchronization, then should the evaluation of possible actions to reduce likelihood or impact be required? 10. R4.1.1 - We suggest that there should be some qualification of which generating units are referred to in this requirement. We propose that the requirement say, “No generating unit connected to the BES shall pull out of synchronism.” For example, some utilities include smaller generation units that are connected at voltages below 100 kV and even down to distribution voltage in their base cases. 11. R4.1.2 - We propose that the wording of this requirement be revised to reflect the same BES qualification of the generating unit that we noted in R4.1.1 above. 12. R4.3.1 - This requirement refers to high speed reclosing and we presume that this is special high speed reclosing that is completed in several cycles, rather than the normal high speed reclosing that is completed in a number of seconds. We recommend that the term high speed reclosing be more clearly defined for this sub-requirement. 13. R5 - This requirement should remove the criterion item, “post-Contingency voltage deviation”, because this criterion is not used widely enough in the industry to be well established criterion. 14. R8 - This requirement should be revised to limit the need to provide the Planning Assessment as follows “adjacent Planning Coordinators and adjacent Transmission Planners and to any registered functional entity...” This suggestion is added to the requirement to clarify that the word adjacent also applies to Transmission Planners and to clarify that the functional entity must be registered in order for the entity to be applicable to the requirement.
TVA Transmission Planning & Compliance	Yes	Additional TVA comments:TVA wishes to make a comment on R4.3.1: it appears that this requires stability simulations of both successful and unsuccessful high-speed reclosing for all contingency simulations. Does high speed reclosing occur in less than 60 cycles or 60 seconds? If a utility does not have reclosing on a

Organization	Yes or No	Question 11 Comment
		transmission line - then must the utility still perform stability studies assuming that there is reclosing? TVA suggests the following wording be used to replace the first bullet: "Successful high-speed reclosing and unsuccessful high-speed reclosing onto a fault, where such reclosing is applied, and where such additional simulations are deemed appropriate by the PC or TP." In R4.1.1, TVA is concerned that no generating unit shall pull out of synchronism in a local area only (thus not impacting the overall reliability of the BES) for Planning Event P1, while the standard does allow generator runback/tripping for the same event. Thus the generating unit may be tripped by a special protection scheme - but may not be tripped by an out of step relay. TVA believes that out of step relaying should be allowed for this unit tripping as long as this does not affect the overall reliability of the BES.
South Carolina and Gas	Yes	We wish to make a comment on the revisions to R4.3.1. We believe that the analysis of both successful and unsuccessful high speed reclosing for all cases is not justified and should be left to the discretion of the Transmission Planner.
ISO New England Inc.	Yes	Requirement 8 and 8.1, should be revised to reflect that comments only to the final Assessment (not drafts developed during a process) need a response and there should be a limit on the comment period as follows:If a recipient of the planning assessment final results provides documented comments on the results within 90 days of receipt, the respective Planning Coordinator or Transmission Planner shall provide a documented response to such recipient within 90 calendar days of receipt of those comments. We have other comments not addressed by this Comment Form as follows - Sections 2.7, 3.3, 4.3 and overall. R2.7 requires that Corrective Action Plans are included in each Planning Assessment and states "Such actions may include..." followed by a list of actions. Runback/tripping of HVDC should be added to the list. Section 3.3 - We feel that the last sentence of 3.3.1 should be removed. This is handled by PRC-023. Line ratings are addressed by PRC-023. PRC-023 requires coordination with the Reliability Coordinator. Remove "Tripping of Transmission elements where relay loadability limits are exceeded." Section 4.3 - High speed reclosing needs to be defined.
Hydro-Quebec TransEnergie	Yes	o All references to 300 kV in document should be replaced with EHV (In the introduction, section 5) o The first phrase of Note 3 on p 14 should be revised as follows: "Bulk Electric System (BES) level references include extra-high voltage (EHV) Facilities defined as those representing the backbone of the System, generally at voltage greater than 300 kV, and high voltage (HV) Facilities defined as those not representing the backbone of the System, as determined by the Planning Coordinator and approved by Regional Entity."

Organization	Yes or No	Question 11 Comment
National Grid	Yes	Other Comments:Section 3.3 - We feel that the last sentence of 3.3.1 should be removed. This is handled by PRC-023. Line ratings are addressed by PRC-023. PRC-023 requires coordination with the Reliability Coordinator. Remove "Tripping of Transmission elements where relay loadability limits are exceeded." Section 4.3 - High speed reclosing is not defined. We have previously commented on sensitivity analysis and guidance for base case assumptions. Also, extreme event analysis should not be mandated in this standard as no corrective action is required.
Tri-State Generation & Transmission	Yes	None regarding R8. The following comments refer to parts of the proposed standard for which no questions are asked.R4, Part 4.1.2: The response to our previous comment indicated that our description was for a system Stability issue. R4 is addressing system Stability and we believe the comment still applies and that it was not answered in the response. We have two issues with 4.1.2: Sometimes out-of-step (loss of generator synchronism) is better mitigated through islanding by tripping transmission rather than by tripping generators; the second point is that the ability of present modeling programs does not include the capability to model all types of impedance relays and their associated OOS blocking and tripping capabilities that are available. R4, Part 4.3.1: The third bullet implies that all impedance relays (and perhaps others) will need to be modeled in the stability databases. We question whether the existing simulation programs can accommodate this large magnitude of data inclusion and whether there is any benefit to BES reliability. Certainly using generic models rather than actual models would be of no benefit. We recommend changing the third bullet to "Evaluation of Protection System behavior when transient power swings are detected or predicted to have impedance characteristics that may approach relay operating characteristics."
Northeast Utilities	Yes	No comments on Question 7.Other Comments: As detailed below, NU has other comments that are not addressed by this Comment Form as follows - Section 3.3, Section 4.3, Non-Consequential Load Loss as referenced in the events Table 1 and studies using extreme event contingencies. Section 3.3 - NU believes that the last sentence of Part 3.3.1 should be removed since this is handled by PRC-023. Line ratings are addressed by PRC-023 which requires coordination with the Reliability Coordinator. NU suggests the removal of the following sentence: "Tripping of Transmission elements where relay loadability limits are exceeded." Section 4.3 - High speed reclosing is not defined and to help eliminate any confusion that it may introduce into the standard it will be worthwhile for the SDT to define this term. Non-Consequential Load Loss - Depending upon the resolution of "Project 2010-11, TPL Table 1, Footnote b" NU may have additional comments regarding this issue. Studies Using Extreme Event Contingencies: The requirements for sensitivity analysis already address issues

Organization	Yes or No	Question 11 Comment
		going beyond what is expected to meet the reliability requirements of the standard. Therefore, requiring extreme event analysis is requiring two layers of event analysis beyond what is required and there is no requirement for corrective action if a concern is identified.
NBSO	Yes	NBSO suggests considering rewording the VSL so that they address the failure to distribute the final results of planning assessments.
ERCOT ISO	Yes	ADDITIONAL COMMENTS: Short circuit analysis (R2.3 and R2.8) should only be applicable to TPs. Fault duty issues are typically local in nature and it would be an overlap for PCs to perform this same analysis done by the local Transmission Planner. Furthermore, R7 should be deleted and the responsibilities of each entity should be explicitly stated within the specific requirements. Previous Comment Unaddressed : Requirement 2.6.2: Reads as if a change is being made to an existing study. It is confusing. Possibly restate: "2.6.2 For steady state, short circuit, or stability analysis: previous studies can be used only if a material change to the system has not occurred or if a change that did occur does not impact the study area." R4.1.2 - Planning Coordinators do not perform protection coordination nor do they have access to the relay settings information required to do this analysis. This requirement should apply to Transmission Planners only because they perform system protection.The substantive scope of the standard is relative to Long-Term Transmission Planning Horizon and Near-Term Transmission Planning Horizon. The Purpose section is described in terms of the “planning horizon” generally. It may be worthwhile aligning the two to mitigate the potential for any confusion. ERCOT proposes the following revisions to the Purpose section: 3.Purpose: Establish Transmission system planning performance requirements within the relevant planning horizon (i.e. Long-Term or Near-Term) to develop a Bulk Electric System (BES) that will operate reliably over a broad spectrum of System conditions and following a wide range of probable Contingencies .In addition, the “Time Horizon” for the Standard is “Long-Term Planning”. Obviously, this necessarily encompasses both Long-Term and Near-Term Transmission Planning Horizons. However, the scope of the Long-Term Planning time horizon is not readily apparent. ERCOT recommends appropriate revisions that clearly define the applicable time horizons.
MidAmerican Energy	Yes	

Organization	Yes or No	Question 11 Comment
Southern California Edison Company	Yes	
Pepco Holings, Inc - Affiliates	Yes	
Exelon Transmission Planning	Yes	
Western Area Power Administration	Yes	
Duke Energy	Yes	
NorthWestern Energy (NWMT)	Yes	
FirstEnergy	Yes	
Platte River Power Authority	Yes	
Manitoba Hydro	Yes	
Minnesota Power	Yes	
Independent Electricity System Operator	Yes	
Seattle City Light	Yes	
Los Angeles Department of Water and Power	Yes	
Idaho Power Co	Yes	
American Transmission Company	Yes	

Organization	Yes or No	Question 11 Comment
American Electric Power (AEP)	Yes	
GTC	Yes	
Oncor Electric Delivery	Yes	
Progress Energy	Yes	
Xcel Energy	Yes	
Tucson Electric Power Company	Yes	

NERC
NORTH AMERICAN ELECTRIC RELIABILITY CORPORATION

Consideration of Comments on Assess Transmission Future Needs and Develop Transmission Plans — Project 2006-02

The Assess Transmission Future Needs and Develop Transmission Plans Drafting Team thanks all commenters who submitted comments on the 6th draft of the TPL-001-2 standard for Assess Transmission Future Needs (Project 2006-02). These standards and associated documents were posted for a 45-day public comment period from April 18, 2011 through May 31, 2011. Stakeholders were asked to provide feedback on the standards and associated documents through a special electronic comment form. There were 43 sets of comments, including comments from approximately 78 different people and approximately 69 companies representing 8 of the 10 Industry Segments as shown in the table on the following pages.

No changes were made to the text of any Requirement. The SDT made several changes in response to comments submitted during the formal comment period and successive ballot that ended May 31, 2011.

- The 5th and 6th bullets of the Data Retention section to make the language in the data retention statements consistent with the language in the requirements.
- The third part of the Severe VSL for Requirement R1 to make the language consistent with the requirement.
- The VSL for Requirement R8 to make the language consistent with the language in the requirement.
- The Effective Date section of the Implementation Plan to make the language consistent with the language in the Effective Date section in the proposed TPL-001-2.
- The bullets in Requirement R3, Part 3.3.1 were replaced with numbers because the bullets were inconsistent with NERC's protocol on the use of bullets in Requirements.
- The bullets in Requirement R4, Part 4.3.1 were replaced with numbers because the bullets were inconsistent with NERC's protocol on the use of bullets in Requirements.

The SDT is requesting that this project be moved to the recirculation ballot stage.

All comments submitted may be reviewed in their original format on the standard's project page:

http://www.nerc.com/filez/standards/Assess-Transmission-Future-Needs.html

If you feel that your comment has been overlooked, please let us know immediately. Our goal is to give every comment serious consideration in this process! If you feel there has been an error or omission, you can contact the Vice President and Director of Standards, Herb Schrayshuen, at 609-452-8060 or at herb.schrayshuen@nerc.net. In addition, there is a NERC Reliability Standards Appeals Process.[1]

[1] The appeals process is in the Reliability Standards Development Procedures: http://www.nerc.com/standards/newstandardsprocess.html.

Index to Questions, Comments, and Responses

1. The SDT has made revisions to the requirements language of TPL-001-2 based on industry comments and the Quality Review. Do you agree with these changes? If you do not support these changes or you agree in general but feel that alternative language would be more appropriate, please provide specific suggestions in your comments with clear indications as to which requirement you are commenting on. …..... 10
2. The SDT has made revisions to the VRF and VSL of TPL-001-2 which will be part of a non-binding poll with this posting based on industry comments and the Quality Review. Do you agree with these changes? If you do not support these changes or you agree in general but feel that alternative language would be more appropriate, please provide specific suggestions in your comments. …..... 39
3. If you have any other comments on this Standard that you have not already provided in response to the prior questions, please provide them here. …..... 54

The Industry Segments are:

1 — Transmission Owners
2 — RTOs, ISOs
3 — Load-serving Entities
4 — Transmission-dependent Utilities
5 — Electric Generators
6 — Electricity Brokers, Aggregators, and Marketers
7 — Large Electricity End Users
8 — Small Electricity End Users
9 — Federal, State, Provincial Regulatory or other Government Entities
10 — Regional Reliability Organizations, Regional Entities

Group/Individual		Commenter	Organization	Registered Ballot Body Segment									
				1	2	3	4	5	6	7	8	9	10
1.	Group	Charles W. Long	SERC Planning Standards Subcommittee	X									X

	Additional Member	Additional Organization	Region	Segment Selection
1.	Pat Huntley	SERC Reliability Corporation	SERC	10
2.	Bob Jones	Southern Company Services	SERC	1
3.	Darrin Church	Tennessee Valley Authority	SERC	1
4.	Phil Kleckley	South Carolina Electric & Gas Co.	SERC	1
5.	John Sullivan	Ameren Services Co.	SERC	1
6.	Charles Long	Entergy Services, Inc.	SERC	1

2.	Group	Guy Zito	Northeast Power Coordinating Council										X

	Additional Member	Additional Organization	Region	Segment Selection
1.	Alan Adamson	New York State Reliability Council, LLC	NPCC	10
2.	Gregory Campoli	New York Independent System Operator	NPCC	2
3.	Kurtis Chong	Independent Electricity System Operator	NPCC	2
4.	Sylvain Clermont	Hydro-Quebec TransEnergie	NPCC	1

Group/Individual		Commenter	Organization		Registered Ballot Body Segment									
					1	2	3	4	5	6	7	8	9	10
5.	Chris de Graffenried	Consolidated Edison Co. of New York, Inc.	NPCC	1										
6.	Gerry Dunbar	Northeast Power Coordinating Council	NPCC	10										
7.	Brian Evans-Mongeon	Utility Services	NPCC	8										
8.	Mike Garton	Dominion Resources Services, Inc.	NPCC	5										
9.	Brian L. Gooder	Ontario Power Generation Incorporated	NPCC	5										
10.	Kathleen Goodman	ISO - New England	NPCC	2										
11.	Chantel Haswell	FPL Group, Inc.	NPCC	5										
12.	David Kiguel	Hydro One Networks Inc.	NPCC	1										
13.	Michael R. Lombardi	Northeast Utilities	NPCC	1										
14.	Randy MacDonald	Nerw Brunswick Power Transmission	NPCC	1										
15.	Bruce Metruck	New York Power Authority	NPCC	6										
16.	Lee Pedowicz	Northeast Power Coordinating Council	NPCC	10										
17.	Robert Pellegrini	The United Illuminating Company	NPCC	1										
18.	Si Truc Phan	Hydro-Quebec TransEnergie	NPCC	1										
19.	Saurabh Saksena	National Grid	NPCC	1										
20.	Michael Schiavone	National Grid	NPCC	1										
21.	Wayne Sipperly	New York Power Authority	NPCC	5										
22.	Donald Weaver	New Brunswick System Operator	NPCC	1										
23.	Ben Wu	Orange and Rockland Utilities	NPCC	1										
24.	Peter Yost	Consolidated Edison Co. of New York, Inc.	NPCC	3										
3.	Group	Jonathan Hayes	SPP Reliability Standards Development Team		X	X	X	X	X					

	Additional Member	Additional Organization	Region	Segment Selection
1.	Charles Yeung	SPP	SPP	2
2.	John Allen	City Utilities of Springfield	SPP	1, 4
3.	John Fulton	Xcel Energy	SPP	1, 3, 5
4.	Mark Hamilton	Oklahoma Gas & Electric	SPP	1, 3, 5
5.	Michelle Corley	CLECO	SPP	1, 3, 5

Group/Individual	Commenter	Organization	Registered Ballot Body Segment									
			1	2	3	4	5	6	7	8	9	10
6. Nathan McNeil	Midwest Energy	SPP 1, 3										
7. Tony Gott	Associated Electric Coop, Inc	SERC 1, 3, 5										
8. Matt Bordelon	CLECO	SPP 1, 3, 5										
9. Valerie Pinamonti	American Electric Power	SPP 1, 3, 5										
4. Group	Denise Koehn	Bonneville Power Administration	X		X		X	X				
Additional Member	**Additional Organization**	**Region**	**Segment Selection**									
1. Berhanu Tesema	BPA, Transmission Planning	WECC	1									
2. Chuck Matthews	BPA, Transmission Planning	WECC	1									
3. Kyle Kohne	BPA, Transmission Planning	WECC	1									
4. Patrick Rochelle	BPA, Transmission Planning	WECC	1									
5. Kendall Rydell	BPA, Transmission Planning	WECC	1									
5. Group	Carol Gerou	MRO's NERC Standards Review Forum										X
Additional Member	**Additional Organization**	**Region**	**Segment Selection**									
1. Mahmood Safi	Omaha Public Utility District	MRO	1, 3, 5, 6									
2. Chuck Lawrence	American Transmission Company	MRO	1									
3. Tom Webb	Wisconsin Public Service Corporation	MRO	3, 4, 5, 6									
4. Jodi Jenson	Western Area Power Administration	MRO	1, 6									
5. Ken Goldsmith	Alliant Energy	MRO	4									
6. Alice Ireland	Xcel Energy	MRO	1, 3, 5, 6									
7. Dave Rudolph	Basin Electric Power Cooperative	MRO	1, 3, 5, 6									
8. Eric Ruskamp	Lincoln Electric System	MRO	1, 3, 5, 6									
9. Joe DePoorter	Madison Gas & Electric	MRO	3, 4, 5, 6									
10. Scott Nickels	Rochester Public Utilties	MRO	4									
11. Terry Harbour	MidAmerican Energy Company	MRO	1, 3, 5, 6									
12. Marie Knox	Midwest ISO Inc.	MRO	2									
13. Lee Kittelson	Otter Tail Power Company	MRO										
14. Scott Bos	Muscatine Power & Water	MRO										

Group/Individual		Commenter	Organization		Registered Ballot Body Segment									
					1	2	3	4	5	6	7	8	9	10
15.	Tony Eddleman	Nebraska Public Power District	MRO	1, 3, 5										
16.	Mike Brytowski	Great River Energy	MRO	1, 3, 5, 6										
17.	Richard Burt	Minnkota Power Cooperative, Inc.	MRO	1, 3, 5, 6										
6.	Group	Patricia Robertson	BC Hydro		X									
	Additional Member	Additional Organization	Region	Segment Selection										
1.	Venkataramakrishnan Vinnakota	BC Hydro	WECC	2										
2.	Pat Harrington	BC Hydro	WECC	3										
3.	Clement Ma	BC Hydro	WECC	5										
4.	Daniel O'Hearn	BC Hydro	WECC	6										
7.	Group	Ed Davis	Entergy Services		X		X		X	X				
	Additional Member	Additional Organization	Region	Segment Selection										
1.	Stan Jaskot	Entergy Services	SERC	5										
2.	Terry Benoit	Entergy Services	SERC	6										
3.	Joel Plessinger	Entergy Services	SERC	3										
4.	Ed Davis	Entergy Services	SERC	1										
8.	Group	Brandy A. Dunn	Western Area Power Administration		X					X				
	Additional Member	Additional Organization	Region	Segment Selection										
1.	Pete Kinney	Western Area Power Administration	MRO	6										
9.	Group	Sammy Alcaraz	Imperial Irrigation District		X		X	X		X				
	Additional Member	Additional Organization	Region	Segment Selection										
1.	David Barajas		WECC											
2.	Marcela Caballero		WECC											
3.	Tino Zaragoza		WECC	1										
4.	Jesus Alcaraz		WECC	3										
5.	Diana Torres		WECC	4										

Group/Individual		Commenter	Organization	Registered Ballot Body Segment									
				1	2	3	4	5	6	7	8	9	10
6. Cathy Bretz			WECC 6										
10.	Group	Bill Middaugh	Tri-State Generation and Transmission Assn., Inc.	X		X		X					
	Additional Member	Additional Organization	Region Segment Selection										
1.	Mark Graham	Tri-State G&T	WECC 1										
2.	Chris Pink	Tri-State G&T	WECC 1										
11.	Individual	David Kiguel	Hydro One Networks Inc.	X		X							
12.	Individual	Jim Eckelkamp	Progress Energy	X		X		X	X				
13.	Individual	Janet Smith	Arizona Public Service Company	X		X		X	X				
14.	Individual	John Bussman	Associated Electric Cooperative Inc	X		X		X	X				
15.	Individual	Thad Ness	American Electric Power	X		X		X	X				
16.	Individual	Greg Rowland	Duke Energy	X		X		X	X				
17.	Individual	Bernie Pasternack	Transmission Strategies, LLC								X		
18.	Individual	Joe O'Brien	NIPSCO	X		X		X	X				
19.	Individual	Scott Bos	Muscatine Power and Water	X		X		X	X				
20.	Individual	Sunitha Kothapalli	Puget Sound Energy, Inc.	X		X		X					
21.	Individual	Anthony Jablonski	ReliabilityFirst										X

Group/Individual		Commenter	Organization	Registered Ballot Body Segment									
				1	2	3	4	5	6	7	8	9	10
22.	Individual	Michael Moltane	ITC	X									
23.	Individual	RoLynda Shumpert	South Carolina Electric and Gas	X		X		X	X				
24.	Individual	Joe Petaski	Manitoba Hydro	X		X		X	X				
25.	Individual	Tony Eddleman	Nebraska Public Power District	X		X		X					
26.	Individual	Robert Casey	Georgia Transmission Corporation	X									
27.	Individual	Jonathan Appelbaum	United Illuminating	X									
28.	Individual	Andrew Z.Pusztai	American Transmission Company, LLC	X									
29.	Individual	Michael Jones	National Grid	X		X							
30.	Individual	Tim E. Ponseti, VP	TVA TP&C	X									
31.	Individual	Michael Falvo	Independent Electricity System Operator		X								
32.	Individual	Alex Rost	NBSO		X								
33.	Individual	Alice Ireland	Xcel Energy	X		X		X	X				
34.	Individual	Christine Hasha	Electric Reliability Council of Texas, Inc.		X								
35.	Individual	Chris de Graffenried	Consolidated Edison Co. of NY, Inc.	X		X		X	X				
36.	Individual	Kathleen Goodman	ISO New England Inc.		X								

Group/Individual		Commenter	Organization	Registered Ballot Body Segment									
				1	2	3	4	5	6	7	8	9	10
37.	Individual	Claudiu Cadar	GDS Associates, Inc.	X									
38.	Individual	David Thorne	Pepco Holdings Inc	X		X							
39.	Individual	Michael Lombardi	Northeast Utilities	X		X		X					
40.	Individual	Marie Knox	MISO		X								
41.	Individual	Gregory Campoli	New York Independent System Operator		X								
42.	Individual	Kirit Shah	Ameren	X		X		X	X				
43.	Individual	Darryl Curtis	Oncor Electric Delivery Company LLC	X									

1. **The SDT has made revisions to the requirements language of TPL-001-2 based on industry comments and the Quality Review. Do you agree with these changes? If you do not support these changes or you agree in general but feel that alternative language would be more appropriate, please provide specific suggestions in your comments with clear indications as to which requirement you are commenting on.**

Summary Consideration: Several commenters stated that Requirement R1, Part 1.1.5 should not include interchange because interchange introduces economic considerations into a Reliability Standard. The SDT explained that the requirement is to include known commitments for interchange and therefore the requirement is not for economic purposes, but rather planning to meet obligations.

A number of commenters stated that they believed that there was an inconsistency between Requirement R2, Parts 2.1 and 2.2, since qualified studies were not allowed for the Long-Term Transmission Planning Horizon case. The SDT believes that the requirement to conduct the annual study on one of the study years in the Long-Term Transmission Planning Horizon ensures that the planner conducts a new study annually to evaluate the System improvement needs in the Long-Term Transmission Planning Horizon, even if they utilize qualified past studies for the Near-Term Transmission Planning Horizon cases.

Several commenters stated that they believed that Requirement R2, Part 2.1.5 was ambiguous since it was not clear that the planner did not have to include multiple outages of long lead time components simultaneously. The SDT explained that Requirement R2, Part 2.1.5 does not require simultaneous outages of multiple long lead time components.

Some commenters expressed concerns with Requirement R2, Part 2.4.1 since they were concerned with the ability for planners to adequately model the dynamic behavior of Load. The SDT explained that since it is important to correctly model the characteristics of the Load, it believes that the requirement to represent the dynamic behavior of the Load is needed to ensure BES reliability.

A number of commenters expressed concern that Requirement R7 was administrative and was not required. The SDT explained that it believes that the requirement is necessary to ensure that there are no gaps created between the Transmission Planners and the Planning Coordinators when they determine their individual responsibilities.

Several commenters stated that they had concerns with Requirement R8. These concerns are that the requirements create excessive work and should include time limits on requesting the Planning Assessment, are ambiguous, and should include the ability to post the Planning Assessment. The SDT explained that the requirements are only to distribute the Planning Assessment, which should not require a large amount of work, and the requirements are clear that the planners must distribute to adjacent Transmission Planners and Planning Coordinators and others with a reliability need. The SDT further explained that posting the Planning Assessment could meet the requirement to distribute.

Several commenters stated that they believed that Table 1, P2-1 was inconsistent with Footnote 7. The SDT explained that Footnote 7 was included to clarify that "Opening a line section without a fault" could include, but does not always, creating a radial line section with Load and that the planner must evaluate this situation as a part of P2-1.

A number of commenters expressed concern that Footnote 12 was not appropriate or that this standard should be delayed until FERC approved TPL-002-1 Footnote 'b'. The SDT explained that Footnote 12 was consistent with language in the recent NERC Board of Trustees approved TPL-002-1 Footnote 'b" and that this standard should not be delayed until FERC rules on the other standard.

No changes were made to requirements due to industry comments to question 1. However changes were made to the wording of the Implementation Plan to make it consistent with the language in the Effective Date section of the standard. Also, the language in the data retention section was changed for bullets five and six to make it consistent with the language in the requirements – no changes were made to the timeframe for data retention.

DR, 5th bullet: The documentation specifying the criteria for acceptable System steady state voltage limits, post-Contingency voltage deviations, and transient voltage response since the last compliance audit in accordance with Requirement R5 and Measure M5.

DR, 6th bullet: The documentation specifying the criteria or methodology utilized in the analysis to identify System instability for conditions such as Cascading, voltage instability, or uncontrolled islanding in support of its Planning Assessments since the last compliance audit in accordance with Requirement R6 and Measure M6.

Organization	Yes / No	Question 1 Comment
Lower Colorado River Authority	Ballot Comment	1. R2 (2.5): The requirement for stability assessment in years 6-10 should be limited for new generation interconnections or for planned major transmission system improvements that have regional impact. The standard should clarify the 'material changes' that would necessitate stability planning assessments and documentation. 2. R8 requirement to distribute all Planning Assessment results to adjacent PCs and TPs are excessive and cumbersome. Regarding R8, LCRA TSC suggests the following language: Each Planning Coordinator and Transmission Planner shall distribute its Planning Assessment results to adjacent Planning Coordinators and adjacent Transmission Planners in accordance with the overseeing Reliability Coordinator requirements. Any functional entity that has a reliability related need and submits a written request for the Planning Assessment results, the Transmission Planner and Planning Coordinator shall provide the latest Planning Assessment results within 30 days of such request.

Organization	Yes / No	Question 1 Comment
Response: For Requirement R2, Part 2.5, the SDT believes it is important to evaluate Stability when the planners are evaluating new generation additions or changes which can be more than 5 years in the future, as required in NERC Standard FAC-001-0. The SDT discussed defining 'material change' but did not believe that such a definition was appropriate in a continent-wide standard. With the wide variety in sizes and types of systems, the number of parameters that need to be considered, etc., there are too many variables involved. No change made. For Requirement R8, the SDT disagrees that the requirement is excessive and cumbersome and did not make the suggested change. In addition, the proposed language would place requirements on the Reliability Coordinators, who are not included in the Applicability for this standard, and they should not be involved in determining the extent of the distribution of the Planning Assessments.		
Florida Municipal Power Agency	Ballot Comment	FMPA has minor comments to help improve the clarity of the standard. R7 is not needed and administrative in nature. Instead is should say that an entity can use as evidence another entity's study, but not in the requirement and rather in the measures. R8 is ambiguous, does the requirement require submitting the Planning Assessment only after receiving a written request, or automatic distribution to neighboring PCs and TPs without a written request, and to others with a reliability related need following a written request? Table 1, under first heading of "Steady State and Stability", bullet c should be removed since it is duplicative of the standard, and not entirely consistent with the standard (e.g., open to interpretation whereas the standard better clarifies how to study protection system operation)
Response: Requirement R7 ensures that there are no gaps between Transmission Planners or the Planning Coordinators that may cause reliability concerns. No change made. Requirement R8 requires the automatic distribution to neighboring Planning Coordinators and Transmission Planners without a written request and to others with a reliability related need following a written request. The SDT believes this is an important considerations and not ambiguous. No change made. Table 1, bullet c under first heading, is not in conflict with the requirements. The SDT decided to include additional details in Table 1 so that it would have the basic information necessary for the planner to develop the simulations for their studies without always referring back to the requirements language. No change made.		
Madison Gas and Electric Co.	Ballot Comment	Please revise the words "System" to "system" or preface with BES System. NERC defines System to include distribution components. Plus this Standard is only applicable to PCs and TPs.

Organization	Yes / No	Question 1 Comment
MidAmerican Energy Co.	Ballot Comment	Resolve the conflict between R2 and other requirements in the TPL standards by replacing the term, "System" with "BES" in various places throughout the standard when the reference should not be to the collective generation, transmission, and distribution systems, which is the definition of the NERC Glossary term, "System". These locations are: R2.1.4, R2.1.5, R2.4.3, R2.6.2, R2.7, R2.7.1, R2.7.4, R2.8.1, R2.8.2, R3.5, R4.5, R5, and R6.
Response: Even though the capitalized term "System" includes distribution components, the SDT believes that its usage within this standard is correct because the Reliability Standards apply only to the BES. Therefore, adding additional qualifiers is not needed. No change made.		
City of Austin dba Austin Energy Lower Colorado River Authority	Ballot Comment	Previous TPL Standard balloting included the FERC Order that clarified footnote 'b', regarding the planned or controlled interruption of electric supply for an N-1 situation. In our view, a Registered Entity's Board of Directors, local public utility commission, and/or its customers should determine what level of service is acceptable and with what associated cost. This view is captured in footnote #12 of Table 1 in the TPL Standard and will be crucial to maintaining an Affirmative vote. Regarding R2 (2.5): The value of annually assessing system stability for years 6-10 is questionable. The requirement for stability assessment in years 6-10 should be limited to new generation interconnections or planned major transmission system improvements with regional impact. The standard should clarify the 'material changes' that would necessitate stability planning assessments and documentation. Regarding the R8 requirement to distribute all Planning Assessment results to adjacent Planning Coordinators and Transmission Planners is excessive and cumbersome. Regarding R8, we suggest the following language: Each Planning Coordinator and Transmission Planner shall distribute its Planning Assessment results to adjacent Planning Coordinators and Transmission Planners in accordance with the requirements of the applicable Reliability Coordinator. Any Registered Entity with a reliability-related need may submit a written request for the Planning Assessment results and the Transmission Planner or Planning Coordinator shall provide the latest Planning Assessment results within 30 days of such request.
Response: The SDT incorporated the language in Footnote 12 that was approved in Project 2010-11 TPL Table 1 Footnote B. For Requirement R2, Part 2.5, the SDT believes it is important to evaluate Stability when the planners are evaluating new generation additions or changes which can be more than 5 years in the future, as required in NERC Standard FAC-001-0. The SDT discussed defining 'material change' but did not believe that such a definition was appropriate in a continent-wide standard. With the wide variety in sizes and types of systems, the number of parameters that need to be considered, etc., there are too many variables involved. No change made.		

Organization	Yes / No	Question 1 Comment
For Requirement R8, the SDT disagrees that the requirement is excessive and cumbersome and did not make the suggested change. In addition, the proposed language would place requirements on the Reliability Coordinators, who are not included in the Applicability for this standard, and they should not be involved in determining the extent of the distribution of the Planning Assessments.		
City of Green Cove Springs City of Vero Beach Fort Pierce Utilities Authority Keys Energy Services	Ballot Comment	R7is not needed and administrative in nature. Instead is should say that an entity can use as evidence another entity's study, but not in the requirement and rather in the measures. R8 is ambiguous, does the requirement require submitting the Planning Assessment only after receiving a written request, or automatic distribution to neighboring PCs and TPs without a written request, and to others with a reliability related need following a written request? Table 1, under first heading of "Steady State and Stability", bullet c should be removed since it is duplicative of the standard, and not entirely consistent with the standard (e.g., open to interpretation whereas the standard better clarifies how to study protection system operation)
Response: Requirement R7 ensures that there are no gaps between Transmission Planners or the Planning Coordinators that may cause reliability concerns. No change made. Requirement R8 requires the automatic distribution to neighboring Planning Coordinators and Transmission Planners without a written request and to others with a reliability related need following a written request. The SDT believes this is an important considerations and not ambiguous. No change made.		
Alberta Electric System Operator	Ballot Comment	With respect to R2, Part 2.7.1 which lists system deficiencies and the associated actions needed to achieve System performance, the 3rd and 4th bullet identify the following actions as being acceptable. :Installation or modification of automatic generation tripping as a response to a single or multiple contingency to mitigate Stability performance violations. :Installation or modification of manual and automatic generation runback/tripping as a response to a single or multiple Contingency to mitigate steady state performance violations. The current Alberta transmission policy does not allow for the tripping or runback of generation for a single contingency; however for multiple contingencies it is acceptable. The AESO will bring TPL-001-2, with any modifications, through the standard development consultation process in Alberta and ultimately to the Alberta Utilities Commission for approval.
Response: The list in Requirement R2, Part 2.7.1 are examples of actions that are acceptable under the NERC Reliability Standard, however, certain actions may not be acceptable under state, provincial, or other regulatory policies or requirements and are not intended to supersede other regulations or policies.		

Organization	Yes / No	Question 1 Comment
ReliabilityFirst	Yes	1. In requirement 4.3, the high speed recloser time of 1 second is too restrictive. We suggest that the time be expanded to 2 seconds to capture all reclosing operations that might impact stability studies.We interpret the use of bullet points in Requirement 4.3.1 to mean that any one of the statements can be included in the analyses. In this requirement, the use of bullet points should be removed and replaced with language that requires all of the statements to be included in the analyses. We strongly believe that the language needs amended in requirement 4.3.1, such that, we will reconsider our voting position. 2. In Table 1 labeled Steady State and Stability Performance Extreme Events we contend that the change to "relay failure" is unnecessarily limiting. The previous use of Protection system was satisfactory. Protection System is a defined term and encompasses many components that may fail and not just the relay. 3. In table 1 Steady State & Stability Performance Planning Events under P5 "non-redundant" needs to be better defined. We suggest saying in a footnote that two devices do not need to be identical in order to be redundant. Redundant relays or relay schemes need to have the same performance level to be considered redundant but do not need to be identical equipment.
Response: The SDT believes that high speed reclosing is less than one second and has not received other comments that the time should be extended. The SDT believes that the language is clear that any of the three items shall be included in the analyses, if applicable. No change made. Table 1, Extreme Events, Stability Item 2 – The SDT made the language consistent with the language in the Planning Events to ensure that the planner was evaluating Stability based on performance of the System after the failure of a relay to operate and the planner should not address the many component failures that could create different failure modes. No change made. The SDT believes that non-redundant is understood by the industry. No change made.		
Bonneville Power Administration	Yes	1. If current study is performed to assess the system, there is no need to supplement with past studies. o Suggested language for R2.2:- For the planning Assessment, the Long-Term Transmission Planning Horizon portion of the steady state analysis shall be assessed and be supported by the following annual current study or qualified past studies as indicated in Requirement R2, Part 2.6 2. Load models should be consistent across the region o Suggested language for R2.4.1:- System peak load for one of the five years. System peak load levels shall include a the latest load model developed by the regional planning coordinator which represents the expected dynamic behavior of loads that could impact the study area, considering the behavior of induction motor loads. 3. R2.5 is redundant and should be deleted. It is already included in R1.1.3 and R2.6.2.4. R3.5: This

Organization	Yes / No	Question 1 Comment
		standard requires mitigating the consequences of extreme events. Requiring potentially very costly mitigation actions for very low probability event is unnecessary burden to utilities. o Suggested language for R3.5. Those extreme events in Table 1 that are expected to produce more severe System impacts shall be identified and a list created of those events to be evaluated in Requirement R3, Part 3.2. The rationale for those Contingencies selected for evaluation shall be available as supporting information. Evaluation of the risk, consequences and adverse impacts of the event(s) shall be conducted.
Response: For Requirement R2, Part 2 - If the planner chooses to annually complete current studies to assess the system, the planner is not required to use past studies, but rather is allowed to use information from past studies in lieu of completing additional current studies. No change made. For Requirement R2, Part 2.4.1 – Not all Transmission Planners and Planning Coordinators are under a regional Planning Coordinator. However, for areas with a regional Planning Coordinator, that regional Planning Coordinator may have a requirement for all Transmission Planners and Planning Coordinators in its area utilize the regional Load model. No change made. Requirement R2, Part 2.5 is not redundant since the referenced requirements do not require the planner to assess the impact in the Long-Term Transmission Planning Horizon. The requirement is that the planners assess the impact of proposed material changes and have corrective action plans to resolve concerns from those proposed changes. The planner is not required to implement the corrective action plans unless the proposed material changes occur and the issues remain unresolved. No change made. Requirement R3, Part 3.5 – The SDT does not believe that the suggested language adds clarity and is also concerned that evaluation of possible actions to reduce the likelihood or mitigate the consequences and adverse impacts of the event are not required by the proposed language. No change made.		
Ameren Services	Ballot Comment	(1) Requirement R2.4.1, which addresses dynamic load modeling, has been a cause for concern because of the lack of guidance regarding reasonable induction motor representation as opposed to generic load models. While it is recognized that the effort to simulate the effects of induction motor loads is important, it is premature to include such modeling as part of the requirements for this standard. (2) For Measurements M3 and M4, there is still some question as to what is to be provided as sufficient evidence of a study. It is not clear whether the study results would be sufficient, or whether the entire powerflow, stability, or short circuit effort needs to be documented in a formal study report. For example, it is not clear whether contingency lists used in performing the study work would need to be retained as part of the documentation. (3) The standard as written is too prescriptive with regard to critical system conditions which are to be modeled. Such conditions would vary considerably for different systems across the continent. (4) Overall,

Organization	Yes / No	Question 1 Comment
		we believe that this standard does not improve the clarity of what is required, and would give additional occasions for disputes between compliance monitors and various registered entities.
Response: For Requirement R2, Part 2.4.1, the SDT believes that there are models available that account for the dynamic nature of the Load. No change made. For Measurements M3 and M4, the planner is required to retain evidence that they completed the tasks required in each sub-part of Requirements R3 & R4. These sub-parts require evidence including steady state power flow, Stability and short circuit. Further, the Contingency lists are specifically required in Requirement R3, Parts 3.4 & 3.5 and Requirement R4, Parts 4.4 & 4.5. No change made. The SDT disagrees that the standard is too restrictive about the system conditions to be evaluated. The SDT believes that this standard is a significant improvement and adds needed clarity to the existing TPL standards. No change made.		
New York State Reliability Council	Ballot Comment	1. In R1.1.5, known commitments for Firm Transmission Service, plus other Interchange that does not violate reliability constraints - it is imperative to model other Interchange after accounting for all existing and planned Firm Transmission Service to ensure that reliability-based transactions are not confused with economic interchange. 2. In R2.2.5, the current requirement language can be interpreted to require evaluation of the simultaneous unavailability of multiple long-lead-time components. Also, as a transformer outage is already evaluated as part of category P6 in Table 1, additional studies should not be required; however, spare equipment strategies could be assessed in the context of the planning assessment. 3. In R2.2, the language in this requirement is materially inconsistent with R2.1, unnecessarily requiring a current study.
Response: The SDT selected known commitments for Firm Transmission Service and Interchange to separate the planning requirements of commitments from the economic transactions. No change made. In Requirement R2, Part 2.1.5, the requirement is for the planner to make an assessment of the loss of long lead time (>1 year) equipment, unless the entity's spare equipment strategy can mitigate the issue in less than one year. Therefore, in those instances, the system will be evaluated against the system with the component out of service (multiple Contingencies). While P6 will simulate the same set of outages, the requirements of P1 and P2 are different than P6. Therefore, the planner needs to make an assessment of their system under the more stringent performance requirements. No change made. Requirement R2, Part 2.1 and 2.2 – The SDT left the requirement to conduct the annual study on one of the study years in the Long-Term Planning Horizon to ensure that the planner would conduct a new study annually to evaluate the System improvement needs in the Long-Term Planning Horizon. No change made.		

Organization	Yes / No	Question 1 Comment
Tennessee Valley Authority	Ballot Comment	1. TVA is concerned about the additional studies, modeling, and projects that must be performed to meet this proposed standard. TVA believes that this amount of work will have little overall improvement on the reliability of the BES. 2. TVA believes that the 7 year implementation plan allowed for "Raising the bar" facilities does not allow sufficient time for TVA to construct the required new facilities. TVA average time for constructing a new 500-kV line can be up to 10 years, given the lead time on ROW and following all NEPA requirements. TVA does understand that the team has language (R2.7.3) regarding the TP or PC inability to get the projects completed through no fault of its own; however, there is no safeguard that the entity will be found non-compliant if all the work cannot be accomplished in this time frame. 3. TVA believes that the footnotes b and c that allow for local load drop in the current TPL standards should still be allowed. TVA understands that this is addressed in FERC Order 693; however, the capital improvements to fix many of these issues will have little overall reliability gain for the Bulk Electric System. TVA believes that this is a local load reliability issue and not a BES concern. 4. TVA is concerned that no generating unit shall pull out of synchronism for Planning Event P1, while the standard does allow generator runback/tripping for the same event. TVA believes that this requirement is overly burdensome without providing any material improvement in system reliability. Does distributed generation have to meet the same requirements for not pulling out of synchronism as a large nuclear unit? 5. The Implementation Plan should include a five-year delay in the effective date for short circuit studies (R2 parts 2.3 and 2.8) since these studies are a new TPL requirement and are not required in the current version 0 standards.
Response: 1) The SDT appreciates the concern about additional work compared to the reliability benefits. The SDT believes that the changes within the proposed standard represent the appropriate work to ensure BES reliability. No change made. 2) The SDT believes that the Implementation Plan gives entities the necessary time to develop and implement Corrective Action Plans. No change made. 3) The SDT incorporated the language in Footnote 12 that was approved in Project 2010-11 TPL Table 1 Footnote B. No change made. 4) The SDT does not believe that any generator should pull out of synchronism for a single Contingency. No change made. 5) While short circuit study requirements may be new in the realm of mandatory enforceable standards, the SDT does not believe that they present a significant "raising of the bar" for industry. The SDT believes that prudent short circuit practices are effectively in place today to ensure safe operation of the equipment.		

Organization	Yes / No	Question 1 Comment
Therefore, no extension in the Implementation Plan was made in regard to short circuit studies.		
Florida Municipal Power Pool	Ballot Comment	A. Spare Equipment, R2.1.5 - The requirement reaches beyond the FERC directive. The directive was: "Accordingly, the Commission directs the ERO to modify the planning Reliability Standards to require the assessment of planned outages consistent with the entity's spare equipment strategy." So, the directive is only to address planned outage, not unplanned outages. Also note that the applicability to GSUs is ambiguous. "Transmission" is defined as: "An interconnected group of lines and associated equipment for the movement or transfer of electric energy between points of supply and points at which it is transformed for delivery to customers or is delivered to other electric systems." Is the "point of supply" the generator terminal, or the GSU high side terminal? B. Table 1, under first heading of "Steady State Only", bullet i is open to interpretation. Many utilities use steady state P-V analyses to study voltage stability and design UVLS systems in apart around those steady state analyses. Would this bullet essentially eliminate P-V and Q-V studies and the related use of UVLS? C. R7 is not needed and administrative in nature. Instead is should say that an entity can use as evidence another entity's study, but not in the requirement and rather in the measures. D. R8 is ambiguous, does the requirement require submitting the Planning Assessment only after receiving a written request, or automatic distribution to neighboring PCs and TPs without a written request, and to others with a reliability related need following a written request? E. Table 1, under first heading of "Steady State and Stability", bullet c should be removed since it is duplicative of the standard, and not entirely consistent with the standard (e.g., open to interpretation whereas the standard better clarifies how to study protection system operation)
Response: The SDT respectfully disagrees that the Commission directive regarding a spare equipment strategy is limited to planned outages. In Order 693, Par 1725, the Commission states in its discussion "Thus, if an entity's spare equipment strategy for the permanent loss of a transformer is to use a "hot spare" or to relocate a transformer from another location in a timely manner, the outage of the transformer need not be assessed under peak system conditions." The SDT believes FERC clearly intended the spare equipment strategy to cover a catastrophic loss of such long lead-time equipment. Further, the SDT believes it has appropriately limited this review to a small subset of the overall Planning Events – P0, P1, and P2 and for a loss that would be sustained for a year or longer. No change made. Table 1, Steady State and Stability, Item I does not restrict the use of UVLS since it only addresses equipment disconnected by end-user equipment. No change made.		

Organization	Yes / No	Question 1 Comment
Requirement R7 ensures that there are no gaps between Transmission Planners or the Planning Coordinators that may cause reliability concerns. No change made. Requirement R8 requires the automatic distribution to neighboring Planning Coordinators and Transmission Planners without a written request and to others with a reliability related need following a written request. The SDT believes this is an important consideration and not ambiguous. No change made. Table 1, Bullet c under first heading, is not in conflict with the requirements. The SDT decided to include additional details in Table 1 so that it would have the basic information necessary for the planner to develop their simulations for their studies without always referring back to the requirements language. No change made.		
Modesto Irrigation District	Ballot Comment	Both Sections 2.1.4 (seven sensitivities) and 2.4.3 (five sensitivities) require sensitivity studies to be run for all planning events and for all years specified , which increases the number of required studies beyond a reasonable and manageable limit. Also, both Section 2.1.4 and 2.4.3 specify that running studies over "...a range of credible conditions that demonstrate a measurable change in System response (performance)." must be completed, yet using "credible conditions" and also "demonstrating a measurable change in System response (performance)", may be mutually exclusive. "Measurable change in System response (performance)" is open to a broad interpretation, which increases the risk that the auditor may very likely interpret it differently than the utility system planner. The definition of the extreme events that have to be analyzed has been made nebulous, where in the existing standards they are quite specific. Requirement 2.1.5 requires the modeling of the loss of any system element that does not have a back-up or spare available sooner than 1 year, as part of the system normal state. It is not clear why using 1 year of loss of use for a system element is being used as the triggering point requiring further system enhancements. Thank you.
Response: Requirement R2, Part 2.1.4 and Part 2.4.3 do not require an unreasonable amount of sensitivities, since they both state the planner must “vary one or more of the following conditions”. No change made. Requirement R2, Parts 2.1.4 and Part 2.4.3 allow the planner to use engineering judgment to determine the sensitivities to be completed. No change made. Requirement R2, Part 2.1.5 uses one year as a typical definition of a long lead time for equipment, so that the planner will assess their system performance without that equipment over peak periods. No change made.		

Organization	Yes / No	Question 1 Comment
Hydro One Networks, Inc.	Ballot Comment	Hydro One Networks is casting a negative vote. Other than a few changes related to Footnotes 9 and 12 of Table 1 and VSLs, the other changes in the proposed draft are minor. The concerns of the industry on several important issues have not been sufficiently addressed in this draft. For detailed comments please refer to our submission through the on-line comment form.
Response: The SDT posted a redline draft against the last posted draft and also posted a redline draft against the previous ballot draft. The SDT addressed important issues that were raised during the first ballot. Please see specific responses to your comments where they were submitted.		
Luminant Energy	Ballot Comment	Our most significant concerns are related to the following: (1) The requirements for Sensitivity Analysis are not stringent enough. (2)Studies should include variations in the duration and timing of transmission outages. “Anticipated” outages should be included in the studies and not just “known” transmission outages. It is our experience that only including “known” outages drastically under represents the actual number of transmission outages. (3) Major equipment outages lasting three or more months, as a result of Spare equipment strategies should be included in studies. The time limit of one year as specified in the Standard is too lax. Specific suggested language: 1.1.2. Known outage(s) of generation or Transmission Facility(ies) with a duration of at least six months or any known outage(s) of generation or Transmission Facility(ies) that will extend into the high stress period of the BES. 2.1. For the Planning Assessment, the Near-Term Transmission Planning Horizon portion of the steady state analysis shall be assessed annually and be supported by current annual studies or qualified past studies (as indicated in Requirement R2, Part 2.6, as follows). Qualifying studies shall include the following conditions: Add language between 2.1.3 and 2.1.4 to account for generation limitations due to Ancillary Services. Suggested wording: All planning studies must recognize and make provision for secure delivery of each of the Ancillary Services (eg Operating Reserve). In no case shall these studies double count capacity as being available for congestion management and Ancillary Services unless processes are in place to allow for location specific deployment of these Ancillary Service reserves for congestion management purposes.

Organization	Yes / No	Question 1 Comment
		2.1.4 (bullet 7) Duration and timing of anticipated Transmission outages such as required maintenance activities. 2.1.4 (bullet 8 added) Reasonable variations of anticipated generator availability after accounting for equivalent forced outage rate. 2.1.5 If an entity's spare equipment strategy could result in the unavailability of major Transmission equipment that would cause an outage of three months or more, (such as a transformer) the impact of this outage on System performance shall be studied. 2.4.3. For each of the studies described in Requirement R2, Parts 2.4.1 and 2.4.2, sensitivity case(s) shall be utilized to demonstrate the impact of changes to the basic assumptions used in the model. To accomplish this, the sensitivity analysis in the Planning Assessment must vary one or more of the following conditions by a sufficient amount to stress the System within a range of credible conditions that demonstrate a measurable change in performance: â€¢ Load level, Load forecast, or dynamic Load model assumptions. â€¢ Expected transfers. â€¢ Expected in service dates of new or modified Transmission Facilities. â€¢ Reactive resource capability. â€¢ Generation additions, retirements, or other dispatch scenarios. â€¢ Duration or timing of anticipated Transmission outages such as required maintenance activities. â€¢ Reasonable variations of anticipated generator availability after accounting for equivalent forced outage rate. 2.4.4. P1 events in Table 1, with known outages modeled as in Requirement R1, Part 1.1.2, under those System peak or Off-Peak conditions when known outages are scheduled. 2.4.5 If an entity's spare equipment strategy could result in the unavailability of major Transmission equipment that would cause an outage of three months or more, (such as a transformer) the impact of this outage on System performance shall be studied.
Response: 1) The sensitivities addressed in Requirement R2, Parts 2.1.4 and Part 2.4.3 allow the planner to use engineering judgment to determine the sensitivities to be completed. Since sensitivities are included to ensure that the planner evaluates alternative conditions, it is necessary to allow flexibility to evaluate different types of changes that could occur. No change made. 2) Reliability Standards are the minimum requirements and if conditions warrant, entities may add additional outages to be evaluated in their planning studies.		

Organization	Yes / No	Question 1 Comment
No change made. 3) Requirement R2, Part 2.1.5 uses one year as a typical definition of a long lead time for equipment, so that the planner will assess their system performance without that equipment over peak periods. No change made. For Requirement R2, Part 2.1, the SDT did not add language between Parts 2.1.3 and 2.1.4 to account for generation limitations due to Ancillary Services. The proposed addition assumes a particular market structure and that market structure is not uniform across North America. The "projected System conditions" in Requirement R1 would be violated if an entity double counted its Ancillary Services. No change made. Requirement R2, Part 2.1.4, bullet 7 & 8 are examples of sensitivities and the examples provided would address those contemplated by the SDT. No change made. Requirement R2, Part 2.1.5 uses one year as a typical definition of a long lead time for equipment, so that the planner will assess their system performance without that equipment over peak periods. No change made. Requirement R2, Part 2.4.3 – Since the five conditions for sensitivities have been vetted through six postings, the SDT did not add the two proposed conditions. No change made. Requirement R2, proposed 2.4.4 – Since the known outages are already included in the cases, as required by Requirement R.1, Part 1.1.2, there is not a need to require specific studies that include them – No change made. Requirement R2, proposed Part 2.4.5 – The proposed requirement is already contained in Requirement 2, Part 2.1.5 and does not need to be duplicated here. The SDT has used the typical one year time period to define long lead time for equipment and believes that three months is too short a time period for this requirement. No change made.		
MidAmerican Energy Co.	Ballot Comment	Regarding Requirement 8, there is not a significant risk to the reliability of the BES if an annual Planning Assessment is not distributed to another entity or if a documented response to Planning Assessment comments is not provided within 90 days of a request. Requirement 8 is an administrative requirement that adds little to improve reliability. We recommend that the VRF for Requirement 8 remain "Low", rather than be changed to "Medium".
Response: The SDT believes that sharing the Planning Assessments with adjacent Transmission Planners and Planning Coordinators is an important component of the planning process. The SDT did not change the VRF. The previous change reflects the latest guidelines on the topic.		

Organization	Yes / No	Question 1 Comment
Consolidated Edison Co. of New York	Ballot Comment	Requirement R1.1.5: Delete “and Interchange.” The inclusion of other than Firm transactions (e.g. economic transactions in Interchange) in a base power flow case utilized for planning/designing the interconnected system blurs the boundary between reliability issues and purely economic issues. Reliability issues are issues that a Transmission Owner (TO) must address for the purpose of meeting its load demand, and are defined by the application of well established reliability standards and criteria that are based on the electrical characteristics of the interconnected system, but without economic considerations. Instead, economic transactions are types of transactions that a TO may enter into once its load obligations are met, and are evaluated based on economic parameters that are markedly different from the aforementioned reliability criteria (e.g. congestion costs). Modeling all types of transactions in a power flow case without distinction detracts from the accuracy and validity of either assessment (reliability and economic).
Response: Requirement R1, Part 1.5 does not require Interchange for economic purposes. The requirement is to represent “Known commitments”. No change made.		
Platte River Power Authority	Ballot Comment	Stability requirements R4.1.2, along with the second and third bullets of R4.3.1, could be misunderstood to require the development of comprehensive relaying models for all Facilities represented in the stability model. These requirements should be made clear that Stability studies are to simulate the effects of relaying (tripping certain Facilities) and not require relaying models to trigger and cause the effects.
Response: The SDT language in Requirement R4, Part 4.3.1 states “The analyses shall include the impact of subsequent” and does not require comprehensive relaying models. However, it does require that the planner take into account the effects of System Protection on System performance. No change made.		
GDS Associates, Inc.	No	1. Footnotea. Footnote should state “Draft 7” instead 2. Requirement R1a. Time Horizon should include both Near-term and Long-term Planning3. Requirement R2a. Time Horizon should include both Near-term and Long-term Planningb. Requirement R2, Part 2.1 o The inclusion of the words "For the Planning Assessment" it seem unnecessary as long as main requirement R2 is only about the Planning Assessment and nothing else. o The term “Qualifying studies” from the last sentence is referring to the qualified past studies, or the annual studies, or both actually? Suggesting adjusting the verbiage so it would not create confusion. o Subpart 2.1.4- Requirement R2, Part 2.1.1 and Part 2.1.2 are referring to system conditions, not studies. The second sentence may be subject of non-objective interpretations and may generate burdensome and

Organization	Yes / No	Question 1 Comment
		unrealistic amount of work. The requirement should state instead "For each of the system conditions described in Requirement R2, Part 2.1.1 and Part 2.1.2, the studies shall include sensitivity cases utilized to demonstrate whether there is any significant impact due to changes on the basic assumptions used in the model. The analysis, by case, may contemplate varying one or more of the following conditions:" o Subpart 2.1.5- We suggest adjusting the time threshold of potential equipment unavailability in order to be consistent with the time frame for the "known Transmission outages". c. Requirement R2, Part 2.2 o The inclusion of the words "For the Planning Assessment" it seem unnecessary as long as main requirement R2 is only about the Planning Assessment and nothing else. o While the Near-Term portion of the Planning Assessment details the premises of the study, the Long-Term is lacking in such thing. d. Requirement R2, Part 2.3 o Although both the steady-state and transient stability studies are required for the Near-Term and Long-Term, the short-circuit study is required only for the Near-Term. This is big disconnect, because there can be stability analyses conducted without a short-circuit assessment. o Breakers should be checked for their breaking capability, as well as to withstand the fault. All other disconnecting equipment, as well as current transformers in particular shall be also verified for their withstand capabilities. The current statement should be replaced with "The short circuit analysis portion of the Planning Assessment shall be conducted annually addressing the Near-Term and Long-Term Transmission Planning Horizon and can be supported by current or past studies as indicated in Requirement R2, part 2.6. The analysis shall be used to assess performances of transmission elements affected by a potential increase of short-circuit contributions to fault" e. Requirement R2, Part 2.4 o The inclusion of the words "For the Planning Assessment" it seem unnecessary as long as main requirement R2 is only about the Planning Assessment and nothing else. o Similar with 2.1, the last sentence should read "The studies should include the following conditions:" o Subpart 2.4.1- We believe that the dynamic behavior of the load cannot be accurately estimated beyond current time. We are concerned about the effort required to ascertain the dynamic response of the load. As for the "Loads that could impact the study area" the standard doesn't include any directions in how an entity will identify these loads. Perhaps the standard should provide guidelines to determine which loads would impact the study area. o Subpart 2.4.3- See comments from Subpart 2.1.4f.

Organization	Yes / No	Question 1 Comment
		Requirement R2, Part 2.5 o The inclusion of the words "For the Planning Assessment" it seem unnecessary as long as main requirement R2 is only about the Planning Assessment and nothing else. g. Requirement R2, Part 2.6 o Subpart 2.6.2- We agree with the suggested changes as responding to previous commentsh. Requirement R2, Part 2.7 o Subpart 2.7.1- We disagree with the implemented changes. The standard should not include examples. If needed, a white paper can accompany the standard. We suggest adjusting the last sentence to read “Such actions may include, but are not limited to, the following:” i. Requirement R2, Part 2.8 o This should apply to all disconnecting equipment and CT in particular with respect not only to their interrupting duty, but to their withstand capabilities also. See comment on Part 2.3.4. Table 1a. Footnote 9 o With respect to the Curtailment of Firm Transmission Service we suggest SDT to revise the language in order to be consistent with the Implementation Plan. 5. Measure M1a. This measure it is hard to read. For simplicity, we suggest adjusting this measure to read "Each Transmission Planner and Planning Coordinator shall provide evidence, in electronic or hard copy format that it is maintaining System models within their respective area, using data consistent with MOD-010 and MOD-012, and the models reflect the System conditions in accordance with Requirement R1." 6. Measure M7a. The measure encompasses the particular scenario where the parties involved have reached an agreement for performing the required studies. In order to cover situations where the parties have not reach an agreement, the measure should read "Each Planning Coordinator, in conjunction with each of its Transmission Planners, shall provide dated documentation on roles and responsibilities, such as meeting minutes, agreements, and e-mail correspondence that identifies all individual and joint responsibilities for performing the required studies and Assessments in accordance with Requirement R7." 7. Compliancea. Data retention o The 5th bullet should read "The documentation specifying the criteria for acceptable System steady state voltage limits, post-Contingency voltage deviations, and the transient voltage response since the last compliance audit in accordance with Requirement R5 and Measure M5." o The 6th bullet should read "The documentation specifying the criteria or methodology used to identify System instability for conditions such as Cascading, voltage instability, or uncontrolled islanding since the last compliance audit in accordance with Requirement R6 and Measure M6." o The 7th bullet should be reworded in accordance with suggested changes at M7.

Organization	Yes / No	Question 1 Comment
Response: 1. This is the sixth time that this standard has been posted for comments. The reference to a seventh posting on the web site is because the standard was posted once for informational purposes. No change made. 2. Requirement R1. Per the standards process, the Time Horizon for this standard is Long-term Planning; which includes both the Short-Term and Long-Term Planning Horizon. No change made. 3. Requirement R2, Part 2.1 – "For the Planning Assessment" were added in a previous draft for clarity – No change made. Requirement R2, Part 2.1 – "Qualifying Studies" could be either or both – No change made. Requirement R2, Part 2.1.4 – The requirement is for the planner to have a completed study for each of the conditions in Parts 2.1.1 & 2.1.2. The requirement to complete sensitivity studies has been included to ensure that the planner tests their system by stressing the system beyond what is within their base cases. Since the System conditions vary across North America, the relevant sensitivities are best determined by the planner. The proposed language does not convey the same intent. No change made. Requirement R2, Part 2.1.5 – The SDT determined that the impact of "known outages …" does not directly coorelate to the entity's spare equipment strategy. No change made. c. Requirement R2, Part 2.2 – "For the Planning Assessment" were added in a previous draft for clarity – No change made. Requirement R2, Part 2.2 - The SDT limited the requirements in the Long-Term to allow the planner more latitude in that time frame, while ensuring that the planner conducted a Long-Term assessment of their portion of the BES. No change made. d. Requirement R2, Part 2.3 - A planner may choose to complete a short circuit study in conjunction with its Long-Term Steady Steady State and Stability studies, but the SDT does not believe that the planner should be required to complete a short circuit study in the Long-Term Transmission Planning Horizon. No change made. The SDT agrees that any system element must be able to withstand the stresses that they may be subjected to, however, the standard must ensure BES reliability. Therefore, the SDT limited the requirement to the breakers since they protect other system elements from the fault. No change made. e. Requirement R2, Part 2.4 – "For the Planning Assessment" were added in a previous draft for clarity . The SDT does not believe that replacing the last sentence as proposed adds any additional clarity. No change made. Requirement R2, Part 2.4.1 – The SDT believes that the planner must consider the dynamic behavior of its System Load and develop a representative model, however, the SDT should not dictate "how" the Load should be modeled. Those specific details must be included in the model by the individual planner. No change made. Requirement R2, Part 2.4.3 - The requirement is for the planner to have a completed study for each of the conditions in Parts 2.4.1 & 2.4.2. The requirement to		

Organization	Yes / No	Question 1 Comment
complete sensitivity studies has been included to ensure that the planner tests their system by stressing the system beyond what is within their base cases. Since the System conditions vary across North America, the relevant sensitivities are best determined by the planner. The proposed language does not convey the same intent. No change made. Requirement R2, Part 2.5 – "For the Planning Assessment" were added in a previous draft for clarity – No change made. Requirement R2, Part 2.7.1 – The SDT has included limited examples where we believe that additional clarity is needed. Since the list is clearly marked as "examples", the SDT believes the phrase "but not limited to", is not required. No change made. Requirement R2, Part 2.8 - The SDT agrees that any system element must be able to withstand the stresses that they may be subjected to, however, the standard must ensure BES reliability. Therefore, the SDT limited the requirement to the breakers since they protect other system elements from the fault. No change made. The Implementation Plan has been revised as suggested although the SDT wishes to point out that no dates have been changed. Measure M1 – While the suggested langauage is shorter it does not contain all of the terminology of the matching requirement and thus violates a basic guideline for measures. No change made. 6. Measure 7 – The suggested langauge doesn't change the assumed scenario cited and provides no additional clarity. No change made. 7. Data retention, 5th bullet – The SDT agrees that for consistency the suggested terms should be added so that this bullet matches up with the language of the requirement. DR, 5th bullet: The documentation specifying the criteria for acceptable System steady state voltage limits, post-Contingency voltage deviations, and transient voltage response since the last compliance audit in accordance with Requirement R5 and Measure M5. Data retention, 6th bullet - The SDT agrees that for consistency the suggested terms should be added so that this bullet matches up with the language of the requirement. DR, 6th bullet: The documentation specifying the criteria or methodology utilized in the analysis to identify System instability for conditions such as Cascading, voltage instability, or uncontrolled islanding in support of its Planning Assessments since the last compliance audit in accordance with Requirement R6 and Measure M6. Data retention, 7th bullet – The SDT declined to make the suggested changes to Requirement R7 so no change is necessary for Measure M7.		
United Illuminating ISO New England Inc	No	a. 2.6.2 - What was the intent of this change? The old language seemed to work. The language should not be changed from the previous version. b. For 2.8.2 - Was the phrase changed to reflect modifications of facilities? If so the requirement should be

Organization	Yes / No	Question 1 Comment
		modified to read "Be reviewed in subsequent annual Planning Assessments for continued validity and implementation status of identified System Facilities and Operating Procedures with respect to modifications of facilities. Otherwise the requirement is unclear. c. For Section R8.1 - the proposed requirement conflicts with a long standing stakeholder process in our area which posts study results and allows comment within a defined period before studies are finalized. If this section is to be retained then it should be modified to only allow comments on Transmission studies less than one-year old. Requirement 8 and 8.1, should be revised to include a limit on the comment period as follows: If a recipient of the planning assessment final results provides documented comments on the results within 90 days of receipt, the respective Planning Coordinator or Transmission Planner shall provide a documented response to such recipient within 90 calendar days of receipt of those comments. d. With respect to Table 1 - We suggest adding an event 6 to P1 to address the contingent loss of back to back HVDC Facilities. If not added to P1 then this event needs to be added somewhere in the standard. e. We don't agree with footnote 7 specifying that only one end of the line should be open for this condition. If the SDT is to keep this concept make P2 event 1 simply say "Opening one end of a line section w/o a fault" and delete the footnote. The existing footnote is unclear due to the use of language such as "possibly".

Response: a. Requirement R2, Part 2.6.2 was revised in response to comments that a "qualified" study may have material changes remote from the area of study and the previous version would not have allowed the use of that study. No change made.

b. Requirement R2, Part 2.8.2 – The added phrase – "of identified System Facilities and Operating Procedures" was added to ensure that it was clear what "implementation status" was referencing. No change made.

c. Requirement R8, Part 8.1 - The SDT does not believe that the requirement conflicts with other stakeholder processes and does not believe that a time limit is required. Beyond responding to the comment, other actions by the planner are at the discretion of the planner. No change made.

d. Table 1, P1 back to back DC - The contingent loss of back to back HVDC facilities is included as a transformer. Footnote 5 states, in part, that "Requirements which are applicable to transformers also apply to variable frequency transformers and phase shifting transformers. Therefore, the SDT has not explicitly included back-to-back HVDC as a separate Contingency. No change made.

e. Table 1, footnote 7 – The SDT added the footnote to further explain its intent for P2-1 and to ensure that the planner assess the voltage of a load bus that was on a radial line. The word "possibly" was used since having load on a radial is not always the outcome of opening one end of a line section. No change made.

Organization	Yes / No	Question 1 Comment
Northeast Utilities	No	Definition of Terms Used in the StandardThe definitions of "Near-Term Transmission Planning Horizon" and "Year One" have been deleted from the standard, yet they are still used in draft 7. NU is concerned about voting in favor of this standard with these terms being defined by another project without a full discussion of the impact to this proposed standard. NU suggests repeating the definitions in this proposed standard. Requirement R1NU believes that the Normal System Conditions as stated in Requirement R1 should establish the base case conditions to be used for the assessment studies. However, a more detailed guideline for developing base cases should be addressed by the requirements. By just modifying the language of requirement R1 to indicate that "P0" constitutes the initial system conditions does not address this concern in Draft #7. A more detailed guideline for base case development is needed. Requirement R8The wording in requirement R8 needs to be amended to restrict comments to the most recent assessment only, for a limited period (say 3 months) after its release. The current wording appears to offer unlimited opportunity to comment on past assessments, long after their release. Footnote 7It appears there is a discrepancy between Footnote 7 and Event P2-1. Footnote 7 could be eliminated by rewording Event P2-1 as follows: "Opening one end of a line section w/o a fault". Footnote 12NU did not agree with the clarification of Table 1 Footnote B of TPL-002 and did not vote for its approval. Therefore, NU does not agree with the same clarification being applied here for Non-Consequential Load Loss. For reference, below is NU's comment on TPL-002 Table 1, Footnote B:"The revised language of Footnote b suggests that non-consequential demand interruption (load that is not directly served by the elements removed from service as a result of the contingency) could be used to mitigate reliability concerns arising from NERC Category B contingency events (i.e., single element contingencies). This language seems to encourage operational workarounds and adds burdens for operators of the system. NU believes this is not consistent with planning a highly reliable bulk electric system and thus does not support this weaker language". General commentNU believes that a standard should contain statements and requirements that are direct and measurable. TPL-001-2 should not be an exception to this rule. Therefore, statements like "An objective" which appears in Footnotes 9 and 12 shall not be used.
Response: Definitions of Near-Term Transmission Planning Horizon and Year One are now approved NERC Glossary Terms and are no longer needed in this proposed standard. The definitions have been vetted through this process through the 1st six postings of this standard and were approved by the Commission in		

Organization	Yes / No	Question 1 Comment
FAC-013. With the wide variety of system conditions and market structures across North America, the SDT chose not to establish a single set of conditions for a base case. Each planner shall establish their base case that meets their needs and their other regulatory requirements. No change made. Requirement R8, Part 8.1 - The SDT does not believe that a time limit for commenting on a Planning Assessment is required. Beyond responding to the comment, other actions by the planner are at the discretion of the planner. No change made. Table 1, P2-1 – The SDT does not agree that there is a discrepancy between the Contingency and Footnote 7. Footnote 7 was utilized to clarify a specific condition that would need to be evaluated as a part of P2-1. No change made. Footnotes 12 and 9 were translated from the BOT approved language from TPL-002-1, Footnote 'b'.		
Electric Reliability Council of Texas, Inc.	No	ERCOT ISO believes that the revisions do not go far enough in addressing previously submitted comments. As written this standard would require restructuring of the functions in the ERCOT Region because several requirements are being assigned to the PC that are currently performed only by the TPs. It would not provide any reliability benefits to have the ERCOT PC assume these functions. Specifically, the following requirements should be modified: R2.1.5 should be clarified to be applicable to TPs only since the ERCOT PC does not have the information necessary to perform this analysis; R2.3 and R2.8 should be clarified to be applicable to TPs only since the ERCOT PC does not perform this analysis (it is performed by the TPs in ERCOT); R4.1.2 should be clarified to only apply to TPs because the ERCOT PC does not have the modeling information necessary to perform this analysis. Additionally, R2.1.4 and R2.4.3 should be removed because the requirements are subjective and there are no actions prescribed to be taken based on the sensitivity results. The Load model requirement should be removed from R2.4.1 because this would be better addressed in a MOD standard. Alternatively, R2.4.1 should be rewritten as "System peak Load for one of the five years with expected dynamic load models." A concurrent requirement should be incorporated to mandate DSPs and TPs to supply dynamic load model data to the PC to perform the required studies.
Response: Requirement R2, Part 2.1.5 requires that studies be completed based on an entity's spare equipment strategy. The ERCOT Planning Coordinator could utilize Requirement R7 to document the individual and joint responsibilities for these studies and document the outcome of these studies. No change made.		

Organization	Yes / No	Question 1 Comment
Requirement R2, Parts 2.3 and 2.8 – The ERCOT Planning Coordinator could utilize Requirement R7 to document the individual and joint responsibilities for these studies and document the outcome of these studies. No change made. Requirement R4, Part 4.1.2 requires the Transmission Planner and Planning Coordinator to accurately represent the behavior of the system if a generator pulls out of synchronism. Therefore, this information is needed by each Transmission Planner and Planning Coordinator to ensure that the appropriate system response is modeled. No change made. Requirement R2, Parts 2.1.4 and R2.4.3 require the completion of sensitivity studies and allows the planner the discretion on which variables to vary. In addition, Requirement R2, Part 2.7 requires Corrective Action Plans to address issues that are present in multiple sensitivities. The MOD standards only require data to be submitted, and this requirement allows the variation of the forecasted load as one of the possible sensitivities. No change made. Requirement R2, Part 2.4.1 – The SDT believes that the drafted language more clearly explains the requirement than the proposed language. This requirement is for the planner to utilize models that reflect the dynamic nature of the load with an expectation that the planner will obtain the required information in Requirement R1 to determine how it is modeled. No change made.		
Independent Electricity System Operator	No	IESO is generally supportive of the draft of TPL-001-2 as evidenced by our previous AFFIRMATIVE vote during the last ballot. Further, IESO also supported the revisions to Footnote 'b' to Table 1 of the TPL standards under Project 2010-11. That revision was balloted and approved by the ballot pool in February 2011 and filed with FERC for approval in March 2011. The revised footnote has been incorporated into the current draft of TPL-001-2 as Footnotes 9 and 12 but the Commission, by letter to NERC dated May 17, 2011, has requested NERC to provide supplemental information before the revised Footnote 'b' could be approved. In light of FERC's request and the uncertainty regarding the final provisions of these footnotes, coupled with the ongoing work on Project 2010-17 for the revision of the BES definition and development of an Exception Process and the impact that may have, we respectfully suggest that the drafting team delay further work on TPL-001-2 pending FERC's ruling on NERC's petition seeking approval of the transmission planning standards that contain the revised Footnote 'b' to Table 1.
Response: The SDT believes that it is important to continue with the approval of this standard. If FERC directs changes based on TPL-002-1, Footnote 'b', they will be addressed with this project.		
New York Independent System Operator	No	If the following recommended revisions are made to the requirements listed, subject to other unforeseen material changes, NYISO would no longer oppose the approval of this standard. Requirement R2.1.5 The current requirement language can be interpreted to require evaluation of the simultaneous unavailability of multiple long-lead-time components. Also, as a transformer outage is already

Organization	Yes / No	Question 1 Comment
		evaluated as part of category P6 in Table 1, additional studies should not be required, however spare equipment strategies could be ASSESSED in the context of the Planning Assessment. NYISO thus recommends this requirement be revised as follows: R 2.1.5 When an entity's spare equipment strategy could result in the unavailability of a major Transmission component that has a lead time of one year or more (such as a transformer), the impact of this possible unavailability on System performance shall be assessed with due regard to categories P0, P1, and P2 identified in Table 1. Requirement R2.2The language in this requirement is materially inconsistent with R2.1, unnecessarily requiring a current study. NYISO requests that R2.2 and the sub-requirement be revised as follows:2.2. For the Planning Assessment, the Long-Term Transmission Planning Horizon portion of the steady state analysis shall be assessed annually and be supported by current annual studies or qualified past studies as indicated in Requirement R2, Part 2.6. Qualifying studies shall include: 2.2.1. Expected System peak Load conditions for one of the years in the Long-Term Transmission Planning Horizon and the rationale for why that year was selected. Requirement R8.1There is an apparent open ended time frame afforded report recipients in their review of any Planning Assessment. This requirement should apply to only the most recent Planning Assessment. NYISO thus recommends the following language: 8.1. If a recipient of the most recent Planning Assessment results provides documented comments on the results, the respective Planning Coordinator or Transmission Planner shall provide a documented response to that recipient within 90 calendar days of receipt of those comments.
Response: Requirement R2, Part 2.1.5 is not the same as P6 – Table 1, however, the analysis for P6 could be utilized, if the results show there will not be load loss. Except for the outages being evaluated under P0, P1, and P2 for individual components out of service without a long term spare, the requirement does not require the evaluation of the simultaneous loss of multiple long lead time components. The SDT believes that the language "with due regard to" is not as clear as the proposed language. No change made. Requirement R2, Part 2.1 and 2.2 – The SDT left the requirement to conduct the annual study on one of the study years in the Long-Term Planning Horizon to ensure that the planner would conduct a new study annually to evaluate the System improvement needs in the Long-Term Planning Horizon. No change made. Requirement R8, Part 8.1 - The SDT does not believe that a time limit for commenting on a Planning Assessment is required. Beyond responding to the comment, other actions by the planner are at the discretion of the planner. No change made.		
NBSO	No	Items that, if not addressed, will likely cause a negative vote from NBSO:R2.2 differs from R2.1, R2.3, R2.4 and R2.5 since R2.2 does not state that the annual assessment of the Long-Term Transmission Planning

Organization	Yes / No	Question 1 Comment
		Horizon portion of the steady state analysis can be supported by qualified past studies. Likely this omission is an oversight, but unresolved it can cause significant burden with little gain in reliability. Individual items that, if not addressed, may not cause NBSO to vote Negative, but in combination may result in a negative vote:The language of requirements R2.1.4 and R2.4.3 allowing the performance of one or more sensitivities appears to be inconsistent with language in R2.7.2 that requires multiple sensitivities to determine if actions to resolve performance deficiencies are necessary. R7 (and M7) seem to indicate that the PC is ultimately responsible for determining the individual and joint responsibilities for performing the required planning assessment studies, with the expectation to consult and come to agreement with its corresponding TPs, but this interpretation is not clear. The correct interpretation of this requirement is important for resolving situations where a PC and TP do not agree on the assignment of responsibilities. Suggested wording: “Each PC shall work in conjunction with each of its TPs to determine and identify...” The language in R8 is unclear. One point of confusion relates to which entity is responsible for sending their Planning assessments to other entities. For example, who does a PC distribute their planning assessments to?:-Adjacent PC? (Seems to be clearly addressed)-TPs within its PC footprint? (Not clearly covered by the language in R8)-TPs adjacent to its PC footprint (Not clear if this is the responsibility of the PC, TP or both)In addition, the language in R8.1 appears to offer unlimited opportunity to request response to comments on any past assessment, long after their release. Providing limits in the langue of R8.1 is recommended in order to avoid unnecessary burden on PCs and TPs for little gain in reliability or constructive stakeholder involvement.

Response: Requirement R2, Part 2.1 and 2.2 – The SDT left the requirement to conduct the annual study on one of the study years in the Long-Term Planning Horizon to ensure that the planner would conduct a new study annually to evaluate the System improvement needs in the Long-Term Planning Horizon. No change made.

Requirement R2, Parts 2.1.4 and 2.4.3 are not inconsistent with Requirement R2, Part 2.7.2. With the various requirements, the planners are required to conduct multiple sensitivities. Therefore, Requirement R2, Part 2.7.2 could be used when the results of these multiple sensitivities identify common concerns. No change made.

Requirement R7 – The SDT believes that the current language addresses the various arrangements that could exist between the Planning Coordinator and Transmission Planner, better than the proposed language. If agreement is not reached, both the Planning Coordinator and the Transmission Planner would be required individually to perform all of the required studies. No change made.

Organization	Yes / No	Question 1 Comment
Requirement R8 – Each planner is required to distribute its Planning Assessment to all adjacent planners (Transmission Planners and Planning Coordinators). Requirement R8, Part 8.1 - The SDT does not believe that a time limit for commenting on a Planning Assessment is required. Beyond responding to the comment, other actions by the planner are at the discretion of the planner. No change made.		
Hydro One Networks Inc.	No	Other than a few changes related to Footnotes 9 and 12 of Table 1 and VSLs, the other changes in the April 15, 2011, draft are minor. The concerns of the industry on several important issues have not been sufficiently addressed in this draft (see our response to Question 3).
Response: Please see the response to Question 3.		
Manitoba Hydro	No	-R2.1.4 and R2.4.3: 'Expected transfers' should be replaced with 'Firm Transmission Service and Interchange' to correlate to R1 (R1.1.5 states 'Known commitments for Firm Transmission Service and Interchange' must be represented in system mode
Response: Requirement R2, Parts 2.1.4 and R2, Part 2.4.3 use the more inclusive term - Expected transfers – for sensitivities. The SDT does not want to unnecessarily restrict the transfers that could be evaluated as a part of a sensitivity study. No change made.		
Associated Electric Cooperative Inc	No	R2.4.1:The SDT has put a stronger emphasis on dynamic load behavior in stability studies (FIDVR, induction motor loads, etc) to be included in the peak models. The standard does indicate that "An aggregate System Load model which represents the overall dynamic behavior of the Load is acceptable." We feel that this should be clarified to ensure that the current modeling processes address what NERC desires with this requirement. At a minimum, we recommend that a grace period be implemented to account for any regional modeling practices which need time to implement dynamic load behavior per the draft standard. R2.5:It is our understanding that the Long-Term Transmission Planning Horizon does not require the sensitivity analysis which is required in R2.4 for the Near-Term Transmission Planning Horizon for the stability portion of the studies. R2.7:It is our understanding that Corrective Action Plan(s) do not need to be developed for performance violations observed in the sensitivity analysis (steady state and stability) unless the violation is observed in several sensitivities as it is indicated in R2.7.2: "Include actions to resolve performance deficiencies indentified in multiple sensitivity studies or provide rationale for why actions were not necessary". We feel

Organization	Yes / No	Question 1 Comment
		that this needs to be further clarified. R3.3.1:This requirement indicates that steady state analysis should include the effect of ride-through voltage limitations of generating units. We are having difficulty seeing how this is a steady-state issue. Generally one would expect a generator to experience ride-through voltage issues during faults. Per Table 1, P1.1 already require generator outages be taken - wouldn't that cover this issue? We feel that this needs to be further clarified. R3.4.1:This requirement states that "Transmission Planners shall coordinate with adjacent Planning Coordinators and Transmission Planners to ensure that Contingencies on adjacent Systems which may impact their Systems are included in the Contingency list". We feel that the coordination requirement should be removed from the standard as this will result in a massive increase in workload/time required to perform the TPL studies. AECI has several ties to adjacent Transmission Planners and Planning Coordinators - it will be a very time intensive task to coordinate with all of these parties. If the standard wants to ensure that the Contingencies overlap - we can agree to that, however we feel that the SDT needs to give some firm clarity on how far to go with it (how many buses away, only include ties, etc?). R4.1.2:We would like clarification on what is mean by "apparent impedance swings". R4.3.1:Is the intent of the SDT to require that generic or actual relay models be added to the stability models? We feel that this needs to be further clarified. R8:This requirement states that the Planning Assessments shall be distributed within 90 days of their completion to adjacent Planning Coordinators, Transmission Planners, and functional entities that have a reliability need (3rd Interconnection Customers?). We do not agree with the mandatory requirement of distributing the results of our TPL studies: We consider this information to be CEII We can agree to distribute the results upon request, but do not agree with the 30 day timeframe as more time will be needed to sign applicable Non-Disclosure Agreements, etc.

Response: Requirement R2, Part 2.4.1 – The SDT has allowed flexibility for the planner to determine how to meet this requirement. The implementation plan has allowed at least 24 months for coordination and development of modeling practices. No change made.

Requirement R2, Part 2.5 – Sensitivities are not required for years in the Long-Term Transmission Planning Horizon.

Requirement R2, Part 2.7 – Your understanding of the need for Corrective Action Plans to address deficiencies identified by sensitivity studies is correct. The SDT believes that the proposed language is clear. No change made.

Organization	Yes / No	Question 1 Comment
Requirement R3, Part 3.3.1 – Within the steady state analysis, the planner is required to represent the actual state of each generator based on the system response to a contingency and this includes voltage ride-through for generators. Table 1, P1-1 does not address this issue, since it is only a single generator outage and the requirements of Requirement R3, Part 3.3.1 could be a generator out of service (because it doesn't ride-through) as a result of a more severe contingency. No change made. Requirement R3, Part 3.4.1 – The SDT added the requirement to coordinate Contingency lists to ensure that these lists do not omit Contingencies on adjacent systems that may cause performance concerns. The SDT believes that most planners are already considering outages on the fringes of their neighbors system to ensure that they meet the performance requirements. The SDT does not agree that this will be a massive increase in workload for planners. No change made. Requirement R4, Part 4.1.2 – The "apparent impedance swing" is the trajectory of changes in the apparent impedance seen by a distance relay for various system and fault conditions. In the case contemplated in Requirement R4, Part 4.1.2, it is the trajectory seen by the distance relay for the initial fault and the subsequent generator(s) pulling out of synchronism. If that trajectory were to come within the tripping characteristic of the relay for a sufficient length of time, the relay would cause its associated line to trip. No change made. Requirement R4, Part 4.3.1, bullet 3 – The planner may reflect the effects of either generic or actual relay models. No change made. Requirement R8 – The SDT believes that 30 days should be adequate time to get the necessary agreements in place to make the Planning Assessment available. No change made.		
National Grid	No	R2.8.2We recommend this requirement be clarified with the following modification: The Corrective Action Plan shall:2.8.1. List System deficiencies and the associated actions needed to achieve required System performance. 2.8.2. Be reviewed in subsequent annual Planning Assessments for continued validity and implementation status of planned modifications to System Facilities and Operating Procedures.
Response: The proposed change of "identified" to "planned modifications to" does not change the proposed requirement or add clarity. No change made.		
Consolidated Edison Co. of NY, Inc.	No	Requirement R1.1.5: Delete "and Interchange." The inclusion of other than Firm transactions (e.g. economic transactions in Interchange) in a base power flow case utilized for planning/designing the interconnected system blurs the boundary between reliability issues and purely economic issues. Reliability issues are issues that a Transmission Owner (TO) must address for the purpose of meeting its load demand, and are defined by the application of well established reliability standards and criteria that are based on the electrical characteristics of the interconnected system, but without economic considerations. Instead, economic transactions are types of transactions that a TO may enter into once its load obligations are met, and are evaluated based on economic parameters that are markedly different from the aforementioned reliability criteria (e.g. congestion costs). Modeling all types of transactions in a power flow

Organization	Yes / No	Question 1 Comment
		case without distinction detracts from the accuracy and validity of either assessment (reliability and economic).
Response: Requirement R1, Part 1.5 does not require Interchange for economic purposes. The requirement is to represent "Known commitments". No change made.		
Nebraska Public Power District	No	The existing TPL-001 through TPL-004 Standards and Requirements are clear and concise. The new merged TPL-001-1 Standard and Requirements is no longer clear and concise. Further, the modification made to allow an SPS to trip a remote generator for an N-1 (TPL-002) type of event is a degradation of system reliability. Transmission system facilities should be added to maintain stability for a new generator interconnection for any N-1 Category B event. An SPS should not be relied upon for a Category B event, an SPS should only be allowed for Category C & D (TPL-003 & TPL-004) type events.
Response: The SDT believes that there is much less ambiguity in the proposed standard than the existing standards. There is no restriction in the existing TPL-002-1 on a planner's ability to utilize an SPS to trip a remote generator for a Category B event and the SDT did not change this. No change made.		
Northeast Power Coordinating Council	No	The wording of Part 1.1.2, "known outages...with a duration of at least 6 months" should be revised to "...at least 1 year". Also for consideration is that "known outages...with a duration of at least 6 months" are dealt with in operational studies rather than planning studies. Any adverse impacts that these outages might have are mitigated by operational decisions rather than planning decisions within a 6 month horizon. Moving this requirement out of the TPL Standard to an operational standard should be considered. Make the wording consistent between 2.1 and 2.2 as it relates to qualified past studies. Specifically:Parts 2.1.2, 2.1.4, 2.1.5The language of requirements 2.1.4 and 2.4.3 allowing the performance of one or moresensitivities appears to be inconsistent with language in 2.7.2. 2.7.2 requires multiplesensitivities to determine if actions to resolve performance deficiencies are necessary.Will varying only one measurable quantity several times in multiple simulationssatisfy multiple sensitivity studies or just one sensitivity study? The numbers and types of required sensitivity studies is unclear, and subject to interpretation by PCs and TPs. The current wording in Part 2.1.5, "spare strategy", appears to be open-ended regarding the number of

Organization	Yes / No	Question 1 Comment
		permutations to be analyzed. It should be restricted to assessing only one piece of equipment being unavailable or outaged at a time. 2.1.5 should be consistent with R2 and 2.1 regarding the use of the terms assessment and studies. As with the preceding comment regarding Part 1.1.2, moving this requirement out of the TPL Standard and to an operational standard should be considered.It is unclear if the last sentence of R2.1.5 allows for the curtailment of firm transmission service before the application of category P0, P1 and P2 events. This last sentence states:"...with the conditions that the System is expected to experience during the possible unavailability of the long lead time equipment." The wording in Part 2.2 "be supported by the following annual current study, supplemented with qualified past studies" should be replaced with the similar statement in Part 2.1: "be supported by current annual studies or qualified past studies". Part 2.7.1 lists potential system actions to address System deficiencies. It is suggested that this list be moved to a guideline or white paper. The wording in Part 8.1 needs to be amended to restrict comments to the most recent assessment only. Contingencies on back to back HVDC installations are not mentioned in the standard. The treatment of combined cycle facilities (all units in outage?) needs to be clarified, as well as Footnote 7 of Table 1 requiring clarification. In Table 1, Event 1 of Category P2 and related Footnote 7 are not clear because of the use of the word "possibly". If the intension is to simulate the line end opening condition of tapped lines, this should be clearly stated in the table (without reference to "Opening of a line section" and use of different language in the footnote). From Table 1b: "Consequential Load Loss as well as generation loss is acceptable as a consequence of any event excluding P0." Firm Transmission Services Loss is also acceptable and should be added (particularly in P1 loss of a single pole of a DC line for which the transfer is reduced accordingly to the remaining pole capability).
Response: Requirement R1, Part 1.1.2 does not address the outages in the operational time frame. However, if a planner knows that a System component is going to be out of service for more than 6 months, the planner must model the component outage in the appropriate models and evaluate the System to ensure that the System meets the performance requirements of the standard. No change made. Requirement R2, Part 2.1 and 2.2 – The SDT left the requirement to conduct the annual study on one of the study years in the Long-Term Planning Horizon to		

Organization	Yes / No	Question 1 Comment
ensure that the planner would conduct a new study annually to evaluate the System improvement needs in the Long-Term Planning Horizon. No change made. Requirement R2, Part 2.1.4 and 2.4.3 each require two studies on sensitivity cases, but more studies can be performed by the planner. Requirement R2, Part 2.7.2 states that Corrective Action Plans are required (or rationale for why they are not needed) are required if performance deficiency exists in multiple sensitivity studies, not just one study. No change made. Requirement R2, Part 2.1.5 requires the study of each major Transmission equipment outage, consistent with spare equipment strategy, for System normal and P1 and P2 Contingencies. It does not require the study of P1 and P2 Contingencies with more than one major Transmission equipment, except for other equipment that are modeled out as "Known outages" consistent with Requirement R1, Part 1.1.2. No change made. Requirement R2, Part 2.1.5 is a planning requirement to ensure that an entity's spare equipment strategy is considered during the development of the Planning Assessment. The curtailment of Firm Transmission Service (FTS) for the situation outlined would be considered curtailing FTS for Normal System conditions and is not allowed. No change made. Requirement R2, Part 2.1 and 2.2 – The SDT left the requirement to conduct the annual study on one of the study years in the Long-Term Planning Horizon to ensure that the planner would conduct a new study annually to evaluate the System improvement needs in the Long-Term Planning Horizon. No change made. Requirement R2, Part 2.7.1 – The list represents examples, but not an exhaustive list of actions that could make up a Corrective Action Plan. No change made. Requirement R8, Part 8.1 - The SDT does not believe that a time limit for commenting on a Planning Assessment is required. Beyond responding to the comment, other actions by the planner are at the discretion of the planner. No change made. Table 1, P1 {back to back DC - The contingent loss of back to back HVDC facilities is included as a transformer. Footnote 5 states, in part, that "Requirements which are applicable to transformers also apply to variable frequency transformers and phase shifting transformers. Therefore, the SDT has not explicitly included back-to-back HVDC as a separate Contingency. No change made. Combined cycle generation outages are expected to be modeled in the manner that they would be tripped, per Requirement R3, Part 3.3.1 and Requirement R4, Part 4.3.1. Therefore, if the outage of one generator causes more generation to be lost (via the Protection System or other automatic controls are expected to disconnect), then, the entire amount of generation lost must be modeled for that specific contingency. No change made. Table 1, footnote 7 – The SDT added the footnote to further explain its intent for P2-1 and to ensure that the planner assess the voltage of a load bus that was on a radial line. The word "possibly" was used since having load on a radial is not always the outcome of opening one end of a line section. No change made. Table 1, Top note 1b – The SDT disagrees that Firm Transmission Service (FTS) may be interrupted for all events. The events where the interruption of FTS is not permitted are shown with a "No" in the column titled "Interruption of Firm Transmission Service Allowed", however, footnote 9 clarifies that interruption of Firm Transmission Service can be used as both a corrective action and system adjustment as permitted within Table 1. For the specific issue raised, loss of a single pole of a DC line, to the extent the availability of the DC pole is a condition of the transfer being viable, footnote 4 may also address the commenter's		

Organization	Yes / No	Question 1 Comment
concern. No change made.		
Ameren	No	There were a number of comments made on the previous draft of TPL-001-2 for which there were few, if any, changes made to the latest draft of the standard. Specifically:Requirement R1 does not address normal (pre-contingency) operating procedures or system configurations. Language should be added to the requirement (possibly as an additional Requirement R1.1.7) to include normal operating procedures or system configurations in place prior to any contingency occurring. Requirement R2.4.1, which addresses dynamic load modeling, has been a cause for concern because of the lack of guidance regarding reasonable induction motor representation as opposed to generic load models. While it is recognized that the effort to simulate the effects of induction motor loads is important, it is premature to include such modeling as part of the requirements for this standard. In addition, it appears that only the peak load model in R2.4.1 is required to represent expected dynamic behavior of Load. Such load models, if adopted should represent dynamic behavior of the load for all dynamic studies.
Response: The SDT posted a redline draft against the last posted draft and also posted a redline draft against the previous ballot draft. The SDT addressed many important issues that were raised during the first ballot. The SDT did not include all of the different procedures that are permitted. Normal operation procedures or system configuration may be utilized as long as they are consistent with the way the System would be operated and not inconsistent with the requirements within the standard. Requirement 2, Part 2.4.1 – One focus of dynamic Load model requirement in Part 2.4.1 is “considering the behavior of induction motor Load”. The areas of concern for induction motor Load are the Peak Load periods since Fault Induced Delayed Voltage Recovery (FIDVR) is primarily a concern at high Load levels with a high penetration of induction motor Loads. The SDT has spelled out this requirement in the Peak Load studies but did not include the explicit requirement, with focus on induction motor Load, for the other Load periods. Even though the standard doesn’t have the explicit requirement for other Load levels, Requirement R1 includes the statement “shall represent projected System conditions”, so the planner cannot ignore the dynamic behavior of the Load for those other Load periods. No change made.		
Western Area Power Administration	No	We concur that the standard is an improvement over previous drafts, but we vote "No" to the existing draft and request additional clarifications and/or modified language for a re-circulated vote prior to adoption. The following are areas where we suggest improvement or have questions:Please further define Consequential and/or Non-Consequential Load Loss: Does the Consequential Load Loss definition include underfrequency or undervoltage load shedding installed to protect transmission system reliability? Does the Consequential Load Loss definition include load tripped by a Special Protection System (SPS) or a

Organization	Yes / No	Question 1 Comment
		Remedial Action Scheme (RAS)? Either how underfrequency and undervoltage load shedding or how load shedding by a RAS relates to Consequential Load Loss should be clear in the Consequential and/or Non-Consequential Load Loss definition of the approved version of this NERC standard. Why is Near-Term Tranmission Planning Horizon deleted from the definitions of Terms Used in this Standard, yet it is used throughout the standard? This definition should remain. R1.1.5: How are “known commitments for Firm Transmission Service” to be modeled and tracked in power flow cases? Is it acceptable for Transmission Planners to simply assume what the ultimate sources and ultimate sinks are for each firm transmission service commitment or are Transmission Planners to know exactly which ultimate sources and ultimate sinks are associated with each commitment and to track each one accordingly in each power flow case?Assuming the intent here is reliability based and not marketing based, is the application of Firm Transmission intended to apply to reliability designated ‘paths’? Most all Firm Transmission service contracts have caveats for unplanned interruption and such agreements should qualify as “re-dispatch” per Footnote 9? R2.1.5: If a group of utilities were to develop and manage among themselves a coordinated spare equipment program, such that the risk to any one of its participating entities of experiencing a significant unavailability for any major Transmission equipment that has a lead time of one year or more is deemed not significant, then would those utilities still have to do the studies required by R2.1.5 to evaluate the system impact of extended outages of such equipment?Scenario for Clarification: Short of spare equipment for items with a greater than 1 yr lead time, assessment studies are required to include sensitivities and operating plans for sustained loss of these equipment items, as a prior outage. For example, if an EHV facility is lost for more than 1 yr, and firm transmission interruption is not allowed, it appears the only compliant alternative (to a redundant facility) is a redispatch plan that is well documented and accepted by all stakeholders, per Footnote 9. R2.3: Is only the 5-year Near-Term Transmission Planning Horizon case required for the annual short-circuit analysis? R2.4.1: How is the dynamic modeling of induction motor Loads to be developed by the Transmission Planners? Is it acceptable for Transmission Planners to assume the same induction motor modeling as has generally been assumed and applied by most Transmission Planners throughout the Western Interconnection or will the induction motor modeling have to be based upon the type and amount of actual

Organization	Yes / No	Question 1 Comment
		induction motors installed in the system? R2.5: Does NERC have a particular technical rationale about what determines “proposed material generation additions or changes?” R2.6.2: Does NERC have a particular technical rationale about what determines “material changes?” R2.7.3: Please define “beyond the control” under Definition of Terms Used in Standard. This is an important concept. Without NERC definition, this term is highly debatable and should be eliminated. Scenario for Clarification: If the stakeholder rate payers do not approve expenditures for facility improvements required to eliminate non-consequential load loss, is this beyond the control of the Transmission Planner? Rate payers should be able make the ultimate free market choice determination of risk versus cost associated with their reliability. Otherwise market interests (particularly generation) disproportionately pressure excessive reliability based improvements that must be borne by all rate payers. R3.3.1: Please define “relay loadability limit” under Definitions of Terms Used in Standard. This is an extremely important concept. This term has been used quite commonly for decades and is now used in this latest proposed standard. Without NERC definition, this term is highly debatable and should be eliminated. Scenario for Clarification: If PRC-023 is met whereby all “relay loadability limits” are set at least 150% of the highest thermal limiter (0.85 voltage and 30 lagging powerfactor) this sensitivity would justifiably not be needed so long as verification is shown that no element overloaded greater than 150%. R3.1 and R3.4: The interrelation between these two paragraphs needs additional clarification. R3.1 calls for verification via studies that the BES meets Table 1 performance criteria based on the contingency list resulting from R3.4. However, R3.4 states that the contingency list used to meet R3.1 only need include “Those planning events in Table 1, that are expected to produce more severe System impacts on.....the BES” and the associated “rationale” for those chosen contingencies. Is NERC suggesting that the studies do not need to include all contingencies based on Table 1, so long as ample “rationale” is provided? However, the Transmission Planner must provide studies to determine if every contingency of Table 1 meets performance requirements. How are the “more severe” contingencies determined if the Table 1 contingencies are not evaluated comprehensively? It seems R3.4 could be eliminated and the contingencies be based simply on Table 1. Please define “more severe”, relative to less severe under Definitions of Terms Used in Standard, in an effort to help evaluate the suitability of a particular contingency for inclusion on this list. Looking at context, it appears that the purpose of this statement is to ensure that the worst contingencies are studied. Is the intent here simply to allow a given contingency to cover for a less severe or similar contingency and avoid duplicate simulations?

Organization	Yes / No	Question 1 Comment
		R3.4.1 and R4.4.1 Please include and define a reasonable number of contingent buses into adjacent systems that should be considered. No more than 2 are recommended for the standard. R3.5 and R4.5: How many of the "events in Table 1 that are expected to produce more severe system impacts" should the required evaluation identify and evaluate? To what extent should the evaluation focus on the "other" Extreme Events described under items 3.b and 2.f in Table 1, particularly if existing disturbance reports in the Western (or Eastern) Interconnection have recorded and evaluated the occurrence of particular events that have already created cascading? Because the requirement seems to involve a check for Cascading, perhaps some clarity could be provided with respect to the NERC definition of "Cascading." In particular, in the Cascading definition, how widespread is "widespread;" is the phrase "electric service interruption" only about the loss of firm load or could it also be only about the loss of firm generation or only about the loss of firm transmission service or is it about some combination of loss of firm load, loss of firm generation, and loss of firm transmission service; how large an area is meant by the expression "spreading beyond an area predetermined by studies" when the simulations that analyze the initiating Extreme Event will model the entire Western (or Eastern) Interconnection? So how does the study determine that the sequentially spreading service interruption has spread beyond the entire Western (or Eastern) Interconnection that is modeled in the simulation? Or is the term "area" meant to describe only that part of the Western (or Eastern) Interconnection that the Transmission Planner has evaluated for system impacts while ignoring impacts to the rest of the Interconnection? Table 1 - Planning Events, Steady State Only Note i: "The response of voltage sensitive Load that is disconnected from the System by end-user equipment associated with an event" seems to be included as items 2) and 3) under the Non-Consequential Load Loss definition. So, it seems acceptable to use this form of load loss to meet the stability performance requirements. However, the "Steady State Only" note i in Table 1 specifically does not allow its use to meet steady state performance requirements. Therefore, the "Steady State Only" note i in Table 1 should clarify why it seems acceptable to use it to meet stability performance requirements but not to meet steady state performance requirements. Table 1 - Planning Events, Category P2: Category P2 seems to include an unrelated mix of planning events ranging from a seemingly benign event (i.e., opening of a line section without a fault) to what would seem to be much more severe events (i.e., bus section fault or internal breaker fault). A clarification of why these planning events were lumped into the same Category P2 would be helpful to the Transmission Planner. Also, does the language in footnote 7 (i.e., "opening one end of a line section without a fault on a normally networked Transmission circuit ...") mean that P2-1 ("opening of a line section without a fault") should be

Organization	Yes / No	Question 1 Comment
		modeled as an open-ended line section? Table 1 - Planning Events, P2-2 (EHV) and P2-3 (EHV): For each of these planning events, its corresponding "Non-Consequential Load Loss Allowed" column should include a footnote 12 with each of the "No" boxes, similar to that allowed under the seemingly much less severe event P2-1 ("opening of a line section without a fault"). Otherwise, please explain why the seemingly much less severe P2 event (P2-1) has a footnote 12 exception for Non-Consequential Load Loss Allowed but the two seemingly more severe P2 events (P2-2 and P2-3) do not. Table 1 - Planning Events, P4-1 through P4-5 (EHV): For the stuck breaker planning events of P4-1 through P4-5 on the EHV system, their corresponding "Non-Consequential Load Loss Allowed" column should include a footnote 12 with their "No" box, similar to that allowed under the seemingly much less severe N 1 planning events (P1-1 through P1-5). Otherwise, please explain why the seemingly much less severe N 1 events (P1-1 through P1-5) have a footnote 12 exception for Non-Consequential Load Loss Allowed but the seemingly much more severe stuck breaker events (P4-1 through P4-5) do not. Table 1 - Planning Events, P5-1 through P5-5 (EHV): For the relay failure planning events of P5-1 through P5-5 on the EHV system, their corresponding "Non-Consequential Load Loss Allowed" column should include a footnote 12 with their "No" box, similar to that allowed under the seemingly much less severe N 1 events (P1-1 through P1-5). Otherwise, please explain why the seemingly much less severe N 1 events (P1-1 through P1-5) have a footnote 12 exception for Non-Consequential Load Loss Allowed but the seemingly much more severe relay failure events (P5-1 through P5-5) do not.

Response: The definition of Consequential Load Loss does not include underfrequency or undervoltage load shedding, since this Load is not interrupted by the "Protection System operation designed to isolate the fault". No change made.

The definition of Consequential Load Loss does not include Load tripped by a Special Protection System (SPS) or a Remedial Action Scheme (RAS), since this Load is not interrupted by the "Protection System operation designed to isolate the fault". No change made.

The definition of Near-Term Transmission Planning Horizon is now an approved NERC Glossary Term. No change made.

Requirement R1, Part 1.1.5 (Known commitments for Firm Transmission Service and Interchange) is required to ensure that planners consider those transactions that have been committed to and meet the system performance requirements. "How" the planners account for these commitments should be developed by the planner in accordance to all of the regulatory and market rules that apply to them. No change made.

Requirement R2, Part 2.1.5 does not require a planner to study the unavailability of major long lead time equipment if the entity's spare equipment strategy could

Organization	Yes / No	Question 1 Comment
not result in the unavailability of that equipment for one year or more. No change made. Requirement R2, Part 2.3 requires the short circuit analysis only for the years of the Near-Term Transmission Planning Horizon. No change made. RequirementR2, Part 2.4.1 – The SDT believes that the planner must consider the dynamic behavior of its System load and develop a representative model, however, the SDT should not dictate "how" the load should be modeled. No change made. Requirement R2, Part 2.5 does not specify "how" an entity determines that "proposed material generation additions or changes" have occurred. It is up to each entity to develop its technical rationale for its determination. No change made. Requirement R2, Part 2.6.2 does not specify "how" an entity determines that "material changes" have occurred. It is up to each entity to develop its technical rationale for its determination. No change made. Requirement R2, Part 2.7.3 has been included to account that certain Corrective Action Plans may not be able to be implemented due to circumstances that the planner cannot control. The SDT expects that these situations will be limited and that the impact to BES will be limited to interrupting Non-Consequential Load if the Contingency were to occur. Due to the wide variety of circumstances across North America, the SDT did not believe that it was appropriate to articulate the acceptable set of conditions. No change made. Requirement R3, Part 3.3.1 utilizes the term "relay loadability limits" as it is utilized in the PRC standard. No change made. Requirement R3, Parts 3.1 and 3.4 together require the planner to create a list of the "more severe" Contingencies, along with the rationale for "why" those Contingencies were selected, that will be simulated to ensure that the System meets the performance requirements. This language was included to be consistent with the existing TPL standards that do not require the planner to run simulations of all possible Contingencies. No change made. Requirements R3, Part 3.4.1 and Requirement R4 Part 4.4.1 do not include "how" to define the Contingencies in adjacent systems that should be included since it will be variable based on the conditions of the System. It is the responsibility of the planners to coordinate the list of Contingencies to ensure BES reliability. No change made. Requirement R3, Part 3.5 and Requirement R4 Part 4.5 require the planner to identify the "events in Table 1 that are expected to produce more severe system impacts". The number of "events" that should be included in the list are a "how" that the planner must determine. No change made. Table 1, Extreme Events Steady State 3b and Stability 2f are included to ensure that the planner considers "operating experience" when determining the extent of Contingency analysis to conduct for the entity's Extreme Event simulations. The term "widespread" categorizes those events that are more far-reaching than the Local Area events identified in Extreme Events Steady State 2 a-e. No change made. Table 1, Top note 'i' Steady State Only does not apply to Stability studies. Therefore, voltage sensitive Load disconnected by end-user equipment may be used during Stability simulations. The planner should not depend on this voltage sensitive Load being disconnected to meet the performance requirements (steady state after the system transient reaction ends) but this Load should be disconnected from the System for the Stability simulations to accurately represent how the		

Organization	Yes / No	Question 1 Comment
System will respond. No change made. Table 1, P2 contains single Contingency events that have the same performance requirements. No change made. Table 1, P2-1 covers the opening of line section without a fault and Footnote 7 clarifies that the line section may be energized from one end and still serving Load. The expectation is that both situations are evaluated when appropriate. No change made. Table 1 P2-2 (EHV) and P2-3 (EHV) do not allow the exception allowed by Footnote 12. The SDT believes that the EHV system should be planned to handle these single Contingencies without Non-Consequential Load Loss. No change made. Table 1, P4-1 through P4-5 (EHV) does not allow the exception allowed by Footnote 12. The SDT believes that the EHV system should be planned to handle these Contingencies without Non-Consequential Load Loss. No change made. Table 1, P5-1 through P5-5 (EHV) does not allow the exception allowed by Footnote 12. The SDT believes that the EHV system should be planned to handle these Contingencies without Non-Consequential Load Loss. No change made.		
Progress Energy		First, Progress Energy ("PE") notes that many changes to the Requirements language have been appropriate or have improved upon the language of the previous drafts, and PE commends the SDT in this. PE does have concerns, however, with the language in R8 and its corresponding Measure M8, and therefore must select 'no' for Q1 and provide comments. PE disagrees with the language of R8 primarily to the extent that the use of the verb “distribute” with respect to communicating Planning Assessments leads the reader to M8, which lacks language that would provide for the optimal correlation with R8. Regarding the M8 language, PE feels that the term “demonstration of a public posting” is a valid action in demonstrating compliance with R8 and thus should be more clearly described as one of several acceptable methods of distributing Planning Assessments. In addition, given the appropriate concern that NERC and FERC have recently raised regarding Cyber threats and the need for additional Cyber Security measures, PE feels that the public posting language should contain a qualification regarding the security of CEII information. PE thus recommends that an appropriate phrase to use would be “demonstration of a secure public posting”, thereby making clear that a public posting would not be a website accessible to just anyone due to CEII concerns.
Response: Requirement R8 - The SDT agrees that posting is an acceptable method of distributing but the intent of the standard requirement is to ensure that affected parties obtain the Planning Assessment. Measure M8 clarifies that posting is acceptable but not the only way to meet the requirement. While the SDT recognizes that certain planning information is covered by CEII requirements, the responsibility to protect that information already resides with the entity and is therefore not needed within this standard. No change made.		

Organization	Yes / No	Question 1 Comment
SERC Planning Standards Subcommittee	Yes	
SPP Reliability Standards Development Team	Yes	
MRO's NERC Standards Review Forum	Yes	
BC Hydro	Yes	
Entergy Services	Yes	
Imperial Irrigation District	Yes	
Arizona Public Service Company	Yes	
American Electric Power	Yes	
Duke Energy	Yes	
Transmission Strategies, LLC	Yes	
NIPSCO	Yes	
Muscatine Power and Water	Yes	
ITC	Yes	
Tri-State Generation and Transmission Assn., Inc.	Yes	In general, revisions are editorial and seem to have improved the overall document.

Organization	Yes / No	Question 1 Comment
Pepco Holdings Inc	Yes	Pepco Holdings Inc supports the proposed revisions.
Puget Sound Energy, Inc.	Yes	We Appreciate SDTs efforts in bringing clarity to the TPL standards.
South Carolina Electric and Gas	Yes	
Georgia Transmission Corporation	Yes	
American Transmission Company, LLC	Yes	
TVA TP&C	Yes	
Xcel Energy	Yes	
MISO	Yes	
Consumers Energy	Ballot Comment	We agree with the comments of MISO.
Oncor Electric Delivery Company LLC	Yes	
Response: Thank you for your support.		

2. **The SDT has made revisions to the VRF and VSL of TPL-001-2 which will be part of a non-binding poll with this posting based on industry comments and the Quality Review. Do you agree with these changes? If you do not support these changes or you agree in general but feel that alternative language would be more appropriate, please provide specific suggestions in your comments.**

Summary Consideration: Comments received were predominantly about individual assessments of whether a VRF or VSL had been assigned correctly and some pointed out what they thought were incorrect interpretations of established guidelines by the SDT. The SDT followed guidelines established by FERC and NERC in these areas and therefore no changes were made in this regard.

In two particular instances, inconsistencies between wording in the requirement and VSL were pointed out and the SDT made the following changes due to those comments:

R1. VSL – Severe (third part): The responsible entity's System model did not use ~~the latest~~ data consistent with ~~the data~~that provided in accordance with the MOD-010 and MOD-012 standards and other sources, including items represented in the Corrective Action Plan.

R8 VSL	The responsible entity distributed its Planning Assessment results to adjacent Planning Coordinators and adjacent Transmission Planners but it was more than 90 days but less than or equal to 120 days following its completion. OR, The responsible entity distributed its Planning Assessment results to functional entities having a reliability related need who requested the Planning Assessment in writing but	The responsible entity distributed its Planning Assessment results to adjacent Planning Coordinators and adjacent Transmission Planners but it was more than 120 days but less than or equal to 130 days following its completion. OR, The responsible entity distributed its Planning Assessment results to functional entities having a reliability related need who requested the Planning Assessment in writing but	The responsible entity distributed its Planning Assessment results to adjacent Planning Coordinators and adjacent Transmission Planners but it was more than 130 days but less than or equal to 140 days following its completion. OR, The responsible entity distributed its Planning Assessment results to functional entities having a reliability related need who requested the Planning Assessment in writing but	The responsible entity distributed its Planning Assessment results to adjacent Planning Coordinators and adjacent Transmission Planners but it was more than 140 days following its completion. OR The responsible entity did not distribute its Planning Assessment results to adjacent Planning Coordinators and adjacent Transmission Planners.

	it was more than 30 days but less than or equal to 40 days following the request	it was more than 40 days but less than or equal to 50 days following the request.	it was more than 50 days but less than or equal to 60 days following the request.	OR The responsible entity distributed its Planning Assessment results to functional entities having a reliability related need who requested the Planning Assessment in writing but it was more than 60 days following the request. OR The responsible entity did not distribute its Planning Assessment results to functional entities having a reliability related need who requested the Planning Assessment in writing.

Organization	Yes / No	Question 2 Comment
Consolidated Edison Co. of New York	Ballot Comment	Requirement R1.1.5: Delete “and Interchange.” The inclusion of other than Firm transactions (e.g. economic transactions in Interchange) in a base power flow case utilized for planning/designing the interconnected system blurs the boundary between reliability issues and purely economic issues. Reliability issues are issues that a Transmission Owner (TO) must address for the purpose of meeting its load demand, and are defined by the application of well established reliability standards and criteria that are based on the electrical characteristics of the interconnected system, but without economic considerations. Instead, economic transactions are types of transactions that a TO may enter into once its load obligations are met, and are

Organization	Yes / No	Question 2 Comment
		evaluated based on economic parameters that are markedly different from the aforementioned reliability criteria (e.g. congestion costs). Modeling all types of transactions in a power flow case without distinction detracts from the accuracy and validity of either assessment (reliability and economic).
Response: The SDT selected Known commitments for Firm Transmission Service and Interchange to separate the planning requirements of commitments from the economic transactions. No change made.		
San Diego Gas & Electric	Ballot Comment	The clarity of this standard is getting worse. Our earlier comments did not seem impacting. At this point, we believe the existing TPL-001-0.1, TPL-002-0a, TPL-003-0a and TPL-004-0 provide much better clarify for us to comply with the TPL standards.
Response: The SDT believes that there is much less ambiguity in the proposed standard than the existing standards, based on feedback from previous postings. . No change made.		
Alberta Electric System Operator	Ballot Comment	The AESO casts an abstain vote as the VSLs and VRFs in Alberta are established by provincial authorities.
Response: Thank you for your response.		
Western Electricity Coordinating Council	Ballot Comment	I'm not certain that I agree with changing the VRF for R2 from Medium to High. I understand that it is accordance with the VRF guidelines, but I guess I disagree with the guidelines. I don't believe that any requirement with a planning time frame, if violated, could directly cause or contribute to bulk electric system instability, separation, or a cascading sequence of failures, or could place the bulk electric system at an unacceptable risk of instability, separation, or cascading failures, or could hinder restoration to a normal condition.
Response: The SDT is required to follow the VRF guidelines established by FERC, which apply to both operations and planning on equal footing. No change made.		
Florida Municipal Power Agency	Ballot Comment	FMPA has minor comments to help improve the clarity of the standard. R7 is not needed and administrative in nature. Instead is should say that an entity can use as evidence another entity's study, but not in the requirement and rather in the measures.

Organization	Yes / No	Question 2 Comment
		R8 is ambiguous, does the requirement require submitting the Planning Assessment only after receiving a written request, or automatic distribution to neighboring PCs and TPs without a written request, and to others with a reliability related need following a written request? Table 1, under first heading of "Steady State and Stability", bullet c should be removed since it is duplicative of the standard, and not entirely consistent with the standard (e.g., open to interpretation whereas the standard better clarifies how to study protection system operation)
Keys Energy Services City of Green Cove Springs	Ballot Comment	R7 is not needed and administrative in nature. Instead is should say that an entity can use as evidence another entity's study, but not in the requirement and rather in the measures. R8 is ambiguous, does the requirement require submitting the Planning Assessment only after receiving a written request, or automatic distribution to neighboring PCs and TPs without a written request, and to others with a reliability related need following a written request? Table 1, under first heading of "Steady State and Stability", bullet c should be removed since it is duplicative of the standard, and not entirely consistent with the standard (e.g., open to interpretation whereas the standard better clarifies how to study protection system operation)
Response: Requirement R7 ensures that there are no gaps between Transmission Planners or the Planning Coordinators that may cause reliability concerns. No change made. Requirement R8 requires the automatic distribution to neighboring Planning Coordinators and Transmission Planners without a written request and to others with a reliability related need following a written request. The SDT believes this is an important consideration and not ambiguous. No change made. Table 1, Bullet c under first heading, is not in conflict with the requirements. The SDT decided to include additional details in Table 1 so that it would have the basic information necessary for the planner to develop their simulations for their studies without always referring back to the requirements language. No change made.		
City of Austin dba Austin Energy	Ballot Comment	Previous TPL Standard balloting included the FERC Order that clarified footnote "b" regarding the planned or controlled interruption of electric supply for an N-1 event. In our view, a Registered Entity's Board of Directors, local public utility commission or customers should determine the acceptable level of service and the associated cost. This view is captured in footnote #12 of Table 1 in the TPL Standard and will be crucial to maintaining an Affirmative vote. Additionally, with respect to R2 (2.5), the value of annually assessing system stability for years 6-10 is

Organization	Yes / No	Question 2 Comment
		questionable. The requirement for stability assessment in years 6-10 should be limited to new generation interconnections or planned major transmission system improvements with regional impact. The standard should clarify the "material changes" that would necessitate stability planning assessments and documentation. Finally, The R8 requirement to distribute all Planning Assessment results to adjacent Planning Coordinators and Transmission Planners is excessive and cumbersome. Regarding R8, we suggest the following language: "Each Planning Coordinator and Transmission Planner shall distribute its Planning Assessment results to adjacent Planning Coordinators and Transmission Planners in accordance with the requirements of the applicable Reliability Coordinator. Any Registered Entity with a reliability-related need may submit a written request for the Planning Assessment results and the Transmission Planner or Planning Coordinator shall provide the latest Planning Assessment results within 30 days of such request."
Response: Footnotes 12 and 9 were translated from the BOT approved language from TPL-002-1, Footnote 'b'. No change made. For Requirement R2, Part 2.5, the SDT believes it is important to evaluate Stability when the planners are evaluating new generation additions or changes which can be more than 5 years in the future, as required in NERC Standard FAC-001-0. The SDT discussed defining 'material change' but did not believe that such a definition was appropriate in a continent-wide standard. With the wide variety in sizes and types of systems, the number of parameters that need to be considered, etc., there are too many variables involved. No change made. For Requirement R8, the SDT disagrees that the requirement is excessive and cumbersome and did not make the suggested change. In addition, the proposed language would place requirements on the Reliability Coordinators, who are not included in the Applicability for this standard, and they should not be involved in determining the extent of the distribution of the Planning Assessments.		
Southwest Power Pool Regional Entity	Ballot Comment	I'm voting affirmative, but I'd prefer to avoid having VSLs where the only choice is Severe. I'd like to see either some gradation or we should use a different term to clarify that the requirement is either met or not (binary) instead of Severe VSL.
Response: The SDT is required to follow the guidelines established by NERC and FERC. No change made. No change made.		
Arizona Public Service Co.	Ballot Comment	While AZPS generally supports this standard, AZPS cannot support the violation severity levels that are proposed in the recirculation ballot. AZPS believes the time frames set forth in the proposed security levels are unreasonably short (10 days) and should be extended to 30 days between each elevation in severity level. For these reasons, AZPS has changed its vote to "negative."

Organization	Yes / No	Question 2 Comment
Response: The SDT has followed the accepted guidelines for timeframes in the proposed VSLs. The SDT is required to follow the guidelines established by NERC and FERC. . No change made.		
Balancing Authority of Northern California NCR11118	Ballot Comment	SMUD believes believes that the VRF should be Medium, as are the VRFs for the other requirements related to conducting the assessments, rather than High.
Response: The SDT is required to follow the VRF guidelines established by FERC,.. No change made.		
Black Hills Corp	Ballot Comment	Black Hills is voting against the proposed VRF/VSL's based on the fact that the VRF for R2 was changed from Medium to High without any explanation.
Deseret Power	Ballot Comment	R2 was moved from medium to high without reason. Since it is long term it should remain medium.
California ISO	Ballot Comment	The VRF for Requirement R2 was changed from Medium to High without explanation. The other VRF's for assessment requirements continue to have a Medium VRF designation, and for consistency it would be appropriate for Requirement R2 to continue to have a Medium VRF designation.
Bonneville Power Administration	No	The VRF for R2 was changed from Medium to High without any explanation. Since the time horizon for R2 is Long Term Planning, BPA believes that the VRF should be Medium, as are the VRFs for the other requirements related to conducting the assessments, rather than High.
Arizona Public Service Company	No	With regards to R2, it appears that the VRF has changed from Medium to High without any justification; and with the time horizon of long term planning, AZPS believes there is no justification for changing it from Medium to High.
Idaho Power Company	Ballot Comment	The VRF for R2 was changed from Medium to High without any explanation. The time horizon for R2 is Long Term Planning and the Idaho Power believes that the VRF should be Medium, as are the VRFs for the other requirements related to conducting the assessments, rather than High.
Tucson Electric Power Co.	Ballot	This recommendation is based on the fact that the VRF for R2 was changed from Medium to High without any

Organization	Yes / No	Question 2 Comment
	Comment	explanation. The time horizon for R2 is Long Term Planning and it is believed that the VRF should be Medium, as are the VRFs for the other requirements related to conducting the assessments, rather than High.
Response: In the comment form for this posting, the SDT did address this issue as shown below: R2 – The VRF has been changed to High to reflect the importance of the Planning Assessment and to meet the latest guidelines. No change made.		
MidAmerican Energy Co.	Ballot Comment	Regarding Requirement 8, we do not believe that there is significant risk to the reliability of the BES if an annual Planning Assessment is not distributed to another entity or if a documented response to Planning Assessment comments is not provided within 90 days of a request. Requirement 8 is an administrative requirement that adds little to improve reliability. We recommend that the VRF for Requirement 8 remain "Low", rather than be changed to "Medium".
Response: In assigning the VRF for Requirement R8, the SDT is required to follow the guidelines established by NERC and FERC. No change made.		
Independent Electricity System Operator	Ballot Comment	IESO is generally supportive of the draft of TPL-001-2 as evidenced by our previous AFFIRMATIVE vote during the last ballot. Further, IESO also supported the revisions to Footnote 'b' to Table 1 of the TPL standards under Project 2010-11. That revision was balloted and approved by the ballot pool in February 2011 and filed with FERC for approval in March 2011. The revised footnote has been incorporated into the current draft of TPL-001-2 as Footnotes 9 and 12 but the Commission, by letter to NERC dated May 17, 2011, has requested NERC to provide supplemental information before the revised Footnote 'b' could be approved. In light of FERC's request and the uncertainty regarding the final provisions of these footnotes, coupled with the ongoing work on Project 2010-17 for the revision of the BES definition and development of an Exception Process and the impact that may have, we respectfully suggest that the drafting team delay further work on TPL-001-2 pending FERC's ruling on NERC's petition seeking approval of the transmission planning standards that contain the revised Footnote 'b' to Table 1.
Response: The SDT believes that it is important to continue with the approval of this standard. If FERC directs changes based on TPL-002-1, Footnote 'b', they will be addressed with this project.		
Hydro One Networks, Inc.	Ballot	Hydro One Networks is casting a negative vote. Other than a few changes related to Footnotes 9 and 12 of Table 1 and VSLs, the other changes in the proposed draft are minor. The concerns of the industry on several

Organization	Yes / No	Question 2 Comment
	Comment	important issues have not been sufficiently addressed in this draft. For detailed comments please refer to our submission through the on-line comment form.
Response: Please see responses to on-line comments.		
Platte River Power Authority	Ballot Comment	VRF for R2 should be changed back to Medium. VRF for R8 should be changed back to Low.
Response: The SDT is required to follow the VRF guidelines established by NERC and FERC. . No change made.		
American Municipal Power	Ballot Comment	The VSLs appear to have a very low threshold for a SEVERE violation of the individual standard requirements for a planning standard. Please consider the impact of having arbitrarily low thresholds for SEVERE violations. The way the VSLs are set now, an honest interpretation or a small administrative mistake could result in a very high dollar penalty and would be construed as having a high correlation with causing a cascading outage by the media. I think we all just want the appropriate fines or sanctions for a violation and to have minimal fines or sanctions for accidental interpretations or menial paperwork based violations. Please consider another metric or raising the current thresholds.
Response: The SDT is required to follow the VSL guidelines established by NERC and FERC, which apply to both operations and planning on equal footing. No change made.VSL		
Florida Municipal Power Pool	Ballot Comment	A. Spare Equipment, R2.1.5 - The requirement reaches beyond the FERC directive. The directive was: "Accordingly, the Commission directs the ERO to modify the planning Reliability Standards to require the assessment of planned outages consistent with the entity's spare equipment strategy." So, the directive is only to address planned outage, not unplanned outages. Also note that the applicability to GSUs is ambiguous. "Transmission" is defined as: "An interconnected group of lines and associated equipment for the movement or transfer of electric energy between points of supply and points at which it is transformed for delivery to customers or is delivered to other electric systems." Is the "point of supply" the generator terminal, or the GSU high side terminal? B. Table 1, under first heading of "Steady State Only", bullet i is open to interpretation. Many utilities use steady state P-V analyses to study voltage stability and design UVLS systems in apart around those steady

Organization	Yes / No	Question 2 Comment
		state analyses. Would this bullet essentially eliminate P-V and Q-V studies and the related use of UVLS? C. R7 is not needed and administrative in nature. Instead is should say that an entity can use as evidence another entity's study, but not in the requirement and rather in the measures. D. R8 is ambiguous, does the requirement require submitting the Planning Assessment only after receiving a written request, or automatic distribution to neighboring PCs and TPs without a written request, and to others with a reliability related need following a written request? E. Table 1, under first heading of "Steady State and Stability", bullet c should be removed since it is duplicative of the standard, and not entirely consistent with the standard (e.g., open to interpretation whereas the standard better clarifies how to study protection system operation)
Response: Requirement R2, Part 2.1.5 ensures BES reliability by requiring the planner to assess the system for long lead time items based on the entities' spare equipment strategy. The footnotes in Table 1 clearly define the way transformers are evaluated. No change made. Table 1, Steady State and Stability, Item I does not restrict the use of UVLS since it only addresses equipment disconnected by end-user equipment. No change made. Requirement R7 ensures that there are no gaps between Transmission Planners or the Planning Coordinators that may cause reliability concerns. No change made. Requirement R8 requires the automatic distribution to neighboring Planning Coordinators and Transmission Planners without a written request and to others with a reliability related need following a written request. The SDT believes this is an important consideration and not ambiguous. No change made. Table 1, Bullet c under first heading, is not in conflict with the requirements. The SDT decided to include additional details in Table 1 so that it would have the basic information necessary for the planner to develop their simulations for their studies without always referring back to the requirements language. No change made.		
MRO's NERC Standards Review Forum	No	The NSRF recommends that the VRF for Requirement 8 remain "Low", rather than be changed to "Medium". We do not believe that there is significant risk to the reliability of the BES if an annual Planning Assessment is not distributed to another entities or a documented response to Planning Assessment comments is not provided within 90 days of a request. The findings in an assessment report are not urgent, but address system needs that will emerge over years in the future. In addition, entities with a reliability related need for Planning Assessment information generally have the means to make their own independent planning assessment of adjacent systems or other areas of interest.

Organization	Yes / No	Question 2 Comment
Minnkota Power Coop. Inc.	Ballot Comment	MPC echoes the comments of the MRO NSRS/F
Lincoln Electric System	Ballot Comment	Refer to comments submitted by the MRO NERC Standards Review Subcommittee.
Response: The SDT is required to follow the guidelines established by NERC and FERC.. No change made.		
Tri-State Generation and Transmission Assn., Inc.	No	Many of the sub-requirements of R2 do not warrant high risk VRFs, yet violation of any R2 sub-requirement would result in a "High Risk Factor" violation assessment. We believe that having so many sub-requirements can result in inaccurate overall severity classification. For example, skipping one study defined in R2.1.2 (Planning Assessments) for a particular time frame or load level would probably not result in a direct actual degradation in system performance, but would still result in a High Violation Risk Factor.
Response: The SDT is required to follow the VRF guidelines established by NERC and FERC, which apply to both operations and planning on equal footing.. No change made.		
Muscatine Power and Water	No	MP&W would like to recommend that the VRF for Requirement 8 remain "Low", rather than "Medium." It is our belief that there is not a significant risk to the reliability of the BES if an annual Planning Assessment is not distributed to another entities or a documented response to Planning Assessment comments is not provided within 90 days of a request. This is more administrative in nature. The findings in an assessment report are not urgent, but address system needs that will emerge over years in the future. Additionally, entities with a reliability-related need for Planning Assessment information generally have the ability to perform their own independent planning assessment of adjacent systems or other areas of interest.
American Transmission Company, LLC	No	ATC recommends that the VRF for Requirement 8 remain "Low", rather than be changed to "Medium". ATC does not believe that there is significant risk to the reliability of the BES if an annual Planning Assessment is not distributed to another entities or a documented response to Planning Assessment comments is not provided within 90 days of a request. The findings in an assessment report are not urgent, but address system needs that will emerge over years in the future. In addition, entities with a reliability related need for Planning Assessment information generally have the means to make their own independent planning assessment of adjacent systems or other areas of interest.

Organization	Yes / No	Question 2 Comment
Electric Reliability Council of Texas, Inc.	No	ERCOT ISO believes that the VRF for R8 should be "low". The distribution of the Planning Assessment is administrative in nature, the failure to distribute the Planning Assessment does not necessarily equate to not communicating the content of the assessment, and the consequence of not distributing the Planning Assessment does not immediately impact the reliability of the BES; thus it does not warrant a 'Medium' risk factor.
Response: The SDT is required to follow the VRF guidelines established by NERC and FERC. No change made.		
ReliabilityFirst	No	ReliabilityFirst generally agrees with the Violation Risk Factors (VRFs) but disagrees with the Violation Severity Levels (VSLs) for the following reasons:1. VSL for R1a. Under the last "Severe" VSL, the word "latest" should be removed to be consistent with the language in Requirement 1. This is a violation of the FERC Guideline 3: "Violation Severity Level Assignment Should Be Consistent with the Corresponding Requirement"2. VSLs for R2a. To be consistent with the language in Requirement 2, suggest modifying the last "Severe" VSL to state "The responsible entity failed to prepare an annual Planning Assessment of its portion of the BES" 3. VSLs for R3a. Under the last VSL under the "High" category, the word "perform" should be replaced with "simulate" to be consistent with the requirement. (e.g. "The responsible entity did not simulate Contingency analysis as described in Requirement R3, Part 3.3.") 4. VSL's for R4a. Under the last VSL under the "High" category, the word "perform" should be replaced with "simulate" to be consistent with the requirement (e.g. "The responsible entity did not simulate Contingency analysis as described in Requirement R4, Part 4.3."). 5. VSLs for R6a. To be consistent with the language in Requirement 6, suggest modifying the "Severe" VSL to state "The responsible entity failed to define and document, within their Planning Assessment, the criteria or methodology used in the analysis to identify System instability for conditions, as described in Requirement R6." 6. VSLs for R7a. Suggest adding the following language to the end of the "Severe" VSL; "for the Planning Assessment", to be consistent with the requirement. 7. VSL for R8a. Under all four categories of VSLs, any reference to "Planning Assessment" should be changed to "Planning Assessment results" to be consistent with the language in Requirement 8 (or more appropriately, the term "results" should be removed from Requirement 8). This is a violation of the FERC

Organization	Yes / No	Question 2 Comment
		Guideline 3: "Violation Severity Level Assignment Should Be Consistent with the Corresponding Requirement" b. Under the "Lower" VSL, it is unclear why there is a 30 day timeframe for the first VSL, while the "Moderate", and "High" VSLs have a 10 day timeframe. Based on FERC recommendations, suggest making the timeframe for all four VSL s, 10 day increments. c. VSLs need to be developed to deal with a violation of Part 8.1 (i.e. the PC or TP failed to provide a documented response to that recipient within 90 calendar days of receipt of those comments)

Response: 1. The SDT has corrected the language used as shown:

R1. VSL – Severe (third part): The responsible entity's System model did not use ~~the latest~~ data consistent with ~~the data~~that provided in accordance with the MOD-010 and MOD-012 standards and other sources, including items represented in the Corrective Action Plan.

2. The SDT believes that the wording shown must be taken in context and thus is clear. No change made.

3. & 4. The SDT believes the word 'perform' is consistent with the language used in the requirement. No change made.

5. The SDT sees the suggested change as unecessary and not providing any additional clarity as it is clear that the analysis is part of the Planning Assessment. No change made.

6. The entire standard is about the Planning Assessment and the SDT believes that this is clear in the language used. No change made.

7. The SDT has made the suggested change as shown below:

R8 VSL	The responsible entity distributed its Planning Assessment results to adjacent Planning Coordinators and adjacent Transmission Planners but it was more than 90 days but less than or equal to 120 days following its completion. OR,	The responsible entity distributed its Planning Assessment results to adjacent Planning Coordinators and adjacent Transmission Planners but it was more than 120 days but less than or equal to 130 days following its completion. OR,	The responsible entity distributed its Planning Assessment results to adjacent Planning Coordinators and adjacent Transmission Planners but it was more than 130 days but less than or equal to 140 days following its completion. OR,	The responsible entity distributed its Planning Assessment results to adjacent Planning Coordinators and adjacent Transmission Planners but it was more than 140 days following its completion. OR

Organization	Yes / No	Question 2 Comment			
		The responsible entity distributed its Planning Assessment results to functional entities having a reliability related need who requested the Planning Assessment in writing but it was more than 30 days but less than or equal to 40 days following the request.	The responsible entity distributed its Planning Assessment results to functional entities having a reliability related need who requested the Planning Assessment in writing but it was more than 40 days but less than or equal to 50 days following the request.	The responsible entity distributed its Planning Assessment results to functional entities having a reliability related need who requested the Planning Assessment in writing but it was more than 50 days but less than or equal to 60 days following the request.	The responsible entity did not distribute its Planning Assessment results to adjacent Planning Coordinators and adjacent Transmission Planners. OR The responsible entity distributed its Planning Assessment results to functional entities having a reliability related need who requested the Planning Assessment in writing but it was more than 60 days following the request. OR The responsible entity did not distribute its Planning Assessment results to functional entities having a reliability related need who requested the Planning Assessment in writing.

7b. The 30 days shown is according to the established guidelines as are the 10 day increments that follow. The SDT is required to follow the guidelines established by NERC and FERC. No change made.e.

7c. VSLs have been developed with regard to Requirement R8, part 8.1 and were shown in the posted version. No change made.

Organization	Yes / No	Question 2 Comment
ITC	No	ITC recommends revising R8 VSLs as follows:Lower VSLThe responsible entity distributed its Planning Assessment to known adjacent Planning Coordinators and known adjacent Transmission Planners but it was more than 90 days but less than or equal to 120 days following its completion. OR, The responsible entity distributed its Planning Assessment to functional entities having a reliability related need who requested the Planning Assessment in writing but it was more than 30 days but less than or equal to 40 days following the request. Moderate VSLsThe responsible entity distributed its Planning Assessment more than 30days but less than 60 days after subsequent requests by adjacent Planning Coordinators or adjacent Transmission Planners who were not sent copies upon completion of the Planning Assessment. OR, The responsible entity distributed its Planning Assessment to functional entities having a reliability related need who requested the Planning Assessment in writing but it was more than 40 days but less than or equal to 50 days following the request High VSLs - eliminate this section. i.e., no high VSLs only lower,moderate and severe Severe VSLsThe responsible entity distributed its Planning Assessment to functional entities having a reliability related need, adjacent Transmission Planners and adjacent Planning coordinators who requested the Planning Assessment in writing but it was more than 60 days following the request.
Response: 1. The suggested wording change is not consistent with the language used in the Requirement. Furthermore, the SDT does not believe that the word 'known' is necessary in this regard. No change made. 2. The suggested wording is not consistent with the language used in the requirement. Furthermore, the increment suggested would violate established guidelines. The SDT is required to follow the VSL guidelines established by FERC. No change made. 3. When dealing with incremental times in VSLs, the established guidelines indicate that all 4 types of VSL should be utilized. No change made. 4. The SDT believes the suggested change makes the VSL less clear. No change made.		
Manitoba Hydro	No	-The language "latest data" is used in the Severe VSL for R1, however "latest" was removed from R1 and M1. "Latest" should also be removed from the Severe VSL for consistency.-What is the rationale for changing the preparation of the Planning
Response: The SDT has corrected the language used as shown: **R1. VSL – Severe** (third part): The responsible entity's System model did not use ~~the latest~~ data consistent with ~~the data~~that provided in accordance with the		

Organization	Yes / No	Question 2 Comment
MOD-010 and MOD-012 standards and other sources, including items represented in the Corrective Action Plan.		
National Grid	No	R 2.0 We recommend that the VRF for this Planning Requirement remain at "Medium". The risks associated with Planning Requirements have a longer time horizon for corrective action than, for example, those risks associated with much shorter Operational time frames.
Response: The SDT is required to follow the VRF guidelines established by NERC and FERC. No change made.		
Independent Electricity System Operator	No	See our response to Q1.
Response: See response to Q1.		
Consumers Energy	Ballot Comment	We agree with comments submitted by MISO
MISO	No	Regarding Requirement 8, we do not believe that there is significant risk to the reliability of the BES if an annual Planning Assessment is not distributed to another entity or if a documented response to Planning Assessment comments is not provided within 90 days of a request. Requirement 8 is an administrative requirement that adds little to improve reliability. We recommend that the VRF for Requirement 8 remain "Low", rather than be changed to "Medium".
Response: The SDT is required to follow the VRF guidelines established by NERC and FERC. No change made.		
New York Independent System Operator	No	Requirement 8 is an administrative burden that adds no value to reliability. Comments have been provided on several past drafts highlighting this effect. The revisions made to the VRF and VSL for Requirement 8 further exacerbate this burden. One could conclude from observation of the VSLs and VRFs, that Requirement 8 was the most important requirement of TPL-001-1.Many Planning Coordinators and Transmission Planners have stakeholder processes that govern participation and notification. Further, FERC Order 890 requires stakeholder participation and transparent processes.
Response: The SDT is required to follow the VRF guidelines established by NERC and FERC.. No change made.		

Organization	Yes / No	Question 2 Comment
Ameren	No	The VRF for Requirement R8 should remain Low. There is no significant risk to the reliability of the BES if a Planning Assessment is not distributed to another entity, or if a documented response is not provided within 90 days of a request. The assignment of some VRFs are inconsistent with the importance of the requirements. R2 requires the development of an assessment and it is determined to have a high VRF. However, R3 and R4 require that studies be performed and these studies are determined to have a medium VRF. Performing the studies is essential to developing an assessment and more important to maintaining reliability. If the VRFs for R3 and R4 are correct, then the VRF for R2 should be no higher than medium. The VRF for R5 to develop a steady-state voltage criteria is determined to be medium. However, the VRF for R6 to develop instability criteria is determined to be low. If the VRF for R6 is correct, then the VRF for R5 should also be low.
Response: The SDT is required to follow the VRF guidelines established by NERC and FERC. No change made. The SDT agrees that studies are essential to the Planning Assessment but believes that the Planning Assessments are more than just the studies. For example, under the correct set of circumstances, an entity can use past studies in their Planning Assessment. Therefore, the SDT believes that the VRFs assigned are correct and in adherence with established guidelines. No change made. The SDT believes that having the criteria (Requirement R5) is more important for the reliability of the BES than documenting the methodology (Requirement R6). No change made.		
SERC Planning Standards Subcommittee	Yes	
SPP Reliability Standards Development Team	Yes	
Entergy Services	Yes	
Imperial Irrigation District	Yes	
Progress Energy	Yes	

Organization	Yes / No	Question 2 Comment
American Electric Power	Yes	
Duke Energy	Yes	
Transmission Strategies, LLC	Yes	
NIPSCO	Yes	
Puget Sound Energy, Inc.	Yes	
South Carolina Electric and Gas	Yes	
Georgia Transmission Corporation	Yes	
United Illuminating	Yes	
TVA TP&C	Yes	
ISO New England Inc.	Yes	
GDS Associates, Inc.	Yes	Agree in general.
Pepco Holdings Inc	Yes	
Northeast Utilities	Yes	
Oncor Electric Delivery Company LLC	Yes	
Response: Thank you for your support.		

3. **If you have any other comments on this Standard that you have not already provided in response to the prior questions, please provide them here.**

Summary Consideration: Several commenters stated that the SDT failed to address significant concerns and that only minor changes were made from the prior draft. The SDT believes that some stakeholders based their review on a red-line document of the TPL standard which only describes changes made following the Quality Review (QR) team review of the standard; shown as a red-line document http://www.nerc.com/docs/standards/sar/tpl-001-2_redline_to_last_posted_110415.pdf. A complete and thorough red-line of all changes made from the prior 3/01/10 ballot period to the version posted on the most recent ballot (concluded on 5/31/11) was posted and communicated after the start of the last comment period. A number of changes were made in response to industry feedback prior to the latest ballot. Those changes can be viewed at: http://www.nerc.com/docs/standards/sar/TPL-001-2_Redline_to_last_balloted.pdf.

A number of commenters indicated they cast a negative vote and recommended the SDT delay further work on TPL-001-2 pending FERC's ruling on the revised Footnote 'b' to Table 1 found in the existing TPL standards. The SDT believes concerns in process efficiency related to this project and FERC's on-going review of the revised footnote 'b' should not be the sole reason for a negative vote on the new proposed TPL standard and that an entity's vote should be based on the technical merits of the standard. The SDT has taken care to ensure footnotes 9 and 12 in combination are written consistently with footnote 'b'. The SDT encourages that any negative ballot based solely on FERC's pending ruling on footnote "b" be revisited.

Some commenters stated they find the new standard to be poorly organized and too prescriptively written and that the existing standards are preferred over the proposed TPL-001-2. The SDT and others in industry, as evidenced by the 74% ballot approval, hold a different opinion in regard to the standard. The SDT believes the comments of one stakeholder well articulate its view of the standard: "The SDT, Observers, and the Industry as a whole have put a tremendous amount of thought and work into the development of this latest draft. While nobody should claim that this latest version is perfect, it is far clearer, more in tune with current industry needs, and much improved compared to the existing approved Standards that it will replace." The SDT believes many important improvements in transmission planning are driven by the proposed TPL-001-2 that will further improve reliability of the Bulk Electric System.

A few commenters questioned the term "non-redundant relay" as used in planning event P5 and asked the SDT to clarify a distinction between a "back-up relay" and a "redundant relay" and proposed the SDT provide a definition for the term "non-redundant". The SDT clarifies that redundant means 'duplicate capability resulting in the same outcome.' A redundant relay is not the same as back-up relaying capability which may result in more Facilities being removed for failure of the primary/redundant relay to operate as designed. The SDT believes this concept is widely understood by most in industry and does not see the need for a NERC Glossary Definition.

Several commenters noted that the standard makes use of new capitalized "defined" terms, yet the definitions proposed in previous drafts were removed from the most recent draft of TPL-001-2. The SDT clarified that two previously proposed

definitions that were part of this project were moved to another standard development project – Project 2010-10, titled "FAC Order 729". The two definitions, "Near-Term Transmission Planning Horizon" and "Year One" were approved by the NERC Board of Trustees on January 24, 2011.

Some commenters indicated that the standard' Implementation Plan should be extended to permit a full 5-years implementation of any Corrective Action Plans required due to short circuit studies. The commenters indicate that these studies are not presently covered by a NERC Reliability Standard and they see this as a significant "raising of the bar" as characterized by other new requirements. The SDT clarified that while a short circuit study requirement is new to mandatory enforceable standards, the SDT does not believe the short circuit study requirements present a significant "raising of the bar" for industry and that good utility short circuit practices are already in place to ensure safe operation of equipment. No extension in the Implementation Plan was made in regard to short circuit studies.

Several commenters stated an opinion that Requirement R1, Part 1.1.2 indicating the models maintained by the Transmission Planners should reflect "known outages … with a duration of at least 6 months", are more appropriately dealt with in the operational studies rather than planning studies and that the item should be removed from the standard. The SDT disagrees with the view that outages of 6 months or more should only be reviewed in the operations timeframe. Such an outage could be for an upcoming construction project requiring certain Facilities to be removed from service for long durations of time one or more years in the future and those situations should be evaluated with sufficient lead time to determine any vulnerabilities and development of sufficient Corrective Action Plans as required. The SDT retained the requirement in the standard.

A number of commenters stated that they believed that there was an inconsistency between Requirement R2, Parts 2.1 and 2.2, since qualified past studies were not allowed for the Long-Term Transmission Planning Horizon case. The SDT clarifies that the requirement to conduct a current annual study for one of the study years in the Long-Term Transmission Planning Horizon is intentional to drive earlier identification of potential Transmission performance limitations and earlier development of Corrective Action Plans (CAP). The study results can be used as qualified past studies as they advance to later years, including moving to the Near-Term Transmission Planning Horizon.

Several commenters stated that they believed that Requirement R2, Part 2.1.5 was ambiguous since it was not clear that the planner did not have to include multiple outages of long lead time components simultaneously. The SDT explained that Requirement R2, Part 2.1.5 does not require simultaneous outages of multiple long lead time components.

Some commenters expressed concerns with Requirement R2, Part 2.4.1 since they were concerned with the ability of planners to adequately model the dynamic behavior of Load. The SDT explained that the "aggregate" dynamic Load model may include high-level assumptions on Load profiles for industrial, commercial, and residential Loads that are applied generically across the planning area study based on the planner's engineering judgment and system knowledge. The model is not required to be "bus" specific.

The SDT appreciates the concern raised by multiple commenters in regard to the inclusion of the 2nd bulleted item of Requirement R3, Part 3.3.1 that states the steady-state Contingency analysis should include subsequent "Tripping of

Transmission elements where relay loadability limits are exceeded". The commenters believe this concern is addressed by PRC-023 and should be removed from the standard. The SDT believes the item is warranted and that TPL studies may earlier identify and flag relay setting concerns based on required Long-Term Transmission Planning Horizon studies. Within the TPL standard, such a concern would have a Corrective Action Plan that would address the issue which would also meet the expectations of PRC-023. The SDT sees this as a defense in depth approach.

A number of commenters expressed concern that Requirement R7 was administrative and was not required. The SDT explained that it believes that the requirement is necessary to ensure that there are no gaps created between the Transmission Planners and the Planning Coordinators when they determine their individual responsibilities.

Several commenters stated that they had concerns with Requirement R8. These concerns are that the requirements create excessive work and should include time limits on requesting the Planning Assessment, are ambiguous, and should include the ability to post the Planning Assessment. The SDT explained that the requirements are only to distribute the Planning Assessment, which should not require a large amount of work, and the requirements are clear that the planners must distribute to adjacent Transmission Planners and Planning Coordinators and others with a reliability need. The SDT further explained that posting the Planning Assessment could meet the requirement to distribute.

Several commenters stated that they believed that Table 1, P2-1 was inconsistent with Footnote 7. The SDT explained that Footnote 7 was included to clarify that "Opening a line section without a fault" could include, but does not always, creating a radial line section with Load and that the planner must evaluate this situation as a part of P2-1.

No requirements were changed as a result of comments received. However, two bulleted items were marked as bullets incorrectly and that formatting has been corrected.

3.1.1 Tripping of generators where simulations show generator bus voltages or high side of the generation step up (GSU) voltages are less than known or assumed minimum generator steady state or ride through voltage limitations. Include in the assessment any assumptions made.

3.3.1.2 Tripping of Transmission elements where relay loadability limits are exceeded.

4.3.1.1 Successful high speed (less than one second) reclosing and unsuccessful high speed reclosing into a Fault where high speed reclosing is utilized.

4.3.1.2 Tripping of generators where simulations show generator bus voltages or high side of the GSU voltages are less than known or assumed generator low voltage ride through capability. Include in the assessment any assumptions made.

4.3.1.3 Tripping of Transmission lines and transformers where transient swings cause Protection System operation based on generic or actual relay models.

Organization	Yes/ No	Question 3 Comment
James A. Maenner	Ballot Comment	The medium VRF for R8 should remain at low. Not sharing planning assessments with other entities within 90 days doesn't create a serious or imminent threat to the BES.
Response: The change to a Medium VRF resulted from the Quality Review (QR) conducted by the independent QR team prior to the last ballot. This requirement is seen as more than simply an administrative response to a request but rather a proactive step required of the applicable planner to share results of its system assessment which may include and reflect potential system impacts to neighboring systems. The SDT is required to follow the VRF guidelines established by NERC and FERC. No change made.		
San Diego Gas & Electric	Ballot Comment	Clarity of this standard is getting worse. Our earlier comments did not seem impacting. At this point, we believe the existing TPL-001-0.1, TPL-002-0a, TPL-003-0a and TPL-004-0 provide much better clarify for us to comply with the TPL standards.
Response: The SDT respectfully disagrees with your view. According to results of the last ballot, 74% of the ballot poolsupport the proposed standard. The SDT believes the standard clarifies a number of expectations and that appropriate changes have been made to further improve the future planning and review of the Bulk Electric System's ability to reliably serve users of the system. No change made.		
Western Electricity Coordinating Council	Ballot Comment	It is unknown at this time what the outcome of the FERC request for additional infomation related to footnote B will be, but if if results in changes to the language of footnote B, that may change our support for this standard.
Salt River Project	Ballot Comment	Previous TPL Standard balloting included the FERC Order that clarified footnote 'b', regarding the planned or controlled interruption of electric supply for an N-1 situation. In SRP's view, a Registered Entity's Board of Directors, state Utilities Commission, and/or its customers should determine what level of service is acceptable and with what associated cost. This view is captured in footnote #12 of Table 1 in the TPL Standard and will be crucial to maintaining Affirmative vote.
Public Utility District No. 1 of Chelan County	Ballot Comment	Previous TPL Standard balloting included the FERC Order that clarified footnote 'b', regarding the planned or controlled interruption of electric supply for an N-1 situation. In our view, board of directors/Public Utility should have the determination what level of service is acceptable and with what associated cost. This view is captured in footnote #12 of Table 1 in the TPL Standard and will be crucial to maintaining an Affirmative vote.
Snohomish County PUD No. 1	Ballot	Previous TPL Standard balloting included the FERC Order that clarified footnote 'b', regarding the planned or

Organization	Yes/ No	Question 3 Comment
	Comment	controlled interruption of electric supply for an N-1 situation. In our view, a Registered Entity's Board of Directors, Utility Commission, and/or its customers should determine what level of service is acceptable and with what associated cost. This view is captured in footnote #12 of Table 1 in the TPL Standard and will be crucial to maintaining an Affirmative vote.
Public Utility District No. 1 of Chelan County	Ballot Comment	Previous TPL Standard balloting included the FERC Order that clarified footnote 'b', regarding the planned or controlled interruption of electric supply for an N-1 situation. In our view, board of directors/Public Utility should have the determination what level of service is acceptable and with what associated cost. This view is captured in footnote #12 of Table 1 in the TPL Standard and will be crucial to maintaining an Affirmative vote.
Clark Public Utilities	Ballot Comment	Previous TPL Standard balloting included the FERC Order that clarified footnote 'b', regarding the planned or controlled interruption of electric supply for an N-1 situation. In our view, the utility's elected board of commissioners should have the determination what level of service is acceptable and with what associated cost. This view is captured in footnote #12 of Table 1 in the TPL Standard and will be crucial to maintaining an Affirmative vote.
Response: The SDT has taken care to ensure consistency in footnote 12 (and footnote 9) with the prior footnote 'b' revision supported by industry, approved by the NERC Board of Trustees and submitted for regulatory approval. No change made.		
Imperial Irrigation District		Previous TPL Standard balloting included the FERC Order that clarified footnote 'b', regarding the planned or controlled interruption of electric supply for an N-1 situation. In our view, board of directors/Public Utility should have the determination what level of service is acceptable and with what associated cost. This view is captured in footnote #12 of Table 1 in the TPL Standard and will be crucial to maintaining an Affirmative vote. 1. R2 (2.5): The value of assessing system stability for years 6-10 is questionable. Stability studies should be conducted for new generation interconnections or for planned major transmission system improvements that have regional impact. 2. R8 requirement to distribute all Planning Assessment results to adjacent PCs and TPs are excessive and cumbersome. Regarding R8, IID suggest the following languages:Each Planning Coordinator and Transmission Planner shall distribute its Planning Assessment results to adjacent Planning Coordinators and adjacent Transmission Planners in accordance with the overseeing Reliability Coordinator requirements. Any functional entity that has a reliability related need and submits a written request for the Planning Assessment results, the Transmission Planner and Planning Coordinator shall provide the latest Planning Assessment

Organization	Yes/ No	Question 3 Comment
		results within 30 days of such request.
Response: The SDT has taken care to ensure consistency in footnote 12 (and footnote 9) with the prior footnote 'b' revision supported by industry, approved by the NERC Board of Trustees and submitted for regulatory approval. No change made. Regarding Requirement R2, Part 2.5, the SDT believes the requirement as written meets your perspective. For the long-term period, the stability assessment is only required to address "... the impact of proposed material generation additions or changes in that timeframe ...". No change made. Regarding Requirement R8, the SDT disagrees that the requirements for distributing assessment results should be based on requirements of the Reliability Coordinator. The Reliability Coordinator is primarily focused on real-time issues/concerns not planning horizon timeframes. The SDT does not see this requirement as overly burdensome as the results could be emailed to multiple entities in a single notification. Additionally, we do not see Requirement R8 as excessive as we believe it is important to communicate assessment results with others in industry whose systems for which they are responsible for may be impacted by the host analysis being communicated. No changes made.		
Gainesville Regional Utilities	Ballot Comment	I do have one point of concern for your consideration; This standard does raise the bar in some areas, most notably for an entity the size of GVL it applies performance requirements for long lead equipment emergency replacement. For example if we don't have the ability to replace a transformer at Parker within a few months of failure, then we would have to demonstrate that we can meet many (but not all) of the same performance criteria without the transformer that we can with the transformer.
Response: The commenter is referring to expectations stated in Requirement R2, Part 2.1.5 related to a spare equipment strategy regarding the potential unavailability of long lead time equipment that could be out of service for a year or more in the absence of a spare replacement. The SDT believes it has appropriately limited the analysis to address Planning Events P0, P1, and P2 as stated in Table 1. No change made.		
Beaches Energy Services	Ballot Comment	My biggest concern is the spare transformer issue. Beaches Energy Services is fine because our Transmission Planner (FMPA) actually run the assessments proposed in the new standard and we have excess transformer capacity; but, I'm concerned for other small entities. Essentially, the requirement will likely be interpreted as requiring us to meet the loss of a Bulk Electric System transformer, plus another contingency (two contingencies) to the same performance criteria as a single contingency, if we don't have a spare. This seems discriminatory to small entities.
Response: The commenter is referring to expectations stated in Requirement R2, Part 2.1.5 related to a spare equipment strategy regarding the potential unavailability of long lead time equipment that could be out of service for a year or more in the absence of a spare replacement. The SDT believes it has appropriately limited the analysis to address Planning Events P0, P1, and P2 as stated in Table 1. Any organization – large or small - meeting functional entity		

Organization	Yes/ No	Question 3 Comment
registration obligations has the potential to impact the Bulk Electric System and their assessments must include appropriate spare equipment strategies. No change made.		
Hydro One Networks, Inc.	Ballot Comment	Hydro One Networks is casting a negative vote. Other than a few changes related to Footnotes 9 and 12 of Table 1 and VSLs, the other changes in the proposed draft are minor. The concerns of the industry on several important issues have not been sufficiently addressed in this draft. For detailed comments please refer to our submission through the on-line comment form.
Response: The SDT believes the commenter's response is based on their review of red-line document of the TPL standard which only describe changes made following the Quality Review (QR) team review of the standard which was conducted prior to the last ballot. That red-line was shown as http://www.nerc.com/docs/standards/sar/tpl-001-2_redline_to_last_posted_110415.pdf. A complete and thorough red-line of the TPL standard showing all changes made from the prior 3/01/10 ballot period to the version posted on the most recent ballot (concluded on 5/31/11) was posted during the last comment/ballot period. A number of changes were made in response to industry feedback prior to the last ballot. Those changes can be viewed at: http://www.nerc.com/docs/standards/sar/TPL-001-2_Redline_to_last_balloted.pdf. The SDT's response to input provided by the on-line comment form is addressed in responses to Q1 and Q2 above. No change made.		
Hydro-Quebec TransEnergie	Ballot Comment	These are the two major concerns : * In Table 1 footnote 3 : Again, the definition of EHV facilities shoud be changed to something like : Bulk Electric System (BES) level references include extra-high voltage (EHV) Facilities defined as those representing the backbone of the System, generally at voltage greater than 300 kV, and high voltage (HV) Facilities defined as those not representing the backbone of the System, as determined by the Planning Coordinator and approved by Regional Entity. * In Table 1 b : "Consequential Load Loss as well as generation loss is acceptable as a a consequence of any event excluding P0". We should also add Firm Transmission Services Loss is also acceptable (particularly in P1 Loss of a single pole of a DC line for which the transfer is reduced accordingly to the remaining pole capability). "
Response: In regard to Table 1 footnote 3, the SDT respectfully disagrees and believes the footnote is clear in regards to what subset of Bulk Electric System Facilities are classified as EHV and that the remaining fall to HV Facilities. Anything not deemed Bulk Electric System by a Regional Entity is outside of the scope of footnote 3 and the footnote clarifies that Table 1 sometimes has unique performance requirements depending on the event studied. The SDT believes the categorization is correct. No change made. The SDT disagrees that Firm Transmission Service (FTS) may be interrupted for all events. The events where the interruption of FTS is not permitted are shown with a "No" in the column titled "Interruption of Firm Transmission Service Allowed", however, footnote 9 clarifies that interruption of Firm Transmission Service		

Organization	Yes/ No	Question 3 Comment
can be used as both a corrective action and system adjustment as permitted within Table 1. For the specific issue raised, loss of a single pole of a DC line, to the extent the availability of the DC pole is a condition of the transfer being viable, footnote 4 may also address the commenter's concern. No change made.		
Independent Electricity System Operator	Ballot Comment	IESO is generally supportive of the draft of TPL-001-2 as evidenced by our previous AFFIRMATIVE vote during the last ballot. Further, IESO also supported the revisions to Footnote 'b' to Table 1 of the TPL standards under Project 2010-11. That revision was balloted and approved by the ballot pool in February 2011 and filed with FERC for approval in March 2011. The revised footnote has been incorporated into the current draft of TPL-001-2 as Footnotes 9 and 12 but the Commission, by letter to NERC dated May 17, 2011, has requested NERC to provide supplemental information before the revised Footnote 'b' could be approved. In light of FERC's request and the uncertainty regarding the final provisions of these footnotes, coupled with the ongoing work on Project 2010-17 for the revision of the BES definition and development of an Exception Process and the impact that may have, we respectfully suggest that the drafting team delay further work on TPL-001-2 pending FERC's ruling on NERC's petition seeking approval of the transmission planning standards that contain the revised Footnote 'b' to Table 1.
Response: The SDT believes IESO's concerns in process efficiency related to this project and FERC's on-going review of the prior submittal of a revised footnote 'b' should not be the sole reason for a negative vote on the new proposed TPL standard and that IESO's vote should be based on the technical merits of the standard. The SDT encourages IESO to revisit its negative ballot position during the recirculation ballot. As stated in the comment provided, IESO finds footnotes 9 and 12 to be written consistently with footnote 'b' and if IESO supported footnote 'b', the SDT encourages continued support of the issue in the new proposed TPL-001-2 and doing so shows support of the standard on its technical merits. No change made.		
Lakeland Electric	Ballot Comment	LAK appreciates the hard work of the Standard Drafting team and applauds the significant improvement of clarity of the draft standard. FMPA believes we are almost there, but, there are a number of issues left to resolve. Issues that Cause FMPA to Recommend a Negative Vote A. Spare Equipment, R2.1.5 - The requirement reaches beyond the FERC directive. The directive was: "Accordingly, the Commission directs the ERO to modify the planning Reliability Standards to require the assessment of planned outages consistent with the entity's spare equipment strategy." So, the directive is only to address planned outage, not unplanned outages. Also note that the applicability to GSUs is ambiguous. "Transmission" is defined as: "An interconnected group of lines and associated equipment for the movement or transfer of electric energy between points of supply and points at which it is transformed for delivery to customers or is delivered to other electric systems." Is the "point of supply" the generator terminal, or the GSU high side terminal?

Organization	Yes/ No	Question 3 Comment
		B. Table 1, under first heading of "Steady State Only", bullet i is open to interpretation. Many utilities use steady state P-V analyses to study voltage stability and design UVLS systems in apart around those steady state analyses. Would this bullet essentially eliminate P-V and Q-V studies and the related use of UVLS?
Response: The SDT respectfully disagrees that the Commission directive regarding a spare equipment strategy is limited to planned outages. In Order 693, Par 1725, the Commission states in its discussion "Thus, if an entity's spare equipment strategy for the permanent loss of a transformer is to use a "hot spare" or to relocate a transformer from another location in a timely manner, the outage of the transformer need not be assessed under peak system conditions." The SDT believes FERC clearly intended the spare equipment strategy to cover a catastrophic loss of such long lead-time equipment. Further, the SDT believes it has appropriately limited this review to a small subset of the overall Planning Events – P0, P1, and P2 and for a loss that would be sustained for a year or longer. No change made. The SDT refers the commenter to footnote 5 in regards to the applicability of GSU transformers. The "point of supply" is irrelevant in regards to planning a Transmission system for potential generation loss. The applicable generation is any unit deemed to be BES generation supply by the applicable regional entity. No change made. The SDT points out that Table 1 header note "i" applies to steady-state only and is intended to prevent any reduction in non-consequential Load due to what the planner believes to be sensitive Load loss that may drop out as voltage declines. It is the understanding of the SDT that most utilities only reflect or account for such reduction in Load in the transient timeframe and that planning decisions based on steady-state analysis would appropriately account for serving the non-consequential Load unless subject to interruption per that studied planning event. The bullet does not eliminate P-V or Q-V studies nor does it prohibit use of UVLS as a mitigating action where non-consequential load interruption is permitted. No change made.		
New Brunswick Power Transmission Corporation	Ballot Comment	Foot Note 12: Rather than requiring planning entities to have a open and transparent planning stakeholder process, which could require significant costs and administration, the foot note should focus on ensuring that affected loads/entities are aware of the possible risks of load loss and alternatives and provide for affected stakeholder feedback
Response: The SDT believes the open and transparent stakeholder process described by footnote 12 provides an efficient platform for which the affected end-users and other registered entities would be made aware of instances where non-consequential Load loss is being considered as a Corrective Action Plan and provides the best opportunity for feedback. The process envisioned is already in place in various areas across the various Interconnections in which the NERC Reliability Standards are enforceable. No change made.		
Powerex Corp.	Ballot Comment	Powerex has submitted a negative ballot for Draft #6 of Standard TPL-001 because Powerex has concerns regarding Footnotes 9 and 4 that need to be addressed. Details of our concerns are summarized below.

Organization	Yes/ No	Question 3 Comment
		Background: The work that transmission planners do to ensure Firm Transmission Service is tremendously important for the reliability of the Bulk Electric System and forms a key part of the foundation upon which system operators and energy market participants interact. As a Purchasing-Selling Entity, Powerex is primarily concerned about Footnote 9 that conditions when interruption of Firm Transmission Service may allowed. We believe that the goals of maintaining system reliability and enhancing market participation will both be best served if the conditions for interrupting Firm Transmission Service become clear and unambiguous in the TPL-001-2 Standard. In our experience, Transmission Providers have different interpretations of the TPL-001 Performance Table and because of latitude previously granted by Footnote B have different perspectives of when Interuptions of Firm Transfers is acceptable. Below we describe the two interpretations using the language of the proposed TPL-001 standard. Interpretation #1: Following loss of the most critical transmission element under stressed conditions, the transmission provider plans to supply the forecast peak loads and Firm Transmission Service indefinitely. o Typically this is achieved by assuming that the System Operators would, within a few minutes of the P1 Single Contingency, curtail all non-firm transmission service and then arm Special Protection Schemes that could result in Interruption of Firm Transmission Service or Non-Consequential Load Loss in the event of a P6 Multiple contingency. Interpretation #2: Following loss of the most critical transmission element under stressed conditions, the transmission provider plans to supply the forecast peak loads indefinitely but may curtail all Firm Transmission Service within 20 minutes if required. o Typically this occurs on systems where there are no Special Protection Schemes to address P6 Multiple contingencies, consequently, the transmission planners assume that curtailment of all non-firm AND as much Firm Transmission Service as required will occur within ~20 minutes of the P1 Single Contingency because the Operators must prepare their transmission system to withstand the next worst contingency. Currently, Purchasing-Selling Entities must plan for situations where they could see their Firm Transmission Service on certain paths curtailed within 20 minutes of a P1 contingency. The less stringent interpretation of the TPL-001 Performance Table that allowed a P1 contingency to change into a P6 contingency within the same operating hour, has resulted in situations where the Firm Transmission Service for inter-regional transfers face significantly greater risks of interruption than the Firm Transmission Service provided to local Load Serving Entities. Powerex recommends that the Standards Drafting Team revise TPL-001 such that all Transmission Planners will know that they should plan for Firm Transmission Service to be sustained indefinitely following P1 contingencies. Specific Comments on TPL-001-2: Footnote 9: Deviation from the Approved Footnote B Powerex believes that the Footnote B, as approved by the NERC Board of Trustees on February 17, 2011, is more stringent than the previous Footnote B and will have the effect of ensuring that Firm Transmission Service can be sustained indefinitely following P1 contingencies. The key difference of the proposed Footnote 9 is that it adds

Organization	Yes/ No	Question 3 Comment
		the phrase "as a System adjustment" to the approved version of Footnote B. We believe this addition would cause the practice of curtailing Firm Transmission Service within 20 minutes of P1 contingencies to continue. Consequently, we recommend that the proposed Footnote 9 maintain the approved wording as follows: Footnote 9: An objective of the planning process should be to minimize the likelihood and magnitude of interruption of Firm Transmission Service following Contingency events. Curtailment of Firm Transmission Service is allowed (deletion)[as] a corrective action when achieved through the appropriate re-dispatch of resources obligated to re-dispatch.... For consistency, Table 1 should also be modified to remove the Footnote 9 reference from the Initial Condition Column for the P3-Multiple Contingency and P6 Multiple Contingency Categories. Footnote 9: Clarity on what is meant by "Resources obligated to re-dispatch" It is unclear to many parties what is meant by an obligation to re-dispatch. Some interpret this as a right to direct the Source to curtail energy scheduled on Firm Transmission Service. Our belief is that "an obligation to re-dispatch" should correspond to a formal agreement with a Generation Owner, located on the load side of a transmission constraint, to resupply the load that had been receiving energy from a remote source before the Firm Transmission Service was curtailed. Consequently, we recommend that Footnote 9 be revised as follows: Footnote 9: ..... a corrective action when achieved through the appropriate re-dispatch of resources obligated to re-dispatch [to ensure uninterrupted energy supply to the Load-Serving Entity(ies)], where it can be demonstrated that Facilities, internal and external to the Transmission Planner's planning region, remain within applicable Facility Ratings and the re-dispatch does not result in any Non-Consequential Load Loss.... Footnote 4: Conditional Firm Transmission Service Footnote 4: "Curtailment of Conditional Firm Transmission Service is allowed when the conditions and/or events being studied formed the basis for the Conditional Firm Transmission Service." In a sense, offering conditional firm transmission service is analogous to selling land in a known flood plane - this can be a perfectly acceptable option provided all parties involved in current and future transactions can quantify the risks and manage them appropriately. There needs to be coordination between the planners, operators and marketers to ensure that the conditions that could lead to curtailment of Conditional Firm Transmission Service are understood and the associated risks properly managed. We are concerned that in the absence of coordination, specifically additional requirements included in the BAL and INT standards, energy that is scheduled on conditional firm could actually be marketed as firm and as a result the counterparties to some transactions may not be aware of the curtailment risks they could face.
Response: Footnote 9 - The SDT believes that footnote 9 appropriately allows interruption of Firm Transmission Service as both a corrective action to the initial event studied and as a permissible intermediate "system adjustment" when evaluating a multiple Contingency event such as P3 or P6. The key is that there must		

Organization	Yes/ No	Question 3 Comment
be no loss of Load and the planner must be able to show that the curtailment is supported by a valid re-dispatch of generation that would be "obligated to re-dispatch." Therefore, the planner cannot simply re-dispatch units outside the area of control for the transmission system for which it is reviewing – the re-dispatch must be valid and realistic. The commenter indicates an opinion that footnote 9 introduces a difference from the revised footnote 'b' because footnote 9 is applied to multiple Contingency planning events P3 and P6 as an intermediate step – system adjustment. However, the SDT believes that footnote 'b' is consistent as it does not explicitly distinguish between the two – corrective action or system adjustment following the single Contingency event that may precede a multiple Contingency event. No change made. Footnote 4 – The SDT agrees with the commenter that the specifics of Conditional Firm Transmission service including the potential/rights for curtailments need to be well understood by all parties involved but the SDT has not identified any BES reliability gaps. No change made.		
Tucson Electric Power Co.	Ballot Comment	The definition for Near Term Planning Horizon was deleted, but the formal term is used in other sections such as R2.2.1. There should be a linkage to MOD standard (e.g. 028, 029 & 030) definitions such as 13 months, etc.
Response: Two previously proposed definitions that were part of this project were moved to another standard development project – Project 2010-10 titled "FAC Order 729". The two definitions, "Near-term Transmission Planning Horizon" and "Year One" were approved by the Board of Trustees on January 24, 2011.		
Western Area Power Administration	Ballot Comment	Standard is improved over previous drafts, but would like to see further changes. Please see suggestions and comments provided on the Official Comment Form.
Response: Please see the SDT's response to your suggestions in Question 1.		
SERC Planning Standards Subcommittee		R1 does not seem to address issues where data errors have been introduced into the latest model data. Also, R1 and its VSL may be interpreted to exclude the use of past studies. The Implementation Plan should include a five-year delay in the effective date for short circuit studies (R2 parts 2.3 and 2.8) since these studies are not required in the current version 0 standards. The comments expressed herein represent a consensus of the views of the above-named members of the SERC EC Planning Standards Subcommittee only and should not be construed as the position of SERC Reliability Corporation, its board, or its officers.
Response: Requirement R1 of the new TPL standard requires the Transmission Planner and Planning Coordinator to maintain System models within its		

Organization	Yes/ No	Question 3 Comment
respective area of responsibility. The requirement indicates that information received via MOD-010 and MOD-012 shall be "supplemented by other sources as needed" and to the extent errors and omissions were either discovered by, or brought to the attention of, the Transmission Planner or Planning Coordinator Requirement R1 establishes an expectation that these "other sources" would be utilized to accurately "represent the project System conditions" being studied. No change made. Requirement R1 is applicable to models used for both current and past studies. No change made. Implementation Plan, Short Circuit Studies – While short circuit study requirements may be new in the realm of mandatory enforceable standards, the SDT does not believe that they present a significant "raising of the bar" for industry. The SDT believes that prudent short circuit practices are effectively in place today to ensure safe operation of the equipment. Therefore, no extension in the Implementation Plan was made in regard to short circuit studies.		
SPP Reliability Standards Development Team		A5 It would seem that 84 months wouldn't be universally attainable due to different system configurations, terrain, geography, and permitting issues that are required to complete a corrective action plan. In 2.4.1 we would like to see better clarity on what an Aggregate system load model is and how granular it should be. If the answer is a very detailed representation of the load system then it may take a longer time to implement. In section 2.7 we would to see clarification on the sensitivity analysis. Is this in reference to seasonal models and differences in fuel availability? We need more detail on how this is to be done so that it won't be left up to interpretation. We would like for clarification of the planning assessment and who is performing which tasks. We would also like to utilize a regional assessment due to limited resources. Under which criteria should the assessment fall under the regional entity or the individual companies? In section 3.4.1 this type of coordination could be difficult due to other adjacent entities on different schedules and some possibly couldn't have the amount of detail to incorporate into another's processes. We know this is generally covered in coordination of real time operations and wonder if it is appropriate to require this type of coordination in the long term process. Is there already an operational standard that covers this? Would it be better to address this in the operational standards? PC's between regions are already coordinating for long term studies. Should this standard fall more on the back of the PC's rather than the TP Can we get a bright line definition of what apparent impedance swings means? R4.3.1 will the detailed amount of data then be incorporated back into the NERC modeling processes and create a more detailed model with better accuracy?

Organization	Yes/ No	Question 3 Comment
		R8 We do not agree that we should provide the assessment to every adjacent PC and TP. We do agree however that if requested by these entities we would provide the assessment. We don't mind sharing information with requestors but would like a longer duration than 30 days due to the fact that we would like to know what type of "reliability need" any entity would have considering that some of the information could be considered CEII. Non disclosure agreements may be needed in order to provide this information.

Response: Effective Date (A5) – The SDT believes the 7 year (84 month) transition to areas where the standard significantly raises planning expectations over the existing standard is more than sufficient for the vast majority of the continent and for most Corrective Action Plans. To the extent additional time is required an entity would need to submit a timely mitigation plan with its Regional Entity organization. No change made.

The "aggregate" dynamic Load model may include high-level assumptions on Load profiles for industrial, commercial, and residential Loads that are applied generically across the planning area study based on the planner's engineering judgment and system knowledge. The model is not required to be "bus" specific. No change made.

In Requirement R2, Part 2.7, it is stated that a Corrective Action Plan is not required solely for a "single sensitivity study". The standard envisions a portfolio of sensitivity analyses being established for a planning area and the standard does not require Corrective Action Plans for single sensitivity results that may have placed the system in a greater stressed analysis (i.e., heavy system transfers) for its initial (P0) sensitivity model over other models that did not identify performance criteria violations for the same Contingency event studied. No change made.

If a Regional Entity acts as your "Planning Coordinator" then tasks between the Planning Coordinator and Transmission Planner are to be defined as part of Requirement R7. The standard does not prohibit the use of valid studies performed by 3rd parties for a given planning area. No change made.

In regards to Requirement R3, Part 3.4.1, the SDT envisions that knowledge of the applicable Contingencies on neighboring systems would develop over time and be discovered with the results being distributed in Requirement R8. The SDT believes that this is an important improvement to the planning timeframe analysis and that system information learned in the operations environment should most certainly be considered to the extent it improves the robustness of the Planning Assessment. No change made.

Both the registered Transmission Planner and Planning Coordinator have functional entity responsibility for Transmission system planning as defined by NERC's Functional Model. The SDT believes the new TPL-001-2 is appropriately aimed at both throughout the standard. Additionally, Requirement R7 should address the commenter's concern and if greater responsibility can be agreed upon for the Planning Coordinator for a particular area of the continent the standard would not prohibit such a determination. No change made.

The "apparent impedance swing" is the trajectory of changes in the apparent impedance seen by a distance relay for various system and fault conditions. In the case contemplated in Requirement R4, Part 4.1.2, it is the trajectory seen by the distance relay for the initial fault and the subsequent generator(s) pulling out of synchronism. If that trajectory were to come within the tripping characteristic of the relay for a sufficient length of time, the relay would cause its associated line

Organization	Yes/ No	Question 3 Comment
to trip. No change made. This standard does not address the studies performed by NERC or its model building practices. The SDT and (based on the recent ballot approval of 74%) the majority of industry support Requirement R8 – no change made.		
MRO's NERC Standards Review Forum		The NSRF recommends that the term, "System" be replaced with "BES" in various places throughout the standard when the reference should not be to the collective generation, transmission, and distribution systems, which is the definition of the NERC Glossary term, "System". These locations are: R2.1.4, R2.1.5, R2.4.3, R2.6.2, R2.7, R2.7.1, R2.7.4, R2.8.1, R2.8.2, R3.5, R4.5, R5, and R6
Muscatine Power and Water		MP&W recommends that the term "System" be replaced with "BES" in various places throughout the standard when the reference should not be to the collective generation, transmission, and distribution systems. This is the current definition of the NERC Glossary term "System". The locations where "System" can be found in the Standard are: R2.1.4, R2.1.5, R2.4.3, R2.6.2, R2.7, R2.7.1, R2.7.4, R2.8.1, R2.8.2, R3.5, R4.5, R5, and R6.
Response: Even though the capitalized term "System" includes distribution components, the SDT believes that its usage within this standard is correct because the Reliability Standards apply only to the BES. Therefore, adding additional qualifiers is not needed. No change made.		
BC Hydro		BC Hydro agrees with merging the standards together into one and we feel the new version brings further clarity to the annual planning assessment. BC Hydro would vote Affirmative for bringing clarity, however we do not believe the rewording in Footnote 9 is clear which is why we are voting Negative. Footnote B, as approved by the NERC Board of Trustees on February 17, 2011 was reworded as Foot Note 9 in the proposed TPL 001-2 draft 7 amendment. This rewording still does not clearly define what impact the proposed revision would have on the curtailment of firm transfers in the regional entities.
Response: The equivalent of the revised footnote 'b' as approved by the NERC Board of Trustees on February 17, 2011 is addressed by the combination of two footnotes – footnote 9 and footnote 12 – in the new proposed TPL-001-2 standard. The SDT believes that footnote 9 appropriately allows interruption of Firm Transmission Service as both a corrective action to the initial event studied and as a permissible intermediate "system adjustment" when evaluating a multiple Contingency event such as P3 or P6. The reliance on the interruption of Firm Transmission Service in the Planning Horizon is limited in two ways. First, there must be no planned use of firm Load shedding and second, the planner must be able to demonstrate that the curtailment is supported by a valid re-dispatch of generation that would be "obligated to re-dispatch." Therefore, the planner cannot simply re-dispatch units outside the area of control for the transmission system for which it is reviewing – the re-dispatch must be valid and realistic. No change made.		

Organization	Yes/ No	Question 3 Comment
Entergy Services		Footnote 12 to Table 1 concerning non-consequential load loss should be clarified. The existing language will result in difficulties in proving compliance. Suggested language would be:"Planned or controlled interruption of Demand supplied by Transmission Facilities made temporarily radial as a result of a P1 or P2 event and where the location of the planned loss of Demand is limited to those Transmission Facilities made radial.
Response: The SDT in a separate standards development project - Project 2010-11 TPL Table 1 Order – attempted the radial concept described by the commenter in its revision of footnote 'b' as used in the existing set of TPL standards. The proposed "radial" footnote 'b' was presented for industry ballot from 05/17/10 through 05/27/10 and failed at 63.8%. Following an industry technical conference, the SDT continued to work on footnote 'b' and a revised version was approved by the NERC Board of Trustees on February 17, 2011. The combination of footnotes 9 and 12 consistently apply the industry approved revised footnote 'b' in the new standard. No change made.		
Tri-State Generation and Transmission Assn., Inc.		R1.1 to "System models used for Steady State and Stability Analysis shall represent:" Much of what is in R1.1 is unnecessary for Short Circuit studies. In contrast, there are items not mentioned in R1.1 that are necessary for short circuit studies. R2.1.4 requires sensitivity analysis to study "a range of credible conditions that demonstrate a measurable change". How will the required actions in R2.1.4 be documented or measured, and what is accomplished by performing sensitivity analysis in the context of a system performance assessment? In R2.3, change the first sentence to read "The short circuit analysis portion of the Planning Assessment shall be conducted annually, using one of the cases described in 2.1.1, addressing the Near-Term Transmission Planning Horizon and can be supported by current or past studies as qualified in Requirement R2, Part 2.6." There appears to be no reason to perform short circuit studies for all three Near-Term Transmission Planning Horizon cases. R2.4.3 requires sensitivity analysis to study "a range of credible conditions that demonstrate a measurable change". How will the required actions in R2.4.3 be documented or measured, and what is accomplished by performing sensitivity analysis in the context of a system performance assessment? R2.7.1 remove the last bullet. We believe these programs are already factored into the load forecast, as they are associated with resource scheduling and planning load serving, and not transmission planning. In particular, DSM measures would fall under R2.4.1, and the term "new technologies, or other initiatives" The language of Requirement 3 unnecessarily repeats the language of R1 and R2. As now written, R3 states "For the steady state portion of the Planning Assessment, each Transmission Planner and Planning

Organization	Yes/ No	Question 3 Comment
		Coordinator shall perform studies for the Near-Term and Long-Term Transmission Planning Horizons in Requirement R2, Parts 2.1, and 2.2. The studies shall be based on computer simulation models using data provided in Requirement R1." R3 We recommend that the introductory language in Requirement R3 be changed to read "The studies in Requirement R2, Parts 2.1, and 2.2 shall be performed using models as defined in Requirement R1 in accordance with the following criteria." We believe that Requirements 3.1 and 3.4 should be combined into R3.1, eliminating R3.4. It is redundant to have Requirement 3.1 say "perform R3.4". We recommend that R3.4 be deleted and that R3.1 be replaced with:R3.1 Planning event studies shall be performed in accordance with "Table 1 - Steady State & Stability Performance Planning Events;" and shall be based on a supportable Contingency list. Comment: The content of 3.4.1 was intentionally omitted as it is redundant with R7. Also, the language "...more severe System impacts..." was intentionally omitted as it could be subject to a wide range of interpretations.Similarly, we recommend that R3.5 be deleted and that R3.2 be replaced with:R3.2 Extreme event studies shall be performed in accordance with "Table 1 - Steady State & Stability Extreme Events;" and shall be based on a supportable Contingency list. We recommend the following new requirement be inserted after the revised R3.2 language:Should the extreme event studies identify potential Cascading, an evaluation of possible actions designed to reduce the likelihood or mitigate the consequences and adverse impacts of the event(s) shall be conducted. Comment: As before, the language "...more severe System impacts..." was intentionally omitted as it could be subject to a wide range of interpretations. We recommend removing the second bullet of R3.3.1, "Tripping of Transmission elements where relay loadability limits are exceeded" for the following reasons:1. There is currently no tool to model relay loadability characteristics in Steady State analysis. 2. Requirement R3.3.1 would require inclusion of relay models in modeling data that are not currently provided. MOD-012 does not require impedance or overcurrent relay models to be submitted.3. In Requirement 3.3.1, the second bullet, it is impossible to model complete and accurate relay loadability using present-day steady state simulation tools. At best an individual point could be chosen to model relays based on a selected power factor. We recommend changing the opening text of Requirement R.3.3.2 to say "Simulate the expected automatic or manual operation..." Subrequirement R4.1.2 represents a tremendous increase in dynamic modeling complexity. Modeling relay

Organization	Yes/ No	Question 3 Comment
		action during apparent impedance swings would require inclusion of impedance relay models in modeling data that are not required to be submitted in MOD-012. If such modeling is necessary, then the corresponding data requirements need to be addressed in MOD standards. We believe that Requirements 4.1 and 4.4 should be combined into R4.1 as shown below and R4.4 should be deleted. It is redundant to have Requirement 4.1 say "perform R4.4." We recommend R4.1 language be revised to read as follows:R4.1 Planning event studies shall be performed in accordance with "Table 1 - Steady State & Stability Performance Planning Events;" and shall be based on a supportable Contingency list.Comment: The content of 4.4.1 should be omitted as it is redundant with R7. Also, the language "...more severe System impacts..." should be omitted as it could be subject to a wide range of interpretations. Similarly, R4.5 should be deleted and R4.2 should be replaced with:R4.2 Extreme event studies shall be performed in accordance with "Table 1 - Steady State & Stability Extreme Events;" and shall be based on a supportable Contingency list. We recommend the following new requirement be inserted after the revised R4.2:Should the extreme event studies identify potential Cascading, an evaluation of possible actions designed to reduce the likelihood or mitigate the consequences and adverse impacts of the even(s) shall be conducted. Comment: As before, the language "...more severe System impacts..." was intentionally omitted as it could be subject to a wide range of interpretations. Clarify the first bullet in Requirement R4, part 4.3.1 by changing it to "High-speed (less than 1 second) reclosing, where the fault has cleared, and high-speed reclosing into the permanent fault , but in each case only if high-speed reclosing is utilized". In Requirement R4, part 4.3.1, third bullet, it is impossible to model complete and accurate relay loadability using present-day steady state simulation tools. Existing applications do have impedance relay models, but these models do not model many relay capabilities- for example, non-circular protection regions and load-encroachment. We recommend removing this bullet. The comment statement we made above referring to R4.1.2 also applies to R4.3.1. MOD-012 does not require reclosing relay model data to be submitted. If such modeling is necessary, then the corresponding data requirements need to be addressed in MOD standards. Furthermore, there is not a standard built-in reclosing relay model in current stability simulation tools. Comments regarding Table 1-We assume the headnote i. to Table 1 - "The response of voltage sensitive Load..." - means that studies must not rely on end-user load tripping to meet the performance requirements defined in TPL-001-2 but that it should be modeled (when known) so that its occurrence would be evident.

Organization	Yes/ No	Question 3 Comment
		We don't see the need to apply Footnote 12 to only certain contingency categories or certain events in categories. Recommend putting the footnote in the column header just as with Footnotes 1, 2, 3, and 4.Recommend changing "utilized" in Measurement M3 to "performed."Recommend changing "utilized" in Measurement M4 to "performed."Modify Measurement M7 to "Each Planning Coordinator shall provide dated documentation on roles and responsibilities of its Transmission Planners, such as..." The deleted phrase, "in conjunction with each of its Transmission Planners," appears to be unnecessary.

Response: Requirement R1, Part 1.1 – The SDT believes that the planners must have the general information in Requirement R1, Part 1.1 in order to conduct the necessary studies for steady state, stability, and short circuit. The requirement states that the planner shall maintain System models, not to have a single model that covers all three categories. The SDT believes that the planner will need the items in Requirement R1, Part 1.1 to develop the smaller set of items that are necessary for their short circuit models. No change made.

Requirement R2, Part 2.1.4 – This item requires the planner to show evidence of one or more sensitivity studies which show appreciable change from the prior projected (P0) system condition (pre-sensitivity adjustment). Measurable changes for the revised P0 system condition could be evidenced by line or transformer flows, voltages, a change in dispatch, load increase, etc., assuming the change places additional stress on a portion of the system being reviewed for the sensitivity studied. The sensitivity analysis is important for the applicable entity to better understand their system's vulnerability to alternate "base (P0)" conditions. The intent is to develop a portfolio of potential credible conditions so that the planner better understands potential vulnerabilities. In the Corrective Action Plans (CAP) area of the standard, Requirement R2, Part 2.7, a CAP may be required if a Planning Event shows performance criteria concerns for one or more sensitivity scenarios. No change made.

Requirement R2, Part 2.3 – The standard states that the planner shall maintain System models, not to have a single model that covers all three categories - for steady state, stability, and short circuit. It is common within many organizations that separate models are maintained for short circuit analysis since they require breaker configuration details not contained within steady-state load flows. Additionally, short circuit models may not have end-use Load represented but rather emphasis is on system topology, impedance, generation dispatch, fault location etc. No change made.

Requirement R2, Part 2.4.3 – same response as Requirement R2, Part 2.1.4 above.

Requirement R2, Part 2.7.1 – The SDT disagrees that the last bulleted item which includes use of a rate application or DSM program would be inclusive to the forecasted Load within the model studied. No change made.

Requirement R3 – The SDT clarifies that Requirement R2 refers to an "annual assessment" which collectively includes current or past studies, Corrective Action Plans, etc. required for steady-state, stability, and short circuit analysis. Requirement R3 deals with a portion of the overall assessment and is focused on the

Organization	Yes/ No	Question 3 Comment
steady-state "study" requirements for the Near-Term and Long-Term Transmission Planning Horizons. No change made. Requirement R3, Part 3.1 – The SDT did not receive any significant industry objection to having Parts 3.1 and 3.4 separated. The proposed change is based on a formatting and style preference and does not address a reliability gap in the standard. No change made. Requirement R3, Part 3.2 – The SDT did not receive any significant industry objection to having Parts 3.2 and 3.5 separated. The proposed change is based on a formatting and style preference and does not address a reliability gap in the standard. No change made. Requirement R3, Part 3.4.1 and Requirement R7 are uniquely different and not redundant as suggested by the commenter. No change made. Requirement R3, Part 3.5 (proposed new 3.2 by commenter) – The commenter finds the term "more severe System impacts" too open to interpretation and suggests a focus on Cascading conditions. The SDT believes the requirement is clear as written and that the statement "more severe System impacts" is used to describe the latitude in engineering judgment afforded to the planner in developing its extreme Contingency list. Action is only required on the subset of items that show the potential for Cascading. No change made. Requirement R3, Part 3.3.1, bullet 2 – this does not require an "automatic" modeling feature but rather it could be further subsequent manual analysis performed as needed for a given Planning Event. For example, if a line flow shows >150% loading the planner may need to trip the circuit to see if a stable condition results and what performance criteria issues may be present. To the extent this could be automated through programming the planner may do so at their discretion. No change made. For similar reasons stated in the response to Requirement R3, Part 3.5, the SDT does not find the phrase "more severe System impacts" as vague and open to interpretation. No change made. Requirement R3, Part 3.3.1 - The SDT language does not require comprehensive relaying models. No change made. Requirement R3, Part 3.3.2 - The SDT does not believe the proposed wording changes provide any clarity and finds the item clear as stated. No change made. Requirement R4, Part 4.1.2 – The "apparent impedance swing" is the trajectory of changes in the apparent impedance seen by a distance relay for various system and Fault conditions. In the case contemplated in Requirement R4, Part 4.1.2, it is the trajectory seen by the distance relay for the initial Fault and the subsequent generator(s) pulling out of synchronism. If that trajectory were to come within the tripping characteristic of the relay for a sufficient length of time, the relay would cause its associated line to trip. With that explanation, the SDT does not believe the modeling requirements are overly complex or difficult to achieve. No change		

Organization	Yes/ No	Question 3 Comment
made. Requirement R4, Parts 4.1 and 4.4 - The SDT did not receive any significant industry objection to having Parts 4.1 and 4.4 separated. The proposed change is based on a formatting and style preference and does not address a reliability gap in the standard. No change made. Requirement R4, Part 4.5 - the SDT does not believe the proposed wording changes are warranted and finds the item clear as stated. No change made. Requirement R4, Part 4.3.1, first bullet – the SDT does not believe the proposed wording changes are warranted and finds the item clear as stated. No change made. Requirement R4, Part 4.3.1, third bullet – The SDT language in Requirement R4, Part 4.3.1 states "The analyses shall include the impact of subsequent" and does not require comprehensive relaying models. However, it does require that the planner take into account the effects of System Protection on System performance. No change made. Table 1 header note "i" – The SDT notes that this item only applies to steady-state load flow analysis and no assumed shedding of non-consequential sensitive Load is permitted for the steady-state analysis unless it is to be intentionally dropped as part of a Corrective Action Plan where warranted. No change made.		
Hydro One Networks Inc.		A. Regarding Requirement 1.1.2, assessment of "known outages... with a duration of at least 6 months", are dealt with in the operational studies rather than planning studies. In addition, any adverse impact that these outages might have, are mitigated by operational decisions rather than "planning" decisions within a 6-month horizon. It is suggested to move this requirement out of TPL standards and instead include it a relevant operational standards. B. The statement in R 2.1.4, "must vary one or more of the following conditions by a sufficient amount to stress the System within a range of credible conditions that demonstrate a measurable change in System response", leaves room for very different interpretations by PCs and TPs as to the number and type of required sensitivity studies. Are all interpretations, based on the engineering judgment of the PC and TP, acceptable? C. The language of R 2.1.4 and 2.4.3 allowing to perform one or more sensitivities appears to be inconsistent with the language in R 2.7.2 which requires multiple sensitivities to determine if actions to resolve performance deficiencies are necessary. Will varying only one measurable quantity several times in multiple simulations constitute multiple sensitivity studies or one sensitivity study?

Organization	Yes/ No	Question 3 Comment
		D. The language of Requirement 2.1.5, "spare strategy", appears to be open-ended regarding the number of permutations to be analyzed. It is suggested to move this requirement out of TPL standard and instead have this issue dealt with in the operational standards. E. In R 2.2, the statement "be supported by the following annual current study, supplemented with qualified past studies" should be replaced with a similar statement in R 2.1 which says: "be supported by current annual studies or qualified past studies". F. In R 4.1.1, "For planning event P1: No generating unit shall pull out of synchronism" is too restrictive. In many cases a P1 event may result in instability of a small nearby generator without a significant impact on the reliability of BES. The same requirement states that "A generator being disconnected from the System ... by a Special Protection System is not considered pulling out of synchronism". If rejection of ANY generator by SPS is acceptable, why should instability of a small generator, resulting in its disconnection by its protection without a severe impact on the system, be unacceptable in all circumstances? If this requirement is unchanged, it dictates the addition of an SPS (Generation Rejection) for any unit that might go unstable without any benefit for the reliability of the BES. G. In Table 1, Event 1 of Category P2 and related Footnote 7 (simulation of LEO condition) are not clear (concern with the use of the word "possibly"). If the intension is to simulate LEO condition of tapped lines, this should be clearly stated in the table (without reference to "Opening of a line section" and use of different language in the footnote).

Response: A: The SDT disagrees with the view that outages of 6-months or more should only be reviewed in the operations timeframe. Such an outage could be for an upcoming construction project requiring certain facilities to be removed from service for long durations of time and those situations should be evaluated with sufficient lead time to determine any vulnerabilities and development of sufficient Corrective Action Plans as required. No change made.

B. The standard does not mandate the number of sensitivity analyses performed nor the number of adjustments made and engineering judgment of the Transmission Planner and Planning Coordinator is acceptable. No change made.

C. Requirement R2, Parts 2.1.4 and 2.4.3 are not inconsistent with Requirement R2, Part 2.7.2. With the various requirements, the planners are required to conduct multiple sensitivities. Therefore, Requirement R2, Part 2.7.2 could be used when the results of these multiple sensitivities identify common concerns. The situation described ~~would~~ could be considered multiple sensitivity studies, if the multiple simulations represent more than one of the studies in Requirement R2, Part 2.1.1 and 2.1.2 or Requirement R2, Part 2.4.1 and 2.4.2. No change made.

D. The spare equipment strategy is an important planning aspect to better assist operations. The SDT disagrees that the number of permutations is open-ended. The evaluation is simply a new P0 condition starting with a long lead-time (one year or more) facility removed from service followed by an analysis

Organization	Yes/ No	Question 3 Comment
covering the P0, P1 and P2 studies. No change made. E. The requirement for an annual current steady-state study in the Long-term Transmission Planning Horizon is intentional to drive earlier identification of potential transmission performance limitations and earlier development of Corrective Action Plans. The study results can be used as qualified studies as they advance to later years, including moving to the Near-Term Transmission Planning Horizon. No change made. F. The SDT respectfully disagrees with the commenter. For a P1 single Contingency event, the SDT believes, and a majority of industry stakeholders find it reasonable, that no Bulk Electric System (BES) generation unit be pulled out of synchronism due to the P1 event studied. If the "small" nearby unit is served below threshold kV and MW size limitations set by your Regional Entity to qualify as a BES unit, the unit would not be within scope of the standard. No change made. G. Table 1, footnote 7 – The SDT added the footnote to further explain its intent for P2-1 and to ensure that the planner assess the voltage of a load bus that was on a radial line. The word "possibly" was used since having load on a radial is not always the outcome of opening one end of a line section. No change made.		
Arizona Public Service Company		AZPS would like to reiterate its "Affirmative" voting recommendation with regard to the proposed revisions to the Standard. AZPS erroneously entered a "Negative" Standard vote for one of its voting segments.
Transmission Strategies, LLC		The SDT, Observers, and the Industry as a whole have put a tremendous amount of thought and work into the development of this latest draft. While nobody should claim that this latest version is perfect, it is far clearer, more in tune with current industry needs, and much improved compared to the existing approved Standards that it will replace.
Response: Thank you for your support.		
NIPSCO		1.1.2. Known outage(s) of generation or Transmission Facility(ies) with a duration of at least six months. This is a little confusing to me. Does this mean the outage must last at least six months?Or does this mean at least model outages that last six months or more. If it is the latter then, I'm not sure that is stringent enough.There may be known critical outages occurring over peak that do not last 6 months. If non-consequential load loss is not allowed for loss of one element, then what about the next contingency? Couldn't that result in having to interrupt Firm service? Is that okay as a corrective action plan in the outage coordination horizon?Does this apply to both near-term and long-term planning? If so, we probably need to model additional unplanned potential outages on top of n-1 conditions.

Organization	Yes/ No	Question 3 Comment
		Lastly. in section 2.1.4 should there be a category for high/low wind conditions?
Response: Requirement R1, Part 1.1.2 is related to known existing conditions or known future conditions of facilities being removed from service; i.e., a construction project that requires an existing facility to be de-energized for a period of 6-months or more. This requirement should not be confused with hypothetical situations that could result in an extended loss of a facility. Those situations are the intended purpose of a sound spare equipment strategy. The standard only requires analysis of known or planned outages of 6-months or greater to be included within a P0 system condition. The planner could review shorter duration planned outages as part of its sensitivity analysis portfolio. No change made. The SDT does not believe there is a need to account for a high/low wind condition situation. The intended purpose of this suggested condition within the sensitivity portfolio is not clear. No change made.		
ReliabilityFirst		1. Requirement 8 and 8.1 uses the language of "Planning Assessment results". This language is not defined in the section of the standard that defines the terms of use. For consistency "Planning Assessment results" should be replaced with "Planning Assessment". 2. Requirement 2.1.5 has statements that are ambiguous. What is considered major transmission equipment? What is an entity's "spare equipment strategy"? The requirement is not clear as to how many power flow models are required (one per piece of "major transmission equipment" without a spare, or one model with every piece of "major transmission equipment" without a spare being out of service)? As written, if an entity has no "spare equipment strategy" they could be exempt from this requirement. 3. We interpret the use of bullet points in Requirement 3.3.1 to mean that either one of the statements can be chosen. This requirement should be written where all the bulleted statements are included in the analyses.
Response: 1. The SDT sees no reliability reason or clarity for the change suggested. No change made. 2. Requirement R2, Part 2.1.5 is intended to analyze the removal of a single piece of long lead time equipment (one year or more) to the extent there is no existing spare equipment strategy to provide a means of returning to service (in a less than one year) a comparable replacement. If this condition exists, then the facility (single element) in question must be removed in the model to establish a new P0 system condition and studies must then be run for P0, P1, and P2 for the new system scenario. The spare equipment strategy must be reviewed for the entity's system exposure to catastrophic failures resulting in the long lead-time facility outages, however, only one facility must be removed at a time if the condition exists for multiple facilities. A Transmission Planner may have no spare equipment strategy if they are able to demonstrate they are not responsible for any facilities which they believe could place them in a "long lead-time" scenario. No change made.		

Organization	Yes/ No	Question 3 Comment
3. The bulleted items of Requirement R3, Part 3.3.1 were meant to be inclusive. This means that the use of bullets here was incorrect and the items should be numbered elements. This same change was made to Requirement R4, Part 4.3.1. **3.3.1.1** Tripping of generators where simulations show generator bus voltages or high side of the generation step up (GSU) voltages are less than known or assumed minimum generator steady state or ride through voltage limitations. Include in the assessment any assumptions made. **3.3.1.2** Tripping of Transmission elements where relay loadability limits are exceeded. **4.3.1.1** Successful high speed (less than one second) reclosing and unsuccessful high speed reclosing into a Fault where high speed reclosing is utilized. **4.3.1.2** Tripping of generators where simulations show generator bus voltages or high side of the GSU voltages are less than known or assumed generator low voltage ride through capability. Include in the assessment any assumptions made. **4.3.1.3** Tripping of Transmission lines and transformers where transient swings cause Protection System operation based on generic or actual relay models.		
ITC		ITC COMMENTS on TPL-001 voteITC will reluctantly vote to approve the draft standard. While we have concerns, we are voting to approve this standard because we believe the positive elements outweigh the portions of the draft standard that we object to. It is important that the improved requirements that effectively "raise the bar" over the existing standard should become effective sooner rather than later. A negative vote, which might cause a further delay in implementation of the standard, would be the least desirable outcome. However, we still believe that the VSL that would find that an entity had committed a "severe" violation for failure to distribute its planning assessment to an adjacent Transmission Planner or Planning Coordinator has the potential to overly punish a simple error in oversight. We would agree that willfully withholding an assessment from a neighbor or a valid requestor justifies a severe violation but an administrative or clerical oversight does not. For example, it might escape our attention that an entity, particularly a smaller one, registers as a TP or TP. As far as we know, there is no requirement that a registrant, or even one who de-registers, must notify an "adjacent" TP or PC of their change in status. As written, the standard requires you be found in "severe" violation, even if that new entity fails to notify you of their change in status. You would still be in severe violation even if they later ask for your planning assessment. Even if the standard passes, we request that this VSL be fixed to make the distinction between an administrative error and willful neglect. Our response to question 2 offers a suggested method to do this.
Response: Requirement R8 is an important aspect of the new TPL-001-2 standard to communicate results with neighboring systems and those demonstrating a reliability need. The SDT notes that the VSL Guidelines require a Severe VSL for each and every requirement but encourages graded (multiple level) VSLs where		

Organization	Yes/ No	Question 3 Comment
possible. In regard to Requirement R8, the SDT has established four VSLs. It is noted that an entity can be up to 120 days (~ 4 months) late in its delivery of the information and remain in the Lower VSL category before being exposed to the Severe VSL category. The 10 day increment in the other VSL categories, above the 120 day Lower VSL, conforms to NERC's VSL Guidelines. See the response to your suggested VSL changes in Question 2, however, it is noted that no changes were made to the Requirement R8 VSLs. No change made.		
South Carolina Electric and Gas		R1 does not seem to address errors in data that have been introduced in the latest model data. In addition, R1 and its VSL may be interpreted to exclude the use of past studies. The Implementation Plan should include a five year delay in the effective date for short circuit studies for parts 2.3 and 2.8 of R2 because these studies are not required in the current Version 0 standards.
Response: Requirement R1 of the new TPL-001-2 standard requires the Transmission Planner and Planning Coordinator to maintain System models within its respective area of responsibility. The requirement indicates that information received via MOD-010 and MOD-012 shall be "supplemented by other sources as needed" and to the extent errors and omissions were to be discovered by, or brought to the attention of, the Transmission Planner or Planning Coordinator Requirement R1 establishes an expectation that these "other sources" would be utilized to accurately "represent the project System conditions" being studied. No change made. Requirement R1 is applicable to models used for both current and past studies. No change made. Implementation Plan, Short Circuit Studies – While short circuit study requirements may be new in the realm of mandatory enforceable standards, the SDT does not believe that they present a significant "raising of the bar" for industry. The SDT believes that prudent short circuit practices are effectively in place today to ensure safe operation of the equipment. Therefore, no extension in the Implementation Plan was made in regard to short circuit studies.		
Manitoba Hydro		-Why was the Near Team Transmission Planning Horizon definition moved to the Glossary prior to TPL-001-2 approval?- The definition of Non-Consequential Load Loss should not contain '(2) the response of voltage sensitive Load' because voltage sensitive
Response: Two previously proposed definitions that were part of this project were moved to another standard development project – Project 2010-10 titled "FAC Order 729". The two definitions, "Near-term Transmission Planning Horizon" and "Year One" were approved by the Board of Trustees on January 24, 2011. The statement related to the "Non-Consequential Load Loss" definition is incomplete. No change made.		

Organization	Yes/ No	Question 3 Comment
National Grid		R 1.1.2 We recommend the known facility outage duration be defined as facility outage durations lasting at least twelve months. R 1.1. (page 4) System models shall represent: 1.1.1. Existing Facilities 1.1.2. Known outage(s) of generation or Transmission Facility(ies) with a duration of at least six twelve months. 1.1.3 ..... R 2.1.4 We recommend that this requirement be eliminated. We do not see the value of this additional analysis when the number, type and severity of the sensitivity tests are not well defined. These tests are then used to define Corrective Action Plans in cases only where multiple tests show performance deficiencies. R 2.1.5 Spare equipment strategies are typically designed to prevent long outages (possibility a year or more) of equipment with very long lead times. Any such strategy “could” result in these long outages depending upon the number of failures that may be postulated.This requirement is misleading and we thus recommend it be eliminated. R 2.2 We recommend the language for R 2.2 should be consistent with 2.1 for example - use "current or qualified past studies" instead of "the following annual current study." R 2.6.2 We recommend that the wording of this requirement remain unchanged. R 2.7.1 This portion of the requirement provides a list of “acceptable” Corrective Action Plans. It provides equal weight to infrastructure reinforcements and Special Protection Systems as means to mitigate violations resulting form single or multiple contingencies at both the EHV and HV levels.National Grid’s position is that a national standard should not endorse the use of Special Protection Systems as corrective actions to mitigate single contingency violations.Local Northeast Planning Criteria indicates that special protection systems (SPS) shall be used judiciously and may be used to provide protection for infrequent contingencies, or for temporary conditions that may exist such as project delays, unusual combinations of system demand and equipment outages or availability, or specific equipment maintenance outages. A SPS may also be applied to preserve system integrity in the event of severe facility outages and extreme contingencies. The decision to employ a SPS shall take into account the complexity of the scheme and the consequences of correct or incorrect operation as well as its benefits. We are further of the opinion that specific methods of correcting system performance deficiencies should not be specified in a National Standard. We thus recommend that the Corrective Action List be eliminated from this requirement as illustrated below. 2.7.1. List System deficiencies and the associated actions needed to achieve required System performance. R 2.7.2 We feel that this requirement and requirement R 2.1.4 adds ambiguity to the process as we have

Organization	Yes/ No	Question 3 Comment
		indicated above. We thus recommend that this requirement be eliminated. R 3.3.1 We feel that the last sentence of 3.3.1 should be removed. This is handled by PRC-023. Line ratings are addressed by PRC-023. PRC-023 requires coordination with the Reliability Coordinator. Remove "Tripping of Transmission elements where relay loadability limits are exceeded" Contingency analyses for Requirement R3, Parts 3.1 & 3.2 shall: 3.3.1. Simulate the removal of all elements that the Protection System and other automatic controls are expected to disconnect for each Contingency without operator intervention. The analyses shall include the impact of subsequent: o Tripping of generators where simulations show generator bus voltages or high side of the generation step up (GSU) voltages are less than known or assumed minimum generator steady state or ride through voltage limitations. Include in the assessment any assumptions made. R 3.4.1 We would recommend the following addition as a clarification to the required information exchange: 3.4. Those planning events in Table 1, that are expected to produce more severe System impacts on its portion of the BES, shall be identified and a list of those Contingencies to be evaluated for System performance in Requirement R3, Part 3.1 created. The rationale for those Contingencies selected for evaluation shall be available as supporting information. 3.4.1. The Planning Coordinator and Transmission Planner shall coordinate with adjacent Planning Coordinators and Transmission Planners to ensure that Contingencies on adjacent Systems which may impact their respective Systems are included in the Contingency list. R 8.1 National Grid's concern regarding this requirement stems from the apparent open ended time frame afforded report recipients in their review of the Planning Assessment. This has the potential to stall the review process. National Grid thus recommends that any recipient of the Planning Assessments be given a specific time period for their response as indicated in R 8.1 below. R8. Each Planning Coordinator and Transmission Planner shall distribute its Planning Assessment results to adjacent Planning Coordinators, and adjacent Transmission Planners, within 90 calendar days of completing its Planning Assessment, and to any functional entity that has a reliability related need and submits a written request for the information within 30 days of sucha request. [Violation Risk Factor: LowMedium] [Time Horizon: Long-term Planning] 8.1. The recipient of the Planning Assessment results shall provides documented final comments on the results within 90 calendar days of receipt of the Planning Assessment. The respective Planning Coordinator or Transmission Planner shall provide a documented response to that recipient within 90 calendar days of receipt of those comments. Table 1 Steady State & Stability Performance Planning Events (Page10). The event description for

Organization	Yes/ No	Question 3 Comment
		Category P2 Event 1. along with the accompanying footnote 7 (Page 14) creates some confusion for multi-terminal lines. We recommend that Footnote 7 be eliminated and the event description be changed as follows: Category Initial Conditions Event P2 Normal System 1. Opening of a single load interrupting device at one terminal of a line without a fault. Table 1 (Planning Events and Extreme Events) Footnote 12 (Page 14).We are concerned that additional stakeholder process indicated in Footnote 12 has the potential to stall the Planning Assessment review process. We recommend that reference to this new process be eliminated from the Footnote.Our additional, concerns with Footnote 12 are addressed in comments originally provided by ISO-NE. We agree with their following comments : The following language for Footnote 12 is proposed:"Planned or controlled interruption of electric supply to radial customers or some local Network customers, connected to or supplied by the Faulted element or by the affected area, may occur in certain areas without impacting the overall reliability of the interconnected transmission systems."If Footnote 12 in Table 1 must be retained, the following language is proposed: "An objective of the planning process shall be to minimize the likelihood and magnitude of interruption of Demand, (excluding Interruptible Demand or Demand-Side Management), following Contingency events. However, it is recognized that Demand will be interrupted if it is directly served by the Elements removed from service as a result of the Contingency. Furthermore, in limited circumstances Demand may need to be interrupted to address BES performance requirements. When interruption of Demand is utilized within the planning process to address BES performance requirements, such interruption is limited to: a. Interruptible Demand or Demand-Side Managementb. Circumstances where the uses of Demand interruption not directly interrupted by the contingency are documentedc. Curtailment of firm transfers is allowed to meet BES performance requirements and meet applicable Facility Ratings, where it can be demonstrated it does not result in the interruption of any Demand (other than Interruptible Demand or Demand Side Management)"

Response: Requirement R1, Part 1.1.2 – The SDT and a majority of industry stakeholder support the 6-month period stated in the requirement. No change made.

Requirement R1, Part 1.1 – Same comment as above. No change made.

Requirement R2, Part 2.1.4 – Requirement R2, Parts 2.1.4 and 2.4.3 are not inconsistent with Requirement R2, Part 2.7.2. With the various requirements, the planners are required to conduct multiple sensitivities. Therefore, Requirement R2, Part 2.7.2 could be used when the results of these multiple sensitivities identify common concerns. No change made.

Requirement R2, Part 2.1.5 is intended to analyze the removal of a single piece of long lead time equipment (one year or more) to the extent there is no existing

Organization	Yes/ No	Question 3 Comment
spare equipment strategy to provide a means of returning to service (in less than one year) a comparable replacement. If this condition exists, then the facility (single element) in question must be removed in the model to establish a new P0 system condition and studies must then be run for P0, P1, and P2 for the new system scenario. The spare equipment strategy must be reviewed for the entity's system exposure to catastrophic failures resulting in the long lead-time facility outages, however, only one facility must be removed at a time if the condition exists for multiple facilities. A Transmission Planner may have no spare equipment strategy if they are able to demonstrate they are not responsible for any facilities which they believe could place them in a "long lead-time" scenario. No change made. Requirement R2, Part 2.2 - The requirement for an annual current steady-state study in the Long-Term Transmission Planning Horizon is intentional to drive earlier identification of potential Transmission performance limitations and earlier development of Corrective Action Plans. The study results can be used as qualified studies as they advance to later years, including moving to the Near-Term Transmission Planning Horizon. No change made. Requirement R2, Part 2.6 – The changes made to this requirement in the last draft were essentially style changes and the most substantive change is the introduction of documentation required to support the technical rationale for determining whether or not material changes have occurred. This was a recommendation made by the Quality Review process and agreed to by the SDT. No change made. Requirement R2, R2.7.1 – The SDT respectfully disagrees that actions that could be part of a Corrective Action Plan (CAP) should be eliminated. In regard to the concern of allowing SPS within the CAP, this view is not shared across the continent-wide footprint and National Grid and its Regional Entity always have the ability to go above and beyond the requirements of a NERC standard if they believe such action is warranted. No change made. Requirement R2, Part 2.7.2 - Requirement R2, Parts 2.1.4 and 2.4.3 are not inconsistent with Requirement R2, Part 2.7.2. With the various requirements, the planners are required to conduct multiple sensitivities. Therefore, Requirement R2, Part 2.7.2 could be used when the results of these multiple sensitivities identify common concerns. No change made. Requirement R3, Part 3.3.1 – The SDT appreciates the concern raised; however, it believes the subsequent tripping of "Transmission elements where relay loadability limits are exceeded" is warranted. The TPL studies may earlier identify and flag relay setting concerns based on required Long-Term Transmission Planning Horizon studies. Within the TPL standard, such a concern would have a Corrective Action Plan that would address the issue which would also meet the expectations of PRC-023. The SDT sees this as a defense in depth approach. No change made. Requirement R3, Part 3.4.1 – The additional information suggested was not implemented as it did not add to reliability or clarify the issue beyond the present wording. No change made. Requirement R8, Part 8.1 – The SDT does not see a reliability related need for the suggestion and believes a response regarding a Planning Assessment is warranted no matter when raised by the reviewing party. No change made.		

Organization	Yes/ No	Question 3 Comment
Table 1, footnote 7 – The SDT added the footnote to further explain its intent for P2-1 and to ensure that the planner assess the voltage of a load bus that was on a radial line. The word "possibly" was used since having load on a radial is not always the outcome of opening one end of a line section. No change made. Table 1, Footnote 12 – The SDT believes the stakeholder process provides a level of transparency needed when an entity intends to utilize provisions offered by footnote 12 (and footnote 9). No change made.		
TVA TP&C		TVA - has following comments:TVA is concerned about footnote 12 (known as footnote b in existing TPL standards). TVA believes that utilities should be given some freedom in dropping local load in response to N-1 events as long as overall BES reliability is not impacted. Otherwise significant capital improvements will be required that will have no overall reliability gain for the Bulk Electric System. In R4.1.1, TVA is concerned that no generating unit (including distributed generation) shall pull out of synchronism in a local area only (thus not impacting the overall reliability of the BES) for Planning Event P1, while the standard does allow generator runback/tripping for the same event. Thus the generating unit may be tripped by a special protection scheme - but may not be tripped by an out of step relay. TVA believes that out of step relaying should be allowed for this unit tripping as long as this does not affect the overall reliability of the BES. Table 1 contains both planning events and extreme events. Suggest labeling the planning events as Table 1 and the extreme events as Table 2 to help reduce confusion. VSL for R1 does not seem to address issues where data errors have been introduced into the latest model data. Also, R1 and its VSL may be interpreted to exclude the use of past models. The Implementation Plan should include a five-year delay in the effective date for short circuit studies (R2 parts 2.3 and 2.8) since these studies are a new TPL requirement and are not required in the current version 0 standards.
Response: The SDT has taken care to ensure consistency in footnote 12 (and footnote 9) with the prior footnote 'b' revision supported by industry, approved by the NERC Board of Trustees, and submitted for regulatory approval. No change made. Requirement R4, Part 4.1.1 - The SDT respectfully disagrees with the commenter. For a P1 single Contingency event, the SDT believes, and a majority of industry stakeholders find it reasonable, that no Bulk Electric System (BES) generation unit be pulled out of synchronism due to the P1 event studied. If the "small" nearby unit is served below threshold kV and MW size limitations set by the Regional Entity to qualify as a BES unit, the unit would not be within scope of the standard. No change made.		

Organization	Yes/ No	Question 3 Comment
Desire for Two Tables – This has been vetted within industry in prior comment/ballot periods. The majority of stakeholders support the current format. No change made. Requirement R1 VSL – The requirement indicates that supplied data may have to be supplemented as appropriate. The SDT believes that this covers correcting any data errors. The SDT sees no reason why the current language invalidates the use of past models as long as they meet the requirements. No change made. While short circuit study requirements may be new in the realm of mandatory enforceable standards, the SDT does not believe that they present a significant "raising of the bar" for industry. The SDT believes that prudent short circuit practices are effectively in place today to ensure safe operation of the equipment. Therefore, no extension in the Implementation Plan was made in regard to short circuit studies.		
Independent Electricity System Operator		See our response to Q1.
Response: See response to Q1.		
NBSO		Items that, if not addressed, will likely cause a negative vote from NBSO: NBSO believes that R1.1.2 is more appropriately addressed in the operational timeframe. Perhaps more appropriate alternatives could include:-only considering planned outages with durations of one year or more (in-line with typical planning timeframes), or -requiring that facilities with planned outages lasting over the complete duration of time period being studied be modeled out of service. R2.1.5 may significantly increase the demands of the planning assessments with little gain in reliability. Depending on interpretation, R2.1.5 could exponentially increase the work load of the annual planning assessment. NBSO interprets the intent of R2.1.5 to require that entities have, review and evaluate their spare equipment strategies. Perhaps the assessment of a spare equipment strategy would be more appropriately addressed in a separate standard. Further, categories P0, P1 and P2 do not reference footnote 9 in the Initial Condition column. NBSO is unclear if the last sentence of R2.1.5 allows for the curtailment of firm transmission service under the N-1 conditions before the application of category P0, P1 and P2 events. This last sentence states:"...with the conditions that the System is expected to experience during the possible unavailability of the long lead time equipment." Table 1, note b should be modified to allow for the loss of Firm Transmission Service. This addresses cases where Firm Transmission Service is lost in direct consequence to the event (e.g. loss of one DC pole, an

Organization	Yes/ No	Question 3 Comment
		interface comprised of a single line, a bus fault that clears multiple lines in an interface, etc...) Individual items that, if not addressed, may not cause NBSO to vote Negative, but in combination may result in a negative vote:The definitions of “near-term transmission planning horizon” and “year one” have been removed from the standard, yet they are still used in draft 7. Further, the definition of these terms is being filed as part of another project. NBSO is concerned with endorsing a standard based on terms whose definitions may change independently of this project. For R7, NBSO is concerned that one entity may be found noncompliant should another entity fail to meet their agreed upon responsibilities. For example, a PC may be relying on the results from a TP’s studies to complete its own planning assessment, but the TP did not meet their responsibilities. In this case, the PC should not be found non-compliant for an incomplete planning assessment due to the failure of the TP to meet their responsibilities.Contingencies on back to back HVDC facilities are not addressed in the standard.

Response: Requirement R1, Part 1.1.2 - The SDT disagrees with the view that outages of 6 months or more should only be reviewed in the operations timeframe. Such an outage could be for an upcoming construction project requiring certain facilities to be removed from service for long durations of time and those situations should be evaluated with sufficient lead time to determine any vulnerabilities and development of sufficient Corrective Action Plans as required. No change made.

Requirement R2, Part 2.1.5 is intended to analyze the removal of a single piece of long lead time equipment (one year or more) to the extent there is no existing spare equipment strategy to provide a means of returning to service (in a less than one year) a comparable replacement. If this condition exists, then the facility (single element) in question must be removed in the model to establish a new P0 system condition and studies must then be run for P0, P1, and P2 for the new system scenario. The spare equipment strategy must be reviewed for the entity’s system exposure to catastrophic failures resulting in the long lead-time facility outages, however, only one facility must be removed at a time if the condition exists for multiple facilities. A Transmission Planner may have no spare equipment strategy if they are able to demonstrate they are not responsible for any facilities which they believe could place them in a “long lead-time” scenario. No change made.

Requirement R2, Part 2.1.5 & Footnote 9 – Footnote 9 is not applicable to the Initial Condition (Pre-contingency) of P0, P1, and P2 even with a long lead-time device out of service. No change made.

Table 1, footnote ‘b’ - The SDT believes the concern should be addressed by footnote 4, Conditional Firm Transmission Service. No change made.

Removal of Definitions - Two previously proposed definitions that were part of this project were moved to another standard development project – Project 2010-10 titled “FAC Order 729”. The two definitions, “Near-Term Transmission Planning Horizon” and “Year One” were approved by the Board of Trustees on January 24, 2011.

Requirement R7 – The SDT disagrees, having documented clear lines of responsibility should protect against the concern raised. No change made.

Organization	Yes/ No	Question 3 Comment
Back to Back HVDC – The contingent loss of back to back HVDC facilities is included as a transformer. Footnote 5 states, in part, that "Requirements which are applicable to transformers also apply to variable frequency transformers and phase shifting transformers. Therefore, the SDT has not explicitly included back-to-back HVDC as a separate Contingency. No change made.		
Xcel Energy		Effective Date: The effective date section seems to imply that Non-Consequential Load Loss will not be permitted after the 84 month implementation period. We do not believe that was the drafting team's intent and request that it be modified. Footnote # 12 in Table 1, in particular, seems to support our assumption that the team did not intend to disallow it. For reference, the footnote states:"12. An objective of the planning process should be to minimize the likelihood and magnitude of Non-Consequential Load Loss following Contingency events. However, in limited circumstances Non-Consequential Load Loss may be needed to address BES performance requirements. When Non-Consequential Load Loss is utilized within the planning process to address BES performance requirements, such interruption is limited to circumstances where the Non-Consequential Load Loss is documented, including alternatives evaluated; and where the utilization of Non-Consequential Load Loss is subject to review in an open and transparent stakeholder process that includes addressing stakeholder comments." However, if it was the drafting team's intent to not allow Non-consequential Load Loss after the 84 month implementation period, we disagree and ask the team to reconsider. Particularly for rural areas, in some cases, this will be the only action possible. R2.1.4: a) We would like to see clarification on the term "sensitivity analysis". Is this in reference to seasonal models and differences in fuel availability? We would like more detail on how this is to be done so that it won't be left up to interpretation. b) We would like the drafting team to consider stratification of the tasks needed to perform a Planning Assessment. In our opinion, having both the TP and PC do exactly the same study produces tremendous and unnecessary duplication. Without stratification, the TPL-001 standard will continue to perpetuate the same paradigm used in the existing TPL-001 through TPL-004 standards. The NERC Functional Model makes a clear distinction between PC and TP functions/responsibilities. It is not clear why that distinction is not leveraged in the new TPL-001 standard. This will be particularly troublesome in areas where an ISO or RTO is the Planning Coordinator. In order for the RTO/ISO, as the PC, to be able to do their Planning Assessment, the Transmission Planners would have to provide a lot of detailed input data. So, in effect, both the PC and TP would be performing their assessment from the same data. It would make more sense if the RTO (as the PC) performed the required studies on the 500-345 kV network and the TP performed the required studies on everything below 230 KV.

Organization	Yes/ No	Question 3 Comment
		We also recommend the allowance for utilization of a regional assessment, instead of performing your own, due to individual entity resource constraints. R2.4.1: We would like to see better clarity on what an Aggregate system load model is and how granular it should be. If the intent is for the model to contain a very detailed representation of the load system, then it may take a longer time to implement. R3.4.1: a) This type of coordination could be difficult due to other adjacent entities on different schedules and some may not have the amount of detail to incorporate into another's processes. We know this is generally covered in coordination of real time operations and wonder if it is appropriate to require this type of coordination in the long term process. Is there already an operational standard that covers this? Would it be better to address this in the operational standards? We would like the roles of the coordinators vs. the planners to be clarified in order to ensure that no work is being duplicated. b) PC's between regions, such as RTOs, are already coordinating for long term studies. In these cases, we feel the PC should alone be responsible for the requirements, rather than also the TPs. c) Can we get a clear definition of what apparent impedance swings means? We interpret it as rotor angle stability. R4.3.1: We would like to see that the detailed data is incorporated back into the NERC modeling processes and create a more detailed model with better accuracy. R8: We do not agree with the requirement to provide the assessment to every adjacent PC and TP because we fail to see the reliability benefit in doing so. However, we do agree that the PC and TP should be required to provide the assessment to any of these entities, if requested. Additionally, for entities that make such requests, we would like to have 90 days instead of 30 to respond. In many cases a non-disclosure agreement will have to be executed due to CEII classification of some information, and this can take several months.
Response: Effective Date - The SDT believes the Effective Date section is sufficiently clear. The use of Non-Consequential Load Loss while discouraged by the standard is permitted when justified and presented in a transparent manner to other stakeholders (footnote 12). No change made. Sensitivity Analysis – This analysis should be viewed as a modified study of the Peak or off-peak studies required in Requirement R2, Parts 2.1.1 and 2.1.2. The SDT believes the examples provided in the bulleted list of Requirement R2, Part 2.1.4 are sufficiently clear as examples of what could be modified to create the sensitivity model. No change made.		

Organization	Yes/ No	Question 3 Comment
Delineation of tasks between Transmission Planner and Planning Coordinator – The issue raised is addressed by Requirement R7. No change made. Regional Assessments – The standard does not prohibit the use of valid studies performed by 3rd parties for use in the assessment results. No change made. Requirement R2, Part 2.4.1 - The "aggregate" dynamic Load model may include high-level assumptions on Load profiles for industrial, commercial, and residential Loads that are applied generically across the planning area study based on the planner's engineering judgment and system knowledge. The model is not required to be "bus" specific. No change made. Requirement R3, Part 3.4.1 - The SDT envisions that knowledge of the applicable Contingencies on neighboring systems would develop over time and be discovered with the results being distributed in Requirement R8. The SDT believes that this is an important improvement to the planning timeframe analysis and that system information learned in the operations environment should most certainly be considered to the extent it improves the robustness of the planning assessment. No change made. Planning Coordinator responsibility – NERC's Functional Model clearly places Transmission planning responsibility both on the Transmission Planner and Planning Coordinator. Requirement R7 should help alleviate any overlap concerns in responsibility. No change made. Apparent Impedance Swings - The "apparent impedance swing" is the trajectory of changes in the apparent impedance seen by a distance relay for various system and Fault conditions. In the case contemplated in Requirement R4, Part 4.1.2, it is the trajectory seen by the distance relay for the initial Fault and the subsequent generator(s) pulling out of synchronism. If that trajectory were to come within the tripping characteristic of the relay for a sufficient length of time, the relay would cause its associated line to trip. No change made. NERC Modeling Process – The standard does not govern NERC actions as they are not a registered entity. To the extent NERC pulls information from a model building process such as MMWG (ERAG) then the models used by NERC will likely contain the information desired. No change made. Requirement R8 – The SDT and a majority of industry support Requirement R8. No change made.		
ISO New England Inc.		We feel previous comments have largely been ignored by the Standards Drafting Team leading to a lack of support for the standard. Overall the standard should be more precise in its language. The following comments are provided for serious consideration with respect to revisions:Comments: From Section A.3 - the introduction please strike the word "probable" as shown below Purpose: Establish Transmission system planning performance requirements within the planning horizon to develop a Bulk Electric System (BES) that will operate reliably over a broad spectrum of System conditions and following a wide range of probable Contingencies This is deterministic contingency testing and this word introduces probability into the standard where it does not belong. For R1.1 Part 1.1.2. With respect to known outages, there needs to be greater flexibility in the standards (e.g. more tolerance to non-consequential load shedding or limitations to the contingencies that need to be

Organization	Yes/ No	Question 3 Comment
		considered (e.g. P0, P1, & P2)). Regional allowances for load shedding under this condition should be acceptable. Duration of known outages should be increased from six months to one year. For R1.1 Part 1.1.6 Delete "required for Load". Resources may also be used for export to other areas, not just internal load. REMOVE INTERCHANGE from 1.1.5 - Definition of Interchange - The inclusion of Interchange requires designing for non-Firm service.In the NERC Glossary of Terms Used the term Interchange is defined as "Energy transfers that cross Balancing Authority boundaries." It is meant to refer to energy transaction other than firm Transmission Service. While rigorous planning studies have been conducted to permit the uninterrupted implementation of firm Transmission Service without jeopardizing the reliable operation of the Interconnected System, other types of energy transaction only take place whenever system conditions permit them. They are usually of very short duration relative to planning assessment periods (usually spanning for a few hours to a few days) and are deemed highly interruptible and subject to reliability issues that may arise during operation of the system. In other words, the term Interchange refers to economic transactions that are permitted when the system is secure and there are reasonable reliability margins to effect dispatch changes to lower operating costs. As such, Interchange should not be reflected in system representation meant to assess system reliability under TPL-001. Part 2.1.4, requires an entity to vary one or more conditions to demonstrate a change in performance. If the cases were initially stressed, this may force an entity to simulate conditions with less severe stresses. At this point, there is limited or no value to this additional workload. Having a requirement to test at least one sensitivity as a blanket requirement may not be informative by itself and is more unclear since sensitivities are being required on an undefined base set of conditions. Additionally, our concern involves wording under 2.1.4 and 2.4.3 that sensitivities are required varying one or more conditions. Subsequently, in requirement 2.7.2 corrective action plans need to be developed to resolve performance deficiencies "only" if identified in multiple conditions or require a rationalization why no corrective action plan is necessary. Multiple condition sensitivities under 2.1.4 and 2.4.3 are necessary to satisfy requirement 2.7.2. Requirement 2.7.2 adds ambiguity and should be removed or revised as follows: 2.7.2. Corrective Action Plans are not required for performance deficiencies identified in a sensitivity analysis. We agree with R2.1 however with respect to R2.2 Language should be consistent with 2.1 for example - use "current or qualified past studies" instead of "the following annual current study." For 2.7.1 - We don't believe this list provides value nor should it be included in the standard. Section 3.3 - We feel that the last sentence of 3.3.1 should be removed. This is handled by PRC-023. Line

Organization	Yes/ No	Question 3 Comment
		ratings are addressed by PRC-023. PRC-023 requires coordination with the Reliability Coordinator. Remove "Tripping of Transmission elements where relay loadability limits are exceeded." In Table 1 - The fault descriptions must be clear. They must use "3-phase", "single-phase-to ground", or "2-phases-to ground" in the descriptions of a fault rather than SLG (a line is not a phase in electrical terms--single line to ground is not precise enough). In Table 1 - Where two elements are affected by a fault it must be clear whether the requirement is for a single-phase-to ground fault, or a 2-phase-to ground fault. They are different faults that will have different dynamic responses. For Table 1- add a footnote for the term generator to address the treatment of Combined Cycle Generators - "In addition to evaluating the loss of a single generator, the loss of all interrelated generators shall also be considered as a single contingency." Operating experience has shown that trips of the entire CC facility often occur even on facilities that claim the combined cycle generators are independent. Where a category involves an initial condition representing the loss of a facility followed by an event represeting the loss of a facility such as P3, the standard must be clear as to the amount of time assumed between faults. An assumption may be 30 minutes, but the standard must not leave this unsaid. This clarity must be provided in the Table 1 Notes.In addition, the standard must be clear on the allowable re-adjustments between contingencies such as P3, or better, must be clearly limit the permissible re-adjustments. For example, it is not realistic to assume an unlimited amount of re-dispatch between faults-e.g. the allowable re-adjustment should be limited to actions that can be effectively implemented in less than 30 minutes, such as a, b, c, d, ..., and the amount of generation re-dispatch must not exceed the amount of future planned contingency reserve, or similar language. This clarity must be derivable from the Table 1 Notes.

Response: A.3 Purpose Statement – While admittedly "probable" is somewhat in the eye of the beholder the intent is that Bulk Electric System (BES) should operate reliably for the more "probable" or "credible" Contingencies, i.e., Planning Events (Table 1), and that the BES reliability performance expectation is lower for the less "probable" extreme events. The SDT does not see this statement as defining the standard as probabilistic Contingency planning and agrees that the standard is deterministic planning. No change made.

Requirement R2, Part 1.1.2 – The SDT disagrees that the duration of known outages should be increased from 6 months to one year. The intent is to ensure review of an upcoming construction project requiring certain facilities to be removed from service for long durations of time and those situations should be evaluated with sufficient lead time to determine any vulnerabilities and development of sufficient Corrective Action Plans (CAP) as required. The SDT believes it is

Organization	Yes/ No	Question 3 Comment
		appropriate to study all planning events for the projected system and not limit it to just P0, P1. or P2. Load shedding could be part of a "temporary" CAP when justified by the use of footnote 12. No change made. Requirement R1, Part 1.1.6 - The SDT does not believe the phrase "required for Load" is confusing. Without the statement, in theory, one could have a model with lots of supply resources but none which are dispatched to serve the Load. The term Load does not depict whether it is located internal or external to the Transmission system footprint. No change made. Requirement R1, Part 1.1.5 – Both firm and non-firm transfers of power should be modeled to the extent they are "known commitments" in the Planning Horizon. The short duration transactions described would likely not be known and therefore should not be included in a planning model. No change made. Requirement R2, Part 2.1.4 – the commenter has missed the key phrase "… by a sufficient amount to stress the System …". So, by definition of the requirement the sensitivity analysis is not intended to lower the overall stress of the system being analyzed. Additionally, Requirement R2, Parts 2.1.4 and 2.4.3 are not inconsistent with Requirement R2, Part 2.7.2. With the various requirements, the planners are required to conduct multiple sensitivities. Therefore, Requirement R2, Part 2.7.2 could be used when the results of these multiple sensitivities identify common concerns. No change made. Requirement R2, Part 2.2 - The requirement for an annual current steady-state study in the Long-Term Transmission Planning Horizon is intentional to drive earlier identification of potential transmission performance limitations and earlier development of Corrective Action Plans (CAPs). The study results can be used as qualified studies as they advance to later years, including moving to the Near-Term Transmission Planning Horizon. No change made. Requirement R2, R2.7.1 – The SDT respectfully disagrees that example actions that could be part of a Corrective Action Plan (CAP) should be eliminated. If an entity takes issue with the use of one of the stated items as part of a CAP, they are always free to go above and beyond the requirements of a NERC standard if they believe such action is warranted. No change made. Requirement R3, Part 3.3.1 – The SDT appreciates the concern raised; however, it believes the subsequent tripping of "Transmission elements where relay loadability limits are exceeded" is warranted. The TPL studies may earlier identify and flag relay setting concerns based on required Long-Term Transmission Planning Horizon studies. Within the TPL standard, such a concern would have a CAP that would address the issue which would also meet the expectations of PRC-023. The SDT sees this as a defense in depth approach. No change made. Fault Types – Only single line to ground (SLG) and three-phase (3PH) fault types are covered by the standard. See Table 1, footnote 2 for further information on fault types and standard expectations. No change made. Combined Cycle Plants – If the planner believes it is appropriate to model the tripping of the combined cycle generation as a set then they should do so. Recall, in planning assessments, you are analyzing Contingency events based on electrical Faults and the SDT reminds the commenter that adherence to introductory Table 1 note "c" is required. Additionally, to the extent the combined cycle units deliver their power via a common GSU transformer the loss of the GSU should also address the concern. No change made. System Adjustments – The timing between events which are not common mode events (P3, P6) is not defined by the standard. Engineering judgment should

Organization	Yes/ No	Question 3 Comment
prevail and if the planner believes a susceptibility to an N-2 event of quick duration places their system at risk then the use of automatic controls should be considered. The only qualifier on System adjustments is that Facility Ratings must be adhered to during the adjustment. So, if you are adhering to a 30-minute Emergency Rating, but are exceeding a 24-hour Emergency Rating then the adjustment must be completed within the time limitation of the rating. No change made.		
Northeast Utilities		The following previous comments that were filed by NU were not addressed by the SDT in the current draft. For NU to support the standard these comments should be addressed or reasons should be provided why they have not been addressed. Repeated below are NU's comments that were filed for the previous draft. Requirement R1, Part 1.1.2 NU requests that the six month duration stated by Requirement R1, Part 1.1.2 should be modified to one year duration to eliminate outages that occur within the "operational planning timeframe". Requirement R1, Part 1.1.6The phrase "required for Load" should be deleted as this confuses the issue.Requirement R2, Part 2.2The language of Requirement R2 Part 2.2 seems to suggest that current annual studies are always required for the long-term steady state assessment. This may have been an oversight, for consistency Requirement R2 Part 2.2 should be modified to similarly read as Requirement R2, Part 2.1. Requirement R2, Parts 2.1.4 & 2.4.31) The standard is referring to requirements for sensitivity and other issues without a reference to base assumptions. The standard must describe base assumptions. To define a sensitivity condition, NERC must define base assumptions. 2) Requirement R2, Part 2.1.4 and Part 2.4.3 should clarify what is meant by multiple sensitivity studies and one sensitivity study. Will varying only one measurable quantity several times in multiple simulations constitute multiple sensitivity studies or one sensitivity study? Requirement R3, Part 3.3.1NU feels that the last sentence of Requirement R3, Part 3.3.1 should be removed since this is handled by PRC-023. Line ratings are addressed by PRC-023 which requires coordination with the Reliability Coordinator. NU suggests the removal of the following sentence: "Tripping of Transmission elements where relay loadability limits are exceeded."
Response: Requirement R1, Part 1.1.2 - The SDT disagrees with the view that outages of 6 months or more should only be reviewed in the operations timeframe. Such an outage could be for an upcoming construction project requiring certain Facilities to be removed from service for a long durations of time and those situations should be evaluated with sufficient lead time to determine any vulnerabilities and development of sufficient Corrective Action Plans as required. The		

Organization	Yes/ No	Question 3 Comment
review of known and planned construction items should not be delayed until the operations timeframe. No change made. Requirement R1, Part 1.1.6 - The SDT does not believe the phrase "required for Load" is confusing. Without the statement, in theory, one could have a model with lots of supply resources but none which are dispatched to serve the load. No change made. Requirement R2, Part 2.2 - The requirement for an annual current steady-state study in the Long-term Transmission Planning Horizon is intentional to drive earlier identification of potential Transmission performance limitations and earlier development of Corrective Action Plans (CAP). The study results can be used as qualified studies as they advance to later years, including moving to the Near-Term Transmission Planning Horizon. No change made. Requirement R2, Parts 2.1.4 & 2.4.3 – The "base case" assumption is described in Requirement R1 by the fact that the P0 model "shall represent the projected System conditions" for the study period. That essentially establishes the "base case" condition. The sensitivity analysis in Requirement R2, Part 2.1.4 is intended to address some potential "what if" conditions that the planner should consider as an alternate base P0 condition. The SDT believes Requirement R2, Part 2.1.4 provides sufficient detail and clarity of the intended purpose of a sensitivity study and defers to engineering judgment in how the alternate base (sensitivity) model is established. Varying one variable multiple times would cover multiple sensitivities. For example, one may vary the Load modeled. If the base condition is a 50/50 forecast model, one sensitivity may be an 80/20 forecast, while yet another is a 90/10 forecast model. No change made. Requirement R3, Part 3.3.1 – The SDT appreciates the concern raised; however, it believes the subsequent tripping of "Transmission elements where relay loadability limits are exceeded" is warranted. The TPL studies may earlier identify and flag relay setting concerns based on required Long-Term Transmission Planning Horizon studies. Within the TPL standard, such a concern would have a CAP that would address the issue which would also meet the expectations of PRC-023. The SDT sees this as a defense in depth approach. No change made.		
MISO		Overall, we remain concerned that the revisions to the TPL standard are not on balance an improvement to the original. The document is not well organized topically, making it more difficult to navigate and understand. If the primary improvements sought in requirements for reliability planning were to increase system performance levels (no loss of firm demand) for certain multiple contingency events, and to ensure more stressed system sensitivities are analyzed, this can be accomplished in a much simpler revision. We do not believe that this standard as written improves the clarity of what is required, and therefore provides an opportunity for greater disputes between compliance monitors and applicable entities, and this is not a positive outcome. We also believe that the standard is too prescriptive as to what critical system conditions must be modeled, as these conditions vary considerably from system to system and within large systems. Table 1-Steady State and Stability Performance Planning Events, Category P5, now includes "non-redundant" relay in the Event column. What is meant by non-redundant relay? It is unclear if the SDT's intent is to provide distinction between a back-up relay and a redundant relay. We recommend that the SDT provide a definition for the term "non-redundant".

Organization	Yes/ No	Question 3 Comment
Consumers Energy	Ballot Comment	We agree with comments submitted by MISO
Response: The SDT and others in industry hold a different opinion in regards to the standard. The SDT refers you to the comments provided by Transmission Strategies, LLC which well articulates what it believe is the opinion of many in industry evidenced by the 74% approval during the last ballot. Transmission Strategies, LLC states "The SDT, Observers, and the Industry as a whole have put a tremendous amount of thought and work into the development of this latest draft. While nobody should claim that this latest version is perfect, it is far clearer, more in tune with current industry needs, and much improved compared to the existing approved Standards that it will replace". No change made. Redundant Relay – Redundant means duplicate capability resulting in the same outcome. The redundant relay is not the same as a back-up relaying capability which may result in more Facilities being removed for failure of the primary/redundant relay to operate as designed. The SDT believes this concept is widely understood by most in industry and does not see the need for a NERC Glossary Definition. No change made.		
New York Independent System Operator		Requirement R2.4.1The NYISO, along with many other systems, has not determined a need to model dynamic loads, and therefore has not benchmarked any such models. The NYISO recommends that prior to the implementation of this requirement a modeling standard should exist that is specific to dynamic loads, including as assessment for the need for dynamic load models.
Response: Requirement 2, Part 2.4.1 – One focus of the dynamic Load model requirement in Requirement R2, Part 2.4.1 is "considering the behavior of induction motor load". The areas of concern for induction motor load are the Peak load periods since Fault Induced Delayed Voltage Recovery (FIDVR) is primarily a concern at a high load levels with a high penetration of induction motor loads. The SDT has spelled out this requirement in the Peak Load studies but did not include the explicit requirement, with focus on induction motor load, for the other load periods. Even though the standard doesn't have the explicit requirement for other load levels, Requirement R1 includes the statement "shall represent projected System conditions", so the planner cannot ignore the dynamic behavior of the load for those other load periods. No change made.		
Ameren		With respect to Requirement R8, will posting the assessment to a secure web site meet the intent of the requirement? What are the Planning Assessment results identified in R8, and how are they different from the Planning Assessment? It appears that the language for R8 is inconsistent with the VSL for R8. The revised language for the VSL for R8 has removed the word "results". For Measurements M3 and M4, there is still some question as to what is to be provided as sufficient evidence of a study. It is not clear whether the study results would be sufficient, or whether the entire powerflow,

Organization	Yes/ No	Question 3 Comment
		stability, or short circuit effort needs to be documented in a formal study report. For example, it is not clear whether contingency lists used in performing the study work would need to be retained as part of the documentation. The items listed as 4.1.1 through 4.1.3 are not requirements but are performance criteria and should be included in the Table 1 only, consistent with the other performance criteria. Overall, we believe that this standard does not improve the clarity of what is required, and would give additional occasions for disputes between compliance monitors and various registered entities. The standard as written is too prescriptive with regard to critical system conditions which are to be modeled. Such conditions would vary considerably for different systems across the continent.

Response: Requirement R8 – Posting results to a secure website with adequate communication that the results are available for review would suffice for Requirement R8. The "Planning Assessment" and "Planning Assessment results" are one and the same. No change made.

Measures M3 and M4 – The evidence could be a combination of summary documented results, the power flow case itself, the Contingency lists, output files showing evidence of the Contingency analysis being performed, etc. No change made.

The SDT believes the items in Requirement R4, Parts 4.1.1 through 4.1.3 are properly located. The standard is the sum of the parts – requirements and the Table and the location of the highlighted items is not critical to the desired outcome. No change made.

Clarity of the standard - The SDT and others in industry hold a different opinion in regard to the standard. The SDT refers you to the comments provided by Transmission Strategies, LLC which well articulates what it believes is the opinion of many in industry evidenced by the 74% approval during the last ballot. Transmission Strategies, LLC states "The SDT, Observers, and the Industry as a whole have put a tremendous amount of thought and work into the development of this latest draft. While nobody should claim that this latest version is perfect, it is far clearer, more in tune with current industry needs, and much improved compared to the existing approved Standards that it will replace". No change made.

Exhibit E

Mapping Document

NERC
NORTH AMERICAN ELECTRIC RELIABILITY CORPORATION

Mapping Document

Project 2006-02 Assess Transmission Future Needs

Mapping document showing the translation of TPL-001-2 – System Performance Under Normal (No Contingency) Conditions (Category A); TPL-002—1b – System Performance Following Loss of a Single Bulk Electric System (BES) Element (Category B); TPL-003-1a – System Performance Following Loss of Two or More Bulk Electric System Elements (Category C); TPL-004-1 – System Performance Following Extreme Events Resulting in the Loss of Two or More Bulk Electric System Elements (Category D); TPL-005-0 – Regional and Interregional Self-Assessment Reliability Reports; and TPL-006-0.1 – Data From the Regional Reliability Organization Needed to Assess Reliability.

Standard TPL-001-1 – System Performance Under Normal (No Contingency) Conditions (Category A)		
Requirement in Approved Standard	Translation to New Standard or Other Action	Description (as needed)
R1	TPL-001-2, R1 & R2 TPL-001-2, Table 1 – P0	Requirement R1 sets P0 in Table 1 as the normal system condition.
R1.1	TPL-001-2, R2.1 TPL-001-2, R2.2	Requirement R2.1 is for near-term and Requirement R2.2 is for long-term
R1.2	TPL-001-2, R2.1 TPL-001-2, R2.2	Requirement R2.1 is for near-term and Requirement R2.2 is for long-term
R1.3	TPL-001-2, R2.3 TPL-001-2, R2.4	Requirement R2.3 is for near-term and Requirement R2.4 is for long-term
R1.3.1	TPL-001-2, R2.1.1 TPL-001-2, R2.1.2 TPL-001-2, R2.2.1 TPL-001-2, R1	Requirements R2.1.1 & 2.1.1 are for near-term and Requirement R2.2.1 is for long-term. These new requirements are more stringent than the existing as they require annual assessments regardless of whether the system has changed or not. Requirement R1 is for System models.
R1.3.2	TPL-001-2, R2.1.1 & R2.1.2 TPL-001-2, R2.2.1	Requirements R2.1.1 & R2.1.2 are for near-term and Requirement R2.2 is for long-term.
R1.3.3	TPL-001-2, R2.2.1	This requirement is more stringent than the existing requirement in that it requires a long-term assessment regardless of system conditions.
R1.3.4	TPL-001-2, R1	Normal (pre-contingency) operating procedures, if required, are a part of a Corrective Action Plan and therefore, are required to be included in the System model.

R1.3.5	TPL-001-2, R1.1.5	
R1.3.6	TPL-001-2, R1 & R2.1.1 TPL-001-2, R1 & R2.1.2 TPL-001-2, R2.1.4	Requirements R1, R2.1.1, & R2.1.2 set up the base requirements and Requirement 2.1.4 requires sensitivity analysis to demonstrate the impact of changes to the basic assumptions used in the model.
R1.3.7	TPL-001-2, R1 TPL-001-2, Table 1	Requirement R1 sets P0 in Table 1 as the normal system condition.
R1.3.8	TPL-001-2, R1.1.1 TPL-001-2, R1.1.3	
R1.3.9	TPL-001-2, R1.1.4	Requirement R1.1.4 requires that Reactive Power forecasts are utilized and that performance is met for same.
R1.4	TPL-001-2, R1 &R1.1.3	
R2	N/A	Introductory sentence
R2.1	TPL-001-2, R2.7	
R2.1.1	TPL-001-2, R2.7	Requirement 2.7 requires the development of a Corrective Action Plan which includes a schedule for implementation.
R2.1.2	TPL-001-2, R2.7	Requirement 2.7 requires the development of a Corrective Action Plan which includes a schedule for implementation.
R2.1.3	TPL-001-2, R2.7	Requirement 2.7 requires the development of a Corrective Action Plan which includes a schedule for implementation.
R2.2	TPL-001-2, R1	
R3	TPL-001-2, R2 TPL-001-2, R8	Requirement R2 requires the documentation of the assumptions and summarized results. The revised Requirement R8 is more stringent than the existing requirement in that it includes other Planning Coordinators and Transmission Planners as well as functional entities having a reliability-based need.

Standard TPL-002—1b – System Performance Following Loss of a Single Bulk Electric System (BES) Element (Category B)		
Requirement in Approved	Translation to	Description (as needed)

Standard	New Standard or Other Action	
R1	TPL-001-2, R1, R2, R3.1, & R4.1 TPL-001-2, Table 1 – P1 & P2-1	
R1.1.	TPL-001-2, R2.1 TPL-001-2, R2.2	Requirement R2.1 is for near-term and Requirement R2.2 is for long-term.
R1.2	TPL-001-2, R2.1 & 2.4 TPL-001-2, R2.2 & 2.5	Requirements R2.1 & R2.4 are for near-term and Requirements R2.2 & R2.5 are for long-term.
R1.3.	TPL-001-2, R3 TPL-001-2, R4	Requirement R3 is for steady-state. Requirement R4 is for stability.
R1.3.1	TPL-001-2, R3.4 TPL-001-2, R4.4	Requirement R3.4 is for steady-state and Requirement R4.4 is for stability.
R1.3.2	TPL-001-2, R2.1 & R2.4 TPL-001-2, R2.2 & R2.5 TPL-001-2, R1	Requirements R2.1 & R2.4 are for near-term. Requirement R2.2 is for long-term. Requirement R1 is for System models.
R1.3.3	TPL-001-2, R2.1.1, R2.1.2, R2.4.1, & R2.4.2 TPL-001-2, R2.2.1 & R2.5	Requirements R2.1.1, R2.1.2, R2.4.1 & R2.4.2 are for near-term and Requirements R2.2.1 & R2.5 are for long-term. These new requirements are more stringent than the existing as they require annual assessments regardless of whether the system has changed or not.
R1.3.4	TPL-001-2, R2.2.1 TPL-001-2, R2.5	These requirements are more stringent than the existing requirement in that it requires a long-term assessment regardless of system conditions.
R1.3.5	TPL-001-2, R1.1.5	
R1.3.6	TPL-001-2, R1, R2.1.1 & R2.4.1 TPL-001-2, R1, R2.1.2 & R2.4.2 TPL-001-2, R2.1.4	Requirements R1, R2.1.1, R2.1.2, R2.4.1, & R2.4.2 set up the base requirements and Requirement 2.1.4 requires sensitivity analysis to demonstrate the impact of changes to the basic assumptions used in the model.

R1.3.7	TPL-001-2, R3.1 & R4.1 TPL-001-2, Table 1 – P1 & P2-1	
R1.3.8	TPL-001-2, R1.1.1 TPL-001-2, R1.1.3	
R1.3.9	TPL-001-2, R1.1.4	Requirement R1.1.4 requires that Reactive Power forecasts are utilized and that performance is met for same.
R1.3.10	TPL-001-2, R1.1.1, R1.1.3, R3.3.1, & R4.3.1 TPL-001-2, Table 1 – header note 'c', P-4, & P-5	Requirements R3.3.1, R4.3.1, and header note 'c' require the removal of elements that protection systems are expected to disconnect. Requirements R1.1.1 & R1.1.3 require that existing and planned facilities are modeled. Table 1, P-4, P-5, & extreme events require that backup or redundant systems are included.
R1.3.11	TPL-001-2, R3.3.2 & R4.3.2	Requirements R3.3.2 and R4.3.2 require the simulation of expected automatic operation of existing and planned control devices.
R1.3.12	TPL-001-2, R1.1.2 TPL-001-2, R2.1.3	
R1.4	TPL-001-2, R1 & R1.1.3	
R1.5	TPL-001-2, R3.1 & R4.1 TPL-001-2, Table 1 – P1 & P2-1	
R2	N/A	Introductory sentence
R2.1	TPL-001-2, R2.7	
R2.1.1	TPL-001-2, R2.7	Requirement 2.7 requires the development of a Corrective Action Plan which includes a schedule for implementation.
R2.1.2	TPL-001-2, R2.7	Requirement 2.7 requires the development of a Corrective Action Plan which includes a schedule for implementation.
R2.1.3	TPL-001-2, R2.7	Requirement 2.7 requires the development of a Corrective Action Plan which includes a schedule for implementation.
R2.2	TPL-001-2, R1	
R3	TPL-001-2, R2 &	Requirement R2 requires the documentation of

	R8	the assumptions and summarized results. Requirement R8 is more stringent than the existing requirement in that it includes other Planning Coordinators and Transmission Planners as well as functional entities having a reliability-based need.
Standard TPL-003-1a – System Performance Following Loss of Two or More Bulk Electric System Elements (Category C)		
Requirement in Approved Standard	Translation to New Standard or Other Action	Description (as needed)
R1	TPL-001-2, R1, R2, R3.1, and R4.1 TPL-001-2, Table 1 – P2-2, P2-3, P2-4, P3 through P7	
R1.1	TPL-001-2, R2.1 TPL-001-2, R2.2	Requirement R2.1 is for near-term and Requirement R2.2 is for long-term.
R1.2	TPL-001-2, R2.1 & R2.4 TPL-001-2, R2.2 & R2.5	Requirements R2.1 & R2.4 are for near-term and Requirements R2.2 & R2.5 are for long-term
R1.3	TPL-001-2, R3 TPL-001-2, R4	Requirement R3 is for steady-state and Requirement R4 is for stability.
R1.3.1	TPL-001-2, R3.4 TPL-001-2, R4.4	Requirement R3.4 is for steady-state and Requirement R4.4 is for stability.
R1.3.2	TPL-001-2, R2.1 &R2.4 TPL-001-2, R2.2 & R2.5 TPL-001-2, R1	Requirements R2.1 & R2.4 are for near-term. Requirements R2.2 & R2.5 are for long-term. Requirement R1 is for System models.
R1.3.3	TPL-001-2, R2.1.1, R2.1.2, R2.4.1, & R2.4.2 TPL-001-2, R2.2.1 & R2.5	Requirements R2.1.1, 2.1.2, R2.4.1, & R2.4.2 are for near-term and Requirements R2.2.1 & R2.5 are for long-term. These new requirements are more stringent than the existing as they require annual assessments regardless of whether the system has changed or not.

R1.3.4	TPL-001-2, R2.2.1 TPL-001-2, R2.5	These new requirements are more stringent than the existing requirement in that it requires a long-term assessment regardless of system conditions.
R1.3.5	TPL-001-2, R1.1.5	
R1.3.6	TPL-001-2, R1, R2.1.1, & R2.4.1 TPL-001-2, R1, R2.1.2, & R2.4.2 TPL-001-2, R2.1.4	Requirements R1, R2.1.1, R2.1.2, R2.4.1, & R2.4.2 set up the base requirements and Requirement 2.1.4 requires sensitivity analysis to demonstrate the impact of changes to the basic assumptions used in the model.
R1.3.7	TPL-001-2, R3.1 & R4.1 TPL-001-2, Table 1 – P2-2, P2-3, P2-4, P3 through P7	
R1.3.8	TPL-001-2, R1.1.1 TPL-001-2, R1.1.3	
R1.3.9	TPL-001-2, R1.1.4	Requirement R1.1.4 requires that Reactive Power forecasts are utilized and that performance is met for same.
R1.3.10	TPL-001-2, R1.1.1, R1.1.3, R3.3.1, & R4.3.1 TPL-001-2, Table 1 – header note 'c', P-4 & P-5	Requirements R3.3.1, R4.3.1, and header note 'c' require the removal of elements that protection systems are expected to disconnect. Requirements R1.1.1 & R1.1.3 require that existing and planned facilities are modeled. Table 1, P-4 & P-5, require that backup or redundant systems are included.
R1.3.11	TPL-001-2, R3.3.2 & R4.3.2	Requirements R3.3.2 and R4.3.2 require the simulation of expected automatic operation of existing and planned control devices.
R1.3.12	TPL-001-2, R1.1.2 TPL-001-2, R2.1.3	
R1.4	TPL-001-2, R1 & R1.1.3	
R1.5	TPL-001-2, R3.1 & R4.1 TPL-001-2, Table 1 – P2-2, P2-3,	

	P2-4, P3 through P7	
R2	N/A	Introductory sentence
R2.1	TPL-001-2, R2.7	
R2.1.1	TPL-001-2, R2.7	Requirement 2.7 requires the development of a Corrective Action Plan which includes a schedule for implementation.
R2.1.2	TPL-001-2, R2.7	Requirement 2.7 requires the development of a Corrective Action Plan which includes a schedule for implementation.
R2.1.3	TPL-001-2, R2.7	Requirement 2.7 requires the development of a Corrective Action Plan which includes a schedule for implementation.
R2.2	TPL-001-2, R1	
R3	TPL-001-2, R2 & R8	Requirement R2 requires the documentation of the assumptions and summarized results. Requirement R8 is more stringent than the existing requirement in that it includes other Planning Coordinators and Transmission Planners as well as functional entities having a reliability-based need.
Standard TPL-004-1 – System Performance Following Extreme Events Resulting in the Loss of Two or More Bulk Electric System Elements (Category D)		
Requirement in Approved Standard	Translation to New Standard or Other Action	Description (as needed)
R1	TPL-001-2, R1, R2, R3.5, & R4.5 TPL-001-2, Table 1 – Steady State & Stability Performance Extreme Events	
R1.1	TPL-001-2, R2.1	
R1.2	TPL-001-2, R2.1 & R2.4	
R1.3	TPL-001-2, R3 TPL-001-2, R4	Requirement R3 is for steady-state and requirement R4 is for stability.

R1.3.1	TPL-001-2, R3.5 & R4.5	
R1.3.2	TPL-001-2, R2.1 & R2.4 TPL-001-2, R1	Requirements R2.1 & R2.4 are for near-term. Requirement R1 is for System models.
R1.3.3	TPL-001-2, R2.1.1, R2.1.2, R2.4.1, & R2.4.2	These new requirements are more stringent than the existing as they require annual assessments regardless of whether the system has changed or not.
R1.3.4	TPL-001-2, R1.1.5	
R1.3.5	TPL-001-2, R1.1.1 TPL-001-2, R1.1.3	
R1.3.6	TPL-001-2, R1.1.4	Requirement R1.1.4 requires that Reactive Power forecasts are utilized and that performance is met for same.
R1.3.7	TPL-001-2, R1.1.1, R1.1.3, R3.3.1, & R4.3.1 TPL-001-2, Table 1 – Extreme Events header note 'a' & extreme events	Requirements R3.3.1, R4.3.1, and Extreme Events header note 'a' require the removal of elements that protection systems are expected to disconnect. Requirements R1.1.1 & R1.1.3 require that existing and planned facilities are modeled. Table 1, extreme events require that backup or redundant systems are included.
R1.3.8	TPL-001-2, R3.3.2 & R4.3.2	Requirements R3.3.2 and R4.3.2 require the simulation of expected automatic operation of existing and planned control devices.
R1.3.9	TPL-001-2, R1.1.2 TPL-001-2, R2.1.3	
R1.4	TPL-001-2, Table 1 – Steady State & Stability Performance Extreme Events	
R2	TPL-001-2, R2 & R8	Requirement R2 requires the documentation of the assumptions and summarized results. Requirement R8 is more stringent than the

		existing requirement in that it includes other Planning Coordinators and Transmission Planners as well as functional entities having a reliability-based need.
Standard TPL-005-0 – Regional and Interregional Self-Assessment Reliability Reports		
Requirement in Approved Standard	Translation to New Standard or Other Action	Description (as needed)
R1	ERO Rules of Procedure, Section 803	
R1.1	ERO Rules of Procedure, Section 803	
R1.1.1	ERO Rules of Procedure, Section 803	
R1.1.2	ERO Rules of Procedure, Section 803	
R1.1.3	ERO Rules of Procedure, Section 803	
R1.2	ERO Rules of Procedure, Section 803	
R1.3	ERO Rules of Procedure, Section 803	
R1.4	ERO Rules of Procedure, Section 803	
R2	ERO Rules of Procedure, Section 803	
R3	ERO Rules of Procedure, Section 803	
R3.1	ERO Rules of Procedure,	

	Section 803	
R3.2	ERO Rules of Procedure, Section 803	
R3.3	ERO Rules of Procedure, Section 803	
R3.4	ERO Rules of Procedure, Section 803	
R3.5	ERO Rules of Procedure, Section 803	
R3.6	ERO Rules of Procedure, Section 803	
Standard TPL-006-0.1 – Data From the Regional Reliability Organization Needed to Assess Reliability		
Requirement in Approved Standard	Translation to New Standard or Other Action	Description (as needed)
R1	ERO Rules of Procedure, Section 804	
R1.1	ERO Rules of Procedure, Section 804	
R1.2	ERO Rules of Procedure, Section 804	
R1.3	ERO Rules of Procedure, Section 804	
R1.4	ERO Rules of Procedure, Section 804	
R1.5	ERO Rules of Procedure, Section 804	
R1.6	ERO Rules of Procedure,	

	Section 804	
R1.7	ERO Rules of Procedure, Section 804	

Exhibit F

Complete Development record of the proposed TPL-001-2 Reliability Standard

Project 2006-02
Assess Transmission Future Needs and Develop Transmission Plans

Related Files

Status:
The NERC Board of Trustees adopted the TPL-001-2 standard on August 4, 2011. The Implementation Plan for TPL-001-2 will retire TPL-001-1, TPL-002-1b, TPL-003-1a, and TPL-004-1 at midnight the day before TPL-001-2 becomes effective as they are replaced in their entirety by TPL-001-2 (subject to regulatory approval). The Implementation Plan also calls for retiring TPL-005-0 and TPL-006-0.1 at that time (subject to regulatory approval) because the Requirements are either covered by the revised TPL-001-2 or by Section 800 of NERC's Rules of Procedure.

Purpose / Industry Need:
The revisions to the following standards would improve technical clarity and address concerns identified by stakeholders and FERC:

- TPL-001 — System Performance under Normal Conditions
- TPL-002 — System Performance Following Loss of a Single BES Element
- TPL-003 — System Performance Following Loss of Two or More BES Elements
- TPL-004 — System Performance Following Extreme BES Events
- TPL-005 — Regional and Interregional Self-Assessment Reliability Reports
- TPL-006 — Data from the Regional Reliability Organization Needed to Assess Reliability

The final SAR is to establish a standard for assessing and planning the transmission systems in North America. The transmission system must be assessed and planned to ensure that it performs its intended functions in providing reliable delivery of power for the future needs of customers.

Draft	Action	Dates	Results	Consideration of Comments
Draft 8 TPL-001-2 Clean**(94)** | Redline to last posting**(95)** **Implementation Plan** Clean**(92)** | Redline**(93)** New Definitions for Approval**(91)** VRFs and VSLs for	Recirculation Ballot>> Info**(96)**	7/13/11 - 7/22/11 (closed)	Summary**(99)** Full Record**(98)** Ballot Comments**(97)**	

Draft	Action	Dates	Results	Consideration of Comments
Draft 8 TPL-001-2 Clean**(94)** | Redline to last posting**(95)** **Implementation Plan** Clean**(92)** | Redline**(93)** New Definitions for Approval**(91)** VRFs and VSLs for TPL-001-2**(90)** **Supporting Materials:** TPL-001-1**(89)** TPL-002-1b**(88)** TPL-003-1a**(87)** TPL-004-1**(86)** TPL-005-0**(85)** TPL-006-0.1**(84)**	Recirculation Ballot>> Info**(96)**	7/13/11 - 7/22/11 (closed)	Summary**(99)** Full Record**(98)** Ballot Comments**(97)**	
Draft 7 TPL-001-2 — Transmission System Planning Performance Requirements Clean**(74)** | Redline to last posting **(75)**|TPL-001-2 Redline to last balloted**(76)** Implementation Plan**(73)** **Supporting Materials:** Comment Form**(72)** TPL-001-1**(71)** TPL-002-1b**(70)** TPL-003-1a**(69)** TPL-004-1**(68)** TPL-005-0**(67)** TPL-006-0.1**(66)**	Join ballot pool>>	4/18/11 - 5/18/11 (closed)	Summary**(82)** Full Record**(81)** Non-Binding Results**(80)**	Consideration of Comments**(83)**
	Successive Ballot and Non-Binding Poll>> Info**(78)**	5/18/11 - 5/31/11 (closed)		
	30-day Formal Comment Period Submit Comments>> Info**(77)**	4/18/11 - 5/31/11 (closed)	Comments Received**(79)**	

Draft 6 TPL-001-2 — Transmission System Planning Performance Requirements Clean**(63)** | Redline to last posting**(64)**	Info**(65)**			
Draft 5 TPL-001-2 — Transmission System Planning Performance Requirements Clean**(58)** | Redline**(59)** Implementation Plan Clean**(56)** | Redline**(57)** **Supporting Materials:** Comment Form (Word)**(55)**	30-day Informal Comment Period Submit Comments>>| Info**(60)**	08/03/10 - 09/02/10	Comments Received**(61)**	Consideration of Comments**(62)**
TPL-001-1 — Transmission System Planning Performance Requirements Clean**(48)** | Redline**(49)** Implementation Plan Clean**(46)** | Redline**(47)** **Supporting Materials:** Issues Database**(45)** VRF and VSL Documentation**(44)**	Initial Ballot Vote>> | Info**(51)**	02/19/10 - 03/01/10 (closed)	Summary**(53)** Full Record**(52)**	Consideration of Comments**(54)**
	Pre-ballot Review Join>> | Info**(50)**	01/20/10 - 02/19/10 (closed)		

Draft 4 TPL-001-1 — Transmission System Planning Performance Requirements Clean**(39)** | Redline to last posting**(40)** **Supporting Materials:** Comment Form (Word)**(38)** Implementation Plan Clean**(36)** **|** Redline**(37)**	Comment Period Info**(41)** Submit Comments>>	09/16/09 - 10/16/09 (closed)	Comments Received**(42)**	Consideration of Comments**(43)**
Draft 3 TPL-001-1 — Transmission System Planning Performance Requirements Clean**(31)** | Redline to last posting**(32)** **Supporting Materials:** Comment Form (Word)**(30)** Implementation Plan**(29)**	Comment Period Info**(33)** Submit Comments>>	05/26/09 - 07/09/09 (closed)	Comments Received**(34)**	Consideration of Comments**(35)**
Draft 2 TPL-001-1 — Transmission System Planning Performance Requirements Clean**(24)** | Redline to last posting**(25)** **Supporting Materials:** Comment Form (Word)**(23)**	Comment Period Info**(26)** Submit Comments>>	08/14/08 - 9/29/08 (closed)	Comments Received**(27)**	Consideration of Comments**(28)**

Industry WebEx and Conference Call to Provide Overview of First Draft of TPL-001-1 — Transmission System Planning Performance Requirements Info(22)		October 10, 2007		
Draft 1 TPL-001-1 — Transmission System Planning Performance Requirements Clean(17)	Comment Period Info(19) Submit Comments(18)	09/12/07 - 10/26/07 (closed)	Comments Received(20)	Response to Comments(21)
ATFN Supplemental SAR Supplemental SAR Version 2(16) Redline to 1st Posting(15)				
ATFN Supplemental SAR Supplemental SAR Version 1(10)	Comment Period Info(12) Submit Comments(11)	02/15/07 - 03/16/07 (closed)	Comments Received(13)	Consideration of Comments(14)
Final SAR(9)				
Assess Transmission Future Needs SAR Drafting Team Draft SAR Version 3(7)	Submit Nomination(8)	November 18, 2005 (closed)		
Draft SAR Version 2(4)		05/05/04 - 06/05/04 (closed)	Comments Received(5)	Consideration of Comments(6)
Draft SAR Version 1(1)		04/02/02 - 05/03/02 (closed)	Comments Received(2)	Consideration of Comments(3)

Standard Authorization Request (SAR) Form

Title of Proposed Standard:	Assess Transmission Future Needs and Develop Transmission Plans
Request Date:	March 6, 2002
Authorized for Posting:	March 20, 2002
SAR ID# :	TRNS_NDS_&_PLNS_01_01

SAR Requestor Information		**SAR Type** (Put an 'x' in front of one of these selections)	
Name:	Jim Byrd	X	New Standard
Primary Contact:	Jim Byrd		Revision to existing Standard
Telephone: Fax:	214-743-6870 972-263-6710		Withdrawal of existing Standard
e-mail:	jbyrd@txu.com		Emergency Action

Purpose/Industry Need (Provide one or two sentences)

To establish a standard for assessing and planning the transmission systems in North America.
The transmission system must be assessed and planned to ensure that it performs its intended functions in providing reliable delivery of power for the future needs of customers.

Brief Description (A few sentences or a paragraph)

Requirements shall be established for assessing transmission system performance under a variety of system conditions including system normal conditions, abnormal conditions, and extreme system conditions. Requirements shall be established for a plan, including a definition of the planning horizon, to address these conditions to ensure that the interconnected transmission systems perform their intended functions and to prevent severe adverse effects such as uncontrolled or cascading interruption of network operation. The plan may utilize operating, construction, market solutions or other components to address these conditions.

Reliability Functions

The Standard will Apply to the Following Functions *(Put an 'X' in front of each one that applies)*		
X	Reliability Authority	Ensures the reliability of the bulk transmission system within its Security Authority Area. This is the highest reliability authority.
	Balancing Authority	Integrates resource plans ahead of time, and maintains load-interchange-resource balance within its metered boundary and supports system frequency in real time
	Interchange Authority	Authorizes valid and balanced Interchange Schedules
X	Planning Authority	Plans the bulk electric system
	Transmission Service Provider	Provides transmission services to qualified market participants under applicable transmission service agreements
X	Transmission Owner	Owns transmission facilities
	Transmission Operator	Operates and maintains the transmission facilities, and executes switching orders
	Distribution Provider	Provides and operates the "wires" between the transmission system and the customer
	Generator	Owns and operates generation unit(s) or runs a market for generation products that performs the functions of supplying energy and Interconnected Operations Services
	Purchasing-Selling Entity	The function of purchasing or selling energy, capacity and all necessary Interconnected Operations Services as required.
	Load-Serving Entity	Secures energy and transmission (and related generation services) to serve the end user

SAR: Assess Transmission Future Needs and Develop Transmission Plans

Reliability and Market Interface Principles

Applicable Reliability Principles *(Put an 'x in front of all that apply)*	
X	1. Interconnected bulk electric systems shall be planned and operated in a coordinated manner to perform reliably under normal and abnormal conditions.
	2. The frequency of interconnected bulk electric systems shall be controlled within defined limits through the balancing of electric supply and demand
X	3. Information necessary for planning and operation of interconnected bulk electric systems shall be made available to those entities responsible for planning and operating the systems reliably
	4. Plans for emergency operation and system restoration of interconnected bulk electric systems shall be developed, coordinated, maintained and implemented
	5. Facilities for communication, monitoring and control shall be provided, used and maintained for the reliability of interconnected bulk electric systems
X	6. Personnel responsible for planning and operating interconnected bulk electric systems shall be trained, qualified and have the responsibility and authority to implement actions
X	7. The security of the interconnected bulk electric systems shall be assessed, monitored and maintained on a wide area basis

Does the proposed Standard comply with all of the following Market Interface Principles? *(Enter 'yes' or 'no')*	YES
1. Interconnected The planning and operation of bulk electric systems shall recognize that reliability is an essential requirement of a robust North American economy	
2. An Organization Standard shall not give any market participant an unfair competitive advantage	
3. An Organization Standard shall neither mandate nor prohibit any specific market structure	
4. An Organization Standard shall not preclude market solutions to achieving compliance with that Standard	
5. An Organization Standard shall not require the public disclosure of commercially sensitive information. All market participants shall have equal opportunity to access commercially non-sensitive information that is required for compliance with reliability standards	

Assess Transmission Future Needs and Develop Transmission Plans

SAR Commenter Information			
Name	David H. McMillan		
Organization	Calpine		
Telephone	713-830-8710	Fax	713-830-2001
E-mail	dmcmillan@calpine.com		

Does this set of Proposed Organization Standards cover the scope of performance needed to ensure reliability of the interconnected North American grid?
☒ Yes ☐ No

Look at the SAR called: Assess Transmission Future Needs and Develop Transmission Plans:
Is there a reliability-related need for an Organization Standard to be developed on this topic?

☒ Yes ☐ No
☐ Yes ☒ No The scope of the SAR is fine as it is
☐ The scope of the SAR should be expanded to include:
☒ The scope of the SAR should be reduced to eliminate: any aspect that goes beyond establishing specific reliability criteria to be incorporated into the Transmission Planning activity and product.
Other comments: The "Generator" reliability function should be checked as being impacted since generators are defined as an integral component of the bulk power transmission system being planned.

SAR Commenter Information			
Name	Bill Carr		
Organization	Dynegy, Inc.		
Telephone	713-7657-8723	Fax	713-767-5986
E-mail	bill.carr@dynegy.com		

Does this set of Proposed Organization Standards cover the scope of performance needed to ensure reliability of the interconnected North American grid?

☒ Yes ☐ No

Look at the SAR called: Assess Transmission Future Needs and Develop Transmission Plans:
Is there a reliability-related need for an Organization Standard to be developed on this topic?

☒ Yes ☐ No

☒ Yes ☐ No The scope of the SAR is fine as it is

☐ The scope of the SAR should be expanded to include:

☐ The scope of the SAR should be reduced to eliminate:

Other comments: The purpose/industry need section should start with: The purpose of this standard is to ensure that a consistent, uniformly applied standard is developed .. ..

SAR Commenter Information			
Name	John Anderson and John Hughes		
Organization	Electricity Consumers Resource Council (ELCON)		
Telephone	202-682-1390	Fax	202-289-6370
E-mail	jhughes@elcon.org/janderson@elcon.org		

Does this set of Proposed Organization Standards cover the scope of performance needed to ensure reliability of the interconnected North American grid?

☒ Yes ☐ No

If you believe there are some performance areas that are included in the proposed set of Organization Standards but are not needed, tell us what you believe is not needed:

The actual drafting of these 11 SARs is premature. Every "reliability" standard also is a "commercial" standard. There must be very detailed coordination with the organization that will establish "commercial" standards (NAESB). Such coordination has not even begun. The scope, procedures, process and practices of such coordination must be clearly specified and agreed to before the drafting of the SARs begins.

Look at the SAR called: Assess Transmission Future Needs and Develop Transmission Plans:
Is there a reliability-related need for an Organization Standard to be developed on this topic?

☒ Yes ☐ No
☐ Yes ☒ No The scope of the SAR is fine as it is
☐ The scope of the SAR should be expanded to include:
☒ The scope of the SAR should be reduced to eliminate: The establishment of this SAR is premature. All commercial implications of the SAR should be identified and mitigated prior to the drafting.

SAR Commenter Information			
Name	Phil Park		
Organization	Powerex		
Telephone	604 891 5020	Fax	604 895 7012
E-mail	phil.park@powerex.com		

If you believe there are some performance areas that are included in the proposed set of Organization Standards but are not needed, tell us what you believe is not needed:

I have a general comment to preface my comments on the individual SARs. To me, what we are calling a "core reliability requirements" are simply technical specifications for things we believe the industry cannot adequately address through commercial negotiations between individual players or things too small to bother with by one on one negotiations. Core reliability requirements do not include business practices. These technical specification should ensure that they do not prohibit worthwhile commercial negotiations. With this definition, all core reliability requirements have commercial elements. I can accept this and this should not inhibit us from setting a technical specification (core reliability requirement) where one makes sense. However, we must avoid setting one whenever we can, simply because we can. This latter approach will inhibit valuable commercial activity. If the reliability standards become so encompassing that they threaten commercial activity, we will simply end up focusing on including exemptions, waivers, and differences such that the standard has limited applicability.

In many cases in my comments below I have not indicated whether or not the proposed standard is required. This can only be determined after we have rationalized the details of each of the SARs. The answer to this question should be an outcome of the process, not an input to it.

Is there a reliability-related need for an Organization Standard to be developed on this topic?

☐ Yes ☐ No
☐ Yes ☒ No The scope of the SAR is fine as it is
☐ The scope of the SAR should be expanded to include:
☐ The scope of the SAR should be reduced to eliminate: The description should be revised as follows: "Requirements shall be established to ensure that interconnected transmission systems are planned such that they can reliably perform their intended functions over a wide range of system conditions." The phase "while continuing to operate reliably within equipment and electric system thermal, voltage, and statbility limits" should be transferred to SAR #2 addressing facility ratings, operating limits, and transfer capabilities.

Other comments: *Assessment of future needs and development of transmission plans is highly related to commercial processes. As in other markets, information needs to be collected to assess future ability of the market participants to respond to market requirements. This SAR should be coordinated with business practices for the industry.*

The phase I am recommending be moved to SAR #2, which appears to encompass standards presently covered by Planning Standards I.A (Table 1) and I.D, is the major component that makes this SAR a core reliability requirement. My rationale for moving this to SAR #2 is included in the comment form for that SAR.

SAR Commenter Information			
Name	MAAC Region		
Organization	MAAC		
Telephone	610-666-8854	Fax	610-666-2297
E-mail	dicapram@pjm.com		

Does this set of Proposed Organization Standards cover the scope of performance needed to ensure reliability of the interconnected North American grid?

☒ Yes ☐ No

If you believe there are some performance areas not covered with the proposed set of Organization Standards, tell us what is missing:

If you believe there are some performance areas that are included in the proposed set of Organization Standards but are not needed, tell us what you believe is not needed:

MAAC questions the need for standards concerning 'Design' of Protection systems, Physical connection, Coordinate Interchange, and Analysis of disturbances.

"Design" issues are commercial issues not reliability issues.
The Transmission Operators will define Interconnection Agreements.
Coordination of Interchange can be a subset of "Coordinate Operations"
Disturbance analysis will be address by regulators

Most of these are good business practices or good utility practice but not core reliability standards.

Is there a reliability-related need for an Organization Standard to be developed on this topic?

☒ Yes ☐ No
☐ Yes ☒ No The scope of the SAR is fine as it is
☐ The scope of the SAR should be expanded to include:
☐ The scope of the SAR should be reduced to eliminate:

Other comments:

The substance of this SAR should focus on defining 'uniform study conditions' and on ensuring that all interregional analyses use those conditions.

Must ensure that the SAR does NOT become a mandate "to use the same load flow Tool" (which would be a violation of the Market principles).

SAR Commenter Information			
Name	Mike Miller		
Organization	Southern Company		
Telephone	205 257 7755	Fax	6663
E-mail	mbmiller@southernco.com		

Does this set of Proposed Organization Standards cover the scope of performance needed to ensure reliability of the interconnected North American grid?

☐ Yes ☒ No

If you believe there are some performance areas not covered with the proposed set of Organization Standards, tell us what is missing: The "Assess Transmission future needs and develop transmission plans" SAR does not state a requirement to plan the system so that it can be operated within operating limits. I feel that this terminology (operating limits or other term such as Operating Security Limits) should be common among all SARs. The system must be planned so that it can be operated reliably. Using this terminology in all SARs would provide the appropriate link among them.

Without knowing the details that will be included in the standards as described by these SARs, it is difficult to make an assessment on the completeness of this set of SARs. I feel that there should be a SAR that requires LSEs, distribution providers, and generators to respond to requests that will have the effect of operating the system within Operating Limits.

Is there a reliability-related need for an Organization Standard to be developed on this topic?

☒ Yes ☐ No

☐ Yes ☒ No The scope of the SAR is fine as it is

☒ The scope of the SAR should be expanded to include: Planning must be coordinated to optimize not only transmission but generation as well. The left alone process of disjointing generation and transmission is creating a non-steady state electrical system. The criteria for designing a system must include defined measurements adopted by all. This brief description does not provide sufficient detail to ensure reliability is planned. The planning criteria must address defined transmission planning for transfer usage as well as specific load service usage in other words interconnection as well as intraconnection. The need to define roles, responsibilities and authority must be developed between Federal (RTO) characteristics and functions and transmission owners.

☐ The scope of the SAR should be reduced to eliminate:

Other comments: Transmission Operator and perhaps Distribution Provider should be added to the list of applicable functions.

SAR Commenter Information			
Name	Alan Johnson		
Organization	Mirant Americas Energy Marketing		
Telephone	678-579-3108	Fax	678-579-5760
E-mail	alan.r.johnson@mirant.com		

Does this set of Proposed Organization Standards cover the scope of performance needed to ensure reliability of the interconnected North American grid?

☒ Yes ☐ No

If you believe there are some performance areas not covered with the proposed set of Organization Standards, tell us what is missing:

If you believe there are some performance areas that are included in the proposed set of Organization Standards but are not needed, tell us what you believe is not needed:

There may not be a need for the following two standards: i) Define (Physical) Connection Requirements; and ii) Monitor and Analyze Disturbances, Events, and Conditions.

Is there a reliability-related need for an Organization Standard to be developed on this topic?

☒ Yes ☐ No

☐ Yes ☒ No The scope of the SAR is fine as it is

☐ The scope of the SAR should be expanded to include:

☒ The scope of the SAR should be reduced to eliminate: Reference to standardization of the solution set for the transmission plan (see Brief Description section). Mirant is concerned that the standard goes beyond assessment and planning of the bulk transmission system, delving into definition of the methods for meeting the plan. Per the *Market Interface Principles* (principle 4), the standard should not inhibit commercial/market solutions.

Other comments:

Mirant believes that the standard should not apply to the Transmission Owner function, consistent with the *Functional Model*.

April 23, 2002

SRP Comments on NERC 11 SAR sent out on April 2, 2002.

All 11 SAR's (this group of 10 plus the one sent out earlier) don't contain enough information to make the kind of judgments requested on the forms. Therefore the forms are not filled out.

We recommend all the SAR's be advanced to the next step to develop the specific standards and associated measurements for each standard so that we can evaluate and comment on them.

All of these SAR's are needed for reliable planning and operation of the bulk electric transmission system and meet the principle requirements.

Comments on the White paper:

1. The paper fails to state what standards are supposed to be. This seems so basic; one has to assume that those drafting the white paper want to redefine the definition contained in the Organizational Standards Manual. This leads to a lot of confusion and is not the place to do that.

2. The Planning Standards were written in a different time period than the Operating Policies with different objectives. Thus they are different and that should be recognized. For instance the development of a Planning Functional model has absolutely nothing to do with whether control areas exist or not and whether companies have restructured or not. The statement about control areas may be true for the Operating Policies but it is not try for the Planning Standards.

   The Planning Standards (Templates) were written to meet the definition of a standard in the Organizational Standards Manual, to meet at least one of the Reliability Principles, to comply with all the Market Interface Principles and to contain the compliance administration elements. This is very different than what is contained in the Operating Policies. The Planning Standards need to go through the new process so that both the Operating elements and Planning elements of the Organizational Standards are consistent, are not duplicative and are needed for reliability.

3. The term " core reliability requirement" is used in the white paper but is never mentioned in the Organizational Standards Manual. Using an undefined term is very misleading and should be avoided.

4. The paper in several places address "what performance must be achieved". As noted above, an Organizational Standard can be broader than that and this write up is misleading.

5. The process has been lengthened because of the multiple posting of the SAR's. NERC has a body of reliability requirements written up into Compliance Templates. With very little effort these could be written up into SAR's that would provide sufficient detail for NERC to evaluate them. It is very hard to comprehend why one does not use this work to expedite the process. Instead SAR's are sent out with insufficient information. The process is long enough. We should be looking for all ways possible to speed it up.

Comments on the SAR write-up:

1. The SAR write-up only contains the purpose and brief description of a standard. Where is the Standard? I thought that is what the SAR is for?

2. The descriptions are in most cases extremely vague. The write-ups contain words like "such as" or "as defined in the standard". These are big enough to cover a MAC truck. Once again there is insufficient information to make a good judgment.

April 29, 2002

Guy V. Zito
Manager, Planning
Northeast Power Coordinating Council
1515 Broadway Floor 43
New York, NY 10036

RE: NEPOOL Compliance Working Group (NCWG) comments pertaining to the 10 Standard Authorization Requests (SARs) posted for open comment

The NCWG has reviewed the 10 SARs posted for open comment and has agreed they are core standards, which serve a purpose in support of reliability.

Standard Title:
Prepare for and Respond to Abnormal or Emergency Conditions
Prepare for and Respond to Blackout or Island Conditions
Coordinate Interchange
Coordinate Operations
Monitor and Analyze Disturbances, Events and Conditions
Operate Within Limits – Monitor and Assess Short-term Transmission
Define (Physical) Connection Requirements
Design, Install, and Coordinate Control Protection Systems
Assess Transmission Future Needs and Develop Transmission Plans
Determine Facility Ratings, Operating Limits, and Transfer Capabilities

We do not agree that the **SAR Type** is a new standard. We suggest that at a minimum the SAR should indicate the existing standard and whether or not it will be withdrawn when the revised standard is adopted. We suggest that NERC stop the open process of reviewing existing policies and standards if these Organizational Standards will replace them. NERC should clearly indicate that one purpose of the Organizational Standards Process is to replace existing standards.

Sincerely,
Daniel L. Stosick

Chairman, NEPOOL Compliance Working Group
C/o ISO New England, Inc.
One Sullivan Road
Holyoke MA 01040-2841

Cc: NEPOOL Compliance Working Group
CP9 Working Group
Paul Shortly
Richard Burke
Richard Kowalski

SAR Commenter Information			
Name	Robert D. Smith		
Organization	Arizona Public Service		
Telephone	(602) 250-1144	Fax	(602) 250-1155
E-mail	robert.smith@aps.com		

Does this set of Proposed Organization Standards cover the scope of performance needed to ensure reliability of the interconnected North American grid?

☒ Yes ☐ No

Is there a reliability-related need for an Organization Standard to be developed on this topic?

☒ Yes ☐ No
☒ Yes ☐ No The scope of the SAR is fine as it is
☐ The scope of the SAR should be expanded to include:
☐ The scope of the SAR should be reduced to eliminate:
Other comments: We do not believe that transmission plans should utilize market solutions as solutions to identify problems.

SAR Commenter Information			
Name	Mr. Charles Moser (Northborough, MA) and Mr. Ronald Halsey (Syracuse, NY)		
Organization National Grid USA			
Telephone	508 421 7600 315 428 3181	Fax	508 421 7520 315 428 5615
E-mail	charles.moser@us.ngrid.com ronald.halsey@us.ngrid.com		

Does this set of Proposed Organization Standards cover the scope of performance needed to ensure reliability of the interconnected North American grid?

☐ Yes ☒ No

If you believe there are some performance areas not covered with the proposed set of Organization Standards, tell us what is missing:

If you believe there are some performance areas that are included in the proposed set of Organization Standards but are not needed, tell us what you believe is not needed: These standards as written delve much too deeply into the details of "HOW" and "WHAT" AND "WHEN". They instead should stick to the idea of developing an umbrella of BROAD PERFORMANCE BASED CRITERIA standards that establish the basis for the creation of Region specific standards that will meet the intent of the NERC standard.

Is there a reliability-related need for an Organization Standard to be developed on this topic?

☒ Yes ☐ No

☐ Yes ☐ No The scope of the SAR is fine as it is

☐ The scope of the SAR should be expanded to include:

☒ The scope of the SAR should be reduced to eliminate:

Other comments: The standard should define the transmission system performance basis upon which any planning or assessment efforts would be measured. We do not need a standard on HOW to assess or plan our systems. We need a broad based standard that will define the required transmission system performance levels based on an established and demonstrated need for such performance levels rather than on an abstract concept of "reliability".

SAR Commenter Information			
Name	Vern Colbert		
Organization	Dominion Virginia Power		
Telephone	(804) 273-3399	Fax	(804) 273-2405
E-mail	vern_colbert@dom.com		
Does this set of Proposed Organization Standards cover the scope of performance needed to ensure reliability of the interconnected North American grid? ☒ Yes ☐ No			

SAR Commenter Information			
Name	Greg Gideon		
Organization	TXU Energy		
Telephone	214-875-9483	Fax	214-875-9246
e-mail	ggideon1@txu.com		
Does this set of Proposed Organization Standards cover the scope of performance needed to ensure reliability of the interconnected North American grid? ☒ Yes ☐ No			

SAR Commenter Information			
Name	Paul Rocha		
Organization	Reliant Energy HL&P		
Telephone	713-207-2768	Fax	713-207-2281
e-mail	paul-rocha@reliantenergy.com		

Reliant Energy HL&P ("HL&P") files these comments regarding the ten Standard Authorization Requests (SARs) discussed below. Please note that HL&P is the regulated electric utility operating in and around the area of Houston, Texas, within the ERCOT region. HL&P does not represent Reliant Resources, the unregulated energy services company operating in various areas of North America and Europe. Reliant Energy expects to spin off Reliant Resources later this year. In anticipation of the pending separation, HL&P and Reliant Resources are operating in large part as two separate companies. It is HL&P's understanding that Reliant Resources may separately provide comments regarding these SARs.

HL&P agrees that there is a need for a standard for assessing transmission future needs and developing transmission plans. We support ERCOT's comments, which either have or will soon be filed, regarding the appropriate scope and characteristics of such standards. However, we believe a prospective NERC planning standard should apply to interstate and international electric systems only, and should not apply to intrastate electric systems such as ERCOT, as explained more fully below.

The assessment of need and development of transmission plans should strive for an appropriate balance between ensuring reliability, maintaining reasonable transmission rates, mitigating congestion costs, and avoiding unnecessary landowner impact. For intrastate transmission systems such as ERCOT, HL&P believes that the appropriate place to balance these objectives is within the intrastate region itself, since the ERCOT organization, and the standards it develops, are subject to state commission review and approval. That same state commission (the Public Utility Commission of Texas) also has rate-setting and line certification authority, and thus is uniquely positioned to balance the conflicting objectives involved in transmission system planning. However, for interstate and international regions, it may be appropriate for NERC to develop a transmission planning standard. Recognizing that NERC does not have rate-setting or line certification authority, NERC should guard against establishing one-dimensional standards that fail to take into account all the dimensions that guide the transmission planning process.

SAR Commenter Information			
Name	Brant Eldridge		
Organization	ECAR		
Telephone	330-580-8005	Fax	330-456-3648
E-mail	brante@ecar.org		

ECAR has conducted a survey of its member companies regarding the eleven SARs, which NERC has initiated to-date. We recognize that the comment period for the first SAR issued ("Balance Resources and Demand") has already closed. However, considering that the first SAR was issued earlier than the other ten primarily just to get the process started, and further considering that all 11 SARs are viewed by NERC as a possible complete set of Organization Standards (re: the "White Paper"), ECAR believes that comments on the first SAR should still be considered along with those on the other ten.

11 of the 18 ECAR Full Members, along with two Associate Members, submitted responses to the SAR survey. Some of the responses were submitted using the NERC "SAR Comment Form", while others were contained in narrative e-mails, and one was faxed to us. Therefore, a complete set of the ECAR member company responses will be sent to the Standards Process Manager at NERC via Fed Ex to arrive at NERC by May 3rd. The Fed Ex package will include a copy of this e-mail. FYI, NERC may also receive some of the ECAR member company responses directly from the companies. Some of the individual company responses will be identical to what will be in the Fed Ex package and some will contain more detailed comments.

The ECAR member company responses contain numerous and wide-ranging comments about the need for each of the 11 proposed Organization Standards, as well as comments regarding the scope and applicability of the SARs. As your review of these responses will show, there is general ECAR consensus – but not unanimity -- that the 11 SARs as a set cover the scope of performance needed to ensure reliability of the interconnected North American bulk power systems. Some ECAR members feel that there are performance areas not covered in the proposed set of Organization Standards, and they have provided what they think is missing. Others believe that some of the proposed Organization Standards are not needed, and they explain why they feel that way. Numerous comments were directed at the scope and applicability of the SARs. Several ECAR companies questioned the inclusion of the "Distribution Provider" function in the applicability section of the SARs, believing that NERC should stick to its traditional focus on the bulk power systems and stay out of the distribution arena.

The recent call for nominees to serve on SAR Drafting Teams is the appropriate next step. ECAR believes that all 11 SARs need to be refined to reflect industry comments and then posted again for another round of industry comments. Before proceeding into actual development of Organization Standards based on these 11 SARs, NERC must have clear industry consensus on the need for each of the Organization Standards outlined in the 11 SARs, as well as consensus on the scope and applicability of those SARs.

If the wide-ranging comments received from ECAR members are any indication, there is still some serious work to be done to achieve the needed clear industry consensus on how to proceed.

East Kentucky Power Cooperative (General Comment)

EKPC believes our present standards are adequate and therefore is not in favor of developing a new set of standards. We also believe the new process should be revised to provide for a screening committee to evaluate proposed standards before they are presented to all NERC members for comment. However, given that we are going to develop new standards with this process, EKPC endorses all eleven of the SARs. Thanks, Paul Atchison.

LG&E Energy (General Comment)

LG&E agrees there is a need for the eleven proposed organization standards. However, we do see a disconnect with their development and operating procedures/protocols of RTO's. Where will this coordination take place to ensure consistency, eliminate redundancy, and application particularly since there will most likely be more than 1 RTO at the time of issuance?

VECTRON - Southern Indiana Gas & Electric (General Comment)

The NERC Proposed Organization Standards appear to me to cover the scope of performance needed to insure reliability of the interconnected grid. The scope of the SARs as proposed, also, look fine to me.

Dayton Power & Light (General Comment)

We are okay with the 11 proposed Standards.

American Electric Power (General Comment)

BERNIE M PASTERNACK
Job Title: DIRECTOR
Company: AMERICAN ELECTRIC POWER
Department: TRANSMISSION PLANNING
825 TECH CENTER DR
GAHANNA, OH 43230-8250
Bus: (614) 552-1600
Primary: *PLANNING COMMITTEE
Bus Fax: (614) 552-1676
E-mail: bmpasternack@aep.com

American Electric Power is providing the following comments on the 10 most recent Standard Authorization Requests (SARs) to ECAR as input to the formulation of ECAR's response to NERC. AEP looks forward to working with ECAR and NERC as well as other market participants to ensure the continued reliability of the electrical system.

Clearly the electricity industry has been exceptionally dynamic and fluid in recent years and is going through many changes. While changes can be positive, it is incumbent on the industry to ensure that changes, which are adopted result in enhanced reliability and a better market environment. With this in mind, we envision that there are actually three interrelated but separable processes with respect to the development of standards.

First, the relevant standards need to be identified. Over recent months this has been referred to as defining "what" the standard is.

Second, there need to be decisions about "how" these standards are to be achieved.

Third, choices have to be made as to how these standards will be implemented.

The resultant standards, when implemented and operational, will potentially affect production, consumption and investment decisions. By necessity, the standards, including how they are achieved and implemented, are closely related to the design of the market and the separation of functions among market

participants and service providers. For this reason, we encourage discussion and even preliminary definition of what core reliability standards are needed. However, we strongly urge restraint with respect to the other two aspects of the process - defining how the standards will be achieved as well as how they will be implemented. In our opinion, the latter two processes are highly integrated with the process of market design and implementation as well as market operation; the development of RTOs; and the definition of the NERC/NAESB interface.

Given that closure on many of the market design issues is expected in the near future, we see little risk in delaying the latter two processes - how the standards are achieved and implemented-- until such time as clarity is achieved on Standard Market Design (SMD) and RTO formation. Moreover, since the NERC/NAESB interface will likely impact decisions on how standards will be achieved as well as how they will be implemented, it seems logical to wait until that interface has been defined.

We think it would be beneficial for NERC to recognize that nothing is gained by deciding how the standards will be achieved (including implementation) at this stage of the debate on Standard Market Design and the RTO development process. We would prefer to see the SAR process simply make the threshold determination as to whether any of the proposed standards are needed, and then put on hold the actual development of those standards that are needed until the critical market development activities described above are closer to completion. AEP is reviewing the SARs with particular emphasis on their scope, both individually and collectively, and we plan to provide appropriate comments to NERC by May 3.

Consumers Energy (General Comment)

Consumers Energy opposes all 10 of the SARs on their present form. We understand that it is too late to vote on the 11th SAR.

The concern that we have is that there is only limited ability to prevent new requirements from being incorporated with the old, standard reliability requirements. The SAR descriptions sound good because they espouse the old, tried and true reliability concepts that we have known and loved from the past. If there was an effective way to limit the resulting practices to those traditional values, I would be the first to support them. Unfortunately, we are not voting here on codification of the current practices. We, instead, are voting to develop a set of practices that will include the currently unknown and possibly oppressive, unacceptable set of future requirements. This vote has nothing to do with the tried and true practices from the past. Its about accepting an unknown set of requirements on faith and trust ... that none of the practice developers will be out to do us harm.

The standard argument here is that the SARs are only scope setting documents and that we will still have a change to shape and to vote on the actual standards when they go through the final approval stage. If we believe this argument, we are totally ignoring the lessons from the past. There is no guarantee that ECAR will have any personnel involved in the development of the final practices. It is unclear how many people will be involved in the drafting of the practices nor how they will be selected.

The biggest single concern is what the final product will look like and how it will be voted on. I would make a modest wager that it will consist of a handful of standard practices that we all could accept (and in fact would insist upon) along with three practices that are new and totally unacceptable. We will be faced with the proposition that we must vote on the "package" of practices where we must accept the bad ones to get the good ones. I can find no reference to a line item voting procedure.

The solution to this problem is to suggest a provision in all ten SARs that the final package of practices will not include any policies that are not already in the NERC approved set of policies and standards. Consumers Energy could then support all ten SARs.

C.V. Waits

Duquesne Light Company (General Comment)

OPERATIONS AND ASSET MANAGEMENT
System Operations
Transmission Business

TO: Brant Eldridge
FROM: J. F. Rosser
DATE: May 8, 2002
SUBJECT: NERC "Organizational Standards"

In response to your memo of April 19, 2002, Duquesne Light Company presents the following comments concerning the eleven "Standard Authorization Request" (SAR) Forms. Generally, the proposed standards seem to simply restate today's standards and label them as "new" Organizational Standards. Specifically, the proposed SAR titled "Balance Resources and Demand" is really a restatement of the current Disturbance Control Measure, CPS1, CPS2 and a new Frequency Response Measurement. This SAR, as represented at the CRC meeting, was to provide an example of how other SARs should be composed.

1. The purpose of the standard is stated as; Maintain scheduled Frequency within an Interconnection.

2. The Industry need includes Arrest Sudden frequency changes; Prevent Time error; Prevent Operation of Underfrequency Relays, prevent line loading limits violations, minimize inadvertant interchange.

3. Standards include; a measurement (FRM) to ensure automatic throttle controls are available to arrest frequency changes, a measurement (CPM1) to ensure adequate generation control regulation to maintain scheduled frequency, a measurement (CPM2) to ensure unscheduled power flows do not occur which could cause transmission operating limit violations, a measurement (DCM) to ensure scheduled frequency is maintained after a disturbance.

It is evident that this SAR's Title, Purpose, Need and Measures are inconsistent with each other, mixing frequency schedules and inadvertant accumulations with transmission loading violations and time error. Also, certain "Needs" and "Standards" are inconsistent with the NERC BOT decision to not pursue the development of business practices (i.e., minimization of inadvertant accumulations, timer error accumulations, etc. are equity issues and not related to reliability concerns).

Furthermore, suggested are measures that better relate to other Standards. For example, transmission limit violations fit better into "Monitor and Assess Short Term Transmission Reliability" – operate within limits. When considered under that alternate standard, this measurement may not survive because other measurements may be deemed more appropriate.

Look at the SAR from a purely technical approach. In doing so, Duquesne Light suggests that the title of the Standard "Balance Resources and Load" should be rewritten to be "Maintain Scheduled Frequency".

The Purpose of Standards would be to maintain Interconnection frequency within acceptable limits.

The Industry Need would be to prevent damage to customer equipment and to prevent unstable operations related to disturbances.

The Standard should include a description of acceptable frequency along with a technical defense of the standard including standard generator limits, motor limits, etc.. See ECAR Document #3, Appendix 1, (attached) as an example.

The Standard should include adherence to accepted industry practices such as the installation of underfrequency relays, automatic governor control requirements, etc. including the operation of this equipment within limits specified within the standard.

Measures and Requirements may include:

1. a measurement similar to CPS1
2. annual audit of underfrequency load shedding equipment, levels, and set points
3. annual audit of the status and condition of automatic governor controls
4. monitoring of frequency excursions related to disturbance conditions (Security Coordinator)
5. Coordination of interchange schedules

Measurements should not include:

1. DCM because it duplicates CPM1 and is not frequency sensitive
2. CPM2 because it purports to protect against transmission loading violations related to SAR #6

If NERC would consider business practices, the ECAR Inadvertant Settlement Process could be incorporated into the standard with a longer range target of replacing energy banks with a pay as you go policy, possible tied to adders ($/MWH) related to system frequency deviations from schedule. Otherwise, NAESB would develop these business practices.

The following are Duquesne's comments on the other 10 proposed SARs.

1. Assess Transmission Future Needs & Develop Transmission Plans – Appropriate
2. Determine Facility Ratings, Operating Limits and Transfer Capabilities – Appropriate
3. Design, Install, Coordinate Control and Protection Systems – Appropriate
   Standard should be expanded to include coordination between Transmission Owners, Transmission Operators, etc.
4. Define (Physical) Connection Requirements – Inappropriate as a stand alone SAR
   This SAR should be included in SARs #2, #3, #6, #7, #8, #9, #10, #11
5. Previously reviewed
6. Operate Within Limits – Monitor & Assess – Inappropriate as a stand alone SAR, but should be incorporated with SAR #8. Coordinated operations are required to ensure limits are not violated.
7. Coordinate Interchange – Inappropriate as a stand alone SAR. Should be part of SAR #5.
8. See review of SAR #6.

9., 10., and 11. Should be incorporated into SAR #6/#8 and/or #5 as modified by DLC

In conclusion, Duquesne Light applauds the NERC SAR initiative. NERC must, however, take care to not simply allow this initiative to be a restatement of existing standards

and application of performance measurements that miss the target. Care must be taken to identify the exact technical need/purpose (quantifiable) for each performance standard, ensuring that each performance measurement ties precisely with a stated need/purpose in support of the standard (e.g., A Standard whose purpose is to maintain frequency should not be tied to a need to limit unscheduled power flows that can cause operating limit violations but should be tied to general turbine-generator requirements).

cc: ECAR Executive Board
ECAR Coordination Review Committee
ECAR Market Interface Committee

SAR Commenter Information			
Name	David L. Hart		
Organization	Ohio Valley Electric Corporation		
Telephone	614/223-1090	Fax	614/223-1094
E-mail	dlhart3@aep.com		

Does this set of Proposed Organization Standards cover the scope of performance needed to ensure reliability of the interconnected North American grid?

☒ Yes ☐ No

Is there a reliability-related need for an Organization Standard to be developed on this topic?

☒ Yes ☐ No
☒ Yes ☐ No The scope of the SAR is fine as it is
☐ The scope of the SAR should be expanded to include:
☐ The scope of the SAR should be reduced to eliminate:

Other comments: The SAR seems broad enough to enable it to include planning associated with IPPs. This should definitely be considered in the further development of this Standard.

SAR Commenter Information			
Name	Lew Gray, Mike Holtsclaw, Steve Clouse		
Organization	Indianapolis Power & Light		
Telephone	317-261-8126	Fax	317-261-8996
E-mail	lew.gray@aes.com		

Does this set of Proposed Organization Standards cover the scope of performance needed to ensure reliability of the interconnected North American grid?

☐ Yes ☒ No

What is missing from the NERC set of SARs?

1. Load forecasting, generation capacity, and capacity margin analysis.
2. Generation operating requirements:
    a. Voltage schedule produced and followed
    b. Voltage control kept on automatic
    c. Generator controls with a 5% or less droop
    d. Speed control (frequency) on automatic
    e. Record the times and reasons when speed control, voltage control, or voltage schedule were not on automatic.
3. Reliable construction and maintenance standards for transmission lines, transmission substations, and generation substations.
4. Control Area tie-line tripping for conditions of:
    a. Under frequency
    b. Overload
    c. Instability
    d. Voltage collapse

Note that item #4 was not included in the old NERC Reliability Standards. We did not have the technical ability to properly manage these conditions for at least the first twenty years of NERC. We now have the technical ability to predict and operate at the **points of no recovery** for these conditions and should not do so, to:

a. Reduce the number of **Control Areas Blacked Out** by a major disturbance to the interconnected grid.
b. Make **Safe Unit Shut Down Power** from neighboring control areas much more available.
c. Make **Unit Restart Power** much more available from neighboring control areas.
d. Make **Load Restoration Power** much more available from neighboring control areas.
e. **Reduce Dependence** on questionable black start plans.
f. **Never disconnect a control area** from the interconnected grid, unnecessarily.

All that is needed at this time for this item #4 is that the five ECAR technical panels involved (OP, TSPP, TFP, GFP, PP) develop a set of guides for these four conditions for which tie lines should be tripped. Then, any control area that would like to obtain the six advantages listed above, would have a solid well thought out set of guides to start from. (I would be glad to help any of the technical panels with the details. Lew Gray)

Is there a reliability-related need for an Organization Standard to be developed on this topic?

☒ Yes ☐ No

☒ Yes ☐ No The scope of the SAR is fine as it is

SAR Commenter Information			
Name	David W. Sandefur		
Organization Hoosier Energy REC, Inc.			
Telephone	812-876-0267	Fax	812-876-3139
E-mail	dsandefur@hepn.com		

Does this set of Proposed Organization Standards cover the scope of performance needed to ensure reliability of the interconnected North American grid?

☒ Yes ☐ No

Is there a reliability-related need for an Organization Standard to be developed on this topic?

☒ Yes ☐ No

☒ Yes ☐ No The scope of the SAR is fine as it is

Other comments: The Standard should also apply to the Transmission Provider function since the source fo much of the congestion management/ TLR related data will be obtained from this functional area.

SAR Commenter Information			
Name	Verne B. Ingersoll, II		
Organization Progress Energy - Carolina Power & Light Company and Florida Power Corp.			
Telephone	919-546-7534	Fax	919-546-7558
E-mail	verne.ingersoll@pgnmail.com		

Does this set of Proposed Organization Standards cover the scope of performance needed to ensure reliability of the interconnected North American grid?

☐ Yes ☒ No

If you believe there are some performance areas not covered with the proposed set of Organization Standards, tell us what is missing:

General Comments:

1) Even though the Standards drafting committee is to be fairly small (8 or 9, I believe), there needs to be a committee VOTING process for deciding on the final proposed wording or a Standard.

2) There needs to be a formal face to face forum for reviewing SARs after the drafting committee has done its work. Some have proposed the current Standing Committee meeting as this forum. As long as the meetings match up with the Standards development timeline, this would be OK.

3) We also support the submittal of the actual Standards Development process through the SAR process. The current process was developed without any "due process" or formal approval process prior to the BOT adoption.

4) We still believe that there are too many Segments in the NERC process.

5) The new NERC standards development should be completed and receive ANSI approval before development begins on the new standards contemplated by these SARS. Proceeding with SARS before the new standards process is in place ensures that significant re-work will be required.

6) The industry is already stretched very thin supporting the many NERC and FERC initiatives. The number of SARs proposed at one time is excessive. Also, there will be inevitable overlaps and conflicts between the various SAR drafting groups. Only 1 or 2 SARs should move forward at one time.

7) The time provided to review and comment on such a large number of SARs was insufficient to do a thorough review and provide accurate and complete comments.

The "Assess Transmission future needs and develop transmission plans" SAR does not state a requirement to plan the system so that it can be operated within operating limits. We feel that this terminology (operating limits or other term such as Operating Security Limits) should be common among all SARs. The system must be planned so that it can be opearated reliably. Using this terminology in all SARs would provide the appropriate link among them.

Without knowing the details that will be included in the standards as described by these SARs, it is difficult to make an assessment on the completeness of this set of SARs. We feel that there should be a SAR that requires LSEs, distribution providers, and generators to respond to requests that will have the effect of operating the system within Operating Limits.

Maintenance requirements should cover transmission equipment other than just protection and control equipment.

A lot of vital requirements of existing policies are not included in any of the proposed SARS, i.e., time error correction, inadvertent, etc.

The main power equipment design, installation, and maintenance requirements are not adequately addressed in these SARs (i.e. circuit breakers, transformers, transmission lines, etc.). Should also address transmission line right-of-way maintenance.

If you believe there are some performance areas that are included in the proposed set of Organization Standards but are not needed, tell us what you believe is not needed:

It appears that some of the SARS overlap and cover some of the same areas, such as "Prepare For and Respond to Emergency Conditions", "Prepare for and Respjond to Blackout or Island conditions", and "Monitor and Analyze Disturbances, Events, and Conditions". These could all fall under a single Emergency Operations SAR. "Coordinate Interchange" should also fall under "Coordinate Operations". In addition, the SARS are intended to define standards for core reliability functions, i.e., "who to do". Some of the SARS really describe processes (i.e., "how to do it") rather than define standards, such as the SAR on "Determine Facility Ratings, Operating Limits and Transfer Limits". There are others that may need to be combined-it is suggested that a remapping of policies to specific SARS should be done.

Is there a reliability-related need for an Organization Standard to be developed on this topic?

☒ Yes ☐ No

☒ Yes ☐ No The scope of the SAR is fine as it is

☐ The scope of the SAR should be expanded to include:

☐ The scope of the SAR should be reduced to eliminate:

Other comments: For the Applicable Functions, TSP, T-owner, and T-operator could all apply. We question whether RA should be applicable. Was the RA inclusion possibly a holdover from when the Planning Authority was not developed?

The scope of this SAR seems rather large, perhaps it could be divided into more manageable pieces.

SAR Commenter Information		
Name	Charles Yeung	
Organization	Reliant Resources	
Telephone	713-207-2935	Fax
E-mail	cyeung@reliant.com	

Does this set of Proposed Organization Standards cover the scope of performance needed to ensure reliability of the interconnected North American grid?

☒ Yes ☐ No

If you believe there are some performance areas not covered with the proposed set of Organization Standards, tell us what is missing:

If you believe there are some performance areas that are included in the proposed set of Organization Standards but are not needed, tell us what you believe is not needed: Core organization standards for reliability must be specific and offer measurable boundary conditions to achieve reliability objectives. Additionally, these standards should not presume that procedural requirements to achieve reliability objectives are included as part of a core reliability standard. Procedures may be necessary for entities to follow to meet NERC Organization Standards requirements. Most procedures meant to achieve reliability objectives contain impacts on the operations of the marketplace. The inextricable link between the reliability needs and the market needs makes the development of reliability-driven procedures impossible to do in a NERC reliability - focused process. If NERC proceeds to develop the core organization standards for reliability, there must be close coordination with entities, such as NAESB and RTOs, that will develop market-driven procedures so that a proper procedure can be developed to meet both reliability objectives and commercial needs.

Is there a reliability-related need for an Organization Standard to be developed on this topic?

☐ Yes ☒ No

☐ Yes ☐ No The scope of the SAR is fine as it is

☐ The scope of the SAR should be expanded to include:

☒ The scope of the SAR should be reduced to eliminate: any reference to criteria to be determined by boundary conditions established outside a measurable or quantifiable standard. A core standard for reliability should be specific and measurable. This SAR proposes that a standard be "a plan" that encompasses normal, abnormal, and extreme system conditions and not define what those conditions are. The plan is a solution - not a measurable standard. As stated in the SAR, "..the plan may utilize operating, construction, and market solutions..", there are numerous possible methods to facilitate the reliability need this SAR suggests. These methods revolve around market operations and should be developed in a process that considers all market interests and weigh those against a measurable reliability need. The proposed standard should be focused on the measurable and definable boundary conditions for "normal, abnormal, and extreme system conditions."

SAR Commenter Information			
Name	Kirit S. Shah		
Organization	Ameren Services -Energy Delivery Technical Services		
Telephone	314 554 3542	Fax	314 554 3260
E-mail	kirit_s_shah@ameren.com		

Does this set of Proposed Organization Standards cover the scope of performance needed to ensure reliability of the interconnected North American grid?

☐ Yes ☒ No

If you believe there are some performance areas not covered with the proposed set of Organization Standards, tell us what is missing:

The proposed set of 11 Standards are described in very generic terms with few details. Therefore it is not possible to assess whether or not the set of these 11 organization standards is complete with respect to some or all areas of power system performance from reliability perspective. For example, there should be a standard for Power System Model (power flow, short circuit, dynamics, EMTP) Development along with corresponding Data Verification requirements. Is model building and data verification encompassed by the presently proposed set of standards? If so, there should be a separate stand-alone standard for it, because most, if not all, reliability and marketing decisions for performance and use of the transmission system are based on the analyses using this data. Providing timely, verified, and appropriate data should be the responsibility of all the users of the transmission system.

There also should be a standard for wide-area coordinated system planning. Is wide-area coordinated planning addressed by the proposed standards? While some level of coordination in planning and operation exists today, this level of coordination needs to be increased. Again, an RTO should facilitate coordination among its members and neighbors, but a standard for wide-area (beyond the boundaries of transmission owning entity, RRO, or RTO) planning would ensure that it is done on a regular and consistent basis.

Much effort (several man-years) was expended in the recent development of the NERC Planning Standards. It would seem that the main emphasis of those standards is still relevant. While we are not sure whether or not or how those standards would be used in this SAR process, we believe that at the very least, they should be used as starting points from which new standards can be developed that can wrap around the NERC Functional Model.

Not being involved in this process from the beginning, I am not sure what was considered in determining which existing standards belong in the proposed set of 11 as a separate standard. It would appear that Coordinate Interchange (SAR#7) and Coordinate Operations (SAR#8) could be combined into one Organizational Standard as could Prepare for and Respond to Abnormal or Emergency Conditions (SAR# 10) and Prepare for and Respond to Blackout or Island Conditions (SAR#11). Similarly, it appears that the proposed SAR#2, Determine Facility Ratings, Operating Limits, and Transfer Capabilities should be separated into three SARs.

Either in these Standards or The NERC Functional Model, a clear definition of who is ultimately responsible for compliance with the standard is required. For example, which entity assumes the ultimate responsibility for long term system planning? Is it ISO, RTO, ITC, Transmission Owner or Transmission Provider? As the function definition of the Planning Authority has not been defined yet, it is not certain that it would provide an answer to this question. In any case, responsible entities should be very clearly defined for compliance with each proposed standard or the new standards.

Is there a reliability-related need for an Organization Standard to be developed on this topic?

☒ Yes ☐ No

☐ Yes ☒ No The scope of the SAR is fine as it is

☒ The scope of the SAR should be expanded to include: More details to judge whether or not all reliability related activities are covered or not.

☐ The scope of the SAR should be reduced to eliminate:

Other comments: The purpose and description is too general. This standard may require to be split into two or more SARs.

SAR Commenter Information			
Name	Dan Wheeler		
Organization	NorthWestern Energy		
Telephone	(406) 497-2234	Fax	(406) 497-3002
E-mail	dan.wheeler@northwestern.com		
Does this set of Proposed Organization Standards cover the scope of performance needed to ensure reliability of the interconnected North American grid? ☒ Yes ☐ No			
Is there a reliability-related need for an Organization Standard to be developed on this topic? ☒ Yes ☐ No ☒ Yes ☐ No The scope of the SAR is fine as it is			

SAR Commenter Information			
Name	John K. Loftis, Jr.		
Organization	Dominion Virginia Power		
Telephone	804 - 273 - 3897	Fax	804 - 273 - 3259
E-mail	john_loftis@dom.com		

Does this set of Proposed Organization Standards cover the scope of performance needed to ensure reliability of the interconnected North American grid?

☒ Yes ☐ No

Is there a reliability-related need for an Organization Standard to be developed on this topic?

☒ Yes ☐ No

☒ Yes ☐ No The scope of the SAR is fine as it is

☐ The scope of the SAR should be expanded to include:

☐ The scope of the SAR should be reduced to eliminate:

Other comments: This high level SAR is ok, as is. More detail must be added in future SAR iterations/postings to provide expectations to those entities/individuals involved with planning and/or assessing the performance of the bulk power transmission system under varying conditions.

SAR Commenter Information			
Name	Terri Grabiak		
Organization	Allegheny Power		
Telephone	724-838-6748	Fax	724-838-6156
E-mail	tgrabia@alleghenypower.com		

Does this set of Proposed Organization Standards cover the scope of performance needed to ensure reliability of the interconnected North American grid?

☐ Yes ☒ No

If you believe there are some performance areas not covered with the proposed set of Organization Standards, tell us what is missing: The SARs do not seem to address requirements for data (network models, generator and load models) needed for static and dynamic studies in the Operating and Planning horizones.

Is there a reliability-related need for an Organization Standard to be developed on this topic?

☒ Yes ☐ No
☐ Yes ☒ No The scope of the SAR is fine as it is
☐ The scope of the SAR should be expanded to include:
☐ The scope of the SAR should be reduced to eliminate:

Other comments: The sentences that refer to 'plan' to 'address these conditions' should be modified to incorporate the following concept;

When studies show that the system may not meet the performance requirements established for various conditions, plans shall be developed to address such situations, and studies shall demonstrate that when the plans are implemented the system will meet the established performance requirements.

SAR Commenter Information		
Name	George Bartlett	
Organization	Entergy Services	
Telephone	504-310-5801	Fax
E-mail	gbartle@entergy.com	

Does this set of Proposed Organization Standards cover the scope of performance needed to ensure reliability of the interconnected North American grid?

☒ Yes ☐ No

If you believe there are some performance areas not covered with the proposed set of Organization Standards, tell us what is missing:

N/A

If you believe there are some performance areas that are included in the proposed set of Organization Standards but are not needed, tell us what you believe is not needed:

Entergy believes there are three "core reliability" Organization Standards needed that constitute "what" is needed for reliability:

1) Balance Resources and Demand,
2) Operate Within Thermal, Voltage and Stability Limits, and
3) Coordinate Operations.

All the other eight SARs, including other processes like TLR, constitute "how" these three "core reliability" Organization Standards are met. The remaining eight SARs do not rise to the level of "core reliability" Organization Standards. These eight should be developed as processes, either by the industry within the three Organization Standards or by individual industry owners/participants. For instance, the E-Tag system was developed by the industry, facilitated by NERC, and is one part of the process for meeting the intent of "Coordinate Interchange", which itself is a process under "Balance Resources and Demand" and/or "Coordinate Operations". The existing TLR process was developed by the industry to assist industry participants meet the core Organization Standard "Operate Within Limits - Monitor and Assess Short-Term Transmission".

Others of the SARs should be developed by individuals but do not themselves rise to the level of "core reliability" Organization Standard. For instance, every system operator should have plans for recovering from blackout or islanding conditions, "Prepare for and Respond to Blackout or Island Conditions". However, we believe these processes should be developed by individual operators, unique to their own systems, and are not core Organization Standards.

Further comments on the individual SARs are included below for your consideration.

Is there a reliability-related need for an Organization Standard to be developed on this topic?

☐ Yes ☒ No
☐ Yes ☒ No The scope of the SAR is fine as it is
☐ The scope of the SAR should be expanded to include:
☐ The scope of the SAR should be reduced to eliminate:

Other comments:

This SAR is really a requirement to establish a "process" for assessing and planning the transmission system. We view the contents of this SAR to be one of the "how"s for meeting the renamed Organization Standard "Operate Within Limits - Monitor and Assess Short-Term Transmission" . As such, this SAR does not rise to the level of "core reliability" Organization Standard.

The industry currently has in place regional processes for assessing and planning the power system under a variety of normal, abnormal, and extreme system conditions. The process should be continued, updated if necessary, and participation in the process should be a required activity by all industry participants.

SAR Commenter Information			
Name	Michael Desselle		
Organization	American Electric Power		
Telephone	214-777-1826	Fax	214-777-1831
E-mail	mddesselle@aep.com		

American Electric Power (AEP) appreciates the opportunity to comment on the 10 most recent Standard Authorization Requests (SARs) and looks forward to working with NERC and other market participants to ensure the continued reliability of the electrical system.
Clearly the electricity industry has been exceptionally dynamic and fluid in recent years and is going through many changes. While changes can be positive, it is incumbent on the industry to ensure that changes, which are adopted result in enhanced reliability and a better market environment. With this in mind, we envision that there are actually three interrelated but separable processes with respect to the development of standards.

? First, the relevant standards need to be identified. Over recent months this has been referred to as defining "what" the standard is.
? Second, there need to be decisions about "how" these standards are to be achieved.
? Third, choices have to be made as to how these standards will be implemented.

The resultant standards, when implemented and operational, will potentially affect production, consumption and investment decisions. By necessity, the standards, including how they are achieved and implemented, are closely related to the design of the market and the separation of functions among market participants and service providers. For this reason, we encourage discussion and even preliminary definition of what core reliability standards are needed. However, we strongly urge restraint with respect to the other two aspects of the process – defining how the standards will be achieved as well as how they will be implemented. In our opinion, the latter two processes are highly integrated with the process of market design and implementation as well as market operation; the development of RTOs; and the definition of the NERC/NAESB interface.

Given that closure on many of the market design issues is expected in the near future, we see little risk in delaying the latter two processes – how the standards are achieved and implemented - until such time as clarity is achieved on Standard Market Design (SMD) and RTO formation. Moreover, since the NERC/NAESB interface will likely impact decisions on how standards will be achieved as well as how they will be implemented, it seems logical to wait until that interface has been defined.

We would prefer to see the SAR process simply make the threshold determination as to whether each of the proposed standards are needed, and then put on hold the actual development of those standards that are needed until the critical market development activities described above are closer to completion. Only at that point in time, will it be known whether the proposed standards cover the scope of performance needed to ensure reliability of the interconnected North American Grid. In the interim, AEP looks forward to continue working with NERC, NAESB and other market participants to develop and implement the appropriate standards.

Other comments: It is unclear to AEP what the intent was of this SAR . This SAR appears to have both market and reliability implications. As such, before moving forward to develop this SAR, AEP requests a further clarification of the specific intent. To the extent that this SAR is transitioning an existing standard from the old world to the new world (Functional Model), then the standard should not go beyond the original scope. Consistent with our general comments, once the clarity is achieved on Standard Market Design and RTO formations, then this standard should be revisited and reevaluated.

SAR Commenter Information			
Name	Ed Kirschner		
Organization	Cinergy		
Telephone	317-838-1455	Fax	317-838-6846
E-mail	ekirschner@cinergy.com		

Does this set of Proposed Organization Standards cover the scope of performance needed to ensure reliability of the interconnected North American grid?

☒ Yes ☐ No

If you believe there are some performance areas not covered with the proposed set of Organization Standards, tell us what is missing:

If you believe there are some performance areas that are included in the proposed set of Organization Standards but are not needed, tell us what you believe is not needed: General comment on entire set of SAR's and the overall process: Based on the short descriptions and the broad scope of most of these SAR's, it appears that these SAR's will encompass many of the existing planning and operating templates developed during the NERC pilot program. Experience obtained during the pilot program showed that many of the planning templates and some of the operating templates were difficult to interpret and even more difficult to measure for compliance, let alone determine exactly who the templates applied. Based on the scope descriptions given for each SAR, it appears these SAR's are written to encompass those same templates. Hopefully, the final standards will be written such that each standard is clear and concise as to how exactly the entity must comply for different levels of compliance and exactly which entities must comply for each measure of each standard. With the benefit of experience of the pilot program, Cinergy would like to suggest that since several of the measures in the existing templates are difficult if not impossible to actually measure for compliance, that some of these proposed standards or portions thereof not be developed into standards but instead be written as "good engineering practices". These "practices" could be used in the certification process for the various functions in the NERC Functional model such as Reliability Authority, Planning Authority, etc. We will try to indicate on each SAR, those portions that should be written as "practices". In the event that all eleven of these SAR's are approved to move forward, then the list should be prioritized and developed somewhat consecutively instead of simultaneously. We have already observed how difficult it is to stay abreast of the templates developed during the pilot as far as providing meaningful comments and review due to the sheer volume of documents distributed for review. Although there are only eleven SAR's, each SAR encompasses multiple measures, which will need to be defined in order to specify how each part is to be measured for compliance and to define what entities must comply for each part. Also since technical experts will be required to assist in the development of these standards, there will be a burden on resources if all of these are developed simultaneously since many of the standards could involve some of the same experts. The priority of developing each standard should be based on industry consensus of what are the major problems/issues that are threatening the reliability of the transmission grid today. Standards should be written so that performance can be measured as it affects overall grid reliability vs trying to measure practices or procedures.

Is there a reliability-related need for an Organization Standard to be developed on this topic?

☐ Yes ☒ No

☐ Yes ☒ No The scope of the SAR is fine as it is

☐ The scope of the SAR should be expanded to include:

☒ The scope of the SAR should be reduced to eliminate: entire standard

Other comments: This SAR should be developed as a "practice" to be used in the certification process for Planning Authorities and Reliability Authorities. Experience with the existing templates and NERC Table 1A shows how difficult it is to not only determining how to comply with this standard but to actually measure it for compliance. It is difficult if not impossible to determine if events will result in "cascading" - usually engineering judgment is used. It is also not practical to investigate every possible extreme or abnormal system condition to check for "cascading" - again engineering judgment is used. All of these factors makes measuring an entity for compliance very difficult if not impossible. Based on the ongoing development of RTO's and the open stakeholder process proposed for future planning studies, it does not appear that lack of planning will be an issue.

SAR Commenter Information			
Name	Jim Griffith		
Organization	Bulk Power Operations Southern Company		
Telephone	205-257-6892	Fax	205-257-6663
E-mail	jsgriffi@southernco.com		

Does this set of Proposed Organization Standards cover the scope of performance needed to ensure reliability of the interconnected North American grid?

☐ Yes ☒ No

If you believe there are some performance areas not covered with the proposed set of Organization Standards, tell us what is missing: Frequency control and processes standardized to speedy determine what are the problems contributing to poor frequency. What is considered "poor frequency"? Some SARs do not include critical participants that should be included.

If you believe there are some performance areas that are included in the proposed set of Organization Standards but are not needed, tell us what you believe is not needed: The scopes of these SARs range from small details to broad areas of responsibilities and overlap in many areas. It would seem that a top down approached would make better sense.

None

SAR Commenter Information			
Name	Peter Burke (submitting comments provided by numerous ATC contributors)		
Organization American Transmission Company			
Telephone	262-506-6863	Fax	262-506-6709
E-mail	PBurke@atcllc.com		

Does this set of Proposed Organization Standards cover the scope of performance needed to ensure reliability of the interconnected North American grid?

☐ Yes ☒ No

If you believe there are some performance areas not covered with the proposed set of Organization Standards, tell us what is missing: (1) ATC applauds the effort of the SAR's to acknowledge the dismantling of the vertically integrated utilities. However, some care needs to be given to defining the separated groups. For example, it is not always clear what is meant by Planning Group, Transmission Owner, Transmission Service Provider, and Transmission Operator, whether some groups are included in others, and whether there should or shouldn't be that inclusion. For each of the SAR's, there was some lack of confidence that the correct complying entities had been identified.

(2) Perhaps buried within the SAR's is a modeling component that will surface in the details, but none of these SAR's will accomplish their intent without credible models from which to do analysis.

Is there a reliability-related need for an Organization Standard to be developed on this topic?

☒ Yes ☐ No

☐ Yes ☒ No The scope of the SAR is fine as it is

☒ The scope of the SAR should be expanded to include: SAR #8 includes coordinated "planning". This language should be added here so that the Assessing and Planning of the Transmission System is coordinated. If modeling isn't addressed in the details it should be.

☐ The scope of the SAR should be reduced to eliminate:

Other comments: (1) It is not clear how market solutions would fit in providing reliable delivery of power for the future needs of customers. Market solutions could provide an interm solution to transmission constraints but they should not be used in planning future transmission needs.

Maybe the transmission service provider (TSP) should have some responsibility within this area as it relates to providing adequate transmission service to the market. If the TSP identifies a bottleneck on the transmission system creating problems transferring energy across the system, that should be included in future plans to try to eliminate that bottleneck.

The transmission operator, if not the same as the transmission owner, should have some responsibility in making sure the transmission owner knows about future improvements needed to improve it's system from an operational perspective.

(2) NERC should ensure that the standards defined within this SAR include a definition of how the planning model is created. Is there any way to come up with a standard for what gets included in the future models? For example, roll-over rights for transmission service, proposed generation facilities, proposed transmission facilities that require state approval and/or signficant right-of-way acquisition.

SAR Commenter Information			
Name	Bob Pierce		
Organization	Duke Power		
Telephone	(704) 373-6480	Fax	(704) 382-7887
E-mail	rwpierce@duke-energy.com		

Does this set of Proposed Organization Standards cover the scope of performance needed to ensure reliability of the interconnected North American grid?

☐ Yes ☒ No

If you believe there are some performance areas not covered with the proposed set of Organization Standards, tell us what is missing: SARs should be developed that cover Operator Personnel and Training and Telecommunications reliability.

Is there a reliability-related need for an Organization Standard to be developed on this topic?

☒ Yes ☐ No

☒ Yes ☐ No The scope of the SAR is fine as it is

☐ The scope of the SAR should be expanded to include:

☐ The scope of the SAR should be reduced to eliminate:

Other comments: The SAR should also apply to the following organizations because of their involvement in the planning process: Transmission Service Provider, Transmission Operator, Distribution Provider, Generator, Purchasing-Selling Entitiy, and Load-Serving Entity.

SAR Commenter Information			
Name	David Little		
Organization	Nova Scotia Power Inc.		
Telephone	902 428-7580	Fax	902 428-7550
E-mail	david.little@nspower.ca		
Is there a reliability-related need for an Organization Standard to be developed on this topic? ☒ Yes ☐ No ☒ Yes ☐ No The scope of the SAR is fine as it is			

SAR Commenter Information			
Name	Art Giardino		
Organization	Public Service Electric & Gas		
Telephone	973 430-6374	Fax	973 242-6074
E-mail	arthur.giardino@pseg.com		

Does this set of Proposed Organization Standards cover the scope of performance needed to ensure reliability of the interconnected North American grid?

☐ Yes ☒ No

If you believe there are some performance areas not covered with the proposed set of Organization Standards, tell us what is missing:

If you believe there are some performance areas that are included in the proposed set of Organization Standards but are not needed, tell us what you believe is not needed: Too soon to proceed

Is there a reliability-related need for an Organization Standard to be developed on this topic?

☐ Yes ☒ No

☐ Yes ☐ No The scope of the SAR is fine as it is

☐ The scope of the SAR should be expanded to include:

☐ The scope of the SAR should be reduced to eliminate:

Other comments: Resources should not be expended on this SAR until FERC has specifyed the organization responsible for wholesale electric standards development.

SAR Commenter Information		
Name	Compliance Subcommittee	
Organization SERC (Contact = Nancy Fallon)		
Telephone	704-892-6026	Fax
E-mail	nfallon@serc1.org	

Does this set of Proposed Organization Standards cover the scope of performance needed to ensure reliability of the interconnected North American grid?

☐ Yes ☒ No

If you believe there are some performance areas not covered with the proposed set of Organization Standards, tell us what is missing: A lot of vital requirements of existing policies are not included in any of the proposed SARS, i.e., time error correction, inadvertent, etc.

If you believe there are some performance areas that are included in the proposed set of Organization Standards but are not needed, tell us what you believe is not needed: It appears that some of the SARS overlap and cover some of the same areas, such as "Prepare For and Respond to Emergency Conditions", "Prepare for and Respond to Blackout or Island conditions", and "Monitor and Analyze Disturbances, Events, and Conditions". These could all fall under a single Emergency Operations SAR. "Coordinate Interchange" should also fall under "Coordinate Operations". In addition, the SARS are intended to define standards for core reliability functions, i.e., "what to do". Some of the SARS really describe processes (i.e., "how to do it") rather than define standards, such as the SAR on "Determine Facility Ratings, Operating Limits and Transfer Limits". There are others that may need to be combined - it is suggested that a re-mapping of Policies to specific SARs should be done.

None

SAR Commenter Information	
Name OPWG	
Organization SERC (Contact = Nancy Fallon)	
Telephone 704-892-6026	Fax
E-mail nfallon@serc1.org	
Does this set of Proposed Organization Standards cover the scope of performance needed to ensure reliability of the interconnected North American grid? ☐ Yes ☒ No If you believe there are some performance areas not covered with the proposed set of Organization Standards, tell us what is missing: The "Assess Transmission future needs and develop transmission plans" SAR does not state a requirement to plan the system so that it can be operated within operating limits. We feel that this terminology (operating limits or other term such as Operating Security Limits) should be common among all SARs. The system must be planned so that it can be opearated reliably. Using this terminology in all SARs would provide the appropriate link among them. Without knowing the details that will be included in the standards as described by these SARs, it is difficult to make an assessment on the completeness of this set of SARs. We feel that there should be a SAR that requires LSEs, distribution providers, and generators to respond to requests that will have the effect of operating the system within Operating Limits.	
None	

SAR Commenter Information		
Name	Planning Standards Working Group (PSWG)	
Organization SERC (Contact = Nancy Fallon)		
Telephone	704-892-6026	Fax
E-mail	nfallon@serc1.org	

Does this set of Proposed Organization Standards cover the scope of performance needed to ensure reliability of the interconnected North American grid?

☐ Yes ☒ No

If you believe there are some performance areas not covered with the proposed set of Organization Standards, tell us what is missing: Maintenance requirements should cover transmission equipment other than just protection and control equipment.

Is there a reliability-related need for an Organization Standard to be developed on this topic?

☒ Yes ☐ No

☒ Yes ☐ No The scope of the SAR is fine as it is

☐ The scope of the SAR should be expanded to include:

☐ The scope of the SAR should be reduced to eliminate:

Other comments: For the Applicable Functions, TSP, T-owner, and T-operator could all apply. We question whether RA should be applicable. Was the RA inclusion possibly a holdover from when the Planning Authority was not developed?

The scope of this SAR seems rather large, perhaps it could be divided into more manageable pieces.

SAR Commenter Information			
Name	Gary Won and Don Tench Comments submitted on behalf of the Independent Electricity Market Operator (IMO)		
Organization	Independent Electricity Market Operator (IMO)		
Telephone	905-855-6427	Fax	905-855-6372
E-mail	gary.won@theimo.com and don.tench@theimo.com		

Does this set of Proposed Organization Standards cover the scope of performance needed to ensure reliability of the interconnected North American grid?

☒ Yes ☐ No - see comments

If you believe there are some performance areas not covered with the proposed set of Organization Standards, tell us what is missing:

If you believe there are some performance areas that are included in the proposed set of Organization Standards but are not needed, tell us what you believe is not needed:

Comments:

The proposed standards appear to provide the necessary coverage to ensure a reliable interconnected North American grid. A thorough review will need to be done to ensure that no necessary and significant performance requirement is missed that is in the current Operating Policies and Planning Standards. While the proposed SARs may cover the scope of performance needed, we have several concerns with the overall set at this stage of implementation;

1. The 'White Paper on NERC's set of Organizational Standards", dated April 11, 2002, clearly articulates a direction with which we agree. The paper proposes that 'these standards will define ***what*** performance must be achieved, without providing restrictive measures on ***how*** to achieve that performance'. This direction arose following industry experience with the very large set of current planning and operating standards and recognition by the industry that the current standards, in many areas, are too prescriptive of the 'how'. By focusing the industry on meeting less meaningful standards, the goal of maintaining reliability is actually put at risk. It is our belief that the proposed set of standards still focuses too much on the 'how', to the potential detriment of the overall objective.
2. Perhaps the most important aspect of a set of organization standards is to define to whom and to what the standards apply. The NERC Functional Model does a good job of providing a framework to define to whom the standards apply. However, what the standards apply to is left almost entirely open. What the standards apply to is variously described in the proposed SARs as the; transmission system, interconnected transmission system, network, power system, bulk electricity system and those facilities which affect reliability, among others. The white paper again provides valuable insight by defining the objective in terms of the 'interconnected electric systems in North America', however, this too is subject to individual interpretation. A definition of what the standards apply to, in terms of scope, is perhaps more important than the individual SARs. As such, I suggest that this scope needs to be developed through the SAR process. This needs to be addressed in a global fashion rather than relying on the development of a different scope for each SAR.
3. The proposed SARs deviate from the white paper direction to focus on reliability and delve into areas which are potentially outside of their scope such as; equipment damage, data sharing, procedures and studies. To the extent that these areas are performance related, the need is understood. However the development of past standards has shown that these areas often become part of a standard when they are really only one method of how a given level of performance can be achieved.
4. The 'High Level Map of Old Doc's to new Doc's' proposed by SAC (attached at the end of this package) provides a mapping of existing NERC planning and operating standards into the proposed new SARs. Each of the broad areas defined by the existing standards must be judged carefully against the 'White Paper' principles before even being included in the mapping. It is our belief that many will not pass this test.
5. The language of the proposed set of SARs struggle (understandably) to recognize the industry changes facing open electricity markets. Often they reflect a historic utility perspective including distinctions between 'planning' and 'operating' and emphasis on elements of 'pro forma' tariffs, which may no longer be relevant. To the maximum extent possible, the SARs must be developed to be independent of organizational and regulatory structures as well as respecting Regional and international differences. In our view, performance based standards are the best way to recognize this diversity.

We are very supportive of the goals NERC has set and would be glad to discuss further or participate more directly in their development.

Is there a reliability-related need for an Organization Standard to be developed on this topic?

☒ Yes ☐ No
☐ Yes ☒ No The scope of the SAR is fine as it is
☐ The scope of the SAR should be expanded to include:
☒ The scope of the SAR should be reduced to eliminate:
The SAR must be rigorously tested against the White Paper requirements to specify what performance must be achieved rather than how to achieve that performance. For example, in what way is a standard for 'planning the transmission systems' a performance standard? Wouldn't such a standard be considered one means of determining whether a performance standard based on system behaviour (both present and future) is met?
Other comments: The Standard description implies that there should be a single transmission expansion plan. It reads as if there is or must be a single coordinated and minimum cost plan (same theme in the Planning Authority proposal currently being circulated for comment). In a market environment, there may be a need for multiple plans since the viability and timing of various generator projects (and the system enhancements that may be required for deliverability of their output) will be dictated by commercial rather than system adequacy considerations. Similarly the timing of merchant transmission projects will reflect commercial rather than system security considerations

A minimum set of criteria for assessing the acceptability of plans is needed. The NPCC A-2 (see www.npcc.org) document covers the aspects of ensuring against significant (disagree with the use of "extreme" in the SAR), adverse impacts over a wide area. Market systems also need criteria to determine when to initiate or order plans, or trigger some regulatory backstop if expansion plans are deemed to be insufficient to meet needs. (Must also define what minimum need is).

SAR Commenter Information		
Name	David Scarpignato	
Organization	Baltimore Gas & Electric	
Telephone	410-597-7593	Fax
E-mail	scarp@bge.com	

Does this set of Proposed Organization Standards cover the scope of performance needed to ensure reliability of the interconnected North American grid?

☐ Yes ☒ No

If you believe there are some performance areas not covered with the proposed set of Organization Standards, tell us what is missing: The promulgation for comment of these SARs is premature. The industry "standard making process" is in a transition phase and it is overly burdensome to devote resources at this time. Once legislation or FERC firmly determines which entiy(ies) is responsible for standards it will make sense to move forward with said entity.

Even if NERC wants to cover reliability standards, almost all standards have a reliability and commercial impact; thereby, necessitating developing a single process that incorporates both commercial and reliability aspects of standards development. The current NERC process risks being changed soon, discounts commercial aspects, and is not part of a finalized overall industry process.

Waiting a short while to move forward on a new standards setting process is acceptable and prudent given that NERC standards are currently in place and the industry can continue to use these standards until the new process and standards setting organization(s) are firmly set.

If you believe there are some performance areas that are included in the proposed set of Organization Standards but are not needed, tell us what you believe is not needed: The promulgation for comment of these SARs is premature. The industry "standard making process" is in a transition phase and it is overly burdensome to devote resources at this time. Once legislation or FERC firmly determines which entiy(ies) is responsible for standards it will make sense to move forward with said entity.

Even if NERC wants to cover reliability standards, almost all standards have a reliability and commercial impact; thereby, necessitating developing a single process that incorporates both commercial and reliability aspects of standards development. The current NERC process risks being changed soon, discounts commercial aspects, and is not part of a finalized overall industry process.

Waiting a short while to move forward on a new standards setting process is acceptable and prudent given that NERC standards are currently in place and the industry can continue to use these standards until the new process and standards setting organization(s) are firmly set.

Is there a reliability-related need for an Organization Standard to be developed on this topic?

☐ Yes ☒ No

☐ Yes ☐ No The scope of the SAR is fine as it is

☐ The scope of the SAR should be expanded to include:

☐ The scope of the SAR should be reduced to eliminate:

Other comments: The promulgation for comment of these SARs is premature. The industry "standard making process" is in a transition phase and it is overly burdensome to devote resources at this time. Once legislation or FERC firmly determines which entiy(ies) is responsible for standards it will make sense to move forward with said entity.

Even if NERC wants to cover reliability standards, almost all standards have a reliability and commercial impact; thereby, necessitating developing a single process that incorporates both commercial and reliability aspects of standards development. The current NERC process risks being changed soon, discounts commercial aspects, and is not part of a finalized overall industry process.

Waiting a short while to move forward on a new standards setting process is acceptable and prudent given that NERC standards are currently in place and the industry can continue to use these standards until the new process and standards setting organization(s) are firmly set.

SAR Commenter Information		
Name	R. Scott Henry, Chairman	
Organization	Interconnected Operations Services Subcommittee, NERC	
Telephone	(704) 382-6182	Fax
E-mail	rshenry@duke-energy.com	

Does this set of Proposed Organization Standards cover the scope of performance needed to ensure reliability of the interconnected North American grid?

☒ Yes ☐ No

If you believe there are some performance areas not covered with the proposed set of Organization Standards, tell us what is missing:

If you believe there are some performance areas that are included in the proposed set of Organization Standards but are not needed, tell us what you believe is not needed: The IOS Subcommittee appreciates the opportunity of submitting comments on the ten SAR's posted by NERC. The IOS Subcommittee found the white paper most instructive in explaining the intent of this initial posting. Generally, the SAR's posted outline the topics for a reasonable first set of organization standards. Since much work is still to be done in developing the details of the SAR's and the related organization standards, a definitive statement on the comprehensive nature of these SAR's is premature at this point. The IOS Subcommittee does note that interconnected operations services are important components of several of the SAR's. NERC's IOS work, summarized in the IOS Reference Document in the NERC Operating Manual, has been substantive in identifying the minimum necessary components of interconnected operations services. Addressing more than simply the need to balance energy, the IOS work stresses the importance of responsive capabilities and controls necessary to achieve reliable bulk electric operation. The IOS Subcommittee recommends that the drafting of the proposed standards considers the IOS Reference Document and that IOS expertise be considered an essential competency of the standard drafting team.

In its discussion of these SAR's, the IOS Subcommittee identified three fundamental policy issues needing resolution prior to detailed work on development of these standards. First, the SAR's generally propose that the organization standards would apply to Service Functions contained in the Reliability Model, and they do not propose addressing the role of generators, loads, and others in provision and delivery of IOS's. The SAR's implicitly assume that the roles of others will be addressed through contracts. While the IOS Subcommittee does not necessarily disagree with this assumption (no consensus has been reached either way), there is a need to further explore the potential applicability of aspects of the proposed standard to others. This issue requires further debate and may serve as a critical precedent for the scope of other Organization Standards. Second, the "Assess Transmission Future Needs and Develop Transmission Plans" SAR proposes a standard to develop plans. None of the SAR's identifies who has the obligation to implement the plan. A plan without assignment or accountability for implementation is likely to provide no fruitful results. Third, the proposed standards and associated measures and criteria should not be any more restrictive than is necessary for a reliable bulk electric system. Market mechanisms for the provision of IOS should not be unnecessarily constrained. Market design is evolving rapidly, including for example, the ability to provide real time balancing services through bid-based mechanisms.

The IOS Subcommittee offers its assistance to the Standards Requestor(s) as further work is invested in development of these organization standards.

SAR Commenter Information			
Name	Jim Cyrulewski Manager -Michigan Electric Power Coordination Center		
Organization	Michigan Electric Coordinated Systems (MECS)		
Telephone	734-665-3628	Fax	734-665-3480
E-mail	cyrulewskij@dteenergy.com		

Does this set of Proposed Organization Standards cover the scope of performance needed to ensure reliability of the interconnected North American grid?

☒ Yes ☐ No

Is there a reliability-related need for an Organization Standard to be developed on this topic?

☐ Yes ☒ No
☐ Yes ☐ No The scope of the SAR is fine as it is
☐ The scope of the SAR should be expanded to include:
☐ The scope of the SAR should be reduced to eliminate:

Other comments: This is an ongoing function that will be coordinated by RTOs with transmission owners and market participants. Every RTO will have or already has a planning protocol on how long term transmission plans are developed. A standard is not needed to make this function occur. For those entities not in an RTO, a similar process will exist to develop long term transmission plans.

SAR Commenter Information			
Name	Kent Saathoff		
Organization	Kent Saathoff		
Telephone	(512)225-7011	Fax	(512)225-7020
E-mail	ksaathoff@ercot.com		

This SAR and the other posted SARs provide an appropriate framework for transitioning existing NERC Operating Policies and Planning Standards into new, NERC Organization Standards. Multiple compliance measures may be defined and developed for each of the eleven proposed Organization Standards. The Organization Standards and related compliance measures should focus on what functions must be performed for reliability, on who is responsible for each compliance measure for each required function and not, on how the compliance measure is achieved. The compliance measure must be measurable or demonstrable to ensure compliance.

Sound planning is the foundation for a reliable transmission system. Therefore a standard for defining transmission planning requirements is appropriate.

ERCOT believes the following issues should be considered in the development of this standard:

· The assessment leading to a transmission plan may be the most important aspect of this standard. Operational challenges must be identified, coordinated and remedial action plans made. Facility solutions usually require a longer time frame than the operating requirements allow.

· Incorporate a reasonable planning horizon - Sound planning must be based on reasonably accurate forecasts of future load and generation patterns. In the new competitive generation markets it is not possible to perform meaningful forecasts more than five years out. Attempting to do so is not a good use of scarce resources.

· Allowance of Remedial Action Plans (RAP) and Special Protection Schemes (SPS)– Major transmission construction that may be the preferred long-term answer to transmission reliability usually has a long lead-time. There should be provisions for the interim use of RAP and SPS in meeting the planning standard.

· Recognition of Regional differences - All standards should make allowance for reasonable differing regional requirements. Requirements may vary due to differences in climate, predominate generation type, transmission design standards, availability of interruptible load and market rules.

· FACTS devices are emerging as feasible solutions to transmission improvements. They should be considered in the development of standards for transmission planning and facility ratings (may include in SAR ID# FACILITY_RATINGS_01_01 as well).

SAR Commenter Information			
Name	Ronald Gunderson		
Organization	MAPP Reliability Council		
Telephone	(402)845-5252	Fax	(402)845-5205
E-mail	rogunde@nppd.com		

Does this set of Proposed Organization Standards cover the scope of performance needed to ensure reliability of the interconnected North American grid?

☐ Yes ☒ No

If you believe there are some performance areas not covered with the proposed set of Organization Standards, tell us what is missing: We did not have adequate time to be sure all reliability areas are covered by these SARs.

Is there a reliability-related need for an Organization Standard to be developed on this topic?

☒ Yes ☐ No

☐ Yes ☒ No The scope of the SAR is fine as it is

☒ The scope of the SAR should be expanded to include: 1) a requirement to provide assessments at all demand levels 2) Transmission Service Providers should be included in the list of functions.

☒ The scope of the SAR should be reduced to eliminate: This standard should only apply to long-term planning functions. A parallel standard is required for operational planning.

SAR Commenter Information			
Name	Linda Clarke		
Organization	Exelon Corporation		
Telephone	(610) 765-6698	Fax	(610) 765-6698
E-mail	lclarke@pwrteam.com		

Does this set of Proposed Organization Standards cover the scope of performance needed to ensure reliability of the interconnected North American grid?

☒ Yes ☐ No

If you believe there are some performance areas not covered with the proposed set of Organization Standards, tell us what is missing:

If you believe there are some performance areas that are included in the proposed set of Organization Standards but are not needed, tell us what you believe is not needed:

The reliability policies, or "Organization Standards", must be specific and limited to standards based on the NERC-defined seven reliability principles and five market interface principles and not go beyond these areas. In addition, the NERC Organization Standards process must be coordinated with the process that will be established by FERC to develop busines practice standards.

Is there a reliability-related need for an Organization Standard to be developed on this topic?

☐ Yes ☒ No

☐ Yes ☐ No The scope of the SAR is fine as it is

☐ The scope of the SAR should be expanded to include:

☐ The scope of the SAR should be reduced to eliminate:

Other comments: A SAR is not needed for a transmission expanision plan, since it includes "market solutions". Market solutions are outside NERC's scope with respect to the development of reliability policies or "Organization Standards".

SAR Commenter Information			
Name	Carter B. Edge		
Organization	Southeastern Power Administration		
Telephone	706-213-3855	Fax	706-213-3884
E-mail	cartere@sepa.doe.gov		

Does this set of Proposed Organization Standards cover the scope of performance needed to ensure reliability of the interconnected North American grid?

☐ Yes ☒ No

If you believe there are some performance areas not covered with the proposed set of Organization Standards, tell us what is missing: Time Error Corrections; Inadvertant Interchange

Is there a reliability-related need for an Organization Standard to be developed on this topic?

☒ Yes ☐ No

SAR Commenter Information			
Name	Warren Schaefer		
Organization	Dairyland Power Cooperative		
Telephone	608/787-1252	Fax	608/787/1327
E-mail	wjs@dairynet.com		

Does this set of Proposed Organization Standards cover the scope of performance needed to ensure reliability of the interconnected North American grid?

☒ Yes ☐ No

If you believe there are some performance areas not covered with the proposed set of Organization Standards, tell us what is missing: We are not sure from the brief scope that is provided with each SAR that all the NERC Planning Standards and Operating Policies are covered.

Is there a reliability-related need for an Organization Standard to be developed on this topic?

☒ Yes ☐ No

☐ Yes ☒ No The scope of the SAR is fine as it is

☒ The scope of the SAR should be expanded to include: 1) a requirement to provide assessments at all demand levels 2) Transmission Service Providers should be included in the list of functions.

☒ The scope of the SAR should be reduced to eliminate: This standard should only apply to long-term planning functions. A parallel standard is required for operational planning.

Other comments: This is a reliability standard and should not include Market functions

SAR Commenter Information			
Name	Mike Miller		
Organization	Southern Company		
Telephone	205 257 7755	Fax	6663
E-mail	mbmiller@southernco.com		

Does this set of Proposed Organization Standards cover the scope of performance needed to ensure reliability of the interconnected North American grid?

☐ Yes ☒ No

If you believe there are some performance areas not covered with the proposed set of Organization Standards, tell us what is missing: The "Assess Transmission future needs and develop transmission plans" SAR does not state a requirement to plan the system so that it can be operated within operating limits. I feel that this terminology (operating limits or other term such as Operating Security Limits) should be common among all SARs. The system must be planned so that it can be operated reliably. Using this terminology in all SARs would provide the appropriate link among them.

Without knowing the details that will be included in the standards as described by these SARs, it is difficult to make an assessment on the completeness of this set of SARs. I feel that there should be a SAR that requires LSEs, distribution providers, and generators to respond to requests that will have the effect of operating the system within Operating Limits.

Is there a reliability-related need for an Organization Standard to be developed on this topic?

☒ Yes ☐ No

☐ Yes ☒ No The scope of the SAR is fine as it is

☒ The scope of the SAR should be expanded to include: Planning must be coordinated to optimize not only transmission but generation as well. The left alone process of disjointing generation and transmission is creating a non-steady state electrical system. The criteria for designing a system must include defined measurements adopted by all. This brief description does not provide sufficient detail to ensure reliability is planned. The planning criteria must address defined transmission planning for transfer usage as well as specific load service usage in other words interconnection as well as intraconnection. The need to define roles, responsibilities and authority must be developed between Federal (RTO) characteristics and functions and transmission owners.

☐ The scope of the SAR should be reduced to eliminate:

Other comments: Transmission Operator and perhaps Distribution Provider should be added to the list of applicable functions.

SAR Commenter Information			
Name	Jim Griffith		
Organization	Bulk Power Operations Southern Company		
Telephone	205-257-6892	Fax	205-257-6663
E-mail	jsgriffi@southernco.com		

Does this set of Proposed Organization Standards cover the scope of performance needed to ensure reliability of the interconnected North American grid?

☐ Yes ☒ No

If you believe there are some performance areas not covered with the proposed set of Organization Standards, tell us what is missing: Frequency control and processes standardized to speedy determine what are the problems contributing to poor frequency. What is considered "poor frequency"? Some SARs do not include critical participants that should be included.

If you believe there are some performance areas that are included in the proposed set of Organization Standards but are not needed, tell us what you believe is not needed: The scopes of these SARs range from small details to broad areas of responsibilities and overlap in many areas. It would seem that a top down approached would make better sense.

None

SAR Commenter Information		
Name	Southern Company	
Organization		
Telephone	(205) *257-4222*	Fax (205) *257-1040*
E-mail	DGPIATT@southernco.com	

Does this set of Proposed Organization Standards cover the scope of performance needed to ensure reliability of the interconnected North American grid?

☐ Yes ☒ No

If you believe there are some performance areas not covered with the proposed set of Organization Standards, tell us what is missing:

The new Organizational Standards must include the "How's" as well as the "What's" to just maintain the current level of reliability for the electric transmission system. The current NERC Planning Standards and Operating Policies, in general, document the body of good utility practice that provides that currently level of reliability seen in North America. If only the Standards ("What's") were published without the Measures ("How's") the new document will be woefully inadequate. The planning, design, construction, operation and maintenance of the electric transmission system are a very refined process of applied scientific principles and technology. The current proposed Organizational Standards create a level of ambiguity that will not adequately ensure the reliability of the grid is maintained at the levels seen today. Southern Company suggests that NERC consider withdrawing the entire proposed set of standards and reconsider its process for developing reliability standards. When posting standards for comment, NERC should consider a longer comment period. Thirty days is too short due to the amount of corporate coordination and information gathering required to submit meaningful responses.

With respect to the scope of reliability standards, the development of all reliability standards should be within the general context of ensuring that the grid is protected from uncontrolled or cascading interruption of network operation. None of the proposed SAR's fully addresses these basic operational requirements, although certain aspects of these requirements are contained within some of the SAR's. Therefore, it is recommended that NERC prepare an initial standard that establishes the minimum reliability requirements needed to prevent severe adverse events from occurring on our transmission system, i.e. uncontrolled or cascading interruption of network operation. This pivotal standard - call it "MINIMAL OPERATIONAL REQUIREMENTS" - would address such basic reliability considerations such as

- No operator should knowingly operate in a manner that inappropriately affects the reliability of another entity
- No operator should allow operation of the system in such a manner that inappropriately risks cascading outage of the network or violates an operating security limit.
- No operator should allow operations that violate safety standards established by the National Electric Safety Code, ANSI Standards, IEEE, etc….
- No operator should allow operations outside established equipment ratings
- Etc.

These may or may not represent the appropriate set of minimal reliability considerations, and are offered for illustrative purposes only. Once this pivotal standard has been established and fully vetted, all future SAR's can be developed within the context of these basic requirements. If it were deemed necessary to increase or adjust these pre-established minimum levels, the pending adjustments would need to be fully vetted in both the commercial and the reliability forums.

Is there a reliability-related need for an Organization Standard to be developed on this topic?

☒ Yes ☐ No

☐ Yes ☒ No the scope of the SAR is fine as it is

☒ The scope of the SAR should be expanded to include:

The scope of this SAR is poorly written and does not adequately represent or convey the transmission planning functional responsibilities. A better way to phrase the purpose could be:

To establish a standard for evaluating the performance of the transmission system to ensure that appropriate levels of functionality and reliability are achieved in both the short-term and long-term time frames.

☐ The scope of the SAR should be reduced to eliminate:

Other comments:

The "Brief Description", once again, is poorly written and does not represent transmission planning in general.

The I.A. Planning Standard is a very functional standard with the exception of S3.M3 and should be

followed very closely as a template to the developing the scope of this SAR.

SAR Commenter Information			
Name	Jon. Loresch		
Organization	FirstEnergy Solutions		
Telephone	330-315-7313	Fax	330-315-6773
E-mail	LoreschJ@FirstEnergyCorp.com		

Does this set of Proposed Organization Standards cover the scope of performance needed to ensure reliability of the interconnected North American grid?

☐ Yes ☒ No

If you believe there are some performance areas not covered with the proposed set of Organization Standards, tell us what is missing: responsibility for maintaining adequate operating reserves and reactive support. (Perhaps to be included in SAR on "Balancing Resources and Demand"?); responsibility for assessing and defining what are adequate operating reserves and reactive support. (Perhaps to be included in SAR on "Developing Transmission Plans"?)

Is there a reliability-related need for an Organization Standard to be developed on this topic?

☒ Yes ☐ No

☐ Yes ☒ No The scope of the SAR is fine as it is

☒ The scope of the SAR should be expanded to include: responsibility for assessing and defining what are adequate operating reserves and reactive support.

☐ The scope of the SAR should be reduced to eliminate:

Other comments: Load and Generator entities are just as integral as Transmission Owners to the planning of the system. This should incorporate the responsibilities of all entities to provide information necessary for assessment.

SAR Commenter Information			
Name	Ray Morella		
Organization	FirstEnergy Corp		
Telephone	330.336.9831	Fax	330.336.9024
E-mail	morellar@firstenergycorp.com		

Does this set of Proposed Organization Standards cover the scope of performance needed to ensure reliability of the interconnected North American grid?

☒ Yes ☐ No

Is there a reliability-related need for an Organization Standard to be developed on this topic?

☒ Yes ☐ No
☒ Yes ☐ No The scope of the SAR is fine as it is
☐ The scope of the SAR should be expanded to include:
☐ The scope of the SAR should be reduced to eliminate:

Other comments: Standard requirements that establish a consistant and reliable measure to evaluate the transmission system must be developed and maintained to insure that the transmision system can perform safely and reliably. Requirements that address normal, abnormal, and extreme conditions need to be defined. Standard protocol need to be enforced that addresses future operating conditions of the transmission system that will ensure that events such as uncontrolled seperation or cascading does not occure during any single contingency.

SAR Commenter Information			
Name	Scott Helyer		
Organization	Tenaska		
Telephone	817-462-1512	Fax	817-462-1510
E-mail	shelyer@tnsk.com		

Does this set of Proposed Organization Standards cover the scope of performance needed to ensure reliability of the interconnected North American grid?

☒ Yes ☐ No

If you believe there are some performance areas not covered with the proposed set of Organization Standards, tell us what is missing:

If you believe there are some performance areas that are included in the proposed set of Organization Standards but are not needed, tell us what you believe is not needed: On SAR ID# PHYSCAL_CON_REQ_01_01, it appears that specifying requirements for operating limits and AGC go beyond the Physical Connection Requirements. We need to ensure that this Standard would not overlap another reliability standard on operating limits and that we do not create a reliability requirement that AGC is needed for all generators when the market should decide which generators require AGC. Writing a standard that indicates how AGC should be provided if a generator wishes to provide such a service would be acceptable.

Is there a reliability-related need for an Organization Standard to be developed on this topic?

☒ Yes ☐ No

☒ Yes ☐ No The scope of the SAR is fine as it is

SAR Commenter Information			
Name	Kenneth A. Githens		
Organization	Allegheny Energy Supply		
Telephone	412-858-1635	Fax	412-856-2912
E-mail	kgithen@alleghenyenergy.com		

Does this set of Proposed Organization Standards cover the scope of performance needed to ensure reliability of the interconnected North American grid?

☒ Yes ☐ No

If you believe there are some performance areas not covered with the proposed set of Organization Standards, tell us what is missing:

If you believe there are some performance areas that are included in the proposed set of Organization Standards but are not needed, tell us what you believe is not needed: Several of the SAR's contain market related issues. These should be delayed until FERC final ruling on Standardized Transmission Service and Wholesale Electric Market Design

The scope of the SAR should be reduced to eliminate: This SAR proposes "the plan may utililize operating, construction, market solutions or other components to address these conditions." Market solutions requires this standard be developed by a process that take into account market along with reliability interests.

SAR Commenter Information			
Name	Chifong Thomas		
Organization	Pacific Gas and Electric Company		
Telephone	(415) 973-7646	Fax	(415) 973-8804
E-mail	clt7@pge.com		

Does this set of Proposed Organization Standards cover the scope of performance needed to ensure reliability of the interconnected North American grid?

☐ Yes ☒ No

If you believe there are some performance areas not covered with the proposed set of Organization Standards, tell us what is missing: We need to add flexibility to allow for Regional differences in all the SAR's. We also need application criteria to provide guidance on when SPS should be applied as permanent measures and when it should be applied as temporary measures to mitigate potential system problems.

☒ Yes ☐ No

☒ Yes ☐ No The scope of the SAR is fine as it is

SAR Commenter Information			
Name	Vahid Madani		
Organization	WECC Remedial Action Scheme Reliability Task Force		
Telephone	(510) 874-2300	Fax	(510) 874-2442
E-mail	vxm6@pge.com		

Does this set of Proposed Organization Standards cover the scope of performance needed to ensure reliability of the interconnected North American grid?

☐ Yes ☒ No

If you believe there are some performance areas not covered with the proposed set of Organization Standards, tell us what is missing: Application criteria for SPS (or Remedial Action Scchemes) should be included. SPS, thought may be considered as some form of protection and control measure, is applied for many different purposes which may be systems related and not necessary equipment protection related. Clear criteria are needed for consistant application of SPS (RAS) and when SPS (RAS) could be considered as an alternative to mitigate for system deficiencies. Planning criteria need to provide guidance on when SPS should be applied as permanent measures and when it should be applied as temporary measures to mitigate potential system problems. Special Protection Schemes, Protection Schemes and Control Schemes should all be treated separately.

Is there a reliability-related need for an Organization Standard to be developed on this topic?

☒ Yes ☐ No

☐ Yes ☐ No The scope of the SAR is fine as it is

☒ The scope of the SAR should be expanded to include:

1) Planning criteria should be expanded to include maintainability of the system. Simple mitigation measures such as removing equipment out of service during lightly loaded and off-peak hours, to make system adjustments and to allow equipment protection against high voltage conditions may not be considered practical since it may crate N-1 operating conditions. Also, possible overall system deficiencies for interconnected systems may not allow such prudent practices such as removing equipment from service.

2) Establish a separate SAR for implementation of various types of SPS - Identify criteria for application of each type such as:
Overload mitigation, Adaptive overload mitigation schemes, UFLS, UVLS, stability related schemes, etc.

3) Develop a plan to address operating issues for interconnected grids systems where SPS is used systematically to mitigate against many different types of system deficiencies within a Region, operating in a coordinated manner with multiple mitigation measures simultaneously operating in parallel creates increased potential for cascading outages following an un-planned outage.

SAR Commenter Information			
Name	Ed Riley		
Organization	California ISO		
Telephone	(916) 351-4463	Fax	(916) 608-5906
E-mail	eriley@caiso.com		

Does this set of Proposed Organization Standards cover the scope of performance needed to ensure reliability of the interconnected North American grid?

☐ Yes ☒ No

If you believe there are some performance areas not covered with the proposed set of Organization Standards, tell us what is missing: See individual SAR comments.

If you believe there are some performance areas that are included in the proposed set of Organization Standards but are not needed, tell us what you believe is not needed: See individual SAR comments.

Is there a reliability-related need for an Organization Standard to be developed on this topic?

☒ Yes ☐ No

☐ Yes ☒ No The scope of the SAR is fine as it is

☒ The scope of the SAR should be expanded to include: More detail is needed about what is required in order to write this standard.

☒ The scope of the SAR should be reduced to eliminate: Developing plans. The SAR should only address the creation of Planning Standards - Plan Development is a compliance issue.

Other comments: As written, this SAR does not set a standard, but rather seems to try to assign responsibility for setting the standard.

SAR Commenter Information			
Name	Mr Paul Tremblay, Mr. Mike Penstone, and Mr Ajay Garg		
Organization	Hydro One Networks Inc.		
Telephone	416 345-5420	Fax	416 345-5422
E-mail	ajay.garg@HydroOne.com; mike.penstone@HydroOne.com		

Does this set of Proposed Organization Standards cover the scope of performance needed to ensure reliability of the interconnected North American grid?

☐ Yes ☒ No

If you believe there are some performance areas not covered with the proposed set of Organization Standards, tell us what is missing:

The design of Bulk Electric System is complex and its performance depends upon a variety of factors including but not limited to, designs, configurations, designs, technologies, operating practices, etc. The proposed standards should focus upon required performance objectives and methods of measuring success or failure(ie. PERFORMANCE BASED CRITERIA standards) rather than prescribing the means to achieve these objectives.

If you believe there are some performance areas that are included in the proposed set of Organization Standards but are not needed, tell us what you believe is not needed:

As above, standards should not prescribe processes nor means of achieving an outcome. This has been done, effectively, by NPCC for over 25 years.

NERC standards should facilitate in the establishment of Region/RTO/Area specific standards that will meet the NERC performance standard.

Is there a reliability-related need for an Organization Standard to be developed on this topic?

☐ Yes ☒ No

☐ Yes ☐ No The scope of the SAR is fine as it is

☐ The scope of the SAR should be expanded to include:

☒ The scope of the SAR should be reduced to eliminate:

SAR Commenter Information			
Name	Marv Landauer		
Organization BPA			
Telephone	360-619-6602	Fax	360-619-6945
E-mail	mjlandauer@bpa.gov		

Does this set of Proposed Organization Standards cover the scope of performance needed to ensure reliability of the interconnected North American grid?

☒ Yes ☐ No

If you believe there are some performance areas not covered with the proposed set of Organization Standards, tell us what is missing:

If you believe there are some performance areas that are included in the proposed set of Organization Standards but are not needed, tell us what you believe is not needed: I do not think it is appropriate at this point in the process to define the Reliability Functions that are associated with the Standard and cast them in concrete (which Maureen has indicated is the case). As the standards are drafted. issues may come up that need to be includeded that will require coverage by other reliability functions. If they are defined early in the porcess, they should be subject to revision later as necessary.

Is there a reliability-related need for an Organization Standard to be developed on this topic?

☒ Yes ☐ No

☒ Yes ☐ No The scope of the SAR is fine as it is

☐ The scope of the SAR should be expanded to include:

☐ The scope of the SAR should be reduced to eliminate:

Other comments: The description should be modified to only include "performance under a variety of PLAUSIBLE system conditions". Why aren't the load and generator functions involved in this standard? Aren't they the ones the system is built for? As I mentioned above, I believe that making the connection between Reliability Functions and the SAR should be deferred until later in the process.

SAR Commenter Information			
Name	Francis J Halpin		
Organization	Bonneville Power Administration - Power Business Line		
Telephone	503 230 3000	Fax	503 230 5669
E-mail	fjhalpin@BPA		

Does this set of Proposed Organization Standards cover the scope of performance needed to ensure reliability of the interconnected North American grid?

☒ Yes ☐ No

Is there a reliability-related need for an Organization Standard to be developed on this topic?

☒ Yes ☐ No
☒ Yes ☐ No The scope of the SAR is fine as it is
☐ The scope of the SAR should be expanded to include:
☐ The scope of the SAR should be reduced to eliminate:
Other comments: Drafting team should rely heavily upon existing NERC Reliability Criteria in the development of this standard.

Should include Generator and LSE to the list of functional entities to which this standard would apply. Generators and loads are both key factors in the planning process for future transmission needs and should therefore be subject to the requirements of this standard.

SAR Commenter Information		
Name	Edward Stoneburg	
Organization	Illinois Power Company	
Telephone	(217) 362 6363	Fax
E-mail	edward_stoneburg@illinoispower.com	

Does this set of Proposed Organization Standards cover the scope of performance needed to ensure reliability of the interconnected North American grid?

☐ Yes ☒ No

If you believe there are some performance areas not covered with the proposed set of Organization Standards, tell us what is missing: There is inadequate detail provided to allow a determination of whether the proposed set of Organization Standards cover the scope of performance needed to ensure reliability of the interconnected North American Grid. The answer to this question will depend upon the specifics included in each SAR. Detailed SARs must be developed and recirculated before any work begins on development of detailed Organization Standards. These SAR's should be specific about the WHAT of what is the reliability requirement and WHO is obligated to comply (but does not necessarily need detail as to HOW and should not set commercial practices as to HOW to comply) .

Illinois Power suggests the following approach to developing an adequately detailed SAR:

1) For each Function, determine what are the necessary standards to which the provider of that function should be held to in order to ensure reliability. This should not be a wholesale transfer of existing NERC Operating Procedures and Planning Standards into Organization Standards.

2) Consideration should be given to having Standards that apply clearly for each Function rather than multiple Functions being addressed within topical Standards. In that way a Balancing Authority, for example, would only need to be concerned with one Standard, not sorting through multiple standards to figure out what applies to them. Much easier for training their people, keeping track of changes, etc.

3) Each SAR should clearly identify specific and measurable requirements. This aspect is key and should not be left to the later development work, nor should the Standard Writers have authority to expand the specific, measurable reliability requirements without coming through the SAR process.

Should NERC decide to proceed based upon the information submitted for comment, Illinois Power has provided specific comments on each SAR.

If you believe there are some performance areas that are included in the proposed set of Organization Standards but are not needed, tell us what you believe is not needed: See above

Is there a reliability-related need for an Organization Standard to be developed on this topic?

☐ Yes ☐ No **THE INTENT OF THIS STANDARD IS UNCLEAR SUCH THAT WE CANNOT DETERMINE IF THERE IS A NEED**

☐ Yes ☒ No The scope of the SAR is fine as it is

☐ The scope of the SAR should be expanded to include:

☒ The scope of the SAR should be reduced to eliminate: Reliability Authorities: In reviewing a Reliabilty Authorities responsibilities, it does not appear to Illinois Power that the RA has any responsibility to assess FUTURE needs or develop FUTURE plans, and therefore would not be subject to this Standard

Other comments: There is inadequate detail in the SAR to determine if the scope of the SAR is appropriate and adequate. A standard in this area should focus on the minimum frequency of assessment and the definition of normal, abnormal, and extreme conditions that must be studied. The creation of a plan should not be a measurable standard as implied in this SAR. Nor should the Standard require specific operating, construction, or market solutions. It should only define the reliability requirements

SAR Commenter Information			
Name	Saif Mogri		
Organization	WECC Technical Studies Subcommittee		
Telephone	(213)367-0447	Fax	(213)367-0457
E-mail	smogri@email.com		

Does this set of Proposed Organization Standards cover the scope of performance needed to ensure reliability of the interconnected North American grid?

☐ Yes ☒ No

If you believe there are some performance areas not covered with the proposed set of Organization Standards, tell us what is missing: Flexibility allowing for Regional differences in all the SAR's.

If you believe there are some performance areas that are included in the proposed set of Organization Standards but are not needed, tell us what you believe is not needed: Further comments on SAR's will clarify some of our thoughts.

Is there a reliability-related need for an Organization Standard to be developed on this topic?

☒ Yes ☐ No

☒ Yes ☐ No The scope of the SAR is fine as it is

SAR Commenter Information			
Name	Gerald N. Rheault		
Organization	Manitoba Hydro		
Telephone	(204) 487-5423	Fax	(204) 487-5360
E-mail	gnrheault@hydro.mb.ca		

Does this set of Proposed Organization Standards cover the scope of performance needed to ensure reliability of the interconnected North American grid?

☐ Yes ☒ No

If you believe there are some performance areas not covered with the proposed set of Organization Standards, tell us what is missing: A separate Standard should be developed related to operational planning requirements. In your proposed SARs, the operational planning function is included in SAR 1 along with the new facility planning function. Although there are a lot of similar activities requiring similar tools in either function the criteria system consideration and level of detail involved is quite different. Therefore they should be two Separate SARs to address the Standards requirement relative to these activities. Further discussed in SAR1 comments

If you believe there are some performance areas that are included in the proposed set of Organization Standards but are not needed, tell us what you believe is not needed: SAR 7 "Coordinate Interchange" as written seems to reference the function of creating transactions which is a Business Standard. This SAR to reference the reliability requirements of interchange should be related to SCHEDULED Transactions and the data and monitoring requirements associated with this activity. This is further discussed in SAR7.

Is there a reliability-related need for an Organization Standard to be developed on this topic?

☒ Yes ☐ No

☐ Yes ☐ No The scope of the SAR is fine as it is

☐ The scope of the SAR should be expanded to include:

☒ The scope of the SAR should be reduced to eliminate: functionality related to assessing transmission performance and relate only to planning future transmission expansion.

Other comments: This SAR's Purpose/Industry Need should be modified in the following way:

the Purpose statement should have the word "assessing" removed so it addresses a planning function only.

The Industry Need comment should be changed to the following "The transmission system must be planned to ensure the reliable delivery of energy and power to meet the needs of customers. A reliable supply of electricity is essential to ensure the safety and economic viability of modern North American society."

Transmission Service Provider should also be included in the list of complying functions.

SAR Commenter Information			
Name	Donald D. Taylor, PE		
Organization	Westar Energy		
Telephone	785-575-6430	Fax	785-575-1798
E-mail	don_taylor@wr.com		

Does this set of Proposed Organization Standards cover the scope of performance needed to ensure reliability of the interconnected North American grid?

☒ Yes ☐ No

Is there a reliability-related need for an Organization Standard to be developed on this topic?

☒ Yes ☐ No
☒ Yes ☐ No The scope of the SAR is fine as it is
☐ The scope of the SAR should be expanded to include:
☐ The scope of the SAR should be reduced to eliminate:

Other comments: These comments apply to the complete set of Proposed Organization Standards. Among the set of SARs, the references to "Reliability Function(s) That Would Need to Comply With This Standard" is not consistent. Ensure the "Function Definitions" from The NERC Functional Model are used consistently throughout. All of the "Reliability Principle(s)" should be listed first to ensure the reader knows what all of them are. In the SAR form they are referred to as "Reliability and Market Interface Principles". It appears that the term "interconnected bulk electric systems" is not consistently used.

The Brief Description refers to "or other components to address these conditions." The vagueness is problematic as was discovered in the crafting of the original NERC Planning Standards.

SAR Commenter Information			
Name	Frank A. Venhuizen		
Organization NIPS (Northern Indiana Public Service Co.)			
Telephone	(219) 647-5630	Fax	(219) 647-5663
E-mail	favenhuizen@nisource.com		

Does this set of Proposed Organization Standards cover the scope of performance needed to ensure reliability of the interconnected North American grid?

☐ Yes ☒ No

If you believe there are some performance areas not covered with the proposed set of Organization Standards, tell us what is missing: Need to add standards covering Reliability Authority responsibilities and authority; and Telecommunications.

Is there a reliability-related need for an Organization Standard to be developed on this topic?

☒ Yes ☐ No

☐ Yes ☒ No The scope of the SAR is fine as it is

☐ The scope of the SAR should be expanded to include:

☒ The scope of the SAR should be reduced to eliminate: market solutions" in the last sentence of the Brief Description.

Assess Transmission Future Needs and Develop Transmission Plans SAR

Consideration of Industry Comments on SAR Version 1
(SAR Originally Posted for Comment 4/02/02 – 5/03/02)

Background:

Version 1 of the **"Assess Transmission Future Needs and Develop Transmission Plans"** SAR was an abbreviated SAR, which included an "Industry Need" statement and a brief description of the proposed standard, but did not include a detailed description. The purpose of this first posting was to collect feedback from the industry on the following questions:

- Is there a reliability-related need for this SAR?

If there is such a need, how should the scope of the SAR be changed?
- The scope of the SAR is fine as is
- The scope of the SAR should be reduced to eliminate……
- The scope of the SAR should be expanded to include…..

In January 2004, the Standards Authorization Committee (SAC) appointed a Drafting Team (DT) to address industry answers and comments to the questions posed. The DT was also charged with refining the SAR and drafting a detailed description of the proposed standard in preparation for the 2nd posting of the SAR.

This document contains the DT responses to the first set of comments on the original SAR. Because almost 2 years have elapsed since the comments were collected, some have become dated and no longer apply to the present situation. Thus, the DT has not addressed each and every comment, but rather only those that are still timely and represent a general consensus from industry.

Please note that the original comments from industry respondents are shown as underlined text, while the SAR DT responses are shown in yellow highlight.

Question: *"Is there a Reliability-Related Need for this SAR?*

Development of this SAR is not needed or is premature.
Industry comments were overwhelmingly in favor of a standard on transmission assessment and planning, so the SAR DT feels we should proceed with the preparation of a final SAR to be posted for industry comment.

Question: *"Scope of this SAR Should be Reduced to Eliminate ……."*

Standard should not go beyond assessment & planning of the bulk transmission system.
We agree. The DT feels that this SAR as presently written does not go beyond assessment and planning of the bulk transmission system.

Standard should not apply to intrastate systems.
These standards are being drafted to apply to ALL North American bulk electric systems.

Market solutions are outside NERC's scope with respect to development of reliability policies.
Agreed. The present SAR does not require transmission plans to facilitate market operation -- instead, the emphasis is on ensuring reliability.

Definition of "what" core reliability standards are needed is encouraged. However, "how" they are achieved and implemented should not be included at this time, until there is clarity on SMD & RTO formation, and NERC/NAESB interface is defined.
We agree. Industry responses to postings of other SARs and standards indicate that it is widely felt that NERC standards should concentrate on "what" the requirements are, not "how" to achieve them.

SAR should only address creation of Planning Standards. Plan Development is a compliance issue.
The Standard will not tell people "how" to achieve the solutions, but only require that they have a Plan. This is in accordance with the Functional Model, which requires that each Planning Authority have a documented Plan to address inadequacies identified in a transmission needs assessment.

SAR should only define the reliability requirements, not specific solutions.
Agreed.

Eliminate the function relating to "assessing" transmission performance. Only "plan" future transmission expansion.
Assessment of the transmission system is needed to identify anticipated deficiencies that proper planning will correct. Thus, the SAR DT feels that both "assessment" and "planning" are essential components of this SAR.

Standard should only apply to the long-term planning function. Should be a parallel standard for operational planning.
We agree. The standard will only address long term planning, which is defined in the Functional Model as 1 year and beyond.

Standard must not become a mandate for all to use the same load flow model.
Agreed.

Question: *"Scope of this SAR Should be Expanded to Include ……."*

Scope should be expanded to include generation as well.
The SAR DT understands this requirement to "include" generation to mean developing transmission plans that include (as inputs to the transmission adequacy assessment) resources, adequacy plans and load forecasts of LSE's . According to the Functional Model, the Planning Authority must develop an integrated plan from both Transmission Planners and Resource Planners. We agree generation should be included; however, we do not believe that there should be a single standard that integrates resource adequacy planning and transmission adequacy planning. This standard should address only transmission adequacy planning. Separate RA standards may be developed, applicable to different entities; e.g., transmission standards for TOs, resource standards for LSEs .

NERC should guard against establishing a one-dimensional standard that fails to take into account all dimensions that guide the planning process.
Agreed.

SAR should include a requirement to plan the system so that it can be operated within operating limits .
The SAR DT believes that complying with a properly-designed planning standard will result in a system that can be operated within operating limits.

Scope should include planning associated with IPPs
See our response to the comment above that the "scope should be expanded to include generation as well".

NERC should ensure that the standards defined include a definition of how the planning model is created.
The SAR DT has attempted to address this issue in the proposed SAR.

Standard should be specific and measurable and define what "normal", "extreme", and "abnormal" system conditions are.
Agreed. The DT has deleted these terms from the SAR and instead has included a requirement that the standard use the contingency events identified in Table 1 of existing Planning Standard I.A.

Minimum set of criteria for assessing acceptability of plans is needed.
The SAR DT believes the proposed SAR establishes minimum system performance standards, but does not direct how to meet those standards. For a Plan to be acceptable, anticipated system performance under the Plan must meet the minimum criteria established by the standard.

May be a need for multiple expansion plans because of timing of generator projects that are dictated by commercial rather than system adequacy considerations.
The SAR DT does not envision that the standard will address commercial or market issues. However, the standard will require documentation and disclosure of generation assumptions used to develop the Transmission Plan.

Must define what minimum need is. Some regulatory backstop is needed if expansion plans are deemed insufficient to meet needs.
The DT feels that the SAR as written will result in a standard that defines the minimum need.

SAR should identify who has obligation to implement transmission plans.
The Functional Model identifies which functions have the responsibility to implement transmission plans. The SAR DT (in the Comment Form posted with Version 2 of the SAR) has asked for industry guidance on the monitoring of implementation plans.

Must use a reasonable planning horizon (less than or equal to 5 years).
The DT believes that the SAR as written will result in a standard that requires the use of a reasonable planning horizon.

Provision for interim use of Remedial Action Plans (RAP) & Special Protection Schemes (SPS) is needed.
The SAR DT feels that the standard will neither require nor preclude the use of RAP or SPS for either interim or permanent use to meet the reliability criteria contained in the standard.

Regional differences should be recognized.
Agreed. The SAR DT has asked for industry input to identify such differences. See the Comment Form posted with the SAR – V2.

Requirement to provide assessment at all demand levels should be added.
The SAR DT has developed language to consider the variability of load in the development of the standard.

Responsibility for assessing and defining adequate operating reserves and reactive support should be added.
The SAR DT believes operating reserves is an operational issue that should be addressed by operating standards. However, voltage support and reactive power will be addressed in this standard.

Planning criteria should be expanded to include maintainability of system.
The SAR DT has asked for industry input on this issue. Refer to the Comment Form posted with the SAR – V2.

When studies indicate that the system may not meet performance requirements, plans should be developed to address the situation and studies should demonstrate that implemented plans meet requirements.
We agree.

Core standard for reliability should be specific & measurable.
Agreed.

"Miscellaneous Comments"

Technical specifications should ensure that they do not prohibit worthwhile commercial negotiations or commercial activity.
Agreed.

Must have coordination with operating procedures and protocols of RTOs.
The standard will be applicable to all functional responsibilities included in the Functional Model.

Must be close coordination with NAESB and RTOs to meet both reliability objectives and commercial needs.
The standard will define reliability criteria without precluding or dictating viable commercial solutions.

Measuring for compliance is extremely difficult. It is also difficult to determine if events will result in "cascading outages".
We believe the standard will clarify and explicitly state the requirements for compliance. Agreed that a clearer definition of "cascading outages" is needed, and the definition is being developed.

SAR will not accomplish its intent without credible models from which to do analysis.
Agreed.

SAR seems large – divide it up?
The SAR does cover a large scope, but the DT feels that dividing the SAR and standard is premature at this point.

Scope of SAR is poorly written. It does not convey transmission planning responsibilities.
Scope is being revised to add more details and become clearer.

Separate SAR should be established for implementation of SPS. Develop plans to address operational issues for interconnected grids where SPS is needed to mitigate against system deficiencies.
There is a separate SAR that addresses Protection Systems. To the extent that SPS affects transmission assessment and planning, some aspects of SPS may be addressed in this SAR.

SAR does not set standard, but tries to assign responsibility for setting standard.
As envisioned, this SAR will address BOTH the standard and the responsibility.

END OF INDUSTRY COMMENTS/DT RESPONSES FOR SAR – V1

When completed, email to: gerry.cauley@nerc.net

Standard Authorization Request Form

Title of Proposed Standard	Assess Transmission Future Needs and Develop Transmission Plans
Request Date	May 01, 2004

SAR Requestor Information		**SAR Type** (Put an 'x' in front of one of these selections)	
Name	Paul Rocha	☒	New Standard
Primary Contact	Paul Rocha	☐	Revision to existing Standard
Telephone Fax	(713) 207-2768	☐	Withdrawal of existing Standard
E-mail	paul.rocha@centerpointenergy.com	☐	Urgent Action

Purpose/Industry Need (Provide one or two sentences)

To establish a standard for assessing and planning the transmission systems in North America. The transmission system must be assessed and planned to ensure that it performs its intended functions in providing reliable delivery of power for the future needs of customers.

Reliability Functions

The Standard will Apply to the Following Functions *(Check box for each one that applies by double clicking the grey boxes.)*		
☒	Reliability Authority	Ensures the reliability of the bulk transmission system within its Reliability Authority area. This is the highest reliability authority.
☐	Balancing Authority	Integrates resource plans ahead of time, and maintains load-interchange-resource balance within its metered boundary and supports system frequency in real time
☐	Interchange Authority	Authorizes valid and balanced Interchange Schedules
☒	Planning Authority	Plans the bulk electric system
☐	Resource Planner	Develops a long-term (>1year) plan for the resource adequacy of specific loads within a Planning Authority area.
☒	Transmission Planner	Develops a long-term (>1 year) plan for the reliability of transmission systems within its portion of the Planning Authority area.
☐	Transmission Service Provider	Provides transmission services to qualified market participants under applicable transmission service agreements
☒	Transmission Owner	Owns transmission facilities
☐	Transmission Operator	Operates and maintains the transmission facilities, and executes switching orders
☐	Distribution Provider	Provides and operates the “wires” between the transmission system and the customer
☐	Generator Owner	Owns and maintains generation unit(s)
☐	Generator Operator	Operates generation unit(s) and performs the functions of supplying energy and Interconnected Operations Services
☐	Purchasing-Selling Entity	The function of purchasing or selling energy, capacity and all necessary Interconnected Operations Services as required
☐	Market Operator	Integrates energy, capacity, balancing, and transmission resources to achieve an economic, reliability-constrained dispatch.
☐	Load-Serving Entity	Secures energy and transmission (and related generation services) to serve the end user

Reliability and Market Interface Principles

Applicable Reliability Principles *(Check boxes for all that apply by double clicking the grey boxes.)*	
☒	1. Interconnected bulk electric systems shall be planned and operated in a coordinated manner to perform reliably under normal and abnormal conditions as defined in the NERC Standards.
☐	2. The frequency and voltage of interconnected bulk electric systems shall be controlled within defined limits through the balancing of real and reactive power supply and demand.
☒	3. Information necessary for the planning and operation of interconnected bulk electric systems shall be made available to those entities responsible for planning and operating the systems reliably.
☐	4. Plans for emergency operation and system restoration of interconnected bulk electric systems shall be developed, coordinated, maintained and implemented.
☐	5. Facilities for communication, monitoring and control shall be provided, used and maintained for the reliability of interconnected bulk electric systems.
☐	6. Personnel responsible for planning and operating interconnected bulk electric systems shall be trained, qualified and have the responsibility and authority to implement actions.
☐	7. The security of the interconnected bulk electric systems shall be assessed, monitored and maintained on a wide area basis.

Does the proposed Standard comply with all of the following Market Interface Principles? *(Select 'yes' or 'no' from the drop-down box by double clicking the grey area.)*
1. The planning and operation of bulk electric systems shall recognize that reliability is an essential requirement of a robust North American economy. Yes
2. An Organization Standard shall not give any market participant an unfair competitive advantage.Yes
3. An Organization Standard shall neither mandate nor prohibit any specific market structure. Yes
4. An Organization Standard shall not preclude market solutions to achieving compliance with that Standard. Yes
5. An Organization Standard shall not require the public disclosure of commercially sensitive information. All market participants shall have equal opportunity to access commercially non-sensitive information that is required for compliance with reliability standards. Yes

Detailed Description (Provide enough detail so that an independent entity familiar with the industry could draft, modify, or withdraw a Standard based on this description.)

The Standard shall establish requirements for assessing the performance of planned bulk electric transmission systems and the requirements for documenting a plan to remedy any inadequacies identified in the process of conducting such assessments.

The scope of such assessments and plans is for a planning horizon of one year or more. The scope *does not* include the operating horizon less than one year. While the planning horizon is intended to provide for facility additions, there is no intent to exclude appropriate operating procedures from the transmission plan.

The planning horizon must be long enough to permit timely implementation of viable solutions to remedy the potential inadequacies found. Assessments should cover a planning horizon of at least 5 years. The horizon may be longer than 5 years, based on regulatory or legislative requirements, or on the judgment of the Transmission Planner or Planning Authority.

The Standard shall identify reliability requirements, but shall not specify *how* to achieve such requirements. These requirements shall apply to Transmission Planners and to Planning Authorities.

The applicable portions of the following existing NERC Planning Standards will be used as the starting point in drafting these requirements:

- I.A Transmission Systems
- I.B Reliability Assessment
- I.D Voltage Support & Reactive Power
- II.A System Data
- II.D Actual and Forecast Demands

The Standard shall require that system models be developed, maintained and shared in a manner consistent with the Functional Model. Included will be requirements that each Planning Authority and Transmission Planner document and disclose the methodology used for incorporating planned generation assets in the model, as well as how such generation is dispatched. While methodologies and assumptions must be documented, the Standard will *not* prescribe specific tools to be used in the performance assessment of the planned systems.

The Standard will identify the various planning functions that are responsible for compliance with the standard criteria. The assignment of compliance responsibility will be consistent with the Functional Model.

This Standard will *not* include requirements for:

- Resource Planning (i.e., assessing or ensuring the availability of adequate generation resources to serve load).
- Planning generation additions to remedy any generation resource inadequacies.
- Mitigation plans to relieve congestion due to economy transfers of generation resources.

However, the Standard should neither preclude nor require the consideration of generation or load (demand side management) or operating procedures as alternatives to transmission reinforcement/reconfiguration when developing solutions to potential transmission inadequacies.

While the Standard should start from and closely align with the existing Planning Standards I.A, .B, .D, II.A,.D, the system conditions to be studied or assessed may need to be better defined or clarified. For example, the Standard should clarify that the requirement to assess the performance at ***all*** demand levels does not mean that a multitude of transmission models need to be created for every possible demand level, only that a representative sample covering critical operating conditions needs to be modeled in accordance with regionally-defined criteria.

Other examples of areas that should be considered for clarification in the Standard include:

- The Standard should provide a clearer definition of "cascading outages".*

  *Existing Planning Standard I.A definition: "Cascading is the uncontrolled successive loss of system elements triggered by an incident at any location. Cascading results in widespread service interruption which cannot be restrained from sequentially spreading beyond an area predetermined by appropriate studies"

- The Standard should take into account the variability of load due to factors such as weather and time of day.

- The Standard should allow for the development and use of probabilistic planning methods. The minimum requirements of probabilistic methods are the contingencies as described in Table 1 of existing Planning Standard I.A.. There should be NERC approval of acceptable levels of risk.

- Existing Planning Standard S1, S2, S3, S4 and Table I.A Category A, B, C, D should be clarified on the issue of how a planned outage should be used in an assessment.

- Performance requirements for Category C events shall be re-evaluated. For example, for certain Category C events, such as #2, #3 and #9 events, consider removing references to "Applicable Ratings" to clarify that the performance requirement is "No Cascading Outages are Allowed".

- The Standard should include requirements to ensure that the maximum available short circuit current is within the ratings of transmission facilities.

Related Standards

Standard No.	Explanation

Related SARs

SAR ID	Explanation
FACILITY_RATINGS_01_01	*"Determine Facility Ratings, Operating Limits and Transfer Capabilities".* The Planning Standard will use some data collected within the "Facility Ratings" SAR. The Draft "Facility Ratings" Standard, Section 603, establishes some guidelines for the planning function to set operating limits based on Table 1 of the existing Planning Standard I.A.
OPER_WITHN_LMTS_01_01	*"Operate Within Interconnection Reliability Operating Limits".* This Planning Standard needs to establish future planning criteria such that the bulk electric power system can be operated within operating limits.

Regional Differences

Region	Explanation
ECAR	
ERCOT	
FRCC	
MAAC	
MAIN	
MAPP	
NPCC	
SERC	
SPP	
WECC	

Related NERC Operating Policies or Planning Standards

ID	Explanation
Planning Std. I.A	Transmission Systems: Plan within ratings, avoid cascading outages, uncontrolled system separation, and voltage and transient instability.
Planning Std. I.B	Reliability Assessment
Planning Std. I.D	Voltage Support & Reactive Power
Planning Std. II.A	System Data
Planning Std. II.D	Actual & Forecast Demands

Note – This form is to comment on **Version 2** of the **"Assess Transmission Future Needs and Develop Transmission Plans"** SAR.

The latest version of this SAR **(**TRNS_NDS_&_PLNS_01_02**)** is posted on the Standards web site at: http://www.nerc.com/~filez/standards/Assess-Transmission-Future-Needs.html

E-mail this form between May 5 and June 5, 2004 to: sarcomm@nerc.com with "Comments" in the subject line.

If you have any questions about this Standards Draft Comment Form, please contact the Director of Standards – Gerry Cauley at 609-452-8060.

Background:

Version 1 of the **"Assess Transmission Future Needs and Develop Transmission Plans"** SAR was posted for a 30-day public comment period between April 2 and May 3, 2002. This first version was an abbreviated SAR, which included an "Industry Need" statement and a brief description of the proposed standard, but did not include a detailed description. The purpose of this first posting was to collect feedback from the industry on the following questions:

- Is there a reliability-related need for an Organization Standard to be developed on this topic?

If there is such a need, how should the scope of the SAR be changed?

- The scope of the SAR is fine as is
- The scope of the SAR should be expanded to include…..
- The scope of the SAR should be reduced to eliminate……

In January 2004, the Standards Authorization Committee (SAC) appointed a Drafting Team (DT) to address industry answers and comments to the questions posed. The DT was also charged with refining the SAR and drafting a detailed description of the proposed standard in preparation for the 2nd posting of the SAR.

Most of the industry respondents indicated that there is indeed a reliability-related need to develop a standard to address transmission assessment and planning issues. Comments were received from many different sources, including individuals, small and large utilities, groups of utilities, and Regional Councils. The SAR DT considered the comments submitted by each industry participant, and revised the SAR to conform to the changes that were technically sound and appeared to represent a consensus of participants.

The revised SAR (Version 2) is posted on the NERC web site given in the blue box at the top of this form. Also posted is a Consideration of Comments document, in which the DT has responded to the original industry comments from 2002. You can find Version 1 of the SAR and industry comments on this version at the same web location.

Please review Version 2 of the SAR and complete this Comment Form to let the SAR DT know if you agree or disagree with the SAR DT's assessment that this SAR is ready to be developed into a Standard.

Commenter Information (For Individual Commenters)
Name: Karl Kohlrus Organization: City Water, Light & Power Industry Segment #: 5 Telephone: (217)-321-1391 E-mail: kkohlrus@cwlp.com

Key to Industry Segment #'s:

1 – Trans. Owners
2 – RTO's, ISO's, RRC's
3 – LSE's
4 – TDU's
5 - Generators
6 - Brokers, Aggregators, and Marketers
7 - Large Electricity End Users
8 - Small Electricity Users
9 - Federal, State, and Provincial Regulatory or other Govt. Entities

STD Commenter Information (For Groups Submitting Group Comments)	
Name of Group:	**Group Chair:** **Chair Phone:** **Chair Email:**

List of Group Participants that Support These Comments:

Name	**Company**	**Industry Segment #**

Please Review Version 2 of the SAR and Answer the Following Questions

Insert a "check' mark in the appropriate boxes by double-clicking the gray areas.

1. Some members of the SAR drafting team believe that certain Category C events, as defined in Table 1 of existing Planning Standard I.A, are much less likely to occur than other events in Category C. It is felt that certain specific Cat. C events could be re-classified as Cat. D upon showing a low probability of occurrence (and low consequence) of these events.

   (a). Do you believe that the events in Categories B, C & D are classified correctly?

   ☒ Yes

   ☐ No

   ☐ Comments:

   (b). If your answer to (a) is No, how would you re-classify the events? If you have data to support your answer, please provide contact information for the individual responsible for the data.

   (c) Which of the following approaches do you favor regarding Table 1 of existing Planning Standard I.A?:

   ☒ Keep the same categories as now exist and re-classify the low probability (and low consequence) events as Category D events.

   Please explain your choice:

   ☒ Create a new category between C and D with performance characteristics between that of the present Categories C and D.

   Please explain your choice

   Multiple contingencies have lower and varying probabilities of occurrence.

   ☐ Keep the same categories as now exist, but allow for "good cause exceptions" upon a showing of low probability of occurrence (and low consequence) of specific Category C events.

   Please explain your choice:

   ☐ Comments:

2. Do you believe the standard should include requirements for reporting on the progress or status of *implementing* the plans developed in accordance with this standard?

   ☐ Yes

   ☒ No

   ☐ Comments:

3. If your answer to question 2 is Yes, given that transmission plans change over time as modeling assumptions, systems and plans change, how would you propose accounting for changes in a Transmission Plan?

4. Existing Planning Standard I.A requires: *"The systems must be capable of meeting Category C requirements while accommodating the planned (including maintenance) outage of any bulk electric equipment (including protection systems or their components) at those demand levels for which planned (including maintenance) outages are performed".*

   The SAR drafting team believes that it is impractical to exhaustively test for every contingency described in each category plus every conceivable planned outage. Should the requirement to consider planned outages in addition to each Category A through D contingency remain part of this planning standard?

   ☐ Yes (consider planned outages in all Categories A through D).

   ☒ Yes (consider planned outages in some Categories only).

   Please specify which Categories: B and some C.

   ☐ No

   ☐ Comments:

5. Are you aware of any Regional or Interconnection differences in the requirements for assessing and planning transmission systems in North America? If so, please list and explain.

   ☒ Comments:

   WECC has asked the NERC PC for waivers for some of the Category C requirements.

6. Do you have any other comments on the SAR?

   ☐ Comments:

Note – This form is to comment on **Version 2** of the **"Assess Transmission Future Needs and Develop Transmission Plans"** SAR.

The latest version of this SAR **(**TRNS_NDS_&_PLNS_01_02**)** is posted on the Standards web site at: http://www.nerc.com/~filez/standards/Assess-Transmission-Future-Needs.html

E-mail this form between May 5 and June 5, 2004 to: sarcomm@nerc.com with "Comments" in the subject line.

If you have any questions about this Standards Draft Comment Form, please contact the Director of Standards – Gerry Cauley at 609-452-8060.

Background:

Version 1 of the **"Assess Transmission Future Needs and Develop Transmission Plans"** SAR was posted for a 30-day public comment period between April 2 and May 3, 2002. This first version was an abbreviated SAR, which included an "Industry Need" statement and a brief description of the proposed standard, but did not include a detailed description. The purpose of this first posting was to collect feedback from the industry on the following questions:

- Is there a reliability-related need for an Organization Standard to be developed on this topic?

If there is such a need, how should the scope of the SAR be changed?

- The scope of the SAR is fine as is
- The scope of the SAR should be expanded to include…..
- The scope of the SAR should be reduced to eliminate……

In January 2004, the Standards Authorization Committee (SAC) appointed a Drafting Team (DT) to address industry answers and comments to the questions posed. The DT was also charged with refining the SAR and drafting a detailed description of the proposed standard in preparation for the 2nd posting of the SAR.

Most of the industry respondents indicated that there is indeed a reliability-related need to develop a standard to address transmission assessment and planning issues. Comments were received from many different sources, including individuals, small and large utilities, groups of utilities, and Regional Councils. The SAR DT considered the comments submitted by each industry participant, and revised the SAR to conform to the changes that were technically sound and appeared to represent a consensus of participants.

The revised SAR (Version 2) is posted on the NERC web site given in the blue box at the top of this form. Also posted is a Consideration of Comments document, in which the DT has responded to the original industry comments from 2002. You can find Version 1 of the SAR and industry comments on this version at the same web location.

Please review Version 2 of the SAR and complete this Comment Form to let the SAR DT know if you agree or disagree with the SAR DT's assessment that this SAR is ready to be developed into a Standard.

Commenter Information (For Individual Commenters)
Name: William J. Smith Organization: Allegheny Power Industry Segment #: 1 Telephone: (724) 838-6552 E-mail: wsmith1@alleghenypower.com

Key to Industry Segment #'s:

- **1 – Trans. Owners**
- **2 – RTO's, ISO's, RRC's**
- **3 – LSE's**
- **4 – TDU's**
- **5 - Generators**
- 6 - Brokers, Aggregators, and Marketers
- **7 - Large Electricity End Users**
- **8 - Small Electricity Users**
- 9 - Federal, State, and Provincial Regulatory or other Govt. Entities

STD Commenter Information (For Groups Submitting Group Comments)	
Name of Group:	**Group Chair:** **Chair Phone:** **Chair Email:**

List of Group Participants that Support These Comments:

Name	Company	Industry Segment #

Please Review Version 2 of the SAR and Answer the Following Questions

Insert a "check' mark in the appropriate boxes by double-clicking the gray areas.

1. Some members of the SAR drafting team believe that certain Category C events, as defined in Table 1 of existing Planning Standard I.A, are much less likely to occur than other events in Category C. It is felt that certain specific Cat. C events could be re-classified as Cat. D upon showing a low probability of occurrence (and low consequence) of these events.

   (a). Do you believe that the events in Categories B, C & D are classified correctly?

   ☒ Yes

   ☐ No

   ☐ Comments:

   (b). If your answer to (a) is No, how would you re-classify the events? If you have data to support your answer, please provide contact information for the individual responsible for the data.

   (c) Which of the following approaches do you favor regarding Table 1 of existing Planning Standard I.A?:

   ☐ Keep the same categories as now exist and re-classify the low probability (and low consequence) events as Category D events.

   Please explain your choice:

   ☐ Create a new category between C and D with performance characteristics between that of the present Categories C and D.

   Please explain your choice

   ☐ Keep the same categories as now exist, but allow for "good cause exceptions" upon a showing of low probability of occurrence (and low consequence) of specific Category C events.

   Please explain your choice:

   ☐ Comments:

2. Do you believe the standard should include requirements for reporting on the progress or status of *implementing* the plans developed in accordance with this standard?

   ☐ Yes

   ☒ No

   ☐ Comments:

3. If your answer to question 2 is Yes, given that transmission plans change over time as modeling assumptions, systems and plans change, how would you propose accounting for changes in a Transmission Plan?

4. Existing Planning Standard I.A requires: *"The systems must be capable of meeting Category C requirements while accommodating the planned (including maintenance) outage of any bulk electric equipment (including protection systems or their components) at those demand levels for which planned (including maintenance) outages are performed".*

   The SAR drafting team believes that it is impractical to exhaustively test for every contingency described in each category plus every conceivable planned outage. Should the requirement to consider planned outages in addition to each Category A through D contingency remain part of this planning standard?

   ☐ Yes (consider planned outages in all Categories A through D).

   ☒ Yes (consider planned outages in some Categories only).

   Please specify which Categories:

   ☐ No

   ☒ Comments: Allegheny Power feels that it is practical to consider planned outages in categories A and B.

5. Are you aware of any Regional or Interconnection differences in the requirements for assessing and planning transmission systems in North America? If so, please list and explain.

   ☐ Comments:

6. Do you have any other comments on the SAR?

   ☒ Comments: Under "Detailed Description" the second and third paragraphs are unclear and appear to be conflicting. The first of those paragraphs specifies that the "scope of such assessments and plans is for a planning horizon of one year or more". The second of those paragraphs specifies, "Assessments should cover a planning horizon of at least 5 years". This appears to be a conflict. It may be that the term "planning horizon" is being used differently in these two paragraphs. It is unclear to us what is the intention of the first of those two paragraphs is.

   Also under "Detailed Description on page SAR-5, the paragraph starting "While the Standard should start from…" has a problem with it's second sentence. The sentence "For example…" does really apply to the first sentence. We recommend that this paragraph be changed as follows:

   > While the Standard should start from and closely align with the existing Planning Standards I.A, .B, .D, II.A,.D, the system conditions to be studied or assessed may need to be better defined or clarified.
   >
   > Examples of areas that should be considered for clarification in the Standard include:

- The Standard should clarify that the requirement to assess the performance at all demand levels does not mean that a multitude of transmission models need to be created for every possible demand level, only that a representative sample covering critical operating conditions needs to be modeled in accordance with regionally-defined criteria.
- The Standard should provide a clearer definition of "cascading outages".*

And so on.

Also in that bulleted list, the existing 5th bullet item, "Performance requirements for Category C events shall be re-evaluated. For example, for certain Category C events , such as #2, #3 and #9 events, consider removing references to "Applicable Ratings" to clarify that the performance requirement is "no Cascading Outages are Allowed" doesn't appear necessary. "No Cascading Outages" is already part of Table I for these events. Removing "Applicable Ratings" would not add to the clarity.

Note – This form is to comment on **Version 2** of the **"Assess Transmission Future Needs and Develop Transmission Plans"** SAR.

The latest version of this SAR **(**TRNS_NDS_&_PLNS_01_02**)** is posted on the Standards web site at: http://www.nerc.com/~filez/standards/Assess-Transmission-Future-Needs.html

E-mail this form between May 1 and May 31, 2004 to: sarcomm@nerc.com with "Comments" in the subject line.

If you have any questions about this Standards Draft Comment Form, please contact the Director of Standards – Gerry Cauley at 609-452-8060.

Background:

Version 1 of the **"Assess Transmission Future Needs and Develop Transmission Plans"** SAR was posted for a 30-day public comment period between April 2 and May 3, 2002. This first version was an abbreviated SAR, which included an "Industry Need" statement and a brief description of the proposed standard, but did not include a detailed description. The purpose of this first posting was to collect feedback from the industry on the following questions:

- Is there a reliability-related need for an Organization Standard to be developed on this topic?

If there is such a need, how should the scope of the SAR be changed?

- The scope of the SAR is fine as is
- The scope of the SAR should be expanded to include…..
- The scope of the SAR should be reduced to eliminate……

In January 2004, the Standards Authorization Committee (SAC) appointed a Drafting Team (DT) to address industry answers and comments to the questions posed. The DT was also charged with refining the SAR and drafting a detailed description of the proposed standard in preparation for the 2nd posting of the SAR.

Most of the industry respondents indicated that there is indeed a reliability-related need to develop a standard to address transmission assessment and planning issues. Comments were received from many different sources, including individuals, small and large utilities, groups of utilities, and Regional Councils. The SAR DT considered the comments submitted by each industry participant, and revised the SAR to conform to the changes that were technically sound and appeared to represent a consensus of participants.

The revised SAR (Version 2) is posted on the NERC web site given in the blue box at the top of this form. Also posted is a Consideration of Comments document, in which the DT has responded to the original industry comments from 2002. You can find Version 1 of the SAR and industry comments on this version at the same web location.

Please review Version 2 of the SAR and complete this Comment Form to let the SAR DT know if you agree or disagree with the SAR DT's assessment that this SAR is ready to be developed into a Standard.

Commenter Information (For Individual Commenters)
Name: Tom Mielnik Organization: MidAmerican Energy Company Industry Segment #:3 Telephone: 563-333-8129 E-mail: tcmielnik@midamerican.com

Key to Industry Segment #'s:

- **1 – Trans. Owners**
- **2 – RTO's, ISO's, RRC's**
- **3 – LSE's**
- **4 – TDU's**
- **5 - Generators**
- 6 - Brokers, Aggregators, and Marketers
- **7 - Large Electricity End Users**
- **8 - Small Electricity Users**
- 9 - Federal, State, and Provincial Regulatory or other Govt. Entities

STD Commenter Information (For Groups Submitting Group Comments)	
Name of Group:	**Group Chair:** **Chair Phone:** **Chair Email:**

List of Group Participants that Support These Comments:

Name	**Company**	**Industry Segment #**

Please Review Version 2 of the SAR and Answer the Following Questions

Insert a "check' mark in the appropriate boxes by double-clicking the gray areas.

1. Some members of the SAR drafting team believe that certain Category C events, as defined in Table 1 of existing Planning Standard I.A, are much less likely to occur than other events in Category C. It is felt that certain specific Cat. C events could be re-classified as Cat. D upon showing a low probability of occurrence (and low consequence) of these events.

   (a). Do you believe that the events in Categories B, C & D are classified correctly?

   ☐ Yes

   ☒ No

   ☐ Comments:

   (b). If your answer to (a) is No, how would you re-classify the events? If you have data to support your answer, please provide contact information for the individual responsible for the data.

   MidAmerican Energy believes the interconnected transmission system should be planned, designed, and constructed to withstand high probability events and to withstand low probability events with significant negative consequences. MidAmerican believes it is a waste of the ratepayers' money to plan, design, and construct the interconnected transmission system for low probability events without significant negative consequences.

   MidAmerican Energy would reclassify certain low probability events such as Category C1 events, C2 events, certain Category C3 events (two transformers, transmission circuit plus a transformer, two transmission circuits, DC line plus a transformer, DC line plus a transmission circuit, and two DC lines), C6 events, C7 events, C8 events, and C9 events to a new category between C and D with performance characteristics between that of the present Categories C and D. MidAmerican Energy would require that the interconnected transmission system be planned, designed, and constructed to protect for instability, cascading, and uncontrolled separation for the low probability events in the new sub-category.

   MidAmerican Energy believes the following information supports this new reclassification by demonstrating that the events that MidAmerican recommends for reclassification are the low probability Category C events. MidAmerican recognizes that published outage data are subject to interpretation, potential inaccuracy, and change through time; however, MidAmerican believes that MidAmerican operating experience with transmission element outages supports the statistical summary provided in the following table.

345 kV Outage Data				
Contingency	Outage Rate, occ./year	Duration, hours	Probability	Relative Likelihood
Generator B1	9	81	0.08321918	1
Two generators C3	1.5	40.5	0.00693493	12
Bipolar DC line * (Similar to B4)	1.41	21	0.00338014	24
Line * B2	0.8065	18	0.00165719	50
Transformer B3	0.0642	157	0.00115062	72
Bipolar DC Line * + Generator (Sim. to 1 Pole DC line + gen. C3)	0.1478	16.68	0.00028143	296
Line * + Generator C3	0.0820	14.7	0.00013760	605
Generator + Transformer C3	0.0157	53.4	0.00009571	870
Common tower * C5	0.007	113	0.00009030	922
Breaker Failure- Insulation Breakdown C2 RECLASSIFY THIS EVENT	0.001423	163	0.00002647	3,144
Bipolar DC line *+Bipolar DC line * (Sim. to Two 1 Pole DC lines - C3) RECLASSIFY THIS EVENT	0.009532	10.5	0.00001143	7,281
Stuck breaker C6-C9 RECLASSIFY THIS EVENT	0.00635	4	0.00000290	28,696
Line * + Line * (independent) C3 RECLASSIFY THIS EVENT	0.00267	9	0.00000275	30,262
Line * + Transformer C3 RECLASSIFY THIS EVENT	0.0010	16.1	0.00000184	45,228
Two transformers C3 RECLASSIFY THIS EVENT	0.00014774	78.5	0.00000132	63,045
Bus Section** RECLASSIFY THIS EVENT	0.0023	4.7	0.00000123	67,438

* Per 100 mile-year.

** Based upon 230 kV data.

References

1. MAPP-CSRWG, "MAPP Bulk transmission system outage report", June 2001.
2. C. R. Heising, et al, "Final report on high voltage circuit breaker reliability data for use in substation and system studies – report on behalf of WG 13.06, in Proceedings of CIGRE Conference, Paris, 1994.
3. R. Billinton, A. A. Chowdhury, "Generating unit models using the Canadian Electricity database", CEA Transactions, Volume 23, 1984.
4. R. N. Allan, "Concepts of data for assessing the reliability of composite systems", IEEE Tutorial Course on Reliability Assessment of Composite Generation and Transmission Systems, Course Text 90EH0311-1-PWR.

Contact info:

Tom Mielnik, Manager
Electric System Planning
MidAmerican Energy Company
106 East Second Street
Davenport, Iowa 52801
(563)333-8129
tcmielnik@midamerican.com

(c) Which of the following approaches do you favor regarding Table 1 of existing Planning Standard I.A?:

☐ Keep the same categories as now exist and re-classify the low probability (and low consequence) events as Category D events.

Please explain your choice:

☒ Create a new category between C and D with performance characteristics between that of the present Categories C and D.

Please explain your choice

The approach that results in the most appropriate transmission system design is the one recommended by MidAmerican Energy. Improvements should be planned for those Category C events that are high probability events regardless of the consequences. Planners should also review all Category C events for instability, cascading, and uncontrolled separation. Improvements should be planned for those Category C events (both high probability and low probability events) which have significant consequences, that is, that result in instability, cascading, and uncontrolled separation. It is MidAmerican's belief that the intent of the drafting team that originally developed the existing NERC Planning Standards was to require the NERC member to plan to protect for instability, cascading, and uncontrolled separation for Category C events.

MidAmerican believes reclassifying less likely Category C events as Category D events will result in planners ignoring low-probability contingencies that result in significant consequences: cascading, uncontrolled separation, and instability.

MidAmerican believes that allowing for "good cause exceptions" is also not the preferable approach. MidAmerican believes that the events listed by MidAmerican for reclassification are much less likely than the other Category C events generally throughout NERC. This means that these events should be reclassified in general throughout NERC and not just in certain "good cause exceptions". (Although, it should be noted that MidAmerican does support regional differences where appropriate.) Besides, there are issues associated with the development and utilization of a process for approving "good cause exceptions".

☐ Keep the same categories as now exist, but allow for "good cause exceptions" upon a showing of low probability of occurrence (and low consequence) of specific Category C events.

Please explain your choice:

☐ Comments:

2. Do you believe the standard should include requirements for reporting on the progress or status of *implementing* the plans developed in accordance with this standard?

   ☐ Yes

   ☒ No

   ☒ Comments: MidAmerican Energy believes that this standard should not include requirements for reporting on the progress or status of implementing the plans developed in accordance with this standard. There are too many conditions beyond the control of the NERC member for this to be a part of a standard requiring compliance review. Complex environmental, regulatory, and political issues prevent many transmission facilities from being constructed or being constructed in a scheduled manner. The Not-In-My-Back-Yard philosophy has hit even the rural areas so that there is no part of the NERC area where a NERC member can confidently predict completion of transmission system improvements in plans. Further, conditions can change even during a year to such an extent that compliance review for implementation from one year to the next is problematic. Further, regulatory oversight provides for appropriate review of plan implementation anyway. MidAmerican urges that the SAR drafting team not pursue this well-meaning but problematic approach.

3. If your answer to question 2 is Yes, given that transmission plans change over time as modeling assumptions, systems and plans change, how would you propose accounting for changes in a Transmission Plan?

4. Existing Planning Standard I.A requires: *"The systems must be capable of meeting Category C requirements while accommodating the planned (including maintenance) outage of any bulk electric equipment (including protection systems or their components) at those demand levels for which planned (including maintenance) outages are performed".*

   The SAR drafting team believes that it is impractical to exhaustively test for every contingency described in each category plus every conceivable planned outage. Should the requirement to consider planned outages in addition to each Category A through D contingency remain part of this planning standard?

   ☐ Yes (consider planned outages in all Categories A through D).

   ☐ Yes (consider planned outages in some Categories only).

   Please specify which Categories:

   ☒ No

   ☒ Comments:

   Planned Outages can be scheduled and analyzed in advance in the operating horizon (less than one year). Therefore, it should not be necessary to require that "systems must be capable of meeting Category C requirements while accommodating the planned outage of any bulk electric equipment..." Planned outages should be studied in advance by the requesting control area and be reviewed by the governing Reliability Coordinator to determine if overloads could occur. If studies show that overloads could occur, the planned outage should be deferred or operating guides prepared which would be used in the event a contingency does occur.

There is no need to plan or build facilities to meet Planning Standard 1.A when Planned Outages can be accommodated within the frame work of existing guidelines and procedures. Studies conducted for the operating horizon are not the subject of this standard.

5. Are you aware of any Regional or Interconnection differences in the requirements for assessing and planning transmission systems in North America? If so, please list and explain.

   ☐ Comments:

6. Do you have any other comments on the SAR?

   ☒ Comments:

   a. MidAmerican Energy urges the SAR drafting team to add Category C#1, #6, #7 and #8 events to the second from last paragraph in the SAR which describes considering removing references to "Applicable Ratings" to clarify the performance requirement for certain Category C events.

   b. MidAmerican Energy urges the SAR drafting team to direct the Standard Drafting Team to remove references to "Applicable Ratings" from all events listed in the second to last paragraph because information is readily available which demonstrates that the listed events are much less likely than other Category C events.

   c. MidAmerican Energy urges the SAR drafting team to add the following words to the third paragraph from the end to more clearly explain the SAR drafting team's position with regard to planned outages:

   "In particular, it is incorrect to have a requirement to exhaustively test for every contingency described in each category plus every conceivable planning outage.

   Planned Outages can be scheduled and analyzed in advance in the operating horizon (less than one year). Therefore, it should not be necessary to require that "systems must be capable of meeting Category C requirements while accommodating the planned outage of any bulk electric equipment..." Planned outages should be studied in advance by the requesting control area and be reviewed by the governing Reliability Coordinator to determine if overloads could occur. If studies show that overloads could occur, the planned outage should be deferred or operating guides prepared which would be used in the event a contingency does occur.

   There is no need to plan or build facilities to meet Planning Standard 1.A when Planned Outages can be accommodated within the frame work of existing guidelines and procedures. Studies conducted for the operating horizon are not the subject of this standard.

   Therefore, the SAR drafting team directs the standard drafting team to delete the requirement for the prior planned outage from the standard given that known planned outages must be included in studies that are conducted during the operating horizon which are not the subject of this standard but which are required in accordance with NERC Standard 200, "Operate Within Interconnection Reliability Operating Limits Standard" and NERC Standard 600, "Determine Facility Ratings, Operating Limits, and Transfer Capabilities".

   d. MidAmerican Energy urges the SAR drafting team to include the following statement in the SAR:

   "The Standard should clarify how breaker failure events (Category C2, C6, C7, C8, and C9 events) are to be considered given that operating a breaker with disconnects open or eliminating a breaker are technically acceptable mitigation schemes for such events. Such mitigation schemes actually result in less reliable system designs and system operating configurations. Thus including Applicable Ratings in the Standard for these lower probability breaker failure events can send the wrong reliability signals to NERC members."

This paragraph reflects another reason why breaker failure events should be reclassified such that Applicable Ratings is no longer considered a requirement for these low probability events.

e. MidAmerican Energy urges the SAR drafting team to consider not reclassifying any of the Category C events to Category D but instead deleting the Applicable Rating requirements from the lower probability Category C events. MidAmerican believes that the performance requirements for lower probability Category C events should be to protect for cascading, instability, and uncontrolled separation. It is MidAmerican's belief that this was the intent of the drafting team that originally developed the existing NERC Planning Standards.

f. MidAmerican Energy is concerned that the SAR does not provide for the coordination of the requirements of the planning standards in NERC Standard 500, "Assess Transmission Future Needs and Develop Transmission Plans", with the NERC Operating Standards provided in NERC Standard 600, "Determine Facility Ratings, Operating Limits, and Transfer Capabilities." The criteria that are proposed as a starting point for 500 in this SAR (events from Categories A through D) differ from the criteria that are included in the latest draft of NERC Standard 600 (Categories A and B). If these approaches are continued, then studies run for the operating horizon will differ significantly from studies run for the planning horizon. These differences in studies will carry over to the calculation of quantities used to offer transmission service, that is, Total Transfer Capacity and Available Transmission Capacity. If NERC does not coordinate these two standards, there will be a discontinuity in TTC and ATCs when the Planning Horizon begins and the Operating Horizon ends or from one day less than one year to one year. MidAmerican urges the SAR drafting team to consider this discontinuity and coordinate the SAR for 500 with the Standard that is being written for 600. If a discontinuity between criteria is allowed to continue in the SAR for Standard 500, the SAR drafting team should have a clear explanation for all market participants as to the reason for the discontinuity and how that should be dealt with by the elements of the NERC Functional Model.

g. In general, MidAmerican Energy supports the six bullets that the SAR drafting team has provided on page SAR-5 with the amendments and additions described above in our comments. These bullets add needed details to the SAR.

Note – This form is to comment on **Version 2** of the **"Assess Transmission Future Needs and Develop Transmission Plans"** SAR.

The latest version of this SAR **(**TRNS_NDS_&_PLNS_01_02**)** is posted on the Standards web site at: http://www.nerc.com/~filez/standards/Assess-Transmission-Future-Needs.html

E-mail this form between May 1 and May 31, 2004 to: sarcomm@nerc.com with "Comments" in the subject line.

If you have any questions about this Standards Draft Comment Form, please contact the Director of Standards – Gerry Cauley at 609-452-8060.

Background:

Version 1 of the **"Assess Transmission Future Needs and Develop Transmission Plans"** SAR was posted for a 30-day public comment period between April 2 and May 3, 2002. This first version was an abbreviated SAR, which included an "Industry Need" statement and a brief description of the proposed standard, but did not include a detailed description. The purpose of this first posting was to collect feedback from the industry on the following questions:

- Is there a reliability-related need for an Organization Standard to be developed on this topic?

If there is such a need, how should the scope of the SAR be changed?

- The scope of the SAR is fine as is
- The scope of the SAR should be expanded to include…..
- The scope of the SAR should be reduced to eliminate……

In January 2004, the Standards Authorization Committee (SAC) appointed a Drafting Team (DT) to address industry answers and comments to the questions posed. The DT was also charged with refining the SAR and drafting a detailed description of the proposed standard in preparation for the 2nd posting of the SAR.

Most of the industry respondents indicated that there is indeed a reliability-related need to develop a standard to address transmission assessment and planning issues. Comments were received from many different sources, including individuals, small and large utilities, groups of utilities, and Regional Councils. The SAR DT considered the comments submitted by each industry participant, and revised the SAR to conform to the changes that were technically sound and appeared to represent a consensus of participants.

The revised SAR (Version 2) is posted on the NERC web site given in the blue box at the top of this form. Also posted is a Consideration of Comments document, in which the DT has responded to the original industry comments from 2002. You can find Version 1 of the SAR and industry comments on this version at the same web location.

Please review Version 2 of the SAR and complete this Comment Form to let the SAR DT know if you agree or disagree with the SAR DT's assessment that this SAR is ready to be developed into a Standard.

Commenter Information (For Individual Commenters)
Name:
Organization:
Industry Segment #:
Telephone:
E-mail:

Key to Industry Segment #'s:

- **1 – Trans. Owners**
- **2 – RTO's, ISO's, RRC's**
- **3 – LSE's**
- **4 – TDU's**
- **5 - Generators**
- 6 - Brokers, Aggregators, and Marketers
- **7 - Large Electricity End Users**
- **8 - Small Electricity Users**
- 9 - Federal, State, and Provincial Regulatory or other Govt. Entities

STD Commenter Information (For Groups Submitting Group Comments)	
Name of Group: MAPP Planning Standards Development Working Group	**Group Chair:** Tom Mielnik **Chair Phone:** 563-333-8129 **Chair Email:** tcmielnik@midamerican.com

List of Group Participants that Support These Comments:

Name	Company	Industry Segment #
Tom Mielnik	**MEC**	**2**
Delyn Helm	**GRE**	**2**
David Jacobson	**MH**	**2**
Dennis Kimm	**MEC**	**2**
Dean Schiro	**XEL**	**2**
Jason Weiers	**OTP**	**2**
Steve Sanders	**WAPA**	**2**

Please Review Version 2 of the SAR and Answer the Following Questions

Insert a "check' mark in the appropriate boxes by double-clicking the gray areas.

1. Some members of the SAR drafting team believe that certain Category C events, as defined in Table 1 of existing Planning Standard I.A, are much less likely to occur than other events in Category C. It is felt that certain specific Cat. C events could be re-classified as Cat. D upon showing a low probability of occurrence (and low consequence) of these events.

   (a). Do you believe that the events in Categories B, C & D are classified correctly?

   ☐ Yes

   ☐ No

☒ Comments: The definition of applicable ratings needs to be clarified. The SAR DT should also indicate if it is feasible to have different applicable ratings for different categories of events.

The SAR DT should review the history of the original classification. This review should include all classes. If outage statistics are used to classify events, how many years of data are appropriate? If the data window is too small, the results will be skewed. Moreover, is it appropriate to use outage data for all these categories of events? Outage data over a long period of time may provide insight into equipment performance, but is it appropriate to reflect weather related contingency events – the data may not reflect the effect of a once in a 100 year storm?

(b). If your answer to (a) is No, how would you re-classify the events? If you have data to support your answer, please provide contact information for the individual responsible for the data.

MAPP would reclassify certain low probability events such as Category C1 events, C2 events, certain Category C3 events (two transformers, transmission circuit plus a transformer, two transmission circuits, DC line plus a transformer, DC line plus a transmission circuit, and two DC lines), C6 events, C7 events, C8 events, and C9 events to either a new category between C and D with performance characteristics between that of the present Categories C and D or to Category D. MAPP would require that the interconnected transmission system be planned, designed, and constructed to protect for instability, cascading, and uncontrolled separation for the low probability events in the new sub-category. Regions should develop procedures for determining that systems are properly protected for instability, cascading and uncontrolled separation.

MAPP believes the following information supports this new reclassification by demonstrating that the events that MAPP recommends for reclassification are the low probability Category C events. MAPP recognizes that published outage data are subject to interpretation, potential inaccuracy, and change through time; however, MAPP believes that MAPP operating experience with transmission element outages supports the statistical summary provided in the following table.

345 kV Outage Data				
Contingency	Outage Rate, occ./year	Duration, hours	Probability	Relative Likelihood
Generator B1	9	81	0.08321918	1
Two generators C3	1.5	40.5	0.00693493	12
Bipolar DC line * (Similar to B4)	1.41	21	0.00338014	24
Line * B2	0.8065	18	0.00165719	50
Transformer B3	0.0642	157	0.00115062	72
Bipolar DC Line * + Generator (Sim. to 1 Pole DC line + gen. C3)	0.1478	16.68	0.00028143	296
Line * + Generator C3	0.0820	14.7	0.00013760	605
Generator + Transformer C3	0.0157	53.4	0.00009571	870
Common tower * C5	0.007	113	0.00009030	922
Breaker Failure- Insulation Breakdown C2 RECLASSIFY THIS EVENT	0.001423	163	0.00002647	3,144
Bipolar DC line *+Bipolar DC line * (Sim. to Two 1 Pole DC lines - C3) RECLASSIFY THIS EVENT	0.009532	10.5	0.00001143	7,281
Stuck breaker C6-C9 RECLASSIFY THIS EVENT	0.00635	4	0.00000290	28,696
Line * + Line * (independent) C3 RECLASSIFY THIS EVENT	0.00267	9	0.00000275	30,262
Line * + Transformer C3 RECLASSIFY THIS EVENT	0.0010	16.1	0.00000184	45,228
Two transformers C3 RECLASSIFY THIS EVENT	0.00014774	78.5	0.00000132	63,045
Bus Section** RECLASSIFY THIS EVENT	0.0023	4.7	0.00000123	67,438

* Per 100 mile-year.

** Based upon 230 kV data.

References

1. MAPP-CSRWG, "MAPP Bulk transmission system outage report", June 2001.
2. C. R. Heising, et al, "Final report on high voltage circuit breaker reliability data for use in substation and system studies – report on behalf of WG 13.06, in Proceedings of CIGRE Conference, Paris, 1994.
3. R. Billinton, A. A. Chowdhury, "Generating unit models using the Canadian Electricity database", CEA Transactions, Volume 23, 1984.
4. R. N. Allan, "Concepts of data for assessing the reliability of composite systems", IEEE Tutorial Course on Reliability Assessment of Composite Generation and Transmission Systems, Course Text 90EH0311-1-PWR.

Contact info:

Tom Mielnik, Chair
MAPP Planning Standards Development Working Group
MidAmerican Energy Company
106 East Second Street
Davenport, Iowa 52801
(563)333-8129
tcmielnik@midamerican.com

(c) Which of the following approaches do you favor regarding Table 1 of existing Planning Standard I.A?:

☒ Keep the same categories as now exist and re-classify the low probability (and low consequence) events as Category D events.

If the events are low probability, then some should be considered for moving to Cat D.

Please explain your choice:

☒ Create a new category between C and D with performance characteristics between that of the present Categories C and D.

Please explain your choice

Improvements should be planned for those Category C events that are high probability events regardless of the consequences. Planners should also review all Category C events for instability, cascading, and uncontrolled separation. Improvements should be planned for those Category C events (both high probability and low probability events) which have significant consequences, that is, that result in instability, cascading, and uncontrolled separation.

MAPP believes that allowing for "good cause exceptions" is not the preferable approach. MAPP believes that the events listed by MAPP for reclassification are much less likely than the other Category C events generally throughout NERC. This means that these events should be reclassified in general throughout NERC and not just in certain "good cause exceptions". (Although, it should be noted that MAPP does support regional differences where appropriate.) Besides, there are issues associated with the development and utilization of a process for approving "good cause exceptions".

☐ Keep the same categories as now exist, but allow for "good cause exceptions" upon a showing of low probability of occurrence (and low consequence) of specific Category C events.

Please explain your choice:

☐ Comments:

2. Do you believe the standard should include requirements for reporting on the progress or status of *implementing* the plans developed in accordance with this standard?

☐ Yes

☐ No

☒ Comments: Requirements for reporting on the progress or status of implementing the plans should be left to the regions and appropriate regulatory bodies. The MAPP Regional Transmission Committee currently has a regional planning process for compliance for implementing transmission plans.

3. If your answer to question 2 is Yes, given that transmission plans change over time as modeling assumptions, systems and plans change, how would you propose accounting for changes in a Transmission Plan?

4. Existing Planning Standard I.A requires: *"The systems must be capable of meeting Category C requirements while accommodating the planned (including maintenance) outage of any bulk electric equipment (including protection systems or their components) at those demand levels for which planned (including maintenance) outages are performed".*

   The SAR drafting team believes that it is impractical to exhaustively test for every contingency described in each category plus every conceivable planned outage. Should the requirement to consider planned outages in addition to each Category A through D contingency remain part of this planning standard?

   ☐ Yes (consider planned outages in all Categories A through D).

   ☐ Yes (consider planned outages in some Categories only).

   Please specify which Categories:

   ☒ No

   ☒ Comments:

   Planned Outages can be scheduled and analyzed in advance in the operating horizon (less than one year). Therefore, it should not be necessary to require that "systems must be capable of meeting Category C requirements while accommodating the planned outage of any bulk electric equipment..." Planned outages should be studied in advance by the requesting control area and be reviewed by the governing Reliability Coordinator to determine if overloads could occur. If studies show that overloads could occur, the planned outage should be deferred or operating guides prepared which would be used in the event a contingency does occur.

5. Are you aware of any Regional or Interconnection differences in the requirements for assessing and planning transmission systems in North America? If so, please list and explain.

   ☐ Comments:

6. Do you have any other comments on the SAR?

   ☒ Comments:

   a. MAPP urges the SAR drafting team clarify the meaning of the term "Applicable Ratings" and determine if it is possible to have different A/Rs for different categories.

   b. MAPP urges the SAR drafting team to add words to the third paragraph from the end to more clearly explain the SAR drafting team's position with regard to prior planned outages.

c. MAPP is concerned that the SAR does not provide for the coordination of the requirements of the planning standards in NERC Standard 500, "Assess Transmission Future Needs and Develop Transmission Plans", with the NERC Operating Standards provided in NERC Standard 600, "Determine Facility Ratings, Operating Limits, and Transfer Capabilities." The criteria that are proposed as a starting point for 500 in this SAR (events from Categories A through D) differ from the criteria that are included in the latest draft of NERC Standard 600 (Categories A and B). If these approaches are continued, then studies run for the operating horizon will differ significantly from studies run for the planning horizon. These differences in studies will carry over to the calculation of quantities used to offer transmission service, that is, Total Transfer Capacity and Available Transmission Capacity. If NERC does not coordinate these two standards, there will be a discontinuity in TTC and ATCs when the Planning Horizon begins and the Operating Horizon ends or from one day less than one year to one year. MAPP urges the SAR drafting team to consider this discontinuity and coordinate the SAR for 500 with the Standard that is being written for 600. If a discontinuity between criteria is allowed to continue in the SAR for Standard 500, the SAR drafting team should have a clear explanation for all market participants as to the reason for the discontinuity and how that should be dealt with by the elements of the NERC Functional Model.

d. MAPP notes that Standard 600, "Determine Facility Ratings, Operating Limits, and Transfer Capabilities" has been drafted to do away with the references to Categories A through D. The criteria are just listed in the standard. MAPP asks that the SAR drafting team require that the standard drafting team for Standard 500 also eliminate the category references to be consistent with the Standard 600 approach.

e. MAPP is concerned that the SAR does not limit manual or automatic readjustments for certain lower probability or low consequence events. MAPP urges that the SAR drafting team add additional provisions to require the drafting team to consider which manual and automatic readjustments are allowed and when in meeting the criteria that is included in the standards.

f. MAPP is concerned that there is no provision for recognizing the variability of generation in the SAR. MAPP asks the SAR drafting team add another bullet to the SAR which states, "The Standard should take into account the variability of generation due to factors such as weather and time of day."

g. MAPP is concerned that there is no reference in the SAR to the need to handle firm contracts that may roll-over in the futures. Plans developed for the transmission system must recognize that the transmission system must have sufficient capacity to handle roll-overs. MAPP urges the SAR drafting team to include an appropriate description of the requirement for the plans with regard to roll-overs.

h. MAPP asks that the SAR drafting team add a bullet to the SAR that requires that the Standard drafting team to consider the development of reactive power margin and transfer power margin standards which expand beyond existing NERC Standard I.D.

i. In general, MAPP supports the six bullets that the SAR drafting team has provided on page SAR-5 with the amendments and additions described above in our comments. These bullets add needed details to the SAR.

Note – This form is to comment on **Version 2** of the **"Assess Transmission Future Needs and Develop Transmission Plans"** SAR.

The latest version of this SAR **(**TRNS_NDS_&_PLNS_01_02**)** is posted on the Standards web site at: http://www.nerc.com/~filez/standards/Assess-Transmission-Future-Needs.html

E-mail this form between May 5 and June 5, 2004 to: sarcomm@nerc.com with "Comments" in the subject line.

If you have any questions about this Standards Draft Comment Form, please contact the Director of Standards – Gerry Cauley at 609-452-8060.

Background:

Version 1 of the **"Assess Transmission Future Needs and Develop Transmission Plans"** SAR was posted for a 30-day public comment period between April 2 and May 3, 2002. This first version was an abbreviated SAR, which included an "Industry Need" statement and a brief description of the proposed standard, but did not include a detailed description. The purpose of this first posting was to collect feedback from the industry on the following questions:

- Is there a reliability-related need for an Organization Standard to be developed on this topic?

If there is such a need, how should the scope of the SAR be changed?

- The scope of the SAR is fine as is
- The scope of the SAR should be expanded to include…..
- The scope of the SAR should be reduced to eliminate……

In January 2004, the Standards Authorization Committee (SAC) appointed a Drafting Team (DT) to address industry answers and comments to the questions posed. The DT was also charged with refining the SAR and drafting a detailed description of the proposed standard in preparation for the 2nd posting of the SAR.

Most of the industry respondents indicated that there is indeed a reliability-related need to develop a standard to address transmission assessment and planning issues. Comments were received from many different sources, including individuals, small and large utilities, groups of utilities, and Regional Councils. The SAR DT considered the comments submitted by each industry participant, and revised the SAR to conform to the changes that were technically sound and appeared to represent a consensus of participants.

The revised SAR (Version 2) is posted on the NERC web site given in the blue box at the top of this form. Also posted is a Consideration of Comments document, in which the DT has responded to the original industry comments from 2002. You can find Version 1 of the SAR and industry comments on this version at the same web location.

Please review Version 2 of the SAR and complete this Comment Form to let the SAR DT know if you agree or disagree with the SAR DT's assessment that this SAR is ready to be developed into a Standard.

Commenter Information (For Individual Commenters)
Name: John Horakh – May 27, 2004 Organization: MAAC Industry Segment #: 2 Telephone: 609-625-6014 E-mail:john.horakh@conectiv.com

Key to Industry Segment #'s:

1 – Trans. Owners
2 – RTO's, ISO's, RRC's
3 – LSE's
4 – TDU's
5 - Generators
6 - Brokers, Aggregators, and Marketers
7 - Large Electricity End Users
8 - Small Electricity Users
9 - Federal, State, and Provincial Regulatory or other Govt. Entities

STD Commenter Information (For Groups Submitting Group Comments)	
Name of Group:	**Group Chair:** **Chair Phone:** **Chair Email:**

List of Group Participants that Support These Comments:

Name	**Company**	**Industry Segment #**

Please Review Version 2 of the SAR and Answer the Following Questions

Insert a "check' mark in the appropriate boxes by double-clicking the gray areas.

1. Some members of the SAR drafting team believe that certain Category C events, as defined in Table 1 of existing Planning Standard I.A, are much less likely to occur than other events in Category C. It is felt that certain specific Cat. C events could be re-classified as Cat. D upon showing a low probability of occurrence (and low consequence) of these events.

   (a). Do you believe that the events in Categories B, C & D are classified correctly?

   X☐ Yes, but see comments below

   ☐ No

   X☐ Comments: Categories B, C and D should be renamed as follows –

   Category B – High Probability Contingency Event

   Category C – Medium Probability Contingency Event

   Category D – Low Probability Contingency Event

   The difference in the categories should NOT be stated in terms of how many elements are out of service, but rather should be stated in terms of the PROBABILITY of the initiating event that occurs. The difference in the categories is in the "stress" the system is allowed to experience and in the "fix" required. For B, a high probability event, stress should be low and the only fix allowed is system reinforcement. For D, a low probability event, severe system stress is allowed, and system reinforcement is not mandated. C is somewhere in between, a medium probability, with medium system stress permitted, and some loss of load and/or curtailment of transfers allowed in lieu of system reinforcement. Table I can then be simplified by removing the column labeled "Elements Out of Service", because it is unnecessary and not relative. Actually, the columns labeled "Thermal Limits", "Voltage Limits", "System Stable" and "Cascading Outages" can be eliminated too, because they are the same for each Category A, B and C (but notes for each column should be retained).

   (b). If your answer to (a) is No, how would you re-classify the events? If you have data to support your answer, please provide contact information for the individual responsible for the data.

   (c) Which of the following approaches do you favor regarding Table 1 of existing Planning Standard I.A?:

   ☐ Keep the same categories as now exist and re-classify the low probability (and low consequence) events as Category D events.

   Please explain your choice:

   ☐ Create a new category between C and D with performance characteristics between that of the present Categories C and D.

   Please explain your choice

☐ Keep the same categories as now exist, but allow for "good cause exceptions" upon a showing of low probability of occurrence (and low consequence) of specific Category C events.

Please explain your choice:

X☐ Comments: NONE OF THE ABOVE. Keep the three categories, but rename them as in 1.a. above. Adding an additional category would introduce too much confusion in planning the system. Assuming that the contingencies in B, C and D are already in their correct probability categories, no changes need to be made. If someone could prove that a contingency in B is Low Probability the same as the contingencies in D, that contingency could be moved.

2. Do you believe the standard should include requirements for reporting on the progress or status of *implementing* the plans developed in accordance with this standard?

X☐ Yes

☐ No

X☐ Comments: Reporting should be on a "delay" basis. Known delays to the plan should be reported, along with the reason for the delay and use of alternate solutions.

3. If your answer to question 2 is Yes, given that transmission plans change over time as modeling assumptions, systems and plans change, how would you propose accounting for changes in a Transmission Plan? See answer to 2. Above.

4. Existing Planning Standard I.A requires: *"The systems must be capable of meeting Category C requirements while accommodating the planned (including maintenance) outage of any bulk electric equipment (including protection systems or their components) at those demand levels for which planned (including maintenance) outages are performed".*

The SAR drafting team believes that it is impractical to exhaustively test for every contingency described in each category plus every conceivable planned outage. Should the requirement to consider planned outages in addition to each Category A through D contingency remain part of this planning standard?

☐ Yes (consider planned outages in all Categories A through D).

X☐ Yes (consider planned outages in some Categories only).

Please specify which Categories: Categories A and B, which are high probability and therefore could easily occur during a planned outage.

☐ No

☐ Comments:

5. Are you aware of any Regional or Interconnection differences in the requirements for assessing and planning transmission systems in North America? If so, please list and explain.

☐ Comments:

6. Do you have any other comments on the SAR?

☐ Comments:

Note – This form is to comment on **Version 2** of the **"Assess Transmission Future Needs and Develop Transmission Plans"** SAR.

The latest version of this SAR **(**TRNS_NDS_&_PLNS_01_02**)** is posted on the Standards web site at: http://www.nerc.com/~filez/standards/Assess-Transmission-Future-Needs.html

E-mail this form between May 5 and June 5, 2004 to: sarcomm@nerc.com with "Comments" in the subject line.

If you have any questions about this Standards Draft Comment Form, please contact the Director of Standards – Gerry Cauley at 609-452-8060.

Background:

Version 1 of the **"Assess Transmission Future Needs and Develop Transmission Plans"** SAR was posted for a 30-day public comment period between April 2 and May 3, 2002. This first version was an abbreviated SAR, which included an "Industry Need" statement and a brief description of the proposed standard, but did not include a detailed description. The purpose of this first posting was to collect feedback from the industry on the following questions:

- Is there a reliability-related need for an Organization Standard to be developed on this topic?

If there is such a need, how should the scope of the SAR be changed?

- The scope of the SAR is fine as is
- The scope of the SAR should be expanded to include…..
- The scope of the SAR should be reduced to eliminate……

In January 2004, the Standards Authorization Committee (SAC) appointed a Drafting Team (DT) to address industry answers and comments to the questions posed. The DT was also charged with refining the SAR and drafting a detailed description of the proposed standard in preparation for the 2nd posting of the SAR.

Most of the industry respondents indicated that there is indeed a reliability-related need to develop a standard to address transmission assessment and planning issues. Comments were received from many different sources, including individuals, small and large utilities, groups of utilities, and Regional Councils. The SAR DT considered the comments submitted by each industry participant, and revised the SAR to conform to the changes that were technically sound and appeared to represent a consensus of participants.

The revised SAR (Version 2) is posted on the NERC web site given in the blue box at the top of this form. Also posted is a Consideration of Comments document, in which the DT has responded to the original industry comments from 2002. You can find Version 1 of the SAR and industry comments on this version at the same web location.

Please review Version 2 of the SAR and complete this Comment Form to let the SAR DT know if you agree or disagree with the SAR DT's assessment that this SAR is ready to be developed into a Standard.

Commenter Information (For Individual Commenters)
Name:
Organization:
Industry Segment #:
Telephone:
E-mail:

Key to Industry Segment #'s:

1 – Trans. Owners
2 – RTO's, ISO's, RRC's
3 – LSE's
4 – TDU's
5 - Generators
6 - Brokers, Aggregators, and Marketers
7 - Large Electricity End Users
8 - Small Electricity Users
9 - Federal, State, and Provincial Regulatory or other Govt. Entities

STD Commenter Information (For Groups Submitting Group Comments)	
Name of Group: SERC EC Planning Standards Subcommittee	**Group Chair:** Bob Jones **Chair Phone:** (205) 257-6148 **Chair Email:** rajones@southernco.com

List of Group Participants that Support These Comments:

Name	**Company**	**Industry Segment #**
Darrell Pace	**Alabama Electric Cooperative, Inc**	**1**
Brian D. Moss	**Duke Power Company**	**1**
Kham Vongkhamchanh	**Entergy Services, Inc.**	**1**
Clay Young	**South Carolina Electric & Gas Company**	**3**
Arthur E. (Art) Brown	**South Carolina Public Service Authority**	**1**
Bob Jones	**Southern Company Services, Inc.**	**1**
Byron Stewart	**Tennessee Valley Authority**	**1**
Pat Huntley	**SERC Staff**	**2**

Please Review Version 2 of the SAR and Answer the Following Questions

Insert a "check' mark in the appropriate boxes by double-clicking the gray areas.

1. Some members of the SAR drafting team believe that certain Category C events, as defined in Table 1 of existing Planning Standard I.A, are much less likely to occur than other events in Category C. It is felt that certain specific Cat. C events could be re-classified as Cat. D upon showing a low probability of occurrence (and low consequence) of these events.

   (a). Do you believe that the events in Categories B, C & D are classified correctly?

   X Yes

   ☐ No

   X Comments: The SERC PSS believes that Category C events are more likely to occur than Category D events and should require higher performance expectations.

   (b). If your answer to (a) is No, how would you re-classify the events? If you have data to support your answer, please provide contact information for the individual responsible for the data.

   (c) Which of the following approaches do you favor regarding Table 1 of existing Planning Standard I.A?:

   ☐ Keep the same categories as now exist and re-classify the low probability (and low consequence) events as Category D events.

   Please explain your choice:

   ☐ Create a new category between C and D with performance characteristics between that of the present Categories C and D.

   Please explain your choice

   ☐ Keep the same categories as now exist, but allow for "good cause exceptions" upon a showing of low probability of occurrence (and low consequence) of specific Category C events.

   Please explain your choice:

   X Comments: The SERC PSS agrees that low consequence Category C events should be considered compliant. However, as we interpret Table I, a Category C event that results in low consequences (e.g. no cascading) is already considered compliant since entities can drop load or curtail firm transfers to return to applicable thermal or voltage ratings.

2. Do you believe the standard should include requirements for reporting on the progress or status of *implementing* the plans developed in accordance with this standard?

   ☐ Yes

   X No

☐ Comments:

3. If your answer to question 2 is Yes, given that transmission plans change over time as modeling assumptions, systems and plans change, how would you propose accounting for changes in a Transmission Plan?

4. Existing Planning Standard I.A requires: *"The systems must be capable of meeting Category C requirements while accommodating the planned (including maintenance) outage of any bulk electric equipment (including protection systems or their components) at those demand levels for which planned (including maintenance) outages are performed".*

   The SAR drafting team believes that it is impractical to exhaustively test for every contingency described in each category plus every conceivable planned outage. Should the requirement to consider planned outages in addition to each Category A through D contingency remain part of this planning standard?

   ☐ Yes (consider planned outages in all Categories A through D).

   ☐ Yes (consider planned outages in some Categories only).

   Please specify which Categories:

   ☐ No

   X Comments: The SERC PSS agrees that the requirement to consider planned outages in addition to each Category A and B contingency remain part of this planning standard. The SERC PSS could not reach consensus on the requirement to consider planned outages in addition to each Category C and D contingency. However, the SERC PSS does agree that exhaustive testing for every contingency described in each category is not required. The I.A compliance templates state that they must "Be performed and evaluated only for those Category [B, C, and D] contingencies that would produce the more severe system results or impacts."

5. Are you aware of any Regional or Interconnection differences in the requirements for assessing and planning transmission systems in North America? If so, please list and explain. No

   ☐ Comments:

6. Do you have any other comments on the SAR?

   X Comments: The SERC PSS agrees that the Standard should provide a clearer definition of "cascading outages." In addition the SERC PSS recommends that the Standard provide a clearer definition of what is meant by "system stable."

   The SERC PSS agrees that the Standard should not address resource planning, however the standard should include requirements for LSEs to provide forecast resource data required to develop power flow models as required in the current II.D standards. Accordingly, this standard should also apply to LSEs.

Note – This form is to comment on **Version 2** of the **"Assess Transmission Future Needs and Develop Transmission Plans"** SAR.

The latest version of this SAR **(**TRNS_NDS_&_PLNS_01_02**)** is posted on the Standards web site at: http://www.nerc.com/~filez/standards/Assess-Transmission-Future-Needs.html

E-mail this form between May 5 and June 5, 2004 to: sarcomm@nerc.com with "Comments" in the subject line.

If you have any questions about this Standards Draft Comment Form, please contact the Director of Standards – Gerry Cauley at 609-452-8060.

Background:

Version 1 of the **"Assess Transmission Future Needs and Develop Transmission Plans"** SAR was posted for a 30-day public comment period between April 2 and May 3, 2002. This first version was an abbreviated SAR, which included an "Industry Need" statement and a brief description of the proposed standard, but did not include a detailed description. The purpose of this first posting was to collect feedback from the industry on the following questions:

- Is there a reliability-related need for an Organization Standard to be developed on this topic?

If there is such a need, how should the scope of the SAR be changed?

- The scope of the SAR is fine as is
- The scope of the SAR should be expanded to include…..
- The scope of the SAR should be reduced to eliminate……

In January 2004, the Standards Authorization Committee (SAC) appointed a Drafting Team (DT) to address industry answers and comments to the questions posed. The DT was also charged with refining the SAR and drafting a detailed description of the proposed standard in preparation for the 2nd posting of the SAR.

Most of the industry respondents indicated that there is indeed a reliability-related need to develop a standard to address transmission assessment and planning issues. Comments were received from many different sources, including individuals, small and large utilities, groups of utilities, and Regional Councils. The SAR DT considered the comments submitted by each industry participant, and revised the SAR to conform to the changes that were technically sound and appeared to represent a consensus of participants.

The revised SAR (Version 2) is posted on the NERC web site given in the blue box at the top of this form. Also posted is a Consideration of Comments document, in which the DT has responded to the original industry comments from 2002. You can find Version 1 of the SAR and industry comments on this version at the same web location.

Please review Version 2 of the SAR and complete this Comment Form to let the SAR DT know if you agree or disagree with the SAR DT's assessment that this SAR is ready to be developed into a Standard.

Commenter Information (For Individual Commenters)
Name: Robert Snow Organization: Robert Snow Industry Segment #: 8 Telephone: 973 763 0832 E-mail: familysnow@aol.com

Key to Industry Segment #'s:

- **1 – Trans. Owners**
- **2 – RTO's, ISO's, RRC's**
- **3 – LSE's**
- **4 – TDU's**
- **5 - Generators**
- 6 - Brokers, Aggregators, and Marketers
- **7 - Large Electricity End Users**
- **8 - Small Electricity Users**
- 9 - Federal, State, and Provincial Regulatory or other Govt. Entities

STD Commenter Information (For Groups Submitting Group Comments)	
Name of Group:	**Group Chair:** **Chair Phone:** **Chair Email:**

List of Group Participants that Support These Comments:

Name	**Company**	**Industry Segment #**

Please Review Version 2 of the SAR and Answer the Following Questions

Insert a "check' mark in the appropriate boxes by double-clicking the gray areas.

1. Some members of the SAR drafting team believe that certain Category C events, as defined in Table 1 of existing Planning Standard I.A, are much less likely to occur than other events in Category C. It is felt that certain specific Cat. C events could be re-classified as Cat. D upon showing a low probability of occurrence (and low consequence) of these events.

   (a). Do you believe that the events in Categories B, C & D are classified correctly?

   ☒ Yes

   ☐ No

   ☐ Comments: **Without a rigorous Probabilistic Risk Analysis, moving any of these events to a category D event is bad practice. All of the events have occurred at one time or another, especially circuit breaker and bus faults. Moving them to a category D essentially removes them from requiring action to mitigate/solve the impact on reliability.**

   (b). If your answer to (a) is No, how would you re-classify the events? If you have data to support your answer, please provide contact information for the individual responsible for the data.

   (c) Which of the following approaches do you favor regarding Table 1 of existing Planning Standard I.A?:

   ☐ Keep the same categories as now exist and re-classify the low probability (and low consequence) events as Category D events.

   Please explain your choice:

   ☐ Create a new category between C and D with performance characteristics between that of the present Categories C and D.

   Please explain your choice

   ☐ Keep the same categories as now exist, but allow for "good cause exceptions" upon a showing of low probability of occurrence (and low consequence) of specific Category C events.

   Please explain your choice:

   ☐ Comments:

2. Do you believe the standard should include requirements for reporting on the progress or status of *implementing* the plans developed in accordance with this standard?

   ☒ Yes

   ☐ No

☒ Comments: Developing plans without a follow up program is a waste of time and money. One of the most telling comments form the August Blackout report was that a number of the items were the same as in other blackouts.

3. If your answer to question 2 is Yes, given that transmission plans change over time as modeling assumptions, systems and plans change, how would you propose accounting for changes in a Transmission Plan? When there is a significant change in the assumptions, the plan needs to be re-studied and revised as appropriate. The SAR must require such re-studies. Any plan is only as good as its assumptions. Whenever there is a significant change in the assumptions, the plan needs to be revised to account for the change. Having a plan that assumes there will be specific generation projects is worthless when those specific projects are changed, cancelled or if other generation retires.

4. Existing Planning Standard I.A requires: *"The systems must be capable of meeting Category C requirements while accommodating the planned (including maintenance) outage of any bulk electric equipment (including protection systems or their components) at those demand levels for which planned (including maintenance) outages are performed".*

   The SAR drafting team believes that it is impractical to exhaustively test for every contingency described in each category plus every conceivable planned outage. Should the requirement to consider planned outages in addition to each Category A through D contingency remain part of this planning standard?

   ☐ Yes (consider planned outages in all Categories A through D).

   ☒ Yes (consider planned outages in some Categories only).

Please specify which Categories: Categories A through C should be considered. Category D does not require action so the analysis with outages does not add anything. Most planning software allows the sue of scripts to run multiple analysis without intervention. The state of modern computers is such that the added testing is not significant. Also, for most systems, this type of analysis is performed to define which load levels and generation dispatch would allow the maintenance (the problem in reverse).

   ☐ No

   ☐ Comments:

5. Are you aware of any Regional or Interconnection differences in the requirements for assessing and planning transmission systems in North America? If so, please list and explain.

   ☒ Comments: Each region has their own requirements.

6. Do you have any other comments on the SAR?

   ☒ Comments:

Second Paragraph: Replace the second sentence with "The planning horizon is intended to provide for facility additions. Operating procedures shall not be used as a substitute for good system design and shall only be applicable during maintenance outages and while facilities are being constructed." (The original language would allow what was identified as the root cause of the Italian blackout. Namely, an operating procedure that had to be executed within 15 minutes. The operator had to call another area and ask for them to perform an operating procedure. The procedure was underway but

did not happen fast enough to avoid the next line to trip. Operating procedures should never be a long term substitute for constructing facilities needed to assure reliability.)

Third Paragraph: While some of the information about generation additions and load growth are considered reliable for five (5) years, a long-term study of approximately ten (10) years is necessary to identify global issues such as import limitations to a region that would require projects that have traditionally taken more than five (5) years. Suggest, "Assessments shall cover a detailed planning horizon consistent with available information but no less than five (5) years. The five year horizon shall include load growth, new internal and external firm generation, generation retirements/failures, uncontrollable loop flows, reliance on external generation (identify both firm and market), topology changes, and firm transactions. A longer term study using a variety of scenarios that are expected to cover the most likely long term activity, shall be conducted to identify projects that take longer than five years to implement."

Fourth Paragraph: The standards should apply to transmission owners, transmission operators, transmission planners, anyone who is connecting facilities to the transmission system, control areas, and reliability coordinators.

Fifth Paragraph: Add the following after the bullets. "In addition to the above, the standard shall provide requirements on methodology of forecasting and normalizing load. This would include methods of determining the normalized load over a large geographic area with different weather patterns and norms. The "normalized" load should not be the load associated with the median weather over a summer or winter period but the load level that will provide sufficient reliability to supply all firm load obligations. Each region shall provide a definition as to what is sufficient reliability. The definition shall clearly define the risk that is being assumed in terms similar to the LOLE for lack of generation. In addition to the above two risk variables, a methodology shall be identified to quantify the risk of not being able to deliver the difference between the local load and generation. This is essentially the ability of the transmission system to respond to different generation dispatch patterns."

Sixth Paragraph: Replace the last phrase in the last sentence with "while the standard will not prescribe specific tools, it shall identify methodologies to validate and procedures to operate the tools so that the identified outcomes from the analysis are not dependent on the tool or the way the tool was used or initialized."

Under the section of "Other Examples …"

3rd Bullet: Add a sentence after the first sentence "The probabilistic methodology shall not ignore specific cases that would result in significant load dump or cascading outrages. Each region shall identify how to resolve such outages." The last sentence "Acceptable levels of risk in terms of maximum consequential and programmatic load dump and maximum durations for the outages shall be defined."

5th bullet: Clarify that the "applicable ratings" for multiple events should be consistent with supplying firm load and firm transactions until the outages are repaired or switching mitigates the overloads. For example, one applicable rating would be the short time rating of equipment that was stressed when a transformer failed. However, there must be a method of supplying the load pocket for the duration to repair/replace the transformer that does not involve long term rotating blackouts. Just achieving "no cascading outages" is not sufficient.

New section: The subject of assuring the generation is deliverable to the load should be added. This should not be vague but should be defined by a specific set of tests and the expected range of results. In doing these tests, reliance on capacity assigned to other regions should be limited to amounts identified and accepted by adjacent regions. For example, if a region is assuming it will have net purchases from adjacent regions, the other regions must show a net sale.

Note – This form is to comment on **Version 2** of the **"Assess Transmission Future Needs and Develop Transmission Plans"** SAR.

The latest version of this SAR **(**TRNS_NDS_&_PLNS_01_02**)** is posted on the Standards web site at: http://www.nerc.com/~filez/standards/Assess-Transmission-Future-Needs.html

E-mail this form between May 1 and May 31, 2004 to: sarcomm@nerc.com with "Comments" in the subject line.

If you have any questions about this Standards Draft Comment Form, please contact the Director of Standards – Gerry Cauley at 609-452-8060.

Background:

Version 1 of the **"Assess Transmission Future Needs and Develop Transmission Plans"** SAR was posted for a 30-day public comment period between April 2 and May 3, 2002. This first version was an abbreviated SAR, which included an "Industry Need" statement and a brief description of the proposed standard, but did not include a detailed description. The purpose of this first posting was to collect feedback from the industry on the following questions:

- Is there a reliability-related need for an Organization Standard to be developed on this topic?

If there is such a need, how should the scope of the SAR be changed?

- The scope of the SAR is fine as is
- The scope of the SAR should be expanded to include…..
- The scope of the SAR should be reduced to eliminate……

In January 2004, the Standards Authorization Committee (SAC) appointed a Drafting Team (DT) to address industry answers and comments to the questions posed. The DT was also charged with refining the SAR and drafting a detailed description of the proposed standard in preparation for the 2nd posting of the SAR.

Most of the industry respondents indicated that there is indeed a reliability-related need to develop a standard to address transmission assessment and planning issues. Comments were received from many different sources, including individuals, small and large utilities, groups of utilities, and Regional Councils. The SAR DT considered the comments submitted by each industry participant, and revised the SAR to conform to the changes that were technically sound and appeared to represent a consensus of participants.

The revised SAR (Version 2) is posted on the NERC web site given in the blue box at the top of this form. Also posted is a Consideration of Comments document, in which the DT has responded to the original industry comments from 2002. You can find Version 1 of the SAR and industry comments on this version at the same web location.

Please review Version 2 of the SAR and complete this Comment Form to let the SAR DT know if you agree or disagree with the SAR DT's assessment that this SAR is ready to be developed into a Standard.

Commenter Information (For Individual Commenters)
Name: Kirit S. Shah
Organization: Ameren
Industry Segment #: 1
Telephone: (314) 554-3542
E-mail: kshah@ameren.com

Key to Industry Segment #'s:

- **1 – Trans. Owners**
- **2 – RTO's, ISO's, RRC's**
- **3 – LSE's**
- **4 – TDU's**
- **5 - Generators**
- 6 - Brokers, Aggregators, and Marketers
- **7 - Large Electricity End Users**
- **8 - Small Electricity Users**
- 9 - Federal, State, and Provincial Regulatory or other Govt. Entities

STD Commenter Information (For Groups Submitting Group Comments)	
Name of Group:	**Group Chair:** **Chair Phone:** **Chair Email:**

List of Group Participants that Support These Comments:

Name	**Company**	**Industry Segment #**

Please Review Version 2 of the SAR and Answer the Following Questions

Insert a "check' mark in the appropriate boxes by double-clicking the gray areas.

1. Some members of the SAR drafting team believe that certain Category C events, as defined in Table 1 of existing Planning Standard I.A, are much less likely to occur than other events in Category C. It is felt that certain specific Cat. C events could be re-classified as Cat. D upon showing a low probability of occurrence (and low consequence) of these events.

   (a). Do you believe that the events in Categories B, C & D are classified correctly?

   ☐ Yes

   ☒ No

   ☐ Comments:

   (b). If your answer to (a) is No, how would you re-classify the events? If you have data to support your answer, please provide contact information for the individual responsible for the data.

   All category C outages that have a direct impact on serving load because of the system configuration (straight bus or tapped load) should be reclassified, including C-1, C-2, C-5, and C-9 to provide more latitude. For category C events, we should be more concerned that the system holds together and not that the local load may be at risk for these multiple contingency events.

   (c) Which of the following approaches do you favor regarding Table 1 of existing Planning Standard I.A?:

   ☒ Keep the same categories as now exist and re-classify the low probability (and low consequence) events as Category D events.

   Please explain your choice: Reclassify C-1,C-2, and C-9 to category D (less probable events).

   C-3 (line and a generator combination) should be reclassified as category B event (more probable than other C-3 events. Also, why is a loss of a tower line with two circuits category C (C-5) while loss of a tower line with 3 circuits is category D (D-6), though a probability of loss of a tower line may be the same ? We may want to be consistent in categorizing the event – loss of a multi-circuit tower line.

   ☐ Create a new category between C and D with performance characteristics between that of the present Categories C and D.

   Please explain your choice

   ☐ Keep the same categories as now exist, but allow for "good cause exceptions" upon a showing of low probability of occurrence (and low consequence) of specific Category C events.

   Please explain your choice:

   ☐ Comments:

2. Do you believe the standard should include requirements for reporting on the progress or status of *implementing* the plans developed in accordance with this standard?

☒ Yes

☐ No

☒ Comments: The requirement should not be onerous.

3. If your answer to question 2 is Yes, given that transmission plans change over time as modeling assumptions, systems and plans change, how would you propose accounting for changes in a Transmission Plan?

   (i) Annual update with a short note to document changes.
   (ii) Smaller projects (cap bank addition, change of terminal equipment like switches, wavetrap, or CT) may be combined as a group in such reporting to avoid providing a long list of updates.

4. Existing Planning Standard I.A requires: *"The systems must be capable of meeting Category C requirements while accommodating the planned (including maintenance) outage of any bulk electric equipment (including protection systems or their components) at those demand levels for which planned (including maintenance) outages are performed".*

   The SAR drafting team believes that it is impractical to exhaustively test for every contingency described in each category plus every conceivable planned outage. Should the requirement to consider planned outages in addition to each Category A through D contingency remain part of this planning standard?

   ☐ Yes (consider planned outages in all Categories A through D).

   ☐ Yes (consider planned outages in some Categories only).

   Please specify which Categories:

   ☒ No

   ☒ Comments: (i) Is the issue planning the system or granting the outage? Local load may be exposed for granting a maintenance/construction outage, but the system should not be at risk.

   (ii) If the system is planned with category C requirements, in most cases it should meet category A and B requirements during a planned outage. To meet requirements of categories A and B during planned outage should be adequate.

5. Are you aware of any Regional or Interconnection differences in the requirements for assessing and planning transmission systems in North America? If so, please list and explain.

   ☐ Comments:

6. Do you have any other comments on the SAR?

   ☒ Comments:

   A. We believe that for planning of robust transmission system, the Standard should include (1) some incremental transfer capability requirement in addition to what is "projected" or modeled in the base case, (2) a combination of a line and a generator outage should be included in category B.

   B. Page SAR-4, Paragraph 2, last phrase states that " …there is no intent to exclude appropriate operating procedures…". What is "appropriate"? Could generation redispatch be an appropriate operating procedure? If yes, what level of redispatch is appropriate?

The standard should include definition of "appropriateness" of operating procedures so that they are developed and applied on an uniform and consistent basis.

C. Page SAR-4, Paragraph 4: Should the requirements be applied to Transmission Owners also?

D. Page SAR-4, Paragraph 6, Why document and disclose of methodology limited to planned generation only? What about planned transmission and interchange? Is it because there is more uncertainty for speculative generation than transmission? What about differences in modeling details require for different type of analyses, such as thermal or voltage, regional or local? It is our experience that more detailed representation (lower voltage facilities) is required for voltage analysis than thermal analysis. Perhaps the standard should state that additional detail may need to be added to the model to adequately represent the system for specific studies.

E. Page SAR-5, Paragraph 1: If generation is considered in lieu of transmission reinforcement, the system must be able to withstand the loss of that generation plus another single contingency. The reason for this is that generation can be on or off due to economic and other factors after its installation, while transmission is almost always "on".

F. Other example of areas that should be considered for clarification is :

The "projected level of transfers" defined in the Standard – what does this include? Should it include/consider all transmission reservations including roll-over-rights?

G. SAR-5, Bullet #1: In addition to the definition of "cascading outages" , clarification is needed for identification of a cascading state. For example, we are not sure that assumption of some percent overload, say 125% of emergency rating, is a good proxy for cascading.

H. Page SAR-5, Bullet# 3: the second statement states that "The minimum requirements of probabilistic methods are the contingencies as described in Table 1 of existing Planning Standard I.A. " Does this mean that probability should be assigned to at least all of the contingencies included in Table I.A.?

I. Page SAR-5, Bullet #3: We believe that defining acceptable levels of risk will be a major undertaking. Isn't the level of risk is dependent upon the entity and/or perception? Using a deterministic methodology in the planning horizon for single contingency provides a margin to handle many multiple unplanned facility outages or unforeseen system conditions in operating horizon.

J. Page SAR-5, Bullet# 4: Planned outages for maintenance or construction are generally managed in the operating horizon, and are granted only during specific load levels (off-peak), generation patterns, and interchange patterns when the transmission system is not expected to be fully utilized. We agree that clarification should be provided on how this information should be used in an assessment. However, as the scope of planning assessments is for the planning horizon of one year or more (SAR-4, paragraph 2) and not the operating horizon, we do not believe that the requirement for planning for maintenance outages should be included in planning assessments.

K. Page SAR-5, Bullet# 5: We agree that some of the contingency categories should be reviewed. See our response to Item 1 C.

L. Page SAR-5, Bullet# 6: We assume that short circuit current refers to fault duty or interrupting current.

Note – This form is to comment on **Version 2** of the **"Assess Transmission Future Needs and Develop Transmission Plans"** SAR.

The latest version of this SAR **(**TRNS_NDS_&_PLNS_01_02**)** is posted on the Standards web site at: http://www.nerc.com/~filez/standards/Assess-Transmission-Future-Needs.html

E-mail this form between May 5 and June 5, 2004 to: sarcomm@nerc.com with "Comments" in the subject line.

If you have any questions about this Standards Draft Comment Form, please contact the Director of Standards – Gerry Cauley at 609-452-8060.

Background:

Version 1 of the **"Assess Transmission Future Needs and Develop Transmission Plans"** SAR was posted for a 30-day public comment period between April 2 and May 3, 2002. This first version was an abbreviated SAR, which included an "Industry Need" statement and a brief description of the proposed standard, but did not include a detailed description. The purpose of this first posting was to collect feedback from the industry on the following questions:

- Is there a reliability-related need for an Organization Standard to be developed on this topic?

If there is such a need, how should the scope of the SAR be changed?

- The scope of the SAR is fine as is
- The scope of the SAR should be expanded to include…..
- The scope of the SAR should be reduced to eliminate……

In January 2004, the Standards Authorization Committee (SAC) appointed a Drafting Team (DT) to address industry answers and comments to the questions posed. The DT was also charged with refining the SAR and drafting a detailed description of the proposed standard in preparation for the 2nd posting of the SAR.

Most of the industry respondents indicated that there is indeed a reliability-related need to develop a standard to address transmission assessment and planning issues. Comments were received from many different sources, including individuals, small and large utilities, groups of utilities, and Regional Councils. The SAR DT considered the comments submitted by each industry participant, and revised the SAR to conform to the changes that were technically sound and appeared to represent a consensus of participants.

The revised SAR (Version 2) is posted on the NERC web site given in the blue box at the top of this form. Also posted is a Consideration of Comments document, in which the DT has responded to the original industry comments from 2002. You can find Version 1 of the SAR and industry comments on this version at the same web location.

Please review Version 2 of the SAR and complete this Comment Form to let the SAR DT know if you agree or disagree with the SAR DT's assessment that this SAR is ready to be developed into a Standard.

Commenter Information (For Individual Commenters)
Name: Jim Useldinger Organization: Kansas City Power & Light Industry Segment #: 1 Telephone: 816-654-1212 E-mail: jim.useldinger@kcpl.com

Key to Industry Segment #'s:

1 – Trans. Owners
2 – RTO's, ISO's, RRC's
3 – LSE's
4 – TDU's
5 - Generators
6 - Brokers, Aggregators, and Marketers
7 - Large Electricity End Users
8 - Small Electricity Users
9 - Federal, State, and Provincial Regulatory or other Govt. Entities

STD Commenter Information (For Groups Submitting Group Comments)	
Name of Group:	**Group Chair:** **Chair Phone:** **Chair Email:**

List of Group Participants that Support These Comments:

Name	**Company**	**Industry Segment #**

Please Review Version 2 of the SAR and Answer the Following Questions

Insert a "check' mark in the appropriate boxes by double-clicking the gray areas.

1. Some members of the SAR drafting team believe that certain Category C events, as defined in Table 1 of existing Planning Standard I.A, are much less likely to occur than other events in Category C. It is felt that certain specific Cat. C events could be re-classified as Cat. D upon showing a low probability of occurrence (and low consequence) of these events.

   (a). Do you believe that the events in Categories B, C & D are classified correctly?

   ☒ Yes

   ☐ No

   ☐ Comments:

   (b). If your answer to (a) is No, how would you re-classify the events? If you have data to support your answer, please provide contact information for the individual responsible for the data.

   (c) Which of the following approaches do you favor regarding Table 1 of existing Planning Standard I.A?:

   ☐ Keep the same categories as now exist and re-classify the low probability (and low consequence) events as Category D events.

   Please explain your choice:

   ☐ Create a new category between C and D with performance characteristics between that of the present Categories C and D.

   Please explain your choice

   ☒ Keep the same categories as now exist, but allow for "good cause exceptions" upon a showing of low probability of occurrence (and low consequence) of specific Category C events.

   Please explain your choice: KCP&L supports the recommendation that the Standard should allow for the development and use of probabilistic planning methods in reliability assessment.

   ☒ Comments: KCP&L does not support any reclassification of the existing Category's. The probability of occurrence of some contingencies may, in actuality, be very low. However, this should not diminish the importance of their assessment in the Category that they are currently found.

2. Do you believe the standard should include requirements for reporting on the progress or status of *implementing* the plans developed in accordance with this standard?

   ☒ Yes

   ☐ No

☒ Comments:

KCP&L supports a requirement for reporting the status of implementing the mitigation plans. On a regional basis, mitigation plans should be reported by the Transmission Planner, as a minimum, on an annual basis through the regional model building process and assessed through the regional assessment studies performed by the Regional Reliability Coordinator.

3. If your answer to question 2 is Yes, given that transmission plans change over time as modeling assumptions, systems and plans change, how would you propose accounting for changes in a Transmission Plan?

   Any out-of-cycle changes to the mitigation plan should be reported to the Reliability Coordinator and re-evaluated on an as-needed basis. Coordinated planning between other regions and entities will be critical.

4. Existing Planning Standard I.A requires: *"The systems must be capable of meeting Category C requirements while accommodating the planned (including maintenance) outage of any bulk electric equipment (including protection systems or their components) at those demand levels for which planned (including maintenance) outages are performed".*

   The SAR drafting team believes that it is impractical to exhaustively test for every contingency described in each category plus every conceivable planned outage. Should the requirement to consider planned outages in addition to each Category A through D contingency remain part of this planning standard?

   ☐ Yes (consider planned outages in all Categories A through D).

   ☐ Yes (consider planned outages in some Categories only).

   Please specify which Categories:

   ☒ No

   ☐ Comments:

   Planned outages are typically short-term (less than 1 year) and should be considered in the operating horizon. A planned outage is typically allowed during system load conditions when they will have minimal impact on the system.

   KCP&L would prefer to clarify the existing Category B contingency that states "Loss of an element without a fault" be listed as the B5 contingency on the Table. Then, in Category C under Contingency 3, the revised wording should read "3. Category B (B1, B2, B3, B4, or B5) contingency, manual system adjustments, followed by another Category B (B1, B2, B3, B4, or B5) contingency. This will allow for the first contingency to include a planned outage (B5 without a fault) as well as a contingency with one of the fault conditions described in B1, B2, B3, and B4.

5. Are you aware of any Regional or Interconnection differences in the requirements for assessing and planning transmission systems in North America? If so, please list and explain.

   ☒ Comments:

   KCP&L is aware of neighboring regional council differences in classification of Category B and C contingencies between SPP and MAPP.

6. Do you have any other comments on the SAR?

☒ Comments:

In regards to developing accurate regional models, all known firm transmission service including rollover provisions for all firm transmission service should be included in the base case models.

Note – This form is to comment on **Version 2** of the **"Assess Transmission Future Needs and Develop Transmission Plans"** SAR.

The latest version of this SAR **(**TRNS_NDS_&_PLNS_01_02**)** is posted on the Standards web site at: http://www.nerc.com/~filez/standards/Assess-Transmission-Future-Needs.html

E-mail this form between May 5 and June 5, 2004 to: sarcomm@nerc.com with "Comments" in the subject line.

If you have any questions about this Standards Draft Comment Form, please contact the Director of Standards – Gerry Cauley at 609-452-8060.

Background:

Version 1 of the **"Assess Transmission Future Needs and Develop Transmission Plans"** SAR was posted for a 30-day public comment period between April 2 and May 3, 2002. This first version was an abbreviated SAR, which included an "Industry Need" statement and a brief description of the proposed standard, but did not include a detailed description. The purpose of this first posting was to collect feedback from the industry on the following questions:

- Is there a reliability-related need for an Organization Standard to be developed on this topic?

If there is such a need, how should the scope of the SAR be changed?

- The scope of the SAR is fine as is
- The scope of the SAR should be expanded to include…..
- The scope of the SAR should be reduced to eliminate……

In January 2004, the Standards Authorization Committee (SAC) appointed a Drafting Team (DT) to address industry answers and comments to the questions posed. The DT was also charged with refining the SAR and drafting a detailed description of the proposed standard in preparation for the 2nd posting of the SAR.

Most of the industry respondents indicated that there is indeed a reliability-related need to develop a standard to address transmission assessment and planning issues. Comments were received from many different sources, including individuals, small and large utilities, groups of utilities, and Regional Councils. The SAR DT considered the comments submitted by each industry participant, and revised the SAR to conform to the changes that were technically sound and appeared to represent a consensus of participants.

The revised SAR (Version 2) is posted on the NERC web site given in the blue box at the top of this form. Also posted is a Consideration of Comments document, in which the DT has responded to the original industry comments from 2002. You can find Version 1 of the SAR and industry comments on this version at the same web location.

Please review Version 2 of the SAR and complete this Comment Form to let the SAR DT know if you agree or disagree with the SAR DT's assessment that this SAR is ready to be developed into a Standard.

Commenter Information (For Individual Commenters)
Name: Donald D. Taylor, PE, NSPE Organization: Westar Energy, Inc. Industry Segment #: 1 Telephone: 785-575-6430 E-mail: Don_Taylor@wr.com

Key to Industry Segment #'s:

- **1 – Trans. Owners**
- **2 – RTO's, ISO's, RRC's**
- **3 – LSE's**
- **4 – TDU's**
- **5 - Generators**
- 6 - Brokers, Aggregators, and Marketers
- **7 - Large Electricity End Users**
- **8 - Small Electricity Users**
- 9 - Federal, State, and Provincial Regulatory or other Govt. Entities

STD Commenter Information (For Groups Submitting Group Comments)	
Name of Group:	**Group Chair:** **Chair Phone:** **Chair Email:**

List of Group Participants that Support These Comments:		
Name	**Company**	**Industry Segment #**

Please Review Version 2 of the SAR and Answer the Following Questions

Insert a "check' mark in the appropriate boxes by double-clicking the gray areas.

1. Some members of the SAR drafting team believe that certain Category C events, as defined in Table 1 of existing Planning Standard I.A, are much less likely to occur than other events in Category C. It is felt that certain specific Cat. C events could be re-classified as Cat. D upon showing a low probability of occurrence (and low consequence) of these events.

   (a). Do you believe that the events in Categories B, C & D are classified correctly?

   ☒ Yes

   ☐ No

   ☒ Comments: "Loss of single component without a fault" should become Category B5 and be included in the listing of items in category C3.

   (b). If your answer to (a) is No, how would you re-classify the events? If you have data to support your answer, please provide contact information for the individual responsible for the data.

   (c) Which of the following approaches do you favor regarding Table 1 of existing Planning Standard I.A?:

   ☐ Keep the same categories as now exist and re-classify the low probability (and low consequence) events as Category D events.

   Please explain your choice:

   ☐ Create a new category between C and D with performance characteristics between that of the present Categories C and D.

   Please explain your choice

   ☒ Keep the same categories as now exist, but allow for "good cause exceptions" upon a showing of low probability of occurrence (and low consequence) of specific Category C events.

   Please explain your choice: Once an analysis has been performed, a subsequent "assessment" can easily dismiss low consequence events. However, low probability with high consequence should not be granted an exception. The initial premise of the Planning Standards did not contemplate probabilistic or Monte Carlo analysis.

   ☒ Comments: "Good Cause Exception" must be carefully defined before entities are allowed to shield high consequence events regardless of probability of occurence.

2. Do you believe the standard should include requirements for reporting on the progress or status of *implementing* the plans developed in accordance with this standard?

   ☒ Yes

   ☐ No

☐ Comments: Having a "plan" that is not implemented is of no value.

3. If your answer to question 2 is Yes, given that transmission plans change over time as modeling assumptions, systems and plans change, how would you propose accounting for changes in a Transmission Plan?

   In the annual process to update power flow models, there are necessarily changes to the load forecast, use of the interconnected network, and financial constraints which must be taken into account. Reporting to the Regional Reliability Organization should include a discussion of substantive changes and reasons behind them. There should not be a judgment made by the RRO that the explanation is "adequate" so long as the explanation is made. The changes are critical information that must be taken into account when evaluating transmission service requests. Reporting should not be more frequent than the model-building cycle.

   Existing Planning Standard I.A requires: *"The systems must be capable of meeting Category C requirements while accommodating the planned (including maintenance) outage of any bulk electric equipment (including protection systems or their components) at those demand levels for which planned (including maintenance) outages are performed".*

   The SAR drafting team believes that it is impractical to exhaustively test for every contingency described in each category plus every conceivable planned outage. Should the requirement to consider planned outages in addition to each Category A through D contingency remain part of this planning standard?

   ☒ Yes (consider planned outages in all Categories A through D).

   ☐ Yes (consider planned outages in some Categories only).

   Please specify which Categories: Categories A through C.

   ☐ No

   ☒ Comments: The notion of including maintenance outages is to ensure that system restorations correctly evaluate single elements that would be removed in groups under a breaker-to-breaker outage analysis. The intent should not be to have any single element out for maintenance AND withstand the next contingency and should be stated as such.

4. Are you aware of any Regional or Interconnection differences in the requirements for assessing and planning transmission systems in North America? If so, please list and explain.

   ☒ Comments: Yes. MAPP categorizes some contingencies differently.

5. Do you have any other comments on the SAR?

   ☒ Comments: How will this SAR integrate with the Version 0 Standards?

Note – This form is to comment on **Version 2** of the **"Assess Transmission Future Needs and Develop Transmission Plans"** SAR.

The latest version of this SAR **(**TRNS_NDS_&_PLNS_01_02**)** is posted on the Standards web site at: http://www.nerc.com/~filez/standards/Assess-Transmission-Future-Needs.html

E-mail this form between May 5 and June 5, 2004 to: sarcomm@nerc.com with "Comments" in the subject line.

If you have any questions about this Standards Draft Comment Form, please contact the Director of Standards – Gerry Cauley at 609-452-8060.

Background:

Version 1 of the **"Assess Transmission Future Needs and Develop Transmission Plans"** SAR was posted for a 30-day public comment period between April 2 and May 3, 2002. This first version was an abbreviated SAR, which included an "Industry Need" statement and a brief description of the proposed standard, but did not include a detailed description. The purpose of this first posting was to collect feedback from the industry on the following questions:

- Is there a reliability-related need for an Organization Standard to be developed on this topic?

If there is such a need, how should the scope of the SAR be changed?

- The scope of the SAR is fine as is
- The scope of the SAR should be expanded to include…..
- The scope of the SAR should be reduced to eliminate……

In January 2004, the Standards Authorization Committee (SAC) appointed a Drafting Team (DT) to address industry answers and comments to the questions posed. The DT was also charged with refining the SAR and drafting a detailed description of the proposed standard in preparation for the 2nd posting of the SAR.

Most of the industry respondents indicated that there is indeed a reliability-related need to develop a standard to address transmission assessment and planning issues. Comments were received from many different sources, including individuals, small and large utilities, groups of utilities, and Regional Councils. The SAR DT considered the comments submitted by each industry participant, and revised the SAR to conform to the changes that were technically sound and appeared to represent a consensus of participants.

The revised SAR (Version 2) is posted on the NERC web site given in the blue box at the top of this form. Also posted is a Consideration of Comments document, in which the DT has responded to the original industry comments from 2002. You can find Version 1 of the SAR and industry comments on this version at the same web location.

Please review Version 2 of the SAR and complete this Comment Form to let the SAR DT know if you agree or disagree with the SAR DT's assessment that this SAR is ready to be developed into a Standard.

Commenter Information (For Individual Commenters)
Name: Ed Davis
Organization: Entergy Services, Inc
Industry Segment #: 1 – Trans. Owner
Telephone: 504-310-5884
E-mail: edavis@entergy.com

Key to Industry Segment #'s:

- **1 – Trans. Owners**
- **2 – RTO's, ISO's, RRC's**
- **3 – LSE's**
- **4 – TDU's**
- **5 - Generators**
- 6 - Brokers, Aggregators, and Marketers
- **7 - Large Electricity End Users**
- **8 - Small Electricity Users**
- 9 - Federal, State, and Provincial Regulatory or other Govt. Entities

STD Commenter Information (For Groups Submitting Group Comments)	
Name of Group:	**Group Chair:** **Chair Phone:** **Chair Email:**

List of Group Participants that Support These Comments:

Name	Company	Industry Segment #

Please Review Version 2 of the SAR and Answer the Following Questions

Insert a "check' mark in the appropriate boxes by double-clicking the gray areas.

1. Some members of the SAR drafting team believe that certain Category C events, as defined in Table 1 of existing Planning Standard I.A, are much less likely to occur than other events in Category C. It is felt that certain specific Cat. C events could be re-classified as Cat. D upon showing a low probability of occurrence (and low consequence) of these events.

   (a). Do you believe that the events in Categories B, C & D are classified correctly?

   ☒ Yes

   ☐ No

   ☒ Comments:

   - Entergy believes that Category C events are more likely to occur than Category D events and should require higher performance expectations.

   (b). If your answer to (a) is No, how would you re-classify the events? If you have data to support your answer, please provide contact information for the individual responsible for the data.

   (c) Which of the following approaches do you favor regarding Table 1 of existing Planning Standard I.A?:

   ☐ Keep the same categories as now exist and re-classify the low probability (and low consequence) events as Category D events.

   Please explain your choice:

   ☐ Create a new category between C and D with performance characteristics between that of the present Categories C and D.

   Please explain your choice

   ☐ Keep the same categories as now exist, but allow for "good cause exceptions" upon a showing of low probability of occurrence (and low consequence) of specific Category C events.

   Please explain your choice:

   ☒ Comments:

   - Entergy agrees that low consequence Category C events should be considered compliant. However, as we interpret Table I, a Category C

event that results in low consequences (e.g. no cascading) is already considered compliant since entities can drop load or curtail firm transfers to return to applicable thermal or voltage ratings.

2. Do you believe the standard should include requirements for reporting on the progress or status of *implementing* the plans developed in accordance with this standard?

   ☐ Yes

   ☒ No

   ☐ Comments:

3. If your answer to question 2 is Yes, given that transmission plans change over time as modeling assumptions, systems and plans change, how would you propose accounting for changes in a Transmission Plan?

4. Existing Planning Standard I.A requires: *"The systems must be capable of meeting Category C requirements while accommodating the planned (including maintenance) outage of any bulk electric equipment (including protection systems or their components) at those demand levels for which planned (including maintenance) outages are performed".*

   The SAR drafting team believes that it is impractical to exhaustively test for every contingency described in each category plus every conceivable planned outage. Should the requirement to consider planned outages in addition to each Category A through D contingency remain part of this planning standard?

   ☐ Yes (consider planned outages in all Categories A through D).

   ☒ Yes (consider planned outages in some Categories only).

   Please specify which Categories:

   ☐ No

   ☒ Comments:

   - It is not necessary to include planned maintenance outages in addition to Category A (no contingencies) because Category A plus planned outages equals Category B (single contingency). Therefore inclusion of maintenance outages in Category A is superfluous. The current standards do not require planned outages with Category A for that very reason.

Maintenance outages should be considered for only Category B and C contingencies.

Category D recognizes that cascading will occur in conjunction with the contingencies, so adding on more planned outages seems unnecessary, especially since Category D outages are very low probability events.

5. Are you aware of any Regional or Interconnection differences in the requirements for assessing and planning transmission systems in North America? If so, please list and explain.

   ☐ Comments:

6. Do you have any other comments on the SAR?

   ☒ Comments:

   - Entergy agrees the standard should not address resource planning. However, the standard should include requirements for the LSEs to provide forecast resource data required to develop power flow models. Accordingly, this standard should also apply to LSEs.

   - In addition, the standard should require the Transmission Planner to document and describe the methodology used to plan the transmission system around the generation dispatch assumptions used by the Transmission Planner to meet the LSE load when and if the LSE provided resources do not equal the LSE provided load.

Note – This form is to comment on **Version 2** of the **"Assess Transmission Future Needs and Develop Transmission Plans"** SAR.

The latest version of this SAR **(**TRNS_NDS_&_PLNS_01_02**)** is posted on the Standards web site at: http://www.nerc.com/~filez/standards/Assess-Transmission-Future-Needs.html

E-mail this form between May 5 and June 5, 2004 to: sarcomm@nerc.com with "Comments" in the subject line.

If you have any questions about this Standards Draft Comment Form, please contact the Director of Standards – Gerry Cauley at 609-452-8060.

Background:

Version 1 of the **"Assess Transmission Future Needs and Develop Transmission Plans"** SAR was posted for a 30-day public comment period between April 2 and May 3, 2002. This first version was an abbreviated SAR, which included an "Industry Need" statement and a brief description of the proposed standard, but did not include a detailed description. The purpose of this first posting was to collect feedback from the industry on the following questions:

- Is there a reliability-related need for an Organization Standard to be developed on this topic?

If there is such a need, how should the scope of the SAR be changed?

- The scope of the SAR is fine as is
- The scope of the SAR should be expanded to include…..
- The scope of the SAR should be reduced to eliminate……

In January 2004, the Standards Authorization Committee (SAC) appointed a Drafting Team (DT) to address industry answers and comments to the questions posed. The DT was also charged with refining the SAR and drafting a detailed description of the proposed standard in preparation for the 2nd posting of the SAR.

Most of the industry respondents indicated that there is indeed a reliability-related need to develop a standard to address transmission assessment and planning issues. Comments were received from many different sources, including individuals, small and large utilities, groups of utilities, and Regional Councils. The SAR DT considered the comments submitted by each industry participant, and revised the SAR to conform to the changes that were technically sound and appeared to represent a consensus of participants.

The revised SAR (Version 2) is posted on the NERC web site given in the blue box at the top of this form. Also posted is a Consideration of Comments document, in which the DT has responded to the original industry comments from 2002. You can find Version 1 of the SAR and industry comments on this version at the same web location.

Please review Version 2 of the SAR and complete this Comment Form to let the SAR DT know if you agree or disagree with the SAR DT's assessment that this SAR is ready to be developed into a Standard.

Commenter Information (For Individual Commenters)
Name: K. Bachor, Dir. of Transmission Services S. Wallace, Dir. of System Operations Organization: Seminole Electric Cooperative Industry Segment #: 4 Telephone: (813) 963-0994 E-mail:

Key to Industry Segment #'s:

1 – Trans. Owners
2 – RTO's, ISO's, RRC's
3 – LSE's
4 – TDU's
5 - Generators
6 - Brokers, Aggregators, and Marketers
7 - Large Electricity End Users
8 - Small Electricity Users
9 - Federal, State, and Provincial Regulatory or other Govt. Entities

STD Commenter Information (For Groups Submitting Group Comments)	
Name of Group:	**Group Chair:** **Chair Phone:** **Chair Email:**

List of Group Participants that Support These Comments:

Name	**Company**	**Industry Segment #**

Please Review Version 2 of the SAR and Answer the Following Questions

Insert a "check' mark in the appropriate boxes by double-clicking the gray areas.

1. Some members of the SAR drafting team believe that certain Category C events, as defined in Table 1 of existing Planning Standard I.A, are much less likely to occur than other events in Category C. It is felt that certain specific Cat. C events could be re-classified as Cat. D upon showing a low probability of occurrence (and low consequence) of these events.

   (a). Do you believe that the events in Categories B, C & D are classified correctly?

   ☐ Yes

   ☐ No

   ☐ Comments:

   (b). If your answer to (a) is No, how would you re-classify the events? If you have data to support your answer, please provide contact information for the individual responsible for the data.

   (c) Which of the following approaches do you favor regarding Table 1 of existing Planning Standard I.A?:

   ☐ Keep the same categories as now exist and re-classify the low probability (and low consequence) events as Category D events.

   Please explain your choice:

   ☐ Create a new category between C and D with performance characteristics between that of the present Categories C and D.

   Please explain your choice

   ☐ Keep the same categories as now exist, but allow for "good cause exceptions" upon a showing of low probability of occurrence (and low consequence) of specific Category C events.

   Please explain your choice:

   ☐ Comments:

2. Do you believe the standard should include requirements for reporting on the progress or status of *implementing* the plans developed in accordance with this standard?

   ☐ Yes

   ☐ No

   ☐ Comments:

3. If your answer to question 2 is Yes, given that transmission plans change over time as modeling assumptions, systems and plans change, how would you propose accounting for changes in a Transmission Plan?

4. Existing Planning Standard I.A requires: *"The systems must be capable of meeting Category C requirements while accommodating the planned (including maintenance) outage of any bulk electric equipment (including protection systems or their components) at those demand levels for which planned (including maintenance) outages are performed".*

   The SAR drafting team believes that it is impractical to exhaustively test for every contingency described in each category plus every conceivable planned outage. Should the requirement to consider planned outages in addition to each Category A through D contingency remain part of this planning standard?

   ☐ Yes (consider planned outages in all Categories A through D).

   ☐ Yes (consider planned outages in some Categories only).

   Please specify which Categories:

   ☐ No

   ☐ Comments:

5. Are you aware of any Regional or Interconnection differences in the requirements for assessing and planning transmission systems in North America? If so, please list and explain.

   X Comments:

   In Florida, with the state requirements for the siting of facilities, the planning horizon should be adjusted from 5 YRS to 8 YRS. The 5 YR horizon is too short for some major transmission line projects and/or studies of transmission interconnections/upgrades for base load central station generating facilities.

6. Do you have any other comments on the SAR?

   X Comments:

   - SAR Paragraph 6: " … the Standard shall require that system models be developed, maintained …"
     it is recommended that these models be "region-wide" system models that are developed utilizing a documented, consistent, region-wide criteria
   - SAR Paragraph 10: " … a representative sample covering critical operating conditions …"
     It is recommended that this standard include specific requirements; such as, at what load levels and how many different load levels is intended by this part of the SAR. A suggestion would be 100% and 80%, and perhaps the 60% load level.
   - SAR Paragraph 11 Bullet 4: Many grid operations difficulties occur when a line is scheduled out for maintenance. If this SAR is going to address required N-2 planning assessments, then it must be clear and specific regarding the conditions when N-2 assessments are appropriate and the specific criteria for N-2 assessments.

Additional Comments:

- The SAR should define specific planning voltage criteria for consistency between transmission owners/providers. Voltage Criteria should be specifically defined for normal condition and N-1 conditions and can be specified differently for:
    - Bulk power - non-load serving buses
    - Meshed/Looped - load serving buses
    - Radial - load serving buses
- The SAR should require joint transmission planning - at a minimum, joint transmission planning should be required between transmission service providers and their network service customers.

Note – This form is to comment on **Version 2** of the **"Assess Transmission Future Needs and Develop Transmission Plans"** SAR.

The latest version of this SAR **(**TRNS_NDS_&_PLNS_01_02**)** is posted on the Standards web site at: http://www.nerc.com/~filez/standards/Assess-Transmission-Future-Needs.html

E-mail this form between May 1 and May 31, 2004 to: sarcomm@nerc.com with "Comments" in the subject line.

If you have any questions about this Standards Draft Comment Form, please contact the Director of Standards – Gerry Cauley at 609-452-8060.

Background:

Version 1 of the **"Assess Transmission Future Needs and Develop Transmission Plans"** SAR was posted for a 30-day public comment period between April 2 and May 3, 2002. This first version was an abbreviated SAR, which included an "Industry Need" statement and a brief description of the proposed standard, but did not include a detailed description. The purpose of this first posting was to collect feedback from the industry on the following questions:

- Is there a reliability-related need for an Organization Standard to be developed on this topic?

If there is such a need, how should the scope of the SAR be changed?

- The scope of the SAR is fine as is
- The scope of the SAR should be expanded to include…..
- The scope of the SAR should be reduced to eliminate……

In January 2004, the Standards Authorization Committee (SAC) appointed a Drafting Team (DT) to address industry answers and comments to the questions posed. The DT was also charged with refining the SAR and drafting a detailed description of the proposed standard in preparation for the 2nd posting of the SAR.

Most of the industry respondents indicated that there is indeed a reliability-related need to develop a standard to address transmission assessment and planning issues. Comments were received from many different sources, including individuals, small and large utilities, groups of utilities, and Regional Councils. The SAR DT considered the comments submitted by each industry participant, and revised the SAR to conform to the changes that were technically sound and appeared to represent a consensus of participants.

The revised SAR (Version 2) is posted on the NERC web site given in the blue box at the top of this form. Also posted is a Consideration of Comments document, in which the DT has responded to the original industry comments from 2002. You can find Version 1 of the SAR and industry comments on this version at the same web location.

Please review Version 2 of the SAR and complete this Comment Form to let the SAR DT know if you agree or disagree with the SAR DT's assessment that this SAR is ready to be developed into a Standard.

Commenter Information (For Individual Commenters)
Name: Alan Adamson Organization: New York State Reliability Council Industry Segment # 2 Telephone: (518) 355-1937 E-mail: aadamson@nycap.rr.com

Key to Industry Segment #'s:

1 – Trans. Owners
2 – RTO's, ISO's, RRC's
3 – LSE's
4 – TDU's
5 - Generators
6 - Brokers, Aggregators, and Marketers
7 - Large Electricity End Users
8 - Small Electricity Users
9 - Federal, State, and Provincial Regulatory or other Govt. Entities

STD Commenter Information (For Groups Submitting Group Comments)	
Name of Group:	**Group Chair:** **Chair Phone:** **Chair Email:**

List of Group Participants that Support These Comments:

Name	**Company**	**Industry Segment #**

Please Review Version 2 of the SAR and Answer the Following Questions

General Comment: It is the New York State Reliability Council's (NYSRC) position that NERC should not weaken existing criteria, including the NERC Planning Standards listed in the SAR as the starting point to be used in drafting a new standard. Therefore, with the advent of the Version 0 standards, we believe that there is no longer a need for this SAR. The comments in the "Consideration of Industry Comments" paper indicate that comments received in 2002 on SAR Version 1 were in favor of a standard on transmission assessment and planning, which was the SAR DT's reason for preparing this SAR. However, the Version 0 standards development process will now provide a transmission planning standard, without requiring the preparation of this new SAR. The comments below support our position that the existing Planning Standards should not be weakened.

Insert a "check' mark in the appropriate boxes by double-clicking the gray areas.

1. Some members of the SAR drafting team believe that certain Category C events, as defined in Table 1 of existing Planning Standard I.A, are much less likely to occur than other events in Category C. It is felt that certain specific Cat. C events could be re-classified as Cat. D upon showing a low probability of occurrence (and low consequence) of these events.

   (a). Do you believe that the events in Categories B, C & D are classified correctly?

   ☒ Yes

   ☐ No

   ☐ Comments:

   (b). If your answer to (a) is No, how would you re-classify the events? If you have data to support your answer, please provide contact information for the individual responsible for the data.

   (c) Which of the following approaches do you favor regarding Table 1 of existing Planning Standard I.A?:

   ☐ Keep the same categories as now exist and re-classify the low probability (and low consequence) events as Category D events.

   Please explain your choice:

   ☐ Create a new category between C and D with performance characteristics between that of the present Categories C and D.

   Please explain your choice

   ☐ Keep the same categories as now exist, but allow for "good cause exceptions" upon a showing of low probability of occurrence (and low consequence) of specific Category C events.

   NYSRC Comment: In accordance with the NERC process for developing reliability standards, an entity may include a Regional Difference as part of the NERC standard if there is such a condition. Therefore, there is no need for the standard to include "good cause exceptions".

Please explain your choice:

☒ **NYSRC Comments:** Any of the above three choices would weaken the present NERC standards. Therefore, as answered in (a) above, there should be no changes to Categories B, C, and D as they now exist in the present Planning Standards.

2. Do you believe the standard should include requirements for reporting on the progress or status of *implementing* the plans developed in accordance with this standard?

   ☒ Yes

   ☐ No

   ☐ Comments:

3. If your answer to question 2 is Yes, given that transmission plans change over time as modeling assumptions, systems and plans change, how would you propose accounting for changes in a Transmission Plan?

   NYSRC Response: Updated transmission plans should be reported along with compliance assessments as required.

4. Existing Planning Standard I.A requires: *"The systems must be capable of meeting Category C requirements while accommodating the planned (including maintenance) outage of any bulk electric equipment (including protection systems or their components) at those demand levels for which planned (including maintenance) outages are performed".*

   The SAR drafting team believes that it is impractical to exhaustively test for every contingency described in each category plus every conceivable planned outage. Should the requirement to consider planned outages in addition to each Category A through D contingency remain part of this planning standard?

   ☒ Yes (consider planned outages in all Categories A through D).

   ☐ Yes (consider planned outages in some Categories only).

   Please specify which Categories:

   ☐ No

   ☒ **NYSRC Comment:** Again, the existing standards should not be weakened.

5. Are you aware of any Regional or Interconnection differences in the requirements for assessing and planning transmission systems in North America? If so, please list and explain.

   ☒ **NYSRC Comments:** It is the NYSRC's position that (1) NERC specifies minimum standards, (2) a Region may establish more stringent standards for its members separate from the NERC standards, and (3) it is unnecessary to include these more stringent standards within the framework of the NERC standards.

6. Do you have any other comments on the SAR?

   ☒ **NYSRC Comments:** As stated above, it is the NYSRC's position that there is no need to develop this SAR. However, despite this position, if the DT has sufficient support to go forward with a new standard, we have the following additional comments:

1. SAR-4: Third paragraph – insert "and plans" after "Assessments". The last sentence is not needed. A Region or other entity may have more stringent requirements than NERC – therefore, such a statement is not needed.
2. Fifth paragraph – define "applicable portion". List the specific standards and measurements that are intended to be used as the starting point.
3. Bottom of page - We agree that a transmission planning standard should not include Resource Planning requirements. However, the NYSRC strongly believes that NERC should develop a separate Resource Planning Standard.
4. SAR-5: first bullet – replace "provide" with "consider".
5. Third bullet – Is the probabilistic method referred to here considered a replacement for the NERC Criteria or a supplement to NERC Criteria? NERC should not allow such a method as a substitute for NERC criteria. I am not aware that NERC has completed an analysis to evaluate and compare the level of reliability of probabilistic criteria with NERC criteria. Such an evaluation would be needed.
6. Fifth bullet – This should be removed. This would be a weakening of the criteria.
7. The relationship with the Version 0 standards should recognized in the SAR, including the mechanism of how this "Version 1" standard would replace Version 0.

Note – This form is to comment on **Version 2** of the **"Assess Transmission Future Needs and Develop Transmission Plans"** SAR.

The latest version of this SAR **(**TRNS_NDS_&_PLNS_01_02**)** is posted on the Standards web site at: http://www.nerc.com/~filez/standards/Assess-Transmission-Future-Needs.html

E-mail this form between May 5 and June 5, 2004 to: sarcomm@nerc.com with "Comments" in the subject line.

If you have any questions about this Standards Draft Comment Form, please contact the Director of Standards – Gerry Cauley at 609-452-8060.

Background:

Version 1 of the **"Assess Transmission Future Needs and Develop Transmission Plans"** SAR was posted for a 30-day public comment period between April 2 and May 3, 2002. This first version was an abbreviated SAR, which included an "Industry Need" statement and a brief description of the proposed standard, but did not include a detailed description. The purpose of this first posting was to collect feedback from the industry on the following questions:

- Is there a reliability-related need for an Organization Standard to be developed on this topic?

If there is such a need, how should the scope of the SAR be changed?

- The scope of the SAR is fine as is
- The scope of the SAR should be expanded to include…..
- The scope of the SAR should be reduced to eliminate……

In January 2004, the Standards Authorization Committee (SAC) appointed a Drafting Team (DT) to address industry answers and comments to the questions posed. The DT was also charged with refining the SAR and drafting a detailed description of the proposed standard in preparation for the 2nd posting of the SAR.

Most of the industry respondents indicated that there is indeed a reliability-related need to develop a standard to address transmission assessment and planning issues. Comments were received from many different sources, including individuals, small and large utilities, groups of utilities, and Regional Councils. The SAR DT considered the comments submitted by each industry participant, and revised the SAR to conform to the changes that were technically sound and appeared to represent a consensus of participants.

The revised SAR (Version 2) is posted on the NERC web site given in the blue box at the top of this form. Also posted is a Consideration of Comments document, in which the DT has responded to the original industry comments from 2002. You can find Version 1 of the SAR and industry comments on this version at the same web location.

Please review Version 2 of the SAR and complete this Comment Form to let the SAR DT know if you agree or disagree with the SAR DT's assessment that this SAR is ready to be developed into a Standard.

Commenter Information (For Individual Commenters)
Name:
Organization:
Industry Segment #:
Telephone:
E-mail:

Key to Industry Segment #'s:

- **1 – Trans. Owners**
- **2 – RTO's, ISO's, RRC's**
- **3 – LSE's**
- **4 – TDU's**
- **5 - Generators**
- 6 - Brokers, Aggregators, and Marketers
- **7 - Large Electricity End Users**
- **8 - Small Electricity Users**
- 9 - Federal, State, and Provincial Regulatory or other Govt. Entities

STD Commenter Information (For Groups Submitting Group Comments)	
Name of Group: NPCC, **CP9 Reliability Standards Working Group**	**Group Chair: Guy Zito** **Chair Phone:212-840-1047** **Chair Email: gzito@npcc.org**

List of Group Participants that Support These Comments:

Name	Company	Industry Segment #
Roger Champagne	*TransEnergie (Quebec)*	*1*
Ralph Rufrano	*New York Power Authority*	*1*
David Kiguel	*Hydro One Netwoks (Ontario)*	*1*
David Little	*Nova Scotia Power*	*1*
Kathleen Goodman	*ISO New England*	*2*
Dan Stosick	*ISO New England*	*2*
Peter Lebro	*US National Grid*	*1*
James Pratico	*New York ISO*	*2*
Larry Eng	*Niagara Mohawk*	*1*
Khaqan Khan	*The Independent Electricity Market Operator IMO, Ontario*	*2*
Alan Adamson	*New York State Reliability Council*	*2*
Guy Zito, John Mosier, Brian Hogue (Staff)	*Northeast Power Coordinating Council*	*2*

Please Review Version 2 of the SAR and Answer the Following Questions

Insert a "check' mark in the appropriate boxes by double-clicking the gray areas.

General Comment: It is the opinion of the Northeast Power Coordinating Council's CP9 working group participating members that the existing NERC criteria should not be weakened, including the NERC Planning Standards listed in the SAR as the starting point to be used in drafting a new standard. The comments below support our position that the existing Planning Standards should not be weakened.

1. Some members of the SAR drafting team believe that certain Category C events, as defined in Table 1 of existing Planning Standard I.A, are much less likely to occur than other events in

Category C. It is felt that certain specific Cat. C events could be re-classified as Cat. D upon showing a low probability of occurrence (and low consequence) of these events.

(a). Do you believe that the events in Categories B, C & D are classified correctly?

☒ Yes

☐ No

☐ Comments:

(b). If your answer to (a) is No, how would you re-classify the events? If you have data to support your answer, please provide contact information for the individual responsible for the data.

(c) Which of the following approaches do you favor regarding Table 1 of existing Planning Standard I.A?:

☐ Keep the same categories as now exist and re-classify the low probability (and low consequence) events as Category D events.

Please explain your choice:

☐ Create a new category between C and D with performance characteristics between that of the present Categories C and D.

Please explain your choice

☐ Keep the same categories as now exist, but allow for "good cause exceptions" upon a showing of low probability of occurrence (and low consequence) of specific Category C events.

Please explain your choice:

☒ Comments:

NPCC believes that the relationship between the concept of the Version 0 Standards and all the developing Version 1 Standards needs to be consistent. The reliability attributes of the Version 0 standards must be "carried through and into" the Version 1 Standards and there needs to be coordination to ensure this occurs.

NPCC suggests leaving the categories as listed. Choice of any of the above would result in a weakened standard. We suggest no changes be made to Categories B, C, and D as they presently exist in the Planning Standards

2. Do you believe the standard should include requirements for reporting on the progress or status of *implementing* the plans developed in accordance with this standard?

☒ Yes

☐ No

☐ Comments:

3. If your answer to question 2 is Yes, given that transmission plans change over time as modeling assumptions, systems and plans change, how would you propose accounting for changes in a Transmission Plan?

In the northeast, the NPCC Annual Transmission Reviews address this and in addition NPCC keeps a "Major Projects List" to "track" BPS additions and modifications and includes transmission, generation and other major equipment identified as a BPS element.

NPCC suggests that the resultant NERC standard not be overly prescriptive in requirements for reporting progress/status on the standard and flexibility be afforded to allow various documentation and processes already in place to achieve compliance, and also we suggest it be done annually.

4. Existing Planning Standard I.A requires: *"The systems must be capable of meeting Category C requirements while accommodating the planned (including maintenance) outage of any bulk electric equipment (including protection systems or their components) at those demand levels for which planned (including maintenance) outages are performed".*

   The SAR drafting team believes that it is impractical to exhaustively test for every contingency described in each category plus every conceivable planned outage. Should the requirement to consider planned outages in addition to each Category A through D contingency remain part of this planning standard?

   ☐ Yes (consider planned outages in all Categories A through D).

   ☒ Yes (consider planned outages in some Categories only).

   Please specify which Categories:

   ☐ No

   ☒ Comments: We reiterate that the existing standards should not be weakened and request that the SAR be clarified to remove ambiguity regarding what is meant by "considering" a planned outage. Planned outages at present are considered however this is deemed an Operational Planning issue and is conducted so as to set Operational Limits for those conditions on a pre-contingency basis to allow for N-1 conditions.

   This particular SAR will ultimately result in a "planning" Reliability Standard. The wording, as it has been phrased, infers that the system must be planned, designed and built to N-2 standards (i.e. a line out for maintenance on top of a circuit element outage). Treatment of planned outages should be considered to some extent and NPCC suggests the drafting team receive direction from the SAC regarding planned outages. NPCC suggests that planned outages should be considered only in categories in A through C.

5. Are you aware of any Regional or Interconnection differences in the requirements for assessing and planning transmission systems in North America? If so, please list and explain.

   ☐ Comments:

6. Do you have any other comments on the SAR?

   ☒ Comments:

   NPCC also would like to submit its definition of Bulk Power System, as follows, and would like it to be considered as a "building block" for the NERC BES definition.

– **Bulk Power System-BPS-(or BES in NERC documents) — The interconnected electrical systems within northeastern North America comprising generation and transmission facilities on which faults or disturbances can have a significant adverse impact outside of the local area. In this context, local areas are determined by the Council members.**

– NPCC suggests that any discussion and resultant determination of a definition for Cascading Outage be fully coordinated with the STDs 200 and 600. NPCC had submitted a suggested definition for the last posting of STD 200;

  Cascading Outage- "The uncontrolled successive loss of Bulk Electric System elements that propagate beyond a defined area (Balancing Area's) boundaries."

Also NPCC recognizes that Resource Planning is not covered in the proposed Standard because it is considered as being handled by market mechanisms that are/will be in place or perhaps addressed in a separate standard. Therefore, NPCC assumes that the generation and load information required to perform the planning studies are provided as described in section II.A of the existing Planning Standards. If not, sections II.B, II.E and III of the existing Planning Standards should also be used as the starting point in drafting of the reliability requirements.

– NPCC is not in favor of removing references to "Applicable Ratings" as is suggested on SAR-5 fifth bullet. Despite the fact that the performance requirement would be "No Cascading Outages are Allowed", the "Applicable Ratings" should always be respected.

Note – This form is to comment on **Version 2** of the **"Assess Transmission Future Needs and Develop Transmission Plans"** SAR.

The latest version of this SAR **(**TRNS_NDS_&_PLNS_01_02**)** is posted on the Standards web site at: http://www.nerc.com/~filez/standards/Assess-Transmission-Future-Needs.html

E-mail this form between May 5 and June 5, 2004 to: sarcomm@nerc.com with "Comments" in the subject line.

If you have any questions about this Standards Draft Comment Form, please contact the Director of Standards – Gerry Cauley at 609-452-8060.

Background:

Version 1 of the **"Assess Transmission Future Needs and Develop Transmission Plans"** SAR was posted for a 30-day public comment period between April 2 and May 3, 2002. This first version was an abbreviated SAR, which included an "Industry Need" statement and a brief description of the proposed standard, but did not include a detailed description. The purpose of this first posting was to collect feedback from the industry on the following questions:

- Is there a reliability-related need for an Organization Standard to be developed on this topic?

If there is such a need, how should the scope of the SAR be changed?

- The scope of the SAR is fine as is
- The scope of the SAR should be expanded to include…..
- The scope of the SAR should be reduced to eliminate……

In January 2004, the Standards Authorization Committee (SAC) appointed a Drafting Team (DT) to address industry answers and comments to the questions posed. The DT was also charged with refining the SAR and drafting a detailed description of the proposed standard in preparation for the 2nd posting of the SAR.

Most of the industry respondents indicated that there is indeed a reliability-related need to develop a standard to address transmission assessment and planning issues. Comments were received from many different sources, including individuals, small and large utilities, groups of utilities, and Regional Councils. The SAR DT considered the comments submitted by each industry participant, and revised the SAR to conform to the changes that were technically sound and appeared to represent a consensus of participants.

The revised SAR (Version 2) is posted on the NERC web site given in the blue box at the top of this form. Also posted is a Consideration of Comments document, in which the DT has responded to the original industry comments from 2002. You can find Version 1 of the SAR and industry comments on this version at the same web location.

Please review Version 2 of the SAR and complete this Comment Form to let the SAR DT know if you agree or disagree with the SAR DT's assessment that this SAR is ready to be developed into a Standard.

Commenter Information (For Individual Commenters)
Name: Ken Githens Organization: Allegheny Energy Supply Industry Segment #: 5 Telephone: 412-858-1635 E-mail: kgithen@alleghenyenergy.com

Key to Industry Segment #'s:

1 – Trans. Owners
2 – RTO's, ISO's, RRC's
3 – LSE's
4 – TDU's
5 - Generators
6 - Brokers, Aggregators, and Marketers
7 - Large Electricity End Users
8 - Small Electricity Users
9 - Federal, State, and Provincial Regulatory or other Govt. Entities

STD Commenter Information (For Groups Submitting Group Comments)	
Name of Group:	**Group Chair:** **Chair Phone:** **Chair Email:**

List of Group Participants that Support These Comments:

Name	**Company**	**Industry Segment #**

Please Review Version 2 of the SAR and Answer the Following Questions

Insert a "check' mark in the appropriate boxes by double-clicking the gray areas.

1. Some members of the SAR drafting team believe that certain Category C events, as defined in Table 1 of existing Planning Standard I.A, are much less likely to occur than other events in Category C. It is felt that certain specific Cat. C events could be re-classified as Cat. D upon showing a low probability of occurrence (and low consequence) of these events.

   (a). Do you believe that the events in Categories B, C & D are classified correctly?

   ☒ Yes

   ☐ No

   ☐ Comments:

   (b). If your answer to (a) is No, how would you re-classify the events? If you have data to support your answer, please provide contact information for the individual responsible for the data.

   (c) Which of the following approaches do you favor regarding Table 1 of existing Planning Standard I.A?:

   ☐ Keep the same categories as now exist and re-classify the low probability (and low consequence) events as Category D events.

   Please explain your choice:

   ☐ Create a new category between C and D with performance characteristics between that of the present Categories C and D.

   Please explain your choice

   ☐ Keep the same categories as now exist, but allow for "good cause exceptions" upon a showing of low probability of occurrence (and low consequence) of specific Category C events.

   Please explain your choice:

   ☐ Comments:

2. Do you believe the standard should include requirements for reporting on the progress or status of *implementing* the plans developed in accordance with this standard?

   ☐ Yes

   ☒ No

   ☒ Comments: However, major facility additions, delayed additions, or deletions that effect the reliability of the system could be included as part of the regional form 715 base case yearly filings and listed as changes from last year's cases. This would allow older cases to easily be updated and used.

3. If your answer to question 2 is Yes, given that transmission plans change over time as modeling assumptions, systems and plans change, how would you propose accounting for changes in a Transmission Plan?

4. Existing Planning Standard I.A requires: *"The systems must be capable of meeting Category C requirements while accommodating the planned (including maintenance) outage of any bulk electric equipment (including protection systems or their components) at those demand levels for which planned (including maintenance) outages are performed".*

   The SAR drafting team believes that it is impractical to exhaustively test for every contingency described in each category plus every conceivable planned outage. Should the requirement to consider planned outages in addition to each Category A through D contingency remain part of this planning standard?

   ☐ Yes (consider planned outages in all Categories A through D).

   ☐ Yes (consider planned outages in some Categories only).

   Please specify which Categories:

   ☒ No

   ☒ Comments: I would modify C-3 since it has the same effect as or similar to a C-3 event to include (line out followed by a category B event).

5. Are you aware of any Regional or Interconnection differences in the requirements for assessing and planning transmission systems in North America? If so, please list and explain.

   ☐ Comments:

6. Do you have any other comments on the SAR?

   ☐ Comments:

Note – This form is to comment on **Version 2** of the **"Assess Transmission Future Needs and Develop Transmission Plans"** SAR.

The latest version of this SAR **(**TRNS_NDS_&_PLNS_01_02**)** is posted on the Standards web site at: http://www.nerc.com/~filez/standards/Assess-Transmission-Future-Needs.html

E-mail this form between May 5 and June 5, 2004 to: sarcomm@nerc.com with "Comments" in the subject line.

If you have any questions about this Standards Draft Comment Form, please contact the Director of Standards – Gerry Cauley at 609-452-8060.

Background:

Version 1 of the **"Assess Transmission Future Needs and Develop Transmission Plans"** SAR was posted for a 30-day public comment period between April 2 and May 3, 2002. This first version was an abbreviated SAR, which included an "Industry Need" statement and a brief description of the proposed standard, but did not include a detailed description. The purpose of this first posting was to collect feedback from the industry on the following questions:

- Is there a reliability-related need for an Organization Standard to be developed on this topic?

If there is such a need, how should the scope of the SAR be changed?

- The scope of the SAR is fine as is
- The scope of the SAR should be expanded to include…..
- The scope of the SAR should be reduced to eliminate……

In January 2004, the Standards Authorization Committee (SAC) appointed a Drafting Team (DT) to address industry answers and comments to the questions posed. The DT was also charged with refining the SAR and drafting a detailed description of the proposed standard in preparation for the 2nd posting of the SAR.

Most of the industry respondents indicated that there is indeed a reliability-related need to develop a standard to address transmission assessment and planning issues. Comments were received from many different sources, including individuals, small and large utilities, groups of utilities, and Regional Councils. The SAR DT considered the comments submitted by each industry participant, and revised the SAR to conform to the changes that were technically sound and appeared to represent a consensus of participants.

The revised SAR (Version 2) is posted on the NERC web site given in the blue box at the top of this form. Also posted is a Consideration of Comments document, in which the DT has responded to the original industry comments from 2002. You can find Version 1 of the SAR and industry comments on this version at the same web location.

Please review Version 2 of the SAR and complete this Comment Form to let the SAR DT know if you agree or disagree with the SAR DT's assessment that this SAR is ready to be developed into a Standard.

Commenter Information (For Individual Commenters)
Name:
Organization:
Industry Segment #:
Telephone:
E-mail:

Key to Industry Segment #'s:

1 – Trans. Owners
2 – RTO's, ISO's, RRC's
3 – LSE's
4 – TDU's
5 - Generators
6 - Brokers, Aggregators, and Marketers
7 - Large Electricity End Users
8 - Small Electricity Users
9 - Federal, State, and Provincial Regulatory or other Govt. Entities

STD Commenter Information (For Groups Submitting Group Comments)	
Name of Group: TVA Transmission Planning Department	**Group Chair:** **Chair Phone:** **Chair Email:**

List of Group Participants that Support These Comments:

Name	**Company**	**Industry Segment #**
David Till	**TVA**	**9**
David Marler	**TVA**	**9**
Brenda Eberhart	**TVA**	**9**
Darrin Church	**TVA**	**9**
Byron Stewart	**TVA**	**9**
William Tiller	**TVA**	**9**

Please Review Version 2 of the SAR and Answer the Following Questions

Insert a "check' mark in the appropriate boxes by double-clicking the gray areas.

1. Some members of the SAR drafting team believe that certain Category C events, as defined in Table 1 of existing Planning Standard I.A, are much less likely to occur than other events in Category C. It is felt that certain specific Cat. C events could be re-classified as Cat. D upon showing a low probability of occurrence (and low consequence) of these events.

   (a). Do you believe that the events in Categories B, C & D are classified correctly?

   ☒ Yes

   ☐ No

   ☐ Comments:

   (b). If your answer to (a) is No, how would you re-classify the events? If you have data to support your answer, please provide contact information for the individual responsible for the data.

   (c) Which of the following approaches do you favor regarding Table 1 of existing Planning Standard I.A?:

   ☐ Keep the same categories as now exist and re-classify the low probability (and low consequence) events as Category D events.

   Please explain your choice:

   ☐ Create a new category between C and D with performance characteristics between that of the present Categories C and D.

   Please explain your choice

   ☒ Keep the same categories as now exist, but allow for "good cause exceptions" upon a showing of low probability of occurrence (and low consequence) of specific Category C events.

   Please explain your choice:

   This approach allows documentation of an assessment of low consequence to substitute for the expenditure of an unwarranted solution, but maintains the integrity of the event probability assessment. Since others may have different ideas of what is low probability, this approach would be best with sufficient justification of low probability.

   ☐ Comments:

2. Do you believe the standard should include requirements for reporting on the progress or status of *implementing* the plans developed in accordance with this standard?

   ☐ Yes

☒ No

☒ Comments:

This reporting would constitute a logistical burden counterproductive to the total planning effort.

3. If your answer to question 2 is Yes, given that transmission plans change over time as modeling assumptions, systems and plans change, how would you propose accounting for changes in a Transmission Plan?

4. Existing Planning Standard I.A requires: *"The systems must be capable of meeting Category C requirements while accommodating the planned (including maintenance) outage of any bulk electric equipment (including protection systems or their components) at those demand levels for which planned (including maintenance) outages are performed".*

   The SAR drafting team believes that it is impractical to exhaustively test for every contingency described in each category plus every conceivable planned outage. Should the requirement to consider planned outages in addition to each Category A through D contingency remain part of this planning standard?

   ☐ Yes (consider planned outages in all Categories A through D).

   ☐ Yes (consider planned outages in some Categories only).

   Please specify which Categories:

   ☐ No

   ☒ Comments: Everyone in the group agreed that planned outages should be considered, but the group didn't agree on which categories to apply. About half believed they should be applied to all categories while the other half believed only A and B categories should have planned outages studied for the one year and beyond horizon.

5. Are you aware of any Regional or Interconnection differences in the requirements for assessing and planning transmission systems in North America? If so, please list and explain.

   ☐ Comments:

6. Do you have any other comments on the SAR?

   ☐ Comments:

Note – This form is to comment on **Version 2** of the **"Assess Transmission Future Needs and Develop Transmission Plans"** SAR.

The latest version of this SAR **(**TRNS_NDS_&_PLNS_01_02**)** is posted on the Standards web site at: http://www.nerc.com/~filez/standards/Assess-Transmission-Future-Needs.html

E-mail this form between May 5 and June 5, 2004 to: sarcomm@nerc.com with "Comments" in the subject line.

If you have any questions about this Standards Draft Comment Form, please contact the Director of Standards – Gerry Cauley at 609-452-8060.

Background:

Version 1 of the **"Assess Transmission Future Needs and Develop Transmission Plans"** SAR was posted for a 30-day public comment period between April 2 and May 3, 2002. This first version was an abbreviated SAR, which included an "Industry Need" statement and a brief description of the proposed standard, but did not include a detailed description. The purpose of this first posting was to collect feedback from the industry on the following questions:

- Is there a reliability-related need for an Organization Standard to be developed on this topic?

If there is such a need, how should the scope of the SAR be changed?

- The scope of the SAR is fine as is
- The scope of the SAR should be expanded to include…..
- The scope of the SAR should be reduced to eliminate……

In January 2004, the Standards Authorization Committee (SAC) appointed a Drafting Team (DT) to address industry answers and comments to the questions posed. The DT was also charged with refining the SAR and drafting a detailed description of the proposed standard in preparation for the 2nd posting of the SAR.

Most of the industry respondents indicated that there is indeed a reliability-related need to develop a standard to address transmission assessment and planning issues. Comments were received from many different sources, including individuals, small and large utilities, groups of utilities, and Regional Councils. The SAR DT considered the comments submitted by each industry participant, and revised the SAR to conform to the changes that were technically sound and appeared to represent a consensus of participants.

The revised SAR (Version 2) is posted on the NERC web site given in the blue box at the top of this form. Also posted is a Consideration of Comments document, in which the DT has responded to the original industry comments from 2002. You can find Version 1 of the SAR and industry comments on this version at the same web location.

Please review Version 2 of the SAR and complete this Comment Form to let the SAR DT know if you agree or disagree with the SAR DT's assessment that this SAR is ready to be developed into a Standard.

Commenter Information (For Individual Commenters)	
Name:	Kathleen Goodman
Organization:	ISO New England Inc.
Industry Segment #:	2
Telephone:	(413) 535-4111
E-mail:	kgoodman@iso-ne.com

Key to Industry Segment #'s:

1 – Trans. Owners
2 – RTO's, ISO's, RRC's
3 – LSE's
4 – TDU's
5 - Generators
6 - Brokers, Aggregators, and Marketers
7 - Large Electricity End Users
8 - Small Electricity Users
9 - Federal, State, and Provincial Regulatory or other Govt. Entities

STD Commenter Information (For Groups Submitting Group Comments)	
Name of Group:	**Group Chair:** **Chair Phone:** **Chair Email:**

List of Group Participants that Support These Comments:		
Name	**Company**	**Industry Segment #**

<u>Please Review Version 2 of the SAR and Answer the Following Questions</u>

Insert a "check' mark in the appropriate boxes by double-clicking the gray areas.

<u>General Comment:</u> It is the opinion of the Northeast Power Coordinating Council's CP9 working group participating members that the existing NERC criteria should not be weakened, including the NERC Planning Standards listed in the SAR as the starting point to be used in drafting a new standard. The comments below support our position that the existing Planning Standards should not be weakened.

1. Some members of the SAR drafting team believe that certain Category C events, as defined in Table 1 of existing Planning Standard I.A, are much less likely to occur than other events in Category C. It is felt that certain specific Cat. C events could be re-classified as Cat. D upon showing a low probability of occurrence (and low consequence) of these events.

(a). Do you believe that the events in Categories B, C & D are classified correctly?

☒ Yes

☐ No

☐ Comments:

(b). If your answer to (a) is No, how would you re-classify the events? If you have data to support your answer, please provide contact information for the individual responsible for the data.

(c) Which of the following approaches do you favor regarding Table 1 of existing Planning Standard I.A?:

☐ Keep the same categories as now exist and re-classify the low probability (and low consequence) events as Category D events.

Please explain your choice:

☐ Create a new category between C and D with performance characteristics between that of the present Categories C and D.

Please explain your choice

☐ Keep the same categories as now exist, but allow for "good cause exceptions" upon a showing of low probability of occurrence (and low consequence) of specific Category C events.

Please explain your choice:

☒ Comments:

ISO-NE believes that the relationship between the concept of the Version 0 Standards and all the developing Version 1 Standards needs to be consistent. The reliability attributes of the Version 0 Standards must be "carried through and into" the Version 1 Standards; there needs to be coordination to ensure this occurs.

ISO-NE suggests leaving the categories as listed. Choice of any of the above would result in a weakened standard. We suggest no changes be made to Categories B, C, and D as they presently exist in the Planning Standards.

2. Do you believe the standard should include requirements for reporting on the progress or status of *implementing* the plans developed in accordance with this standard?

☒ Yes

☐ No

☐ Comments:

3. If your answer to question 2 is Yes, given that transmission plans change over time as modeling assumptions, systems and plans change, how would you propose accounting for changes in a Transmission Plan?

In the northeast, the NPCC Annual Transmission Reviews address this and, in addition, NPCC keeps a "Major Projects List" to "track" BPS additions and modifications and includes transmission, generation and other major equipment identified as a BPS element.

ISO-NE suggests that the resultant NERC Standard not be overly prescriptive in requirements for reporting progress/status on the standard and flexibility be afforded to allow various documentation and processes already in place to achieve compliance; we also suggest it be done annually.

4. Existing Planning Standard I.A requires: *"The systems must be capable of meeting Category C requirements while accommodating the planned (including maintenance) outage of any bulk electric equipment (including protection systems or their components) at those demand levels for which planned (including maintenance) outages are performed".*

   The SAR drafting team believes that it is impractical to exhaustively test for every contingency described in each category plus every conceivable planned outage. Should the requirement to consider planned outages in addition to each Category A through D contingency remain part of this planning standard?

   ☐ Yes (consider planned outages in all Categories A through D).

   ☒ Yes (consider planned outages in some Categories only).

   Please specify which Categories:

   ☐ No

   ☒ Comments: We reiterate that the existing Standards should not be weakened and request that the SAR be clarified to remove ambiguity regarding what is meant by "considering" a planned outage. Planned outages, at present, are considered, however this is deemed an Operational Planning issue and is conducted so as to set Operational Limits for those conditions on a pre-contingency basis to allow for N-1 conditions.

   This particular SAR will ultimately result in a "planning" Reliability Standard. The wording, as it has been phrased, infers that the system must be planned, designed and built to N-2 standards (i.e. a line out for maintenance on top of a circuit element outage). Treatment of planned outages should be considered to some extent and NPCC suggests the drafting team receive direction from the SAC regarding planned outages. NPCC suggests that planned outages should be considered only in categories A through C.

5. Are you aware of any Regional or Interconnection differences in the requirements for assessing and planning transmission systems in North America? If so, please list and explain.

   ☐ Comments:

6. Do you have any other comments on the SAR?

   ☒ Comments:

   ISO-NE would like to submit the NPCC definition of Bulk Power System, as follows, and would like it to be considered as a "building block" for the NERC BES definition.

– **Bulk Power System-BPS-(or BES in NERC documents) — The interconnected electrical systems within {northeastern} North America comprising generation and transmission facilities on which faults or disturbances can have a significant adverse impact outside of the local area. In this context, local areas are determined by the Council members.**

– ISO-NE strongly suggests that any discussion and resultant determination of a definition for Cascading Outage be fully coordinated with the STDs 200 and 600. ISO-NE and NPCC had submitted a suggested definition for the last posting of STD 200;

Cascading Outage - "The uncontrolled successive loss of Bulk Electric System elements that propagate beyond a defined area (Balancing Area's) boundaries."

Recognizing that Resource Planning is not covered in the proposed Standard because it is considered as being handled by market mechanisms that are/will be in place or perhaps addressed in a separate standard, may we assume that the generation and load information required to perform the planning studies are provided as described in Section II.A of the existing Planning Standards?. If not, Sections II.B, II.E and III of the existing Planning Standards should also be used as the starting point in drafting of the reliability requirements.

– ISO-NE does not support removing references to "Applicable Ratings" as is suggested on SAR-5 fifth bullet. Despite the fact that the performance requirement would be "No Cascading Outages are Allowed," the "Applicable Ratings" should always be respected.

Note – This form is to comment on **Version 2** of the **"Assess Transmission Future Needs and Develop Transmission Plans"** SAR.

The latest version of this SAR **(**TRNS_NDS_&_PLNS_01_02**)** is posted on the Standards web site at: http://www.nerc.com/~filez/standards/Assess-Transmission-Future-Needs.html

E-mail this form between May 5 and June 5, 2004 to: sarcomm@nerc.com with "Comments" in the subject line.

If you have any questions about this Standards Draft Comment Form, please contact the Director of Standards – Gerry Cauley at 609-452-8060.

Background:

Version 1 of the **"Assess Transmission Future Needs and Develop Transmission Plans"** SAR was posted for a 30-day public comment period between April 2 and May 3, 2002. This first version was an abbreviated SAR, which included an "Industry Need" statement and a brief description of the proposed standard, but did not include a detailed description. The purpose of this first posting was to collect feedback from the industry on the following questions:

- Is there a reliability-related need for an Organization Standard to be developed on this topic?

If there is such a need, how should the scope of the SAR be changed?

- The scope of the SAR is fine as is
- The scope of the SAR should be expanded to include…..
- The scope of the SAR should be reduced to eliminate……

In January 2004, the Standards Authorization Committee (SAC) appointed a Drafting Team (DT) to address industry answers and comments to the questions posed. The DT was also charged with refining the SAR and drafting a detailed description of the proposed standard in preparation for the 2nd posting of the SAR.

Most of the industry respondents indicated that there is indeed a reliability-related need to develop a standard to address transmission assessment and planning issues. Comments were received from many different sources, including individuals, small and large utilities, groups of utilities, and Regional Councils. The SAR DT considered the comments submitted by each industry participant, and revised the SAR to conform to the changes that were technically sound and appeared to represent a consensus of participants.

The revised SAR (Version 2) is posted on the NERC web site given in the blue box at the top of this form. Also posted is a Consideration of Comments document, in which the DT has responded to the original industry comments from 2002. You can find Version 1 of the SAR and industry comments on this version at the same web location.

Please review Version 2 of the SAR and complete this Comment Form to let the SAR DT know if you agree or disagree with the SAR DT's assessment that this SAR is ready to be developed into a Standard.

Commenter Information (For Individual Commenters)
Name: Khaqan Khan **Organization:** Independent Electricity Market Operator **Industry Segment #:** 2 **Telephone: 905-855-6288** **E-mail: khaqan.khan@theIMO.com**

Key to Industry Segment #'s:

- **1 – Trans. Owners**
- **2 – RTO's, ISO's, RRC's**
- **3 – LSE's**
- **4 – TDU's**
- **5 - Generators**
- 6 - Brokers, Aggregators, and Marketers
- **7 - Large Electricity End Users**
- **8 - Small Electricity Users**
- 9 - Federal, State, and Provincial Regulatory or other Govt. Entities

STD Commenter Information (For Groups Submitting Group Comments)	
Name of Group:	**Group Chair:** **Chair Phone:** **Chair Email:**

List of Group Participants that Support These Comments:

Name	Company	Industry Segment #

Please Review Version 2 of the SAR and Answer the Following Questions

Insert a "check' mark in the appropriate boxes by double-clicking the gray areas.

1. Some members of the SAR drafting team believe that certain Category C events, as defined in Table 1 of existing Planning Standard I.A, are much less likely to occur than other events in Category C. It is felt that certain specific Cat. C events could be re-classified as Cat. D upon showing a low probability of occurrence (and low consequence) of these events.

   (a). Do you believe that the events in Categories B, C & D are classified correctly?

   ☒ Yes

   ☐ No

   ☐ Comments:

   (b). If your answer to (a) is No, how would you re-classify the events? If you have data to support your answer, please provide contact information for the individual responsible for the data.

   (c) Which of the following approaches do you favor regarding Table 1 of existing Planning Standard I.A?:

   ☐ Keep the same categories as now exist and re-classify the low probability (and low consequence) events as Category D events.

   Please explain your choice:

   ☐ Create a new category between C and D with performance characteristics between that of the present Categories C and D.

   Please explain your choice

   ☐ Keep the same categories as now exist, but allow for "good cause exceptions" upon a showing of low probability of occurrence (and low consequence) of specific Category C events.

   Please explain your choice:

   ☒ Comments: Any inclusion of above mentioned options [re: under item (c)] may result in deteriorated standard. Therefore, for purposes of continued goals of reliability, it is our suggestion that no changes should be made in categories B, C and D (as they presently exist in the Planning Standards).

2. Do you believe the standard should include requirements for reporting on the progress or status of *implementing* the plans developed in accordance with this standard?

   ☒ Yes

   ☐ No

☐ Comments:

3. If your answer to question 2 is Yes, given that transmission plans change over time as modeling assumptions, systems and plans change, how would you propose accounting for changes in a Transmission Plan?

   Comments: In the Northeast, the NPCC Annual Transmission Reviews address this and in addition NPCC keeps a "Major Projects List" to "track" BPS additions and modifications and includes transmission, generation and other major equipment identified as a BPS element.

   We also suggest that the resultant NERC standard not be overly prescriptive in requirements for reporting progress/status on the standard and flexibility be afforded to allow various documentation and processes already in place to achieve compliance, and moreover, we suggest that this be done annually.

4. Existing Planning Standard I.A requires: *"The systems must be capable of meeting Category C requirements while accommodating the planned (including maintenance) outage of any bulk electric equipment (including protection systems or their components) at those demand levels for which planned (including maintenance) outages are performed".*

   The SAR drafting team believes that it is impractical to exhaustively test for every contingency described in each category plus every conceivable planned outage. Should the requirement to consider planned outages in addition to each Category A through D contingency remain part of this planning standard?

   ☐ Yes (consider planned outages in all Categories A through D).

   ☒ Yes (consider planned outages in some Categories only).

   Please specify which Categories:

   ☐ No

   ☒ Comments: We reiterate that the existing standards should not be weakened and request that the SAR be clarified to remove ambiguity regarding what is meant by "considering" a planned outage. Planned outages are considered however this is deemed an Operational Planning issue and is conducted so as to set Operational Limits for those conditions on a pre-contingency basis to allow for N-1 conditions.

   This particular SAR will ultimately result in a planning standard. The wording, as it has been phrased, infers that the system must be planned, designed and built to N-2 standards (i.e. a line out for maintenance on top of a circuit element outage). Treatment of planned outages should be considered to some extent and NPCC suggests the drafting team receive direction from the SAC regarding planned outages. We also concur with the NPCC/CP9 suggestion that planned outages should be considered only in categories in A through C.

5. Are you aware of any Regional or Interconnection differences in the requirements for assessing and planning transmission systems in North America? If so, please list and explain.

   ☐ Comments:

6. Do you have any other comments on the SAR?

☒ Comments:

(1) We also resubmit our earlier suggested definition as given in the comments for the last(3rd) posted version of STD 200;

Cascading Outage- "The uncontrolled successive loss of Bulk Electric System elements that propagate beyond a defined area (Balancing Area's) boundaries"

(2) The IMO also supports the comments submitted by ISO/RTO Council- Standards Review Committee as well as the CP-9/NPCC Group

Note – This form is to comment on **Version 2** of the **"Assess Transmission Future Needs and Develop Transmission Plans"** SAR.

The latest version of this SAR **(**TRNS_NDS_&_PLNS_01_02**)** is posted on the Standards web site at: http://www.nerc.com/~filez/standards/Assess-Transmission-Future-Needs.html

E-mail this form between May 5 and June 5, 2004 to: sarcomm@nerc.com with "Comments" in the subject line.

If you have any questions about this Standards Draft Comment Form, please contact the Director of Standards – Gerry Cauley at 609-452-8060.

Background:

Version 1 of the **"Assess Transmission Future Needs and Develop Transmission Plans"** SAR was posted for a 30-day public comment period between April 2 and May 3, 2002. This first version was an abbreviated SAR, which included an "Industry Need" statement and a brief description of the proposed standard, but did not include a detailed description. The purpose of this first posting was to collect feedback from the industry on the following questions:

- Is there a reliability-related need for an Organization Standard to be developed on this topic?

If there is such a need, how should the scope of the SAR be changed?

- The scope of the SAR is fine as is
- The scope of the SAR should be expanded to include…..
- The scope of the SAR should be reduced to eliminate……

In January 2004, the Standards Authorization Committee (SAC) appointed a Drafting Team (DT) to address industry answers and comments to the questions posed. The DT was also charged with refining the SAR and drafting a detailed description of the proposed standard in preparation for the 2nd posting of the SAR.

Most of the industry respondents indicated that there is indeed a reliability-related need to develop a standard to address transmission assessment and planning issues. Comments were received from many different sources, including individuals, small and large utilities, groups of utilities, and Regional Councils. The SAR DT considered the comments submitted by each industry participant, and revised the SAR to conform to the changes that were technically sound and appeared to represent a consensus of participants.

The revised SAR (Version 2) is posted on the NERC web site given in the blue box at the top of this form. Also posted is a Consideration of Comments document, in which the DT has responded to the original industry comments from 2002. You can find Version 1 of the SAR and industry comments on this version at the same web location.

Please review Version 2 of the SAR and complete this Comment Form to let the SAR DT know if you agree or disagree with the SAR DT's assessment that this SAR is ready to be developed into a Standard.

Commenter Information (For Individual Commenters)
Name:
Organization:
Industry Segment #:
Telephone:
E-mail:

Key to Industry Segment #'s:

- **1 – Trans. Owners**
- **2 – RTO's, ISO's, RRC's**
- **3 – LSE's**
- **4 – TDU's**
- **5 - Generators**
- 6 - Brokers, Aggregators, and Marketers
- **7 - Large Electricity End Users**
- **8 - Small Electricity Users**
- 9 - Federal, State, and Provincial Regulatory or other Govt. Entities

STD Commenter Information (For Groups Submitting Group Comments)	
Name of Group: **SPP's Transmission Working Group**	**Group Chair:** Ronnie Frizzell **Chair Phone:** (501) 570-2433 **Chair Email:** rfrizzell@aecc.com

List of Group Participants that Support These Comments:		
Name	**Company**	**Industry Segment #**
Ronnie Frizzell*	**Arkansas Electric Cooperative Corp.**	**4**
Noman Williams*	**Sunflower Electric Power Cooperative**	**1**
Don Taylor*	**Westar Energy**	**1**
Jim Useldinger*	**Kansas City Power & Light**	**1**
John Fulton*	**Southwestern Public Service**	**1**
Matt McGee*	**American Electric Power**	**1**
Sam McGarrah*	**Empire District Electric**	**1**
Mitch Williams*	**Western Farmers Electric Cooperative**	**1**
John Chiles*	**ETEC**	**4**
Mak Nagle	**Entergy**	**1**
Jim Kistner	**Associated Electric Cooperative, Inc.**	**1**
Alex Lau*	**Southwest Power Pool**	**2**
Phil Crissup*	**Oklahoma Gas & Electric**	**1**
Howard Conus*	**City Utilities of Springfield, Mo**	**1**
Alan Myers*	**Aquila Networks**	**1**
David Sargent*	**Southwestern Power Administration**	**1**

Please Review Version 2 of the SAR and Answer the Following Questions

Insert a "check' mark in the appropriate boxes by double-clicking the gray areas.

1. Some members of the SAR drafting team believe that certain Category C events, as defined in Table 1 of existing Planning Standard I.A, are much less likely to occur than other events in Category C. It is felt that certain specific Cat. C events could be re-classified as Cat. D upon showing a low probability of occurrence (and low consequence) of these events.

   (a). Do you believe that the events in Categories B, C & D are classified correctly?

   ☒ Yes

   ☐ No

   ☐ Comments:

   (b). If your answer to (a) is No, how would you re-classify the events? If you have data to support your answer, please provide contact information for the individual responsible for the data.

   (c) Which of the following approaches do you favor regarding Table 1 of existing Planning Standard I.A?:

   ☐ Keep the same categories as now exist and re-classify the low probability (and low consequence) events as Category D events.

   Please explain your choice:

   ☐ Create a new category between C and D with performance characteristics between that of the present Categories C and D.

   Please explain your choice

   ☒ Keep the same categories as now exist, but allow for "good cause exceptions" upon a showing of low probability of occurrence (and low consequence) of specific Category C events.

   Please explain your choice: SPP would like to see a definition of "good cause exceptions" at a minimum.

   ☒ Comments: SPP encourages the development of probabilistic techniques to assess reliability but caution needs to be exercised prior to implementation to ensure support from all stakeholders.

2. Do you believe the standard should include requirements for reporting on the progress or status of *implementing* the plans developed in accordance with this standard?

   ☒ Yes

   ☐ No

   ☒ Comments: SPP supports this reporting requirement, but notes that this burden should not be imposed more frequently than annually.

3. If your answer to question 2 is Yes, given that transmission plans change over time as modeling assumptions, systems and plans change, how would you propose accounting for changes in a Transmission Plan? Although SPP is implementing a 2 year planning cycle, project updates are collected on an annual basis. To ensure compliance with reliability criteria, mitigation reviews are also provided on an annual basis consistent with the annual model building process. Updates due to new "out of cycle" projects or significant scope/timing changes associated with major projects in the approved regional expansion plan and its assessments are evaluated on an as-needed basis. Coordinated planning and model building using consistent definitions with neighboring regions/entities will be critical. Efforts should be undertaken to put data collection, modeling building and transmission assessment processes for neighboring regions/entities on the same cycles.

4. Existing Planning Standard I.A requires: *"The systems must be capable of meeting Category C requirements while accommodating the planned (including maintenance) outage of any bulk electric equipment (including protection systems or their components) at those demand levels for which planned (including maintenance) outages are performed".*

   The SAR drafting team believes that it is impractical to exhaustively test for every contingency described in each category plus every conceivable planned outage. Should the requirement to consider planned outages in addition to each Category A through D contingency remain part of this planning standard?

   ☐ Yes (consider planned outages in all Categories A through D).

   ☒ Yes (consider planned outages in some Categories only).

   Please specify which Categories: C.3. needs to be modified to address N-1-1 concerns. Category B (B1, B2, B3 or B4, including loss of an element without a fault) or in the alternative create Category B5 to Loss of an element without a fault. The later is preferred.

   ☐ No

   ☒ Comments: Planned outages are typically not evaluated more than one year in advance and are not scheduled during peak load conditions. However, the existing Planning Standard 1.A is problematic in that it requires the system to be designed to accommodate planned outages during peak load conditions.

5. Are you aware of any Regional or Interconnection differences in the requirements for assessing and planning transmission systems in North America? If so, please list and explain.

   ☒ Comments: SPP is aware of differences between SPP and the neighboring regions of ERCOT, MAPP and WECC.

6. Do you have any other comments on the SAR?

   ☒ Comments: Implementation of this SAR needs to be coordinated with the activities of the Version 0 Standards Drafting Team.

Note – This form is to comment on **Version 2** of the **"Assess Transmission Future Needs and Develop Transmission Plans"** SAR.

The latest version of this SAR **(**TRNS_NDS_&_PLNS_01_02**)** is posted on the Standards web site at: http://www.nerc.com/~filez/standards/Assess-Transmission-Future-Needs.html

E-mail this form between May 5 and June 5, 2004 to: sarcomm@nerc.com with "Comments" in the subject line.

If you have any questions about this Standards Draft Comment Form, please contact the Director of Standards – Gerry Cauley at 609-452-8060.

Background:

Version 1 of the **"Assess Transmission Future Needs and Develop Transmission Plans"** SAR was posted for a 30-day public comment period between April 2 and May 3, 2002. This first version was an abbreviated SAR, which included an "Industry Need" statement and a brief description of the proposed standard, but did not include a detailed description. The purpose of this first posting was to collect feedback from the industry on the following questions:

- Is there a reliability-related need for an Organization Standard to be developed on this topic?

If there is such a need, how should the scope of the SAR be changed?

- The scope of the SAR is fine as is
- The scope of the SAR should be expanded to include…..
- The scope of the SAR should be reduced to eliminate……

In January 2004, the Standards Authorization Committee (SAC) appointed a Drafting Team (DT) to address industry answers and comments to the questions posed. The DT was also charged with refining the SAR and drafting a detailed description of the proposed standard in preparation for the 2nd posting of the SAR.

Most of the industry respondents indicated that there is indeed a reliability-related need to develop a standard to address transmission assessment and planning issues. Comments were received from many different sources, including individuals, small and large utilities, groups of utilities, and Regional Councils. The SAR DT considered the comments submitted by each industry participant, and revised the SAR to conform to the changes that were technically sound and appeared to represent a consensus of participants.

The revised SAR (Version 2) is posted on the NERC web site given in the blue box at the top of this form. Also posted is a Consideration of Comments document, in which the DT has responded to the original industry comments from 2002. You can find Version 1 of the SAR and industry comments on this version at the same web location.

Please review Version 2 of the SAR and complete this Comment Form to let the SAR DT know if you agree or disagree with the SAR DT's assessment that this SAR is ready to be developed into a Standard.

Commenter Information (For Individual Commenters)
Name: Peter Burke [on behalf of ATC's David Smith] Organization: American Transmission Company Industry Segment #: 1 Telephone: 262-506-6863 E-mail: PBurke@atcllc.com

Key to Industry Segment #'s:

1 – Trans. Owners
2 – RTO's, ISO's, RRC's
3 – LSE's
4 – TDU's
5 - Generators
6 - Brokers, Aggregators, and Marketers
7 - Large Electricity End Users
8 - Small Electricity Users
9 - Federal, State, and Provincial Regulatory or other Govt. Entities

STD Commenter Information (For Groups Submitting Group Comments)		
Name of Group:	**Group Chair:** **Chair Email:**	**Chair Phone:**
List of Group Participants that Support These Comments:		
Name	**Company**	**Industry Segment #**

Please Review Version 2 of the SAR and Answer the Following Questions

Insert a "check' mark in the appropriate boxes by double-clicking the gray areas.

1. Some members of the SAR drafting team believe that certain Category C events, as defined in Table 1 of existing Planning Standard I.A, are much less likely to occur than other events in Category C. It is felt that certain specific Cat. C events could be re-classified as Cat. D upon showing a low probability of occurrence (and low consequence) of these events.

   (a). Do you believe that the events in Categories B, C & D are classified correctly?

   ☒ Yes

   ☐ No

   ☐ Comments:

(b). If your answer to (a) is No, how would you re-classify the events? If you have data to support your answer, please provide contact information for the individual responsible for the data.

(c) Which of the following approaches do you favor regarding Table 1 of existing Planning Standard I.A?:

☐ Keep the same categories as now exist and re-classify the low probability (and low consequence) events as Category D events.

Please explain your choice:

☐ Create a new category between C and D with performance characteristics between that of the present Categories C and D.

Please explain your choice

☒ Keep the same categories as now exist, but allow for "good cause exceptions" upon a showing of low probability of occurrence (and low consequence) of specific Category C events.

Please explain your choice:

The outage listed in the existing categories are reasonable but, because we don't know all the specific details about a certain part of the system, there should be some mechanism to consider exceptions.

☐ Comments:

2. Do you believe the standard should include requirements for reporting on the progress or status of *implementing* the plans developed in accordance with this standard?

☐ Yes

☒ No

☐ Comments:

While an entity should be implementing plans to maintain or improve the reliability required by the standards, having to report on the implementation could become quite complicated. Plans are often changing to meet changing system conditions, sometimes so much so that what seemed reasonable to do last year is replaced by entirely new plans.

3. If your answer to question 2 is Yes, given that transmission plans change over time as modeling assumptions, systems and plans change, how would you propose accounting for changes in a Transmission Plan?

4. Existing Planning Standard I.A requires: *"The systems must be capable of meeting Category C requirements while accommodating the planned (including maintenance) outage of any bulk electric equipment (including protection systems or their components) at those demand levels for which planned (including maintenance) outages are performed".*

   The SAR drafting team believes that it is impractical to exhaustively test for every contingency described in each category plus every conceivable planned outage. Should the requirement to consider planned outages in addition to each Category A through D contingency remain part of this planning standard?

   ☐ Yes (consider planned outages in all Categories A through D).

   ☐ Yes (consider planned outages in some Categories only).

   Please specify which Categories:

   ☒ No

   ☐ Comments: *Planning the system should consider the need for planned outages but should not require the capability to plan outages at peak system loads.*

5. Are you aware of any Regional or Interconnection differences in the requirements for assessing and planning transmission systems in North America? If so, please list and explain.

   ☐ Comments:

6. Do you have any other comments on the SAR?

   ☐ Comments:

   P SAR-3, Market Interface principles, question 5 – Depending on the level of public exposure of the load flow and stability models, generation cost data and stability parameter data may be deemed by some entities as confidential market information.

   P SAR-4, II.A System Data – Needs to consider the difficulties, particularly for stand-alone transmission companies, in obtaining resource information so models can balance load and resources.

   P SAR-5, third bullet – This may also go back to question 1 in this document but the statement, "There should be NERC approval of acceptable levels of risk" needs to be better defined. For example does this mean that a utility can't decide to increase the operating temperature of a line conductor without NERC approval?

   The SAR drafting team seems to have its arms around the issues and seems ready to proceed to Standard development.

Note – This form is to comment on **Version 2** of the **"Assess Transmission Future Needs and Develop Transmission Plans"** SAR.

The latest version of this SAR **(**TRNS_NDS_&_PLNS_01_02**)** is posted on the Standards web site at: http://www.nerc.com/~filez/standards/Assess-Transmission-Future-Needs.html

E-mail this form between May 5 and June 5, 2004 to: sarcomm@nerc.com with "Comments" in the subject line.

If you have any questions about this Standards Draft Comment Form, please contact the Director of Standards – Gerry Cauley at 609-452-8060.

Background:

Version 1 of the **"Assess Transmission Future Needs and Develop Transmission Plans"** SAR was posted for a 30-day public comment period between April 2 and May 3, 2002. This first version was an abbreviated SAR, which included an "Industry Need" statement and a brief description of the proposed standard, but did not include a detailed description. The purpose of this first posting was to collect feedback from the industry on the following questions:

- Is there a reliability-related need for an Organization Standard to be developed on this topic?

If there is such a need, how should the scope of the SAR be changed?

- The scope of the SAR is fine as is
- The scope of the SAR should be expanded to include…..
- The scope of the SAR should be reduced to eliminate……

In January 2004, the Standards Authorization Committee (SAC) appointed a Drafting Team (DT) to address industry answers and comments to the questions posed. The DT was also charged with refining the SAR and drafting a detailed description of the proposed standard in preparation for the 2nd posting of the SAR.

Most of the industry respondents indicated that there is indeed a reliability-related need to develop a standard to address transmission assessment and planning issues. Comments were received from many different sources, including individuals, small and large utilities, groups of utilities, and Regional Councils. The SAR DT considered the comments submitted by each industry participant, and revised the SAR to conform to the changes that were technically sound and appeared to represent a consensus of participants.

The revised SAR (Version 2) is posted on the NERC web site given in the blue box at the top of this form. Also posted is a Consideration of Comments document, in which the DT has responded to the original industry comments from 2002. You can find Version 1 of the SAR and industry comments on this version at the same web location.

Please review Version 2 of the SAR and complete this Comment Form to let the SAR DT know if you agree or disagree with the SAR DT's assessment that this SAR is ready to be developed into a Standard.

Commenter Information (For Individual Commenters)	Key to Industry Segment #'s: **1 – Trans. Owners** **2 – RTO's, ISO's, RRC's** **3 – LSE's** **4 – TDU's** **5 - Generators** 6 - Brokers, Aggregators, and Marketers **7 - Large Electricity End Users** **8 - Small Electricity Users** 9 - Federal, State, and Provincial Regulatory or other Govt. Entities
Name: Bill Bojorquez Organization: ERCOT Industry Segment #:2 Telephone: (512) 248-3036 E-mail: bbojorquez@ercot.com	

Please Review Version 2 of the SAR and Answer the Following Questions

Insert a "check' mark in the appropriate boxes by double-clicking the gray areas.

1. Some members of the SAR drafting team believe that certain Category C events, as defined in Table 1 of existing Planning Standard I.A, are much less likely to occur than other events in Category C. It is felt that certain specific Cat. C events could be re-classified as Cat. D upon showing a low probability of occurrence (and low consequence) of these events.

(a). Do you believe that the events in Categories B, C & D are classified correctly?

☒ Yes

☐ No

☐ Comments:

(b). If your answer to (a) is No, how would you re-classify the events? If you have data to support your answer, please provide contact information for the individual responsible for the data.

(c) Which of the following approaches do you favor regarding Table 1 of existing Planning Standard I.A?:

☐ Keep the same categories as now exist and re-classify the low probability (and low consequence) events as Category D events.

Please explain your choice:

☐ Create a new category between C and D with performance characteristics between that of the present Categories C and D.

Please explain your choice

☐ Keep the same categories as now exist, but allow for "good cause exceptions" upon a showing of low probability of occurrence (and low consequence) of specific Category C events.

Please explain your choice:

☒ Comments:

We suggest no changes be made to Categories B, C, and D as they presently exist in the Planning Standards. Choice of any of the above would result in a weakened standard and degraded reliability throughout NERC member systems.

2. Do you believe the standard should include requirements for reporting on the progress or status of *implementing* the plans developed in accordance with this standard?

☒ Yes

☐ No

☐ Comments:

3. If your answer to question 2 is Yes, given that transmission plans change over time as modeling assumptions, systems and plans change, how would you propose accounting for changes in a Transmission Plan?

Periodic Transmission Reviews to address changes in plans and tracking lists of BPS additions and modifications (that would include transmission, generation and other major equipment identified as a BPS element).

The resultant NERC standard should not be overly prescriptive in requirements for reporting progress/status on the standard. Flexibility should allow for the various documentation and processes already in place to achieve compliance.

4. Existing Planning Standard I.A requires: *"The systems must be capable of meeting Category C requirements while accommodating the planned (including maintenance) outage of any bulk electric equipment (including protection systems or their components) at those demand levels for which planned (including maintenance) outages are performed".*

   The SAR drafting team believes that it is impractical to exhaustively test for every contingency described in each category plus every conceivable planned outage. Should the requirement to consider planned outages in addition to each Category A through D contingency remain part of this planning standard?

   ☒ Yes (consider planned outages in all Categories A through D).

   ☐ Yes (consider planned outages in some Categories only).

   Please specify which Categories:

   ☐ No

   ☒ Comments*: The existing standards should not be weakened*

5. Are you aware of any Regional or Interconnection differences in the requirements for assessing and planning transmission systems in North America? If so, please list and explain.

   ☐ Comments:

6. Do you have any other comments on the SAR?

   ☒ Comments:

   Determination of a definition for Cascading Outage should be coordinated with the STDs 200 and 600.

Note – This form is to comment on **Version 2** of the **"Assess Transmission Future Needs and Develop Transmission Plans"** SAR.

The latest version of this SAR **(**TRNS_NDS_&_PLNS_01_02**)** is posted on the Standards web site at: http://www.nerc.com/~filez/standards/Assess-Transmission-Future-Needs.html

E-mail this form between May 5 and June 5, 2004 to: sarcomm@nerc.com with "Comments" in the subject line.

If you have any questions about this Standards Draft Comment Form, please contact the Director of Standards – Gerry Cauley at 609-452-8060.

Background:

Version 1 of the **"Assess Transmission Future Needs and Develop Transmission Plans"** SAR was posted for a 30-day public comment period between April 2 and May 3, 2002. This first version was an abbreviated SAR, which included an "Industry Need" statement and a brief description of the proposed standard, but did not include a detailed description. The purpose of this first posting was to collect feedback from the industry on the following questions:

- Is there a reliability-related need for an Organization Standard to be developed on this topic?

If there is such a need, how should the scope of the SAR be changed?

- The scope of the SAR is fine as is
- The scope of the SAR should be expanded to include…..
- The scope of the SAR should be reduced to eliminate……

In January 2004, the Standards Authorization Committee (SAC) appointed a Drafting Team (DT) to address industry answers and comments to the questions posed. The DT was also charged with refining the SAR and drafting a detailed description of the proposed standard in preparation for the 2nd posting of the SAR.

Most of the industry respondents indicated that there is indeed a reliability-related need to develop a standard to address transmission assessment and planning issues. Comments were received from many different sources, including individuals, small and large utilities, groups of utilities, and Regional Councils. The SAR DT considered the comments submitted by each industry participant, and revised the SAR to conform to the changes that were technically sound and appeared to represent a consensus of participants.

The revised SAR (Version 2) is posted on the NERC web site given in the blue box at the top of this form. Also posted is a Consideration of Comments document, in which the DT has responded to the original industry comments from 2002. You can find Version 1 of the SAR and industry comments on this version at the same web location.

Please review Version 2 of the SAR and complete this Comment Form to let the SAR DT know if you agree or disagree with the SAR DT's assessment that this SAR is ready to be developed into a Standard.

Commenter Information (For Individual Commenters)
Name:
Organization:
Industry Segment #:
Telephone:
E-mail:

Key to Industry Segment #'s:

- **1 – Trans. Owners**
- **2 – RTO's, ISO's, RRC's**
- **3 – LSE's**
- **4 – TDU's**
- **5 - Generators**
- 6 - Brokers, Aggregators, and Marketers
- **7 - Large Electricity End Users**
- **8 - Small Electricity Users**
- 9 - Federal, State, and Provincial Regulatory or other Govt. Entities

STD Commenter Information (For Groups Submitting Group Comments)	
Name of Group: ***Southern Company Services, Inc***	**Group Chair:** ***Marc Butts*** **Chair Phone: 205-257-4839** **Chair Email: mmbutts@southernco.com**

List of Group Participants that Support These Comments:

Name	Company	Industry Segment #
Rod Hardiman	***Southern Company Services***	**1**
Jonathan Glidewell	***Southern Company Services***	**1**
Bobby Jones	***Southern Company Services***	**1**
Bill Pope	***Gulf Power Company***	**3**
Marc Butts	***Southern Company Services***	**1**

Please Review Version 2 of the SAR and Answer the Following Questions

Insert a "check' mark in the appropriate boxes by double-clicking the gray areas.

1. Some members of the SAR drafting team believe that certain Category C events, as defined in Table 1 of existing Planning Standard I.A, are much less likely to occur than other events in Category C. It is felt that certain specific Cat. C events could be re-classified as Cat. D upon showing a low probability of occurrence (and low consequence) of these events.

   (a). Do you believe that the events in Categories B, C & D are classified correctly?

   ☒ Yes

   ☐ No

☒ Comments: **Category C events are more likely to occur than Category D events and should require higher performance expectations.**

(b). If your answer to (a) is No, how would you re-classify the events? If you have data to support your answer, please provide contact information for the individual responsible for the data.

(c) Which of the following approaches do you favor regarding Table 1 of existing Planning Standard I.A?:

☐ Keep the same categories as now exist and re-classify the low probability (and low consequence) events as Category D events.

Please explain your choice:

☐ Create a new category between C and D with performance characteristics between that of the present Categories C and D.

Please explain your choice

☐ Keep the same categories as now exist, but allow for "good cause exceptions" upon a showing of low probability of occurrence (and low consequence) of specific Category C events.

Please explain your choice:

☒ Comments: **Since the events are currently categorized correctly, 1.b and 1.c are not applicable. Low consequence Category C events should be considered compliant. However, as we interpret Table I, a Category C event that results in low consequences (e.g. no cascading) is already considered compliant since entities can drop load or curtail firm transfers to return to applicable thermal or voltage ratings.**

2. Do you believe the standard should include requirements for reporting on the progress or status of *implementing* the plans developed in accordance with this standard?

☐ Yes

☒ No

☐ Comments: **Too burdensome for the perceived benefits.**

3. If your answer to question 2 is Yes, given that transmission plans change over time as modeling assumptions, systems and plans change, how would you propose accounting for changes in a Transmission Plan?

4. Existing Planning Standard I.A requires: *"The systems must be capable of meeting Category C requirements while accommodating the planned (including maintenance) outage of any bulk electric equipment (including protection systems or their components) at those demand levels for which planned (including maintenance) outages are performed".*

   The SAR drafting team believes that it is impractical to exhaustively test for every contingency described in each category plus every conceivable planned outage. Should the requirement to consider planned outages in addition to each Category A through D contingency remain part of this planning standard?

   ☐ Yes (consider planned outages in all Categories A through D).

   ☒ Yes (consider planned outages in some Categories only).

   Please specify which Categories: **Categories A and B only.**

   ☐ No

   ☒ Comments: **The requirement to consider planned outages in addition to each Category A and B contingency should remain part of this planning standard. We agree with the SAR drafting team that exhaustive testing for every contingency described and every load level in each category is not practical.**

5. Are you aware of any Regional or Interconnection differences in the requirements for assessing and planning transmission systems in North America? If so, please list and explain.

   ☒ Comments: **Not aware of any at this time. However, Regional Differences could develop and each request for a Regional Difference should be considered individually.**

6. Do you have any other comments on the SAR?

   ☒ Comments:

   In general, the NERC Standards need to have a common definition across the board for any definition used in a Standard. For example, the definition for "Cascading Outages" needs to be coordinated with the Standards Drafting Team (SDT) for the "Determine Facility Ratings, Operating Limits, and Transfer Capability" standard.

   Southern agrees that the Standard should provide a clearer definition of "cascading outages." We suggest that the following be considered:
   Cascading — the uncontrolled successive loss of system elements triggered by contingencies which results in widespread electric service interruption 1) that drops 1000 MW of load or more or 2) that crosses control area boundaries.
   In addition Southern recommends that the Standard provide a clearer definition of what is meant by "system stable." We suggest that the following be considered:

   System stable — For Category A and B simulations, system stable means that no generating units pull out of synchronism. For Category C events, system stable means that if units pull out of synchronism, 1) the resulting impedance swings are not out into the transmission system and 2) the total amount of generation lost because of out-of-step tripping does not exceed the control area operating reserve level.

The standard should include requirements for LSEs to provide forecast resource data as required in the current II.D standards, to facilitate development of power flow models. Accordingly, this standard should also apply to LSEs.

On page 4 of the SAR, bottom half of the page; there is a paragraph that discusses how the Transmission Planner should document generation dispatch. Comment: In relation to the methodology being used for incorporating planned generation assets in the model and how generation is dispatched, the type of each generating unit, the primary fuel type for each generating unit, and a dispatch order of the generating units should be required. In addition, a general description of the dispatch methodology used for the system should also be required. However, no cost information should be required.

Note – This form is to comment on **Version 2** of the **"Assess Transmission Future Needs and Develop Transmission Plans"** SAR.

The latest version of this SAR **(**TRNS_NDS_&_PLNS_01_02**)** is posted on the Standards web site at: http://www.nerc.com/~filez/standards/Assess-Transmission-Future-Needs.html

E-mail this form between May 5 and June 5, 2004 to: sarcomm@nerc.com with "Comments" in the subject line.

If you have any questions about this Standards Draft Comment Form, please contact the Director of Standards – Gerry Cauley at 609-452-8060.

Background:

Version 1 of the **"Assess Transmission Future Needs and Develop Transmission Plans"** SAR was posted for a 30-day public comment period between April 2 and May 3, 2002. This first version was an abbreviated SAR, which included an "Industry Need" statement and a brief description of the proposed standard, but did not include a detailed description. The purpose of this first posting was to collect feedback from the industry on the following questions:

- Is there a reliability-related need for an Organization Standard to be developed on this topic?

If there is such a need, how should the scope of the SAR be changed?

- The scope of the SAR is fine as is
- The scope of the SAR should be expanded to include…..
- The scope of the SAR should be reduced to eliminate……

In January 2004, the Standards Authorization Committee (SAC) appointed a Drafting Team (DT) to address industry answers and comments to the questions posed. The DT was also charged with refining the SAR and drafting a detailed description of the proposed standard in preparation for the 2nd posting of the SAR.

Most of the industry respondents indicated that there is indeed a reliability-related need to develop a standard to address transmission assessment and planning issues. Comments were received from many different sources, including individuals, small and large utilities, groups of utilities, and Regional Councils. The SAR DT considered the comments submitted by each industry participant, and revised the SAR to conform to the changes that were technically sound and appeared to represent a consensus of participants.

The revised SAR (Version 2) is posted on the NERC web site given in the blue box at the top of this form. Also posted is a Consideration of Comments document, in which the DT has responded to the original industry comments from 2002. You can find Version 1 of the SAR and industry comments on this version at the same web location.

Please review Version 2 of the SAR and complete this Comment Form to let the SAR DT know if you agree or disagree with the SAR DT's assessment that this SAR is ready to be developed into a Standard.

Commenter Information (For Individual Commenters)
Name:
Organization:
Industry Segment #:
Telephone:
E-mail:

Key to Industry Segment #'s:

1 – Trans. Owners
2 – RTO's, ISO's, RRC's
3 – LSE's
4 – TDU's
5 - Generators
6 - Brokers, Aggregators, and Marketers
7 - Large Electricity End Users
8 - Small Electricity Users
9 - Federal, State, and Provincial Regulatory or other Govt. Entities

STD Commenter Information (For Groups Submitting Group Comments)	
Name of Group: **Western Electricity Coordinating Council**	**Group Chair:** Ben Morris **Chair Phone:** 415-973-7687 **Chair Email:** bem8@pge.com

List of Group Participants that Support These Comments:

Name	**Company**	**Industry Segment #**
Baj Agrawal	*Arizona Public Service*	*1*
Phil Park	*British Columbia Transmission Corporation*	*2*
Jeff Miller	*California Independent System Operator*	*2*
Ron Schellberg	*Idaho Power Company*	*1*
Rahn Sorensen	*Nevada Power Company*	*1*
Ben Morris	*Pacific Gas and Electric Company*	*1*
Rick Padilla	*Pacific Gas and Electric Company*	*5*
Chifong Thomas	*Pacific Gas &Electric Company.*	*1*
Dilip Mahendra	*Sacramento Municipal Utility District*	*1*
Brian K. Keel	*Salt River Project*	*1*
Dana Cabbell	*Southern California Edison*	*1*
Mohan Kondragunta	*Southern California Edison*	*1*
John D. Martinsen	*Snohomish County PUD*	*4*

Please Review Version 2 of the SAR and Answer the Following Questions

Insert a "check' mark in the appropriate boxes by double-clicking the gray areas.

1. Some members of the SAR drafting team believe that certain Category C events, as defined in Table 1 of existing Planning Standard I.A, are much less likely to occur than other events in Category C. It is felt that certain specific Cat. C events could be re-classified as Cat. D upon showing a low probability of occurrence (and low consequence) of these events.

(a). Do you believe that the events in Categories B, C & D are classified correctly?

☐ Yes

☒ No

☒ Comments:

The Categories should be based on the probability of occurrence of the initiating events. A review of Table I (Standard IA) shows that the contingencies in the same Categories seem to have very different probabilities of occurrence. As such, a new category should be defined between Category C and Category D. The more probable Category D events and the less probable Category C events should be placed in this new category and not be allowed to cascade.

(b). If your answer to (a) is No, how would you re-classify the events? If you have data to support your answer, please provide contact information for the individual responsible for the data.

WECC supports moving C.2 and C.9 to a new Category between the current C and D Categories. WECC Planning Standards do not support reclassification of C.3.

(c) Which of the following approaches do you favor regarding Table 1 of existing Planning Standard I.A?:

☐ Keep the same categories as now exist and re-classify the low probability (and low consequence) events as Category D events.

Please explain your choice:

☒ Create a new category between C and D with performance characteristics between that of the present Categories C and D.

Please explain your choice

A no-cascading performance requirement is needed for this new category.

There are Category C events, which have a very low probability of occurrence. Such events, even if they occurred should not lead to cascading, even though local facility ratings or voltage limits may be exceeded. Very often, the solution for such low probability contingencies would be to install a relay system to interrupt load or generation. The probability of relay misoperation to prevent potential problems resulting from the contingency may be higher than the probability of the contingency itself. Thus the impact on the users of the grid may not be significantly reduced. Nevertheless, the system reliability would be better served if we can add a category for such low probability contingencies (which would not result in cascading), and the risk of which is acceptable.

☐ Keep the same categories as now exist, but allow for "good cause exceptions" upon a showing of low probability of occurrence (and low consequence) of specific Category C events.

Please explain your choice:

☐ Comments:

2. Do you believe the standard should include requirements for reporting on the progress or status of *implementing* the plans developed in accordance with this standard?

☐ Yes

☒ No

☒ Comments:
Since many of the transmission plans are dependent upon factors such as, resource plans, local load projections, new technology, permitting, to name a few, it would not be meaningful to report on the status of implementation of a transmission plan. In any case, if a potential transmission problem is not solved, it will show up again in subsequent years, so there will be pressure to solve it. This continuous "certification" would ensure that any potential transmission problem, once identified, would not be left unsolved even without NERC requiring status reports on implementation.

3. If your answer to question 2 is Yes, given that transmission plans change over time as modeling assumptions, systems and plans change, how would you propose accounting for changes in a Transmission Plan?

4. Existing Planning Standard I.A requires: *"The systems must be capable of meeting Category C requirements while accommodating the planned (including maintenance) outage of any bulk electric equipment (including protection systems or their components) at those demand levels for which planned (including maintenance) outages are performed".*

The SAR drafting team believes that it is impractical to exhaustively test for every contingency described in each category plus every conceivable planned outage. Should the requirement to consider planned outages in addition to each Category A through D contingency remain part of this planning standard?

☐ Yes (consider planned outages in all Categories A through D).

☒ Yes (consider planned outages in some Categories only).

Please specify which Categories: A, B, and C (except C-3)

☐ No

☒ Comments:
All contingencies where a single point of failure could cause facilities to be lost should be tested for compliance with the standards even under planned maintenance conditions. However, it should never be necessary to exhaustively test every possible combination of outages. Those contingencies that are clearly not critical outages should not have to be simulated.

5. Are you aware of any Regional or Interconnection differences in the requirements for assessing and planning transmission systems in North America? If so, please list and explain.

☒ Comments:

The existing NERC Standard C-9 (and C-2 for bus sectionalizing breakers) as it applies to WECC should be modified so that thermal limit and voltage limit violations are allowed for bus sectionalizing breaker failures. This is because bus sectionalizing breaker failure is a relatively low probability event. Use of a bus sectionalizing breaker should be encouraged because it reduces the impact of a disturbance to a portion of the load only. Without the proposed modification there is no incentive to use the sectionalizing breaker. However, under no conditions should system instability or cascading outages be allowed for bus sectionalizing breaker failures.

6. Do you have any other comments on the SAR?

– ☒ Comments:

1. On Page SAR-5 of the draft SAR, the third bullet states: "The Standard should allow for the development and use of probabilistic planning methods. The minimum requirements of probabilistic methods are the contingencies as described in Table 1 of existing Planning Standard I.A. There should be NERC approval of acceptable levels of risk."

   The Standard should also allow for the use of Probabilistic Criteria. In WECC, Probabilistic Planning refers to the application of fixed planning standards to a given problem to determine the probable or expected load not served. Probabilistic Criteria is used to refer to adjusting the performance category based on the probability of the event for a specific facility. The performance category can move up or down depending on actual or planned performance. Therefore, Table 1 would be the starting point for making probabilistic criteria adjustments. Probabilistic adjusted criteria would be the basis for Probabilistic Planning.

   For example, the NERC Planning Standards should follow what WECC is doing with regard to listing disturbances as a guide, but say that other disturbances with the same probability should be included. List the probability ranges (outages per year), Category B: >= 0.33, Category C: 0.33 to 0.033; Category D1 (no cascading): 0.033 to .0033, Category D2: < .0033.

   The standard should allow for changes in the required performance for given disturbances if a probability in another range has been established for a given disturbance.

   WECC recommends that the approval of acceptable levels of risk be at the regional level.

   NERC should require that the regional councils specify voltage dip and minimum frequency standards. NERC should not set the standards.

2. Page SAR-4 states that the Standard would not include requirements for Resource Planning. In order to develop any meaningful standard the resource part of the power system should be addressed by including standards for the modeling of existing resources, planned retirement of resources, and planned resources in the next 5 to 10 years time frame. This information will be necessary in order to assess whether future system can or can not meet the reliability standards.

Note – This form is to comment on **Version 2** of the **"Assess Transmission Future Needs and Develop Transmission Plans"** SAR.

The latest version of this SAR **(**TRNS_NDS_&_PLNS_01_02**)** is posted on the Standards web site at: http://www.nerc.com/~filez/standards/Assess-Transmission-Future-Needs.html

E-mail this form between May 5 and June 5, 2004 to: sarcomm@nerc.com with "Comments" in the subject line.

If you have any questions about this Standards Draft Comment Form, please contact the Director of Standards – Gerry Cauley at 609-452-8060.

Background:

Version 1 of the **"Assess Transmission Future Needs and Develop Transmission Plans"** SAR was posted for a 30-day public comment period between April 2 and May 3, 2002. This first version was an abbreviated SAR, which included an "Industry Need" statement and a brief description of the proposed standard, but did not include a detailed description. The purpose of this first posting was to collect feedback from the industry on the following questions:

- Is there a reliability-related need for an Organization Standard to be developed on this topic?

If there is such a need, how should the scope of the SAR be changed?

- The scope of the SAR is fine as is
- The scope of the SAR should be expanded to include…..
- The scope of the SAR should be reduced to eliminate……

In January 2004, the Standards Authorization Committee (SAC) appointed a Drafting Team (DT) to address industry answers and comments to the questions posed. The DT was also charged with refining the SAR and drafting a detailed description of the proposed standard in preparation for the 2nd posting of the SAR.

Most of the industry respondents indicated that there is indeed a reliability-related need to develop a standard to address transmission assessment and planning issues. Comments were received from many different sources, including individuals, small and large utilities, groups of utilities, and Regional Councils. The SAR DT considered the comments submitted by each industry participant, and revised the SAR to conform to the changes that were technically sound and appeared to represent a consensus of participants.

The revised SAR (Version 2) is posted on the NERC web site given in the blue box at the top of this form. Also posted is a Consideration of Comments document, in which the DT has responded to the original industry comments from 2002. You can find Version 1 of the SAR and industry comments on this version at the same web location.

Please review Version 2 of the SAR and complete this Comment Form to let the SAR DT know if you agree or disagree with the SAR DT's assessment that this SAR is ready to be developed into a Standard.

Commenter Information (For Individual Commenters)
Name: Mark J. Kuras Organization: MAAC Industry Segment #: 2 Telephone: 610-666-8924 E-mail: kuras@pjm.com

Key to Industry Segment #'s:

- **1 – Trans. Owners**
- **2 – RTO's, ISO's, RRC's**
- **3 – LSE's**
- **4 – TDU's**
- **5 - Generators**
- 6 - Brokers, Aggregators, and Marketers
- **7 - Large Electricity End Users**
- **8 - Small Electricity Users**
- 9 - Federal, State, and Provincial Regulatory or other Govt. Entities

STD Commenter Information (For Groups Submitting Group Comments)	
Name of Group:	**Group Chair:** **Chair Phone:** **Chair Email:**

List of Group Participants that Support These Comments:

Name	**Company**	**Industry Segment #**

Please Review Version 2 of the SAR and Answer the Following Questions

Insert a "check' mark in the appropriate boxes by double-clicking the gray areas.

1. Some members of the SAR drafting team believe that certain Category C events, as defined in Table 1 of existing Planning Standard I.A, are much less likely to occur than other events in Category C. It is felt that certain specific Cat. C events could be re-classified as Cat. D upon showing a low probability of occurrence (and low consequence) of these events.

   (a). Do you believe that the events in Categories B, C & D are classified correctly?

   X Yes

   No

   X Comments: **I believe that an in depth investigation of the probability of each possible contingency occurring be investigated by NERC to determine each contingency's relative probability and those results used to re-rank the contingency list, if necessary.**

   (b). If your answer to (a) is No, how would you re-classify the events? If you have data to support your answer, please provide contact information for the individual responsible for the data.

   (c) Which of the following approaches do you favor regarding Table 1 of existing Planning Standard I.A?:

   ☐ Keep the same categories as now exist and re-classify the low probability (and low consequence) events as Category D events.

   Please explain your choice:

   X Create a new category between C and D with performance characteristics between that of the present Categories C and D.

   Please explain your choice

   This is the best choice of the ones mentioned here but see my answer to 1.(b) above for another approach. This approach allows for some levels of performance between C and D such as restricting the performance to "no cascading or system instability" for some C and maybe even D events.

   ☐ Keep the same categories as now exist, but allow for "good cause exceptions" upon a showing of low probability of occurrence (and low consequence) of specific Category C events.

   Please explain your choice:

   ☐ Comments:

2. Do you believe the standard should include requirements for reporting on the progress or status of *implementing* the plans developed in accordance with this standard?

   X Yes

☐ No

☐ Comments: **It's one thing to develop plans and another to follow through on them. PJM can offer suggestions on how this tracking could be accomplished.**

3. If your answer to question 2 is Yes, given that transmission plans change over time as modeling assumptions, systems and plans change, how would you propose accounting for changes in a Transmission Plan?

   A plan is a plan at that point in time. Plans change. Periodic checks of implementation of plans can uncover these plan changes that should be allowed.

4. Existing Planning Standard I.A requires: *"The systems must be capable of meeting Category C requirements while accommodating the planned (including maintenance) outage of any bulk electric equipment (including protection systems or their components) at those demand levels for which planned (including maintenance) outages are performed".*

   The SAR drafting team believes that it is impractical to exhaustively test for every contingency described in each category plus every conceivable planned outage. Should the requirement to consider planned outages in addition to each Category A through D contingency remain part of this planning standard?

   X Yes (consider planned outages in all Categories A through D).

   ☐ Yes (consider planned outages in some Categories only).

   Please specify which Categories:

   ☐ No

   ☐ Comments: **Contingencies don't only happen when all lines are in service. Outages should be modeled during all types of contingency evaluation. This may be a fairly daunting task but this evaluation will help the system operators be prepared for the reality of operating the system in a less than ideal state. Possible ways to select lines to outage may be to look at lines with high unscheduled outage rates, lines close to sources of contamination, lines through areas that have historically had vegetation contact problems, and especially lines that when outaged can cause operating problems.**

5. Are you aware of any Regional or Interconnection differences in the requirements for assessing and planning transmission systems in North America? If so, please list and explain.

   ☐ Comments:

6. Do you have any other comments on the SAR?

   ☐ Comments:

Note – This form is to comment on **Version 2** of the **"Assess Transmission Future Needs and Develop Transmission Plans"** SAR.

The latest version of this SAR **(**TRNS_NDS_&_PLNS_01_02**)** is posted on the Standards web site at: http://www.nerc.com/~filez/standards/Assess-Transmission-Future-Needs.html

E-mail this form between May 5 and June 5, 2004 to: sarcomm@nerc.com with "Comments" in the subject line.

If you have any questions about this Standards Draft Comment Form, please contact the Director of Standards – Gerry Cauley at 609-452-8060.

Background:

Version 1 of the **"Assess Transmission Future Needs and Develop Transmission Plans"** SAR was posted for a 30-day public comment period between April 2 and May 3, 2002. This first version was an abbreviated SAR, which included an "Industry Need" statement and a brief description of the proposed standard, but did not include a detailed description. The purpose of this first posting was to collect feedback from the industry on the following questions:

- Is there a reliability-related need for an Organization Standard to be developed on this topic?

If there is such a need, how should the scope of the SAR be changed?

- The scope of the SAR is fine as is
- The scope of the SAR should be expanded to include…..
- The scope of the SAR should be reduced to eliminate……

In January 2004, the Standards Authorization Committee (SAC) appointed a Drafting Team (DT) to address industry answers and comments to the questions posed. The DT was also charged with refining the SAR and drafting a detailed description of the proposed standard in preparation for the 2nd posting of the SAR.

Most of the industry respondents indicated that there is indeed a reliability-related need to develop a standard to address transmission assessment and planning issues. Comments were received from many different sources, including individuals, small and large utilities, groups of utilities, and Regional Councils. The SAR DT considered the comments submitted by each industry participant, and revised the SAR to conform to the changes that were technically sound and appeared to represent a consensus of participants.

The revised SAR (Version 2) is posted on the NERC web site given in the blue box at the top of this form. Also posted is a Consideration of Comments document, in which the DT has responded to the original industry comments from 2002. You can find Version 1 of the SAR and industry comments on this version at the same web location.

Please review Version 2 of the SAR and complete this Comment Form to let the SAR DT know if you agree or disagree with the SAR DT's assessment that this SAR is ready to be developed into a Standard.

Commenter Information (For Individual Commenters)
Name: Marv Landauer Organization: BPA Industry Segment #: 1 Telephone: 503-230-4105 E-mail: mjlandauer@bpa.gov

Key to Industry Segment #'s:

1 – Trans. Owners
2 – RTO's, ISO's, RRC's
3 – LSE's
4 – TDU's
5 - Generators
6 - Brokers, Aggregators, and Marketers
7 - Large Electricity End Users
8 - Small Electricity Users
9 - Federal, State, and Provincial Regulatory or other Govt. Entities

STD Commenter Information (For Groups Submitting Group Comments)	
Name of Group: Internal BPA review group	**Group Chair:** **Chair Phone:** **Chair Email:**

List of Group Participants that Support These Comments:

Name	**Company**	**Industry Segment #**
Paul Arnold	**BPA**	**1**
Rebecca Berdahl	**BPA**	**1**
Mark Bond	**BPA**	**1**
Gordon Comegys	**BPA**	**1**
Angela DeClerk	**BPA**	**1**
Don Gold	**BPA**	**1**
Kyle Kohne	**BPA**	**1**
Mike Kreipe	**BPA**	**1**
Chuck Matthews	**BPA**	**1**
Bill Mittelstadt	**BPA**	**1**
James Murphy	**BPA**	**1**
Melvin Rodrigues	**BPA**	**1**
Mike Viles	**BPA**	**1**
Paul Ferron	**BPA**	**1**

Please Review Version 2 of the SAR and Answer the Following Questions

Insert a "check' mark in the appropriate boxes by double-clicking the gray areas.

1. Some members of the SAR drafting team believe that certain Category C events, as defined in Table 1 of existing Planning Standard I.A, are much less likely to occur than other events in Category C. It is felt that certain specific Cat. C events could be re-classified as Cat. D upon showing a low probability of occurrence (and low consequence) of these events.

   (a). Do you believe that the events in Categories B, C & D are classified correctly?

   ☐ Yes

   x☐x No

   ☐ Comments:

   (b). If your answer to (a) is No, how would you re-classify the events? If you have data to support your answer, please provide contact information for the individual responsible for the data.

Outage categories C1, C2 and C9 do not appear to be classified correctly as verified by the attached outage probability data. There is consistency between the categories except that C1, C2 and C9 outages have a much lower probability of occurrence that the other Category C outages.

(c) Which of the following approaches do you favor regarding Table 1 of existing Planning Standard I.A?:

☐ Keep the same categories as now exist and re-classify the low probability (and low consequence) events as Category D events.

Please explain your choice:

x☐x Create a new category between C and D with performance characteristics between that of the present Categories C and D.

Please explain your choice

The C2 (with respect to a bus section breaker failure) and the C9 outages should be in this new category. Although these outages have extremely low probability, they should not cause cascading. This is especially true of C2, which is a single contingency failure of a bus section breaker. Therefore we favor adding a new category between Level C and D (or moving these two outages to Level D) with performance requirements of no cascading and system stable but with no requirement to be within applicable ratings.

☐ Keep the same categories as now exist, but allow for "good cause exceptions" upon a showing of low probability of occurrence (and low consequence) of specific Category C events.

Please explain your choice:

☐ Comments:

Although this is not our preferred choice, allowing the use of "good cause exceptions" (which

we assume is the same as probabilistic methods which could move contingencies to a lower performance level although this is inconsistent with other statements in the SAR) to verify exceptions to the present categories would also be acceptable. For the C2 example, showing that these events statistically occur every 1200-1300 years and would not cause cascading problems on the system should provide enough evidence that a lower performance level is appropriate.

2. Do you believe the standard should include requirements for reporting on the progress or status of *implementing* the plans developed in accordance with this standard?

   x☐x Yes

   ☐ No

   ☐ Comments:

A plan without a requirement to update progress on implementing the plan has little value. This is essential for an effective standard. This should not be an extensive reporting procedure and could easily be met during the subsequent compliance report.

3. If your answer to question 2 is Yes, given that transmission plans change over time as modeling assumptions, systems and plans change, how would you propose accounting for changes in a Transmission Plan?

Once a transmission plan is identified in a compliance report, progress on that project should be reported in subsequent compliance reports. If system conditions change, this should be described along with the consequences to the proposed plans. If project need goes away, the project can be cancelled. However, if the project need still exists and the responsible entity has not implemented a plan to correct the deficiency, it should be listed as non-compliant. Legitimate problems with regulatory and siting issues should be acceptable reasons for project delay.

4. Existing Planning Standard I.A requires: *"The systems must be capable of meeting Category C requirements while accommodating the planned (including maintenance) outage of any bulk electric equipment (including protection systems or their components) at those demand levels for which planned (including maintenance) outages are performed".*

   The SAR drafting team believes that it is impractical to exhaustively test for every contingency described in each category plus every conceivable planned outage. Should the requirement to consider planned outages in addition to each Category A through D contingency remain part of this planning standard?

   ☐ Yes (consider planned outages in all Categories A through D).

   ☐ Yes (consider planned outages in some Categories only).

   Please specify which Categories:

   x☐x No

   ☐ Comments:

This requirement should be addressed in operational planning studies (less than one year). This standard is not appropriate for Transmission Planning studies except possibly as a tool to measure or compare the robustness or availability of transmission plans. This is not an item that should require any compliance action.

5. Are you aware of any Regional or Interconnection differences in the requirements for assessing and planning transmission systems in North America? If so, please list and explain.

   x☐x Comments:

Although WECC has several requirements in its standards that are more stringent than the existing NERC criteria, it also has two standards that are less stringent (C2 and C9). Depending on the resolution of question #1 above, C2 and C9 may be a regional difference.

WECC has a formal Probabilistic Planning process that allows adjustment of performance levels of contingencies in either direction. As this SAR states that the existing NERC Table I is the minimum criteria for probabilistic methods, this will be a regional difference for WECC. This is discussed more in Item #6 below.

6. Do you have any other comments on the SAR?

   x☐x Comments:

Probabilistic Planning Methods: The handling of probabilistic criteria in the SAR seems quite convoluted, i.e. it can only be used to increase performance levels AND has to be approved by NERC. This is not the way probabilistic planning should work.

WECC presently has a process (Seven Step Reliability Performance Evaluation) to allow changes in performance requirements (both up and down) for specific outages based on rigorous analysis and monitoring actual performance. It is mostly applicable to requirements beyond the NERC criteria (such as outages of adjacent circuits on separate towers). Use of these methods should be allowed with approval of affected regions. This process should allow for movement below Table 1, i.e. moving Category C outage to Category D. One way to resolve this would be to replace the word "minimum" in the SAR to "starting".

Applicable Ratings: There is a need to tighten up the methodology for Applicable Ratings to ensure that compliance with this standard is measurable. We assume that this will take place in the Determine Facility Ratings Standard although we are concerned about how this is progressing.

Transition to Operating Standards: The Planning Standards include multi-layered requirements for different types of outages, i.e., Level B single contingencies, Level C and D multiple contingencies. Compliance with these requirements is to be defined and monitored via the new Reliability Standards. However, once the system moves into the Operational timeframe (one year or less), Policy 2 presently requires meeting N-1 contingencies only with no requirements for Levels C and D. The transition between planning and operations needs further exploration.

Note – This form is to comment on **Version 2** of the **"Assess Transmission Future Needs and Develop Transmission Plans"** SAR.

The latest version of this SAR **(**TRNS_NDS_&_PLNS_01_02**)** is posted on the Standards web site at: http://www.nerc.com/~filez/standards/Assess-Transmission-Future-Needs.html

E-mail this form between May 5 and June 5, 2004 to: sarcomm@nerc.com with "Comments" in the subject line.

If you have any questions about this Standards Draft Comment Form, please contact the Director of Standards – Gerry Cauley at 609-452-8060.

Background:

Version 1 of the **"Assess Transmission Future Needs and Develop Transmission Plans"** SAR was posted for a 30-day public comment period between April 2 and May 3, 2002. This first version was an abbreviated SAR, which included an "Industry Need" statement and a brief description of the proposed standard, but did not include a detailed description. The purpose of this first posting was to collect feedback from the industry on the following questions:

- Is there a reliability-related need for an Organization Standard to be developed on this topic?

If there is such a need, how should the scope of the SAR be changed?

- The scope of the SAR is fine as is
- The scope of the SAR should be expanded to include…..
- The scope of the SAR should be reduced to eliminate……

In January 2004, the Standards Authorization Committee (SAC) appointed a Drafting Team (DT) to address industry answers and comments to the questions posed. The DT was also charged with refining the SAR and drafting a detailed description of the proposed standard in preparation for the 2nd posting of the SAR.

Most of the industry respondents indicated that there is indeed a reliability-related need to develop a standard to address transmission assessment and planning issues. Comments were received from many different sources, including individuals, small and large utilities, groups of utilities, and Regional Councils. The SAR DT considered the comments submitted by each industry participant, and revised the SAR to conform to the changes that were technically sound and appeared to represent a consensus of participants.

The revised SAR (Version 2) is posted on the NERC web site given in the blue box at the top of this form. Also posted is a Consideration of Comments document, in which the DT has responded to the original industry comments from 2002. You can find Version 1 of the SAR and industry comments on this version at the same web location.

Please review Version 2 of the SAR and complete this Comment Form to let the SAR DT know if you agree or disagree with the SAR DT's assessment that this SAR is ready to be developed into a Standard.

Commenter Information (For Individual Commenters)
Name: Neil Brausen, Jeff Billinton, Bob Chow Organization: Alberta Electric System Operator (AESO) Industry Segment #: 2 Telephone: 403-539-2531 E-mail: bob.chow@aeso.ca

Key to Industry Segment #'s:

1 – Trans. Owners
2 – RTO's, ISO's, RRC's
3 – LSE's
4 – TDU's
5 - Generators
6 - Brokers, Aggregators, and Marketers
7 - Large Electricity End Users
8 - Small Electricity Users
9 - Federal, State, and Provincial Regulatory or other Govt. Entities

STD Commenter Information (For Groups Submitting Group Comments)		
Name of Group:	**Group Chair:** **Chair Email:**	**Chair Phone:**
List of Group Participants that Support These Comments:		
Name	**Company**	**Industry Segment #**

Please Review Version 2 of the SAR and Answer the Following Questions

Insert a "check' mark in the appropriate boxes by double-clicking the gray areas.

1. Some members of the SAR drafting team believe that certain Category C events, as defined in Table 1 of existing Planning Standard I.A, are much less likely to occur than other events in Category C. It is felt that certain specific Cat. C events could be re-classified as Cat. D upon showing a low probability of occurrence (and low consequence) of these events.

   (a). Do you believe that the events in Categories B, C & D are classified correctly?

   ☒ Yes

   ☐ No

   ☒ Comments:

Generally the B and C events are classified correctly. However, there is a need to reconsider the grouping of the D events on some consistent basis (e.g. such as using outage frequency as a determinant). There should also be some means to include double-circuit lines and buses as B events if their probability of outage is comparable to that of other category B contingencies.

(b). If your answer to (a) is No, how would you re-classify the events? If you have data to support your answer, please provide contact information for the individual responsible for the data.

(c) Which of the following approaches do you favor regarding Table 1 of existing Planning Standard I.A?:

☐ Keep the same categories as now exist and re-classify the low probability (and low consequence) events as Category D events.

Please explain your choice:

☒ Create a new category between C and D with performance characteristics between that of the present Categories C and D.

Please explain your choice

There are D contingencies that are probable although rare (e.g. loss of multiple circuits on separate tower lines on a common right-of-way). These contingencies may result in loss of load or generation but should not allow cascading. Other D contingencies such as loss of all lines on a multi-line corridor or the loss of a complete station would be difficult to contain. These events should be treated differently than the former.

☐ Keep the same categories as now exist, but allow for "good cause exceptions" upon a showing of low probability of occurrence (and low consequence) of specific Category C events.

Please explain your choice:

☐ Comments:

2. Do you believe the standard should include requirements for reporting on the progress or status of *implementing* the plans developed in accordance with this standard?

☐ Yes

☒ No

☒ Comments:

It is not clear to whom the reporting would go to and how it would be used. Normally, reporting would be required for the regulatory process in the affected jurisdiction. The scope of that reporting would not be limited to reliability only but also other aspects of the transmission plan (e.g. customer connections, efficiency improvements, etc).

3. If your answer to question 2 is Yes, given that transmission plans change over time as modeling assumptions, systems and plans change, how would you propose accounting for changes in a Transmission Plan?

4. Existing Planning Standard I.A requires: *"The systems must be capable of meeting Category C requirements while accommodating the planned (including maintenance) outage of any bulk electric equipment (including protection systems or their components) at those demand levels for which planned (including maintenance) outages are performed".*

   The SAR drafting team believes that it is impractical to exhaustively test for every contingency described in each category plus every conceivable planned outage. Should the requirement to consider planned outages in addition to each Category A through D contingency remain part of this planning standard?

   ☐ Yes (consider planned outages in all Categories A through D).

   ☒ Yes (consider planned outages in some Categories only).

   Please specify which Categories: A to C

   ☐ No

   ☒ Comments:

   A need to clarify what constitutes the "normal" condition when a facility (transmission or generation) is on a long duration planned outage (is it a day, a week, etc). The A to C contingency categories can then be applied to the "normal" condition as defined. The testing requirement could perhaps be stated in a way that leaves it to the judgement of the planning authority as to the critical combinations of outages that need to be tested.

5. Are you aware of any Regional or Interconnection differences in the requirements for assessing and planning transmission systems in North America? If so, please list and explain.

   ☐ Comments:

6. Do you have any other comments on the SAR?

   ☒ Comments:

   The basis of probabilistic planning, in our view, is to make planning decisions based on the metrics, such frequency, duration and impact, derived from probabilistic assessments. This is usually difficult to do in planning the bulk portion of the transmission system, since outage events are rare but their impact is significant (like multiplying infinity and zero). The categorization of contingencies in Table 1 using outage frequency as a determinant is a step in applying probabilistic techniques in this Standard but it is not probabilistic planning in its true sense. The

SAR development team should clarify what it intends with regard to "the use of probabilistic planning methods".

We believe that the assumptions made for the amount, type and location of future supply are important considerations in assessing the future needs of transmission systems. The SAR drafting team should consider this forecast requirement in developing this Standard. Similarly, there is difficulty in separating planning for reliability and planning for overall system efficiency and economy, and the Standard must be clear on this differentiation.

The SAR drafting team should clarify through rules, tests, definitions, etc. the portion of an entity's transmission system that shall be planned under the full NERC Standard and what portion may be exempted.

There should be a clear distinction between the appropriate use and application of RAS (or SPS) and "safety nets".

Note – This form is to comment on **Version 2** of the **"Assess Transmission Future Needs and Develop Transmission Plans"** SAR.

The latest version of this SAR **(**TRNS_NDS_&_PLNS_01_02**)** is posted on the Standards web site at: http://www.nerc.com/~filez/standards/Assess-Transmission-Future-Needs.html

E-mail this form between May 5 and June 5, 2004 to: sarcomm@nerc.com with "Comments" in the subject line.

If you have any questions about this Standards Draft Comment Form, please contact the Director of Standards – Gerry Cauley at 609-452-8060.

Background:

Version 1 of the **"Assess Transmission Future Needs and Develop Transmission Plans"** SAR was posted for a 30-day public comment period between April 2 and May 3, 2002. This first version was an abbreviated SAR, which included an "Industry Need" statement and a brief description of the proposed standard, but did not include a detailed description. The purpose of this first posting was to collect feedback from the industry on the following questions:

- Is there a reliability-related need for an Organization Standard to be developed on this topic?

If there is such a need, how should the scope of the SAR be changed?

- The scope of the SAR is fine as is
- The scope of the SAR should be expanded to include…..
- The scope of the SAR should be reduced to eliminate……

In January 2004, the Standards Authorization Committee (SAC) appointed a Drafting Team (DT) to address industry answers and comments to the questions posed. The DT was also charged with refining the SAR and drafting a detailed description of the proposed standard in preparation for the 2nd posting of the SAR.

Most of the industry respondents indicated that there is indeed a reliability-related need to develop a standard to address transmission assessment and planning issues. Comments were received from many different sources, including individuals, small and large utilities, groups of utilities, and Regional Councils. The SAR DT considered the comments submitted by each industry participant, and revised the SAR to conform to the changes that were technically sound and appeared to represent a consensus of participants.

The revised SAR (Version 2) is posted on the NERC web site given in the blue box at the top of this form. Also posted is a Consideration of Comments document, in which the DT has responded to the original industry comments from 2002. You can find Version 1 of the SAR and industry comments on this version at the same web location.

Please review Version 2 of the SAR and complete this Comment Form to let the SAR DT know if you agree or disagree with the SAR DT's assessment that this SAR is ready to be developed into a Standard.

Commenter Information (For Individual Commenters)
Name:
Organization:
Industry Segment #:
Telephone:
E-mail:

Key to Industry Segment #'s:

- **1 – Trans. Owners**
- **2 – RTO's, ISO's, RRC's**
- **3 – LSE's**
- **4 – TDU's**
- **5 - Generators**
- 6 - Brokers, Aggregators, and Marketers
- **7 - Large Electricity End Users**
- **8 - Small Electricity Users**
- 9 - Federal, State, and Provincial Regulatory or other Govt. Entities

STD Commenter Information (For Groups Submitting Group Comments)	
Name of Group: ISO/RTO Council Standards Review Committee	**Group Chair:** Karl Tammar **Chair Phone:** 518-356-6205 **Chair Email:** ktammar@nyiso.com

List of Group Participants that Support These Comments:

Name	Company	Industry Segment #
Dale McMaster	AESO	2
Ed Riley	CAISO	2
Sam Jones	ERCOT	2
Don Tench	IMO	2
Peter Brandien	ISO-NE	2
Bill Phillips	MISO	2
Karl Tammar	NYISO	2
Bruce Balmat	PJM	2
Carl Monroe	SPP	2

Please Review Version 2 of the SAR and Answer the Following Questions

Insert a "check' mark in the appropriate boxes by double-clicking the gray areas.

1. Some members of the SAR drafting team believe that certain Category C events, as defined in Table 1 of existing Planning Standard I.A, are much less likely to occur than other events in Category C. It is felt that certain specific Cat. C events could be re-classified as Cat. D upon showing a low probability of occurrence (and low consequence) of these events.

(a). Do you believe that the events in Categories B, C & D are classified correctly?

☒ Yes

☐ No

☐ Comments:

(b). If your answer to (a) is No, how would you re-classify the events? If you have data to support your answer, please provide contact information for the individual responsible for the data.

(c) Which of the following approaches do you favor regarding Table 1 of existing Planning Standard I.A?:

☐ Keep the same categories as now exist and re-classify the low probability (and low consequence) events as Category D events.

Please explain your choice:

☐ Create a new category between C and D with performance characteristics between that of the present Categories C and D.

Please explain your choice

☐ Keep the same categories as now exist, but allow for "good cause exceptions" upon a showing of low probability of occurrence (and low consequence) of specific Category C events.

Please explain your choice:

☒ Comments:

We suggest no changes be made to Categories B, C, and D as they presently exist in the Planning Standards. Choice of any of the above would result in a weakened and degraded reliability standard throughout NERC member systems.

.

2. Do you believe the standard should include requirements for reporting on the progress or status of *implementing* the plans developed in accordance with this standard?

   ☒ Yes

   ☐ No

   ☐ Comments:

3. If your answer to question 2 is Yes, given that transmission plans change over time as modeling assumptions, systems and plans change, how would you propose accounting for changes in a Transmission Plan?

Periodic Transmission Reviews to address changes in plans and tracking lists of BPS additions and modifications (that would include transmission, generation and other major equipment identified as a BPS element).

The resultant NERC standard should not be overly prescriptive in requirements for reporting progress/status on the standard. Flexibility should allow for the various documentation and processes already in place to achieve compliance.

4. Existing Planning Standard I.A requires: *"The systems must be capable of meeting Category C requirements while accommodating the planned (including maintenance) outage of any bulk electric equipment (including protection systems or their components) at those demand levels for which planned (including maintenance) outages are performed".*

   The SAR drafting team believes that it is impractical to exhaustively test for every contingency described in each category plus every conceivable planned outage. Should the requirement to consider planned outages in addition to each Category A through D contingency remain part of this planning standard?

   ☒ Yes (consider planned outages in all Categories A through D).

   ☐ Yes (consider planned outages in some Categories only).

   Please specify which Categories:

   ☐ No

   ☒ Comments*: The existing standards should not be weakened*

5. Are you aware of any Regional or Interconnection differences in the requirements for assessing and planning transmission systems in North America? If so, please list and explain.

   ☐ Comments:

6. Do you have any other comments on the SAR?

   ☒ Comments:

   Determining a definition for Cascading Outage should be coordinated with the STDs 200 and 600.

   This standard should make it abundantly clear that it applies to both internal and external systems, that is the system under study and adjacent systems, or the entire interconnection if appropriate.

   Seasonal and weather related variability should be considered in studies.

Note – This form is to comment on **Version 2** of the **"Assess Transmission Future Needs and Develop Transmission Plans"** SAR.

The latest version of this SAR **(**TRNS_NDS_&_PLNS_01_02**)** is posted on the Standards web site at: http://www.nerc.com/~filez/standards/Assess-Transmission-Future-Needs.html

E-mail this form between May 5 and June 5, 2004 to: sarcomm@nerc.com with "Comments" in the subject line.

If you have any questions about this Standards Draft Comment Form, please contact the Director of Standards – Gerry Cauley at 609-452-8060.

Background:

Version 1 of the **"Assess Transmission Future Needs and Develop Transmission Plans"** SAR was posted for a 30-day public comment period between April 2 and May 3, 2002. This first version was an abbreviated SAR, which included an "Industry Need" statement and a brief description of the proposed standard, but did not include a detailed description. The purpose of this first posting was to collect feedback from the industry on the following questions:

- Is there a reliability-related need for an Organization Standard to be developed on this topic?

If there is such a need, how should the scope of the SAR be changed?

- The scope of the SAR is fine as is
- The scope of the SAR should be expanded to include…..
- The scope of the SAR should be reduced to eliminate……

In January 2004, the Standards Authorization Committee (SAC) appointed a Drafting Team (DT) to address industry answers and comments to the questions posed. The DT was also charged with refining the SAR and drafting a detailed description of the proposed standard in preparation for the 2nd posting of the SAR.

Most of the industry respondents indicated that there is indeed a reliability-related need to develop a standard to address transmission assessment and planning issues. Comments were received from many different sources, including individuals, small and large utilities, groups of utilities, and Regional Councils. The SAR DT considered the comments submitted by each industry participant, and revised the SAR to conform to the changes that were technically sound and appeared to represent a consensus of participants.

The revised SAR (Version 2) is posted on the NERC web site given in the blue box at the top of this form. Also posted is a Consideration of Comments document, in which the DT has responded to the original industry comments from 2002. You can find Version 1 of the SAR and industry comments on this version at the same web location.

Please review Version 2 of the SAR and complete this Comment Form to let the SAR DT know if you agree or disagree with the SAR DT's assessment that this SAR is ready to be developed into a Standard.

Commenter Information (For Individual Commenters)
Name:
Organization:
Industry Segment #:
Telephone:
E-mail:

Key to Industry Segment #'s:

- **1 – Trans. Owners**
- **2 – RTO's, ISO's, RRC's**
- **3 – LSE's**
- **4 – TDU's**
- **5 - Generators**
- 6 - Brokers, Aggregators, and Marketers
- **7 - Large Electricity End Users**
- **8 - Small Electricity Users**
- 9 - Federal, State, and Provincial Regulatory or other Govt. Entities

STD Commenter Information (For Groups Submitting Group Comments)	
Name of Group: Southern Co. Generation & Energy Marketing (SCGEM)	**Group Chair**: **Roman Carter** **Chair Phone:205.257.6027** **Chair Email:jrcarter@southernco.com**

List of Group Participants that Support These Comments:		
Name	**Company**	**Industry Segment #**
Roman Carter	**SCGEM**	**6**
Joel Dison	*SCGEM*	*6*
Lucius Burris	*SCGEM*	*6*
Tony Reed	*SCGEM*	*6*
Lloyd Barnes	*SCGEM*	*6*
Clifford Shepard	**SCGEM**	**6**

Please Review Version 2 of the SAR and Answer the Following Questions

Insert a "check' mark in the appropriate boxes by double-clicking the gray areas.

1. Some members of the SAR drafting team believe that certain Category C events, as defined in Table 1 of existing Planning Standard I.A, are much less likely to occur than other events in Category C. It is felt that certain specific Cat. C events could be re-classified as Cat. D upon showing a low probability of occurrence (and low consequence) of these events.

   (a). Do you believe that the events in Categories B, C & D are classified correctly?

   ☒ Yes

   ☐ No

☒ Comments: Category C events are more likely to occur than Category D events and should require higher performance expectations.

(b). If your answer to (a) is No, how would you re-classify the events? If you have data to support your answer, please provide contact information for the individual responsible for the data.

(c) Which of the following approaches do you favor regarding Table 1 of existing Planning Standard I.A?:

☐ Keep the same categories as now exist and re-classify the low probability (and low consequence) events as Category D events.

Please explain your choice:

☐ Create a new category between C and D with performance characteristics between that of the present Categories C and D.

Please explain your choice

☐ Keep the same categories as now exist, but allow for "good cause exceptions" upon a showing of low probability of occurrence (and low consequence) of specific Category C events.

Please explain your choice:

☒ Comments: Since the events are currently categorized correctly, 1.b and 1.c are not applicable.

Low consequence Category C events should be considered compliant. However, as we interpret Table I, a Category C event that results in low consequences (e.g. no cascading) is already considered compliant since entities can drop load or curtail firm transfers to return to applicable thermal or voltage ratings.

2. Do you believe the standard should include requirements for reporting on the progress or status of *implementing* the plans developed in accordance with this standard?

☐ Yes

☒ No

☐ Comments: Too burdensome for the perceived benefits.

3. If your answer to question 2 is Yes, given that transmission plans change over time as modeling assumptions, systems and plans change, how would you propose accounting for changes in a Transmission Plan?

4. Existing Planning Standard I.A requires: *"The systems must be capable of meeting Category C requirements while accommodating the planned (including maintenance) outage of any bulk electric equipment (including protection systems or their components) at those demand levels for which planned (including maintenance) outages are performed".*

   The SAR drafting team believes that it is impractical to exhaustively test for every contingency described in each category plus every conceivable planned outage. Should the requirement to consider planned outages in addition to each Category A through D contingency remain part of this planning standard?

   ☐ Yes (consider planned outages in all Categories A through D).

   ☒ Yes (consider planned outages in some Categories only).

   Please specify which Categories: **Categories A and B only.**

   ☐ No

   ☒ Comments: The requirement to consider planned outages in addition to each Category A and B contingency should remain part of this planning standard. We agree with the SAR drafting team that exhaustive testing for every contingency described and every load level in each category is not practical.

5. Are you aware of any Regional or Interconnection differences in the requirements for assessing and planning transmission systems in North America? If so, please list and explain.

   ☒ Comments: Not aware of any at this time. However, Regional Differences could develop and each request for a Regional Difference should be considered individually.

6. Do you have any other comments on the SAR?

   ☒ Comments:

   Southern agrees that the Standard should provide a clearer definition of "cascading outages". We suggest that the following be considered: The uncontrolled successive loss of system elements triggered by contingencies which results in widespread electric service interruption 1) that drops 1000 mw of load or more or 2) that crosses control area boundaries.

   In addition, Southern recommends that the Standard provide a clearer definition of what is meant by "system stable". We suggest that the following be considered: For category A and B simulations, system stable means that no generating units pull out of synchronism. For Category C events, system stable means that if units pull out of synchronism, 1) the resulting impedance swings are not out into the transmission system and 2) the total amount of generation lost because of out-of-step tripping does not exceed the control area operating reserve level.

   In general, the NERC Standards need to have a common definition across the board for any definition used in a Standard. For example, the definition for "Cascading Outages" needs to be coordinated with the Standards Drafting Team (SDT) for the "Determine Facility Ratings, Operating Limits, and Transfer Capability" standard.

   It would also be beneficial to the generation sector if the SDT for this new Planning Standard could summarize the differences between the existing Planning Standards I.A, I.B, I.D, II.A, and II.D and the new Planning Standard as it is being developed. This would gauge the potential impact to the plants. The main concerns have been 1) how to address regional differences (primarily related to

Category C events), 2) how to differentiate Table I's application to the Planning world versus the Operations world, and 3) how to state the requirements more clearly.

The standard should include requirements for LSEs to provide forecast resource data required to develop power flow models as required in the current II.D standards. Accordingly, this standard should also apply to LSEs.

In relation to the methodology being used for incorporating planned generation assets in the model and how generation is dispatched, the type of each generating unit, the primary fuel type for each generating unit, and a dispatch order of the generating units should be required. In addition, a general description of the dispatch methodology used for the system should also be required. However, no cost information should be required**.**

Note – This form is to comment on **Version 2** of the **"Assess Transmission Future Needs and Develop Transmission Plans"** SAR.

The latest version of this SAR **(**TRNS_NDS_&_PLNS_01_02**)** is posted on the Standards web site at: http://www.nerc.com/~filez/standards/Assess-Transmission-Future-Needs.html

E-mail this form between May 1 and May 31, 2004 to: sarcomm@nerc.com with "Comments" in the subject line.

If you have any questions about this Standards Draft Comment Form, please contact the Director of Standards – Gerry Cauley at 609-452-8060.

Background:

Version 1 of the **"Assess Transmission Future Needs and Develop Transmission Plans"** SAR was posted for a 30-day public comment period between April 2 and May 3, 2002. This first version was an abbreviated SAR, which included an "Industry Need" statement and a brief description of the proposed standard, but did not include a detailed description. The purpose of this first posting was to collect feedback from the industry on the following questions:

- Is there a reliability-related need for an Organization Standard to be developed on this topic?

If there is such a need, how should the scope of the SAR be changed?

- The scope of the SAR is fine as is
- The scope of the SAR should be expanded to include…..
- The scope of the SAR should be reduced to eliminate……

In January 2004, the Standards Authorization Committee (SAC) appointed a Drafting Team (DT) to address industry answers and comments to the questions posed. The DT was also charged with refining the SAR and drafting a detailed description of the proposed standard in preparation for the 2nd posting of the SAR.

Most of the industry respondents indicated that there is indeed a reliability-related need to develop a standard to address transmission assessment and planning issues. Comments were received from many different sources, including individuals, small and large utilities, groups of utilities, and Regional Councils. The SAR DT considered the comments submitted by each industry participant, and revised the SAR to conform to the changes that were technically sound and appeared to represent a consensus of participants.

The revised SAR (Version 2) is posted on the NERC web site given in the blue box at the top of this form. Also posted is a Consideration of Comments document, in which the DT has responded to the original industry comments from 2002. You can find Version 1 of the SAR and industry comments on this version at the same web location.

Please review Version 2 of the SAR and complete this Comment Form to let the SAR DT know if you agree or disagree with the SAR DT's assessment that this SAR is ready to be developed into a Standard.

Commenter Information (For Individual Commenters)
Name: Raj Rana - Coordinator
Organization: AEP
Industry Segment #:1,3,5,6
Telephone: 614-716-2359
E-mail: raj_rana@AEP.com

Key to Industry Segment #'s:

1 – Trans. Owners
2 – RTO's, ISO's, RRC's
3 – LSE's
4 – TDU's
5 - Generators
6 - Brokers, Aggregators, and Marketers
7 - Large Electricity End Users
8 - Small Electricity Users
9 - Federal, State, and Provincial Regulatory or other Govt. Entities

STD Commenter Information (For Groups Submitting Group Comments)	
Name of Group:	**Group Chair:** **Chair Phone:** **Chair Email:**

List of Group Participants that Support These Comments:

Name	**Company**	**Industry Segment #**

Please Review Version 2 of the SAR and Answer the Following Questions

Insert a "check' mark in the appropriate boxes by double-clicking the gray areas.

1. Some members of the SAR drafting team believe that certain Category C events, as defined in Table 1 of existing Planning Standard I.A, are much less likely to occur than other events in Category C. It is felt that certain specific Cat. C events could be re-classified as Cat. D upon showing a low probability of occurrence (and low consequence) of these events.

   (a). Do you believe that the events in Categories B, C & D are classified correctly?

   ☐ Yes

   ☐ No

   X Comments: Need to see outage probability data in order to answer definitively.

   (b). If your answer to (a) is No, how would you re-classify the events? If you have data to support your answer, please provide contact information for the individual responsible for the data.

   Based on good data, the probabilities of exiting C and D events could be estimated. The events could then be grouped into higher probability events (Category C) and lower probability events (Category D). AEP would be able to provide some outage data to support this analysis. Contact Ali Al-Fayez, Manager – Transmission Asset Performance (614 552-1649)

   (c) Which of the following approaches do you favor regarding Table 1 of existing Planning Standard I.A?:

   X Keep the same categories as now exist and re-classify the low probability (and low consequence) events as Category D events.

   Please explain your choice: Four categories are sufficient and generally understood by the industry. Specific changes that are supported by outage probabilities can be made, as appropriate, by moving Category C tests to Category D.

   ☐ Create a new category between C and D with performance characteristics between that of the present Categories C and D.

   Please explain your choice

   ☐ Keep the same categories as now exist, but allow for "good cause exceptions" upon a showing of low probability of occurrence (and low consequence) of specific Category C events.

   Please explain your choice:

   X☐ Comments: "Good cause exceptions" can always be considered, but this approach should not be institutionalized.

2. Do you believe the standard should include requirements for reporting on the progress or status of *implementing* the plans developed in accordance with this standard?

X Yes

☐ No

X Comments: The reporting requirements should not be burdensome, but they are needed to ensure a minimum level of accountability.

3. If your answer to question 2 is Yes, given that transmission plans change over time as modeling assumptions, systems and plans change, how would you propose accounting for changes in a Transmission Plan?
A simple narrative explanation should be provided that explains what factors have eliminated the need for the transmission modification/addition or changed its timing. In cases where a modified solution has been developed, the Transmission Planner should demonstrate the effectiveness of the modified approach and compare to the original approach.

4. Existing Planning Standard I.A requires: *"The systems must be capable of meeting Category C requirements while accommodating the planned (including maintenance) outage of any bulk electric equipment (including protection systems or their components) at those demand levels for which planned (including maintenance) outages are performed".*

   The SAR drafting team believes that it is impractical to exhaustively test for every contingency described in each category plus every conceivable planned outage. Should the requirement to consider planned outages in addition to each Category A through D contingency remain part of this planning standard?

   ☐ Yes (consider planned outages in all Categories A through D).

   X Yes (consider planned outages in some Categories only).

   Please specify which Categories: B, C and D

   ☐ No

   X Comments: For Categories where planned maintenance is considered, it should only be necessary to test the most significant planned outages, not all possible planned outages.

5. Are you aware of any Regional or Interconnection differences in the requirements for assessing and planning transmission systems in North America? If so, please list and explain.

   No

   ☐ Comments:

6. Do you have any other comments on the SAR?
No

   ☐ Comments:

Note – This form is to comment on **Version 2** of the **"Assess Transmission Future Needs and Develop Transmission Plans"** SAR.

The latest version of this SAR **(**TRNS_NDS_&_PLNS_01_02**)** is posted on the Standards web site at: http://www.nerc.com/~filez/standards/Assess-Transmission-Future-Needs.html

E-mail this form between May 5 and June 5, 2004 to: sarcomm@nerc.com with "Comments" in the subject line.

If you have any questions about this Standards Draft Comment Form, please contact the Director of Standards – Gerry Cauley at 609-452-8060.

Background:

Version 1 of the **"Assess Transmission Future Needs and Develop Transmission Plans"** SAR was posted for a 30-day public comment period between April 2 and May 3, 2002. This first version was an abbreviated SAR, which included an "Industry Need" statement and a brief description of the proposed standard, but did not include a detailed description. The purpose of this first posting was to collect feedback from the industry on the following questions:

- Is there a reliability-related need for an Organization Standard to be developed on this topic?

If there is such a need, how should the scope of the SAR be changed?

- The scope of the SAR is fine as is
- The scope of the SAR should be expanded to include…..
- The scope of the SAR should be reduced to eliminate……

In January 2004, the Standards Authorization Committee (SAC) appointed a Drafting Team (DT) to address industry answers and comments to the questions posed. The DT was also charged with refining the SAR and drafting a detailed description of the proposed standard in preparation for the 2nd posting of the SAR.

Most of the industry respondents indicated that there is indeed a reliability-related need to develop a standard to address transmission assessment and planning issues. Comments were received from many different sources, including individuals, small and large utilities, groups of utilities, and Regional Councils. The SAR DT considered the comments submitted by each industry participant, and revised the SAR to conform to the changes that were technically sound and appeared to represent a consensus of participants.

The revised SAR (Version 2) is posted on the NERC web site given in the blue box at the top of this form. Also posted is a Consideration of Comments document, in which the DT has responded to the original industry comments from 2002. You can find Version 1 of the SAR and industry comments on this version at the same web location.

Please review Version 2 of the SAR and complete this Comment Form to let the SAR DT know if you agree or disagree with the SAR DT's assessment that this SAR is ready to be developed into a Standard.

Commenter Information (For Individual Commenters)
Name:
Organization:
Industry Segment #:
Telephone:
E-mail:

Key to Industry Segment #'s:

- **1 – Trans. Owners**
- **2 – RTO's, ISO's, RRC's**
- **3 – LSE's**
- **4 – TDU's**
- **5 - Generators**
- 6 - Brokers, Aggregators, and Marketers
- **7 - Large Electricity End Users**
- **8 - Small Electricity Users**
- 9 - Federal, State, and Provincial Regulatory or other Govt. Entities

STD Commenter Information (For Groups Submitting Group Comments)	
Name of Group:	**Group Chair:** **Chair Phone:** **Chair Email:**

List of Group Participants that Support These Comments:

Name	**Company**	**Industry Segment #**
Robert W. Pierce	**Duke Energy**	**1**

Please Review Version 2 of the SAR and Answer the Following Questions

Insert a "check' mark in the appropriate boxes by double-clicking the gray areas.

1. Some members of the SAR drafting team believe that certain Category C events, as defined in Table 1 of existing Planning Standard I.A, are much less likely to occur than other events in Category C. It is felt that certain specific Cat. C events could be re-classified as Cat. D upon showing a low probability of occurrence (and low consequence) of these events.

   (a). Do you believe that the events in Categories B, C & D are classified correctly?

   ☒ Yes

   ☐ No

   ☐ Comments:

   (b). If your answer to (a) is No, how would you re-classify the events? If you have data to support your answer, please provide contact information for the individual responsible for the data.

   (c) Which of the following approaches do you favor regarding Table 1 of existing Planning Standard I.A?:

   ☐ Keep the same categories as now exist and re-classify the low probability (and low consequence) events as Category D events.

   Please explain your choice:

   ☐ Create a new category between C and D with performance characteristics between that of the present Categories C and D.

   Please explain your choice

   ☒ Keep the same categories as now exist, but allow for "good cause exceptions" upon a showing of low probability of occurrence (and low consequence) of specific Category C events.

   Please explain your choice: Allow the flexibility for reasonable exceptions to the general categories based on frequency of occurrence. This may mean the possibility of a particular contingency moving up or down in category. This allowance permits appropriate exercise of engineering judgment in the planning process.

   ☐ Comments:

2. Do you believe the standard should include requirements for reporting on the progress or status of *implementing* the plans developed in accordance with this standard?

   ☐ Yes

   ☒ No

☐ Comments:

3. If your answer to question 2 is Yes, given that transmission plans change over time as modeling assumptions, systems and plans change, how would you propose accounting for changes in a Transmission Plan?

4. Existing Planning Standard I.A requires: *"The systems must be capable of meeting Category C requirements while accommodating the planned (including maintenance) outage of any bulk electric equipment (including protection systems or their components) at those demand levels for which planned (including maintenance) outages are performed".*

   The SAR drafting team believes that it is impractical to exhaustively test for every contingency described in each category plus every conceivable planned outage. Should the requirement to consider planned outages in addition to each Category A through D contingency remain part of this planning standard?

   ☐ Yes (consider planned outages in all Categories A through D).

   ☐ Yes (consider planned outages in some Categories only).

   Please specify which Categories:

   ☒ No

   ☒ Comments: The first priority should be to clarify the requirements of the I.A table. Utilities/ regions are interpreting the table differently. What was the original basis for the contingency categories and required response in the table? Clarify whether the original intent was to perform thermal, voltage and stability screens for all categories and the frequency at which the screenings were intended to performed.

   It is impractical to expect all screenings of all categories on a frequent basis. It may be appropriate to state that the table is for general guidance and that transmission owners may determine frequency at which studies should be performed based on load growth, system loading and significance of changes to the system.

5. Are you aware of any Regional or Interconnection differences in the requirements for assessing and planning transmission systems in North America? If so, please list and explain.

   ☐ Comments:

6. Do you have any other comments on the SAR?

   ☒ Comments: Resource planning cannot be excluded from the standard. Guidance should be provided on incorporation of resource data from all LSE's and how resource deficiencies in outyear models should be handled (e.g. model fictitious generation with no reactive capability to ensure sufficient reactive resources are planned for if power is purchased from off system in the future). The increasingly frequent changes in resource designations are causing greater uncertainty in performance of planning for reliable system operation.

Note – This form is to comment on **Version 2** of the **"Assess Transmission Future Needs and Develop Transmission Plans"** SAR.

The latest version of this SAR **(**TRNS_NDS_&_PLNS_01_02**)** is posted on the Standards web site at: http://www.nerc.com/~filez/standards/Assess-Transmission-Future-Needs.html

E-mail this form between May 5 and June 5, 2004 to: sarcomm@nerc.com with "Comments" in the subject line.

If you have any questions about this Standards Draft Comment Form, please contact the Director of Standards – Gerry Cauley at 609-452-8060.

17TemplE330Background:

Version 1 of the **"Assess Transmission Future Needs and Develop Transmission Plans"** SAR was posted for a 30-day public comment period between April 2 and May 3, 2002. This first version was an abbreviated SAR, which included an "Industry Need" statement and a brief description of the proposed standard, but did not include a detailed description. The purpose of this first posting was to collect feedback from the industry on the following questions:

- Is there a reliability-related need for an Organization Standard to be developed on this topic?

If there is such a need, how should the scope of the SAR be changed?

- The scope of the SAR is fine as is
- The scope of the SAR should be expanded to include…..
- The scope of the SAR should be reduced to eliminate……

In January 2004, the Standards Authorization Committee (SAC) appointed a Drafting Team (DT) to address industry answers and comments to the questions posed. The DT was also charged with refining the SAR and drafting a detailed description of the proposed standard in preparation for the 2nd posting of the SAR.

Most of the industry respondents indicated that there is indeed a reliability-related need to develop a standard to address transmission assessment and planning issues. Comments were received from many different sources, including individuals, small and large utilities, groups of utilities, and Regional Councils. The SAR DT considered the comments submitted by each industry participant, and revised the SAR to conform to the changes that were technically sound and appeared to represent a consensus of participants.

The revised SAR (Version 2) is posted on the NERC web site given in the blue box at the top of this form. Also posted is a Consideration of Comments document, in which the DT has responded to the original industry comments from 2002. You can find Version 1 of the SAR and industry comments on this version at the same web location.

Please review Version 2 of the SAR and complete this Comment Form to let the SAR DT know if you agree or disagree with the SAR DT's assessment that this SAR is ready to be developed into a Standard.

Commenter Information (For Individual Commenters)
Name:
Organization:
Industry Segment #:
Telephone:
E-mail:

Key to Industry Segment #'s:

- **1 – Trans. Owners**
- **2 – RTO's, ISO's, RRC's**
- **3 – LSE's**
- **4 – TDU's**
- **5 - Generators**
- 6 - Brokers, Aggregators, and Marketers
- **7 - Large Electricity End Users**
- **8 - Small Electricity Users**
- 9 - Federal, State, and Provincial Regulatory or other Govt. Entities

STD Commenter Information (For Groups Submitting Group Comments)		
Name of Group:	**Group Chair:** Peter Mackin **Chair Phone:** 916-631-3212 **Chair Email:** pmackin@navigantconsulting.com	
List of Group Participants that Support These Comments:		
Name	**Company**	**Industry Segment #**
Peter Krzykos	**Arizona Public Service**	**1**
Chifong Thomas	**Pacific Gas and Electric Co.**	**1**
Peter Mackin	**Transmission Agency of Northern California (TANC)**	**1**
Matthew Stoltz	**Basin Electric Power Cooperative**	**1**
Bob Easton	**Western Area Power Administration**	**1**
Charles Russell	**Salt River Project**	**1**
Joe Seabrook	**Puget Sound Energy**	**1, 3, and 5**

Please Review Version 2 of the SAR and Answer the Following Questions

Insert a "check' mark in the appropriate boxes by double-clicking the gray areas.

1. Some members of the SAR drafting team believe that certain Category C events, as defined in Table 1 of existing Planning Standard I.A, are much less likely to occur than other events in Category C. It is felt that certain specific Cat. C events could be re-classified as Cat. D upon showing a low probability of occurrence (and low consequence) of these events.

   (a). Do you believe that the events in Categories B, C & D are classified correctly?

   ☐ Yes

   ☒ No

☒ Comments:

The Categories should be based on probability of occurrence of the initiating events. A review of Table I (Standard IA) show that the contingencies in the same Categories seem to have very different probabilities of occurrence.

Category D needs to be split into two categories, the more probable Category D events should not be allowed to cascade. For example, the new no cascading category should include:

loss of 2 units at a plant

loss of adjacent lines in a right of way

loss of multiple bus sections as a result of failure or delayed clearing of a bus tie or bus sectionalizing breaker

There is no defined performance level for 3 phase fault, stuck breaker, and loss of one line.

(b). If your answer to (a) is No, how would you re-classify the events? If you have data to support your answer, please provide contact information for the individual responsible for the data.

See A. For support, see the NERC/WECC Planning Standards

(c) Which of the following approaches do you favor regarding Table 1 of existing Planning Standard I.A?:

☐ Keep the same categories as now exist and re-classify the low probability (and low consequence) events as Category D events.

Please explain your choice:

☒ Create a new category between C and D with performance characteristics between that of the present Categories C and D.

Please explain your choice

A no-cascading performance requirement is needed.

There are Category C events, which have a very low probability of occurrence. Such events, even if occurred should not lead to cascading, even though local facility ratings or voltage limits may be exceeded. Very often, the solution for such low probability contingencies would be to install relay system to interrupt load or generation. The probability of relay misoperation to prevent potential problems resulting from the contingency may be higher than the probability of the contingency itself. In this case, the system reliability would be better serve if we can add a category for such low probability contingencies (which would not result in cascading), and the risk of which is acceptable.

☐ Keep the same categories as now exist, but allow for "good cause exceptions" upon a showing of low probability of occurrence (and low consequence) of specific Category C events.

Please explain your choice:

☐ Comments:

2. Do you believe the standard should include requirements for reporting on the progress or status of *implementing* the plans developed in accordance with this standard?

☐ Yes

☒ No

☒ Comments:

Since many of the transmission plans are dependent upon factors such as, resource plans, local load projections, new technology, permitting, to name a few, it would not be meaningful to report on the status of implementation of a transmission plan. In any case, if a potential transmission problem is not solved, it will show up again in subsequent years, so there will be pressure to solve it. This continuous "certification" would ensure that any potential transmission problem, once identified, would not be left unsolved even without NERC requiring status reports on implementation.

3. If your answer to question 2 is Yes, given that transmission plans change over time as modeling assumptions, systems and plans change, how would you propose accounting for changes in a Transmission Plan?

4. Existing Planning Standard I.A requires: *"The systems must be capable of meeting Category C requirements while accommodating the planned (including maintenance) outage of any bulk electric equipment (including protection systems or their components) at those demand levels for which planned (including maintenance) outages are performed".*

The SAR drafting team believes that it is impractical to exhaustively test for every contingency described in each category plus every conceivable planned outage. Should the requirement to consider planned outages in addition to each Category A through D contingency remain part of this planning standard?

☐ Yes (consider planned outages in all Categories A through D).

☒ Yes (consider planned outages in some Categories only).

Please specify which Categories: A, B, and C (except C-3)

☐ No

☒ Comments: All contingencies where a single point of failure could cause facilities to be lost should be tested for compliance with the standards even under planned maintenance conditions. However, it should never be necessary to exhaustively test every possible combination of outages. Those contingencies that are clearly not critical outages should not have to be simulated.

5. Are you aware of any Regional or Interconnection differences in the requirements for assessing and planning transmission systems in North America? If so, please list and explain.

☒ Comments: The existing NERC Standard C-9 (and C-2 for bus sectionalizing breakers) as it applies to WECC should be modified so that thermal limit and voltage limit violations are allowed for bus sectionalizing breaker failures. However, under no conditions should system instability or cascading outages be allowed for bus sectionalizing breaker failures.

6. Do you have any other comments on the SAR?

– ☒ Comments: On Page SAR-5 of the draft SAR, the third bullet states: "The Standard should allow for the development and use of probabilistic planning methods. The minimum requirements of probabilistic methods are the contingencies as described in Table 1 of existing Planning Standard I.A. There should be NERC approval of acceptable levels of risk."

–

It appears to us that as written, the standard that flows from this SAR can only allow the probabilistic planning methods to make the standard more, not less, stringent than the existing Standard IA. This is not the way probabilistic planning methods should work. This statement also does not make sense when you read the next sentence, "There should be NERC approval of acceptable levels of risk." If the standard can only be more stringent, then there is no need for NERC to approve the level of risk, or even the probability of occurrence of the contingency. One way to resolve this issue would be to change the word "minimum" to "starting".

The NERC Planning Standards should follow what WECC is doing with regard to listing disturbances as a guide, but say that other disturbances with the same probability should be included. List the probability ranges (outages per year), Category B: >= 0.33, Category C: 0.33 to 0.033; Category D1 (no cascading): 0.033 to .0033, Category D2: < .0033.

The standard should allow for changes in the required performance for given disturbances if a probability in another range has been established for a given disturbance.

NERC should specify voltage dip and minimum frequency standards similar to WECC (i.e., the voltage dip and minimum frequency should be within Applicable Ratings). We are not proposing that NERC set fixed values for these standards that would be the same throughout the ten NERC Regions.

CONTENTS

Background 2
Format of this Document 2
Question 1(a): Do you believe that the events in Table I of existing Planning Standard I.A are classified correctly? 3
Question 1(b): If your answer to the above question is No, how would you re-classify the events? 5
Question 1(c): Which approach do you favor?: (1) Keep the same categories and re-classify certain events as Category D, (2) Create a new category between C & D, (3) Keep the same categories and allow for good cause exceptions. 8
Question 2: Do you believe the standard should require reporting on *implementing* the transmission plans? 13
Question 3: If your answer to *Question 2* is Yes, how would you propose accounting for changes in a Transmission Plan? 16
Question 4: Should the requirement to consider planned outages in addition to each contingency remain part of this Planning Standard? 18
Question 5: Are you aware of any Regional or Interconnection differences in requirements for assessing and planning transmission systems in North America? 23
Question 6: Do you have any other comments on the SAR (V2)? 26
GENERAL COMMENTS ON THE SAR (VERSION 2) 27
COMMENTS ON SCOPE OF STANDARD 29
COMMENTS ON THE PLANNING HORIZON 30
COMMENTS ON USE OF OPERATING PROCEDURES 32
COMMENTS ON TRANSITION BETWEEN PLANNING & OPERATING STANDARDS 33
COMMENTS ON FUNCTIONS TO WHICH THE STANDARD APPLIES 34
COMMENTS ON APPLICABLE PORTIONS OF EXISTING STANDARD 35
COMMENTS ON SYSTEM MODELS 37
COMMENTS ON RESOURCE PLANNING 40
COMMENT ON USE OF GENERATION OR LOAD AS SOLUTIONS 42
COMMENT ON SAR FORMATTING 43
COMMENT ON DEMAND LEVELS FOR MODELING 44
COMMENTS ON DEFINITION OF TERMS 45
COMMENTS ON VARIABILITY OF GENERATION & LOAD 47
COMMENTS ON PROBABILISTIC PLANNING METHODS 48
COMMENTS ON PLANNED OUTAGES 52
COMMENTS ON APPLICABLE RATINGS 54
COMMENT ON SHORT CIRCUIT CURRENT 57
COMMENTS ON OTHER AREAS THAT SHOULD BE ADDED OR CLARIFIED 58
Industry Commenter Key 60

Note: Questions refer to the 6 questions posed to industry on the SAR Comment Form, posted with SAR Version 2. Some of the question statements listed in this Table of Contents have been abbreviated or paraphrased from their original form. Question statements are shown in their entirety in the body of this document.

BACKGROUND

The Standard 500 **S**tandard **A**uthorization **R**equest **(SAR)**, "Assess Transmission Future Needs and Develop Transmission Plans", was posted for a second public comment period from May 5 through June 5, 2004. The SAR Drafting Team (DT) asked industry participants to provide feedback on the revisions made to the SAR through a special Comment Form posted with the SAR (Version 2).

The SAR (Version 2) Comment Form posed 6 questions, some of which were multi-part. There was a total of 28 sets of comments returned, with 121 individuals responding. The industry comments can be viewed in their original format at:

ftp://www.nerc.com/pub/sys/all_updl/standards/sar/TRNS_NDS_&_PLNS_DT_01_02_Comments.pdf

The Standard 500: "Assess Transmission Future Needs and Develop Transmission Plans" SAR Drafting Team met and considered each of the sets of responses to the questions posed with the SAR (Version 2) Comment Form. The questions were aimed at gathering feedback on the changes made (or proposed to be made) to the SAR.

In consideration of these industry comments, the SAR DT drafted a third version of the SAR for consideration by the Standards Authorization Committee (SAC). The SAR (Version 3), if accepted by the SAC, will serve as specifications for a Standards Drafting Team to draft the new Standard 500. The Standards Drafting Team will have access to all industry comments made on the SAR (Version 2), and well as the SAR DT's consideration of these comments.

FORMAT OF THIS DOCUMENT

In this document, comments from industry participants are shown under each question, along with the SAR Drafting Team's summary of results and consideration of the comments, provided in blue text immediately under each question.

In most cases, a single response has been provided to show how the comments were considered. In some cases, the SAR DT provided a short note to indicate how a unique comment was considered.

At the end of this document there is an Industry Commenter Key listing each entity, industry segment (e.g., Transmission Owner, Generator, ISO, etc.) and the individual names of those responding via the SAR Comment Form.

If you feel that your comment has been overlooked, please let us know immediately. Our goal is to give EVERY comment serious consideration in this process! If you feel there has been an error or omission, you can contact John Twitchell in the NERC office. John can be reached at 609-452-8060 or at John.Twitchell@nerc.net. Or you can contact this SAR's DT's Facilitator, Margaret Stambach at 518-384-1062 or at mr.stambach@ieee.org.

QUESTION 1(A): DO YOU BELIEVE THAT THE EVENTS IN TABLE I OF EXISTING PLANNING STANDARD I.A ARE CLASSIFIED CORRECTLY?

Question in its entirety:

1. Some members of the SAR drafting team believe that certain Category C events, as defined in Table 1 of existing Planning Standard I.A, are much less likely to occur than other events in Category C. It is felt that certain specific Cat. C events could be re-classified as Cat. D upon showing a low probability of occurrence (and low consequence) of these events.

(a). Do you believe that the events in Categories B, C & D are classified correctly? Comments?

SUMMARY:

YES (entities)	21	NO (entities)	5
YES (individuals)	76	NO (individuals)	42
	NO definitive answer	1 (1 entity, 1 individual) - AEP	

Consideration by the SAR DT:

The SAR DT is recommending a review of existing Table I, including the likelihood, duration and impact of events, as well as the definition of applicable ratings (A/R). This review may result in a re-classification of Table I events for the new Standard. The review may also result in other changes, such as addition or deletion of categories, events or performance requirements, use of probabilistic planning methods, or re-naming of categories based on event probability ranges.

Entities responding YES to Question 1(a) – the events in Table I are classified correctly:

AES, AESO, ALLEGHENY, ATC, CWLP, DUKE, ENTERGY, ERCOT, IMO, ISONE, ISO/RTO, KCPL, MAAC/Horakh, MAAC/Kuras, NPCC, NYSRC, R.Snow, SCGEM, SERC, SOUTHERNCO, SPP, TVA, WESTAR (21 entities, 76 individuals).

SOME ENTITIES RESPONDING YES TO QUESTION 1 (a) [THE EVENTS ARE CLASSIFIED CORRECTLY] HAD THE FOLLOWING ADDITIONAL COMMENTS:	
AESO:	Generally the B and C events are classified correctly. However, there is a need to reconsider the grouping of the D events on some consistent basis (e.g. such as using outage frequency as a determinant). There should also be some means to include double-circuit lines and buses as B events if their probability of outage is comparable to that of other category B contingencies.
ENTERGY, SERC, SOUTHERNCO, SCGEM:	Entities listed believe that Category C events are more likely to occur than Category D events and should require higher performance expectations.
MAAC/Horakh	Categories B, C and D should be renamed as follows – Category B – High Probability Contingency Event

	Category C – Medium Probability Contingency Event Category D – Low Probability Contingency Event The difference in the categories should NOT be stated in terms of how many elements are out of service, but rather should be stated in terms of the PROBABILITY of the initiating event that occurs. The difference in the categories is in the "stress" the system is allowed to experience and in the "fix" required. For B, a high probability event, stress should be low and the only fix allowed is system reinforcement. For D, a low probability event, severe system stress is allowed, and system reinforcement is not mandated. C is somewhere in between, a medium probability, with medium system stress permitted, and some loss of load and/or curtailment of transfers allowed in lieu of system reinforcement. Table I can then be simplified by removing the column labeled "Elements Out of Service", because it is unnecessary and not relative. Actually, the columns labeled "Thermal Limits", "Voltage Limits", "System Stable" and "Cascading Outages" can be eliminated too, because they are the same for each Category A, B and C (but notes for each column should be retained).
MAAC/Kuras:	I believe that an in depth investigation of the probability of each possible contingency occurring be investigated by NERC to determine each contingency's relative probability and those results used to re-rank the contingency list, if necessary.
R.Snow:	Without a rigorous Probabilistic Risk Analysis, moving any of these events to a category D event is bad practice. All of the events have occurred at one time or another, especially circuit breaker and bus faults. Moving them to a category D essentially removes them from requiring action to mitigate/solve the impact on reliability.
WESTAR**:**	"Loss of single component without a fault" should become Category B5 and be included in the listing of items in category C3 *{See similar comments: SPP comment under Question 4, Choice (2) and KCPL comment under Question 4, Choice (3)}.*

QUESTION 1(B): IF YOUR ANSWER TO THE ABOVE QUESTION IS NO, HOW WOULD YOU RE-CLASSIFY THE EVENTS?

Question in its entirety:

1. Some members of the SAR drafting team believe that certain Category C events, as defined in Table 1 of existing Planning Standard I.A, are much less likely to occur than other events in Category C. It is felt that certain specific Cat. C events could be re-classified as Cat. D upon showing a low probability of occurrence (and low consequence) of these events.

(a). Do you believe that the events in Categories B, C & D are classified correctly?

(b). If your answer to (a) is No, how would you re-classify the events? If you have data to support your answer, please provide contact information for the individual responsible for the data.

SUMMARY: 5 entities (42 individuals) answered NO to Question 1(a) and therefore responded to Question 1(b).

Also included in this section are two miscellaneous comments on whether events are classified correctly: one comment from AEP, who had no definitive answer to Question 1(a), and one comment from MAPP, who answered NO to Question 1(a).

Consideration by the SAR DT:

The SAR DT is recommending a review of existing Table I, including the likelihood, duration and impact of events, as well as the definition of applicable ratings (A/R). This review may result in a re-classification of Table I events for the new Standard. The review may also result in other changes, such as addition or deletion of categories, events or performance requirements, use of probabilistic planning methods, or re-naming of categories based on event probability ranges.

Entities responding NO to Question 1(a) – the events in Table I are NOT classified correctly:

AMEREN, BPA, MAPP, MEC and WECC (WECC-1 plus WECC-2). (5 entities, 42 individuals)

ENTITIES RESPONDING TO QUESTION 1(b) [i.e., ENTITIES RESPONDING NO TO QUESTION 1(a) - THE EVENTS ARE NOT CLASSIFIED CORRECTLY]	
Ameren	All category C outages that have a direct impact on serving load because of the system configuration (straight bus or tapped load) should be reclassified, including C-1, C-2, C-5, and C-9 to provide more latitude. For category C events, we should be more concerned that the system holds together and not that the local load may be at risk for these multiple contingency events.
BPA	Outage categories C1, C2 and C9 do not appear to be classified correctly as verified by the attached *outage probability data.* There is consistency between the categories except that C1, C2 and C9 outages have a much lower probability of occurrence than the other Category C outages. ***{See Attached Companion Document: Excel File – "BPAdata". Or contact: Marv Landauer, (503) 230-4105, mjlandauer@bpa.gov}***
MAPP & MEC	MAPP and MEC would reclassify certain low probability events such as Category C1 events, C2 events, certain Category C3 events (two transformers, transmission circuit plus a transformer, two transmission circuits, DC line plus a transformer, DC line plus a transmission circuit, and two DC lines), C6 events, C7 events, C8 events, and C9 events to either a new

	category between C and D with performance characteristics between that of the present Categories C and D or to Category D. *[MEC supports creating a new category between C & D].* MAPP and MEC would require that the interconnected transmission system be planned, designed, and constructed to protect for instability, cascading, and uncontrolled separation for the low probability events in the new sub-category. Regions should develop procedures for determining that systems are properly protected for instability, cascading and uncontrolled separation. MAPP & MEC believe the attached *outage probability data* supports this new reclassification by demonstrating that the events that MAPP & MEC recommend for reclassification are the low probability Category C events. ***{See Attached Companion Document: Word File – "MAPP-MECdata". Or contact: Tom Mielnik, (563) 333-8129, tcmielnik@midamerican.com}***
MEC	MidAmerican Energy believes the interconnected transmission system should be planned, designed, and constructed to withstand high probability events and to withstand low probability events with significant negative consequences. MidAmerican believes it is a waste of the ratepayers' money to plan, design, and construct the interconnected transmission system for low probability events without significant negative consequences.
WECC-1 & WECC-2	The Categories should be based on the probability of occurrence of the initiating events. A review of Table I (Standard I.A) shows that the contingencies in the same Categories seem to have very different probabilities of occurrence.
WECC-1	Category D needs to be split into two categories, the more probable Category D events should not be allowed to cascade. For example, the new "No Cascading" category should include: Loss of 2 units at a plant Loss of adjacent lines in a right of way Loss of multiple bus sections as a result of failure or delayed clearing of a bus tie or bus sectionalizing breaker. There is no defined performance level for 3 phase fault, stuck breaker, and loss of one line. For support of this position, see the NERC/WECC Planning Standards
WECC-2	A new category should be defined between Category C and Category D. The more probable Category D events and the less probable Category C events should be placed in this new category and not be allowed to cascade. This WECC group supports moving C.2 and C.9 to a new Category between the current C and D Categories. WECC Planning Standards do not support reclassification of C.3.

MISCELLANEOUS COMMENTS ON WHETHER EVENTS ARE CLASSIFIED CORRECTLY	
AEP	Need to see outage probability data in order to answer definitively. Based on good data, the probabilities of existing C and D events could be estimated. The events could then be grouped into higher probability events

	(Category C) and lower probability events (Category D). AEP would be able to provide some outage data to support this analysis. ***{Contact Ali Al-Fayez, Manager – Transmission Asset Performance (614 552-1649)}***
MAPP:	The definition of applicable ratings needs to be clarified. The SAR DT should also indicate if it is feasible to have different applicable ratings for different categories of events. The SAR DT should review the history of the original classification. This review should include all classes. If outage statistics are used to classify events, how many years of data are appropriate? If the data window is too small, the results will be skewed. Moreover, is it appropriate to use outage data for all these categories of events? Outage data over a long period of time may provide insight into equipment performance, but is it appropriate to reflect weather related contingency events – the data may not reflect the effect of a once in a 100 year storm? **Consideration by the SAR DT:** *The SAR DT is recommending that the new Standard clarify ambiguities in performance requirements, specifically cascading outages and A/R. We are also recommending the new Standard clarify that different ratings may be applicable to different categories of events, and perhaps to different types of events within a category (specified by entities in accordance with STD 600).*

QUESTION 1(C): WHICH APPROACH DO YOU FAVOR?: (1) KEEP THE SAME CATEGORIES AND RE-CLASSIFY CERTAIN EVENTS AS CATEGORY D, (2) CREATE A NEW CATEGORY BETWEEN C & D, (3) KEEP THE SAME CATEGORIES AND ALLOW FOR GOOD CAUSE EXCEPTIONS.

Question in its entirety:

1. Some members of the SAR drafting team believe that certain Category C events, as defined in Table 1 of existing Planning Standard I.A, are much less likely to occur than other events in Category C. It is felt that certain specific Cat. C events could be re-classified as Cat. D upon showing a low probability of occurrence (and low consequence) of these events.

(c). Which of the following approaches do you favor regarding Table 1 of existing Planning standard I.A?
(1) Keep the same categories as now exist and re-classify the low probability (and low consequence) events as Category D events. Please explain your choice.
(2) Create a new category between C and D with performance characteristics between that of the present categories C and D. Please explain your choice.
(3) Keep the same categories as now exist, but allow for "good cause exceptions" upon showing a low probability of occurrence (and low consequence) of specific Category C events. Please explain your choice.

SUMMARY:

Entities supporting Choice (1)	4 (9 individuals)
Entities supporting Choice (2)	7 (46 individuals)
Entities supporting Choice (3)	6 (24 individuals)
Entities supporting NONE of the choices	11 (44 individuals)

Consideration by the SAR DT:

The SAR DT is recommending a review of existing Table I, including the likelihood, duration and impact of events, as well as the definition of applicable ratings (A/R). This review may result in a re-classification of Table I events for the new Standard. The review may also result in other changes, such as addition or deletion of categories, events or performance requirements, use of probabilistic planning methods, or re-naming of categories based on event probability ranges.

Since there was no clear consensus on how to address re-classification of events, the SAR DT feels that a thorough review of existing Table I will assure that events are properly classified for the new Standard.

Entities supporting Choice (1) – keep same categories and re-classify certain events as Cat. D

AEP, AMEREN, CWLP, MAPP (4 entities, 9 individuals)

ENTITIES SUPPORTING CHOICE (1) – KEEP SAME CATEGORIES AND RE-CLASSIFY CERTAIN EVENTS AS CATEGORY D	
AEP	Four categories are sufficient and generally understood by the industry. Specific changes that are supported by outage probabilities can be made, as appropriate, by moving Category C tests to Category D.
AMEREN	Reclassify C-1,C-2, and C-9 to category D (less probable events). C-3 (line and a generator combination) should be reclassified as category B event (more probable than other C-3 events. Also, why is a loss of a tower line with two circuits category C (C-5) while loss of a tower line with 3 circuits is category D (D-6), though a probability of loss of a tower line may be the same ? We may want to be consistent in categorizing the event – loss of a multi-circuit tower line.
CWLP	(No explanation given.)
MAPP	If the events are low probability, then some should be considered for moving to C or D.
MISCELLANEOUS COMMENT ON CHOICE (1) – KEEP SAME CATEGORIES & RE-CLASSIFY CERTAIN EVENTS AS CATEGORY D	
MEC	MidAmerican does NOT support this choice, since MEC believes that reclassifying less likely Category C events as Category D events will result in planners ignoring low-probability contingencies that result in significant consequences: cascading, uncontrolled separation, and instability.

Entities supporting Choice (2) – create new category between C & D.

AESO, BPA, CWLP, MAAC/Kuras, MAPP, MEC, WECC (WECC-1 plus WECC-2). (7 entities, 46 individuals)

ENTITIES SUPPORTING CHOICE (2) – CREATE A NEW CATEGORY BETWEEN C & D	
AESO	There are D contingencies that are probable although rare (e.g. loss of multiple circuits on separate tower lines on a common right-of-way). These contingencies may result in loss of load or generation but should not allow cascading. Other D contingencies such as loss of all lines on a multi-line corridor or the loss of a complete station would be difficult to contain. These events should be treated differently than the former.
BPA	The C2 (with respect to a bus section breaker failure) and the C9 outages should be in this new category. Although these outages have extremely low probability, they should not cause cascading. This is especially true of C2, which is a single contingency failure of a bus section breaker. Therefore we favor adding a new category between Level C and D (or moving these two outages to Level D) with performance requirements of no cascading and system stable but with no requirement to be within applicable ratings. ***[See similar comment from WECC-2 under Question 5, Regional Differences]***

CWLP	Multiple contingencies have lower and varying probabilities of occurrence.
MAAC/Kuras	This is the best choice of the ones mentioned here but see my comment in 1.(a) above for another approach. This approach allows for some levels of performance between C and D such as restricting the performance to "no cascading or system instability" for some C and maybe even D events.
MAPP & MEC	Improvements should be planned for those Category C events that are high probability events regardless of the consequences. Planners should also review all Category C events for instability, cascading, and uncontrolled separation. Improvements should be planned for those Category C events (both high probability and low probability events) which have significant consequences, that is, that result in instability, cascading, and uncontrolled separation.
MEC	The approach that results in the most appropriate transmission system design is the one recommended by MEC. It is MEC's belief that the intent of the drafting team that originally developed the existing NERC Planning Standards was to require the NERC member to plan to protect for instability, cascading, and uncontrolled separation for Category C events.
WECC-1 & WECC-2	A "No Cascading" performance requirement is needed for this new category. There are Category C events, which have a very low probability of occurrence. Such events, even if they occurred, should not lead to cascading, even though local facility ratings or voltage limits may be exceeded. Very often, the solution for such low probability contingencies would be to install a relay system to interrupt load or generation. The probability of relay misoperation to prevent potential problems resulting from the contingency may be higher than the probability of the contingency itself. Thus the impact on the users of the grid may not be significantly reduced. Nevertheless, the system reliability would be better served if we can add a category for such low probability contingencies (which would not result in cascading), and the risk of which is acceptable.

Entities supporting Choice (3) – keep same categories and allow for good cause exceptions.

ATC, BPA, DUKE, KCPL, SPP, TVA, WESTAR. (6 entities, 24 individuals).

{Note: BPA not counted in this choice. BPA counted in Choice (2) "New Category", since that is their preferred choice}

ENTITIES SUPPORTING CHOICE (3) – KEEP SAME CATEGORIES AND ALLOW FOR GOOD CAUSE EXCEPTIONS	
ATC	The outages listed in the existing categories are reasonable but, because we don't know all the specific details about a certain part of the system, there should be some mechanism to consider exceptions.
BPA	Although this is not our preferred choice, allowing the use of "good cause exceptions" (which we assume is the same as probabilistic methods which could move contingencies to a lower performance level although this is inconsistent with other statements in the SAR) to verify exceptions to the present categories would also be acceptable. For the C2 example, showing that these events statistically occur every 1200-1300 years and would not cause cascading problems on the system should provide enough evidence that a lower performance level is appropriate.

DUKE	Allow the flexibility for reasonable exceptions to the general categories based on frequency of occurrence. This may mean the possibility of a particular contingency moving up or down in category. This allowance permits appropriate exercise of engineering judgment in the planning process.
KCPL	KCPL supports the recommendation that the Standard should allow for the development and use of probabilistic planning methods in reliability assessment. However, KCP&L does not support any reclassification of the existing Categories. The probability of occurrence of some contingencies may, in actuality, be very low. However, this should not diminish the importance of their assessment in the Category that they are currently found.
SPP	SPP would like to see a definition of "good cause exceptions" at a minimum. SPP encourages the development of probabilistic techniques to assess reliability but caution needs to be exercised prior to implementation to ensure support from all stakeholders.
TVA	This "good cause exception" approach allows documentation of an assessment of low consequence to substitute for the expenditure of an unwarranted solution, but maintains the integrity of the event probability assessment. Since others may have different ideas of what is low probability, this approach would be best with sufficient justification of low probability.
WESTAR	Once an analysis has been performed, a subsequent "assessment" can easily dismiss low consequence events. However, low probability with high consequence should not be granted an exception. The initial premise of the Planning Standards did not contemplate probabilistic or Monte Carlo analysis. "Good Cause Exception" must be carefully defined before entities are allowed to shield high consequence events regardless of probability of occurrence.
MISCELLANEOUS COMMENTS ON CHOICE (3) - KEEP SAME CATEGORIES & ALLOW FOR GOOD CAUSE EXCEPTIONS	
AEP	"Good cause exceptions" can always be considered, but this approach should not be institutionalized.
MAPP & MEC	MAPP & MEC believe that allowing for "good cause exceptions" is not the preferable approach. We believe that the events listed by MAPP & MEC for reclassification are much less likely than the other Category C events generally throughout NERC. This means that these events should be reclassified in general throughout NERC and not just in certain "good cause exceptions". (Although, it should be noted that MAPP & MEC do support Regional Differences where appropriate.) Besides, there are issues associated with the development and utilization of a process for approving "good cause exceptions".
NYSRC	In accordance with the NERC process for developing reliability standards, an entity may include a Regional Difference as part of the NERC standard if there is such a condition. Therefore, there is no need for the standard to include "good cause exceptions".

Entities supporting NONE of the 3 choices:

ENTERGY, ERCOT, IMO, ISONE, ISO/RTO, MAAC/Horakh, NPCC, NYSRC, SCGEM, SERC, SOUTHERNCO, (11 entities, 44 individuals).

ENTITIES SUPPORTING NONE OF THE CHOICES - NO CHANGES TO CATEGORIES/EVENTS	
ENTERGY, SCGEM, SERC, SOUTHERNCO	Since the events are currently categorized correctly, above Questions 1 (b) and 1 (c) are not applicable. Entities listed agree that low consequence Category C events should be considered compliant. However, as we interpret Table I, a Category C event that results in low consequences (e.g. no cascading) is already considered compliant since entities can drop load or curtail firm transfers to return to applicable thermal or voltage ratings.
ERCOT, IMO, ISONE, ISO/RTO, NPCC, NYSRC	Any of the above three choices would weaken the present NERC standards. All entities listed take the position that there should be No Changes to Categories B, C, and D as they now exist in the present Planning Standards.
MAAC/Horakh	NONE OF THE ABOVE. Keep the three categories, but rename them as in 1.a. above. Adding an additional category would introduce too much confusion in planning the system. Assuming that the contingencies in B, C and D are already in their correct probability categories, no changes need to be made. If someone could prove that a contingency in B is Low Probability the same as the contingencies in D, that contingency could be moved.

QUESTION 2: DO YOU BELIEVE THE STANDARD SHOULD REQUIRE REPORTING ON *IMPLEMENTING* THE TRANSMISSION PLANS?

Question in its entirety:

2. Do you believe the standard should include requirements for reporting on the progress or status of *implementing* the plans developed in accordance with this standard?

SUMMARY:

YES (entities)	13	NO (entities)	13
YES (individuals)	60	NO (individuals)	53
	NO definitive answer	1 (1 entity, 7 individuals) - MAPP	

Consideration by the SAR DT:

There was no clear consensus on whether reporting on the progress or status of implementing the plans should be included in the Standard. This SAR Drafting Team is recommending that the new Standard address requirements for reporting (perhaps to the Regions) on the progress or status of implementing the plans, but such requirements should not impose undue burdens upon transmission entities.

Any such reporting requirements shall be consistent with the Resource & Transmission Adequacy's RTATF Recommendation #2: "Among other items, the new Reliability Standards should clearly define the key elements of an acceptable mitigation plan to achieve compliance with the standard(s) and a general process to ensure implementation of the mitigation plan".

Entities responding YES to Question 2 – the standard SHOULD require implementation reporting.

AEP, AMEREN, BPA, IMO, ISONE, ISO/RTO, ERCOT, KCPL, MAAC/Horakh, MAAC/Kuras, NPCC, NYSRC, R.Snow, SPP, WESTAR (13 entities, 60 individuals)

SOME ENTITIES RESPONDING YES TO QUESTION 2 [THE STANDARD SHOULD REQUIRE IMPLEMENTATION REPORTING] HAD THE FOLLOWING ADDITIONAL COMMENTS:	
AEP	The reporting requirements should not be burdensome, but they are needed to ensure a minimum level of accountability.
AMEREN	The reporting requirement should not be onerous.
BPA	A plan without a requirement to update progress on implementing the plan has little value. This is essential for an effective standard. This should not be an extensive reporting procedure and could easily be met during the subsequent compliance report.
KCPL	KCP&L supports a requirement for reporting the status of implementing the mitigation plans. On a regional basis, mitigation plans should be reported by the Transmission Planner, as a minimum, on an annual basis through the regional model building process and assessed through the regional

	assessment studies performed by the Regional Reliability Coordinator.
MAAC/Kuras	It's one thing to develop plans and another to follow through on them. PJM can offer suggestions on how this tracking could be accomplished.
R.Snow	Developing plans without a follow up program is a waste of time and money. One of the most telling comments from the August Blackout report was that a number of the items were the same as in other blackouts.
SPP	SPP supports this reporting requirement, but notes that this burden should not be imposed more frequently than annually.
WESTAR	Having a "plan" that is not implemented is of no value.

Entities responding NO to Question 2 – the standard SHOULD NOT require implementation reporting.

AES, AESO, ALLEGHENY, ATC, CWLP, DUKE, ENTERGY, MEC, SCGEM, SERC, SOUTHERNCO, TVA, WECC-1, WECC-2 (13 entities, 53 individuals)

SOME ENTITIES RESPONDING NO TO QUESTION 2 [THE STANDARD <u>SHOULD NOT</u> REQUIRE IMPLEMENTATION REPORTING] HAD THE FOLLOWING ADDITIONAL COMMENTS:	
AES	AES does not favor an implementation report. However, major facility additions, delayed additions, or deletions that effect the reliability of the system could be included as part of the regional form 715 base case yearly filings and listed as changes from last year's cases. This would allow older cases to easily be updated and used.
AESO	It is not clear to whom the reporting would go to and how it would be used. Normally, reporting would be required for the regulatory process in the affected jurisdiction. The scope of that reporting would not be limited to reliability only but also other aspects of the transmission plan (e.g. customer connections, efficiency improvements, etc).
ATC	While an entity should be implementing plans to maintain or improve the reliability required by the standards, having to report on the implementation could become quite complicated. Plans are often changing to meet changing system conditions, sometimes so much so that what seemed reasonable to do last year is replaced by entirely new plans.
MEC	MidAmerican Energy believes that this standard should not include requirements for reporting on the progress or status of implementing the plans developed in accordance with this standard. There are too many conditions beyond the control of the NERC member for this to be a part of a standard requiring compliance review. Complex environmental, regulatory, and political issues prevent many transmission facilities from being constructed or being constructed in a scheduled manner. The Not-In-My-Back-Yard philosophy has hit even the rural areas so that there is no part of the NERC area where a NERC member can confidently predict completion of transmission system improvements in plans. Further, conditions can change even during a year to such an extent that compliance review for implementation from one year to the next is problematic. Further, regulatory oversight provides for appropriate review of plan implementation anyway. MidAmerican urges that the SAR drafting team not pursue this well-meaning but problematic approach.

SCGEM, SOUTHERNCO	Too burdensome for the perceived benefits.
TVA	This reporting would constitute a logistical burden counterproductive to the total planning effort.
WECC-1 & WECC-2	Since many of the transmission plans are dependent upon factors such as, resource plans, local load projections, new technology, permitting, to name a few, it would not be meaningful to report on the status of implementation of a transmission plan. In any case, if a potential transmission problem is not solved, it will show up again in subsequent years, so there will be pressure to solve it. This continuous "certification" would ensure that any potential transmission problem, once identified, would not be left unsolved even without NERC requiring status reports on implementation.

MISCELLANEOUS COMMENT ON WHETHER THE STANDARD SHOULD REQUIRE IMPLEMENTATION REPORTING (Neither Yes/No Box Checked)	
MAPP	Requirements for reporting on the progress or status of implementing the plans should be left to the regions and appropriate regulatory bodies. The MAPP Regional Transmission Committee currently has a regional planning process for compliance for implementing transmission plans.

QUESTION 3: IF YOUR ANSWER TO *QUESTION 2* IS YES, HOW WOULD YOU PROPOSE ACCOUNTING FOR CHANGES IN A TRANSMISSION PLAN?

Question in its entirety:

3. If your answer to Question 2 is Yes, given that transmission plans change over time as modeling assumptions, systems and plans change, how would you propose accounting for changes in a Transmission Plan?

SUMMARY: 13 entities (60 individuals) answered YES to Question 2 and therefore responded to Question 3.

Consideration by the SAR DT:

There was no clear consensus on whether reporting on the progress or status of implementing the plans should be included in the Standard. This SAR Drafting Team is recommending that the new Standard address requirements for reporting (perhaps to the Regions) on the progress or status of implementing the plans, but such requirements should not impose undue burdens upon transmission entities.

Any such reporting requirements shall be consistent with the Resource & Transmission Adequacy's RTATF Recommendation #2: "Among other items, the new Reliability Standards should clearly define the key elements of an acceptable mitigation plan to achieve compliance with the standard(s) and a general process to ensure implementation of the mitigation plan".

Entities responding YES to Question 2 (The standard SHOULD require implementation reporting) and therefore responding to Question 3 (How would you account for changes in a Transmission Plan?).

AEP, AMEREN, BPA, ERCOT, IMO, ISONE, ISO/RTO, KCPL, MAAC/Horakh, MAAC/Kuras, NPCC, NYSRC, R.Snow, SPP, WESTAR (13 entities, 60 individuals)

ENTITIES RESPONDING TO QUESTION 3 – HOW WOULD YOU PROPOSE ACCOUNTING FOR CHANGES IN A TRANSMISSION PLAN? [i.e., ENTITIES RESPONDING YES TO QUESTION 2 - THE STANDARD SHOULD REQUIRE IMPLEMENTATION REPORTING]:	
AEP	A simple narrative explanation should be provided that explains what factors have eliminated the need for the transmission modification/addition or changed its timing. In cases where a modified solution has been developed, the Transmission Planner should demonstrate the effectiveness of the modified approach and compare to the original approach.
AMEREN	Provide the following: (i) Annual update with a short note to document changes. (ii) Smaller projects (cap bank addition, change of terminal equipment like switches, wavetrap, or CT) may be combined as a group in such reporting to avoid providing a long list of updates.
BPA	Once a transmission plan is identified in a compliance report, progress on that project should be reported in subsequent compliance reports. If system conditions change, this should be described along with the consequences to the proposed plans. If project need goes away, the project can be canceled.

	However, if the project need still exists and the responsible entity has not implemented a plan to correct the deficiency, it should be listed as non-compliant. Legitimate problems with regulatory and siting issues should be acceptable reasons for project delay.
ERCOT, IMO, ISONE, ISO/RTO, NPCC	All entities listed favor periodic transmission reviews to address changes in plans. In the northeast, the NPCC Annual Transmission Reviews address this and in addition NPCC keeps a "Major Projects List" to "track" BPS additions and modifications and includes transmission, generation and other major equipment identified as a BPS element. The entities suggest that the resultant NERC standard not be overly prescriptive in requirements for reporting progress/status on the standard and flexibility be afforded to allow various documentation and processes already in place to achieve compliance. They suggest it be done annually.
KCPL	Any out-of-cycle changes to the mitigation plan should be reported to the Reliability Coordinator and re-evaluated on an as-needed basis. Coordinated planning between other regions and entities will be critical.
MAAC/Horakh	Reporting should be on a "delay" basis. Known delays to the plan should be reported, along with the reason for the delay and use of alternate solutions.
MAAC/Kuras	A plan is a plan at that point in time. Plans change. Periodic checks of implementation of plans can uncover these plan changes that should be allowed.
NYSRC	Updated transmission plans should be reported along with compliance assessments as required.
R. Snow	When there is a significant change in the assumptions, the plan needs to be re-studied and revised as appropriate. The SAR must require such re-studies. Any plan is only as good as its assumptions. Whenever there is a significant change in the assumptions, the plan needs to be revised to account for the change. Having a plan that assumes there will be specific generation projects is worthless when those specific projects are changed, canceled or if other generation retires.
SPP	Although SPP is implementing a 2 year planning cycle, project updates are collected on an annual basis. To ensure compliance with reliability criteria, mitigation reviews are also provided on an annual basis consistent with the annual model building process. Updates due to new "out of cycle" projects or significant scope/timing changes associated with major projects in the approved regional expansion plan and its assessments are evaluated on an as-needed basis. Coordinated planning and model building using consistent definitions with neighboring regions/entities will be critical. Efforts should be undertaken to put data collection, modeling building and transmission assessment processes for neighboring regions/entities on the same cycles.
WESTAR	In the annual process to update power flow models, there are necessarily changes to the load forecast, use of the interconnected network, and financial constraints which must be taken into account. Reporting to the Regional Reliability Organization should include a discussion of substantive changes and reasons behind them. There should not be a judgment made by the RRO that the explanation is "adequate" so long as the explanation is made. The changes are critical information that must be taken into account when evaluating transmission service requests. Reporting should not be more frequent than the model-building cycle.

QUESTION 4: SHOULD THE REQUIREMENT TO CONSIDER PLANNED OUTAGES IN ADDITION TO EACH CONTINGENCY REMAIN PART OF THIS PLANNING STANDARD?

Question in its entirety:

4. Existing Planning Standard I.A requires: *"The systems must be capable of meeting Category C requirements while accommodating the planned (including maintenance) outage of any bulk electric equipment (including protection systems or their components) at those demand levels for which planned (including maintenance) outages are performed".*

The SAR drafting team believes that it is impractical to exhaustively test for every contingency described in each category plus every conceivable planned outage. Should the requirement to consider planned outages in addition to each Category A through D contingency remain part of this planning standard?
(1) Yes, consider planned outages in all Categories A through D.
(2) Yes, consider planned outages in some Categories only – Please specify which Categories.
(3) No, do not consider planned outages in addition to each contingency in any Category.

SUMMARY:

Entities supporting Choice (1)	6 (16 individuals)
Entities supporting Choice (2)	15 (76 individuals)
Entities supporting Choice (3)	8 (27 individuals)

Miscellaneous Comment (No choice selected) – 1 entity (2 individuals) - Seminole

Consideration by the SAR DT:

The SAR Drafting Team believes there is confusion surrounding the planned outage requirement in Table I of the existing standard. The SAR DT is recommending that the new Planning Standard clarify the issue of how a planned outage should be used in a planning assessment.

The new Standard should specify whether the planned outage requirement should be retained for Categories B and C. If retained, the requirement should be clarified in such a way that it can be practically implemented. In particular, the Transmission Planner should not be required to exhaustively test their systems for every conceivable planned (including maintenance) outage in addition to every conceivable Category B and C contingency.

The new Standard should clarify that the planned outage requirement does not apply to Categories A and D.

Entities supporting Choice (1) – consider planned outages in ALL Categories A through D.

ERCOT, ISO/RTO, NYSRC, MAAC/Kuras, TVA (half of group), WESTAR (6 entities, 16 individuals)

ENTITIES SUPPORTING CHOICE (1) – CONSIDER PLANNED OUTAGES IN ALL CATEGORIES A THROUGH D	
ERCOT, ISO/RTO, NYSRC	Again, the existing standards should not be weakened.

MAAC/Kuras	Contingencies don't only happen when all lines are in service. Outages should be modeled during all types of contingency evaluation. This may be a fairly daunting task but this evaluation will help the system operators be prepared for the reality of operating the system in a less than ideal state. Possible ways to select lines to outage may be to look at lines with high unscheduled outage rates, lines close to sources of contamination, lines through areas that have historically had vegetation contact problems, and especially lines that when outaged can cause operating problems.
TVA	**{Half of group}.** Everyone in the group agreed that planned outages should be considered, but the group didn't agree on which categories to apply. About half believed they should be applied to all categories while the other half believed only A and B categories should have planned outages studied for the one year and beyond horizon.
WESTAR	The notion of including maintenance outages is to ensure that system restorations correctly evaluate single elements that would be removed in groups under a breaker-to-breaker outage analysis. The intent should not be to have any single element out for maintenance AND withstand the next contingency and should be stated as such.

Entities supporting Choice (2) – consider planned outages in SOME Categories only.

AEP, AESO, ALLEGHENY, CWLP, ENTERGY, IMO, ISONE, MAAC/Horakh, NPCC, R. Snow, SCGEM, SERC, SOUTHERNCO, SPP, TVA (half of group), WECC (WECC-1 plus WECC-2). (15 entities, 76 individuals)

ENTITIES SUPPORTING CHOICE (2) – CONSIDER PLANNED OUTAGES IN <u>SOME</u> CATEGORIES.	
AEP	**{B, C & D only}.** For Categories where planned maintenance is considered, it should only be necessary to test the most significant planned outages, not all possible planned outages.
AESO	**{A, B & C only}.** There is a need to clarify what constitutes the "normal" condition when a facility (transmission or generation) is on a long duration planned outage (is it a day, a week, etc). The A to C contingency categories can then be applied to the "normal" condition as defined. The testing requirement could perhaps be stated in a way that leaves it to the judgment of the Planning Authority as to the critical combinations of outages that need to be tested.
ALLEGHENY	**{A & B only}.** Allegheny Power feels that it is practical to consider planned outages in categories A and B.
CWLP	**{B and some C}.** No further comments.
ENTERGY	**{B & C only}.** It is not necessary to include planned maintenance outages in addition to Category A (no contingencies) because Category A plus planned outages equals Category B (single contingency). Therefore inclusion of maintenance outages in Category A is superfluous. The current standards do not require planned outages with Category A for that very reason. Maintenance outages should be considered for only Category B and C contingencies. Category D recognizes that cascading will occur in conjunction with the contingencies, so adding on more planned outages seems unnecessary,

	especially since Category D outages are very low probability events.
IMO, ISONE, NPCC	**{A, B & C only}.** We reiterate that the existing standards should not be weakened and request that the SAR be clarified to remove ambiguity regarding what is meant by "considering" a planned outage. Planned outages at present are considered however this is deemed an Operational Planning issue and is conducted so as to set Operational Limits for those conditions on a pre-contingency basis to allow for N-1 conditions. This particular SAR will ultimately result in a "planning" Reliability Standard. The wording, as it has been phrased, infers that the system must be planned, designed and built to N-2 standards (i.e. a line out for maintenance on top of a circuit element outage). Treatment of planned outages should be considered to some extent and the listed entities suggest the drafting team receive direction from the SAC regarding planned outages. The listed entities suggest that planned outages should be considered only in categories in A through C.
MAAC/Horakh	**{A & B only}.** Consider planned outages in Categories A & B only, since these categories are high probability and therefore could easily occur during a planned outage.
R.Snow	**{A, B & C only}.** Categories A through C should be considered. Category D does not require action so the analysis with outages does not add anything. Most planning software allows the sue of scripts to run multiple analysis without intervention. The state of modern computers is such that the added testing is not significant. Also, for most systems, this type of analysis is performed to define which load levels and generation dispatch would allow the maintenance (the problem in reverse).
SCGEM, SOUTHERNCO	**{A & B only}.** The requirement to consider planned outages in addition to each Category A and B contingency should remain part of this planning standard. We agree with the SAR drafting team that exhaustive testing for every contingency described and every load level in each category is not practical.
SERC	**{A & B only}.** The SERC PSS agrees that the requirement to consider planned outages in addition to each Category A and B contingency remain part of this planning standard. The SERC PSS could not reach consensus on the requirement to consider planned outages in addition to each Category C and D contingency. However, the SERC PSS does agree that exhaustive testing for every contingency described in each category is not required. The I.A compliance templates state that they must *"Be performed and evaluated only for those Category [B, C, and D] contingencies that would produce the more severe system results or impacts."*
SPP	**{B & C only}.** C.3. needs to be modified to address N-1-1 concerns. Category B (B1, B2, B3 or B4, including loss of an element without a fault) or in the alternative create Category B5 to Loss of an element without a fault. The latter is preferred. *[See similar comments - KCPL comment under Question 4 Choice (3) below, and Westar comment under Question 1(a) above]* Planned outages are typically not evaluated more than one year in advance and are not scheduled during peak load conditions. However, the existing Planning Standard 1.A is problematic in that it requires the system to be designed to accommodate planned outages during peak load conditions.
TVA	**{A & B only – half of group}.** Everyone in the group agreed that planned

	outages should be considered, but the group didn't agree on which categories to apply. About half believed they should be applied to all categories while the other half believed only A and B categories should have planned outages studied for the one year and beyond horizon.
WECC-1 & WECC-2	**{A, B & C (except C-3)}.** All contingencies where a single point of failure could cause facilities to be lost should be tested for compliance with the standards even under planned maintenance conditions. However, it should never be necessary to exhaustively test every possible combination of outages. Those contingencies that are clearly not critical outages should not have to be simulated.

Entities supporting Choice (3) – do NOT consider planned outages in addition to each contingency in any Category.

AES, AMEREN, ATC, BPA, DUKE, KCPL, MAPP, MEC (8 entities, 27 individuals)

ENTITIES SUPPORTING CHOICE (3) – DO NOT CONSIDER PLANNED OUTAGES IN ADDITION TO EACH CONTINGENCY IN ANY CATEGORY.	
AES	I would modify C-3 since it has the same effect as or similar to a C-3 event to include (line out followed by a category B event).
AMEREN	Is the issue planning the system or granting the outage? Local load may be exposed for granting a maintenance/construction outage, but the system should not be at risk. If the system is planned with category C requirements, in most cases it should meet category A and B requirements during a planned outage. To meet requirements of categories A and B during planned outage should be adequate. Planned outages for maintenance or construction are generally managed in the operating horizon, and are granted only during specific load levels (off-peak), generation patterns, and interchange patterns when the transmission system is not expected to be fully utilized. We agree that clarification should be provided on how this information should be used in an assessment. However, as the scope of planning assessments is for the planning horizon of one year or more (SAR-4, paragraph 2) and not the operating horizon, we do not believe that the requirement for planning for maintenance outages should be included in planning assessments.
ATC	Planning the system should consider the need for planned outages but should not require the capability to plan outages at peak system loads.
BPA	This requirement should be addressed in operational planning studies (less than one year). This standard is not appropriate for Transmission Planning studies except possibly as a tool to measure or compare the robustness or availability of transmission plans. This is not an item that should require any compliance action.
DUKE	The first priority should be to clarify the requirements of the I.A table. Utilities/ regions are interpreting the table differently. What was the original basis for the contingency categories and required response in the table? Clarify whether the original intent was to perform thermal, voltage and stability screens for all categories and the frequency at which the screenings were intended to performed. It is impractical to expect all screenings of all categories on a frequent basis. It may be appropriate to state that the table is for general guidance and that

	transmission owners may determine frequency at which studies should be performed based on load growth, system loading and significance of changes to the system.
KCPL	Planned outages are typically short-term (less than 1 year) and should be considered in the operating horizon. A planned outage is typically allowed during system load conditions when they will have minimal impact on the system. KCPL would prefer to clarify the existing Category B contingency that states "Loss of an element without a fault" be listed as the B5 contingency on the Table. Then, in Category C under Contingency 3, the revised wording should read "3. Category B (B1, B2, B3, B4, or B5) contingency, manual system adjustments, followed by another Category B (B1, B2, B3, B4, or B5) contingency. This will allow for the first contingency to include a planned outage (B5 without a fault) as well as a contingency with one of the fault conditions described in B1, B2, B3, and B4. {*See similar comments - Westar comment under Question 1(a) and SPP comment under Question 4, Choice (2).*}
MAPP & MECC	Planned Outages can be scheduled and analyzed in advance in the operating horizon (less than one year). Therefore, it should not be necessary to require that "systems must be capable of meeting Category C requirements while accommodating the planned outage of any bulk electric equipment..." Planned outages should be studied in advance by the requesting control area and be reviewed by the governing Reliability Coordinator to determine if overloads could occur. If studies show that overloads could occur, the planned outage should be deferred or operating guides prepared which would be used in the event a contingency does occur.
MEC	There is no need to plan or build facilities to meet Planning Standard 1.A when Planned Outages can be accommodated within the frame work of existing guidelines and procedures. Studies conducted for the operating horizon are not the subject of this standard.

MISCELLANEOUS COMMENT ON CONSIDERING PLANNED OUTAGES – (No Choice Selected)	
SEMINOLE	Many grid operations difficulties occur when a line is scheduled out for maintenance. If this SAR is going to address required N-2 planning assessments, then it must be clear and specific regarding the conditions when N-2 assessments are appropriate and the specific criteria for N-2 assessments.

QUESTION 5: ARE YOU AWARE OF ANY REGIONAL OR INTERCONNECTION DIFFERENCES IN REQUIREMENTS FOR ASSESSING AND PLANNING TRANSMISSION SYSTEMS IN NORTH AMERICA?

Question in its entirety:

5. Are you aware of any Regional or Interconnection differences in the requirements for assessing and planning transmission systems in North America? If so, please list and explain.

SUMMARY: 10 entities (68 individuals) responded to this question and gave examples of Regional/Interconnection differences.

Consideration by the SAR DT:

The SAR Drafting Team considered each comment individually, as shown in the table below.

Entities responding to Question 5 – are you aware of any Regional/Interconnection differences?

BPA, CWLP, KCPL, NYSRC, SCGEM, SEMINOLE, SOUTHERNCO, SPP, R, Snow, WECC (WECC-1 plus WECC-2), WESTAR. (10 entities, 68 individuals)

ENTITIES RESPONDING TO QUESTION (5) – ARE YOU AWARE OF ANY REGONAL/INTERCONNECTION DIFFERENCES?	
BPA	Although WECC has several requirements in its standards that are more stringent than the existing NERC criteria, it also has two standards that are less stringent (C2 and C9). Depending on the resolution of question #1 above, C2 and C9 may be a regional difference. WECC has a formal Probabilistic Planning process that allows adjustment of performance levels of contingencies in either direction. As this SAR states that the existing NERC Table I is the minimum criteria for probabilistic methods, this will be a regional difference for WECC. This is discussed more in our comments on the SAR document. **Consideration by the SAR DT** *The present SAR no longer states that existing Table I is the minimum criteria for probabilistic methods, only that Table I should be used as a starting point for a review of the existing standard. Thus, probabilistic planning could allow for adjustment of performance requirements in either direction.* *The SAR DT is recommending that the review of the existing standard include the likelihood, duration and impact of events, as well as the definition of applicable ratings (A/R). This review may result in a re-classification of Table I events for the new Standard. The review may also result in other changes, such as addition or deletion of categories, events or performance requirements, use of probabilistic planning methods, or re-naming of categories based on event probability ranges.* *Since there was no clear consensus on how to address re-classification of events, the SAR DT feels that a thorough review of existing Table I will assure that events are properly classified for the new Standard.* *If differences in the classification of events or performance requirements remain after the draft Standard is posted, please provide your specific*

	comments at that time
CWLP	WECC has asked the NERC PC for waivers for some of the Category C requirements. **Consideration by the SAR DT** *See the SAR DT response to WECC-1 & WECC-2 in this table.*
KCPL	KCPL is aware of neighboring regional council differences in classification of Category B and C contingencies between SPP and MAPP. **Consideration by the SAR DT** *The SAR DT is recommending a review of existing Table I, which may result in a re-classification of Table I events for the new Standard. The review may also result in other changes, such as addition or deletion of categories, events or performance requirements, use of probabilistic planning methods, or re-naming of categories based on event probability ranges.* *Since there was no clear consensus on how to address re-classification of events, the SAR DT feels that a thorough review of existing Table I will assure that events are properly classified for the new Standard.* *If differences in the classification of Category B and C contingencies remain after the draft Standard is posted, please provide your specific comments at that time.*
NYSRC	It is the NYSRC's position that (1) NERC specifies minimum standards, (2) a Region may establish more stringent standards for its members separate from the NERC standards, and (3) it is unnecessary to include these more stringent standards within the framework of the NERC standards. **Consideration by the SAR DT** *The SAR DT agrees with this position.*
SCGEM, SOUTHERNCO	Not aware of any at this time. However, Regional Differences could develop and each request for a Regional Difference should be considered individually. **Consideration by the SAR DT** *The SAR DT agrees with this position.*
SEMINOLE	In Florida, with the state requirements for the siting of facilities, the planning horizon should be adjusted from 5 YRS to 8 YRS. The 5 YR horizon is too short for some major transmission line projects and/or studies of transmission interconnections/upgrades for base load central station generating facilities. **Consideration by the SAR DT** *The present SAR provides for a planning horizon of 5 years or more.*
SPP	SPP is aware of differences between SPP and the neighboring regions of ERCOT, MAPP and WECC. **Consideration by the SAR DT** *If differences remain after the draft Standard is posted, please provide your specific comments at that time.*
R. Snow	Each region has their own requirements.

	Consideration by the SAR DT *Each Region has the right to request Regional differences for approval as part of the Standard.*
WECC-1 & WECC-2	The existing NERC Standard C-9 (and C-2 for bus sectionalizing breakers) as it applies to WECC should be modified so that thermal limit and voltage limit violations are allowed for bus sectionalizing breaker failures. This is because bus sectionalizing breaker failure is a relatively low probability event. Use of a bus sectionalizing breaker should be encouraged because it reduces the impact of a disturbance to a portion of the load only. Without the proposed modification there is no incentive to use the sectionalizing breaker. However, under no conditions should system instability or cascading outages be allowed for bus sectionalizing breaker failures. **Consideration by the SAR DT** *The SAR DT is recommending a review of existing Table I, including the likelihood, duration and impact of events, as well as the definition of applicable ratings (A/R). This review may result in a re-classification of Table I events for the new Standard. The review may also result in other changes, such as addition or deletion of categories, events or performance requirements, use of probabilistic planning methods, or re-naming of categories based on event probability ranges.* *Since there was no clear consensus on how to address re-classification of events, the SAR DT feels that a thorough review of existing Table I will assure that events are properly classified for the new Standard.* *If differences in the classification of events or performance requirements remain after the draft Standard is posted, please provide your specific comments at that time.*
WESTAR	Yes. MAPP categorizes some contingencies differently. **Consideration by the SAR DT** *The SAR DT is recommending a review of existing Table I, which may result in a re-classification of Table I events for the new Standard. The review may also result in other changes, such as addition or deletion of categories, events or performance requirements, use of probabilistic planning methods, or re-naming of categories based on event probability ranges.* *Since there was no clear consensus on how to address re-classification of events, the SAR DT feels that a thorough review of existing Table I will assure that events are properly classified for the new Standard.* *If differences in the categorization of events remain after the draft Standard is posted, please provide your specific comments at that time.*

QUESTION 6: DO YOU HAVE ANY OTHER COMMENTS ON THE SAR (V2)?

Question in its entirety:

6. Do you have any other comments on Version 2 of the SAR? Please list and explain.

SUMMARY: Most of the 28 entities (121 individuals) responded to this question and provided additional comments on the SAR (Version 2).

Consideration by the SAR DT:

The SAR Drafting Team considered each comment individually, as shown in the tables below.

The additional comments were divided into the following headings:

- *General – Is there a need for this SAR? How will this SAR fit in with the new Version 0 Standards? Will the existing standards be weakened?*
- *Scope of Standard*
- *Planning Horizon*
- *Use of Operating Procedures*
- *Transition Between Operating & Planning Standards*
- *Functions to Which the Standard Applies*
- *Applicable Portions of Existing Standards*
- *System Models*
- *Resource Planning*
- *Use of Generation or Load as Solutions*
- *Formatting of the SAR*
- *Demand Levels for Modeling*
- *Definition of Terms*
- *Variability of Load & Generation*
- *Probabilistic Planning Methods*
- *Planned Outages*
- *Applicable Ratings*
- *Short Circuit Current*
- *Other Areas that Should be Added or Clarified*

GENERAL COMMENTS ON THE SAR (VERSION 2)

ATC	The SAR drafting team seems to have its arms around the issues and seems ready to proceed to Standard development. **Consideration by the SAR DT** *The SAR DT agrees with this position and appreciates the vote of confidence.* On p. 3 of the SAR, Market Interface Principles, Question 5 stating that the Standard will not require public disclosure of commercially sensitive information: Depending on the level of public exposure of the load flow and stability models, generation cost data and stability parameter data may be deemed by some entities as confidential market information. **Consideration by the SAR DT** *This SAR does not establish the level of public exposure of data. The Standard Drafting Team will determine these requirements. Please submit your comments at the time of the draft Standard posting.*
IMO, ISONE, NPCC	The entities listed believe that the relationship between the concept of the Version 0 Standards and all the developing Version 1 Standards needs to be consistent. The reliability attributes of the Version 0 standards must be "carried through and into" the Version 1 Standards and there needs to be coordination to ensure this occurs. **Consideration by the SAR DT** *There will certainly be changes between V0 and the developing V1 Standards (V1 will be a revision of V0) but these changes must be approved by the industry, thus assuring carry-through and acceptance of reliability attributes.*
IMO, ISONE, NPCC, NYSRC	It is the opinion of NYSRC, ISONE, IMO, and the Northeast Power Coordinating Council's CP9 working group participating members that the existing NERC criteria should not be weakened, including the NERC Planning Standards listed in the SAR as the starting point to be used in drafting a new standard. Our comments support our position that the existing Planning Standards should not be weakened. **Consideration by the SAR DT** *The majority of industry comments have indicated that this SAR is needed to consider content changes in existing Standards. There will be changes between the Version 0 standards (existing standards with formatting changes) and the developing Version 1 standards (V1 will be a revision of V0), but these changes must be approved by the Industry.* *All parties will have an opportunity to participate in the Standard drafting process, including commenting on the draft Standard. Concerns that changes made may weaken the Standard should be brought up at that time.*
NYSRC	<u>With the advent of the Version 0 standards, we believe that there is no longer a need for this SAR.</u> The comments in the "Consideration of Industry Comments" paper indicate that comments received in 2002 on SAR Version 1 were in favor of a standard on transmission assessment and planning, which was the SAR DT's reason for preparing this SAR. However, the Version 0

	standards development process will now provide a transmission planning standard, without requiring the preparation of this new SAR. Despite this position, if the DT does get sufficient support to go forward with a new standard, NYSRC has additional comments, as shown below. **Consideration by the SAR DT** *Version 0 Standards are intended to re-format the existing Standards without changing content, using Functional Model terminology. The majority of industry comments have indicated that this SAR is indeed required to consider content changes in existing Standards.* The relationship with the Version 0 standards should be recognized in the SAR, including the mechanism of how this "Version 1" standard would replace Version 0. **Consideration by the SAR DT** *Version 0 Standards are intended to re-format existing Standards without changing content, using Functional Model terminology. The present SAR uses these existing approved Standards as a starting point to consider content changes for a new Planning Standard. There will be changes between V0 and the developing V1 standards (V1 will be a revision of V0), but these changes must be approved by the Industry.*
SPP	Implementation of this SAR needs to be coordinated with the activities of the Version 0 Standards Drafting Team. **Consideration by the SAR DT** *See our response to NYSRC above.*
WESTAR	How will this SAR integrate with Version 0 Standards? **Consideration by the SAR DT** *Version 0 Standards are intended to re-format the existing Standards without changing content, using Functional Model terminology. The present SAR uses these existing approved Standards as a starting point to consider content changes for a new Planning Standard.*

COMMENTS ON SCOPE OF STANDARD

AESO	The SAR drafting team should clarify through rules, tests, definitions, etc. the portion of an entity's transmission system that shall be planned under the full NERC Standard and what portion may be exempted. **Consideration by the SAR DT** *All NERC Standards apply to the bulk electric power system.* *The SAR DT felt that the definition of "bulk transmission" is an issue too large to be handled by one DT alone, and should be defined at a higher level. Accordingly, the SAR DT referred this issue to the NERC Director of Standards.*
IMO, ISO/RTO	This standard should make it abundantly clear that it applies to both internal and external systems, that is the system under study and adjacent systems, or the entire interconnection if appropriate. **Consideration by the SAR DT** *The SAR DT agrees with this position. If the commenter believes the Standard does not sufficiently address this issue, we encourage the commenter to provide specific language to address this concern when a draft Standard is posted.*
SEMINOLE	The SAR should require joint transmission planning - at a minimum, joint transmission planning should be required between transmission service providers and their network service customers. **Consideration by the SAR DT** *Based on industry feedback to the first posting (V1) of the SAR, this present SAR indicates the Standard will identify reliability performance requirements, but not specify <u>how</u> to achieve such requirements. Joint planning is one way to achieve the reliability requirements, and is neither precluded nor required by this SAR.*

COMMENTS ON THE PLANNING HORIZON

ALLEGHENY	This paragraph and the next **(the 2nd & 3rd paragraphs of posted SAR-Version 2)** are unclear and appear to be conflicting. This first paragraphs specifies that the "scope of such assessments and plans is for a planning horizon of one year or more". The next paragraph specifies, "Assessments should cover a planning horizon of at least 5 years". This appears to be a conflict. It may be that the term "planning horizon" is being used differently in these two paragraphs. It is unclear to us what is the intention of the first of these two paragraphs. **Consideration by the SAR DT** *As a result of your comment, the present SAR has been clarified to indicate that the planning period starts at one year and extends to 5 years or more.*
NYSRC	**From SAR Version 2:** "……..The planning horizon must be long enough to permit timely implementation of viable solutions to remedy the potential inadequacies found. Assessments should cover a planning horizon of at least 5 years. The horizon may be longer than 5 years, based on regulatory or legislative requirements, or on the judgment of the Transmission Planner or Planning Authority……" In paragraph above, 2nd sentence, insert "and plans" after "Assessments". The last sentence is not needed. A Region or other entity may have more stringent requirements than NERC – therefore, such a statement is not needed. **Consideration by the SAR DT** *The SAR DT agrees and accepts your first comment for inclusion in the revised SAR. The SAR DT decided to retain the last sentence in the referenced paragraph to clarify the requirement about the planning horizon.*
R. Snow	While some of the information about generation additions and load growth are considered reliable for five (5) years, a long-term study of approximately ten (10) years is necessary to identify global issues such as import limitations to a region that would require projects that have traditionally taken more than five (5) years. Suggest the following wording: *"Assessments shall cover a detailed planning horizon consistent with available information but no less than five (5) years. The five year horizon shall include load growth, new internal and external firm generation, generation retirements/failures, uncontrollable loop flows, reliance on external generation (identify both firm and market), topology changes, and firm transactions. A longer term study using a variety of scenarios that are expected to cover the most likely long term activity, shall be conducted to identify projects that take longer than five years to implement."* **Consideration by the SAR DT** *The SAR DT considered your alternative wording to be overly prescriptive. However, in the present SAR, the wording has been changed to clarify that the planning horizon extends to 5 years or more.*
SEMINOLE	In Florida, with the state requirements for the siting of facilities, the planning horizon should be adjusted from 5 YRS to 8 YRS. The 5 YR horizon is too short for some major transmission line projects and/or studies of transmission interconnections/upgrades for base load central station generating facilities. **Consideration by the SAR DT** *In the present SAR, the wording has been changed to clarify that the planning*

	horizon extends to 5 years or more.

COMMENTS ON USE OF OPERATING PROCEDURES

AMEREN	" …there is no intent to exclude appropriate operating procedures…". What is "appropriate"? Could generation redispatch be an appropriate operating procedure? If yes, what level of redispatch is appropriate? The standard should include a definition of "appropriateness" of operating procedures so that they are developed and applied on a uniform and consistent basis. **Consideration by the SAR DT** *The SAR DT believes it to be problematic to produce an exhaustive list of all appropriate operating procedures. Furthermore, industry feedback to the first posting (V1) of the SAR indicated a strong industry preference for the Standard not to specify how to achieve the reliability requirements. However, if you believe the draft Standard, when posted, does not sufficiently address this issue, please submit your comments at that time.*
MAPP	MAPP is concerned that the SAR does not limit manual or automatic readjustments for certain lower probability or low consequence events. MAPP urges that the SAR drafting team add additional provisions to require the drafting team to consider which manual and automatic readjustments are allowed and when in meeting the criteria that is included in the standards. **Consideration by the SAR DT** *See the SAR DT response to AMEREN, above.*
R. Snow	***From SAR Version 2:*** "……..While the planning horizon is intended to provide for facility additions, there is no intent to exclude appropriate operating procedures from the transmission plan……..." Replace this sentence with "The planning horizon is intended to provide for facility additions. Operating procedures shall not be used as a substitute for good system design and shall only be applicable during maintenance outages and while facilities are being constructed." *[The original language would allow what was identified as the root cause of the Italian blackout. Namely, an operating procedure that had to be executed within 15 minutes. The operator had to call another area and ask them to perform an operating procedure. The procedure was underway but did not happen fast enough to avoid the next line trip. Operating procedures should never be a long term substitute for constructing facilities needed to assure reliability.]* **Consideration by the SAR DT** *Industry feedback to the first posting (V1) of the SAR indicated a strong industry preference for the Standard not to specify how to achieve the reliability requirements. Therefore, the SAR DT did not accept your suggestion. However, when the draft Standard is posted, feel free to submit your comments at that time.*

COMMENTS ON TRANSITION BETWEEN PLANNING & OPERATING STANDARDS

BPA	*Transition to Operating Standards:* The Planning Standards include multi-layered requirements for different types of outages, i.e., Level B single contingencies, Level C and D multiple contingencies. Compliance with these requirements is to be defined and monitored via the new Reliability Standards. However, once the system moves into the Operational timeframe (one year or less), Policy 2 presently requires meeting N-1 contingencies only with no requirements for Levels C and D. The transition between planning and operations needs further exploration. **Consideration by the SAR DT** *As a result of your comment and others, the present SAR has been revised to require that the new Standard consider the transition between operating and planning standards. In particular, the new Planning Standard will be coordinated with other standards, such as Standard 600, "Determine Facility Ratings, Operating Limits and Transfer Capabilities", which also applies to operations.*
MAPP & MEC	MAPP & MEC are concerned that the SAR does not provide for the coordination of the requirements of the planning standards in NERC Standard 500, "Assess Transmission Future Needs and Develop Transmission Plans", with the NERC Operating Standards provided in NERC Standard 600, "Determine Facility Ratings, Operating Limits, and Transfer Capabilities." The criteria that are proposed as a starting point for 500 in this SAR (events from Categories A through D) differ from the criteria that are included in the latest draft of NERC Standard 600 (Categories A and B). If these approaches are continued, then studies run for the operating horizon will differ significantly from studies run for the planning horizon. These differences in studies will carry over to the calculation of quantities used to offer transmission service, that is, Total Transfer Capacity and Available Transmission Capacity. If NERC does not coordinate these two standards, there will be a discontinuity in TTC and ATCs when the Planning Horizon begins and the Operating Horizon ends or from one day less than one year to one year. MAPP & MEC urge the SAR drafting team to consider this discontinuity and coordinate the SAR for 500 with the Standard that is being written for 600. If a discontinuity between criteria is allowed to continue in the SAR for Standard 500, the SAR drafting team should have a clear explanation for all market participants as to the reason for the discontinuity and how that should be dealt with by the elements of the NERC Functional Model. **Consideration by the SAR DT** *See the SAR DT's response to BPA above.*

COMMENTS ON FUNCTIONS TO WHICH THE STANDARD APPLIES

AMEREN	**From SAR Version 2:** "…….The Standard shall identify reliability requirements, but shall not specify how to achieve such requirements. These requirements shall apply to Transmission Planners and to Planning Authorities……..." Should the requirements be applied to Transmission Owners also? **Consideration by the SAR DT** *Yes. After reviewing your comment, we deleted the last sentence of the referenced paragraph, since page 2 of the SAR already lists TO as a function to which the Standard applies.*
R. Snow	The standards should apply to Transmission Owners, Transmission Operators, Transmission Planners, anyone who is connecting facilities to the transmission system, control areas, and reliability coordinators. ***Consideration by the SAR DT*** *After reviewing your comment, we deleted the last sentence of the referenced paragraph. On SAR page 2 is a list of functions to which the Standard applies. The functions listed are: RA, PA, TP, TO, LSE. This list is consistent with the Functional Model.*

COMMENTS ON APPLICABLE PORTIONS OF EXISTING STANDARD

NYSRC	***From SAR Version 2:*** "……The applicable portions of the following existing NERC Planning Standards will be used as the starting point in drafting these requirements: • I.A Transmission Systems • I.B Reliability Assessment • I.D Voltage Support & Reactive Power • II.A System Data • II.D Actual and Forecast Demands……." Define "applicable portion". List the specific standards and measurements that are intended to be used as the starting point. ***Consideration by the SAR DT*** *The SAR DT believes this level of specificity is not needed in a SAR. If this concern is not addressed in the posted draft Standard, please feel free to submit your comments at that time.*
R. Snow	***From SAR Version 2:*** "……The applicable portions of the following existing NERC Planning Standards will be used as the starting point in drafting these requirements: • I.A Transmission Systems • I.B Reliability Assessment • I.D Voltage Support & Reactive Power • II.A System Data • II.D Actual and Forecast Demands……." Add the following after the bullets. *"In addition to the above, the standard shall provide requirements on methodology of forecasting and normalizing load. This would include methods of determining the normalized load over a large geographic area with different weather patterns and norms. The "normalized" load should not be the load associated with the median weather over a summer or winter period but the load level that will provide sufficient reliability to supply all firm load obligations. Each region shall provide a definition as to what is sufficient reliability. The definition shall clearly define the risk that is being assumed in terms similar to the LOLE for lack of generation. In addition to the above two risk variables, a methodology shall be identified to quantify the risk of not being able to deliver the difference between the local load and generation. This is essentially the ability of the transmission system to respond to different generation dispatch patterns."* ***Consideration by the SAR DT*** *The SAR DT believes this level of specificity is not needed in a SAR. If these concerns are not addressed in the posted draft Standard, please feel free to submit your comments at that time.*
SCGEM	It would also be beneficial to the generation sector if the SDT for this new Planning Standard could summarize the differences between the existing Planning Standards I.A, I.B, I.D, II.A, and II.D and the new Planning Standard as it is being developed. This would gauge the potential impact to the plants. The main concerns have been 1) how to address regional differences (primarily related to Category C events), 2) how to differentiate Table I's application to the Planning world versus the Operations world, and 3) how to state the requirements more clearly. ***Consideration by the SAR DT*** *Since the revised Standard has not yet been drafted, the summary you*

	requested cannot be provided at this time. This summary comparison will be addressed in the Implementation Document that accompanies the new Standard.
SEMINOLE	The SAR should define specific planning voltage criteria for consistency between transmission owners/providers. Voltage Criteria should be specifically defined for normal condition and N-1 conditions and can be specified differently for: • Bulk power - non-load serving buses • Meshed/Looped - load serving buses • Radial - load serving buses ***Consideration by the SAR DT*** *The SAR DT believes this level of specificity is not needed in a SAR. If this concern is not addressed in the posted draft Standard, please feel free to submit your comments at that time.*

COMMENTS ON SYSTEM MODELS

AESO	We believe that the assumptions made for the amount, type and location of future supply are important considerations in assessing the future needs of transmission systems. The SAR drafting team should consider this forecast requirement in developing this Standard. Similarly, there is difficulty in separating planning for reliability and planning for overall system efficiency and economy, and the Standard must be clear on this differentiation. ***Consideration by the SAR DT*** *The SAR DT believes the present SAR addresses most of these concerns. With regard to your last concern, the SAR DT believes there is not always a clear differentiation between reliability, efficiency & economy considerations. However, NERC standards primarily focus on reliability and do not directly address efficiency & economy considerations. If you have specific suggestions after the draft Standard is posted, please comment at that time.*
AMEREN	We believe that for planning of robust transmission systems, the Standard should include (1) some incremental transfer capability requirement in addition to what is "projected" or modeled in the base case, (2) a combination of a line and a generator outage should be included in category B. ***Consideration by the SAR DT*** *With regard to (1) the SAR requires each Planning Authority and Transmission Planner to document the methodology for incorporating planned generation assets in the model. In response to your comment, the present SAR has been revised to specify that the methodology for incorporating planned generation assets (including transfers) must be documented. However, the SAR DT believes any specific incremental transfer capability requirement in the new Standard would be overly prescriptive.* *With regard to (2), the Standard Drafting Team will be reviewing the likelihood, duration and impact of events, as well as performance requirements of the existing Table I Categories. If this issue is still a concern when the draft Standard is posted, please submit your comments at that time.*
AMEREN	Why document and disclose methodologies limited to planned generation only? What about planned transmission and interchange? Is it because there is more uncertainty for speculative generation than transmission? What about differences in modeling details required for different type of analyses, such as thermal or voltage, regional or local? It is our experience that more detailed representation (lower voltage facilities) is required for voltage analysis than thermal analysis. Perhaps the standard should state that additional detail may need to be added to the model to adequately represent the system for specific studies. ***Consideration by the SAR DT*** *In response to your comment, the present SAR has been revised to require documentation of modeling assumptions, including generation modeling assumptions. The SAR DT highlighted generation assumptions because the SAR DT believes such assumptions are particularly important. Furthermore, given unbundling of generation resources from transmission in some areas, we believe there is considerable additional uncertainty in these assumptions,*

	both with regard to new generating units and dispatch of new and existing units.
ATC	New standard needs to consider the difficulties, particularly for stand-alone transmission companies, in obtaining resource information so models can balance load and resources. ***Consideration by the SAR DT*** *The present SAR does indicate that the Standard shall require that system models be developed, maintained and shared in a manner consistent with the Functional Model. The SAR also states that the Standard shall consider a requirement for LSEs to provide forecast resource data for input to the models. If the commenter has specific suggestions to further address this concern, please provide specific suggestions when the draft Standard is posted.*
KCPL	In regards to developing accurate regional models, all known firm transmission service, including rollover provisions for all firm transmission service, should be included in the base case models. ***Consideration by the SAR DT*** *The SAR DT believes this provision does not need to be in the SAR for the new Standard. Rollover provisions for firm transmission service is a FERC tariff issue that does not apply to entities outside of FERC's jurisdiction. Therefore, the SAR DT believes this provision would be overly prescriptive.*
MAPP	MAPP is concerned that there is no reference in the SAR to the need to handle firm contracts that may roll-over in the futures. Plans developed for the transmission system must recognize that the transmission system must have sufficient capacity to handle roll-overs. MAPP urges the SAR drafting team to include an appropriate description of the requirement for the plans with regard to roll-overs. ***Consideration by the SAR DT*** *The SAR DT believes this provision does not need to be in the SAR for the new Standard. Rollover provisions for firm transmission service is a FERC tariff issue that does not apply to entities outside of FERC's jurisdiction. Therefore, the SAR DT believes this provision would be overly prescriptive.*
R. Snow	**From SAR Version 2:** "…….The Standard shall require that system models be developed, maintained and shared in a manner consistent with the Functional Model. Included will be requirements that each Planning Authority and Transmission Planner document and disclose the methodology used for incorporating planned generation assets in the model, as well as how such generation is dispatched. While methodologies and assumptions must be documented, the Standard will not prescribe specific tools to be used in the performance assessment of the planned systems……." Replace the last sentence with *"while the standard will not prescribe specific tools, it shall identify methodologies to validate and procedures to operate the tools so that the identified outcomes from the analysis are not dependent on the tool or the way the tool was used or initialized."* ***Consideration by the SAR DT*** *Industry feedback to the first posting (V1) of the SAR indicated a strong industry preference for the Standard not to specify how to achieve the*

	reliability requirements. Therefore, the SAR DT did not accept your suggestion.
SCGEM, SOUTHERNCO	In relation to the methodology being used for incorporating planned generation assets in the model and how generation is dispatched: the type of each generating unit, the primary fuel type for each generating unit, and a dispatch order of the generating units should be required. In addition, a general description of the dispatch methodology used for the system should also be required. However, no cost information should be required. ***Consideration by the SAR DT*** *The SAR DT believes the referenced language addresses this concern by requiring system model sharing and documentation of generation modeling assumptions. The SAR DT agrees with the commenter that cost data should not be required because it would violate Market Interface Principle 5 (see SAR p. 3) which prohibits requiring the public disclosure of commercially-sensitive information.*
SEMINOLE	It is recommended that these models be "region-wide" system models that are developed utilizing a documented, consistent, region-wide criteria. ***Consideration by the SAR DT*** *The SAR DT believes this provision would be overly prescriptive.*

COMMENTS ON RESOURCE PLANNING

DUKE	Resource planning cannot be excluded from the standard. Guidance should be provided on incorporation of resource data from all LSE's and how resource deficiencies in outyear models should be handled (e.g. model fictitious generation with no reactive capability to ensure sufficient reactive resources are planned for if power is purchased from off system in the future). The increasingly frequent changes in resource designations are causing greater uncertainty in performance of planning for reliable system operation. ***Consideration by the SAR DT*** *The SAR DT agrees that generation resource modeling is an important data requirement for transmission assessment and planning. However, the SAR distinguishes resource information as an input to transmission planning studies from a requirement to assess and ensure the adequacy of generation resources (i.e., resource planning).* *The SAR DT believes it is an open issue as to what level of specificity the Standard should require for model building. If this issue is still a concern when the draft Standard is posted, please submit your comments at that time.* *Note: Whether to check the Resource Planning box on page. 2 of the SAR (as a function to which the Standard applies) has been deferred to the NERC Director of Standards.*
ENTERGY, SCGEM, SERC, SOUTHERNCO	Entities agree the Standard should not address resource planning. However, the Standard should include requirements for the LSEs to provide forecast resource data required to develop power flow models as required in the current II.D Standards. Accordingly, this new Standard should also apply to LSEs. (Thus, entities believe the "LSE" box on p.2 of SAR should be checked as an applicable function). ***Consideration by the SAR DT*** *The SAR DT believes commenters have raised a valid point. The SAR DT believes it is an open issue as to what level of specificity the Standard should require for model building. Therefore, the present SAR has been revised to indicate that the Standard shall consider a requirement for the Load Serving Entities to provide forecast resource data.* *Note: LSE box on page 2 of the SAR has also been checked.*
ENTERGY	In addition, the Standard should require the Transmission Planner to document and describe the methodology used to plan the transmission system around the generation dispatch assumptions used by the Transmission Planner to meet the LSE load when and if the LSE provided resources do not equal the LSE provided load. ***Consideration by the SAR DT*** *The SAR DT believes it is an open issue as to what level of specificity the Standard should require for model building. If this issue is still a concern when the draft Standard is posted, please submit your comments at that time.*
IMO, ISONE, NPCC	The entities listed recognize that Resource Planning is not covered in the proposed Standard because it is considered as being handled by market

	mechanisms that are/will be in place or perhaps addressed in a separate standard. Therefore, we assume that the generation and load information required to perform the planning studies are provided as described in section II.A of the existing Planning Standards. If not, sections II.B, II.E and III of the existing Planning Standards should also be used as the starting point in drafting of the reliability requirements. ***Consideration by the SAR DT*** *The SAR DT believes it is an open issue as to what level of specificity the Standard should require for model building. If this issue is still a concern when the draft Standard is posted, please submit your comments at that time.*
NYSRC	We agree that a transmission planning standard should not include Resource Planning requirements. However, the NYSRC strongly believes that NERC should develop a separate Resource Planning Standard. ***Consideration by the SAR DT*** *The Resource and Transmission Adequacy Task Force (RTATF) proposed and NERC accepted that a Resource Adequacy SAR should be developed.*
WECC-2	In order to develop any meaningful standard, the resource part of the power system should be addressed by including standards for the modeling of existing resources, planned retirement of resources, and planned resources in the next 5 to 10 years time frame. This information will be necessary in order to assess whether future systems can or can not meet the reliability standards. ***Consideration by the SAR DT*** *The SAR DT believes the present SAR as written addresses this concern. Specifically, the SAR requires the documentation and sharing of system models, including the methodology of incorporating planned generation assets in the model as well as how such generation is dispatched.*

COMMENT ON USE OF GENERATION OR LOAD AS SOLUTIONS

AMEREN	If generation is considered in lieu of transmission reinforcement, the system must be able to withstand the loss of that generation plus another single contingency. The reason for this is that generation can be on or off due to economic and other factors after its installation, while transmission is almost always "on". ***Consideration by the SAR DT*** *The SAR DT agrees with this position. The loss of a generating unit plus another single contingency is already an event against which transmission systems must be tested in the existing Standards, and the present SAR provides for the new Standard to use the existing Standards as a starting point. If this issue is still a concern when the draft Standard is posted, please submit your comments at that time.*

COMMENT ON SAR FORMATTING

ALLEGHENY	***From SAR Version 2:*** "……..While the Standard should start from and closely align with the existing Planning Standards I.A, .B, .D, II.A,.D, the system conditions to be studied or assessed may need to be better defined or clarified. For example, the Standard should clarify that the requirement to assess the performance at **all** demand levels does not mean that a multitude of transmission models need to be created for every possible demand level, only that a representative sample covering critical operating conditions needs to be modeled in accordance with regionally-defined criteria……..." This paragraph starting "While the Standard should start from…" has a problem with it's second sentence. The sentence "For example…" does not really apply to the first sentence. We recommend that this paragraph be changed as follows: *"While the Standard should start from and closely align with the existing Planning Standards I.A, .B, .D, II.A,.D, the system conditions to be studied or assessed may need to be better defined or clarified.* *Examples of areas that should be considered for clarification in the Standard include:* *The Standard should clarify that the requirement to assess the performance at ALL demand levels does not mean that a multitude of transmission models need to be created for every possible demand level, only that a representative sample covering critical operating conditions needs to be modeled in accordance with regionally-defined criteria.* *The Standard should provide a clearer definition of "cascading outages".** *And so on".* ***Consideration by the SAR DT*** *In response to your comment, we have revised the SAR to reflect the new formatting.*

COMMENT ON DEMAND LEVELS FOR MODELING

SEMINOLE	***From SAR Version 2:*** "……For example, the Standard should clarify that the requirement to assess the performance at **all** demand levels does not mean that a multitude of transmission models need to be created for every possible demand level, only that a representative sample covering critical operating conditions needs to be modeled in accordance with regionally-defined criteria……..." Regarding " … a representative sample covering critical operating conditions …" It is recommended that this standard include specific requirements; such as, at what load levels and how many different load levels is intended by this part of the SAR. A suggestion would be 100% and 80%, and perhaps the 60% load level. ***Consideration by the SAR DT*** *The SAR DT considered your suggestions for specific load levels to be overly prescriptive.*

COMMENTS ON DEFINITION OF TERMS

AMEREN	In addition to the definition of "cascading outages" , clarification is needed for identification of a cascading state. For example, we are not sure that assumption of some percent overload, say 125% of emergency rating, is a good proxy for cascading. ***Consideration by the SAR DT*** *The SAR DT agrees that a clearer definition of cascading outages (including what constitutes a cascading state) must be provided in the new Standard, and be fully coordinated with the definition in other new Standards. The present SAR has been revised accordingly.*
ERCOT, IMO, ISONE, ISO/RTO, NPCC	All entities listed suggest that the definition for Cascading Outage be fully coordinated with the STDs 200 and 600. ***Consideration by the SAR DT*** *The SAR DT agrees with this position. The SAR DT believes a clearer definition of cascading outages must be provided in the new Standard, and be fully coordinated with the definition in other new Standards. The SAR has been revised accordingly.*
IMO, ISONE, NPCC	NPCC has submitted a suggested definition of "cascading outage" in the comments for the last posting of STD 200, which is endorsed by the other entities listed: *Cascading Outage- "The uncontrolled successive loss of Bulk Electric System elements that propagate beyond a defined area (Balancing Area's) boundaries.""* ***Consideration by the SAR DT*** *The SAR DT agrees that a clearer definition of cascading outages must be provided in the new Standard, and be fully coordinated with the definition in other new Standards. Your specific suggestion is inconsistent with the definition in the latest version of STD 600. Please provide additional comments and suggestions when the draft Standard is posted.*
IMO, ISONE, NPCC	NPCC would also like to submit a proposed definition of Bulk Power System, as follows, and would like it to be considered as a "building block" for the NERC BES (Bulk Electric System) definition. The definition is endorsed by the other listed entities: *Bulk Power System-BPS-(or BES in NERC documents) — "The interconnected electrical systems within northeastern North America comprising generation and transmission facilities on which faults or disturbances can have a significant adverse impact outside of the local area. In this context, local areas are determined by the Council members."* ***Consideration by the SAR DT*** *The SAR DT feels that the definition of "bulk transmission" is an issue too large to be handled by one Drafting Team alone, and should be defined at a higher level. Accordingly, the SAR DT referred this issue to the NERC Director of Standards.*
NYSRC	***From SAR Version 2:*** "…….The Standard should provide a clearer definition of "cascading

	outages"……". Replace "provide" with "consider". ***Consideration by the SAR DT*** *The SAR DT retained the word "provide", since we believe a clearer definition of cascading outages must be provided in the new Standard, and be fully coordinated with the definition used in other developing Standards.* *The present SAR has been revised to require that definitions be coordinated and consistent with other Standards being drafted by NERC.*
SERC	The SERC PSS agrees that the Standard should provide a clearer definition of "cascading outages." In addition the SERC PSS recommends that the Standard provide a clearer definition of what is meant by "system stable." ***Consideration by the SAR DT*** *The SAR DT agrees, and the SAR has been revised to recommend that the new Standard provide a clearer definition of "system stable".*
SCGEM, SOUTHERNCO	In general, the NERC Standards need to have a common definition across the board for any definition used in a Standard. For example, the definition for "Cascading Outages" needs to be coordinated with the Standards Drafting Team (SDT) for the "Determine Facility Ratings, Operating Limits, and Transfer Capability" standard (STD 600). ***Consideration by the SAR DT*** *The SAR DT agrees with this position. The SAR DT believes a clearer definition of cascading outages must be provided in the new Standard, and be fully coordinated with the definition in other new Standards. The SAR has been revised accordingly.*
SCGEM, SOUTHERNCO	Southern agrees that the Standard should provide a clearer definition of "cascading outages." We suggest that the following be considered: *Cascading — "The uncontrolled successive loss of system elements triggered by contingencies which results in widespread electric service interruption 1) that drops 1000 MW of load or more or 2) that crosses control area boundaries."* In addition, Southern recommends that the Standard provide a clearer definition of what is meant by "system stable." We suggest that the following be considered: *System stable — "For Category A and B simulations, system stable means that no generating units pull out of synchronism. For Category C events, system stable means that if units pull out of synchronism, 1) the resulting impedance swings are not out into the transmission system and 2) the total amount of generation lost because of out-of-step tripping does not exceed the control area operating reserve level."* ***Consideration by the SAR DT*** *The SAR DT will pass these suggested definitions along to the Standard Drafting Team for consideration.*

COMMENTS ON VARIABILITY OF GENERATION & LOAD

IMO, ISO/RTO	Seasonal and weather related variability should be considered in studies. ***Consideration by the SAR DT*** *The SAR DT agrees with this position. We believe the present SAR as written takes into account seasonal and weather-related variations.*
MAPP	MAPP is concerned that there is no provision for recognizing the variability of generation in the SAR. MAPP asks the SAR drafting team to add another bullet to the SAR which states, "The Standard should take into account the variability of generation due to factors such as weather and time of day." ***Consideration by the SAR DT*** *The SAR DT agrees with this position. We have not added a bullet to the SAR, but rather have revised the existing bullet to take your suggestion into account.*

COMMENTS ON PROBABILISTIC PLANNING METHODS

AESO	The basis of probabilistic planning, in our view, is to make planning decisions based on the metrics, such frequency, duration and impact, derived from probabilistic assessments. This is usually difficult to do in planning the bulk portion of the transmission system, since outage events are rare but their impact is significant (like multiplying infinity and zero). The categorization of contingencies in Table 1 using outage frequency as a determinant is a step in applying probabilistic techniques in this Standard but it is not probabilistic planning in its true sense. The SAR development team should clarify what it intends with regard to "the use of probabilistic planning methods". ***Consideration by the SAR DT*** *In response to your comment, the SAR DT has revised the present SAR to clarify our intent with regard to probabilistic planning methods.*
AMEREN	**From SAR Version 2:** "……..The Standard should allow for the development and use of probabilistic planning methods. The minimum requirements of probabilistic methods are the contingencies as described in Table 1 of existing Planning Standard I.A.. There should be NERC approval of acceptable levels of risk……..." The second sentence about "The minimum requirements of probabilistic methods …. Does this mean that probability should be assigned to at least all of the contingencies included in Table I.A.? AMEREN believes that defining acceptable levels of risk will be a major undertaking. Isn't the level of risk dependent upon the entity and/or perception? Using a deterministic methodology in the planning horizon for single contingency provides a margin to handle many multiple unplanned facility outages or unforeseen system conditions in the operating horizon. ***Consideration by the SAR DT*** *The SAR DT is recommending the continued use of deterministic criteria in the Standard, but is also recommending probabilistic planning methods as an alternative or augmentation to the deterministic criteria. The SAR DT believes probabilistic planning methods are another way of defining acceptable levels of risk. For example, the existing deterministic criteria considers all line outages to be the same level of risk, but a probabilistic method may differentiate transmission line outages by length of line. The SAR DT has revised the present SAR to clarify this point in response to your comment.*
ATC	**From SAR Version 2:** "……..The Standard should allow for the development and use of probabilistic planning methods. The minimum requirements of probabilistic methods are the contingencies as described in Table 1 of existing Planning Standard I.A.. There should be NERC approval of acceptable levels of risk……..." This may also go back to question 1 in the Comment Form, but the statement, "There should be NERC approval of acceptable levels of risk" needs to be better defined. For example does this mean that a utility can't decide to increase the operating temperature of a line conductor without NERC approval? ***Consideration by the SAR DT*** *The SAR DT agrees that the sentence concerning NERC approval was unclear. The SAR DT has removed the referenced sentence and added*

	wording to clarify our intent regarding the "use of probabilistic planning methods".
BPA	The handling of probabilistic criteria in the SAR seems quite convoluted, i.e. it can only be used to *increase* performance levels AND has to be approved by NERC. This is not the way probabilistic planning should work. WECC presently has a process (Seven Step Reliability Performance Evaluation) to allow changes in performance requirements (both up and down) for specific outages based on rigorous analysis and monitoring actual performance. It is mostly applicable to requirements beyond the NERC criteria (such as outages of adjacent circuits on separate towers). Use of these methods should be allowed with approval of affected regions. This process should allow for movement below Table 1, i.e. moving Category C outage to Category D. One way to resolve this would be to replace the word "minimum" in the SAR to "starting". ***Consideration by the SAR DT*** *In response to your comment, the SAR DT has added wording to clarify our intent regarding the "use of probabilistic planning methods". Specifically, there is no longer reference to "minimum criteria", but rather a recommendation that the existing Standards be used as a "starting point", allowing movement above or below existing Table I. The reference to NERC approval has also been removed.*
NYSRC	Is the probabilistic method referred to here considered a replacement for the NERC Criteria or a supplement to NERC Criteria? NERC should not allow such a method as a substitute for NERC criteria. I am not aware that NERC has completed an analysis to evaluate and compare the level of reliability of probabilistic criteria with NERC criteria. Such an evaluation would be needed. ***Consideration by the SAR DT*** *The SAR DT is recommending the continued use of deterministic criteria in the Standard, but is also recommending probabilistic planning methods as an alternative or augmentation to the deterministic criteria. The SAR DT has revised the present SAR to clarify this point in response to your comment.*
R. Snow	**From SAR Version 2:** "……..The Standard should allow for the development and use of probabilistic planning methods. The minimum requirements of probabilistic methods are the contingencies as described in Table 1 of existing Planning Standard I.A.. There should be NERC approval of acceptable levels of risk……." Add a sentence after the first sentence *"The probabilistic methodology shall not ignore specific cases that would result in significant load dump or cascading outages. Each region shall identify how to resolve such outages." The last sentence "Acceptable levels of risk in terms of maximum consequential and programmatic load dump and maximum durations for the outages shall be defined."* ***Consideration by the SAR DT*** *The SAR DT believes this level of specificity is not needed in a SAR. However, the SAR DT appreciates your comment, and has revised the present SAR to clarify the potential application of probabilistic planning methods. If this issue is still a concern when the Standard is posted, feel free to submit your comments at that time.*

WECC-1	It appears to us that as written, the standard that flows from this SAR can only allow the probabilistic planning methods to make the standard more, not less, stringent than the existing Standard IA. This is not the way probabilistic planning methods should work. This statement also does not make sense when you read the next sentence, "There should be NERC approval of acceptable levels of risk." If the standard can only be more stringent, then there is no need for NERC to approve the level of risk, or even the probability of occurrence of the contingency. One way to resolve this issue would be to change the word "minimum" to "starting". ***Consideration by the SAR DT*** *In response to your comment, the SAR DT has added wording to clarify our intent regarding the "use of probabilistic planning methods". Specifically, there is no longer reference to "minimum criteria", but rather a recommendation that the existing Standards be used as a "starting point", allowing movement above or below existing Table I. The reference to NERC approval has also been removed.*
WECC-2	The Standard should also allow for the use of Probabilistic Criteria. In WECC, Probabilistic Planning refers to the application of fixed planning standards to a given problem to determine the probable or expected load not served. Probabilistic Criteria is used to refer to adjusting the performance category based on the probability of the event for a specific facility. The performance category can move up or down depending on actual or planned performance. Therefore, Table 1 would be the starting point for making probabilistic criteria adjustments. Probabilistic adjusted criteria would be the basis for Probabilistic Planning. ***Consideration by the SAR DT*** *See the SAR DT's response to WECC-1 and BPA above.*
WECC-1 & WECC-2	The NERC Planning Standards should follow what WECC is doing with regard to listing disturbances as a guide, but say that other disturbances with the same probability should be included. List the probability ranges (outages per year), Category B: >= 0.33, Category C: 0.33 to 0.033; Category D1 (no cascading): 0.033 to .0033, Category D2: < .0033. The standard should allow for changes in the required performance for given disturbances if a probability in another range has been established for a given disturbance. NERC should require that the Regional Councils specify voltage dip and minimum frequency standards similar to WECC (i.e., the voltage dip and minimum frequency should be within Applicable Ratings). We are not proposing that NERC set fixed values for these standards that would be the same throughout the ten NERC Regions. NERC should not set the standards. WECC recommends that the approval of acceptable levels of risk be at the regional level. ***Consideration by the SAR DT*** *In response to your comment, the SAR DT has added wording to clarify our intent regarding the "use of probabilistic planning methods".*

	The SAR DT believes the existing Standard allows Regions to apply voltage dip and voltage stability Regional requirements under the "voltage limits" section of Table I. The SAR DT believes that frequency standards are outside the scope of Transmission Planning for most Regions, and has not included frequency standards in the NERC SAR. This does not preclude Regions where frequency standards have transmission adequacy implications from developing their own standards.

COMMENTS ON PLANNED OUTAGES

AMEREN	We do not believe that the requirement for planning for maintenance outages should be included in planning assessments. See AMEREN's response/comments to Question 4 in this document. ***Consideration by the SAR DT*** *In reviewing industry responses, there was no clear consensus on the issue of including planned outages in planning assessments. See the SAR DT's response to MAPP below. We believe the revised wording in the present SAR adequately addresses these concerns.*
MAPP	MAPP urges the SAR drafting team to add words under this bullet to more clearly explain the SAR drafting team's position with regard to prior planned outages. ***Consideration by the SAR DT*** *The SAR DT believes there is confusion surrounding the planned outage requirement in the existing standard. The SAR DT is recommending that the new Standard specify whether to retain this requirement for Categories B and C. If retained, the Standard should clarify the requirement in such a way that the requirement can be practically implemented.* *In particular, the SAR DT has revised the present SAR to clarify that transmission entities are not required to exhaustively test their systems for every conceivable planned (including maintenance) outage in addition to every conceivable Category B and C contingency. The SAR DT has also revised the SAR to delete the planned outage requirement for Categories A and D.*
MEC	MEC urges the SAR drafting team to add the following words to this bullet to more clearly explain the SAR drafting team's position with regard to planned outages: *"In particular, it is incorrect to have a requirement to exhaustively test for every contingency described in each category plus every conceivable planned outage.* *Planned Outages can be scheduled and analyzed in advance in the operating horizon (less than one year). Therefore, it should not be necessary to require that "systems must be capable of meeting Category C requirements while accommodating the planned outage of any bulk electric equipment..." Planned outages should be studied in advance by the requesting control area and be reviewed by the governing Reliability Coordinator to determine if overloads could occur. If studies show that overloads could occur, the planned outage should be deferred or operating guides prepared which would be used in the event a contingency does occur.* *There is no need to plan or build facilities to meet Planning Standard 1.A when Planned Outages can be accommodated within the frame work of existing guidelines and procedures. Studies conducted for the operating horizon are not the subject of this standard.* *Therefore, the SAR drafting team directs the standard drafting team to delete the requirement for the prior planned outage from the standard given that known planned outages must be included in studies that are conducted during the operating horizon which are not the subject of this standard but which are required in accordance with NERC Standard 200, "Operate Within Interconnection Reliability Operating Limits Standard" and NERC Standard 600, "Determine Facility Ratings, Operating Limits, and Transfer Capabilities".*

	Note: The above suggested wording is similar to the MAPP/MEC comment for Question 4, and the SAR DT is offering a similar consideration: ***Consideration by the SAR DT*** *See the SAR DT's response to MAPP above. We believe the revised wording in the present SAR adequately addresses these concerns.*
SEMINOLE	Many grid operations difficulties occur when a line is scheduled out for maintenance. If this SAR is going to address required N-2 planning assessments, then it must be clear and specific regarding the conditions when N-2 assessments are appropriate and the specific criteria for N-2 assessments. ***Consideration by the SAR DT*** *See the SAR DT's response to MAPP above. We believe the revised wording in the present SAR adequately addresses these concerns*

COMMENTS ON APPLICABLE RATINGS

ALLEGHENY	**From SAR- Version 2:** "……..Performance requirements for Category C events shall be re-evaluated. For example, for certain Category C events, such as #2, #3 and #9 events, consider removing references to "Applicable Ratings" to clarify that the performance requirement is "No Cascading Outages are Allowed"……". This bullet does not appear necessary. "No Cascading Outages" is already part of Table I for these events. Removing "Applicable Ratings" would not add to the clarity. ***Consideration by the SAR DT*** *The wording in the present SAR was revised to remove the referenced language.* *The SAR DT is recommending that the Standard DT conduct a review to determine whether the events in existing Table I are classified correctly. In conducting its review of the likelihood of events and acceptable performance requirements, the Standard DT should clarify ambiguities in performance requirements, specifically cascading outages and Applicable Ratings (A/R).* *For example, the Standard should clarify tests used for considering cascading, such as divergent power flow, overload limits post contingency, voltage magnitudes, etc. The Standard should also clarify that different ratings may be applicable to different categories of events and perhaps to different types of events with a category (specified by entities in accordance with STD 600).*
AMEREN	We agree that some of the contingency categories should be reviewed. See AMEREN's comment for Question 1 (c) in this document – approach (1): keep same categories but re-classify certain events as Category D. ***Consideration by the SAR DT*** *See the SAR DT's global consideration of your Question 1(c) comment.*
BPA	Applicable Ratings: There is a need to tighten up the methodology for Applicable Ratings to ensure that compliance with this standard is measurable. We assume that this will take place in the Determine Facility Ratings Standard although we are concerned about how this is progressing. ***Consideration by the SAR DT*** *The SAR DT is recommending that Applicable Ratings (A/R) be clarified by the Standard DT and the Standard DT will evaluate your comment at that time.*
IMO, ISONE, NPCC	We are not in favor of removing references to "Applicable Ratings". Despite the fact that the performance requirement would be "No Cascading Outages are Allowed", the "Applicable Ratings" should always be respected. ***Consideration by the SAR DT*** *The SAR DT is recommending that Applicable Ratings (A/R) be clarified by the Standard DT and the Standard DT will evaluate your comment at that time.*

MAPP	MAPP urges the SAR drafting team to clarify the meaning of the term "Applicable Ratings" and determine if it is possible to have different A/Rs for different categories. ***Consideration by the SAR DT*** *The SAR DT is recommending that Applicable Ratings (A/R) be clarified by the Standard DT and the Standard DT will evaluate your comment at that time.*
MEC	**From SAR- Version 2:** "……..Performance requirements for Category C events shall be re-evaluated. For example, for certain Category C events, such as #2, #3 and #9 events, consider removing references to "Applicable Ratings" to clarify that the performance requirement is "No Cascading Outages are Allowed"……". MEC urges the SAR drafting team to add Category C#1, #6, #7 and #8 events to the bullet above, to clarify the performance requirement for certain Category C events. ***Consideration by the SAR DT*** *The wording concerning A/R has been revised in the present SAR.* *There was no clear consensus from industry that the events in Categories B, C and D in Table I should be or should not be re-classified. The SAR DT is recommending that the Standard DT conduct a review to evaluate whether the events are classified correctly.* *All parties will have an opportunity to participate in the Standard drafting process, including commenting on the draft Standard. Specific concerns should be brought up at that time.*
MEC	MEC urges the SAR drafting team to direct the Standard Drafting Team to remove references to "Applicable Ratings" from all events listed (see MEC comment above), since information is readily available which demonstrates that the listed events are much less likely than other Category C events. ***Consideration by the SAR DT*** *The SAR DT is recommending that Applicable Ratings (A/R) be clarified by the Standard DT and the Standard DT will evaluate your comment at that time.*
MEC	MEC urges the SAR drafting team to include the following statement in the SAR: "The Standard should clarify how breaker failure events (Category C2, C6, C7, C8, and C9 events) are to be considered given that operating a breaker with disconnects open or eliminating a breaker are technically acceptable mitigation schemes for such events. Such mitigation schemes actually result in less reliable system designs and system operating configurations. Thus including Applicable Ratings in the Standard for these lower probability breaker failure events can send the wrong reliability signals to NERC members." This statement reflects another reason why breaker failure events should be reclassified such that Applicable Ratings is no longer considered a requirement for these low probability events. ***Consideration by the SAR DT*** *See the SAR DT's consideration of MEC's first comment above.*

MEC	MEC urges the SAR drafting team to consider NOT reclassifying any of the Category C events to Category D but instead deleting the Applicable Rating requirements from the lower probability Category C events. MEC believes that the performance requirements for lower probability Category C events should be to protect for cascading, instability, and uncontrolled separation. It is MEC's belief that this was the intent of the drafting team that originally developed the existing NERC Planning Standards. ***Consideration by the SAR DT*** *See the SAR DT's consideration of MEC's first comment above.*
NYSRC	**From SAR- Version 2:** "……..Performance requirements for Category C events shall be re-evaluated. For example, for certain Category C events, such as #2, #3 and #9 events, consider removing references to "Applicable Ratings" to clarify that the performance requirement is "No Cascading Outages are Allowed"……". The above bullet should be removed. This would be a weakening of the criteria. ***Consideration by the SAR DT*** *There was no clear consensus from industry that the events in Categories B, C and D in Table I should be or should not be re-classified. The SAR DT is recommending that the Standard DT conduct a review to evaluate whether the events are classified correctly.* *All parties will have an opportunity to participate in the Standard drafting process, including commenting on the draft Standard. Concerns that changes made may weaken the Standard should be brought up at that time.*
R. Snow	Clarify that the "applicable ratings" for multiple events should be consistent with supplying firm load and firm transactions until the outages are repaired or switching mitigates the overloads. For example, one applicable rating would be the short time rating of equipment that was stressed when a transformer failed. However, there must be a method of supplying the load pocket for the duration to repair/replace the transformer that does not involve long term rotating blackouts. Just achieving "no cascading outages" is not sufficient. ***Consideration by the SAR DT*** *The SAR DT is recommending that Applicable Ratings (A/R) be clarified by the Standard DT and the Standard DT will evaluate your comment at that time.*

COMMENT ON SHORT CIRCUIT CURRENT

AMEREN	We assume that short circuit current refers to fault duty or interrupting current. ***Consideration by the SAR DT*** *Fault duty and interrupting current refer to the ratings of transmission facilities. The short circuit current is compared to these ratings.*

COMMENTS ON OTHER AREAS THAT SHOULD BE ADDED OR CLARIFIED

AESO	There should be a clear distinction between the appropriate use and application of RAS (or SPS) and "safety nets". ***Consideration by the SAR DT*** *Based on industry comments on the first posting (V1) of the SAR, there was a strong preference not to specify how to achieve reliability performance requirements. Therefore, the SAR does not specifically address these issues/distinctions.*
AMEREN	The "projected level of transfers" defined in the Standard – what does this include? Should it include/consider all transmission reservations including roll-over-rights? ***Consideration by the SAR DT*** *The present SAR has been revised to specify that system models must be developed and shared, including documenting the methodology for incorporating planned generation assets (including transfers) in the model. The projected levels of transfers are determined by each Transmission Planner, and these may include rollover provisions as appropriate.* *Note: See KCPL & MAPP comments under the "System Models" table in this document, and the SAR DT's consideration of those comments.*
MAPP	MAPP asks that the SAR drafting team add a bullet to the SAR that requires that the Standard drafting team consider the development of reactive power margin and transfer power margin standards which expand beyond existing NERC Standard I.D. ***Consideration by the SAR DT*** *The NERC Planning Committee is reviewing Regional reactive power and voltage control practices. Their findings may need to be incorporated into the new Planning Standard (STD 500) when this review is completed. Standard 600 addresses system operating limits and transfer capability. Whereas this SAR DT did not attempt to duplicate these efforts, the present SAR does not preclude the Standard Drafting Team from further refining reactive power margins and/or power transfer margins.* *In the present SAR, a bullet has been added that the Standard address requirements on reactive planning, with specific reference to steady state and transient voltage stability criteria.*
MAPP	MAPP notes that Standard 600, "Determine Facility Ratings, Operating Limits, and Transfer Capabilities" has been drafted to do away with the references to Categories A through D. The criteria are just listed in the standard. MAPP asks that the SAR drafting team require that the standard drafting team for Standard 500 also eliminate the category references to be consistent with the Standard 600 approach. ***Consideration by the SAR DT*** *This SAR 500 DT does not believe that Standard 500 necessarily has to have*

	the same format as Standard 600. However, we have revised the present Standard 500 SAR to provide for coordination between the two Standards.
MAPP & MEC	In general, MAPP and MEC support the six bullets that the SAR drafting team has provided on page SAR-5 (of SAR-Version 2) with the amendments and additions described above in our comments. These bullets add needed details to the SAR. ***Consideration by the SAR DT*** *The present SAR has been revised to reflect appropriate details.*
R. Snow	New section: The subject of assuring that generation is deliverable to the load should be added. This should not be vague but should be defined by a specific set of tests and the expected range of results. In doing these tests, reliance on capacity assigned to other regions should be limited to amounts identified and accepted by adjacent regions. For example, if a region is assuming it will have net purchases from adjacent regions, the other regions must show a net sale. ***Consideration by the SAR DT*** *The NERC Planning Committee is tackling this deliverability issue, as identified by the Resource and Transmission Adequacy Task Force (RTATF). This new Transmission Planning Standard (STD 500) may need to be revised in the future to reflect integration with Resource Adequacy Standards.*

INDUSTRY COMMENTER KEY

TOTAL ENTITIES COMMENTING; 28

TOTAL INDIVIDUALS COMMENTING 121

AEP: AEP Service Corp, Raj Rana

AES: Allegheny Energy Supply (Generator), Ken Githens

AESO: Alberta Electric System Operator (ISO), Neil Brausen, group chair. Includes:

Neil Brausen, Jeff Billinton, Bob Chow

ALLEGHENY: Allegheny Power (Transmission Owner), William J. Smith

AMEREN: Ameren (Transmission Owner), Kirit Shah

ATC: American Transmission Company (Transmission Owner), Peter Burke (on behalf of ATC's David Smith).

BPA: Bonneville Power Administration (Transmission Owner), Marv Landauer, group chair. Includes:

Paul Arnold, Rebecca Berdahl, Mark Bond, Gordon Comegys, Angela DeClerk, Don Gold, Kyle Kohne, Mike Kreipe, Chuck Matthews, Bill Mittlestadt, James Murphy, Melvin Rodrigues, Mike Viles, Paul Ferron

CWLP: City Water, Light & Power (Illinois- Generator), Karl Kohlrus

DUKE: Duke Energy (Transmission Owner), Thomas Pruitt, Robert W. Pierce

ENTERGY: Entergy Services, Inc (Transmission Owner), Ed Davis

ERCOT: Electric Reliability Council of Texas, Bill Bojorquez

IMO: Independent Electricity Market Operator; Khaqan Khan

ISONE: ISO New England, Kathleen Goodman

ISO/RTO: ISO/RTO Council Standards Review Committee, Karl Tammar (NYISO), group chair. Includes:

AESO, Dale McMaster
CAISO, Ed Riley
ERCOT, Sam Jones
IMO, Don Tench
ISO-NE, Peter Brandien
MISO, Bill Phillips
NYISO, Karl Tammar
PJM, Bruce Balmat
SPP, Carl Monroe

KCPL: Kansas City Power & Light (Transmission Owner), Jim Useldinger

MAAC/Horakh: Mid-Atlantic Area Council, John Horakh
MAAC/Kuras: Mid-Atlantic Area Council, Mark J. Kuras

MAPP: Mid-Continent Area Power Pool, Tom Mielnik (MEC), group chair. Includes:

MidAmerican Energy Company (MEC), Tom Mielnik, Dennis Kimm
Great River Energy (GRE), Delyn Helm
MH, David Jacobson
XEL, Dean Schiro
Otter Tail Power (OTP), Jason Weiers
Western Area Power Administration, Steve Sanders

MEC: MidAmerican Energy Company (Load Serving Entity), Tom Mielnik

NPCC: Northeast Power Coordinating Council, Guy Zito (NPCC), group chair. Includes:

TransEnergie (Quebec), Roger Champagne
New York Power Authority, Ralph Rufrano
Hydro One Networks (Ontario), David Kiguel
Nova Scotia Power, David Little
ISO New England, Kathleen Goodman, Dan Stosick
US National Grid, Peter Lebro
New York ISO, James Practico
Niagara Mohawk, Larry Eng
Independent Electricity Market Operator, Ontario, Khaquan Khan
New York State Reliability Council, Alan Adamson
NPCC, Guy Zito, John Mosier, Briam Hogue (satff)

NYSRC: New York State Reliability Council, Alan Adamson

R.Snow: Robert Snow, Individual Commenter (Small Electricity User).

SCGEM: Southern Company Generation & Energy Marketing (Brokers, Aggregators, Marketers), Roman Carter, group chair. Includes:

Roman Carter, Joel Dison, Lucius Burris, Tony Reed, Lloyd Barnes, Clifford Shepard.

SEMINOLE: Seminole Electric Coop.(TDU), K. Bachor & S. Wallace

SERC: Southeastern Electric Reliability Council, Bob Jones (Southern Company Services), group chair. Includes:

Alabama Electric Coop., Darrell Pace
Duke Power, Brian Moss
Entergy Services, Kham Vongkhamchanh
South Carolina Electric & Gas, Clay Young
South Carolina Public Service Authority, Arthur Brown
Southern Company Services, Bob Jones
Tennessee Valley Authority, Byron Stewart
SERC Staff, Pat Huntley

SOUTHERNCO: Southern Company Services, Inc. (Transmission Owner), Marc Butts, group chair. Includes:

Rod Hardiman,, Jonathan Gildewell, Bobby Jones, Marc Butts
Bill Pope – Gulf Power (Load Serving Entity)

SPP: Southwest Power Pool – Transmission Working Group, Ronnie Frizzell, group chair. Includes:

Arkansas Electric Coop Corp., Ronnie Frizzell
Sunflower Electric Power Coop., Norman Williams
Westar Energy, Donald Taylor
Kansas City Power & Light, Jim Useldinger
Southwestern Public Service, John Fulton
American Electric Power, Matt McGee
Empire District Electric, Sam McGarrah
Western Farmers Electric Coop., Mitch Williams
ETEC, John Chiles
Entergy, Mak Nagle
Associated Electric Coop., Inc., Jim Kistner
Southwest Power Pool, Alex Lau
Oklahoma Gas & Electric, Phil Crissup
City Utilities of Springfield, MO, Howard Conus
Aquila Networks, Alan Myers
Southwestern Power Administration, David Sargent

TVA: Tennesse Valley Authority (Government Entity). Includes:

David Till, David Marler, Brenda Eberhart, Darrin Church, Byron Stewart, William Tiller

WECC-1: Western Electricity Coordinating Council, Peter Mackin (TANC), group chair. Includes:

Arizona Public Service, Peter Krzykos
Pacific Gas & Electric, Chifong Thomas
Transmission Agency of Northern California (TANC), Peter Mackin
Basin Electric Power Coop, Matthew Stoltz
Western Area Power Administration, Bob Easton
Salt River Project, Charles Russell
Puget Sound Energy, Joe Seabrook

WECC-2: Western Electricity Coordinating Council, Ben Morris (PG&E), group chair. Includes:

Arizona Public Service, Baj Agrawal
British Columbia Transmission Corp., Phil Park
California ISO, Jeff Miller
Idaho Power, Ron Schellberg
Nevada Power, Rahn Sorensen
Pacific Gas & Electric, Ben Morris, Rick Padilla, Chifong Thomas
Sacramento Municipal Utility District, Dilip Mahendra
Salt River Project, Brian Keel
Southern California Edison, Dana Cabbell, Mohan Kondragunta
Snohomish County PUD, John Martinsen

WESTAR: Westar Energy, Inc. (Transmission Owner), Donald Taylor

When completed, email to: gerry.cauley@nerc.net

Standard Authorization Request Form

Title of Proposed Standard	Assess Transmission Future Needs and Develop Transmission Plans
Request Date	May 01, 2004

SAR Requestor Information		**SAR Type** (Put an 'x' in front of one of these selections)	
Name	Paul Rocha	☒	New Standard
Primary Contact	Paul Rocha	☐	Revision to existing Standard
Telephone Fax	(713) 207-2768	☐	Withdrawal of existing Standard
E-mail	paul.rocha@centerpointenergy.com	☐	Urgent Action

Purpose/Industry Need (Provide one or two sentences)

To establish a standard for assessing and planning the transmission systems in North America. The transmission system must be assessed and planned to ensure that it performs its intended functions in providing reliable delivery of power for the future needs of customers.

Reliability Functions

The Standard will Apply to the Following Functions *(Check box for each one that applies by double clicking the grey boxes.)*		
☒	Reliability Authority	Ensures the reliability of the bulk transmission system within its Reliability Authority area. This is the highest reliability authority.
☐	Balancing Authority	Integrates resource plans ahead of time, and maintains load-interchange-resource balance within its metered boundary and supports system frequency in real time
☐	Interchange Authority	Authorizes valid and balanced Interchange Schedules
☒	Planning Authority	Plans the bulk electric system
☐	Resource Planner	Develops a long-term (>1year) plan for the resource adequacy of specific loads within a Planning Authority area.
☒	Transmission Planner	Develops a long-term (>1 year) plan for the reliability of transmission systems within its portion of the Planning Authority area.
☐	Transmission Service Provider	Provides transmission services to qualified market participants under applicable transmission service agreements
☒	Transmission Owner	Owns transmission facilities
☐	Transmission Operator	Operates and maintains the transmission facilities, and executes switching orders
☐	Distribution Provider	Provides and operates the “wires” between the transmission system and the customer
☐	Generator Owner	Owns and maintains generation unit(s)
☐	Generator Operator	Operates generation unit(s) and performs the functions of supplying energy and Interconnected Operations Services
☐	Purchasing-Selling Entity	The function of purchasing or selling energy, capacity and all necessary Interconnected Operations Services as required
☐	Market Operator	Integrates energy, capacity, balancing, and transmission resources to achieve an economic, reliability-constrained dispatch.
☒	Load-Serving Entity	Secures energy and transmission (and related generation services) to serve the end user

Reliability and Market Interface Principles

Applicable Reliability Principles *(Check boxes for all that apply by double clicking the grey boxes.)*	
☒	1. Interconnected bulk electric systems shall be planned and operated in a coordinated manner to perform reliably under normal and abnormal conditions as defined in the NERC Standards.
☐	2. The frequency and voltage of interconnected bulk electric systems shall be controlled within defined limits through the balancing of real and reactive power supply and demand.
☒	3. Information necessary for the planning and operation of interconnected bulk electric systems shall be made available to those entities responsible for planning and operating the systems reliably.
☐	4. Plans for emergency operation and system restoration of interconnected bulk electric systems shall be developed, coordinated, maintained and implemented.
☐	5. Facilities for communication, monitoring and control shall be provided, used and maintained for the reliability of interconnected bulk electric systems.
☐	6. Personnel responsible for planning and operating interconnected bulk electric systems shall be trained, qualified and have the responsibility and authority to implement actions.
☐	7. The security of the interconnected bulk electric systems shall be assessed, monitored and maintained on a wide area basis.

Does the proposed Standard comply with all of the following Market Interface Principles? *(Select 'yes' or 'no' from the drop-down box by double clicking the grey area.)*
1. The planning and operation of bulk electric systems shall recognize that reliability is an essential requirement of a robust North American economy. Yes
2. An Organization Standard shall not give any market participant an unfair competitive advantage.Yes
3. An Organization Standard shall neither mandate nor prohibit any specific market structure. Yes
4. An Organization Standard shall not preclude market solutions to achieving compliance with that Standard. Yes
5. An Organization Standard shall not require the public disclosure of commercially sensitive information. All market participants shall have equal opportunity to access commercially non-sensitive information that is required for compliance with reliability standards. Yes

Detailed Description (Provide enough detail so that an independent entity familiar with the industry could draft, modify, or withdraw a Standard based on this description.)

The Standard shall establish requirements for assessing the performance of planned bulk electric transmission systems and the requirements for documenting plans to remedy any inadequacies identified in the process of conducting such assessments.

The scope of such assessments and plans is for a future planning period (planning horizon) starting at one year and extending to five years or more.

The planning horizon must be long enough to permit timely implementation of viable solutions to remedy the potential inadequacies found. Planning horizons beyond 5 years may be needed to meet regulatory or legislative requirements, or may be based on the judgment of the Transmission Planner or Planning Authority.

The scope *does not* include the operating horizon less than one year. While the planning horizon is intended to provide sufficient time for facility additions, there is no intent to exclude appropriate operating procedures as options to correct potential transmission inadequacies. Such procedures should also be included in the Transmission Plan.

The Standard will consider the transition from the operating horizon to the planning horizon. In particular, the Standard will assure consistency between reliability requirements set forth in the Standards for Planning (for example, this Standard 500, "Assess Transmission Future Needs and Develop Transmission Plans") and similar criteria required by other Standards (such as Standard 600, "Determine Facility Ratings, Operating Limits and Transfer Capabilities"), which also apply in operations.

In addition, the Standard shall explain the relationship between the reliability requirements for operations and those for planning, so that differences are better understood.

The Standard shall identify reliability performance requirements, but shall not specify *how* to achieve such performance requirements.

The applicable portions of the following existing NERC Planning Standards will be used as the starting point in drafting these requirements:

- I.A Transmission Systems
- I.B Reliability Assessment
- I.D Voltage Support & Reactive Power
- II.A System Data
- II.D Actual and Forecast Demands

The Standard shall require that system models be developed, maintained and shared in a manner consistent with the Functional Model and appropriate information-sharing policies. Included will be requirements that each Planning Authority and Transmission Planner document modeling assumptions, including the methodology used for incorporating planned generation assets (including transfers) in the model, as well as how such generation is dispatched. The Standard shall consider a requirement for Load Serving Entities (LSEs) to provide forecast resource data for input to the models.

While methodologies and assumptions must be documented, the Standard will *not* prescribe specific tools to be used in the performance assessment of the planned systems.

The Standard will identify the various planning functions that are responsible for compliance with the standard criteria. The assignment of compliance responsibility will be consistent with the Functional Model.

This Standard will *not* include requirements for:

- Resource Planning (i.e., assessing or ensuring the availability of adequate aggregate generation resources to serve aggregate load).

- Planning generation additions to remedy any aggregate generation resource inadequacies.

- Developing Transmission Plans to mitigate congestion due to economy transfers of generation resources.

However, the Standard should neither preclude nor require the consideration of generation or load (demand side management) as alternatives to transmission reinforcement/reconfiguration when developing solutions to potential transmission inadequacies.

While the Standard should start from and closely align with the existing Planning Standards I.A, I.B, I.D, II.A, and II.D, the system conditions to be studied or assessed may need to be better defined or clarified.

Examples of areas that should be considered for clarification in the Standard include:

- The Standard should clarify that the requirement to assess the performance at *all* demand levels does not mean that a multitude of transmission models need to be created for every possible demand level, only that a representative sample covering critical operating conditions needs to be modeled in accordance with regionally-defined criteria.

- The Standard should provide a clearer definition of "cascading outages", including what constitutes a cascading state. The Standard should also consider providing a clearer definition of "system stable". These definitions must be coordinated and consistent with definitions in other new Standards being drafted by NERC, such as Standards 200 and 600.

- The Standard should take into account the variability of generation, including unit maintenance outages, weather and time of day. Variability of load due to factors such as weather and time of day should also be considered.

- The Standard should continue to use deterministic criteria. The criteria embodied in Table 1 of existing Planning Standard I.A shall be used as a starting point. Following a review of the likelihood, duration, impact of events, and definition of applicable ratings (A/R) in existing Table I, a re-classification of Table I events should be considered, as necessary, for inclusion in the new Standard.

  Other changes should be considered for incorporation into the new Standard. Such changes could include:

  (1) Addition or deletion of categories/events/performance requirements.
  (2) Use of probabilistic planning methods.
  (3) Re-definition of categories (e.g., categories determined by event probability levels or ranges).
  (4) Differences in requirements for an event based on a range of event probabilities (for example, recognize that longer lines have a greater probability of outage than shorter lines).

(5) An alternative table, similar to Table I of existing Planning Standard I.A, except allowing for probabilistic planning criteria.
(6) Provision for a specific facility with an abnormal outage probability to have different performance requirements.

The list above is intended to be illustrative and not exhaustive or mutually exclusive. As allowed by the Standards Development Process, Regions may submit Regional Differences.

- Existing Planning Standard S1, S2, S3, S4 and Table I, Categories A, B, C, and D should be clarified on the issue of how a planned outage should be used in an assessment.

  The Standard should specify whether the planned outage requirement should be retained for Categories B and C. If retained, the requirement should be clarified in such a way that it can be practically implemented. In particular, the Transmission Planner should not be required to exhaustively test its system for every conceivable planned outage (including maintenance outages) in addition to every conceivable Category B and C contingency. The Standard should clarify that the planned outage requirement does not apply to Categories A and D.

- The Standard should address and rectify ambiguities in performance requirements, specifically cascading outages and applicable ratings (A/R). This applies to all Categories, especially Category C.
  For example, the Standard should clarify tests used for considering cascading, such as divergent power flow, post-contingency overload limits, voltage magnitudes, etc. The Standard should also clarify that different ratings may be applicable to different categories of events and perhaps different types of events within a category (specified by entities in accordance with Standard 600).

- The Standard should include requirements to ensure that the maximum available short circuit current does not exceed facility owner specifications.

- The Standard should also address requirements on reactive planning with specific reference to steady state and transient voltage stability criteria.

- The Standard should address requirements for reporting (perhaps to the Regions) on the progress or status of implementing the plans developed in accordance with the Standard. However, any such reporting requirements should be consistent with the Resource & Transmission Adequacy Task Force Recommendation #2, and should not impose undue burdens upon transmission entities

Related Standards

Standard No.	Explanation

Related SARs

SAR ID	Explanation
FACILITY_RATINGS_01_01	*"Determine Facility Ratings, Operating Limits and Transfer Capabilities".* The Planning Standard will use some data collected within the "Facility Ratings" SAR. The Draft "Facility Ratings" Standard, Section 603, establishes some guidelines for the planning function to set operating limits based on Table 1 of the existing Planning Standard I.A.
OPER_WITHN_LMTS_01_01	*"Operate Within Interconnection Reliability Operating Limits".* This Planning Standard needs to establish future planning criteria such that the bulk electric power system can be operated within operating limits.

Regional Differences

Region	Explanation
ECAR	
ERCOT	
FRCC	
MAAC	
MAIN	
MAPP	
NPCC	
SERC	
SPP	
WECC	

Related NERC Operating Policies or Planning Standards

ID	Explanation
Planning Std. I.A	Transmission Systems: Plan within ratings, avoid cascading outages, uncontrolled system separation, and voltage and transient instability.
Planning Std. I.B	Reliability Assessment
Planning Std. I.D	Voltage Support & Reactive Power
Planning Std. II.A	System Data
Planning Std. II.D	Actual & Forecast Demands

MAPP & MEC believe the following information supports our proposed new reclassification by demonstrating that the events that MAPP & MEC recommend for reclassification are the low probability Category C events. MAPP & MEC recognize that published outage data are subject to interpretation, potential inaccuracy, and change through time; however, we believe that MAPP & MEC operating experience with transmission element outages supports the statistical summary provided in the following table.

Contact info:
Tom Mielnik, Chair
MAPP Planning Standards Development Working Group
MidAmerican Energy Company
106 East Second Street
Davenport, Iowa 52801
(563)333-8129
tcmielnik@midamerican.com

345 kV Outage Data				
Contingency	Outage Rate, occ./year	Duration, hours	Probability	Relative Likelihood
Generator B1	9	81	0.08321918	1
Two generators C3	1.5	40.5	0.00693493	12
Bipolar DC line * (Similar to B4)	1.41	21	0.00338014	24
Line * B2	0.8065	18	0.00165719	50
Transformer B3	0.0642	157	0.00115062	72
Bipolar DC Line * + Generator (Sim. to 1 Pole DC line + gen. C3)	0.1478	16.68	0.00028143	296
Line * + Generator C3	0.0820	14.7	0.00013760	605
Generator + Transformer C3	0.0157	53.4	0.00009571	870
Common tower * C5	0.007	113	0.00009030	922
Breaker Failure- Insulation Breakdown C2 RECLASSIFY THIS EVENT	0.001423	163	0.00002647	3,144
Bipolar DC line *+Bipolar DC line * (Sim. to Two 1 Pole DC lines - C3) RECLASSIFY THIS EVENT	0.009532	10.5	0.00001143	7,281
Stuck breaker C6-C9 RECLASSIFY THIS EVENT	0.00635	4	0.00000290	28,696
Line * + Line * (independent) C3 RECLASSIFY THIS EVENT	0.00267	9	0.00000275	30,262
Line * + Transformer C3 RECLASSIFY THIS EVENT	0.0010	16.1	0.00000184	45,228
Two transformers C3 RECLASSIFY THIS EVENT	0.00014774	78.5	0.00000132	63,045
Bus Section** RECLASSIFY THIS EVENT	0.0023	4.7	0.00000123	67,438

* Per 100 mile-year.

** Based upon 230 kV data.

References

1. **MAPP-CSRWG, "MAPP Bulk transmission system outage report", June 2001.**
2. **C. R. Heising, et al, "Final report on high voltage circuit breaker reliability data for use in substation and system studies – report on behalf of WG 13.06, in Proceedings of CIGRE Conference, Paris, 1994.**
3. **R. Billinton, A. A. Chowdhury, "Generating unit models using the Canadian Electricity database", CEA Transactions, Volume 23, 1984.**
4. **R. N. Allan, "Concepts of data for assessing the reliability of composite systems", IEEE Tutorial Course on Reliability Assessment of Composite Generation and Transmission Systems, Course Text 90EH0311-1-PWR.**

BPA Data

Category	Contingencies	Outages per year	Source of Data
B1	Generator	4	NW Federal system is mostly hydro generation in remote locations and these outages are usually of little consequence to the power system. These outage data are based on three thermal plants located in load areas. Due to the small size of this sample, they may not be very useful. These outages average 109 hour duration.
B2	Transmission Circuit	0.97	BPA data for 225 lines 200-kV through 550-kV, 1985-2003 data (19 years), average length 50.5 miles, outages with duration greater than 1 minute only. Five hour average duration.
B3	Transformer	0.037	IEEE Paper 91 SM 442-4 PWRS, BPA autotransformers, winding voltages 115 to 550-kV. 28 day average duration.
B4	Single Pole DC Line	9	BPA data for PDCI, 845 miles (one line only). 8.99 outages per year with total annual outage time of 170 hours. Not including terminal outages. 19 hour average duration.
C1	Bus section	0.00733	BPA data for 115 stations with voltages between 230-kv through 500-kV, 17.8 years of data, resulting in 15 events.
C2	Breaker internal fault	0.00079	1994 CIGRE Brochure 83: data for 230 and 500-kV breakers: insulation breakdown.
C2	Breaker fails to open	0.00569	1994 CIGRE Brochure 83: data for 230 and 500-kV breakers: failure to open.
C3	Two Line Dependent	0.08700	BPA data for sustained multiple outages (greater than one minute) for its 500-kV lines, 1985-2003 data (19 years). Calculated for two lines with 50 mile common corridor length.
C3	Two Line Independent	0.00110	Calculated based on single contingency rate indicated above: 1 outage per year with duration of 5 hours
C3	Generator and Transformer	0.01400	Calculated based on single contingency outage rates indicated above: 0.037 outages per year of duration 28 days for transformers and 4 outages per year of duration 109 hours for generators.
C3	Line and Transformer	0.00290	Calculated based on single contingency outage rates indicated above: 1 outage per year of duration 5 hours for line and .037 outages per year of duration 28 days for transformer.
C3	Two Generator	0.45000	Calculated based on single contingency outage rate indicated above: 4 outages per year with duration 109 hours each. Small sample of data - may not be representive.

C3	Line and Generator	0.05500	Calculated based on single contingency outage rates indicated above: 1 outage per year of duration 5 hours for line and 4 outages per year of duration 109 hours for generator.
C4	Bipolar DC Line	0.35000	Calculated based on single contingency outage rate indicated above: 9 outages per year for duration of 19 hours
C5	2 circuits on multiple towerline	0.05100	BPA data for sustained multiple outages (greater than one minute) for its 500-kV double circuit lines, 1985-2003 data (19 years). Calculated for double circuit line with 50 mile length.
C6, C7, C8, C9	Protection failure	0.11969	BPA Data for 115 stations with voltages 230 through 500-kV, 17.8 years of data, resulted in 245 events of preotection failure.
C6	SLG Fault Generator with protection failure	0.47875	Generator single contingency outage rate from above multiplied by protection failure rate (0.11969)
C7	SLG Fault Transmission circuit with protection failure	0.11490	Transmission line single contingency outage rate from above multiplied by protection failure rate (0.11969)
C8	SLG Fault Transformer with protection failure	0.00443	Transformer single contingency outage rate from above multiplied by protection failure rate (0.11969)
C9	Bus section fault with protection failure	0.00088	Bus fault outage rate from above multiplied by protection failure rate (0.11969)

Data provided by Marv Landauer based on outage data collected by BPA.

Assess Transmission Planning Future Needs and Develop Transmission Plans-Standard Drafting Team Nomination Form

Please return this form to sarcomm@nerc.com by November 18, 2005. For questions, please contact Mark Ladrow at 609-452-8060 or mark.ladrow@nerc.net.

Please note this Standard drafting team will likely meet initially in mid-December, 2005 to review comments posted on the SAR and to begin drafting the proposed standards. The SAC has directed the drafting team to consider the reduced scope necessitated by the adoption of the current reliability standards and to specifically delineate this reduction in scope during its first public posting. The team will meet as necessary to finalize the scope of standard development activity and to draft the standard(s). The meeting schedule has not been determined yet. It is expected the teams will meet several times in 2006. **All candidates should be prepared to participate actively at these meetings.**

Proposed Standard: Assess Transmission Future Needs and Develop Transmission Plans. The SAR is provided at: SAR LINK
Name: Organization: Address: Office Telephone: Mobile Telephone: Fax: Email:
Please briefly describe your experience and qualifications to serve on the Assess Transmission Future Needs and Develop Transmission Plans Standard Drafting Team. Candidates should have expertise in one or more of the following areas: transmission operations; transmission planning; or regulatory or legal experience related to any of the listed areas. Previous experience working on or applying NERC standards is beneficial, but not a requirement.

I represent the following NERC Reliability Region(s) (check all that apply):	I represent the following Industry Segment (check one):	
☐ ERCOT	☐	1 - Transmission Owners
☐ ECAR	☐	2 - RTOs, ISOs, Regional Reliability Councils
☐ FRCC	☐	3 - Load-serving Entities
☐ MAAC	☐	4 - Transmission-dependent Utilities
☐ MAIN	☐	5 - Electric Generators
☐ MAPP	☐	6 - Electricity Brokers, Aggregators, and Marketers
☐ NPCC	☐	7 - Large Electricity End Users
☐ SERC	☐	8 - Small Electricity End Users
☐ SPP	☐	9 - Federal, State, and Provincial Regulatory or other Government Entities
☐ WECC		
☐ Not Applicable		

Which of the following Function(s)[1] do you have expertise or responsibilities:

☐ Reliability Authority	☐ Transmission Service Provider
☐ Balancing Authority	☐ Transmission Owner
☐ Interchange Authority	☐ Load Serving Entity
☐ Planning Authority	☐ Distribution Provider
☐ Transmission Operator	☐ Purchasing-selling Entity
☐ Generator Operator	☐ Generator Owner
☐ Transmission Planner	☐ Resource Planner
	☐ Market Operator

Provide the names and contact information for two references who could attest to your technical qualifications and your ability to work well in a group.

[1] These functions are defined in the NERC Functional Model, which is downloadable from the NERC website.

Name: Organization:	Office Telephone: Email:
Name: Organization:	Office Telephone: Email:

When completed, email to: gerry.cauley@nerc.net

Standard Authorization Request Form

Title of Proposed Standard	Assess Transmission Future Needs and Develop Transmission Plans
Request Date	May 01, 2004
Revised: April 30, 2006	

SAR Requestor Information	**SAR Type** (Put an 'x' in front of one of these selections)	
Name Paul Rocha	☒	New Standard
Primary Contact Paul Rocha	☐	Revision to existing Standard
Telephone (713) 207-2768 Fax	☐	Withdrawal of existing Standard
E-mail paul.rocha@centerpointenergy.com	☐	Urgent Action

Purpose/Industry Need (Provide one or two sentences)

To establish a standard for assessing and planning the transmission systems in North America. The transmission system must be assessed and planned to ensure that it performs its intended functions in providing reliable delivery of power for the future needs of customers.

Reliability Functions

The Standard will Apply to the Following Functions *(Check box for each one that applies by double clicking the grey boxes.)*		
☒	Reliability Authority	Ensures the reliability of the bulk transmission system within its Reliability Authority area. This is the highest reliability authority.
☐	Balancing Authority	Integrates resource plans ahead of time, and maintains load-interchange-resource balance within its metered boundary and supports system frequency in real time
☐	Interchange Authority	Authorizes valid and balanced Interchange Schedules
☒	Planning Authority	Plans the bulk electric system
☐	Resource Planner	Develops a long-term (>1year) plan for the resource adequacy of specific loads within a Planning Authority area.
☒	Transmission Planner	Develops a long-term (>1 year) plan for the reliability of transmission systems within its portion of the Planning Authority area.
☐	Transmission Service Provider	Provides transmission services to qualified market participants under applicable transmission service agreements
☒	Transmission Owner	Owns transmission facilities
☐	Transmission Operator	Operates and maintains the transmission facilities, and executes switching orders
☐	Distribution Provider	Provides and operates the “wires” between the transmission system and the customer
☐	Generator Owner	Owns and maintains generation unit(s)
☐	Generator Operator	Operates generation unit(s) and performs the functions of supplying energy and Interconnected Operations Services
☐	Purchasing-Selling Entity	The function of purchasing or selling energy, capacity and all necessary Interconnected Operations Services as required
☐	Market Operator	Integrates energy, capacity, balancing, and transmission resources to achieve an economic, reliability-constrained dispatch.
☒	Load-Serving Entity	Secures energy and transmission (and related generation services) to serve the end user

Reliability and Market Interface Principles

Applicable Reliability Principles *(Check boxes for all that apply by double clicking the grey boxes.)*	
☒	1. Interconnected bulk electric systems shall be planned and operated in a coordinated manner to perform reliably under normal and abnormal conditions as defined in the NERC Standards.
☐	2. The frequency and voltage of interconnected bulk electric systems shall be controlled within defined limits through the balancing of real and reactive power supply and demand.
☒	3. Information necessary for the planning and operation of interconnected bulk electric systems shall be made available to those entities responsible for planning and operating the systems reliably.
☐	4. Plans for emergency operation and system restoration of interconnected bulk electric systems shall be developed, coordinated, maintained and implemented.
☐	5. Facilities for communication, monitoring and control shall be provided, used and maintained for the reliability of interconnected bulk electric systems.
☐	6. Personnel responsible for planning and operating interconnected bulk electric systems shall be trained, qualified and have the responsibility and authority to implement actions.
☐	7. The security of the interconnected bulk electric systems shall be assessed, monitored and maintained on a wide area basis.

Does the proposed Standard comply with all of the following Market Interface Principles? *(Select 'yes' or 'no' from the drop-down box by double clicking the grey area.)*
1. The planning and operation of bulk electric systems shall recognize that reliability is an essential requirement of a robust North American economy. Yes
2. An Organization Standard shall not give any market participant an unfair competitive advantage.Yes
3. An Organization Standard shall neither mandate nor prohibit any specific market structure. Yes
4. An Organization Standard shall not preclude market solutions to achieving compliance with that Standard. Yes
5. An Organization Standard shall not require the public disclosure of commercially sensitive information. All market participants shall have equal opportunity to access commercially non-sensitive information that is required for compliance with reliability standards. Yes

Detailed Description (Provide enough detail so that an independent entity familiar with the industry could draft, modify, or withdraw a Standard based on this description.)

The Standard shall establish requirements, where requirements don't exist, and verify and clarify the existing reliability standards for assessing the performance of planned bulk electric transmission systems and the requirements for documenting plans to remedy any inadequacies identified in the process of conducting such assessments.

The scope of such assessments and plans is for a future planning period (planning horizon) starting beyond the operating horizon and extending to five years or more.

The planning horizon must be long enough to permit timely implementation of viable solutions to remedy the potential inadequacies found. Planning horizons beyond 5 years may be needed to meet regulatory or legislative requirements, or may be based on the judgment of the Transmission Planner or Planning Authority.

The scope *does not* include the operating horizon, typically less than one year. While the planning horizon is intended to provide sufficient time for facility additions, there is no intent to exclude appropriate operating procedures as options to correct potential transmission inadequacies. Such procedures should also be included in the Transmission Plan.

The Standard will address the transition from the operating horizon to the planning horizon. In particular, the Standard will assure consistency between reliability requirements set forth in the Standards for Planning (for example,,TPL-001 through TPL-004) and similar criteria required by other Standards (such as FAC-008-1 through FAC-013-1 standards, "Determine Facility Ratings, Operating Limits and Transfer Capabilities"), which also apply in operations.

In addition, the Standard shall address the relationship between the reliability requirements for operations and those for planning, so that differences are better understood.

The Standard shall identify reliability performance requirements, but shall not specify *how* to achieve such performance requirements.

The existing NERC Reliability Standards TPL-001-0 through TPL-004-0 will be used as the starting point in drafting these requirements.. Included will be requirements that each Planning Authority and Transmission Planner document modeling assumptions, including the methodology used for incorporating planned generation assets (including transfers) in the model, as well as how such generation is dispatched. The Standard may address a requirement for Load Serving Entities (LSEs) to provide forecast resource data for input to the models.

While methodologies and assumptions must be documented, the Standard will *not* prescribe specific tools to be used in the performance assessment of the planned systems.

This Standard will *not* include requirements for:

- Resource Planning (i.e., assessing or ensuring the availability of adequate aggregate generation resources to serve aggregate load).
- Planning generation additions to remedy any aggregate generation resource inadequacies.
- Developing Transmission Plans to mitigate congestion due to economy transfers of generation resources.

However, the Standard should neither preclude nor require the consideration of generation or load (demand side management) as alternatives to transmission reinforcement/reconfiguration when developing solutions to potential transmission inadequacies.

While the Standard should start from and closely align with the existing Reliability Standards TPL-001-0 through TPL-004-0, the system conditions to be studied or assessed may need to be better defined or clarified.

Examples of areas that should be considered for clarification in the Standard include:

- The Standard should clarify that the requirement to assess the performance at *all* demand levels does not mean that a multitude of transmission models need to be created for every possible demand level, only that a representative sample covering critical operating conditions needs to be modeled in accordance with appropriate criteria. (TPL-001-0 through TPL-004-0)
- The Standard should provide a clearer definition of "cascading outages", including what constitutes a cascading state. The Standard should also consider providing a clearer definition of "system stable". (TPL-001-0 through TPL-004-0)

These definitions must be coordinated and consistent with definitions in other new Standards either being drafted or recently approved by NERC, such as Standards FAC-008-1 through FAC-013-1 (Determine Facility Ratings) and IRO-007-1 through IRO-013-1 (Operate within Interconnection Reliability Operating Limits) .

- The Standard should take into account the variability of generation, including unit maintenance outages, weather and time of day. Variability of load due to factors such as weather and time of day should also be considered. (TPL-001-0 through TPL-004-0)
- The Standard should continue to use deterministic criteria. The criteria embodied in Table 1 of existing Reliability Standards TPL-001-0 through TPL-004-0 shall be used as a starting point. Following a review of the likelihood, duration, impact of events, and definition of applicable ratings in existing Table I, a reclassification of Table I events should be considered, as necessary, for inclusion in the new Standard.

Other changes should be considered for incorporation into the new Standard. Such changes could include:

1) Addition or deletion of categories/events/performance requirements.
2) Use of probabilistic planning methods.
3) Re-definition of categories (e.g., categories determined by event probability levels or ranges).
4) Differences in requirements for an event based on a range of event probabilities (for example, recognize that longer lines have a greater probability of outage than shorter lines).
5) An alternative table, similar to Table I of existing Reliability Standards TPL-001-0 through TPL-004-0, except allowing for probabilistic planning criteria.
6) Provision for a specific facility with an abnormal outage probability to have different performance requirements.

The list above is intended to be illustrative and not exhaustive or mutually exclusive. As allowed by the Standards Development Process, Regions may submit Regional Differences.

- Existing Reliability Standard TPL-001-0 through TPL-004-0 and Table I, Categories A, B, C, and D should be clarified on the issue of how a planned outage should be used in an assessment. The Standard should specify whether the planned outage requirement should be retained for Categories B and C. If retained, the requirement should be clarified in such a way that it can be practically implemented. In particular, the Transmission Planner should not be required to exhaustively test its system for every conceivable planned outage (including maintenance outages) in addition to every conceivable Category B and C contingency. The Standard should clarify that the planned outage requirement does not apply to Categories A and D.
- The Standard should address and rectify ambiguities in performance requirements, specifically cascading outages and applicable ratings. This applies to all Categories, especially Category C. For example, the Standard should clarify tests used for considering cascading, such as divergent power flow, post-contingency overload limits, voltage magnitudes, etc. The Standard should also clarify that different ratings may be applicable to different categories of events and perhaps different types of events within a category (specified by entities in accordance with (IRO-007-1 through IRO-013-1 (Operate within Interconnection Reliability Operating Limits)).

- The Standard should include requirements to ensure that the maximum available short circuit current does not exceed facility owner specifications.
- The Standard should also address requirements on reactive planning with specific reference to steady state and transient voltage stability criteria.
- The Standard should address requirements for reporting (perhaps to the Regions) on the progress or status of implementing the plans developed in accordance with the Standard. However, any such reporting requirements should be consistent with the Resource & Transmission Adequacy Task Force Recommendation #2, and should not impose undue burdens upon transmission entities.

Related Standards

Standard No.	Explanation

Related SARs

SAR ID	Explanation
FACILITY_RATINGS_01_01	*"Determine Facility Ratings, Operating Limits and Transfer Capabilities".* The Planning Standard will use some data collected within the "Facility Ratings" SAR. The Draft "Facility Ratings" Standard, Section 603, establishes some guidelines for the planning function to set operating limits based on Table 1 of the existing Planning Standard I.A.
OPER_WITHN_LMTS_01_01	*"Operate Within Interconnection Reliability Operating Limits".* This Planning Standard needs to establish future planning criteria such that the bulk electric power system can be operated within operating limits.

Regional Differences

Region	Explanation
ECAR	
ERCOT	
FRCC	

MAAC	
MAIN	
MAPP	
NPCC	
SERC	
SPP	
WECC	

Related NERC Operating Policies or Planning Standards

ID	Explanation
Planning Std. I.A	Transmission Systems: Plan within ratings, avoid cascading outages, uncontrolled system separation, and voltage and transient instability.
Planning Std. I.B	Reliability Assessment
Planning Std. I.D	Voltage Support & Reactive Power
Planning Std. II.A	System Data
Planning Std. II.D	Actual & Forecast Demands

MAPP & MEC believe the following information supports our proposed new reclassification by demonstrating that the events that MAPP & MEC recommend for reclassification are the low probability Category C events. MAPP & MEC recognize that published outage data are subject to interpretation, potential inaccuracy, and change through time; however, we believe that MAPP & MEC operating experience with transmission element outages supports the statistical summary provided in the following table.

Contact info:
Tom Mielnik, Chair
MAPP Planning Standards Development Working Group
MidAmerican Energy Company
106 East Second Street
Davenport, Iowa 52801
(563)333-8129
tcmielnik@midamerican.com

345 kV Outage Data				
Contingency	Outage Rate, occ./year	Duration, hours	Probability	Relative Likelihood
Generator B1	9	81	0.08321918	1
Two generators C3	1.5	40.5	0.00693493	12
Bipolar DC line * (Similar to B4)	1.41	21	0.00338014	24
Line * B2	0.8065	18	0.00165719	50
Transformer B3	0.0642	157	0.00115062	72
Bipolar DC Line * + Generator (Sim. to 1 Pole DC line + gen. C3)	0.1478	16.68	0.00028143	296
Line * + Generator C3	0.0820	14.7	0.00013760	605
Generator + Transformer C3	0.0157	53.4	0.00009571	870
Common tower * C5	0.007	113	0.00009030	922
Breaker Failure- Insulation Breakdown C2 RECLASSIFY THIS EVENT	0.001423	163	0.00002647	3,144
Bipolar DC line *+Bipolar DC line * (Sim. to Two 1 Pole DC lines - C3) RECLASSIFY THIS EVENT	0.009532	10.5	0.00001143	7,281
Stuck breaker C6-C9 RECLASSIFY THIS EVENT	0.00635	4	0.00000290	28,696
Line * + Line * (independent) C3 RECLASSIFY THIS EVENT	0.00267	9	0.00000275	30,262
Line * + Transformer C3 RECLASSIFY THIS EVENT	0.0010	16.1	0.00000184	45,228
Two transformers C3 RECLASSIFY THIS EVENT	0.00014774	78.5	0.00000132	63,045
Bus Section** RECLASSIFY THIS EVENT	0.0023	4.7	0.00000123	67,438

* Per 100 mile-year.
** Based upon 230 kV data.

References

1. **MAPP-CSRWG, "MAPP Bulk transmission system outage report", June 2001.**
2. **C. R. Heising, et al, "Final report on high voltage circuit breaker reliability data for use in substation and system studies – report on behalf of WG 13.06, in Proceedings of CIGRE Conference, Paris, 1994.**
3. **R. Billinton, A. A. Chowdhury, "Generating unit models using the Canadian Electricity database", CEA Transactions, Volume 23, 1984.**
4. **R. N. Allan, "Concepts of data for assessing the reliability of composite systems", IEEE Tutorial Course on Reliability Assessment of Composite Generation and Transmission Systems, Course Text 90EH0311-1-PWR.**

BPA Data

Category	Contingencies	Outages per year	Source of Data
B1	Generator	4	NW Federal system is mostly hydro generation in remote locations and these outages are usually of little consequence to the power system. These outage data are based on three thermal plants located in load areas. Due to the small size of this sample, they may not be very useful. These outages average 109 hour duration.
B2	Transmission Circuit	0.97	BPA data for 225 lines 200-kV through 550-kV, 1985-2003 data (19 years), average length 50.5 miles, outages with duration greater than 1 minute only. Five hour average duration.
B3	Transformer	0.037	IEEE Paper 91 SM 442-4 PWRS, BPA autotransformers, winding voltages 115 to 550-kV. 28 day average duration.
B4	Single Pole DC Line	9	BPA data for PDCI, 845 miles (one line only). 8.99 outages per year with total annual outage time of 170 hours. Not including terminal outages. 19 hour average duration.
C1	Bus section	0.00733	BPA data for 115 stations with voltages between 230-kv through 500-kV, 17.8 years of data, resulting in 15 events.
C2	Breaker internal fault	0.00079	1994 CIGRE Brochure 83: data for 230 and 500-kV breakers: insulation breakdown.
C2	Breaker fails to open	0.00569	1994 CIGRE Brochure 83: data for 230 and 500-kV breakers: failure to open.
C3	Two Line Dependent	0.08700	BPA data for sustained multiple outages (greater than one minute) for its 500-kV lines, 1985-2003 data (19 years). Calculated for two lines with 50 mile common corridor length.
C3	Two Line Independent	0.00110	Calculated based on single contingency rate indicated above: 1 outage per year with duration of 5 hours
C3	Generator and Transformer	0.01400	Calculated based on single contingency outage rates indicated above: 0.037 outages per year of duration 28 days for transformers and 4 outages per year of duration 109 hours for generators.
C3	Line and Transformer	0.00290	Calculated based on single contingency outage rates indicated above: 1 outage per year of duration 5 hours for line and .037 outages per year of duration 28 days for transformer.
C3	Two Generator	0.45000	Calculated based on single contingency outage rate indicated above: 4 outages per year with duration 109 hours each. Small sample of data - may not be representive.
C3	Line and Generator	0.05500	Calculated based on single contingency outage rates indicated above: 1 outage per year of duration 5 hours for line and 4 outages per year of duration 109 hours for generator.

C4	Bipolar DC Line	0.35000	Calculated based on single contingency outage rate indicated above: 9 outages per year for duration of 19 hours
C5	2 circuits on multiple towerline	0.05100	BPA data for sustained multiple outages (greater than one minute) for its 500-kV double circuit lines, 1985-2003 data (19 years). Calculated for double circuit line with 50 mile length.
C6, C7, C8, C9	Protection failure	0.11969	BPA Data for 115 stations with voltages 230 through 500-kV, 17.8 years of data, resulted in 245 events of preotection failure.
C6	SLG Fault Generator with protection failure	0.47875	Generator single contingency outage rate from above multiplied by protection failure rate (0.11969)
C7	SLG Fault Transmission circuit with protection failure	0.11490	Transmission line single contingency outage rate from above multiplied by protection failure rate (0.11969)
C8	SLG Fault Transformer with protection failure	0.00443	Transformer single contingency outage rate from above multiplied by protection failure rate (0.11969)
C9	Bus section fault with protection failure	0.00088	Bus fault outage rate from above multiplied by protection failure rate (0.11969)

Data provided by Marv Landauer based on outage data collected by BPA.

Standard Authorization Request Form

Title of Proposed Project: Revisions to TPL-001 through TPL-006, Transmission System Performance and Assessment (This SAR is intended to supplement the SAR for Assess Transmission Future Needs and Develop Transmission Plans dated April 30, 2006 in support of Standards Project 2006-02.)	
Request Date	January 17, 2007

SAR Requestor Information		**SAR Type** (*Check a box for each one that applies.*)	
Name	Assess Transmission Future Needs Standard Drafting Team	☐	New Standard
Primary Contact	Robert Millard – Vice Chair, ATFNSDT	☒	Revision to existing Standards
Telephone Fax	(708) 588-9886 none	☒	Withdrawal of existing Standard (possible)
E-mail	bob.millard@rfirst.org	☐	Urgent Action

Purpose (Describe the purpose of the standard — what the standard will achieve in support of reliability.)

This SAR is intended to supplement the SAR for Assess Transmission Future Needs and Develop Transmission Plans dated April 30, 2006 in support of Standards Project 2006-02.

The revisions to the following standards would improve technical clarity and address concerns identified by stakeholders and FERC:

TPL-001 — System Performance under Normal Conditions
TPL-002 — System Performance Following Loss of a Single BES Element
TPL-003 — System Performance Following Loss of Two or More BES Elements
TPL-004 — System Performance Following Extreme BES Events
TPL-005 — Regional and Interregional Self-Assessment Reliability Reports
TPL-006 — Data from the Regional Reliability Organization Needed to Assess Reliability

Revisions to TPL-001 through TPL-004 are already underway (Assess Transmission Future Needs and Develop Transmission Plans Standard Drafting Team) with the primary focus to clarify the associated Table 1, Transmission System Standards – Normal and Emergency Conditions, used to identify the criteria for system assessments. The expansion of the work already underway with TPL-001 through TPL-004 will focus on the general improvements to the standard identified through the attached *Appendix A: Reliability Standard Review Guidelines* and the FERC and stakeholder concerns identified in the attached *Appendix B: TPL-001 through TPL-006 Technical Issues List*.

TPL-005 and TPL-006, which require regional and inter-regional assessments based on the system performance requirements stated in TPL-001 through TPL-004, need to be modified or retired to address the "fill-in-the blank" components and establish requirements within the standards or through a contractual arrangement as to which entity should perform and provide the subject assessment and data. If these requirements are addressed through the delegation agreements each Region has with the Electric Reliability Organization (ERO), TPL-005 and TPL-006 could be retired.

The purpose of modifying this set of standards is to:

1. Provide an adequate level of reliability for the North American bulk power systems — ensure each of the standards is complete and the requirements are set at an appropriate level to ensure reliability.
2. Ensure each of the standards is enforceable as a mandatory reliability standard with financial penalties — the applicability to bulk power system owners, operators, and users, and as appropriate particular classes of facilities, is clearly defined; the purpose, requirements, and measures are results-focused and unambiguous; the consequences of violating the requirements are clear.
3. Make general improvements using the Reliability Standard Review Guidelines and consider the items mentioned in the Technical Issues Lists prepared by the NERC staff which attempt to capture comments from the:
    - FERC NOPR (Docket #RM06-16-00 dated October 20, 2006) ,
    - FERC staff report dated May 11, 2006 concerning NERC standards submitted with ERO application,
    - Version 0 and Phase 3&4 standards development (see note 1),
    - Violations Risk Factors (VRF) drafting team (see note 1),
    - Regional Fill-in-the-Blank Team (RRSWG — a NERC working group involved

with regional standards development), and

- Draft SAR for Planning Authority

The SDT should also consider any other issues that were not completely captured but were stated or referenced in the above materials.

Note 1: Comments received from the industry during public postings of the TPL subject matter were sometimes outside the work being posted or outside the drafting team's scope and were not reflected in the drafting of the final work product. These should now be considered by this SDT.

Industry Need (Provide a detailed statement justifying the need for the proposed standard, along with any supporting documentation.)

The six standards in this set are all Version 0 standards. As the ERO begins enforcing compliance with reliability standards under Section 215 of the Federal Power Act in the United States and applicable statutes and regulations in Canada, the industry needs a set of clear, measurable, and enforceable reliability standards. The Version 0 standards, while a good foundation, were translated from historical operating and planning policies and guides that were appropriate in an era of voluntary compliance. The Version 0 standards and recent updates were put in place as a temporary starting point to start-up the ERO and begin enforcement of mandatory standards. However, it is important to update the standards in a timely manner, incorporating improvements to make the standards more suitable for enforcement and to capture prior recommendations that were deferred during the Version 0 translation and any subsequent standards development that have implications to the TPL standards.

Brief Description: (Describe the proposed standard in sufficient detail to clearly define the scope in a manner that can be easily understood by others.)

The proposed work effort will address three main issues:

1. Conformance to the new rules and regulations brought about by Section 215 of the Federal Power Act and the creation of the ERO,
2. Supplement the approved work of the existing ATFNSDT to include the necessary revisions to TPL-005 & TPL-006, and
3. Address technical issues raised by FERC and industry stakeholders.

Reliability Functions

The Standard will Apply to the Following Functions *(Check box for each one that applies.)*		
☒	Reliability Coordinator	Responsible for the real-time operating reliability of its Reliability Coordinator Area in coordination with its neighboring Reliability Coordinator's wide area view.
☐	Balancing Authority	Integrates resource plans ahead of time, and maintains load-interchange-resource balance within a Balancing Authority Area and supports Interconnection frequency in real time.
☐	Interchange Authority	Ensures communication of interchange transactions for reliability evaluation purposes and coordinates implementation of valid and balanced interchange schedules between Balancing Authority Areas.
☒	Planning Coordinator	Assesses the longer-term reliability of its Planning Coordinator Area.
☒	Resource Planner	Develops a (>one year) plan for the resource adequacy of its specific loads within its portion of a Planning Coordinator area.
☒	Transmission Planner	Develops a (>one year) plan for the reliability of the interconnected Bulk Electric System within its portion of the Planning Coordinator area.
☐	Transmission Service Provider	Administers the transmission tariff and provides transmission services under applicable transmission service agreements (e.g., the pro forma tariff).
☒	Transmission Owner	Owns and maintains transmission facilities.
☐	Transmission Operator	Ensures the real-time operating reliability of the transmission assets within a Transmission Operator Area.
☐	Distribution Provider	Delivers electrical energy to the End-use customer.
☒	Generator Owner	Owns and maintains generating facilities.
☐	Generator Operator	Operates generation unit(s) to provide real and reactive power.
☐	Purchasing-Selling Entity	Purchases or sells energy, capacity, and necessary reliability-related services as required.
☐	Market Operator	Interface point for reliability functions with commercial functions.
☒	Load-Serving Entity	Secures energy and transmission service (and related reliability-related services) to serve the End-use Customer.

Reliability and Market Interface Principles

Applicable Reliability Principles *(Check box for all that apply.)*	
☒	1. Interconnected bulk electric systems shall be planned and operated in a coordinated manner to perform reliably under normal and abnormal conditions as defined in the NERC Standards.
☐	2. The frequency and voltage of interconnected bulk electric systems shall be controlled within defined limits through the balancing of real and reactive power supply and demand.
☒	3. Information necessary for the planning and operation of interconnected bulk electric systems shall be made available to those entities responsible for planning and operating the systems reliably.
☐	4. Plans for emergency operation and system restoration of interconnected bulk electric systems shall be developed, coordinated, maintained and implemented.
☐	5. Facilities for communication, monitoring and control shall be provided, used and maintained for the reliability of interconnected bulk electric systems.
☐	6. Personnel responsible for planning and operating interconnected bulk electric systems shall be trained, qualified, and have the responsibility and authority to implement actions.
☒	7. The security of the interconnected bulk electric systems shall be assessed, monitored and maintained on a wide area basis.

Does the proposed Standard comply with all of the following Market Interface Principles? *(Select 'yes' or 'no' from the drop-down box.)*
1. The planning and operation of bulk electric systems shall recognize that reliability is an essential requirement of a robust North American economy. Yes
2. An Organization Standard shall not give any market participant an unfair competitive advantage.Yes
3. An Organization Standard shall neither mandate nor prohibit any specific market structure. Yes
4. An Organization Standard shall not preclude market solutions to achieving compliance with that Standard. Yes
5. An Organization Standard shall not require the public disclosure of commercially sensitive information. All market participants shall have equal opportunity to access commercially non-sensitive information that is required for compliance with reliability standards. Yes

Detailed Description (Provide enough detail so that an independent entity familiar with the industry could draft a standard based on this description.)

This SAR expands on the work already underway with the Assess Transmission Future Needs and Develop Transmission Plans Standard Drafting Team, by requiring that TPL-001 through TPL-006 be upgraded in accordance with the Reliability Standards Development Plan 2007–2009. These revisions include the following:

This SAR will be appended to the already approved SAR for Assess Transmission Future Needs and Develop Transmission Plans and will include modifications to all of the following standards:

TPL-001 — System Performance under Normal Conditions
TPL-002 — System Performance Following Loss of a Single BES Element
TPL-003 — System Performance Following Loss of Two or More BES Elements
TPL-004 — System Performance Following Extreme BES Events
TPL-005 — Regional and Interregional Self-Assessment Reliability Reports
TPL-006 — Data from the Regional Reliability Organization Needed to Assess Reliability

The revisions would improve technical clarity and address concerns identified by stakeholders and FERC. The drafting team will focus on the general improvements to the standards and use as a starting point for the expanded work the subject matter identified in *Appendix A: Reliability Standard Review Guidelines* and the FERC and stakeholder concerns identified in *Appendix B: TPL-001 through TPL-006 Technical Issues List*.

The expanded scope also will include elimination of the 'fill-in-the-blank' elements of TPL-005 and TPL-006, which require regional and inter-regional assessments based on the system performance requirements stated in TPL-001 through TPL-004. The standards need to be modified or retired to address the "fill-in-the blank" components. If the 'fill-in-the-blank' requirements are addressed through the contractual arrangements each Region has with the ERO, TPL-005 and TPL-006 could be retired.

The drafting team must ensure that there is consistency in the requirements across the set of TPL standards

The overall development may include other improvements to the standards deemed appropriate by the drafting team, with the consensus of stakeholders, consistent with establishing high quality, enforceable and technically sufficient bulk power system reliability standards, using the attached, Reliability Standard Review Guidelines. In addition, the drafting team will need to make conforming changes to standards impacted by changes made to these six standards.

Related Standards

Standard No.	Explanation

Related SARs

SAR ID	Explanation

Regional Differences

Region	Explanation
ERCOT	
FRCC	
MRO	
NPCC	
SERC	
RFC	
SPP	
WECC	

Appendix A: Reliability Standard Review Guidelines

Applicability
Does this reliability standard clearly identify the functional classes of entities responsible for complying with the reliability standard, with any specific additions or exceptions noted? Where multiple functional classes are identified is there a clear line of responsibility for each requirement identifying the functional class and entity to be held accountable for compliance? Does the requirement allow overlapping responsibilities between Registered Entities possibly creating confusion for who is ultimately accountable for compliance?

Does this reliability standard identify the geographic applicability of the standard, such as the entire North American bulk power system, an interconnection, or within a regional entity area? If no geographic limitations are identified, the default is that the standard applies throughout North America.

Does this reliability standard identify any limitations on the applicability of the standard based on electric facility characteristics, such as generators with a nameplate rating of 20 MW or greater, or transmission facilities energized at 200 kV or greater or some other criteria? If no functional entity limitations are identified, the default is that the standard applies to all identified functional entities.

Purpose
Does this reliability standard have a clear statement of purpose that describes how the standard contributes to the reliability of the bulk power system? Each purpose statement should include a value statement.

Performance Requirements
Does this reliability standard state one or more performance requirements, which if achieved by the applicable entities, will provide for a reliable bulk power system, consistent with good utility practices and the public interest?

Does each requirement identify who shall do what under what conditions and to what outcome?

Measurability
Is each performance requirement stated so as to be objectively measurable by a third party with knowledge or expertise in the area addressed by that requirement?

Does each performance requirement have one or more associated measures used to objectively evaluate compliance with the requirement?

If performance results can be practically measured quantitatively, are metrics provided within the requirement to indicate satisfactory performance?

Technical Basis in Engineering and Operations
Is this reliability standard based upon sound engineering and operating judgment, analysis, or experience, as determined by expert practitioners in that particular field?

Completeness
Is this reliability standard complete and self-contained? Does the standard depend on external information to determine the required level of performance?

Consequences for Noncompliance

In combination with guidelines for penalties and sanctions, as well as other ERO and regional entity compliance documents, are the consequences of violating a standard clearly known to the responsible entities?

Clear Language
Is the reliability standard stated using clear and unambiguous language? Can responsible entities, using reasonable judgment and in keeping with good utility practices, arrive at a consistent interpretation of the required performance?

Practicality
Does this reliability standard establish requirements that can be practically implemented by the assigned responsible entities within the specified effective date and thereafter?

Capability Requirements versus Performance Requirements
In general, requirements for entities to have 'capabilities' (this would include facilities for communication, agreements with other entities, etc.), should be located in the standards for certification. The certification requirements should indicate that entities have a responsibility to 'maintain' their capabilities.

Consistent Terminology
To the extent possible, does this reliability standard use a set of standard terms and definitions that are approved through the NERC reliability standards development process?

If the standard uses terms that are included in the NERC Glossary of Terms Used in Reliability Standards, then the term must be capitalized when it is used in the standard. New terms should not be added unless they have a 'unique' definition when used in a NERC reliability standard. Common terms that could be found in a college dictionary should not be defined and added to the NERC Glossary.

Are the verbs on the 'verb list' from the DT Guidelines? If not – do new verbs need to be added to the guidelines or could you use one of the verbs from the verb list?

Violation Risk Factors (Risk Factor)

High Risk Requirement

A requirement that, if violated, could directly cause or contribute to bulk electric system instability, separation, or a cascading sequence of failures, or could place the bulk electric system at an unacceptable risk of instability, separation, or cascading failures;

or a requirement in a planning time frame that, if violated, could, under emergency, abnormal, or restorative conditions anticipated by the preparations, directly cause or contribute to bulk electric system instability, separation, or a cascading sequence of failures, or could place the bulk electric system at an unacceptable risk of instability, separation, or cascading failures, or could hinder restoration to a normal condition.

Medium Risk Requirement

This is a requirement that, if violated, could directly affect the electrical state or the capability of the bulk electric system, or the ability to effectively monitor and control the bulk electric system. However, violation of a medium risk requirement is unlikely to lead to bulk electric system instability, separation, or cascading failures;

or a requirement in a planning time frame that, if violated, could, under emergency, abnormal, or restorative conditions anticipated by the preparations, directly and adversely affect the electrical state or capability of the bulk electric system, or the ability to effectively monitor, control, or restore the bulk electric system. However, violation of a medium risk requirement is unlikely, under emergency, abnormal, or restoration conditions anticipated by the preparations, to lead to bulk electric system instability, separation, or cascading failures, nor to hinder restoration to a normal condition.

Lower Risk Requirement

A requirement that, if violated, would not be expected to adversely affect the electrical state or capability of the bulk electric system, or the ability to effectively monitor and control the bulk electric system. A requirement that is administrative in nature;

Or a requirement in a planning time frame that, if violated, would not, under the emergency, abnormal, or restorative conditions anticipated by the preparations, be expected to adversely affect the electrical state or capability of the bulk electric system, or the ability to effectively monitor, control, or restore the bulk electric system. A planning requirement that is administrative in nature.

Time Horizon

The drafting team should also indicate the time horizon available for mitigating a violation to the requirement using the following definitions:

- **Long-term Planning** — a planning horizon of one year or longer.
- **Operations Planning** — operating and resource plans from day-ahead up to and including seasonal.
- **Same-day Operations** — routine actions required within the timeframe of a day, but not real-time.
- **Real-time Operations** — actions required within one hour or less to preserve the reliability of the bulk electric system.
- **Operations Assessment** — follow-up evaluations and reporting of real time operations.

Violation Severity Levels

The drafting team should indicate a set of violation severity levels that can be applied for the requirements within a standard. ('Violation severity levels' replaces the existing 'levels of non-compliance.') The violation severity levels may be applied for each requirement or combined to cover multiple requirements, as long as it is clear which requirements are included.

The violation severity levels should be based on the following definitions:

- **Lower: mostly compliant with minor exceptions** — the responsible entity is mostly compliant with and meets the intent of the requirement but is deficient with respect to one or more minor details. Equivalent score: 95% to 99% compliant.
- **Moderate: mostly compliant with significant exceptions** — the responsible entity is mostly compliant with and meets the intent of the requirement but is deficient with respect to one or more significant elements. Equivalent score: 85% to 94% compliant.

- **High: marginal performance or results** — the responsible entity has only partially achieved the reliability objective of the requirement and is missing one or more significant elements. Equivalent score: 70% to 84% compliant.
- **Severe: poor performance or results** — the responsible entity has failed to meet the reliability objective of the requirement. Equivalent score: less than 70% compliant.

Compliance Monitor

Replace, 'Regional Reliability Organization' with 'Regional Entity'

Fill-in-the-blank Requirements

Do not include any 'fill-in-the-blank' requirements. These are requirements that assign one entity responsibility for developing some performance measures without requiring that the performance measures be included in the body of a standard – then require another entity to comply with those requirements.

Every reliability objective can be met, at least at a threshold level, by a North American standard. If we need regions to develop regional standards, such as in under-frequency load shedding, we can always write a uniform North American standard for the applicable functional entities as a means of encouraging development of the regional standards.

Requirements for Regional Reliability Organization

Do not write any requirements for the Regional Reliability Organization. Any requirements currently assigned to the RRO should be re-assigned to the applicable functional entity.

Effective Dates

Must be 1st day of 1st quarter after entities are expected to be compliant – must include time to file with regulatory authorities and provide notice to responsible entities of the obligation to comply. If the standard is to be actively monitored, time for the Compliance Monitoring and Enforcement Program to develop reporting instructions and modify the Compliance Data Management System(s) both at NERC and Regional Entities must be provided in the implementation plan.

Associated Documents

If there are standards that are referenced within a standard, list the full name and number of the standard under the section called, 'Associated Documents'.

Appendix B: TPL-001 through TPL-006 Technical Issues List

Excerpted from NERC Reliability Standards Development Plan: 2007 - 2009

TPL-001
FERC NOPR

- Require that critical system conditions be determined by conducting sensitivity studies; *(Not necessarily "cook book" but what are the processes someone reasonably skilled in the art would follow.)*
- Require that system conditions and contingencies assessed be reviewed by neighboring systems; *(Looking for coordination with neighboring systems)*
- Modify Requirement R1.3 to substitute the reference to regional reliability organization with Regional Entity;
- Require consideration of planned outages of critical equipment; and
- Modify footnote (a): footnote (a) to Table 1 requires clarification. The NERC Transmission Issues Subcommittee (TIS) 325 recommended that footnote (a) be modified to state explicitly that emergency ratings apply to Category B and C (contingency conditions) and not to Category A (system intact). The Commission proposes that footnote (a) be modified in the revised Reliability Standard as recommended by TIS and that the normal facility rating be in accordance with Reliability Standard FAC-008-1 and normal voltages be in accordance with Reliability Standard VAR-001-1.

FERC Staff Report

- Only for normal
- Doesn't consider planned outages
- Clarify footnote 'a' & 'b' in table
- Stress system during simulations
- Include sensitivity studies
- Include extreme events

Version 0 Industry Comments

- Several semantic issues
- Clarify timing for submittal of corrective plan
- Clarify use of applicable ratings in Table 1, note 'a'
- Need to address deliverability to load
- Define critical system conditions
- Allow for engineering judgment in setting conditions for power flow
- Do planned facilities include just those under construction?
- Need to include multiple time frames
- What is a major load center?
- Table 1 – C.5 goes beyond double circuit outage criteria
- Table 1, items 6, 7, 8 & 9 need footnote stating that they do not apply to generator breaker failure
- Table 1, note 'b' – clarify when to curtail firm deliveries

Phase III / IV Comments

- Add a requirement to verify that there are sufficient reactive resources
- Add a requirement to identify where UVLS should be installed

Violation Risk Factors (VRF) Drafting Team Comment

- R1 – time horizon should be long-term planning

Comment from Draft SAR on Planning Authority

- Provide clarity where the Planning Authority is mentioned

TPL-002:
FERC NOPR

- Require that critical system conditions be determined in the same manner as we propose to require for TPL-001-0;
- Require the inclusion of the reliability impact of the entities' existing spare equipment strategy; *(Only looking for consideration of spare equipment that has a long lead time such as a transformer)*
- Explicitly require all generators to ride through the same set of Category B and C contingencies as required for wind generators in Order No. 661; *(Document explicit definition of ride through capability for generators)*
- Require documentation of load models used in system studies and supporting rationale for their use;
- Clarify the phrase "permit operating steps necessary to maintain system control;" and
- Clarify footnote (b): modify footnote (b) to state that load shedding for a single contingency is not permitted except in very special circumstances where such interruption is limited to the firm load associated with the failure (consequential load loss).330 For purposes of clarity, the Commission proposes to require that the phrase "to prepare for the next contingency, system adjustments are permitted, including curtailments of contracted Firm (non-recallable reserved) electric power transfers" be deleted from footnote (b). This statement is more appropriate for Category C events and is already captured by footnote (c) to Table 1, which is applicable to Category C events.

FERC staff report

- Only includes loss of single element
- NERC TIS Report recommendations not addressed

Version 0 Industry Comments

- Define critical system conditions
- Clarify timing for corrective plan
- Address deliverability of generation to load
- Clarify applicable ratings in Table 1, note 'a'
- Don't include generation runback or re-dispatch
- Must study all contingencies and multiple demand levels & time frames
- Don't include planning outage
- Single terminals are not included

Phase III / IV comments

- Add a requirement to verify that there are sufficient reactive resources
- Add a requirement to identify where UVLS should be installed

VRF comments

- Time horizon should be long-term planning and R2.2 – redundant with R1.3.8

Comment from draft SAR on Planning Authority

- Provide clarity where the Planning Authority is mentioned

TPL-003:
FERC NOPR

- Require that critical system conditions be determined by conducting sensitivity studies (as elaborated in our discussion of TPL-001-0);
- Clarify footnote c: modify footnote (c) to provide specificity regarding the use of the term "controlled interruption" of load.
- Require the applicable entities to define and document the proxies necessary to simulate cascading outages; and
- Tailor the purpose statement to reflect the specific goal of the Reliability, as discussed above.

FERC Staff Report

- Same as TPL-001 & 002

Version 0 Industry Comments

- Same as TPL-001 & 002
- TO should provide plan of action
- Don't base penalties on low probability, low consequence events
- Use NERC Compliance Reporting Process
- Clearly identify outages

Phase III / IV Comments

- Add a requirement to verify that there are sufficient reactive resources
- Add a requirement to identify where UVLS should be installed

VRF Comment

- Time horizon should be long-term planning
- R2 – lack of consistency with TPL-001 & TPL-002
- R2.1 - lack of consistency with TPL-001
- R2.1.1 - lack of consistency with TPL-001 & TPL-004
- R2.1.2 - lack of consistency with TPL-001 & TPL-005
- R2.1.3 - lack of consistency with TPL-001 & TPL-006
- R2.2 - lack of consistency with TPL-001 & TPL-007

Comment from Draft SAR on Planning Authority

- Provide clarity where the Planning Authority is mentioned

TPL-004:

FERC NOPR

- Require that critical system conditions be determined in the same manner as proposed for TPL-001-0;
- Require the identification of options for reducing the probability or impacts of extreme events that cause cascading;
- Require that, in determining the range of extreme events to be assessed, the contingency list of Category D be expanded to include recent events; and
- Tailor the purpose statement to reflect the specific goal of the Reliability Standard.

FERC Staff Report

- Need to reduce the probability of loss of multiple elements and mitigating impact
- Share assessments
- Need to be more severe than weather
- Same as TPL-001

Version 0 Industry Comments

- Same as TPL-001
- Perform analysis on credible contingency
- R1.3.9 – remove from extreme events
- TO should determine which events to study

Phase III / IV Comments

- Add a requirement to verify that there are sufficient reactive resources
- Add a requirement to identify where UVLS should be installed

Comment from Draft SAR on Planning Authority

- Provide clarity where the Planning Authority is mentioned

TPL-005:

FERC NOPR

- Commission will not propose any action on TPL-005-0, as it applies only to regional reliability organizations.
- The term and extent of assessment, as well as the study years, are not appropriately defined; the process for determining load levels needs to be standardized; and local area networks and system adjustments need to be specifically defined.

Regional Fill-in-the-Blank Team Comments

- New SAR needed

Version 0 Industry Comments

- Define fuel adequacy
- An RRO can't make a mandatory request for another RRO to perform a study

TPL-006:
FERC NOPR

- Commission will not propose any action on TPL-006-0, as it applies only to regional reliability organizations.

Comment Form — SAR to Supplement the SAR for Assess Transmission Future Needs and Develop Transmission Plans

Please use this form to submit comments on the proposed SAR to Supplement the SAR for Assess Transmission Future Needs and Develop Transmission Plans. Comments must be submitted by **March 16, 2007**. You may submit the completed form by e-mail to sarcomm@nerc.com with the words "TPL Supplement SAR" in the subject line. If you have questions please contact Ed Dobrowolski at ed.dobrowoski@nerc.net or by telephone at 609-452-8060.

Individual Commenter Information **(Complete this page for comments from one organization or individual.)**		
Name:		
Organization:		
Telephone:		
E-mail:		
NERC Region		**Registered Ballot Body Segment**
☐ **ERCOT**	☐	1 — Transmission Owners
☐ **FRCC**	☐	2 — RTOs, or ISOs
☐ **MRO**	☐	3 — Load-serving Entities
☐ **NPCC**	☐	4 — Transmission-dependent Utilities
☐ **RFC**	☐	5 — Electric Generators
☐ **SERC**	☐	6 — Electricity Brokers, Aggregators, and Marketers
☐ **SPP**	☐	7 — Large Electricity End Users
☐ **WECC**	☐	8 — Small Electricity End Users
☐ **NA – Not Applicable**	☐	9 — Federal, State, Provincial Regulatory or other Government Entities
	☐	10 – Regional Reliability Organizations, or Regional Entities

Group Comments (Complete this page if comments are from a group.)

Group Name:

Lead Contact:

Contact Organization:

Contact Segment:

Contact Telephone:

Contact E-mail:

Additional Member Name	Additional Member Organization	Region*	Segment*

*If more than one region or segment applies, indicate the best fit for the purpose of these comments. Regional acronyms and segment numbers are shown on prior page.

Background Information

This SAR is intended to supplement the already-approved SAR for Assess Transmission Future Needs and Develop Transmission Plans dated April 30, 2006. The Assess Transmission Future Needs and Develop Transmission Plans SAR includes revisions to TPL-001 through TPL-004 with the primary focus to clarify the associated Table 1, Transmission System Standards – Normal and Emergency Conditions, used to identify the criteria for system assessments.

The supplementary SAR would expand the scope or the original SAR to include TPL-005 and TPL-006 and upgrade the entire set of standards (TPL-001 through TPL-006) to conform to the latest version of the Reliability Standards Procedure Development and the ERO Rules of Procedure.

TPL-005 and TPL-006, which require regional and inter-regional assessments based on the system performance requirements stated in TPL-001 through TPL-004, need to be modified or retired to address the "fill-in-the blank" components and establish requirements within the standards or through a contractual arrangement as to which entity should perform and provide the subject assessment and data. If these requirements are addressed through the delegation agreements each Region has with the Electric Reliability Organization (ERO), TPL-005 and TPL-006 could be retired.

The intent is to comprehensively address all necessary revisions to the entire set of TPL Standards:

TPL-001 — System Performance under Normal Conditions
TPL-002 — System Performance Following Loss of a Single BES Element
TPL-003 — System Performance Following Loss of Two or More BES Elements
TPL-004 — System Performance Following Extreme BES Events
TPL-005 — Regional and Interregional Self-Assessment Reliability Reports
TPL-006 — Data from the Regional Reliability Organization Needed to Assess Reliability

Please review the SAR and then answer the questions on the following page. Please submit the completed form by e-mail to sarcomm@nerc.com with the words "TPL Supplement SAR" in the subject line by **March 16, 2007**.

You do not have to answer all questions.

Insert a "check" mark in the appropriate boxes by double-clicking the gray areas.

1. Do you believe that there is a reliability-related need to provide additional detail, including specific issues for consideration, to the requirements in this set of standards as proposed in this supplemental SAR?

   ☐ Yes

   ☐ No

   Comments:

2. Do you agree with the expanded scope of the proposed project as set forth in this supplemental SAR? (The scope includes all the items noted on the "Standard Review Forms" attached to the SAR as well as other improvements to the standards that meet the consensus of stakeholders, consistent with establishing high-quality, enforceable, and technically sufficient bulk power system reliability standards. Please consider these items as non-mandatory and only for consideration by the drafting team.)

   ☐ Yes

   ☐ No

   Comments:

3. Do you think that there are any additional revisions that should be incorporated into this set of standards, beyond those that have already been identified in the April 30, 2006 version of the original SAR and this supplemental SAR?

   ☐ Yes

   ☐ No

   Comments:

NERC
NORTH AMERICAN ELECTRIC
RELIABILITY CORPORATION

Maureen E. Long
Standards Process Manager

February 15, 2007

TO: REGISTERED BALLOT BODY

Ladies and Gentlemen:

Announcement: Three 30-day Comment Periods Open

The Standards Committee (SC) announces the following standards actions:

SAR to Amend the Assess Transmission Future Needs and Develop Transmission Plans SAR Posted for 30-day Comment Period February 15–March 16, 2007

The SAR to amend the already-approved SAR for Assess Transmission Future Needs and Develop Transmission Plans (Project 2006-02) proposes to add TPL-005-0 and TPL-006-0 to the list of transmission planning standards currently addressed (TPL-001 through TPL-004), to consider issues raised by FERC and stakeholders regarding this set of standards, and to bring the entire set of standards into conformance with the ERO Rules of Procedure and the latest version of the Reliability Standards Development Procedure. Please use the comment form to provide comments on this SAR amendment.

First Standard (MOD-001-1) in the Series of ATC/TTC/AFC Revisions Posted for 30-day Comment Period February 15–March 16, 2007

The first standard modified under Project 2006-07, MOD-001-1 — ATC and AFC Calculation Methodologies, requires the Transmission Service Provider to document and use a single methodology for calculating ATC or AFC. The drafting team is soliciting comments on the proposed requirements before developing the measures and compliance elements. Please use the comment form to provide comments on this draft standard's proposed requirements.

Second Draft of SAR for Backup Facilities Posted for 30-day Comment Period February 15–March 16, 2007

The SAR for Project 2006-04 proposes modifying EOP-008-0 — Plans for Loss of Control Center Functionality. The revisions to EOP-008 focus on ensuring the continuation of functionality needed for reliable system operation regardless of the manner in which it is achieved. The modifications will consider issues raised by FERC and stakeholders about this standard, and will bring the standard into conformance with the ERO Rules of Procedure and the latest version of the Reliability Standards Development Procedure. Please use the comment form to provide comments on this SAR.

Standards Development Process

The *Reliability Standards Development Procedure* contains all the procedures governing the standards development process. The success of the NERC standards development process depends on stakeholder participation. We extend our thanks to all those who participate. If you have any questions, please contact me at 813-468-5998 or maureen.long@nerc.net.

Sincerely,

Maureen E. Long

cc: Registered Ballot Body Registered Users
Standards Mailing List
NERC Roster

116-390 Village Boulevard, Princeton, New Jersey 08540-5721
Phone: 609.452.8060 ▪ Fax: 609.452.9550 ▪ www.nerc.com

Comment Form — SAR to Supplement the SAR for Assess Transmission Future Needs and Develop Transmission Plans

Please use this form to submit comments on the proposed SAR to Supplement the SAR for Assess Transmission Future Needs and Develop Transmission Plans. Comments must be submitted by **March 16, 2007**. You may submit the completed form by e-mail to sarcomm@nerc.com with the words "TPL Supplement SAR" in the subject line. If you have questions please contact Ed Dobrowolski at ed.dobrowoski@nerc.net or by telephone at 609-452-8060.

Individual Commenter Information **(Complete this page for comments from one organization or individual.)**		
Name:	James H. Sorrels, Jr.	
Organization:	AEP	
Telephone:	(614) 716-2370	
E-mail:	jhsorrels@aep.com	
NERC Region		**Registered Ballot Body Segment**
☒ **ERCOT**	☒	1 — Transmission Owners
☐ **FRCC**	☐	2 — RTOs, or ISOs
☐ **MRO**	☐	3 — Load-serving Entities
☐ **NPCC**	☐	4 — Transmission-dependent Utilities
☒ **RFC**	☒	5 — Electric Generators
☐ **SERC**	☒	6 — Electricity Brokers, Aggregators, and Marketers
☒ **SPP**	☐	7 — Large Electricity End Users
☐ **WECC**	☐	8 — Small Electricity End Users
☐ **NA – Not Applicable**	☐	9 — Federal, State, Provincial Regulatory or other Government Entities
	☐	10 – Regional Reliability Organizations, or Regional Entities

Group Comments (Complete this page if comments are from a group.)

Group Name:

Lead Contact:

Contact Organization:

Contact Segment:

Contact Telephone:

Contact E-mail:

Additional Member Name	Additional Member Organization	Region*	Segment*

*If more than one region or segment applies, indicate the best fit for the purpose of these comments. Regional acronyms and segment numbers are shown on prior page.

Background Information

This SAR is intended to supplement the already-approved SAR for Assess Transmission Future Needs and Develop Transmission Plans dated April 30, 2006. The Assess Transmission Future Needs and Develop Transmission Plans SAR includes revisions to TPL-001 through TPL-004 with the primary focus to clarify the associated Table 1, Transmission System Standards – Normal and Emergency Conditions, used to identify the criteria for system assessments.

The supplementary SAR would expand the scope or the original SAR to include TPL-005 and TPL-006 and upgrade the entire set of standards (TPL-001 through TPL-006) to conform to the latest version of the Reliability Standards Procedure Development and the ERO Rules of Procedure.

TPL-005 and TPL-006, which require regional and inter-regional assessments based on the system performance requirements stated in TPL-001 through TPL-004, need to be modified or retired to address the "fill-in-the blank" components and establish requirements within the standards or through a contractual arrangement as to which entity should perform and provide the subject assessment and data. If these requirements are addressed through the delegation agreements each Region has with the Electric Reliability Organization (ERO), TPL-005 and TPL-006 could be retired.

The intent is to comprehensively address all necessary revisions to the entire set of TPL Standards:

TPL-001 — System Performance under Normal Conditions
TPL-002 — System Performance Following Loss of a Single BES Element
TPL-003 — System Performance Following Loss of Two or More BES Elements
TPL-004 — System Performance Following Extreme BES Events
TPL-005 — Regional and Interregional Self-Assessment Reliability Reports
TPL-006 — Data from the Regional Reliability Organization Needed to Assess Reliability

Please review the SAR and then answer the questions on the following page. Please submit the completed form by e-mail to sarcomm@nerc.com with the words "TPL Supplement SAR" in the subject line by **March 16, 2007**.

You do not have to answer all questions.

Insert a "check" mark in the appropriate boxes by double-clicking the gray areas.

1. Do you believe that there is a reliability-related need to provide additional detail, including specific issues for consideration, to the requirements in this set of standards as proposed in this supplemental SAR?

   ☒ Yes

   ☐ No

   Comments:

2. Do you agree with the expanded scope of the proposed project as set forth in this supplemental SAR? (The scope includes all the items noted on the "Standard Review Forms" attached to the SAR as well as other improvements to the standards that meet the consensus of stakeholders, consistent with establishing high-quality, enforceable, and technically sufficient bulk power system reliability standards. Please consider these items as non-mandatory and only for consideration by the drafting team.)

   ☒ Yes

   ☐ No

   Comments: Considering the current scope, the Std DT should be encouraged to consider a major re-write of TPL-001 thru TPL-006, possibly including a restructuring into a single standard rather than the present multiple standards.

3. Do you think that there are any additional revisions that should be incorporated into this set of standards, beyond those that have already been identified in the April 30, 2006 version of the original SAR and this supplemental SAR?

   ☐ Yes

   ☒ No

   Comments:

Comment Form — SAR to Supplement the SAR for Assess Transmission Future Needs and Develop Transmission Plans

Please use this form to submit comments on the proposed SAR to Supplement the SAR for Assess Transmission Future Needs and Develop Transmission Plans. Comments must be submitted by **March 16, 2007**. You may submit the completed form by e-mail to sarcomm@nerc.com with the words "TPL Supplement SAR" in the subject line. If you have questions please contact Ed Dobrowolski at ed.dobrowoski@nerc.net or by telephone at 609-452-8060.

Individual Commenter Information **(Complete this page for comments from one organization or individual.)**		
Name:	Steve Myers	
Organization:	ERCOT	
Telephone:	512-248-3077	
E-mail:	smyers@ercot.com	
NERC Region		**Registered Ballot Body Segment**
☒ **ERCOT**	☐	1 — Transmission Owners
☐ **FRCC**	☒	2 — RTOs, or ISOs
☐ **MRO**	☐	3 — Load-serving Entities
☐ **NPCC**	☐	4 — Transmission-dependent Utilities
☐ **RFC**	☐	5 — Electric Generators
☐ **SERC**	☐	6 — Electricity Brokers, Aggregators, and Marketers
☐ **SPP**	☐	7 — Large Electricity End Users
☐ **WECC**	☐	8 — Small Electricity End Users
☐ **NA – Not Applicable**	☐	9 — Federal, State, Provincial Regulatory or other Government Entities
	☐	10 – Regional Reliability Organizations, or Regional Entities

Group Comments (Complete this page if comments are from a group.)

Group Name:

Lead Contact:

Contact Organization:

Contact Segment:

Contact Telephone:

Contact E-mail:

Additional Member Name	Additional Member Organization	Region*	Segment*

*If more than one region or segment applies, indicate the best fit for the purpose of these comments. Regional acronyms and segment numbers are shown on prior page.

Background Information

This SAR is intended to supplement the already-approved SAR for Assess Transmission Future Needs and Develop Transmission Plans dated April 30, 2006. The Assess Transmission Future Needs and Develop Transmission Plans SAR includes revisions to TPL-001 through TPL-004 with the primary focus to clarify the associated Table 1, Transmission System Standards – Normal and Emergency Conditions, used to identify the criteria for system assessments.

The supplementary SAR would expand the scope or the original SAR to include TPL-005 and TPL-006 and upgrade the entire set of standards (TPL-001 through TPL-006) to conform to the latest version of the Reliability Standards Procedure Development and the ERO Rules of Procedure.

TPL-005 and TPL-006, which require regional and inter-regional assessments based on the system performance requirements stated in TPL-001 through TPL-004, need to be modified or retired to address the "fill-in-the blank" components and establish requirements within the standards or through a contractual arrangement as to which entity should perform and provide the subject assessment and data. If these requirements are addressed through the delegation agreements each Region has with the Electric Reliability Organization (ERO), TPL-005 and TPL-006 could be retired.

The intent is to comprehensively address all necessary revisions to the entire set of TPL Standards:

TPL-001 — System Performance under Normal Conditions
TPL-002 — System Performance Following Loss of a Single BES Element
TPL-003 — System Performance Following Loss of Two or More BES Elements
TPL-004 — System Performance Following Extreme BES Events
TPL-005 — Regional and Interregional Self-Assessment Reliability Reports
TPL-006 — Data from the Regional Reliability Organization Needed to Assess Reliability

Please review the SAR and then answer the questions on the following page. Please submit the completed form by e-mail to sarcomm@nerc.com with the words "TPL Supplement SAR" in the subject line by **March 16, 2007**.

You do not have to answer all questions.

Insert a "check" mark in the appropriate boxes by double-clicking the gray areas.

1. Do you believe that there is a reliability-related need to provide additional detail, including specific issues for consideration, to the requirements in this set of standards as proposed in this supplemental SAR?

   ☒ Yes

   ☐ No

   Comments: I recommend that you clarify that these lists of items in Appendix B are topics to consider, not topics that must be included. Also, I recommend that any standards requirements that are evident as Good Utility Practice or procedural in nature be retired as requirements, but retained in the form of reference documents, operating guidelines, or some other similar form that will be available to any industry participant that wishes to use them.

2. Do you agree with the expanded scope of the proposed project as set forth in this supplemental SAR? (The scope includes all the items noted on the "Standard Review Forms" attached to the SAR as well as other improvements to the standards that meet the consensus of stakeholders, consistent with establishing high-quality, enforceable, and technically sufficient bulk power system reliability standards. Please consider these items as non-mandatory and only for consideration by the drafting team.)

   ☒ Yes

   ☐ No

   Comments: Please also see my response to Question #1.

3. Do you think that there are any additional revisions that should be incorporated into this set of standards, beyond those that have already been identified in the April 30, 2006 version of the original SAR and this supplemental SAR?

   ☐ Yes

   ☒ No

   Comments:

Comment Form — SAR to Supplement the SAR for Assess Transmission Future Needs and Develop Transmission Plans

Please use this form to submit comments on the proposed SAR to Supplement the SAR for Assess Transmission Future Needs and Develop Transmission Plans. Comments must be submitted by **March 16, 2007**. You may submit the completed form by e-mail to sarcomm@nerc.com with the words "TPL Supplement SAR" in the subject line. If you have questions please contact Ed Dobrowolski at ed.dobrowoski@nerc.net or by telephone at 609-452-8060.

Individual Commenter Information **(Complete this page for comments from one organization or individual.)**		
Name:	Eric Mortenson	
Organization:	Exelon	
Telephone:	(630) 576-6898	
E-mail:	eric.mortenson@exeloncorp.com	
NERC Region		**Registered Ballot Body Segment**
☐ **ERCOT**	☐	1 — Transmission Owners
☐ **FRCC**	☐	2 — RTOs, or ISOs
☐ **MRO**	☐	3 — Load-serving Entities
☐ **NPCC**	☐	4 — Transmission-dependent Utilities
☐ **RFC**	☐	5 — Electric Generators
☐ **SERC**	☐	6 — Electricity Brokers, Aggregators, and Marketers
☐ **SPP**	☐	7 — Large Electricity End Users
☐ **WECC**	☐	8 — Small Electricity End Users
☐ **NA – Not Applicable**	☐	9 — Federal, State, Provincial Regulatory or other Government Entities
	☐	10 – Regional Reliability Organizations, or Regional Entities

Group Comments (Complete this page if comments are from a group.)

Group Name:

Lead Contact:

Contact Organization:

Contact Segment:

Contact Telephone:

Contact E-mail:

Additional Member Name	Additional Member Organization	Region*	Segment*

*If more than one region or segment applies, indicate the best fit for the purpose of these comments. Regional acronyms and segment numbers are shown on prior page.

Background Information

This SAR is intended to supplement the already-approved SAR for Assess Transmission Future Needs and Develop Transmission Plans dated April 30, 2006. The Assess Transmission Future Needs and Develop Transmission Plans SAR includes revisions to TPL-001 through TPL-004 with the primary focus to clarify the associated Table 1, Transmission System Standards – Normal and Emergency Conditions, used to identify the criteria for system assessments.

The supplementary SAR would expand the scope or the original SAR to include TPL-005 and TPL-006 and upgrade the entire set of standards (TPL-001 through TPL-006) to conform to the latest version of the Reliability Standards Procedure Development and the ERO Rules of Procedure.

TPL-005 and TPL-006, which require regional and inter-regional assessments based on the system performance requirements stated in TPL-001 through TPL-004, need to be modified or retired to address the "fill-in-the blank" components and establish requirements within the standards or through a contractual arrangement as to which entity should perform and provide the subject assessment and data. If these requirements are addressed through the delegation agreements each Region has with the Electric Reliability Organization (ERO), TPL-005 and TPL-006 could be retired.

The intent is to comprehensively address all necessary revisions to the entire set of TPL Standards:

TPL-001 — System Performance under Normal Conditions
TPL-002 — System Performance Following Loss of a Single BES Element
TPL-003 — System Performance Following Loss of Two or More BES Elements
TPL-004 — System Performance Following Extreme BES Events
TPL-005 — Regional and Interregional Self-Assessment Reliability Reports
TPL-006 — Data from the Regional Reliability Organization Needed to Assess Reliability

Please review the SAR and then answer the questions on the following page. Please submit the completed form by e-mail to sarcomm@nerc.com with the words "TPL Supplement SAR" in the subject line by **March 16, 2007**.

You do not have to answer all questions.

Insert a "check" mark in the appropriate boxes by double-clicking the gray areas.

1. Do you believe that there is a reliability-related need to provide additional detail, including specific issues for consideration, to the requirements in this set of standards as proposed in this supplemental SAR?

   ☒ Yes

   ☐ No

   Comments: I believe that most of the additional information contained in the draft 'supplemental' SAR is valuable and will assist the SDT in addressing the various stakeholder concerns. I am concerned with conflicting information addressed below.

   I am not familiar with the concept of a supplemental SAR and am not sure if there are going to be two SARs now, or if this new effort supercedes the existing SAR. This is especially a concern when there appear to be differences between them regarding functional applicabilities and principles, as well as the expansion of scope.

   I understand the Standards Development Procedure to require the original SAR to be modified, when it states, "If the standard drafting team determines it is necessary to expand the scope of the standard ot to modify the scope in a way that is no longer consistent with the scope defined in the SAR, then the drafting team may initiate or recommend another requestor initiate a new SAR (Step 1) to develop the expanded or modified scope. At no time will a drafting team develop a standard that is not within the scope ot the SAR that was authorized for development."

2. Do you agree with the expanded scope of the proposed project as set forth in this supplemental SAR? (The scope includes all the items noted on the "Standard Review Forms" attached to the SAR as well as other improvements to the standards that meet the consensus of stakeholders, consistent with establishing high-quality, enforceable, and technically sufficient bulk power system reliability standards. Please consider these items as non-mandatory and only for consideration by the drafting team.)

   ☐ Yes

   ☒ No

   Comments: The approved SAR is of type 'New Standard' while the supplemental SAR type is not, but rather, 'Revision to existing Standards' as well as, 'Withdraw of existing Standard (possible)'.

   Regarding the Reliability Function Applicabilities, the supplemental SAR does not include the Reliability Authority or the Planning Authority which were included in the approved SAR, and the supplemental SAR includes the Resource Planner and Generation Owner functions, which are not included in the approved SAR. I believe that the Planning Authority needs to be addressed in terms of the FERC NOPR discussion, summarized on pages B3 and B4 of the supplemental SAR.

   The supplemental SAR includes item 7 in the Applicable Reliability Principles, while the approved SAR does not.

If there are going to be two SARs then I believe that the supplemental SAR should include the previously approved SAR in the 'Related SARs' section on page 7.

The concise summaries of the Version 0 Industry comments are appreciated, but these should be made more clear in that these will probably become key to any actual changes to planning contingencies. For example, it is not clear what, 'Address deliverability of generation to load' means. Also, does, 'Don't include generation runback or redispatch' mean that this shouldn't be addressed or that the standard should be worded to specifically not include them. Other terms such as, 'Don't include planning outage', and 'single terminals are not included' should also be more thoroughly described.

3. Do you think that there are any additional revisions that should be incorporated into this set of standards, beyond those that have already been identified in the April 30, 2006 version of the original SAR and this supplemental SAR?

   ☐ Yes

   ☐ No

   Comments:

Comment Form — SAR to Supplement the SAR for Assess Transmission Future Needs and Develop Transmission Plans

Please use this form to submit comments on the proposed SAR to Supplement the SAR for Assess Transmission Future Needs and Develop Transmission Plans. Comments must be submitted by **March 16, 2007**. You may submit the completed form by e-mail to sarcomm@nerc.com with the words "TPL Supplement SAR" in the subject line. If you have questions please contact Ed Dobrowolski at ed.dobrowoski@nerc.net or by telephone at 609-452-8060.

Individual Commenter Information **(Complete this page for comments from one organization or individual.)**		
Name:	Roger Champagne	
Organization:	Hydro-Québec TransÉnergie	
Telephone:	514 289-2211, X 2766	
E-mail:	champagne.roger.2@hydro.qc.ca	
NERC Region		**Registered Ballot Body Segment**
☐ **ERCOT**	☒	1 — Transmission Owners
☐ **FRCC**	☐	2 — RTOs, or ISOs
☐ **MRO**	☐	3 — Load-serving Entities
☒ **NPCC**	☐	4 — Transmission-dependent Utilities
☐ **RFC**	☐	5 — Electric Generators
☐ **SERC**	☐	6 — Electricity Brokers, Aggregators, and Marketers
☐ **SPP**	☐	7 — Large Electricity End Users
☐ **WECC**	☐	8 — Small Electricity End Users
☐ **NA – Not Applicable**	☐	9 — Federal, State, Provincial Regulatory or other Government Entities
	☐	10 – Regional Reliability Organizations, or Regional Entities

Group Comments (Complete this page if comments are from a group.)

Group Name:

Lead Contact:

Contact Organization:

Contact Segment:

Contact Telephone:

Contact E-mail:

Additional Member Name	Additional Member Organization	Region*	Segment*

*If more than one region or segment applies, indicate the best fit for the purpose of these comments. Regional acronyms and segment numbers are shown on prior page.

Background Information

This SAR is intended to supplement the already-approved SAR for Assess Transmission Future Needs and Develop Transmission Plans dated April 30, 2006. The Assess Transmission Future Needs and Develop Transmission Plans SAR includes revisions to TPL-001 through TPL-004 with the primary focus to clarify the associated Table 1, Transmission System Standards – Normal and Emergency Conditions, used to identify the criteria for system assessments.

The supplementary SAR would expand the scope or the original SAR to include TPL-005 and TPL-006 and upgrade the entire set of standards (TPL-001 through TPL-006) to conform to the latest version of the Reliability Standards Procedure Development and the ERO Rules of Procedure.

TPL-005 and TPL-006, which require regional and inter-regional assessments based on the system performance requirements stated in TPL-001 through TPL-004, need to be modified or retired to address the "fill-in-the blank" components and establish requirements within the standards or through a contractual arrangement as to which entity should perform and provide the subject assessment and data. If these requirements are addressed through the delegation agreements each Region has with the Electric Reliability Organization (ERO), TPL-005 and TPL-006 could be retired.

The intent is to comprehensively address all necessary revisions to the entire set of TPL Standards:

TPL-001 — System Performance under Normal Conditions
TPL-002 — System Performance Following Loss of a Single BES Element
TPL-003 — System Performance Following Loss of Two or More BES Elements
TPL-004 — System Performance Following Extreme BES Events
TPL-005 — Regional and Interregional Self-Assessment Reliability Reports
TPL-006 — Data from the Regional Reliability Organization Needed to Assess Reliability

Please review the SAR and then answer the questions on the following page. Please submit the completed form by e-mail to sarcomm@nerc.com with the words "TPL Supplement SAR" in the subject line by **March 16, 2007**.

You do not have to answer all questions.

Insert a "check" mark in the appropriate boxes by double-clicking the gray areas.

1. Do you believe that there is a reliability-related need to provide additional detail, including specific issues for consideration, to the requirements in this set of standards as proposed in this supplemental SAR?

   ☒ Yes

   ☐ No

   Comments:

2. Do you agree with the expanded scope of the proposed project as set forth in this supplemental SAR? (The scope includes all the items noted on the "Standard Review Forms" attached to the SAR as well as other improvements to the standards that meet the consensus of stakeholders, consistent with establishing high-quality, enforceable, and technically sufficient bulk power system reliability standards. Please consider these items as non-mandatory and only for consideration by the drafting team.)

   ☒ Yes

   ☐ No

   Comments:

3. Do you think that there are any additional revisions that should be incorporated into this set of standards, beyond those that have already been identified in the April 30, 2006 version of the original SAR and this supplemental SAR?

   ☐ Yes

   ☒ No

   Comments:

Comment Form — SAR to Supplement the SAR for Assess Transmission Future Needs and Develop Transmission Plans

Please use this form to submit comments on the proposed SAR to Supplement the SAR for Assess Transmission Future Needs and Develop Transmission Plans. Comments must be submitted by **March 16, 2007**. You may submit the completed form by e-mail to sarcomm@nerc.com with the words "TPL Supplement SAR" in the subject line. If you have questions please contact Ed Dobrowolski at ed.dobrowoski@nerc.net or by telephone at 609-452-8060.

Individual Commenter Information **(Complete this page for comments from one organization or individual.)**		
Name:	Ron Falsetti	
Organization:	IESO	
Telephone:	905-855-6187	
E-mail:	ron.falsetti@ieso.ca	
NERC Region		**Registered Ballot Body Segment**
☐ **ERCOT**	☐	1 — Transmission Owners
☐ **FRCC**	☒	2 — RTOs, or ISOs
☐ **MRO**	☐	3 — Load-serving Entities
☒ **NPCC**	☐	4 — Transmission-dependent Utilities
☐ **RFC**	☐	5 — Electric Generators
☐ **SERC**	☐	6 — Electricity Brokers, Aggregators, and Marketers
☐ **SPP**	☐	7 — Large Electricity End Users
☐ **WECC**	☐	8 — Small Electricity End Users
☐ **NA – Not Applicable**	☐	9 — Federal, State, Provincial Regulatory or other Government Entities
	☐	10 – Regional Reliability Organizations, or Regional Entities

Group Comments (Complete this page if comments are from a group.)

Group Name:

Lead Contact:

Contact Organization:

Contact Segment:

Contact Telephone:

Contact E-mail:

Additional Member Name	Additional Member Organization	Region*	Segment*

*If more than one region or segment applies, indicate the best fit for the purpose of these comments. Regional acronyms and segment numbers are shown on prior page.

Background Information

This SAR is intended to supplement the already-approved SAR for Assess Transmission Future Needs and Develop Transmission Plans dated April 30, 2006. The Assess Transmission Future Needs and Develop Transmission Plans SAR includes revisions to TPL-001 through TPL-004 with the primary focus to clarify the associated Table 1, Transmission System Standards – Normal and Emergency Conditions, used to identify the criteria for system assessments.

The supplementary SAR would expand the scope or the original SAR to include TPL-005 and TPL-006 and upgrade the entire set of standards (TPL-001 through TPL-006) to conform to the latest version of the Reliability Standards Procedure Development and the ERO Rules of Procedure.

TPL-005 and TPL-006, which require regional and inter-regional assessments based on the system performance requirements stated in TPL-001 through TPL-004, need to be modified or retired to address the "fill-in-the blank" components and establish requirements within the standards or through a contractual arrangement as to which entity should perform and provide the subject assessment and data. If these requirements are addressed through the delegation agreements each Region has with the Electric Reliability Organization (ERO), TPL-005 and TPL-006 could be retired.

The intent is to comprehensively address all necessary revisions to the entire set of TPL Standards:

TPL-001 — System Performance under Normal Conditions
TPL-002 — System Performance Following Loss of a Single BES Element
TPL-003 — System Performance Following Loss of Two or More BES Elements
TPL-004 — System Performance Following Extreme BES Events
TPL-005 — Regional and Interregional Self-Assessment Reliability Reports
TPL-006 — Data from the Regional Reliability Organization Needed to Assess Reliability

Please review the SAR and then answer the questions on the following page. Please submit the completed form by e-mail to sarcomm@nerc.com with the words "TPL Supplement SAR" in the subject line by **March 16, 2007**.

You do not have to answer all questions.

Insert a "check" mark in the appropriate boxes by double-clicking the gray areas.

1. Do you believe that there is a reliability-related need to provide additional detail, including specific issues for consideration, to the requirements in this set of standards as proposed in this supplemental SAR?

   ☒ Yes

   ☐ No

   Comments:

2. Do you agree with the expanded scope of the proposed project as set forth in this supplemental SAR? (The scope includes all the items noted on the "Standard Review Forms" attached to the SAR as well as other improvements to the standards that meet the consensus of stakeholders, consistent with establishing high-quality, enforceable, and technically sufficient bulk power system reliability standards. Please consider these items as non-mandatory and only for consideration by the drafting team.)

   ☒ Yes

   ☐ No

   Comments:

3. Do you think that there are any additional revisions that should be incorporated into this set of standards, beyond those that have already been identified in the April 30, 2006 version of the original SAR and this supplemental SAR?

   ☐ Yes

   ☒ No

   Comments:

Comment Form — SAR to Supplement the SAR for Assess Transmission Future Needs and Develop Transmission Plans

Please use this form to submit comments on the proposed SAR to Supplement the SAR for Assess Transmission Future Needs and Develop Transmission Plans. Comments must be submitted by **March 16, 2007**. You may submit the completed form by e-mail to sarcomm@nerc.com with the words "TPL Supplement SAR" in the subject line. If you have questions please contact Ed Dobrowolski at ed.dobrowoski@nerc.net or by telephone at 609-452-8060.

Individual Commenter Information **(Complete this page for comments from one organization or individual.)**		
Name:	Kathleen Goodman	
Organization:	ISO New England	
Telephone:	(413) 535-4111	
E-mail:	kgoodman@iso-ne.com	
NERC Region		**Registered Ballot Body Segment**
☐ **ERCOT**	☐	1 — Transmission Owners
☐ **FRCC**	☒	2 — RTOs, or ISOs
☐ **MRO**	☐	3 — Load-serving Entities
☒ **NPCC**	☐	4 — Transmission-dependent Utilities
☐ **RFC**	☐	5 — Electric Generators
☐ **SERC**	☐	6 — Electricity Brokers, Aggregators, and Marketers
☐ **SPP**	☐	7 — Large Electricity End Users
☐ **WECC**	☐	8 — Small Electricity End Users
☐ **NA – Not Applicable**	☐	9 — Federal, State, Provincial Regulatory or other Government Entities
	☐	10 – Regional Reliability Organizations, or Regional Entities

Group Comments (Complete this page if comments are from a group.)

Group Name:

Lead Contact:

Contact Organization:

Contact Segment:

Contact Telephone:

Contact E-mail:

Additional Member Name	Additional Member Organization	Region*	Segment*

*If more than one region or segment applies, indicate the best fit for the purpose of these comments. Regional acronyms and segment numbers are shown on prior page.

Background Information

This SAR is intended to supplement the already-approved SAR for Assess Transmission Future Needs and Develop Transmission Plans dated April 30, 2006. The Assess Transmission Future Needs and Develop Transmission Plans SAR includes revisions to TPL-001 through TPL-004 with the primary focus to clarify the associated Table 1, Transmission System Standards – Normal and Emergency Conditions, used to identify the criteria for system assessments.

The supplementary SAR would expand the scope or the original SAR to include TPL-005 and TPL-006 and upgrade the entire set of standards (TPL-001 through TPL-006) to conform to the latest version of the Reliability Standards Procedure Development and the ERO Rules of Procedure.

TPL-005 and TPL-006, which require regional and inter-regional assessments based on the system performance requirements stated in TPL-001 through TPL-004, need to be modified or retired to address the "fill-in-the blank" components and establish requirements within the standards or through a contractual arrangement as to which entity should perform and provide the subject assessment and data. If these requirements are addressed through the delegation agreements each Region has with the Electric Reliability Organization (ERO), TPL-005 and TPL-006 could be retired.

The intent is to comprehensively address all necessary revisions to the entire set of TPL Standards:

TPL-001 — System Performance under Normal Conditions
TPL-002 — System Performance Following Loss of a Single BES Element
TPL-003 — System Performance Following Loss of Two or More BES Elements
TPL-004 — System Performance Following Extreme BES Events
TPL-005 — Regional and Interregional Self-Assessment Reliability Reports
TPL-006 — Data from the Regional Reliability Organization Needed to Assess Reliability

Please review the SAR and then answer the questions on the following page. Please submit the completed form by e-mail to sarcomm@nerc.com with the words "TPL Supplement SAR" in the subject line by **March 16, 2007**.

You do not have to answer all questions.

Insert a "check" mark in the appropriate boxes by double-clicking the gray areas.

1. Do you believe that there is a reliability-related need to provide additional detail, including specific issues for consideration, to the requirements in this set of standards as proposed in this supplemental SAR?

   ☒ Yes

   ☐ No

   Comments:

2. Do you agree with the expanded scope of the proposed project as set forth in this supplemental SAR? (The scope includes all the items noted on the "Standard Review Forms" attached to the SAR as well as other improvements to the standards that meet the consensus of stakeholders, consistent with establishing high-quality, enforceable, and technically sufficient bulk power system reliability standards. Please consider these items as non-mandatory and only for consideration by the drafting team.)

   ☐ Yes

   ☒ No

   Comments: We do not support a long-term planning standards applying to RCs. The NERC functional model is very clear that RCs are operational entities. Is the intent to replace RRO with RC for the fill-in-the-blank standards? That would be an inappropriate solution. A more appropriate solution would be to consider replacing the RRO with the planning coordinator.

   We also do not understand how a transmission planning standard could apply to the additional functional entities: Transmission Owner and Generator Owner.

3. Do you think that there are any additional revisions that should be incorporated into this set of standards, beyond those that have already been identified in the April 30, 2006 version of the original SAR and this supplemental SAR?

   ☐ Yes

   ☒ No

   Comments:

Comment Form — SAR to Supplement the SAR for Assess Transmission Future Needs and Develop Transmission Plans

Please use this form to submit comments on the proposed SAR to Supplement the SAR for Assess Transmission Future Needs and Develop Transmission Plans. Comments must be submitted by **March 16, 2007**. You may submit the completed form by e-mail to sarcomm@nerc.com with the words "TPL Supplement SAR" in the subject line. If you have questions please contact Ed Dobrowolski at ed.dobrowoski@nerc.net or by telephone at 609-452-8060.

Individual Commenter Information **(Complete this page for comments from one organization or individual.)**		
Name:	Brian Thumm	
Organization:	ITC Transmission	
Telephone:	248.374.7846	
E-mail:	bthumm@itctransco.com	
NERC Region		**Registered Ballot Body Segment**
☐ **ERCOT**	☒	1 — Transmission Owners
☐ **FRCC**	☐	2 — RTOs, or ISOs
☐ **MRO**	☐	3 — Load-serving Entities
☐ **NPCC**	☐	4 — Transmission-dependent Utilities
☒ **RFC**	☐	5 — Electric Generators
☐ **SERC**	☐	6 — Electricity Brokers, Aggregators, and Marketers
☐ **SPP**	☐	7 — Large Electricity End Users
☐ **WECC**	☐	8 — Small Electricity End Users
☐ **NA – Not Applicable**	☐	9 — Federal, State, Provincial Regulatory or other Government Entities
	☐	10 – Regional Reliability Organizations, or Regional Entities

Group Comments (Complete this page if comments are from a group.)

Group Name:

Lead Contact:

Contact Organization:

Contact Segment:

Contact Telephone:

Contact E-mail:

Additional Member Name	Additional Member Organization	Region*	Segment*

*If more than one region or segment applies, indicate the best fit for the purpose of these comments. Regional acronyms and segment numbers are shown on prior page.

Background Information

This SAR is intended to supplement the already-approved SAR for Assess Transmission Future Needs and Develop Transmission Plans dated April 30, 2006. The Assess Transmission Future Needs and Develop Transmission Plans SAR includes revisions to TPL-001 through TPL-004 with the primary focus to clarify the associated Table 1, Transmission System Standards – Normal and Emergency Conditions, used to identify the criteria for system assessments.

The supplementary SAR would expand the scope or the original SAR to include TPL-005 and TPL-006 and upgrade the entire set of standards (TPL-001 through TPL-006) to conform to the latest version of the Reliability Standards Procedure Development and the ERO Rules of Procedure.

TPL-005 and TPL-006, which require regional and inter-regional assessments based on the system performance requirements stated in TPL-001 through TPL-004, need to be modified or retired to address the "fill-in-the blank" components and establish requirements within the standards or through a contractual arrangement as to which entity should perform and provide the subject assessment and data. If these requirements are addressed through the delegation agreements each Region has with the Electric Reliability Organization (ERO), TPL-005 and TPL-006 could be retired.

The intent is to comprehensively address all necessary revisions to the entire set of TPL Standards:

TPL-001 — System Performance under Normal Conditions
TPL-002 — System Performance Following Loss of a Single BES Element
TPL-003 — System Performance Following Loss of Two or More BES Elements
TPL-004 — System Performance Following Extreme BES Events
TPL-005 — Regional and Interregional Self-Assessment Reliability Reports
TPL-006 — Data from the Regional Reliability Organization Needed to Assess Reliability

Please review the SAR and then answer the questions on the following page. Please submit the completed form by e-mail to sarcomm@nerc.com with the words "TPL Supplement SAR" in the subject line by **March 16, 2007**.

You do not have to answer all questions.

Insert a "check" mark in the appropriate boxes by double-clicking the gray areas.

1. Do you believe that there is a reliability-related need to provide additional detail, including specific issues for consideration, to the requirements in this set of standards as proposed in this supplemental SAR?

   ☒ Yes

   ☐ No

   Comments: The original SAR did a good job of capturing many of the reliability improvements necessary to the TPL Standards. Now that additional information is available from the various stakeholder groups and drafting teams, it is clear that additional reliability-related improvements to the Standards can be made. It is not clear how to quantify the additional improvement the supplemental SAR will make to the existing Standard Drafting effort, but certqainly there are additional reliability improvements to be made to each of the subject Standards.

2. Do you agree with the expanded scope of the proposed project as set forth in this supplemental SAR? (The scope includes all the items noted on the "Standard Review Forms" attached to the SAR as well as other improvements to the standards that meet the consensus of stakeholders, consistent with establishing high-quality, enforceable, and technically sufficient bulk power system reliability standards. Please consider these items as non-mandatory and only for consideration by the drafting team.)

   ☐ Yes

   ☒ No

   Comments: Standard Drafting Teams should not be responding so heavily to comments made by FERC in a NOPR. The NOPR is just that … "Proposed." There may be additional changes required as a result of the final Rule. The final Rule may even negate some of the proposed changes made in the NOPR. If the drafting team thinks that FERC hit on a good idea for improvement, then it would be appropriate for inclusion in the Standard, but simply to make changes to a Standard because an idea surfaced in a Proposed Rule is premature.

3. Do you think that there are any additional revisions that should be incorporated into this set of standards, beyond those that have already been identified in the April 30, 2006 version of the original SAR and this supplemental SAR?

   ☐ Yes

   ☒ No

   Comments:

Comment Form — SAR to Supplement the SAR for Assess Transmission Future Needs and Develop Transmission Plans

Please use this form to submit comments on the proposed SAR to Supplement the SAR for Assess Transmission Future Needs and Develop Transmission Plans. Comments must be submitted by **March 16, 2007**. You may submit the completed form by e-mail to sarcomm@nerc.com with the words "TPL Supplement SAR" in the subject line. If you have questions please contact Ed Dobrowolski at ed.dobrowoski@nerc.net or by telephone at 609-452-8060.

Individual Commenter Information **(Complete this page for comments from one organization or individual.)**		
Name:	Michael Gammon	
Organization:	Kansas City Power & Light	
Telephone:	816-654-1242	
E-mail:	mike.gammon@kcpl.com	
NERC Region		**Registered Ballot Body Segment**
☐ **ERCOT**	☒	1 — Transmission Owners
☐ **FRCC**	☐	2 — RTOs, or ISOs
☐ **MRO**	☐	3 — Load-serving Entities
☐ **NPCC**	☐	4 — Transmission-dependent Utilities
☐ **RFC**	☐	5 — Electric Generators
☐ **SERC**	☐	6 — Electricity Brokers, Aggregators, and Marketers
☒ **SPP**	☐	7 — Large Electricity End Users
☐ **WECC**	☐	8 — Small Electricity End Users
☐ **NA – Not Applicable**	☐	9 — Federal, State, Provincial Regulatory or other Government Entities
	☐	10 – Regional Reliability Organizations, or Regional Entities

Group Comments (Complete this page if comments are from a group.)

Group Name:

Lead Contact:

Contact Organization:

Contact Segment:

Contact Telephone:

Contact E-mail:

Additional Member Name	Additional Member Organization	Region*	Segment*

*If more than one region or segment applies, indicate the best fit for the purpose of these comments. Regional acronyms and segment numbers are shown on prior page.

Background Information

This SAR is intended to supplement the already-approved SAR for Assess Transmission Future Needs and Develop Transmission Plans dated April 30, 2006. The Assess Transmission Future Needs and Develop Transmission Plans SAR includes revisions to TPL-001 through TPL-004 with the primary focus to clarify the associated Table 1, Transmission System Standards – Normal and Emergency Conditions, used to identify the criteria for system assessments.

The supplementary SAR would expand the scope or the original SAR to include TPL-005 and TPL-006 and upgrade the entire set of standards (TPL-001 through TPL-006) to conform to the latest version of the Reliability Standards Procedure Development and the ERO Rules of Procedure.

TPL-005 and TPL-006, which require regional and inter-regional assessments based on the system performance requirements stated in TPL-001 through TPL-004, need to be modified or retired to address the "fill-in-the blank" components and establish requirements within the standards or through a contractual arrangement as to which entity should perform and provide the subject assessment and data. If these requirements are addressed through the delegation agreements each Region has with the Electric Reliability Organization (ERO), TPL-005 and TPL-006 could be retired.

The intent is to comprehensively address all necessary revisions to the entire set of TPL Standards:

TPL-001 — System Performance under Normal Conditions
TPL-002 — System Performance Following Loss of a Single BES Element
TPL-003 — System Performance Following Loss of Two or More BES Elements
TPL-004 — System Performance Following Extreme BES Events
TPL-005 — Regional and Interregional Self-Assessment Reliability Reports
TPL-006 — Data from the Regional Reliability Organization Needed to Assess Reliability

Please review the SAR and then answer the questions on the following page. Please submit the completed form by e-mail to sarcomm@nerc.com with the words "TPL Supplement SAR" in the subject line by **March 16, 2007**.

You do not have to answer all questions.

Insert a "check" mark in the appropriate boxes by double-clicking the gray areas.

1. Do you believe that there is a reliability-related need to provide additional detail, including specific issues for consideration, to the requirements in this set of standards as proposed in this supplemental SAR?

   ☒ Yes

   ☐ No

   Comments:

2. Do you agree with the expanded scope of the proposed project as set forth in this supplemental SAR? (The scope includes all the items noted on the "Standard Review Forms" attached to the SAR as well as other improvements to the standards that meet the consensus of stakeholders, consistent with establishing high-quality, enforceable, and technically sufficient bulk power system reliability standards. Please consider these items as non-mandatory and only for consideration by the drafting team.)

   ☒ Yes

   ☐ No

   Comments:

3. Do you think that there are any additional revisions that should be incorporated into this set of standards, beyond those that have already been identified in the April 30, 2006 version of the original SAR and this supplemental SAR?

   ☐ Yes

   ☒ No

   Comments:

Comment Form — SAR to Supplement the SAR for Assess Transmission Future Needs and Develop Transmission Plans

Please use this form to submit comments on the proposed SAR to Supplement the SAR for Assess Transmission Future Needs and Develop Transmission Plans. Comments must be submitted by **March 16, 2007**. You may submit the completed form by e-mail to sarcomm@nerc.com with the words "TPL Supplement SAR" in the subject line. If you have questions please contact Ed Dobrowolski at ed.dobrowoski@nerc.net or by telephone at 609-452-8060.

Individual Commenter Information **(Complete this page for comments from one organization or individual.)**		
Name:	Ron Mazur	
Organization:	Manitoba Hydro	
Telephone:	(204) 474-3113	
E-mail:	rwmazur@hydro.mb.ca	
NERC Region		**Registered Ballot Body Segment**
☐ **ERCOT**	☒	1 — Transmission Owners
☐ **FRCC**	☐	2 — RTOs, or ISOs
☒ **MRO**	☒	3 — Load-serving Entities
☐ **NPCC**	☐	4 — Transmission-dependent Utilities
☐ **RFC**	☒	5 — Electric Generators
☐ **SERC**	☒	6 — Electricity Brokers, Aggregators, and Marketers
☐ **SPP**	☐	7 — Large Electricity End Users
☐ **WECC**	☐	8 — Small Electricity End Users
☐ **NA – Not Applicable**	☐	9 — Federal, State, Provincial Regulatory or other Government Entities
	☐	10 – Regional Reliability Organizations, or Regional Entities

Group Comments (Complete this page if comments are from a group.)

Group Name:

Lead Contact:

Contact Organization:

Contact Segment:

Contact Telephone:

Contact E-mail:

Additional Member Name	Additional Member Organization	Region*	Segment*

*If more than one region or segment applies, indicate the best fit for the purpose of these comments. Regional acronyms and segment numbers are shown on prior page.

Background Information

This SAR is intended to supplement the already-approved SAR for Assess Transmission Future Needs and Develop Transmission Plans dated April 30, 2006. The Assess Transmission Future Needs and Develop Transmission Plans SAR includes revisions to TPL-001 through TPL-004 with the primary focus to clarify the associated Table 1, Transmission System Standards – Normal and Emergency Conditions, used to identify the criteria for system assessments.

The supplementary SAR would expand the scope or the original SAR to include TPL-005 and TPL-006 and upgrade the entire set of standards (TPL-001 through TPL-006) to conform to the latest version of the Reliability Standards Procedure Development and the ERO Rules of Procedure.

TPL-005 and TPL-006, which require regional and inter-regional assessments based on the system performance requirements stated in TPL-001 through TPL-004, need to be modified or retired to address the "fill-in-the blank" components and establish requirements within the standards or through a contractual arrangement as to which entity should perform and provide the subject assessment and data. If these requirements are addressed through the delegation agreements each Region has with the Electric Reliability Organization (ERO), TPL-005 and TPL-006 could be retired.

The intent is to comprehensively address all necessary revisions to the entire set of TPL Standards:

TPL-001 — System Performance under Normal Conditions
TPL-002 — System Performance Following Loss of a Single BES Element
TPL-003 — System Performance Following Loss of Two or More BES Elements
TPL-004 — System Performance Following Extreme BES Events
TPL-005 — Regional and Interregional Self-Assessment Reliability Reports
TPL-006 — Data from the Regional Reliability Organization Needed to Assess Reliability

Please review the SAR and then answer the questions on the following page. Please submit the completed form by e-mail to sarcomm@nerc.com with the words "TPL Supplement SAR" in the subject line by **March 16, 2007**.

You do not have to answer all questions.

Insert a "check" mark in the appropriate boxes by double-clicking the gray areas.

1. Do you believe that there is a reliability-related need to provide additional detail, including specific issues for consideration, to the requirements in this set of standards as proposed in this supplemental SAR?

   ☒ Yes

   ☐ No

   Comments: Manitoba Hydro believes the planning standards should ensure that complete and consistent assessments are conducted by the responsible entities.

2. Do you agree with the expanded scope of the proposed project as set forth in this supplemental SAR? (The scope includes all the items noted on the "Standard Review Forms" attached to the SAR as well as other improvements to the standards that meet the consensus of stakeholders, consistent with establishing high-quality, enforceable, and technically sufficient bulk power system reliability standards. Please consider these items as non-mandatory and only for consideration by the drafting team.)

   ☒ Yes

   ☐ No

   Comments: Manitoba Hydro agrees in principle with the expanded scope, but believes that this scope should be a part of the Standards Development Procedures manual so all stakeholdrs have a voice in the requirements in Appendix A. We have some concern that the SAR gives the drafting team the power to add additional improvements beyond the SAR as this provides an opportunity for SDT members to forward specific owner agendas.

3. Do you think that there are any additional revisions that should be incorporated into this set of standards, beyond those that have already been identified in the April 30, 2006 version of the original SAR and this supplemental SAR?

   ☒ Yes

   ☐ No

   Comments: The SAR should considering adding a requirements to the standards to mandate tests for robustness by doing sensitivity to critical system paramenters such as lload growth rate, load power factor, etc.to provide insight into the margin between the operating point and unacceptable performance. There should also be a specific requirement to assess reactive power adequacy, voltage stability and system damping.

Comment Form — SAR to Supplement the SAR for Assess Transmission Future Needs and Develop Transmission Plans

Please use this form to submit comments on the proposed SAR to Supplement the SAR for Assess Transmission Future Needs and Develop Transmission Plans. Comments must be submitted by **March 16, 2007**. You may submit the completed form by e-mail to sarcomm@nerc.com with the words "TPL Supplement SAR" in the subject line. If you have questions please contact Ed Dobrowolski at ed.dobrowoski@nerc.net or by telephone at 609-452-8060.

Individual Commenter Information **(Complete this page for comments from one organization or individual.)**		
Name:		
Organization:		
Telephone:		
E-mail:		
NERC Region		**Registered Ballot Body Segment**
☐ **ERCOT**	☐	1 — Transmission Owners
☐ **FRCC**	☐	2 — RTOs, or ISOs
☐ **MRO**	☐	3 — Load-serving Entities
☐ **NPCC**	☐	4 — Transmission-dependent Utilities
☐ **RFC**	☐	5 — Electric Generators
☐ **SERC**	☐	6 — Electricity Brokers, Aggregators, and Marketers
☐ **SPP**	☐	7 — Large Electricity End Users
☐ **WECC**	☐	8 — Small Electricity End Users
☐ **NA – Not Applicable**	☐	9 — Federal, State, Provincial Regulatory or other Government Entities
	☐	10 – Regional Reliability Organizations, or Regional Entities

Group Comments (Complete this page if comments are from a group.)

Group Name:	Midwest ISO Stakeholders' Standards Collaboration Participants
Lead Contact:	**Jason Marshall**
Contact Organization:	**MISO**
Contact Segment:	**2**
Contact Telephone:	**317-249-5494**
Contact E-mail:	**jmarshall@midwestiso.org**

Additional Member Name	Additional Member Organization	Region*	Segment*
Jim Cyrulewski	**JDRJC Associates**	**RFC**	8

*If more than one region or segment applies, indicate the best fit for the purpose of these comments. Regional acronyms and segment numbers are shown on prior page.

Background Information

This SAR is intended to supplement the already-approved SAR for Assess Transmission Future Needs and Develop Transmission Plans dated April 30, 2006. The Assess Transmission Future Needs and Develop Transmission Plans SAR includes revisions to TPL-001 through TPL-004 with the primary focus to clarify the associated Table 1, Transmission System Standards – Normal and Emergency Conditions, used to identify the criteria for system assessments.

The supplementary SAR would expand the scope or the original SAR to include TPL-005 and TPL-006 and upgrade the entire set of standards (TPL-001 through TPL-006) to conform to the latest version of the Reliability Standards Procedure Development and the ERO Rules of Procedure.

TPL-005 and TPL-006, which require regional and inter-regional assessments based on the system performance requirements stated in TPL-001 through TPL-004, need to be modified or retired to address the "fill-in-the blank" components and establish requirements within the standards or through a contractual arrangement as to which entity should perform and provide the subject assessment and data. If these requirements are addressed through the delegation agreements each Region has with the Electric Reliability Organization (ERO), TPL-005 and TPL-006 could be retired.

The intent is to comprehensively address all necessary revisions to the entire set of TPL Standards:

TPL-001 — System Performance under Normal Conditions
TPL-002 — System Performance Following Loss of a Single BES Element
TPL-003 — System Performance Following Loss of Two or More BES Elements
TPL-004 — System Performance Following Extreme BES Events
TPL-005 — Regional and Interregional Self-Assessment Reliability Reports
TPL-006 — Data from the Regional Reliability Organization Needed to Assess Reliability

Please review the SAR and then answer the questions on the following page. Please submit the completed form by e-mail to sarcomm@nerc.com with the words "TPL Supplement SAR" in the subject line by **March 16, 2007**.

You do not have to answer all questions.

Insert a "check" mark in the appropriate boxes by double-clicking the gray areas.

1. Do you believe that there is a reliability-related need to provide additional detail, including specific issues for consideration, to the requirements in this set of standards as proposed in this supplemental SAR?

   ☒ Yes

   ☐ No

   Comments: As the standards are written now, all of the requirements apply to both the Transmission Planner and Planning Authority. The NERC Functional Model Version 3 replaced the Planning Authority with the Planning Coordinator . The standards should reflect this change as well as the division of responsibilities between Transmission Planner and Planning Coordinator in the functional model.

   Additionally, they should seek to clarify the relationship between Transmission Planner and Planning Coordinator. How many transmission planners can their be per Planning Coordinator. Can there be overlapping Planning Coordinators?

2. Do you agree with the expanded scope of the proposed project as set forth in this supplemental SAR? (The scope includes all the items noted on the "Standard Review Forms" attached to the SAR as well as other improvements to the standards that meet the consensus of stakeholders, consistent with establishing high-quality, enforceable, and technically sufficient bulk power system reliability standards. Please consider these items as non-mandatory and only for consideration by the drafting team.)

   ☐ Yes

   ☒ No

   Comments: We do not support a long-term planning standards applying to RCs. The NERC functional model is very clear that RCs are operational entities. Is the intent to replace RRO with RC for the fill-in-the-blank standards? That would be an inappropriate solution. A more appropriate solution would be to consider replacing the RRO with the planning coordinator.

3. Do you think that there are any additional revisions that should be incorporated into this set of standards, beyond those that have already been identified in the April 30, 2006 version of the original SAR and this supplemental SAR?

   ☐ Yes

   ☒ No

   Comments:

Comment Form — SAR to Supplement the SAR for Assess Transmission Future Needs and Develop Transmission Plans

Please use this form to submit comments on the proposed SAR to Supplement the SAR for Assess Transmission Future Needs and Develop Transmission Plans. Comments must be submitted by **March 16, 2007**. You may submit the completed form by e-mail to sarcomm@nerc.com with the words "TPL Supplement SAR" in the subject line. If you have questions please contact Ed Dobrowolski at ed.dobrowoski@nerc.net or by telephone at 609-452-8060.

Individual Commenter Information **(Complete this page for comments from one organization or individual.)**		
Name:		
Organization:		
Telephone:		
E-mail:		
NERC Region		**Registered Ballot Body Segment**
☐ **ERCOT**	☐	1 — Transmission Owners
☐ **FRCC**	☐	2 — RTOs, or ISOs
☐ **MRO**	☐	3 — Load-serving Entities
☐ **NPCC**	☐	4 — Transmission-dependent Utilities
☐ **RFC**	☐	5 — Electric Generators
☐ **SERC**	☐	6 — Electricity Brokers, Aggregators, and Marketers
☐ **SPP**	☐	7 — Large Electricity End Users
☐ **WECC**	☐	8 — Small Electricity End Users
☐ **NA – Not Applicable**	☐	9 — Federal, State, Provincial Regulatory or other Government Entities
	☐	10 – Regional Reliability Organizations, or Regional Entities

Group Comments (Complete this page if comments are from a group.)

Group Name: Midwest Reliability Organization (MRO)

Lead Contact: **David Rudolph**

Contact Organization: **MRO for Group (MidAmerican for Contact)**

Contact Segment: **10**

Contact Telephone: **701-355-5722**

Contact E-mail: **drudolph@bepc.com**

Additional Member Name	Additional Member Organization	Region*	Segment*
Neal Balu	WPSR	MRO	10
Terry Bilke	MISO	MRO	10
Al Boesch	NPPD	MRO	10
Robert Coish, Chair	MHEB	MRO	10
Carol Gerou	MP	MRO	10
Ken Goldsmith	ALT	MRO	10
Todd Gosnell	OPPD	MRO	10
Jim Haigh	WAPA	MRO	10
Pam Oreschnik	XCEL	MRO	10
Dick Pursley	GRE	MRO	10
Dave Rudolph	BEPC	MRO	10
Eric Ruskamp	LES	MRO	10
Mike Brytowski, Secretary	MRO	MRO	10
27 Additional MRO Members	Not Named Above	MRO	10

*If more than one region or segment applies, indicate the best fit for the purpose of these comments. Regional acronyms and segment numbers are shown on prior page.

Background Information

This SAR is intended to supplement the already-approved SAR for Assess Transmission Future Needs and Develop Transmission Plans dated April 30, 2006. The Assess Transmission Future Needs and Develop Transmission Plans SAR includes revisions to TPL-001 through TPL-004 with the primary focus to clarify the associated Table 1, Transmission System Standards – Normal and Emergency Conditions, used to identify the criteria for system assessments.

The supplementary SAR would expand the scope or the original SAR to include TPL-005 and TPL-006 and upgrade the entire set of standards (TPL-001 through TPL-006) to conform to the latest version of the Reliability Standards Procedure Development and the ERO Rules of Procedure.

TPL-005 and TPL-006, which require regional and inter-regional assessments based on the system performance requirements stated in TPL-001 through TPL-004, need to be modified or retired to address the "fill-in-the blank" components and establish requirements within the standards or through a contractual arrangement as to which entity should perform and provide the subject assessment and data. If these requirements are addressed through the delegation agreements each Region has with the Electric Reliability Organization (ERO), TPL-005 and TPL-006 could be retired.

The intent is to comprehensively address all necessary revisions to the entire set of TPL Standards:

TPL-001 — System Performance under Normal Conditions
TPL-002 — System Performance Following Loss of a Single BES Element
TPL-003 — System Performance Following Loss of Two or More BES Elements
TPL-004 — System Performance Following Extreme BES Events
TPL-005 — Regional and Interregional Self-Assessment Reliability Reports
TPL-006 — Data from the Regional Reliability Organization Needed to Assess Reliability

Please review the SAR and then answer the questions on the following page. Please submit the completed form by e-mail to sarcomm@nerc.com with the words "TPL Supplement SAR" in the subject line by **March 16, 2007**.

You do not have to answer all questions.

Insert a "check" mark in the appropriate boxes by double-clicking the gray areas.

1. Do you believe that there is a reliability-related need to provide additional detail, including specific issues for consideration, to the requirements in this set of standards as proposed in this supplemental SAR?

   ☒ Yes

   ☐ No

   Comments:

2. Do you agree with the expanded scope of the proposed project as set forth in this supplemental SAR? (The scope includes all the items noted on the "Standard Review Forms" attached to the SAR as well as other improvements to the standards that meet the consensus of stakeholders, consistent with establishing high-quality, enforceable, and technically sufficient bulk power system reliability standards. Please consider these items as non-mandatory and only for consideration by the drafting team.)

   ☒ Yes

   ☐ No

   Comments:

3. Do you think that there are any additional revisions that should be incorporated into this set of standards, beyond those that have already been identified in the April 30, 2006 version of the original SAR and this supplemental SAR?

   ☐ Yes

   ☒ No

   Comments:

Comment Form — SAR to Supplement the SAR for Assess Transmission Future Needs and Develop Transmission Plans

Please use this form to submit comments on the proposed SAR to Supplement the SAR for Assess Transmission Future Needs and Develop Transmission Plans. Comments must be submitted by **March 16, 2007**. You may submit the completed form by e-mail to sarcomm@nerc.com with the words "TPL Supplement SAR" in the subject line. If you have questions please contact Ed Dobrowolski at ed.dobrowoski@nerc.net or by telephone at 609-452-8060.

Individual Commenter Information **(Complete this page for comments from one organization or individual.)**		
Name:		
Organization:		
Telephone:		
E-mail:		
NERC Region		**Registered Ballot Body Segment**
☐ **ERCOT**	☐	1 — Transmission Owners
☐ **FRCC**	☐	2 — RTOs, or ISOs
☐ **MRO**	☐	3 — Load-serving Entities
☒ **NPCC**	☐	4 — Transmission-dependent Utilities
☐ **RFC**	☐	5 — Electric Generators
☐ **SERC**	☐	6 — Electricity Brokers, Aggregators, and Marketers
☐ **SPP**	☐	7 — Large Electricity End Users
☐ **WECC**	☐	8 — Small Electricity End Users
☐ **NA – Not Applicable**	☐	9 — Federal, State, Provincial Regulatory or other Government Entities
	☒	10 – Regional Reliability Organizations, or Regional Entities

Group Comments (Complete this page if comments are from a group.)

Group Name: NPCC CP9 Working Group

Lead Contact: **Guy V. Zito**

Contact Organization: **Northeast Power Coordinating Council**

Contact Segment: **10**

Contact Telephone: **212-840-1070**

Contact E-mail: **gzito@npcc.org**

Additional Member Name	Additional Member Organization	Region*	Segment*
Ralph Rufrano	New York Power Authority	NPCC	1
Ed Thompson	ConEdison	NPCC	1
Al Adamson	New York Power Authority	NPCC	2
Kathleen Goodman	ISO-New England	NPCC	2
Roger Champagne	TransEnergie HydroQuebec	NPCC	1
Ron Falsetti	The IESO	NPCC	2
Murale Gopinathan	Northeast Utilities	NPCC	1
Greg Campoli	New York ISO	NPCC	2
Randy Macdonald	New Brunswick System Operator	NPCC	2
Guy Zito	Northeast Power Coordinating Council	NPCC	10

*If more than one region or segment applies, indicate the best fit for the purpose of these comments. Regional acronyms and segment numbers are shown on prior page.

Background Information

This SAR is intended to supplement the already-approved SAR for Assess Transmission Future Needs and Develop Transmission Plans dated April 30, 2006. The Assess Transmission Future Needs and Develop Transmission Plans SAR includes revisions to TPL-001 through TPL-004 with the primary focus to clarify the associated Table 1, Transmission System Standards – Normal and Emergency Conditions, used to identify the criteria for system assessments.

The supplementary SAR would expand the scope or the original SAR to include TPL-005 and TPL-006 and upgrade the entire set of standards (TPL-001 through TPL-006) to conform to the latest version of the Reliability Standards Procedure Development and the ERO Rules of Procedure.

TPL-005 and TPL-006, which require regional and inter-regional assessments based on the system performance requirements stated in TPL-001 through TPL-004, need to be modified or retired to address the "fill-in-the blank" components and establish requirements within the standards or through a contractual arrangement as to which entity should perform and provide the subject assessment and data. If these requirements are addressed through the delegation agreements each Region has with the Electric Reliability Organization (ERO), TPL-005 and TPL-006 could be retired.

The intent is to comprehensively address all necessary revisions to the entire set of TPL Standards:

TPL-001 — System Performance under Normal Conditions
TPL-002 — System Performance Following Loss of a Single BES Element
TPL-003 — System Performance Following Loss of Two or More BES Elements
TPL-004 — System Performance Following Extreme BES Events
TPL-005 — Regional and Interregional Self-Assessment Reliability Reports
TPL-006 — Data from the Regional Reliability Organization Needed to Assess Reliability

Please review the SAR and then answer the questions on the following page. Please submit the completed form by e-mail to sarcomm@nerc.com with the words "TPL Supplement SAR" in the subject line by **March 16, 2007**.

You do not have to answer all questions.

Insert a "check" mark in the appropriate boxes by double-clicking the gray areas.

1. Do you believe that there is a reliability-related need to provide additional detail, including specific issues for consideration, to the requirements in this set of standards as proposed in this supplemental SAR?

   ☒ Yes

   ☐ No

   Comments:

2. Do you agree with the expanded scope of the proposed project as set forth in this supplemental SAR? (The scope includes all the items noted on the "Standard Review Forms" attached to the SAR as well as other improvements to the standards that meet the consensus of stakeholders, consistent with establishing high-quality, enforceable, and technically sufficient bulk power system reliability standards. Please consider these items as non-mandatory and only for consideration by the drafting team.)

   ☒ Yes

   ☐ No

   Comments:

3. Do you think that there are any additional revisions that should be incorporated into this set of standards, beyond those that have already been identified in the April 30, 2006 version of the original SAR and this supplemental SAR?

   ☐ Yes

   ☒ No

   Comments:

Comment Form — SAR to Supplement the SAR for Assess Transmission Future Needs and Develop Transmission Plans

Please use this form to submit comments on the proposed SAR to Supplement the SAR for Assess Transmission Future Needs and Develop Transmission Plans. Comments must be submitted by **March 16, 2007**. You may submit the completed form by e-mail to sarcomm@nerc.com with the words "TPL Supplement SAR" in the subject line. If you have questions please contact Ed Dobrowolski at ed.dobrowoski@nerc.net or by telephone at 609-452-8060.

Individual Commenter Information **(Complete this page for comments from one organization or individual.)**		
Name:	Michael Calimano	
Organization:	New York Independent System Operator	
Telephone:	518-356-6129	
E-mail:	mcalimano@nyiso.com	
NERC Region		**Registered Ballot Body Segment**
☐ **ERCOT**	☐	1 — Transmission Owners
☐ **FRCC**	☒	2 — RTOs, or ISOs
☐ **MRO**	☐	3 — Load-serving Entities
☒ **NPCC**	☐	4 — Transmission-dependent Utilities
☐ **RFC**	☐	5 — Electric Generators
☐ **SERC**	☐	6 — Electricity Brokers, Aggregators, and Marketers
☐ **SPP**	☐	7 — Large Electricity End Users
☐ **WECC**	☐	8 — Small Electricity End Users
☐ **NA – Not Applicable**	☐	9 — Federal, State, Provincial Regulatory or other Government Entities
	☐	10 – Regional Reliability Organizations, or Regional Entities

Group Comments (Complete this page if comments are from a group.)

Group Name:

Lead Contact:

Contact Organization:

Contact Segment:

Contact Telephone:

Contact E-mail:

Additional Member Name	Additional Member Organization	Region*	Segment*

*If more than one region or segment applies, indicate the best fit for the purpose of these comments. Regional acronyms and segment numbers are shown on prior page.

Background Information

This SAR is intended to supplement the already-approved SAR for Assess Transmission Future Needs and Develop Transmission Plans dated April 30, 2006. The Assess Transmission Future Needs and Develop Transmission Plans SAR includes revisions to TPL-001 through TPL-004 with the primary focus to clarify the associated Table 1, Transmission System Standards – Normal and Emergency Conditions, used to identify the criteria for system assessments.

The supplementary SAR would expand the scope or the original SAR to include TPL-005 and TPL-006 and upgrade the entire set of standards (TPL-001 through TPL-006) to conform to the latest version of the Reliability Standards Procedure Development and the ERO Rules of Procedure.

TPL-005 and TPL-006, which require regional and inter-regional assessments based on the system performance requirements stated in TPL-001 through TPL-004, need to be modified or retired to address the "fill-in-the blank" components and establish requirements within the standards or through a contractual arrangement as to which entity should perform and provide the subject assessment and data. If these requirements are addressed through the delegation agreements each Region has with the Electric Reliability Organization (ERO), TPL-005 and TPL-006 could be retired.

The intent is to comprehensively address all necessary revisions to the entire set of TPL Standards:

TPL-001 — System Performance under Normal Conditions
TPL-002 — System Performance Following Loss of a Single BES Element
TPL-003 — System Performance Following Loss of Two or More BES Elements
TPL-004 — System Performance Following Extreme BES Events
TPL-005 — Regional and Interregional Self-Assessment Reliability Reports
TPL-006 — Data from the Regional Reliability Organization Needed to Assess Reliability

Please review the SAR and then answer the questions on the following page. Please submit the completed form by e-mail to sarcomm@nerc.com with the words "TPL Supplement SAR" in the subject line by **March 16, 2007**.

You do not have to answer all questions.

Insert a "check" mark in the appropriate boxes by double-clicking the gray areas.

1. Do you believe that there is a reliability-related need to provide additional detail, including specific issues for consideration, to the requirements in this set of standards as proposed in this supplemental SAR?

   ☒ Yes

   ☐ No

   Comments:

2. Do you agree with the expanded scope of the proposed project as set forth in this supplemental SAR? (The scope includes all the items noted on the "Standard Review Forms" attached to the SAR as well as other improvements to the standards that meet the consensus of stakeholders, consistent with establishing high-quality, enforceable, and technically sufficient bulk power system reliability standards. Please consider these items as non-mandatory and only for consideration by the drafting team.)

   ☐ Yes

   ☒ No

   Comments: It is unclear as to what obligations the RC, TO, and GO would have in a long-term planning standard. The NERC functional model is very clear that RCs are operational entities. The RC, TO, GO ,should not have a direct obligation in the process, but should be a resource for input into the process.

3. Do you think that there are any additional revisions that should be incorporated into this set of standards, beyond those that have already been identified in the April 30, 2006 version of the original SAR and this supplemental SAR?

   ☐ Yes

   ☒ No

   Comments:

Comment Form — SAR to Supplement the SAR for Assess Transmission Future Needs and Develop Transmission Plans

Please use this form to submit comments on the proposed SAR to Supplement the SAR for Assess Transmission Future Needs and Develop Transmission Plans. Comments must be submitted by **March 16, 2007**. You may submit the completed form by e-mail to sarcomm@nerc.com with the words "TPL Supplement SAR" in the subject line. If you have questions please contact Ed Dobrowolski at ed.dobrowoski@nerc.net or by telephone at 609-452-8060.

Individual Commenter Information **(Complete this page for comments from one organization or individual.)**		
Name:	Mark Ringhausen	
Organization:	ODEC	
Telephone:	804-290-2194	
E-mail:	mringhausen@odec.com	
NERC Region		**Registered Ballot Body Segment**
☐ **ERCOT**	☐	1 — Transmission Owners
☐ **FRCC**	☐	2 — RTOs, or ISOs
☐ **MRO**	☐	3 — Load-serving Entities
☐ **NPCC**	☒	4 — Transmission-dependent Utilities
☒ **RFC**	☐	5 — Electric Generators
☒ **SERC**	☐	6 — Electricity Brokers, Aggregators, and Marketers
☐ **SPP**	☐	7 — Large Electricity End Users
☐ **WECC**	☐	8 — Small Electricity End Users
☐ **NA – Not Applicable**	☐	9 — Federal, State, Provincial Regulatory or other Government Entities
	☐	10 – Regional Reliability Organizations, or Regional Entities

Group Comments (Complete this page if comments are from a group.)

Group Name:

Lead Contact:

Contact Organization:

Contact Segment:

Contact Telephone:

Contact E-mail:

Additional Member Name	Additional Member Organization	Region*	Segment*

*If more than one region or segment applies, indicate the best fit for the purpose of these comments. Regional acronyms and segment numbers are shown on prior page.

Background Information

This SAR is intended to supplement the already-approved SAR for Assess Transmission Future Needs and Develop Transmission Plans dated April 30, 2006. The Assess Transmission Future Needs and Develop Transmission Plans SAR includes revisions to TPL-001 through TPL-004 with the primary focus to clarify the associated Table 1, Transmission System Standards – Normal and Emergency Conditions, used to identify the criteria for system assessments.

The supplementary SAR would expand the scope or the original SAR to include TPL-005 and TPL-006 and upgrade the entire set of standards (TPL-001 through TPL-006) to conform to the latest version of the Reliability Standards Procedure Development and the ERO Rules of Procedure.

TPL-005 and TPL-006, which require regional and inter-regional assessments based on the system performance requirements stated in TPL-001 through TPL-004, need to be modified or retired to address the "fill-in-the blank" components and establish requirements within the standards or through a contractual arrangement as to which entity should perform and provide the subject assessment and data. If these requirements are addressed through the delegation agreements each Region has with the Electric Reliability Organization (ERO), TPL-005 and TPL-006 could be retired.

The intent is to comprehensively address all necessary revisions to the entire set of TPL Standards:

TPL-001 — System Performance under Normal Conditions
TPL-002 — System Performance Following Loss of a Single BES Element
TPL-003 — System Performance Following Loss of Two or More BES Elements
TPL-004 — System Performance Following Extreme BES Events
TPL-005 — Regional and Interregional Self-Assessment Reliability Reports
TPL-006 — Data from the Regional Reliability Organization Needed to Assess Reliability

Please review the SAR and then answer the questions on the following page. Please submit the completed form by e-mail to sarcomm@nerc.com with the words "TPL Supplement SAR" in the subject line by **March 16, 2007**.

You do not have to answer all questions.

Insert a "check" mark in the appropriate boxes by double-clicking the gray areas.

1. Do you believe that there is a reliability-related need to provide additional detail, including specific issues for consideration, to the requirements in this set of standards as proposed in this supplemental SAR?

   ☒ Yes

   ☐ No

   Comments: The planning of the transmission system is critical to the reliability of the transmission system. Additional details provided to all stakeholders are crucial to ensure that transmission is built in a timley manner to protect the relability of the system. Also, by making the process and information available to all stakeholders, you ensure that everyone's interest is heard in the process and not just the large transmission owner/operators, but all users of the transmission system. The assumptions used in the evaluation process must be vetted by all stakeholders as they are the critical drivers on what transmission is needed and when it is needed.

2. Do you agree with the expanded scope of the proposed project as set forth in this supplemental SAR? (The scope includes all the items noted on the "Standard Review Forms" attached to the SAR as well as other improvements to the standards that meet the consensus of stakeholders, consistent with establishing high-quality, enforceable, and technically sufficient bulk power system reliability standards. Please consider these items as non-mandatory and only for consideration by the drafting team.)

   ☐ Yes

   ☒ No

   Comments: These are transmission planning standards and as such, should only apply to TPs, not RP, TO and GO entities. Certainly, information must be provided from the TOs and GOs on their facilities to be able to run the planning studies, but the MOd standards should cover this obligation. And RC are operating entities and not planning entities.

3. Do you think that there are any additional revisions that should be incorporated into this set of standards, beyond those that have already been identified in the April 30, 2006 version of the original SAR and this supplemental SAR?

   ☐ Yes

   ☒ No

   Comments: This should be more than enough to try to get into these transmission planning standards.

Comment Form — SAR to Supplement the SAR for Assess Transmission Future Needs and Develop Transmission Plans

Please use this form to submit comments on the proposed SAR to Supplement the SAR for Assess Transmission Future Needs and Develop Transmission Plans. Comments must be submitted by **March 16, 2007**. You may submit the completed form by e-mail to sarcomm@nerc.com with the words "TPL Supplement SAR" in the subject line. If you have questions please contact Ed Dobrowolski at ed.dobrowoski@nerc.net or by telephone at 609-452-8060.

Individual Commenter Information **(Complete this page for comments from one organization or individual.)**		
Name:	Linda Brown	
Organization:	San Diego Gas and Electric	
Telephone:	858-654-6477	
E-mail:	LPBrown@semprautilities.com	
NERC Region		**Registered Ballot Body Segment**
☐ **ERCOT**	☒	1 — Transmission Owners
☐ **FRCC**	☐	2 — RTOs, or ISOs
☐ **MRO**	☐	3 — Load-serving Entities
☐ **NPCC**	☐	4 — Transmission-dependent Utilities
☐ **RFC**	☐	5 — Electric Generators
☐ **SERC**	☐	6 — Electricity Brokers, Aggregators, and Marketers
☐ **SPP**	☐	7 — Large Electricity End Users
☒ **WECC**	☐	8 — Small Electricity End Users
☐ **NA – Not Applicable**	☐	9 — Federal, State, Provincial Regulatory or other Government Entities
	☐	10 – Regional Reliability Organizations, or Regional Entities

Group Comments (Complete this page if comments are from a group.)

Group Name:

Lead Contact:

Contact Organization:

Contact Segment:

Contact Telephone:

Contact E-mail:

Additional Member Name	Additional Member Organization	Region*	Segment*

*If more than one region or segment applies, indicate the best fit for the purpose of these comments. Regional acronyms and segment numbers are shown on prior page.

Background Information

This SAR is intended to supplement the already-approved SAR for Assess Transmission Future Needs and Develop Transmission Plans dated April 30, 2006. The Assess Transmission Future Needs and Develop Transmission Plans SAR includes revisions to TPL-001 through TPL-004 with the primary focus to clarify the associated Table 1, Transmission System Standards – Normal and Emergency Conditions, used to identify the criteria for system assessments.

The supplementary SAR would expand the scope or the original SAR to include TPL-005 and TPL-006 and upgrade the entire set of standards (TPL-001 through TPL-006) to conform to the latest version of the Reliability Standards Procedure Development and the ERO Rules of Procedure.

TPL-005 and TPL-006, which require regional and inter-regional assessments based on the system performance requirements stated in TPL-001 through TPL-004, need to be modified or retired to address the "fill-in-the blank" components and establish requirements within the standards or through a contractual arrangement as to which entity should perform and provide the subject assessment and data. If these requirements are addressed through the delegation agreements each Region has with the Electric Reliability Organization (ERO), TPL-005 and TPL-006 could be retired.

The intent is to comprehensively address all necessary revisions to the entire set of TPL Standards:

TPL-001 — System Performance under Normal Conditions
TPL-002 — System Performance Following Loss of a Single BES Element
TPL-003 — System Performance Following Loss of Two or More BES Elements
TPL-004 — System Performance Following Extreme BES Events
TPL-005 — Regional and Interregional Self-Assessment Reliability Reports
TPL-006 — Data from the Regional Reliability Organization Needed to Assess Reliability

Please review the SAR and then answer the questions on the following page. Please submit the completed form by e-mail to sarcomm@nerc.com with the words "TPL Supplement SAR" in the subject line by **March 16, 2007**.

You do not have to answer all questions.

Insert a "check" mark in the appropriate boxes by double-clicking the gray areas.

1. Do you believe that there is a reliability-related need to provide additional detail, including specific issues for consideration, to the requirements in this set of standards as proposed in this supplemental SAR?

   ☒ Yes

   ☐ No

   Comments:

2. Do you agree with the expanded scope of the proposed project as set forth in this supplemental SAR? (The scope includes all the items noted on the "Standard Review Forms" attached to the SAR as well as other improvements to the standards that meet the consensus of stakeholders, consistent with establishing high-quality, enforceable, and technically sufficient bulk power system reliability standards. Please consider these items as non-mandatory and only for consideration by the drafting team.)

   ☒ Yes

   ☐ No

   Comments:

3. Do you think that there are any additional revisions that should be incorporated into this set of standards, beyond those that have already been identified in the April 30, 2006 version of the original SAR and this supplemental SAR?

   ☒ Yes

   ☐ No

   Comments:

   SDG&E believes that there are additional revisions that need to be incorporated into this set of standards.

   The Supplemental SAR dated January 17, 2007, has an Appendix B that summarizes issues to be resolved in this new set of standards. Those issues are a collection of comments from FERC NOPR, FERC Staff Report, Industrial comments on version 0, Phase III/IV, etc.

   In order to develop a set of reliability standards for transmission planners, SDG&E believes there are a few more issues to be addressed and/or clarified in this set of standards.

   1. Critical System Conditions

   These "Critical System Conditions" are referring to system conditions to be studied for the transmission planning. Typically, entities deem several system conditions as critical on the basis of accumulative institutional knowledge.

However, in recent FERC NOPR, FERC directs industry to conduct sensitivity studies to identify these critical system conditions and document the sensitivity studies. The sensitivity factors in FERC's direction include load power factors, generation retirements, generation dispatch, transaction patterns, controllable loads, demand side management, transmission outages.

As those will result in extensive scope of study, we would like to see this set of standards clearly answer following questions:

a. How often do we required to perform such sensitivity studies to identify critical system conditions?
b. Do we check those sensitivity factors one by one to find the worst, or do we define the worst combination as the critical? Or
c. Do we continue to leave the "critical system conditions" determination to study performer's discretion?

2. Contingencies
In Appendix B of the latest Supplementary SAR for TPL standards, comments and modification requests were summarized. Contingencies for planning studies is one of critical elements. This can be split into three issues and SDG&E provides following comments for each of them:

a. Study all contingencies
One of the comments suggests to study "all contingencies". Clearly, "All contingencies" need to be clarified. The additional workload incurred due to the dismissal of planners' accumulative institutional knowledge may be unreasonable.
b. Study non-common mode contingencies
The issue regarding reasonable workload also applies to the "non-common mode" contingencies. The non-common mode refers to combination of unrelated elements, say one 230 kV line in CFE (Mexico) and other 230 kV line in Alberta, Canada, as one contingency. This too needs clarification.
c. Study event-based contingencies
Evaluating the impact of "event-based" contingencies makes sense. However, translating an event, such as an earthquake, into a list of elements to be taken out for power flow and stability computer simulation, will need clear guidelines.

3. "Identification of options for reducing the probability or impacts of extreme events that cause cascading"
This is a direct quote of FERC's directed modification in its NOPR.

a. If the impacts only need to be identified with conceptual methods, how do we maintain "consistency" among entities?
b. If FERC intends to request the entities to identify the probability/impacts with quantitative methods, then there is a long list of issues to be addressed before a transmission planner could in reality perform such an analysis:
- How to define "cascading" in system simulation analysis.
- Reasonable and feasible probabilistic variables need to be defined. For instance, in addition to the equipment failure as probabilistic variable, other probabilistic variables need to be considered to meet FERC's direction, such as hurricanes, fires, earthquakes, lightening, flooding, landslides and even an airplane falling into a critical substation, and so on.
- Regional efforts need to be taken to develop a probabilistic methodology and probabilistic database that can be applied uniformly so entities can be treated equally.

- Regional efforts need to be taken to guide selection and/or development of probabilistic analysis software tools. Such tools have to be ready for transmission planners to use and derive quantified solutions.

Comment Form — SAR to Supplement the SAR for Assess Transmission Future Needs and Develop Transmission Plans

Please use this form to submit comments on the proposed SAR to Supplement the SAR for Assess Transmission Future Needs and Develop Transmission Plans. Comments must be submitted by **March 16, 2007**. You may submit the completed form by e-mail to sarcomm@nerc.com with the words "TPL Supplement SAR" in the subject line. If you have questions please contact Ed Dobrowolski at ed.dobrowoski@nerc.net or by telephone at 609-452-8060.

Individual Commenter Information **(Complete this page for comments from one organization or individual.)**		
Name:		
Organization:		
Telephone:		
E-mail:		
NERC Region		**Registered Ballot Body Segment**
☐ **ERCOT**	☐	1 — Transmission Owners
☐ **FRCC**	☐	2 — RTOs, or ISOs
☐ **MRO**	☐	3 — Load-serving Entities
☐ **NPCC**	☐	4 — Transmission-dependent Utilities
☐ **RFC**	☐	5 — Electric Generators
☐ **SERC**	☐	6 — Electricity Brokers, Aggregators, and Marketers
☐ **SPP**	☐	7 — Large Electricity End Users
☐ **WECC**	☐	8 — Small Electricity End Users
☐ **NA – Not Applicable**	☐	9 — Federal, State, Provincial Regulatory or other Government Entities
	☐	10 – Regional Reliability Organizations, or Regional Entities

Group Comments (Complete this page if comments are from a group.)

Group Name: IRC Standards Review Committee

Lead Contact: **Charles Yeung**

Contact Organization: **SPP**

Contact Segment: **2**

Contact Telephone: **832-724-6142**

Contact E-mail: **cyeung@spp.org**

Additional Member Name	Additional Member Organization	Region*	Segment*
Alicia Daugherty	PJM	RFC	2
Mike Calamino	NYISO	NPCC	2
Ron Falsetti	IESO	NPCC	2
Matt Goldberg	ISO-NE	NPCC	2
Brent Kingsford	CAISO	WECC	2
Anita Lee	AESO	WECC	2
Steve Myers	ERCOT	ERCOT	2
William Phillips	MISO	RFC+	2
		MRO+	
		SERC	

*If more than one region or segment applies, indicate the best fit for the purpose of these comments. Regional acronyms and segment numbers are shown on prior page.

Background Information

This SAR is intended to supplement the already-approved SAR for Assess Transmission Future Needs and Develop Transmission Plans dated April 30, 2006. The Assess Transmission Future Needs and Develop Transmission Plans SAR includes revisions to TPL-001 through TPL-004 with the primary focus to clarify the associated Table 1, Transmission System Standards – Normal and Emergency Conditions, used to identify the criteria for system assessments.

The supplementary SAR would expand the scope or the original SAR to include TPL-005 and TPL-006 and upgrade the entire set of standards (TPL-001 through TPL-006) to conform to the latest version of the Reliability Standards Procedure Development and the ERO Rules of Procedure.

TPL-005 and TPL-006, which require regional and inter-regional assessments based on the system performance requirements stated in TPL-001 through TPL-004, need to be modified or retired to address the "fill-in-the blank" components and establish requirements within the standards or through a contractual arrangement as to which entity should perform and provide the subject assessment and data. If these requirements are addressed through the delegation agreements each Region has with the Electric Reliability Organization (ERO), TPL-005 and TPL-006 could be retired.

The intent is to comprehensively address all necessary revisions to the entire set of TPL Standards:

TPL-001 — System Performance under Normal Conditions
TPL-002 — System Performance Following Loss of a Single BES Element
TPL-003 — System Performance Following Loss of Two or More BES Elements
TPL-004 — System Performance Following Extreme BES Events
TPL-005 — Regional and Interregional Self-Assessment Reliability Reports
TPL-006 — Data from the Regional Reliability Organization Needed to Assess Reliability

Please review the SAR and then answer the questions on the following page. Please submit the completed form by e-mail to sarcomm@nerc.com with the words "TPL Supplement SAR" in the subject line by **March 16, 2007**.

You do not have to answer all questions.

Insert a "check" mark in the appropriate boxes by double-clicking the gray areas.

1. Do you believe that there is a reliability-related need to provide additional detail, including specific issues for consideration, to the requirements in this set of standards as proposed in this supplemental SAR?

   ☒ Yes

   ☐ No

   Comments:

2. Do you agree with the expanded scope of the proposed project as set forth in this supplemental SAR? (The scope includes all the items noted on the "Standard Review Forms" attached to the SAR as well as other improvements to the standards that meet the consensus of stakeholders, consistent with establishing high-quality, enforceable, and technically sufficient bulk power system reliability standards. Please consider these items as non-mandatory and only for consideration by the drafting team.)

   ☐ Yes

   ☒ No

   Comments: We do not support a long-term planning standards applying to RCs. The NERC functional model is very clear that RCs are operational entities. Is the intent to replace RRO with RC for the fill-in-the-blank standards? That would be an inappropriate solution. A more appropriate solution would be to consider replacing the RRO with the planning coordinator.

   We also do not understand how a transmission planning standard could apply to the additional functional entities: Transmission Owner and Generator Owner.

3. Do you think that there are any additional revisions that should be incorporated into this set of standards, beyond those that have already been identified in the April 30, 2006 version of the original SAR and this supplemental SAR?

   ☐ Yes

   ☒ No

   Comments:

Consideration of Comments on 1st Posting of SAR to Supplement the Assess Transmission Future Needs SAR

The Supplemental Assess Transmission Future Needs SAR Drafting Team thanks all commenters who submitted comments on the Supplemental Assess Transmission Future Needs SAR. This SAR was posted for a 30-day public comment period from February 15 through March 16, 2007. The requesters asked stakeholders to provide feedback on the standard through a special standard Comment Form. There were 16 sets of comments, including comments from 42 different people associated with more than 37 companies or organizations representing 8 of the 10 Industry Segments as shown in the table on the following pages.

Based on the comments received, the drafting team is recommending that the Standards Committee approve the Supplemental SAR to be moved forward to the standards drafting stage of the process.

In this "Consideration of Comments" document stakeholder comments have been organized so that it is easy to see the responses associated with each question. All comments received on the standards can be viewed in their original format at:

http://www.nerc.com/~filez/standards/Assess-Transmission-Future-Needs.html

If you feel that your comment has been overlooked, please let us know immediately. Our goal is to give every comment serious consideration in this process! If you feel there has been an error or omission, you can contact the Director of Standards, Gerry Adamski, at 609-452-8060 or at gerry.adamski@nerc.net. In addition, there is a NERC Reliability Standards Appeals Process.[1]

No changes were made to the SAR based on received comments. The only changes that were made to the SAR at this time were to add references and appropriate supporting material to address the FERC Order 693 and to update the attachment to reflect the latest version of the Standard Review Guidelines.

[1] The appeals process is in the Reliability Standards Development Procedures: http://www.nerc.com/standards/newstandardsprocess.html.

The Industry Segments are:

1 — Transmission Owners
2 — RTOs, ISOs
3 — Load-serving Entities
4 — Transmission-dependent Utilities
5 — Electric Generators
6 — Electricity Brokers, Aggregators, and Marketers
7 — Large Electricity End Users
8 — Small Electricity End Users
9 — Federal, State, Provincial Regulatory or other Government Entities
10 – Regional Reliability Organizations, Regional Entities

Commenter		Organization	Industry Segment									
			1	2	3	4	5	6	7	8	9	10
1.	James H. Sorrels, Jr.	AEP	✓				✓	✓				
2.	Anita Lee (G1)	AESO		✓								
3.	Ken Goldsmith (G3)	ALT										✓
4.	Dave Rudolph (G3)	BEPC										✓
5.	Brent Kingsford (G1)	CAISO		✓								
6.	Ed Thompson (G2)	ConEdison										✓
7.	Steve Myers (G1) (I)	ERCOT		✓								
8.	Eric Mortenson	Exelon										
9.	Dick Pursley (G3)	GRE										✓
10.	Roger Champagne	HQT	✓									
11.	Ron Falsetti (G1) (G2) (I)	IESO		✓								
12.	Kathleen Goodman (G2) (I)	ISO-NE										✓
13.	Matt Goldberg (G1)	ISO-NE		✓								
14.	Brian Thumm	ITC Transmission	✓									
15.	Jim Cyrulewski	JDRJC Associates								✓		
16.	Michael Gammon	KCPL	✓									
17.	Eric Ruskamp (G3)	LES										✓
18.	Robert Coish, Chair (G3)	Manitoba Hydro										✓
19.	Ron Mazur	Manitoba Hydro	✓		✓		✓	✓				
20.	David Rudolph (G3)	MidAmerican										✓
21.	Jason Marshall	MISO		✓								
22.	Terry Bilke (G3)	MISO										✓
23.	William Phillips (G1)	MISO		✓								
24.	Carol Gerou (G3)	MP										✓
25.	Mike Brytowski (G3)	MRO										✓

Commenter		Organization	Industry Segment									
			1	2	3	4	5	6	7	8	9	10
26.	Randy Macdonald (G2)	New Brunswick System Opeartor		✓								✓
27.	Murale Gopinathan (G2)	Northeast Utilities										✓
28.	Guy V. Zito (G2)	NPCC										✓
29.	Al Boesch (G3)	NPPD										✓
30.	Greg Campoli (G2)	NY ISO										✓
31.	Mike Calamino (G1) (I)	NYISO		✓								
32.	Ralph Rufrano (G2)	NYPA										✓
33.	Al Adamson (G2)	NYSRC										✓
34.	Mark Ringhausen	Old Dominion Electric Coop.				✓						
35.	Todd Gosnell (G3)	OPPD										✓
36.	Alicia Daugherty (G1)	PJM		✓								
37.	Linda Brown	San Diego Gas and Electric	✓									
38.	Charles Yeung (G1)	SPP		✓								
39.	Roger Champagne (G2)	TransEnergie HydroQuebec										✓
40.	Jim Haigh (G3)	WAPA										✓
41.	Neal Balu (G3)	WPSR										✓
42.	Pam Oreschnik (G3)	XCEL										✓

Legend:

- G1 - IRC Standards Review Committee
- G2 – NPCC CP9 Working Group
- G3 – MRO
- I – Individual comments were submitted in addition to comments submitted as part of a group

Index to Questions, Comments, and Responses

1. Do you believe that there is a reliability-related need to provide additional detail, including specific issues for consideration, to the requirements in this set of standards as proposed in this supplemental SAR? 5

2. Do you agree with the expanded scope of the proposed project as set forth in this supplemental SAR? 8

3. Do you think that there are any additional revisions that should be incorporated into this set of standards, beyond those that have already been identified in the April 30, 2006 version of the original SAR and this supplemental SAR?.....12

1. **Do you believe that there is a reliability-related need to provide additional detail, including specific issues for consideration, to the requirements in this set of standards as proposed in this supplemental SAR?**

Summary Consideration: All respondents agreed with the statement. The affirmative responses that included comments mainly dealt with procedural issues as opposed to content. The SAR DT believes that we have answered those concerns in the provided responses and that no additional changes to the SAR are required.

Question #1			
Commenter	**Yes**	**No**	**Comment**
Exelon	☑		I believe that most of the additional information contained in the draft 'supplemental' SAR is valuable and will assist the SDT in addressing the various stakeholder concerns. I am concerned with conflicting information addressed below. I am not familiar with the concept of a supplemental SAR and am not sure if there are going to be two SARs now, or if this new effort supercedes the existing SAR. This is especially a concern when there appear to be differences between them regarding functional applicabilities and principles, as well as the expansion of scope. I understand the Standards Development Procedure to require the original SAR to be modified, when it states, "If the standard drafting team determines it is necessary to expand the scope of the standard ot to modify the scope in a way that is no longer consistent with the scope defined in the SAR, then the drafting team may initiate or recommend another requestor initiate a new SAR (Step 1) to develop the expanded or modified scope. At no time will a drafting team develop a standard that is not within the scope ot the SAR that was authorized for development."
Response: The SDT recognized that the scope of the original SAR needed to be broadened to encompass changes in the industry since the approval of the original SAR. We decided to use the concept of a supplement rather than completely re-writing the original SAR. These are not intended to be two distinct SARs. The Supplemental SAR is intended to be a true supplement to the original SAR in every sense of the word.			
ODEC	☑		The planning of the transmission system is critical to the reliability of the transmission system. Additional details provided to all stakeholders are crucial to ensure that transmission is built in a timley manner to protect the relability of the system. Also, by making the process and information available to all stakeholders, you ensure that everyone's interest is heard in the process and not just the large transmission owner/operators, but all users of the transmission system. The assumptions used in the evaluation process must be vetted by all stakeholders as they are the critical drivers on what transmission is needed and when it is needed.
Response: Stakeholders will receive their opportunity to vet the assumptions used in the evaluation process during comment			

Question #1			
Commenter	**Yes**	**No**	**Comment**
and balloting of the standards.			
ERCOT	☑		I recommend that you clarify that these lists of items in Appendix B are topics to consider, not topics that must be included. Also, I recommend that any standards requirements that are evident as Good Utility Practice or procedural in nature be retired as requirements, but retained in the form of reference documents, operating guidelines, or some other similar form that will be available to any industry participant that wishes to use them.
Response: The following excerpt is from point #3 of the Supplemental SAR Purpose Statement – "…***consider*** the items mentioned in the Technical Issues Lists prepared by the NERC staff…" (emphasis added). The intent was always to consider the issues and not to make them necessarily mandatory changes. The comment on good utility practice and procedural requirements will be passed on to the SDT. Please note that Appendix B as it was included in the Supplemental SAR was prepared prior to the final FERC Order. Directions included with that Order must be specifically addressed in the standards drafting process.			
MISO	☑		As the standards are written now, all of the requirements apply to both the Transmission Planner and Planning Authority. The NERC Functional Model Version 3 replaced the Planning Authority with the Planning Coordinator . The standards should reflect this change as well as the division of responsibilities between Transmission Planner and Planning Coordinator in the functional model. Additionally, they should seek to clarify the relationship between Transmission Planner and Planning Coordinator. How many transmission planners can their be per Planning Coordinator. Can there be overlapping Planning Coordinators?
Response: Functional Model v3 will be used as the reference. Your comment and questions will be passed on to the SDT.			
ITC Transmission	☑		The original SAR did a good job of capturing many of the reliability improvements necessary to the TPL Standards. Now that additional information is available from the various stakeholder groups and drafting teams, it is clear that additional reliability-related improvements to the Standards can be made. It is not clear how to quantify the additional improvement the supplemental SAR will make to the existing Standard Drafting effort, but certainly there are additional reliability improvements to be made to each of the subject Standards.
Response: Agreed.			
Manitoba Hydro	☑		Manitoba Hydro believes the planning standards should ensure that complete and consistent assessments are conducted by the responsible entities.
Response: Agreed.			
AEP	☑		

Question #1			
Commenter	**Yes**	**No**	**Comment**
HQT	☑		
IESO	☑		
ISO New England	☑		
KCPL	☑		
MRO	☑		
NPCC CP9 Working Group	☑		
NYISO	☑		
San Diego Gas & Electric	☑		
IRC Standards Review Committee	☑		

2. Do you agree with the expanded scope of the proposed project as set forth in this supplemental SAR? (The scope includes all the items noted on the "Standard Review Forms" attached to the SAR as well as other improvements to the standards that meet the consensus of stakeholders, consistent with establishing high-quality, enforceable, and technically sufficient bulk power system reliability standards. Please consider these items as non-mandatory and only for consideration by the drafting team.)

Summary Consideration: The majority of respondents agreed to the proposition. The negative opinions ranged from procedural matters to items that dealt with providing the SDT with sufficient flexibility to do their job or issues that are more appropriately addressed at the standards drafting stage. In particular, there was concern that some of the applicable entities checked on the supplementary SAR were not appropriate. The SAR DT felt that the Transmission Owner & Generator Owner might potentially provide data that could come into play for some of the requirements in TPL-005 & 006. The SAR DT wanted to provide maximum flexibility to the SDT so these entities as well as the Reliability Coordinator were included. However they are only for consideration and not mandatory. The SAR DT believes that we have addressed these concerns in the responses provided and that no additional changes to the SAR are required.

Question #2			
Commenter	**Yes**	**No**	**Comment**
Exelon		☑	The approved SAR is of type 'New Standard' while the supplemental SAR type is not, but rather, 'Revision to existing Standards' as well as, 'Withdraw of existing Standard (possible)'. Regarding the Reliability Function Applicabilities, the supplemental SAR does not include the Reliability Authority or the Planning Authority which were included in the approved SAR, and the supplemental SAR includes the Resource Planner and Generation Owner functions, which are not included in the approved SAR. I believe that the Planning Authority needs to be addressed in terms of the FERC NOPR discussion, summarized on pages B3 and B4 of the supplemental SAR. The supplemental SAR includes item 7 in the Applicable Reliability Principles, while the approved SAR does not. If there are going to be two SARs then I believe that the supplemental SAR should include the previously approved SAR in the 'Related SARs' section on page 7. The concise summaries of the Version 0 Industry comments are appreciated, but these should be made more clear in that these will probably become key to any actual changes to planning contingencies. For example, it is not clear what, 'Address deliverability of generation to load' means. Also, does, 'Don't include generation runback or redispatch'

Question #2			
Commenter	**Yes**	**No**	**Comment**
			mean that this shouldn't be addressed or that the standard should be worded to specifically not include them. Other terms such as, 'Don't include planning outage', and 'single terminals are not included' should also be more thoroughly described.
Response: The SDT recognized that the scope of the original SAR needed to be broadened to encompass changes in the industry since the approval of the original SAR. We decided to use the concept of a supplement rather than completely re-writing the original SAR. These are not intended to be two distinct SARs. The Supplemental SAR is intended to be a true supplement to the original SAR in every sense of the word. The full text of all comments referenced in the Supplemental SAR Appendix B has been made available to the SDT so that there should be no confusion as to the intent or meaning of the comment.			
ODEC		☑	These are transmission planning standards and as such, should only apply to TPs, not RP, TO and GO entities. Certainly, information must be provided from the TOs and GOs on their facilities to be able to run the planning studies, but the MOd standards should cover this obligation. And RC are operating entities and not planning entities.
Response: The SAR DT felt that the TO & GO might potentially provide data that could come into play for some of the requirements in TPL-005 & 006. The SAR DT wanted to provide maximum flexibility to the SDT so these entities as well as the RC were included. However they are only for consideration and not mandatory. Your comments will be passed on to the SDT.			
ISO New England		☑	We do not support a long-term planning standards applying to RCs. The NERC functional model is very clear that RCs are operational entities. Is the intent to replace RRO with RC for the fill-in-the-blank standards? That would be an inappropriate solution. A more appropriate solution would be to consider replacing the RRO with the planning coordinator. We also do not understand how a transmission planning standard could apply to the additional functional entities: Transmission Owner and Generator Owner.
Response: The SAR DT felt that the TO & GO might potentially provide data that could come into play for some of the requirements in TPL-005 & 006. The SAR DT wanted to provide maximum flexibility to the SDT so these entities as well as the RC were included. However they are only for consideration and not mandatory. Your comments will be passed on to the SDT.			
MISO		☑	We do not support a long-term planning standards applying to RCs. The NERC functional model is very clear that RCs are operational entities. Is the intent to replace RRO with RC for the fill-in-the-blank standards? That would be an inappropriate solution. A more appropriate solution would be to consider replacing the RRO with the planning coordinator.
Response: The SAR DT felt that the TO & GO might potentially provide data that could come into play for some of the			

Question #2			
Commenter	**Yes**	**No**	**Comment**
requirements in TPL-005 & 006. The SAR DT wanted to provide maximum flexibility to the SDT so these entities as well as the RC were included. However they are only for consideration and not mandatory. Your comments will be passed on to the SDT.			
NYISO		☑	It is unclear as to what obligations the RC, TO, and GO would have in a long-term planning standard. The NERC functional model is very clear that RCs are operational entities. The RC, TO, GO ,should not have a direct obligation in the process, but should be a resource for input into the process.
Response: The SAR DT felt that the TO & GO might potentially provide data that could come into play for some of the requirements in TPL-005 & 006. The SAR DT wanted to provide maximum flexibility to the SDT so these entities as well as the RC were included. However they are only for consideration and not mandatory. Your comments will be passed on to the SDT.			
IRC Standards Review Committee		☑	We do not support a long-term planning standards applying to RCs. The NERC functional model is very clear that RCs are operational entities. Is the intent to replace RRO with RC for the fill-in-the-blank standards? That would be an inappropriate solution. A more appropriate solution would be to consider replacing the RRO with the planning coordinator. We also do not understand how a transmission planning standard could apply to the additional functional entities: Transmission Owner and Generator Owner.
Response: The SAR DT felt that the TO & GO might potentially provide data that could come into play for some of the requirements in TPL-005 & 006. The SAR DT wanted to provide maximum flexibility to the SDT so these entities as well as the RC were included. However they are only for consideration and not mandatory. Your comments will be passed on to the SDT.			
ITC Transmission		☑	Standard Drafting Teams should not be responding so heavily to comments made by FERC in a NOPR. The NOPR is just that … "Proposed." There may be additional changes required as a result of the final Rule. The final Rule may even negate some of the proposed changes made in the NOPR. If the drafting team thinks that FERC hit on a good idea for improvement, then it would be appropriate for inclusion in the Standard, but simply to make changes to a Standard because an idea surfaced in a Proposed Rule is premature.
Response: The following excerpt is from point #3 of the Supplemental SAR Purpose Statement – "…*consider* the items mentioned in the Technical Issues Lists prepared by the NERC staff…" (emphasis added). The intent was always to consider the issues and not to make them necessarily mandatory changes. Directions included with the FERC Final Order must be specifically addressed in the standards drafting process.			
AEP	☑		Considering the current scope, the Std DT should be encouraged to consider a major re-write of TPL-001 thru TPL-006, possibly including a restructuring into a single standard

Question #2			
Commenter	**Yes**	**No**	**Comment**
			rather than the present multiple standards.
Response: We agree with the general concept and the SDT will be provided with this option**.**			
Manitoba Hydro	☑		Manitoba Hydro agrees in principle with the expanded scope, but believes that this scope should be a part of the Standards Development Procedures manual so all stakeholders have a voice in the requirements in Appendix A. We have some concern that the SAR gives the drafting team the power to add additional improvements beyond the SAR as this provides an opportunity for SDT members to forward specific owner agendas.
Response: The material in Appendix A is excerpted from the Reliability Standards Development Work Plan 2007 – 2009 that was reviewed and approved by the Standards Committee. As stated, it represents general guidelines and not mandatory changes for the revision of existing standards. Stakeholders will receive their opportunity to vet the assumptions used in the evaluation process during comment and balloting of the standards**.**			
ERCOT	☑		Please also see my response to Question #1.
Response: Please see the response to your comment on question #1.			
HQT	☑		
IESO	☑		
KCPL	☑		
MRO	☑		
NPCC CP9 Working Group	☑		
San Diego Gas & Electric	☑		

3. Do you think that there are any additional revisions that should be incorporated into this set of standards, beyond those that have already been identified in the April 30, 2006 version of the original SAR and this supplemental SAR?

Summary Consideration: Only two respondents suggested revisions. In both cases the comments are more appropriately addressed at the standards drafting stage. The SAR DT believes that we have satisfactorily addressed the expressed concerns with the provided responses and that no additional changes to the SAR are required.

Question #3			
Commenter	**Yes**	**No**	**Comment**
Manitoba Hydro	☑		The SAR should considering adding a requirements to the standards to mandate tests for robustness by doing sensitivity to critical system paramenters such as load growth rate, load power factor, etc., to provide insight into the margin between the operating point and unacceptable performance. There should also be a specific requirement to assess reactive power adequacy, voltage stability and system damping.
Response: The SAR DT is aware of the interest in these items. The scope of both the original and supplemental SARs allows these items to be incorporated in the standards drafting process. We will pass your comments on to the SDT.			
San Diego Gas & Electric	☑		SDG&E believes that there are additional revisions that need to be incorporated into this set of standards. The Supplemental SAR dated January 17, 2007, has an Appendix B that summarizes issues to be resolved in this new set of standards. Those issues are a collection of comments from FERC NOPR, FERC Staff Report, Industrial comments on version 0, Phase III/IV, etc. In order to develop a set of reliability standards for transmission planners, SDG&E believes there are a few more issues to be addressed and/or clarified in this set of standards. 1. Critical System Conditions These "Critical System Conditions" are referring to system conditions to be studied for the transmission planning. Typically, entities deem several system conditions as critical on the basis of accumulative institutional knowledge. However, in recent FERC NOPR, FERC directs industry to conduct sensitivity studies to identify these critical system conditions and document the sensitivity studies. The sensitivity factors in FERC's direction include load power factors, generation

Question #3			
Commenter	**Yes**	**No**	**Comment**
			retirements, generation dispatch, transaction patterns, controllable loads, demand side management, transmission outages. As those will result in extensive scope of study, we would like to see this set of standards clearly answer following questions: a. How often do we required to perform such sensitivity studies to identify critical system conditions? b. Do we check those sensitivity factors one by one to find the worst, or do we define the worst combination as the critical? Or c. Do we continue to leave the "critical system conditions" determination to study performer's discretion? 2. Contingencies In Appendix B of the latest Supplementary SAR for TPL standards, comments and modification requests were summarized. Contingencies for planning studies is one of critical elements. This can be split into three issues and SDG&E provides following comments for each of them: a. Study all contingencies One of the comments suggests to study "all contingencies". Clearly, "All contingencies" need to be clarified. The additional workload incurred due to the dismissal of planners' accumulative institutional knowledge may be unreasonable. b. Study non-common mode contingencies The issue regarding reasonable workload also applies to the "non-common mode" contingencies. The non-common mode refers to combination of unrelated elements, say one 230 kV line in CFE (Mexico) and other 230 kV line in Alberta, Canada, as one contingency. This too needs clarification. c. Study event-based contingencies Evaluating the impact of "event-based" contingencies makes sense. However, translating an event, such as an earthquake, into a list of elements to be taken out for power flow and stability computer simulation, will need clear guidelines. 3. "Identification of options for reducing the probability or impacts of extreme events that cause cascading" This is a direct quote of FERC's directed modification in its NOPR.

Question #3			
Commenter	**Yes**	**No**	**Comment**
			a. If the impacts only need to be identified with conceptual methods, how do we maintain "consistency" among entities? b. If FERC intends to request the entities to identify the probability/impacts with quantitative methods, then there is a long list of issues to be addressed before a transmission planner could in reality perform such an analysis: • How to define "cascading" in system simulation analysis. • Reasonable and feasible probabilistic variables need to be defined. For instance, in addition to the equipment failure as probabilistic variable, other probabilistic variables need to be considered to meet FERC's direction, such as hurricanes, fires, earthquakes, lightening, flooding, landslides and even an airplane falling into a critical substation, and so on. • Regional efforts need to be taken to develop a probabilistic methodology and probabilistic database that can be applied uniformly so entities can be treated equally. • Regional efforts need to be taken to guide selection and/or development of probabilistic analysis software tools. Such tools have to be ready for transmission planners to use and derive quantified solutions.
Response: The following excerpt is from point #3 of the Supplemental SAR Purpose Statement – "…***consider*** the items mentioned in the Technical Issues Lists prepared by the NERC staff…" (emphasis added). The intent was always to consider the issues and not to make them necessarily mandatory changes. Directions included with the FERC Final Order must be specifically addressed in the standards drafting process. The Supplemental SAR was intended to be a true supplement to the original SAR in every sense of the word. The SAR DT is aware of the interest in these items. The scope of both the original and supplemental SARs allows these items to be incorporated in the standards drafting process. We will pass your comments on to the SDT. We refer the commenter to the NERC web site for previous meeting notes and comments concerning related issues.			
ODEC		☑	This should be more than enough to try to get into these transmission planning standards.
Response: Most stakeholders who commented seemed to agree with you.			
MISO		☑	
MRO		☑	
NPCC CP9 Working Group		☑	
NYISO		☑	

Question #3			
Commenter	**Yes**	**No**	**Comment**
IRC Standards Review Committee		☑	
AEP		☑	
ERCOT		☑	
HQT		☑	
IESO		☑	
ISO New England		☑	
ITC Transmission		☑	
KCPL		☑	

1/17/07 Standard Authorization Request Form

Title of Proposed Project: Revisions to TPL-001 through TPL-006, Transmission System Performance and Assessment (This SAR is intended to supplement the SAR for Assess Transmission Future Needs and Develop Transmission Plans dated 4/30/06 in support of Standards Project 2006-02.)	
Request Date	January 17, 2007
Revised	April 5, 2006

SAR Requestor Information	**SAR Type** (*Check a box for each one that applies.*)	
Name Assess Transmission Future Needs Standard Drafting Team	☐	New Standard
Primary Contact Robert Millard – Vice-Chair, ATFNSDT	☒	Revision to existing Standards
Telephone (708) 588-9886 Fax none	☒	Withdrawal of existing Standard (possible)
E-mail bob.millard@rfirst.org	☐	Urgent Action

Purpose (Describe the purpose of the standard — what the standard will achieve in support of reliability.)

This SAR is intended to supplement the SAR for Assess Transmission Future Needs and Develop Transmission Plans dated 4/30/06 in support of Standards Project 2006-02.

The revisions to the following standards would improve technical clarity and address concerns identified by stakeholders and FERC:

TPL-001 — System Performance under Normal Conditions
TPL-002 — System Performance Following Loss of a Single BES Element
TPL-003 — System Performance Following Loss of Two or More BES Elements
TPL-004 — System Performance Following Extreme BES Events
TPL-005 — Regional and Interregional Self-Assessment Reliability Reports
TPL-006 — Data from the Regional Reliability Organization Needed to Assess Reliability

Revisions to TPL-001 through TPL-004 are already underway (Assess Transmission Future Needs and Develop Transmission Plans Standard Drafting Team) with the primary focus to clarify the associated Table 1, Transmission System Standards – Normal and Emergency Conditions, used to identify the criteria for system assessments. The expansion of the work already underway with TPL-001 through TPL-004 will focus on the general improvements to the standard identified through the attached *Appendix A: Reliability Standard Review Guidelines* and the FERC and stakeholder concerns identified in the attached *Appendix B: TPL-001 through TPL-006 Technical Issues List*.

TPL-005 and TPL-006, which require regional and inter-regional assessments based on the system performance requirements stated in TPL-001 through TPL-004, need to be modified or retired to address the "fill-in-the blank" components and establish requirements within the standards or through a contractual arrangement as to which entity should perform and provide the subject assessment and data. If these requirements are addressed through the delegation agreements each Region has with the Electric Reliability Organization (ERO), TPL-005 and TPL-006 could be retired.

The purpose of modifying this set of standards is to:

1. Provide an adequate level of reliability for the North American bulk power systems — ensure each of the standards is complete and the requirements are set at an appropriate level to ensure reliability.
2. Ensure each of the standards is enforceable as a mandatory reliability standard with financial penalties — the applicability to bulk power system owners, operators, and users, and as appropriate particular classes of facilities, is clearly defined; the purpose, requirements, and measures are results-focused and unambiguous; the consequences of violating the requirements are clear.
3. Make general improvements using the Reliability Standard Review Guidelines and consider the items mentioned in the Technical Issues Lists prepared by the NERC staff which attempt to capture comments from the:
    - FERC NOPR (Docket # RM06-16-00 dated October 20, 2006) ,
    - FERC staff report dated May 11, 2006 concerning NERC standards submitted with ERO application,

- Version 0 and Phase 3&4 standards development (see note 1),
- Violations Risk Factors (VRF) drafting team (see note 1),
- Regional Fill-in-the-Blank Team (RRSWG – a NERC working group involved with regional standards development), and
- Draft SAR for Planning Authority

The SDT should also consider any other issues that were not completely captured but were stated or referenced in the above materials.

Directions extracted from FERC Order 693, 890 and other applicable orders and any possible future subsequent revisions will be addressed by the SDT.

Note 1: Comments received from the industry during public postings of the TPL subject matter were sometimes outside the work being posted or outside the drafting team's scope and were not reflected in the drafting of the final work product. These should now be considered by this SDT.

Industry Need (Provide a detailed statement justifying the need for the proposed standard, along with any supporting documentation.)

The six standards in this set are all Version 0 standards. As the ERO begins enforcing compliance with reliability standards under Section 215 of the Federal Power Act in the United States and applicable statutes and regulations in Canada, the industry needs a set of clear, measurable, and enforceable reliability standards. The Version 0 standards, while a good foundation, were translated from historical operating and planning policies and guides that were appropriate in an era of voluntary compliance. The Version 0 standards and recent updates were put in place as a temporary starting point to start-up the ERO and begin enforcement of mandatory standards. However, it is important to update the standards in a timely manner, incorporating improvements to make the standards more suitable for enforcement and to capture prior recommendations that were deferred during the Version 0 translation and any subsequent standards development that have implications to the TPL standards.

Brief Description: (Describe the proposed standard in sufficient detail to clearly define the scope in a manner that can be easily understood by others.)

The proposed work effort will address three main issues:

1. Conformance to the new rules and regulations brought about by Section 215 of the Federal Power Act and the creation of the ERO,
2. Supplement the approved work of the existing ATFNSDT to include the necessary revisions to TPL-005 & TPL-006, and
3. Address technical issues raised by FERC and industry stakeholders.

Reliability Functions

The Standard will Apply to the Following Functions *(Check box for each one that applies.)*		
☒	Reliability Coordinator	Responsible for the real-time operating reliability of its Reliability Coordinator Area in coordination with its neighboring Reliability Coordinator's wide area view.
☐	Balancing Authority	Integrates resource plans ahead of time, and maintains load-interchange-resource balance within a Balancing Authority Area and supports Interconnection frequency in real time.
☐	Interchange Authority	Ensures communication of interchange transactions for reliability evaluation purposes and coordinates implementation of valid and balanced interchange schedules between Balancing Authority Areas.
☒	Planning Coordinator	Assesses the longer-term reliability of its Planning Coordinator Area.
☒	Resource Planner	Develops a (>one year) plan for the resource adequacy of its specific loads within its portion of a Planning Coordinator area.
☒	Transmission Planner	Develops a (>one year) plan for the reliability of the interconnected Bulk Electric System within its portion of the Planning Coordinator area.
☐	Transmission Service Provider	Administers the transmission tariff and provides transmission services under applicable transmission service agreements (e.g., the pro forma tariff).
☒	Transmission Owner	Owns and maintains transmission facilities.
☐	Transmission Operator	Ensures the real-time operating reliability of the transmission assets within a Transmission Operator Area.
☐	Distribution Provider	Delivers electrical energy to the End-use customer.
☒	Generator Owner	Owns and maintains generating facilities.
☐	Generator Operator	Operates generation unit(s) to provide real and reactive power.
☐	Purchasing-Selling Entity	Purchases or sells energy, capacity, and necessary reliability-related services as required.
☐	Market Operator	Interface point for reliability functions with commercial functions.
☒	Load-Serving Entity	Secures energy and transmission service (and related reliability-related services) to serve the End-use Customer.

Reliability and Market Interface Principles

Applicable Reliability Principles *(Check box for all that apply.)*	
☒	1. Interconnected bulk electric systems shall be planned and operated in a coordinated manner to perform reliably under normal and abnormal conditions as defined in the NERC Standards.
☐	2. The frequency and voltage of interconnected bulk electric systems shall be controlled within defined limits through the balancing of real and reactive power supply and demand.
☒	3. Information necessary for the planning and operation of interconnected bulk electric systems shall be made available to those entities responsible for planning and operating the systems reliably.
☐	4. Plans for emergency operation and system restoration of interconnected bulk electric systems shall be developed, coordinated, maintained and implemented.
☐	5. Facilities for communication, monitoring and control shall be provided, used and maintained for the reliability of interconnected bulk electric systems.
☐	6. Personnel responsible for planning and operating interconnected bulk electric systems shall be trained, qualified, and have the responsibility and authority to implement actions.
☒	7. The security of the interconnected bulk electric systems shall be assessed, monitored and maintained on a wide area basis.

Does the proposed Standard comply with all of the following Market Interface Principles? *(Select 'yes' or 'no' from the drop-down box.)*
1. The planning and operation of bulk electric systems shall recognize that reliability is an essential requirement of a robust North American economy. Yes
2. An Organization Standard shall not give any market participant an unfair competitive advantage.Yes
3. An Organization Standard shall neither mandate nor prohibit any specific market structure. Yes
4. An Organization Standard shall not preclude market solutions to achieving compliance with that Standard. Yes
5. An Organization Standard shall not require the public disclosure of commercially sensitive information. All market participants shall have equal opportunity to access commercially non-sensitive information that is required for compliance with reliability standards. Yes

Detailed Description (Provide enough detail so that an independent entity familiar with the industry could draft a standard based on this description.)

This SAR expands on the work already underway with the Assess Transmission Future Needs and Develop Transmission Plans Standard Drafting Team, by requiring that TPL-001 through TPL-006 be upgraded in accordance with the Reliability Standards Development Plan 2007 – 2009. These revisions include the following:

This SAR will be appended to the already approved SAR for Assess Transmission Future Needs and Develop Transmission Plans and will include modifications to all of the following standards:

TPL-001 — System Performance under Normal Conditions
TPL-002 — System Performance Following Loss of a Single BES Element
TPL-003 — System Performance Following Loss of Two or More BES Elements
TPL-004 — System Performance Following Extreme BES Events
TPL-005 — Regional and Interregional Self-Assessment Reliability Reports
TPL-006 — Data from the Regional Reliability Organization Needed to Assess Reliability

The revisions would improve technical clarity and address concerns identified by stakeholders and FERC. The drafting team will focus on the general improvements to the standards and use as a starting point for the expanded work the subject matter identified in *Appendix A: Reliability Standard Review Guidelines* and the FERC and stakeholder concerns identified in *Appendix B: TPL-001 through TPL-006 Technical Issues List*.

The expanded scope also will include elimination of the 'fill-in-the-blank' elements of TPL-005 and TPL-006, which require regional and inter-regional assessments based on the system performance requirements stated in TPL-001 through TPL-004. The standards need to be modified or retired to address the "fill-in-the blank" components. If the 'fill-in-the-blank' requirements are addressed through the contractual arrangements each Region has with the ERO, TPL-005 and TPL-006 could be retired.

The drafting team must ensure that there is consistency in the requirements across the set of TPL standards

The overall development may include other improvements to the standards deemed appropriate by the drafting team, with the consensus of stakeholders, consistent with establishing high quality, enforceable and technically sufficient bulk power system reliability standards, using the attached, Reliability Standard Review Guidelines. In addition, the drafting team will need to make conforming changes to standards impacted by changes made to these six standards.

Related Standards

Standard No.	Explanation

Related SARs

SAR ID	Explanation

Regional Differences

Region	Explanation
ERCOT	
FRCC	
MRO	
NPCC	
SERC	
RFC	
SPP	
WECC	

Appendix A: Reliability Standard Review Guidelines

Applicability
Does this reliability standard clearly identify the functional classes of entities responsible for complying with the reliability standard, with any specific additions or exceptions noted? Where multiple functional classes are identified is there a clear line of responsibility for each requirement identifying the functional class and entity to be held accountable for compliance? Does the requirement allow overlapping responsibilities between Registered Entities possibly creating confusion for who is ultimately accountable for compliance?

Does this reliability standard identify the geographic applicability of the standard, such as the entire North American bulk power system, an interconnection, or within a regional entity area? If no geographic limitations are identified, the default is that the standard applies throughout North America.

Does this reliability standard identify any limitations on the applicability of the standard based on electric facility characteristics, such as generators with a nameplate rating of 20 MW or greater, or transmission facilities energized at 200 kV or greater or some other criteria? If no functional entity limitations are identified, the default is that the standard applies to all identified functional entities.

Purpose
Does this reliability standard have a clear statement of purpose that describes how the standard contributes to the reliability of the bulk power system? Each purpose statement should include a value statement.

Performance Requirements
Does this reliability standard state one or more performance requirements, which if achieved by the applicable entities, will provide for a reliable bulk power system, consistent with good utility practices and the public interest?

Does each requirement identify who shall do what under what conditions and to what outcome?

Measurability
Is each performance requirement stated so as to be objectively measurable by a third party with knowledge or expertise in the area addressed by that requirement?

Does each performance requirement have one or more associated measures used to objectively evaluate compliance with the requirement?

If performance results can be practically measured quantitatively, are metrics provided within the requirement to indicate satisfactory performance?

Technical Basis in Engineering and Operations
Is this reliability standard based upon sound engineering and operating judgment, analysis, or experience, as determined by expert practitioners in that particular field?

Completeness
Is this reliability standard complete and self-contained? Does the standard depend on external information to determine the required level of performance?

Consequences for Noncompliance

In combination with guidelines for penalties and sanctions, as well as other ERO and regional entity compliance documents, are the consequences of violating a standard clearly known to the responsible entities?

Clear Language
Is the reliability standard stated using clear and unambiguous language? Can responsible entities, using reasonable judgment and in keeping with good utility practices, arrive at a consistent interpretation of the required performance?

Practicality
Does this reliability standard establish requirements that can be practically implemented by the assigned responsible entities within the specified effective date and thereafter?

Capability Requirements versus Performance Requirements
In general, requirements for entities to have 'capabilities' (this would include facilities for communication, agreements with other entities, etc.), should be located in the standards for certification. The certification requirements should indicate that entities have a responsibility to 'maintain' their capabilities.

Consistent Terminology
To the extent possible, does this reliability standard use a set of standard terms and definitions that are approved through the NERC reliability standards development process?

If the standard uses terms that are included in the NERC Glossary of Terms Used in Reliability Standards, then the term must be capitalized when it is used in the standard. New terms should not be added unless they have a 'unique' definition when used in a NERC reliability standard. Common terms that could be found in a college dictionary should not be defined and added to the NERC Glossary.

Are the verbs on the 'verb list' from the DT Guidelines? If not – do new verbs need to be added to the guidelines or could you use one of the verbs from the verb list?

Violation Risk Factors (Risk Factor)

High Risk Requirement

A requirement that, if violated, could directly cause or contribute to bulk electric system instability, separation, or a cascading sequence of failures, or could place the bulk electric system at an unacceptable risk of instability, separation, or cascading failures;

or a requirement in a planning time frame that, if violated, could, under emergency, abnormal, or restorative conditions anticipated by the preparations, directly cause or contribute to bulk electric system instability, separation, or a cascading sequence of failures, or could place the bulk electric system at an unacceptable risk of instability, separation, or cascading failures, or could hinder restoration to a normal condition.

Medium Risk Requirement

This is a requirement that, if violated, could directly affect the electrical state or the capability of the bulk electric system, or the ability to effectively monitor and control the bulk electric system. However, violation of a medium risk requirement is unlikely to lead to bulk electric system instability, separation, or cascading failures;

or a requirement in a planning time frame that, if violated, could, under emergency, abnormal, or restorative conditions anticipated by the preparations, directly and adversely affect the electrical state or capability of the bulk electric system, or the ability to effectively monitor, control, or restore the bulk electric system. However, violation of a medium risk requirement is unlikely, under emergency, abnormal, or restoration conditions anticipated by the preparations, to lead to bulk electric system instability, separation, or cascading failures, nor to hinder restoration to a normal condition.

Lower Risk Requirement

A requirement that, if violated, would not be expected to adversely affect the electrical state or capability of the bulk electric system, or the ability to effectively monitor and control the bulk electric system. A requirement that is administrative in nature;

Or a requirement in a planning time frame that, if violated, would not, under the emergency, abnormal, or restorative conditions anticipated by the preparations, be expected to adversely affect the electrical state or capability of the bulk electric system, or the ability to effectively monitor, control, or restore the bulk electric system. A planning requirement that is administrative in nature.

~~Mitigation~~ Time Horizon

The drafting team should also indicate the time horizon available for mitigating a violation to the requirement using the following definitions:

- **Long-term Planning** — a planning horizon of one year or longer.
- **Operations Planning** — operating and resource plans from day-ahead up to and including seasonal.
- **Same-day Operations** — routine actions required within the timeframe of a day, but not real-time.
- **Real-time Operations** — actions required within one hour or less to preserve the reliability of the bulk electric system.
- **Operations Assessment** — follow-up evaluations and reporting of real time operations.

Violation Severity Levels

The drafting team should indicate a set of violation severity levels that can be applied for the requirements within a standard. ('Violation severity levels' replaces the existing 'levels of non-compliance.') The violation severity levels may be applied for each requirement ~~or~~ and may be combined to cover multiple requirements, as long as it is clear which requirements are included and that all requirements are included.

The violation severity levels should be based on the following definitions:

- **Lower: mostly compliant with minor exceptions** — the responsible entity is mostly compliant with and meets the intent of the requirement but is deficient with respect to one or more minor details. Equivalent score: 95% to 99% compliant.
- **Moderate: mostly compliant with significant exceptions** — the responsible entity is mostly compliant with and meets the intent of the requirement but is deficient with respect to one or more significant elements. Equivalent score: 85% to 94% compliant.

- **High: marginal performance or results** — the responsible entity has only partially achieved the reliability objective of the requirement and is missing one or more significant elements. Equivalent score: 70% to 84% compliant.
- **Severe: poor performance or results** — the responsible entity has failed to meet the reliability objective of the requirement. Equivalent score: less than 70% compliant.

Compliance Monitor

Replace, 'Regional Reliability Organization' with '~~Electric Reliability Organization'~~Regional Entity

~~Bulk Electric System~~

~~Replace, 'Bulk Electric System' with 'bulk power system'~~

Fill-in-the-blank Requirements

Do not include any 'fill-in-the-blank' requirements. These are requirements that assign one entity responsibility for developing some performance measures without requiring that the performance measures be included in the body of a standard – then require another entity to comply with those requirements.

Every reliability objective can be met, at least at a threshold level, by a North American standard. If we need regions to develop regional standards, such as in under-frequency load shedding, we can always write a uniform North American standard for the applicable functional entities as a means of encouraging development of the regional standards.

Requirements for Regional Reliability Organization

Do not write any requirements for the Regional Reliability Organization. Any requirements currently assigned to the RRO should be re-assigned to the applicable functional entity.

Effective Dates

Must be 1st day of 1st quarter after entities are expected to be compliant – must include time to file with regulatory authorities and provide notice to responsible entities of the obligation to comply. If the standard is to be actively monitored, time for the Compliance Monitoring and Enforcement Program to develop reporting instructions and modify the Compliance Data Management System(s) both at NERC and Regional Entities must be provided in the implementation plan.

Associated Documents

If there are standards that are referenced within a standard, list the full name and number of the standard under the section called, 'Associated Documents'.

Appendix B: TPL-001 through TPL-006 Technical Issues List

Excerpted from NERC Reliability Standards Development Plan: 2007 - 2009

TPL-001
FERC NOPR

- Require that critical system conditions be determined by conducting sensitivity studies; *(Not necessarily "cook book" but what are the processes someone reasonably skilled in the art would follow.)*
- Require that system conditions and contingencies assessed be reviewed by neighboring systems; *(Looking for coordination with neighboring systems)*
- Modify Requirement R1.3 to substitute the reference to regional reliability organization with Regional Entity;
- Require consideration of planned outages of critical equipment; and
- Modify footnote (a): footnote (a) to Table 1 requires clarification. The NERC Transmission Issues Subcommittee (TIS) 325 recommended that footnote (a) be modified to state explicitly that emergency ratings apply to Category B and C (contingency conditions) and not to Category A (system intact). The Commission proposes that footnote (a) be modified in the revised Reliability Standard as recommended by TIS and that the normal facility rating be in accordance with Reliability Standard FAC-008-1 and normal voltages be in accordance with Reliability Standard VAR-001-1.

FERC Staff Report

- Only for normal
- Doesn't consider planned outages
- Clarify footnote 'a' & 'b' in table
- Stress system during simulations
- Include sensitivity studies
- Include extreme events

Version 0 Industry Comments

- Several semantic issues
- Clarify timing for submittal of corrective plan
- Clarify use of applicable ratings in Table 1, note 'a'
- Need to address deliverability to load
- Define critical system conditions
- Allow for engineering judgment in setting conditions for power flow
- Do planned facilities include just those under construction?
- Need to include multiple time frames
- What is a major load center?
- Table 1 – C.5 goes beyond double circuit outage criteria
- Table 1, items 6, 7, 8 & 9 need footnote stating that they do not apply to generator breaker failure
- Table 1, note 'b' – clarify when to curtail firm deliveries

Phase III / IV Comments

- Add a requirement to verify that there are sufficient reactive resources
- Add a requirement to identify where UVLS should be installed

Violation Risk Factors (VRF) Drafting Team Comment

- R1 – time horizon should be long-term planning

Comment from Draft SAR on Planning Authority

- Provide clarity where the Planning Authority is mentioned

TPL-002:
FERC NOPR

- Require that critical system conditions be determined in the same manner as we propose to require for TPL-001-0;
- Require the inclusion of the reliability impact of the entities' existing spare equipment strategy; *(Only looking for consideration of spare equipment that has a long lead time such as a transformer)*
- Explicitly require all generators to ride through the same set of Category B and C contingencies as required for wind generators in Order No. 661; *(Document explicit definition of ride through capability for generators)*
- Require documentation of load models used in system studies and supporting rationale for their use;
- Clarify the phrase "permit operating steps necessary to maintain system control;" and
- Clarify footnote (b): modify footnote (b) to state that load shedding for a single contingency is not permitted except in very special circumstances where such interruption is limited to the firm load associated with the failure (consequential load loss).330 For purposes of clarity, the Commission proposes to require that the phrase "to prepare for the next contingency, system adjustments are permitted, including curtailments of contracted Firm (non-recallable reserved) electric power transfers" be deleted from footnote (b). This statement is more appropriate for Category C events and is already captured by footnote (c) to Table 1, which is applicable to Category C events.

FERC staff report

- Only includes loss of single element
- NERC TIS Report recommendations not addressed

Version 0 Industry Comments

- Define critical system conditions
- Clarify timing for corrective plan
- Address deliverability of generation to load
- Clarify applicable ratings in Table 1, note 'a'
- Don't include generation runback or re-dispatch
- Must study all contingencies and multiple demand levels & time frames
- Don't include planning outage
- Single terminals are not included

Phase III / IV comments

- Add a requirement to verify that there are sufficient reactive resources
- Add a requirement to identify where UVLS should be installed

VRF comments

- Time horizon should be long-term planning and R2.2 – redundant with R1.3.8

Comment from draft SAR on Planning Authority

- Provide clarity where the Planning Authority is mentioned

TPL-003:
FERC NOPR

- Require that critical system conditions be determined by conducting sensitivity studies (as elaborated in our discussion of TPL-001-0);
- Clarify footnote c: modify footnote (c) to provide specificity regarding the use of the term "controlled interruption" of load.
- Require the applicable entities to define and document the proxies necessary to simulate cascading outages; and
- Tailor the purpose statement to reflect the specific goal of the Reliability, as discussed above.

FERC Staff Report

- Same as TPL-001 & 002

Version 0 Industry Comments

- Same as TPL-001 & 002
- TO should provide plan of action
- Don't base penalties on low probability, low consequence events
- Use NERC Compliance Reporting Process
- Clearly identify outages

Phase III / IV Comments

- Add a requirement to verify that there are sufficient reactive resources
- Add a requirement to identify where UVLS should be installed

VRF Comment

- Time horizon should be long-term planning
- R2 – lack of consistency with TPL-001 & TPL-002
- R2.1 - lack of consistency with TPL-001
- R2.1.1 - lack of consistency with TPL-001 & TPL-004
- R2.1.2 - lack of consistency with TPL-001 & TPL-005
- R2.1.3 - lack of consistency with TPL-001 & TPL-006
- R2.2 - lack of consistency with TPL-001 & TPL-007

Comment from Draft SAR on Planning Authority

- Provide clarity where the Planning Authority is mentioned

TPL-004:
FERC NOPR

- Require that critical system conditions be determined in the same manner as proposed for TPL-001-0;
- Require the identification of options for reducing the probability or impacts of extreme events that cause cascading;
- Require that, in determining the range of extreme events to be assessed, the contingency list of Category D be expanded to include recent events; and
- Tailor the purpose statement to reflect the specific goal of the Reliability Standard.

FERC Staff Report

- Need to reduce the probability of loss of multiple elements and mitigating impact
- Share assessments
- Need to be more severe than weather
- Same as TPL-001

Version 0 Industry Comments

- Same as TPL-001
- Perform analysis on credible contingency
- R1.3.9 – remove from extreme events
- TO should determine which events to study

Phase III / IV Comments

- Add a requirement to verify that there are sufficient reactive resources
- Add a requirement to identify where UVLS should be installed

Comment from Draft SAR on Planning Authority

- Provide clarity where the Planning Authority is mentioned

TPL-005:

FERC NOPR

- Commission will not propose any action on TPL-005-0, as it applies only to regional reliability organizations.
- The term and extent of assessment, as well as the study years, are not appropriately defined; the process for determining load levels needs to be standardized; and local area networks and system adjustments need to be specifically defined.

Regional Fill-in-the-Blank Team Comments

- New SAR needed

Version 0 Industry Comments

- Define fuel adequacy
- An RRO can't make a mandatory request for another RRO to perform a study

TPL-006:
FERC NOPR

- Commission will not propose any action on TPL-006-0, as it applies only to regional reliability organizations.

Excerpts from FERC Order 693
TPL Standards

TPL-001-0

1770. Accordingly, the Commission approves Reliability Standard TPL-001-0 as mandatory and enforceable. In addition, the Commission directs the ERO to develop a modification to TPL-001-0 through the Reliability Standards development process that:

(1) requires that critical system conditions and study years be determined by conducting sensitivity studies with due consideration of the range of factors outlined above;
(2) requires a peer review of planning assessments with neighboring entities;
(3) modifies Requirement R1.3 to substitute the reference to regional reliability organization with Regional Entity;
(4) requires assessments of outages of critical long lead time equipment, consistent with the entity's spare equipment strategy and
(5) address the concerns regarding footnote (a) of Table 1, including the applicability of emergency ratings and consistency of normal ratings and voltages with values obtained from other Reliability Standards and the concerns raised by International Transmission in regard to the footnotes in Table 1.

TPL-002-0

1797. Accordingly, the Commission approves Reliability Standard TPL-002-0 as mandatory and enforceable. In addition, the Commission directs the ERO to develop a modification to TPL-002-0 through the Reliability Standards development process that:

(1) requires that critical system conditions be determined in the same manner as we propose to require for TPL-001-0;
(2) requires assessments of planned outages of long lead time critical equipment consistent with the entity's spare equipment strategy;
(3) requires all generators to ride through the same set of Category B and C contingencies as required by wind generators in Order No. 661, or to simulate those generators that cannot ride through as tripping;
(4) requires documentation of load models used in system studies and supporting rationale for their use;
(5) clarifies the phrase "permit operating steps necessary to maintain system control" in footnote (a) and the use of emergency ratings and
(6) clarifies footnote (b) in regard to load loss following a single contingency, specifying the amount and duration of consequential load loss and system adjustments permitted after the first contingency to return the system to a normal operating state, as discussed above.

TPL-003-0

1825. Accordingly, the Commission approves Reliability Standard TPL-003-0 as mandatory and enforceable. In addition, the Commission directs the ERO to develop a modification to TPL-003-0 through the Reliability Standards development process that:

(1) requires that critical system conditions be determined in the same manner as we propose to require for TPL-001-0;
(2) modifies footnote (c) to Table 1 to clarify the term "controlled load interruption;"
(3) requires applicable entities to define and document the proxies necessary to simulate cascading outages and
(4) tailors the purpose statement to reflect the specific goal of the Reliability Standard.

TPL-004-0

1836. Accordingly, the Commission approves Reliability Standard TPL-004-0 as mandatory and enforceable. In addition, the Commission directs the ERO to develop a modification to TPL-004-0 through the Reliability Standards development process that:

(1) requires that critical system conditions be determined in the same manner as proposed for TPL-001-0;
(2) requires the identification of options for reducing the probability or impacts of extreme events that cause cascading;
(3) requires that, in determining the range of extreme events to be assessed, the contingency list of Category D be expanded to include recent events and
(4) tailors the purpose statement to reflect the specific goal of the Reliability Standard.

TPL-005-0

1840. Consistent with our discussion in the Common Issues section above, we will not approve or remand TPL-005-0 until we receive additional information from the ERO.

1841. In Order No. 890, the Commission stated that there will be a series of technical conferences and regional meetings to obtain industry input to achieving the goal of regional planning. The Commission encourages the ERO to monitor those proceedings and use the results as input to the Reliability Standards development process in revising Reliability Standard TPL-005-0 to address regional planning and related processes.

TPL-006-0

1845. Consistent with our discussion in the Common Issues section above, the Commission will not approve or remand TPL-006-0.

1/17/07 Standard Authorization Request Form

Title of Proposed Project: Revisions to TPL-001 through TPL-006, Transmission System Performance and Assessment (This SAR is intended to supplement the SAR for Assess Transmission Future Needs and Develop Transmission Plans dated 4/30/06 in support of Standards Project 2006-02.)	
Request Date	January 17, 2007
Revised	April 5, 2006

SAR Requestor Information	**SAR Type** (*Check a box for each one that applies.*)	
Name Assess Transmission Future Needs Standard Drafting Team	☐	New Standard
Primary Contact Robert Millard – Vice-Chair, ATFNSDT	☒	Revision to existing Standards
Telephone (708) 588-9886 Fax none	☒	Withdrawal of existing Standard (possible)
E-mail bob.millard@rfirst.org	☐	Urgent Action

Purpose (Describe the purpose of the standard — what the standard will achieve in support of reliability.)

This SAR is intended to supplement the SAR for Assess Transmission Future Needs and Develop Transmission Plans dated 4/30/06 in support of Standards Project 2006-02.

The revisions to the following standards would improve technical clarity and address concerns identified by stakeholders and FERC:

TPL-001 — System Performance under Normal Conditions
TPL-002 — System Performance Following Loss of a Single BES Element
TPL-003 — System Performance Following Loss of Two or More BES Elements
TPL-004 — System Performance Following Extreme BES Events
TPL-005 — Regional and Interregional Self-Assessment Reliability Reports
TPL-006 — Data from the Regional Reliability Organization Needed to Assess Reliability

Revisions to TPL-001 through TPL-004 are already underway (Assess Transmission Future Needs and Develop Transmission Plans Standard Drafting Team) with the primary focus to clarify the associated Table 1, Transmission System Standards – Normal and Emergency Conditions, used to identify the criteria for system assessments. The expansion of the work already underway with TPL-001 through TPL-004 will focus on the general improvements to the standard identified through the attached *Appendix A: Reliability Standard Review Guidelines* and the FERC and stakeholder concerns identified in the attached *Appendix B: TPL-001 through TPL-006 Technical Issues List*.

TPL-005 and TPL-006, which require regional and inter-regional assessments based on the system performance requirements stated in TPL-001 through TPL-004, need to be modified or retired to address the "fill-in-the blank" components and establish requirements within the standards or through a contractual arrangement as to which entity should perform and provide the subject assessment and data. If these requirements are addressed through the delegation agreements each Region has with the Electric Reliability Organization (ERO), TPL-005 and TPL-006 could be retired.

The purpose of modifying this set of standards is to:

1. Provide an adequate level of reliability for the North American bulk power systems — ensure each of the standards is complete and the requirements are set at an appropriate level to ensure reliability.
2. Ensure each of the standards is enforceable as a mandatory reliability standard with financial penalties — the applicability to bulk power system owners, operators, and users, and as appropriate particular classes of facilities, is clearly defined; the purpose, requirements, and measures are results-focused and unambiguous; the consequences of violating the requirements are clear.
3. Make general improvements using the Reliability Standard Review Guidelines and consider the items mentioned in the Technical Issues Lists prepared by the NERC staff which attempt to capture comments from the:
    - FERC NOPR (Docket # RM06-16-00 dated October 20, 2006) ,
    - FERC staff report dated May 11, 2006 concerning NERC standards submitted with ERO application,

- Version 0 and Phase 3&4 standards development (see note 1),
- Violations Risk Factors (VRF) drafting team (see note 1),
- Regional Fill-in-the-Blank Team (RRSWG – a NERC working group involved with regional standards development), and
- Draft SAR for Planning Authority

The SDT should also consider any other issues that were not completely captured but were stated or referenced in the above materials.

Directions extracted from FERC Order 693, 890 and other applicable orders and any possible future subsequent revisions will be addressed by the SDT.

Note 1: Comments received from the industry during public postings of the TPL subject matter were sometimes outside the work being posted or outside the drafting team's scope and were not reflected in the drafting of the final work product. These should now be considered by this SDT.

Industry Need (Provide a detailed statement justifying the need for the proposed standard, along with any supporting documentation.)

The six standards in this set are all Version 0 standards. As the ERO begins enforcing compliance with reliability standards under Section 215 of the Federal Power Act in the United States and applicable statutes and regulations in Canada, the industry needs a set of clear, measurable, and enforceable reliability standards. The Version 0 standards, while a good foundation, were translated from historical operating and planning policies and guides that were appropriate in an era of voluntary compliance. The Version 0 standards and recent updates were put in place as a temporary starting point to start-up the ERO and begin enforcement of mandatory standards. However, it is important to update the standards in a timely manner, incorporating improvements to make the standards more suitable for enforcement and to capture prior recommendations that were deferred during the Version 0 translation and any subsequent standards development that have implications to the TPL standards.

Brief Description: (Describe the proposed standard in sufficient detail to clearly define the scope in a manner that can be easily understood by others.)

The proposed work effort will address three main issues:

1. Conformance to the new rules and regulations brought about by Section 215 of the Federal Power Act and the creation of the ERO,
2. Supplement the approved work of the existing ATFNSDT to include the necessary revisions to TPL-005 & TPL-006, and
3. Address technical issues raised by FERC and industry stakeholders.

Reliability Functions

The Standard will Apply to the Following Functions *(Check box for each one that applies.)*		
☒	Reliability Coordinator	Responsible for the real-time operating reliability of its Reliability Coordinator Area in coordination with its neighboring Reliability Coordinator's wide area view.
☐	Balancing Authority	Integrates resource plans ahead of time, and maintains load-interchange-resource balance within a Balancing Authority Area and supports Interconnection frequency in real time.
☐	Interchange Authority	Ensures communication of interchange transactions for reliability evaluation purposes and coordinates implementation of valid and balanced interchange schedules between Balancing Authority Areas.
☒	Planning Coordinator	Assesses the longer-term reliability of its Planning Coordinator Area.
☒	Resource Planner	Develops a (>one year) plan for the resource adequacy of its specific loads within its portion of a Planning Coordinator area.
☒	Transmission Planner	Develops a (>one year) plan for the reliability of the interconnected Bulk Electric System within its portion of the Planning Coordinator area.
☐	Transmission Service Provider	Administers the transmission tariff and provides transmission services under applicable transmission service agreements (e.g., the pro forma tariff).
☒	Transmission Owner	Owns and maintains transmission facilities.
☐	Transmission Operator	Ensures the real-time operating reliability of the transmission assets within a Transmission Operator Area.
☐	Distribution Provider	Delivers electrical energy to the End-use customer.
☒	Generator Owner	Owns and maintains generating facilities.
☐	Generator Operator	Operates generation unit(s) to provide real and reactive power.
☐	Purchasing-Selling Entity	Purchases or sells energy, capacity, and necessary reliability-related services as required.
☐	Market Operator	Interface point for reliability functions with commercial functions.
☒	Load-Serving Entity	Secures energy and transmission service (and related reliability-related services) to serve the End-use Customer.

Reliability and Market Interface Principles

Applicable Reliability Principles *(Check box for all that apply.)*	
☒	1. Interconnected bulk electric systems shall be planned and operated in a coordinated manner to perform reliably under normal and abnormal conditions as defined in the NERC Standards.
☐	2. The frequency and voltage of interconnected bulk electric systems shall be controlled within defined limits through the balancing of real and reactive power supply and demand.
☒	3. Information necessary for the planning and operation of interconnected bulk electric systems shall be made available to those entities responsible for planning and operating the systems reliably.
☐	4. Plans for emergency operation and system restoration of interconnected bulk electric systems shall be developed, coordinated, maintained and implemented.
☐	5. Facilities for communication, monitoring and control shall be provided, used and maintained for the reliability of interconnected bulk electric systems.
☐	6. Personnel responsible for planning and operating interconnected bulk electric systems shall be trained, qualified, and have the responsibility and authority to implement actions.
☒	7. The security of the interconnected bulk electric systems shall be assessed, monitored and maintained on a wide area basis.

Does the proposed Standard comply with all of the following Market Interface Principles? *(Select 'yes' or 'no' from the drop-down box.)*
1. The planning and operation of bulk electric systems shall recognize that reliability is an essential requirement of a robust North American economy. Yes
2. An Organization Standard shall not give any market participant an unfair competitive advantage.Yes
3. An Organization Standard shall neither mandate nor prohibit any specific market structure. Yes
4. An Organization Standard shall not preclude market solutions to achieving compliance with that Standard. Yes
5. An Organization Standard shall not require the public disclosure of commercially sensitive information. All market participants shall have equal opportunity to access commercially non-sensitive information that is required for compliance with reliability standards. Yes

Detailed Description (Provide enough detail so that an independent entity familiar with the industry could draft a standard based on this description.)

This SAR expands on the work already underway with the Assess Transmission Future Needs and Develop Transmission Plans Standard Drafting Team, by requiring that TPL-001 through TPL-006 be upgraded in accordance with the Reliability Standards Development Plan 2007 – 2009. These revisions include the following:

This SAR will be appended to the already approved SAR for Assess Transmission Future Needs and Develop Transmission Plans and will include modifications to all of the following standards:

TPL-001 — System Performance under Normal Conditions
TPL-002 — System Performance Following Loss of a Single BES Element
TPL-003 — System Performance Following Loss of Two or More BES Elements
TPL-004 — System Performance Following Extreme BES Events
TPL-005 — Regional and Interregional Self-Assessment Reliability Reports
TPL-006 — Data from the Regional Reliability Organization Needed to Assess Reliability

The revisions would improve technical clarity and address concerns identified by stakeholders and FERC. The drafting team will focus on the general improvements to the standards and use as a starting point for the expanded work the subject matter identified in *Appendix A: Reliability Standard Review Guidelines* and the FERC and stakeholder concerns identified in *Appendix B: TPL-001 through TPL-006 Technical Issues List*.

The expanded scope also will include elimination of the 'fill-in-the-blank' elements of TPL-005 and TPL-006, which require regional and inter-regional assessments based on the system performance requirements stated in TPL-001 through TPL-004. The standards need to be modified or retired to address the "fill-in-the blank" components. If the 'fill-in-the-blank' requirements are addressed through the contractual arrangements each Region has with the ERO, TPL-005 and TPL-006 could be retired.

The drafting team must ensure that there is consistency in the requirements across the set of TPL standards

The overall development may include other improvements to the standards deemed appropriate by the drafting team, with the consensus of stakeholders, consistent with establishing high quality, enforceable and technically sufficient bulk power system reliability standards, using the attached, Reliability Standard Review Guidelines. In addition, the drafting team will need to make conforming changes to standards impacted by changes made to these six standards.

Related Standards

Standard No.	Explanation

Related SARs

SAR ID	Explanation

Regional Differences

Region	Explanation
ERCOT	
FRCC	
MRO	
NPCC	
SERC	
RFC	
SPP	
WECC	

Appendix A: Reliability Standard Review Guidelines

Applicability
Does this reliability standard clearly identify the functional classes of entities responsible for complying with the reliability standard, with any specific additions or exceptions noted? Where multiple functional classes are identified is there a clear line of responsibility for each requirement identifying the functional class and entity to be held accountable for compliance? Does the requirement allow overlapping responsibilities between Registered Entities possibly creating confusion for who is ultimately accountable for compliance?

Does this reliability standard identify the geographic applicability of the standard, such as the entire North American bulk power system, an interconnection, or within a regional entity area? If no geographic limitations are identified, the default is that the standard applies throughout North America.

Does this reliability standard identify any limitations on the applicability of the standard based on electric facility characteristics, such as generators with a nameplate rating of 20 MW or greater, or transmission facilities energized at 200 kV or greater or some other criteria? If no functional entity limitations are identified, the default is that the standard applies to all identified functional entities.

Purpose
Does this reliability standard have a clear statement of purpose that describes how the standard contributes to the reliability of the bulk power system? Each purpose statement should include a value statement.

Performance Requirements
Does this reliability standard state one or more performance requirements, which if achieved by the applicable entities, will provide for a reliable bulk power system, consistent with good utility practices and the public interest?

Does each requirement identify who shall do what under what conditions and to what outcome?

Measurability
Is each performance requirement stated so as to be objectively measurable by a third party with knowledge or expertise in the area addressed by that requirement?

Does each performance requirement have one or more associated measures used to objectively evaluate compliance with the requirement?

If performance results can be practically measured quantitatively, are metrics provided within the requirement to indicate satisfactory performance?

Technical Basis in Engineering and Operations
Is this reliability standard based upon sound engineering and operating judgment, analysis, or experience, as determined by expert practitioners in that particular field?

Completeness
Is this reliability standard complete and self-contained? Does the standard depend on external information to determine the required level of performance?

Consequences for Noncompliance

In combination with guidelines for penalties and sanctions, as well as other ERO and regional entity compliance documents, are the consequences of violating a standard clearly known to the responsible entities?

Clear Language
Is the reliability standard stated using clear and unambiguous language? Can responsible entities, using reasonable judgment and in keeping with good utility practices, arrive at a consistent interpretation of the required performance?

Practicality
Does this reliability standard establish requirements that can be practically implemented by the assigned responsible entities within the specified effective date and thereafter?

Capability Requirements versus Performance Requirements
In general, requirements for entities to have 'capabilities' (this would include facilities for communication, agreements with other entities, etc.), should be located in the standards for certification. The certification requirements should indicate that entities have a responsibility to 'maintain' their capabilities.

Consistent Terminology
To the extent possible, does this reliability standard use a set of standard terms and definitions that are approved through the NERC reliability standards development process?

If the standard uses terms that are included in the NERC Glossary of Terms Used in Reliability Standards, then the term must be capitalized when it is used in the standard. New terms should not be added unless they have a 'unique' definition when used in a NERC reliability standard. Common terms that could be found in a college dictionary should not be defined and added to the NERC Glossary.

Are the verbs on the 'verb list' from the DT Guidelines? If not – do new verbs need to be added to the guidelines or could you use one of the verbs from the verb list?

Violation Risk Factors (Risk Factor)

High Risk Requirement

A requirement that, if violated, could directly cause or contribute to bulk electric system instability, separation, or a cascading sequence of failures, or could place the bulk electric system at an unacceptable risk of instability, separation, or cascading failures;

or a requirement in a planning time frame that, if violated, could, under emergency, abnormal, or restorative conditions anticipated by the preparations, directly cause or contribute to bulk electric system instability, separation, or a cascading sequence of failures, or could place the bulk electric system at an unacceptable risk of instability, separation, or cascading failures, or could hinder restoration to a normal condition.

Medium Risk Requirement

This is a requirement that, if violated, could directly affect the electrical state or the capability of the bulk electric system, or the ability to effectively monitor and control the bulk electric system. However, violation of a medium risk requirement is unlikely to lead to bulk electric system instability, separation, or cascading failures;

or a requirement in a planning time frame that, if violated, could, under emergency, abnormal, or restorative conditions anticipated by the preparations, directly and adversely affect the electrical state or capability of the bulk electric system, or the ability to effectively monitor, control, or restore the bulk electric system. However, violation of a medium risk requirement is unlikely, under emergency, abnormal, or restoration conditions anticipated by the preparations, to lead to bulk electric system instability, separation, or cascading failures, nor to hinder restoration to a normal condition.

Lower Risk Requirement

A requirement that, if violated, would not be expected to adversely affect the electrical state or capability of the bulk electric system, or the ability to effectively monitor and control the bulk electric system. A requirement that is administrative in nature;

Or a requirement in a planning time frame that, if violated, would not, under the emergency, abnormal, or restorative conditions anticipated by the preparations, be expected to adversely affect the electrical state or capability of the bulk electric system, or the ability to effectively monitor, control, or restore the bulk electric system. A planning requirement that is administrative in nature.

Time Horizon

The drafting team should also indicate the time horizon available for mitigating a violation to the requirement using the following definitions:

- **Long-term Planning** — a planning horizon of one year or longer.
- **Operations Planning** — operating and resource plans from day-ahead up to and including seasonal.
- **Same-day Operations** — routine actions required within the timeframe of a day, but not real-time.
- **Real-time Operations** — actions required within one hour or less to preserve the reliability of the bulk electric system.
- **Operations Assessment** — follow-up evaluations and reporting of real time operations.

Violation Severity Levels

The drafting team should indicate a set of violation severity levels that can be applied for the requirements within a standard. ('Violation severity levels' replaces the existing 'levels of non-compliance.') The violation severity levels may be applied for each requirement and may be combined to cover multiple requirements, as long as it is clear which requirements are included and that all requirements are included.

The violation severity levels should be based on the following definitions:

- **Lower: mostly compliant with minor exceptions** — the responsible entity is mostly compliant with and meets the intent of the requirement but is deficient with respect to one or more minor details. Equivalent score: 95% to 99% compliant.
- **Moderate: mostly compliant with significant exceptions** — the responsible entity is mostly compliant with and meets the intent of the requirement but is deficient with respect to one or more significant elements. Equivalent score: 85% to 94% compliant.

- **High: marginal performance or results** — the responsible entity has only partially achieved the reliability objective of the requirement and is missing one or more significant elements. Equivalent score: 70% to 84% compliant.
- **Severe: poor performance or results** — the responsible entity has failed to meet the reliability objective of the requirement. Equivalent score: less than 70% compliant.

Compliance Monitor

Replace, 'Regional Reliability Organization' with 'Regional Entity

Fill-in-the-blank Requirements

Do not include any 'fill-in-the-blank' requirements. These are requirements that assign one entity responsibility for developing some performance measures without requiring that the performance measures be included in the body of a standard – then require another entity to comply with those requirements.

Every reliability objective can be met, at least at a threshold level, by a North American standard. If we need regions to develop regional standards, such as in under-frequency load shedding, we can always write a uniform North American standard for the applicable functional entities as a means of encouraging development of the regional standards.

Requirements for Regional Reliability Organization

Do not write any requirements for the Regional Reliability Organization. Any requirements currently assigned to the RRO should be re-assigned to the applicable functional entity.

Effective Dates

Must be 1st day of 1st quarter after entities are expected to be compliant – must include time to file with regulatory authorities and provide notice to responsible entities of the obligation to comply. If the standard is to be actively monitored, time for the Compliance Monitoring and Enforcement Program to develop reporting instructions and modify the Compliance Data Management System(s) both at NERC and Regional Entities must be provided in the implementation plan.

Associated Documents

If there are standards that are referenced within a standard, list the full name and number of the standard under the section called, 'Associated Documents'.

Appendix B: TPL-001 through TPL-006 Technical Issues List

Excerpted from NERC Reliability Standards Development Plan: 2007 - 2009

TPL-001
FERC NOPR

- Require that critical system conditions be determined by conducting sensitivity studies; *(Not necessarily "cook book" but what are the processes someone reasonably skilled in the art would follow.)*
- Require that system conditions and contingencies assessed be reviewed by neighboring systems; *(Looking for coordination with neighboring systems)*
- Modify Requirement R1.3 to substitute the reference to regional reliability organization with Regional Entity;
- Require consideration of planned outages of critical equipment; and
- Modify footnote (a): footnote (a) to Table 1 requires clarification. The NERC Transmission Issues Subcommittee (TIS) 325 recommended that footnote (a) be modified to state explicitly that emergency ratings apply to Category B and C (contingency conditions) and not to Category A (system intact). The Commission proposes that footnote (a) be modified in the revised Reliability Standard as recommended by TIS and that the normal facility rating be in accordance with Reliability Standard FAC-008-1 and normal voltages be in accordance with Reliability Standard VAR-001-1.

FERC Staff Report

- Only for normal
- Doesn't consider planned outages
- Clarify footnote 'a' & 'b' in table
- Stress system during simulations
- Include sensitivity studies
- Include extreme events

Version 0 Industry Comments

- Several semantic issues
- Clarify timing for submittal of corrective plan
- Clarify use of applicable ratings in Table 1, note 'a'
- Need to address deliverability to load
- Define critical system conditions
- Allow for engineering judgment in setting conditions for power flow
- Do planned facilities include just those under construction?
- Need to include multiple time frames
- What is a major load center?
- Table 1 – C.5 goes beyond double circuit outage criteria
- Table 1, items 6, 7, 8 & 9 need footnote stating that they do not apply to generator breaker failure
- Table 1, note 'b' – clarify when to curtail firm deliveries

Phase III / IV Comments

- Add a requirement to verify that there are sufficient reactive resources
- Add a requirement to identify where UVLS should be installed

Violation Risk Factors (VRF) Drafting Team Comment

- R1 – time horizon should be long-term planning

Comment from Draft SAR on Planning Authority

- Provide clarity where the Planning Authority is mentioned

TPL-002:
FERC NOPR

- Require that critical system conditions be determined in the same manner as we propose to require for TPL-001-0;
- Require the inclusion of the reliability impact of the entities' existing spare equipment strategy; *(Only looking for consideration of spare equipment that has a long lead time such as a transformer)*
- Explicitly require all generators to ride through the same set of Category B and C contingencies as required for wind generators in Order No. 661; *(Document explicit definition of ride through capability for generators)*
- Require documentation of load models used in system studies and supporting rationale for their use;
- Clarify the phrase "permit operating steps necessary to maintain system control;" and
- Clarify footnote (b): modify footnote (b) to state that load shedding for a single contingency is not permitted except in very special circumstances where such interruption is limited to the firm load associated with the failure (consequential load loss).330 For purposes of clarity, the Commission proposes to require that the phrase "to prepare for the next contingency, system adjustments are permitted, including curtailments of contracted Firm (non-recallable reserved) electric power transfers" be deleted from footnote (b). This statement is more appropriate for Category C events and is already captured by footnote (c) to Table 1, which is applicable to Category C events.

FERC staff report

- Only includes loss of single element
- NERC TIS Report recommendations not addressed

Version 0 Industry Comments

- Define critical system conditions
- Clarify timing for corrective plan
- Address deliverability of generation to load
- Clarify applicable ratings in Table 1, note 'a'
- Don't include generation runback or re-dispatch
- Must study all contingencies and multiple demand levels & time frames
- Don't include planning outage
- Single terminals are not included

Phase III / IV comments

- Add a requirement to verify that there are sufficient reactive resources
- Add a requirement to identify where UVLS should be installed

VRF comments

- Time horizon should be long-term planning and R2.2 – redundant with R1.3.8

Comment from draft SAR on Planning Authority

- Provide clarity where the Planning Authority is mentioned

TPL-003:
FERC NOPR

- Require that critical system conditions be determined by conducting sensitivity studies (as elaborated in our discussion of TPL-001-0);
- Clarify footnote c: modify footnote (c) to provide specificity regarding the use of the term "controlled interruption" of load.
- Require the applicable entities to define and document the proxies necessary to simulate cascading outages; and
- Tailor the purpose statement to reflect the specific goal of the Reliability, as discussed above.

FERC Staff Report

- Same as TPL-001 & 002

Version 0 Industry Comments

- Same as TPL-001 & 002
- TO should provide plan of action
- Don't base penalties on low probability, low consequence events
- Use NERC Compliance Reporting Process
- Clearly identify outages

Phase III / IV Comments

- Add a requirement to verify that there are sufficient reactive resources
- Add a requirement to identify where UVLS should be installed

VRF Comment

- Time horizon should be long-term planning
- R2 – lack of consistency with TPL-001 & TPL-002
- R2.1 - lack of consistency with TPL-001
- R2.1.1 - lack of consistency with TPL-001 & TPL-004
- R2.1.2 - lack of consistency with TPL-001 & TPL-005
- R2.1.3 - lack of consistency with TPL-001 & TPL-006
- R2.2 - lack of consistency with TPL-001 & TPL-007

Comment from Draft SAR on Planning Authority

- Provide clarity where the Planning Authority is mentioned

TPL-004:
FERC NOPR

- Require that critical system conditions be determined in the same manner as proposed for TPL-001-0;
- Require the identification of options for reducing the probability or impacts of extreme events that cause cascading;
- Require that, in determining the range of extreme events to be assessed, the contingency list of Category D be expanded to include recent events; and
- Tailor the purpose statement to reflect the specific goal of the Reliability Standard.

FERC Staff Report

- Need to reduce the probability of loss of multiple elements and mitigating impact
- Share assessments
- Need to be more severe than weather
- Same as TPL-001

Version 0 Industry Comments

- Same as TPL-001
- Perform analysis on credible contingency
- R1.3.9 – remove from extreme events
- TO should determine which events to study

Phase III / IV Comments

- Add a requirement to verify that there are sufficient reactive resources
- Add a requirement to identify where UVLS should be installed

Comment from Draft SAR on Planning Authority

- Provide clarity where the Planning Authority is mentioned

TPL-005:

FERC NOPR

- Commission will not propose any action on TPL-005-0, as it applies only to regional reliability organizations.
- The term and extent of assessment, as well as the study years, are not appropriately defined; the process for determining load levels needs to be standardized; and local area networks and system adjustments need to be specifically defined.

Regional Fill-in-the-Blank Team Comments

- New SAR needed

Version 0 Industry Comments

- Define fuel adequacy
- An RRO can't make a mandatory request for another RRO to perform a study

TPL-006:
FERC NOPR

- Commission will not propose any action on TPL-006-0, as it applies only to regional reliability organizations.

Excerpts from FERC Order 693
TPL Standards

TPL-001-0

1770. Accordingly, the Commission approves Reliability Standard TPL-001-0 as mandatory and enforceable. In addition, the Commission directs the ERO to develop a modification to TPL-001-0 through the Reliability Standards development process that:

(1) requires that critical system conditions and study years be determined by conducting sensitivity studies with due consideration of the range of factors outlined above;
(2) requires a peer review of planning assessments with neighboring entities;
(3) modifies Requirement R1.3 to substitute the reference to regional reliability organization with Regional Entity;
(4) requires assessments of outages of critical long lead time equipment, consistent with the entity's spare equipment strategy and
(5) address the concerns regarding footnote (a) of Table 1, including the applicability of emergency ratings and consistency of normal ratings and voltages with values obtained from other Reliability Standards and the concerns raised by International Transmission in regard to the footnotes in Table 1.

TPL-002-0

1797. Accordingly, the Commission approves Reliability Standard TPL-002-0 as mandatory and enforceable. In addition, the Commission directs the ERO to develop a modification to TPL-002-0 through the Reliability Standards development process that:

(1) requires that critical system conditions be determined in the same manner as we propose to require for TPL-001-0;
(2) requires assessments of planned outages of long lead time critical equipment consistent with the entity's spare equipment strategy;
(3) requires all generators to ride through the same set of Category B and C contingencies as required by wind generators in Order No. 661, or to simulate those generators that cannot ride through as tripping;
(4) requires documentation of load models used in system studies and supporting rationale for their use;
(5) clarifies the phrase "permit operating steps necessary to maintain system control" in footnote (a) and the use of emergency ratings and
(6) clarifies footnote (b) in regard to load loss following a single contingency, specifying the amount and duration of consequential load loss and system adjustments permitted after the first contingency to return the system to a normal operating state, as discussed above.

TPL-003-0

1825. Accordingly, the Commission approves Reliability Standard TPL-003-0 as mandatory and enforceable. In addition, the Commission directs the ERO to develop a modification to TPL-003-0 through the Reliability Standards development process that:

(1) requires that critical system conditions be determined in the same manner as we propose to require for TPL-001-0;
(2) modifies footnote (c) to Table 1 to clarify the term "controlled load interruption;"
(3) requires applicable entities to define and document the proxies necessary to simulate cascading outages and
(4) tailors the purpose statement to reflect the specific goal of the Reliability Standard.

TPL-004-0

1836. Accordingly, the Commission approves Reliability Standard TPL-004-0 as mandatory and enforceable. In addition, the Commission directs the ERO to develop a modification to TPL-004-0 through the Reliability Standards development process that:

(1) requires that critical system conditions be determined in the same manner as proposed for TPL-001-0;
(2) requires the identification of options for reducing the probability or impacts of extreme events that cause cascading;
(3) requires that, in determining the range of extreme events to be assessed, the contingency list of Category D be expanded to include recent events and
(4) tailors the purpose statement to reflect the specific goal of the Reliability Standard.

TPL-005-0

1840. Consistent with our discussion in the Common Issues section above, we will not approve or remand TPL-005-0 until we receive additional information from the ERO.

1841. In Order No. 890, the Commission stated that there will be a series of technical conferences and regional meetings to obtain industry input to achieving the goal of regional planning. The Commission encourages the ERO to monitor those proceedings and use the results as input to the Reliability Standards development process in revising Reliability Standard TPL-005-0 to address regional planning and related processes.

TPL-006-0

1845. Consistent with our discussion in the Common Issues section above, the Commission will not approve or remand TPL-006-0.

Standard Development Roadmap

This section is maintained by the drafting team during the development of the standard and will be removed when the standard becomes effective.

Development Steps Completed:

1. Version 1 of SAR posted for comment from April 2, 2002 through May 3, 2002.
2. Version 2 of SAR posted for comment from May 5, 2004 through June 5, 2004.
3. Version 3 of SAR posted on November 18, 2005.
4. SAR approved on April 30, 2006.
5. Version 1 of Supplemental SAR posted for comment from February 15, 2007 through March 16, 2007.
6. Version 2 of Supplemental SAR posted on April 9, 2007.
7. Version 1 of revised standard(s) posted for comment on September 17, 2007.

Proposed Action Plan and Description of Current Draft:

The SDT has established an aggressive schedule of meetings and conference calls that allows for steady progress through the standards development process in anticipation of completing their assignment in 2Q08. The current draft is the first iteration of the revision of existing standards TPL-001 through TPL-006 and includes one revised standard, TPL-001-1, replacing TPL-001-0, TPL-002-0, TPL-003-0 and TPL-004-0. TPL-005 & -006 will be addressed later in the project. Violation Risk Factors, Time Horizons, Measures, Compliance and Implementation Plans will be included in subsequent postings.

Future Development Plan:

Anticipated Actions	Anticipated Date
1. Respond to comments from first posting of standard(s) and submit revision 1 of the standard(s).	4Q2007
2. Respond to comments from second posting of standard(s) and submit revision 2 of the standard(s).	4Q2007
3. Submit revision 3 of the standard(s) for balloting.	4Q2007
4. Submit standard(s) for recirculation balloting.	2Q2008
5. Submit standard(s) to BOT.	2Q2008
6.	
7.	

Definitions of Terms Used in Standard

This section includes all newly defined or revised terms used in the proposed standard. Terms already defined in the Reliability Standards Glossary of Terms are not repeated here. New or revised definitions listed below become approved when the proposed standard is approved. When the standard becomes effective, these defined terms will be removed from the individual standard and added to the Glossary.

Base Case: Computer representation of the projected initial or starting Transmission System conditions for a specific point in time. Each base case reflects the forecasted Load at each bus (or node) on the interconnected Transmission System, the transmission facilities which deliver the generation and reactive resources to the connected Load, and the generation dispatch including firm transaction obligations assumed to supply the connected Load. The models also reflect Facility Ratings.

Consequential Load Loss: Load that is no longer served because it is directly connected to an element(s) that is removed from service due to fault clearing action or mis-operation.

Extreme Events: Events which are more severe than Planning Events and have a low probability of occurrence.

Long-Term Transmission Planning Horizon: Transmission planning period that covers years six through ten or beyond.

Near-Term Transmission Planning Horizon: Transmission planning period that covers Years One through five.

Non-Consequential Load Loss: Load loss other than Consequential Load Loss. For example, Load loss that occurs through manual (operator initiated) or automatic operations such as under-voltage Load shedding, under-frequency Load shedding, or Special Protection Systems.

Planning Assessment: Documented evaluation of future Bulk Electric System needs by the use of performance studies that cover a range of assumptions regarding system conditions, time frames, future plans including capital reinforcements and operating procedures and other factors, such as asset conditions and age.

Planning Events: Events which require Transmission system performance requirements to be met.

Plant Stability Study: Study of an individual plant's Stability for various Contingencies in the vicinity of the plant; concerned with the effect on the System of the generating units' loss of synchronism and the damping of the generating units' power oscillations.

System Stability Study: Study of the System or portions of the System to ensure that angular Stability is maintained, inter-area power oscillations are damped, and voltages during the dynamic simulation stay within acceptable performance limits.

Year One: The first year that a Transmission Planner is responsible for studying. This is further defined as the planning window that begins the next calendar year from the time the Transmission Planner submits their annual studies.

A. Introduction

1. **Title:** **Transmission System Planning Performance Requirements**

2. **Number:** **TPL-001-1**

3. **Purpose:** Establish Transmission System planning performance requirements within the planning horizon to develop a Bulk Electric System that will operate reliably over a broad spectrum of System conditions and following a wide range of probable Contingencies.

4. **Applicability:**

   4.1. Functional Entity

   4.1.1. Planning Coordinator.

   4.1.2. Transmission Planner.

   4.1.3. Resource Planner.

   4.1.4. Load-Serving Entity.

   4.1.5. Transmission Owner.

   4.1.6. Generator Owner.

5. **Effective Date:** TBD

B. Requirements

R1. Each Resource Planner, Transmission Planner, Transmission Owner, Generator Owner, and Load-Serving Entity shall each provide its respective Planning Coordinator with the following modeling information required for System performance studies upon request (within 30 calendar days) : *[Violation Risk Factor: TBD] [Time Horizon: TBD]*

R1.1. Load forecasts adhering, at a minimum, to the following criteria:

R1.1.1. Use of expected Load mix based on the actual or expected aggregate mix of industrial, commercial, and residential Loads.

R1.1.2. Based on normal weather patterns as agreed to by the Planning Coordinator(s) and the Transmission Planner(s) for the area(s) of their responsibility.

R1.1.3. Identification of Demand Side Management (DSM) Load reductions consistent with operational requirements.

R1.2. Load models with supporting rationale that include power factor data based on historical System performance, validated by measurement during stressed System conditions, or documented Transmission planning area requirements.

R1.3. Firm transfers/Interchange Schedules and resources required to supply Load for each Balancing Authority.

R1.4. Known planned outages and long-term outages for Transmission and generation equipment including protective relays with consideration given to spare equipment strategy.

R1.5. Planned Facilities defined in accordance with the documented criteria of the Planning Coordinator, including but not limited to: Transmission Lines, generators, circuit breakers, Reactive Power devices, Protection System equipment and control devices, and new technologies.

R2. Each Transmission Planner and Planning Coordinator shall conduct and document the results of its annual Planning Assessment of its portion of the BES. This Planning Assessment shall use current or past studies, and shall cover steady state analyses, short circuit analyses, and Stability analyses including both System and plant Stability. *[Violation Risk Factor: TBD] [Time Horizon: TBD]*

R2.1. The steady state portion of the Near-Term Transmission Planning Horizon Planning Assessment shall address all five years of the assessment period and be supported at a minimum by the following annual current studies,, supplemented with qualified past studies as shown in Requirement R2.6:

R2.1.1. System peak Load for either Year One or year two, and year five.

R2.1.2. System Off-Peak Load for one of the five years.

R2.1.3. For each of the studies described in Requirement R2.1.1 and Requirement R2.1.2, sensitivity case(s) that stress the System with sensitivities that reflect one or more of the following conditions shall be run and documentation with the rationale for the selected sensitivity(ies) shall be supplied:

R.2.1.3.1. Higher or lower Load forecasts from the Base Case with variability of Load/demand and Load power factors due to season, weather, or time of day.

R.2.1.3.2. Modification of expected transfers.

R.2.1.3.3. Unavailability of long lead time facilities.

R.2.1.3.4. Variability and outages of reactive resources.

R.2.1.3.5. Generation additions, retirements, or other dispatch scenarios.

R.2.1.3.6. Decreased effectiveness of controllable Loads and Demand Side Management.

R.2.1.3.7. Modification of planned Transmission outages.

R2.2. For the steady state portion of the Long-Term Transmission Planning Horizon Planning Assessment, at a minimum, a current System peak Load study is required annually for one of the years in the assessment period to support the annual Planning Assessment.

R2.2.1. To accommodate any known longer lead time projects that may take longer than ten years to complete, the Planning Assessment shall be extended accordingly.

R2.3. The short circuit portion of the Planning Assessment shall be conducted annually and supported by current or past studies.

R2.3.1. A current study shall be performed if changes in the BES result in increased fault currents such as resource additions and other Facility changes that result in reductions in impedance.

R2.4. The System Stability portion of the Near-Term Transmission Planning Horizon Planning Assessment shall address all five years of the assessment period, and be supported by current or past studies. The following studies are required:

R2.4.1. System peak Load for one of the five years. For peak System Load levels, the Load model shall include the dynamic effects of induction motor Loads.

R2.4.2. System Off-Peak Load for one of the five years.

R2.4.3. Sensitivity case(s) that stress the System to reflect one or more of the following conditions shall be run with documentation provided explaining the rationale for the selected sensitivity(ies):

R.2.4.3.1. Variations in Load model assumptions.
R.2.4.3.2. Expected simultaneous transfers including non-firm transfers.
R.2.4.3.3. Unavailability of long lead time facilities.
R.2.4.3.4. Reactive dispatch of generators and other reactive power devices.
R.2.4.3.5. Generation additions, retirements, or other dispatch scenarios.

R2.5. The plant Stability portion of the Planning Assessment shall be analyzed consistent with Requirement R4.6 with studies for the year when the following occur:

R2.5.1. New generator(s) are added or generation modifications are made such as increasing generation capability, replacing the exciter or addition of a power System stabilizer.

R2.5.2. Material changes in the electrical vicinity of existing generation are made such as the addition or removal of a Transmission Line at or near the point of Interconnection.

R2.6. Past studies may be used to support the Planning Assessment if they meet the following requirements:

R2.6.1. For steady state analysis: if the study is less than three years old and no material changes have occurred to the System in the intervening period. Material changes include topology changes, generation additions/removals, and market structure changes.

R2.6.2. For short circuit analysis: if the study is less than five years old and no material changes have occurred to the System in the intervening period.

R2.6.3. For plant and System Stability analysis: until material changes in the System make the study no longer valid. Material changes in the system include the addition of a Transmission Line or a generator.

R2.7. For Planning Events shown in Table 1 – Steady State Performance and Table 2 – Stability Performance, when the analysis indicates an inability of the System to meet the performance requirements in the tables, the Planning Assessment shall include Corrective Action Plans addressing how the performance requirements will be met. Revisions to the Corrective Action Plans are allowed over time but shall meet the performance requirements in the tables. Such plans shall:

R2.7.1. Identify System deficiencies and the associated actions needed to achieve required System performance including Transmission and generation improvements, DSM, new technologies, or Operating Procedures including the duration of interim Operating Procedures.

R.2.7.1.1. For the Near-Term Transmission Planning Horizon, include both a project initiation date as well as an in-service date.

R.2.7.1.2. For the Long-Term Transmission Planning Horizon, provide an in-service year..

R2.7.2. Be added to study cases and the cases re-tested to show that the System with planned additions meets the performance requirements in the tables.

R2.7.3. Include documentation of the criteria for determining committed and proposed projects, with all projects identified as either, 'committed' or 'proposed.'

R2.7.4. Not remove committed projects without documentation to show that the revised plan meets the performance requirements.

R2.7.5. Be reviewed in subsequent annual Planning Assessments as to implementation status of identified System Facilities and Operating Procedures.

R3. For the steady state portion of the Planning Assessment, each Transmission Planner and Planning Coordinator shall perform analysis for the Near-Term and Long-Term Transmission Planning Horizon studies in Requirement R2.1 and Requirement R2.2. The studies shall be based on computer power flow simulations that analyze BES normal performance (n-0) and System response to contingencies in Table 1 – Steady State Performance. *[Violation Risk Factor: TBD] [Time Horizon: TBD]*

R3.1. Studies shall determine whether the BES meets the performance requirements in Table 1 – Steady State Performance.

R3.2. Contingency analyses shall simulate the removal of all elements including those that System protection is expected to disconnect for each Contingency without operator intervention.

R3.2.1. For all generators, studies shall consider the minimum steady state voltage limitations of all generators and identify how the generators are treated in the steady state simulation.

R3.2.2. For all Transmission lines, studies shall consider relay loadability and identify how loadability is treated in the steady state simulation.

R3.3. For Steady State studies:

R3.3.1. Performance criteria for System normal conditions and for Planning Events in Table 1 – Steady State Performance shall be met.

R3.3.2. Evaluations shall be performed for single Contingencies (identified in Table 1 – Steady State Performance).

R.3.3.2.1. Consequential Load loss (expected maximum demand and expected duration) following a single Contingency shall be identified in the Planning Assessment.

R.3.3.2.2. Following single Contingency events, System adjustments other than shedding of firm Load or curtailment of firm transfers are permitted to meet performance requirements provided these adjustments can be accomplished within the time period allowed by the applicable time limited ratings.

R3.3.3. Those Planning Event Contingencies in Table 1 – Steady State Performance not covered in Requirement R3.3.2 that are expected to produce more severe System impacts shall be identified, evaluated for System performance, and the rationale for the Contingencies selected for evaluation shall be available as supporting information and shall include an explanation of why the remaining Contingencies would produce less severe System results.

R3.4. Those Extreme Events in Table 1 – Steady State Performance that are expected to produce more severe System impacts shall be identified, evaluated for System performance, and the rationale for the Contingencies selected for evaluation shall be available as supporting information and shall include an explanation of why the remaining Contingencies would produce less severe System results. If the Extreme Events analysis concludes there are Cascading Outages caused by the occurrence of Extreme Events, an evaluation of implementing a change designed to reduce or mitigate the likelihood of such consequences shall be conducted.

R3.5. Manual and automatic generation run-back is allowed as a response to single and multiple Contingencies as long as Facility Ratings are not exceeded.

R3.6. Manual and automatic generation tripping is allowed for multiple Contingencies and for single Contingencies only in situations that meet all of the following conditions:

R3.6.1. TBD

Note: WECC has informed the SDT that it will be submitting an Interconnection-wide regional variance to allow for manual and automatic generation tripping for single Contingencies. The regional variance will be justified based on physical System differences in the western Interconnection. WECC is developing a white paper to support this position. The actual text of the regional variance will be included in the next posting of this standard.

R4. For the Stability portion of the Planning Assessment, as described in Requirement R2.4

and Requirement R2.5, each Transmission Planner and Planning Coordinator shall perform the Contingency analyses listed in Table 2 – Stability Performance. The studies shall cover both System Stability and plant Stability. The following requirements apply to both System Stability and plant Stability studies unless otherwise noted. *[Violation Risk Factor: TBD] [Time Horizon: TBD]*

R4.1. Studies to meet the performance requirements in Table 2 – Stability Performance shall use computer Stability simulations that analyze the response of the BES.

R4.2. Contingency analyses shall simulate the removal of all elements including those that System protection is expected to disconnect for each Contingency without operator intervention.

R4.3. Studies shall consider the voltage ride through capability of all generators and identify how the generators are treated in the simulation.

R4.4. Studies shall identify any planned upgrades (including protection and control modifications) needed to meet the performance requirements of the Planning Events of Table 2 – Stability Performance and validate their effectiveness.

R4.5. For the System Stability study:

R4.5.1. At a minimum, those Planning Event Contingencies in Table 2 – Stability Performance that would produce more severe System impacts shall be identified, evaluated for System performance, and the rationale for the Contingencies selected for evaluation shall be available as supporting information with an explanation of why the remaining Contingencies would produce less severe System results.

R4.5.2. At a minimum, those Extreme Events in Table 2 – Stability Performance that would produce more severe System impacts shall be identified, evaluated for System performance, and the rationale for the Contingencies selected for evaluation shall be available as supporting information and shall include an explanation of why the remaining Contingencies would produce less severe System results. If the Extreme Events analysis concludes there are Cascading Outages, an evaluation of implementing a change designed to reduce or mitigate the likelihood of such consequences shall be conducted.

R4.6. For the Plant Stability studies:

R4.6.1. Shall be performed for individual generating units 20 MW or greater directly connected through a step-up transformer to the BES and for generating units at the same location which total 75 MW or greater, directly connected through their step-up transformer(s) to the BES.

R4.6.2. Shall be performed for changes in the real power output of a generating unit by more than 10% of the existing capability or more than 20 MW whichever is greater.

R4.6.3. Shall be performed and evaluated for those Planning Events that would produce more severe System impacts and the rationale for the Contingencies selected for evaluation shall be available as supporting

information and shall include an explanation of why the remaining Contingencies would produce less severe System results. The identified Contingencies, at a minimum, shall be evaluated.

R4.6.4. Shall meet Performance requirements for Planning Events in Table 2 – Stability Performance.

R5. Each Transmission Planner and Planning Coordinator shall determine and identify individual and joint responsibilities for performing the required studies for the Planning Assessment. *[Violation Risk Factor: TBD] [Time Horizon: TBD]*

R6. Each Planning Coordinator shall coordinate the distribution of Planning Assessment results among affected entities, coordinating analysis of these results through an open and transparent peer review process. *[Violation Risk Factor: TBD] [Time Horizon: TBD]* This distribution shall include:

R6.1. Transmission Planners within the Planning Coordinator's area

R6.2. Transmission Planners of neighboring impacted areas

R6.3. Planning Coordinators of neighboring areas

Table 1 – Steady State Performance

Performance Requirements

For all Planning Events:

- Equipment Ratings shall not be exceeded.
- System steady state voltages and post-transient voltage deviation shall be within acceptable limits established by the Planning Coordinator (or Transmission Planner if more restrictive.)
- Voltage instability, cascading outages, and uncontrolled islanding shall not occur.
- Consequential Load loss is allowed for all cases shown.
- Simulate the removal of all elements that Protection Systems and controls are expected to disconnect for each Contingency.
- Simulate Normal Clearing unless otherwise specified.

Planning Events			
#	**Event**	**Interruption of Firm Transfer Allowed (does not result in loss of Load)**	**Non-Consequential Load Loss Allowed**
P1 (single Contingency)	Loss of: 1. A generator 2. A Transmission circuit 3. A transformer 4. A shunt device (including FACTS devices)	No	No
P2 (single Contingency)	Loss of: 1. Bus section above 300 kV 2. Non-bus tie breaker (above 300 kV) due to internal fault 3. Single pole of a DC line	Yes, if transfer is dependent on the outaged DC line No otherwise	No
P3 (multiple Contingency)	Loss of either a generator, Transmission circuit, a transformer with low side voltage rating above 300 kV, or a bus and a stuck non-bus tie breaker (above 300 kV)	Yes, if transfer is dependent on the outaged DC line No otherwise	No
P4 (multiple Contingency)	1. Loss of a generator followed by a System adjustment followed by the loss of a generator. 2. Loss of a generator followed by a System adjustment followed by the loss of a monopolar DC line 3. Loss of a generator followed by a System adjustment followed by the loss of a Transmission circuit 4. Loss of a generator followed by a System adjustment followed by the	Yes, if transfer is dependent on the outaged DC line No otherwise	No

	loss of a transformer		
P5 (multiple Contingency)	Above 300 kV, the loss of: 1. A Transmission circuit followed by a System adjustment followed by the loss of another Transmission circuit 2. A Transmission circuit followed by a System adjustment followed by the loss of a transformer with low side voltage rating above 300 kV 3. A transformer with low side voltage rating above 300 kV followed by a System adjustment followed by the loss of another transformer	Yes	No
P6 (single Contingency)	Loss of: 1. A bus tie breaker due to internal fault 2. A bipolar DC line or an asynchronous tie line 3. A non-bus tie breaker (below 300 kV) due to internal fault 4. A bus section below 300 kV	Yes	Yes
P7 (multiple Contingency)	Loss of: 1. A bus section above 300 kV and a stuck bus tie breaker 2. Either a generator, a Transmission circuit, a transformer, or a bus and a stuck non-bus tie breaker (below 300 kV)	Yes	Yes
P8 (multiple Contingency)	Below 300 kV, the loss of: 1. A Transmission circuit followed by a System adjustment followed by the loss of another Transmission circuit 2. A Transmission circuit followed by a System adjustment followed by the loss of a transformer 3. A transformer followed by a System adjustment followed by the loss of another transformer	Yes	Yes
P9 (multiple Contingency)	1. Loss of any two circuits on a common structure (excluding where multiple circuits share a common structure for no more than one mile) 2. Loss of a generator followed by a System adjustment followed by the loss of a monopolar or bipolar DC line, or an asynchronous tie line 3. Loss of a DC line (monopolar or bipolar) or asynchronous tie followed by a System adjustment followed by the loss of a second DC line (monopolar or bipolar) or asynchronous tie 4. Loss of a DC line (monopolar or bipolar) or asynchronous tie followed by a System adjustment followed by the loss of a Transmission circuit	Yes	Yes

	5. Loss of a transformer followed by a System adjustment followed by the loss of a DC line (monopolar or bipolar) or asynchronous tie line 6. Loss of a transformer followed by a System adjustment with a spare transformer available followed by the loss of another transformer		

Extreme Events

Evaluation Requirements

For all Extreme Events:

1. See Requirement R3.4
2. Simulate the removal of all elements that Protection Systems and controls are expected to disconnect for each Contingency.
3. Simulate Normal Clearing unless otherwise specified.

Extreme Event Descriptions

1. Loss of a single generator, Transmission circuit, DC line, or transformer forced out of service followed by another single generator, Transmission circuit, DC line, or transformer forced out of service prior to System adjustments.

2. Local area events affecting the Transmission System such as:
   a. Loss of tower line with three or more circuits
   b. Loss of all Transmission lines on a common right-of-way
   c. Loss of switching station or substation (loss of one voltage level plus transformers)
   d. Loss of all generating units at a station
   e. Loss of a large Load or major Load center

3. Wide area events affecting the Transmission System such as:
   a. Loss of a large gas pipeline into a region or multiple regions that have significant gas-fired generation
   b. A successful cyber attack
   c. Regulation that restricts or eliminates the use of a river or lake or other body of water as the cooling source for generation
   d. Shutdown of a nuclear power plant(s) and other facilities a day or more prior to a hurricane, tornado or wildfire, or for other common causes
   e. Regulation that restricts or eliminates the use of a river or lake or other body of water as the cooling source for generation
   f. Shutdown of a nuclear power plant(s) and other facilities a day or more prior to a hurricane, tornado or wildfire, or for other common causes such as problems with similarly designed plants
   g. The loss of older Transmission lines which may not be constructed to meet an entity's present radial ice or wind loading requirements, while the newer or stronger Transmission lines remain in service
   h. Other events based upon operating experience

Table 2 – Stability Performance Table

Performance Requirements

For all Planning Events:

- The System shall be stable[1]
- Dynamic voltages shall be within acceptable limits established by the Planning Coordinator or Transmission Planner (if more restrictive)
- Uncontrolled islanding and Cascading Outages shall not occur
- Simulate the removal of all elements that Protection Systems and controls are expected to disconnect for each Contingency.
- Simulate Normal Clearing unless otherwise specified.

Planning Events			
#	**Initial Condition**	**Event**	**Non-Consequential Load Loss Allowed**
P1 (single Contingency)	System normal	Single Line Ground (SLG) fault on, a 3-Phase (3Ø) fault on, or an unexpected loss without a fault of (whichever is worst): 1. A generator 2. A Transmission circuit 3. A transformer	No
P2 (single Contingency)	System normal	1. SLG fault on bus section above 300 kV 2. SLG internal fault in non-bus tie breaker (above 300 kV) 3. A single pole block of a DC line	No
P3 (multiple Contingency)	System normal	SLG fault on either a generator, Transmission circuit, a transformer, or a bus and a stuck[2] non-bus tie breaker (above 300 kV)	No
P4 (multiple Contingency)	A single generator out of service followed by System adjustments	1. Apply a P1.1 Contingency. 2. Apply a P2.3 Contingency. 3. Apply a P1.2 Contingency. 4. Apply a P1.3 Contingency.	No
P5 (multiple Contingency)	A Transmission circuit above 300 kV out of service followed by System adjustments	1. Apply a P1.2 Contingency. 2. Apply a P1.3 Contingency.	No

	A transformer with low side voltage rating above 300 kV out of service followed by System adjustments	3. Apply a P1.3 Contingency.	
P6 (single Contingency)	System normal	1. SLG internal fault in bus tie breaker 2. A bipolar block of a DC line 3. SLG internal fault in non-bus tie breaker (below 300 kV) 4. SLG fault on bus section (below 300 kV)	Yes
P7 (multiple Contingency)	System normal	1. SLG fault on a bus section above 300 kV and a stuck bus tie breaker 2. SLG fault on either a generator, a Transmission circuit, a transformer, or a bus and a stuck non-bus tie breaker (below 300 kV)	Yes
P8 (multiple Contingency)	A Transmission circuit below 300 kV out of service followed by System adjustments A transformer with low side voltage rating below 300 kV out of service followed by System adjustments	1. Apply a P1.2 Contingency. 2. Apply a P1.3 Contingency. 3. Apply a P1.3 Contingency.	Yes
P9 (multiple Contingency)	System normal A single generator out of service followed by System adjustments A DC circuit out of service followed by	1. SLG fault on each circuit of any two circuits on a common structure (excluding events where multiple circuits share a common structure for no more than one mile). 2. Apply a P6.2 Contingency. 3. Apply a P2.3 Contingency. 4. Apply a P1.2 Contingency.	Yes

	System adjustments A transformer out of service followed by System adjustments A spare transformer inserted to replace an outaged transformer followed by System adjustments	5. Apply a P2.3 Contingency. 6. Apply a P1.3 Contingency.	

Extreme Events

Evaluation Requirements

For all Extreme Events:

- See Requirement R4.5.2 in the text
- Simulate the removal of all elements that Protection Systems and controls are expected to disconnect for each Contingency.
- Simulate Normal Clearing unless otherwise specified.

1. 3Ø fault on generator with stuck breaker
2. 3Ø fault on Transmission circuit with stuck breaker
3. 3Ø fault on transformer with stuck breaker
4. 3Ø fault on bus section with stuck breaker
5. 3Ø internal fault in breaker
6. 3Ø fault on two or more circuits on a common structure
7. SLG or 3Ø fault on all Transmission lines on a common right-of-way
8. 3Ø fault on switching station or substation (loss of one voltage level plus transformers)
9. 3Ø fault with loss of all generating units at a station

Notes:

1. System stable means:
   a. Angular stability:
      i. For Planning Events P1 and P3.2: No generating unit or units shall be allowed to pull out of synchronism. A generator being disconnected from the system by fault clearing action or by a Special Protection Scheme is not considered pulling out of synchronism.
      ii. For all other Planning Events: No generating unit or units totaling more than the contingency reserve (spinning reserve) of the Balancing Authority shall be allowed to pull out of synchronism. Generators that pull out of synchronism must have out-of-step protection and the resulting apparent impedance swings must not pass through relay characteristics that would result in the tripping of

any transmission system elements other than the generating unit and its direct connection facilities.

iii. For all Planning Events: Power oscillations shall exhibit acceptable damping as established by the Planning Coordinator or Transmission Planner (if more restrictive).

b. General: Unplanned islanding of portions of the system shall not occur for Planning Events.

2. A stuck breaker means that for a gang-operated breaker, all three phases of the breaker have remained closed. For an independent pole operated (IPO) breaker, only one pole is assumed to remain closed.

C. Measures

M1. To be supplied at a later date.

E. Regional Variances

1. WECC Interconnection-wide waiver is under development (see Requirement R3.6.2).

Version History

Version	Date	Action	Change Tracking
1		Revision of TPL-001-0 as per Project 2006-02; includes merging requirements of TPL-001-0, TPL-002-0, TPL-003-0, and TPL-004-0 into one, single, comprehensive, coordinated standard: TPL-001-1	Not employed due to scope of revision

NERC
NORTH AMERICAN ELECTRIC RELIABILITY CORPORATION

Comment Form for First Draft of TPL-001-1 — Transmission System Planning Performance Requirements

Please use this form to submit comments on the proposed draft of TPL-001-1. Comments must be submitted by **Friday, October 26, 2007**. You may submit the completed form by e-mail to sarcomm@nerc.net with the words "TPL-001 Draft 1" in the subject line. If you have questions please contact Ed Dobrowolski at ed.dobrowolksi@nerc.net or by telephone at 609-947-3673.

Individual Commenter Information **(Complete this page for comments from one organization or individual.)**		
Name:		
Organization:		
Telephone:		
E-mail:		
NERC Region (check all Regions in which your company operates)		**Registered Ballot Body Segment (check all industry segments in which your company is registered)**
☐ **ERCOT** ☐ **FRCC** ☐ **MRO** ☐ **NPCC** ☐ **RFC** ☐ **SERC** ☐ **SPP** ☐ **WECC** ☐ **NA – Not Applicable**	☐	1 — Transmission Owners
	☐	2 — RTOs and ISOs
	☐	3 — Load-serving Entities
	☐	4 — Transmission-dependent Utilities
	☐	5 — Electric Generators
	☐	6 — Electricity Brokers, Aggregators, and Marketers
	☐	7 — Large Electricity End Users
	☐	8 — Small Electricity End Users
	☐	9 — Federal, State, Provincial Regulatory or other Government Entities
	☐	10 — Regional Reliability Organizations and Regional Entities

Group Comments (Complete this page if comments are from a group.)

Group Name:

Lead Contact:

Contact Organization:

Contact Segment:

Contact Telephone:

Contact E-mail:

Additional Member Name	Additional Member Organization	Region*	Segment*

*If more than one Region or Segment applies, please list all that apply. Regional acronyms and segment numbers are shown on prior page.

Background

The purpose of this standard is to establish Transmission System planning performance requirements within the planning horizon to develop a Bulk Electric System that will operate reliably over a broad spectrum of System conditions and following a wide range of probable Contingencies. This standard will replace TPL-001-0, TPL-002-0, TPL-003-0, and TPL-004-0. The standard drafting team has not yet addressed TPL-005-0 and TPL-006-0, but will address these two standards during the next phase of the drafting process.

The major objectives of the standard drafting team are to:

1) Ensure the standard is complete and the requirements are set at an appropriate level to ensure reliability (Not Least Common Denominator)
2) Ensure that the standard is enforceable by having clearly defined requirements with unambiguous language
3) Address the issues raised by FERC Order 693, 890, and other applicable orders
4) Address the issues raised in the original Standards Authorization Request (SAR) and the Supplemental SAR.

The standard drafting team did not attempt to edit the existing standards but rather chose to write one standard that addresses all aspects of transmission planning in the existing TPL-001-0, TPL-002-0, TPL-003-0, and TPL-004-0. The standard drafting team organized the new standard in the following sections:

R1 – Modeling requirements
R2 – Assessment and Corrective Plan requirements
R3 – Steady State Analysis requirements
R4 – Stability Analysis requirements
R5 – Coordination requirements

The standard drafting team determined that the requirements and analysis for Steady State are different from those for stability. As such, the standard drafting team separated the analysis requirements and created two performance requirement tables.

The standard drafting team recognizes that this draft standard is a starting point for industry input into the standard and that there is still a lot of work required to complete the process. The standard drafting team has made many changes to clarify requirements, add requirements, and make some of the performance requirements stricter. The standard drafting team has not addressed Measures, Risk Factors, Violation Severity Factors, or Time Horizons at this time. These will be addressed when the standard drafting team has better defined the requirements of the standard.

For questions where you agree with the standard drafting team, please state that you agree and if available, please provide supporting documentation. If you disagree with the standard drafting team, please explain why you disagree and provide data to support your position, such as outage data or analysis. If you believe that we have made a performance requirement too strict please provide supporting documentation. If applicable, please include the approximate cost in man-hours for additional studies and/or cost in $Millions for additional transmission investment to meet the new requirements or the stricter requirements. If you believe that the standard should be stricter, please provide the rationale along with any supporting data, including existing practices, cost estimates or additional analysis.

To improve the standard, the standard drafting team would appreciate responses to as many of these questions as you can answer.

A. New Definitions

Many of the concerns about the existing TPL standards come from the fact that a number of generally understood concepts are embedded in undefined terms, tables, and footnotes. To clarify some of these concerns, the standard drafting team is proposing new definitions. Please indicate whether you agree with the following proposed definitions and provide proposed changes to the definitions if you disagree:

Definition	Agree or Disagree
Q1. **Base Case**: Computer representation of the projected initial or starting Transmission System conditions for a specific point in time. Each base case reflects the forecasted Load at each bus (or node) on the interconnected Transmission System, the transmission facilities which deliver the generation and reactive resources to the connected Load, and the generation dispatch including firm transaction obligations assumed to supply the connected Load. The models also reflect facility ratings in accordance with FAC-008 & FAC-009.	☐Agree. ☐Do not agree.
Q1. **Comment:**	
Q2. **Consequential Load Loss:** Load that is no longer served because it is directly connected to an element(s) that is removed from service due to fault clearing action or mis-operation.	☐Agree. ☐Do not agree.
Q2. **Comment:**	
Q3. **Extreme Events:** Events which are more severe than Planning Events and have a low probability of occurrence.	☐Agree. ☐Do not agree.
Q3. **Comment:**	
Q4. **Long-Term Transmission Planning Horizon:** Transmission planning period that covers years six through ten or beyond.	☐Agree. ☐Do not agree.
Q4. **Comment:**	
Q5. **Near-Term Transmission Planning Horizon:** Transmission planning period that covers years One through five.	☐Agree. ☐Do not agree.
Q5. **Comment:**	
Q6. **Non-Consequential Load Loss:** Load loss other than Consequential Load Loss. For example, Load loss that occurs through manual (operator initiated) or automatic operations such as under-voltage Load shedding, under-frequency Load shedding, or Special Protection Systems.	☐Agree. ☐Do not agree.
Q6. **Comment:**	
Q7. **Planning Assessment:** Documented evaluation of future Bulk Electric System needs by the use of performance studies that cover a range of assumptions regarding system conditions, time	☐Agree. ☐Do not

frames, future plans including capital reinforcements and operating procedures and other factors, such as asset conditions and age.	agree.
Q7. **Comment:**	
Q8. **Planning Events:** Events which require Transmission system performance requirements to be met.	☐Agree. ☐Do not agree.
Q8. **Comment:**	
Q9. **Plant Stability Study:** Study of an individual plant's Stability for various Contingencies in the vicinity of the plant; concerned with the effect on the System of the generating units' loss of synchronism and the damping of the generating units' power oscillations.	☐Agree. ☐Do not agree.
Q9. **Comment:**	
Q10. **System Stability Study:** Study of the System or portions of the System to ensure that angular Stability is maintained, inter-area power oscillations are damped, and voltages during the dynamic simulation stay within acceptable performance limits.	☐Agree. ☐Do not agree.
Q10. **Comment:**	
Q11. **Year One:** The first year that a Transmission Planner is responsible for studying. This is further defined as the planning window that begins the next calendar year from the time the Transmission Planner submits their annual studies. Analysis conducted for time horizons within the calendar year from the study publication are assumed to be conducted under the auspices of Operations Planning.	☐Agree. ☐Do not agree.
Q11. **Comment:**	

B. Sensitivity Studies

The draft planning standard includes the requirement, as specified in FERC Order 693, that planning decisions be based on a portfolio of analyses. In section 12.a.ii "Sensitivity studies and critical system conditions" FERC provided direction to consider a full range of variables considered to be significant that need to be assessed and documentation provided that explains the rationale for the selection of variables assessed.

In addition to the firm obligation scenario, the portfolio of analyses should be supplemented to include information from sensitivity analysis. The sensitivity analysis should be developed using additional cases that simulate reasonably stressed system conditions. The standard drafting team has included several parameters that can be varied to create the requisite sensitivity case(s). The draft standards specify that the sensitivities reflect one or more of the following conditions and that documentation be provided explaining the rationale for selecting the sensitivity(ies) employed. The parameters that should be varied include:

- Higher or lower Load forecasts from the Base Case with variability of Load/demand and Load power factors due to season, weather, or time of day.
- Modification of expected transfers.
- Unavailability of long lead time facilities.
- Variability and outages of Reactive Resources.
- Generation additions, retirements, or other dispatch scenarios.

- Decreased effectiveness of controllable Loads and Demand Side Management.
- Modification of planned Transmission outages

To help focus industry discussion, please respond to the questions below:

Q12. Should the standard provide more specific direction regarding the number of sensitivity cases that need to be developed?

Yes ☐ No ☐
Comment:

Q13. Should the standard specify the required changes, such as changes in expected transfers, load forecasts, generation patterns, etc., from the study case to be considered a "reasonably stressed" case?

Yes ☐ No ☐
Comment:

Q14. The SDT proposes to require the use of sensitivity studies for Near-Term Transmission System Planning Horizon stability analysis. Do you concur with the use of sensitivity analysis in dynamic studies?

Yes ☐ No ☐
Comment:

Q15. The draft TPL standard does not require the use of sensitivity studies for the Long-Term Transmission System Planning Horizon (year six and beyond) studies. Do you concur with this approach or should there be some level of sensitivity analysis required for the long-term period?

Yes ☐ No ☐
Comment:

C. Corrective Action Plans

Requirement R2.7 of the standard states that when analysis shows that the performance requirements in Table 1 and Table 2 are not fully met, a Corrective Action Plan that utilizes all or some of the Transmission System enhancements, generation additions, DSM, new technologies and Operating Procedures shall be included in the Planning Assessment. This Corrective Action Plan should ensure that upon its implementation the identified system deficiencies will be corrected so that the performance requirements in Table 1 and Table 2 will be met. Furthermore, studies included in the Planning Assessment should demonstrate that this is indeed the case.

Q16. Requirement R2.7.1: Such Corrective Action Plans shall "Identify System deficiencies and the associated actions needed to achieve required System performance including Transmission and generation improvements, DSM, new technologies, or Operating Procedures including the duration of Interim Operating Procedures". System deficiencies may be corrected using an integrated plan, i.e., an optimal mix of Transmission, generation, DSM and Operating Procedures. Should DSM be considered in conjunction with other measures in developing Corrective Action Plans? If yes, please comment on how the impact of DSM should be included.

Yes ☐ No ☐
Comment:

Q17. Requirement R2.7.2: Such Corrective Action Plans shall "Be added to study cases and the cases re-tested to show that the System with planned additions meets the performance requirements in the tables". Should new studies, including the facilities comprising the Corrective Action Plan, be performed to assess System normal performance and Contingency response for conditions that previously resulted in the System deficiencies (without the planned additions) and also demonstrate that the changes would not result in inadvertent negative impacts on the System. If you "agree", please comment on how a study area should be determined.

Yes ☐ No ☐
Comment:

Q18. Requirement R2.7.3: The standard calls for a differentiation between committed and proposed projects. Do you agree that they should be treated separately? If not, please state why not.

Yes ☐ No ☐
Comment:

Q19. Requirement R2.7.4: For such Corrective Action Plans "Committed projects shall not be removed without documentation to show that the revised plan meets the performance requirements". Do you agree or disagree with this requirement? If you disagree, please explain why.

Yes ☐ No ☐
Comment:

D. Performance Requirements

The proposed revised planning standard (TPL-001-1) incorporates a number of changes in requirements as compared to the current planning standards (TPL-001-0 through TPL-004-0), which it is expected to replace. Among other things these changes are intended to clarify the standard, address issues described by FERC, and, in particular, to “raise the bar.” Strengthening the planning standards in selected areas is necessary to maintain a reliable Bulk Electric System that is up to the challenges of the 21st Century. In proposing the requirements in this draft, the standard drafting team attempted to balance the value of increased reliability against any potential increase in work and costs to meet the new proposed standard.

The standard drafting team is seeking input from the industry to determine whether a proper balance has been achieved. The areas where material changes are proposed in this draft are enumerated below, and questions are posed by the standard drafting team to obtain industry comment. In formulating your responses, please keep in mind that material changes in the final standard will be accompanied by a transition plan to provide for an orderly implementation of the final standard.

The performance requirements relative to Non-Consequential Loss of Load for the following events enumerated in the two tables can be considered more stringent than the existing TPL standards. Furthermore, the proposed standard is based on an assumption that performance requirements for EHV facilities should be more stringent than for lower voltage facilities.

Do you agree that Non-Consequential Loss of Load should not be permitted for the following events? If you disagree, please provide a reason for your disagreement.

Event	Agree or Disagree	Comment
Q20. P2-1: Loss of bus section (SLG for stability) above 300 kV	☐Agree. ☐Do not agree.	
Q21. P5-1: For facilities above 300 kV, loss of a Transmission circuit followed by System adjustment[1] followed by loss of another Transmission circuit	☐Agree. ☐Do not agree.	
Q22. P5-2: For facilities above 300 kV, loss of a Transmission circuit followed by System adjustment followed by loss of a transformer with low side voltage rating above 300 kV	☐Agree. ☐Do not agree.	
Q23. P5-3: For facilities above 300 kV, loss of a transformer with low side voltage rating above 300 kV followed by System adjustment followed by loss of another transformer	☐Agree. ☐Do not agree.	

[1]System adjustment can be manual or automatic.

The proposed standard is based on an assumption that performance requirements for non-bus tie EHV breakers should be distinguished from other breakers. Do you agree that Non-Consequential Loss of Load should not be permitted for this event?

Q24. Loss of non-bus tie breaker (above 300 kV) due to internal fault

Yes ☐ No ☐
Comment:

The proposed standard is based on an assumption that performance requirements for non-bus tie EHV breakers should be distinguished from other breakers and that performance requirements for EHV facilities should be more stringent than for lower voltage facilities. Do you agree that Non-Consequential Loss of Load should not be permitted for this event?

Q25. P3-1: Loss of (SLG for stability) either a generator, a Transmission circuit, a transformer, or a bus and a stuck non-bus tie breaker (above 300 kV)

Yes ☐ No ☐
Comment:

The proposed standard is based on an assumption that the following events are relatively high probability events and, therefore, Non-Consequential Loss of Load should not be permitted. Do you agree? If you disagree, please provide a reason for your disagreement.

Event	Agree or Disagree	Comment
Q26. P4-1: Loss of a Generator followed by System adjustment[1] followed by loss of another Generator	☐Agree. ☐Do not agree.	
Q27. P4-2: Loss of a generator followed by a System adjustment followed by the loss of a monopolar DC line	☐Agree. ☐Do not agree.	
Q28. P4-3: Loss of a generator followed by System adjustment followed by loss of a Transmission circuit	☐Agree. ☐Do not agree.	
Q29. P4-4: Loss of a generator followed by System adjustment followed by loss of a transformer	☐Agree. ☐Do not agree.	

The performance requirement for the following event may be considered less stringent than the existing TPL Standards — P2-3: Loss of a single pole of a DC line. Interruption of firm transactions (without Loss of firm Load) if the transaction is dependent on the faulted DC line is now allowed for this initiating event/Contingency.

Q30. Do you agree that interruption of any firm transfers that are dependent on the outaged DC line that is taken out of service should be permitted?

Yes ☐ No ☐
Comment:

E. Stability

Q31. The proposed standard is based on an assumption that steady state analysis and stability analysis are different from each other and that therefore, two tables of Contingencies and performance requirements were needed. It is also based on an assumption that stability study requirements should be clearly separated from the steady state study requirements. Do you agree with the action taken in separating stability analysis from steady state analysis? If not, please explain.

Yes ☐ No ☐
Comment:

[1] System adjustment can be manual or automatic

Q32. The SDT has added requirements for plant stability studies and has drawn a distinction in these studies from System stability studies. Do you agree with this approach? If not, please explain.

Yes ☐ No ☐
Comment:

Q33. The existing TPL-004-0 standard has a requirement to consider the Loss of all generating units at a plant, but it was not clear whether this requirement should apply to stability studies. The SDT did not include this requirement in the stability table, because it is hard to envision a condition when all units would trip simultaneously within the timeframe of a stability simulation. Do you think this condition should be required in stability analysis of extreme events? If not, please explain.

Yes ☐ No ☐
Comment:

Q34. There are an increasing number of events with slow voltage recovery after faults on the Transmission System. The dynamic behavior of induction motor loads is a major factor in this phenomenon. The proposed standard therefore requires that the load model for stability studies of peak Load conditions include the dynamic effects of induction motors. Do you agree with this requirement? If not, please explain?

Yes ☐ No ☐
Comment:

Q35. What type of manual or automatic adjustments of generators should be allowed for single and multiple Contingencies?

Comment:

F. Generation Runback and Tripping

The SDT has discussed the automatic and manual readjustments of generators that should be permissible for single contingencies and multiple contingencies. The existing TPL-001-0 through TPL-004-0 standards through footnote (a) of Table I could include emergency ratings applicable for short durations as required to permit operating steps necessary to maintain system control. The footnote is silent about allowable generation adjustments in response to the Category B events. However, it does indicate that system adjustments are permitted to prepare for the next Contingency. These system adjustments could include manual or automatic adjustments involving generation.

The SDT has learned that many transmission owners use System Protection Systems (SPS) or Remedial Action Schemes (RAS) to trip generation for single and multiple Contingency outage events to prevent overloads, low voltage, and instability in the Interconnected Transmission network for N-1 and N-2 events. In some cases, the RAS are used to prepare for the next Contingency; but in some cases, the RAS are used to simultaneously avoid exceeding emergency ratings.

Q36. The proposed standard allows generation runback after the disturbance that causes a single Contingency (or due to a single Contingency outage) to move the Interconnected Transmission System from an emergency state (within emergency ratings) to a normal state (within normal ratings), assuming that the disturbance does not result in instability? Do you agree? If not, please explain.

Yes ☐ No ☐
Comment:

Q37. Since emergency ratings are thermal ratings, should this standard allow an automatic generation runback scheme (that is initiated immediately after the disturbance causing the single Contingency) to prevent thermal overloads (assuming that the disturbance does not result in instability)? If yes, what are the conditions that must be met in order to allow such a runback scheme to meet the System performance criteria for single Contingencies? Please explain the reason for your answer.

Yes ☐ No ☐
Comment:

The standard drafting team has considered that RAS or SPS may be allowable under certain situations for single Contingencies, but proposes that their use should be limited.

Q38. Do you agree that RAS or SPS may be allowed for single Contingencies? If not, please explain.

Yes ☐ No ☐
Comment:

Q39. Please describe the limitations that you believe should be placed on the use of RAS or SPS for single Contingency events.

Comment:

Q40. When RAS or SPS are allowed, what conditions should be met when these systems are used in system adjustments to meet performance requirements?

Comment:

G. General Questions

Q41. If you are aware of any regional variances that would be required as a result of these standards, please identify them here.

Yes ☐ No ☐
Comment:

Q42. If you are aware of any conflicts between the proposed standards and any regulatory function, rule order, tariff, rate schedule, legislative requirement or agreement, please identify them here.

Yes ☐ No ☐
Comment:

Q43. Do you have any other questions or concerns with the proposed standard that have not been addressed? If yes, please explain.

Yes ☐ No ☐
Comment:

Maureen E. Long
Standards Process Manager

September 12, 2007

TO: REGISTERED BALLOT BODY

Ladies and Gentlemen:

Announcement: Comment Period Opens

The Standards Committee (SC) announces the following standards actions:

First Draft of TPL-001-1 — Transmission System Planning Performance Requirements Posted for 45-day Comment Period

The first draft of TPL-001-1 — Transmission System Planning Performance Requirements is posted for a 45-day comment period from September 12 though October 26, 2007. The purpose of the proposed standard is to establish Transmission System planning performance requirements within the planning horizon to develop a Bulk Electric System that will operate reliably over a broad spectrum of System conditions and following a wide range of probable Contingencies.

The proposed standard consolidates, clarifies, and expands on the requirements that had been in TPL-001-0, TPL-002-0, TPL-003-0 and TPL-004-0, and includes several new definitions.

Note that the drafting team will hold a WebEx and Conference Call on Wednesday, October 10 from 1 p.m. to 4 p.m. EDT to present and discuss the proposed requirements in TPL-001-1. The purpose of this call is to provide stakeholders with an overview of the proposed requirements, to highlight the areas where the proposed requirements differ from the requirements in the existing TPL-001-0 through TPL-004-0, and to provide stakeholders with the opportunity to ask questions about the proposed requirements.

Please use this comment form to provide comments on the first draft of this standard.

Standards Development Process

The *Reliability Standards Development Procedure* contains all the procedures governing the standards development process. The success of the NERC standards development process depends on stakeholder participation. We extend our thanks to all those who participate. If you have any questions, please contact me at 813-468-5998 or maureen.long@nerc.net.

Sincerely,

Maureen E. Long

cc: Registered Ballot Body Registered Users
Standards Mailing List
NERC Roster

NERC
NORTH AMERICAN ELECTRIC RELIABILITY CORPORATION

Comment Form for First Draft of TPL-001-1 — Transmission System Planning Performance Requirements

Please use this form to submit comments on the proposed draft of TPL-001-1. Comments must be submitted by **Friday, October 26, 2007**. You may submit the completed form by e-mail to sarcomm@nerc.net with the words "TPL-001 Draft 1" in the subject line. If you have questions please contact Ed Dobrowolski at ed.dobrowolksi@nerc.net or by telephone at 609-947-3673.

Individual Commenter Information **(Complete this page for comments from one organization or individual.)**		
Name:	William Quaintance	
Organization:	ABB Consulting	
Telephone:	919-856-3310	
E-mail:	william.quaintance@us.abb.com	
NERC Region (check all Regions in which your company operates)		**Registered Ballot Body Segment (check all industry segments in which your company is registered)**
☐ **ERCOT**	☐	1 — Transmission Owners
☐ **FRCC**	☐	2 — RTOs and ISOs
☐ **MRO**	☐	3 — Load-serving Entities
☐ **NPCC**	☐	4 — Transmission-dependent Utilities
☐ **RFC**	☐	5 — Electric Generators
☐ **SERC**	☐	6 — Electricity Brokers, Aggregators, and Marketers
☐ **SPP**	☐	7 — Large Electricity End Users
☐ **WECC**	☐	8 — Small Electricity End Users
☒ **NA – Not Applicable**	☐	9 — Federal, State, Provincial Regulatory or other Government Entities
	☐	10 — Regional Reliability Organizations and Regional Entities

Group Comments (Complete this page if comments are from a group.)

Group Name:

Lead Contact:

Contact Organization:

Contact Segment:

Contact Telephone:

Contact E-mail:

Additional Member Name	Additional Member Organization	Region*	Segment*

*If more than one Region or Segment applies, please list all that apply. Regional acronyms and segment numbers are shown on prior page.

Background

The purpose of this standard is to establish Transmission System planning performance requirements within the planning horizon to develop a Bulk Electric System that will operate reliably over a broad spectrum of System conditions and following a wide range of probable Contingencies. This standard will replace TPL-001-0, TPL-002-0, TPL-003-0, and TPL-004-0. The standard drafting team has not yet addressed TPL-005-0 and TPL-006-0, but will address these two standards during the next phase of the drafting process.

The major objectives of the standard drafting team are to:

1) Ensure the standard is complete and the requirements are set at an appropriate level to ensure reliability (Not Least Common Denominator)
2) Ensure that the standard is enforceable by having clearly defined requirements with unambiguous language
3) Address the issues raised by FERC Order 693, 890, and other applicable orders
4) Address the issues raised in the original Standards Authorization Request (SAR) and the Supplemental SAR.

The standard drafting team did not attempt to edit the existing standards but rather chose to write one standard that addresses all aspects of transmission planning in the existing TPL-001-0, TPL-002-0, TPL-003-0, and TPL-004-0. The standard drafting team organized the new standard in the following sections:

R1 – Modeling requirements
R2 – Assessment and Corrective Plan requirements
R3 – Steady State Analysis requirements
R4 – Stability Analysis requirements
R5 – Coordination requirements

The standard drafting team determined that the requirements and analysis for Steady State are different from those for stability. As such, the standard drafting team separated the analysis requirements and created two performance requirement tables.

The standard drafting team recognizes that this draft standard is a starting point for industry input into the standard and that there is still a lot of work required to complete the process. The standard drafting team has made many changes to clarify requirements, add requirements, and make some of the performance requirements stricter. The standard drafting team has not addressed Measures, Risk Factors, Violation Severity Factors, or Time Horizons at this time. These will be addressed when the standard drafting team has better defined the requirements of the standard.

For questions where you agree with the standard drafting team, please state that you agree and if available, please provide supporting documentation. If you disagree with the standard drafting team, please explain why you disagree and provide data to support your position, such as outage data or analysis. If you believe that we have made a performance requirement too strict please provide supporting documentation. If applicable, please include the approximate cost in man-hours for additional studies and/or cost in $Millions for additional transmission investment to meet the new requirements or the stricter requirements. If you believe that the standard should be stricter, please provide the rationale along with any supporting data, including existing practices, cost estimates or additional analysis.

To improve the standard, the standard drafting team would appreciate responses to as many of these questions as you can answer.

A. New Definitions

Many of the concerns about the existing TPL standards come from the fact that a number of generally understood concepts are embedded in undefined terms, tables, and footnotes. To clarify some of these concerns, the standard drafting team is proposing new definitions. Please indicate whether you agree with the following proposed definitions and provide proposed changes to the definitions if you disagree:

Definition	**Agree or Disagree**
Q1. **Base Case**: Computer representation of the projected initial or starting Transmission System conditions for a specific point in time. Each base case reflects the forecasted Load at each bus (or node) on the interconnected Transmission System, the transmission facilities which deliver the generation and reactive resources to the connected Load, and the generation dispatch including firm transaction obligations assumed to supply the connected Load. The models also reflect facility ratings in accordance with FAC-008 & FAC-009.	☒Agree. ☐Do not agree.
Q1. **Comment: Agree but delete "or node". It is unnecessary.**	
Q2. **Consequential Load Loss:** Load that is no longer served because it is directly connected to an element(s) that is removed from service due to fault clearing action or mis-operation.	☐Agree. ☒Do not agree.
Q2. **Comment: See Q6. Also, from your definition above, a better term would be "directly-connected load loss". This is clear and to the point.**	
Q3. **Extreme Events:** Events which are more severe than Planning Events and have a low probability of occurrence.	☒Agree. ☐Do not agree.
Q3. **Comment:**	
Q4. **Long-Term Transmission Planning Horizon:** Transmission planning period that covers years six through ten or beyond.	☒Agree. ☐Do not agree.
Q4. **Comment:**	
Q5. **Near-Term Transmission Planning Horizon:** Transmission planning period that covers years One through five.	☒Agree. ☐Do not agree.
Q5. **Comment:**	
Q6. **Non-Consequential Load Loss:** Load loss other than Consequential Load Loss. For example, Load loss that occurs through manual (operator initiated) or automatic operations such as under-voltage Load shedding, under-frequency Load shedding, or Special Protection Systems.	☐Agree. ☒Do not agree.
Q6. **Comment: Most people will think of inconsequential, which often means irrelevant, unimportant, or insignificant. But what you are trying to define is the opposite: load loss that is significant, important, and needs to be**	

prevented. Also, whatever you call it, your examples (UVLS, UFLS, SPS) should be expanded to include unintentional and uncontrolled load loss due to low voltage, high current, impedance relays, etc.	
Q7. **Planning Assessment:** Documented evaluation of future Bulk Electric System needs by the use of performance studies that cover a range of assumptions regarding system conditions, time frames, future plans including capital reinforcements and operating procedures and other factors, such as asset conditions and age.	☒Agree. ☐Do not agree.
Q7. **Comment:**	
Q8. **Planning Events:** Events which require Transmission system performance requirements to be met.	☒Agree. ☐Do not agree.
Q8. **Comment: Agree but adjust language. You are saying "require requirements to be met". Duh. Even if you took out one of them and said "requirements must be met", this is also redundant. The definition of "requirement" is that it is required. How about "Events for which there are strict transmission performance standards that must be met." This may also be slightly redundant, but not as much as the original.**	
Q9. **Plant Stability Study:** Study of an individual plant's Stability for various Contingencies in the vicinity of the plant; concerned with the effect on the System of the generating units' loss of synchronism and the damping of the generating units' power oscillations.	☐Agree. ☒Do not agree.
Q9. **Comment: I don't see any reason to differentiate between "Plant Stability" and "System Stability". These are not commonly separated. A better differentiation would be between generator (or angular) stability and load (or voltage) stability. These are usually independently studied and indendently occurring.**	
Q10. **System Stability Study:** Study of the System or portions of the System to ensure that angular Stability is maintained, inter-area power oscillations are damped, and voltages during the dynamic simulation stay within acceptable performance limits.	☐Agree. ☒Do not agree.
Q10. **Comment: See Q9.**	
Q11. **Year One:** The first year that a Transmission Planner is responsible for studying. This is further defined as the planning window that begins the next calendar year from the time the Transmission Planner submits their annual studies. Analysis conducted for time horizons within the calendar year from the study publication are assumed to be conducted under the auspices of Operations Planning.	☒Agree. ☐Do not agree.
Q11. **Comment: Agree but delete "annual". Unnecessarily restrictive. Aren't there non-annual studies for which the definition of "year one" is important?**	

B. Sensitivity Studies

The draft planning standard includes the requirement, as specified in FERC Order 693, that planning decisions be based on a portfolio of analyses. In section 12.a.ii "Sensitivity studies and critical system conditions" FERC provided direction to consider a full range of

variables considered to be significant that need to be assessed and documentation provided that explains the rationale for the selection of variables assessed.

In addition to the firm obligation scenario, the portfolio of analyses should be supplemented to include information from sensitivity analysis. The sensitivity analysis should be developed using additional cases that simulate reasonably stressed system conditions. The standard drafting team has included several parameters that can be varied to create the requisite sensitivity case(s). The draft standards specify that the sensitivities reflect one or more of the following conditions and that documentation be provided explaining the rationale for selecting the sensitivity(ies) employed. The parameters that should be varied include:

- Higher or lower Load forecasts from the Base Case with variability of Load/demand and Load power factors due to season, weather, or time of day.
- Modification of expected transfers.
- Unavailability of long lead time facilities.
- Variability and outages of Reactive Resources.
- Generation additions, retirements, or other dispatch scenarios.
- Decreased effectiveness of controllable Loads and Demand Side Management.
- Modification of planned Transmission outages

To help focus industry discussion, please respond to the questions below:

Q12. Should the standard provide more specific direction regarding the number of sensitivity cases that need to be developed?

Yes ☐ No ☒
Comment: No. However, as long as we're talking about it, NERC should set a standard for the definition of the "peak load" to be planned for. Some utilities use the 50% probability peak load. Some use 90%. A big difference that will result in a big difference in how they are prepared for the peak load days. The sensitivity section is not sufficient to address this.
Also, outages of reactive resources should be (and are) in the list of contingencies, not sensitivities.

Q13. Should the standard specify the required changes, such as changes in expected transfers, load forecasts, generation patterns, etc., from the study case to be considered a "reasonably stressed" case?

Yes ☐ No ☒
Comment:

Q14. The SDT proposes to require the use of sensitivity studies for Near-Term Transmission System Planning Horizon stability analysis. Do you concur with the use of sensitivity analysis in dynamic studies?

Yes ☒ No ☐
Comment: Absolutely.

Q15. The draft TPL standard does not require the use of sensitivity studies for the Long-Term Transmission System Planning Horizon (year six and beyond) studies. Do you concur with this approach or should there be some level of sensitivity analysis required for the long-term period?

Yes ☐ No ☐
Comment:

C. Corrective Action Plans

Requirement R2.7 of the standard states that when analysis shows that the performance requirements in Table 1 and Table 2 are not fully met, a Corrective Action Plan that utilizes all or some of the Transmission System enhancements, generation additions, DSM, new technologies and Operating Procedures shall be included in the Planning Assessment. This Corrective Action Plan should ensure that upon its implementation the identified system deficiencies will be corrected so that the performance requirements in Table 1 and Table 2 will be met. Furthermore, studies included in the Planning Assessment should demonstrate that this is indeed the case.

Q16. Requirement R2.7.1: Such Corrective Action Plans shall "Identify System deficiencies and the associated actions needed to achieve required System performance including Transmission and generation improvements, DSM, new technologies, or Operating Procedures including the duration of Interim Operating Procedures". System deficiencies may be corrected using an integrated plan, i.e., an optimal mix of Transmission, generation, DSM and Operating Procedures. Should DSM be considered in conjunction with other measures in developing Corrective Action Plans? If yes, please comment on how the impact of DSM should be included.

Yes ☒ No ☐
Comment: First of all, you are not exactly requiring that DSM be considered or analyzed. You have simply listed it as one of the possible solutions. And you should mention the possibility of "integrated plan" in the standard itself. Since DSM is simply optional, let the planners figure out themselves how to consider DSM.

Q17. Requirement R2.7.2: Such Corrective Action Plans shall "Be added to study cases and the cases re-tested to show that the System with planned additions meets the performance requirements in the tables". Should new studies, including the facilities comprising the Corrective Action Plan, be performed to assess System normal performance and Contingency response for conditions that previously resulted in the System deficiencies (without the planned additions) and also demonstrate that the changes would not result in inadvertent negative impacts on the System. If you "agree", please comment on how a study area should be determined.

Yes ☒ No ☒
Comment: Any area where there might possibly be an impact. I.e., engineering judgement.

Q18. Requirement R2.7.3: The standard calls for a differentiation between committed and proposed projects. Do you agree that they should be treated separately? If not, please state why not.

Yes ☒ No ☐
Comment: Yes, it helps when considering other issues in the same area. You would know whether or not you can count on a project going in.

Q19. Requirement R2.7.4: For such Corrective Action Plans "Committed projects shall not be removed without documentation to show that the revised plan meets the performance requirements". Do you agree or disagree with this requirement? If you disagree, please explain why.

Yes ☒ No ☐
Comment: It's kind of obvious. If you require a solution to begin with, then if that solution is removed, another solution must be planned. However, if the removed project

is not directly related to the study or problem at hand, then engineering judgement will be needed as to whether or not to repeat the study.

D. Performance Requirements

The proposed revised planning standard (TPL-001-1) incorporates a number of changes in requirements as compared to the current planning standards (TPL-001-0 through TPL-004-0), which it is expected to replace. Among other things these changes are intended to clarify the standard, address issues described by FERC, and, in particular, to "raise the bar." Strengthening the planning standards in selected areas is necessary to maintain a reliable Bulk Electric System that is up to the challenges of the 21st Century. In proposing the requirements in this draft, the standard drafting team attempted to balance the value of increased reliability against any potential increase in work and costs to meet the new proposed standard.

The standard drafting team is seeking input from the industry to determine whether a proper balance has been achieved. The areas where material changes are proposed in this draft are enumerated below, and questions are posed by the standard drafting team to obtain industry comment. In formulating your responses, please keep in mind that material changes in the final standard will be accompanied by a transition plan to provide for an orderly implementation of the final standard.

The performance requirements relative to Non-Consequential Loss of Load for the following events enumerated in the two tables can be considered more stringent than the existing TPL standards. Furthermore, the proposed standard is based on an assumption that performance requirements for EHV facilities should be more stringent than for lower voltage facilities.

Do you agree that Non-Consequential Loss of Load should not be permitted for the following events? If you disagree, please provide a reason for your disagreement.

Event	Agree or Disagree	Comment
Q20. P2-1: Loss of bus section (SLG for stability) above 300 kV	☐Agree. ☐Do not agree.	Loss of load is not usually considered by tranmission planners. In power flow studies, they look at flows and voltages versus limits. In stability studies, they are looking for angles, speeds, and voltages that stabilize at good values, possibly with temporary excursions less than some limits. How should all these be converted to a loss of load value? Normally we ensure no loss of load <because> we meet thermal, voltage, and stability requirements. Maybe you are saying that planners should not use load tripping as a solution for these violations?
Q21. P5-1: For facilities above 300 kV, loss of a Transmission circuit	☐Agree. ☐Do not	

followed by System adjustment[1] followed by loss of another Transmission circuit	agree.	
Q22. P5-2: For facilities above 300 kV, loss of a Transmission circuit followed by System adjustment followed by loss of a transformer with low side voltage rating above 300 kV	☐Agree. ☐Do not agree.	
Q23. P5-3: For facilities above 300 kV, loss of a transformer with low side voltage rating above 300 kV followed by System adjustment followed by loss of another transformer	☐Agree. ☐Do not agree.	

[1]System adjustment can be manual or automatic.

The proposed standard is based on an assumption that performance requirements for non-bus tie EHV breakers should be distinguished from other breakers. Do you agree that Non-Consequential Loss of Load should not be permitted for this event?

Q24. Loss of non-bus tie breaker (above 300 kV) due to internal fault

Yes ☒ No ☒

Comment: When talking about breaker outages, I see no reason to differentiate between "non-bus tie" and "bus tie" breakers. Are bus tie breakers inherently more reliable? If the effect on the system due to a tie breaker outage is very bad, then this should be fixed. All other contingencies seem to be slotted based on probability. Shouldn't breakers? Maybe bus tie breakers are weak points in the transmission system that need to be improved.

The proposed standard is based on an assumption that performance requirements for non-bus tie EHV breakers should be distinguished from other breakers and that performance requirements for EHV facilities should be more stringent than for lower voltage facilities. Do you agree that Non-Consequential Loss of Load should not be permitted for this event?

Q25. P3-1: Loss of (SLG for stability) either a generator, a Transmission circuit, a transformer, or a bus and a stuck non-bus tie breaker (above 300 kV)

Yes ☒ No ☒

Comment: Table 1 P3 is a little hard to read/understand. The second column should start out something like "A stuck breaker following the outage of any 1 of the following:" However, P3 will be completely redundant with P2 because, in power flow analysis, there is no difference between a breaker internal fault and a stuck breaker following an external fault. The final outaged equipment is the same. This will cause extra unnecessary work.

The proposed standard is based on an assumption that the following events are relatively high probability events and, therefore, Non-Consequential Loss of Load should not be permitted. Do you agree? If you disagree, please provide a reason for your disagreement.

Event	Agree or Disagree	Comment
Q26. P4-1: Loss of a Generator followed by System adjustment[1] followed by loss of another Generator	☒Agree. ☐Do not agree.	For Table 1 P4, rewrite it to read "Loss of a generator followed by a System adjustment followed by the loss of any one of the following: 1. Generator 2. Transmission Circuit 3. Transformer 4. A shunt device 5. Single pole of DC line." This structure is easier to read and understand. The order should be like this to match P1. Shunt devices should be included. P3 should be structured similarly.
Q27. P4-2: Loss of a generator followed by a System adjustment followed by the loss of a monopolar DC line	☒Agree. ☐Do not agree.	
Q28. P4-3: Loss of a generator followed by System adjustment followed by loss of a Transmission circuit	☒Agree. ☐Do not agree.	
Q29. P4-4: Loss of a generator followed by System adjustment followed by loss of a transformer	☒Agree. ☐Do not agree.	

The performance requirement for the following event may be considered less stringent than the existing TPL Standards — P2-3: Loss of a single pole of a DC line. Interruption of firm transactions (without Loss of firm Load) if the transaction is dependent on the faulted DC line is now allowed for this initiating event/Contingency.

Q30. Do you agree that interruption of any firm transfers that are dependent on the outaged DC line that is taken out of service should be permitted?

Yes ☒ No ☐
Comment: Yes, this is the purpose of HVDC. It carries the power your want, no more, no less. Both the good and bad of parallel flows are avoided.

[1] System adjustment can be manual or automatic

E. Stability

Q31. The proposed standard is based on an assumption that steady state analysis and stability analysis are different from each other and that therefore, two tables of Contingencies and performance requirements were needed. It is also based on an assumption that stability study requirements should be clearly separated from the steady state study requirements. Do you agree with the action taken in separating stability analysis from steady state analysis? If not, please explain.

Yes ☒ No ☐
Comment: Yes, I like this. You can maintain them to be as similar as possible, while still containing the requisite differences.

Q32. The SDT has added requirements for plant stability studies and has drawn a distinction in these studies from System stability studies. Do you agree with this approach? If not, please explain.

Yes ☐ No ☒
Comment: I don't see any reason to differentiate between "Plant Stability" and "System Stability". These are not commonly separated, and this distinction is not standard in the industry. You should not be inventing a distinction that doesn't exist. A better differentiation would be between generator (or angular) stability and load (or voltage) stability. These are usually independently studied and independently occurring.

Q33. The existing TPL-004-0 standard has a requirement to consider the Loss of all generating units at a plant, but it was not clear whether this requirement should apply to stability studies. The SDT did not include this requirement in the stability table, because it is hard to envision a condition when all units would trip simultaneously within the timeframe of a stability simulation. Do you think this condition should be required in stability analysis of extreme events? If not, please explain.

Yes ☐ No ☒
Comment: No. Good idea. A whole plant may be out because of a shortage of cooling water, but this is an orderly shutdown, not a sudden event. It is only appropriate for steady-state.

Q34. There are an increasing number of events with slow voltage recovery after faults on the Transmission System. The dynamic behavior of induction motor loads is a major factor in this phenomenon. The proposed standard therefore requires that the load model for stability studies of peak Load conditions include the dynamic effects of induction motors. Do you agree with this requirement? If not, please explain?

Yes ☒ No ☐
Comment: Yes, but the impact on the models and studies is unknown. Some testing needs to be done with full Eastern and Western Interconnection models to see how they handle motor models at every load. I've performed numerous studies where loads in an entire utility or state have been converted to a large % of motors, and the effect can be shocking. The programs (PSS/E and PSLF) may completely bog down if this is done for a whole interconnection. Many stability problems will be found. We definitely need to transition to this, but with care.

Q35. What type of manual or automatic adjustments of generators should be allowed for single and multiple Contingencies?

Comment: For multiple, only automatic schemes. For single, only automatic schemes if the loss of MW is shown to be acceptable.

F. Generation Runback and Tripping

The SDT has discussed the automatic and manual readjustments of generators that should be permissible for single contingencies and multiple contingencies. The existing TPL-001-0 through TPL-004-0 standards through footnote (a) of Table I could include emergency ratings applicable for short durations as required to permit operating steps necessary to maintain system control. The footnote is silent about allowable generation adjustments in response to the Category B events. However, it does indicate that system adjustments are permitted to prepare for the next Contingency. These system adjustments could include manual or automatic adjustments involving generation.

The SDT has learned that many transmission owners use System Protection Systems (SPS) or Remedial Action Schemes (RAS) to trip generation for single and multiple Contingency outage events to prevent overloads, low voltage, and instability in the Interconnected Transmission network for N-1 and N-2 events. In some cases, the RAS are used to prepare for the next Contingency; but in some cases, the RAS are used to simultaneously avoid exceeding emergency ratings.

Q36. The proposed standard allows generation runback after the disturbance that causes a single Contingency (or due to a single Contingency outage) to move the Interconnected Transmission System from an emergency state (within emergency ratings) to a normal state (within normal ratings), assuming that the disturbance does not result in instability? Do you agree? If not, please explain.

Yes ☒ No ☐
Comment: Every single event will eventually require preparing for the next event. But we cannot plan for every next event. Only specific single and multiple contingencies should be planned for, all flows must be within an established rating of some kind (continuous, 12-hour, 4-hour, 15-min, whatever), and the idea of the "next event" should not be included in a planning standard.

Now maybe there should be a limit as to how short the time of a rating can be in Planning. For example, planning to a 15-min rating is a bad idea. That rating can be used by operators in emergencies, but planners need to do something better. A minimum should be set (e.g. 1 hour rating). I guess if a company wants to use a 15-min rating and then AUTOMATICALLY transition to a 1-hour or 12-hour rating with runback or something else, that is reasonable.

Q37. Since emergency ratings are thermal ratings, should this standard allow an automatic generation runback scheme (that is initiated immediately after the disturbance causing the single Contingency) to prevent thermal overloads (assuming that the disturbance does not result in instability)? If yes, what are the conditions that must be met in order to allow such a runback scheme to meet the System performance criteria for single Contingencies? Please explain the reason for your answer.

Yes ☒ No ☒
Comment: No. Following a single contingency, all flows must be within some kind of established rating. After that, runback can be used to get under a longer-term rating.

For multiple contingencies, some type of cross-tripping is OK, but runback is too slow and unreliable.

The standard drafting team has considered that RAS or SPS may be allowable under certain situations for single Contingencies, but proposes that their use should be limited.

Q38. Do you agree that RAS or SPS may be allowed for single Contingencies? If not, please explain.

Yes ☐ No ☒
Comment: It makes the system too complex and less reliable. Single contingencies need to be handled without any fancy controls.

Q39. Please describe the limitations that you believe should be placed on the use of RAS or SPS for single Contingency events.

Comment: They could be used in the short term until a permanent fix is available. Limit to <5 years.

Q40. When RAS or SPS are allowed, what conditions should be met when these systems are used in system adjustments to meet performance requirements?

Comment:

G. General Questions

Q41. If you are aware of any regional variances that would be required as a result of these standards, please identify them here.

Yes ☐ No ☒
Comment:

Q42. If you are aware of any conflicts between the proposed standards and any regulatory function, rule order, tariff, rate schedule, legislative requirement or agreement, please identify them here.

Yes ☐ No ☒
Comment:

Q43. Do you have any other questions or concerns with the proposed standard that have not been addressed? If yes, please explain.

Yes ☒ No ☐
Comment: In Table 2 P3, more clarification is needed for "above 300 kV". For generators, does that mean those whose POI is >300kV? For transformers, is it the secondary voltage? Also, is the footnote referencing correct?

"A transformer with low side rating above 300 kV" is confusing for transformers with 3 windings. What's the low-side rating of a 500/345/13.8 kV transformer? You should say "a secondary voltage rating above 300 kV" and define "secondary voltage rating" as the second highest voltage rating. This is standard nomenclature. Also, I assume you know that there aren't very many of these. The possibilities are 765/500, 500/345, and 765/345. The first two are uncommon, and the 3rd is only common in AEP and HQ.

In P3, does the 300 kV limit apply to the transmission circuits as well? It is hard to tell.

In R1, you say "Each … shall each …" Delete the second "each", which is redundant. Also delete "required for system performance studies". These words are not part of the requirement. They are part of the justification for the requirement.

Table 1, Extreme Event Descriptions, 3d and 3f are almost identical.

Table 1, P9-1, rewrite as "… (excluding circuits that share common structures for one mile or less)". P9-1 uses "structure" whereas Extreme 2a uses "tower". Make consistent.

P9-2 monopolar is already covered under P4-2.

For all of the multiple contingencies with System Adjustment in the middle, group them together something like this (for those with the same requirements):

"Outage of any one of the following:

1.
2.
3.
4.

followed by System Adjustments followed by outage of any one of the following:

a.
b.
c.
d."

This is easier to understand than separately writing each possible combination of 2.

Overall, the structures of the Tables needs to be made clearer and more consistent. But the ideas are good.

The transition is going to be critical for some of the standards that may require significantly more study work and significant capital investments in transmission infrastructure.

NERC
NORTH AMERICAN ELECTRIC RELIABILITY CORPORATION

Comment Form for First Draft of TPL-001-1 — Transmission System Planning Performance Requirements

Please use this form to submit comments on the proposed draft of TPL-001-1. Comments must be submitted by **Friday, October 26, 2007**. You may submit the completed form by e-mail to sarcomm@nerc.net with the words "TPL-001 Draft 1" in the subject line. If you have questions please contact Ed Dobrowolski at ed.dobrowolksi@nerc.net or by telephone at 609-947-3673.

Individual Commenter Information **(Complete this page for comments from one organization or individual.)**		
Name:	John Bussman	
Organization:	AECI	
Telephone:	417-885-9216	
E-mail:	jbussman@aeci.org	
NERC Region (check all Regions in which your company operates)		**Registered Ballot Body Segment (check all industry segments in which your company is registered)**
☐ **ERCOT**	☒	1 — Transmission Owners
☐ **FRCC**	☐	2 — RTOs and ISOs
☐ **MRO**	☐	3 — Load-serving Entities
☐ **NPCC**	☐	4 — Transmission-dependent Utilities
☐ **RFC**	☐	5 — Electric Generators
☒ **SERC**	☐	6 — Electricity Brokers, Aggregators, and Marketers
☐ **SPP**	☐	7 — Large Electricity End Users
☐ **WECC**	☐	8 — Small Electricity End Users
☐ **NA – Not Applicable**	☐	9 — Federal, State, Provincial Regulatory or other Government Entities
	☐	10 — Regional Reliability Organizations and Regional Entities

Group Comments (Complete this page if comments are from a group.)

Group Name:

Lead Contact:

Contact Organization:

Contact Segment:

Contact Telephone:

Contact E-mail:

Additional Member Name	Additional Member Organization	Region*	Segment*

*If more than one Region or Segment applies, please list all that apply. Regional acronyms and segment numbers are shown on prior page.

Background

The purpose of this standard is to establish Transmission System planning performance requirements within the planning horizon to develop a Bulk Electric System that will operate reliably over a broad spectrum of System conditions and following a wide range of probable Contingencies. This standard will replace TPL-001-0, TPL-002-0, TPL-003-0, and TPL-004-0. The standard drafting team has not yet addressed TPL-005-0 and TPL-006-0, but will address these two standards during the next phase of the drafting process.

The major objectives of the standard drafting team are to:

1) Ensure the standard is complete and the requirements are set at an appropriate level to ensure reliability (Not Least Common Denominator)
2) Ensure that the standard is enforceable by having clearly defined requirements with unambiguous language
3) Address the issues raised by FERC Order 693, 890, and other applicable orders
4) Address the issues raised in the original Standards Authorization Request (SAR) and the Supplemental SAR.

The standard drafting team did not attempt to edit the existing standards but rather chose to write one standard that addresses all aspects of transmission planning in the existing TPL-001-0, TPL-002-0, TPL-003-0, and TPL-004-0. The standard drafting team organized the new standard in the following sections:

R1 – Modeling requirements
R2 – Assessment and Corrective Plan requirements
R3 – Steady State Analysis requirements
R4 – Stability Analysis requirements
R5 – Coordination requirements

The standard drafting team determined that the requirements and analysis for Steady State are different from those for stability. As such, the standard drafting team separated the analysis requirements and created two performance requirement tables.

The standard drafting team recognizes that this draft standard is a starting point for industry input into the standard and that there is still a lot of work required to complete the process. The standard drafting team has made many changes to clarify requirements, add requirements, and make some of the performance requirements stricter. The standard drafting team has not addressed Measures, Risk Factors, Violation Severity Factors, or Time Horizons at this time. These will be addressed when the standard drafting team has better defined the requirements of the standard.

For questions where you agree with the standard drafting team, please state that you agree and if available, please provide supporting documentation. If you disagree with the standard drafting team, please explain why you disagree and provide data to support your position, such as outage data or analysis. If you believe that we have made a performance requirement too strict please provide supporting documentation. If applicable, please include the approximate cost in man-hours for additional studies and/or cost in $Millions for additional transmission investment to meet the new requirements or the stricter requirements. If you believe that the standard should be stricter, please provide the rationale along with any supporting data, including existing practices, cost estimates or additional analysis.

To improve the standard, the standard drafting team would appreciate responses to as many of these questions as you can answer.

A. New Definitions

Many of the concerns about the existing TPL standards come from the fact that a number of generally understood concepts are embedded in undefined terms, tables, and footnotes. To clarify some of these concerns, the standard drafting team is proposing new definitions. Please indicate whether you agree with the following proposed definitions and provide proposed changes to the definitions if you disagree:

Definition	**Agree or Disagree**
Q1. **Base Case**: Computer representation of the projected initial or starting Transmission System conditions for a specific point in time. Each base case reflects the forecasted Load at each bus (or node) on the interconnected Transmission System, the transmission facilities which deliver the generation and reactive resources to the connected Load, and the generation dispatch including firm transaction obligations assumed to supply the connected Load. The models also reflect facility ratings in accordance with FAC-008 & FAC-009.	☒Agree. ☐Do not agree.
Q1. **Comment:**	
Q2. **Consequential Load Loss:** Load that is no longer served because it is directly connected to an element(s) that is removed from service due to fault clearing action or mis-operation.	☒Agree. ☐Do not agree.
Q2. **Comment:**	
Q3. **Extreme Events:** Events which are more severe than Planning Events and have a low probability of occurrence.	☒Agree. ☐Do not agree.
Q3. **Comment: However this could be very subjective.**	
Q4. **Long-Term Transmission Planning Horizon:** Transmission planning period that covers years six through ten or beyond.	☒Agree. ☐Do not agree.
Q4. **Comment:**	
Q5. **Near-Term Transmission Planning Horizon:** Transmission planning period that covers years One through five.	☒Agree. ☐Do not agree.
Q5. **Comment:**	
Q6. **Non-Consequential Load Loss:** Load loss other than Consequential Load Loss. For example, Load loss that occurs through manual (operator initiated) or automatic operations such as under-voltage Load shedding, under-frequency Load shedding, or Special Protection Systems.	☒Agree. ☐Do not agree.
Q6. **Comment:**	
Q7. **Planning Assessment:** Documented evaluation of future Bulk Electric System needs by the use of performance studies that cover a range of assumptions regarding system conditions, time	☒Agree. ☐Do not

frames, future plans including capital reinforcements and operating procedures and other factors, such as asset conditions and age.	agree.
Q7. **Comment:**	
Q8. **Planning Events:** Events which require Transmission system performance requirements to be met.	☒Agree. ☐Do not agree.
Q8. **Comment:**	
Q9. **Plant Stability Study:** Study of an individual plant's Stability for various Contingencies in the vicinity of the plant; concerned with the effect on the System of the generating units' loss of synchronism and the damping of the generating units' power oscillations.	☒Agree. ☐Do not agree.
Q9. **Comment:**	
Q10. **System Stability Study:** Study of the System or portions of the System to ensure that angular Stability is maintained, inter-area power oscillations are damped, and voltages during the dynamic simulation stay within acceptable performance limits.	☒Agree. ☐Do not agree.
Q10. **Comment:**	
Q11. **Year One:** The first year that a Transmission Planner is responsible for studying. This is further defined as the planning window that begins the next calendar year from the time the Transmission Planner submits their annual studies. Analysis conducted for time horizons within the calendar year from the study publication are assumed to be conducted under the auspices of Operations Planning.	☒Agree. ☐Do not agree.
Q11. **Comment:**	

B. Sensitivity Studies

The draft planning standard includes the requirement, as specified in FERC Order 693, that planning decisions be based on a portfolio of analyses. In section 12.a.ii "Sensitivity studies and critical system conditions" FERC provided direction to consider a full range of variables considered to be significant that need to be assessed and documentation provided that explains the rationale for the selection of variables assessed.

In addition to the firm obligation scenario, the portfolio of analyses should be supplemented to include information from sensitivity analysis. The sensitivity analysis should be developed using additional cases that simulate reasonably stressed system conditions. The standard drafting team has included several parameters that can be varied to create the requisite sensitivity case(s). The draft standards specify that the sensitivities reflect one or more of the following conditions and that documentation be provided explaining the rationale for selecting the sensitivity(ies) employed. The parameters that should be varied include:

- Higher or lower Load forecasts from the Base Case with variability of Load/demand and Load power factors due to season, weather, or time of day.
- Modification of expected transfers.
- Unavailability of long lead time facilities.
- Variability and outages of Reactive Resources.
- Generation additions, retirements, or other dispatch scenarios.

- Decreased effectiveness of controllable Loads and Demand Side Management.
- Modification of planned Transmission outages

To help focus industry discussion, please respond to the questions below:

Q12. Should the standard provide more specific direction regarding the number of sensitivity cases that need to be developed?

Yes ☐ No ☒
Comment:

Q13. Should the standard specify the required changes, such as changes in expected transfers, load forecasts, generation patterns, etc., from the study case to be considered a "reasonably stressed" case?

Yes ☐ No ☒
Comment:

Q14. The SDT proposes to require the use of sensitivity studies for Near-Term Transmission System Planning Horizon stability analysis. Do you concur with the use of sensitivity analysis in dynamic studies?

Yes ☐ No ☒
Comment: We beklieve that only the worst case would need to be addressed for stability purposes.

Q15. The draft TPL standard does not require the use of sensitivity studies for the Long-Term Transmission System Planning Horizon (year six and beyond) studies. Do you concur with this approach or should there be some level of sensitivity analysis required for the long-term period?

Yes ☒ No ☐
Comment:

C. Corrective Action Plans

Requirement R2.7 of the standard states that when analysis shows that the performance requirements in Table 1 and Table 2 are not fully met, a Corrective Action Plan that utilizes all or some of the Transmission System enhancements, generation additions, DSM, new technologies and Operating Procedures shall be included in the Planning Assessment. This Corrective Action Plan should ensure that upon its implementation the identified system deficiencies will be corrected so that the performance requirements in Table 1 and Table 2 will be met. Furthermore, studies included in the Planning Assessment should demonstrate that this is indeed the case.

Q16. Requirement R2.7.1: Such Corrective Action Plans shall "Identify System deficiencies and the associated actions needed to achieve required System performance including Transmission and generation improvements, DSM, new technologies, or Operating Procedures including the duration of Interim Operating Procedures". System deficiencies may be corrected using an integrated plan, i.e., an optimal mix of Transmission, generation, DSM and Operating Procedures. Should DSM be considered in conjunction with other measures in developing Corrective Action Plans? If yes, please comment on how the impact of DSM should be included.

Yes ☐ No ☒

Comment:

Q17. Requirement R2.7.2: Such Corrective Action Plans shall "Be added to study cases and the cases re-tested to show that the System with planned additions meets the performance requirements in the tables". Should new studies, including the facilities comprising the Corrective Action Plan, be performed to assess System normal performance and Contingency response for conditions that previously resulted in the System deficiencies (without the planned additions) and also demonstrate that the changes would not result in inadvertent negative impacts on the System. If you "agree", please comment on how a study area should be determined.

Yes ☐ No ☒
Comment:

Q18. Requirement R2.7.3: The standard calls for a differentiation between committed and proposed projects. Do you agree that they should be treated separately? If not, please state why not.

Yes ☒ No ☐
Comment: However, the question as to what is considered committed versus proposed. There are variuos step in the approval process for our company and we are not sure which approval would be considered committed.

Q19. Requirement R2.7.4: For such Corrective Action Plans "Committed projects shall not be removed without documentation to show that the revised plan meets the performance requirements". Do you agree or disagree with this requirement? If you disagree, please explain why.

Yes ☒ No ☐
Comment:

D. Performance Requirements

The proposed revised planning standard (TPL-001-1) incorporates a number of changes in requirements as compared to the current planning standards (TPL-001-0 through TPL-004-0), which it is expected to replace. Among other things these changes are intended to clarify the standard, address issues described by FERC, and, in particular, to "raise the bar." Strengthening the planning standards in selected areas is necessary to maintain a reliable Bulk Electric System that is up to the challenges of the 21st Century. In proposing the requirements in this draft, the standard drafting team attempted to balance the value of increased reliability against any potential increase in work and costs to meet the new proposed standard.

The standard drafting team is seeking input from the industry to determine whether a proper balance has been achieved. The areas where material changes are proposed in this draft are enumerated below, and questions are posed by the standard drafting team to obtain industry comment. In formulating your responses, please keep in mind that material changes in the final standard will be accompanied by a transition plan to provide for an orderly implementation of the final standard.

The performance requirements relative to Non-Consequential Loss of Load for the following events enumerated in the two tables can be considered more stringent than the existing TPL standards. Furthermore, the proposed standard is based on an assumption that

performance requirements for EHV facilities should be more stringent than for lower voltage facilities.

Do you agree that Non-Consequential Loss of Load should not be permitted for the following events? If you disagree, please provide a reason for your disagreement.

Event	Agree or Disagree	Comment
Q20. P2-1: Loss of bus section (SLG for stability) above 300 kV	☒Agree. ☐Do not agree.	
Q21. P5-1: For facilities above 300 kV, loss of a Transmission circuit followed by System adjustment[1] followed by loss of another Transmission circuit	☒Agree. ☐Do not agree.	
Q22. P5-2: For facilities above 300 kV, loss of a Transmission circuit followed by System adjustment followed by loss of a transformer with low side voltage rating above 300 kV	☒Agree. ☐Do not agree.	
Q23. P5-3: For facilities above 300 kV, loss of a transformer with low side voltage rating above 300 kV followed by System adjustment followed by loss of another transformer	☒Agree. ☐Do not agree.	

[1]System adjustment can be manual or automatic.

The proposed standard is based on an assumption that performance requirements for non-bus tie EHV breakers should be distinguished from other breakers. Do you agree that Non-Consequential Loss of Load should not be permitted for this event?

Q24. Loss of non-bus tie breaker (above 300 kV) due to internal fault

Yes ☒ No ☐
Comment:

The proposed standard is based on an assumption that performance requirements for non-bus tie EHV breakers should be distinguished from other breakers and that performance requirements for EHV facilities should be more stringent than for lower voltage facilities. Do you agree that Non-Consequential Loss of Load should not be permitted for this event?

Q25. P3-1: Loss of (SLG for stability) either a generator, a Transmission circuit, a transformer, or a bus and a stuck non-bus tie breaker (above 300 kV)

Yes ☒ No ☐
Comment:

The proposed standard is based on an assumption that the following events are relatively high probability events and, therefore, Non-Consequential Loss of Load should not be permitted. Do you agree? If you disagree, please provide a reason for your disagreement.

Event	Agree or Disagree	Comment
Q26. P4-1: Loss of a Generator followed by System adjustment[1] followed by loss of another Generator	☒Agree. ☐Do not agree.	
Q27. P4-2: Loss of a generator followed by a System adjustment followed by the loss of a monopolar DC line	☒Agree. ☐Do not agree.	
Q28. P4-3: Loss of a generator followed by System adjustment followed by loss of a Transmission circuit	☒Agree. ☐Do not agree.	
Q29. P4-4: Loss of a generator followed by System adjustment followed by loss of a transformer	☒Agree. ☐Do not agree.	

The performance requirement for the following event may be considered less stringent than the existing TPL Standards — P2-3: Loss of a single pole of a DC line. Interruption of firm transactions (without Loss of firm Load) if the transaction is dependent on the faulted DC line is now allowed for this initiating event/Contingency.

Q30. Do you agree that interruption of any firm transfers that are dependent on the outaged DC line that is taken out of service should be permitted?

Yes ☒ No ☐
Comment:

E. Stability

Q31. The proposed standard is based on an assumption that steady state analysis and stability analysis are different from each other and that therefore, two tables of Contingencies and performance requirements were needed. It is also based on an assumption that stability study requirements should be clearly separated from the steady state study requirements. Do you agree with the action taken in separating stability analysis from steady state analysis? If not, please explain.

[1] System adjustment can be manual or automatic

Yes ☒ No ☐
Comment:

Q32. The SDT has added requirements for plant stability studies and has drawn a distinction in these studies from System stability studies. Do you agree with this approach? If not, please explain.

Yes ☒ No ☐
Comment:

Q33. The existing TPL-004-0 standard has a requirement to consider the Loss of all generating units at a plant, but it was not clear whether this requirement should apply to stability studies. The SDT did not include this requirement in the stability table, because it is hard to envision a condition when all units would trip simultaneously within the timeframe of a stability simulation. Do you think this condition should be required in stability analysis of extreme events? If not, please explain.

Yes ☒ No ☒
Comment: Agree with the statement above as to the timefram regarding stability.

Q34. There are an increasing number of events with slow voltage recovery after faults on the Transmission System. The dynamic behavior of induction motor loads is a major factor in this phenomenon. The proposed standard therefore requires that the load model for stability studies of peak Load conditions include the dynamic effects of induction motors. Do you agree with this requirement? If not, please explain?

Yes ☒ No ☐
Comment: However, getting all the modleing data is not easy and may take some time.

Q35. What type of manual or automatic adjustments of generators should be allowed for single and multiple Contingencies?

Comment: Whatever the generator is capable of.

F. Generation Runback and Tripping

The SDT has discussed the automatic and manual readjustments of generators that should be permissible for single contingencies and multiple contingencies. The existing TPL-001-0 through TPL-004-0 standards through footnote (a) of Table I could include emergency ratings applicable for short durations as required to permit operating steps necessary to maintain system control. The footnote is silent about allowable generation adjustments in response to the Category B events. However, it does indicate that system adjustments are permitted to prepare for the next Contingency. These system adjustments could include manual or automatic adjustments involving generation.

The SDT has learned that many transmission owners use System Protection Systems (SPS) or Remedial Action Schemes (RAS) to trip generation for single and multiple Contingency outage events to prevent overloads, low voltage, and instability in the Interconnected Transmission network for N-1 and N-2 events. In some cases, the RAS are used to prepare

for the next Contingency; but in some cases, the RAS are used to simultaneously avoid exceeding emergency ratings.

Q36. The proposed standard allows generation runback after the disturbance that causes a single Contingency (or due to a single Contingency outage) to move the Interconnected Transmission System from an emergency state (within emergency ratings) to a normal state (within normal ratings), assuming that the disturbance does not result in instability? Do you agree? If not, please explain.

Yes ☒ No ☐
Comment:

Q37. Since emergency ratings are thermal ratings, should this standard allow an automatic generation runback scheme (that is initiated immediately after the disturbance causing the single Contingency) to prevent thermal overloads (assuming that the disturbance does not result in instability)? If yes, what are the conditions that must be met in order to allow such a runback scheme to meet the System performance criteria for single Contingencies? Please explain the reason for your answer.

Yes ☒ No ☐
Comment: We do not have the capability to have automatic runback at this time. However if an entity does have the capability to perform automatic runback than it should be allowed to prevent overloads. That would be the purpose.

The standard drafting team has considered that RAS or SPS may be allowable under certain situations for single Contingencies, but proposes that their use should be limited.

Q38. Do you agree that RAS or SPS may be allowed for single Contingencies? If not, please explain.

Yes ☒ No ☐
Comment:

Q39. Please describe the limitations that you believe should be placed on the use of RAS or SPS for single Contingency events.

Comment: no comment

Q40. When RAS or SPS are allowed, what conditions should be met when these systems are used in system adjustments to meet performance requirements?

Comment: no comment

G. General Questions

Q41. If you are aware of any regional variances that would be required as a result of these standards, please identify them here.

Yes ☐ No ☒
Comment:

Q42. If you are aware of any conflicts between the proposed standards and any regulatory function, rule order, tariff, rate schedule, legislative requirement or agreement, please identify them here.

Yes ☐ No ☒
Comment:

Q43. Do you have any other questions or concerns with the proposed standard that have not been addressed? If yes, please explain.

Yes ☒ No ☐
Comment: Based on the p1 to P9 events one would have to model a breaker to breaker instaed of bus to bus. This would be a large undertaking and it seems that it would be more conservative to have a bus to bus model.

Question on P4 - does this apply to all generators on a system or is ther a MW limit to the size of the generator.

P5 Does this mean running N-2 for the 300 KV for all seven cases that would be required. This could take a large amount of computer run time.

We are stating that this change to the standard is not warrented. However, if all these changes are implemented what used to take approximately 1 month to assess will now take approximately 4 months and we are not that big of a system. I assume that the time and manpower to perform all the contingencies has been considered.

NERC
NORTH AMERICAN ELECTRIC RELIABILITY CORPORATION

Comment Form for First Draft of TPL-001-1 — Transmission System Planning Performance Requirements

Please use this form to submit comments on the proposed draft of TPL-001-1. Comments must be submitted by **Friday, October 26, 2007**. You may submit the completed form by e-mail to sarcomm@nerc.net with the words "TPL-001 Draft 1" in the subject line. If you have questions please contact Ed Dobrowolski at ed.dobrowolksi@nerc.net or by telephone at 609-947-3673.

Individual Commenter Information **(Complete this page for comments from one organization or individual.)**		
Name:	Anita Lee	
Organization:	Alberta Electric System Operator	
Telephone:	403 539-2497	
E-mail:	anita.lee@aeso.ca	
NERC Region (check all Regions in which your company operates)		**Registered Ballot Body Segment (check all industry segments in which your company is registered)**
☐ **ERCOT**	☐	1 — Transmission Owners
☐ **FRCC**	☒	2 — RTOs and ISOs
☐ **MRO**	☐	3 — Load-serving Entities
☐ **NPCC**	☐	4 — Transmission-dependent Utilities
☐ **RFC**	☐	5 — Electric Generators
☐ **SERC**	☐	6 — Electricity Brokers, Aggregators, and Marketers
☐ **SPP**	☐	7 — Large Electricity End Users
☐ **WECC**	☐	8 — Small Electricity End Users
☐ **NA – Not Applicable**	☐	9 — Federal, State, Provincial Regulatory or other Government Entities
	☐	10 — Regional Reliability Organizations and Regional Entities

Group Comments (Complete this page if comments are from a group.)

Group Name:

Lead Contact:

Contact Organization:

Contact Segment:

Contact Telephone:

Contact E-mail:

Additional Member Name	Additional Member Organization	Region*	Segment*
			2

*If more than one Region or Segment applies, please list all that apply. Regional acronyms and segment numbers are shown on prior page.

Background

The purpose of this standard is to establish Transmission System planning performance requirements within the planning horizon to develop a Bulk Electric System that will operate reliably over a broad spectrum of System conditions and following a wide range of probable Contingencies. This standard will replace TPL-001-0, TPL-002-0, TPL-003-0, and TPL-004-0. The standard drafting team has not yet addressed TPL-005-0 and TPL-006-0, but will address these two standards during the next phase of the drafting process.

The major objectives of the standard drafting team are to:

1) Ensure the standard is complete and the requirements are set at an appropriate level to ensure reliability (Not Least Common Denominator)
2) Ensure that the standard is enforceable by having clearly defined requirements with unambiguous language
3) Address the issues raised by FERC Order 693, 890, and other applicable orders
4) Address the issues raised in the original Standards Authorization Request (SAR) and the Supplemental SAR.

The standard drafting team did not attempt to edit the existing standards but rather chose to write one standard that addresses all aspects of transmission planning in the existing TPL-001-0, TPL-002-0, TPL-003-0, and TPL-004-0. The standard drafting team organized the new standard in the following sections:

R1 – Modeling requirements
R2 – Assessment and Corrective Plan requirements
R3 – Steady State Analysis requirements
R4 – Stability Analysis requirements
R5 – Coordination requirements

The standard drafting team determined that the requirements and analysis for Steady State are different from those for stability. As such, the standard drafting team separated the analysis requirements and created two performance requirement tables.

The standard drafting team recognizes that this draft standard is a starting point for industry input into the standard and that there is still a lot of work required to complete the process. The standard drafting team has made many changes to clarify requirements, add requirements, and make some of the performance requirements stricter. The standard drafting team has not addressed Measures, Risk Factors, Violation Severity Factors, or Time Horizons at this time. These will be addressed when the standard drafting team has better defined the requirements of the standard.

For questions where you agree with the standard drafting team, please state that you agree and if available, please provide supporting documentation. If you disagree with the standard drafting team, please explain why you disagree and provide data to support your position, such as outage data or analysis. If you believe that we have made a performance requirement too strict please provide supporting documentation. If applicable, please include the approximate cost in man-hours for additional studies and/or cost in $Millions for additional transmission investment to meet the new requirements or the stricter requirements. If you believe that the standard should be stricter, please provide the rationale along with any supporting data, including existing practices, cost estimates or additional analysis.

To improve the standard, the standard drafting team would appreciate responses to as many of these questions as you can answer.

A. New Definitions

Many of the concerns about the existing TPL standards come from the fact that a number of generally understood concepts are embedded in undefined terms, tables, and footnotes. To clarify some of these concerns, the standard drafting team is proposing new definitions. Please indicate whether you agree with the following proposed definitions and provide proposed changes to the definitions if you disagree:

Definition	**Agree or Disagree**
Q1. **Base Case**: Computer representation of the projected initial or starting Transmission System conditions for a specific point in time. Each base case reflects the forecasted Load at each bus (or node) on the interconnected Transmission System, the transmission facilities which deliver the generation and reactive resources to the connected Load, and the generation dispatch including firm transaction obligations assumed to supply the connected Load. The models also reflect facility ratings in accordance with FAC-008 & FAC-009.	☐Agree. ☐Do not agree.
Q1. **Comment: Due to the length of this questionnaire and the different regional approaches to how IRC members meet the TPL requirements, indiividual ISO RTOs have chosen to respond separately. Collectively the IRC SRC provides comments in #43 of this questionnaire.**	
Q2. **Consequential Load Loss:** Load that is no longer served because it is directly connected to an element(s) that is removed from service due to fault clearing action or mis-operation.	☐Agree. ☐Do not agree.
Q2. **Comment:**	
Q3. **Extreme Events:** Events which are more severe than Planning Events and have a low probability of occurrence.	☐Agree. ☐Do not agree.
Q3. **Comment:**	
Q4. **Long-Term Transmission Planning Horizon:** Transmission planning period that covers years six through ten or beyond.	☐Agree. ☐Do not agree.
Q4. **Comment:**	
Q5. **Near-Term Transmission Planning Horizon:** Transmission planning period that covers years One through five.	☐Agree. ☐Do not agree.
Q5. **Comment:**	
Q6. **Non-Consequential Load Loss:** Load loss other than Consequential Load Loss. For example, Load loss that occurs through manual (operator initiated) or automatic operations such as under-voltage Load shedding, under-frequency Load shedding, or Special Protection Systems.	☐Agree. ☐Do not agree.
Q6. **Comment:**	

Q7. **Planning Assessment:** Documented evaluation of future Bulk Electric System needs by the use of performance studies that cover a range of assumptions regarding system conditions, time frames, future plans including capital reinforcements and operating procedures and other factors, such as asset conditions and age.	☐Agree. ☐Do not agree.
Q7. **Comment:**	
Q8. **Planning Events:** Events which require Transmission system performance requirements to be met.	☐Agree. ☐Do not agree.
Q8. **Comment:**	
Q9. **Plant Stability Study:** Study of an individual plant's Stability for various Contingencies in the vicinity of the plant; concerned with the effect on the System of the generating units' loss of synchronism and the damping of the generating units' power oscillations.	☐Agree. ☐Do not agree.
Q9. **Comment:**	
Q10. **System Stability Study:** Study of the System or portions of the System to ensure that angular Stability is maintained, inter-area power oscillations are damped, and voltages during the dynamic simulation stay within acceptable performance limits.	☐Agree. ☐Do not agree.
Q10. **Comment:**	
Q11. **Year One:** The first year that a Transmission Planner is responsible for studying. This is further defined as the planning window that begins the next calendar year from the time the Transmission Planner submits their annual studies. Analysis conducted for time horizons within the calendar year from the study publication are assumed to be conducted under the auspices of Operations Planning.	☐Agree. ☐Do not agree.
Q11. **Comment:**	

B. Sensitivity Studies

The draft planning standard includes the requirement, as specified in FERC Order 693, that planning decisions be based on a portfolio of analyses. In section 12.a.ii "Sensitivity studies and critical system conditions" FERC provided direction to consider a full range of variables considered to be significant that need to be assessed and documentation provided that explains the rationale for the selection of variables assessed.

In addition to the firm obligation scenario, the portfolio of analyses should be supplemented to include information from sensitivity analysis. The sensitivity analysis should be developed using additional cases that simulate reasonably stressed system conditions. The standard drafting team has included several parameters that can be varied to create the requisite sensitivity case(s). The draft standards specify that the sensitivities reflect one or more of the following conditions and that documentation be provided explaining the rationale for selecting the sensitivity(ies) employed. The parameters that should be varied include:

- Higher or lower Load forecasts from the Base Case with variability of Load/demand and Load power factors due to season, weather, or time of day.
- Modification of expected transfers.

- Unavailability of long lead time facilities.
- Variability and outages of Reactive Resources.
- Generation additions, retirements, or other dispatch scenarios.
- Decreased effectiveness of controllable Loads and Demand Side Management.
- Modification of planned Transmission outages

To help focus industry discussion, please respond to the questions below:

Q12. Should the standard provide more specific direction regarding the number of sensitivity cases that need to be developed?

Yes ☐ No ☐
Comment:

Q13. Should the standard specify the required changes, such as changes in expected transfers, load forecasts, generation patterns, etc., from the study case to be considered a "reasonably stressed" case?

Yes ☐ No ☐
Comment:

Q14. The SDT proposes to require the use of sensitivity studies for Near-Term Transmission System Planning Horizon stability analysis. Do you concur with the use of sensitivity analysis in dynamic studies?

Yes ☐ No ☐
Comment:

Q15. The draft TPL standard does not require the use of sensitivity studies for the Long-Term Transmission System Planning Horizon (year six and beyond) studies. Do you concur with this approach or should there be some level of sensitivity analysis required for the long-term period?

Yes ☐ No ☐
Comment:

C. Corrective Action Plans

Requirement R2.7 of the standard states that when analysis shows that the performance requirements in Table 1 and Table 2 are not fully met, a Corrective Action Plan that utilizes all or some of the Transmission System enhancements, generation additions, DSM, new technologies and Operating Procedures shall be included in the Planning Assessment. This Corrective Action Plan should ensure that upon its implementation the identified system deficiencies will be corrected so that the performance requirements in Table 1 and Table 2 will be met. Furthermore, studies included in the Planning Assessment should demonstrate that this is indeed the case.

Q16. Requirement R2.7.1: Such Corrective Action Plans shall "Identify System deficiencies and the associated actions needed to achieve required System performance including Transmission and generation improvements, DSM, new technologies, or Operating Procedures including the duration of Interim Operating Procedures". System deficiencies may be corrected using an integrated plan, i.e., an optimal mix of Transmission, generation, DSM and Operating Procedures. Should DSM be considered in

conjunction with other measures in developing Corrective Action Plans? If yes, please comment on how the impact of DSM should be included.

Yes ☐ No ☐
Comment:

Q17. Requirement R2.7.2: Such Corrective Action Plans shall "Be added to study cases and the cases re-tested to show that the System with planned additions meets the performance requirements in the tables". Should new studies, including the facilities comprising the Corrective Action Plan, be performed to assess System normal performance and Contingency response for conditions that previously resulted in the System deficiencies (without the planned additions) and also demonstrate that the changes would not result in inadvertent negative impacts on the System. If you "agree", please comment on how a study area should be determined.

Yes ☐ No ☐
Comment:

Q18. Requirement R2.7.3: The standard calls for a differentiation between committed and proposed projects. Do you agree that they should be treated separately? If not, please state why not.

Yes ☐ No ☐
Comment:

Q19. Requirement R2.7.4: For such Corrective Action Plans "Committed projects shall not be removed without documentation to show that the revised plan meets the performance requirements". Do you agree or disagree with this requirement? If you disagree, please explain why.

Yes ☐ No ☐
Comment:

D. Performance Requirements

The proposed revised planning standard (TPL-001-1) incorporates a number of changes in requirements as compared to the current planning standards (TPL-001-0 through TPL-004-0), which it is expected to replace. Among other things these changes are intended to clarify the standard, address issues described by FERC, and, in particular, to "raise the bar." Strengthening the planning standards in selected areas is necessary to maintain a reliable Bulk Electric System that is up to the challenges of the 21st Century. In proposing the requirements in this draft, the standard drafting team attempted to balance the value of increased reliability against any potential increase in work and costs to meet the new proposed standard.

The standard drafting team is seeking input from the industry to determine whether a proper balance has been achieved. The areas where material changes are proposed in this draft are enumerated below, and questions are posed by the standard drafting team to obtain industry comment. In formulating your responses, please keep in mind that material changes in the final standard will be accompanied by a transition plan to provide for an orderly implementation of the final standard.

The performance requirements relative to Non-Consequential Loss of Load for the following events enumerated in the two tables can be considered more stringent than the existing TPL

standards. Furthermore, the proposed standard is based on an assumption that performance requirements for EHV facilities should be more stringent than for lower voltage facilities.

Do you agree that Non-Consequential Loss of Load should not be permitted for the following events? If you disagree, please provide a reason for your disagreement.

Event	Agree or Disagree	Comment
Q20. P2-1: Loss of bus section (SLG for stability) above 300 kV	☐Agree. ☐Do not agree.	
Q21. P5-1: For facilities above 300 kV, loss of a Transmission circuit followed by System adjustment[1] followed by loss of another Transmission circuit	☐Agree. ☐Do not agree.	
Q22. P5-2: For facilities above 300 kV, loss of a Transmission circuit followed by System adjustment followed by loss of a transformer with low side voltage rating above 300 kV	☐Agree. ☐Do not agree.	
Q23. P5-3: For facilities above 300 kV, loss of a transformer with low side voltage rating above 300 kV followed by System adjustment followed by loss of another transformer	☐Agree. ☐Do not agree.	

[1]System adjustment can be manual or automatic.

The proposed standard is based on an assumption that performance requirements for non-bus tie EHV breakers should be distinguished from other breakers. Do you agree that Non-Consequential Loss of Load should not be permitted for this event?

Q24. Loss of non-bus tie breaker (above 300 kV) due to internal fault

Yes ☐ No ☐
Comment:

The proposed standard is based on an assumption that performance requirements for non-bus tie EHV breakers should be distinguished from other breakers and that performance requirements for EHV facilities should be more stringent than for lower voltage facilities. Do you agree that Non-Consequential Loss of Load should not be permitted for this event?

Q25. P3-1: Loss of (SLG for stability) either a generator, a Transmission circuit, a transformer, or a bus and a stuck non-bus tie breaker (above 300 kV)

Yes ☐ No ☐
Comment:

The proposed standard is based on an assumption that the following events are relatively high probability events and, therefore, Non-Consequential Loss of Load should not be permitted. Do you agree? If you disagree, please provide a reason for your disagreement.

Event	Agree or Disagree	Comment
Q26. P4-1: Loss of a Generator followed by System adjustment[1] followed by loss of another Generator	☐Agree. ☐Do not agree.	
Q27. P4-2: Loss of a generator followed by a System adjustment followed by the loss of a monopolar DC line	☐Agree. ☐Do not agree.	
Q28. P4-3: Loss of a generator followed by System adjustment followed by loss of a Transmission circuit	☐Agree. ☐Do not agree.	
Q29. P4-4: Loss of a generator followed by System adjustment followed by loss of a transformer	☐Agree. ☐Do not agree.	

The performance requirement for the following event may be considered less stringent than the existing TPL Standards — P2-3: Loss of a single pole of a DC line. Interruption of firm transactions (without Loss of firm Load) if the transaction is dependent on the faulted DC line is now allowed for this initiating event/Contingency.

Q30. Do you agree that interruption of any firm transfers that are dependent on the outaged DC line that is taken out of service should be permitted?

Yes ☐ No ☐
Comment:

E. Stability

Q31. The proposed standard is based on an assumption that steady state analysis and stability analysis are different from each other and that therefore, two tables of Contingencies and performance requirements were needed. It is also based on an assumption that stability study requirements should be clearly separated from the

[1] System adjustment can be manual or automatic

steady state study requirements. Do you agree with the action taken in separating stability analysis from steady state analysis? If not, please explain.

Yes ☐ No ☐
Comment:

Q32. The SDT has added requirements for plant stability studies and has drawn a distinction in these studies from System stability studies. Do you agree with this approach? If not, please explain.

Yes ☐ No ☐
Comment:

Q33. The existing TPL-004-0 standard has a requirement to consider the Loss of all generating units at a plant, but it was not clear whether this requirement should apply to stability studies. The SDT did not include this requirement in the stability table, because it is hard to envision a condition when all units would trip simultaneously within the timeframe of a stability simulation. Do you think this condition should be required in stability analysis of extreme events? If not, please explain.

Yes ☐ No ☐
Comment:

Q34. There are an increasing number of events with slow voltage recovery after faults on the Transmission System. The dynamic behavior of induction motor loads is a major factor in this phenomenon. The proposed standard therefore requires that the load model for stability studies of peak Load conditions include the dynamic effects of induction motors. Do you agree with this requirement? If not, please explain?

Yes ☐ No ☐
Comment:

Q35. What type of manual or automatic adjustments of generators should be allowed for single and multiple Contingencies?

Comment:

F. Generation Runback and Tripping

The SDT has discussed the automatic and manual readjustments of generators that should be permissible for single contingencies and multiple contingencies. The existing TPL-001-0 through TPL-004-0 standards through footnote (a) of Table I could include emergency ratings applicable for short durations as required to permit operating steps necessary to maintain system control. The footnote is silent about allowable generation adjustments in response to the Category B events. However, it does indicate that system adjustments are permitted to prepare for the next Contingency. These system adjustments could include manual or automatic adjustments involving generation.

The SDT has learned that many transmission owners use System Protection Systems (SPS) or Remedial Action Schemes (RAS) to trip generation for single and multiple Contingency outage events to prevent overloads, low voltage, and instability in the Interconnected

Transmission network for N-1 and N-2 events. In some cases, the RAS are used to prepare for the next Contingency; but in some cases, the RAS are used to simultaneously avoid exceeding emergency ratings.

Q36. The proposed standard allows generation runback after the disturbance that causes a single Contingency (or due to a single Contingency outage) to move the Interconnected Transmission System from an emergency state (within emergency ratings) to a normal state (within normal ratings), assuming that the disturbance does not result in instability? Do you agree? If not, please explain.

Yes ☐ No ☐
Comment:

Q37. Since emergency ratings are thermal ratings, should this standard allow an automatic generation runback scheme (that is initiated immediately after the disturbance causing the single Contingency) to prevent thermal overloads (assuming that the disturbance does not result in instability)? If yes, what are the conditions that must be met in order to allow such a runback scheme to meet the System performance criteria for single Contingencies? Please explain the reason for your answer.

Yes ☐ No ☐
Comment:

The standard drafting team has considered that RAS or SPS may be allowable under certain situations for single Contingencies, but proposes that their use should be limited.

Q38. Do you agree that RAS or SPS may be allowed for single Contingencies? If not, please explain.

Yes ☐ No ☐
Comment:

Q39. Please describe the limitations that you believe should be placed on the use of RAS or SPS for single Contingency events.

Comment:

Q40. When RAS or SPS are allowed, what conditions should be met when these systems are used in system adjustments to meet performance requirements?

Comment:

G. General Questions

Q41. If you are aware of any regional variances that would be required as a result of these standards, please identify them here.

Yes ☐ No ☐
Comment:

Q42. If you are aware of any conflicts between the proposed standards and any regulatory function, rule order, tariff, rate schedule, legislative requirement or agreement, please identify them here.

Yes ☐ No ☐
Comment:

Q43. Do you have any other questions or concerns with the proposed standard that have not been addressed? If yes, please explain.

Yes ☒ No ☐
Comment: The Alberta Electric System Operator (AESO) supports the comments from WECC with the exception of Question #19 where the AESO agrees with the proposed requirement R2.7.4 by the SDT.

NERC
NORTH AMERICAN ELECTRIC RELIABILITY CORPORATION

Comment Form for First Draft of TPL-001-1 — Transmission System Planning Performance Requirements

Please use this form to submit comments on the proposed draft of TPL-001-1. Comments must be submitted by **Friday, October 26, 2007**. You may submit the completed form by e-mail to sarcomm@nerc.net with the words "TPL-001 Draft 1" in the subject line. If you have questions please contact Ed Dobrowolski at ed.dobrowolksi@nerc.net or by telephone at 609-947-3673.

Individual Commenter Information **(Complete this page for comments from one organization or individual.)**		
Name:	Wesley O. Davis	
Organization:	Alcoa Power Generating, Inc	
Telephone:	(704)787-1392	
E-mail:	Wesley.Davis@alcoa.com	
NERC Region (check all Regions in which your company operates)		**Registered Ballot Body Segment (check all industry segments in which your company is registered)**
☐ **ERCOT**	☒	1 — Transmission Owners
☐ **FRCC**	☐	2 — RTOs and ISOs
☐ **MRO**	☒	3 — Load-serving Entities
☐ **NPCC**	☐	4 — Transmission-dependent Utilities
☐ **RFC**	☒	5 — Electric Generators
☒ **SERC**	☐	6 — Electricity Brokers, Aggregators, and Marketers
☐ **SPP**	☒	7 — Large Electricity End Users
☐ **WECC**	☐	8 — Small Electricity End Users
☐ **NA – Not Applicable**	☐	9 — Federal, State, Provincial Regulatory or other Government Entities
	☐	10 — Regional Reliability Organizations and Regional Entities

Group Comments (Complete this page if comments are from a group.)

Group Name:

Lead Contact:

Contact Organization:

Contact Segment:

Contact Telephone:

Contact E-mail:

Additional Member Name	Additional Member Organization	Region*	Segment*

*If more than one Region or Segment applies, please list all that apply. Regional acronyms and segment numbers are shown on prior page.

Background

The purpose of this standard is to establish Transmission System planning performance requirements within the planning horizon to develop a Bulk Electric System that will operate reliably over a broad spectrum of System conditions and following a wide range of probable Contingencies. This standard will replace TPL-001-0, TPL-002-0, TPL-003-0, and TPL-004-0. The standard drafting team has not yet addressed TPL-005-0 and TPL-006-0, but will address these two standards during the next phase of the drafting process.

The major objectives of the standard drafting team are to:

1) Ensure the standard is complete and the requirements are set at an appropriate level to ensure reliability (Not Least Common Denominator)
2) Ensure that the standard is enforceable by having clearly defined requirements with unambiguous language
3) Address the issues raised by FERC Order 693, 890, and other applicable orders
4) Address the issues raised in the original Standards Authorization Request (SAR) and the Supplemental SAR.

The standard drafting team did not attempt to edit the existing standards but rather chose to write one standard that addresses all aspects of transmission planning in the existing TPL-001-0, TPL-002-0, TPL-003-0, and TPL-004-0. The standard drafting team organized the new standard in the following sections:

R1 – Modeling requirements
R2 – Assessment and Corrective Plan requirements
R3 – Steady State Analysis requirements
R4 – Stability Analysis requirements
R5 – Coordination requirements

The standard drafting team determined that the requirements and analysis for Steady State are different from those for stability. As such, the standard drafting team separated the analysis requirements and created two performance requirement tables.

The standard drafting team recognizes that this draft standard is a starting point for industry input into the standard and that there is still a lot of work required to complete the process. The standard drafting team has made many changes to clarify requirements, add requirements, and make some of the performance requirements stricter. The standard drafting team has not addressed Measures, Risk Factors, Violation Severity Factors, or Time Horizons at this time. These will be addressed when the standard drafting team has better defined the requirements of the standard.

For questions where you agree with the standard drafting team, please state that you agree and if available, please provide supporting documentation. If you disagree with the standard drafting team, please explain why you disagree and provide data to support your position, such as outage data or analysis. If you believe that we have made a performance requirement too strict please provide supporting documentation. If applicable, please include the approximate cost in man-hours for additional studies and/or cost in $Millions for additional transmission investment to meet the new requirements or the stricter requirements. If you believe that the standard should be stricter, please provide the rationale along with any supporting data, including existing practices, cost estimates or additional analysis.

To improve the standard, the standard drafting team would appreciate responses to as many of these questions as you can answer.

A. New Definitions

Many of the concerns about the existing TPL standards come from the fact that a number of generally understood concepts are embedded in undefined terms, tables, and footnotes. To clarify some of these concerns, the standard drafting team is proposing new definitions. Please indicate whether you agree with the following proposed definitions and provide proposed changes to the definitions if you disagree:

Definition	**Agree or Disagree**
Q1. **Base Case**: Computer representation of the projected initial or starting Transmission System conditions for a specific point in time. Each base case reflects the forecasted Load at each bus (or node) on the interconnected Transmission System, the transmission facilities which deliver the generation and reactive resources to the connected Load, and the generation dispatch including firm transaction obligations assumed to supply the connected Load. The models also reflect facility ratings in accordance with FAC-008 & FAC-009.	☐Agree. ☐Do not agree.
Q1. **Comment:**	
Q2. **Consequential Load Loss:** Load that is no longer served because it is directly connected to an element(s) that is removed from service due to fault clearing action or mis-operation.	☐Agree. ☐Do not agree.
Q2. **Comment:**	
Q3. **Extreme Events:** Events which are more severe than Planning Events and have a low probability of occurrence.	☐Agree. ☐Do not agree.
Q3. **Comment:**	
Q4. **Long-Term Transmission Planning Horizon:** Transmission planning period that covers years six through ten or beyond.	☐Agree. ☐Do not agree.
Q4. **Comment:**	
Q5. **Near-Term Transmission Planning Horizon:** Transmission planning period that covers years One through five.	☐Agree. ☐Do not agree.
Q5. **Comment:**	
Q6. **Non-Consequential Load Loss:** Load loss other than Consequential Load Loss. For example, Load loss that occurs through manual (operator initiated) or automatic operations such as under-voltage Load shedding, under-frequency Load shedding, or Special Protection Systems.	☐Agree. ☐Do not agree.
Q6. **Comment:**	
Q7. **Planning Assessment:** Documented evaluation of future Bulk Electric System needs by the use of performance studies that cover a range of assumptions regarding system conditions, time	☐Agree. ☐Do not

frames, future plans including capital reinforcements and operating procedures and other factors, such as asset conditions and age.	agree.
Q7. **Comment:**	
Q8. **Planning Events:** Events which require Transmission system performance requirements to be met.	☐Agree. ☐Do not agree.
Q8. **Comment:**	
Q9. **Plant Stability Study:** Study of an individual plant's Stability for various Contingencies in the vicinity of the plant; concerned with the effect on the System of the generating units' loss of synchronism and the damping of the generating units' power oscillations.	☐Agree. ☐Do not agree.
Q9. **Comment:**	
Q10. **System Stability Study:** Study of the System or portions of the System to ensure that angular Stability is maintained, inter-area power oscillations are damped, and voltages during the dynamic simulation stay within acceptable performance limits.	☐Agree. ☐Do not agree.
Q10. **Comment:**	
Q11. **Year One:** The first year that a Transmission Planner is responsible for studying. This is further defined as the planning window that begins the next calendar year from the time the Transmission Planner submits their annual studies. Analysis conducted for time horizons within the calendar year from the study publication are assumed to be conducted under the auspices of Operations Planning.	☐Agree. ☐Do not agree.
Q11. **Comment:**	

B. Sensitivity Studies

The draft planning standard includes the requirement, as specified in FERC Order 693, that planning decisions be based on a portfolio of analyses. In section 12.a.ii "Sensitivity studies and critical system conditions" FERC provided direction to consider a full range of variables considered to be significant that need to be assessed and documentation provided that explains the rationale for the selection of variables assessed.

In addition to the firm obligation scenario, the portfolio of analyses should be supplemented to include information from sensitivity analysis. The sensitivity analysis should be developed using additional cases that simulate reasonably stressed system conditions. The standard drafting team has included several parameters that can be varied to create the requisite sensitivity case(s). The draft standards specify that the sensitivities reflect one or more of the following conditions and that documentation be provided explaining the rationale for selecting the sensitivity(ies) employed. The parameters that should be varied include:

- Higher or lower Load forecasts from the Base Case with variability of Load/demand and Load power factors due to season, weather, or time of day.
- Modification of expected transfers.
- Unavailability of long lead time facilities.
- Variability and outages of Reactive Resources.
- Generation additions, retirements, or other dispatch scenarios.

- Decreased effectiveness of controllable Loads and Demand Side Management.
- Modification of planned Transmission outages

To help focus industry discussion, please respond to the questions below:

Q12. Should the standard provide more specific direction regarding the number of sensitivity cases that need to be developed?

Yes ☐ No ☐
Comment:

Q13. Should the standard specify the required changes, such as changes in expected transfers, load forecasts, generation patterns, etc., from the study case to be considered a "reasonably stressed" case?

Yes ☐ No ☐
Comment:

Q14. The SDT proposes to require the use of sensitivity studies for Near-Term Transmission System Planning Horizon stability analysis. Do you concur with the use of sensitivity analysis in dynamic studies?

Yes ☐ No ☐
Comment:

Q15. The draft TPL standard does not require the use of sensitivity studies for the Long-Term Transmission System Planning Horizon (year six and beyond) studies. Do you concur with this approach or should there be some level of sensitivity analysis required for the long-term period?

Yes ☐ No ☐
Comment:

C. Corrective Action Plans

Requirement R2.7 of the standard states that when analysis shows that the performance requirements in Table 1 and Table 2 are not fully met, a Corrective Action Plan that utilizes all or some of the Transmission System enhancements, generation additions, DSM, new technologies and Operating Procedures shall be included in the Planning Assessment. This Corrective Action Plan should ensure that upon its implementation the identified system deficiencies will be corrected so that the performance requirements in Table 1 and Table 2 will be met. Furthermore, studies included in the Planning Assessment should demonstrate that this is indeed the case.

Q16. Requirement R2.7.1: Such Corrective Action Plans shall "Identify System deficiencies and the associated actions needed to achieve required System performance including Transmission and generation improvements, DSM, new technologies, or Operating Procedures including the duration of Interim Operating Procedures". System deficiencies may be corrected using an integrated plan, i.e., an optimal mix of Transmission, generation, DSM and Operating Procedures. Should DSM be considered in conjunction with other measures in developing Corrective Action Plans? If yes, please comment on how the impact of DSM should be included.

Yes ☐ No ☐
Comment:

Q17. Requirement R2.7.2: Such Corrective Action Plans shall "Be added to study cases and the cases re-tested to show that the System with planned additions meets the performance requirements in the tables". Should new studies, including the facilities comprising the Corrective Action Plan, be performed to assess System normal performance and Contingency response for conditions that previously resulted in the System deficiencies (without the planned additions) and also demonstrate that the changes would not result in inadvertent negative impacts on the System. If you "agree", please comment on how a study area should be determined.

Yes ☒ No ☒

Comment: NERC is revising the Transmission Planning Standards beginning with TPL-001. Alcoa agrees with NERC's approach to revising TPL-001 wherein NERC is consolidating duplicative Standards to promote consistent requirements of the planning process and thus improving reliability. Also, Alcoa agrees that new studies should not result in inadvertent negative impacts on the system especially when such studies have not taken into account the negative impact on an adjacent system.

However, Alcoa believes that the current draft of the TPL fails to address FERC Order 890's requirements of an open and transparent Planning Process. Such a process provides Market Participants an equal opportunity for consideration in the Planning Assessments for contingency impact on transmission availability. (See FERC Order 890 ¶¶ 140, 207, 212, 323, 327, 337). Alcoa also believes that the current draft of the TPL fails to address and incorporate FERC Order 890's new requirement that transmission providers coordinate "…ATC calculations with their neighboring systems."

For example, while Planning Assessments may indicate no NERC Compliance violations where the Table 1 and Table 2 Requirements are met, Market Participants are harmed and not provided protection from unequal treatment of their circumstance. This problem occurs when an analysis of a contingency event results in no IROL or SOL (all facilities remain within established ratings), but resultant transmission constraints cause reductions of ATC and subsequent market impact. As part of the System Planning Process, this is unacceptable, and, as a minimum, this type of situation must be included as a scenario reviewed in the required sensitivity analysis under the NERC TPL-001-1 Standard.

The impact of such practices by large transmission providers on the ATC of smaller transmission providers can be significant. For instance, small transmission providers similar to Alcoa that operate non base-load resources such as hydropower, peaking units or wind power can easily see their ATC's reduced when sensitivity analyses are not performed under TPL-001-1. Alcoa believes that such sensitivity analyses should be a requirement.

Alcoa believes that for consistency with the provisions of Order 890, NERC must re-visit not only the Planning Assessment implications on transmission availability but also couple this review with the revision of the NERC Modeling Data and Assessment Standards (MOD). Alcoa recommends that the MOD and TPL Standards be addressed in similar fashion to:

1) Incorporate the intent of Order 890 requirements of an "Open and transparent Regional Planning Process to provide non-discriminatory planning" for ALL Market Participants

2) Assure that the revised MOD and TPL Standards fully address implications of burdens on the Bulk Electric System (BES) related to transmission availability for contingencies in the Planning Process.

FERC Order 890 ¶ 523 - Coordinate planning with interconnected systems. In addition to preparing a system plan for its own control area on an open and nondiscriminatory basis, each Transmission Provider will be required to coordinate with interconnected systems to (1) share system plans to ensure that they are simultaneously feasible and otherwise use consistent assumptions and data and (2) identify system enhancements that could relieve congestion or integrate new resources. (Emphasis added).

3) Sensitivity Analysis should include the potential impact on transmission availability and/or reductions in ATC on adjacent systems. Where ATC on an interface is reduced for a single contingency (N-1 planning, mitigation options must be provided). (This may require a threshold level of ATC reduction where a percentage reduction would be specified as acceptable on the N-1 basis, and a greater reduction than that threshold would be considered a Standard's Violation).

Q18. Requirement R2.7.3: The standard calls for a differentiation between committed and proposed projects. Do you agree that they should be treated separately? If not, please state why not.

Yes ☐ No ☐

Comment:

Q19. Requirement R2.7.4: For such Corrective Action Plans "Committed projects shall not be removed without documentation to show that the revised plan meets the performance requirements". Do you agree or disagree with this requirement? If you disagree, please explain why.

Yes ☐ No ☐

Comment:

D. Performance Requirements

The proposed revised planning standard (TPL-001-1) incorporates a number of changes in requirements as compared to the current planning standards (TPL-001-0 through TPL-004-0), which it is expected to replace. Among other things these changes are intended to clarify the standard, address issues described by FERC, and, in particular, to "raise the bar." Strengthening the planning standards in selected areas is necessary to maintain a reliable Bulk Electric System that is up to the challenges of the 21st Century. In proposing the requirements in this draft, the standard drafting team attempted to balance the value of increased reliability against any potential increase in work and costs to meet the new proposed standard.

The standard drafting team is seeking input from the industry to determine whether a proper balance has been achieved. The areas where material changes are proposed in this draft are enumerated below, and questions are posed by the standard drafting team to obtain industry comment. In formulating your responses, please keep in mind that material changes in the final standard will be accompanied by a transition plan to provide for an orderly implementation of the final standard.

The performance requirements relative to Non-Consequential Loss of Load for the following events enumerated in the two tables can be considered more stringent than the existing TPL standards. Furthermore, the proposed standard is based on an assumption that performance requirements for EHV facilities should be more stringent than for lower voltage facilities.

Do you agree that Non-Consequential Loss of Load should not be permitted for the following events? If you disagree, please provide a reason for your disagreement.

Event	Agree or Disagree	Comment
Q20. P2-1: Loss of bus section (SLG for	☐Agree.	

stability) above 300 kV	☐Do not agree.	
Q21. P5-1: For facilities above 300 kV, loss of a Transmission circuit followed by System adjustment[1] followed by loss of another Transmission circuit	☐Agree. ☐Do not agree.	
Q22. P5-2: For facilities above 300 kV, loss of a Transmission circuit followed by System adjustment followed by loss of a transformer with low side voltage rating above 300 kV	☐Agree. ☐Do not agree.	
Q23. P5-3: For facilities above 300 kV, loss of a transformer with low side voltage rating above 300 kV followed by System adjustment followed by loss of another transformer	☐Agree. ☐Do not agree.	

[1]System adjustment can be manual or automatic.

The proposed standard is based on an assumption that performance requirements for non-bus tie EHV breakers should be distinguished from other breakers. Do you agree that Non-Consequential Loss of Load should not be permitted for this event?

Q24. Loss of non-bus tie breaker (above 300 kV) due to internal fault

Yes ☐ No ☐
Comment:

The proposed standard is based on an assumption that performance requirements for non-bus tie EHV breakers should be distinguished from other breakers and that performance requirements for EHV facilities should be more stringent than for lower voltage facilities. Do you agree that Non-Consequential Loss of Load should not be permitted for this event?

Q25. P3-1: Loss of (SLG for stability) either a generator, a Transmission circuit, a transformer, or a bus and a stuck non-bus tie breaker (above 300 kV)

Yes ☐ No ☐
Comment:

The proposed standard is based on an assumption that the following events are relatively high probability events and, therefore, Non-Consequential Loss of Load should not be permitted. Do you agree? If you disagree, please provide a reason for your disagreement.

Event	Agree or Disagree	Comment
Q26. P4-1: Loss of a Generator followed by System adjustment[1] followed by loss of another Generator	☐Agree. ☐Do not agree.	
Q27. P4-2: Loss of a generator followed by a System adjustment followed by the loss of a monopolar DC line	☐Agree. ☐Do not agree.	
Q28. P4-3: Loss of a generator followed by System adjustment followed by loss of a Transmission circuit	☐Agree. ☐Do not agree.	
Q29. P4-4: Loss of a generator followed by System adjustment followed by loss of a transformer	☐Agree. ☐Do not agree.	

The performance requirement for the following event may be considered less stringent than the existing TPL Standards — P2-3: Loss of a single pole of a DC line. Interruption of firm transactions (without Loss of firm Load) if the transaction is dependent on the faulted DC line is now allowed for this initiating event/Contingency.

Q30. Do you agree that interruption of any firm transfers that are dependent on the outaged DC line that is taken out of service should be permitted?

Yes ☐ No ☐
Comment:

E. Stability

Q31. The proposed standard is based on an assumption that steady state analysis and stability analysis are different from each other and that therefore, two tables of Contingencies and performance requirements were needed. It is also based on an assumption that stability study requirements should be clearly separated from the steady state study requirements. Do you agree with the action taken in separating stability analysis from steady state analysis? If not, please explain.

Yes ☐ No ☐
Comment:

Q32. The SDT has added requirements for plant stability studies and has drawn a distinction in these studies from System stability studies. Do you agree with this approach? If not, please explain.

Yes ☐ No ☐
Comment:

[1] System adjustment can be manual or automatic

Q33. The existing TPL-004-0 standard has a requirement to consider the Loss of all generating units at a plant, but it was not clear whether this requirement should apply to stability studies. The SDT did not include this requirement in the stability table, because it is hard to envision a condition when all units would trip simultaneously within the timeframe of a stability simulation. Do you think this condition should be required in stability analysis of extreme events? If not, please explain.

Yes ☐ No ☐
Comment:

Q34. There are an increasing number of events with slow voltage recovery after faults on the Transmission System. The dynamic behavior of induction motor loads is a major factor in this phenomenon. The proposed standard therefore requires that the load model for stability studies of peak Load conditions include the dynamic effects of induction motors. Do you agree with this requirement? If not, please explain?

Yes ☐ No ☐
Comment:

Q35. What type of manual or automatic adjustments of generators should be allowed for single and multiple Contingencies?

Comment:

F. Generation Runback and Tripping

The SDT has discussed the automatic and manual readjustments of generators that should be permissible for single contingencies and multiple contingencies. The existing TPL-001-0 through TPL-004-0 standards through footnote (a) of Table I could include emergency ratings applicable for short durations as required to permit operating steps necessary to maintain system control. The footnote is silent about allowable generation adjustments in response to the Category B events. However, it does indicate that system adjustments are permitted to prepare for the next Contingency. These system adjustments could include manual or automatic adjustments involving generation.

The SDT has learned that many transmission owners use System Protection Systems (SPS) or Remedial Action Schemes (RAS) to trip generation for single and multiple Contingency outage events to prevent overloads, low voltage, and instability in the Interconnected Transmission network for N-1 and N-2 events. In some cases, the RAS are used to prepare for the next Contingency; but in some cases, the RAS are used to simultaneously avoid exceeding emergency ratings.

Q36. The proposed standard allows generation runback after the disturbance that causes a single Contingency (or due to a single Contingency outage) to move the Interconnected Transmission System from an emergency state (within emergency ratings) to a normal state (within normal ratings), assuming that the disturbance does not result in instability? Do you agree? If not, please explain.

Yes ☐ No ☐
Comment:

Q37. Since emergency ratings are thermal ratings, should this standard allow an automatic generation runback scheme (that is initiated immediately after the disturbance causing the single Contingency) to prevent thermal overloads (assuming that the disturbance does not result in instability)? If yes, what are the conditions that must be met in order to allow such a runback scheme to meet the System performance criteria for single Contingencies? Please explain the reason for your answer.

Yes ☐ No ☐
Comment:

The standard drafting team has considered that RAS or SPS may be allowable under certain situations for single Contingencies, but proposes that their use should be limited.

Q38. Do you agree that RAS or SPS may be allowed for single Contingencies? If not, please explain.

Yes ☐ No ☐
Comment:

Q39. Please describe the limitations that you believe should be placed on the use of RAS or SPS for single Contingency events.

Comment:

Q40. When RAS or SPS are allowed, what conditions should be met when these systems are used in system adjustments to meet performance requirements?

Comment:

G. General Questions

Q41. If you are aware of any regional variances that would be required as a result of these standards, please identify them here.

Yes ☐ No ☐
Comment:

Q42. If you are aware of any conflicts between the proposed standards and any regulatory function, rule order, tariff, rate schedule, legislative requirement or agreement, please identify them here.

Yes ☐ No ☐
Comment:

Q43. Do you have any other questions or concerns with the proposed standard that have not been addressed? If yes, please explain.

Yes ☐ No ☐
Comment:

NERC
NORTH AMERICAN ELECTRIC RELIABILITY CORPORATION

Comment Form for First Draft of TPL-001-1 — Transmission System Planning Performance Requirements

Please use this form to submit comments on the proposed draft of TPL-001-1. Comments must be submitted by **Friday, October 26, 2007**. You may submit the completed form by e-mail to sarcomm@nerc.net with the words "TPL-001 Draft 1" in the subject line. If you have questions please contact Ed Dobrowolski at ed.dobrowolksi@nerc.net or by telephone at 609-947-3673.

Individual Commenter Information **(Complete this page for comments from one organization or individual.)**		
Name:	William J. Smith	
Organization:	Allegheny Power	
Telephone:	(724) 838-6552	
E-mail:	wsmith1@alleghenypower.com	
NERC Region (check all Regions in which your company operates)		**Registered Ballot Body Segment (check all industry segments in which your company is registered)**
☐ **ERCOT**	☒	1 — Transmission Owners
☐ **FRCC**	☐	2 — RTOs and ISOs
☐ **MRO**	☐	3 — Load-serving Entities
☐ **NPCC**	☐	4 — Transmission-dependent Utilities
☒ **RFC**	☐	5 — Electric Generators
☐ **SERC**	☐	6 — Electricity Brokers, Aggregators, and Marketers
☐ **SPP**	☐	7 — Large Electricity End Users
☐ **WECC**	☐	8 — Small Electricity End Users
☐ **NA – Not Applicable**	☐	9 — Federal, State, Provincial Regulatory or other Government Entities
	☐	10 — Regional Reliability Organizations and Regional Entities

Group Comments (Complete this page if comments are from a group.)

Group Name:

Lead Contact:

Contact Organization:

Contact Segment:

Contact Telephone:

Contact E-mail:

Additional Member Name	Additional Member Organization	Region*	Segment*

*If more than one Region or Segment applies, please list all that apply. Regional acronyms and segment numbers are shown on prior page.

Background

The purpose of this standard is to establish Transmission System planning performance requirements within the planning horizon to develop a Bulk Electric System that will operate reliably over a broad spectrum of System conditions and following a wide range of probable Contingencies. This standard will replace TPL-001-0, TPL-002-0, TPL-003-0, and TPL-004-0. The standard drafting team has not yet addressed TPL-005-0 and TPL-006-0, but will address these two standards during the next phase of the drafting process.

The major objectives of the standard drafting team are to:

1) Ensure the standard is complete and the requirements are set at an appropriate level to ensure reliability (Not Least Common Denominator)
2) Ensure that the standard is enforceable by having clearly defined requirements with unambiguous language
3) Address the issues raised by FERC Order 693, 890, and other applicable orders
4) Address the issues raised in the original Standards Authorization Request (SAR) and the Supplemental SAR.

The standard drafting team did not attempt to edit the existing standards but rather chose to write one standard that addresses all aspects of transmission planning in the existing TPL-001-0, TPL-002-0, TPL-003-0, and TPL-004-0. The standard drafting team organized the new standard in the following sections:

R1 – Modeling requirements
R2 – Assessment and Corrective Plan requirements
R3 – Steady State Analysis requirements
R4 – Stability Analysis requirements
R5 – Coordination requirements

The standard drafting team determined that the requirements and analysis for Steady State are different from those for stability. As such, the standard drafting team separated the analysis requirements and created two performance requirement tables.

The standard drafting team recognizes that this draft standard is a starting point for industry input into the standard and that there is still a lot of work required to complete the process. The standard drafting team has made many changes to clarify requirements, add requirements, and make some of the performance requirements stricter. The standard drafting team has not addressed Measures, Risk Factors, Violation Severity Factors, or Time Horizons at this time. These will be addressed when the standard drafting team has better defined the requirements of the standard.

For questions where you agree with the standard drafting team, please state that you agree and if available, please provide supporting documentation. If you disagree with the standard drafting team, please explain why you disagree and provide data to support your position, such as outage data or analysis. If you believe that we have made a performance requirement too strict please provide supporting documentation. If applicable, please include the approximate cost in man-hours for additional studies and/or cost in $Millions for additional transmission investment to meet the new requirements or the stricter requirements. If you believe that the standard should be stricter, please provide the rationale along with any supporting data, including existing practices, cost estimates or additional analysis.

To improve the standard, the standard drafting team would appreciate responses to as many of these questions as you can answer.

A. New Definitions

Many of the concerns about the existing TPL standards come from the fact that a number of generally understood concepts are embedded in undefined terms, tables, and footnotes. To clarify some of these concerns, the standard drafting team is proposing new definitions. Please indicate whether you agree with the following proposed definitions and provide proposed changes to the definitions if you disagree:

Definition	**Agree or Disagree**
Q1. **Base Case**: Computer representation of the projected initial or starting Transmission System conditions for a specific point in time. Each base case reflects the forecasted Load at each bus (or node) on the interconnected Transmission System, the transmission facilities which deliver the generation and reactive resources to the connected Load, and the generation dispatch including firm transaction obligations assumed to supply the connected Load. The models also reflect facility ratings in accordance with FAC-008 & FAC-009.	☒Agree. ☐Do not agree.
Q1. **Comment:**	
Q2. **Consequential Load Loss:** Load that is no longer served because it is directly connected to an element(s) that is removed from service due to fault clearing action or mis-operation.	☒Agree. ☐Do not agree.
Q2. **Comment:**	
Q3. **Extreme Events:** Events which are more severe than Planning Events and have a low probability of occurrence.	☒Agree. ☐Do not agree.
Q3. **Comment:**	
Q4. **Long-Term Transmission Planning Horizon:** Transmission planning period that covers years six through ten or beyond.	☒Agree. ☐Do not agree.
Q4. **Comment:**	
Q5. **Near-Term Transmission Planning Horizon:** Transmission planning period that covers years One through five.	☒Agree. ☐Do not agree.
Q5. **Comment:**	
Q6. **Non-Consequential Load Loss:** Load loss other than Consequential Load Loss. For example, Load loss that occurs through manual (operator initiated) or automatic operations such as under-voltage Load shedding, under-frequency Load shedding, or Special Protection Systems.	☒Agree. ☐Do not agree.
Q6. **Comment:**	
Q7. **Planning Assessment:** Documented evaluation of future Bulk Electric System needs by the use of performance studies that cover a range of assumptions regarding system conditions, time	☒Agree. ☐Do not

frames, future plans including capital reinforcements and operating procedures and other factors, such as asset conditions and age.	agree.
Q7. **Comment:**	
Q8. **Planning Events:** Events which require Transmission system performance requirements to be met.	☒Agree. ☐Do not agree.
Q8. **Comment:**	
Q9. **Plant Stability Study:** Study of an individual plant's Stability for various Contingencies in the vicinity of the plant; concerned with the effect on the System of the generating units' loss of synchronism and the damping of the generating units' power oscillations.	☒Agree. ☐Do not agree.
Q9. **Comment:**	
Q10. **System Stability Study:** Study of the System or portions of the System to ensure that angular Stability is maintained, inter-area power oscillations are damped, and voltages during the dynamic simulation stay within acceptable performance limits.	☒Agree. ☐Do not agree.
Q10. **Comment:**	
Q11. **Year One:** The first year that a Transmission Planner is responsible for studying. This is further defined as the planning window that begins the next calendar year from the time the Transmission Planner submits their annual studies. Analysis conducted for time horizons within the calendar year from the study publication are assumed to be conducted under the auspices of Operations Planning.	☒Agree. ☐Do not agree.
Q11. **Comment:**	

B. Sensitivity Studies

The draft planning standard includes the requirement, as specified in FERC Order 693, that planning decisions be based on a portfolio of analyses. In section 12.a.ii "Sensitivity studies and critical system conditions" FERC provided direction to consider a full range of variables considered to be significant that need to be assessed and documentation provided that explains the rationale for the selection of variables assessed.

In addition to the firm obligation scenario, the portfolio of analyses should be supplemented to include information from sensitivity analysis. The sensitivity analysis should be developed using additional cases that simulate reasonably stressed system conditions. The standard drafting team has included several parameters that can be varied to create the requisite sensitivity case(s). The draft standards specify that the sensitivities reflect one or more of the following conditions and that documentation be provided explaining the rationale for selecting the sensitivity(ies) employed. The parameters that should be varied include:

- Higher or lower Load forecasts from the Base Case with variability of Load/demand and Load power factors due to season, weather, or time of day.
- Modification of expected transfers.
- Unavailability of long lead time facilities.
- Variability and outages of Reactive Resources.
- Generation additions, retirements, or other dispatch scenarios.

- Decreased effectiveness of controllable Loads and Demand Side Management.
- Modification of planned Transmission outages

To help focus industry discussion, please respond to the questions below:

Q12. Should the standard provide more specific direction regarding the number of sensitivity cases that need to be developed?

Yes ☐ No ☒
Comment: Scenario analysis should be based on the unique aspect of the particular Transmission zone. Transmission Planners should work to select the best scenarios related to the specific system and adequately describe the selection process..

Q13. Should the standard specify the required changes, such as changes in expected transfers, load forecasts, generation patterns, etc., from the study case to be considered a "reasonably stressed" case?

Yes ☐ No ☒
Comment: Providing examples would be helpful but specifically stating the required thresholds are transmission system dependent. Providing some methodologies to follow may be prudent such as forecast levels like 90/10; 80/20; or 50/50.

Q14. The SDT proposes to require the use of sensitivity studies for Near-Term Transmission System Planning Horizon stability analysis. Do you concur with the use of sensitivity analysis in dynamic studies?

Yes ☒ No ☐
Comment:

Q15. The draft TPL standard does not require the use of sensitivity studies for the Long-Term Transmission System Planning Horizon (year six and beyond) studies. Do you concur with this approach or should there be some level of sensitivity analysis required for the long-term period?

Yes ☒ No ☐
Comment: No sensistivity needed for long term assessment.

C. Corrective Action Plans

Requirement R2.7 of the standard states that when analysis shows that the performance requirements in Table 1 and Table 2 are not fully met, a Corrective Action Plan that utilizes all or some of the Transmission System enhancements, generation additions, DSM, new technologies and Operating Procedures shall be included in the Planning Assessment. This Corrective Action Plan should ensure that upon its implementation the identified system deficiencies will be corrected so that the performance requirements in Table 1 and Table 2 will be met. Furthermore, studies included in the Planning Assessment should demonstrate that this is indeed the case.

Q16. Requirement R2.7.1: Such Corrective Action Plans shall "Identify System deficiencies and the associated actions needed to achieve required System performance including Transmission and generation improvements, DSM, new technologies, or Operating Procedures including the duration of Interim Operating Procedures". System deficiencies may be corrected using an integrated plan, i.e., an optimal mix of Transmission, generation, DSM and Operating Procedures. Should DSM be considered in

conjunction with other measures in developing Corrective Action Plans? If yes, please comment on how the impact of DSM should be included.

Yes ☒ No ☐
Comment: It should be included if there are specific mandated or approved DSM programs in place during the study period.

Q17. Requirement R2.7.2: Such Corrective Action Plans shall "Be added to study cases and the cases re-tested to show that the System with planned additions meets the performance requirements in the tables". Should new studies, including the facilities comprising the Corrective Action Plan, be performed to assess System normal performance and Contingency response for conditions that previously resulted in the System deficiencies (without the planned additions) and also demonstrate that the changes would not result in inadvertent negative impacts on the System. If you "agree", please comment on how a study area should be determined.

Yes ☒ No ☐
Comment: Study area should be at least two buses beyond deficiency and plan elements.

Q18. Requirement R2.7.3: The standard calls for a differentiation between committed and proposed projects. Do you agree that they should be treated separately? If not, please state why not.

Yes ☒ No ☐
Comment: There needs to be a clear definition developed for committed and proposed projects and those definitions need to be included in the definition section of the standard.

Q19. Requirement R2.7.4: For such Corrective Action Plans "Committed projects shall not be removed without documentation to show that the revised plan meets the performance requirements". Do you agree or disagree with this requirement? If you disagree, please explain why.

Yes ☒ No ☐
Comment:

D. Performance Requirements

The proposed revised planning standard (TPL-001-1) incorporates a number of changes in requirements as compared to the current planning standards (TPL-001-0 through TPL-004-0), which it is expected to replace. Among other things these changes are intended to clarify the standard, address issues described by FERC, and, in particular, to "raise the bar." Strengthening the planning standards in selected areas is necessary to maintain a reliable Bulk Electric System that is up to the challenges of the 21st Century. In proposing the requirements in this draft, the standard drafting team attempted to balance the value of increased reliability against any potential increase in work and costs to meet the new proposed standard.

The standard drafting team is seeking input from the industry to determine whether a proper balance has been achieved. The areas where material changes are proposed in this draft are enumerated below, and questions are posed by the standard drafting team to obtain industry comment. In formulating your responses, please keep in mind that material changes in the final standard will be accompanied by a transition plan to provide for an orderly implementation of the final standard.

The performance requirements relative to Non-Consequential Loss of Load for the following events enumerated in the two tables can be considered more stringent than the existing TPL standards. Furthermore, the proposed standard is based on an assumption that performance requirements for EHV facilities should be more stringent than for lower voltage facilities.

Do you agree that Non-Consequential Loss of Load should not be permitted for the following events? If you disagree, please provide a reason for your disagreement.

Event	Agree or Disagree	Comment
Q20. P2-1: Loss of bus section (SLG for stability) above 300 kV	☒Agree. ☐Do not agree.	
Q21. P5-1: For facilities above 300 kV, loss of a Transmission circuit followed by System adjustment[1] followed by loss of another Transmission circuit	☒Agree. ☐Do not agree.	
Q22. P5-2: For facilities above 300 kV, loss of a Transmission circuit followed by System adjustment followed by loss of a transformer with low side voltage rating above 300 kV	☒Agree. ☐Do not agree.	
Q23. P5-3: For facilities above 300 kV, loss of a transformer with low side voltage rating above 300 kV followed by System adjustment followed by loss of another transformer	☒Agree. ☐Do not agree.	

[1]System adjustment can be manual or automatic.

The proposed standard is based on an assumption that performance requirements for non-bus tie EHV breakers should be distinguished from other breakers. Do you agree that Non-Consequential Loss of Load should not be permitted for this event?

Q24. Loss of non-bus tie breaker (above 300 kV) due to internal fault

Yes ☒ No ☐
Comment:

The proposed standard is based on an assumption that performance requirements for non-bus tie EHV breakers should be distinguished from other breakers and that performance

requirements for EHV facilities should be more stringent than for lower voltage facilities. Do you agree that Non-Consequential Loss of Load should not be permitted for this event?

Q25. P3-1: Loss of (SLG for stability) either a generator, a Transmission circuit, a transformer, or a bus and a stuck non-bus tie breaker (above 300 kV)

Yes ☒ No ☐
Comment:

The proposed standard is based on an assumption that the following events are relatively high probability events and, therefore, Non-Consequential Loss of Load should not be permitted. Do you agree? If you disagree, please provide a reason for your disagreement.

Event	Agree or Disagree	Comment
Q26. P4-1: Loss of a Generator followed by System adjustment[1] followed by loss of another Generator	☒Agree. ☐Do not agree.	
Q27. P4-2: Loss of a generator followed by a System adjustment followed by the loss of a monopolar DC line	☒Agree. ☐Do not agree.	
Q28. P4-3: Loss of a generator followed by System adjustment followed by loss of a Transmission circuit	☒Agree. ☐Do not agree.	
Q29. P4-4: Loss of a generator followed by System adjustment followed by loss of a transformer	☒Agree. ☐Do not agree.	

The performance requirement for the following event may be considered less stringent than the existing TPL Standards — P2-3: Loss of a single pole of a DC line. Interruption of firm transactions (without Loss of firm Load) if the transaction is dependent on the faulted DC line is now allowed for this initiating event/Contingency.

Q30. Do you agree that interruption of any firm transfers that are dependent on the outaged DC line that is taken out of service should be permitted?

Yes ☒ No ☐
Comment:

E. Stability

Q31. The proposed standard is based on an assumption that steady state analysis and stability analysis are different from each other and that therefore, two tables of Contingencies and performance requirements were needed. It is also based on an

[1] System adjustment can be manual or automatic

assumption that stability study requirements should be clearly separated from the steady state study requirements. Do you agree with the action taken in separating stability analysis from steady state analysis? If not, please explain.

Yes ☒ No ☐
Comment:

Q32. The SDT has added requirements for plant stability studies and has drawn a distinction in these studies from System stability studies. Do you agree with this approach? If not, please explain.

Yes ☒ No ☐
Comment:

Q33. The existing TPL-004-0 standard has a requirement to consider the Loss of all generating units at a plant, but it was not clear whether this requirement should apply to stability studies. The SDT did not include this requirement in the stability table, because it is hard to envision a condition when all units would trip simultaneously within the timeframe of a stability simulation. Do you think this condition should be required in stability analysis of extreme events? If not, please explain.

Yes ☒ No ☐
Comment:

Q34. There are an increasing number of events with slow voltage recovery after faults on the Transmission System. The dynamic behavior of induction motor loads is a major factor in this phenomenon. The proposed standard therefore requires that the load model for stability studies of peak Load conditions include the dynamic effects of induction motors. Do you agree with this requirement? If not, please explain?

Yes ☒ No ☐
Comment:

Q35. What type of manual or automatic adjustments of generators should be allowed for single and multiple Contingencies?

Comment: Should not be limited

F. Generation Runback and Tripping

The SDT has discussed the automatic and manual readjustments of generators that should be permissible for single contingencies and multiple contingencies. The existing TPL-001-0 through TPL-004-0 standards through footnote (a) of Table I could include emergency ratings applicable for short durations as required to permit operating steps necessary to maintain system control. The footnote is silent about allowable generation adjustments in response to the Category B events. However, it does indicate that system adjustments are permitted to prepare for the next Contingency. These system adjustments could include manual or automatic adjustments involving generation.

The SDT has learned that many transmission owners use System Protection Systems (SPS) or Remedial Action Schemes (RAS) to trip generation for single and multiple Contingency

outage events to prevent overloads, low voltage, and instability in the Interconnected Transmission network for N-1 and N-2 events. In some cases, the RAS are used to prepare for the next Contingency; but in some cases, the RAS are used to simultaneously avoid exceeding emergency ratings.

Q36. The proposed standard allows generation runback after the disturbance that causes a single Contingency (or due to a single Contingency outage) to move the Interconnected Transmission System from an emergency state (within emergency ratings) to a normal state (within normal ratings), assuming that the disturbance does not result in instability? Do you agree? If not, please explain.

Yes ☒ No ☐
Comment:

Q37. Since emergency ratings are thermal ratings, should this standard allow an automatic generation runback scheme (that is initiated immediately after the disturbance causing the single Contingency) to prevent thermal overloads (assuming that the disturbance does not result in instability)? If yes, what are the conditions that must be met in order to allow such a runback scheme to meet the System performance criteria for single Contingencies? Please explain the reason for your answer.

Yes ☒ No ☐
Comment: This could be permitted provided the run back will allow for the ability to prepare for the next operational contingency and not affect load.

The standard drafting team has considered that RAS or SPS may be allowable under certain situations for single Contingencies, but proposes that their use should be limited.

Q38. Do you agree that RAS or SPS may be allowed for single Contingencies? If not, please explain.

Yes ☒ No ☐
Comment:

Q39. Please describe the limitations that you believe should be placed on the use of RAS or SPS for single Contingency events.

Comment: The use of these system should be limited and not used as a preferred solution and also be approved by a stringent review process through the RTO & RE.

Q40. When RAS or SPS are allowed, what conditions should be met when these systems are used in system adjustments to meet performance requirements?

Comment: The system should remain stable, reliable, allow for operational preparation for the next contingency and failure of the RAS/SPS should not lead to a cascading event.

G. General Questions

Q41. If you are aware of any regional variances that would be required as a result of these standards, please identify them here.

Yes ☐ No ☒
Comment:

Q42. If you are aware of any conflicts between the proposed standards and any regulatory function, rule order, tariff, rate schedule, legislative requirement or agreement, please identify them here.

Yes ☐ No ☒
Comment:

Q43. Do you have any other questions or concerns with the proposed standard that have not been addressed? If yes, please explain.

Yes ☒ No ☒
Comment: General Comments:

1). We believe the 300kV cutoff should not be used. It should be based on the definition of a Backbone Facility. The 300kV and above standards should only apply to backbone facilities that are used to provide overall energy transfer and ties to other systems and not facilities that provide load serving purposes. Backbone facilites should be specifically defined and accepted as Backbone facilities through RTO and RE review and acceptance.

2). Planning Scenarios should be forced to include a market based scenario under the Planning Authority obligation which should include long range market projections for generation dispatch, significant energy price changes due to environmental issues or fuels, and market impact of large transmission reinforcements.

3). It should be noted in the process that additional planning resource additions (maybe as much as 30%) will be required to met these new study requirements since they are much more expansive than the existing requirements.

4). These standards could require substantial (millions) upgrades to the system to meet the proposed changes. These are primarily due to the 300kV and above standard revisions and the non-consequential load drop criteria adjustments.

NERC
NORTH AMERICAN ELECTRIC RELIABILITY CORPORATION

Comment Form for First Draft of TPL-001-1 — Transmission System Planning Performance Requirements

Please use this form to submit comments on the proposed draft of TPL-001-1. Comments must be submitted by **Friday, October 26, 2007**. You may submit the completed form by e-mail to sarcomm@nerc.net with the words "TPL-001 Draft 1" in the subject line. If you have questions please contact Ed Dobrowolski at ed.dobrowolksi@nerc.net or by telephone at 609-947-3673.

Individual Commenter Information **(Complete this page for comments from one organization or individual.)**		
Name:	John Sullivan	
Organization:	Ameren	
Telephone:	(314) 554-3833	
E-mail:	JSullivan@ameren.com	
NERC Region (check all Regions in which your company operates)		**Registered Ballot Body Segment (check all industry segments in which your company is registered)**
☐ **ERCOT**	☒	1 — Transmission Owners
☐ **FRCC**	☐	2 — RTOs and ISOs
☐ **MRO**	☐	3 — Load-serving Entities
☐ **NPCC**	☐	4 — Transmission-dependent Utilities
☐ **RFC**	☐	5 — Electric Generators
☐ **SERC**	☐	6 — Electricity Brokers, Aggregators, and Marketers
☐ **SPP**	☐	7 — Large Electricity End Users
☐ **WECC**	☐	8 — Small Electricity End Users
☐ **NA – Not Applicable**	☐	9 — Federal, State, Provincial Regulatory or other Government Entities
	☐	10 — Regional Reliability Organizations and Regional Entities

Group Comments (Complete this page if comments are from a group.)

Group Name:

Lead Contact:

Contact Organization:

Contact Segment:

Contact Telephone:

Contact E-mail:

Additional Member Name	Additional Member Organization	Region*	Segment*

*If more than one Region or Segment applies, please list all that apply. Regional acronyms and segment numbers are shown on prior page.

Background

The purpose of this standard is to establish Transmission System planning performance requirements within the planning horizon to develop a Bulk Electric System that will operate reliably over a broad spectrum of System conditions and following a wide range of probable Contingencies. This standard will replace TPL-001-0, TPL-002-0, TPL-003-0, and TPL-004-0. The standard drafting team has not yet addressed TPL-005-0 and TPL-006-0, but will address these two standards during the next phase of the drafting process.

The major objectives of the standard drafting team are to:

1) Ensure the standard is complete and the requirements are set at an appropriate level to ensure reliability (Not Least Common Denominator)
2) Ensure that the standard is enforceable by having clearly defined requirements with unambiguous language
3) Address the issues raised by FERC Order 693, 890, and other applicable orders
4) Address the issues raised in the original Standards Authorization Request (SAR) and the Supplemental SAR.

The standard drafting team did not attempt to edit the existing standards but rather chose to write one standard that addresses all aspects of transmission planning in the existing TPL-001-0, TPL-002-0, TPL-003-0, and TPL-004-0. The standard drafting team organized the new standard in the following sections:

R1 – Modeling requirements
R2 – Assessment and Corrective Plan requirements
R3 – Steady State Analysis requirements
R4 – Stability Analysis requirements
R5 – Coordination requirements

The standard drafting team determined that the requirements and analysis for Steady State are different from those for stability. As such, the standard drafting team separated the analysis requirements and created two performance requirement tables.

The standard drafting team recognizes that this draft standard is a starting point for industry input into the standard and that there is still a lot of work required to complete the process. The standard drafting team has made many changes to clarify requirements, add requirements, and make some of the performance requirements stricter. The standard drafting team has not addressed Measures, Risk Factors, Violation Severity Factors, or Time Horizons at this time. These will be addressed when the standard drafting team has better defined the requirements of the standard.

For questions where you agree with the standard drafting team, please state that you agree and if available, please provide supporting documentation. If you disagree with the standard drafting team, please explain why you disagree and provide data to support your position, such as outage data or analysis. If you believe that we have made a performance requirement too strict please provide supporting documentation. If applicable, please include the approximate cost in man-hours for additional studies and/or cost in $Millions for additional transmission investment to meet the new requirements or the stricter requirements. If you believe that the standard should be stricter, please provide the rationale along with any supporting data, including existing practices, cost estimates or additional analysis.

To improve the standard, the standard drafting team would appreciate responses to as many of these questions as you can answer.

A. New Definitions

Many of the concerns about the existing TPL standards come from the fact that a number of generally understood concepts are embedded in undefined terms, tables, and footnotes. To clarify some of these concerns, the standard drafting team is proposing new definitions. Please indicate whether you agree with the following proposed definitions and provide proposed changes to the definitions if you disagree:

Definition	**Agree or Disagree**
Q1. **Base Case**: Computer representation of the projected initial or starting Transmission System conditions for a specific point in time. Each base case reflects the forecasted Load at each bus (or node) on the interconnected Transmission System, the transmission facilities which deliver the generation and reactive resources to the connected Load, and the generation dispatch including firm transaction obligations assumed to supply the connected Load. The models also reflect facility ratings in accordance with FAC-008 & FAC-009.	☒Agree. ☐Do not agree.
Q1. **Comment: Yes, we agree that the "base case" is a power flow model and is the starting point of the analysis. What we are concerned with are the assumptions that go into the development of the "base case". The season, time of day, load level, generation dispatch assumptions, facilities in service, and interchange assumptions (all based on best available data) are just a small subset of the issues that need to be addressed in the development of the base case. We have concerns that so-called "stressed cases" proposed in the standard for compliance testing may in reality be contingency cases, from which additional compliance performance testing would be required.**	
Q2. **Consequential Load Loss:** Load that is no longer served because it is directly connected to an element(s) that is removed from service due to fault clearing action or mis-operation.	☒Agree. ☐Do not agree.
Q2. **Comment: A better name for this would be "direct load loss". The definition should include load served by the faulted element but not directly connected to the faulted element.**	
Q3. **Extreme Events:** Events which are more severe than Planning Events and have a low probability of occurrence.	☐Agree. ☒Do not agree.
Q3. **Comment: Most planning events have a low probability of occurrence. It appears that the SDT is trying to make a distinction that these extreme events would have a lower probability of occurrence than planning events. Consideration should be given to adding the performance requirements with the definition.**	
Q4. **Long-Term Transmission Planning Horizon:** Transmission planning period that covers years six through ten or beyond.	☒Agree. ☐Do not agree.

Q4. **Comment:**	
Q5. **Near-Term Transmission Planning Horizon:** Transmission planning period that covers years One through five.	☒Agree. ☐Do not agree.
Q5. **Comment: It is suggested that another definition be added for "operations planning horizon".**	
Q6. **Non-Consequential Load Loss:** Load loss other than Consequential Load Loss. For example, Load loss that occurs through manual (operator initiated) or automatic operations such as under-voltage Load shedding, under-frequency Load shedding, or Special Protection Systems.	☒Agree. ☐Do not agree.
Q6. **Comment: A better name for this would be "indirect load loss".**	
Q7. **Planning Assessment:** Documented evaluation of future Bulk Electric System needs by the use of performance studies that cover a range of assumptions regarding system conditions, time frames, future plans including capital reinforcements and operating procedures and other factors, such as asset conditions and age.	☐Agree. ☒Do not agree.
Q7. **Comment: We do not agree that the planning assessment should include asset conditions and age. The age of equipment, if it is well maintained, has little impact on reliability. If NERC wants a standard to deal with age and maintenance of equipment, then it should develop a separate standard for asset management and not overburden TPL-001-1 with such issues.**	
Q8. **Planning Events:** Events which require Transmission system performance requirements to be met.	☐Agree. ☒Do not agree.
Q8. **Comment: Consideration should be given to adding the performance requirements in the definition.**	
Q9. **Plant Stability Study:** Study of an individual plant's Stability for various Contingencies in the vicinity of the plant; concerned with the effect on the System of the generating units' loss of synchronism and the damping of the generating units' power oscillations.	☐Agree. ☒Do not agree.
Q9. **Comment: It seems that the SDT is trying to divide the stability issues between plant (local) and system. As the system load representation and its damping characteristics affect both plant and system stability, it is difficult to separate plant versus system stability studies. The focus of the studies may be only slightly different, depending on the location, type, and duration of the fault conditions assumed.**	
Q10. **System Stability Study:** Study of the System or portions of the System to ensure that angular Stability is maintained, inter-area power oscillations are damped, and voltages during the dynamic simulation stay within acceptable performance limits.	☐Agree. ☒Do not agree.
Q10. **Comment: See comments above in the response to Q9. Specific inclusion of voltage (load) stability seems to be missing from the definition. Also, angular stability is mentioned only as part of the definition for System Stability Study and not Plant Stability Study. It would seem that this item would be part of both types of study.**	
Q11. **Year One:** The first year that a Transmission Planner is	☒Agree.

responsible for studying. This is further defined as the planning window that begins the next calendar year from the time the Transmission Planner submits their annual studies. Analysis conducted for time horizons within the calendar year from the study publication are assumed to be conducted under the auspices of Operations Planning.	☐Do not agree.
Q11. **Comment:**	

B. Sensitivity Studies

The draft planning standard includes the requirement, as specified in FERC Order 693, that planning decisions be based on a portfolio of analyses. In section 12.a.ii "Sensitivity studies and critical system conditions" FERC provided direction to consider a full range of variables considered to be significant that need to be assessed and documentation provided that explains the rationale for the selection of variables assessed.

In addition to the firm obligation scenario, the portfolio of analyses should be supplemented to include information from sensitivity analysis. The sensitivity analysis should be developed using additional cases that simulate reasonably stressed system conditions. The standard drafting team has included several parameters that can be varied to create the requisite sensitivity case(s). The draft standards specify that the sensitivities reflect one or more of the following conditions and that documentation be provided explaining the rationale for selecting the sensitivity(ies) employed. The parameters that should be varied include:

- Higher or lower Load forecasts from the Base Case with variability of Load/demand and Load power factors due to season, weather, or time of day.
- Modification of expected transfers.
- Unavailability of long lead time facilities.
- Variability and outages of Reactive Resources.
- Generation additions, retirements, or other dispatch scenarios.
- Decreased effectiveness of controllable Loads and Demand Side Management.
- Modification of planned Transmission outages

To help focus industry discussion, please respond to the questions below:

Q12. Should the standard provide more specific direction regarding the number of sensitivity cases that need to be developed?

Yes ☐ No ☒

Comment: For the purposes of compliance, we believe that the existing requirement R1 in Standard TPL-001-0 adequately defines the sensitivities that need to be covered in a valid assessment, and no additional clarification is necessary. Deterministic tests of a limited number of system conditions require the application of engineering judgement to evaluate the complex multi-variable problems involved in planning analyses. We all agree that performing contingency analyses on a single snapshot of expected system conditions is not adequate to plan the transmission system, but planning is not a cookbook exercise, and neither is an engineering assessment of planning activities demonstrating required system performance. Further, we believe that a test of incremental transfer capability determined from some of the sensitivity cases needs to be added to the standard and would go a long way to address how much margin exists in the transmission system to handle the unknown or previously undefined variables.

Q13. Should the standard specify the required changes, such as changes in expected transfers, load forecasts, generation patterns, etc., from the study case to be considered a "reasonably stressed" case?

Yes ☐ No ☒
Comment: There is no need to build a multitude of sensitivity cases to assess the reliability of the system. The sensitivity issues should be handled on an individual system basis by the local transmission planners as applicable to the study system. Conditions that are considered as "stressed" for one area may require all facilities to be in service in another area. Powerflow cases utilizing a number of the items listed under R2.1.3 or R2.4.3 could be produced for in-house study work, but such work should not be required as part of standards compliance. The standard should not be dictating what types of sensitivities should be investigated or considered for all parts of the transmission system.

Q14. The SDT proposes to require the use of sensitivity studies for Near-Term Transmission System Planning Horizon stability analysis. Do you concur with the use of sensitivity analysis in dynamic studies?

Yes ☐ No ☒
Comment: The biggest problem with performing stability analysis is getting the stability cases to match up with the powerflow cases, and only a limited number of stability cases are developed each year. Further, for those systems that are planned in excess of the NERC Standards regarding stability (3-L-G or 2-L-G vs. 1-L-G as in the Standard), there are no benefits to performing additional sensitivity studies to demonstrate compliance with this standard.

Q15. The draft TPL standard does not require the use of sensitivity studies for the Long-Term Transmission System Planning Horizon (year six and beyond) studies. Do you concur with this approach or should there be some level of sensitivity analysis required for the long-term period?

Yes ☒ No ☐
Comment: There are more unknowns in the longer-term studies than in the near-term studies, which would indicate that more sensitivity studies would need to be performed and not less. However, it is more reasonable to suggest that if near-term sensitivity studies show a problem in a particular part of the system, then similar sensitivity studies need to be performed in the longer-term analyses.

C. Corrective Action Plans

Requirement R2.7 of the standard states that when analysis shows that the performance requirements in Table 1 and Table 2 are not fully met, a Corrective Action Plan that utilizes all or some of the Transmission System enhancements, generation additions, DSM, new technologies and Operating Procedures shall be included in the Planning Assessment. This Corrective Action Plan should ensure that upon its implementation the identified system deficiencies will be corrected so that the performance requirements in Table 1 and Table 2 will be met. Furthermore, studies included in the Planning Assessment should demonstrate that this is indeed the case.

Q16. Requirement R2.7.1: Such Corrective Action Plans shall "Identify System deficiencies and the associated actions needed to achieve required System performance including Transmission and generation improvements, DSM, new technologies, or

Operating Procedures including the duration of Interim Operating Procedures". System deficiencies may be corrected using an integrated plan, i.e., an optimal mix of Transmission, generation, DSM and Operating Procedures. Should DSM be considered in conjunction with other measures in developing Corrective Action Plans? If yes, please comment on how the impact of DSM should be included.

Yes ☒ No ☒
Comment: If DSM can be implemented in the required operating time, we have no objections to using DSM as the planned mitigation to relieve overloads or low system voltages for multiple contingency conditions, but not as a long-term solution for single contingency conditions. However, from our experience, we believe that developing enough DSM in the required time at specific locations in the system will be difficult, and that plain load-shedding would be required to supplement the DSM to achieve the desired performance.

Q17. Requirement R2.7.2: Such Corrective Action Plans shall "Be added to study cases and the cases re-tested to show that the System with planned additions meets the performance requirements in the tables". Should new studies, including the facilities comprising the Corrective Action Plan, be performed to assess System normal performance and Contingency response for conditions that previously resulted in the System deficiencies (without the planned additions) and also demonstrate that the changes would not result in inadvertent negative impacts on the System. If you "agree", please comment on how a study area should be determined.

Yes ☐ No ☒
Comment: This proposed requirement is unnecessary and a waste of time. Keep in mind this is a planning assessment and not a facilities study. Further, such a requirement implies a distrust of the transmission planners to develop valid corrective action plans to meet the requirements of the TPL standard.

For more complex system facility additions, it would be inconceivable that a Transmission Planner or Owner or Planning Coordinator would proceed without performing powerflow simulations to determine the efficacy of the system addition. But these studies would be perfromed over time considering the best available information and latest standards performance requirements.

The majority of transmission projects consist of the upgrading of terminal equipment or conductor on one or more branches. The only significant change that such upgrade work would produce in a powerflow model would be that the branch ratings would change. It is not necessary to rerun powerflow simulations for such cases, as it can be determined by inspection whether the upgrade work would be sufficient to move the facility rating above the expected normal or contingency flow.

Q18. Requirement R2.7.3: The standard calls for a differentiation between committed and proposed projects. Do you agree that they should be treated separately? If not, please state why not.

Yes ☐ No ☒
Comment: We understand that there are differences between committed and proposed projects in an RTO environment where there is cost sharing for facility upgrades. From a NERC Standards compliance perspective, however, we do not see a need to differentiate between proposed and committed projects in the corrective action plan, as

long as either properly addresses the required performance issue. We are not sure why there is a need to develop or maintain information on committed projects. This tracking is not needed to meet the existing TPL standards. Compliance requirements should be kept separate from administrative data requests. What is the perceived need to track committed projects that has not been presented here? Is this another example of distrust for transmission owners to build the proper facilities to create a more robust system?

Q19. Requirement R2.7.4: For such Corrective Action Plans "Committed projects shall not be removed without documentation to show that the revised plan meets the performance requirements". Do you agree or disagree with this requirement? If you disagree, please explain why.

Yes ☐ No ☒

Comment: As stated above, we are not sure why there is a need to develop or maintain information on committed projects. This tracking is not required in the existing TPL standards. As long as the revised corrective action plan meets the reliability performance requirements, what difference does it make if a committed project is cancelled or changed to a proposed project from a compliance perspective? We need to keep compliance requirements separate from administrative data requests or survey responses.

D. Performance Requirements

The proposed revised planning standard (TPL-001-1) incorporates a number of changes in requirements as compared to the current planning standards (TPL-001-0 through TPL-004-0), which it is expected to replace. Among other things these changes are intended to clarify the standard, address issues described by FERC, and, in particular, to "raise the bar." Strengthening the planning standards in selected areas is necessary to maintain a reliable Bulk Electric System that is up to the challenges of the 21st Century. In proposing the requirements in this draft, the standard drafting team attempted to balance the value of increased reliability against any potential increase in work and costs to meet the new proposed standard.

The standard drafting team is seeking input from the industry to determine whether a proper balance has been achieved. The areas where material changes are proposed in this draft are enumerated below, and questions are posed by the standard drafting team to obtain industry comment. In formulating your responses, please keep in mind that material changes in the final standard will be accompanied by a transition plan to provide for an orderly implementation of the final standard.

The performance requirements relative to Non-Consequential Loss of Load for the following events enumerated in the two tables can be considered more stringent than the existing TPL standards. Furthermore, the proposed standard is based on an assumption that performance requirements for EHV facilities should be more stringent than for lower voltage facilities.

Do you agree that Non-Consequential Loss of Load should not be permitted for the following events? If you disagree, please provide a reason for your disagreement.

Event	Agree or Disagree	Comment
Q20. P2-1: Loss of bus	☒Agree.	No significant material change identified.

section (SLG for stability) above 300 kV	☐Do not agree.	
Q21. P5-1: For facilities above 300 kV, loss of a Transmission circuit followed by System adjustment[1] followed by loss of another Transmission circuit	☐Agree. ☒Do not agree.	Load pockets supplied by a single EHV substation with only two supplies would not meet this proposed requirement, whereas the existing TPL-003-0 standard would allow the dropping of load for the multiple outage event. A significant material change to build new facilities would be needed to meet the new requirement.
Q22. P5-2: For facilities above 300 kV, loss of a Transmission circuit followed by System adjustment followed by loss of a transformer with low side voltage rating above 300 kV	☐Agree. ☐Do not agree.	No opinion as we do not have any transformers with the low side voltages rated above 300 kV. Transmission owners with transformers meeting this requirement should be consulted to determine if a material change would be required.
Q23. P5-3: For facilities above 300 kV, loss of a transformer with low side voltage rating above 300 kV followed by System adjustment followed by loss of another transformer	☐Agree. ☐Do not agree.	No opinion as we do not have any transformers with the low side voltages rated above 300 kV. Transmission owners with transformers meeting this requirement should be consulted to determine if a material change would be required.

[1]System adjustment can be manual or automatic.

The proposed standard is based on an assumption that performance requirements for non-bus tie EHV breakers should be distinguished from other breakers. Do you agree that Non-Consequential Loss of Load should not be permitted for this event?

Q24. Loss of non-bus tie breaker (above 300 kV) due to internal fault

Yes ☒ No ☒

Comment: This part of the proposed standard language is confusing. From our perspective, the failure of any 300 kV or above non-bus-tie circuit breaker should not result in the non-consequential loss of load. Further, EHV circuit breakers failing as a result of internal faults are extremely rare, bus-ties or not. Also, it is not clear what would be considered a non-bus tie breaker for ring bus and breaker-and-a-half bus configurations. It would seem that performance requirements for EHV bus-tie breakers (and not non-bus-tie breakers) should be distinguished from other breakers.

The proposed standard is based on an assumption that performance requirements for non-bus tie EHV breakers should be distinguished from other breakers and that performance requirements for EHV facilities should be more stringent than for lower voltage facilities. Do you agree that Non-Consequential Loss of Load should not be permitted for this event?

Q25. P3-1: Loss of (SLG for stability) either a generator, a Transmission circuit, a transformer, or a bus and a stuck non-bus tie breaker (above 300 kV)

Yes ☐ No ☒
Comment: The loss of two or more elements at any EHV substation at time of peak would likely result in loss of non-consequential load. If the intent of the proposed standard is to encourage the development of ring bus or breaker-and-a-half bus arrangements at the EHV level, we would concur where it is physically possible and makes for good engineering practice. However, we must remind the SDT that there are some existing facilities that cannot be converted practically or economically from their present straight bus configuration because of physical limitations. A significant material change, potentially several million dollars per substation, would be required to retrofit facilities, where possible. It would appear that performance requirements for EHV bus-tie breakers (and not non-bus-tie breakers) should be distinguished from other breakers.

The proposed standard is based on an assumption that the following events are relatively high probability events and, therefore, Non-Consequential Loss of Load should not be permitted. Do you agree? If you disagree, please provide a reason for your disagreement.

Event	Agree or Disagree	Comment
Q26. P4-1: Loss of a Generator followed by System adjustment[1] followed by loss of another Generator	☒Agree. ☐Do not agree.	The outage of any two generators should not result in any non-consequential loss of load.
Q27. P4-2: Loss of a generator followed by a System adjustment followed by the loss of a monopolar DC line	☒Agree. ☐Do not agree.	The outage of a generator and any other element should not result in any non-consequential loss of load.
Q28. P4-3: Loss of a generator followed by System adjustment followed by loss of a Transmission circuit	☒Agree. ☐Do not agree.	The outage of a generator and any other element should not result in any non-consequential loss of load.
Q29. P4-4: Loss of a generator followed by System adjustment followed by loss of a transformer	☒Agree. ☐Do not agree.	The outage of a generator and any other element should not result in any non-consequential loss of load.

The performance requirement for the following event may be considered less stringent than the existing TPL Standards — P2-3: Loss of a single pole of a DC line. Interruption of firm transactions (without Loss of firm Load) if the transaction is dependent on the faulted DC line is now allowed for this initiating event/Contingency.

Q30. Do you agree that interruption of any firm transfers that are dependent on the outaged DC line that is taken out of service should be permitted?

Yes ☐ No ☒

[1] System adjustment can be manual or automatic

Comment: If the system cannot withstand the outage of the single element (AC or DC) without curtailment of the transfer, then the transaction should not be considered as firm.

E. Stability

Q31. The proposed standard is based on an assumption that steady state analysis and stability analysis are different from each other and that therefore, two tables of Contingencies and performance requirements were needed. It is also based on an assumption that stability study requirements should be clearly separated from the steady state study requirements. Do you agree with the action taken in separating stability analysis from steady state analysis? If not, please explain.

Yes ☐ No ☒
Comment: We understand the need to clarify the different requirements in the steady-state vs. the stability analyses. However, for each contingency category we expect to see both the steady-state requirements and the corresponding stability requirements in the same table. We believe that it would be better to recombine the steady-state and stability tables and present the information in a landscape format.

Q32. The SDT has added requirements for plant stability studies and has drawn a distinction in these studies from System stability studies. Do you agree with this approach? If not, please explain.

Yes ☒ No ☐
Comment: We appreciate the SDT concern for performing repeated plant stability studies without any change in plant/machine characteristics. However, as the system load representation and its damping characteristics affect both plant and system stability, it is difficult to separate plant versus system stability studies. On some systems in which load and generation are tightly coupled, the focus of plant or system stability studies may differ only slightly with the location and duration of applied fault events. As such, the scope and manner of conducting System Stability study work under Requirement R2.4. for such portions of the interconnected system is not clear. Differences between Plant Stability Studies and System Stability Studies need to be made more clear.

Q33. The existing TPL-004-0 standard has a requirement to consider the Loss of all generating units at a plant, but it was not clear whether this requirement should apply to stability studies. The SDT did not include this requirement in the stability table, because it is hard to envision a condition when all units would trip simultaneously within the timeframe of a stability simulation. Do you think this condition should be required in stability analysis of extreme events? If not, please explain.

Yes ☒ No ☐
Comment: A good test of the robustness of the interconnected system is its ability to handle import plus heavy inrush conditions, such as might occur with loss of a large plant. While the probability of such random events would be very low, the possibility still exists that intentional sabotage could result in such an event.

Q34. There are an increasing number of events with slow voltage recovery after faults on the Transmission System. The dynamic behavior of induction motor loads is a major factor in this phenomenon. The proposed standard therefore requires that the load

model for stability studies of peak Load conditions include the dynamic effects of induction motors. Do you agree with this requirement? If not, please explain?

Yes ☒ No ☒
Comment: Dynamic studies of peak load conditions should include the effects of induction motors, and particularly in areas where traditional load models have indicated a problem. Unfortunately, there is a lack of data to support the amount and characteristics of the detailed induction load models in many areas. In addition to the consideration of the dynamic effects of induction motor loads, the effects of static capacitor banks installed at both distribution and transmission voltage levels would need to be considered as well. The industry would be looking to NERC for some guidance as to how this data should be developed and maintained for models in future years.

Note that meeting such a requirement would necessitate a significant increase in the dynamic data needed to represent the system. Also, maintenance of such load model data would need to be considered. Load characteristics valid for a near term model might not be valid for future years. Also, summer peak load, winter peak load, and off-peak load characteristics would differ.

Q35. What type of manual or automatic adjustments of generators should be allowed for single and multiple Contingencies?

Comment: No adjustment of firm (network resource) generation should be allowed for the long-term mitigation of a single contingency. Allowing post-contingency shifts of firm generation as a long-term mitigation of a single contingency event is short-sighted and would not produce a robust system that is required to handle more than single contingency events. Redispatch of firm generation may be required in the near-term as an interim operating guide or procedure until the limiting transmission element can be uprated or other system reinforcement is in place. Generation redispatch should also be allowed to prepare for the next single contingency. For responding to multiple contingencies, redispatch of firm generation should be allowed in the mitigation plan provided that the redispatch can be accomplished in the required operating time and the contingency overloads are not overly severe (indicating possible cascading). Firm generation should also be tripped to quickly mitigate contingencies involving multiple generation outlet transmission circuits. Non-firm (energy only) generation can be tripped or redispatched for any contingency event as needed to keep facility loadings within ratings.

F. Generation Runback and Tripping

The SDT has discussed the automatic and manual readjustments of generators that should be permissible for single contingencies and multiple contingencies. The existing TPL-001-0 through TPL-004-0 standards through footnote (a) of Table I could include emergency ratings applicable for short durations as required to permit operating steps necessary to maintain system control. The footnote is silent about allowable generation adjustments in response to the Category B events. However, it does indicate that system adjustments are permitted to prepare for the next Contingency. These system adjustments could include manual or automatic adjustments involving generation.

The SDT has learned that many transmission owners use System Protection Systems (SPS) or Remedial Action Schemes (RAS) to trip generation for single and multiple Contingency outage events to prevent overloads, low voltage, and instability in the Interconnected Transmission network for N-1 and N-2 events. In some cases, the RAS are used to prepare for the next Contingency; but in some cases, the RAS are used to simultaneously avoid exceeding emergency ratings.

Q36. The proposed standard allows generation runback after the disturbance that causes a single Contingency (or due to a single Contingency outage) to move the Interconnected Transmission System from an emergency state (within emergency ratings) to a normal state (within normal ratings), assuming that the disturbance does not result in instability? Do you agree? If not, please explain.

Yes ☐ No ☒
Comment: The runback of firm generation should only be allowed as a valid interim operating procedure until a system reinforcement would be installed to uprate or unload the limiting facility. The use of the runback scheme should not be allowed as the long-term solution to a single contingency event. As mentioned above in the response to Q35, non-firm (energy only) generation should be tripped or redispatched for any contingency event as needed to keep facility loadings within ratings.

Q37. Since emergency ratings are thermal ratings, should this standard allow an automatic generation runback scheme (that is initiated immediately after the disturbance causing the single Contingency) to prevent thermal overloads (assuming that the disturbance does not result in instability)? If yes, what are the conditions that must be met in order to allow such a runback scheme to meet the System performance criteria for single Contingencies? Please explain the reason for your answer.

Yes ☐ No ☒
Comment: No generation runbacks should be allowed as long-term solutions for single contingency conditions.

The standard drafting team has considered that RAS or SPS may be allowable under certain situations for single Contingencies, but proposes that their use should be limited.

Q38. Do you agree that RAS or SPS may be allowed for single Contingencies? If not, please explain.

Yes ☒ No ☐
Comment: Yes, but only as interim operating procedures until the limiting facilities can be uprated or unloaded. SPS or RAS should be allowed to trip non-firm (energy only) generation to keep facility loadings within ratings.

Q39. Please describe the limitations that you believe should be placed on the use of RAS or SPS for single Contingency events.

Comment: SPS and RAS should be used only as interim operating procedures to mitigate single contingency events until the limiting facilities can be uprated or unloaded. SPS and RAS should be allowed to trip non-firm (energy only) generation as needed to keep facility loadings within ratings.

Q40. When RAS or SPS are allowed, what conditions should be met when these systems are used in system adjustments to meet performance requirements?

Comment: RAS and SPS should be allowed only as an interim operating procedure to mitigate single contingency conditions or to mitigate multiple contingency events on a long-term basis. The RAS or SPS must be effective in mitigating the contingencies and can be implemented within the required operating time.

G. General Questions

Q41. If you are aware of any regional variances that would be required as a result of these standards, please identify them here.

Yes ☐ No ☒
Comment:

Q42. If you are aware of any conflicts between the proposed standards and any regulatory function, rule order, tariff, rate schedule, legislative requirement or agreement, please identify them here.

Yes ☐ No ☒
Comment: The proposed standard, as well as the existing standards, makes no distinction between firm (network resource) and non-firm (energy only) generation. The standard should clearly state that the standard does not apply to non-firm generation.

Q43. Do you have any other questions or concerns with the proposed standard that have not been addressed? If yes, please explain.

Yes ☒ No ☐
Comment: Much of the language under R1 appears to be redundant with model data requirements as listed in Reliability Standard MOD-010 and MOD-011. Such information would typically be used to produce an annual series of powerflow cases. Instead of supplying such information in a piecemeal manner to the Planning Coordinator as a separate annual effort, the Planning Coordinator should make use of the most recent set of powerflow models. This requirement, as written, could cause a needless duplication of work effort.

It is not clear what is meant by 'stressed System conditions' in Requirement R1.2. Does this mean higher than predicted load, lower than expected reactive resources, or other meaning? It is also not clear what is covered by 'load models' in the same requirement.

It is not clear how expected transfers are to be modified in Requirement R2.1.3.2. Possibilities include higher or lower in the same transfer direction, turn transfer directions around so that importers become exporters, the inclusion of non-firm transfers that can be cut, or change import/export directions. There should be some basis for the sensitivity change.

It is not clear how planned transmission outages are to be modified in Requirement R2.1.3.7. Possibilities include modification of the outage duration, or modifications involving more or less facilities. Since outages are scheduled in the operations planning horizon, based on the best information available at the time of the outage request, it is questionable whether they should not be included in standards that apply to planning in years 1-5 or year 6-10 and beyond.

Requirement R2.2.1. should be deleted. Uncertainties involved with studies looking at system conditions out to ten years in the future would preclude the need to extend a Planning Assessment beyond the ten year period. Any corrective actions needed to resolve problems found during study of long-term system conditions could be noted in the Planning Assessment without the need to extend beyond ten years.

In Requirement R2.3, the scope of the study work involving the short circuit portion of the Planning Assessment is not clear. It is not clear whether the study work should be based on three-phase faults only, three-phase and single-phase faults, or whether classical representation or more a more detailed representation should be utilized.

We assume that Requirement R2.4.3.5 would require only known generation additions, retirements, or other dispatch scenarios, and that those performing the planning scenarios would not speculate on unkown generation additions and retirements.

A market structure change in Requirement R2.6.1 would not constitute a material change in an area with an abundance of low cost base load generation that was always on before the market change and would still be on after the market change.

Under Requirement R2.6.3., Plant and System Stability analyses are considered valid until material changes in the System invalidate previous study work. Here, material changes in the system include addition of a transmission line or generator. Addition of a transmission line or generator would only have an impact on stability of generators near the new facility installation. This is not clear from the wording of the standard, which would appear to require restudy of all generators if a transmission line or generator is added anywhere on the system.

What would be the duration of interim operating procedures in Requirement R2.7?

Requirement R.2.7.1.1. states that a project initiation date should be included in the Corrective Action Plan for each project, as well as an in-service date. A project initiation date may be of use to the particular project design engineering staff, but is of little use in planning the system. Keep in mind that this is a Planning Assessment and not a data request.

The wording of Requirements R3.2 and R4.2 appear to require taking all transmission elements as contingencies, plus modeling contingencies which would remove all elements automatically via System protection equipment. Based on comments from the SDT, the inclusion of all single elements in the set of contingencies to be considered is not intended as part of these requirements. Please verify this in writing.

The wording of Requirement R3.2.1., dealing with generator minimum voltage limitations, is vague with respect to what is required. It is not clear who would determine the minimum steady-state voltage limitations for all generators, and for what conditions. Note that it may be difficult to obtain some information from IPP generating facilities.

Requirement R3.2.2. appears redundant with requirement R1.2.1 of FAC-008-1, which deals with Facility Ratings. Relay load limits are one component already considered in establishing facility ratings.

Requirement R3.3.2.1., which deals with the amount and duration of Consequential Load loss, cannot be addressed adequately. Because an outage might be caused by a

transitory event with quick restoration of the outaged facility, or be caused by extensive damage requiring lengthy repairs, there would be no single value for expected duration for any given outage event in the planning horizon. Therefore, this requirement should be removed from TPL-001-1.

Requirement R3.3.2.2, describing permissible actions following single contingency events to meet performance requrirements, should be removed from TPL-001-1. System adjustments following single contingencies should not be permitted to meet system performance requirements. For similar reasons, Requirement R3.5, describing generator adjustments permissible as responses to single and multiple contingencies, should be modified to remove the reference to single contingencies.

What additional single contingencies would there be that should be considered in Requirement R3.3.3?

Consequential generation loss needs to be considered in Requirement R3.6 for those generators directly connected (through transformation) to transmission lines.

Interconnection requirements establish that generators must have low-voltage ride through capability. It is not clear how is the transmission planner performing the studies would be able to consider this capability in Requirement R4.3.

In Requirement R6, there is no longer a requirement to send the Planning Assessment and Corrective Plan to the regional entities, but to the Reliability Coordinators instead. Why has this change been made? RTOs should not be involved in assessing compliance.

In reference to Table 1, bullet point #3, it is not clear how voltage instability, cascading outages, or uncontrolled islanding would be determined under steady state conditions.

Under Table 1, P1, cutting of firm transfers is not permitted as a response to a single contingency. However, it is not clear whether, in preparation for a subsequent contingency, reduction in firm transfers would be permitted. Reduction in firm transfers should be permissible in this instance.

In Table 1, for contingency categories P5 and P8, how would loss of a transmission circuit above 300 kV followed by loss of a transmission circuit below 300 kV be handled?

Under the Extreme Event Description section of Table 1, note that item 3e. is a duplicate of item 3c. One of these can be deleted. Also, for items 3d. and 3f. the notation regarding early shutdown of nuclear facilities for tornadoes is not realistic. The current state of the art of weather prediction does not permit adequate forecasting of tornadoes a day or more ahead of time which might be a cause for concern for a particular nuclear facility.

With respect to Table 2, contingency types P5 and P8, it would seem that events should include the same items as shown for contingency type P4.

In Table 2, for contingency types P1, P3, P4, P5, P8, and P9, clarification is needed as to whether distribution transformers (138-69 kV or 138-34.5 kV, for example) would be included in the events, or whether the transformers mentioned would be restricted to transmission transformers.

For the various stability scenarios, note that Consequential Load Loss would be a function of how System protection equipment is set up for particular scenarios. Delayed clearing time/Zone 2 clearing times could result in load dropped that would not have been dropped for events cleared in primary clearing time.

In Table 2, Note 1 ii., is it the intent of the drafting team to require dynamic model representation of relaying equipment?

General comments:

We are not sure that a wholesale replacement of the existing standards TPL-001-0 through TPL-004-0 is required. We agree that additional clarification is needed for some items, and particularly for the study assumptions that go into the development of models to be used for the performance testing, but we do not agree that the proposed replacement standard provides that necessary clarification. Further, we believe that the replacement standard relies too much on the accompanying tables. More text needs to be included in the standard regarding the system performance requirements.

There is a lot of subjectivity involved in developing the study assumptions that need to be considered in the sensitivity models for study. How can we be sure that one or more of the sensitivity requirements in R2.1.3 stated for consideration are of the same level of importance by both auditors and those performing the studies? We are interested to see what the measures for all the requirements of the standard will be when they are developed.

Additional planning standard requirements for the EHV system to meet all N-2 conditions without dropping some load will require significant material changes, where feasible. We do not believe that the significant additional costs required for compliance would produce tangible benefits and a corresponding significant improvement in system reliability. What is the justification for the separate treatment for the EHV (>300 kV) facilities? One obvious effect of such requirements is to create a bias against any straight bus configuration for facilities above 300 kV. As stated in response to Question 25, there are existing facilities which cannot be converted from their present configuration. For those facilities which could be upgraded, an implementation period of several years would be needed to meet such requirements.

Meeting the requirements of this standard should not be a full time job. There are many more planning activities that need to be performed other than simulation testing to demonstrate compliance. The existing TPL standards require a significant manpower effort to perform the required studies and develop the planning assessment and corrective action plan. We are concerned that the replacement standard, as proposed, will create an even greater burden on the transmission owners without a commensurate benefit to the system reliability.

It is not within NERC's or ERO's scope of responsibility to address load loss. The focus of the standard should be on the system capabilities and not how much local load is dropped for a substation outage in a defined service area. A few reports showing the resultant bus voltages and facility loadings on a percentage basis for all single and a the more severe multiple contingency events, including operator or automatic mitigation procedures, should be adequate to demonstrate compliance.

NERC
NORTH AMERICAN ELECTRIC RELIABILITY CORPORATION

Comment Form for First Draft of TPL-001-1 — Transmission System Planning Performance Requirements

Please use this form to submit comments on the proposed draft of TPL-001-1. Comments must be submitted by **Friday, October 26, 2007**. You may submit the completed form by e-mail to sarcomm@nerc.net with the words "TPL-001 Draft 1" in the subject line. If you have questions please contact Ed Dobrowolski at ed.dobrowolksi@nerc.net or by telephone at 609-947-3673.

Individual Commenter Information **(Complete this page for comments from one organization or individual.)**		
Name:	Thad K. Ness	
Organization:	AEP	
Telephone:	614-716-2053	
E-mail:	tkness@aep.com	
NERC Region (check all Regions in which your company operates)		**Registered Ballot Body Segment (check all industry segments in which your company is registered)**
☒ **ERCOT**	☒	1 — Transmission Owners
☐ **FRCC**	☐	2 — RTOs and ISOs
☐ **MRO**	☒	3 — Load-serving Entities
☐ **NPCC**	☐	4 — Transmission-dependent Utilities
☒ **RFC**	☒	5 — Electric Generators
☐ **SERC**	☒	6 — Electricity Brokers, Aggregators, and Marketers
☒ **SPP**	☐	7 — Large Electricity End Users
☐ **WECC**	☐	8 — Small Electricity End Users
☐ **NA – Not Applicable**	☐	9 — Federal, State, Provincial Regulatory or other Government Entities
	☐	10 — Regional Reliability Organizations and Regional Entities

Group Comments (Complete this page if comments are from a group.)

Group Name: **AEP**

Lead Contact: **Thad K. Ness**

Contact Organization: **AEP**

Contact Segment: **1,3,5,6**

Contact Telephone: **614-716-2053**

Contact E-mail: **tkness@aep.com**

Additional Member Name	Additional Member Organization	Region*	Segment*
Takis Laios	AEP	**RFC**	1
John Riley	AEP	RFC	1
Rob O'Keefe	AEP	RFC	1
Navin Bahtt	AEP	RFC	1
Scott Rainbolt	AEP	SPP	1
Omar Hellalat	AEP	SPP	1
Roger Bentz	AEP	ERCOT	1
Vance Beauregard	AEP	ERCOT	1
Phil Cox	AEP	RFC, ERCOT, SPP	5,6

*If more than one Region or Segment applies, please list all that apply. Regional acronyms and segment numbers are shown on prior page.

Background

The purpose of this standard is to establish Transmission System planning performance requirements within the planning horizon to develop a Bulk Electric System that will operate reliably over a broad spectrum of System conditions and following a wide range of probable Contingencies. This standard will replace TPL-001-0, TPL-002-0, TPL-003-0, and TPL-004-0. The standard drafting team has not yet addressed TPL-005-0 and TPL-006-0, but will address these two standards during the next phase of the drafting process.

The major objectives of the standard drafting team are to:

1) Ensure the standard is complete and the requirements are set at an appropriate level to ensure reliability (Not Least Common Denominator)
2) Ensure that the standard is enforceable by having clearly defined requirements with unambiguous language
3) Address the issues raised by FERC Order 693, 890, and other applicable orders
4) Address the issues raised in the original Standards Authorization Request (SAR) and the Supplemental SAR.

The standard drafting team did not attempt to edit the existing standards but rather chose to write one standard that addresses all aspects of transmission planning in the existing TPL-001-0, TPL-002-0, TPL-003-0, and TPL-004-0. The standard drafting team organized the new standard in the following sections:

R1 – Modeling requirements
R2 – Assessment and Corrective Plan requirements
R3 – Steady State Analysis requirements
R4 – Stability Analysis requirements
R5 – Coordination requirements

The standard drafting team determined that the requirements and analysis for Steady State are different from those for stability. As such, the standard drafting team separated the analysis requirements and created two performance requirement tables.

The standard drafting team recognizes that this draft standard is a starting point for industry input into the standard and that there is still a lot of work required to complete the process. The standard drafting team has made many changes to clarify requirements, add requirements, and make some of the performance requirements stricter. The standard drafting team has not addressed Measures, Risk Factors, Violation Severity Factors, or Time Horizons at this time. These will be addressed when the standard drafting team has better defined the requirements of the standard.

For questions where you agree with the standard drafting team, please state that you agree and if available, please provide supporting documentation. If you disagree with the standard drafting team, please explain why you disagree and provide data to support your position, such as outage data or analysis. If you believe that we have made a performance requirement too strict please provide supporting documentation. If applicable, please include the approximate cost in man-hours for additional studies and/or cost in $Millions for additional transmission investment to meet the new requirements or the stricter requirements. If you believe that the standard should be stricter, please provide the

rationale along with any supporting data, including existing practices, cost estimates or additional analysis.

To improve the standard, the standard drafting team would appreciate responses to as many of these questions as you can answer.

A. New Definitions

Many of the concerns about the existing TPL standards come from the fact that a number of generally understood concepts are embedded in undefined terms, tables, and footnotes. To clarify some of these concerns, the standard drafting team is proposing new definitions. Please indicate whether you agree with the following proposed definitions and provide proposed changes to the definitions if you disagree:

Definition	**Agree or Disagree**
Q1. **Base Case**: Computer representation of the projected initial or starting Transmission System conditions for a specific point in time. Each base case reflects the forecasted Load at each bus (or node) on the interconnected Transmission System, the transmission facilities which deliver the generation and reactive resources to the connected Load, and the generation dispatch including firm transaction obligations assumed to supply the connected Load. The models also reflect facility ratings in accordance with FAC-008 & FAC-009.	☒Agree. ☐Do not agree.
Q1. **Comment: Consider replacing"computer" with "model".**	
Q2. **Consequential Load Loss:** Load that is no longer served because it is directly connected to an element(s) that is removed from service due to fault clearing action or mis-operation.	☒Agree. ☐Do not agree.
Q2. **Comment: Consider replacing "Consequential" with better wording (no specific suggestion to offer at this time).**	
Q3. **Extreme Events:** Events which are more severe than Planning Events and have a low probability of occurrence.	☒Agree. ☐Do not agree.
Q3. **Comment:**	
Q4. **Long-Term Transmission Planning Horizon:** Transmission planning period that covers years six through ten or beyond.	☒Agree. ☐Do not agree.
Q4. **Comment:**	
Q5. **Near-Term Transmission Planning Horizon:** Transmission planning period that covers years One through five.	☒Agree. ☐Do not agree.
Q5. **Comment:**	
Q6. **Non-Consequential Load Loss:** Load loss other than Consequential Load Loss. For example, Load loss that occurs through manual (operator initiated) or automatic operations such as under-voltage Load shedding, under-frequency Load shedding, or Special Protection Systems.	☒Agree. ☐Do not agree.

Q6. **Comment: Consider replacing "Non-Consequential" with better wording (no specific suggestion to offer at this time).**	
Q7. **Planning Assessment:** Documented evaluation of future Bulk Electric System needs by the use of performance studies that cover a range of assumptions regarding system conditions, time frames, future plans including capital reinforcements and operating procedures and other factors, such as asset conditions and age.	☒Agree. ☐Do not agree.
Q7. **Comment:**	
Q8. **Planning Events:** Events which require Transmission system performance requirements to be met.	☒Agree. ☐Do not agree.
Q8. **Comment:**	
Q9. **Plant Stability Study:** Study of an individual plant's Stability for various Contingencies in the vicinity of the plant; concerned with the effect on the System of the generating units' loss of synchronism and the damping of the generating units' power oscillations.	☒Agree. ☐Do not agree.
Q9. **Comment:**	
Q10. **System Stability Study:** Study of the System or portions of the System to ensure that angular Stability is maintained, inter-area power oscillations are damped, and voltages during the dynamic simulation stay within acceptable performance limits.	☒Agree. ☐Do not agree.
Q10. **Comment:**	
Q11. **Year One:** The first year that a Transmission Planner is responsible for studying. This is further defined as the planning window that begins the next calendar year from the time the Transmission Planner submits their annual studies. Analysis conducted for time horizons within the calendar year from the study publication are assumed to be conducted under the auspices of Operations Planning.	☒Agree. ☐Do not agree.
Q11. **Comment:**	

B. Sensitivity Studies

The draft planning standard includes the requirement, as specified in FERC Order 693, that planning decisions be based on a portfolio of analyses. In section 12.a.ii "Sensitivity studies and critical system conditions" FERC provided direction to consider a full range of variables considered to be significant that need to be assessed and documentation provided that explains the rationale for the selection of variables assessed.

In addition to the firm obligation scenario, the portfolio of analyses should be supplemented to include information from sensitivity analysis. The sensitivity analysis should be developed using additional cases that simulate reasonably stressed system conditions. The standard drafting team has included several parameters that can be varied to create the requisite sensitivity case(s). The draft standards specify that the sensitivities reflect one or more of the following conditions and that documentation be provided explaining the rationale for selecting the sensitivity(ies) employed. The parameters that should be varied include:

- Higher or lower Load forecasts from the Base Case with variability of Load/demand and Load power factors due to season, weather, or time of day.
- Modification of expected transfers.
- Unavailability of long lead time facilities.
- Variability and outages of Reactive Resources.
- Generation additions, retirements, or other dispatch scenarios.
- Decreased effectiveness of controllable Loads and Demand Side Management.
- Modification of planned Transmission outages

To help focus industry discussion, please respond to the questions below:

Q12. Should the standard provide more specific direction regarding the number of sensitivity cases that need to be developed?

Yes ☒ No ☐
Comment: Consider requiring a minumum of two sensitivity cases.

Q13. Should the standard specify the required changes, such as changes in expected transfers, load forecasts, generation patterns, etc., from the study case to be considered a "reasonably stressed" case?

Yes ☐ No ☒
Comment: Consider requiring that the most severe sensitivity cases be included in the studies as determined by the entities conducting the studies.

Q14. The SDT proposes to require the use of sensitivity studies for Near-Term Transmission System Planning Horizon stability analysis. Do you concur with the use of sensitivity analysis in dynamic studies?

Yes ☐ No ☐
Comment: We concur with the use of sensitivity studies, but object to the requirement on what sensitivities to include. The flexibility to determine if sensitivity studies are appropriate, and the flexibility to choose what parameters are appropriate to study for sensitivity should be left open. R2.4.3 as written is restrictive to certain sensitivities and should not be.

Q15. The draft TPL standard does not require the use of sensitivity studies for the Long-Term Transmission System Planning Horizon (year six and beyond) studies. Do you concur with this approach or should there be some level of sensitivity analysis required for the long-term period?

Yes ☐ No ☒
Comment: Consider requiring the same sensitivity analysis that is conducted under the near-term studies.

C. Corrective Action Plans

Requirement R2.7 of the standard states that when analysis shows that the performance requirements in Table 1 and Table 2 are not fully met, a Corrective Action Plan that utilizes all or some of the Transmission System enhancements, generation additions, DSM, new technologies and Operating Procedures shall be included in the Planning Assessment. This Corrective Action Plan should ensure that upon its implementation the identified system deficiencies will be corrected so that the performance requirements in Table 1 and Table 2

will be met. Furthermore, studies included in the Planning Assessment should demonstrate that this is indeed the case.

Q16. Requirement R2.7.1: Such Corrective Action Plans shall "Identify System deficiencies and the associated actions needed to achieve required System performance including Transmission and generation improvements, DSM, new technologies, or Operating Procedures including the duration of Interim Operating Procedures". System deficiencies may be corrected using an integrated plan, i.e., an optimal mix of Transmission, generation, DSM and Operating Procedures. Should DSM be considered in conjunction with other measures in developing Corrective Action Plans? If yes, please comment on how the impact of DSM should be included.

Yes ☒ No ☐
Comment: Consider requiring that problem contingencies be simulated on base case that models the lower load level that would result with the DSM implemented.

Q17. Requirement R2.7.2: Such Corrective Action Plans shall "Be added to study cases and the cases re-tested to show that the System with planned additions meets the performance requirements in the tables". Should new studies, including the facilities comprising the Corrective Action Plan, be performed to assess System normal performance and Contingency response for conditions that previously resulted in the System deficiencies (without the planned additions) and also demonstrate that the changes would not result in inadvertent negative impacts on the System. If you "agree", please comment on how a study area should be determined.

Yes ☒ No ☐
Comment: Consider limiting study area to immediately adjacent systems.

Q18. Requirement R2.7.3: The standard calls for a differentiation between committed and proposed projects. Do you agree that they should be treated separately? If not, please state why not.

Yes ☒ No ☒
Comment: Consider adding clear definition of "proposed" and "committed" projects (definition may impact response to this question).

Q19. Requirement R2.7.4: For such Corrective Action Plans "Committed projects shall not be removed without documentation to show that the revised plan meets the performance requirements". Do you agree or disagree with this requirement? If you disagree, please explain why.

Yes ☒ No ☐
Comment:

D. Performance Requirements

The proposed revised planning standard (TPL-001-1) incorporates a number of changes in requirements as compared to the current planning standards (TPL-001-0 through TPL-004-0), which it is expected to replace. Among other things these changes are intended to clarify the standard, address issues described by FERC, and, in particular, to "raise the bar." Strengthening the planning standards in selected areas is necessary to maintain a reliable Bulk Electric System that is up to the challenges of the 21st Century. In proposing the requirements in this draft, the standard drafting team attempted to balance the value of increased reliability against any potential increase in work and costs to meet the new proposed standard.

The standard drafting team is seeking input from the industry to determine whether a proper balance has been achieved. The areas where material changes are proposed in this draft are enumerated below, and questions are posed by the standard drafting team to obtain industry comment. In formulating your responses, please keep in mind that material changes in the final standard will be accompanied by a transition plan to provide for an orderly implementation of the final standard.

The performance requirements relative to Non-Consequential Loss of Load for the following events enumerated in the two tables can be considered more stringent than the existing TPL standards. Furthermore, the proposed standard is based on an assumption that performance requirements for EHV facilities should be more stringent than for lower voltage facilities.

Do you agree that Non-Consequential Loss of Load should not be permitted for the following events? If you disagree, please provide a reason for your disagreement.

Event	Agree or Disagree	Comment
Q20. P2-1: Loss of bus section (SLG for stability) above 300 kV	☒Agree. ☐Do not agree.	
Q21. P5-1: For facilities above 300 kV, loss of a Transmission circuit followed by System adjustment[1] followed by loss of another Transmission circuit	☒Agree. ☐Do not agree.	Consider adding clear definition of "system adjustments", including the amount of time permited to implement prior to the loss of the second facility.
Q22. P5-2: For facilities above 300 kV, loss of a Transmission circuit followed by System adjustment followed by loss of a transformer with low side voltage rating above 300 kV	☒Agree. ☐Do not agree.	Consider adding clear definition of "system adjustments", including the amount of time permited to implement prior to the loss of the second facility.
Q23. P5-3: For facilities above 300 kV, loss of a transformer with low side voltage rating above 300 kV followed by System adjustment followed by loss of another transformer	☒Agree. ☐Do not agree.	Consider adding clear definition of "system adjustments", including the amount of time permited to implement prior to the loss of the second facility.

[1]System adjustment can be manual or automatic.

The proposed standard is based on an assumption that performance requirements for non-bus tie EHV breakers should be distinguished from other breakers. Do you agree that Non-Consequential Loss of Load should not be permitted for this event?

Q24. Loss of non-bus tie breaker (above 300 kV) due to internal fault

Yes ☒ No ☐
Comment: Consider adding clear definition of "bus tie breaker" and "non-bus tie breaker".

The proposed standard is based on an assumption that performance requirements for non-bus tie EHV breakers should be distinguished from other breakers and that performance requirements for EHV facilities should be more stringent than for lower voltage facilities. Do you agree that Non-Consequential Loss of Load should not be permitted for this event?

Q25. P3-1: Loss of (SLG for stability) either a generator, a Transmission circuit, a transformer, or a bus and a stuck non-bus tie breaker (above 300 kV)

Yes ☒ No ☐
Comment: Consider adding clear definition of "bus tie breaker" and "non-bus tie breaker".

The proposed standard is based on an assumption that the following events are relatively high probability events and, therefore, Non-Consequential Loss of Load should not be permitted. Do you agree? If you disagree, please provide a reason for your disagreement.

Event	Agree or Disagree	Comment
Q26. P4-1: Loss of a Generator followed by System adjustment[1] followed by loss of another Generator	☒Agree. ☐Do not agree.	
Q27. P4-2: Loss of a generator followed by a System adjustment followed by the loss of a monopolar DC line	☒Agree. ☐Do not agree.	
Q28. P4-3: Loss of a generator followed by System adjustment followed by loss of a Transmission circuit	☒Agree. ☐Do not agree.	
Q29. P4-4: Loss of a generator followed by System adjustment followed by loss of a transformer with low side voltage rating above 300 kV	☒Agree. ☐Do not agree.	

The performance requirement for the following event may be considered less stringent than the existing TPL Standards — P2-3: Loss of a single pole of a DC line. Interruption of firm transactions (without Loss of firm Load) if the transaction is dependent on the faulted DC line is now allowed for this initiating event/Contingency.

[1] System adjustment can be manual or automatic

Q30. Do you agree that interruption of any firm transfers that are dependent on the outaged DC line that is taken out of service should be permitted?

Yes ☒ No ☐
Comment:

E. Stability

Q31. The proposed standard is based on an assumption that steady state analysis and stability analysis are different from each other and that therefore, two tables of Contingencies and performance requirements were needed. It is also based on an assumption that stability study requirements should be clearly separated from the steady state study requirements. Do you agree with the action taken in separating stability analysis from steady state analysis? If not, please explain.

Yes ☒ No ☐
Comment:

Q32. The SDT has added requirements for plant stability studies and has drawn a distinction in these studies from System stability studies. Do you agree with this approach? If not, please explain.

Yes ☒ No ☐
Comment:

Q33. The existing TPL-004-0 standard has a requirement to consider the Loss of all generating units at a plant, but it was not clear whether this requirement should apply to stability studies. The SDT did not include this requirement in the stability table, because it is hard to envision a condition when all units would trip simultaneously within the timeframe of a stability simulation. Do you think this condition should be required in stability analysis of extreme events? If not, please explain.

Yes ☒ No ☐
Comment: Extreme Event #9 in Table 2 has 3-phase fault and loss of all generating units at a station. Was this left in by mistake? This type of scenario could conceivably lead to low interconnection frequency or cascading due to consequent transmission overloading or low voltage, and could be studied by dynamic simulation. There have been a number of just such generation loss events as this in the past.

Q34. There are an increasing number of events with slow voltage recovery after faults on the Transmission System. The dynamic behavior of induction motor loads is a major factor in this phenomenon. The proposed standard therefore requires that the load model for stability studies of peak Load conditions include the dynamic effects of induction motors. Do you agree with this requirement? If not, please explain?

Yes ☐ No ☒
Comment: The statements of fact in the question may be true for some study areas, but not necessarily for all. Requiring this type of load representation when it might not be appropriate to the study is excessively burdensome. This is a judgment better left to those conducting the studies. The percentage of load to be so represented, the extent of the study area over which to apply induction machine representations, and the specific modeling parameters are all judgements just as important as whether or not to

include this type of representation. There is a limit as to how far a standard can replace engineering judgment and that limit is reached here.

Q35. What type of manual or automatic adjustments of generators should be allowed for single and multiple Contingencies?

Comment: The existing TPL standards imply that generator tripping is not permissible in connection with Category B events in that footnote b does not mention it, whereas it is mentioned in connection with Category C events in footnote c. Generation is a system resource and should be protected against the more common single contingency transmission events. We agree with the status quo on this issue being maintained in the new standard, with the provision for regional variance in R3.6. The provision for manual and automatic runback in R3.5 is okay. We also agree with manual adjustments remaining acceptable in response to any contingencies in the new standard consistent with C3 in existing TPL-003.

F. Generation Runback and Tripping

The SDT has discussed the automatic and manual readjustments of generators that should be permissible for single contingencies and multiple contingencies. The existing TPL-001-0 through TPL-004-0 standards through footnote (a) of Table I could include emergency ratings applicable for short durations as required to permit operating steps necessary to maintain system control. The footnote is silent about allowable generation adjustments in response to the Category B events. However, it does indicate that system adjustments are permitted to prepare for the next Contingency. These system adjustments could include manual or automatic adjustments involving generation.

The SDT has learned that many transmission owners use System Protection Systems (SPS) or Remedial Action Schemes (RAS) to trip generation for single and multiple Contingency outage events to prevent overloads, low voltage, and instability in the Interconnected Transmission network for N-1 and N-2 events. In some cases, the RAS are used to prepare for the next Contingency; but in some cases, the RAS are used to simultaneously avoid exceeding emergency ratings.

Q36. The proposed standard allows generation runback after the disturbance that causes a single Contingency (or due to a single Contingency outage) to move the Interconnected Transmission System from an emergency state (within emergency ratings) to a normal state (within normal ratings), assuming that the disturbance does not result in instability? Do you agree? If not, please explain.

Yes ☒ No ☐
Comment: Question: Why would a runback scheme be needed to move from an emergency state to a normal state when that could be accomplished by regular redispatch?

Q37. Since emergency ratings are thermal ratings, should this standard allow an automatic generation runback scheme (that is initiated immediately after the disturbance causing the single Contingency) to prevent thermal overloads (assuming that the disturbance does not result in instability)? If yes, what are the conditions that must be met in order to allow such a runback scheme to meet the System performance criteria for single Contingencies? Please explain the reason for your answer.

Yes ☒ No ☐
Comment: Ensure that the scheme is enabled to automatically runback for the problem conditions.

The standard drafting team has considered that RAS or SPS may be allowable under certain situations for single Contingencies, but proposes that their use should be limited.

Q38. Do you agree that RAS or SPS may be allowed for single Contingencies? If not, please explain.

Yes ☒ No ☐
Comment: As long as they are automatic.

Q39. Please describe the limitations that you believe should be placed on the use of RAS or SPS for single Contingency events.

Comment: Should be allowed as long as they have been approved by the applicable Regional Reliability Organization.

Q40. When RAS or SPS are allowed, what conditions should be met when these systems are used in system adjustments to meet performance requirements?

Comment: They include redundancy and their failure does not result in cascading.

G. General Questions

Q41. If you are aware of any regional variances that would be required as a result of these standards, please identify them here.

Yes ☐ No ☒
Comment:

Q42. If you are aware of any conflicts between the proposed standards and any regulatory function, rule order, tariff, rate schedule, legislative requirement or agreement, please identify them here.

Yes ☐ No ☒
Comment:

Q43. Do you have any other questions or concerns with the proposed standard that have not been addressed? If yes, please explain.

Yes ☒ No ☐
Comment: (1) Consider clarifying system performance requirements that would be applicable during (a) the first two minutes after the system disturbance when slow-acting automatic system adjustments (such as the operation of motor-operated-air-break switches that are relayed to sectionalize the faulted segment of a multi-terminal circuit; the changing of taps on tap-changing-under-load transformers; the switching of capacitor banks; etc.) would not allowed to be considered, (b) the next three minutes (two to five minutes after the system disturbance) when these slow-acting automatic system adjustments would be allowed to be considered, (c) the next twenty-five minutes (five to thirty minutes after the system disturbance) when manual system

adjustments would be allowed to be considered, and (d) the time period beyond thirty minutes after the system disturbance when no system adjustments of any kind would be allowed to be considered.

(2) Consider clarifying which functional entity is expected to provide what information specified in this standard, especially in requirement 1.

(3) Consider clarifying the need for functional entities to provide competitive sensitive information such as planned outages.

(4)The system stability study documentation requirements R2.4 and R4.5 do not specify a level on the scope of studies or indicate the extent of coverage across a system required for acceptability. A reasonable scope of such studies might include studies of a system nature in association with dynamic devices, or voltage collapse or cascading scenarios, but what else would be required? Or, how much more stability study documentation beyond what is necessary to comply with TPL-001 through 004 would be required? Specific comments regarding R2.4 are as follows: what does "address" all five years mean? How much of the system do you need to study (for example, do you need to apply faults at every bus)? Again, you wouldn't know how much studying needs to be done before this requirement is satisfied. In R2.4.1 and R2.4.2, depending upon the study at hand, some other load condition such as shoulder peak may be more appropriate. Why should you be required to do peak and off-peak cases in such an instance? In R2.4.3 you are forced into doing at least one of the sensitivity studies listed (i.e., "to reflect one or more of the following conditions..."). Is this intentional? Depending upon the study at hand, none of these may be worthwhile doing, and there may be some other parameter that would be better looked at for sensitivity purposes. Existing TPL-001 through 004, Table 1, Category C3 requires any combination of generator, transmission line, transformer, or HVDC pole block in succession. The new standard excludes several of these combinations from being required in P4, P5, P8 and P9. Is this an intentional exclusion? If so, why? The standard should state explicitly that existing generation does not need to be studied unless R2.5.1 or R2.5.2 apply.

NERC
NORTH AMERICAN ELECTRIC RELIABILITY CORPORATION

Comment Form for First Draft of TPL-001-1 — Transmission System Planning Performance Requirements

Please use this form to submit comments on the proposed draft of TPL-001-1. Comments must be submitted by **[Due Date in bold]**. You may submit the completed form by e-mail to sarcomm@nerc.net with the words "TPL-001 Draft 1" in the subject line. If you have questions please contact Ed Dobrowolski at ed.dobrowolski@nerc.net or by telephone at 609-947-3673.

Individual Commenter Information **(Complete this page for comments from one organization or individual.)**		
Name:	Nick Henery and Allen Mosher	
Organization:	American Public Power Association	
Telephone:	202-467-2985/2944	
E-mail:	nhenery@appanet.org amosher@appanet.org	
NERC Region (check all Regions in which your company operates)		**Registered Ballot Body Segment (check all industry segments in which your company is registered)**
☐ **ERCOT**	☐	1 — Transmission Owners
☐ **FRCC**	☐	2 — RTOs and ISOs
☐ **MRO**	☒	3 — Load-serving Entities
☐ **NPCC**	☒	4 — Transmission-dependent Utilities
☐ **RFC**	☐	5 — Electric Generators
☐ **SERC**	☐	6 — Electricity Brokers, Aggregators, and Marketers
☐ **SPP**	☐	7 — Large Electricity End Users
☐ **WECC**	☐	8 — Small Electricity End Users
☒ **NA – Not Applicable**	☐	9 — Federal, State, Provincial Regulatory or other Government Entities
	☐	10 — Regional Reliability Organizations and Regional Entities

DRAFT

Group Comments (Complete this page if comments are from a group.)

Group Name:

Lead Contact:

Contact Organization:

Contact Segment:

Contact Telephone:

Contact E-mail:

Additional Member Name	Additional Member Organization	Region*	Segment*

DRAFT

*If more than one Region or Segment applies, please list all that apply. Regional acronyms and segment numbers are shown on prior page.

Background

The purpose of this standard is to establish Transmission System planning performance requirements within the planning horizon to develop a Bulk Electric System that will operate reliably over a broad spectrum of System conditions and following a wide range of probable Contingencies. This standard will replace TPL-001-0, TPL-002-0, TPL-003-0 and TPL-004-0. The SDT has not yet addressed TPL-005-0 and TPL-006-0, but will address these two standards during the next phase of the drafting process.

The major objectives of the SDT are to:

1) Ensure the standard is complete and the requirements are set at an appropriate level to ensure reliability (Not Least Common Denominator)
2) Ensure that the standard is enforceable by having clearly defined requirements with unambiguous language
3) Address the issues raised by FERC Order 693, 890 and other applicable orders
4) Address the issues raised in the original Standards Authorization Request (SAR) and the Supplemental SAR.

The SDT did not attempt to edit the existing standards but rather chose to write one standard that addresses all aspects of transmission planning in the existing TPL-001-0, TPL-002-0, TPL-003-0 and TPL-004-0. The SDT organized the new standard in the following sections:

R1 – Modeling requirements
R2 – Assessment and Corrective Plan requirements
R3 – Steady State Analysis requirements
R4 – Stability Analysis requirements
R5 – Coordination requirements

The SDT determined that the requirements and analysis for Steady State are different from those for stability. As such, the SDT separated the analysis requirements and created two performance requirement tables.

The SDT recognizes that this draft standard is a starting point for industry input into the standard and that there is still a lot of work required to complete the process. The SDT has made many changes to clarify requirements, add requirements, and make some of the performance requirements stricter. The SDT has not addressed Measures, Risk Factors, Violation Severity Factors or Time Horizons at this time. These will be addressed when the SDT has better defined the requirements of the standard.

For questions where you agree with the SDT, please state that you agree and if available, please provide supporting documentation. If you disagree with the SDT, please explain why you disagree and provide data to support your position, such as outage data or analysis. If you

DRAFT

believe that we have made a performance requirement too strict please provide supporting documentation. If applicable, please include the approximate cost in man-hours for additional studies and/or cost in $Millions for additional transmission investment to meet the new requirements or the stricter requirements. If you believe that the standard should be stricter, please provide the rationale along with any supporting data, including existing practices, cost estimates or additional analysis.

To improve the standard, the SDT would appreciate responses to as many of these questions as you can answer.

A. New Definitions

Many of the concerns about the existing TPL standards come from the fact that a number of generally understood concepts are embedded in undefined terms, tables, and footnotes. To clarify some of these concerns, the SDT is proposing new definitions. Please indicate whether you agree with the following proposed definitions and provide proposed changes to the definitions if you disagree:

Definition	**Agree or Disagree**
Q1. **Base Case**: Computer representation of the projected initial or starting Transmission System conditions for a specific point in time. Each base case reflects the forecasted Load at each bus (or node) on the interconnected Transmission System, the transmission facilities which deliver the generation and reactive resources to the connected Load, and the generation dispatch including firm transaction obligations assumed to supply the connected Load. The models also reflect facility ratings in accordance with FAC-008 & FAC-009.	☐Agree. ☒Do not agree.
Q1. **Comment: This should not be a defined term in the Glossary, instead there should be a Standard written that provides the industry with the requirements for completing a Base Case Study. This is the first step in completing the Transmission Studies required in TPL-001. There is no guarantee that the rules used by the transmission planners for the base case studies are done in a reliable manner. The Standard needs to be expanded to insure oversight by the compliance monitors to ensure that the base case is sound from a reliability perspective. Also, both reliability and transparency require that the results of the base case study along with the assumptions used to develop the study must be shared with responsible entities within contiguous areas of the BES, not just with contiguous Planning Coordinators and Transmission Planners. To insure consistent results, the Standard should require that a properly conducted Base Case Study be based on agreed rules for conducting such studies within each interconnection and use of consistent data/assumptions by other entities in the region; otherwise, the results of each PC's and TP's planning horizon studies and the operation planning studies will be brought into question.**	
Q2. **Consequential Load Loss:** Load that is no longer served because it is directly connected to an element(s) that is removed from service due to fault clearing action or mis-operation.	☒Agree. ☐Do not agree.
Q2. **Comment: This definition will help define what cascading outage is. There is**	

DRAFT

confusion in the industry and FERC as to "what is a cascading outage." The planning process needs to address this confusion and define exactly what a cascading outage consists. Some want a cascading outage to be when loads beyond the primary or secondary protection equipment are dropped.	
Q3. **Extreme Events:** Events which are more severe than Planning Events and have a low probability of occurrence.	☐Agree. ☒Do not agree.
Q3. **Comment: The definition is needed; however, this term is dependent on a clear definition of Planning Events, which does not exist.**	
Q4. **Long-Term Transmission Planning Horizon:** Transmission planning period that covers years six through ten or beyond.	☒Agree. ☐Do not agree.
Q4. **Comment: This definition is needed to eliminate the confusion that exists in the industry.**	
Q5. **Near-Term Transmission Planning Horizon:** Transmission planning period that covers Years One through five.	☒Agree. ☐Do not agree.
Q5. **Comment: This definition is needed to eliminate the confusion that exists in the industry.**	
Q6. **Non-Consequential Load Loss:** Load loss other than Consequential Load Loss. For example, Load loss that occurs through manual (operator initiated) or automatic operations such as under-voltage Load shedding, under-frequency Load shedding, or Special Protection Systems.	☐Agree. ☒Do not agree.
Q6. **Comment: This definition should go beyond just saying "Load loss other than Consequential Load Loss." Recommend adding the following: " . . . including Load Loss that occurs through planned manual (Transmission Operator, Distribution Provider, and so on) operation or planned automatic operation of load shedding equipment such as under-frequency load shedding devices or Special Protection Systems."**	
Q7. **Planning Assessment:** Documented evaluation of future Bulk Electric System needs by the use of performance studies that cover a range of assumptions regarding system conditions, time frames, future plans including capital reinforcements and operating procedures and other factors, such as asset conditions and age.	☐Agree. ☒Do not agree.
Q7. Comment: This is too general. Just about any kind of review will qualify as a Planning Assessment. Suggested definition: "Documented evaluation of future Bulk Electric System needs by the use of performance studies such as NERC Steady State Transmission Studies or Plant Stability Studies conducted in accordance with the NERC Reliability Standards."	
Q8. **Planning Events:** Events which require Transmission system performance requirements to be met.	☐Agree. ☒Do not agree.
Q8. **Comment: What are "performance requirements?" This is too general a statement to be of value for writing specific standards.**	
Q9. **Plant Stability Study:** Study of an individual plant's Stability for various Contingencies in the vicinity of the plant; concerned with the effect on the System of the generating units' loss of synchronism and the damping of the generating units' power oscillations.	☐Agree. ☒Do not agree.
Q9. **Comment: Insert "electric generating" prior to "plant" for clarity. It is unclear as to the intent of this statement. The Standard should require the Transmission Planner to consider contingencies in the vicinity of a particular electric generation plant. However,**	

DRAFT

the ultimate goal of the "Stability Study" is to determine the stability of the BES and not just the "electric generation plant." It is recommended that this be rewritten to make clear the intent of this statement.	
Q10. **System Stability Study:** Study of the System or portions of the System to ensure that angular Stability is maintained, inter-area power oscillations are damped, and voltages during the dynamic simulation stay within acceptable performance limits.	☒Agree. ☐Do not agree.
Q10. **Comment: This is a very clear definition that can be used in Standards. The author did a good job of using defined terms in this definition.**	
Q11. **Year One:** The first year that a Transmission Planner is responsible for studying. This is further defined as the planning window that begins the next calendar year from the time the Transmission Planner submits **their** annual studies. Analysis conducted for time horizons within the calendar year from the study publication are assumed to be conducted under the auspices of Operations Planning.	☐Agree. ☒Do not agree.
Q11. **Comment: There is a term in the Glossary that is "Operation Plan;" however, there is not a term defining Operations Planning. It is recommended that the SDT drop the last sentence and define the term Operations Planning for the Glossary. Change "their" to "its."**	

B. Sensitivity Studies

The draft planning standard includes the requirement, as specified in FERC Order 693, that planning decisions be based on a portfolio of analyses. In section 12.a.ii "Sensitivity studies and critical system conditions", FERC provided direction to consider a full range of variables considered to be significant that need to be assessed and documentation provided that explains the rationale for the selection of variables assessed.

In addition to the firm obligation scenario, the portfolio of analyses should be supplemented to include information from sensitivity analysis. The sensitivity analysis should be developed using additional cases that simulate reasonably stressed system conditions. The SDT has included several parameters that can be varied to create the requisite sensitivity case(s). The draft standards specify that the sensitivities reflect one or more of the following conditions and that documentation be provided explaining the rationale for selecting the sensitivity (ies) employed. The parameters that should be varied include:

- Higher or lower Load forecasts from the Base Case with variability of Load/demand and Load power factors due to season, weather, or time of day.
- Modification of expected transfers.
- Unavailability of long lead time facilities.
- Variability and outages of Reactive Resources.
- Generation additions, retirements, or other dispatch scenarios.
- Decreased effectiveness of controllable Loads and Demand Side Management.
- Modification of planned Transmission outages

To help focus industry discussion, please respond to the questions below:

DRAFT

Q12. Should the standard provide more specific direction regarding the number of sensitivity cases that need to be developed?

Yes ☐ No ☒

Comment: The term Base Case should not be used in this manner. The conditions of the Base Case Study should be in a Standard to insure that all sensitivity cases are covered.

Q13. Should the standard specify the required changes, such as changes in expected transfers, load forecasts, generation patterns, etc., from the study case to be considered a "reasonably stressed" case?

Yes ☒ No ☐

Comment: The Standard should indicate a list that says "the list will include but not be limited to:" and then list the minimum necessary to adequately cover the changes in the study.

Q14. The SDT proposes to require the use of sensitivity studies for Near-Term Transmission System Planning Horizon stability analysis. Do you concur with the use of sensitivity analysis in dynamic studies?

Yes ☒ No ☐

Comment: This is absolutely necessary; it will help with the operational planning that will be needed next. In addition, it will help to determine the amount of study uncertainty that the Transmission Planner believes will be in the plan. This is very important for the Year One.

Q15. The draft TPL standard does not require the use of sensitivity studies for the Long-Term Transmission System Planning Horizon (year 6 and beyond) studies. Do you concur with this approach or should there be some level of sensitivity analysis required for the long-term period?

Yes ☒ No ☐

Comment: The sensitivity study of year 6 and beyond is of little value. The uncertainty (standard deviations) in the input assumptions used to complete the studies for 6 years and longer are so large it would not provide useful answers to make sound decisions regarding the need to build, remove, or improve BES facilities.

C. Corrective Action Plans

Requirement R2.7 of the standard states that when analysis shows that the performance requirements in Table 1 and Table 2 are not fully met, a Corrective Action Plan that utilizes all or some of the Transmission System enhancements, generation additions, DSM, new technologies and Operating Procedures shall be included in the Planning Assessment. This Corrective Action Plan should ensure that upon its implementation the identified system deficiencies will be corrected so that the performance requirements in Table 1 and Table 2 will

DRAFT

be met. Furthermore, studies included in the Planning Assessment should demonstrate that this is indeed the case.

Q16. Requirement R2.7.1: Such Corrective Action Plans shall "Identify System deficiencies and the associated actions needed to achieve required System performance including Transmission and generation improvements, DSM, new technologies, or Operating Procedures including the duration of Interim Operating Procedures". System deficiencies may be corrected using an integrated plan, i.e., an optimal mix of Transmission, generation, DSM and Operating Procedures. Should DSM be considered in conjunction with other measures in developing Corrective Action Plans? If Yes, please comment on how the impact of DSM should be included.

Yes ☒ No ☐

Comment: This is a conditional Yes. The Resource Planner or Transmission Planner must provide assurance that the specific "Demand" reduction that is incorporated into the scenario analyses will actually be reduced through either customer action or direct load shedding by the Balancing Authority. This type of controllable "Demand" does exist, but it is rare that planners and operators actually have such resources in their portfolios to help with System Deficiencies.

Q17. Requirement R2.7.2: Such Corrective Action Plans shall "Be added to study cases and the cases re-tested to show that the System with planned additions meets the performance requirements in the tables". Should new studies, including the facilities comprising the Corrective Action Plan, be performed to assess System normal performance and Contingency response for conditions that previously resulted in the System deficiencies (without the planned additions) and also demonstrate that the changes would not result in inadvertent negative impacts on the System. If you "agree", please comment on how a study area should be determined.

Yes ☒ No ☐

Comment: This is necessary to insure the planners did not accidentally take the system and the future operation of the system from the frying pan into the fire.

Q18. Requirement R2.7.3: The standard calls for a differentiation between committed and proposed projects. Do you agree that they should be treated separately? If not, please state why not.

Yes ☒ No ☐

Comment: While it is good to know the difference, it should be made clear in the Standard that if a project is listed as committed, it may be changed the next year to proposed project. Definitions for "committed" and "proposed" are needed to ensure consistent data/assumptions within each region.

Q19. Requirement R2.7.4: For such Corrective Action Plans "Committed projects shall not be removed without documentation to show that the revised plan meets the performance

DRAFT

requirements". Do you agree or disagree with this requirement? If you disagree, please explain why.

Yes ☒ No ☐

Comment: It may be necessary, as a band-aid-type substitute, to replace a committed project with a Remedial Action Scheme (RAS)/Special Protection Systems in lieu of new facilities. Whatever the revised plan, it must be shown to meet the performance requirements.

D. Performance Requirements

The proposed revised planning standard (TPL-001-1) incorporates a number of changes in requirements as compared to the current planning standards (TPL-001-0 through TPL-004-0), which it is expected to replace. Among other things these changes are intended to clarify the standard, address issues described by FERC, and, in particular, to "raise the bar." Strengthening the planning standards in selected areas is necessary to maintain a reliable BES that is up to the challenges of the 21st Century. In proposing the requirements in this draft, the SDT attempted to balance the value of increased reliability against any potential increase in work and costs to meet the new proposed standard.

The SDT is seeking input from the industry to determine whether a proper balance has been achieved. The areas where material changes are proposed in this draft are enumerated below, and questions are posed by the SDT to obtain industry comment. In formulating your responses, please keep in mind that material changes in the final standard will be accompanied by a transition plan to provide for an orderly implementation of the final standard.

The performance requirements relative to Non-Consequential Loss of Load for the following events enumerated in the two tables can be considered more stringent than the existing TPL Standards. Furthermore, the proposed standard is based on an assumption that performance requirements for EHV facilities should be more stringent than for lower voltage facilities.

Do you agree that Non-Consequential Loss of Load should not be permitted for the following events? If you disagree, please provide a reason for your disagreement.

Event	**Agree or Disagree**	**Comment**
Q20. P2-1: Loss of bus section (SLG for stability) above 300 kV	☒Agree. ☐Do not agree.	**Note to APPA members – Please examine closely and give us specific comments on Q20 – Q29. If you disagree we need to know.**
Q21. P5-1: For facilities above 300 kV, loss of a Transmission circuit followed by System adjustment[1] followed by	☒Agree. ☐Do not agree.	

DRAFT

loss of another Transmission circuit		
Q22. P5-2: For facilities above 300 kV, loss of a Transmission circuit followed by System adjustment followed by loss of a transformer with low side voltage rating above 300 kV	☒Agree. ☐Do not agree.	
Q23. P5-3: For facilities above 300 kV, loss of a transformer with low side voltage rating above 300 kV followed by System adjustment followed by loss of another transformer	☒Agree. ☐Do not agree.	

[1]System adjustment can be manual or automatic.

The proposed standard is based on an assumption that performance requirements for non-bus tie EHV breakers should be distinguished from other breakers. Do you agree that Non-Consequential Loss of Load should not be permitted for this event?

Q24. Loss of non-bus tie breaker (above 300 kV) due to internal fault

Yes ☒ No ☐
Comment:

The proposed standard is based on an assumption that performance requirements for non-bus tie EHV breakers should be distinguished from other breakers and that performance requirements for EHV facilities should be more stringent than for lower voltage facilities. Do you agree that Non-Consequential Loss of Load should not be permitted for this event?

Q25. P3-1: Loss of (SLG for stability) either a generator, a Transmission circuit, a transformer, or a bus and a stuck non-bus tie breaker (above 300 kV)

Yes ☒ No ☐
Comment:

The proposed standard is based on an assumption that the following events are relatively high probability events and, therefore, Non-Consequential Loss of Load should not be permitted. Do you agree? If you disagree, please provide a reason for your disagreement.

DRAFT

Event	Agree or Disagree	Comment
Q26. P4-1: Loss of a Generator followed by System adjustment[1] followed by loss of another Generator	☒Agree. ☐Do not agree.	
Q27. P4-2: Loss of a generator followed by a System adjustment followed by the loss of a monopolar DC line	☒Agree. ☐Do not agree.	
Q28. P4-3: Loss of a generator followed by System adjustment followed by loss of a Transmission circuit	☒Agree. ☐Do not agree.	
Q29. P4-4: Loss of a generator followed by System adjustment followed by loss of a transformer with low side voltage rating above 300 kV	☒Agree. ☐Do not agree.	

The performance requirement for the following event may be considered less stringent than the existing TPL Standards - P2-3: Loss of a single pole of a DC line. Interruption of firm transactions (without Loss of firm Load) if the transaction is dependent on the faulted DC line is now allowed for this initiating event/Contingency.

Q30. Do you agree that interruption of any firm transfers that are dependent on the outaged DC line that is taken out of service should be permitted?

Yes ☒ No ☐
Comment:

E. Stability

Q31. The proposed standard is based on an assumption that steady state analysis and stability analysis are different from each other and that therefore, two tables of Contingencies and performance requirements were needed. It is also based on an assumption that stability study requirements should be clearly separated from the steady state study requirements. Do you agree with the action taken in separating stability analysis from steady state analysis? If not, please explain.

Yes ☒ No ☐
Comment:

[1] System adjustment can be manual or automatic

DRAFT

Q32. The SDT has added requirements for plant stability studies and has drawn a distinction in these studies from System stability studies. Do you agree with this approach? If not, please explain.

Yes ☒ No ☐

Comment: This has been needed for some time.

Q33. The existing TPL-004-0 standard has a requirement to consider the Loss of all generating units at a plant, but it was not clear whether this requirement should apply to stability studies. The SDT did not include this requirement in the stability table, because it is hard to envision a condition when all units would trip simultaneously within the timeframe of a stability simulation. Do you think this condition should be required in stability analysis of extreme events? If not, please explain.

Yes ☒ No ☐

Comment: This is a conditional Yes. If the plant design was such that a fault at the plant could remove all units, then all units should be considered. However, if the plant design is such that the likelihood of all plants going down at one time is improbable, then the SDT's approach is very reliable.

Q34. There are an increasing number of events with slow voltage recovery after faults on the Transmission System. The dynamic behavior of induction motor loads is a major factor in this phenomenon. The proposed standard therefore requires that the load model for stability studies of peak Load conditions include the dynamic effects of induction motors. Do you agree with this requirement? If not, please explain?

Yes ☒ No ☐

Comment: The SDT is correct to include the effects of induction motors in simulating the loads. Voltage issues are and will continue to become more critical in the operation of the BES as time goes by. It will be a big help to planners and operators to know the impacts of such loads.

Q35. What type of manual or automatic adjustments of generators should be allowed for single and multiple Contingencies?

Comment: I do not understand the question. Is this dealing with voltage adjustment or power adjustment?

F. Generation Runback and Tripping

The SDT has discussed the automatic and manual readjustments of generators that should be permissible for single contingencies and multiple contingencies. The existing TPL-001-0 through TPL-004-0 standards through footnote (a) of Table I could include emergency ratings applicable for short durations as required to permit operating steps necessary to maintain system control.

DRAFT

The footnote is silent about allowable generation adjustments in response to the Category B events. However, it does indicate that system adjustments are permitted to prepare for the next Contingency. These system adjustments could include manual or automatic adjustments involving generation.

The SDT has learned that many transmission owners use System Protection Systems (SPS) or Remedial Action Schemes (RAS) to trip generation for single and multiple Contingency outage events to prevent overloads, low voltage, and instability in the Interconnected Transmission network for N-1 and N-2 events. In some cases, the RAS are used to prepare for the next Contingency; but in some cases, the RAS are used to simultaneously avoid exceeding emergency ratings.

Q36. The proposed standard allows generation runback after the disturbance that causes a single Contingency (or due to a single Contingency outage) to move the Interconnected Transmission System from an emergency state (within emergency ratings) to a normal state (within normal ratings), assuming that the disturbance does not result in instability? Do you agree? If not, please explain.

Yes ☒ No ☐

Comment: However, it should be pointed out that RAS are band-aid solutions to building needed BES infrastructure. Experience has shown that an interconnection can have so many RAS that one RAS will counter another RAS designed for another problem in the interconnection. This problem requires additional study by a NERC task force.

Q37. Since emergency ratings are thermal ratings, should this standard allow an automatic generation runback scheme (that is initiated immediately after the disturbance causing the single Contingency) to prevent thermal overloads (assuming that the disturbance does not result in instability)? If yes, what are the conditions that must be met in order to allow such a runback scheme to meet the System performance criteria for single Contingencies? Please explain the reason for your answer.

Yes ☒ No ☐

Comment: Care must be taken to insure runbacks of one event will not cancel the effects of other runback plans in the same interconnections.

The SDT has considered that RAS or SPS may be allowable under certain situations for single Contingencies, but proposes that their use should be limited.

Q38. Do you agree that RAS or SPS may be allowed for single Contingencies? If not, please explain.

Yes ☒ No ☐

Comment: As the SDT has said under certain situations.

DRAFT

Q39. Please describe the limitations that you believe should be placed on the use of RAS or SPS for single Contingency events.

Comment: **See Question 36.**

Q40. When RAS or SPS are allowed, what conditions should be met when these systems are used in system adjustments to meet performance requirements?

Comment: **Maintain system stability and prevent the loss of load.**

G. General Questions

Q41. If you are aware of any regional variances that would be required as a result of these standards, please identify them here.

Yes ☒ No ☐
Comment: **The WECC will probably have a couple.**

Q42. If you are aware of any conflicts between the proposed standards and any regulatory function, rule order, tariff, rate schedule, legislative requirement or agreement, please identify them here.

Yes ☐ No ☒
Comment:

Q43. Do you have any other questions or concerns with the proposed standard that have not been addressed? If yes, please explain.

Yes ☒ No ☐
Comment: **The Standards are a great start in getting a set of requirements in place that will provide a planning methodology that will be transparent to the Functional entities in the interconnections and will produce results that will permit reliable planning and operations of the BES.**

Requirement 5 is a start at attempting to share the results of the planning studies with the correct entities. However, because this is such an important part of reliable planning, this requirement should be rewritten to be much more definitive and comprehensive. It is recommended the SDT review the FAC-014 Standard where this Standard deals with who is to receive the methodology for calculating SOLs. The SDT needs to insure that the Transmission Planners and Planning Coordinators share their Near-Term Planning Horizon Studies with the Transmission Operators (Operation Planners) and the appropriate Regional Entity Planning Committees and Operating Committees.

It is also recommended that the SDT remove all Requirements that are subjective and cannot be measured. For example, who must the Transmission Planner share information

DRAFT

with? Requirement R5.2 states that information must be shared with Transmission Planners of neighboring impacted areas. A Compliance Monitor cannot determine if a neighbor is being impacted. In fact, from an enforcement perspective, if the involved parties must go before a Judge, who will determine if someone is impacted or not?

In addition, the assumptions the Transmission Planners and Planning Coordinators use to conduct the Studies are not required to be shared or posted. As an example, in some parts of the BES Transmission Planners and Planning Coordinators use Flowgate Methodology to study the BES, while others use Rated System Paths, and still others use Area Interchange (Network Methodology).

This standard needs to be modified to respond to several requests from Order 890 and Order 693. These Orders request that through the Standards, information be made available, posted, and shared with the appropriate reliability functions. This information includes the results of Planning Horizon Studies, Operating Horizon Studies, and eventually the determination of Available Transfer Capabilities. This information also includes, but is not necessarily limited to: how do the planners treat the "counter flows" in their studies, what are the generation and transmission planned outage schedules used in the planning studies, how are Network Loads and Network Facilities treated in planning studies; and how do the planners treat Grandfathered Transmission and Grandfathered Power and Energy Contracts in the planning studies?

DRAFT

NERC
NORTH AMERICAN ELECTRIC RELIABILITY CORPORATION

Comment Form for First Draft of TPL-001-1 — Transmission System Planning Performance Requirements

Please use this form to submit comments on the proposed draft of TPL-001-1. Comments must be submitted by **Friday, October 26, 2007**. You may submit the completed form by e-mail to sarcomm@nerc.net with the words "TPL-001 Draft 1" in the subject line. If you have questions please contact Ed Dobrowolski at ed.dobrowolksi@nerc.net or by telephone at 609-947-3673.

Individual Commenter Information **(Complete this page for comments from one organization or individual.)**		
Name:	Baj Agrawal	
Organization:	Arizona Public Service Co.	
Telephone:	602-371-6386	
E-mail:	bajarang.agrawal@aps.com	
NERC Region (check all Regions in which your company operates)		**Registered Ballot Body Segment (check all industry segments in which your company is registered)**
☐ **ERCOT**	☒	1 — Transmission Owners
☐ **FRCC**	☐	2 — RTOs and ISOs
☐ **MRO**	☒	3 — Load-serving Entities
☐ **NPCC**	☐	4 — Transmission-dependent Utilities
☐ **RFC**	☒	5 — Electric Generators
☐ **SERC**	☐	6 — Electricity Brokers, Aggregators, and Marketers
☐ **SPP**	☐	7 — Large Electricity End Users
☒ **WECC**	☐	8 — Small Electricity End Users
☐ **NA – Not Applicable**	☐	9 — Federal, State, Provincial Regulatory or other Government Entities
	☐	10 — Regional Reliability Organizations and Regional Entities

Group Comments (Complete this page if comments are from a group.)

Group Name:

Lead Contact:

Contact Organization:

Contact Segment:

Contact Telephone:

Contact E-mail:

Additional Member Name	Additional Member Organization	Region*	Segment*

*If more than one Region or Segment applies, please list all that apply. Regional acronyms and segment numbers are shown on prior page.

Background

The purpose of this standard is to establish Transmission System planning performance requirements within the planning horizon to develop a Bulk Electric System that will operate reliably over a broad spectrum of System conditions and following a wide range of probable Contingencies. This standard will replace TPL-001-0, TPL-002-0, TPL-003-0, and TPL-004-0. The standard drafting team has not yet addressed TPL-005-0 and TPL-006-0, but will address these two standards during the next phase of the drafting process.

The major objectives of the standard drafting team are to:

1) Ensure the standard is complete and the requirements are set at an appropriate level to ensure reliability (Not Least Common Denominator)
2) Ensure that the standard is enforceable by having clearly defined requirements with unambiguous language
3) Address the issues raised by FERC Order 693, 890, and other applicable orders
4) Address the issues raised in the original Standards Authorization Request (SAR) and the Supplemental SAR.

The standard drafting team did not attempt to edit the existing standards but rather chose to write one standard that addresses all aspects of transmission planning in the existing TPL-001-0, TPL-002-0, TPL-003-0, and TPL-004-0. The standard drafting team organized the new standard in the following sections:

R1 – Modeling requirements
R2 – Assessment and Corrective Plan requirements
R3 – Steady State Analysis requirements
R4 – Stability Analysis requirements
R5 – Coordination requirements

The standard drafting team determined that the requirements and analysis for Steady State are different from those for stability. As such, the standard drafting team separated the analysis requirements and created two performance requirement tables.

The standard drafting team recognizes that this draft standard is a starting point for industry input into the standard and that there is still a lot of work required to complete the process. The standard drafting team has made many changes to clarify requirements, add requirements, and make some of the performance requirements stricter. The standard drafting team has not addressed Measures, Risk Factors, Violation Severity Factors, or Time Horizons at this time. These will be addressed when the standard drafting team has better defined the requirements of the standard.

For questions where you agree with the standard drafting team, please state that you agree and if available, please provide supporting documentation. If you disagree with the standard drafting team, please explain why you disagree and provide data to support your position, such as outage data or analysis. If you believe that we have made a performance requirement too strict please provide supporting documentation. If applicable, please include the approximate cost in man-hours for additional studies and/or cost in $Millions for additional transmission investment to meet the new requirements or the stricter requirements. If you believe that the standard should be stricter, please provide the rationale along with any supporting data, including existing practices, cost estimates or additional analysis.

To improve the standard, the standard drafting team would appreciate responses to as many of these questions as you can answer.

A. New Definitions

Many of the concerns about the existing TPL standards come from the fact that a number of generally understood concepts are embedded in undefined terms, tables, and footnotes. To clarify some of these concerns, the standard drafting team is proposing new definitions. Please indicate whether you agree with the following proposed definitions and provide proposed changes to the definitions if you disagree:

Definition	**Agree or Disagree**
Q1. **Base Case**: Computer representation of the projected initial or starting Transmission System conditions for a specific point in time. Each base case reflects the forecasted Load at each bus (or node) on the interconnected Transmission System, the transmission facilities which deliver the generation and reactive resources to the connected Load, and the generation dispatch including firm transaction obligations assumed to supply the connected Load. The models also reflect facility ratings in accordance with FAC-008 & FAC-009.	☐Agree. ☐Do not agree.
Q1. **Comment:**	
Q2. **Consequential Load Loss:** Load that is no longer served because it is directly connected to an element(s) that is removed from service due to fault clearing action or mis-operation.	☐Agree. ☐Do not agree.
Q2. **Comment:**	
Q3. **Extreme Events:** Events which are more severe than Planning Events and have a low probability of occurrence.	☐Agree. ☐Do not agree.
Q3. **Comment:**	
Q4. **Long-Term Transmission Planning Horizon:** Transmission planning period that covers years six through ten or beyond.	☐Agree. ☐Do not agree.
Q4. **Comment:**	
Q5. **Near-Term Transmission Planning Horizon:** Transmission planning period that covers years One through five.	☐Agree. ☐Do not agree.
Q5. **Comment:**	
Q6. **Non-Consequential Load Loss:** Load loss other than Consequential Load Loss. For example, Load loss that occurs through manual (operator initiated) or automatic operations such as under-voltage Load shedding, under-frequency Load shedding, or Special Protection Systems.	☐Agree. ☐Do not agree.
Q6. **Comment:**	
Q7. **Planning Assessment:** Documented evaluation of future Bulk Electric System needs by the use of performance studies that cover a range of assumptions regarding system conditions, time	☐Agree. ☐Do not

frames, future plans including capital reinforcements and operating procedures and other factors, such as asset conditions and age.	agree.
Q7. **Comment:**	
Q8. **Planning Events:** Events which require Transmission system performance requirements to be met.	☐Agree. ☐Do not agree.
Q8. **Comment:**	
Q9. **Plant Stability Study:** Study of an individual plant's Stability for various Contingencies in the vicinity of the plant; concerned with the effect on the System of the generating units' loss of synchronism and the damping of the generating units' power oscillations.	☐Agree. ☐Do not agree.
Q9. **Comment:**	
Q10. **System Stability Study:** Study of the System or portions of the System to ensure that angular Stability is maintained, inter-area power oscillations are damped, and voltages during the dynamic simulation stay within acceptable performance limits.	☐Agree. ☐Do not agree.
Q10. **Comment:**	
Q11. **Year One:** The first year that a Transmission Planner is responsible for studying. This is further defined as the planning window that begins the next calendar year from the time the Transmission Planner submits their annual studies. Analysis conducted for time horizons within the calendar year from the study publication are assumed to be conducted under the auspices of Operations Planning.	☐Agree. ☐Do not agree.
Q11. **Comment:**	

B. Sensitivity Studies

The draft planning standard includes the requirement, as specified in FERC Order 693, that planning decisions be based on a portfolio of analyses. In section 12.a.ii "Sensitivity studies and critical system conditions" FERC provided direction to consider a full range of variables considered to be significant that need to be assessed and documentation provided that explains the rationale for the selection of variables assessed.

In addition to the firm obligation scenario, the portfolio of analyses should be supplemented to include information from sensitivity analysis. The sensitivity analysis should be developed using additional cases that simulate reasonably stressed system conditions. The standard drafting team has included several parameters that can be varied to create the requisite sensitivity case(s). The draft standards specify that the sensitivities reflect one or more of the following conditions and that documentation be provided explaining the rationale for selecting the sensitivity(ies) employed. The parameters that should be varied include:

- Higher or lower Load forecasts from the Base Case with variability of Load/demand and Load power factors due to season, weather, or time of day.
- Modification of expected transfers.
- Unavailability of long lead time facilities.
- Variability and outages of Reactive Resources.
- Generation additions, retirements, or other dispatch scenarios.

- Decreased effectiveness of controllable Loads and Demand Side Management.
- Modification of planned Transmission outages

To help focus industry discussion, please respond to the questions below:

Q12. Should the standard provide more specific direction regarding the number of sensitivity cases that need to be developed?

Yes ☐ No ☐
Comment:

Q13. Should the standard specify the required changes, such as changes in expected transfers, load forecasts, generation patterns, etc., from the study case to be considered a "reasonably stressed" case?

Yes ☐ No ☐
Comment:

Q14. The SDT proposes to require the use of sensitivity studies for Near-Term Transmission System Planning Horizon stability analysis. Do you concur with the use of sensitivity analysis in dynamic studies?

Yes ☐ No ☐
Comment:

Q15. The draft TPL standard does not require the use of sensitivity studies for the Long-Term Transmission System Planning Horizon (year six and beyond) studies. Do you concur with this approach or should there be some level of sensitivity analysis required for the long-term period?

Yes ☐ No ☐
Comment:

C. Corrective Action Plans

Requirement R2.7 of the standard states that when analysis shows that the performance requirements in Table 1 and Table 2 are not fully met, a Corrective Action Plan that utilizes all or some of the Transmission System enhancements, generation additions, DSM, new technologies and Operating Procedures shall be included in the Planning Assessment. This Corrective Action Plan should ensure that upon its implementation the identified system deficiencies will be corrected so that the performance requirements in Table 1 and Table 2 will be met. Furthermore, studies included in the Planning Assessment should demonstrate that this is indeed the case.

Q16. Requirement R2.7.1: Such Corrective Action Plans shall "Identify System deficiencies and the associated actions needed to achieve required System performance including Transmission and generation improvements, DSM, new technologies, or Operating Procedures including the duration of Interim Operating Procedures". System deficiencies may be corrected using an integrated plan, i.e., an optimal mix of Transmission, generation, DSM and Operating Procedures. Should DSM be considered in conjunction with other measures in developing Corrective Action Plans? If yes, please comment on how the impact of DSM should be included.

Yes ☐ No ☐
Comment:

Q17. Requirement R2.7.2: Such Corrective Action Plans shall "Be added to study cases and the cases re-tested to show that the System with planned additions meets the performance requirements in the tables". Should new studies, including the facilities comprising the Corrective Action Plan, be performed to assess System normal performance and Contingency response for conditions that previously resulted in the System deficiencies (without the planned additions) and also demonstrate that the changes would not result in inadvertent negative impacts on the System. If you "agree", please comment on how a study area should be determined.

Yes ☐ No ☐
Comment:

Q18. Requirement R2.7.3: The standard calls for a differentiation between committed and proposed projects. Do you agree that they should be treated separately? If not, please state why not.

Yes ☐ No ☐
Comment:

Q19. Requirement R2.7.4: For such Corrective Action Plans "Committed projects shall not be removed without documentation to show that the revised plan meets the performance requirements". Do you agree or disagree with this requirement? If you disagree, please explain why.

Yes ☐ No ☐
Comment:

D. Performance Requirements

The proposed revised planning standard (TPL-001-1) incorporates a number of changes in requirements as compared to the current planning standards (TPL-001-0 through TPL-004-0), which it is expected to replace. Among other things these changes are intended to clarify the standard, address issues described by FERC, and, in particular, to "raise the bar." Strengthening the planning standards in selected areas is necessary to maintain a reliable Bulk Electric System that is up to the challenges of the 21st Century. In proposing the requirements in this draft, the standard drafting team attempted to balance the value of increased reliability against any potential increase in work and costs to meet the new proposed standard.

The standard drafting team is seeking input from the industry to determine whether a proper balance has been achieved. The areas where material changes are proposed in this draft are enumerated below, and questions are posed by the standard drafting team to obtain industry comment. In formulating your responses, please keep in mind that material changes in the final standard will be accompanied by a transition plan to provide for an orderly implementation of the final standard.

The performance requirements relative to Non-Consequential Loss of Load for the following events enumerated in the two tables can be considered more stringent than the existing TPL standards. Furthermore, the proposed standard is based on an assumption that performance requirements for EHV facilities should be more stringent than for lower voltage facilities.

Do you agree that Non-Consequential Loss of Load should not be permitted for the following events? If you disagree, please provide a reason for your disagreement.

Event	Agree or Disagree	Comment
Q20. P2-1: Loss of bus section (SLG for stability) above 300 kV	☐Agree. ☐Do not agree.	
Q21. P5-1: For facilities above 300 kV, loss of a Transmission circuit followed by System adjustment[1] followed by loss of another Transmission circuit	☐Agree. ☐Do not agree.	
Q22. P5-2: For facilities above 300 kV, loss of a Transmission circuit followed by System adjustment followed by loss of a transformer with low side voltage rating above 300 kV	☐Agree. ☐Do not agree.	
Q23. P5-3: For facilities above 300 kV, loss of a transformer with low side voltage rating above 300 kV followed by System adjustment followed by loss of another transformer	☐Agree. ☐Do not agree.	

[1]System adjustment can be manual or automatic.

The proposed standard is based on an assumption that performance requirements for non-bus tie EHV breakers should be distinguished from other breakers. Do you agree that Non-Consequential Loss of Load should not be permitted for this event?

Q24. Loss of non-bus tie breaker (above 300 kV) due to internal fault

Yes ☐ No ☐
Comment:

The proposed standard is based on an assumption that performance requirements for non-bus tie EHV breakers should be distinguished from other breakers and that performance requirements for EHV facilities should be more stringent than for lower voltage facilities. Do you agree that Non-Consequential Loss of Load should not be permitted for this event?

Q25. P3-1: Loss of (SLG for stability) either a generator, a Transmission circuit, a transformer, or a bus and a stuck non-bus tie breaker (above 300 kV)

Yes ☐ No ☐
Comment:

The proposed standard is based on an assumption that the following events are relatively high probability events and, therefore, Non-Consequential Loss of Load should not be permitted. Do you agree? If you disagree, please provide a reason for your disagreement.

Event	Agree or Disagree	Comment
Q26. P4-1: Loss of a Generator followed by System adjustment[1] followed by loss of another Generator	☐Agree. ☐Do not agree.	
Q27. P4-2: Loss of a generator followed by a System adjustment followed by the loss of a monopolar DC line	☐Agree. ☐Do not agree.	
Q28. P4-3: Loss of a generator followed by System adjustment followed by loss of a Transmission circuit	☐Agree. ☐Do not agree.	
Q29. P4-4: Loss of a generator followed by System adjustment followed by loss of a transformer	☐Agree. ☐Do not agree.	

The performance requirement for the following event may be considered less stringent than the existing TPL Standards — P2-3: Loss of a single pole of a DC line. Interruption of firm transactions (without Loss of firm Load) if the transaction is dependent on the faulted DC line is now allowed for this initiating event/Contingency.

Q30. Do you agree that interruption of any firm transfers that are dependent on the outaged DC line that is taken out of service should be permitted?

Yes ☐ No ☐
Comment:

E. Stability

Q31. The proposed standard is based on an assumption that steady state analysis and stability analysis are different from each other and that therefore, two tables of Contingencies and performance requirements were needed. It is also based on an assumption that stability study requirements should be clearly separated from the steady state study requirements. Do you agree with the action taken in separating stability analysis from steady state analysis? If not, please explain.

Yes ☐ No ☐
Comment:

[1] System adjustment can be manual or automatic

Q32. The SDT has added requirements for plant stability studies and has drawn a distinction in these studies from System stability studies. Do you agree with this approach? If not, please explain.

Yes ☐ No ☐
Comment:

Q33. The existing TPL-004-0 standard has a requirement to consider the Loss of all generating units at a plant, but it was not clear whether this requirement should apply to stability studies. The SDT did not include this requirement in the stability table, because it is hard to envision a condition when all units would trip simultaneously within the timeframe of a stability simulation. Do you think this condition should be required in stability analysis of extreme events? If not, please explain.

Yes ☐ No ☐
Comment:

Q34. There are an increasing number of events with slow voltage recovery after faults on the Transmission System. The dynamic behavior of induction motor loads is a major factor in this phenomenon. The proposed standard therefore requires that the load model for stability studies of peak Load conditions include the dynamic effects of induction motors. Do you agree with this requirement? If not, please explain?

Yes ☐ No ☐
Comment:

Q35. What type of manual or automatic adjustments of generators should be allowed for single and multiple Contingencies?

Comment:

F. Generation Runback and Tripping

The SDT has discussed the automatic and manual readjustments of generators that should be permissible for single contingencies and multiple contingencies. The existing TPL-001-0 through TPL-004-0 standards through footnote (a) of Table I could include emergency ratings applicable for short durations as required to permit operating steps necessary to maintain system control. The footnote is silent about allowable generation adjustments in response to the Category B events. However, it does indicate that system adjustments are permitted to prepare for the next Contingency. These system adjustments could include manual or automatic adjustments involving generation.

The SDT has learned that many transmission owners use System Protection Systems (SPS) or Remedial Action Schemes (RAS) to trip generation for single and multiple Contingency outage events to prevent overloads, low voltage, and instability in the Interconnected Transmission network for N-1 and N-2 events. In some cases, the RAS are used to prepare for the next Contingency; but in some cases, the RAS are used to simultaneously avoid exceeding emergency ratings.

Q36. The proposed standard allows generation runback after the disturbance that causes a single Contingency (or due to a single Contingency outage) to move the Interconnected Transmission System from an emergency state (within emergency ratings) to a normal state (within normal ratings), assuming that the disturbance does not result in instability? Do you agree? If not, please explain.

Yes ☐ No ☐
Comment:

Q37. Since emergency ratings are thermal ratings, should this standard allow an automatic generation runback scheme (that is initiated immediately after the disturbance causing the single Contingency) to prevent thermal overloads (assuming that the disturbance does not result in instability)? If yes, what are the conditions that must be met in order to allow such a runback scheme to meet the System performance criteria for single Contingencies? Please explain the reason for your answer.

Yes ☐ No ☐
Comment:

The standard drafting team has considered that RAS or SPS may be allowable under certain situations for single Contingencies, but proposes that their use should be limited.

Q38. Do you agree that RAS or SPS may be allowed for single Contingencies? If not, please explain.

Yes ☐ No ☐
Comment:

Q39. Please describe the limitations that you believe should be placed on the use of RAS or SPS for single Contingency events.

Comment:

Q40. When RAS or SPS are allowed, what conditions should be met when these systems are used in system adjustments to meet performance requirements?

Comment:

G. General Questions

Q41. If you are aware of any regional variances that would be required as a result of these standards, please identify them here.

Yes ☐ No ☐
Comment:

Q42. If you are aware of any conflicts between the proposed standards and any regulatory function, rule order, tariff, rate schedule, legislative requirement or agreement, please identify them here.

Yes ☐ No ☐
Comment:

Q43. Do you have any other questions or concerns with the proposed standard that have not been addressed? If yes, please explain.

Yes ☒ No ☐

Comment: R 2.5.1 and R 4.6 require plant stability studies for all generators greater than 20 MVA for changes in excitation system or PSS addition. Generally plant stability is a problem only for large plants with large generators. Changes in the excitation system of a small generator or PSS addition does not significantly impact the plant stability. In fact, in most cases it improves the plant stability. When an excitation system or a PSS is commissioned in the field, part of the commissioning tests ensure that turbine-generator is stable and that the performance of the excitation system and PSS are acceptable. If an excitation system change or PSS addition is causing a plant stability problem in simulation, it is generally a data issue and can be best handled in MOD standards. Requiring stability studies to be redone does not in any way contribute to the system reliability. There are hundreds of old generators in the US which are going through excitation system retrofits in a given year. Requiring a stability study for each change would add additional study burden without any value to the system. This is unnecessary work with little consequence on the system performance or reliability.

Note: We have additional comments on these standards but they have been covered by comments from WECC. We fully support all of those comments.

NERC
NORTH AMERICAN ELECTRIC RELIABILITY CORPORATION

Comment Form for First Draft of TPL-001-1 — Transmission System Planning Performance Requirements

Please use this form to submit comments on the proposed draft of TPL-001-1. Comments must be submitted by **Friday, October 26, 2007**. You may submit the completed form by e-mail to sarcomm@nerc.net with the words "TPL-001 Draft 1" in the subject line. If you have questions please contact Ed Dobrowolski at ed.dobrowolksi@nerc.net or by telephone at 609-947-3673.

Individual Commenter Information **(Complete this page for comments from one organization or individual.)**		
Name:		
Organization:		
Telephone:		
E-mail:		
NERC Region (check all Regions in which your company operates)		**Registered Ballot Body Segment (check all industry segments in which your company is registered)**
☐ **ERCOT**	☐	1 — Transmission Owners
☐ **FRCC**	☐	2 — RTOs and ISOs
☐ **MRO**	☐	3 — Load-serving Entities
☐ **NPCC**	☐	4 — Transmission-dependent Utilities
☐ **RFC**	☐	5 — Electric Generators
☐ **SERC**	☐	6 — Electricity Brokers, Aggregators, and Marketers
☐ **SPP**	☐	7 — Large Electricity End Users
☐ **WECC**	☐	8 — Small Electricity End Users
☐ **NA – Not Applicable**	☐	9 — Federal, State, Provincial Regulatory or other Government Entities
	☐	10 — Regional Reliability Organizations and Regional Entities

Group Comments (Complete this page if comments are from a group.)

Group Name: **Boneville Power Administration**

Lead Contact: **Chuck Matthews**

Contact Organization: **Transmission Planning**

Contact Segment: **Transmission Owners**

Contact Telephone: **360-418-8414**

Contact E-mail: **cematthews@bpa.gov**

Additional Member Name	Additional Member Organization	Region*	Segment*
Berhanu Tesema	BPA, Transmission Planning	**WECC**	1
Kendall Rydell	BPA, Transmission Planning	WECC	1
Kyle Kohne	BPA, Transmission Planning	WECC	1
Melvin Rodrigues	BPA, Transmission Planning	WECC	1

*If more than one Region or Segment applies, please list all that apply. Regional acronyms and segment numbers are shown on prior page.

Background

The purpose of this standard is to establish Transmission System planning performance requirements within the planning horizon to develop a Bulk Electric System that will operate reliably over a broad spectrum of System conditions and following a wide range of probable Contingencies. This standard will replace TPL-001-0, TPL-002-0, TPL-003-0, and TPL-004-0. The standard drafting team has not yet addressed TPL-005-0 and TPL-006-0, but will address these two standards during the next phase of the drafting process.

The major objectives of the standard drafting team are to:

1) Ensure the standard is complete and the requirements are set at an appropriate level to ensure reliability (Not Least Common Denominator)
2) Ensure that the standard is enforceable by having clearly defined requirements with unambiguous language
3) Address the issues raised by FERC Order 693, 890, and other applicable orders
4) Address the issues raised in the original Standards Authorization Request (SAR) and the Supplemental SAR.

The standard drafting team did not attempt to edit the existing standards but rather chose to write one standard that addresses all aspects of transmission planning in the existing TPL-001-0, TPL-002-0, TPL-003-0, and TPL-004-0. The standard drafting team organized the new standard in the following sections:

R1 – Modeling requirements
R2 – Assessment and Corrective Plan requirements
R3 – Steady State Analysis requirements
R4 – Stability Analysis requirements
R5 – Coordination requirements

The standard drafting team determined that the requirements and analysis for Steady State are different from those for stability. As such, the standard drafting team separated the analysis requirements and created two performance requirement tables.

The standard drafting team recognizes that this draft standard is a starting point for industry input into the standard and that there is still a lot of work required to complete the process. The standard drafting team has made many changes to clarify requirements, add requirements, and make some of the performance requirements stricter. The standard drafting team has not addressed Measures, Risk Factors, Violation Severity Factors, or Time Horizons at this time. These will be addressed when the standard drafting team has better defined the requirements of the standard.

For questions where you agree with the standard drafting team, please state that you agree and if available, please provide supporting documentation. If you disagree with the standard drafting team, please explain why you disagree and provide data to support your position, such as outage data or analysis. If you believe that we have made a performance requirement too strict please provide supporting documentation. If applicable, please include the approximate cost in man-hours for additional studies and/or cost in $Millions for additional transmission investment to meet the new requirements or the stricter requirements. If you believe that the standard should be stricter, please provide the rationale along with any supporting data, including existing practices, cost estimates or additional analysis.

To improve the standard, the standard drafting team would appreciate responses to as many of these questions as you can answer.

A. New Definitions

Many of the concerns about the existing TPL standards come from the fact that a number of generally understood concepts are embedded in undefined terms, tables, and footnotes. To clarify some of these concerns, the standard drafting team is proposing new definitions. Please indicate whether you agree with the following proposed definitions and provide proposed changes to the definitions if you disagree:

Definition	**Agree or Disagree**
Q1. **Base Case**: Computer representation of the projected initial or starting Transmission System conditions for a specific point in time. Each base case reflects the forecasted Load at each bus (or node) on the interconnected Transmission System, the transmission facilities which deliver the generation and reactive resources to the connected Load, and the generation dispatch including firm transaction obligations assumed to supply the connected Load. The models also reflect facility ratings in accordance with FAC-008 & FAC-009.	☒Agree. ☒Do not agree.
Q1. **Comment: Support comments submitted by WECC.**	
Q2. **Consequential Load Loss:** Load that is no longer served because it is directly connected to an element(s) that is removed from service due to fault clearing action or mis-operation.	☒Agree. ☒Do not agree.
Q2. **Comment: Support comments submitted by WECC. The definition needs to consider loads that are tripped sympathetically that may not be directly connected to the element that is removed from service for fault clearing.**	
Q3. **Extreme Events:** Events which are more severe than Planning Events and have a low probability of occurrence.	☒Agree. ☒Do not agree.
Q3. **Comment:**	
Q4. **Long-Term Transmission Planning Horizon:** Transmission planning period that covers years six through ten or beyond.	☒Agree. ☐Do not agree.
Q4. **Comment:**	
Q5. **Near-Term Transmission Planning Horizon:** Transmission planning period that covers years One through five.	☒Agree. ☐Do not agree.
Q5. **Comment:**	
Q6. **Non-Consequential Load Loss:** Load loss other than Consequential Load Loss. For example, Load loss that occurs through manual (operator initiated) or automatic operations such as under-voltage Load shedding, under-frequency Load shedding, or Special Protection Systems.	☐Agree. ☒Do not agree.
Q6. **Comment: Support comments submitted by WECC.**	

Q7. **Planning Assessment:** Documented evaluation of future Bulk Electric System needs by the use of performance studies that cover a range of assumptions regarding system conditions, time frames, future plans including capital reinforcements and operating procedures and other factors, such as asset conditions and age.	☒Agree. ☒Do not agree.
Q7. **Comment: Support comments submitted by WECC.**	
Q8. **Planning Events:** Events which require Transmission system performance requirements to be met.	☒Agree. ☐Do not agree.
Q8. **Comment:**	
Q9. **Plant Stability Study:** Study of an individual plant's Stability for various Contingencies in the vicinity of the plant; concerned with the effect on the System of the generating units' loss of synchronism and the damping of the generating units' power oscillations.	☐Agree. ☒Do not agree.
Q9. **Comment: Support comments submitted by WECC. Plant Stability is a subset of System Stability.**	
Q10. **System Stability Study:** Study of the System or portions of the System to ensure that angular Stability is maintained, inter-area power oscillations are damped, and voltages during the dynamic simulation stay within acceptable performance limits.	☒Agree. ☐Do not agree.
Q10. **Comment:**	
Q11. **Year One:** The first year that a Transmission Planner is responsible for studying. This is further defined as the planning window that begins the next calendar year from the time the Transmission Planner submits their annual studies. Analysis conducted for time horizons within the calendar year from the study publication are assumed to be conducted under the auspices of Operations Planning.	☒Agree. ☐Do not agree.
Q11. **Comment:**	

B. Sensitivity Studies

The draft planning standard includes the requirement, as specified in FERC Order 693, that planning decisions be based on a portfolio of analyses. In section 12.a.ii "Sensitivity studies and critical system conditions" FERC provided direction to consider a full range of variables considered to be significant that need to be assessed and documentation provided that explains the rationale for the selection of variables assessed.

In addition to the firm obligation scenario, the portfolio of analyses should be supplemented to include information from sensitivity analysis. The sensitivity analysis should be developed using additional cases that simulate reasonably stressed system conditions. The standard drafting team has included several parameters that can be varied to create the requisite sensitivity case(s). The draft standards specify that the sensitivities reflect one or more of the following conditions and that documentation be provided explaining the rationale for selecting the sensitivity(ies) employed. The parameters that should be varied include:

- Higher or lower Load forecasts from the Base Case with variability of Load/demand and Load power factors due to season, weather, or time of day.

- Modification of expected transfers.
- Unavailability of long lead time facilities.
- Variability and outages of Reactive Resources.
- Generation additions, retirements, or other dispatch scenarios.
- Decreased effectiveness of controllable Loads and Demand Side Management.
- Modification of planned Transmission outages

To help focus industry discussion, please respond to the questions below:

Q12. Should the standard provide more specific direction regarding the number of sensitivity cases that need to be developed?

Yes ☐ No ☒
Comment: Support comments submitted by WECC. Required sensitivities are different for different areas of the system and for the conditions being studied. The TP or PA are the most familiar with the system and would be the best one's to determine the required sensitivities.

Q13. Should the standard specify the required changes, such as changes in expected transfers, load forecasts, generation patterns, etc., from the study case to be considered a "reasonably stressed" case?

Yes ☐ No ☒
Comment: Support comments submitted by WECC.

Q14. The SDT proposes to require the use of sensitivity studies for Near-Term Transmission System Planning Horizon stability analysis. Do you concur with the use of sensitivity analysis in dynamic studies?

Yes ☒ No ☒
Comment: Support comments submitted by WECC.

Q15. The draft TPL standard does not require the use of sensitivity studies for the Long-Term Transmission System Planning Horizon (year six and beyond) studies. Do you concur with this approach or should there be some level of sensitivity analysis required for the long-term period?

Yes ☒ No ☐
Comment:

C. Corrective Action Plans

Requirement R2.7 of the standard states that when analysis shows that the performance requirements in Table 1 and Table 2 are not fully met, a Corrective Action Plan that utilizes all or some of the Transmission System enhancements, generation additions, DSM, new technologies and Operating Procedures shall be included in the Planning Assessment. This Corrective Action Plan should ensure that upon its implementation the identified system deficiencies will be corrected so that the performance requirements in Table 1 and Table 2 will be met. Furthermore, studies included in the Planning Assessment should demonstrate that this is indeed the case.

Q16. Requirement R2.7.1: Such Corrective Action Plans shall "Identify System deficiencies and the associated actions needed to achieve required System performance including Transmission and generation improvements, DSM, new technologies, or

Operating Procedures including the duration of Interim Operating Procedures". System deficiencies may be corrected using an integrated plan, i.e., an optimal mix of Transmission, generation, DSM and Operating Procedures. Should DSM be considered in conjunction with other measures in developing Corrective Action Plans? If yes, please comment on how the impact of DSM should be included.

Yes ☒ No ☒
Comment: Support comments submitted by WECC. There is a concern with using DSM as a corrective action if it is not directly controlled by the utility and the benefits do not materialize as planned.

Q17. Requirement R2.7.2: Such Corrective Action Plans shall "Be added to study cases and the cases re-tested to show that the System with planned additions meets the performance requirements in the tables". Should new studies, including the facilities comprising the Corrective Action Plan, be performed to assess System normal performance and Contingency response for conditions that previously resulted in the System deficiencies (without the planned additions) and also demonstrate that the changes would not result in inadvertent negative impacts on the System. If you "agree", please comment on how a study area should be determined.

Yes ☐ No ☒
Comment: Support comments submitted by WECC.

Q18. Requirement R2.7.3: The standard calls for a differentiation between committed and proposed projects. Do you agree that they should be treated separately? If not, please state why not.

Yes ☐ No ☒
Comment: Support comments submitted by WECC. Also, one reason not to differentiate between committed and proposed projects is that regardless of whether a project is committed or not in a future case, the committment to implement a Corrective Action Plan becomes mandatory as time moves closer to the need date due to required system performance.

Q19. Requirement R2.7.4: For such Corrective Action Plans "Committed projects shall not be removed without documentation to show that the revised plan meets the performance requirements". Do you agree or disagree with this requirement? If you disagree, please explain why.

Yes ☐ No ☒
Comment: See response to Q18.

D. Performance Requirements

The proposed revised planning standard (TPL-001-1) incorporates a number of changes in requirements as compared to the current planning standards (TPL-001-0 through TPL-004-0), which it is expected to replace. Among other things these changes are intended to clarify the standard, address issues described by FERC, and, in particular, to "raise the bar." Strengthening the planning standards in selected areas is necessary to maintain a reliable Bulk Electric System that is up to the challenges of the 21st Century. In proposing the requirements in this draft, the standard drafting team attempted to balance the value of increased reliability against any potential increase in work and costs to meet the new proposed standard.

The standard drafting team is seeking input from the industry to determine whether a proper balance has been achieved. The areas where material changes are proposed in this draft are enumerated below, and questions are posed by the standard drafting team to obtain industry comment. In formulating your responses, please keep in mind that material changes in the final standard will be accompanied by a transition plan to provide for an orderly implementation of the final standard.

The performance requirements relative to Non-Consequential Loss of Load for the following events enumerated in the two tables can be considered more stringent than the existing TPL standards. Furthermore, the proposed standard is based on an assumption that performance requirements for EHV facilities should be more stringent than for lower voltage facilities.

Do you agree that Non-Consequential Loss of Load should not be permitted for the following events? If you disagree, please provide a reason for your disagreement.

Event	Agree or Disagree	Comment
Q20. P2-1: Loss of bus section (SLG for stability) above 300 kV	☐Agree. ☒Do not agree.	Support comments submitted by WECC.
Q21. P5-1: For facilities above 300 kV, loss of a Transmission circuit followed by System adjustment[1] followed by loss of another Transmission circuit	☐Agree. ☒Do not agree.	Support comments submitted by WECC.
Q22. P5-2: For facilities above 300 kV, loss of a Transmission circuit followed by System adjustment followed by loss of a transformer with low side voltage rating above 300 kV	☐Agree. ☒Do not agree.	Support comments submitted by WECC.
Q23. P5-3: For facilities above 300 kV, loss of a transformer with low side voltage rating above 300 kV followed by System adjustment followed by loss of another transformer	☐Agree. ☒Do not agree.	Support comments submitted by WECC.

[1]System adjustment can be manual or automatic.

The proposed standard is based on an assumption that performance requirements for non-bus tie EHV breakers should be distinguished from other breakers. Do you agree that Non-Consequential Loss of Load should not be permitted for this event?

Q24. Loss of non-bus tie breaker (above 300 kV) due to internal fault

Yes ☐ No ☒
Comment: Support comments submitted by WECC. The probability of loss of a breaker due to an internal fault is low and does not warrent precluding loss of load for this event.

The proposed standard is based on an assumption that performance requirements for non-bus tie EHV breakers should be distinguished from other breakers and that performance requirements for EHV facilities should be more stringent than for lower voltage facilities. Do you agree that Non-Consequential Loss of Load should not be permitted for this event?

Q25. P3-1: Loss of (SLG for stability) either a generator, a Transmission circuit, a transformer, or a bus and a stuck non-bus tie breaker (above 300 kV)

Yes ☐ No ☒
Comment: Support comments submitted by WECC.

The proposed standard is based on an assumption that the following events are relatively high probability events and, therefore, Non-Consequential Loss of Load should not be permitted. Do you agree? If you disagree, please provide a reason for your disagreement.

Event	Agree or Disagree	Comment
Q26. P4-1: Loss of a Generator followed by System adjustment[1] followed by loss of another Generator	☒Agree. ☐Do not agree.	
Q27. P4-2: Loss of a generator followed by a System adjustment followed by the loss of a monopolar DC line	☒Agree. ☐Do not agree.	
Q28. P4-3: Loss of a generator followed by System adjustment followed by loss of a Transmission circuit	☒Agree. ☐Do not agree.	
Q29. P4-4: Loss of a generator followed by System adjustment followed by loss of a transformer with low side voltage rating above 300 kV	☒Agree. ☐Do not agree.	

The performance requirement for the following event may be considered less stringent than the existing TPL Standards — P2-3: Loss of a single pole of a DC line. Interruption of firm transactions (without Loss of firm Load) if the transaction is dependent on the faulted DC line is now allowed for this initiating event/Contingency.

[1] System adjustment can be manual or automatic

Q30. Do you agree that interruption of any firm transfers that are dependent on the outaged DC line that is taken out of service should be permitted?

Yes ☒ No ☒
Comment: Support comments submitted by WECC.

E. Stability

Q31. The proposed standard is based on an assumption that steady state analysis and stability analysis are different from each other and that therefore, two tables of Contingencies and performance requirements were needed. It is also based on an assumption that stability study requirements should be clearly separated from the steady state study requirements. Do you agree with the action taken in separating stability analysis from steady state analysis? If not, please explain.

Yes ☒ No ☒
Comment: Support comments sent by WECC. There is a link between transient stability and steady state performance for a given event since they model serial time frames for the event.

Q32. The SDT has added requirements for plant stability studies and has drawn a distinction in these studies from System stability studies. Do you agree with this approach? If not, please explain.

Yes ☐ No ☒
Comment: Support comments sent by WECC.

Q33. The existing TPL-004-0 standard has a requirement to consider the Loss of all generating units at a plant, but it was not clear whether this requirement should apply to stability studies. The SDT did not include this requirement in the stability table, because it is hard to envision a condition when all units would trip simultaneously within the timeframe of a stability simulation. Do you think this condition should be required in stability analysis of extreme events? If not, please explain.

Yes ☐ No ☒
Comment: Support comments sent by WECC..

Q34. There are an increasing number of events with slow voltage recovery after faults on the Transmission System. The dynamic behavior of induction motor loads is a major factor in this phenomenon. The proposed standard therefore requires that the load model for stability studies of peak Load conditions include the dynamic effects of induction motors. Do you agree with this requirement? If not, please explain?

Yes ☒ No ☒
Comment: Support comments sent by WECC.

Q35. What type of manual or automatic adjustments of generators should be allowed for single and multiple Contingencies?

Comment: Support comments sent by WECC.

F. Generation Runback and Tripping

The SDT has discussed the automatic and manual readjustments of generators that should be permissible for single contingencies and multiple contingencies. The existing TPL-001-0 through TPL-004-0 standards through footnote (a) of Table I could include emergency ratings applicable for short durations as required to permit operating steps necessary to maintain system control. The footnote is silent about allowable generation adjustments in response to the Category B events. However, it does indicate that system adjustments are permitted to prepare for the next Contingency. These system adjustments could include manual or automatic adjustments involving generation.

The SDT has learned that many transmission owners use System Protection Systems (SPS) or Remedial Action Schemes (RAS) to trip generation for single and multiple Contingency outage events to prevent overloads, low voltage, and instability in the Interconnected Transmission network for N-1 and N-2 events. In some cases, the RAS are used to prepare for the next Contingency; but in some cases, the RAS are used to simultaneously avoid exceeding emergency ratings.

Q36. The proposed standard allows generation runback after the disturbance that causes a single Contingency (or due to a single Contingency outage) to move the Interconnected Transmission System from an emergency state (within emergency ratings) to a normal state (within normal ratings), assuming that the disturbance does not result in instability? Do you agree? If not, please explain.

Yes ☒ No ☐
Comment:

Q37. Since emergency ratings are thermal ratings, should this standard allow an automatic generation runback scheme (that is initiated immediately after the disturbance causing the single Contingency) to prevent thermal overloads (assuming that the disturbance does not result in instability)? If yes, what are the conditions that must be met in order to allow such a runback scheme to meet the System performance criteria for single Contingencies? Please explain the reason for your answer.

Yes ☒ No ☐
Comment: Support comments sent by WECC.

The standard drafting team has considered that RAS or SPS may be allowable under certain situations for single Contingencies, but proposes that their use should be limited.

Q38. Do you agree that RAS or SPS may be allowed for single Contingencies? If not, please explain.

Yes ☒ No ☐
Comment:

Q39. Please describe the limitations that you believe should be placed on the use of RAS or SPS for single Contingency events.

Comment: Support comments sent by WECC.

Q40. When RAS or SPS are allowed, what conditions should be met when these systems are used in system adjustments to meet performance requirements?

Comment: Support comments sent by WECC.

G. General Questions

Q41. If you are aware of any regional variances that would be required as a result of these standards, please identify them here.

Yes ☒ No ☐
Comment: Support comments sent by WECC.

Q42. If you are aware of any conflicts between the proposed standards and any regulatory function, rule order, tariff, rate schedule, legislative requirement or agreement, please identify them here.

Yes ☒ No ☐
Comment: Support comments sent by WECC.

Q43. Do you have any other questions or concerns with the proposed standard that have not been addressed? If yes, please explain.

Yes ☒ No ☐
Comment: Support comments sent by WECC. In addition,BPA has the following comments:

1. R2.3.1 - The way the requirement is written sounds like the short circuit study should be run after changes are made to the BES. The study needs to be done sufficiently in advance to allow for needed equipment replacements as a result of the study. Also, "current" in the first senetence should be changed because it is confusing whether it refers to "present" or "amps".

2. There needs to be better definition what is meant by "bus tie breaker". It is assumed this includes both bus tie breakers between a main and auxiliary bus, as well as bus sectionalizing breakers between two main bus sections.

3. In general the table seems unnecessarily complex. It would appear to make more sense to group events by performance as done in the previous Table 1. Also, in general the resulting events for the element contingencies in the table should be compared and like events grouped together since they would be are modeled the same and show the same performance in powerflow studies.

5. P9.1 - It is recommended to exclude multiple circuits sharing a common structure for no more than three miles, rather than one mile. Our analysis shows river crossing systems can be up to three miles and it is impractical to plan for common corridor outages of up to this distance.

6. Planning event P9.6 is the same as P8.3 with the only difference being the restoration time.

7. Regarding extreme event descriptions:
- Item 3.a is not a Transmission Planning, but is relevent for Resource Adequacy.

- Item 3.b is an operational issue not relevent to Transmission Planning. Successful cyber attack would need to be defined. Also, how would the consequences of a successful cyber attack be predicted?
- Regarding item 3.c, generation capabilities should already be modeled in base cases within the planning horizon.
- Items 3.d through 3.f are not relevent to Transmission Planning. These are Resource Adequacy issues within a short term operational horizon.
- Items 3.e and 3.f appear redundant to items 3.c and 3.d.
- Item 3.g is not really a planning issue. The system should be designed to meet required performance for selected contingencies regardless of age or maintenance pratices.
- In general, the extreme events layed out in the previous Table 1 is a much more practical approach to planning the transmission system.

NERC
NORTH AMERICAN ELECTRIC RELIABILITY CORPORATION

Comment Form for First Draft of TPL-001-1 — Transmission System Planning Performance Requirements

Please use this form to submit comments on the proposed draft of TPL-001-1. Comments must be submitted by **Friday, October 26, 2007**. You may submit the completed form by e-mail to sarcomm@nerc.net with the words "TPL-001 Draft 1" in the subject line. If you have questions please contact Ed Dobrowolski at ed.dobrowolksi@nerc.net or by telephone at 609-947-3673.

Individual Commenter Information **(Complete this page for comments from one organization or individual.)**		
Name:	David Albers	
Organization:	Brazos Electric Cooperative	
Telephone:	254-750-6358	
E-mail:	dalbers@brazoselectric.com	
NERC Region (check all Regions in which your company operates)		**Registered Ballot Body Segment (check all industry segments in which your company is registered)**
☒ **ERCOT**	☒	1 — Transmission Owners
☐ **FRCC**	☐	2 — RTOs and ISOs
☐ **MRO**	☐	3 — Load-serving Entities
☐ **NPCC**	☐	4 — Transmission-dependent Utilities
☐ **RFC**	☐	5 — Electric Generators
☐ **SERC**	☐	6 — Electricity Brokers, Aggregators, and Marketers
☐ **SPP**	☐	7 — Large Electricity End Users
☐ **WECC**	☐	8 — Small Electricity End Users
☐ **NA – Not Applicable**	☐	9 — Federal, State, Provincial Regulatory or other Government Entities
	☐	10 — Regional Reliability Organizations and Regional Entities

Group Comments (Complete this page if comments are from a group.)

Group Name:

Lead Contact:

Contact Organization:

Contact Segment:

Contact Telephone:

Contact E-mail:

Additional Member Name	Additional Member Organization	Region*	Segment*

*If more than one Region or Segment applies, please list all that apply. Regional acronyms and segment numbers are shown on prior page.

Background

The purpose of this standard is to establish Transmission System planning performance requirements within the planning horizon to develop a Bulk Electric System that will operate reliably over a broad spectrum of System conditions and following a wide range of probable Contingencies. This standard will replace TPL-001-0, TPL-002-0, TPL-003-0, and TPL-004-0. The standard drafting team has not yet addressed TPL-005-0 and TPL-006-0, but will address these two standards during the next phase of the drafting process.

The major objectives of the standard drafting team are to:

1) Ensure the standard is complete and the requirements are set at an appropriate level to ensure reliability (Not Least Common Denominator)
2) Ensure that the standard is enforceable by having clearly defined requirements with unambiguous language
3) Address the issues raised by FERC Order 693, 890, and other applicable orders
4) Address the issues raised in the original Standards Authorization Request (SAR) and the Supplemental SAR.

The standard drafting team did not attempt to edit the existing standards but rather chose to write one standard that addresses all aspects of transmission planning in the existing TPL-001-0, TPL-002-0, TPL-003-0, and TPL-004-0. The standard drafting team organized the new standard in the following sections:

R1 – Modeling requirements
R2 – Assessment and Corrective Plan requirements
R3 – Steady State Analysis requirements
R4 – Stability Analysis requirements
R5 – Coordination requirements

The standard drafting team determined that the requirements and analysis for Steady State are different from those for stability. As such, the standard drafting team separated the analysis requirements and created two performance requirement tables.

The standard drafting team recognizes that this draft standard is a starting point for industry input into the standard and that there is still a lot of work required to complete the process. The standard drafting team has made many changes to clarify requirements, add requirements, and make some of the performance requirements stricter. The standard drafting team has not addressed Measures, Risk Factors, Violation Severity Factors, or Time Horizons at this time. These will be addressed when the standard drafting team has better defined the requirements of the standard.

For questions where you agree with the standard drafting team, please state that you agree and if available, please provide supporting documentation. If you disagree with the standard drafting team, please explain why you disagree and provide data to support your position, such as outage data or analysis. If you believe that we have made a performance requirement too strict please provide supporting documentation. If applicable, please include the approximate cost in man-hours for additional studies and/or cost in $Millions for additional transmission investment to meet the new requirements or the stricter requirements. If you believe that the standard should be stricter, please provide the rationale along with any supporting data, including existing practices, cost estimates or additional analysis.

To improve the standard, the standard drafting team would appreciate responses to as many of these questions as you can answer.

A. New Definitions

Many of the concerns about the existing TPL standards come from the fact that a number of generally understood concepts are embedded in undefined terms, tables, and footnotes. To clarify some of these concerns, the standard drafting team is proposing new definitions. Please indicate whether you agree with the following proposed definitions and provide proposed changes to the definitions if you disagree:

Definition	**Agree or Disagree**
Q1. **Base Case**: Computer representation of the projected initial or starting Transmission System conditions for a specific point in time. Each base case reflects the forecasted Load at each bus (or node) on the interconnected Transmission System, the transmission facilities which deliver the generation and reactive resources to the connected Load, and the generation dispatch including firm transaction obligations assumed to supply the connected Load. The models also reflect facility ratings in accordance with FAC-008 & FAC-009.	☒Agree. ☐Do not agree.
Q1. **Comment:**	
Q2. **Consequential Load Loss:** Load that is no longer served because it is directly connected to an element(s) that is removed from service due to fault clearing action or mis-operation.	☒Agree. ☐Do not agree.
Q2. **Comment:**	
Q3. **Extreme Events:** Events which are more severe than Planning Events and have a low probability of occurrence.	☒Agree. ☐Do not agree.
Q3. **Comment:**	
Q4. **Long-Term Transmission Planning Horizon:** Transmission planning period that covers years six through ten or beyond.	☒Agree. ☐Do not agree.
Q4. **Comment:**	
Q5. **Near-Term Transmission Planning Horizon:** Transmission planning period that covers years One through five.	☒Agree. ☐Do not agree.
Q5. **Comment:**	
Q6. **Non-Consequential Load Loss:** Load loss other than Consequential Load Loss. For example, Load loss that occurs through manual (operator initiated) or automatic operations such as under-voltage Load shedding, under-frequency Load shedding, or Special Protection Systems.	☒Agree. ☐Do not agree.
Q6. **Comment:**	
Q7. **Planning Assessment:** Documented evaluation of future Bulk Electric System needs by the use of performance studies that cover a range of assumptions regarding system conditions, time	☒Agree. ☐Do not

frames, future plans including capital reinforcements and operating procedures and other factors, such as asset conditions and age.	agree.
Q7. **Comment: Some discussion of what 'documented' means is needed each time it is mentioned. Is this some form of written report at all times or are 'saved' cases with contingency analysis sufficient at certain times or is it just a means to show that an 'assessment' was performed in some fashion.**	
Q8. **Planning Events:** Events which require Transmission system performance requirements to be met.	☒Agree. ☐Do not agree.
Q8. **Comment:**	
Q9. **Plant Stability Study:** Study of an individual plant's Stability for various Contingencies in the vicinity of the plant; concerned with the effect on the System of the generating units' loss of synchronism and the damping of the generating units' power oscillations.	☒Agree. ☐Do not agree.
Q9. **Comment:**	
Q10. **System Stability Study:** Study of the System or portions of the System to ensure that angular Stability is maintained, inter-area power oscillations are damped, and voltages during the dynamic simulation stay within acceptable performance limits.	☒Agree. ☐Do not agree.
Q10. **Comment:**	
Q11. **Year One:** The first year that a Transmission Planner is responsible for studying. This is further defined as the planning window that begins the next calendar year from the time the Transmission Planner submits their annual studies. Analysis conducted for time horizons within the calendar year from the study publication are assumed to be conducted under the auspices of Operations Planning.	☒Agree. ☐Do not agree.
Q11. **Comment: Planners do not 'submit' their studies to ERCOT for evaluation or other. Certain projects are submitted to the group for review and comment but not all studies are submitted as normal pratice in all cases. It may be better to use 'create their base cases' or simply 'performs their annual studies' instead of 'submit their annual studies'**	

B. Sensitivity Studies

The draft planning standard includes the requirement, as specified in FERC Order 693, that planning decisions be based on a portfolio of analyses. In section 12.a.ii "Sensitivity studies and critical system conditions" FERC provided direction to consider a full range of variables considered to be significant that need to be assessed and documentation provided that explains the rationale for the selection of variables assessed.

In addition to the firm obligation scenario, the portfolio of analyses should be supplemented to include information from sensitivity analysis. The sensitivity analysis should be developed using additional cases that simulate reasonably stressed system conditions. The standard drafting team has included several parameters that can be varied to create the requisite sensitivity case(s). The draft standards specify that the sensitivities reflect one or more of the following conditions and that documentation be provided explaining the

rationale for selecting the sensitivity(ies) employed. The parameters that should be varied include:

- Higher or lower Load forecasts from the Base Case with variability of Load/demand and Load power factors due to season, weather, or time of day.
- Modification of expected transfers.
- Unavailability of long lead time facilities.
- Variability and outages of Reactive Resources.
- Generation additions, retirements, or other dispatch scenarios.
- Decreased effectiveness of controllable Loads and Demand Side Management.
- Modification of planned Transmission outages

To help focus industry discussion, please respond to the questions below:

Q12. Should the standard provide more specific direction regarding the number of sensitivity cases that need to be developed?

Yes ☐ No ☒
Comment: More descretion should be allowed by the TO or planner in deciding the number of cases.

Q13. Should the standard specify the required changes, such as changes in expected transfers, load forecasts, generation patterns, etc., from the study case to be considered a "reasonably stressed" case?

Yes ☐ No ☒
Comment: Again, descretion should be allowed by the TO when selecting the criteria.

Q14. The SDT proposes to require the use of sensitivity studies for Near-Term Transmission System Planning Horizon stability analysis. Do you concur with the use of sensitivity analysis in dynamic studies?

Yes ☒ No ☐
Comment:

Q15. The draft TPL standard does not require the use of sensitivity studies for the Long-Term Transmission System Planning Horizon (year six and beyond) studies. Do you concur with this approach or should there be some level of sensitivity analysis required for the long-term period?

Yes ☒ No ☐
Comment: Longer term studies should be performed in the broadest sense, the cases are difficult to create accurately and a greater range of sensitivities do not improve the results.

C. Corrective Action Plans

Requirement R2.7 of the standard states that when analysis shows that the performance requirements in Table 1 and Table 2 are not fully met, a Corrective Action Plan that utilizes all or some of the Transmission System enhancements, generation additions, DSM, new technologies and Operating Procedures shall be included in the Planning Assessment. This Corrective Action Plan should ensure that upon its implementation the identified system deficiencies will be corrected so that the performance requirements in Table 1 and Table 2 will be met. Furthermore, studies included in the Planning Assessment should demonstrate that this is indeed the case.

Q16. Requirement R2.7.1: Such Corrective Action Plans shall "Identify System deficiencies and the associated actions needed to achieve required System performance including Transmission and generation improvements, DSM, new technologies, or Operating Procedures including the duration of Interim Operating Procedures". System deficiencies may be corrected using an integrated plan, i.e., an optimal mix of Transmission, generation, DSM and Operating Procedures. Should DSM be considered in conjunction with other measures in developing Corrective Action Plans? If yes, please comment on how the impact of DSM should be included.

Yes ☐ No ☒

Comment: If DSM is not viable due to market failings, then its inclusion in any CAPs provides an inaccurate soltion to achieve the required system performance.

Q17. Requirement R2.7.2: Such Corrective Action Plans shall "Be added to study cases and the cases re-tested to show that the System with planned additions meets the performance requirements in the tables". Should new studies, including the facilities comprising the Corrective Action Plan, be performed to assess System normal performance and Contingency response for conditions that previously resulted in the System deficiencies (without the planned additions) and also demonstrate that the changes would not result in inadvertent negative impacts on the System. If you "agree", please comment on how a study area should be determined.

Yes ☒ No ☐

Comment: It is difficult to understand what is meant by 'retested'. The evaluation of a CAP includes testing the recommended option to see how it performs and to insure that it does not create other problems. We assume this is what is meant by retested. In our evaluation we insure that it does not negatively impact all other facilities in the BES and if so what extent and if it is managable. We do not always create a separate 'study area' each time for each system improvement.

Q18. Requirement R2.7.3: The standard calls for a differentiation between committed and proposed projects. Do you agree that they should be treated separately? If not, please state why not.

Yes ☐ No ☒

Comment: What is the difference? We assume committed means you have begun work on the project and can no longer stop. It would seem this would need to be defined more clearly and it is probably different for each project or entity. Why is this differentiation even needed?

Q19. Requirement R2.7.4: For such Corrective Action Plans "Committed projects shall not be removed without documentation to show that the revised plan meets the performance requirements". Do you agree or disagree with this requirement? If you disagree, please explain why.

Yes ☐ No ☒

Comment: This seems like more documention is needed however if the new CAP analysis will suffice for documentation regarding removal of the 'committed project' then this is acceptable. However, that kind of makes having such a thing as a 'committed project' fairly useless if you can change it. This appears to just be more unnecessary documention.

D. Performance Requirements

The proposed revised planning standard (TPL-001-1) incorporates a number of changes in requirements as compared to the current planning standards (TPL-001-0 through TPL-004-0), which it is expected to replace. Among other things these changes are intended to

clarify the standard, address issues described by FERC, and, in particular, to "raise the bar." Strengthening the planning standards in selected areas is necessary to maintain a reliable Bulk Electric System that is up to the challenges of the 21st Century. In proposing the requirements in this draft, the standard drafting team attempted to balance the value of increased reliability against any potential increase in work and costs to meet the new proposed standard.

The standard drafting team is seeking input from the industry to determine whether a proper balance has been achieved. The areas where material changes are proposed in this draft are enumerated below, and questions are posed by the standard drafting team to obtain industry comment. In formulating your responses, please keep in mind that material changes in the final standard will be accompanied by a transition plan to provide for an orderly implementation of the final standard.

The performance requirements relative to Non-Consequential Loss of Load for the following events enumerated in the two tables can be considered more stringent than the existing TPL standards. Furthermore, the proposed standard is based on an assumption that performance requirements for EHV facilities should be more stringent than for lower voltage facilities.

Do you agree that Non-Consequential Loss of Load should not be permitted for the following events? If you disagree, please provide a reason for your disagreement.

Event	Agree or Disagree	Comment
Q20. P2-1: Loss of bus section (SLG for stability) above 300 kV	☒Agree. ☐Do not agree.	
Q21. P5-1: For facilities above 300 kV, loss of a Transmission circuit followed by System adjustment[1] followed by loss of another Transmission circuit	☒Agree. ☐Do not agree.	
Q22. P5-2: For facilities above 300 kV, loss of a Transmission circuit followed by System adjustment followed by loss of a transformer with low side voltage rating above 300 kV	☒Agree. ☐Do not agree.	
Q23. P5-3: For facilities above 300 kV, loss of a transformer with low side voltage rating above 300 kV followed by System adjustment followed by loss of another transformer	☒Agree. ☐Do not agree.	

[1]System adjustment can be manual or automatic.

The proposed standard is based on an assumption that performance requirements for non-bus tie EHV breakers should be distinguished from other breakers. Do you agree that Non-Consequential Loss of Load should not be permitted for this event?

Q24. Loss of non-bus tie breaker (above 300 kV) due to internal fault

Yes ☒ No ☐
Comment:

The proposed standard is based on an assumption that performance requirements for non-bus tie EHV breakers should be distinguished from other breakers and that performance requirements for EHV facilities should be more stringent than for lower voltage facilities. Do you agree that Non-Consequential Loss of Load should not be permitted for this event?

Q25. P3-1: Loss of (SLG for stability) either a generator, a Transmission circuit, a transformer, or a bus and a stuck non-bus tie breaker (above 300 kV)

Yes ☒ No ☐
Comment:

The proposed standard is based on an assumption that the following events are relatively high probability events and, therefore, Non-Consequential Loss of Load should not be permitted. Do you agree? If you disagree, please provide a reason for your disagreement.

Event	Agree or Disagree	Comment
Q26. P4-1: Loss of a Generator followed by System adjustment[1] followed by loss of another Generator	☐Agree. ☒Do not agree.	need a definition of generator. The entire train, largest unit at a site or other.
Q27. P4-2: Loss of a generator followed by a System adjustment followed by the loss of a monopolar DC line	☒Agree. ☐Do not agree.	
Q28. P4-3: Loss of a generator followed by System adjustment followed by loss of a Transmission circuit	☐Agree. ☒Do not agree.	need definition of system adjustment
Q29. P4-4: Loss of a generator followed by System adjustment followed by loss of a transformer with low side voltage rating above 300 kV	☐Agree. ☒Do not agree.	see above

[1] System adjustment can be manual or automatic

The performance requirement for the following event may be considered less stringent than the existing TPL Standards — P2-3: Loss of a single pole of a DC line. Interruption of firm transactions (without Loss of firm Load) if the transaction is dependent on the faulted DC line is now allowed for this initiating event/Contingency.

Q30. Do you agree that interruption of any firm transfers that are dependent on the outaged DC line that is taken out of service should be permitted?

Yes ☒ No ☐
Comment:

E. Stability

Q31. The proposed standard is based on an assumption that steady state analysis and stability analysis are different from each other and that therefore, two tables of Contingencies and performance requirements were needed. It is also based on an assumption that stability study requirements should be clearly separated from the steady state study requirements. Do you agree with the action taken in separating stability analysis from steady state analysis? If not, please explain.

Yes ☒ No ☐
Comment:

Q32. The SDT has added requirements for plant stability studies and has drawn a distinction in these studies from System stability studies. Do you agree with this approach? If not, please explain.

Yes ☒ No ☐
Comment:

Q33. The existing TPL-004-0 standard has a requirement to consider the Loss of all generating units at a plant, but it was not clear whether this requirement should apply to stability studies. The SDT did not include this requirement in the stability table, because it is hard to envision a condition when all units would trip simultaneously within the timeframe of a stability simulation. Do you think this condition should be required in stability analysis of extreme events? If not, please explain.

Yes ☐ No ☒
Comment:

Q34. There are an increasing number of events with slow voltage recovery after faults on the Transmission System. The dynamic behavior of induction motor loads is a major factor in this phenomenon. The proposed standard therefore requires that the load model for stability studies of peak Load conditions include the dynamic effects of induction motors. Do you agree with this requirement? If not, please explain?

Yes ☒ No ☐
Comment: However, acquiring load data may be difficult if not impossible and would require increased manpower. A more reasonable approach is to vary the load data to see the effects instead of wasting effort on load surveys.

Q35. What type of manual or automatic adjustments of generators should be allowed for single and multiple Contingencies?

Comment:

F. Generation Runback and Tripping

The SDT has discussed the automatic and manual readjustments of generators that should be permissible for single contingencies and multiple contingencies. The existing TPL-001-0 through TPL-004-0 standards through footnote (a) of Table I could include emergency ratings applicable for short durations as required to permit operating steps necessary to maintain system control. The footnote is silent about allowable generation adjustments in response to the Category B events. However, it does indicate that system adjustments are permitted to prepare for the next Contingency. These system adjustments could include manual or automatic adjustments involving generation.

The SDT has learned that many transmission owners use System Protection Systems (SPS) or Remedial Action Schemes (RAS) to trip generation for single and multiple Contingency outage events to prevent overloads, low voltage, and instability in the Interconnected Transmission network for N-1 and N-2 events. In some cases, the RAS are used to prepare for the next Contingency; but in some cases, the RAS are used to simultaneously avoid exceeding emergency ratings.

Q36. The proposed standard allows generation runback after the disturbance that causes a single Contingency (or due to a single Contingency outage) to move the Interconnected Transmission System from an emergency state (within emergency ratings) to a normal state (within normal ratings), assuming that the disturbance does not result in instability? Do you agree? If not, please explain.

Yes ☒ No ☐
Comment:

Q37. Since emergency ratings are thermal ratings, should this standard allow an automatic generation runback scheme (that is initiated immediately after the disturbance causing the single Contingency) to prevent thermal overloads (assuming that the disturbance does not result in instability)? If yes, what are the conditions that must be met in order to allow such a runback scheme to meet the System performance criteria for single Contingencies? Please explain the reason for your answer.

Yes ☒ No ☐
Comment: Can be including in a RAP or SPS with a long term CAP.

The standard drafting team has considered that RAS or SPS may be allowable under certain situations for single Contingencies, but proposes that their use should be limited.

Q38. Do you agree that RAS or SPS may be allowed for single Contingencies? If not, please explain.

Yes ☒ No ☐
Comment:

Q39. Please describe the limitations that you believe should be placed on the use of RAS or SPS for single Contingency events.

Comment: Taken directly from the ERCOT operating Guides for RAPs and SPSs:
Any RAP must meet the following requirements:
a. Coordinated and approved with the owners and operators of facilities included in the RAP.
b. Use is limited to the time required to construct replacement Transmission Facilities. However, the RAP will remain in effect, if replacement Transmission Facilities have been determined by the Control Area Authority to be impractical.
c. Complies with all applicable ERCOT and NERC requirements.
d. ERCOT develops and posts a methodology to include the RAP in the Total Transfer Capability (TTC) calculations, if appropriate.
e. Clearly defines and documents operator actions.
f. Includes the option for the transmission operator to override the procedures if the RAP will not improve system reliability.
g. Operators must be trained in RAP implementation.
For SPSs
13. Special Protection Systems (SPS) are protective relay systems designed to detect abnormal ERCOT System conditions and take pre-planned corrective action (other than the isolation of faulted elements) to provide acceptable ERCOT System performance. SPS actions include among others, changes in demand, generation, or system configuration to maintain system stability, acceptable voltages, or acceptable Facility loadings. An SPS does not include underfrequency or undervoltage load shedding. A Type 1 SPS is any SPS that has wide-area impact and specifically includes any SPS that a) is designed to alter generation output or otherwise constrain generation or imports over DC Ties, or b) is designed to open 345 kV transmission lines or other lines that interconnect TDSPs and impact transfer limits. Any SPS that has only local-area impact and involves only the Facilities of the owner-TDSP is a Type 2 SPS. The determination of whether an SPS is Type 1 or Type 2 will be made by ERCOT upon receipt of a description of the SPS from the SPS owner. Any SPS, whether Type 1 or Type 2, shall meet all requirements of NERC Standards relating to SPSs, and shall additionally meet the following ERCOT requirements:
- The SPS owner shall coordinate design and implementation of the SPS with the owners and operators of Facilities included in the SPS, including but not limited to Generation Resources and HVDC ties.
- The SPS shall be automatically armed when appropriate.
- The SPS shall not operate unnecessarily. To avoid unnecessary SPS operation, the SPS owner may provide a real-time status indication to the owner of any Generation Resource controlled by the SPS to show when the flow on one or more of the SPS's monitored facilities exceeds 90% of the flow necessary to arm the SPS. The cost necessary to provide such status indication shall be allocated as agreed by the SPS owner and the Generation Resource owner.
- The status indication of any automatic or manual arming of the SPS shall be provided as SCADA alarm inputs to the owners of any facility(ies) controlled by the SPS..
- When a Transmission Operator (TO) removes a SPS from service, the TO shall immediately notify ERCOT operations. ERCOT shall modify its reliability constraints to recognize the unavailability of the SPS and notify the Market. When a SPS is returned to service, the TO shall immediately notify ERCOT operations. ERCOT shall modify its reliability constraints to recognize the availability of the SPS.
14. The owner(s) of an existing, modified, or proposed SPS shall submit documentation of the SPS to ERCOT for review and compilation into an ERCOT SPS database. The documentation shall detail the design, operation, functional testing, and coordination of the SPS with other protection and control systems.

- ERCOT shall conduct a review of each proposed SPS and each proposed modification to an existing SPS. Additionally, it shall conduct a review of each existing SPS every five years, or sooner as required by changes in system conditions. Each review shall proceed according to a process and timetable documented in ERCOT Procedures and posted on the ERCOT website.
- For a proposed Type 1 SPS, the review must be completed before the SPS is placed in service, unless ERCOT specifically determines that exemption of the proposed SPS from the review completion requirement is warranted. The timing of placing the SPS into service must be coordinated with and approved by ERCOT. The implementation schedule must be confirmed through submission of a Service Request to ERCOT.
- For a proposed Type 2 SPS, the SPS may be placed into service before completion of the ERCOT review, with advanced prior notice to ERCOT in the form of a Service Request. The timing of placing the SPS into service must be coordinated with and approved by ERCOT. Existing SPSs that have already undergone at least one review shall remain in service during any subsequent review, and proposed modifications to existing SPSs may be implemented, upon notice to ERCOT, and approval of ERCOT before completion of the required ERCOT review.
- The process and schedule for placing an SPS into service must be consistent with documented ERCOT Procedures. The schedule must be coordinated among ERCOT and the owners of any facility(ies) controlled by the SPS, and shall provide sufficient time to perform any necessary testing prior to its being placed in service.
- An ERCOT SPS review shall verify that the SPS complies with ERCOT and NERC criteria and guides. The review shall evaluate and document the consequences of failure of a single component of the SPS, which would result in failure of the SPS to operate when required. The review shall also evaluate and document the consequences of misoperation, incorrect operation, or unintended operation of an SPS, when considered by itself, and without any other system contingency. If deficiencies are identified, a plan to correct the deficiencies shall be developed and implemented. The current review results shall be kept on file and supplied to NERC on request within thirty (30) days.
- As part of the ERCOT review and unless judged to be unnecessary by ERCOT, the appropriate ROS working groups such as the Steady State Working Group, the Dynamics Working Group, and/or the System Protection Working Group shall review the SPS and report any comments, questions, or issues to ERCOT for resolution. ERCOT may work with the owner(s) of facilities controlled by the SPS as necessary to address all issues.
- ERCOT shall develop a methodology to include the SPS in the Commercially Significant Constraint (CSC) limit calculations, if appropriate.
- ERCOT's review shall provide an opportunity for and include consideration of comments submitted by Market Participants affected by the SPS.

15. SPS owners shall notify ERCOT of all SPS operations. Documentation of SPS failures or misoperations shall be provided to ERCOT using the Relay Misoperation Report located in Section 6 of these Operating Guides. ERCOT shall conduct an analysis of all SPS operations, misoperations, and failures. If deficiencies are identified, a plan to correct the deficiencies shall be developed and implemented.
16. For each SPS, the owner shall either identify a preferred exit strategy or explain why no exit strategy is needed to ERCOT. This shall take place according to a timetable documented in ERCOT Procedures and posted on the ERCOT website. Once an exit strategy is complete and a SPS is no longer needed, the owner of an existing SPS shall notify ERCOT, using a Service Request, whenever the SPS is to be permanently disabled, and shall do so according to a timetable coordinated with and approved by ERCOT and the owners of all facilities controlled by the SPS

Q40. When RAS or SPS are allowed, what conditions should be met when these systems are used in system adjustments to meet performance requirements?

Comment: see above

G. General Questions

Q41. If you are aware of any regional variances that would be required as a result of these standards, please identify them here.

Yes ☐ No ☐
Comment:

Q42. If you are aware of any conflicts between the proposed standards and any regulatory function, rule order, tariff, rate schedule, legislative requirement or agreement, please identify them here.

Yes ☐ No ☐
Comment:

Q43. Do you have any other questions or concerns with the proposed standard that have not been addressed? If yes, please explain.

Yes ☒ No ☐
Comment: In R1.1.1. it appears the data that is being requested requires some amount of survey to determine the mix. This data would require a great deal of manpower and provide little more benefit than simply varying the data for comparison. However it does say in R1 upon request so does this allow the Planning Coordinator the descretion as needed on this type data?

R1.2, What is 'supporting rationale' and 'validated' mean? What are "stressed" System conditions? It appears (from 2.1.3) that stressed means various sensitivities.

R1.4, define 'long-term', generation outages are considered confidential information in ERCOT and thus are not available to all TOs, see next comment

R1.5 somewhere (perhaps in R1) the language should include "its respective portions of the data" or something to that effect meaning that a TO should not be held accountable for a GOs data. R1 appears to read that each entity shall provide the requested data. This seems to be intuitive BUT there are GOs that feel the data responsibility for the entire system belongs to the TOs and this leads to delays in getting accurate information if its uncertain as to who provides what data.

In R2 the language indicates the TP and PC shall each perform studies. There should be some clarity here. Also, it indicates that each shall assess "its portion of the BES". This needs to be clarified as well, obviously contingencies on other portions of the BES may cause issues within different portions. again, what constitutes documentation?

R2.1 it appears from the wording (shall "address" all five years) that the planning assessment must be done on all five years but 2.1.1 appears to state only 2 years are required. Please clarify.

R2.1.3 this seems to indicate that the studies mentioned in 2.1.1 and 2.1.2 should be "stressed" by the conditions listed below or just by one of them. We assume this means using only one is acceptable with proper documentation. Is that correct? Further, the sensitivities are ambiguous. How does one justify higher load levels or even know what they are without input from other TOs or the PC? How does one even guess at the other variables? what is meant by 'long lead time facility'? IF this only means for a TOs "portion of the BES" then it makes more sense but are these even valuable considering the wide range of data. The only variable that can be adjusted with any accuracy is the generation and ERCOT maintains the confidential data in this area. We assume R2.1 to mean you need to assess two peak summer cases, one off peak and then look at varying generation patterns on those cases. This appears to be the latitude given. Is this correct?

R2.2.1 are generation additions considered a "project"? If this means that a case must be created and assessed by all TOs for a known generation addition that is 12 years out, then this will lead to unnecessary studies. We assume this to mean, in the case of a generation addition, that the connecting TO should make an assessment once the PC considers this new addition to be valid for study. Is that correct?

R2.3 what is meant by "past studies" and how long must these be kept? Or is this at the TOs discretion?

R2.3.1 how does one know if the changes will result in increased fault currents until studies are done? This implies that studies SHALL be done for just about ANY change to the BES. There must be discretion allowed here. The word "shall" does not afford any discretion.

R2.4 the same comments for R2.1. apply here concerning years of study and defining 'stressed'. Additionally this type study seems to provide better results when done for the BES which would require input from all TOs thus a study based only on "its portion of the BES" would not have as much value unless you are referring to generation additions and localized studies.

R2.5.1 does not allow any discretion, for any and all all modifications, additions, etc…a study shall be performed. This is not needed in all cases.

R2.5.2 Wording such as "material changes" and "vicinity" are ambiguous terms without discretion being allowed the planner. Voltage level Line changes, amount of generation, something needs to be added to clarify.

R2.6.1 again, what are material changes? Topology changes and generation changes happen monthly, weekly. Are studies to be invalidated for each 'material change'?

R2.6.3 who determines if the study is no longer valid? The TO, PC or the agreement of both?

R2.7.1 what is a 'project initiation date' and why is this needed?

R2.7.2 Projects are added to cases after an analysis has been performed to see if the project is an acceptable alternative. In that analysis the project is 'retested' to see if it is effective. This is assume to be acceptable for the definition of 'retesting'.

R2.7.3 unsure what 'committed' means regarding projects nor understand the need to have this documented anywhere.

R3.2.2 what is 'relay loadability' and where would you note how it is supposed to be treated?

R3.3.1 how is this different than R3.1?

R3.3.2.1 why is there a need to know how much non-consequential load loss exists for each contingency and how can one predict the length of time this will last?

R3.3.2.2 Do we need to document the 'system adjustment' for each contingency?

R3.3.3 what is a severe impact and what is one that is less severe?

R3.4 what is the difference to 3.3.3? The definition given in the NERC Glossary from May of 2007 of Cascading Outage is still vague, it appears to allow the TP or PC the discretion to determine it based on studies. Is this the intent?

R3.5 what is the time limit for run-back?

R4.4 how can TPs identify what generation upgrades are needed (protection and control modifications)?

R4.5.2 whats the difference between this and 4.5.1?

R4.6 the generation levels could be too low for the studies to be useful, perhaps voltage levels should also be added or allow for TP/PC discretion.

R4.6.3 seems to allow some TP discretion in deciding which planning events are more severe but how does one know that without studies?

R5 this seems to have no direction for either party.

R6 is ambiguous

Table 1
terms such as voltage instability, cascading outage and uncontrolled islanding should be defined or allowed to be defined by the PC. If consequential load loss is allowed for all cases then why even mention it? Isn't this like saying if the line trips, it will be out of service? why would one want to document this amount, perhaps for some sort of ranking?
Planning events
what is a 'system adjustment'? if this means to manually redispatch the BES for each condition then these studies shown under P4 will take so long to complete that they will be invalid by the time they are done. In ERCOT, the economics of redispatch are not known to the TP thus this is done by the PC. an automatic computer simulated redispatch will possibly not have the same results. Define 'generator' for is this a single unit, the whole train, the largest unit or other?
For P6 events and above, if consequential load loss and non consequential are allowed, they why study these events? Do TPs plan and build transmission to eliminate the overloads for these events or just study them so that the results are known? Studying every possible event or combination does not make the studies better or provide a

higher insight to areas of concern. A number of the combinations have a low probability of occuring and performing the studies and analizing the results will be a manpower burden and provide no better clarity on needs of the system.

Table 2
The number of events to consider seems excessive although this is not our area of expertise. If each of these is to be run for each 'material change' in the BES then this list is excessive without more leeway or guidance provided.

NERC
NORTH AMERICAN ELECTRIC RELIABILITY CORPORATION

Comment Form for First Draft of TPL-001-1 — Transmission System Planning Performance Requirements

Please use this form to submit comments on the proposed draft of TPL-001-1. Comments must be submitted by **Friday, October 26, 2007**. You may submit the completed form by e-mail to sarcomm@nerc.net with the words "TPL-001 Draft 1" in the subject line. If you have questions please contact Ed Dobrowolski at ed.dobrowolksi@nerc.net or by telephone at 609-947-3673.

Individual Commenter Information **(Complete this page for comments from one organization or individual.)**		
Name:	Phil Park	
Organization:	BCTC (British Columbia Transmission Corporation)	
Telephone:	604 699 7340	
E-mail:	phil.park@bctc.com	
NERC Region (check all Regions in which your company operates)		**Registered Ballot Body Segment (check all industry segments in which your company is registered)**
☐ **ERCOT**	☐	1 — Transmission Owners
☐ **FRCC**	☒	2 — RTOs and ISOs
☐ **MRO**	☐	3 — Load-serving Entities
☐ **NPCC**	☐	4 — Transmission-dependent Utilities
☐ **RFC**	☐	5 — Electric Generators
☐ **SERC**	☐	6 — Electricity Brokers, Aggregators, and Marketers
☐ **SPP**	☐	7 — Large Electricity End Users
☒ **WECC**	☐	8 — Small Electricity End Users
☐ **NA – Not Applicable**	☐	9 — Federal, State, Provincial Regulatory or other Government Entities
	☐	10 — Regional Reliability Organizations and Regional Entities

Group Comments (Complete this page if comments are from a group.)

Group Name:

Lead Contact:

Contact Organization:

Contact Segment:

Contact Telephone:

Contact E-mail:

Additional Member Name	Additional Member Organization	Region*	Segment*

*If more than one Region or Segment applies, please list all that apply. Regional acronyms and segment numbers are shown on prior page.

Background

The purpose of this standard is to establish Transmission System planning performance requirements within the planning horizon to develop a Bulk Electric System that will operate reliably over a broad spectrum of System conditions and following a wide range of probable Contingencies. This standard will replace TPL-001-0, TPL-002-0, TPL-003-0, and TPL-004-0. The standard drafting team has not yet addressed TPL-005-0 and TPL-006-0, but will address these two standards during the next phase of the drafting process.

The major objectives of the standard drafting team are to:

1) Ensure the standard is complete and the requirements are set at an appropriate level to ensure reliability (Not Least Common Denominator)
2) Ensure that the standard is enforceable by having clearly defined requirements with unambiguous language
3) Address the issues raised by FERC Order 693, 890, and other applicable orders
4) Address the issues raised in the original Standards Authorization Request (SAR) and the Supplemental SAR.

The standard drafting team did not attempt to edit the existing standards but rather chose to write one standard that addresses all aspects of transmission planning in the existing TPL-001-0, TPL-002-0, TPL-003-0, and TPL-004-0. The standard drafting team organized the new standard in the following sections:

R1 – Modeling requirements
R2 – Assessment and Corrective Plan requirements
R3 – Steady State Analysis requirements
R4 – Stability Analysis requirements
R5 – Coordination requirements

The standard drafting team determined that the requirements and analysis for Steady State are different from those for stability. As such, the standard drafting team separated the analysis requirements and created two performance requirement tables.

The standard drafting team recognizes that this draft standard is a starting point for industry input into the standard and that there is still a lot of work required to complete the process. The standard drafting team has made many changes to clarify requirements, add requirements, and make some of the performance requirements stricter. The standard drafting team has not addressed Measures, Risk Factors, Violation Severity Factors, or Time Horizons at this time. These will be addressed when the standard drafting team has better defined the requirements of the standard.

For questions where you agree with the standard drafting team, please state that you agree and if available, please provide supporting documentation. If you disagree with the standard drafting team, please explain why you disagree and provide data to support your position, such as outage data or analysis. If you believe that we have made a performance requirement too strict please provide supporting documentation. If applicable, please include the approximate cost in man-hours for additional studies and/or cost in $Millions for additional transmission investment to meet the new requirements or the stricter requirements. If you believe that the standard should be stricter, please provide the rationale along with any supporting data, including existing practices, cost estimates or additional analysis.

To improve the standard, the standard drafting team would appreciate responses to as many of these questions as you can answer.

A. New Definitions

Many of the concerns about the existing TPL standards come from the fact that a number of generally understood concepts are embedded in undefined terms, tables, and footnotes. To clarify some of these concerns, the standard drafting team is proposing new definitions. Please indicate whether you agree with the following proposed definitions and provide proposed changes to the definitions if you disagree:

Definition	**Agree or Disagree**
Q1. **Base Case**: Computer representation of the projected initial or starting Transmission System conditions for a specific point in time. Each base case reflects the forecasted Load at each bus (or node) on the interconnected Transmission System, the transmission facilities which deliver the generation and reactive resources to the connected Load, and the generation dispatch including firm transaction obligations assumed to supply the connected Load. The models also reflect facility ratings in accordance with FAC-008 & FAC-009.	☒Agree. ☐Do not agree.
Q1. **Comment:**	
Q2. **Consequential Load Loss:** Load that is no longer served because it is directly connected to an element(s) that is removed from service due to fault clearing action or mis-operation.	☐Agree. ☒Do not agree.
Q2. **Comment: For the reasons discussed below, we do not agree with the proposed definition. To address our concerns and address the FERC staff concern regarding ambiguity, the proposed definition could be made acceptable to us by modifying it as follows:** **Load that is no longer served because it either (a) was supplied (wholly or partly) by an element(s) of a radial system or local network that was removed from service due to fault clearing action, was disconnected by controlled interruption to avoid overload of remaining elements of a radial system or local network, or protection or SPS/RAS mis-operation or (b) has dropped out or been tripped during a transient stability period, including an automatic reclosing period, due to a fault on the radial system or local network, including on branches not directly supplying the load.** **We also offer the following alternative:** **Resultant loss or controlled interruption of customers supplied by a radial system or local network, due to a fault on or loss of a facility in the radial system or local network.** **The definition proposed by the SDT removes the second sentence of footnote (b), as directed by FERC, and replaces the first sentence of footnote (b) with a new definition. We agree with the removal of the second sentence of footnote (b). However, we have a concern with this**	

definition replacing the first sentence of footnote (b). We believe that the existing first sentence is a more appropriate definition of consequential load loss and that the proposed definition is more stringent and will have unacceptable impacts on reliability and/or add transmission costs that cannot be justified.

The coining of the term "Consequential Load Loss" has been a significant improvement in terminology compared to our reference to footnote (b). However, FERC only used this phase descriptively and did not order NERC to reconsider what would be acceptable consequential load loss (i.e. revise the first sentence of footnote (b)). The definition appears to be based on an interpretation of the new term rather than defining what this term was coined to describe.

Order 693 requires that footnote (b) be clarified to not allow loss of firm load or firm transfers - i.e. delete the second sentence. Order 693 then refers to the remaining first sentence as consequential load loss. Order 693 does not address issues regarding whether this should further be restricted to only radial lines, not permitting load loss for outages on local networks. Nothing in the NOPR or the staff paper implies otherwise.

The staff paper discusses potential ambiguity regarding which single contingencies load interruption is permitted for. The definition attempts to address this by referring to “directly connected” load. However, this is now ambiguous as "directly connected" might be interpreted to mean only the facility that the load is physically connected to and excluding any upstream facility.

BCTC submits that the upstream facilities need to include both radial facilities and local networks. NERC has stated that looped configurations are key for reliable operation. We consider looped configurations and local networks to be the same thing. The proposed definition will make it more difficult to transition from a radial supply to a looped configuration. For radial loads connected by a single radial line, when the load exceeds the line capacity, the transmission owner has alternatives of upgrading the line, adding a second circuit, or converting to a local network by providing a loop from another supply. With the addition of a second circuit or conversion to local network, controlled load interruption may be necessary for loss of one circuit to avoid overload of the second line. Without the option of controlled load interruption, these alternatives will not provide N-1 capability for all loads they supply without addition of a third circuit. This will lead to a economic preference to upgrading of the existing circuit to meet criteria, thereby perpetuating the single radial line configuration. Other alternatives could include splitting the load between the lines or operating with one line out of service so that a single contingency does not overload the facilities remaining in service. However, the addition of a second circuit with controlled load interruption will provide a more reliable load serve than any of these alternatives, because under N-1 more load will remain continuously on line. We expect that the proposed definition will provide greater assurrance that existing local networks with N-1 capability will continue to have N-1 capability. However, we have concluded that the definition will introduce an additional unacceptable barrier to transition

from N-0 to N-1 supply and that this barrier is not acceptable. We believe that this barrier would be a more significant issue for improving the reliability of supply to all customers than the current situation of permitting some controlled load interruption on local networks. **Another issue that arises if local networks are excluded is load response during transient periods. Customers can connect voltage sensitive loads, such as large motors, on long weak systems. During the transient stability period, voltages can dip to below the ride through capability of the load. The fault need not be on the circuit directly supplying the customer, but may be downstream or on another branch facility. Automatic reclosing is often employed to shorten restoration times, but with the consequence of worsening the transient period. Customers have options to install different types of motors, motor controls, local voltage support to mitigate impacts of transient voltage swings, or simply restart motors following the disturbance. If transmission systems are required to ensure no loss of load during transient stability periods for external faults, a first course of action may be to remove automatic reclosing, which will reduce reliability. Alternatively, customer load connections may be denied or additional transmission circuits may be required, which can be costly compared to the customer load options.**	
Q3. **Extreme Events:** Events which are more severe than Planning Events and have a low probability of occurrence.	☐Agree. ☒Do not agree.
Q3. **Comment: Alternative wording proposed:** **Events which have a low probability of occurrence and are typically more severe than Planning Events.** **Explanation: The primary consideration is the probability of occurrence. We do not exclude events simply because they are more severe.**	
Q4. **Long-Term Transmission Planning Horizon:** Transmission planning period that covers years six through ten or beyond.	☒Agree. ☐Do not agree.
Q4. **Comment:**	
Q5. **Near-Term Transmission Planning Horizon:** Transmission planning period that covers years One through five.	☒Agree. ☐Do not agree.
Q5. **Comment:**	
Q6. **Non-Consequential Load Loss:** Load loss other than Consequential Load Loss. For example, Load loss that occurs through manual (operator initiated) or automatic operations such as under-voltage Load shedding, under-frequency Load shedding, or Special Protection Systems.	☐Agree. ☒Do not agree.
Q6. **Comment: See comments on Consequential Load Loss. Propose the following definition to clarify situations for which NCLL is acceptable:** **Load loss other than Consequential Load Loss to avoid cascading, voltage**	

stability, or blackout of the BES. For example, load loss that occurs through manual (operator initiated) or automatic operations such as under-voltage load shedding, under-frequency load shedding, or SPS/RAS.	
Q7. **Planning Assessment:** Documented evaluation of future Bulk Electric System needs by the use of performance studies that cover a range of assumptions regarding system conditions, time frames, future plans including capital reinforcements and operating procedures and other factors, such as asset conditions and age.	☐Agree. ☒Do not agree.
Q7. **Comment: Need to insert the word "supported", as below, and further refine, to clarify that the Planning Assessment is not just studies, but includes evaluation of contingencies to be run, sensitivities to consider, etc.** **Documented evaluation of future BES needs, measures to mitigate adverse reliability impacts, and assessments of residual impacts, supported by the use of performance studies ….**	
Q8. **Planning Events:** Events which require Transmission system performance requirements to be met.	☒Agree. ☐Do not agree.
Q8. **Comment:**	
Q9. **Plant Stability Study:** Study of an individual plant's Stability for various Contingencies in the vicinity of the plant; concerned with the effect on the System of the generating units' loss of synchronism and the damping of the generating units' power oscillations.	☒Agree. ☐Do not agree.
Q9. **Comment:**	
Q10. **System Stability Study:** Study of the System or portions of the System to ensure that angular Stability is maintained, inter-area power oscillations are damped, and voltages during the dynamic simulation stay within acceptable performance limits.	☒Agree. ☐Do not agree.
Q10. **Comment:**	
Q11. **Year One:** The first year that a Transmission Planner is responsible for studying. This is further defined as the planning window that begins the next calendar year from the time the Transmission Planner submits their annual studies. Analysis conducted for time horizons within the calendar year from the study publication are assumed to be conducted under the auspices of Operations Planning.	☐Agree. ☒Do not agree.
Q11. **Comment: One problem with this definition is that it assumes that the Transmission Planner submits annual studies. We need definitions for Operating Horizon and Planning Horizon. Then:** **Year One: The first year of the Planning Horizon.**	

B. Sensitivity Studies

The draft planning standard includes the requirement, as specified in FERC Order 693, that planning decisions be based on a portfolio of analyses. In section 12.a.ii "Sensitivity studies and critical system conditions" FERC provided direction to consider a full range of

variables considered to be significant that need to be assessed and documentation provided that explains the rationale for the selection of variables assessed.

In addition to the firm obligation scenario, the portfolio of analyses should be supplemented to include information from sensitivity analysis. The sensitivity analysis should be developed using additional cases that simulate reasonably stressed system conditions. The standard drafting team has included several parameters that can be varied to create the requisite sensitivity case(s). The draft standards specify that the sensitivities reflect one or more of the following conditions and that documentation be provided explaining the rationale for selecting the sensitivity(ies) employed. The parameters that should be varied include:

- Higher or lower Load forecasts from the Base Case with variability of Load/demand and Load power factors due to season, weather, or time of day.
- Modification of expected transfers.
- Unavailability of long lead time facilities.
- Variability and outages of Reactive Resources.
- Generation additions, retirements, or other dispatch scenarios.
- Decreased effectiveness of controllable Loads and Demand Side Management.
- Modification of planned Transmission outages

To help focus industry discussion, please respond to the questions below:

Q12. Should the standard provide more specific direction regarding the number of sensitivity cases that need to be developed?

Yes ☒ No ☒
Comment: The number of sensitivity cases should be tied to the number of resource plans and range of possible load growth forecast.

Q13. Should the standard specify the required changes, such as changes in expected transfers, load forecasts, generation patterns, etc., from the study case to be considered a "reasonably stressed" case?

Yes ☐ No ☒
Comment: Should be tied to the data provided under R1.

Q14. The SDT proposes to require the use of sensitivity studies for Near-Term Transmission System Planning Horizon stability analysis. Do you concur with the use of sensitivity analysis in dynamic studies?

Yes ☒ No ☐
Comment:

Q15. The draft TPL standard does not require the use of sensitivity studies for the Long-Term Transmission System Planning Horizon (year six and beyond) studies. Do you concur with this approach or should there be some level of sensitivity analysis required for the long-term period?

Yes ☒ No ☒
Comment: Long term needs to address sensitivities since it usually takes more than five years to contruct new transmission lines.

C. Corrective Action Plans

Requirement R2.7 of the standard states that when analysis shows that the performance requirements in Table 1 and Table 2 are not fully met, a Corrective Action Plan that utilizes all or some of the Transmission System enhancements, generation additions, DSM, new technologies and Operating Procedures shall be included in the Planning Assessment. This Corrective Action Plan should ensure that upon its implementation the identified system deficiencies will be corrected so that the performance requirements in Table 1 and Table 2 will be met. Furthermore, studies included in the Planning Assessment should demonstrate that this is indeed the case.

Q16. Requirement R2.7.1: Such Corrective Action Plans shall "Identify System deficiencies and the associated actions needed to achieve required System performance including Transmission and generation improvements, DSM, new technologies, or Operating Procedures including the duration of Interim Operating Procedures". System deficiencies may be corrected using an integrated plan, i.e., an optimal mix of Transmission, generation, DSM and Operating Procedures. Should DSM be considered in conjunction with other measures in developing Corrective Action Plans? If yes, please comment on how the impact of DSM should be included.

Yes ☒ No ☐
Comment: DSM should be a load reduction.

Q17. Requirement R2.7.2: Such Corrective Action Plans shall "Be added to study cases and the cases re-tested to show that the System with planned additions meets the performance requirements in the tables". Should new studies, including the facilities comprising the Corrective Action Plan, be performed to assess System normal performance and Contingency response for conditions that previously resulted in the System deficiencies (without the planned additions) and also demonstrate that the changes would not result in inadvertent negative impacts on the System. If you "agree", please comment on how a study area should be determined.

Yes ☒ No ☐
Comment: The Assessment should state how the study area was determined, including input from adjacent Planning Coordinators. WECC has processes for coordination of planning information so that Planning Coordinators are informed of plans in other areas.

Q18. Requirement R2.7.3: The standard calls for a differentiation between committed and proposed projects. Do you agree that they should be treated separately? If not, please state why not.

Yes ☒ No ☐
Comment:

Q19. Requirement R2.7.4: For such Corrective Action Plans "Committed projects shall not be removed without documentation to show that the revised plan meets the performance requirements". Do you agree or disagree with this requirement? If you disagree, please explain why.

Yes ☒ No ☒
Comment: We have a larger concern. If a project is Committed and is proceeding with construction, why would a transmission planner not consider this is in planning studies. Showing that a committed project is not needed and removing it from the plans, does not necessarily remove it from the future system. In addition to showing that the revised plan meets the performance requirements, the planner needs to include documentation to show that the Committed project has been cancelled.

D. Performance Requirements

The proposed revised planning standard (TPL-001-1) incorporates a number of changes in requirements as compared to the current planning standards (TPL-001-0 through TPL-004-0), which it is expected to replace. Among other things these changes are intended to clarify the standard, address issues described by FERC, and, in particular, to "raise the bar." Strengthening the planning standards in selected areas is necessary to maintain a reliable Bulk Electric System that is up to the challenges of the 21st Century. In proposing the requirements in this draft, the standard drafting team attempted to balance the value of increased reliability against any potential increase in work and costs to meet the new proposed standard.

The standard drafting team is seeking input from the industry to determine whether a proper balance has been achieved. The areas where material changes are proposed in this draft are enumerated below, and questions are posed by the standard drafting team to obtain industry comment. In formulating your responses, please keep in mind that material changes in the final standard will be accompanied by a transition plan to provide for an orderly implementation of the final standard.

The performance requirements relative to Non-Consequential Loss of Load for the following events enumerated in the two tables can be considered more stringent than the existing TPL standards. Furthermore, the proposed standard is based on an assumption that performance requirements for EHV facilities should be more stringent than for lower voltage facilities.

Do you agree that Non-Consequential Loss of Load should not be permitted for the following events? If you disagree, please provide a reason for your disagreement.

Event	Agree or Disagree	Comment
Q20. P2-1: Loss of bus section (SLG for stability) above 300 kV	☐Agree. ☒Do not agree.	Do not agree based on SDT definition for Consequential and Non-Consequential Load Loss. Will agree subject to proposed revisions to definitions of Consequential and Non-Consequential Load loss.
Q21. P5-1: For facilities above 300 kV, loss of a Transmission circuit followed by System adjustment[1] followed by loss of another Transmission circuit	☐Agree. ☒Do not agree.	Do not agree based on SDT definitions. Also do not agree for first outage being a forced outage. Will agree subject to above revisions to definitions of Consequential and Non-Consequential Load loss for the first outage being a planned outage but not a forced outage. To meet this requirement for forced outages, estimate that this change could cost $3 to 5 Billion.
Q22. P5-2: For facilities above 300 kV, loss of a Transmission circuit followed by System adjustment followed by loss of a transformer	☐Agree. ☒Do not agree.	Same comments as for Q21. We do not foresee any cost due to this standard at this time because we do not have any transformers with low side voltage rating above 300 kV.

with low side voltage rating above 300 kV		
Q23. P5-3: For facilities above 300 kV, loss of a transformer with low side voltage rating above 300 kV followed by System adjustment followed by loss of another transformer	☐Agree. ☒Do not agree.	Same comments as for Q21/22. Furthermore, a double transformer loss forced outage has a very low probability as transformers are very reliable. A more practical approach would be to use single phase transfomers and provide a spare phase.

[1]System adjustment can be manual or automatic.

The proposed standard is based on an assumption that performance requirements for non-bus tie EHV breakers should be distinguished from other breakers. Do you agree that Non-Consequential Loss of Load should not be permitted for this event?

Q24. Loss of non-bus tie breaker (above 300 kV) due to internal fault

Yes ☐ No ☒
Comment: Do not agree due to definitions of Consequential and Non-Consequential Load Loss. Can agree subject to the proposed revised definitions to address loss of load during the transient stability period. System is already planned to meet this requirement based on the first sentence of footnote (b).

The proposed standard is based on an assumption that performance requirements for non-bus tie EHV breakers should be distinguished from other breakers and that performance requirements for EHV facilities should be more stringent than for lower voltage facilities. Do you agree that Non-Consequential Loss of Load should not be permitted for this event?

Q25. P3-1: Loss of (SLG for stability) either a generator, a Transmission circuit, a transformer, or a bus and a stuck non-bus tie breaker (above 300 kV)

Yes ☐ No ☒
Comment: Do not agree due to definitions of Consequential and Non-Consequential Load Loss. Can agree subject to the proposed revised definitions to address loss of load during the transient stability period. System is already planned to meet this requirement based on the first sentence of footnote (b).

The proposed standard is based on an assumption that the following events are relatively high probability events and, therefore, Non-Consequential Loss of Load should not be permitted. Do you agree? If you disagree, please provide a reason for your disagreement.

Event	Agree or Disagree	Comment
Q26. P4-1: Loss of a Generator followed by System adjustment[1] followed by loss of another Generator	☐Agree. ☒Do not agree.	Do not agree due to the definition for Consequential Load Loss. Definition needs to include local networks for this contingency to be acceptable.
Q27. P4-2: Loss of a generator followed by a System adjustment followed	☐Agree. ☒Do not agree.	similar to Q26.

[1] System adjustment can be manual or automatic

by the loss of a monopolar DC line		
Q28. P4-3: Loss of a generator followed by System adjustment followed by loss of a Transmission circuit	☐Agree. ☒Do not agree.	Similar to Q26.
Q29. P4-4: Loss of a generator followed by System adjustment followed by loss of a transformer with low side voltage rating above 300 kV	☐Agree. ☒Do not agree.	Similar to Q26.

The performance requirement for the following event may be considered less stringent than the existing TPL Standards — P2-3: Loss of a single pole of a DC line. Interruption of firm transactions (without Loss of firm Load) if the transaction is dependent on the faulted DC line is now allowed for this initiating event/Contingency.

Q30. Do you agree that interruption of any firm transfers that are dependent on the outaged DC line that is taken out of service should be permitted?

Yes ☐ No ☒
Comment: Disagree with this unless AC lines are treated the same. There should be no distinction between AC and DC lines.

E. Stability

Q31. The proposed standard is based on an assumption that steady state analysis and stability analysis are different from each other and that therefore, two tables of Contingencies and performance requirements were needed. It is also based on an assumption that stability study requirements should be clearly separated from the steady state study requirements. Do you agree with the action taken in separating stability analysis from steady state analysis? If not, please explain.

Yes ☐ No ☒
Comment: Disagree with the assumption that steady state and stability analysis are different and should be separated. There are only minor differences between the tables and the reasons are not apparent. The separate tables appears to be unnecessary and is confusing, especially the same contingency numbering for both tables. Any contingency that must be studied in the stability period should also be considered in the post transient steady state period. Request that the SDT provide an explanation of their assumption.

Q32. The SDT has added requirements for plant stability studies and has drawn a distinction in these studies from System stability studies. Do you agree with this approach? If not, please explain.

Yes ☐ No ☒
Comment: Plant stability is a Generator Interconnection study, addressed by FAC-001. By including this requirement in TPL, costs may be transferred. TPL-001 need not distinguish between system stability and plant stability. For Planning Assessments, these are the same thing. Plant stability arises when doing generator interconnection.

Q33. The existing TPL-004-0 standard has a requirement to consider the Loss of all generating units at a plant, but it was not clear whether this requirement should apply to stability studies. The SDT did not include this requirement in the stability table, because it is hard to envision a condition when all units would trip simultaneously within the timeframe of a stability simulation. Do you think this condition should be required in stability analysis of extreme events? If not, please explain.

Yes ☐ No ☒
Comment: Stability should be treated the same as steady state. If there is a common mode event that could cause the loss of all generating units at a plant, all relevant simulations should be done. If a common mode contingency of all units at a generating plant is not relevant for stability, then it is not relevant as an extreme event for steady state either. However, operation with all units at a plant off line may be relevant as a sensitivity case for Planning Events. The Transmission Planner needs some lattitude to determine what needs to be considered under Extreme Events and the standards should not be overly perscriptive.

Q34. There are an increasing number of events with slow voltage recovery after faults on the Transmission System. The dynamic behavior of induction motor loads is a major factor in this phenomenon. The proposed standard therefore requires that the load model for stability studies of peak Load conditions include the dynamic effects of induction motors. Do you agree with this requirement? If not, please explain?

Yes ☒ No ☐
Comment:

Q35. What type of manual or automatic adjustments of generators should be allowed for single and multiple Contingencies?

Comment: No restrictions on adjustments that are practical and can be achieved within the timeframe required.

F. Generation Runback and Tripping

The SDT has discussed the automatic and manual readjustments of generators that should be permissible for single contingencies and multiple contingencies. The existing TPL-001-0 through TPL-004-0 standards through footnote (a) of Table I could include emergency ratings applicable for short durations as required to permit operating steps necessary to maintain system control. The footnote is silent about allowable generation adjustments in response to the Category B events. However, it does indicate that system adjustments are permitted to prepare for the next Contingency. These system adjustments could include manual or automatic adjustments involving generation.

The SDT has learned that many transmission owners use System Protection Systems (SPS) or Remedial Action Schemes (RAS) to trip generation for single and multiple Contingency outage events to prevent overloads, low voltage, and instability in the Interconnected Transmission network for N-1 and N-2 events. In some cases, the RAS are used to prepare for the next Contingency; but in some cases, the RAS are used to simultaneously avoid exceeding emergency ratings.

Q36. The proposed standard allows generation runback after the disturbance that causes a single Contingency (or due to a single Contingency outage) to move the Interconnected Transmission System from an emergency state (within emergency

ratings) to a normal state (within normal ratings), assuming that the disturbance does not result in instability? Do you agree? If not, please explain.

Yes ☐ No ☒
Comment: We do not accept R3.5, which does not limit runback to contingencies based on thermal limits, only that Facility Ratings are not exceeded. If an SOL is based on voltage stability (which is often studied in the post disturbance steady state), Facility Ratings may not be exceeded but runback may not be fast enough to avoid voltage instability. Furthermore, runback for single contingencies should be subject to any conditions that might apply to generator tripping for single contingencies.. See response to Question 39.

Q37. Since emergency ratings are thermal ratings, should this standard allow an automatic generation runback scheme (that is initiated immediately after the disturbance causing the single Contingency) to prevent thermal overloads (assuming that the disturbance does not result in instability)? If yes, what are the conditions that must be met in order to allow such a runback scheme to meet the System performance criteria for single Contingencies? Please explain the reason for your answer.

Yes ☒ No ☒
Comment: See our response to Question 36. In addition, since this runback is effectively a RAS/SPS with respect to protecting the transmission system from cascading, it must meet all the reliability requirements of a RAS.

The standard drafting team has considered that RAS or SPS may be allowable under certain situations for single Contingencies, but proposes that their use should be limited.

Q38. Do you agree that RAS or SPS may be allowed for single Contingencies? If not, please explain.

Yes ☒ No ☐
Comment:

Q39. Please describe the limitations that you believe should be placed on the use of RAS or SPS for single Contingency events.

Comment: RAS should be permitted when the system performance conforms with the performance requirements laid out in the tables. Generator tripping should be permitted for single contingency events.

R3.6 proposes to limit generator tripping for single contingencies except for certain conditions which are not listed. Without knowing what these conditions might be, we find ourselves speculating on what might be proposed. On the 10 October 2007 conference call, it was suggested that there are concerns regarding generator reserves and loss of reactive capability. We have some observations regarding these concerns. With respect to reserves, some concerns would also apply to runback, since units on runback could not also be on AGC and could not be reallocated to AGC until the transmission contingency is returned to service. There was also a concern regarding tripping of steam units and the delay in bringing them back on line. This is a resource adequacy issue that should be addressed with the customer, not a transmission reliability issue. Regarding the loss of reactive capability, this would be addressed by the post mitigation plan studies to demonstrate that the reactive reserves meet the requirements, whatever they are determined to be. We would generally expect that the reduction in MW transfers would reduce the need for reactive support, so the new condition might not require the reactive support. Nevertheless, the post mitigation

studies will address this. Therefore, we conclude that these concerns are not applicable to transmission planning standards.

BCTC plans and operates a transmission system that interconnects generation comprised of about 90% hydroelectric. Often the extreme generation patterns for which we consider generator tripping occur for a limited time period during the year at off peak. These would be during high runoff and/or light local load periods. For these conditions, there is typically plenty of other generation that can be used as reserves for generator tripping. BCTC currently strives to avoid use of RAS for N-1, especially on the 500 kV transmission system. However, for example, if avoiding generator tripping were to trigger the need for hundreds of km of 500 kV transmission line for an off peak operating condition or a low capacity factor or intermittent resource, we would likely consider RAS, especially for transmission radial to the generator. In the lower voltage systems we often have consequential loss of small generators and consider generator tripping for radial lines and local networks. In most cases, this generator loss is addressed through sensitivity studies and discussions with generator owners and transmission customers with respect to the costs they are willing to incur and what is required by Resource Planners to meet their planning criteria. Operating reserves requirements are also a consideration. Any loss of generation due to tripping or ramping that is less than the amount lost due to consequential loss should be acceptable without question.

In summary, we would be prepared to review and comment on a proposal from the SDT on limitations on generator tripping. BCTC suggests that the SDT list the limitations rather than the permitted conditions and that these limitations should also apply to generator ramping.

Q40. When RAS or SPS are allowed, what conditions should be met when these systems are used in system adjustments to meet performance requirements?

Comment: See Q39. Also, WECC RAS Reliability requirements must be met for new systems.

G. General Questions

Q41. If you are aware of any regional variances that would be required as a result of these standards, please identify them here.

Yes ☒ No ☐
Comment: WECC may require a regional difference for generator tripping depending on the conditions imposed in R3.6.1. Other regional variances would not necessarily be in the context of regional difference as defined in the Standards Manual, but rather exceptions for long weak systems for which it is not economic to meet criteria applicable to tightly interconnected systems.

Q42. If you are aware of any conflicts between the proposed standards and any regulatory function, rule order, tariff, rate schedule, legislative requirement or agreement, please identify them here.

Yes ☐ No ☒
Comment:

Q43. Do you have any other questions or concerns with the proposed standard that have not been addressed? If yes, please explain.

Yes ☒ No ☐
Comment:

1. We have some questions of clarification for the Standards Drafting Team, that may resolve some of our concerns. (i) Is it the intention of NERC that the more stringent performance requirements in this standard would be applicable for determining System Operating Limits before Transmission Owners are able to implement Corrective Action Plans? The BCTC system is part of the western interconnection and BCTC is a member of WECC. WECC members apply a principle that Planning Standards are also applicable for determining System Operating Limits. If the answer to this question is "no", then BCTC may be able to support some aspects of raising the bar, with the understanding that SOLs would be determined based on the performance standards that the system is planned to. (ii) Has the Standards Drafting Team considered how Transmission Planners will address discrepancies between Corrective Action Plans for this standard and the reality of what can be constructed due to regulatory approvals, siting problems, financing issues, etc.? For example, is it the intention that Transmission Planners should continue to study Corrective Action Plans to meet an N-1-1 Planning Event (e.g. P5-1) without generator tripping when the practical situation is that we may be fortunate to be able to build to meet N-1 with some generator tripping? We are concerned that if we cannot meet the performance requirement for P5-1 due to delay or denial, continuing to assess Corrective Action Plans to meet P5-1 does not provide much useful information compared to planning to meet a doable target. Item 2 below provides a proposal to address this.

2. There is always the possibility that a regulator may deny funding for a Corrective Action Plan or approve funding for a Corrective Action Plan that does not fully meet the performance standards, a siting process may delay or block a Corrective Action Plan, or some other process may frustrate the ability follow through with a Corrective Action Plan to meet NERC performance standards. To avoid the need for a Transmission Planner to continue to study Corrective Action Plans that cannot be implemented, we suggest adding the following Requirement R2.7.6: The Planning Assessment is not required to include a Corrective Action Plan and address the subsequent requirements (of R2.7) in cases that (a) an applicable regulatory agency has ordered that a Corrective Action Plan is not to proceed or that an alternative Corrective Action Plan that does not meet the performance standards is to be implement or (b) the Transmission Planner has documented evidence indicating that such an outcome is likely to occur. Other Requirements for Five and Ten year Assessments may also be exempted depending on the regulatory order. The Planning Assessment will include evidence of the order.

3. R3.3.3, R3.4, R4.5.1, R4.5.2 - A rationale for the selected contingencies should be sufficient. It should not be necessary to explain why the remaining contingencies would produce a less severe result.

4. Table 2, P1 should include shunt devices.

5. A definition or reference to a definition for Firm Load and Firm Transfers is required. The present situation is that these terms are "defined" as those loads and transfers that can be supplied while meeting Category B requirements. In other words, the standards

define the terms. The commercial uses of firm and non-firm may not be applicable and they actually mean non-recallable and recallable service, not directly related to system performance, but incorporating aspects of reservation times.

6. Extreme Events of Tables 1 and 2 should not be subject to the same study requirements as Planning Events. Table 1 Extreme Events need not be studied for both the Near Term and Long Term Horizon (ref. R3.4, R3, R2.1 and R2.2) and for all five years of the Near-Term Horizon (ref R3.4, R3, R2.1). Table 2 Extreme Events should not be required for all five years of the Near-Term Transmission Planning Horizon (ref. R4 and R2.4). When conditions warrant, only a single assessment representing a selected reasonable plannning horizon should be required, and an update required only when past studies are no longer representative. We are concerned that many of the proposed Table 1 Extreme Events (Item 3. a, c, d, e, f) are resource adequacy issues (we also observe that c and e appear to be identical). Transmission Planning Assessments of these events should be initiated at the request of Resource Planners. It should not be necessary for Transmission Planners to initiate and maintain current studies of these Extreme Events. We suggest that Extreme Events be removed from R3 and R4 and addressed in a separate Requirement.

7. The Purpose of this standard should be restated as: Establish requirements for Planning Assessments, including Corrective Action Plans, to be conducted over range of forecast conditions based on system planning performance requirements. Explanation: This revised wording more accurately describes the content of the standard. The Requirements of this standard are to perform Studies and Assessments. The performance tables are referenced by the Requirements and are supporting to the Requirements, but are not a "capital R" Requirement.

NERC
NORTH AMERICAN ELECTRIC RELIABILITY CORPORATION

Comment Form for First Draft of TPL-001-1 — Transmission System Planning Performance Requirements

Please use this form to submit comments on the proposed draft of TPL-001-1. Comments must be submitted by **Friday, October 26, 2007**. You may submit the completed form by e-mail to sarcomm@nerc.net with the words "TPL-001 Draft 1" in the subject line. If you have questions please contact Ed Dobrowolski at ed.dobrowolksi@nerc.net or by telephone at 609-947-3673.

Individual Commenter Information **(Complete this page for comments from one organization or individual.)**		
Name:	Charles Cumpton	
Organization:	California ISO	
Telephone:	916-608-7367 or 916-608-1100	
E-mail:	fcumpton@caiso.com	
NERC Region (check all Regions in which your company operates)		**Registered Ballot Body Segment (check all industry segments in which your company is registered)**
☐ **ERCOT**	☐	1 — Transmission Owners
☐ **FRCC**	☒	2 — RTOs and ISOs
☐ **MRO**	☐	3 — Load-serving Entities
☐ **NPCC**	☐	4 — Transmission-dependent Utilities
☐ **RFC**	☐	5 — Electric Generators
☐ **SERC**	☐	6 — Electricity Brokers, Aggregators, and Marketers
☐ **SPP**	☐	7 — Large Electricity End Users
☒ **WECC**	☐	8 — Small Electricity End Users
☐ **NA – Not Applicable**	☐	9 — Federal, State, Provincial Regulatory or other Government Entities
	☐	10 — Regional Reliability Organizations and Regional Entities

Group Comments (Complete this page if comments are from a group.)

Group Name:

Lead Contact:

Contact Organization:

Contact Segment:

Contact Telephone:

Contact E-mail:

Additional Member Name	Additional Member Organization	Region*	Segment*

*If more than one Region or Segment applies, please list all that apply. Regional acronyms and segment numbers are shown on prior page.

Background

The purpose of this standard is to establish Transmission System planning performance requirements within the planning horizon to develop a Bulk Electric System that will operate reliably over a broad spectrum of System conditions and following a wide range of probable Contingencies. This standard will replace TPL-001-0, TPL-002-0, TPL-003-0, and TPL-004-0. The standard drafting team has not yet addressed TPL-005-0 and TPL-006-0, but will address these two standards during the next phase of the drafting process.

The major objectives of the standard drafting team are to:

1) Ensure the standard is complete and the requirements are set at an appropriate level to ensure reliability (Not Least Common Denominator)
2) Ensure that the standard is enforceable by having clearly defined requirements with unambiguous language
3) Address the issues raised by FERC Order 693, 890, and other applicable orders
4) Address the issues raised in the original Standards Authorization Request (SAR) and the Supplemental SAR.

The standard drafting team did not attempt to edit the existing standards but rather chose to write one standard that addresses all aspects of transmission planning in the existing TPL-001-0, TPL-002-0, TPL-003-0, and TPL-004-0. The standard drafting team organized the new standard in the following sections:

R1 – Modeling requirements
R2 – Assessment and Corrective Plan requirements
R3 – Steady State Analysis requirements
R4 – Stability Analysis requirements
R5 – Coordination requirements

The standard drafting team determined that the requirements and analysis for Steady State are different from those for stability. As such, the standard drafting team separated the analysis requirements and created two performance requirement tables.

The standard drafting team recognizes that this draft standard is a starting point for industry input into the standard and that there is still a lot of work required to complete the process. The standard drafting team has made many changes to clarify requirements, add requirements, and make some of the performance requirements stricter. The standard drafting team has not addressed Measures, Risk Factors, Violation Severity Factors, or Time Horizons at this time. These will be addressed when the standard drafting team has better defined the requirements of the standard.

For questions where you agree with the standard drafting team, please state that you agree and if available, please provide supporting documentation. If you disagree with the standard drafting team, please explain why you disagree and provide data to support your position, such as outage data or analysis. If you believe that we have made a performance requirement too strict please provide supporting documentation. If applicable, please include the approximate cost in man-hours for additional studies and/or cost in $Millions for additional transmission investment to meet the new requirements or the stricter requirements. If you believe that the standard should be stricter, please provide the rationale along with any supporting data, including existing practices, cost estimates or additional analysis.

To improve the standard, the standard drafting team would appreciate responses to as many of these questions as you can answer.

A. New Definitions

Many of the concerns about the existing TPL standards come from the fact that a number of generally understood concepts are embedded in undefined terms, tables, and footnotes. To clarify some of these concerns, the standard drafting team is proposing new definitions. Please indicate whether you agree with the following proposed definitions and provide proposed changes to the definitions if you disagree:

Definition	**Agree or Disagree**
Q1. **Base Case**: Computer representation of the projected initial or starting Transmission System conditions for a specific point in time. Each base case reflects the forecasted Load at each bus (or node) on the interconnected Transmission System, the transmission facilities which deliver the generation and reactive resources to the connected Load, and the generation dispatch including firm transaction obligations assumed to supply the connected Load. The models also reflect facility ratings in accordance with FAC-008 & FAC-009.	☒Agree. ☐Do not agree.
Q1. **Comment: It is a fair description for an initial base case.**	
Q2. **Consequential Load Loss:** Load that is no longer served because it is directly connected to an element(s) that is removed from service due to fault clearing action or mis-operation.	☒Agree. ☐Do not agree.
Q2. **Comment: Agree with the definition**	
Q3. **Extreme Events:** Events which are more severe than Planning Events and have a low probability of occurrence.	☐Agree. ☒Do not agree.
Q3. **Comment: Add specificity in this definition. Suggest the following wording: Outage of two or more elements from service with lower probability of occurrence than Planning Events**	
Q4. **Long-Term Transmission Planning Horizon:** Transmission planning period that covers years six through ten or beyond.	☒Agree. ☐Do not agree.
Q4. **Comment: Agree with the definition**	
Q5. **Near-Term Transmission Planning Horizon:** Transmission planning period that covers years One through five.	☒Agree. ☐Do not agree.
Q5. **Comment: Agree with the definition**	
Q6. **Non-Consequential Load Loss:** Load loss other than Consequential Load Loss. For example, Load loss that occurs through manual (operator initiated) or automatic operations such as under-voltage Load shedding, under-frequency Load shedding, or Special Protection Systems.	☐Agree. ☒Do not agree.
Q6. **Comment: Add Remedial Action Schemes (RAS) after "Systems"**	
Q7. **Planning Assessment:** Documented evaluation of future	☒Agree.

Bulk Electric System needs by the use of performance studies that cover a range of assumptions regarding system conditions, time frames, future plans including capital reinforcements and operating procedures and other factors, such as asset conditions and age.	☐Do not agree.
Q7. **Comment: Agree with the definition**	
Q8. **Planning Events:** Events which require Transmission system performance requirements to be met.	☐Agree. ☒Do not agree.
Q8. **Comment: Needs clarity. Suggest the following wording: Outage of power system elements such as shown in Tables 1 and 2 that need to be considered and simulated to assess Transmission System Performance**	
Q9. **Plant Stability Study:** Study of an individual plant's Stability for various Contingencies in the vicinity of the plant; concerned with the effect on the System of the generating units' loss of synchronism and the damping of the generating units' power oscillations.	☐Agree. ☒Do not agree.
Q9. **Comment: Definition is not clear. Suggest the following wording: Study of an individual generating plant's capability to remain in synchronism and exhibit damping of the generating units' power oscillations for various contingencies in the vicinity of the plant**	
Q10. **System Stability Study:** Study of the System or portions of the System to ensure that angular Stability is maintained, inter-area power oscillations are damped, and voltages during the dynamic simulation stay within acceptable performance limits.	☐Agree. ☒Do not agree.
Q10. **Comment: This definition is for a stable system. Study is performed to determine whether system is stable or not. Suggest the following wording: Study of the system or portions of the system to assess the system's performance in terms of angular stability, power oscillations and voltage limits during dynamic simulation**	
Q11. **Year One:** The first year that a Transmission Planner is responsible for studying. This is further defined as the planning window that begins the next calendar year from the time the Transmission Planner submits their annual studies. Analysis conducted for time horizons within the calendar year from the study publication are assumed to be conducted under the auspices of Operations Planning.	☐Agree. ☒Do not agree.
Q11. **Comment: Suggest a shorter definition: Planning window beginning next calendar year**	

B. Sensitivity Studies

The draft planning standard includes the requirement, as specified in FERC Order 693, that planning decisions be based on a portfolio of analyses. In section 12.a.ii "Sensitivity studies and critical system conditions" FERC provided direction to consider a full range of variables considered to be significant that need to be assessed and documentation provided that explains the rationale for the selection of variables assessed.

In addition to the firm obligation scenario, the portfolio of analyses should be supplemented to include information from sensitivity analysis. The sensitivity analysis should be developed using additional cases that simulate reasonably stressed system conditions. The

standard drafting team has included several parameters that can be varied to create the requisite sensitivity case(s). The draft standards specify that the sensitivities reflect one or more of the following conditions and that documentation be provided explaining the rationale for selecting the sensitivity(ies) employed. The parameters that should be varied include:

- Higher or lower Load forecasts from the Base Case with variability of Load/demand and Load power factors due to season, weather, or time of day.
- Modification of expected transfers.
- Unavailability of long lead time facilities.
- Variability and outages of Reactive Resources.
- Generation additions, retirements, or other dispatch scenarios.
- Decreased effectiveness of controllable Loads and Demand Side Management.
- Modification of planned Transmission outages

To help focus industry discussion, please respond to the questions below:

Q12. Should the standard provide more specific direction regarding the number of sensitivity cases that need to be developed?

Yes ☐ No ☒
Comment: The TP or PA is the best to determine the number and type of sensitivities that are more applicable to their system.

Q13. Should the standard specify the required changes, such as changes in expected transfers, load forecasts, generation patterns, etc., from the study case to be considered a "reasonably stressed" case?

Yes ☐ No ☒
Comment: Let the TP or PA decide the type of stressing needed for a particular case

Q14. The SDT proposes to require the use of sensitivity studies for Near-Term Transmission System Planning Horizon stability analysis. Do you concur with the use of sensitivity analysis in dynamic studies?

Yes ☐ No ☒
Comment: Although we concur with the sensitivity analysis but the TP should determine what sensitivities are more appropriate for their system. Sensitivities should not be scripted in the Standard.

Q15. The draft TPL standard does not require the use of sensitivity studies for the Long-Term Transmission System Planning Horizon (year six and beyond) studies. Do you concur with this approach or should there be some level of sensitivity analysis required for the long-term period?

Yes ☒ No ☐
Comment: Agree. The Standard should state that sensitivity studies are not required but the TP or PA could use sensitivities if desired.

C. Corrective Action Plans

Requirement R2.7 of the standard states that when analysis shows that the performance requirements in Table 1 and Table 2 are not fully met, a Corrective Action Plan that utilizes all or some of the Transmission System enhancements, generation additions, DSM, new technologies and Operating Procedures shall be included in the Planning Assessment. This

Corrective Action Plan should ensure that upon its implementation the identified system deficiencies will be corrected so that the performance requirements in Table 1 and Table 2 will be met. Furthermore, studies included in the Planning Assessment should demonstrate that this is indeed the case.

Q16. Requirement R2.7.1: Such Corrective Action Plans shall "Identify System deficiencies and the associated actions needed to achieve required System performance including Transmission and generation improvements, DSM, new technologies, or Operating Procedures including the duration of Interim Operating Procedures". System deficiencies may be corrected using an integrated plan, i.e., an optimal mix of Transmission, generation, DSM and Operating Procedures. Should DSM be considered in conjunction with other measures in developing Corrective Action Plans? If yes, please comment on how the impact of DSM should be included.

Yes ☒ No ☐
Comment: We agree to include DSM among a mix of solutions to a system problem. However, the difficulty is that DSM is unpredictable when needed. Another issue is how much DSM is actually under the control of the Transmission Operator.

Q17. Requirement R2.7.2: Such Corrective Action Plans shall "Be added to study cases and the cases re-tested to show that the System with planned additions meets the performance requirements in the tables". Should new studies, including the facilities comprising the Corrective Action Plan, be performed to assess System normal performance and Contingency response for conditions that previously resulted in the System deficiencies (without the planned additions) and also demonstrate that the changes would not result in inadvertent negative impacts on the System. If you "agree", please comment on how a study area should be determined.

Yes ☒ No ☐
Comment: We agree that the system should be retested with the corrective measures to ensure that the defficiency has been cured and that there are no inadvertant negative impacts. Regarding Study Area, it is not a defined term, and it could vary depending on the size of the project or nature of the disturbance being evaluated.

Q18. Requirement R2.7.3: The standard calls for a differentiation between committed and proposed projects. Do you agree that they should be treated separately? If not, please state why not.

Yes ☐ No ☒
Comment: The understanding about "committed" projects vary from TP to TP. Also projects that are proposed today become committed in the planning horizon. Similarly, committed projects drop out due to variety of reasons. In terms of system studies, both committed and proposed projects are modeled and evaluated in the same system. How do we distinguish between the two?

Q19. Requirement R2.7.4: For such Corrective Action Plans "Committed projects shall not be removed without documentation to show that the revised plan meets the performance requirements". Do you agree or disagree with this requirement? If you disagree, please explain why.

Yes ☒ No ☐
Comment: We agree that committed projects should not be removed from the revised plan. These are supposed to be included in the planning studies which determine the system performance in the first place.

D. Performance Requirements

The proposed revised planning standard (TPL-001-1) incorporates a number of changes in requirements as compared to the current planning standards (TPL-001-0 through TPL-004-0), which it is expected to replace. Among other things these changes are intended to clarify the standard, address issues described by FERC, and, in particular, to "raise the bar." Strengthening the planning standards in selected areas is necessary to maintain a reliable Bulk Electric System that is up to the challenges of the 21st Century. In proposing the requirements in this draft, the standard drafting team attempted to balance the value of increased reliability against any potential increase in work and costs to meet the new proposed standard.

The standard drafting team is seeking input from the industry to determine whether a proper balance has been achieved. The areas where material changes are proposed in this draft are enumerated below, and questions are posed by the standard drafting team to obtain industry comment. In formulating your responses, please keep in mind that material changes in the final standard will be accompanied by a transition plan to provide for an orderly implementation of the final standard.

The performance requirements relative to Non-Consequential Loss of Load for the following events enumerated in the two tables can be considered more stringent than the existing TPL standards. Furthermore, the proposed standard is based on an assumption that performance requirements for EHV facilities should be more stringent than for lower voltage facilities.

Do you agree that Non-Consequential Loss of Load should not be permitted for the following events? If you disagree, please provide a reason for your disagreement.

Event	Agree or Disagree	Comment
Q20. P2-1: Loss of bus section (SLG for stability) above 300 kV	☐Agree. ☒Do not agree.	Loss of bus section is Category C for which the current NERC criteria allows controlled loss of load. The NERC system has been designed with this criteria. To create a more stringent standard would require to build hundreds of miles of new transmission lines to bring the existing system to NERC compliance. What are the potential benefits of this stringent criteria? Also, what is the reasoning behind selecting 300 kV as a cut off level?
Q21. P5-1: For facilities above 300 kV, loss of a Transmission circuit followed by System adjustment[1] followed by loss of another Transmission circuit	☐Agree. ☒Do not agree.	This event also falls under Category C for which the current NERC criteria allows controlled loss of load. Clear net benefits should be demonstrated to justify adapting to a new stringent criteria.
Q22. P5-2: For facilities above 300 kV, loss of a Transmission circuit followed by System adjustment followed by loss of a transformer	☐Agree. ☒Do not agree.	This event also falls under Category C for which the current NERC criteria allows controlled loss of load. Clear net benefits should be demonstrated to justify adapting to a new stringent criteria.

with low side voltage rating above 300 kV		
Q23. P5-3: For facilities above 300 kV, loss of a transformer with low side voltage rating above 300 kV followed by System adjustment followed by loss of another transformer	☐Agree. ☒Do not agree.	This event also falls under Category C for which the current NERC criteria allows controlled loss of load. Clear net benefits should be demonstrated to justify adapting to a new stringent criteria.

[1]System adjustment can be manual or automatic.

The proposed standard is based on an assumption that performance requirements for non-bus tie EHV breakers should be distinguished from other breakers. Do you agree that Non-Consequential Loss of Load should not be permitted for this event?

Q24. Loss of non-bus tie breaker (above 300 kV) due to internal fault

Yes ☐ No ☒
Comment: Same response as for Q21

The proposed standard is based on an assumption that performance requirements for non-bus tie EHV breakers should be distinguished from other breakers and that performance requirements for EHV facilities should be more stringent than for lower voltage facilities. Do you agree that Non-Consequential Loss of Load should not be permitted for this event?

Q25. P3-1: Loss of (SLG for stability) either a generator, a Transmission circuit, a transformer, or a bus and a stuck non-bus tie breaker (above 300 kV)

Yes ☐ No ☒
Comment: Do not agree for loss of a bus, or loss of a stuck non-bus tie breaker for the reasons as in the response to Q21.

The proposed standard is based on an assumption that the following events are relatively high probability events and, therefore, Non-Consequential Loss of Load should not be permitted. Do you agree? If you disagree, please provide a reason for your disagreement.

Event	Agree or Disagree	Comment
Q26. P4-1: Loss of a Generator followed by System adjustment[1] followed by loss of another Generator	☒Agree. ☐Do not agree.	Non consequential loss of load should not be permitted for this type of event. Loss of a generator has higher probability and longer duration than many other contingencies. Overlapping outage of a second element while one generator is already out of service and system adjusted would likewise has higher probability than other multiple contingency events.

[1] System adjustment can be manual or automatic

Q27. P4-2: Loss of a generator followed by a System adjustment followed by the loss of a monopolar DC line	☒Agree. ☐Do not agree.	Agree that non consequential loss of load should not be permitted due to higher probability of generator outage.
Q28. P4-3: Loss of a generator followed by System adjustment followed by loss of a Transmission circuit	☒Agree. ☐Do not agree.	Same reason as in Q26.
Q29. P4-4: Loss of a generator followed by System adjustment followed by loss of a transformer	☐Agree. ☐Do not agree.	Same reason as in Q26.

The performance requirement for the following event may be considered less stringent than the existing TPL Standards — P2-3: Loss of a single pole of a DC line. Interruption of firm transactions (without Loss of firm Load) if the transaction is dependent on the faulted DC line is now allowed for this initiating event/Contingency.

Q30. Do you agree that interruption of any firm transfers that are dependent on the outaged DC line that is taken out of service should be permitted?

Yes ☒ No ☐
Comment: In addition, the interruptible and other negotiated transactions should also be allowed.

E. Stability

Q31. The proposed standard is based on an assumption that steady state analysis and stability analysis are different from each other and that therefore, two tables of Contingencies and performance requirements were needed. It is also based on an assumption that stability study requirements should be clearly separated from the steady state study requirements. Do you agree with the action taken in separating stability analysis from steady state analysis? If not, please explain.

Yes ☒ No ☐
Comment: Agree that the two analysis should be treated separately.

Q32. The SDT has added requirements for plant stability studies and has drawn a distinction in these studies from System stability studies. Do you agree with this approach? If not, please explain.

Yes ☐ No ☒
Comment: Plant stability studies are a subset of system stability studies in which loss of a generator is already evaluated to meet performance requirements. In specific situations, sensitivity analysis can be done as deemed appropriate by the TP to address a particular system problem.

Q33. The existing TPL-004-0 standard has a requirement to consider the Loss of all generating units at a plant, but it was not clear whether this requirement should apply to stability studies. The SDT did not include this requirement in the stability table, because it is hard to envision a condition when all units would trip simultaneously within

the timeframe of a stability simulation. Do you think this condition should be required in stability analysis of extreme events? If not, please explain.

Yes ☒ No ☐
Comment: It will be cosistent with the performance requirements under Steady State conditions. Also, loss of entire generating station is possible for a variety of reasons such as, loss of all lines emanating from the station, loss of the gas pipeline feeding the plant, etc.

Q34. There are an increasing number of events with slow voltage recovery after faults on the Transmission System. The dynamic behavior of induction motor loads is a major factor in this phenomenon. The proposed standard therefore requires that the load model for stability studies of peak Load conditions include the dynamic effects of induction motors. Do you agree with this requirement? If not, please explain?

Yes ☒ No ☐
Comment: The requirement to include motor load should be extended to other load levels as appropriate.

Q35. What type of manual or automatic adjustments of generators should be allowed for single and multiple Contingencies?

Comment: Maunal such as tripping the generators, automatic such as AVR, excitation systems, stabilizer, and governor adjustments

F. Generation Runback and Tripping

The SDT has discussed the automatic and manual readjustments of generators that should be permissible for single contingencies and multiple contingencies. The existing TPL-001-0 through TPL-004-0 standards through footnote (a) of Table I could include emergency ratings applicable for short durations as required to permit operating steps necessary to maintain system control. The footnote is silent about allowable generation adjustments in response to the Category B events. However, it does indicate that system adjustments are permitted to prepare for the next Contingency. These system adjustments could include manual or automatic adjustments involving generation.

The SDT has learned that many transmission owners use System Protection Systems (SPS) or Remedial Action Schemes (RAS) to trip generation for single and multiple Contingency outage events to prevent overloads, low voltage, and instability in the Interconnected Transmission network for N-1 and N-2 events. In some cases, the RAS are used to prepare for the next Contingency; but in some cases, the RAS are used to simultaneously avoid exceeding emergency ratings.

Q36. The proposed standard allows generation runback after the disturbance that causes a single Contingency (or due to a single Contingency outage) to move the Interconnected Transmission System from an emergency state (within emergency ratings) to a normal state (within normal ratings), assuming that the disturbance does not result in instability? Do you agree? If not, please explain.

Yes ☒ No ☐
Comment: Agree

Q37. Since emergency ratings are thermal ratings, should this standard allow an automatic generation runback scheme (that is initiated immediately after the disturbance causing the single Contingency) to prevent thermal overloads (assuming that the disturbance does not result in instability)? If yes, what are the conditions that must be met in order to allow such a runback scheme to meet the System performance criteria for single Contingencies? Please explain the reason for your answer.

Yes ☒ No ☐
Comment: 1. Run back of generation should not result in tripping of firm load, 2. Power flow should be within the applicable ratings, 3. Frequency should be within the allowable limits

The standard drafting team has considered that RAS or SPS may be allowable under certain situations for single Contingencies, but proposes that their use should be limited.

Q38. Do you agree that RAS or SPS may be allowed for single Contingencies? If not, please explain.

Yes ☒ No ☐
Comment: Agree

Q39. Please describe the limitations that you believe should be placed on the use of RAS or SPS for single Contingency events.

Comment: RAS or SPS should generally be regarded as a stop gap measure before transmission expansion or reinforcement becomes available. It should not be used as a substitute for transmission facilities.

Q40. When RAS or SPS are allowed, what conditions should be met when these systems are used in system adjustments to meet performance requirements?

Comment: 1. RAS or SPS must be simple and manageable. 2. Nnumber of contingencies triggering a RAS or SPS should be very limited (4 allowed by CAISO). 3. RAS or SPS should generally monitor only local facilities that are either directly connected to the plant or one bus away.

G. General Questions

Q41. If you are aware of any regional variances that would be required as a result of these standards, please identify them here.

Yes ☒ No ☐
Comment: ISO relies upon tripping of generators to meet single contingency performance requirements. ISO also relies upon planned and controlled load shedding for the proposed Planning Events P4 and P5.

Q42. If you are aware of any conflicts between the proposed standards and any regulatory function, rule order, tariff, rate schedule, legislative requirement or agreement, please identify them here.

Yes ☐ No ☒
Comment: Not aware of any

Q43. Do you have any other questions or concerns with the proposed standard that have not been addressed? If yes, please explain.

Yes ☒ No ☐

Comment:

First, and as a general matter, the TPL-001 standard needs to accurately reflect the roles of PA'S and TP'S in areas with organized competitive markets and where the PA'S and TP'S are not vertically integrated utilities. In those areas, the TPL standard should recognize that compliance with the standard is achieved through the publication of a Plan that identifies system needs – and leaves open to the marketplace the specific mix of resources that investors construct to meet those needs. As a result, the Plan need not be, and should not be, prescriptive as to the resource mix that must be achieved. It is important for plans to be equally open to generation, demand response and transmission and not be presecriptive to the actual resource mix. Further, not all organized competitive markets have a mechanism in place to develop an integrated resource and transmission plan to meet future needs. Some markets conduct forecast assessment, thereby providing signals to market participants to make investment decisions.

Similarly, reflecting the divested nature of the industry in areas operated by ISOs and RTOs, the modeling standards should be reviewed to make sure that asset owners (e.g., generator owners and transmission owners) are required to give information in the level of detail and granularity that will allow PA's and TP's to develop plans and models consistent with these standards.

As highlighted in question 16, DSM should be considered an acceptable solution to system needs. However, DSM is generally considered in meeting resource requirements rather than as one of means to relieve transmission constraints. In planning studies, loads that are identified as DSM type (contracted or potential) are modeled as firm loads for reliability assessment. We would therefore seek the SDT’s suggestion on how specifically DSM should be explicitly modeled or used to aid in achieving transmission reliability in the planning horizon. Further, the drafting team must consider whether DSM providers are covered in the Compliance Registry and how the NERC Standards should obligate them to provide the requisite information to PA'ss and TP's so that they are fully taken into account.

Finally, the standards need to be improved to better distinguish the responsibility of Planning Authorities versus Transmission Planners. Currently, the Standard refers to both entities as carrying out the requirements. This appears to be reundant.

NERC
NORTH AMERICAN ELECTRIC RELIABILITY CORPORATION

Comment Form for First Draft of TPL-001-1 — Transmission System Planning Performance Requirements

Please use this form to submit comments on the proposed draft of TPL-001-1. Comments must be submitted by **Friday, October 26, 2007**. You may submit the completed form by e-mail to sarcomm@nerc.net with the words "TPL-001 Draft 1" in the subject line. If you have questions please contact Ed Dobrowolski at ed.dobrowolksi@nerc.net or by telephone at 609-947-3673.

Individual Commenter Information **(Complete this page for comments from one organization or individual.)**		
Name:	Paul Rocha	
Organization:	CenterPoint Energy	
Telephone:	713-207-2768	
E-mail:	paul.rocha@centerpointenergy.com	
NERC Region (check all Regions in which your company operates)		**Registered Ballot Body Segment (check all industry segments in which your company is registered)**
☒ **ERCOT**	☒	1 — Transmission Owners
☐ **FRCC**	☐	2 — RTOs and ISOs
☐ **MRO**	☐	3 — Load-serving Entities
☐ **NPCC**	☐	4 — Transmission-dependent Utilities
☐ **RFC**	☐	5 — Electric Generators
☐ **SERC**	☐	6 — Electricity Brokers, Aggregators, and Marketers
☐ **SPP**	☐	7 — Large Electricity End Users
☐ **WECC**	☐	8 — Small Electricity End Users
☐ **NA – Not Applicable**	☐	9 — Federal, State, Provincial Regulatory or other Government Entities
	☐	10 — Regional Reliability Organizations and Regional Entities

Group Comments (Complete this page if comments are from a group.)

Group Name:

Lead Contact:

Contact Organization:

Contact Segment:

Contact Telephone:

Contact E-mail:

Additional Member Name	Additional Member Organization	Region*	Segment*

*If more than one Region or Segment applies, please list all that apply. Regional acronyms and segment numbers are shown on prior page.

Background

The purpose of this standard is to establish Transmission System planning performance requirements within the planning horizon to develop a Bulk Electric System that will operate reliably over a broad spectrum of System conditions and following a wide range of probable Contingencies. This standard will replace TPL-001-0, TPL-002-0, TPL-003-0, and TPL-004-0. The standard drafting team has not yet addressed TPL-005-0 and TPL-006-0, but will address these two standards during the next phase of the drafting process.

The major objectives of the standard drafting team are to:

1) Ensure the standard is complete and the requirements are set at an appropriate level to ensure reliability (Not Least Common Denominator)
2) Ensure that the standard is enforceable by having clearly defined requirements with unambiguous language
3) Address the issues raised by FERC Order 693, 890, and other applicable orders
4) Address the issues raised in the original Standards Authorization Request (SAR) and the Supplemental SAR.

The standard drafting team did not attempt to edit the existing standards but rather chose to write one standard that addresses all aspects of transmission planning in the existing TPL-001-0, TPL-002-0, TPL-003-0, and TPL-004-0. The standard drafting team organized the new standard in the following sections:

R1 – Modeling requirements
R2 – Assessment and Corrective Plan requirements
R3 – Steady State Analysis requirements
R4 – Stability Analysis requirements
R5 – Coordination requirements

The standard drafting team determined that the requirements and analysis for Steady State are different from those for stability. As such, the standard drafting team separated the analysis requirements and created two performance requirement tables.

The standard drafting team recognizes that this draft standard is a starting point for industry input into the standard and that there is still a lot of work required to complete the process. The standard drafting team has made many changes to clarify requirements, add requirements, and make some of the performance requirements stricter. The standard drafting team has not addressed Measures, Risk Factors, Violation Severity Factors, or Time Horizons at this time. These will be addressed when the standard drafting team has better defined the requirements of the standard.

For questions where you agree with the standard drafting team, please state that you agree and if available, please provide supporting documentation. If you disagree with the standard drafting team, please explain why you disagree and provide data to support your position, such as outage data or analysis. If you believe that we have made a performance requirement too strict please provide supporting documentation. If applicable, please include the approximate cost in man-hours for additional studies and/or cost in $Millions for additional transmission investment to meet the new requirements or the stricter requirements. If you believe that the standard should be stricter, please provide the rationale along with any supporting data, including existing practices, cost estimates or additional analysis.

To improve the standard, the standard drafting team would appreciate responses to as many of these questions as you can answer.

A. New Definitions

Many of the concerns about the existing TPL standards come from the fact that a number of generally understood concepts are embedded in undefined terms, tables, and footnotes. To clarify some of these concerns, the standard drafting team is proposing new definitions. Please indicate whether you agree with the following proposed definitions and provide proposed changes to the definitions if you disagree:

Definition	**Agree or Disagree**
Q1. **Base Case**: Computer representation of the projected initial or starting Transmission System conditions for a specific point in time. Each base case reflects the forecasted Load at each bus (or node) on the interconnected Transmission System, the transmission facilities which deliver the generation and reactive resources to the connected Load, and the generation dispatch including firm transaction obligations assumed to supply the connected Load. The models also reflect facility ratings in accordance with FAC-008 & FAC-009.	☐Agree. ☒Do not agree.
Q1. **Comment: Firm transaction obligations are not used throughout all regions in NERC. Change "including firm transaction obligations" to "including firm transaction obligations where applicable."**	
Q2. **Consequential Load Loss:** Load that is no longer served because it is directly connected to an element(s) that is removed from service due to fault clearing action or mis-operation.	☒Agree. ☐Do not agree.
Q2. **Comment:**	
Q3. **Extreme Events:** Events which are more severe than Planning Events and have a low probability of occurrence.	☒Agree. ☐Do not agree.
Q3. **Comment:**	
Q4. **Long-Term Transmission Planning Horizon:** Transmission planning period that covers years six through ten or beyond.	☒Agree. ☐Do not agree.
Q4. **Comment:**	
Q5. **Near-Term Transmission Planning Horizon:** Transmission planning period that covers years One through five.	☒Agree. ☐Do not agree.
Q5. **Comment:**	
Q6. **Non-Consequential Load Loss:** Load loss other than Consequential Load Loss. For example, Load loss that occurs through manual (operator initiated) or automatic operations such as under-voltage Load shedding, under-frequency Load shedding, or Special Protection Systems.	☒Agree. ☐Do not agree.
Q6. **Comment:**	

Q7. **Planning Assessment:** Documented evaluation of future Bulk Electric System needs by the use of performance studies that cover a range of assumptions regarding system conditions, time frames, future plans including capital reinforcements and operating procedures and other factors, such as asset conditions and age.	☒Agree. ☐Do not agree.
Q7. **Comment:**	
Q8. **Planning Events:** Events which require Transmission system performance requirements to be met.	☒Agree. ☐Do not agree.
Q8. **Comment:**	
Q9. **Plant Stability Study:** Study of an individual plant's Stability for various Contingencies in the vicinity of the plant; concerned with the effect on the System of the generating units' loss of synchronism and the damping of the generating units' power oscillations.	☒Agree. ☐Do not agree.
Q9. **Comment:**	
Q10. **System Stability Study:** Study of the System or portions of the System to ensure that angular Stability is maintained, inter-area power oscillations are damped, and voltages during the dynamic simulation stay within acceptable performance limits.	☒Agree. ☐Do not agree.
Q10. **Comment:**	
Q11. **Year One:** The first year that a Transmission Planner is responsible for studying. This is further defined as the planning window that begins the next calendar year from the time the Transmission Planner submits their annual studies. Analysis conducted for time horizons within the calendar year from the study publication are assumed to be conducted under the auspices of Operations Planning.	☒Agree. ☐Do not agree.
Q11. **Comment:**	

B. Sensitivity Studies

The draft planning standard includes the requirement, as specified in FERC Order 693, that planning decisions be based on a portfolio of analyses. In section 12.a.ii "Sensitivity studies and critical system conditions" FERC provided direction to consider a full range of variables considered to be significant that need to be assessed and documentation provided that explains the rationale for the selection of variables assessed.

In addition to the firm obligation scenario, the portfolio of analyses should be supplemented to include information from sensitivity analysis. The sensitivity analysis should be developed using additional cases that simulate reasonably stressed system conditions. The standard drafting team has included several parameters that can be varied to create the requisite sensitivity case(s). The draft standards specify that the sensitivities reflect one or more of the following conditions and that documentation be provided explaining the rationale for selecting the sensitivity(ies) employed. The parameters that should be varied include:

- Higher or lower Load forecasts from the Base Case with variability of Load/demand and Load power factors due to season, weather, or time of day.
- Modification of expected transfers.

- Unavailability of long lead time facilities.
- Variability and outages of Reactive Resources.
- Generation additions, retirements, or other dispatch scenarios.
- Decreased effectiveness of controllable Loads and Demand Side Management.
- Modification of planned Transmission outages

To help focus industry discussion, please respond to the questions below:

Q12. Should the standard provide more specific direction regarding the number of sensitivity cases that need to be developed?

Yes ☐ No ☒
Comment: The number and type of sensitivity studies should be left to the judgement of Transmission Planners. Having too many prescriptive requirements results in concentrating on meeting the requirements rather than on formulating the most effective and efficient improvements.

Q13. Should the standard specify the required changes, such as changes in expected transfers, load forecasts, generation patterns, etc., from the study case to be considered a "reasonably stressed" case?

Yes ☐ No ☒
Comment: See comment to Q12.

Q14. The SDT proposes to require the use of sensitivity studies for Near-Term Transmission System Planning Horizon stability analysis. Do you concur with the use of sensitivity analysis in dynamic studies?

Yes ☐ No ☒
Comment: The number and type of sensitivity studies should be left to the judgement of Transmission Planners.

Q15. The draft TPL standard does not require the use of sensitivity studies for the Long-Term Transmission System Planning Horizon (year six and beyond) studies. Do you concur with this approach or should there be some level of sensitivity analysis required for the long-term period?

Yes ☒ No ☐
Comment:

C. Corrective Action Plans

Requirement R2.7 of the standard states that when analysis shows that the performance requirements in Table 1 and Table 2 are not fully met, a Corrective Action Plan that utilizes all or some of the Transmission System enhancements, generation additions, DSM, new technologies and Operating Procedures shall be included in the Planning Assessment. This Corrective Action Plan should ensure that upon its implementation the identified system deficiencies will be corrected so that the performance requirements in Table 1 and Table 2 will be met. Furthermore, studies included in the Planning Assessment should demonstrate that this is indeed the case.

Q16. Requirement R2.7.1: Such Corrective Action Plans shall "Identify System deficiencies and the associated actions needed to achieve required System performance including Transmission and generation improvements, DSM, new technologies, or Operating Procedures including the duration of Interim Operating Procedures". System

deficiencies may be corrected using an integrated plan, i.e., an optimal mix of Transmission, generation, DSM and Operating Procedures. Should DSM be considered in conjunction with other measures in developing Corrective Action Plans? If yes, please comment on how the impact of DSM should be included.

Yes ☐ No ☒
Comment: CenterPoint Energy is not aware of DSM ever being identified as an effective option to correct a transmission system deficiency. If such an application of DSM was identified and implemented, load growth would quickly negate the DSM impact, and other measures would have to be taken.

Q17. Requirement R2.7.2: Such Corrective Action Plans shall "Be added to study cases and the cases re-tested to show that the System with planned additions meets the performance requirements in the tables". Should new studies, including the facilities comprising the Corrective Action Plan, be performed to assess System normal performance and Contingency response for conditions that previously resulted in the System deficiencies (without the planned additions) and also demonstrate that the changes would not result in inadvertent negative impacts on the System. If you "agree", please comment on how a study area should be determined.

Yes ☒ No ☒
Comment: Many problems identified in future studies and associated transmission improvements are fictitious due to the speculative nature of predicting load and generation growth. Requiring exhaustive studies to determine the full impact of fictitious transmission projects is unnecessarily prescriptive and burdensome, and provides little, if any, value in identifying and solving real transmission problems.

Q18. Requirement R2.7.3: The standard calls for a differentiation between committed and proposed projects. Do you agree that they should be treated separately? If not, please state why not.

Yes ☐ No ☐
Comment:

Q19. Requirement R2.7.4: For such Corrective Action Plans "Committed projects shall not be removed without documentation to show that the revised plan meets the performance requirements". Do you agree or disagree with this requirement? If you disagree, please explain why.

Yes ☐ No ☒
Comment: This is overly prescriptive. Allow each Transmission Plannner to determine the best way to handle planned projects.

D. Performance Requirements

The proposed revised planning standard (TPL-001-1) incorporates a number of changes in requirements as compared to the current planning standards (TPL-001-0 through TPL-004-0), which it is expected to replace. Among other things these changes are intended to clarify the standard, address issues described by FERC, and, in particular, to "raise the bar." Strengthening the planning standards in selected areas is necessary to maintain a reliable Bulk Electric System that is up to the challenges of the 21st Century. In proposing the requirements in this draft, the standard drafting team attempted to balance the value of increased reliability against any potential increase in work and costs to meet the new proposed standard.

The standard drafting team is seeking input from the industry to determine whether a proper balance has been achieved. The areas where material changes are proposed in this

draft are enumerated below, and questions are posed by the standard drafting team to obtain industry comment. In formulating your responses, please keep in mind that material changes in the final standard will be accompanied by a transition plan to provide for an orderly implementation of the final standard.

The performance requirements relative to Non-Consequential Loss of Load for the following events enumerated in the two tables can be considered more stringent than the existing TPL standards. Furthermore, the proposed standard is based on an assumption that performance requirements for EHV facilities should be more stringent than for lower voltage facilities.

Do you agree that Non-Consequential Loss of Load should not be permitted for the following events? If you disagree, please provide a reason for your disagreement.

Event	Agree or Disagree	Comment
Q20. P2-1: Loss of bus section (SLG for stability) above 300 kV	☒Agree. ☐Do not agree.	
Q21. P5-1: For facilities above 300 kV, loss of a Transmission circuit followed by System adjustment[1] followed by loss of another Transmission circuit	☐Agree. ☒Do not agree.	The forced outage of two independent lines has a low probability of occurrence and should be considered an improbable event with non-consequential load loss permitted.
Q22. P5-2: For facilities above 300 kV, loss of a Transmission circuit followed by System adjustment followed by loss of a transformer with low side voltage rating above 300 kV	☐Agree. ☐Do not agree.	
Q23. P5-3: For facilities above 300 kV, loss of a transformer with low side voltage rating above 300 kV followed by System adjustment followed by loss of another transformer	☐Agree. ☐Do not agree.	

[1]System adjustment can be manual or automatic.

The proposed standard is based on an assumption that performance requirements for non-bus tie EHV breakers should be distinguished from other breakers. Do you agree that Non-Consequential Loss of Load should not be permitted for this event?

Q24. Loss of non-bus tie breaker (above 300 kV) due to internal fault

Yes ☐ No ☒
Comment: The loss of a non-bus tie breaker due to an internal fault has a low probability of occurence and should be considered an improbable event with non-consequential load loss permitted. However, the loss of any breaker, whether by internal fault, external flashover, or stuck breaker, should not result in a cascading failure.

The proposed standard is based on an assumption that performance requirements for non-bus tie EHV breakers should be distinguished from other breakers and that performance requirements for EHV facilities should be more stringent than for lower voltage facilities. Do you agree that Non-Consequential Loss of Load should not be permitted for this event?

Q25. P3-1: Loss of (SLG for stability) either a generator, a Transmission circuit, a transformer, or a bus and a stuck non-bus tie breaker (above 300 kV)

Yes ☐ No ☒
Comment: The loss of either a generator, a Transmission cirucit, a transformer, or a bus and a stuck non-bus tie breaker (above 300 kV) has a low probability of occurrence and should be considered an extreme event with non-consequential load loss permitted.

The proposed standard is based on an assumption that the following events are relatively high probability events and, therefore, Non-Consequential Loss of Load should not be permitted. Do you agree? If you disagree, please provide a reason for your disagreement.

Event	Agree or Disagree	Comment
Q26. P4-1: Loss of a Generator followed by System adjustment[1] followed by loss of another Generator	☐Agree. ☒Do not agree.	CenterPoint Energy believes the assumption that this is a high probability event is incorrect. Furthermore, an absolute requirement prohibiting non-consequential loss of load has economic and landowner impacts that cannot be ignored.
Q27. P4-2: Loss of a generator followed by a System adjustment followed by the loss of a monopolar DC line	☐Agree. ☒Do not agree.	CenterPoint Energy believes the assumption that this is a high probability event is incorrect. Furthermore, an absolute requirement prohibiting non-consequential loss of load has economic and landowner impacts that cannot be ignored.
Q28. P4-3: Loss of a generator followed by System adjustment followed by loss of a Transmission circuit	☐Agree. ☒Do not agree.	CenterPoint Energy believes the assumption that this is a high probability event is incorrect. Furthermore, an absolute requirement prohibiting non-consequential loss of load has economic and landowner impacts that cannot be ignored.
Q29. P4-4: Loss of a generator followed by System adjustment followed by loss of a transformer	☐Agree. ☒Do not agree.	CenterPoint Energy believes the assumption that this is a high probability event is incorrect. Furthermore, an absolute requirement

[1] System adjustment can be manual or automatic

		prohibiting non-consequential loss of load has economic and landowner impacts that cannot be ignored.

The performance requirement for the following event may be considered less stringent than the existing TPL Standards — P2-3: Loss of a single pole of a DC line. Interruption of firm transactions (without Loss of firm Load) if the transaction is dependent on the faulted DC line is now allowed for this initiating event/Contingency.

Q30. Do you agree that interruption of any firm transfers that are dependent on the outaged DC line that is taken out of service should be permitted?

Yes ☐ No ☐
Comment:

E. Stability

Q31. The proposed standard is based on an assumption that steady state analysis and stability analysis are different from each other and that therefore, two tables of Contingencies and performance requirements were needed. It is also based on an assumption that stability study requirements should be clearly separated from the steady state study requirements. Do you agree with the action taken in separating stability analysis from steady state analysis? If not, please explain.

Yes ☒ No ☐
Comment: Separating the stability requirements into a second table improved the clarity.

Q32. The SDT has added requirements for plant stability studies and has drawn a distinction in these studies from System stability studies. Do you agree with this approach? If not, please explain.

Yes ☐ No ☒
Comment: CenterPoint Energy does not see the distinction between system stability and plant stability studies as defined in the draft standard. Meeting the performance requirements set in R4.5 should suffice for all stability studies. The requirements in R4.6 seem overly prescriptive and could potentially result in numerous studies being required that would have very little positive effect on transmission systems throughout the country.

Q33. The existing TPL-004-0 standard has a requirement to consider the Loss of all generating units at a plant, but it was not clear whether this requirement should apply to stability studies. The SDT did not include this requirement in the stability table, because it is hard to envision a condition when all units would trip simultaneously within the timeframe of a stability simulation. Do you think this condition should be required in stability analysis of extreme events? If not, please explain.

Yes ☐ No ☒
Comment: CenterPoint Energy agrees with the SDT's assessment.

Q34. There are an increasing number of events with slow voltage recovery after faults on the Transmission System. The dynamic behavior of induction motor loads is a major factor in this phenomenon. The proposed standard therefore requires that the load model for stability studies of peak Load conditions include the dynamic effects of induction motors. Do you agree with this requirement? If not, please explain?

Yes ☐ No ☒
Comment: CenterPoint Energy includes the dynamic effects of induction motor loads in stability studies. However, this requirement is overly prescriptive since some utilities may not need to include the dynamic effects of induction motors and should not be required to do so.

Q35. What type of manual or automatic adjustments of generators should be allowed for single and multiple Contingencies?

Comment:

F. Generation Runback and Tripping

The SDT has discussed the automatic and manual readjustments of generators that should be permissible for single contingencies and multiple contingencies. The existing TPL-001-0 through TPL-004-0 standards through footnote (a) of Table I could include emergency ratings applicable for short durations as required to permit operating steps necessary to maintain system control. The footnote is silent about allowable generation adjustments in response to the Category B events. However, it does indicate that system adjustments are permitted to prepare for the next Contingency. These system adjustments could include manual or automatic adjustments involving generation.

The SDT has learned that many transmission owners use System Protection Systems (SPS) or Remedial Action Schemes (RAS) to trip generation for single and multiple Contingency outage events to prevent overloads, low voltage, and instability in the Interconnected Transmission network for N-1 and N-2 events. In some cases, the RAS are used to prepare for the next Contingency; but in some cases, the RAS are used to simultaneously avoid exceeding emergency ratings.

Q36. The proposed standard allows generation runback after the disturbance that causes a single Contingency (or due to a single Contingency outage) to move the Interconnected Transmission System from an emergency state (within emergency ratings) to a normal state (within normal ratings), assuming that the disturbance does not result in instability? Do you agree? If not, please explain.

Yes ☒ No ☐
Comment:

Q37. Since emergency ratings are thermal ratings, should this standard allow an automatic generation runback scheme (that is initiated immediately after the disturbance causing the single Contingency) to prevent thermal overloads (assuming that the disturbance does not result in instability)? If yes, what are the conditions that must be met in order to allow such a runback scheme to meet the System performance criteria for single Contingencies? Please explain the reason for your answer.

Yes ☒ No ☐
Comment:

The standard drafting team has considered that RAS or SPS may be allowable under certain situations for single Contingencies, but proposes that their use should be limited.

Q38. Do you agree that RAS or SPS may be allowed for single Contingencies? If not, please explain.

Yes ☒ No ☐
Comment:

Q39. Please describe the limitations that you believe should be placed on the use of RAS or SPS for single Contingency events.

Comment:

Q40. When RAS or SPS are allowed, what conditions should be met when these systems are used in system adjustments to meet performance requirements?

Comment:

G. General Questions

Q41. If you are aware of any regional variances that would be required as a result of these standards, please identify them here.

Yes ☐ No ☒
Comment:

Q42. If you are aware of any conflicts between the proposed standards and any regulatory function, rule order, tariff, rate schedule, legislative requirement or agreement, please identify them here.

Yes ☒ No ☐
Comment: FPA section 215(i)(2) "does not authorize the ERO or the Commission to order the construction of additional generation or transmission capacity or to set and enforce compliance with standards for adequacy or safety of electric facilities or services." However, adherence to TPL-001-1 as currently drafted, will require, de facto, the construction of additional transmission facilities. CenterPoint Energy believes this standard goes far beyond the legislative intent of mandatory reliability standards and will result in construction of transmission capacity in order to remain compliant.

Q43. Do you have any other questions or concerns with the proposed standard that have not been addressed? If yes, please explain.

Yes ☒ No ☐
Comment:

TPL-001-1 focuses solely on reliability to the exclusion of economic cost/benefits, prudent avoidance, and landowner impacts, which have been the hallmarks of good utility practice that have governed transmission planning and construction for decades. FPA section 215(i)(2) "does not authorize the ERO or the Commission to order the construction of additional generation or transmission capacity or to set and enforce compliance with standards for adequacy or safety of electric facilities or services." However, adherence to TPL-001-1 as currently drafted, will require, de facto, the construction of additional transmission facilities. CenterPoint Energy believes this standard excludes proven, historical good utility practice to reach far beyond what is intended by the FPA.

TPL-001-1 contains an excessive number of requirements (over 50). The SDT should consider the removal or modification of the following unnecessary, redundant or overly prescriptive requirements:

R1.1. This is a modeling requirement and should be incorporated into the modeling (MOD) standards. Remove or modify this requirement to eliminate any redundancy with existing modeling standards. If certain subrequirements of R1.1 of TPL-001 are not currently requirements in a MOD standard, it should be questioned, then, whether or not these specific subrequirements are actually needed in ANY standard.

R2.1.3 and R2.4.3 should be removed because they introduce new, vague requirements.

R2.2. Analysis beyond five years has little value due to the speculative nature of predicting load and generation growth. Furthermore, ERCOT does not annually create Long-Term Planning Horizon cases because ERCOT does not believe it is necessary. This requirement should be removed.

R2.5 and R4.6. These requirements are overly prescriptive and unnecessary for the reasons stated in the response to Q32. They should be removed.

R2.7.1 through 2.7.5. Requiring Corrective Action Plans that address how performance requirements will be met is reasonable; however, these standard requirements are overly prescriptive and unnecessary. R2.7.1 through R2.7.5 would result in the development, documentation and explanation of fictitious solutions to fictitious problems. They should be removed.

R3.3.2.1. The requirement to identify consequential load loss for single contingencies in the Planning Assessment is unnecessary and burdensome and should be removed.

R5. The roles of the Transmission Planner and Planning Coordinator are already addressed in the approved NERC definitions and further described in the approved NERC Reliability Functional Model. This requirement is unnecessary and should be removed.

Table 1 and Table 2 - P4, P5, P8, and P9. Including all combinations of two components (generator, Transmission circuit, transformer, monopolar DC line) with generation adjustments is impractical and overly burdensome. For multiple contingencies, CenterPoint Energy recommends including only two-circuit tower lines and the two components (generator, Transmission circuit, transformer, monopolar DC line) that would be cleared by a breaker failure (i.e., stuck breaker).

Standard Development Roadmap

This section is maintained by the drafting team during the development of the standard and will be removed when the standard becomes effective.

Development Steps Completed:

1 Version 1 of SAR posted for comment from April 2, 2002 through May 3, 2002.
2 Version 2 of SAR posted for comment from May 5, 2004 through June 5, 2004.
3 Version 3 of SAR posted on November 18, 2005.
4 SAR approved on April 30, 2006.
5 Version 1 of Supplemental SAR posted for comment from February 15, 2007 through March 16, 2007.
6 Version 2 of Supplemental SAR posted on April 9, 2007.
7 Version 1 of revised standard(s) posted for comment on September 17, 2007.

Proposed Action Plan and Description of Current Draft:

The SDT has established an aggressive schedule of meetings and conference calls that allows for steady progress through the standards development process in anticipation of completing their assignment in 2Q08. The current draft is the first iteration of the revision of existing standards TPL-001 through TPL-006 and includes one revised standard, TPL-001-1, replacing TPL-001-0, TPL-002-0, TPL-003-0 and TPL-004-0. TPL-005 & -006 will be addressed later in the project. Violation Risk Factors, Time Horizons, Measures, Compliance and Implementation Plans will be included in subsequent postings.

Future Development Plan:

Anticipated Actions	**Anticipated Date**
1. Respond to comments from first posting of standard(s) and submit revision 1 of the standard(s).	4Q2007
2. Respond to comments from second posting of standard(s) and submit revision 2 of the standard(s).	4Q2007
3. Submit revision 3 of the standard(s) for balloting.	4Q2007
4. Submit standard(s) for recirculation balloting.	2Q2008
5. Submit standard(s) to BOT.	2Q2008
6.	
7.	

Definitions of Terms Used in Standard

This section includes all newly defined or revised terms used in the proposed standard. Terms already defined in the Reliability Standards Glossary of Terms are not repeated here. New or revised definitions listed below become approved when the proposed standard is approved. When the standard becomes effective, these defined terms will be removed from the individual standard and added to the Glossary.

Base Case: Computer representation of the projected initial or starting Transmission System conditions for a specific point in time. Each base case reflects the forecasted Load at each bus (or node) on the interconnected Transmission System, the transmission facilities which deliver the generation and reactive resources to the connected Load, and the generation dispatch, including firm transaction obligations where applicable, assumed to supply the connected Load. The models also reflect Facility Ratings.

Consequential Load Loss: Load that is no longer served because it is directly connected to an element(s) that is removed from service due to fault clearing action or mis-operation.

Extreme Events: Events which are more severe than Planning Events and have a low probability of occurrence.

Long-Term Transmission Planning Horizon: Transmission planning period that covers years six through ten or beyond.

Near-Term Transmission Planning Horizon: Transmission planning period that covers Years One through five.

Non-Consequential Load Loss: Load loss other than Consequential Load Loss. For example, Load loss that occurs through manual (operator initiated) or automatic operations such as under-voltage Load shedding, under-frequency Load shedding, or Special Protection Systems.

Planning Assessment: Documented evaluation of future Bulk Electric System needs by the use of performance studies that cover a range of assumptions regarding system conditions, time frames, future plans including capital reinforcements and operating procedures and other factors, such as asset conditions and age.

Planning Events: Events which require Transmission system performance requirements to be met.

Plant Stability Study: Study of an individual plant's Stability for various Contingencies in the vicinity of the plant; concerned with the effect on the System of the generating units' loss of synchronism and the damping of the generating units' power oscillations.

System Stability Study: Study of the System or portions of the System to ensure that angular Stability is maintained, inter-area power oscillations are damped, and voltages during the dynamic simulation stay within acceptable performance limits.

Year One: The first year that a Transmission Planner is responsible for studying. This is further defined as the planning window that begins the next calendar year from the time the Transmission Planner submits their annual studies.

A. Introduction

1. Title: Transmission System Planning Performance Requirements

2. Number: TPL-001-1

3. Purpose: Establish Transmission System planning performance requirements within the planning horizon to develop a Bulk Electric System that will operate reliably over a broad spectrum of System conditions and following a wide range of probable Contingencies.

4. Applicability:

4.1. Functional Entity

4.1.1. Planning Coordinator.

4.1.2. Transmission Planner.

4.1.3. Resource Planner.

4.1.4. Load-Serving Entity.

4.1.5. Transmission Owner.

4.1.6. Generator Owner.

5. Effective Date: TBD

B. Requirements

R1. Each Resource Planner, Transmission Planner, Transmission Owner, Generator Owner, and Load-Serving Entity shall each provide its respective Planning Coordinator with the following modeling information required for System performance studies upon request (within 30 calendar days) : *[Violation Risk Factor: TBD] [Time Horizon: TBD]*

~~**R1.1.** Load forecasts adhering, at a minimum, to the following criteria:~~

~~**R1.1.1.** Use of expected Load mix based on the actual or expected aggregate mix of industrial, commercial, and residential Loads.~~

~~**R1.1.2.** Based on normal weather patterns as agreed to by the Planning Coordinator(s) and the Transmission Planner(s) for the area(s) of their responsibility.~~

~~**R1.1.3.** Identification of Demand Side Management (DSM) Load reductions consistent with operational requirements.~~

R1.2. Load models with supporting rationale that include power factor data based on historical System performance, validated by measurement during stressed System conditions, or documented Transmission planning area requirements.

R1.3. Firm transfers/Interchange Schedules and resources required to supply Load for each Balancing Authority.

R1.4. Known planned outages and long-term outages for Transmission and generation equipment including protective relays with consideration given to spare equipment strategy.

R1.5. Planned Facilities defined in accordance with the documented criteria of the Planning Coordinator, including but not limited to: Transmission Lines, generators, circuit breakers, Reactive Power devices, Protection System equipment and control devices, and new technologies.

R2. Each Transmission Planner and Planning Coordinator shall conduct and document the results of its annual Planning Assessment of its portion of the BES. This Planning Assessment shall use current or past studies, and shall cover steady state analyses, short circuit analyses, and Stability analyses including both System and plant Stability. *[Violation Risk Factor: TBD] [Time Horizon: TBD]*

R2.1. The steady state portion of the Near-Term Transmission Planning Horizon Planning Assessment shall address all five years of the assessment period and be supported at a minimum by the following annual current studies,, supplemented with qualified past studies as shown in Requirement R2.6:

R2.1.1. System peak Load for either Year One or year two, and year five.

R2.1.2. System Off-Peak Load for one of the five years.

~~**R2.1.3.** For each of the studies described in Requirement R2.1.1 and Requirement R2.1.2, sensitivity case(s) that stress the System with sensitivities that reflect one or more of the following conditions shall be run and documentation with the rationale for the selected sensitivity(ies) shall be supplied:~~

~~**R.2.1.3.1.** Higher or lower Load forecasts from the Base Case with variability of Load/demand and Load power factors due to season, weather, or time of day.~~

~~**R.2.1.3.2.** Modification of expected transfers.~~

~~**R.2.1.3.3.** Unavailability of long lead time facilities.~~

~~**R.2.1.3.4.** Variability and outages of reactive resources.~~

~~**R.2.1.3.5.** Generation additions, retirements, or other dispatch scenarios.~~

~~**R.2.1.3.6.** Decreased effectiveness of controllable Loads and Demand Side Management.~~

~~**R.2.1.3.7.** Modification of planned Transmission outages.~~

~~**R2.2.** For the steady state portion of the Long-Term Transmission Planning Horizon Planning Assessment, at a minimum, a current System peak Load study is required annually for one of the years in the assessment period to support the annual Planning Assessment.~~

~~**R2.2.1.** To accommodate any known longer lead time projects that may take longer than ten years to complete, the Planning Assessment shall be extended accordingly.~~

R2.3. The short circuit portion of the Planning Assessment shall be conducted annually and supported by current or past studies.

R2.3.1. A current study shall be performed if changes in the BES result in increased fault currents such as resource additions and other Facility changes that result in reductions in impedance.

R2.4. The System Stability portion of the Near-Term Transmission Planning Horizon Planning Assessment shall address all five years of the assessment period, and be supported by current or past studies. The following studies are required:

R2.4.1. System peak Load for one of the five years. For peak System Load levels, the Load model shall include the dynamic effects of induction motor Loads.

R2.4.2. System Off-Peak Load for one of the five years.

~~**R2.4.3.** Sensitivity case(s) that stress the System to reflect one or more of the following conditions shall be run with documentation provided explaining the rationale for the selected sensitivity(ies):~~

~~**R.2.4.3.1.** Variations in Load model assumptions.~~
~~**R.2.4.3.2.** Expected simultaneous transfers including non-firm transfers.~~
~~**R.2.4.3.3.** Unavailability of long lead time facilities.~~
~~**R.2.4.3.4.** Reactive dispatch of generators and other reactive power devices.~~
~~**R.2.4.3.5.** Generation additions, retirements, or other dispatch scenarios.~~

~~**R2.5.** The plant Stability portion of the Planning Assessment shall be analyzed consistent with Requirement R4.6 with studies for the year when the following occur:~~

~~**R2.5.1.** New generator(s) are added or generation modifications are made such as increasing generation capability, replacing the exciter or addition of a power System stabilizer.~~

~~**R2.5.2.** Material changes in the electrical vicinity of existing generation are made such as the addition or removal of a Transmission Line at or near the point of Interconnection.~~

R2.6. Past studies may be used to support the Planning Assessment if they meet the following requirements:

R2.6.1. For steady state analysis: if the study is less than three years old and no material changes have occurred to the System in the intervening period. Material changes include topology changes, generation additions/removals, and market structure changes.

R2.6.2. For short circuit analysis: if the study is less than five years old and no material changes have occurred to the System in the intervening period.

R2.6.3. For plant and System Stability analysis: until material changes in the System make the study no longer valid. Material changes in the system include the addition of a Transmission Line or a generator.

R2.7. For Planning Events shown in Table 1 – Steady State Performance and Table 2 – Stability Performance, when the analysis indicates an inability of the System to meet the performance requirements in the tables, the Planning Assessment shall include Corrective Action Plans addressing how the performance requirements will be met. Revisions to the Corrective Action Plans are allowed over time but shall meet the performance requirements in the tables. Such plans shall:

~~**R2.7.1.** Identify System deficiencies and the associated actions needed to achieve required System performance including Transmission and generation improvements, DSM, new technologies, or Operating Procedures including the duration of interim Operating Procedures.~~

~~**R.2.7.1.1.** For the Near-Term Transmission Planning Horizon, include both a project initiation date as well as an in-service date.~~

~~**R.2.7.1.2.** For the Long-Term Transmission Planning Horizon, provide an in-service year..~~

~~**R2.7.2.** Be added to study cases and the cases re-tested to show that the System with planned additions meets the performance requirements in the tables.~~

~~**R2.7.3.** Include documentation of the criteria for determining committed and proposed projects, with all projects identified as either, 'committed' or 'proposed.'~~

~~**R2.7.4.** Not remove committed projects without documentation to show that the revised plan meets the performance requirements.~~

~~**R2.7.5.** Be reviewed in subsequent annual Planning Assessments as to implementation status of identified System Facilities and Operating Procedures.~~

R3. For the steady state portion of the Planning Assessment, each Transmission Planner and Planning Coordinator shall perform analysis for the Near-Term and Long-Term Transmission Planning Horizon studies in Requirement R2.1 and Requirement R2.2. The studies shall be based on computer power flow simulations that analyze BES normal performance (n-0) and System response to contingencies in Table 1 – Steady State Performance. *[Violation Risk Factor: TBD] [Time Horizon: TBD]*

R3.1. Studies shall determine whether the BES meets the performance requirements in Table 1 – Steady State Performance.

R3.2. Contingency analyses shall simulate the removal of all elements including those that System protection is expected to disconnect for each Contingency without operator intervention.

R3.2.1. For all generators, studies shall consider the minimum steady state voltage limitations of all generators and identify how the generators are treated in the steady state simulation.

R3.2.2. For all Transmission lines, studies shall consider relay loadability and identify how loadability is treated in the steady state simulation.

R3.3. For Steady State studies:

R3.3.1. Performance criteria for System normal conditions and for Planning Events in Table 1 – Steady State Performance shall be met.

R3.3.2. Evaluations shall be performed for single Contingencies (identified in Table 1 – Steady State Performance).

~~**R.3.3.2.1.** Consequential Load loss (expected maximum demand and expected duration) following a single Contingency shall be identified in the Planning Assessment.~~

R.3.3.2.2. Following single Contingency events, System adjustments other than shedding of firm Load or curtailment of firm transfers are permitted to meet performance requirements provided these adjustments can be accomplished within the time period allowed by the applicable time limited ratings.

R3.3.3. Those Planning Event Contingencies in Table 1 – Steady State Performance not covered in Requirement R3.3.2 that are expected to produce more severe System impacts shall be identified, evaluated for System performance, and the rationale for the Contingencies selected for evaluation shall be available as supporting information and shall include an explanation of why the remaining Contingencies would produce less severe System results.

R3.4. Those Extreme Events in Table 1 – Steady State Performance that are expected to produce more severe System impacts shall be identified, evaluated for System performance, and the rationale for the Contingencies selected for evaluation shall be available as supporting information and shall include an explanation of why the remaining Contingencies would produce less severe System results. If the Extreme Events analysis concludes there are Cascading Outages caused by the occurrence of Extreme Events, an evaluation of implementing a change designed to reduce or mitigate the likelihood of such consequences shall be conducted.

R3.5. Manual and automatic generation run-back is allowed as a response to single and multiple Contingencies as long as Facility Ratings are not exceeded.

R3.6. Manual and automatic generation tripping is allowed for multiple Contingencies and for single Contingencies only in situations that meet all of the following conditions:

R3.6.1. TBD

Note: WECC has informed the SDT that it will be submitting an Interconnection-wide regional variance to allow for manual and automatic generation tripping for single Contingencies. The regional variance will be justified based on physical System differences in the western Interconnection. WECC is developing a white paper to support this position. The actual text of the regional variance will be included in the next posting of this standard.

R4.

For the Stability portion of the Planning Assessment, as described in Requirement R2.4

and Requirement R2.5, each Transmission Planner and Planning Coordinator shall perform the Contingency analyses listed in Table 2 – Stability Performance. The studies shall cover both System Stability and plant Stability. The following requirements apply to both System Stability and plant Stability studies unless otherwise noted. *[Violation Risk Factor: TBD] [Time Horizon: TBD]*

R4.1. Studies to meet the performance requirements in Table 2 – Stability Performance shall use computer Stability simulations that analyze the response of the BES.

R4.2. Contingency analyses shall simulate the removal of all elements including those that System protection is expected to disconnect for each Contingency without operator intervention.

R4.3. Studies shall consider the voltage ride through capability of all generators and identify how the generators are treated in the simulation.

R4.4. Studies shall identify any planned upgrades (including protection and control modifications) needed to meet the performance requirements of the Planning Events of Table 2 – Stability Performance and validate their effectiveness.

R4.5. For the System Stability study:

R4.5.1. At a minimum, those Planning Event Contingencies in Table 2 – Stability Performance that would produce more severe System impacts shall be identified, evaluated for System performance, and the rationale for the Contingencies selected for evaluation shall be available as supporting information with an explanation of why the remaining Contingencies would produce less severe System results.

R4.5.2. At a minimum, those Extreme Events in Table 2 – Stability Performance that would produce more severe System impacts shall be identified, evaluated for System performance, and the rationale for the Contingencies selected for evaluation shall be available as supporting information and shall include an explanation of why the remaining Contingencies would produce less severe System results. If the Extreme Events analysis concludes there are Cascading Outages, an evaluation of implementing a change designed to reduce or mitigate the likelihood of such consequences shall be conducted.

~~**R4.6.** For the Plant Stability studies:~~

~~**R4.6.1.** Shall be performed for individual generating units 20 MW or greater directly connected through a step-up transformer to the BES and for generating units at the same location which total 75 MW or greater, directly connected through their step-up transformer(s) to the BES.~~

~~**R4.6.2.** Shall be performed for changes in the real power output of a generating unit by more than 10% of the existing capability or more than 20 MW whichever is greater.~~

~~**R4.6.3.** Shall be performed and evaluated for those Planning Events that would produce more severe System impacts and the rationale for the Contingencies selected for evaluation shall be available as supporting~~

~~information and shall include an explanation of why the remaining Contingencies would produce less severe System results. The identified Contingencies, at a minimum, shall be evaluated.~~

~~**R4.6.4.** Shall meet Performance requirements for Planning Events in Table 2 – Stability Performance.~~

~~**R5.** Each Transmission Planner and Planning Coordinator shall determine and identify individual and joint responsibilities for performing the required studies for the Planning Assessment. *[Violation Risk Factor: TBD] [Time Horizon: TBD]*~~

R6. Each Planning Coordinator shall coordinate the distribution of Planning Assessment results among affected entities, coordinating analysis of these results through an open and transparent peer review process. *[Violation Risk Factor: TBD] [Time Horizon: TBD]* This distribution shall include:

R6.1. Transmission Planners within the Planning Coordinator's area

R6.2. Transmission Planners of neighboring impacted areas

R6.3. Planning Coordinators of neighboring areas

Table 1 – Steady State Performance

Performance Requirements For all Planning Events: • Equipment Ratings shall not be exceeded. • System steady state voltages and post-transient voltage deviation shall be within acceptable limits established by the Planning Coordinator (or Transmission Planner if more restrictive.) • Voltage instability, cascading outages, and uncontrolled islanding shall not occur. • Consequential Load loss is allowed for all cases shown. • Simulate the removal of all elements that Protection Systems and controls are expected to disconnect for each Contingency. • Simulate Normal Clearing unless otherwise specified.			
Planning Events			
#	**Event**	**Interruption of Firm Transfer Allowed (does not result in loss of Load)**	**Non-Consequential Load Loss Allowed**
P1 (single Contingency)	Loss of: 1. A generator 2. A Transmission circuit 3. A transformer 4. A shunt device (including FACTS devices)	No	No
P2 (single Contingency)	Loss of: 1. Bus section above 300 kV 2. Non-bus tie breaker (above 300 kV) due to internal fault 3. Single pole of a DC line	Yes, if transfer is dependent on the outaged DC line No otherwise	No
P3 (multiple Contingency)	Loss of either a generator, Transmission circuit, a transformer with low side voltage rating above 300 kV, or a bus and a stuck non-bus tie breaker (above 300 kV)	Yes, if transfer is dependent on the outaged DC line No otherwise	No
P4 (multiple Contingency)	1. Loss of a generator followed by a System adjustment followed by the loss of a generator. 2. Loss of a generator followed by a System adjustment followed by the loss of a monopolar DC line 3. Loss of a generator followed by a System adjustment followed by the loss of a Transmission circuit 4. Loss of a generator followed by a System adjustment followed by the	Yes, if transfer is dependent on the outaged DC line No otherwise	No

	loss of a transformer		
P5 (multiple Contingency)	Above 300 kV, the loss of: 1. A Transmission circuit followed by a System adjustment followed by the loss of another Transmission circuit 2. A Transmission circuit followed by a System adjustment followed by the loss of a transformer with low side voltage rating above 300 kV 3. A transformer with low side voltage rating above 300 kV followed by a System adjustment followed by the loss of another transformer	Yes	No
P6 (single Contingency)	Loss of: 1. A bus tie breaker due to internal fault 2. A bipolar DC line or an asynchronous tie line 3. A non-bus tie breaker (below 300 kV) due to internal fault 4. A bus section below 300 kV	Yes	Yes
P7 (multiple Contingency)	Loss of: 1. A bus section above 300 kV and a stuck bus tie breaker 2. Either a generator, a Transmission circuit, a transformer, or a bus and a stuck non-bus tie breaker (below 300 kV)	Yes	Yes
P8 (multiple Contingency)	Below 300 kV, the loss of: 1. A Transmission circuit followed by a System adjustment followed by the loss of another Transmission circuit 2. A Transmission circuit followed by a System adjustment followed by the loss of a transformer 3. A transformer followed by a System adjustment followed by the loss of another transformer	Yes	Yes
P9 (multiple Contingency)	1. Loss of any two circuits on a common structure (excluding where multiple circuits share a common structure for no more than one mile) 2. Loss of a generator followed by a System adjustment followed by the loss of a monopolar or bipolar DC line, or an asynchronous tie line 3. Loss of a DC line (monopolar or bipolar) or asynchronous tie followed by a System adjustment followed by the loss of a second DC line (monopolar or bipolar) or asynchronous tie 4. Loss of a DC line (monopolar or bipolar) or asynchronous tie followed by a System adjustment followed by the loss of a Transmission circuit	Yes	Yes

	5. Loss of a transformer followed by a System adjustment followed by the loss of a DC line (monopolar or bipolar) or asynchronous tie line 6. Loss of a transformer followed by a System adjustment with a spare transformer available followed by the loss of another transformer		

Extreme Events

Evaluation Requirements For all Extreme Events: 1. See Requirement R3.4 2. Simulate the removal of all elements that Protection Systems and controls are expected to disconnect for each Contingency. 3. Simulate Normal Clearing unless otherwise specified.

Extreme Event Descriptions

1. Loss of a single generator, Transmission circuit, DC line, or transformer forced out of service followed by another single generator, Transmission circuit, DC line, or transformer forced out of service prior to System adjustments. **2.** Local area events affecting the Transmission System such as: a. Loss of tower line with three or more circuits b. Loss of all Transmission lines on a common right-of-way c. Loss of switching station or substation (loss of one voltage level plus transformers) d. Loss of all generating units at a station e. Loss of a large Load or major Load center **3.** Wide area events affecting the Transmission System such as: a. Loss of a large gas pipeline into a region or multiple regions that have significant gas-fired generation b. A successful cyber attack c. Regulation that restricts or eliminates the use of a river or lake or other body of water as the cooling source for generation d. Shutdown of a nuclear power plant(s) and other facilities a day or more prior to a hurricane, tornado or wildfire, or for other common causes e. Regulation that restricts or eliminates the use of a river or lake or other body of water as the cooling source for generation f. Shutdown of a nuclear power plant(s) and other facilities a day or more prior to a hurricane, tornado or wildfire, or for other common causes such as problems with similarly designed plants g. The loss of older Transmission lines which may not be constructed to meet an entity's present radial ice or wind loading requirements, while the newer or stronger Transmission lines remain in service h. Other events based upon operating experience

Table 2 – Stability Performance Table

Performance Requirements For all Planning Events: • The System shall be stable[1] • Dynamic voltages shall be within acceptable limits established by the Planning Coordinator or Transmission Planner (if more restrictive) • Uncontrolled islanding and Cascading Outages shall not occur • Simulate the removal of all elements that Protection Systems and controls are expected to disconnect for each Contingency. • Simulate Normal Clearing unless otherwise specified.			
Planning Events			
#	**Initial Condition**	**Event**	**Non-Consequential Load Loss Allowed**
P1 (single Contingency)	System normal	Single Line Ground (SLG) fault on, a 3 Phase (3Ø) fault on, or an unexpected loss without a fault of (whichever is worst): 1. A generator 2. A Transmission circuit 3. A transformer	No
P2 (single Contingency)	System normal	1. SLG fault on bus section above 300 kV 2. SLG internal fault in non-bus tie breaker (above 300 kV) 3. A single pole block of a DC line	No
P3 (multiple Contingency)	System normal	SLG fault on either a generator, Transmission circuit, a transformer, or a bus and a stuck[2] non-bus tie breaker (above 300 kV)	No
P4 (multiple Contingency)	A single generator out of service followed by System adjustments	1. Apply a P1.1 Contingency. 2. Apply a P2.3 Contingency. 3. Apply a P1.2 Contingency. 4. Apply a P1.3 Contingency.	No
P5 (multiple Contingency)	A Transmission circuit above 300 kV out of service followed by System adjustments	1. Apply a P1.2 Contingency. 2. Apply a P1.3 Contingency.	No

	A transformer with low side voltage rating above 300 kV out of service followed by System adjustments	3. Apply a P1.3 Contingency.	
P6 (single Contingency)	System normal	1. SLG internal fault in bus tie breaker 2. A bipolar block of a DC line 3. SLG internal fault in non-bus tie breaker (below 300 kV) 4. SLG fault on bus section (below 300 kV)	Yes
P7 (multiple Contingency)	System normal	1. SLG fault on a bus section above 300 kV and a stuck bus tie breaker 2. SLG fault on either a generator, a Transmission circuit, a transformer, or a bus and a stuck non-bus tie breaker (below 300 kV)	Yes
P8 (multiple Contingency)	A Transmission circuit below 300 kV out of service followed by System adjustments A transformer with low side voltage rating below 300 kV out of service followed by System adjustments	1. Apply a P1.2 Contingency. 2. Apply a P1.3 Contingency. 3. Apply a P1.3 Contingency.	Yes
P9 (multiple Contingency)	System normal A single generator out of service followed by System adjustments A DC circuit out of service followed by	1. SLG fault on each circuit of any two circuits on a common structure (excluding events where multiple circuits share a common structure for no more than one mile). 2. Apply a P6.2 Contingency. 3. Apply a P2.3 Contingency. 4. Apply a P1.2 Contingency.	Yes

	System adjustments A transformer out of service followed by System adjustments A spare transformer inserted to replace an outaged transformer followed by System adjustments	5. Apply a P2.3 Contingency. 6. Apply a P1.3 Contingency.	
Extreme Events			
Evaluation Requirements For all Extreme Events: • See Requirement R4.5.2 in the text • Simulate the removal of all elements that Protection Systems and controls are expected to disconnect for each Contingency. • Simulate Normal Clearing unless otherwise specified.			
1. 3Ø fault on generator with stuck breaker 2. 3Ø fault on Transmission circuit with stuck breaker 3. 3Ø fault on transformer with stuck breaker 4. 3Ø fault on bus section with stuck breaker 5. 3Ø internal fault in breaker 6. 3Ø fault on two or more circuits on a common structure 7. SLG or 3Ø fault on all Transmission lines on a common right-of-way 8. 3Ø fault on switching station or substation (loss of one voltage level plus transformers) 9. 3Ø fault with loss of all generating units at a station			

Notes:

1. System stable means:

a. Angular stability:

i. For Planning Events P1 and P3.2: No generating unit or units shall be allowed to pull out of synchronism. A generator being disconnected from the system by fault clearing action or by a Special Protection Scheme is not considered pulling out of synchronism.

ii. For all other Planning Events: No generating unit or units totaling more than the contingency reserve (spinning reserve) of the Balancing Authority shall be allowed to pull out of synchronism. Generators that pull out of synchronism must have out-of-step protection and the resulting apparent impedance swings must not pass through relay characteristics that would result in the tripping of

any transmission system elements other than the generating unit and its direct connection facilities.

iii. For all Planning Events: Power oscillations shall exhibit acceptable damping as established by the Planning Coordinator or Transmission Planner (if more restrictive).

b. General: Unplanned islanding of portions of the system shall not occur for Planning Events.

2. A stuck breaker means that for a gang-operated breaker, all three phases of the breaker have remained closed. For an independent pole operated (IPO) breaker, only one pole is assumed to remain closed.

C. Measures

M1. To be supplied at a later date.

E. Regional Variances

1. WECC Interconnection-wide waiver is under development (see Requirement R3.6.2).

Version History

Version	Date	Action	Change Tracking
1		Revision of TPL-001-0 as per Project 2006-02; includes merging requirements of TPL-001-0, TPL-002-0, TPL-003-0, and TPL-004-0 into one, single, comprehensive, coordinated standard: TPL-001-1	Not employed due to scope of revision

NERC
NORTH AMERICAN ELECTRIC RELIABILITY CORPORATION

Comment Form for First Draft of TPL-001-1 — Transmission System Planning Performance Requirements

Please use this form to submit comments on the proposed draft of TPL-001-1. Comments must be submitted by **Friday, October 26, 2007**. You may submit the completed form by e-mail to sarcomm@nerc.net with the words "TPL-001 Draft 1" in the subject line. If you have questions please contact Ed Dobrowolski at ed.dobrowolksi@nerc.net or by telephone at 609-947-3673.

Individual Commenter Information **(Complete this page for comments from one organization or individual.)**		
Name:	David M Conroy	
Organization:	Central Maine Power Company	
Telephone:	(207) 626-9750	
E-mail:	david.conroy@cmpco.com	
NERC Region (check all Regions in which your company operates)		**Registered Ballot Body Segment (check all industry segments in which your company is registered)**
☐ **ERCOT**	☒	1 — Transmission Owners
☐ **FRCC**	☐	2 — RTOs and ISOs
☐ **MRO**	☐	3 — Load-serving Entities
☒ **NPCC**	☐	4 — Transmission-dependent Utilities
☐ **RFC**	☐	5 — Electric Generators
☐ **SERC**	☐	6 — Electricity Brokers, Aggregators, and Marketers
☐ **SPP**	☐	7 — Large Electricity End Users
☐ **WECC**	☐	8 — Small Electricity End Users
☐ **NA – Not Applicable**	☐	9 — Federal, State, Provincial Regulatory or other Government Entities
	☐	10 — Regional Reliability Organizations and Regional Entities

Group Comments (Complete this page if comments are from a group.)

Group Name:

Lead Contact:

Contact Organization:

Contact Segment:

Contact Telephone:

Contact E-mail:

Additional Member Name	Additional Member Organization	Region*	Segment*

*If more than one Region or Segment applies, please list all that apply. Regional acronyms and segment numbers are shown on prior page.

Background

The purpose of this standard is to establish Transmission System planning performance requirements within the planning horizon to develop a Bulk Electric System that will operate reliably over a broad spectrum of System conditions and following a wide range of probable Contingencies. This standard will replace TPL-001-0, TPL-002-0, TPL-003-0, and TPL-004-0. The standard drafting team has not yet addressed TPL-005-0 and TPL-006-0, but will address these two standards during the next phase of the drafting process.

The major objectives of the standard drafting team are to:

1) Ensure the standard is complete and the requirements are set at an appropriate level to ensure reliability (Not Least Common Denominator)
2) Ensure that the standard is enforceable by having clearly defined requirements with unambiguous language
3) Address the issues raised by FERC Order 693, 890, and other applicable orders
4) Address the issues raised in the original Standards Authorization Request (SAR) and the Supplemental SAR.

The standard drafting team did not attempt to edit the existing standards but rather chose to write one standard that addresses all aspects of transmission planning in the existing TPL-001-0, TPL-002-0, TPL-003-0, and TPL-004-0. The standard drafting team organized the new standard in the following sections:

R1 – Modeling requirements
R2 – Assessment and Corrective Plan requirements
R3 – Steady State Analysis requirements
R4 – Stability Analysis requirements
R5 – Coordination requirements

The standard drafting team determined that the requirements and analysis for Steady State are different from those for stability. As such, the standard drafting team separated the analysis requirements and created two performance requirement tables.

The standard drafting team recognizes that this draft standard is a starting point for industry input into the standard and that there is still a lot of work required to complete the process. The standard drafting team has made many changes to clarify requirements, add requirements, and make some of the performance requirements stricter. The standard drafting team has not addressed Measures, Risk Factors, Violation Severity Factors, or Time Horizons at this time. These will be addressed when the standard drafting team has better defined the requirements of the standard.

For questions where you agree with the standard drafting team, please state that you agree and if available, please provide supporting documentation. If you disagree with the standard drafting team, please explain why you disagree and provide data to support your position, such as outage data or analysis. If you believe that we have made a performance requirement too strict please provide supporting documentation. If applicable, please include the approximate cost in man-hours for additional studies and/or cost in $Millions for additional transmission investment to meet the new requirements or the stricter requirements. If you believe that the standard should be stricter, please provide the rationale along with any supporting data, including existing practices, cost estimates or additional analysis.

To improve the standard, the standard drafting team would appreciate responses to as many of these questions as you can answer.

A. New Definitions

Many of the concerns about the existing TPL standards come from the fact that a number of generally understood concepts are embedded in undefined terms, tables, and footnotes. To clarify some of these concerns, the standard drafting team is proposing new definitions. Please indicate whether you agree with the following proposed definitions and provide proposed changes to the definitions if you disagree:

Definition	**Agree or Disagree**
Q1. **Base Case**: Computer representation of the projected initial or starting Transmission System conditions for a specific point in time. Each base case reflects the forecasted Load at each bus (or node) on the interconnected Transmission System, the transmission facilities which deliver the generation and reactive resources to the connected Load, and the generation dispatch including firm transaction obligations assumed to supply the connected Load. The models also reflect facility ratings in accordance with FAC-008 & FAC-009.	☐Agree. ☒Do not agree.
Q1. **Comment: There are a few undefined terms in this definition: "Transmission System" and "interconnected Transmission System". The definition needs to specifically identify what should be modeled and in a manner consistent with other NERC definitions. The definition refers to Facility ratings rather than the general reference to FAC-008 & FAC-009**	
Q2. **Consequential Load Loss:** Load that is no longer served because it is directly connected to an element(s) that is removed from service due to fault clearing action or mis-operation.	☒Agree. ☐Do not agree.
Q2. **Comment:**	
Q3. **Extreme Events:** Events which are more severe than Planning Events and have a low probability of occurrence.	☐Agree. ☒Do not agree.
Q3. **Comment: Modify to "Events which are more severe,but have a lower probability of occurrence, than Planning Events".**	
Q4. **Long-Term Transmission Planning Horizon:** Transmission planning period that covers years six through ten or beyond.	☐Agree. ☒Do not agree.
Q4. **Comment: "A Planning Assessment period that covers years six through ten", is sufficient for the standard." Suggest changing the name to Long-Term Planning Assessment.**	
Q5. **Near-Term Transmission Planning Horizon:** Transmission planning period that covers years One through five.	☒Agree. ☐Do not agree.
Q5. **Comment: Suggest changing the name to Near-Term Planning Assessment, and introduce the description the same was as above.**	
Q6. **Non-Consequential Load Loss:** Load loss other than	☒Agree.

Consequential Load Loss. For example, Load loss that occurs through manual (operator initiated) or automatic operations such as under-voltage Load shedding, under-frequency Load shedding, or Special Protection Systems.	☐Do not agree.
Q6. **Comment:**	
Q7. **Planning Assessment:** Documented evaluation of future Bulk Electric System needs by the use of performance studies that cover a range of assumptions regarding system conditions, time frames, future plans including capital reinforcements and operating procedures and other factors, such as asset conditions and age.	☐Agree. ☒Do not agree.
Q7. **Comment: Eliminate "capital" from the definition. It is not defined or consistently applicable to the standard. Reference to vague "other factors, such as asset conditions and age" should be removed from this standard; there are no consistent definitions or industry standards on which to base this requirement, nor does it appear to be a necessary addition to the standard.**	
Q8. **Planning Events:** Events which require Transmission system performance requirements to be met.	☐Agree. ☒Do not agree.
Q8. **Comment: Propose, "Events for which Transmission performance requirements must be met".**	
Q9. **Plant Stability Study:** Study of an individual plant's Stability for various Contingencies in the vicinity of the plant; concerned with the effect on the System of the generating units' loss of synchronism and the damping of the generating units' power oscillations.	☐Agree. ☒Do not agree.
Q9. **Comment: A Plant Stability Study should be a part of a System Stability Study. How should and why would they be differentiated? The analysis and performance constraints are the same in both cases; it's just a matter of whether one or more generating units are involved.**	
Q10. **System Stability Study:** Study of the System or portions of the System to ensure that angular Stability is maintained, inter-area power oscillations are damped, and voltages during the dynamic simulation stay within acceptable performance limits.	☐Agree. ☒Do not agree.
Q10. **Comment: See comment on Q9; proposed modification, "Study of the System or portions of the System to determine whether plant and system angular Stability is maintained, power oscillations are damped, and voltages during the dynamic simulation stay within acceptable perfomance limits.**	
Q11. **Year One:** The first year that a Transmission Planner is responsible for studying. This is further defined as the planning window that begins the next calendar year from the time the Transmission Planner submits their annual studies. Analysis conducted for time horizons within the calendar year from the study publication are assumed to be conducted under the auspices of Operations Planning.	☐Agree. ☒Do not agree.
Q11. **Comment: Modify to, "The first year that a Tranmission Planner is responsible for studying. This is further defined as the planning window that begins the next calendar year from the time the Transmission Planner completes its annual studies."**	

B. Sensitivity Studies

The draft planning standard includes the requirement, as specified in FERC Order 693, that planning decisions be based on a portfolio of analyses. In section 12.a.ii "Sensitivity studies and critical system conditions" FERC provided direction to consider a full range of variables considered to be significant that need to be assessed and documentation provided that explains the rationale for the selection of variables assessed.

In addition to the firm obligation scenario, the portfolio of analyses should be supplemented to include information from sensitivity analysis. The sensitivity analysis should be developed using additional cases that simulate reasonably stressed system conditions. The standard drafting team has included several parameters that can be varied to create the requisite sensitivity case(s). The draft standards specify that the sensitivities reflect one or more of the following conditions and that documentation be provided explaining the rationale for selecting the sensitivity(ies) employed. The parameters that should be varied include:

- Higher or lower Load forecasts from the Base Case with variability of Load/demand and Load power factors due to season, weather, or time of day.
- Modification of expected transfers.
- Unavailability of long lead time facilities.
- Variability and outages of Reactive Resources.
- Generation additions, retirements, or other dispatch scenarios.
- Decreased effectiveness of controllable Loads and Demand Side Management.
- Modification of planned Transmission outages

To help focus industry discussion, please respond to the questions below:

Q12. Should the standard provide more specific direction regarding the number of sensitivity cases that need to be developed?

Yes ☐ No ☒

Comment: The standard is unclear whether or not it mandates the requirement to mitigate consequences of problems highlighted as a result of one of the sensitivities.

Suggest modification to, "…sensitivity testing that stresses the System shall be considered, and documentation with the rationale for the sensitivity testing shall be supplied. The sensitivity case(s) may include one or more of the following conditions:"

2.1.3.3 should refer only to planned facilities that may be delayed. 2.1.3.4 - "variability" is too vague for a standard; the standard needs to be more specific as to the intent. 2.1.3.7 should be consistent with 1.4. These comments also apply to 2.4.3.

Q13. Should the standard specify the required changes, such as changes in expected transfers, load forecasts, generation patterns, etc., from the study case to be considered a "reasonably stressed" case?

Yes ☐ No ☒

Comment: The standard is unclear whether or not it mandates the requirement to mitigate consequences of problems highlighted as a result of one of the sensitivities.

Reasonably stressed conditions are dependent upon the study area under review and the standard is not likely to be able to be crafted to provide sufficent and consistent direction. However, it might be helpful if the standard clarified whether the base case should include any unplanned generator outages or whether, aside from potential sensitivities, unplanned generator outages are considered only through P1, P3 or P4 Contingencies. If the standard addresses unplanned generator outages only through P1, P3 and P4, then it is recommended that a mandatory sensitivity analysis, with required mitigation, include various potential combinations of a reasonable amount of unplanned outages. The combinations should be based on the part of the system that is under study.

Q14. The SDT proposes to require the use of sensitivity studies for Near-Term Transmission System Planning Horizon stability analysis. Do you concur with the use of sensitivity analysis in dynamic studies?

Yes ☒ No ☐
Comment: The standard is unclear whether or not it mandates the requirement to mitigate consequences of problems highlighted as a result of one of the sensitivities.

Suggest modification to, "…sensitivity testing that stresses the System should be considered. Sensitivity case(s) might include among the following conditions:" 2.4.3 shold mimic 2.1.3 except in regard to load models.

Q15. The draft TPL standard does not require the use of sensitivity studies for the Long-Term Transmission System Planning Horizon (year six and beyond) studies. Do you concur with this approach or should there be some level of sensitivity analysis required for the long-term period?

Yes ☒ No ☐
Comment: There is no need for sensitivity analysis.

C. Corrective Action Plans

Requirement R2.7 of the standard states that when analysis shows that the performance requirements in Table 1 and Table 2 are not fully met, a Corrective Action Plan that utilizes all or some of the Transmission System enhancements, generation additions, DSM, new technologies and Operating Procedures shall be included in the Planning Assessment. This Corrective Action Plan should ensure that upon its implementation the identified system deficiencies will be corrected so that the performance requirements in Table 1 and Table 2 will be met. Furthermore, studies included in the Planning Assessment should demonstrate that this is indeed the case.

Q16. Requirement R2.7.1: Such Corrective Action Plans shall "Identify System deficiencies and the associated actions needed to achieve required System performance including Transmission and generation improvements, DSM, new technologies, or Operating Procedures including the duration of Interim Operating Procedures". System deficiencies may be corrected using an integrated plan, i.e., an optimal mix of Transmission, generation, DSM and Operating Procedures. Should DSM be considered in conjunction with other measures in developing Corrective Action Plans? If yes, please comment on how the impact of DSM should be included.

Yes ☒ No ☐
Comment: DSM should be included to the extent that its performance is sufficiently and consistently understood. The standard does not use the term "optimal" Therefore, the Drafting Team appears to be interpreting the Standard to require a vertically-integrated Planner to produce a so-called optimal-mix of resources plan. This would be an incorrect assumption and is not required. In areas with independent planners and competitive wholesale markets, it is sufficent to identify system needs and produce a plan that identifies regulated transmission solutions in the event that market-based resources (such as DSM) do not address those identified needs. Therefore, while DSM can be as effective a resource as generation, per Commission Orders,

in areas with ISOs/RTOs and a competitive wholesale market, the NERC Standard cannot prescribe the development so-called optimized (as is suggesgted by the Drafting Team) resource-mix plans, as identified by a central planner.

Q17. Requirement R2.7.2: Such Corrective Action Plans shall "Be added to study cases and the cases re-tested to show that the System with planned additions meets the performance requirements in the tables". Should new studies, including the facilities comprising the Corrective Action Plan, be performed to assess System normal performance and Contingency response for conditions that previously resulted in the System deficiencies (without the planned additions) and also demonstrate that the changes would not result in inadvertent negative impacts on the System. If you "agree", please comment on how a study area should be determined.

Yes ☒ No ☐
Comment: The study area should be based upon planning expertise and knowledge of the system, giving due consideration to external impacts.

Q18. Requirement R2.7.3: The standard calls for a differentiation between committed and proposed projects. Do you agree that they should be treated separately? If not, please state why not.

Yes ☒ No ☐
Comment: They should be viewed differently in the Near-Term. However, these should be defined terms.

Q19. Requirement R2.7.4: For such Corrective Action Plans "Committed projects shall not be removed without documentation to show that the revised plan meets the performance requirements". Do you agree or disagree with this requirement? If you disagree, please explain why.

Yes ☒ No ☐
Comment: It is unclear as to what the commited project is being removed from. Suggested language "…removed from the plan…".

D. Performance Requirements

The proposed revised planning standard (TPL-001-1) incorporates a number of changes in requirements as compared to the current planning standards (TPL-001-0 through TPL-004-0), which it is expected to replace. Among other things these changes are intended to clarify the standard, address issues described by FERC, and, in particular, to "raise the bar." Strengthening the planning standards in selected areas is necessary to maintain a reliable Bulk Electric System that is up to the challenges of the 21st Century. In proposing the requirements in this draft, the standard drafting team attempted to balance the value of increased reliability against any potential increase in work and costs to meet the new proposed standard.

The standard drafting team is seeking input from the industry to determine whether a proper balance has been achieved. The areas where material changes are proposed in this draft are enumerated below, and questions are posed by the standard drafting team to obtain industry comment. In formulating your responses, please keep in mind that material changes in the final standard will be accompanied by a transition plan to provide for an orderly implementation of the final standard.

The performance requirements relative to Non-Consequential Loss of Load for the following events enumerated in the two tables can be considered more stringent than the existing TPL standards. Furthermore, the proposed standard is based on an assumption that performance requirements for EHV facilities should be more stringent than for lower voltage facilities.

Do you agree that Non-Consequential Loss of Load should not be permitted for the following events? If you disagree, please provide a reason for your disagreement.

Event	Agree or Disagree	Comment
Q20. P2-1: Loss of bus section (SLG for stability) above 300 kV	☒Agree. ☐Do not agree.	
Q21. P5-1: For facilities above 300 kV, loss of a Transmission circuit followed by System adjustment[1] followed by loss of another Transmission circuit	☐Agree. ☒Do not agree.	Given the low probability of extended overlapping outages of overhead facilities, systems have been designed assuming that load shedding following the loss of a second transmission line is permissible. Eliminating any allowance for load shedding for this condition may require significant system expansion and cost to to customers. However, it would be reasonable to consider establishing an upper bound to the amount of load that could be shed for these purposes.
Q22. P5-2: For facilities above 300 kV, loss of a Transmission circuit followed by System adjustment followed by loss of a transformer with low side voltage rating above 300 kV	☐Agree. ☒Do not agree.	Should also consider the initial loss of a transformer, followed by the loss of a Transmission circuit. This should state a transformer with a "high-side" rating above 300 kV.
Q23. P5-3: For facilities above 300 kV, loss of a transformer with low side voltage rating above 300 kV followed by System adjustment followed by loss of another transformer	☐Agree. ☒Do not agree.	This should state a transformer with a "high-side" rating above 300 kV.

[1]System adjustment can be manual or automatic.

The proposed standard is based on an assumption that performance requirements for non-bus tie EHV breakers should be distinguished from other breakers. Do you agree that Non-Consequential Loss of Load should not be permitted for this event?

Q24. Loss of non-bus tie breaker (above 300 kV) due to internal fault

Yes ☒ No ☐
Comment: It is unclear why bus tie breakers are being treated differently than other breakers. They should be treated the same.

The proposed standard is based on an assumption that performance requirements for non-bus tie EHV breakers should be distinguished from other breakers and that performance requirements for EHV facilities should be more stringent than for lower voltage facilities. Do you agree that Non-Consequential Loss of Load should not be permitted for this event?

Q25. P3-1: Loss of (SLG for stability) either a generator, a Transmission circuit, a transformer, or a bus and a stuck non-bus tie breaker (above 300 kV)

Yes ☐ No ☒
Comment: It is unclear why bus tie breakers are being treated differently than other breakers. They should be treated the same.

The proposed standard is based on an assumption that the following events are relatively high probability events and, therefore, Non-Consequential Loss of Load should not be permitted. Do you agree? If you disagree, please provide a reason for your disagreement.

Event	Agree or Disagree	Comment
Q26. P4-1: Loss of a Generator followed by System adjustment[1] followed by loss of another Generator	☐Agree. ☒Do not agree.	If the base case or a mandatory sensitivity case already includes unplanned generator outages, some load loss may be reasonable following the subsequent loss of 2 additional generators.
Q27. P4-2: Loss of a generator followed by a System adjustment followed by the loss of a monopolar DC line	☐Agree. ☒Do not agree.	If the base case or a mandatory sensitivity case already includes unplanned generator outages, some load loss may be reasonable following the subsequent loss of an additional generators and a monopolar DC line
Q28. P4-3: Loss of a generator followed by System adjustment followed by loss of a Transmission circuit	☐Agree. ☒Do not agree.	If the base case or a mandatory sensitivity case already includes unplanned generator outages, some load loss may be reasonable following the subsequent loss of an additional generators and a Transmission circuit
Q29. P4-4: Loss of a generator followed by System adjustment followed by loss of a transformer	☐Agree. ☒Do not agree.	If the base case or a mandatory sensitivity case already includes unplanned generator outages, some load loss may be reasonable following the subsequent loss of an additional generators and a transformer

The performance requirement for the following event may be considered less stringent than the existing TPL Standards — P2-3: Loss of a single pole of a DC line. Interruption of firm

[1] System adjustment can be manual or automatic

transactions (without Loss of firm Load) if the transaction is dependent on the faulted DC line is now allowed for this initiating event/Contingency.

Q30. Do you agree that interruption of any firm transfers that are dependent on the outaged DC line that is taken out of service should be permitted?

Yes ☒ No ☐
Comment: This should also apply to firm transfers via single or double ac facilities as well. In either case, the transfer could be linked to dedicated facilities.

E. Stability

Q31. The proposed standard is based on an assumption that steady state analysis and stability analysis are different from each other and that therefore, two tables of Contingencies and performance requirements were needed. It is also based on an assumption that stability study requirements should be clearly separated from the steady state study requirements. Do you agree with the action taken in separating stability analysis from steady state analysis? If not, please explain.

Yes ☒ No ☐
Comment:

Q32. The SDT has added requirements for plant stability studies and has drawn a distinction in these studies from System stability studies. Do you agree with this approach? If not, please explain.

Yes ☐ No ☒
Comment: A Plant Stability Study should be a part of a System Stability Study. How should and why would they be differentiated? The analysis and performance constraints are the same in both cases; it's just a matter of whether one or more generating units are involved.

Q33. The existing TPL-004-0 standard has a requirement to consider the Loss of all generating units at a plant, but it was not clear whether this requirement should apply to stability studies. The SDT did not include this requirement in the stability table, because it is hard to envision a condition when all units would trip simultaneously within the timeframe of a stability simulation. Do you think this condition should be required in stability analysis of extreme events? If not, please explain.

Yes ☐ No ☒
Comment: Difficult to envision how such an event would occur.

Q34. There are an increasing number of events with slow voltage recovery after faults on the Transmission System. The dynamic behavior of induction motor loads is a major factor in this phenomenon. The proposed standard therefore requires that the load model for stability studies of peak Load conditions include the dynamic effects of induction motors. Do you agree with this requirement? If not, please explain?

Yes ☐ No ☒
Comment: This requirement is too specific and limited. Induction motors are only one component of a complex load model. Complex load models are not always necessary, nor are they always the most conservative, depending on the analysis that is being conducted. Where complex load models are required, they should be considered; this may involve use of complex motor and lighting loads or polynomial load representations

with or without frequency dependence. This question also suggests the need for an industry standard regarding transient voltage recovery.

Q35. What type of manual or automatic adjustments of generators should be allowed for single and multiple Contingencies?

Comment: Manual or automatic adjustments should be permissible to allow redispatch to return the system to below normal/load cycle based ratings; however, the system should not exceed applicable emergency ratings prior to the adjustment. Manual system adjustment should be allowed in between the multiple Contingencies described in P5, provided that the adjustment can be made between contingencies using short-term reserves (10-30 minute).

F. Generation Runback and Tripping

The SDT has discussed the automatic and manual readjustments of generators that should be permissible for single contingencies and multiple contingencies. The existing TPL-001-0 through TPL-004-0 standards through footnote (a) of Table I could include emergency ratings applicable for short durations as required to permit operating steps necessary to maintain system control. The footnote is silent about allowable generation adjustments in response to the Category B events. However, it does indicate that system adjustments are permitted to prepare for the next Contingency. These system adjustments could include manual or automatic adjustments involving generation.

The SDT has learned that many transmission owners use System Protection Systems (SPS) or Remedial Action Schemes (RAS) to trip generation for single and multiple Contingency outage events to prevent overloads, low voltage, and instability in the Interconnected Transmission network for N-1 and N-2 events. In some cases, the RAS are used to prepare for the next Contingency; but in some cases, the RAS are used to simultaneously avoid exceeding emergency ratings.

Q36. The proposed standard allows generation runback after the disturbance that causes a single Contingency (or due to a single Contingency outage) to move the Interconnected Transmission System from an emergency state (within emergency ratings) to a normal state (within normal ratings), assuming that the disturbance does not result in instability? Do you agree? If not, please explain.

Yes ☒ No ☐

Comment: Generation runback should be permissible to allow redispatch to return the system to below normal/load cycle based ratings; however, the system should not exceed applicable emergency ratings prior to the adjustment

Q37. Since emergency ratings are thermal ratings, should this standard allow an automatic generation runback scheme (that is initiated immediately after the disturbance causing the single Contingency) to prevent thermal overloads (assuming that the disturbance does not result in instability)? If yes, what are the conditions that must be met in order to allow such a runback scheme to meet the System performance criteria for single Contingencies? Please explain the reason for your answer.

Yes ☒ No ☐

Comment: However, this should only be allowed where failure of an automatic runback that is not functionally redundant would not have significant adverse impact on the Bulk Electric System.

The standard drafting team has considered that RAS or SPS may be allowable under certain situations for single Contingencies, but proposes that their use should be limited.

Q38. Do you agree that RAS or SPS may be allowed for single Contingencies? If not, please explain.

Yes ☒ No ☐
Comment: Only allowed where the failure of an SPS that is not functionally redundant would not have significant adverse impact on the Bulk Electric System.

Q39. Please describe the limitations that you believe should be placed on the use of RAS or SPS for single Contingency events.

Comment: Only allowed where SPS failure would not have significant adverse impact on the Bulk Electric System; non-Consequential loss of load should be allowed up to an amount potentially specified in the standard.

Q40. When RAS or SPS are allowed, what conditions should be met when these systems are used in system adjustments to meet performance requirements?

Comment: System must remain stable with acceptable voltages and all equipment within applicable emergency limits.

G. General Questions

Q41. If you are aware of any regional variances that would be required as a result of these standards, please identify them here.

Yes ☒ No ☒
Comment: Unsure due to ambiguities in the standard. Depending upon the final standard, New England may need exceptions for existing facilities or allowance for a transition period to develop a compliance plan.

Q42. If you are aware of any conflicts between the proposed standards and any regulatory function, rule order, tariff, rate schedule, legislative requirement or agreement, please identify them here.

Yes ☐ No ☒
Comment:

Q43. Do you have any other questions or concerns with the proposed standard that have not been addressed? If yes, please explain.

Yes ☒ No ☐
Comment: There should be a "P0" standard that applies to system performance without any contingencies.

Standard should be clear that stabiltiy analysis is not required for Long-Term Planning Assessment.

R.1.1 Load forecasts should be addressed in MOD standards, not TPL.

R 1.4 This should only refer to known long-term outages, not planned outages. Delete "including protective relays"; this is addressed through other provisions.

R.2.1 Shorten "Near-Term Transmission Planning Horizon Planning Assessment" to "Near-Term Planning Assessment".

R 2.2 Shorten "Long-Term Transmission Planning Horizon Planning Assessment" to "Long-Term Planning Assessment".

R2.1, 2.2, 2.3 & 2.4 – The initial paragraph should have identical language regarding 'annual', and 'current or past' aspects.

R2.1.1 There should not be a requirement to look at years one and two; a 5 year study should be sufficient. If there has been an ongoing 5 year study, there should be no major unexpected problems occurring in years 1 and 2. Studies of earlier years should only be required if an unanticipated event occurred that had not been considered in prior studies. The TPL should not address shorter term "Operating Studies" or operating issues.

R 2.2.1 Modify to "If any known projects have a lead time that is longer than ten years, the Planning Assessment shall be extended accordingly."

R 2.6 Steady-state, short circuit, and stability analysis should be required no more than every 5 years unless there is a significant change the system.

R 2.6.1 Remove reference to "market structure changes". The purpose of it's inclusion is unclear.

R 2.7.1.1 Project initiation date should be deleted. If it is retainted, it needs to be defined.

R 2.7.3 Committed and Proposed projects should be defined.

R 3.2.1/R 4.3 - What is the intent of this requirement? There should probably be an MOD associated with Generator Owner requirement to provide related generator protection/ limiter data or other plant information.

R 3.4/R 4.5.2 Remove the requirement to implement changes to reduce or mitigate the likelihood of such consequences of Extreme Events. This may not be reasonable or achieveable.

R 3.2 Sectionalizing schemes shall be considered when reflecting the post-contingent system.

R 3.2.2 - Propose deleting this. Line ratings should already take relay loadability into account.

R 3.3.2.1 - Proposed deleting "expected duration". This would be dependent upon the damage to the element due to the iniating event and other factors.

R 3.3.2.2 - The requirements of this section do not match P6.

R 3.3.3 - Change introductory language to read "Those multiple Contingencies that are…"

R 3.5 - Generation tripping should be allowed as well as generation run-back. In addition, all performance requirements shall be met, rather than just meeting facility rating requirements. Suggested lanague "Manual and automatic generation run-back and/or generation tripping is allowed as a response to single and multiple Contingencies as long as the performance requirements of this standard are met." If these changes are accepted, R 3.6 can be deleted.

R 4 and R 4.1 - The language should be made similar to R 3 and R 3.1.

Suggest bringing language similar R4.4 into the R 3, the steady state section.

R 4.2 - High speed automatic reclosing schemes shall be considered.

R 6.3 - Change to read "Planning Coordinators of neighboring impacted areas".

Table 1 3 b and c Extreme Event descriptions are vague concepts that cannot be practically simulated. 3 d and e are not reasonable or practically useful to simulate.

Table 1, P8 - Language needs to be clarifed as to how the 300 kV threshold is to be treated for transformers. Is this for the high side, low side, or both sides? P5 is much clearer.

Table 2 - Clarification needs to be made that the faults being simulated are permanent faults. This can be addressed under the "Performance Requirements" portion at the beginning of the table, or modify each fault description.

Table 2 P9. Recommend that this be changed to require that faults should be on different phases of each of two adjacent transmission circuits on a multiple circuit transmission tower

Table 1, P9(6) and Table 2 P9 - It is unclear as to what is meant by "A spare transformer inserted to replace an outaged transformer followed by System adjustments". Unclear as to what is to be tested.

General comment - Transmission System is used throughout the document and is an undefined term

The New England Transmission Owners and ISO New England transmission planners met several times to discuss the proposed standard and develop consensus comments based on our experience. The preceding comments are what was developed.

Attached to the e-mail sending these comments is the September 12 Draft 1 TPL-001-1 Reliability Standard in Word format, red-lined with changes to the posted standard which are intended to reflect all of the comments above. This document was maintained by Central Maine Power Company during the course of the New England transmission planner discussions, and any variance (though none are expected) in not intended.
It is expected that this red-lined TPL document will be helpful to the ATFN SDT in reviewing our comments.

Standard Development Roadmap, red-lined with New England Transmission Planners' comments

This section is maintained by the drafting team during the development of the standard and will be removed when the standard becomes effective.

Development Steps Completed:

1. Version 1 of SAR posted for comment from April 2, 2002 through May 3, 2002.
2. Version 2 of SAR posted for comment from May 5, 2004 through June 5, 2004.
3. Version 3 of SAR posted on November 18, 2005.
4. SAR approved on April 30, 2006.
5. Version 1 of Supplemental SAR posted for comment from February 15, 2007 through March 16, 2007.
6. Version 2 of Supplemental SAR posted on April 9, 2007.
7. Version 1 of revised standard(s) posted for comment on September 17, 2007.

Proposed Action Plan and Description of Current Draft:

The SDT has established an aggressive schedule of meetings and conference calls that allows for steady progress through the standards development process in anticipation of completing their assignment in 2Q08. The current draft is the first iteration of the revision of existing standards TPL-001 through TPL-006 and includes one revised standard, TPL-001-1, replacing TPL-001-0, TPL-002-0, TPL-003-0 and TPL-004-0. TPL-005 & -006 will be addressed later in the project. Violation Risk Factors, Time Horizons, Measures, Compliance and Implementation Plans will be included in subsequent postings.

Future Development Plan:

Anticipated Actions	Anticipated Date
1. Respond to comments from first posting of standard(s) and submit revision 1 of the standard(s).	4Q2007
2. Respond to comments from second posting of standard(s) and submit revision 2 of the standard(s).	4Q2007
3. Submit revision 3 of the standard(s) for balloting.	4Q2007
4. Submit standard(s) for recirculation balloting.	2Q2008
5. Submit standard(s) to BOT.	2Q2008
6.	
7.	

Definitions of Terms Used in Standard

This section includes all newly defined or revised terms used in the proposed standard. Terms already defined in the Reliability Standards Glossary of Terms are not repeated here. New or revised definitions listed below become approved when the proposed standard is approved. When the standard becomes effective, these defined terms will be removed from the individual standard and added to the Glossary.

Base Case: Computer representation of the projected initial or starting Transmission System conditions for a specific point in time. Each base case reflects the forecasted Load at each bus (or node) on the interconnected Transmission System, the transmission facilities which deliver the generation and reactive resources to the connected Load, and the generation dispatch including firm transaction obligations assumed to supply the connected Load. The models also reflect Facility Ratings.

Consequential Load Loss: Load that is no longer served because it is directly connected to an element(s) that is removed from service due to fault clearing action or mis-operation.

Extreme Events: Events which are more severe, and have a lower probability of occurrence, than Planning Events~~ and have a low probability of occurrence~~.

Long-Term ~~Transmission~~ Planning ~~Horizon~~Assessment: ~~Transmission~~ A ~~p~~Planning Assessment period that covers years six through ten or beyond.

Near-Term ~~Transmission~~ Planning ~~Horizon~~Assessment: ~~Transmission~~ A ~~P~~planning Assessment period that covers Years One through five.

Non-Consequential Load Loss: Load loss other than Consequential Load Loss. For example, Load loss that occurs through manual (operator initiated) or automatic operations such as under-voltage Load shedding, under-frequency Load shedding, or Special Protection Systems.

Planning Assessment: Documented evaluation of future Bulk Electric System needs by the use of performance studies that cover a range of assumptions regarding system conditions, time frames, future plans including ~~capital~~ reinforcements and operating procedures~~ and other factors, such as asset conditions and age~~.

Planning Events: Events ~~which require~~for which~~-~~ Transmission system performance requirements ~~to be~~must be met.

~~**Plant Stability Study:** Study of an individual plant's Stability for various Contingencies in the vicinity of the plant; concerned with the effect on the System of the generating units' loss of synchronism and the damping of the generating units' power oscillations.~~

System Stability Study: Study of the System or portions of the System to ~~ensure that~~determine whether plant and system angular Stability is maintained, ~~inter-area~~ power oscillations are damped, and voltages during the dynamic simulation stay within acceptable performance limits.

Year One: The first year that a Transmission Planner is responsible for studying. This is further defined as the planning window that begins the next calendar year from the time the Transmission Planner ~~submits~~completes ~~their~~ its annual studies.

A. Introduction

1. **Title:** **Transmission System Planning Performance Requirements**

2. **Number:** **TPL-001-1**

3. **Purpose:** Establish Transmission System planning performance requirements ~~within the planning horizon~~ to develop a Bulk Electric System (BES) that will operate reliably over a broad spectrum of System conditions and following a wide range of ~~probable~~ possible Contingencies.

4. **Applicability:**

   4.1. Functional Entity

   4.1.1. Planning Coordinator

   4.1.2. Transmission Planner

   4.1.3. Resource Planner

   4.1.4. Load-Serving Entity

   4.1.5. Transmission Owner

   4.1.6. Generator Owner

5. **Effective Date:** TBD

B. Requirements

R1. **Modeling Requirements**

Each Resource Planner, Transmission Planner, Transmission Owner, Generator Owner, and Load-Serving Entity shall each provide its respective Planning Coordinator with the following modeling information that is required for System performance studies upon request (within 30 calendar days): *[Violation Risk Factor: TBD] [Time Horizon: TBD]*

~~**R1.1.**~~Load forecasts and Load models adhering, at a minimum, to the requirements of MOD-011 and MOD-013.~~following criteria:~~

~~**R1.2.0.**Use of expected Load mix based on the actual or expected aggregate mix of industrial, commercial, and residential Loads.~~

~~**R1.3.0.**Based on normal weather patterns as agreed to by the Planning Coordinator(s) and the Transmission Planner(s) for the area(s) of their responsibility.~~

~~**R1.4.0.**Identification of Demand Side Management (DSM) Load reductions consistent with operational requirements.~~

R1.2.R1.1. ~~Load models with supporting rationale that include power factor data that may be based on historical System performance, validated by measurement during stressed System conditions, or documented Transmission planning area requirements.~~

~~**R1.3.**~~**R1.2.** Firm transfers/Interchange Schedules and resources required to supply Load for each Balancing Authority.

~~R1.4.~~R1.3. Known ~~planned outages and~~ long-term outages for Transmission and generation equipment ~~including protective relays~~ with consideration given to spare equipment ~~strategy~~.

~~R1.5.~~R1.4. Planned Facilities defined in accordance with the documented criteria of the Planning Coordinator, including but not limited to: Transmission Lines, generators, circuit breakers, Reactive Power devices, Protection System equipment and control devices, and new technologies.

R2. Assessment and Corrective Plan Requirements

Each Transmission Planner and Planning Coordinator shall conduct and document the results of its annual Planning Assessment of its portion of the BES. This Planning Assessment shall use current or past studies, and shall cover steady state analyses, short circuit analyses, and Stability analyses ~~including both System and plant Stability~~.
[Violation Risk Factor: TBD] [Time Horizon: TBD]

R2.1. The steady state portion of the Near-Term ~~Transmission Planning Horizon~~ Planning Assessment shall ~~address all five years of the assessment period and~~ be conducted annually and supported ~~at a minimum~~ by ~~the following annual~~ current studies ~~, supplemented with qualified~~or past studies as ~~shown~~ indicated in Requirement R2.5~~6~~:

R2.1.1. System P~~p~~eak ~~Load~~ Demand for year five; and either Year One or year two if a significant unexpected change in the System occurs~~, and year five~~.

R2.1.2. System Off-Peak Load for one of the five years.

R2.1.3. For each of the studies described in Requirement R2.1.1 and Requirement R2.1.2, sensitivity ~~case(s)~~testing that stresses the System ~~with sensitivities that reflect one or more of the following conditions~~ shall be ~~run~~ considered, and documentation with the rationale for the ~~selected~~ sensitivity ~~(ies)~~testing shall be supplied.~~:~~ The sensitivity case(s) may include one or more of the following conditions:

R.2.1.3.1. Higher or lower Load forecasts from the Base Case with variability of Load~~/demand~~ and Load power factors due to season, weather, or time of day.

R.2.1.3.2. Modification of expected transfers.

R.2.1.3.3. Unavailability of planned long lead time facilities.

R.2.1.3.4. ~~Variability and o~~Outages of reactive resources.

R.2.1.3.5. Generation additions, retirements, or other dispatch scenarios.

R.2.1.3.6. Decreased effectiveness of controllable Loads and Demand Side Management.

R.2.1.3.7. A change in known long-term outages for Transmission and generation equipment, per R1.3.~~Modification of planned Transmission outages~~.

R2.2. ~~For the steady state portion of the Long-Term Transmission Planning Horizon Planning Assessment, at a minimum, a current System peak Load study is required annually for one of the years in the assessment period to support the annual Planning Assessment.~~ The steady state portion of the Long-Term Planning Assessment shall be conducted annually and supported by a System peak Load study or a past study as indicated in Requirement R2.5:

R2.2.1. If ~~To accommodate~~ any known ~~longer lead time~~ projects ~~that may take~~ have a lead time longer than ten years to complete, then the Planning Assessment shall be extended accordingly.

R2.3. The short circuit portion of the Planning Assessment shall be conducted annually and ~~shall be~~ supported by a current study or a past study as indicated in Requirement R2.5:~~ies~~.

R2.3.1. A current study shall be performed if changes in the BES result in increased fault currents such as resource additions and other facility changes that result in reductions in impedance.

R2.4. ~~The System Stability portion of the Near-Term Transmission Planning Horizon Planning Assessment shall address all five years of the assessment period and be supported by current or past studies. The following studies are required:~~ The System Stability portion of the Near-Term Planning Assessment shall be conducted annually and supported by current studies or past studies as indicated in Requirement R2.5:

R2.4.1. System ~~P~~peak ~~Load~~ Demand for one of the five years. ~~For peak System Load levels, the Load model shall include the dynamic effects of induction motor Loads.~~

R2.4.2. System Off-Peak Load for one of the five years.

R2.4.3. Sensitivity ~~case(s)~~testing that stresses the System ~~to reflect one or more of the following conditions~~ shall be ~~run~~ considered, and ~~with~~ documentation with ~~provided explaining~~ the rationale for the ~~selected~~ sensitivity testing shall be supplied~~(ies)~~. The sensitivity case(s) may include one or more of the following conditions:

R.2.4.3.1. Higher or lower Load forecasts from the Base Case with variability of Load and Load power factors due to season, weather, or time of day.

R.2.4.3.2. Modification of expected transfers.

R.2.4.3.3. Unavailability of planned long lead time facilities.

R.2.4.3.4. Outages of reactive resources.

R.2.4.3.5. Generation additions, retirements, or other dispatch scenarios.

R.2.4.3.6. Decreased effectiveness of controllable Loads and Demand Side Management.

R.2.4.3.7. A change in known long-term outages for Transmission and generation equipment, per R1.3.

R.2.4.3.1.R.2.4.3.8. -Variations in Load model assumptions.

R.2.5.0.0. Expected simultaneous transfers including non-firm transfers.

R.2.6.0.0. Unavailability of long lead time facilities.

R.2.7.0.0. Reactive dispatch of generators and other reactive power devices.

R.2.8.0.0. Generation additions, retirements, or other dispatch scenarios.

R2.9. The plant Stability portion of the Planning Assessment shall be analyzed consistent with Requirement R4.6 with studies for the year when the following occur:

R2.10.0. New generator(s) are added or generation modifications are made such as increasing generation capability, replacing the exciter or addition of a power System stabilizer.

R2.11.0. Material changes in the electrical vicinity of existing generation are made such as the addition or removal of a Transmission Line at or near the point of Interconnection.

R2.6.R2.5. Past studies may be used to support the Planning Assessment if they meet the following requirements:

R2.6.1.R2.5.1. For steady state analysis: if the study is less than three five years old and no material changes have occurred to the System in the intervening period. Material changes include topology changes, generation additions/removals, and market structure changes.

R2.6.2.R2.5.2. For short circuit analysis: if the study is less than five years old and no material changes have occurred to the System in the intervening period.

R2.6.3.R2.5.3. For plant and System Stability analysis: until material changes in the System make the study no longer valid. Material changes in the system include the addition of a Transmission Line or a generator.

R2.7.R2.6. For Planning Events shown in Table 1 – Steady State Performance and Table 2 – Stability Performance, when the analysis indicates an inability of the System to meet the performance requirements in the tables, the Planning Assessment shall include Corrective Action Plans addressing how the performance requirements will be met. Revisions to the Corrective Action Plans that are allowed made over time but shall meet the performance requirements in the tables. Such plans shall:

R2.7.1.R2.6.1. Identify System deficiencies and the associated actions needed to achieve required System performance including Transmission projects and/or other changes generation improvements, DSM, new technologies, or Operating Procedures including the duration of interim Operating Procedures.

R.2.6.1.1. For the Near-Term Transmission Planning HorizonAssessment, include both a project initiation date as well as anprovide an in-service date.

R.2.6.1.2. For the Long-Term ~~Transmission~~ Planning ~~Horizon~~Assessment, provide an in-service year.

~~**R2.7.2.**~~**R2.6.2.** Be added to study cases and the cases re-tested to show that the System with planned additions meets the performance requirements in the tables.

~~**R2.7.3.**~~**R2.6.3.** Include documentation of the criteria for determining committed and proposed projects with all projects identified as either 'committed' or 'proposed.'

~~**R2.7.4.**~~**R2.6.4.** Not remove committed projects without documentation to show that the revised plan meets the performance requirements.

~~**R2.7.5.**~~**R2.6.5.** Be reviewed in subsequent annual Planning Assessments as to implementation status of identified System Facilities and Operating Procedures.

R3. Steady State Analysis Requirements

For the steady state portion of the Near-Term and Long-Term Planning Assessment, each Transmission Planner and Planning Coordinator shall perform analysis for the ~~Near-Term and Long-Term Transmission Planning Horizon~~ studies in Requirement R2.1 and Requirement R2.2. The studies shall be based on computer power flow simulations that analyze BES normal performance (n-0) and System response to contingencies in Table 1 – Steady State Performance. *[Violation Risk Factor: TBD] [Time Horizon: TBD]*

R3.1. Studies shall determine whether the BES meets the performance requirements in Table 1 – Steady State Performance.

R3.2. Contingency analyses shall simulate the removal of all elements ~~including those~~which ~~that~~ Protection Systems ~~protection is~~are expected to disconnect for each Contingency without operator intervention, and shall simulate automatic sectionalizing schemes.

~~**R3.2.1.**For all generators, studies shall consider the minimum steady state voltage limitations of all generators and identify how the generators are treated in the steady state simulation.~~

~~**R3.2.2.**For all Transmission lines, studies shall consider relay loadability and identify how loadability is treated in the steady state simulation.~~

R3.3. Studies shall identify any planned upgrades (including protection and control modifications) needed to meet the performance requirements of the Planning Events of Table 1 – Steady State Performance and validate their effectiveness.

~~**R3.3.**~~**R3.4.** For s~~S~~teady s~~S~~tate studies:

~~**R3.3.1.**~~**R3.4.1.** Performance ~~criteria~~ requirements for System normal conditions and for Planning Events in Table 1 – Steady State Performance shall be met.

~~**R3.3.2.**~~**R3.4.2.** Evaluations shall be performed for single Contingencies (identified in Table 1 – Steady State Performance).

R.3.3.2.1.R.3.4.2.1. Consequential Load loss (expected maximum demand and expected duration) following a single Contingency shall be identified in the Planning Assessment.

R.3.3.2.2.R.3.4.2.2. Following single Contingency events, System adjustments other than shedding of firm Load [this is inconsistent with Table 1 event P6] or curtailment of firm transfers[DMC1] are permitted to meet performance requirements provided these adjustments can be accomplished within the time period allowed by the applicable time limited ratings.

R3.3.3.R3.4.3. Those Planning Event Contingencies in Table 1 – Steady State Performance not covered in Requirement R3.3.2multiple Contingencies that are expected to produce more severe System impacts shall be identified, evaluated for System performance, and the rationale for the Contingencies selected for evaluation shall be available as supporting information and shall include an explanation of why the remaining Contingencies would produce less severe System results

R3.4.R3.5. Those Extreme Events in Table 1 – Steady State Performance that are expected to produce more severe System impacts shall be identified, evaluated for System performance, and the rationale for the Contingencies selected for evaluation shall be available as supporting information and shall include an explanation of why the remaining Contingencies would produce less severe System results. If the Extreme Events analysis concludes there are Cascading Outages caused by the occurrence of Extreme Events, an evaluation of implementing a change designed to reduce or mitigate the likelihood of such consequences shall be conducted.

R3.5.R3.6. Manual and automatic generation run-back and/or generation tripping is allowed as a response to single and multiple Contingencies as long as Facility Ratings are not exceededthe performance requirements of this standard are met.-.

R4.0. Manual and automatic generation tripping is allowed for multiple Contingencies and for single Contingencies only in situations that meet all of the following conditions:

R5.0.0.TBD

Note: WECC has informed the SDT that it will be submitting an Interconnection-wide regional variance to allow for manual and automatic generation tripping for single Contingencies. The regional variance will be justified based on physical System differences in the western Interconnection. WECC is developing a white paper to support this position. The actual text of the regional variance will be included in the next posting of this standard.

R4. Stability Analysis Requirements

For the Stability portion of the Near-Term Planning Assessment, as described in Requirement R2.4 and Requirement R2.5, each Transmission Planner and Planning Coordinator shall perform the Contingency analysies for the studies as described in Requirement R2.4. The studies shall be based on computer dynamic simulations that

analyze BES System response to contingencies listed in Table 2 – Stability Performance. ~~The studies shall cover both System Stability and plant Stability. The following requirements apply to both System Stability and plant Stability studies unless otherwise noted.~~ *[Violation Risk Factor: TBD] [Time Horizon: TBD]*

R4.1. Studies shall determine whether the BES meets~~to meet~~ the performance requirements in Table 2 – Stability Performance~~ shall use computer Stability simulations that analyze the response of the BES~~.

R4.2. Contingency analyses shall simulate the removal of all elements ~~including~~ which ~~those that~~ Protection Systems ~~protection is~~are expected to disconnect for each Contingency without operator intervention, and shall simulate automatic reclosing schemes.

~~**R7.3.**Studies shall consider the voltage ride through capability of all generators and identify how the generators are treated in the simulation.~~

~~**R4.4.**~~**R4.3.** Studies shall identify any planned upgrades (including protection and control modifications) needed to meet the performance requirements of the Planning Events of Table 2 – Stability Performance and validate their effectiveness.

~~**R4.5.**~~**R4.4.** For the System Stability S~~s~~tudy:

~~**R4.5.1.**~~**R4.4.1.** ~~At a minimum,~~T ~~t~~hose Planning Events ~~Contingencies~~ in Table 2 – Stability Performance that ~~would~~ are expected to produce more severe System impacts shall be identified, evaluated for System performance, and the rationale for the Contingencies selected for evaluation shall be available as supporting information and shall include an explanation of why the remaining Contingencies would produce less severe System results.

~~**R4.5.2.**~~**R4.4.2.** ~~At a minimum,~~T ~~t~~hose Extreme Events in Table 2 – Stability Performance that are expected to ~~would~~ produce more severe System impacts shall be identified, evaluated for System performance, and the rationale for the Contingencies selected for evaluation shall be available as supporting information and shall include an explanation of why the remaining Contingencies would produce less severe System results. ~~If the Extreme Events analysis concludes there are Cascading Outages, an evaluation of implementing a change designed to reduce or mitigate the likelihood of such consequences shall be conducted.~~

~~**R8.**For the Plant Stability studies:~~

~~**R9.**Shall be performed for individual generating units 20 MW or greater directly connected through a step-up transformer to the BES and for generating units at the same location which total 75 MW or greater, directly connected through their step-up transformer(s) to the BES.~~

~~**R10.**Shall be performed for changes in the real power output of a generating unit by more than 10% of the existing capability or more than 20 MW whichever is greater.~~

~~**R11.**Shall be performed and evaluated for those Planning Events that would produce more severe System impacts shall be identified and the rationale for the Contingencies~~

~~selected for evaluation shall be available as supporting information and shall include an explanation of why the remaining Contingencies would produce less severe System results. The identified Contingencies, at a minimum, shall be evaluated.~~

~~**R12.** Shall meet Performance requirements for Planning Events in Table 2 – Stability Performance.~~

R5. Each Transmission Planner and Planning Coordinator shall determine and identify individual and joint responsibilities for performing the required studies for the Planning Assessment. *[Violation Risk Factor: TBD] [Time Horizon: TBD]*

R6. Each Planning Coordinator shall coordinate the distribution of Planning Assessment results among affected entities, coordinating analysis of these results through an open and transparent peer review process. *[Violation Risk Factor: TBD] [Time Horizon: TBD]* This distribution shall include:

R6.1. Transmission Planners within the Planning Coordinator's area

R6.2. Transmission Planners of neighboring impacted areas

R6.3. Planning Coordinators of neighboring impacted areas

Table 1 – Steady State Performance

Performance Requirements

For all Planning Events:

- Equipment Ratings shall not be exceeded
- System steady state voltages and post-transient voltage deviation shall be within acceptable limits established by the Planning Coordinator (or Transmission Planner if more restrictive)
- Voltage instability, cascading outages, and uncontrolled islanding shall not occur
- Consequential Load loss is allowed for all cases shown.
- Simulate the removal of all elements that Protection Systems and controls are expected to disconnect for each Contingency.
- Simulate Normal Clearing unless otherwise specified.

Planning Events			
#	Event	Interruption of Firm Transfer Allowed (does not result in loss of Load)	Non-Consequential Load Loss Allowed
P0	All transmission facilities in service	No	No
P1 (single Contingency)	Loss of: **1.** A generator **2.** A Transmission circuit **3.** A transformer 4. A shunt device (including FACTS devices)	Yes, if transfer is dependent on the outaged element No otherwise	No
P2 (single Contingency)	Loss of: 1. Bus section above 300kV 2. ~~Non-bus tie b~~Breaker (above 300kV) due to internal fault ~~3.~~Single pole of a DC line 3.	Yes, if transfer is dependent on the outaged ~~DC line~~element No otherwise	No
P3 (multiple Contingency)	Loss of either a: 1. A generator, 2. A Transmission circuit, 3. A~~a~~ transformer with low side voltage rating above 300 kV, or 4. A~~a~~ bus; **and** -a stuck ~~non-bus tie~~ breaker (above 300kV)	Yes, if transfer is dependent on the outaged ~~DC line~~element No otherwise	No
P4 (multiple Contingency)	1. Loss of a generator followed by a System adjustment followed by the loss of a generator. 2. Loss of a generator followed by a System adjustment followed by the loss of a monopolar DC line 3. Loss of a generator followed by a System adjustment followed by the loss of a Transmission circuit	Yes, if transfer is dependent on the outaged ~~DC line~~element No otherwise	~~No~~Yes

	4. Loss of a generator followed by a System adjustment followed by the loss of a transformer		
P5 (multiple Contingency)	Above 300kV, the loss of: 1. A Transmission circuit followed by a System adjustment followed by the loss of another Transmission circuit 2. A Transmission circuit followed by a System adjustment followed by the loss of a transformer with low side voltage rating above 300 kV **3.** A transformer with low side voltage rating above 300 kV followed by a System adjustment followed by the loss of another transformer	Yes	~~No~~Yes
P6 (single Contingency)	Loss of: 1. A ~~bus tie~~ breaker due to internal fault 2. A bipolar DC line or an asynchronous ~~tie line~~interconnection 3. A ~~non-bus tie~~ breaker (below 300kV) due to internal fault 4. A bus section below 300kV	Yes	Yes
P7 (multiple Contingency)	Loss of: 1. A bus section above 300kV and a stuck ~~bus tie~~ breaker 2. Either a generator, a Transmission circuit, a transformer, or a bus and a stuck ~~non-bus tie~~ breaker (below 300kV)	Yes	Yes
P8 (multiple Contingency)	Below 300kV, the loss of: 1. A Transmission circuit followed by a System adjustment followed by the loss of another Transmission circuit 2. A Transmission circuit followed by a System adjustment followed by the loss of a transformer 3. A transformer followed by a System adjustment followed by the loss of another transformer	Yes	Yes
P9 (multiple Contingency)	1. Loss of any two circuits on a common structure (excluding where multiple circuits share a common structure for no more than one mile) 2. Loss of a generator followed by a System adjustment followed by the loss of a monopolar or bipolar DC line, or an asynchronous ~~tie line~~interconnection 3. Loss of a DC line (monopolar or bipolar) or asynchronous ~~tie~~ interconnection followed by a System adjustment followed by the loss of a second DC line (monopolar or bipolar) or asynchronous ~~tie~~ interconnection 4. Loss of a DC line (monopolar or bipolar) or asynchronous ~~tie~~ interconnection followed by a System	Yes	Yes

	adjustment followed by the loss of a Transmission circuit 5. Loss of a transformer followed by a System adjustment followed by the loss of a DC line (monopolar or bipolar) or asynchronous ~~tie line~~interconnection 6. Loss of a transformer followed by a System adjustment with a spare transformer available followed by the loss of another transformer		

Extreme Events

Evaluation Requirements

For all Extreme Events:

1. See Requirement R3.5~~4~~
2. Simulate the removal of all elements that Protection Systems and controls are expected to disconnect for each Contingency.
3. Simulate Normal Clearing unless otherwise specified.

Extreme Event Descriptions

1. Loss of a single generator, Transmission circuit, DC line, or transformer forced out of service followed by another single generator, Transmission circuit, DC line, or transformer forced out of service prior to System adjustments.

2. Local area events affecting the Transmission System such as:

- **a.** Loss of tower line with three or more circuits
- b. Loss of all Transmission lines on a common right-of-way
- c. Loss of switching station or substation (loss of one voltage level plus transformers)
- d. Loss of all generating units at a station
- **e.** Loss of a large Load or major Load center

3. Wide area events affecting the Transmission System such as:

- a. Loss of a large gas pipeline into a region or multiple regions that have significant gas-fired generation
- ~~b.A successful cyber attack~~
- ~~c.Regulation that restricts or eliminates the use of a river or lake or other body of water as the cooling source for generation~~
- ~~d.Shutdown of a nuclear power plant(s) and other facilities a day or more prior to a hurricane, tornado or wildfire, or for other common causes~~
- ~~e.Regulation that restricts or eliminates the use of a river or lake or other body of water as the cooling source for generation~~
- ~~f.~~b. Shutdown of a nuclear power plant(s) and other facilities a day or more prior to a hurricane, tornado or wildfire, or for other common causes such as problems with similarly designed plants
- ~~g.~~c. The loss of older Transmission lines which may not be constructed to meet an entity's present radial ice or wind loading requirements, while the newer or stronger Transmission lines remain in service
- ~~h.~~d. Other events based upon operating experience

Table 2 – Stability Performance Table

Performance Requirements

For all Planning Events:

- The System shall be stable[1]
- Dynamic voltages shall be within acceptable limits established by the Planning Coordinator or Transmission Planner (if more restrictive)
- Uncontrolled islanding and Cascading Outages shall not occur
- Simulate the removal of all elements that Protection Systems and controls are expected to disconnect for each Contingency.
- Simulate permanent Faults with Normal Clearing unless otherwise specified.

Planning Events			
#	**Initial Condition**	**Event**	**Non-Consequential Load Loss Allowed**
P1 (single Contingency)	System normal	Single Line Ground (SLG) fault on, a 3-Phase (3Ø) fault on, or an unexpected loss without a fault of (whichever is worst): 1. A generator 2. A Transmission circuit ~~3.~~3. A transformer	No
P2 (single Contingency)	System normal	1. SLG fault on bus section above 300kV 2. SLG internal fault in ~~non-bus tie~~ breaker (above 300kV) 3. A single pole block of a DC line	No
P3 (multiple Contingency)	System normal	SLG fault on either a 1. A generator, 2. A Transmission circuit, 3. A~~a~~ transformer, or 4. A~~a~~ bus **and** a stuck[2] ~~non-bus tie~~ breaker (above 300kV)[DMC2]	No
P4 (multiple Contingency)	A single generator out of service followed by System adjustments	1. Apply a P1.1 Contingency. 2. Apply a P2.3 Contingency. 3. Apply a P1.2 Contingency. 4. Apply a P1.3 Contingency.	No
P5 (multiple Contingency)	A Transmission circuit above 300 kV out of service followed by System adjustments A transformer with low side voltage rating above 300 kV	1. Apply a P1.2 Contingency. 2. Apply a P1.3 Contingency. 3. Apply a P1.3 Contingency.[DMC3]	No

	out of service followed by System adjustments		
P6 (single Contingency)	System normal	1. SLG internal fault in ~~bus tie~~ breaker 2. A bipolar block of a DC line ~~1.~~3. SLG internal fault in ~~non-bus tie~~ breaker (below 300kV) 4. SLG fault on bus section (below 300kV)	Yes
P7 (multiple Contingency)	System normal	1. SLG fault on a bus section above 300kV and a stuck ~~bus tie~~ breaker 2. SLG fault on either a generator, a Transmission circuit, a transformer, or a bus and a stuck ~~non-bus tie~~ breaker (below 300kV)	Yes
P8 (multiple Contingency)	A Transmission circuit below 300 kV out of service followed by System adjustments A transformer with low side voltage rating below 300 kV out of service followed by System adjustments	1. Apply a P1.2 Contingency. 2. Apply a P1.3 Contingency. 3. Apply a P1.3 Contingency. [DMC4]	Yes
P9 (multiple Contingency)	System normal A single generator out of service followed by System adjustments A DC circuit out of service followed by System adjustments A transformer out of service followed by System adjustments	1. SLG fault on each circuit of ~~any~~ two adjacent circuits on a common structure (excluding events where multiple circuits share a common structure for no more than one mile). 2. Apply a P6.2 Contingency. 3. Apply a P2.3 Contingency. 4. Apply a P1.2 Contingency. 5. Apply a P2.3 Contingency.	Yes

	A spare transformer inserted to replace an outaged transformer followed by System adjustments	6. Apply a P1.3 Contingency. [DMC5]	

Extreme Events

Evaluation Requirements

For all Extreme Events:

- See Requirement R4.~~5~~4.2 in the text
- Simulate the removal of all elements that Protection Systems ~~protection~~ and controls are expected to disconnect for each Contingency.
- Simulate Normal Clearing unless otherwise specified.

Extreme Event Descriptions

1. 3Ø fault on generator with stuck breaker
2. 3Ø fault on Transmission circuit with stuck breaker
3. 3Ø fault on transformer with stuck breaker
4. 3Ø fault on bus section with stuck breaker
5. 3Ø internal fault in breaker
6. 3Ø fault on two or more circuits on a common structure
7. SLG or 3Ø fault on all Transmission lines on a common right-of-way
8. 3Ø fault on switching station or substation (loss of one voltage level plus transformers)
9. 3Ø fault with loss of all generating units at a station

Notes:

1. System stable means:
   a. Angular stability:
      i. For Planning Events P1 and P3.2: No generating unit or units shall be allowed to pull out of synchronism. A generator being disconnected from the system by fault clearing action or by a Special Protection ~~Scheme~~ System is not considered pulling out of synchronism.
      ii. For all other Planning Events: No generating unit or units totaling more than the contingency reserve (spinning reserve) of the Balancing Authority shall be allowed to pull out of synchronism. Generators that pull out of synchronism must have ~~out-of-step protection and the~~ resulting apparent impedance swings ~~must~~ that do not pass through relay characteristics that would result in the tripping of any T~~t~~ransmission system elements other than the generating unit and its direct connection facilities.

iii. For all Planning Events: Power oscillations shall exhibit acceptable damping~~ as established by the Planning Coordinator or Transmission Planner (if more restrictive)~~.

b. General: Unplanned islanding of portions of the system shall not occur for Planning Events.

2. A stuck breaker means that for a gang-operated breaker, all three phases of the breaker have remained closed. For an independent pole operated (IPO) breaker, only one pole is assumed to remain closed.

~~3.~~C. Measures

M1. To be supplied at a later date.

E. Regional Variances

1. WECC Interconnection-wide waiver is under development (see Requirement R3.6.2).

Version History

Version	Date	Action	Change Tracking
1		Revision of TPL-001-0 as per Project 2006-02; includes merging requirements of TPL-001-0, TPL-002-0, TPL-003-0, and TPL-004-0 into one, single, comprehensive, coordinated standard: TPL-001-1	Not employed due to scope of revision

NERC
NORTH AMERICAN ELECTRIC RELIABILITY CORPORATION

Comment Form for First Draft of TPL-001-1 — Transmission System Planning Performance Requirements

Please use this form to submit comments on the proposed draft of TPL-001-1. Comments must be submitted by **Friday, October 26, 2007**. You may submit the completed form by e-mail to sarcomm@nerc.net with the words "TPL-001 Draft 1" in the subject line. If you have questions please contact Ed Dobrowolski at ed.dobrowolksi@nerc.net or by telephone at 609-947-3673.

Individual Commenter Information **(Complete this page for comments from one organization or individual.)**		
Name:	Jeff Knottek	
Organization:	City Utilities of Springfield, Missouri	
Telephone:	417-831-8920	
E-mail:	jeff.knottek@cityutilities.net	
NERC Region (check all Regions in which your company operates)		**Registered Ballot Body Segment (check all industry segments in which your company is registered)**
☐ **ERCOT**	☒	1 — Transmission Owners
☐ **FRCC**	☐	2 — RTOs and ISOs
☐ **MRO**	☒	3 — Load-serving Entities
☐ **NPCC**	☐	4 — Transmission-dependent Utilities
☐ **RFC**	☐	5 — Electric Generators
☐ **SERC**	☐	6 — Electricity Brokers, Aggregators, and Marketers
☒ **SPP**	☐	7 — Large Electricity End Users
☐ **WECC**	☐	8 — Small Electricity End Users
☐ **NA – Not Applicable**	☐	9 — Federal, State, Provincial Regulatory or other Government Entities
	☐	10 — Regional Reliability Organizations and Regional Entities

Group Comments (Complete this page if comments are from a group.)

Group Name:

Lead Contact:

Contact Organization:

Contact Segment:

Contact Telephone:

Contact E-mail:

Additional Member Name	Additional Member Organization	Region*	Segment*

*If more than one Region or Segment applies, please list all that apply. Regional acronyms and segment numbers are shown on prior page.

Background

The purpose of this standard is to establish Transmission System planning performance requirements within the planning horizon to develop a Bulk Electric System that will operate reliably over a broad spectrum of System conditions and following a wide range of probable Contingencies. This standard will replace TPL-001-0, TPL-002-0, TPL-003-0, and TPL-004-0. The standard drafting team has not yet addressed TPL-005-0 and TPL-006-0, but will address these two standards during the next phase of the drafting process.

The major objectives of the standard drafting team are to:

1) Ensure the standard is complete and the requirements are set at an appropriate level to ensure reliability (Not Least Common Denominator)
2) Ensure that the standard is enforceable by having clearly defined requirements with unambiguous language
3) Address the issues raised by FERC Order 693, 890, and other applicable orders
4) Address the issues raised in the original Standards Authorization Request (SAR) and the Supplemental SAR.

The standard drafting team did not attempt to edit the existing standards but rather chose to write one standard that addresses all aspects of transmission planning in the existing TPL-001-0, TPL-002-0, TPL-003-0, and TPL-004-0. The standard drafting team organized the new standard in the following sections:

R1 – Modeling requirements
R2 – Assessment and Corrective Plan requirements
R3 – Steady State Analysis requirements
R4 – Stability Analysis requirements
R5 – Coordination requirements

The standard drafting team determined that the requirements and analysis for Steady State are different from those for stability. As such, the standard drafting team separated the analysis requirements and created two performance requirement tables.

The standard drafting team recognizes that this draft standard is a starting point for industry input into the standard and that there is still a lot of work required to complete the process. The standard drafting team has made many changes to clarify requirements, add requirements, and make some of the performance requirements stricter. The standard drafting team has not addressed Measures, Risk Factors, Violation Severity Factors, or Time Horizons at this time. These will be addressed when the standard drafting team has better defined the requirements of the standard.

For questions where you agree with the standard drafting team, please state that you agree and if available, please provide supporting documentation. If you disagree with the standard drafting team, please explain why you disagree and provide data to support your position, such as outage data or analysis. If you believe that we have made a performance requirement too strict please provide supporting documentation. If applicable, please include the approximate cost in man-hours for additional studies and/or cost in $Millions for additional transmission investment to meet the new requirements or the stricter requirements. If you believe that the standard should be stricter, please provide the rationale along with any supporting data, including existing practices, cost estimates or additional analysis.

To improve the standard, the standard drafting team would appreciate responses to as many of these questions as you can answer.

A. New Definitions

Many of the concerns about the existing TPL standards come from the fact that a number of generally understood concepts are embedded in undefined terms, tables, and footnotes. To clarify some of these concerns, the standard drafting team is proposing new definitions. Please indicate whether you agree with the following proposed definitions and provide proposed changes to the definitions if you disagree:

Definition	**Agree or Disagree**
Q1. **Base Case**: Computer representation of the projected initial or starting Transmission System conditions for a specific point in time. Each base case reflects the forecasted Load at each bus (or node) on the interconnected Transmission System, the transmission facilities which deliver the generation and reactive resources to the connected Load, and the generation dispatch including firm transaction obligations assumed to supply the connected Load. The models also reflect facility ratings in accordance with FAC-008 & FAC-009.	☐Agree. ☒Do not agree.
Q1. **Comment: The manner in which the forecasted bus load is determined needs to be defined with clear and consistent assumptions and methodologies such that the results of transmission studies are reasonably valid throughout the entire planning horizon.**	
Q2. **Consequential Load Loss:** Load that is no longer served because it is directly connected to an element(s) that is removed from service due to fault clearing action or mis-operation.	☒Agree. ☐Do not agree.
Q2. **Comment:**	
Q3. **Extreme Events:** Events which are more severe than Planning Events and have a low probability of occurrence.	☒Agree. ☐Do not agree.
Q3. **Comment:**	
Q4. **Long-Term Transmission Planning Horizon:** Transmission planning period that covers years six through ten or beyond.	☒Agree. ☐Do not agree.
Q4. **Comment:**	
Q5. **Near-Term Transmission Planning Horizon:** Transmission planning period that covers years One through five.	☒Agree. ☐Do not agree.
Q5. **Comment:**	
Q6. **Non-Consequential Load Loss:** Load loss other than Consequential Load Loss. For example, Load loss that occurs through manual (operator initiated) or automatic operations such as under-voltage Load shedding, under-frequency Load shedding, or Special Protection Systems.	☒Agree. ☐Do not agree.
Q6. **Comment:**	

Q7. **Planning Assessment:** Documented evaluation of future Bulk Electric System needs by the use of performance studies that cover a range of assumptions regarding system conditions, time frames, future plans including capital reinforcements and operating procedures and other factors, such as asset conditions and age.	☐Agree. ☐Do not agree.
Q7. **Comment: : Definition should be more clearly defined. Documented evaluation of future Bulk Electric System needs based on the performance requirements as defined for NERC Steady State Transmission Studies or Plant Stability Studies conducted in accordance with the NERC Reliability Standards or more restrictive local area criteria.**	
Q8. **Planning Events:** Events which require Transmission system performance requirements to be met.	☐Agree. ☒Do not agree.
Q8. **Comment: Minimum performance requirements need to be clearly defined.**	
Q9. **Plant Stability Study:** Study of an individual plant's Stability for various Contingencies in the vicinity of the plant; concerned with the effect on the System of the generating units' loss of synchronism and the damping of the generating units' power oscillations.	☒Agree. ☐Do not agree.
Q9. **Comment:**	
Q10. **System Stability Study:** Study of the System or portions of the System to ensure that angular Stability is maintained, inter-area power oscillations are damped, and voltages during the dynamic simulation stay within acceptable performance limits.	☒Agree. ☐Do not agree.
Q10. **Comment:**	
Q11. **Year One:** The first year that a Transmission Planner is responsible for studying. This is further defined as the planning window that begins the next calendar year from the time the Transmission Planner submits their annual studies. Analysis conducted for time horizons within the calendar year from the study publication are assumed to be conducted under the auspices of Operations Planning.	☒Agree. ☐Do not agree.
Q11. **Comment:**	

B. Sensitivity Studies

The draft planning standard includes the requirement, as specified in FERC Order 693, that planning decisions be based on a portfolio of analyses. In section 12.a.ii "Sensitivity studies and critical system conditions" FERC provided direction to consider a full range of variables considered to be significant that need to be assessed and documentation provided that explains the rationale for the selection of variables assessed.

In addition to the firm obligation scenario, the portfolio of analyses should be supplemented to include information from sensitivity analysis. The sensitivity analysis should be developed using additional cases that simulate reasonably stressed system conditions. The standard drafting team has included several parameters that can be varied to create the requisite sensitivity case(s). The draft standards specify that the sensitivities reflect one or more of the following conditions and that documentation be provided explaining the

rationale for selecting the sensitivity(ies) employed. The parameters that should be varied include:

- Higher or lower Load forecasts from the Base Case with variability of Load/demand and Load power factors due to season, weather, or time of day.
- Modification of expected transfers.
- Unavailability of long lead time facilities.
- Variability and outages of Reactive Resources.
- Generation additions, retirements, or other dispatch scenarios.
- Decreased effectiveness of controllable Loads and Demand Side Management.
- Modification of planned Transmission outages

To help focus industry discussion, please respond to the questions below:

Q12. Should the standard provide more specific direction regarding the number of sensitivity cases that need to be developed?

Yes ☒ No ☐
Comment:

Q13. Should the standard specify the required changes, such as changes in expected transfers, load forecasts, generation patterns, etc., from the study case to be considered a "reasonably stressed" case?

Yes ☒ No ☐
Comment:

Q14. The SDT proposes to require the use of sensitivity studies for Near-Term Transmission System Planning Horizon stability analysis. Do you concur with the use of sensitivity analysis in dynamic studies?

Yes ☒ No ☐
Comment:

Q15. The draft TPL standard does not require the use of sensitivity studies for the Long-Term Transmission System Planning Horizon (year six and beyond) studies. Do you concur with this approach or should there be some level of sensitivity analysis required for the long-term period?

Yes ☒ No ☐
Comment:

C. Corrective Action Plans

Requirement R2.7 of the standard states that when analysis shows that the performance requirements in Table 1 and Table 2 are not fully met, a Corrective Action Plan that utilizes all or some of the Transmission System enhancements, generation additions, DSM, new technologies and Operating Procedures shall be included in the Planning Assessment. This Corrective Action Plan should ensure that upon its implementation the identified system deficiencies will be corrected so that the performance requirements in Table 1 and Table 2 will be met. Furthermore, studies included in the Planning Assessment should demonstrate that this is indeed the case.

Q16. Requirement R2.7.1: Such Corrective Action Plans shall "Identify System deficiencies and the associated actions needed to achieve required System performance including Transmission and generation improvements, DSM, new technologies, or Operating Procedures including the duration of Interim Operating Procedures". System deficiencies may be corrected using an integrated plan, i.e., an optimal mix of Transmission, generation, DSM and Operating Procedures. Should DSM be considered in conjunction with other measures in developing Corrective Action Plans? If yes, please comment on how the impact of DSM should be included.

Yes ☒ No ☐

Comment: : Controllable demand that will be available to both the planner and operator must be well defined and readily available when called upon including operating procedures.

Q17. Requirement R2.7.2: Such Corrective Action Plans shall "Be added to study cases and the cases re-tested to show that the System with planned additions meets the performance requirements in the tables". Should new studies, including the facilities comprising the Corrective Action Plan, be performed to assess System normal performance and Contingency response for conditions that previously resulted in the System deficiencies (without the planned additions) and also demonstrate that the changes would not result in inadvertent negative impacts on the System. If you "agree", please comment on how a study area should be determined.

Yes ☒ No ☐

Comment: : Corrective action plans must be appropriately modeled in order to verify that implementing the plans results in a BES that will perform based on the applicable NERC Reliability Standards or more restrictive local area criteria.

Q18. Requirement R2.7.3: The standard calls for a differentiation between committed and proposed projects. Do you agree that they should be treated separately? If not, please state why not.

Yes ☒ No ☐

Comment: : Definitions of both “committed” and “proposed” are needed.

Q19. Requirement R2.7.4: For such Corrective Action Plans "Committed projects shall not be removed without documentation to show that the revised plan meets the performance requirements". Do you agree or disagree with this requirement? If you disagree, please explain why.

Yes ☒ No ☐

Comment:

D. Performance Requirements

The proposed revised planning standard (TPL-001-1) incorporates a number of changes in requirements as compared to the current planning standards (TPL-001-0 through TPL-004-0), which it is expected to replace. Among other things these changes are intended to clarify the standard, address issues described by FERC, and, in particular, to “raise the bar.” Strengthening the planning standards in selected areas is necessary to maintain a reliable Bulk Electric System that is up to the challenges of the 21st Century. In proposing the requirements in this draft, the standard drafting team attempted to balance the value of increased reliability against any potential increase in work and costs to meet the new proposed standard.

The standard drafting team is seeking input from the industry to determine whether a proper balance has been achieved. The areas where material changes are proposed in this draft are enumerated below, and questions are posed by the standard drafting team to obtain industry comment. In formulating your responses, please keep in mind that material changes in the final standard will be accompanied by a transition plan to provide for an orderly implementation of the final standard.

The performance requirements relative to Non-Consequential Loss of Load for the following events enumerated in the two tables can be considered more stringent than the existing TPL standards. Furthermore, the proposed standard is based on an assumption that performance requirements for EHV facilities should be more stringent than for lower voltage facilities.

Do you agree that Non-Consequential Loss of Load should not be permitted for the following events? If you disagree, please provide a reason for your disagreement.

Event	Agree or Disagree	Comment
Q20. P2-1: Loss of bus section (SLG for stability) above 300 kV	☒Agree. ☐Do not agree.	
Q21. P5-1: For facilities above 300 kV, loss of a Transmission circuit followed by System adjustment[1] followed by loss of another Transmission circuit	☒Agree. ☐Do not agree.	
Q22. P5-2: For facilities above 300 kV, loss of a Transmission circuit followed by System adjustment followed by loss of a transformer with low side voltage rating above 300 kV	☒Agree. ☐Do not agree.	
Q23. P5-3: For facilities above 300 kV, loss of a transformer with low side voltage rating above 300 kV followed by System adjustment followed by loss of another transformer	☒Agree. ☐Do not agree.	

[1]System adjustment can be manual or automatic.

The proposed standard is based on an assumption that performance requirements for non-bus tie EHV breakers should be distinguished from other breakers. Do you agree that Non-Consequential Loss of Load should not be permitted for this event?

Q24. Loss of non-bus tie breaker (above 300 kV) due to internal fault

Yes ☒ No ☐
Comment:

The proposed standard is based on an assumption that performance requirements for non-bus tie EHV breakers should be distinguished from other breakers and that performance requirements for EHV facilities should be more stringent than for lower voltage facilities. Do you agree that Non-Consequential Loss of Load should not be permitted for this event?

Q25. P3-1: Loss of (SLG for stability) either a generator, a Transmission circuit, a transformer, or a bus and a stuck non-bus tie breaker (above 300 kV)

Yes ☒ No ☐
Comment:

The proposed standard is based on an assumption that the following events are relatively high probability events and, therefore, Non-Consequential Loss of Load should not be permitted. Do you agree? If you disagree, please provide a reason for your disagreement.

Event	Agree or Disagree	Comment
Q26. P4-1: Loss of a Generator followed by System adjustment[1] followed by loss of another Generator	☐Agree. ☐Do not agree.	Would like to see more explanation for the these scenarios.
Q27. P4-2: Loss of a generator followed by a System adjustment followed by the loss of a monopolar DC line	☐Agree. ☐Do not agree.	
Q28. P4-3: Loss of a generator followed by System adjustment followed by loss of a Transmission circuit	☐Agree. ☐Do not agree.	
Q29. P4-4: Loss of a generator followed by System adjustment followed by loss of a transformer	☐Agree. ☐Do not agree.	

The performance requirement for the following event may be considered less stringent than the existing TPL Standards — P2-3: Loss of a single pole of a DC line. Interruption of firm transactions (without Loss of firm Load) if the transaction is dependent on the faulted DC line is now allowed for this initiating event/Contingency.

Q30. Do you agree that interruption of any firm transfers that are dependent on the outaged DC line that is taken out of service should be permitted?

[1] System adjustment can be manual or automatic

Yes ☐ No ☐
Comment:

E. Stability

Q31. The proposed standard is based on an assumption that steady state analysis and stability analysis are different from each other and that therefore, two tables of Contingencies and performance requirements were needed. It is also based on an assumption that stability study requirements should be clearly separated from the steady state study requirements. Do you agree with the action taken in separating stability analysis from steady state analysis? If not, please explain.

Yes ☐ No ☐
Comment:

Q32. The SDT has added requirements for plant stability studies and has drawn a distinction in these studies from System stability studies. Do you agree with this approach? If not, please explain.

Yes ☐ No ☐
Comment:

Q33. The existing TPL-004-0 standard has a requirement to consider the Loss of all generating units at a plant, but it was not clear whether this requirement should apply to stability studies. The SDT did not include this requirement in the stability table, because it is hard to envision a condition when all units would trip simultaneously within the timeframe of a stability simulation. Do you think this condition should be required in stability analysis of extreme events? If not, please explain.

Yes ☐ No ☐
Comment:

Q34. There are an increasing number of events with slow voltage recovery after faults on the Transmission System. The dynamic behavior of induction motor loads is a major factor in this phenomenon. The proposed standard therefore requires that the load model for stability studies of peak Load conditions include the dynamic effects of induction motors. Do you agree with this requirement? If not, please explain?

Yes ☐ No ☐
Comment:

Q35. What type of manual or automatic adjustments of generators should be allowed for single and multiple Contingencies?

Comment:

F. Generation Runback and Tripping

The SDT has discussed the automatic and manual readjustments of generators that should be permissible for single contingencies and multiple contingencies. The existing TPL-001-0 through TPL-004-0 standards through footnote (a) of Table I could include emergency

ratings applicable for short durations as required to permit operating steps necessary to maintain system control. The footnote is silent about allowable generation adjustments in response to the Category B events. However, it does indicate that system adjustments are permitted to prepare for the next Contingency. These system adjustments could include manual or automatic adjustments involving generation.

The SDT has learned that many transmission owners use System Protection Systems (SPS) or Remedial Action Schemes (RAS) to trip generation for single and multiple Contingency outage events to prevent overloads, low voltage, and instability in the Interconnected Transmission network for N-1 and N-2 events. In some cases, the RAS are used to prepare for the next Contingency; but in some cases, the RAS are used to simultaneously avoid exceeding emergency ratings.

Q36. The proposed standard allows generation runback after the disturbance that causes a single Contingency (or due to a single Contingency outage) to move the Interconnected Transmission System from an emergency state (within emergency ratings) to a normal state (within normal ratings), assuming that the disturbance does not result in instability? Do you agree? If not, please explain.

Yes ☒ No ☐
Comment:

Q37. Since emergency ratings are thermal ratings, should this standard allow an automatic generation runback scheme (that is initiated immediately after the disturbance causing the single Contingency) to prevent thermal overloads (assuming that the disturbance does not result in instability)? If yes, what are the conditions that must be met in order to allow such a runback scheme to meet the System performance criteria for single Contingencies? Please explain the reason for your answer.

Yes ☐ No ☐
Comment:

The standard drafting team has considered that RAS or SPS may be allowable under certain situations for single Contingencies, but proposes that their use should be limited.

Q38. Do you agree that RAS or SPS may be allowed for single Contingencies? If not, please explain.

Yes ☐ No ☐
Comment:

Q39. Please describe the limitations that you believe should be placed on the use of RAS or SPS for single Contingency events.

Comment:

Q40. When RAS or SPS are allowed, what conditions should be met when these systems are used in system adjustments to meet performance requirements?

Comment:

G. General Questions

Q41. If you are aware of any regional variances that would be required as a result of these standards, please identify them here.

Yes ☐ No ☐
Comment:

Q42. If you are aware of any conflicts between the proposed standards and any regulatory function, rule order, tariff, rate schedule, legislative requirement or agreement, please identify them here.

Yes ☐ No ☐
Comment:

Q43. Do you have any other questions or concerns with the proposed standard that have not been addressed? If yes, please explain.

Yes ☒ No ☐
Comment: Requirement R3.2: Contingency analyses representing only the removal of elements that System protection is expected to automatically disconnect which includes Consequential Load Loss is a reduction in reliability. Excluding the contingency analyses between all elements including those with manually operated switches will result in lowering existing reliability standards and ultimately limit the load restoration capabilities of the BES. Minimum performance standards should be adhered to for all applicable contingencies including outages of elements that may be switched both automatically and manually taking into account controlled load curtailment that is allowed.
Requirement R3.3.2.1: The expected duration of Consequential Load Loss was noted to be required in a Planning Assessment following a single Contingency without any indication as to the assumed cause of the outage. The basis for such estimations of time needs to be defined such that these assessments are developed on a consistent basis.

NERC
NORTH AMERICAN ELECTRIC RELIABILITY CORPORATION

Comment Form for First Draft of TPL-001-1 — Transmission System Planning Performance Requirements

Please use this form to submit comments on the proposed draft of TPL-001-1. Comments must be submitted by **Friday, October 26, 2007**. You may submit the completed form by e-mail to sarcomm@nerc.net with the words "TPL-001 Draft 1" in the subject line. If you have questions please contact Ed Dobrowolski at ed.dobrowolksi@nerc.net or by telephone at 609-947-3673.

Individual Commenter Information **(Complete this page for comments from one organization or individual.)**		
Name:	Karl Kohlrus	
Organization:	City Water, Light & Power - Springfield, Illinois	
Telephone:	217-321-1391	
E-mail:	karl.kohlrus@cwlp.com	
NERC Region (check all Regions in which your company operates)		**Registered Ballot Body Segment (check all industry segments in which your company is registered)**
☐ **ERCOT**	☐	1 — Transmission Owners
☐ **FRCC**	☐	2 — RTOs and ISOs
☐ **MRO**	☒	3 — Load-serving Entities
☐ **NPCC**	☒	4 — Transmission-dependent Utilities
☐ **RFC**	☒	5 — Electric Generators
☒ **SERC**	☐	6 — Electricity Brokers, Aggregators, and Marketers
☐ **SPP**	☐	7 — Large Electricity End Users
☐ **WECC**	☐	8 — Small Electricity End Users
☐ **NA – Not Applicable**	☐	9 — Federal, State, Provincial Regulatory or other Government Entities
	☐	10 — Regional Reliability Organizations and Regional Entities

Group Comments (Complete this page if comments are from a group.)

Group Name:

Lead Contact:

Contact Organization:

Contact Segment:

Contact Telephone:

Contact E-mail:

Additional Member Name	Additional Member Organization	Region*	Segment*

*If more than one Region or Segment applies, please list all that apply. Regional acronyms and segment numbers are shown on prior page.

Background

The purpose of this standard is to establish Transmission System planning performance requirements within the planning horizon to develop a Bulk Electric System that will operate reliably over a broad spectrum of System conditions and following a wide range of probable Contingencies. This standard will replace TPL-001-0, TPL-002-0, TPL-003-0, and TPL-004-0. The standard drafting team has not yet addressed TPL-005-0 and TPL-006-0, but will address these two standards during the next phase of the drafting process.

The major objectives of the standard drafting team are to:

1) Ensure the standard is complete and the requirements are set at an appropriate level to ensure reliability (Not Least Common Denominator)
2) Ensure that the standard is enforceable by having clearly defined requirements with unambiguous language
3) Address the issues raised by FERC Order 693, 890, and other applicable orders
4) Address the issues raised in the original Standards Authorization Request (SAR) and the Supplemental SAR.

The standard drafting team did not attempt to edit the existing standards but rather chose to write one standard that addresses all aspects of transmission planning in the existing TPL-001-0, TPL-002-0, TPL-003-0, and TPL-004-0. The standard drafting team organized the new standard in the following sections:

R1 – Modeling requirements
R2 – Assessment and Corrective Plan requirements
R3 – Steady State Analysis requirements
R4 – Stability Analysis requirements
R5 – Coordination requirements

The standard drafting team determined that the requirements and analysis for Steady State are different from those for stability. As such, the standard drafting team separated the analysis requirements and created two performance requirement tables.

The standard drafting team recognizes that this draft standard is a starting point for industry input into the standard and that there is still a lot of work required to complete the process. The standard drafting team has made many changes to clarify requirements, add requirements, and make some of the performance requirements stricter. The standard drafting team has not addressed Measures, Risk Factors, Violation Severity Factors, or Time Horizons at this time. These will be addressed when the standard drafting team has better defined the requirements of the standard.

For questions where you agree with the standard drafting team, please state that you agree and if available, please provide supporting documentation. If you disagree with the standard drafting team, please explain why you disagree and provide data to support your position, such as outage data or analysis. If you believe that we have made a performance requirement too strict please provide supporting documentation. If applicable, please include the approximate cost in man-hours for additional studies and/or cost in $Millions for additional transmission investment to meet the new requirements or the stricter requirements. If you believe that the standard should be stricter, please provide the rationale along with any supporting data, including existing practices, cost estimates or additional analysis.

To improve the standard, the standard drafting team would appreciate responses to as many of these questions as you can answer.

A. New Definitions

Many of the concerns about the existing TPL standards come from the fact that a number of generally understood concepts are embedded in undefined terms, tables, and footnotes. To clarify some of these concerns, the standard drafting team is proposing new definitions. Please indicate whether you agree with the following proposed definitions and provide proposed changes to the definitions if you disagree:

Definition	**Agree or Disagree**
Q1. **Base Case**: Computer representation of the projected initial or starting Transmission System conditions for a specific point in time. Each base case reflects the forecasted Load at each bus (or node) on the interconnected Transmission System, the transmission facilities which deliver the generation and reactive resources to the connected Load, and the generation dispatch including firm transaction obligations assumed to supply the connected Load. The models also reflect facility ratings in accordance with FAC-008 & FAC-009.	☐Agree. ☒Do not agree.
Q1. **Comment: This should not be a defined term in the Glossary, instead there should be a Standard that provides the industry with the requirements for completing a Base Case Study.**	
Q2. **Consequential Load Loss:** Load that is no longer served because it is directly connected to an element(s) that is removed from service due to fault clearing action or mis-operation.	☒Agree. ☐Do not agree.
Q2. **Comment: This could be load lost which is on a radial line or load served by facilites which do not have fault-interrupting breakers.**	
Q3. **Extreme Events:** Events which are more severe than Planning Events and have a low probability of occurrence.	☐Agree. ☒Do not agree.
Q3. **Comment: More needs to be added here, especially to define the phrase "low probability of occurrence". Does this refer to N-1, N-2, N-3 etc.? We have a 300 foot long interconnection line between two substations. In this case even N-1 has a low probability of occurrence. This N-1 event has a much lower probability of occurrence than an N-2 event which involves generator outages. We also have an N-1 SPS event which hasn't occurred in 25 years.**	
Q4. **Long-Term Transmission Planning Horizon:** Transmission planning period that covers years six through ten or beyond.	☒Agree. ☐Do not agree.
Q4. **Comment:**	
Q5. **Near-Term Transmission Planning Horizon:** Transmission planning period that covers years One through five.	☒Agree. ☐Do not agree.
Q5. **Comment:**	

Q6. **Non-Consequential Load Loss:** Load loss other than Consequential Load Loss. For example, Load loss that occurs through manual (operator initiated) or automatic operations such as under-voltage Load shedding, under-frequency Load shedding, or Special Protection Systems.	☐Agree. ☒Do not agree.
Q6. **Comment: This definition should go beyond just saying "Load loss other than Consequential Load Loss." Recommend adding the following: " . . . including Load Loss that occurs through planned manual (Transmission Operator, Distribution Provider, and so-on) operation or planned automatic operation of load shedding equipment such as under-frequency Load shedding devices or Special Protection Systems."**	
Q7. **Planning Assessment:** Documented evaluation of future Bulk Electric System needs by the use of performance studies that cover a range of assumptions regarding system conditions, time frames, future plans including capital reinforcements and operating procedures and other factors, such as asset conditions and age.	☐Agree. ☒Do not agree.
Q7. **Comment: This definition is too vague. A Planning Assessment should cover the Near-Term or Long-Term Planning Horizon and include Base Case and Contingency Analysis according to NERC Standards.**	
Q8. **Planning Events:** Events which require Transmission system performance requirements to be met.	☐Agree. ☒Do not agree.
Q8. **Comment: This statement is too general. Performance Requirements are not defined.**	
Q9. **Plant Stability Study:** Study of an individual plant's Stability for various Contingencies in the vicinity of the plant; concerned with the effect on the System of the generating units' loss of synchronism and the damping of the generating units' power oscillations.	☐Agree. ☒Do not agree.
Q9. **Comment: Insert "Generating" prior to "Plant" for clarity.**	
Q10. **System Stability Study:** Study of the System or portions of the System to ensure that angular Stability is maintained, inter-area power oscillations are damped, and voltages during the dynamic simulation stay within acceptable performance limits.	☐Agree. ☐Do not agree.
Q10. **Comment:**	
Q11. **Year One:** The first year that a Transmission Planner is responsible for studying. This is further defined as the planning window that begins the next calendar year from the time the Transmission Planner submits their annual studies. Analysis conducted for time horizons within the calendar year from the study publication are assumed to be conducted under the auspices of Operations Planning.	☒Agree. ☐Do not agree.
Q11. **Comment:**	

B. Sensitivity Studies

The draft planning standard includes the requirement, as specified in FERC Order 693, that planning decisions be based on a portfolio of analyses. In section 12.a.ii "Sensitivity studies and critical system conditions" FERC provided direction to consider a full range of

variables considered to be significant that need to be assessed and documentation provided that explains the rationale for the selection of variables assessed.

In addition to the firm obligation scenario, the portfolio of analyses should be supplemented to include information from sensitivity analysis. The sensitivity analysis should be developed using additional cases that simulate reasonably stressed system conditions. The standard drafting team has included several parameters that can be varied to create the requisite sensitivity case(s). The draft standards specify that the sensitivities reflect one or more of the following conditions and that documentation be provided explaining the rationale for selecting the sensitivity(ies) employed. The parameters that should be varied include:

- Higher or lower Load forecasts from the Base Case with variability of Load/demand and Load power factors due to season, weather, or time of day.
- Modification of expected transfers.
- Unavailability of long lead time facilities.
- Variability and outages of Reactive Resources.
- Generation additions, retirements, or other dispatch scenarios.
- Decreased effectiveness of controllable Loads and Demand Side Management.
- Modification of planned Transmission outages

To help focus industry discussion, please respond to the questions below:

Q12. Should the standard provide more specific direction regarding the number of sensitivity cases that need to be developed?

Yes ☒ No ☐
Comment: The term Base Case should not be used in this manner. The conditions of the Base Case Study should be in a Standard to insure that all sensitivity cases are covered.

Q13. Should the standard specify the required changes, such as changes in expected transfers, load forecasts, generation patterns, etc., from the study case to be considered a "reasonably stressed" case?

Yes ☒ No ☐
Comment: The Standard should indicate a list which says "the list will include but not be limited to:" then list the minimum changes necessary to adequately cover the changes in the study.

Q14. The SDT proposes to require the use of sensitivity studies for Near-Term Transmission System Planning Horizon stability analysis. Do you concur with the use of sensitivity analysis in dynamic studies?

Yes ☐ No ☒
Comment: The requirement for sensitivity studies multiplies the study efforts. It will be burdensome especially when interregional studies are performed. It is better to have quality than quantity.

Q15. The draft TPL standard does not require the use of sensitivity studies for the Long-Term Transmission System Planning Horizon (year six and beyond) studies. Do you concur with this approach or should there be some level of sensitivity analysis required for the long-term period?

Yes ☒ No ☐
Comment:

C. Corrective Action Plans

Requirement R2.7 of the standard states that when analysis shows that the performance requirements in Table 1 and Table 2 are not fully met, a Corrective Action Plan that utilizes all or some of the Transmission System enhancements, generation additions, DSM, new technologies and Operating Procedures shall be included in the Planning Assessment. This Corrective Action Plan should ensure that upon its implementation the identified system deficiencies will be corrected so that the performance requirements in Table 1 and Table 2 will be met. Furthermore, studies included in the Planning Assessment should demonstrate that this is indeed the case.

Q16. Requirement R2.7.1: Such Corrective Action Plans shall "Identify System deficiencies and the associated actions needed to achieve required System performance including Transmission and generation improvements, DSM, new technologies, or Operating Procedures including the duration of Interim Operating Procedures". System deficiencies may be corrected using an integrated plan, i.e., an optimal mix of Transmission, generation, DSM and Operating Procedures. Should DSM be considered in conjunction with other measures in developing Corrective Action Plans? If yes, please comment on how the impact of DSM should be included.

Yes ☐ No ☒
Comment: DSM is not always available and is usually not available without operator action. Therefore, asuming it is alwasys available could give a false sense of security. The system could collapse before DSM is able to be implemented..

Q17. Requirement R2.7.2: Such Corrective Action Plans shall "Be added to study cases and the cases re-tested to show that the System with planned additions meets the performance requirements in the tables". Should new studies, including the facilities comprising the Corrective Action Plan, be performed to assess System normal performance and Contingency response for conditions that previously resulted in the System deficiencies (without the planned additions) and also demonstrate that the changes would not result in inadvertent negative impacts on the System. If you "agree", please comment on how a study area should be determined.

Yes ☒ No ☐
Comment: The system should be retested with new facilities in place to ensure that no new problems arise with the addition of new facilities.

Q18. Requirement R2.7.3: The standard calls for a differentiation between committed and proposed projects. Do you agree that they should be treated separately? If not, please state why not.

Yes ☒ No ☐
Comment: "Committed" and "proposed" projects need to be defined.

Q19. Requirement R2.7.4: For such Corrective Action Plans "Committed projects shall not be removed without documentation to show that the revised plan meets the performance requirements". Do you agree or disagree with this requirement? If you disagree, please explain why.

Yes ☒ No ☐
Comment:

D. Performance Requirements

The proposed revised planning standard (TPL-001-1) incorporates a number of changes in requirements as compared to the current planning standards (TPL-001-0 through TPL-004-0), which it is expected to replace. Among other things these changes are intended to clarify the standard, address issues described by FERC, and, in particular, to "raise the bar." Strengthening the planning standards in selected areas is necessary to maintain a reliable Bulk Electric System that is up to the challenges of the 21st Century. In proposing the requirements in this draft, the standard drafting team attempted to balance the value of increased reliability against any potential increase in work and costs to meet the new proposed standard.

The standard drafting team is seeking input from the industry to determine whether a proper balance has been achieved. The areas where material changes are proposed in this draft are enumerated below, and questions are posed by the standard drafting team to obtain industry comment. In formulating your responses, please keep in mind that material changes in the final standard will be accompanied by a transition plan to provide for an orderly implementation of the final standard.

The performance requirements relative to Non-Consequential Loss of Load for the following events enumerated in the two tables can be considered more stringent than the existing TPL standards. Furthermore, the proposed standard is based on an assumption that performance requirements for EHV facilities should be more stringent than for lower voltage facilities.

Do you agree that Non-Consequential Loss of Load should not be permitted for the following events? If you disagree, please provide a reason for your disagreement.

Event	Agree or Disagree	Comment
Q20. P2-1: Loss of bus section (SLG for stability) above 300 kV	☒Agree. ☐Do not agree.	
Q21. P5-1: For facilities above 300 kV, loss of a Transmission circuit followed by System adjustment[1] followed by loss of another Transmission circuit	☒Agree. ☐Do not agree.	
Q22. P5-2: For facilities above 300 kV, loss of a Transmission circuit followed by System adjustment followed by loss of a transformer with low side voltage rating above 300 kV	☒Agree. ☐Do not agree.	
Q23. P5-3: For facilities above 300 kV, loss of a transformer with low side voltage rating above 300 kV followed	☒Agree. ☐Do not agree.	

by System adjustment followed by loss of another transformer		

[1]System adjustment can be manual or automatic.

The proposed standard is based on an assumption that performance requirements for non-bus tie EHV breakers should be distinguished from other breakers. Do you agree that Non-Consequential Loss of Load should not be permitted for this event?

Q24. Loss of non-bus tie breaker (above 300 kV) due to internal fault

Yes ☒ No ☐
Comment:

The proposed standard is based on an assumption that performance requirements for non-bus tie EHV breakers should be distinguished from other breakers and that performance requirements for EHV facilities should be more stringent than for lower voltage facilities. Do you agree that Non-Consequential Loss of Load should not be permitted for this event?

Q25. P3-1: Loss of (SLG for stability) either a generator, a Transmission circuit, a transformer, or a bus and a stuck non-bus tie breaker (above 300 kV)

Yes ☒ No ☐
Comment:

The proposed standard is based on an assumption that the following events are relatively high probability events and, therefore, Non-Consequential Loss of Load should not be permitted. Do you agree? If you disagree, please provide a reason for your disagreement.

Event	Agree or Disagree	Comment
Q26. P4-1: Loss of a Generator followed by System adjustment[1] followed by loss of another Generator	☒Agree. ☐Do not agree.	
Q27. P4-2: Loss of a generator followed by a System adjustment followed by the loss of a monopolar DC line	☒Agree. ☐Do not agree.	
Q28. P4-3: Loss of a generator followed by System adjustment followed by loss of a Transmission circuit	☒Agree. ☐Do not agree.	
Q29. P4-4: Loss of a generator followed by System adjustment followed by loss of a transformer	☒Agree. ☐Do not agree.	

[1] System adjustment can be manual or automatic

The performance requirement for the following event may be considered less stringent than the existing TPL Standards — P2-3: Loss of a single pole of a DC line. Interruption of firm transactions (without Loss of firm Load) if the transaction is dependent on the faulted DC line is now allowed for this initiating event/Contingency.

Q30. Do you agree that interruption of any firm transfers that are dependent on the outaged DC line that is taken out of service should be permitted?

Yes ☒ No ☐
Comment:

E. Stability

Q31. The proposed standard is based on an assumption that steady state analysis and stability analysis are different from each other and that therefore, two tables of Contingencies and performance requirements were needed. It is also based on an assumption that stability study requirements should be clearly separated from the steady state study requirements. Do you agree with the action taken in separating stability analysis from steady state analysis? If not, please explain.

Yes ☒ No ☐
Comment:

Q32. The SDT has added requirements for plant stability studies and has drawn a distinction in these studies from System stability studies. Do you agree with this approach? If not, please explain.

Yes ☒ No ☐
Comment:

Q33. The existing TPL-004-0 standard has a requirement to consider the Loss of all generating units at a plant, but it was not clear whether this requirement should apply to stability studies. The SDT did not include this requirement in the stability table, because it is hard to envision a condition when all units would trip simultaneously within the timeframe of a stability simulation. Do you think this condition should be required in stability analysis of extreme events? If not, please explain.

Yes ☒ No ☐
Comment: If there is any single contingency event that could take out an entire plant, it should be studied.

Q34. There are an increasing number of events with slow voltage recovery after faults on the Transmission System. The dynamic behavior of induction motor loads is a major factor in this phenomenon. The proposed standard therefore requires that the load model for stability studies of peak Load conditions include the dynamic effects of induction motors. Do you agree with this requirement? If not, please explain?

Yes ☒ No ☐
Comment: However, low voltage often causes motors and air conditioner compressors to trip, significantly reducing peak loads.

Q35. What type of manual or automatic adjustments of generators should be allowed for single and multiple Contingencies?

Comment: Dispatching quick start units such as combustion turbines or diesels, Contingency Reserve Sharing Group response, redispatch, adjust reactive resources as necessary.

F. Generation Runback and Tripping

The SDT has discussed the automatic and manual readjustments of generators that should be permissible for single contingencies and multiple contingencies. The existing TPL-001-0 through TPL-004-0 standards through footnote (a) of Table I could include emergency ratings applicable for short durations as required to permit operating steps necessary to maintain system control. The footnote is silent about allowable generation adjustments in response to the Category B events. However, it does indicate that system adjustments are permitted to prepare for the next Contingency. These system adjustments could include manual or automatic adjustments involving generation.

The SDT has learned that many transmission owners use System Protection Systems (SPS) or Remedial Action Schemes (RAS) to trip generation for single and multiple Contingency outage events to prevent overloads, low voltage, and instability in the Interconnected Transmission network for N-1 and N-2 events. In some cases, the RAS are used to prepare for the next Contingency; but in some cases, the RAS are used to simultaneously avoid exceeding emergency ratings.

Q36. The proposed standard allows generation runback after the disturbance that causes a single Contingency (or due to a single Contingency outage) to move the Interconnected Transmission System from an emergency state (within emergency ratings) to a normal state (within normal ratings), assuming that the disturbance does not result in instability? Do you agree? If not, please explain.

Yes ☒ No ☐
Comment:

Q37. Since emergency ratings are thermal ratings, should this standard allow an automatic generation runback scheme (that is initiated immediately after the disturbance causing the single Contingency) to prevent thermal overloads (assuming that the disturbance does not result in instability)? If yes, what are the conditions that must be met in order to allow such a runback scheme to meet the System performance criteria for single Contingencies? Please explain the reason for your answer.

Yes ☒ No ☐
Comment: Coordination with neighboring systems is essential when considering generation redispatch.

The standard drafting team has considered that RAS or SPS may be allowable under certain situations for single Contingencies, but proposes that their use should be limited.

Q38. Do you agree that RAS or SPS may be allowed for single Contingencies? If not, please explain.

Yes ☐ No ☒
Comment: SPS use should be limited and SPS's should be of a temporary nature. A mitigation plan with a timeframe for implementation should accompany all SPS's and RAS's.

Q39. Please describe the limitations that you believe should be placed on the use of RAS or SPS for single Contingency events.

Comment: See above.

Q40. When RAS or SPS are allowed, what conditions should be met when these systems are used in system adjustments to meet performance requirements?

Comment: Maintain system stability, prevent loss of load and prevent cascading outages.

G. General Questions

Q41. If you are aware of any regional variances that would be required as a result of these standards, please identify them here.

Yes ☐ No ☒
Comment:

Q42. If you are aware of any conflicts between the proposed standards and any regulatory function, rule order, tariff, rate schedule, legislative requirement or agreement, please identify them here.

Yes ☐ No ☒
Comment:

Q43. Do you have any other questions or concerns with the proposed standard that have not been addressed? If yes, please explain.

Yes ☐ No ☐
Comment: The Standards are a great start in getting a set of requirements in place that will provide a planning methodology that will be transparent to the Functional entities in the interconnections and will produce results that will permit reliable planning and operations of the BES.
The SDY should remove all Requirements that are subjective and can't be measured.
The assumptions the Transmission Planners and Planning Coordinators use to conduct the studies should be posted.

NERC
NORTH AMERICAN ELECTRIC RELIABILITY CORPORATION

Comment Form for First Draft of TPL-001-1 — Transmission System Planning Performance Requirements

Please use this form to submit comments on the proposed draft of TPL-001-1. Comments must be submitted by **Friday, October 26, 2007**. You may submit the completed form by e-mail to sarcomm@nerc.net with the words "TPL-001 Draft 1" in the subject line. If you have questions please contact Ed Dobrowolski at ed.dobrowolksi@nerc.net or by telephone at 609-947-3673.

Individual Commenter Information **(Complete this page for comments from one organization or individual.)**		
Name:	Blake Williams	
Organization:	CPS Energy	
Telephone:	210-353-3557	
E-mail:	bawilliams@cpsenergy.com	
NERC Region (check all Regions in which your company operates)		**Registered Ballot Body Segment (check all industry segments in which your company is registered)**
☒ **ERCOT**	☒	1 — Transmission Owners
☐ **FRCC**	☐	2 — RTOs and ISOs
☐ **MRO**	☐	3 — Load-serving Entities
☐ **NPCC**	☐	4 — Transmission-dependent Utilities
☐ **RFC**	☐	5 — Electric Generators
☐ **SERC**	☐	6 — Electricity Brokers, Aggregators, and Marketers
☐ **SPP**	☐	7 — Large Electricity End Users
☐ **WECC**	☐	8 — Small Electricity End Users
☐ **NA – Not Applicable**	☐	9 — Federal, State, Provincial Regulatory or other Government Entities
	☐	10 — Regional Reliability Organizations and Regional Entities

Group Comments (Complete this page if comments are from a group.)

Group Name:

Lead Contact:

Contact Organization:

Contact Segment:

Contact Telephone:

Contact E-mail:

Additional Member Name	Additional Member Organization	Region*	Segment*

*If more than one Region or Segment applies, please list all that apply. Regional acronyms and segment numbers are shown on prior page.

Background

The purpose of this standard is to establish Transmission System planning performance requirements within the planning horizon to develop a Bulk Electric System that will operate reliably over a broad spectrum of System conditions and following a wide range of probable Contingencies. This standard will replace TPL-001-0, TPL-002-0, TPL-003-0, and TPL-004-0. The standard drafting team has not yet addressed TPL-005-0 and TPL-006-0, but will address these two standards during the next phase of the drafting process.

The major objectives of the standard drafting team are to:

1) Ensure the standard is complete and the requirements are set at an appropriate level to ensure reliability (Not Least Common Denominator)
2) Ensure that the standard is enforceable by having clearly defined requirements with unambiguous language
3) Address the issues raised by FERC Order 693, 890, and other applicable orders
4) Address the issues raised in the original Standards Authorization Request (SAR) and the Supplemental SAR.

The standard drafting team did not attempt to edit the existing standards but rather chose to write one standard that addresses all aspects of transmission planning in the existing TPL-001-0, TPL-002-0, TPL-003-0, and TPL-004-0. The standard drafting team organized the new standard in the following sections:

R1 – Modeling requirements
R2 – Assessment and Corrective Plan requirements
R3 – Steady State Analysis requirements
R4 – Stability Analysis requirements
R5 – Coordination requirements

The standard drafting team determined that the requirements and analysis for Steady State are different from those for stability. As such, the standard drafting team separated the analysis requirements and created two performance requirement tables.

The standard drafting team recognizes that this draft standard is a starting point for industry input into the standard and that there is still a lot of work required to complete the process. The standard drafting team has made many changes to clarify requirements, add requirements, and make some of the performance requirements stricter. The standard drafting team has not addressed Measures, Risk Factors, Violation Severity Factors, or Time Horizons at this time. These will be addressed when the standard drafting team has better defined the requirements of the standard.

For questions where you agree with the standard drafting team, please state that you agree and if available, please provide supporting documentation. If you disagree with the standard drafting team, please explain why you disagree and provide data to support your position, such as outage data or analysis. If you believe that we have made a performance requirement too strict please provide supporting documentation. If applicable, please include the approximate cost in man-hours for additional studies and/or cost in $Millions for additional transmission investment to meet the new requirements or the stricter requirements. If you believe that the standard should be stricter, please provide the rationale along with any supporting data, including existing practices, cost estimates or additional analysis.

To improve the standard, the standard drafting team would appreciate responses to as many of these questions as you can answer.

A. New Definitions

Many of the concerns about the existing TPL standards come from the fact that a number of generally understood concepts are embedded in undefined terms, tables, and footnotes. To clarify some of these concerns, the standard drafting team is proposing new definitions. Please indicate whether you agree with the following proposed definitions and provide proposed changes to the definitions if you disagree:

Definition	**Agree or Disagree**
Q1. **Base Case**: Computer representation of the projected initial or starting Transmission System conditions for a specific point in time. Each base case reflects the forecasted Load at each bus (or node) on the interconnected Transmission System, the transmission facilities which deliver the generation and reactive resources to the connected Load, and the generation dispatch including firm transaction obligations assumed to supply the connected Load. The models also reflect facility ratings in accordance with FAC-008 & FAC-009.	☐Agree. ☒Do not agree.
Q1. **Comment: Firm transaction obligations are not used throughout all regions in NERC. Change "including firm transaction obligations" to "including firm transaction obligations where applicable."**	
Q2. **Consequential Load Loss:** Load that is no longer served because it is directly connected to an element(s) that is removed from service due to fault clearing action or mis-operation.	☒Agree. ☐Do not agree.
Q2. **Comment:**	
Q3. **Extreme Events:** Events which are more severe than Planning Events and have a low probability of occurrence.	☒Agree. ☐Do not agree.
Q3. **Comment:**	
Q4. **Long-Term Transmission Planning Horizon:** Transmission planning period that covers years six through ten or beyond.	☒Agree. ☐Do not agree.
Q4. **Comment:**	
Q5. **Near-Term Transmission Planning Horizon:** Transmission planning period that covers years One through five.	☒Agree. ☐Do not agree.
Q5. **Comment:**	
Q6. **Non-Consequential Load Loss:** Load loss other than Consequential Load Loss. For example, Load loss that occurs through manual (operator initiated) or automatic operations such as under-voltage Load shedding, under-frequency Load shedding, or Special Protection Systems.	☒Agree. ☐Do not agree.
Q6. **Comment:**	

Q7. **Planning Assessment:** Documented evaluation of future Bulk Electric System needs by the use of performance studies that cover a range of assumptions regarding system conditions, time frames, future plans including capital reinforcements and operating procedures and other factors, such as asset conditions and age.	☒Agree. ☐Do not agree.
Q7. **Comment:**	
Q8. **Planning Events:** Events which require Transmission system performance requirements to be met.	☒Agree. ☐Do not agree.
Q8. **Comment:**	
Q9. **Plant Stability Study:** Study of an individual plant's Stability for various Contingencies in the vicinity of the plant; concerned with the effect on the System of the generating units' loss of synchronism and the damping of the generating units' power oscillations.	☒Agree. ☐Do not agree.
Q9. **Comment:**	
Q10. **System Stability Study:** Study of the System or portions of the System to ensure that angular Stability is maintained, inter-area power oscillations are damped, and voltages during the dynamic simulation stay within acceptable performance limits.	☒Agree. ☐Do not agree.
Q10. **Comment:**	
Q11. **Year One:** The first year that a Transmission Planner is responsible for studying. This is further defined as the planning window that begins the next calendar year from the time the Transmission Planner submits their annual studies. Analysis conducted for time horizons within the calendar year from the study publication are assumed to be conducted under the auspices of Operations Planning.	☒Agree. ☐Do not agree.
Q11. **Comment:**	

B. Sensitivity Studies

The draft planning standard includes the requirement, as specified in FERC Order 693, that planning decisions be based on a portfolio of analyses. In section 12.a.ii "Sensitivity studies and critical system conditions" FERC provided direction to consider a full range of variables considered to be significant that need to be assessed and documentation provided that explains the rationale for the selection of variables assessed.

In addition to the firm obligation scenario, the portfolio of analyses should be supplemented to include information from sensitivity analysis. The sensitivity analysis should be developed using additional cases that simulate reasonably stressed system conditions. The standard drafting team has included several parameters that can be varied to create the requisite sensitivity case(s). The draft standards specify that the sensitivities reflect one or more of the following conditions and that documentation be provided explaining the rationale for selecting the sensitivity(ies) employed. The parameters that should be varied include:

- Higher or lower Load forecasts from the Base Case with variability of Load/demand and Load power factors due to season, weather, or time of day.
- Modification of expected transfers.

- Unavailability of long lead time facilities.
- Variability and outages of Reactive Resources.
- Generation additions, retirements, or other dispatch scenarios.
- Decreased effectiveness of controllable Loads and Demand Side Management.
- Modification of planned Transmission outages

To help focus industry discussion, please respond to the questions below:

Q12. Should the standard provide more specific direction regarding the number of sensitivity cases that need to be developed?

Yes ☐ No ☒
Comment: The number of sensitivity studies should be at the discretion of Transmission Planners.

Q13. Should the standard specify the required changes, such as changes in expected transfers, load forecasts, generation patterns, etc., from the study case to be considered a "reasonably stressed" case?

Yes ☐ No ☒
Comment: The type of sensitivty studies should be at the discretion of Transmission Planners.

Q14. The SDT proposes to require the use of sensitivity studies for Near-Term Transmission System Planning Horizon stability analysis. Do you concur with the use of sensitivity analysis in dynamic studies?

Yes ☐ No ☒
Comment: The number and type of sensitivity studies should be at the discretion of Transmission Planners.

Q15. The draft TPL standard does not require the use of sensitivity studies for the Long-Term Transmission System Planning Horizon (year six and beyond) studies. Do you concur with this approach or should there be some level of sensitivity analysis required for the long-term period?

Yes ☒ No ☒
Comment: We concur with not requiring sensitivity studies for the Long Term Assessment.

C. Corrective Action Plans

Requirement R2.7 of the standard states that when analysis shows that the performance requirements in Table 1 and Table 2 are not fully met, a Corrective Action Plan that utilizes all or some of the Transmission System enhancements, generation additions, DSM, new technologies and Operating Procedures shall be included in the Planning Assessment. This Corrective Action Plan should ensure that upon its implementation the identified system deficiencies will be corrected so that the performance requirements in Table 1 and Table 2 will be met. Furthermore, studies included in the Planning Assessment should demonstrate that this is indeed the case.

Q16. Requirement R2.7.1: Such Corrective Action Plans shall "Identify System deficiencies and the associated actions needed to achieve required System performance including Transmission and generation improvements, DSM, new technologies, or Operating Procedures including the duration of Interim Operating Procedures". System deficiencies may be corrected using an integrated plan, i.e., an optimal mix of Transmission, generation, DSM and Operating Procedures. Should DSM be considered in

conjunction with other measures in developing Corrective Action Plans? If yes, please comment on how the impact of DSM should be included.

Yes ☐ No ☒
Comment: Performance of the DSM is not necessarily controlled by the Transmission Owner and cannot be considered "firm". Therefore, use of DSM should be optional, but not mandated.

Q17. Requirement R2.7.2: Such Corrective Action Plans shall "Be added to study cases and the cases re-tested to show that the System with planned additions meets the performance requirements in the tables". Should new studies, including the facilities comprising the Corrective Action Plan, be performed to assess System normal performance and Contingency response for conditions that previously resulted in the System deficiencies (without the planned additions) and also demonstrate that the changes would not result in inadvertent negative impacts on the System. If you "agree", please comment on how a study area should be determined.

Yes ☐ No ☒
Comment: Should be conducted for Near Term Planning Assessment only with the study area determined at the discretion of the Transmission Planners.

Q18. Requirement R2.7.3: The standard calls for a differentiation between committed and proposed projects. Do you agree that they should be treated separately? If not, please state why not.

Yes ☐ No ☒
Comment: The treatment of each project should be at the dscretion of the Transmission Planners.

Q19. Requirement R2.7.4: For such Corrective Action Plans "Committed projects shall not be removed without documentation to show that the revised plan meets the performance requirements". Do you agree or disagree with this requirement? If you disagree, please explain why.

Yes ☐ No ☒
Comment: The treatment of each project should be at the discretion of the Transmission Planners.

D. Performance Requirements

The proposed revised planning standard (TPL-001-1) incorporates a number of changes in requirements as compared to the current planning standards (TPL-001-0 through TPL-004-0), which it is expected to replace. Among other things these changes are intended to clarify the standard, address issues described by FERC, and, in particular, to "raise the bar." Strengthening the planning standards in selected areas is necessary to maintain a reliable Bulk Electric System that is up to the challenges of the 21st Century. In proposing the requirements in this draft, the standard drafting team attempted to balance the value of increased reliability against any potential increase in work and costs to meet the new proposed standard.

The standard drafting team is seeking input from the industry to determine whether a proper balance has been achieved. The areas where material changes are proposed in this draft are enumerated below, and questions are posed by the standard drafting team to obtain industry comment. In formulating your responses, please keep in mind that material changes in the final standard will be accompanied by a transition plan to provide for an orderly implementation of the final standard.

The performance requirements relative to Non-Consequential Loss of Load for the following events enumerated in the two tables can be considered more stringent than the existing TPL standards. Furthermore, the proposed standard is based on an assumption that performance requirements for EHV facilities should be more stringent than for lower voltage facilities.

Do you agree that Non-Consequential Loss of Load should not be permitted for the following events? If you disagree, please provide a reason for your disagreement.

Event	Agree or Disagree	Comment
Q20. P2-1: Loss of bus section (SLG for stability) above 300 kV	☒Agree. ☐Do not agree.	
Q21. P5-1: For facilities above 300 kV, loss of a Transmission circuit followed by System adjustment[1] followed by loss of another Transmission circuit	☐Agree. ☒Do not agree.	Should be determined at the discretion of the Transmission Planners.
Q22. P5-2: For facilities above 300 kV, loss of a Transmission circuit followed by System adjustment followed by loss of a transformer with low side voltage rating above 300 kV	☐Agree. ☐Do not agree.	
Q23. P5-3: For facilities above 300 kV, loss of a transformer with low side voltage rating above 300 kV followed by System adjustment followed by loss of another transformer	☐Agree. ☐Do not agree.	

[1]System adjustment can be manual or automatic.

The proposed standard is based on an assumption that performance requirements for non-bus tie EHV breakers should be distinguished from other breakers. Do you agree that Non-Consequential Loss of Load should not be permitted for this event?

Q24. Loss of non-bus tie breaker (above 300 kV) due to internal fault

Yes ☐ No ☒
Comment: Should be determined at the discretion of the Transmission Planners.

The proposed standard is based on an assumption that performance requirements for non-bus tie EHV breakers should be distinguished from other breakers and that performance requirements for EHV facilities should be more stringent than for lower voltage facilities. Do you agree that Non-Consequential Loss of Load should not be permitted for this event?

Q25. P3-1: Loss of (SLG for stability) either a generator, a Transmission circuit, a transformer, or a bus and a stuck non-bus tie breaker (above 300 kV)

Yes ☐ No ☒
Comment: Should be determined at the discretion of the Transmission Planners.

The proposed standard is based on an assumption that the following events are relatively high probability events and, therefore, Non-Consequential Loss of Load should not be permitted. Do you agree? If you disagree, please provide a reason for your disagreement.

Event	Agree or Disagree	Comment
Q26. P4-1: Loss of a Generator followed by System adjustment[1] followed by loss of another Generator	☐Agree. ☒Do not agree.	Should be determined at the discretion of the Transmission Planners.
Q27. P4-2: Loss of a generator followed by a System adjustment followed by the loss of a monopolar DC line	☐Agree. ☐Do not agree.	
Q28. P4-3: Loss of a generator followed by System adjustment followed by loss of a Transmission circuit	☐Agree. ☒Do not agree.	Should be determined at the discretion of the Transmission Planners.
Q29. P4-4: Loss of a generator followed by System adjustment followed by loss of a transformer	☐Agree. ☒Do not agree.	Should be determined at the discretion of the Transmission Planners.

The performance requirement for the following event may be considered less stringent than the existing TPL Standards — P2-3: Loss of a single pole of a DC line. Interruption of firm transactions (without Loss of firm Load) if the transaction is dependent on the faulted DC line is now allowed for this initiating event/Contingency.

Q30. Do you agree that interruption of any firm transfers that are dependent on the outaged DC line that is taken out of service should be permitted?

Yes ☐ No ☐
Comment:

E. Stability

[1] System adjustment can be manual or automatic

Q31. The proposed standard is based on an assumption that steady state analysis and stability analysis are different from each other and that therefore, two tables of Contingencies and performance requirements were needed. It is also based on an assumption that stability study requirements should be clearly separated from the steady state study requirements. Do you agree with the action taken in separating stability analysis from steady state analysis? If not, please explain.

Yes ☒ No ☐
Comment:

Q32. The SDT has added requirements for plant stability studies and has drawn a distinction in these studies from System stability studies. Do you agree with this approach? If not, please explain.

Yes ☐ No ☒
Comment:

Q33. The existing TPL-004-0 standard has a requirement to consider the Loss of all generating units at a plant, but it was not clear whether this requirement should apply to stability studies. The SDT did not include this requirement in the stability table, because it is hard to envision a condition when all units would trip simultaneously within the timeframe of a stability simulation. Do you think this condition should be required in stability analysis of extreme events? If not, please explain.

Yes ☐ No ☒
Comment:

Q34. There are an increasing number of events with slow voltage recovery after faults on the Transmission System. The dynamic behavior of induction motor loads is a major factor in this phenomenon. The proposed standard therefore requires that the load model for stability studies of peak Load conditions include the dynamic effects of induction motors. Do you agree with this requirement? If not, please explain?

Yes ☐ No ☒
Comment:

Q35. What type of manual or automatic adjustments of generators should be allowed for single and multiple Contingencies?

Comment:

F. Generation Runback and Tripping

The SDT has discussed the automatic and manual readjustments of generators that should be permissible for single contingencies and multiple contingencies. The existing TPL-001-0 through TPL-004-0 standards through footnote (a) of Table I could include emergency ratings applicable for short durations as required to permit operating steps necessary to maintain system control. The footnote is silent about allowable generation adjustments in response to the Category B events. However, it does indicate that system adjustments are permitted to prepare for the next Contingency. These system adjustments could include manual or automatic adjustments involving generation.

The SDT has learned that many transmission owners use System Protection Systems (SPS) or Remedial Action Schemes (RAS) to trip generation for single and multiple Contingency outage events to prevent overloads, low voltage, and instability in the Interconnected Transmission network for N-1 and N-2 events. In some cases, the RAS are used to prepare for the next Contingency; but in some cases, the RAS are used to simultaneously avoid exceeding emergency ratings.

Q36. The proposed standard allows generation runback after the disturbance that causes a single Contingency (or due to a single Contingency outage) to move the Interconnected Transmission System from an emergency state (within emergency ratings) to a normal state (within normal ratings), assuming that the disturbance does not result in instability? Do you agree? If not, please explain.

Yes ☒ No ☐
Comment:

Q37. Since emergency ratings are thermal ratings, should this standard allow an automatic generation runback scheme (that is initiated immediately after the disturbance causing the single Contingency) to prevent thermal overloads (assuming that the disturbance does not result in instability)? If yes, what are the conditions that must be met in order to allow such a runback scheme to meet the System performance criteria for single Contingencies? Please explain the reason for your answer.

Yes ☒ No ☐
Comment:

The standard drafting team has considered that RAS or SPS may be allowable under certain situations for single Contingencies, but proposes that their use should be limited.

Q38. Do you agree that RAS or SPS may be allowed for single Contingencies? If not, please explain.

Yes ☐ No ☒
Comment:

Q39. Please describe the limitations that you believe should be placed on the use of RAS or SPS for single Contingency events.

Comment:

Q40. When RAS or SPS are allowed, what conditions should be met when these systems are used in system adjustments to meet performance requirements?

Comment:

G. General Questions

Q41. If you are aware of any regional variances that would be required as a result of these standards, please identify them here.

Yes ☐ No ☒
Comment:

Q42. If you are aware of any conflicts between the proposed standards and any regulatory function, rule order, tariff, rate schedule, legislative requirement or agreement, please identify them here.

Yes ☐ No ☒
Comment:

Q43. Do you have any other questions or concerns with the proposed standard that have not been addressed? If yes, please explain.

Yes ☒ No ☐
Comment:

R1.1. This is a modeling requirement and should be incorporated into the modeling (MOD) standards. Remove or modify this requirement to eliminate any redundancy with existing modeling standards. If certain subrequirements of R1.1 of TPL-001 are not currently requirements in a MOD standard, it should be questioned, then, whether or not these specific subrequirements are actually needed in ANY standard.

R2.2. ERCOT does not study the Long-Term Planning Horizon because ERCOT does not believe it is necessary. Remove or modify to state "as applicable by region."

R2.7.1.1 Duration of projects vary between Transmission Owners and statement of the project initiation date has no value to reliability.

R3.3.2 Relay loadability is considered as an MLSE component to the circuit rating as identified in MOD-008 and MOD-009.

R3.3.2.1. The requirement to identify consequential load loss for single contingencies in the Planning Assessment is unnecessary and burdensome and should be removed.

R3.6 Automatic generation tripping should be allowed for radial-connected wind resources.

Table 1 - P6.1, P6.3, and P6.4 These events are triggered by a single credible event and should not allow for loss of Non-Consequential Load.

Table 1 - P9.1 Loss of double-circuit tower lines are triggered by a single credible event and should not allow for loss of Non-Consequential Load.

Table 1 and Table 2 - P4, P5, P8, and P9. Including all combinations of two components (generator, Transmission circuit, transformer) with generation adjustments is impractical and overly burdensome. For multiple contingencies, include only double-circuit tower lines and the two components (generator, Transmission circuit, transformer) that would be cleared by breaker failure.

NERC
NORTH AMERICAN ELECTRIC RELIABILITY CORPORATION

Comment Form for First Draft of TPL-001-1 — Transmission System Planning Performance Requirements

Please use this form to submit comments on the proposed draft of TPL-001-1. Comments must be submitted by **Friday, October 26, 2007**. You may submit the completed form by e-mail to sarcomm@nerc.net with the words "TPL-001 Draft 1" in the subject line. If you have questions please contact Ed Dobrowolski at ed.dobrowolksi@nerc.net or by telephone at 609-947-3673.

Individual Commenter Information **(Complete this page for comments from one organization or individual.)**		
Name:		
Organization:		
Telephone:		
E-mail:		
NERC Region (check all Regions in which your company operates)		**Registered Ballot Body Segment (check all industry segments in which your company is registered)**
☐ **ERCOT**	☒	1 — Transmission Owners
☐ **FRCC**	☐	2 — RTOs and ISOs
☐ **MRO**	☐	3 — Load-serving Entities
☐ **NPCC**	☐	4 — Transmission-dependent Utilities
☐ **RFC**	☐	5 — Electric Generators
☒ **SERC**	☐	6 — Electricity Brokers, Aggregators, and Marketers
☐ **SPP**	☐	7 — Large Electricity End Users
☐ **WECC**	☐	8 — Small Electricity End Users
☐ **NA – Not Applicable**	☐	9 — Federal, State, Provincial Regulatory or other Government Entities
	☐	10 — Regional Reliability Organizations and Regional Entities

Group Comments (Complete this page if comments are from a group.)

Group Name: **Dominion - Electric Transmission Planning**

Lead Contact: **John K. Loftis, Jr.**

Contact Organization: **Dominion Virginia Power**

Contact Segment: **1**

Contact Telephone: **(804) 819-2337**

Contact E-mail: **john.loftis@dom.com**

Additional Member Name	Additional Member Organization	Region*	Segment*
Kirit Doshi	Dominion - Electric Transmission Interconnection Planning	**SERC**	1
Craig Crider	Dominion - Electric Transmission Interconnection Planning	SERC	1
Solomon Yirga	Dominion - Electric Transmission Interconnection Planning	SERC	1
Nelson Burks	Dominion - Electric Transmission Interconnection Planning	SERC	1
Ashwani Vaswani	Dominion - Electric Transmission Load Planning	SERC	1
Mehdi Shakibafar	Dominion - Electric Transmission Interconnection Planning	SERC	1
Abdur Masood	Dominion - Electric Transmission Operations Planning	SERC	1
Thanh Nguyen	Dominion - Electric Transmission Operations Planning	SERC	1
Ed Croasdale	Dominion - Electric Transmission Operations Planning	SERC	1
Al MacDonald	Dominion - Electric Transmission Operations Planning	SERC	1

William Bigdely	Dominion - Electric Transmission Load Planning	SERC	1
Ronnie Bailey	Dominion Manager - Electric Transmission Planning	SERC	1

*If more than one Region or Segment applies, please list all that apply. Regional acronyms and segment numbers are shown on prior page.

Background

The purpose of this standard is to establish Transmission System planning performance requirements within the planning horizon to develop a Bulk Electric System that will operate reliably over a broad spectrum of System conditions and following a wide range of probable Contingencies. This standard will replace TPL-001-0, TPL-002-0, TPL-003-0, and TPL-004-0. The standard drafting team has not yet addressed TPL-005-0 and TPL-006-0, but will address these two standards during the next phase of the drafting process.

The major objectives of the standard drafting team are to:

1) Ensure the standard is complete and the requirements are set at an appropriate level to ensure reliability (Not Least Common Denominator)
2) Ensure that the standard is enforceable by having clearly defined requirements with unambiguous language
3) Address the issues raised by FERC Order 693, 890, and other applicable orders
4) Address the issues raised in the original Standards Authorization Request (SAR) and the Supplemental SAR.

The standard drafting team did not attempt to edit the existing standards but rather chose to write one standard that addresses all aspects of transmission planning in the existing TPL-001-0, TPL-002-0, TPL-003-0, and TPL-004-0. The standard drafting team organized the new standard in the following sections:

R1 – Modeling requirements
R2 – Assessment and Corrective Plan requirements
R3 – Steady State Analysis requirements
R4 – Stability Analysis requirements
R5 – Coordination requirements

The standard drafting team determined that the requirements and analysis for Steady State are different from those for stability. As such, the standard drafting team separated the analysis requirements and created two performance requirement tables.

The standard drafting team recognizes that this draft standard is a starting point for industry input into the standard and that there is still a lot of work required to complete the process. The standard drafting team has made many changes to clarify requirements, add requirements, and make some of the performance requirements stricter. The standard drafting team has not addressed Measures, Risk Factors, Violation Severity Factors, or Time Horizons at this time. These will be addressed when the standard drafting team has better defined the requirements of the standard.

For questions where you agree with the standard drafting team, please state that you agree and if available, please provide supporting documentation. If you disagree with the standard drafting team, please explain why you disagree and provide data to support your position, such as outage data or analysis. If you believe that we have made a performance requirement too strict please provide supporting documentation. If applicable, please include the approximate cost in man-hours for additional studies and/or cost in $Millions for additional transmission investment to meet the new requirements or the stricter requirements. If you believe that the standard should be stricter, please provide the rationale along with any supporting data, including existing practices, cost estimates or additional analysis.

To improve the standard, the standard drafting team would appreciate responses to as many of these questions as you can answer.

A. New Definitions

Many of the concerns about the existing TPL standards come from the fact that a number of generally understood concepts are embedded in undefined terms, tables, and footnotes. To clarify some of these concerns, the standard drafting team is proposing new definitions. Please indicate whether you agree with the following proposed definitions and provide proposed changes to the definitions if you disagree:

Definition	**Agree or Disagree**
Q1. **Base Case**: Computer representation of the projected initial or starting Transmission System conditions for a specific point in time. Each base case reflects the forecasted Load at each bus (or node) on the interconnected Transmission System, the transmission facilities which deliver the generation and reactive resources to the connected Load, and the generation dispatch including firm transaction obligations assumed to supply the connected Load. The models also reflect facility ratings in accordance with FAC-008 & FAC-009.	☒Agree. ☐Do not agree.
Q1. **Comment:**	
Q2. **Consequential Load Loss:** Load that is no longer served because it is directly connected to an element(s) that is removed from service due to fault clearing action or mis-operation.	☒Agree. ☐Do not agree.
Q2. **Comment:**	
Q3. **Extreme Events:** Events which are more severe than	☒Agree.

Planning Events and have a low probability of occurrence.	☒Do not agree.
Q3. **Comment: To make this "crisp", it is suggested that this definition be extended as "Events which …..occurrence. The Transmission system performance requirements do not apply to extreme events".**	
Q4. **Long-Term Transmission Planning Horizon:** Transmission planning period that covers years six through ten or beyond.	☒Agree. ☐Do not agree.
Q4. **Comment:**	
Q5. **Near-Term Transmission Planning Horizon:** Transmission planning period that covers years One through five.	☒Agree. ☐Do not agree.
Q5. **Comment:**	
Q6. **Non-Consequential Load Loss:** Load loss other than Consequential Load Loss. For example, Load loss that occurs through manual (operator initiated) or automatic operations such as under-voltage Load shedding, under-frequency Load shedding, or Special Protection Systems.	☒Agree. ☐Do not agree.
Q6. **Comment:**	
Q7. **Planning Assessment:** Documented evaluation of future Bulk Electric System needs by the use of performance studies that cover a range of assumptions regarding system conditions, time frames, future plans including capital reinforcements and operating procedures and other factors, such as asset conditions and age.	☒Agree. ☒Do not agree.
Q7. **Comment: Suggest to change "…by the use of performance studies that cover……" to "…by the use of past or current performance studies that cover……".**	
Q8. **Planning Events:** Events which require Transmission system performance requirements to be met.	☒Agree. ☐Do not agree.
Q8. **Comment:**	
Q9. **Plant Stability Study:** Study of an individual plant's Stability for various Contingencies in the vicinity of the plant; concerned with the effect on the System of the generating units' loss of synchronism and the damping of the generating units' power oscillations.	☒Agree. ☐Do not agree.
Q9. **Comment:**	
Q10. **System Stability Study:** Study of the System or portions of the System to ensure that angular Stability is maintained, inter-area power oscillations are damped, and voltages during the dynamic simulation stay within acceptable performance limits.	☒Agree. ☐Do not agree.
Q10. **Comment:**	
Q11. **Year One:** The first year that a Transmission Planner is responsible for studying. This is further defined as the planning window that begins the next calendar year from the time the Transmission Planner submits their annual studies. Analysis conducted for time horizons within the calendar year from the	☒Agree. ☐Do not agree.

study publication are assumed to be conducted under the auspices of Operations Planning.	
Q11. **Comment:**	

B. Sensitivity Studies

The draft planning standard includes the requirement, as specified in FERC Order 693, that planning decisions be based on a portfolio of analyses. In section 12.a.ii "Sensitivity studies and critical system conditions" FERC provided direction to consider a full range of variables considered to be significant that need to be assessed and documentation provided that explains the rationale for the selection of variables assessed.

In addition to the firm obligation scenario, the portfolio of analyses should be supplemented to include information from sensitivity analysis. The sensitivity analysis should be developed using additional cases that simulate reasonably stressed system conditions. The standard drafting team has included several parameters that can be varied to create the requisite sensitivity case(s). The draft standards specify that the sensitivities reflect one or more of the following conditions and that documentation be provided explaining the rationale for selecting the sensitivity(ies) employed. The parameters that should be varied include:

- Higher or lower Load forecasts from the Base Case with variability of Load/demand and Load power factors due to season, weather, or time of day.
- Modification of expected transfers.
- Unavailability of long lead time facilities.
- Variability and outages of Reactive Resources.
- Generation additions, retirements, or other dispatch scenarios.
- Decreased effectiveness of controllable Loads and Demand Side Management.
- Modification of planned Transmission outages

To help focus industry discussion, please respond to the questions below:

Q12. Should the standard provide more specific direction regarding the number of sensitivity cases that need to be developed?

Yes ☐ No ☒
Comment: Transmission Planning engineers have good engineering judgment and need to have some flexibility in selecting the variables that need to be studied.

Q13. Should the standard specify the required changes, such as changes in expected transfers, load forecasts, generation patterns, etc., from the study case to be considered a "reasonably stressed" case?

Yes ☐ No ☒
Comment: Transmission Planning engineers have good engineering judgment and need to have some flexibility in selecting the variables that need to be studied.

Q14. The SDT proposes to require the use of sensitivity studies for Near-Term Transmission System Planning Horizon stability analysis. Do you concur with the use of sensitivity analysis in dynamic studies?

Yes ☐ No ☒

Comment: Not all the items listed under "B. Sensitivity Studies" may be applicable to stability analysis and also depends on type of stability analysis (Plant/System; angular/voltage). For instance, in some locations stability margins are wide. In such cases, practical experience has shown that such sensitivity analysis is unnecessary. Therefore, this should be applied as applicable, at the engineering judgment of the planning engineers rather than be required by the Standards. In summary, R2.4.3 should be eliminated entirely.

Q15. The draft TPL standard does not require the use of sensitivity studies for the Long-Term Transmission System Planning Horizon (year six and beyond) studies. Do you concur with this approach or should there be some level of sensitivity analysis required for the long-term period?

Yes ☒ No ☐
Comment: We concur that no sensitivity studies should be required for the LT planning horizon.

C. Corrective Action Plans

Requirement R2.7 of the standard states that when analysis shows that the performance requirements in Table 1 and Table 2 are not fully met, a Corrective Action Plan that utilizes all or some of the Transmission System enhancements, generation additions, DSM, new technologies and Operating Procedures shall be included in the Planning Assessment. This Corrective Action Plan should ensure that upon its implementation the identified system deficiencies will be corrected so that the performance requirements in Table 1 and Table 2 will be met. Furthermore, studies included in the Planning Assessment should demonstrate that this is indeed the case.

Q16. Requirement R2.7.1: Such Corrective Action Plans shall "Identify System deficiencies and the associated actions needed to achieve required System performance including Transmission and generation improvements, DSM, new technologies, or Operating Procedures including the duration of Interim Operating Procedures". System deficiencies may be corrected using an integrated plan, i.e., an optimal mix of Transmission, generation, DSM and Operating Procedures. Should DSM be considered in conjunction with other measures in developing Corrective Action Plans? If yes, please comment on how the impact of DSM should be included.

Yes ☒ No ☐
Comment: An appropriate level of DSM should be included in studies.

Q17. Requirement R2.7.2: Such Corrective Action Plans shall "Be added to study cases and the cases re-tested to show that the System with planned additions meets the performance requirements in the tables". Should new studies, including the facilities comprising the Corrective Action Plan, be performed to assess System normal performance and Contingency response for conditions that previously resulted in the System deficiencies (without the planned additions) and also demonstrate that the changes would not result in inadvertent negative impacts on the System. If you "agree", please comment on how a study area should be determined.

Yes ☐ No ☒
Comment: In the normal course of business, a planner out of necessity will need to check to see if the proposed improvements will actually fix the problem. The prospect of making a multi-million dollar mistake is sufficient incentive to insure this study occurs without the additional burden of creating an audit trail to meet a NERC standard.

Requirements for what study area should be used and documentation of the process are not necessary. If, per chance, a study is not performed immediately, the next set of studies will show the deficiencies, if any.

Q18. Requirement R2.7.3: The standard calls for a differentiation between committed and proposed projects. Do you agree that they should be treated separately? If not, please state why not.

Yes ☒ No ☐

Comment:

Q19. Requirement R2.7.4: For such Corrective Action Plans "Committed projects shall not be removed without documentation to show that the revised plan meets the performance requirements". Do you agree or disagree with this requirement? If you disagree, please explain why.

Yes ☐ No ☒

Comment: We are of the opinion that committed projects could be removed without documentation. Once a project is removed, the next set of studies will show the deficiencies, if any.

D. Performance Requirements

The proposed revised planning standard (TPL-001-1) incorporates a number of changes in requirements as compared to the current planning standards (TPL-001-0 through TPL-004-0), which it is expected to replace. Among other things these changes are intended to clarify the standard, address issues described by FERC, and, in particular, to "raise the bar." Strengthening the planning standards in selected areas is necessary to maintain a reliable Bulk Electric System that is up to the challenges of the 21st Century. In proposing the requirements in this draft, the standard drafting team attempted to balance the value of increased reliability against any potential increase in work and costs to meet the new proposed standard.

The standard drafting team is seeking input from the industry to determine whether a proper balance has been achieved. The areas where material changes are proposed in this draft are enumerated below, and questions are posed by the standard drafting team to obtain industry comment. In formulating your responses, please keep in mind that material changes in the final standard will be accompanied by a transition plan to provide for an orderly implementation of the final standard.

The performance requirements relative to Non-Consequential Loss of Load for the following events enumerated in the two tables can be considered more stringent than the existing TPL standards. Furthermore, the proposed standard is based on an assumption that performance requirements for EHV facilities should be more stringent than for lower voltage facilities.

Do you agree that Non-Consequential Loss of Load should not be permitted for the following events? If you disagree, please provide a reason for your disagreement.

Event	Agree or Disagree	Comment
Q20. P2-1: Loss of bus section (SLG for	☐Agree.	Usually, this type of outage will not involve non-consequential load loss,

stability) above 300 kV	☒Do not agree.	however, there may be specific situations where local non-consequential load loss could be justified. This is consistent with how transmission systems have been designed for many years and approved by State commissions. Transmission Owners need to have some flexibility to balance grid reliability vs. cost to the ratepayer. In some instances, the expense required to eliminate all local non-consequential load loss cannot always be justified if there is no significant improvement in wide area bulk power system reliability. In other words, making the standards more stringent by "raising the bar" is not going to result in a dramatic improvement in system reliability. Even the best designed systems are susceptible to human error. Dominion has at least 5 years of transmission outage data clearly illustrating that any resulting loss of load (both consequential and non-consequential) has had an average duration of only 4-7 customer-minutes per year. Going forward, the emphasis and focus should be on planning and operating the bulk electric system so as to confine any transmission outages to the immediate, local area, and not allow the cascading of outages beyond control area boundaries.
Q21. P5-1: For facilities above 300 kV, loss of a Transmission circuit followed by System adjustment[1] followed by loss of another Transmission circuit	☐Agree. ☒Do not agree.	See comment for Question 20 above.
Q22. P5-2: For facilities above 300 kV, loss of a Transmission circuit followed by System adjustment followed by loss of a transformer with low side voltage rating above 300 kV	☐Agree. ☒Do not agree.	See comment for Question 20 above.
Q23. P5-3: For facilities above 300 kV, loss of a transformer with low side voltage rating above 300 kV followed by System adjustment	☐Agree. ☒Do not agree.	See comment for Question 20 above.

followed by loss of another transformer		

[1]System adjustment can be manual or automatic.

The proposed standard is based on an assumption that performance requirements for non-bus tie EHV breakers should be distinguished from other breakers. Do you agree that Non-Consequential Loss of Load should not be permitted for this event?

Q24. Loss of non-bus tie breaker (above 300 kV) due to internal fault

Yes ☐ No ☒
Comment: See comment for Question 20 above.

The proposed standard is based on an assumption that performance requirements for non-bus tie EHV breakers should be distinguished from other breakers and that performance requirements for EHV facilities should be more stringent than for lower voltage facilities. Do you agree that Non-Consequential Loss of Load should not be permitted for this event?

Q25. P3-1: Loss of (SLG for stability) either a generator, a Transmission circuit, a transformer, or a bus and a stuck non-bus tie breaker (above 300 kV)

Yes ☐ No ☒
Comment: See comment for Question 20 above.

The proposed standard is based on an assumption that the following events are relatively high probability events and, therefore, Non-Consequential Loss of Load should not be permitted. Do you agree? If you disagree, please provide a reason for your disagreement.

Event	Agree or Disagree	Comment
Q26. P4-1: Loss of a Generator followed by System adjustment[1] followed by loss of another Generator	☒Agree. ☐Do not agree.	Dominion agrees with these proposed standards as they are relatively higher probability events and reflect very closely to the Company's internal planning criteria.
Q27. P4-2: Loss of a generator followed by a System adjustment followed by the loss of a monopolar DC line	☒Agree. ☐Do not agree.	Although we do not have any DC lines, Dominion agrees with these proposed standards as they are relatively higher probability events and reflect very closely to the Company's internal planning criteria.
Q28. P4-3: Loss of a generator followed by System adjustment followed by loss of a Transmission circuit	☒Agree. ☐Do not agree.	Dominion agrees with these proposed standards as they are relatively higher probability events and reflect very closely to the Company's internal planning criteria.
Q29. P4-4: Loss of a generator followed by System adjustment followed	☒Agree. ☐Do not agree.	Dominion agrees with these proposed standards as they are relatively higher probability events and reflect very

[1] System adjustment can be manual or automatic

by loss of a transformer with low side voltage rating above 300 kV		closely to the Company's internal planning criteria.

The performance requirement for the following event may be considered less stringent than the existing TPL Standards — P2-3: Loss of a single pole of a DC line. Interruption of firm transactions (without Loss of firm Load) if the transaction is dependent on the faulted DC line is now allowed for this initiating event/Contingency.

Q30. Do you agree that interruption of any firm transfers that are dependent on the outaged DC line that is taken out of service should be permitted?

Yes ☐ No ☐
Comment: Not applicable since Dominion has no DC lines

E. Stability

Q31. The proposed standard is based on an assumption that steady state analysis and stability analysis are different from each other and that therefore, two tables of Contingencies and performance requirements were needed. It is also based on an assumption that stability study requirements should be clearly separated from the steady state study requirements. Do you agree with the action taken in separating stability analysis from steady state analysis? If not, please explain.

Yes ☒ No ☐
Comment:

Q32. The SDT has added requirements for plant stability studies and has drawn a distinction in these studies from System stability studies. Do you agree with this approach? If not, please explain.

Yes ☐ No ☒
Comment: More clarification is needed to distinguish the difference in studies performed for plant stability vs. system stability. For example, is a system study mainly a study of inter-area (i.e. - small signal) oscillations?

Q33. The existing TPL-004-0 standard has a requirement to consider the Loss of all generating units at a plant, but it was not clear whether this requirement should apply to stability studies. The SDT did not include this requirement in the stability table, because it is hard to envision a condition when all units would trip simultaneously within the timeframe of a stability simulation. Do you think this condition should be required in stability analysis of extreme events? If not, please explain.

Yes ☐ No ☒
Comment: It is unlikely that all units at a plant would trip simultaneously within a short time frame (20 second or so) for which stability simulations are performed.

Q34. There are an increasing number of events with slow voltage recovery after faults on the Transmission System. The dynamic behavior of induction motor loads is a major factor in this phenomenon. The proposed standard therefore requires that the load model for stability studies of peak Load conditions include the dynamic effects of induction motors. Do you agree with this requirement? If not, please explain?

Yes ☒ No ☒
Comment: The dynamic effects of induction motor load at peak load conditions should be studied only on a limited/selected basis and should not be required for the entire system as a routine study practice. The following are examples where such an effort might be warranted:

(a) where slow voltage recovery has been actually observed in the field following a fault clearance
(b) where steady state analysis (P-V & Q-V curves) indicates a possible voltage collapse scenario for stressed system conditions
(c) for a non-convergent (or very difficult to solve) power-flow case for stressed system conditions while solving for a contingency scenario

Q35. What type of manual or automatic adjustments of generators should be allowed for single and multiple Contingencies?

Comment: For a single contingency, no generation adjustment should be allowed. For multiple transmission element contingencies, generation reduction (automatic or manual runback) may be allowed. Unit trip should only be allowed if a unit becomes unstable.

F. Generation Runback and Tripping

The SDT has discussed the automatic and manual readjustments of generators that should be permissible for single contingencies and multiple contingencies. The existing TPL-001-0 through TPL-004-0 standards through footnote (a) of Table I could include emergency ratings applicable for short durations as required to permit operating steps necessary to maintain system control. The footnote is silent about allowable generation adjustments in response to the Category B events. However, it does indicate that system adjustments are permitted to prepare for the next Contingency. These system adjustments could include manual or automatic adjustments involving generation.

The SDT has learned that many transmission owners use System Protection Systems (SPS) or Remedial Action Schemes (RAS) to trip generation for single and multiple Contingency outage events to prevent overloads, low voltage, and instability in the Interconnected Transmission network for N-1 and N-2 events. In some cases, the RAS are used to prepare for the next Contingency; but in some cases, the RAS are used to simultaneously avoid exceeding emergency ratings.

Q36. The proposed standard allows generation runback after the disturbance that causes a single Contingency (or due to a single Contingency outage) to move the Interconnected Transmission System from an emergency state (within emergency ratings) to a normal state (within normal ratings), assuming that the disturbance does not result in instability? Do you agree? If not, please explain.

Yes ☐ No ☒
Comment: For a single contingency, no generation adjustment should be allowed. For multiple transmission element contingencies, generation reduction (automatic or manual runback) may be allowed. Unit trip should only be allowed if a unit becomes unstable.

Q37. Since emergency ratings are thermal ratings, should this standard allow an automatic generation runback scheme (that is initiated immediately after the disturbance causing the single Contingency) to prevent thermal overloads (assuming that the disturbance does not result in instability)? If yes, what are the conditions that must be met in order to allow such a runback scheme to meet the System performance criteria for single Contingencies? Please explain the reason for your answer.

Yes ☐ No ☒
Comment: For a single contingency, no generation adjustment should be allowed. For multiple transmission element contingencies, generation reduction (automatic or manual runback) may be allowed. Unit trip should only be allowed if a unit becomes unstable.

The standard drafting team has considered that RAS or SPS may be allowable under certain situations for single Contingencies, but proposes that their use should be limited.

Q38. Do you agree that RAS or SPS may be allowed for single Contingencies? If not, please explain.

Yes ☒ No ☐
Comment:

Q39. Please describe the limitations that you believe should be placed on the use of RAS or SPS for single Contingency events.

Comment: For single contingency events, a SPS scheme should not result in loss of load.

Q40. When RAS or SPS are allowed, what conditions should be met when these systems are used in system adjustments to meet performance requirements?

Comment:

G. General Questions

Q41. If you are aware of any regional variances that would be required as a result of these standards, please identify them here.

Yes ☐ No ☒
Comment:

Q42. If you are aware of any conflicts between the proposed standards and any regulatory function, rule order, tariff, rate schedule, legislative requirement or agreement, please identify them here.

Yes ☒ No ☐
Comment: Current planning criteria are approved by State commissions. It is unlikely that the commissions would agree that rate payers should incur the significant cost increases required to meet more stringent planning criteria (i.e. - "raising the bar") when the corresponding improvements in transmission system reliability cannot be quantified.

Q43. Do you have any other questions or concerns with the proposed standard that have not been addressed? If yes, please explain.

Yes ☒ No ☐
Comment:

GENERAL COMMENTS:

(1) Making the standards more stringent by "raising the bar" is not going to result in a dramatic improvement in system reliability. Even the best designed systems are susceptible to human error. Dominion has at least 5 years of transmission outage data clearly illustrating that any resulting loss of load (both consequential and non-consequential) has had an average duration of only 4-7 customer-minutes per year. Going forward, the emphasis and focus should be on planning and operating the bulk electric system so as to confine any transmission outages to the immediate, local area, and not allow the cascading of outages beyond control area boundaries.

(2) Although we are unable to put specific numbers on the impact of "raising the bar "with respect to non-consequential load loss, it will be enormous. Increased staffing levels may be required, and we would likely incur significant increased transmission maintenance and construction costs. It is likely that State commissions everywhere (not just Virginia) would agree that rate payers should not incur the significant cost increases required to meet more stringent planning criteria (i.e. - "raising the bar") when the corresponding improvements in transmission system reliability cannot be quantified.

SPECIFIC COMMENTS PERTAINING TO REFERENCED SECTIONS OF THE STANDARD:

(1) The last block in Category C of Table 1 of the existing standards deals with protection system failure. We interpreted this as, among other things, having a fault beyond the first-zone coverage of the primary protection scheme with the carrier equipment failure resulting in a second-zone trip of the faulted line (even though only one element will be lost). The second-zone trip time is generally in the range of 30-35 cycles. This may be critical from the stability aspect. The proposed Table 2 of TPL-001-1 is silent about this. Is there a reason why this requirement was left out?

(2) The requirement R4.6.2 may cause some confusion due to the last part "….whichever is greater". It is suggested that the entire wording for this requirement be replaced as listed below to avoid any misunderstanding.

"Shall be performed for changes in the real power output of a generating unit if either of the following applies:
(a) the increase is more than 10 % of the existing capacity (regardless of the amount of MW increase)
(b) the increase is more than 20 MW (regardless of the % increase).

Something to think about regarding a cut-off limit of 10% or 20 MW:

We had a unit with 800 MW existing capacity and the request was to increase it by 15 MW making the total new capacity of 815 MW. The requested increase was less than 10% of the existing capacity and also less than 20 MW, meaning the plant stability study is not required. However, we found that the increase of 15 MW made the plant unstable and we had to come up with a solution (and we did). This example warrants to include something like…. "However, in cases where a stability margin is known (or estimated) to

be slim, stability study should be performed regardless of the % or MW amount of increase (this leads to defining "Stability Margin").

(3) Table I, bullet 3 states that "Voltage Instability, cascading outages and uncontrolled islanding shall not occur." There is no definition for "voltage instability" anywhere in the proposed standard.

(4) R.3.3.2.1. states "Consequential Load loss (expected maximum demand and expected duration) following a single Contingency shall be identified in the Planning Assessment." This requirement creates significant unnecessary work without adding any value to system reliability.

(5) Extreme Event Description 3.d. states: "Shutdown of a nuclear power plant(s) and other facilities a day or more prior to a hurricane, tornado or wildfire, or for other common causes." It would appear that day ahead planning for a tornado is not possible, or applicable, for inclusion in this listing.

NERC
NORTH AMERICAN ELECTRIC RELIABILITY CORPORATION

Comment Form for First Draft of TPL-001-1 — Transmission System Planning Performance Requirements

Please use this form to submit comments on the proposed draft of TPL-001-1. Comments must be submitted by **Friday, October 26, 2007**. You may submit the completed form by e-mail to sarcomm@nerc.net with the words "TPL-001 Draft 1" in the subject line. If you have questions please contact Ed Dobrowolski at ed.dobrowolksi@nerc.net or by telephone at 609-947-3673.

Individual Commenter Information **(Complete this page for comments from one organization or individual.)**		
Name:	Greg Rowland	
Organization:	Duke Energy	
Telephone:	704-382-5348	
E-mail:	gdrowland@duke-energy.com	
NERC Region (check all Regions in which your company operates)		**Registered Ballot Body Segment (check all industry segments in which your company is registered)**
☐ **ERCOT**	☒	1 — Transmission Owners
☐ **FRCC**	☐	2 — RTOs and ISOs
☐ **MRO**	☒	3 — Load-serving Entities
☐ **NPCC**	☐	4 — Transmission-dependent Utilities
☒ **RFC**	☐	5 — Electric Generators
☒ **SERC**	☐	6 — Electricity Brokers, Aggregators, and Marketers
☐ **SPP**	☐	7 — Large Electricity End Users
☐ **WECC**	☐	8 — Small Electricity End Users
☐ **NA – Not Applicable**	☐	9 — Federal, State, Provincial Regulatory or other Government Entities
	☐	10 — Regional Reliability Organizations and Regional Entities

Group Comments (Complete this page if comments are from a group.)

Group Name:

Lead Contact:

Contact Organization:

Contact Segment:

Contact Telephone:

Contact E-mail:

Additional Member Name	Additional Member Organization	Region*	Segment*

*If more than one Region or Segment applies, please list all that apply. Regional acronyms and segment numbers are shown on prior page.

Background

The purpose of this standard is to establish Transmission System planning performance requirements within the planning horizon to develop a Bulk Electric System that will operate reliably over a broad spectrum of System conditions and following a wide range of probable Contingencies. This standard will replace TPL-001-0, TPL-002-0, TPL-003-0, and TPL-004-0. The standard drafting team has not yet addressed TPL-005-0 and TPL-006-0, but will address these two standards during the next phase of the drafting process.

The major objectives of the standard drafting team are to:

1) Ensure the standard is complete and the requirements are set at an appropriate level to ensure reliability (Not Least Common Denominator)
2) Ensure that the standard is enforceable by having clearly defined requirements with unambiguous language
3) Address the issues raised by FERC Order 693, 890, and other applicable orders
4) Address the issues raised in the original Standards Authorization Request (SAR) and the Supplemental SAR.

The standard drafting team did not attempt to edit the existing standards but rather chose to write one standard that addresses all aspects of transmission planning in the existing TPL-001-0, TPL-002-0, TPL-003-0, and TPL-004-0. The standard drafting team organized the new standard in the following sections:

R1 – Modeling requirements
R2 – Assessment and Corrective Plan requirements
R3 – Steady State Analysis requirements
R4 – Stability Analysis requirements
R5 – Coordination requirements

The standard drafting team determined that the requirements and analysis for Steady State are different from those for stability. As such, the standard drafting team separated the analysis requirements and created two performance requirement tables.

The standard drafting team recognizes that this draft standard is a starting point for industry input into the standard and that there is still a lot of work required to complete the process. The standard drafting team has made many changes to clarify requirements, add requirements, and make some of the performance requirements stricter. The standard drafting team has not addressed Measures, Risk Factors, Violation Severity Factors, or Time Horizons at this time. These will be addressed when the standard drafting team has better defined the requirements of the standard.

For questions where you agree with the standard drafting team, please state that you agree and if available, please provide supporting documentation. If you disagree with the standard drafting team, please explain why you disagree and provide data to support your position, such as outage data or analysis. If you believe that we have made a performance requirement too strict please provide supporting documentation. If applicable, please include the approximate cost in man-hours for additional studies and/or cost in $Millions for additional transmission investment to meet the new requirements or the stricter requirements. If you believe that the standard should be stricter, please provide the rationale along with any supporting data, including existing practices, cost estimates or additional analysis.

To improve the standard, the standard drafting team would appreciate responses to as many of these questions as you can answer.

A. New Definitions

Many of the concerns about the existing TPL standards come from the fact that a number of generally understood concepts are embedded in undefined terms, tables, and footnotes. To clarify some of these concerns, the standard drafting team is proposing new definitions. Please indicate whether you agree with the following proposed definitions and provide proposed changes to the definitions if you disagree:

Definition	**Agree or Disagree**
Q1. **Base Case**: Computer representation of the projected initial or starting Transmission System conditions for a specific point in time. Each base case reflects the forecasted Load at each bus (or node) on the interconnected Transmission System, the transmission facilities which deliver the generation and reactive resources to the connected Load, and the generation dispatch including firm transaction obligations assumed to supply the connected Load. The models also reflect facility ratings in accordance with FAC-008 & FAC-009.	☒Agree. ☐Do not agree.
Q1. **Comment:**	
Q2. **Consequential Load Loss:** Load that is no longer served because it is directly connected to an element(s) that is removed from service due to fault clearing action or mis-operation.	☐Agree. ☒Do not agree.
Q2. **Comment: It is unclear what is meant by "mis-operation". The SDT also needs to address load lost during the transient time frame (e.g. load dropout due to low voltages as a result of a fault) that may not be directly connected to the element removed from service.**	
Q3. **Extreme Events:** Events which are more severe than Planning Events and have a low probability of occurrence.	☒Agree. ☐Do not agree.
Q3. **Comment:**	
Q4. **Long-Term Transmission Planning Horizon:** Transmission planning period that covers years six through ten or beyond.	☒Agree. ☐Do not agree.
Q4. **Comment:**	
Q5. **Near-Term Transmission Planning Horizon:** Transmission planning period that covers years One through five.	☒Agree. ☐Do not agree.
Q5. **Comment:**	
Q6. **Non-Consequential Load Loss:** Load loss other than Consequential Load Loss. For example, Load loss that occurs through manual (operator initiated) or automatic operations such as under-voltage Load shedding, under-frequency Load shedding, or Special Protection Systems.	☒Agree. ☐Do not agree.
Q6. **Comment:**	

Q7. **Planning Assessment:** Documented evaluation of future Bulk Electric System needs by the use of performance studies that cover a range of assumptions regarding system conditions, time frames, future plans including capital reinforcements and operating procedures and other factors, such as asset conditions and age.	☒Agree. ☐Do not agree.
Q7. **Comment: We have a concern with what will be considered acceptable documentation, particularly as it relates to asset conditions and age. Delete the word "needs" and the phrase "such as asset conditions and age". When measures are developed it should be made clear what will constitute an acceptable Planning Assessment.**	
Q8. **Planning Events:** Events which require Transmission system performance requirements to be met.	☒Agree. ☐Do not agree.
Q8. **Comment:**	
Q9. **Plant Stability Study:** Study of an individual plant's Stability for various Contingencies in the vicinity of the plant; concerned with the effect on the System of the generating units' loss of synchronism and the damping of the generating units' power oscillations.	☐Agree. ☒Do not agree.
Q9. **Comment: Delete the term "the effect on the System of." The reference to "System" causes confusion with the term "System Stability Study.**	
Q10. **System Stability Study:** Study of the System or portions of the System to ensure that angular Stability is maintained, inter-area power oscillations are damped, and voltages during the dynamic simulation stay within acceptable performance limits.	☒Agree. ☐Do not agree.
Q10. **Comment:**	
Q11. **Year One:** The first year that a Transmission Planner is responsible for studying. This is further defined as the planning window that begins the next calendar year from the time the Transmission Planner submits their annual studies. Analysis conducted for time horizons within the calendar year from the study publication are assumed to be conducted under the auspices of Operations Planning.	☐Agree. ☒Do not agree.
Q11. **Comment: Need to provide an example to clarify what this means.**	

B. Sensitivity Studies

The draft planning standard includes the requirement, as specified in FERC Order 693, that planning decisions be based on a portfolio of analyses. In section 12.a.ii "Sensitivity studies and critical system conditions" FERC provided direction to consider a full range of variables considered to be significant that need to be assessed and documentation provided that explains the rationale for the selection of variables assessed.

In addition to the firm obligation scenario, the portfolio of analyses should be supplemented to include information from sensitivity analysis. The sensitivity analysis should be developed using additional cases that simulate reasonably stressed system conditions. The standard drafting team has included several parameters that can be varied to create the requisite sensitivity case(s). The draft standards specify that the sensitivities reflect one or more of the following conditions and that documentation be provided explaining the

rationale for selecting the sensitivity(ies) employed. The parameters that should be varied include:

- Higher or lower Load forecasts from the Base Case with variability of Load/demand and Load power factors due to season, weather, or time of day.
- Modification of expected transfers.
- Unavailability of long lead time facilities.
- Variability and outages of Reactive Resources.
- Generation additions, retirements, or other dispatch scenarios.
- Decreased effectiveness of controllable Loads and Demand Side Management.
- Modification of planned Transmission outages

To help focus industry discussion, please respond to the questions below:

Q12. Should the standard provide more specific direction regarding the number of sensitivity cases that need to be developed?

Yes ☐ No ☒
Comment: The entity performing the studies has the best system specific knowledge to select the appropriate sensitivities that needs to be evaluated. When Measures are developed, they should provide planners with the flexibility to perform appropriate sensitivity studies.

Q13. Should the standard specify the required changes, such as changes in expected transfers, load forecasts, generation patterns, etc., from the study case to be considered a "reasonably stressed" case?

Yes ☐ No ☒
Comment: The sensitivities are best selected by those most familiar with the specific system.

Q14. The SDT proposes to require the use of sensitivity studies for Near-Term Transmission System Planning Horizon stability analysis. Do you concur with the use of sensitivity analysis in dynamic studies?

Yes ☒ No ☒
Comment: Sensitivity studies can be useful, but they should only be requried for System Stability Studies. Due to the intensive nature of the studies, the planning engineer should have flexibility to determine appropriate sensitivities to analyze.

Q15. The draft TPL standard does not require the use of sensitivity studies for the Long-Term Transmission System Planning Horizon (year six and beyond) studies. Do you concur with this approach or should there be some level of sensitivity analysis required for the long-term period?

Yes ☒ No ☐
Comment: Agreed, sensitivity studies should not be required for the Long-Term.

C. Corrective Action Plans

Requirement R2.7 of the standard states that when analysis shows that the performance requirements in Table 1 and Table 2 are not fully met, a Corrective Action Plan that utilizes all or some of the Transmission System enhancements, generation additions, DSM, new

technologies and Operating Procedures shall be included in the Planning Assessment. This Corrective Action Plan should ensure that upon its implementation the identified system deficiencies will be corrected so that the performance requirements in Table 1 and Table 2 will be met. Furthermore, studies included in the Planning Assessment should demonstrate that this is indeed the case.

Q16. Requirement R2.7.1: Such Corrective Action Plans shall "Identify System deficiencies and the associated actions needed to achieve required System performance including Transmission and generation improvements, DSM, new technologies, or Operating Procedures including the duration of Interim Operating Procedures". System deficiencies may be corrected using an integrated plan, i.e., an optimal mix of Transmission, generation, DSM and Operating Procedures. Should DSM be considered in conjunction with other measures in developing Corrective Action Plans? If yes, please comment on how the impact of DSM should be included.

Yes ☒ No ☐
Comment: DSM should be carefully included based upon consideration of the particular DSM measures available and the uncertainty associated with each.

Q17. Requirement R2.7.2: Such Corrective Action Plans shall "Be added to study cases and the cases re-tested to show that the System with planned additions meets the performance requirements in the tables". Should new studies, including the facilities comprising the Corrective Action Plan, be performed to assess System normal performance and Contingency response for conditions that previously resulted in the System deficiencies (without the planned additions) and also demonstrate that the changes would not result in inadvertent negative impacts on the System. If you "agree", please comment on how a study area should be determined.

Yes ☒ No ☐
Comment: New studies should be performed, but the study conditions should be determined based upon the judgment of the planner.

Q18. Requirement R2.7.3: The standard calls for a differentiation between committed and proposed projects. Do you agree that they should be treated separately? If not, please state why not.

Yes ☐ No ☒
Comment: Even committed projects may not be built due to a variety of circumstances. Either type of project can be deferred or cancelled for a variety of reasons, including circumstances beyond the transmission planner's control.

Q19. Requirement R2.7.4: For such Corrective Action Plans "Committed projects shall not be removed without documentation to show that the revised plan meets the performance requirements". Do you agree or disagree with this requirement? If you disagree, please explain why.

Yes ☐ No ☒
Comment: The annual assessment will show that the revised plan meets performance requirements.

D. Performance Requirements

The proposed revised planning standard (TPL-001-1) incorporates a number of changes in requirements as compared to the current planning standards (TPL-001-0 through TPL-004-0), which it is expected to replace. Among other things these changes are intended to

clarify the standard, address issues described by FERC, and, in particular, to "raise the bar." Strengthening the planning standards in selected areas is necessary to maintain a reliable Bulk Electric System that is up to the challenges of the 21st Century. In proposing the requirements in this draft, the standard drafting team attempted to balance the value of increased reliability against any potential increase in work and costs to meet the new proposed standard.

The standard drafting team is seeking input from the industry to determine whether a proper balance has been achieved. The areas where material changes are proposed in this draft are enumerated below, and questions are posed by the standard drafting team to obtain industry comment. In formulating your responses, please keep in mind that material changes in the final standard will be accompanied by a transition plan to provide for an orderly implementation of the final standard.

The performance requirements relative to Non-Consequential Loss of Load for the following events enumerated in the two tables can be considered more stringent than the existing TPL standards. Furthermore, the proposed standard is based on an assumption that performance requirements for EHV facilities should be more stringent than for lower voltage facilities.

Do you agree that Non-Consequential Loss of Load should not be permitted for the following events? If you disagree, please provide a reason for your disagreement.

Event	Agree or Disagree	Comment
Q20. P2-1: Loss of bus section (SLG for stability) above 300 kV	☒Agree. ☐Do not agree.	
Q21. P5-1: For facilities above 300 kV, loss of a Transmission circuit followed by System adjustment[1] followed by loss of another Transmission circuit	☐Agree. ☒Do not agree.	Allow indirect (Non-Consequential) loss of load for events involving short duration outages, such as typical line outages that do not result in cascading outages.
Q22. P5-2: For facilities above 300 kV, loss of a Transmission circuit followed by System adjustment followed by loss of a transformer with low side voltage rating above 300 kV	☐Agree. ☒Do not agree.	Allow indirect (Non-Consequential) loss of load for events involving short duration outages, such as typical line outages that do not result in cascading outages.
Q23. P5-3: For facilities above 300 kV, loss of a transformer with low side voltage rating above 300 kV followed by System adjustment followed by loss of another transformer	☐Agree. ☒Do not agree.	Allow indirect (Non-Consequential) loss of load for events involving short duration outages that do not result in cascading outages.

[1]System adjustment can be manual or automatic.

The proposed standard is based on an assumption that performance requirements for non-bus tie EHV breakers should be distinguished from other breakers. Do you agree that Non-Consequential Loss of Load should not be permitted for this event?

Q24. Loss of non-bus tie breaker (above 300 kV) due to internal fault

Yes ☐ No ☒
Comment: Depends upon the definition of non-bus tie breaker. By not allowing non-consequential load loss, utilities will incur significant expenditures to solve a problem with an extremely low probability of occurrence.

The proposed standard is based on an assumption that performance requirements for non-bus tie EHV breakers should be distinguished from other breakers and that performance requirements for EHV facilities should be more stringent than for lower voltage facilities. Do you agree that Non-Consequential Loss of Load should not be permitted for this event?

Q25. P3-1: Loss of (SLG for stability) either a generator, a Transmission circuit, a transformer, or a bus and a stuck non-bus tie breaker (above 300 kV)

Yes ☐ No ☒
Comment: By not allowing non-consequential load loss, utilities will incur significant expenditures to solve a problem with an extremely low probability of occurrence.

The proposed standard is based on an assumption that the following events are relatively high probability events and, therefore, Non-Consequential Loss of Load should not be permitted. Do you agree? If you disagree, please provide a reason for your disagreement.

Event	Agree or Disagree	Comment
Q26. P4-1: Loss of a Generator followed by System adjustment[1] followed by loss of another Generator	☒Agree. ☐Do not agree.	
Q27. P4-2: Loss of a generator followed by a System adjustment followed by the loss of a monopolar DC line	☒Agree. ☐Do not agree.	
Q28. P4-3: Loss of a generator followed by System adjustment followed by loss of a Transmission circuit	☒Agree. ☐Do not agree.	
Q29. P4-4: Loss of a generator followed by System adjustment followed by loss of a transformer with	☒Agree. ☐Do not agree.	Table in TPL-001-1 doesn't include the last part of P4-4 (low side voltage rating above 300 kV). We assume the inclusion of 300kV here in the comment

[1] System adjustment can be manual or automatic

low side voltage rating above 300 kV		form is in error.

The performance requirement for the following event may be considered less stringent than the existing TPL Standards — P2-3: Loss of a single pole of a DC line. Interruption of firm transactions (without Loss of firm Load) if the transaction is dependent on the faulted DC line is now allowed for this initiating event/Contingency.

Q30. Do you agree that interruption of any firm transfers that are dependent on the outaged DC line that is taken out of service should be permitted?

Yes ☐ No ☒
Comment: DC and AC line contingencies should have the same requirements.

E. Stability

Q31. The proposed standard is based on an assumption that steady state analysis and stability analysis are different from each other and that therefore, two tables of Contingencies and performance requirements were needed. It is also based on an assumption that stability study requirements should be clearly separated from the steady state study requirements. Do you agree with the action taken in separating stability analysis from steady state analysis? If not, please explain.

Yes ☒ No ☐
Comment:

Q32. The SDT has added requirements for plant stability studies and has drawn a distinction in these studies from System stability studies. Do you agree with this approach? If not, please explain.

Yes ☒ No ☐
Comment:

Q33. The existing TPL-004-0 standard has a requirement to consider the Loss of all generating units at a plant, but it was not clear whether this requirement should apply to stability studies. The SDT did not include this requirement in the stability table, because it is hard to envision a condition when all units would trip simultaneously within the timeframe of a stability simulation. Do you think this condition should be required in stability analysis of extreme events? If not, please explain.

Yes ☐ No ☒
Comment: We agree with the basis laid out (in the question) by the SDT.

Q34. There are an increasing number of events with slow voltage recovery after faults on the Transmission System. The dynamic behavior of induction motor loads is a major factor in this phenomenon. The proposed standard therefore requires that the load model for stability studies of peak Load conditions include the dynamic effects of induction motors. Do you agree with this requirement? If not, please explain?

Yes ☐ No ☒
Comment: In general, it is a good practice for System Stabilty studies of seasonal load conditions to include the effects of induction motors. However, there is currently a lack

of data to support the amount and characteristics of detailed induction load models in many areas. Prior to making this a requirement, the industry needs guidance as to how this data should be developed, shared and maintained for near-term and long-term models. A long term transition period is required to incorporate motor models into dynamics studies.

Q35. What type of manual or automatic adjustments of generators should be allowed for single and multiple Contingencies?

Comment: This question is not clear. Manual and automatic adjustments should be allowed for single and multiple contingencies as long as Performance Requirements are met.

F. Generation Runback and Tripping

The SDT has discussed the automatic and manual readjustments of generators that should be permissible for single contingencies and multiple contingencies. The existing TPL-001-0 through TPL-004-0 standards through footnote (a) of Table I could include emergency ratings applicable for short durations as required to permit operating steps necessary to maintain system control. The footnote is silent about allowable generation adjustments in response to the Category B events. However, it does indicate that system adjustments are permitted to prepare for the next Contingency. These system adjustments could include manual or automatic adjustments involving generation.

The SDT has learned that many transmission owners use System Protection Systems (SPS) or Remedial Action Schemes (RAS) to trip generation for single and multiple Contingency outage events to prevent overloads, low voltage, and instability in the Interconnected Transmission network for N-1 and N-2 events. In some cases, the RAS are used to prepare for the next Contingency; but in some cases, the RAS are used to simultaneously avoid exceeding emergency ratings.

Q36. The proposed standard allows generation runback after the disturbance that causes a single Contingency (or due to a single Contingency outage) to move the Interconnected Transmission System from an emergency state (within emergency ratings) to a normal state (within normal ratings), assuming that the disturbance does not result in instability? Do you agree? If not, please explain.

Yes ☒ No ☐
Comment: We see this as an acceptable form of manual or automatic redispatch, which should be allowed as a cost beneficial way of operating the system in a reliable manner, as long as it can be accomplished within the time frame before emergency ratings are exceeded.

Q37. Since emergency ratings are thermal ratings, should this standard allow an automatic generation runback scheme (that is initiated immediately after the disturbance causing the single Contingency) to prevent thermal overloads (assuming that the disturbance does not result in instability)? If yes, what are the conditions that must be met in order to allow such a runback scheme to meet the System performance criteria for single Contingencies? Please explain the reason for your answer.

Yes ☐ No ☒
Comment: Runback should not be used if the disturbance caused you to exceed emergency ratings (i.e. thermal overload).

The standard drafting team has considered that RAS or SPS may be allowable under certain situations for single Contingencies, but proposes that their use should be limited.

Q38. Do you agree that RAS or SPS may be allowed for single Contingencies? If not, please explain.

Yes ☒ No ☐
Comment: RAS and SPS are economical solutions that planners ought to be able to use.

Q39. Please describe the limitations that you believe should be placed on the use of RAS or SPS for single Contingency events.

Comment: You should not have any wide area cascading if the RAS or SPS fails to operate as expected, or operates when it shouldn't.

Q40. When RAS or SPS are allowed, what conditions should be met when these systems are used in system adjustments to meet performance requirements?

Comment: See response to Q36 and Q37 above. No additional conditions beyond meeting the performance requirements.

G. General Questions

Q41. If you are aware of any regional variances that would be required as a result of these standards, please identify them here.

Yes ☐ No ☒
Comment:

Q42. If you are aware of any conflicts between the proposed standards and any regulatory function, rule order, tariff, rate schedule, legislative requirement or agreement, please identify them here.

Yes ☐ No ☒
Comment:

Q43. Do you have any other questions or concerns with the proposed standard that have not been addressed? If yes, please explain.

Yes ☐ No ☒
Comment:

NERC
NORTH AMERICAN ELECTRIC RELIABILITY CORPORATION

Comment Form for First Draft of TPL-001-1 — Transmission System Planning Performance Requirements

Please use this form to submit comments on the proposed draft of TPL-001-1. Comments must be submitted by **Friday, October 26, 2007**. You may submit the completed form by e-mail to sarcomm@nerc.net with the words "TPL-001 Draft 1" in the subject line. If you have questions please contact Ed Dobrowolski at ed.dobrowolksi@nerc.net or by telephone at 609-947-3673.

Individual Commenter Information **(Complete this page for comments from one organization or individual.)**		
Name:		
Organization:		
Telephone:		
E-mail:		
NERC Region (check all Regions in which your company operates)		**Registered Ballot Body Segment (check all industry segments in which your company is registered)**
☐ **ERCOT**	☒	1 — Transmission Owners
☐ **FRCC**	☐	2 — RTOs and ISOs
☐ **MRO**	☐	3 — Load-serving Entities
☐ **NPCC**	☐	4 — Transmission-dependent Utilities
☐ **RFC**	☐	5 — Electric Generators
☒ **SERC**	☐	6 — Electricity Brokers, Aggregators, and Marketers
☐ **SPP**	☐	7 — Large Electricity End Users
☐ **WECC**	☐	8 — Small Electricity End Users
☐ **NA – Not Applicable**	☐	9 — Federal, State, Provincial Regulatory or other Government Entities
	☐	10 — Regional Reliability Organizations and Regional Entities

Group Comments (Complete this page if comments are from a group.)

Group Name:

Lead Contact:

Contact Organization:

Contact Segment:

Contact Telephone:

Contact E-mail:

Additional Member Name	Additional Member Organization	Region*	Segment*

*If more than one Region or Segment applies, please list all that apply. Regional acronyms and segment numbers are shown on prior page.

Background

The purpose of this standard is to establish Transmission System planning performance requirements within the planning horizon to develop a Bulk Electric System that will operate reliably over a broad spectrum of System conditions and following a wide range of probable Contingencies. This standard will replace TPL-001-0, TPL-002-0, TPL-003-0, and TPL-004-0. The standard drafting team has not yet addressed TPL-005-0 and TPL-006-0, but will address these two standards during the next phase of the drafting process.

The major objectives of the standard drafting team are to:

1) Ensure the standard is complete and the requirements are set at an appropriate level to ensure reliability (Not Least Common Denominator)
2) Ensure that the standard is enforceable by having clearly defined requirements with unambiguous language
3) Address the issues raised by FERC Order 693, 890, and other applicable orders
4) Address the issues raised in the original Standards Authorization Request (SAR) and the Supplemental SAR.

The standard drafting team did not attempt to edit the existing standards but rather chose to write one standard that addresses all aspects of transmission planning in the existing TPL-001-0, TPL-002-0, TPL-003-0, and TPL-004-0. The standard drafting team organized the new standard in the following sections:

R1 – Modeling requirements
R2 – Assessment and Corrective Plan requirements
R3 – Steady State Analysis requirements
R4 – Stability Analysis requirements
R5 – Coordination requirements

The standard drafting team determined that the requirements and analysis for Steady State are different from those for stability. As such, the standard drafting team separated the analysis requirements and created two performance requirement tables.

The standard drafting team recognizes that this draft standard is a starting point for industry input into the standard and that there is still a lot of work required to complete the process. The standard drafting team has made many changes to clarify requirements, add requirements, and make some of the performance requirements stricter. The standard drafting team has not addressed Measures, Risk Factors, Violation Severity Factors, or Time Horizons at this time. These will be addressed when the standard drafting team has better defined the requirements of the standard.

For questions where you agree with the standard drafting team, please state that you agree and if available, please provide supporting documentation. If you disagree with the standard drafting team, please explain why you disagree and provide data to support your position, such as outage data or analysis. If you believe that we have made a performance requirement too strict please provide supporting documentation. If applicable, please include the approximate cost in man-hours for additional studies and/or cost in $Millions for additional transmission investment to meet the new requirements or the stricter requirements. If you believe that the standard should be stricter, please provide the rationale along with any supporting data, including existing practices, cost estimates or additional analysis.

To improve the standard, the standard drafting team would appreciate responses to as many of these questions as you can answer.

A. New Definitions

Many of the concerns about the existing TPL standards come from the fact that a number of generally understood concepts are embedded in undefined terms, tables, and footnotes. To clarify some of these concerns, the standard drafting team is proposing new definitions. Please indicate whether you agree with the following proposed definitions and provide proposed changes to the definitions if you disagree:

Definition	**Agree or Disagree**
Q1. **Base Case**: Computer representation of the projected initial or starting Transmission System conditions for a specific point in time. Each base case reflects the forecasted Load at each bus (or node) on the interconnected Transmission System, the transmission facilities which deliver the generation and reactive resources to the connected Load, and the generation dispatch including firm transaction obligations assumed to supply the connected Load. The models also reflect facility ratings in accordance with FAC-008 & FAC-009.	☐Agree. ☒Do not agree.
Q1. **Comment: Why define a term that is used only once in the document (R.2.1.2.1) and is, by definition, applicable to a[ny] specific point in time.**	
Q2. **Consequential Load Loss:** Load that is no longer served because it is directly connected to an element(s) that is removed from service due to fault clearing action or mis-operation.	☐Agree. ☒Do not agree.
Q2. **Comment: I agree with the definiton except for "or mis-operation". The requirements do not, and should not, include mis-operation of protection schemes. We would never finish a study of all potential mis-operations.**	
Q3. **Extreme Events:** Events which are more severe than Planning Events and have a low probability of occurrence.	☐Agree. ☒Do not agree.
Q3. **Comment: I disagree with the phrase "and have a low probability of occurance". All the Planning Events, except possibly a generator outage (P1.1), have a low probability of occurance.**	
Q4. **Long-Term Transmission Planning Horizon:** Transmission planning period that covers years six through ten or beyond.	☒Agree. ☐Do not agree.
Q4. **Comment:**	
Q5. **Near-Term Transmission Planning Horizon:** Transmission planning period that covers years One through five.	☒Agree. ☐Do not agree.
Q5. **Comment:**	
Q6. **Non-Consequential Load Loss:** Load loss other than Consequential Load Loss. For example, Load loss that occurs through manual (operator initiated) or automatic operations such	☒Agree. ☐Do not

as under-voltage Load shedding, under-frequency Load shedding, or Special Protection Systems.	agree.
Q6. **Comment:**	
Q7. **Planning Assessment:** Documented evaluation of future Bulk Electric System needs by the use of performance studies that cover a range of assumptions regarding system conditions, time frames, future plans including capital reinforcements and operating procedures and other factors, such as asset conditions and age.	☐Agree. ☒Do not agree.
Q7. **Comment: I agree that Asset Managers need to consider asset condition and age in their spare equipment and replacement strategies but the impact of these factors is beyond the scope of a deterministic Planning Assessment.**	
Q8. **Planning Events:** Events which require Transmission system performance requirements to be met.	☐Agree. ☒Do not agree.
Q8. **Comment: Recommend: Events to be simulated is studies (listed in Tables 1 and 2 of TPL-001) which must be documented with Corrective Action Plans when performance requirements of TPL-001 are not met.**	
Q9. **Plant Stability Study:** Study of an individual plant's Stability for various Contingencies in the vicinity of the plant; concerned with the effect on the System of the generating units' loss of synchronism and the damping of the generating units' power oscillations.	☐Agree. ☐Do not agree.
Q9. **Comment:**	
Q10. **System Stability Study:** Study of the System or portions of the System to ensure that angular Stability is maintained, inter-area power oscillations are damped, and voltages during the dynamic simulation stay within acceptable performance limits.	☐Agree. ☐Do not agree.
Q10. **Comment:**	
Q11. **Year One:** The first year that a Transmission Planner is responsible for studying. This is further defined as the planning window that begins the next calendar year from the time the Transmission Planner submits their annual studies. Analysis conducted for time horizons within the calendar year from the study publication are assumed to be conducted under the auspices of Operations Planning.	☐Agree. ☒Do not agree.
Q11. **Comment: "studies" should be replaced with "Planning Assessemt", the Planning Assessement is the documention (of past and current studies) submitted for review. Note: the definiton in Q11 does not match TPL-001.**	

B. Sensitivity Studies

The draft planning standard includes the requirement, as specified in FERC Order 693, that planning decisions be based on a portfolio of analyses. In section 12.a.ii "Sensitivity studies and critical system conditions" FERC provided direction to consider a full range of variables considered to be significant that need to be assessed and documentation provided that explains the rationale for the selection of variables assessed.

In addition to the firm obligation scenario, the portfolio of analyses should be supplemented to include information from sensitivity analysis. The sensitivity analysis should be

developed using additional cases that simulate reasonably stressed system conditions. The standard drafting team has included several parameters that can be varied to create the requisite sensitivity case(s). The draft standards specify that the sensitivities reflect one or more of the following conditions and that documentation be provided explaining the rationale for selecting the sensitivity(ies) employed. The parameters that should be varied include:

- Higher or lower Load forecasts from the Base Case with variability of Load/demand and Load power factors due to season, weather, or time of day.
- Modification of expected transfers.
- Unavailability of long lead time facilities.
- Variability and outages of Reactive Resources.
- Generation additions, retirements, or other dispatch scenarios.
- Decreased effectiveness of controllable Loads and Demand Side Management.
- Modification of planned Transmission outages

To help focus industry discussion, please respond to the questions below:

Q12. Should the standard provide more specific direction regarding the number of sensitivity cases that need to be developed?

Yes ☒ No ☐
Comment: The proposed requirements P2, P3 and P4 significantly increase system performance. I agree with the requirements but I do not think it is appropropriate to layer extreme load, extreme transfers and other sensitivities on top of these. The analsysis of any Senistivities should be under the umbrella of Extreme Events or limited to meeting the P1 requirements.

Q13. Should the standard specify the required changes, such as changes in expected transfers, load forecasts, generation patterns, etc., from the study case to be considered a "reasonably stressed" case?

Yes ☐ No ☒
Comment:

Q14. The SDT proposes to require the use of sensitivity studies for Near-Term Transmission System Planning Horizon stability analysis. Do you concur with the use of sensitivity analysis in dynamic studies?

Yes ☐ No ☒
Comment: Stability studies are a labor intensive task. Off-peak studies (with max plant gen) is severe enough.

Q15. The draft TPL standard does not require the use of sensitivity studies for the Long-Term Transmission System Planning Horizon (year six and beyond) studies. Do you concur with this approach or should there be some level of sensitivity analysis required for the long-term period?

Yes ☐ No ☐
Comment: I agree with the approach.

C. Corrective Action Plans

Requirement R2.7 of the standard states that when analysis shows that the performance requirements in Table 1 and Table 2 are not fully met, a Corrective Action Plan that utilizes

all or some of the Transmission System enhancements, generation additions, DSM, new technologies and Operating Procedures shall be included in the Planning Assessment. This Corrective Action Plan should ensure that upon its implementation the identified system deficiencies will be corrected so that the performance requirements in Table 1 and Table 2 will be met. Furthermore, studies included in the Planning Assessment should demonstrate that this is indeed the case.

Q16. Requirement R2.7.1: Such Corrective Action Plans shall "Identify System deficiencies and the associated actions needed to achieve required System performance including Transmission and generation improvements, DSM, new technologies, or Operating Procedures including the duration of Interim Operating Procedures". System deficiencies may be corrected using an integrated plan, i.e., an optimal mix of Transmission, generation, DSM and Operating Procedures. Should DSM be considered in conjunction with other measures in developing Corrective Action Plans? If yes, please comment on how the impact of DSM should be included.

Yes ☐ No ☒
Comment: DSM and generation improvements should be excluded. What is a "generation improvement"? New technologies could apply to anything, does the SDT mean "new Transmission technologies"?

Q17. Requirement R2.7.2: Such Corrective Action Plans shall "Be added to study cases and the cases re-tested to show that the System with planned additions meets the performance requirements in the tables". Should new studies, including the facilities comprising the Corrective Action Plan, be performed to assess System normal performance and Contingency response for conditions that previously resulted in the System deficiencies (without the planned additions) and also demonstrate that the changes would not result in inadvertent negative impacts on the System. If you "agree", please comment on how a study area should be determined.

Yes ☐ No ☒
Comment: Re-testing is part of the normal study process of developing the Corrective Action Plan (CAP). Most CAP should be developed in the Long-Term horizon. The next annual study and all subsequent studies provide sufficient review without developing another set of cases and additional testing in the initial assessment.

Q18. Requirement R2.7.3: The standard calls for a differentiation between committed and proposed projects. Do you agree that they should be treated separately? If not, please state why not.

Yes ☐ No ☒
Comment: MISO has spent years on trying to make a distinction. If this remains, then "Committed Project" must be defined.

Q19. Requirement R2.7.4: For such Corrective Action Plans "Committed projects shall not be removed without documentation to show that the revised plan meets the performance requirements". Do you agree or disagree with this requirement? If you disagree, please explain why.

Yes ☐ No ☒
Comment: Our planning process includes documentation of the need, acceleration, delay, or elimination of all projects. As worded, I do not need to document the delay of a Committed project.

D. Performance Requirements

The proposed revised planning standard (TPL-001-1) incorporates a number of changes in requirements as compared to the current planning standards (TPL-001-0 through TPL-004-

0), which it is expected to replace. Among other things these changes are intended to clarify the standard, address issues described by FERC, and, in particular, to "raise the bar." Strengthening the planning standards in selected areas is necessary to maintain a reliable Bulk Electric System that is up to the challenges of the 21st Century. In proposing the requirements in this draft, the standard drafting team attempted to balance the value of increased reliability against any potential increase in work and costs to meet the new proposed standard.

The standard drafting team is seeking input from the industry to determine whether a proper balance has been achieved. The areas where material changes are proposed in this draft are enumerated below, and questions are posed by the standard drafting team to obtain industry comment. In formulating your responses, please keep in mind that material changes in the final standard will be accompanied by a transition plan to provide for an orderly implementation of the final standard.

The performance requirements relative to Non-Consequential Loss of Load for the following events enumerated in the two tables can be considered more stringent than the existing TPL standards. Furthermore, the proposed standard is based on an assumption that performance requirements for EHV facilities should be more stringent than for lower voltage facilities.

Do you agree that Non-Consequential Loss of Load should not be permitted for the following events? If you disagree, please provide a reason for your disagreement.

Event	Agree or Disagree	Comment
Q20. P2-1: Loss of bus section (SLG for stability) above 300 kV	☒Agree. ☐Do not agree.	
Q21. P5-1: For facilities above 300 kV, loss of a Transmission circuit followed by System adjustment[1] followed by loss of another Transmission circuit	☐Agree. ☒Do not agree.	Outage of two 345 kV circuits can create local area issues that result in loss of load but do not affect the integrity of the BES.
Q22. P5-2: For facilities above 300 kV, loss of a Transmission circuit followed by System adjustment followed by loss of a transformer with low side voltage rating above 300 kV	☐Agree. ☒Do not agree.	Outage of two 345 kV circuit and a transformer can create local area issues that result in loss of load but do not affect the integrity of the BES.
Q23. P5-3: For facilities above 300 kV, loss of a transformer with low side voltage rating above 300 kV followed by System adjustment followed by loss of	☐Agree. ☒Do not agree.	Outage of two 345 kV transformers can create local area issues that result in loss of load but do not affect the integrity of the BES.

another transformer		

[1]System adjustment can be manual or automatic.

The proposed standard is based on an assumption that performance requirements for non-bus tie EHV breakers should be distinguished from other breakers. Do you agree that Non-Consequential Loss of Load should not be permitted for this event?

Q24. Loss of non-bus tie breaker (above 300 kV) due to internal fault

Yes ☐ No ☒
Comment: EHV station configurations are either ring-bus or breaker and one-half. Breaker failure protection isolates two EHV Facilites which may cause local area issues without affecting the BES.

The proposed standard is based on an assumption that performance requirements for non-bus tie EHV breakers should be distinguished from other breakers and that performance requirements for EHV facilities should be more stringent than for lower voltage facilities. Do you agree that Non-Consequential Loss of Load should not be permitted for this event?

Q25. P3-1: Loss of (SLG for stability) either a generator, a Transmission circuit, a transformer, or a bus and a stuck non-bus tie breaker (above 300 kV)

Yes ☐ No ☒
Comment: This event needs to be reworded. Does the stuck non-bus tie breaker condition only apply to the bus fault or to all faults? Does (above 300 kV) only apply to the stuck non-bus tie breaker or is this limited to faults on facilities above 300 kV?

The proposed standard is based on an assumption that the following events are relatively high probability events and, therefore, Non-Consequential Loss of Load should not be permitted. Do you agree? If you disagree, please provide a reason for your disagreement.

Event	Agree or Disagree	Comment
Q26. P4-1: Loss of a Generator followed by System adjustment[1] followed by loss of another Generator	☒Agree. ☐Do not agree.	
Q27. P4-2: Loss of a generator followed by a System adjustment followed by the loss of a monopolar DC line	☐Agree. ☐Do not agree.	
Q28. P4-3: Loss of a generator followed by System adjustment followed by loss of a Transmission circuit	☒Agree. ☐Do not agree.	
Q29. P4-4: Loss of a generator followed by System adjustment followed	☒Agree. ☐Do not agree.	

[1] System adjustment can be manual or automatic

by loss of a transformer		

The performance requirement for the following event may be considered less stringent than the existing TPL Standards — P2-3: Loss of a single pole of a DC line. Interruption of firm transactions (without Loss of firm Load) if the transaction is dependent on the faulted DC line is now allowed for this initiating event/Contingency.

Q30. Do you agree that interruption of any firm transfers that are dependent on the outaged DC line that is taken out of service should be permitted?

Yes ☐ No ☐
Comment: No opinion, we do not operate DC

E. Stability

Q31. The proposed standard is based on an assumption that steady state analysis and stability analysis are different from each other and that therefore, two tables of Contingencies and performance requirements were needed. It is also based on an assumption that stability study requirements should be clearly separated from the steady state study requirements. Do you agree with the action taken in separating stability analysis from steady state analysis? If not, please explain.

Yes ☒ No ☐
Comment:

Q32. The SDT has added requirements for plant stability studies and has drawn a distinction in these studies from System stability studies. Do you agree with this approach? If not, please explain.

Yes ☒ No ☐
Comment: Yes but the distinction is not clear in the defintions. A Plant Stability Study would typically be done as part of the Generatior Interconnection Request and have all units in the area at maximum output. Is the System Stability Study done on the Base Case or is generation maximized within some area(s)?

Q33. The existing TPL-004-0 standard has a requirement to consider the Loss of all generating units at a plant, but it was not clear whether this requirement should apply to stability studies. The SDT did not include this requirement in the stability table, because it is hard to envision a condition when all units would trip simultaneously within the timeframe of a stability simulation. Do you think this condition should be required in stability analysis of extreme events? If not, please explain.

Yes ☐ No ☒
Comment: I agree with the SDTs conclusion.

Q34. There are an increasing number of events with slow voltage recovery after faults on the Transmission System. The dynamic behavior of induction motor loads is a major factor in this phenomenon. The proposed standard therefore requires that the load model for stability studies of peak Load conditions include the dynamic effects of induction motors. Do you agree with this requirement? If not, please explain?

Yes ☐ No ☒
Comment: I agree that this is an issue but I do not have sufficient data to accurately simulate the condition. This is also complicated by dynamic behavior of distribution capacitors which are not modeled.

Q35. What type of manual or automatic adjustments of generators should be allowed for single and multiple Contingencies?

Comment: single - none

F. Generation Runback and Tripping

The SDT has discussed the automatic and manual readjustments of generators that should be permissible for single contingencies and multiple contingencies. The existing TPL-001-0 through TPL-004-0 standards through footnote (a) of Table I could include emergency ratings applicable for short durations as required to permit operating steps necessary to maintain system control. The footnote is silent about allowable generation adjustments in response to the Category B events. However, it does indicate that system adjustments are permitted to prepare for the next Contingency. These system adjustments could include manual or automatic adjustments involving generation.

The SDT has learned that many transmission owners use System Protection Systems (SPS) or Remedial Action Schemes (RAS) to trip generation for single and multiple Contingency outage events to prevent overloads, low voltage, and instability in the Interconnected Transmission network for N-1 and N-2 events. In some cases, the RAS are used to prepare for the next Contingency; but in some cases, the RAS are used to simultaneously avoid exceeding emergency ratings.

Q36. The proposed standard allows generation runback after the disturbance that causes a single Contingency (or due to a single Contingency outage) to move the Interconnected Transmission System from an emergency state (within emergency ratings) to a normal state (within normal ratings), assuming that the disturbance does not result in instability? Do you agree? If not, please explain.

Yes ☐ No ☒

Comment: I do not agree that the system has to be returned to a "normal state" after a single contingency. The system can continue to be operated in the "emergency state" as long as the next contingency does not cause flows above emergency ratings.

Q37. Since emergency ratings are thermal ratings, should this standard allow an automatic generation runback scheme (that is initiated immediately after the disturbance causing the single Contingency) to prevent thermal overloads (assuming that the disturbance does not result in instability)? If yes, what are the conditions that must be met in order to allow such a runback scheme to meet the System performance criteria for single Contingencies? Please explain the reason for your answer.

Yes ☐ No ☐

Comment:

The standard drafting team has considered that RAS or SPS may be allowable under certain situations for single Contingencies, but proposes that their use should be limited.

Q38. Do you agree that RAS or SPS may be allowed for single Contingencies? If not, please explain.

Yes ☐ No ☐
Comment:

Q39. Please describe the limitations that you believe should be placed on the use of RAS or SPS for single Contingency events.

Comment:

Q40. When RAS or SPS are allowed, what conditions should be met when these systems are used in system adjustments to meet performance requirements?

Comment:

G. General Questions

Q41. If you are aware of any regional variances that would be required as a result of these standards, please identify them here.

Yes ☐ No ☒
Comment:

Q42. If you are aware of any conflicts between the proposed standards and any regulatory function, rule order, tariff, rate schedule, legislative requirement or agreement, please identify them here.

Yes ☐ No ☒
Comment:

Q43. Do you have any other questions or concerns with the proposed standard that have not been addressed? If yes, please explain.

Yes ☒ No ☐
Comment:
R1.4 "including protective relays with consideration given to spare equipment strategy" I do not understand the intent of this phrase or what it adds to the requirement.

R2.6.1 "and market structure changes" What is this, does it require a definition?

R2.7.1.1 What is the project initiation date; the date approval is sought, received, materials are ordered, construction begins? Many projects are upgrades or replacements that this will be meaningless. Don't you really only want multiyear projects?

R2.7.2 The initial study process will incorporate testing. This will require the creation of additional cases and additonal testing prior to the Planning Assessment submittal. Most projects should be identified during the Long Range time frame. Inclusion of the project in the next years base cases and subsequent testing should be adequate.

R2.7.3 Define a "Committed Project". MISO has spent years on this.

R2.7.4 Changes in timing of all projects should be documented in the Planning Assessment. Why would you document Committed Projects that are removed but not any delays or accelerations?

R3 Sensitivity studies (if retained) should have less stringent performance requirements than the other cases required by R2.1.

R3.3.2.1 Unless this is limited to above 300 kV, many hours will be spent for naught. The lower voltage systems often have tapped loads that will trip with the line. The time required to restore will vary on the fault location, and time for switching, sometimes remote and sometimes manual. I do not see the need for or the benefit of this requirement. Please explain.

P3 Event is poorly worded, see response to Q25.

P6.1 above 300 kV, below 300 kV or all? The tables need to be reviewed to make sure that the voltage applicability is clearly stated.

P9.6 Why is this a requirement? It should be much less severe than any of the prior requirements.

Extreme Event 9 (3ph fault with loss of all generating units at a station) is in conflict with Q33 which says it was not included). Am I missing something?

Other, it appears that we are not required to study the outage of a transmission line or transformer followed by the outage of a generator. Was this overlooked, or did I miss it? Would system adjustment be allowed?

NERC
NORTH AMERICAN ELECTRIC RELIABILITY CORPORATION

Comment Form for First Draft of TPL-001-1 — Transmission System Planning Performance Requirements

Please use this form to submit comments on the proposed draft of TPL-001-1. Comments must be submitted by **Friday, October 26, 2007**. You may submit the completed form by e-mail to sarcomm@nerc.net with the words "TPL-001 Draft 1" in the subject line. If you have questions please contact Ed Dobrowolski at ed.dobrowolksi@nerc.net or by telephone at 609-947-3673.

Individual Commenter Information **(Complete this page for comments from one organization or individual.)**		
Name:	Larry Rodriguez	
Organization:	Entegra Power Group	
Telephone:	813 301-4952	
E-mail:	lrodriguez@entegrapower.com	
NERC Region (check all Regions in which your company operates)		**Registered Ballot Body Segment (check all industry segments in which your company is registered)**
☐ **ERCOT**	☐	1 — Transmission Owners
☐ **FRCC**	☐	2 — RTOs and ISOs
☐ **MRO**	☐	3 — Load-serving Entities
☐ **NPCC**	☐	4 — Transmission-dependent Utilities
☐ **RFC**	☒	5 — Electric Generators
☒ **SERC**	☒	6 — Electricity Brokers, Aggregators, and Marketers
☐ **SPP**	☐	7 — Large Electricity End Users
☒ **WECC**	☐	8 — Small Electricity End Users
☐ **NA – Not Applicable**	☐	9 — Federal, State, Provincial Regulatory or other Government Entities
	☐	10 — Regional Reliability Organizations and Regional Entities

Group Comments (Complete this page if comments are from a group.)

Group Name:

Lead Contact:

Contact Organization:

Contact Segment:

Contact Telephone:

Contact E-mail:

Additional Member Name	Additional Member Organization	Region*	Segment*

*If more than one Region or Segment applies, please list all that apply. Regional acronyms and segment numbers are shown on prior page.

Background

The purpose of this standard is to establish Transmission System planning performance requirements within the planning horizon to develop a Bulk Electric System that will operate reliably over a broad spectrum of System conditions and following a wide range of probable Contingencies. This standard will replace TPL-001-0, TPL-002-0, TPL-003-0, and TPL-004-0. The standard drafting team has not yet addressed TPL-005-0 and TPL-006-0, but will address these two standards during the next phase of the drafting process.

The major objectives of the standard drafting team are to:

1) Ensure the standard is complete and the requirements are set at an appropriate level to ensure reliability (Not Least Common Denominator)
2) Ensure that the standard is enforceable by having clearly defined requirements with unambiguous language
3) Address the issues raised by FERC Order 693, 890, and other applicable orders
4) Address the issues raised in the original Standards Authorization Request (SAR) and the Supplemental SAR.

The standard drafting team did not attempt to edit the existing standards but rather chose to write one standard that addresses all aspects of transmission planning in the existing TPL-001-0, TPL-002-0, TPL-003-0, and TPL-004-0. The standard drafting team organized the new standard in the following sections:

R1 – Modeling requirements
R2 – Assessment and Corrective Plan requirements
R3 – Steady State Analysis requirements
R4 – Stability Analysis requirements
R5 – Coordination requirements

The standard drafting team determined that the requirements and analysis for Steady State are different from those for stability. As such, the standard drafting team separated the analysis requirements and created two performance requirement tables.

The standard drafting team recognizes that this draft standard is a starting point for industry input into the standard and that there is still a lot of work required to complete the process. The standard drafting team has made many changes to clarify requirements, add requirements, and make some of the performance requirements stricter. The standard drafting team has not addressed Measures, Risk Factors, Violation Severity Factors, or Time Horizons at this time. These will be addressed when the standard drafting team has better defined the requirements of the standard.

For questions where you agree with the standard drafting team, please state that you agree and if available, please provide supporting documentation. If you disagree with the standard drafting team, please explain why you disagree and provide data to support your position, such as outage data or analysis. If you believe that we have made a performance requirement too strict please provide supporting documentation. If applicable, please include the approximate cost in man-hours for additional studies and/or cost in $Millions for additional transmission investment to meet the new requirements or the stricter requirements. If you believe that the standard should be stricter, please provide the rationale along with any supporting data, including existing practices, cost estimates or additional analysis.

To improve the standard, the standard drafting team would appreciate responses to as many of these questions as you can answer.

A. New Definitions

Many of the concerns about the existing TPL standards come from the fact that a number of generally understood concepts are embedded in undefined terms, tables, and footnotes. To clarify some of these concerns, the standard drafting team is proposing new definitions. Please indicate whether you agree with the following proposed definitions and provide proposed changes to the definitions if you disagree:

Definition	**Agree or Disagree**
Q1. **Base Case**: Computer representation of the projected initial or starting Transmission System conditions for a specific point in time. Each base case reflects the forecasted Load at each bus (or node) on the interconnected Transmission System, the transmission facilities which deliver the generation and reactive resources to the connected Load, and the generation dispatch including firm transaction obligations assumed to supply the connected Load. The models also reflect facility ratings in accordance with FAC-008 & FAC-009.	☒Agree. ☐Do not agree.
Q1. **Comment:**	
Q2. **Consequential Load Loss:** Load that is no longer served because it is directly connected to an element(s) that is removed from service due to fault clearing action or mis-operation.	☐Agree. ☒Do not agree.
Q2. **Comment: Further examination is needed to determine how to correctly treat loads served downstream from the faulted element, but not directly connected.**	
Q3. **Extreme Events:** Events which are more severe than Planning Events and have a low probability of occurrence.	☐Agree. ☒Do not agree.
Q3. **Comment: The statement would be clearer if "low" were changed to "lower".**	
Q4. **Long-Term Transmission Planning Horizon:** Transmission planning period that covers years six through ten or beyond.	☒Agree. ☐Do not agree.
Q4. **Comment:**	
Q5. **Near-Term Transmission Planning Horizon:** Transmission planning period that covers years One through five.	☒Agree. ☐Do not agree.
Q5. **Comment:**	
Q6. **Non-Consequential Load Loss:** Load loss other than Consequential Load Loss. For example, Load loss that occurs through manual (operator initiated) or automatic operations such as under-voltage Load shedding, under-frequency Load shedding, or Special Protection Systems.	☒Agree. ☐Do not agree.
Q6. **Comment:**	

Q7. **Planning Assessment:** Documented evaluation of future Bulk Electric System needs by the use of performance studies that cover a range of assumptions regarding system conditions, time frames, future plans including capital reinforcements and operating procedures and other factors, such as asset conditions and age.	☐Agree. ☒Do not agree.
Q7. **Comment: Should also include validation of reactive power supplies.**	
Q8. **Planning Events:** Events which require Transmission system performance requirements to be met.	☒Agree. ☐Do not agree.
Q8. **Comment:**	
Q9. **Plant Stability Study:** Study of an individual plant's Stability for various Contingencies in the vicinity of the plant; concerned with the effect on the System of the generating units' loss of synchronism and the damping of the generating units' power oscillations.	☒Agree. ☐Do not agree.
Q9. **Comment:**	
Q10. **System Stability Study:** Study of the System or portions of the System to ensure that angular Stability is maintained, inter-area power oscillations are damped, and voltages during the dynamic simulation stay within acceptable performance limits.	☒Agree. ☐Do not agree.
Q10. **Comment:**	
Q11. **Year One:** The first year that a Transmission Planner is responsible for studying. This is further defined as the planning window that begins the next calendar year from the time the Transmission Planner submits their annual studies. Analysis conducted for time horizons within the calendar year from the study publication are assumed to be conducted under the auspices of Operations Planning.	☒Agree. ☐Do not agree.
Q11. **Comment:**	

B. Sensitivity Studies

The draft planning standard includes the requirement, as specified in FERC Order 693, that planning decisions be based on a portfolio of analyses. In section 12.a.ii "Sensitivity studies and critical system conditions" FERC provided direction to consider a full range of variables considered to be significant that need to be assessed and documentation provided that explains the rationale for the selection of variables assessed.

In addition to the firm obligation scenario, the portfolio of analyses should be supplemented to include information from sensitivity analysis. The sensitivity analysis should be developed using additional cases that simulate reasonably stressed system conditions. The standard drafting team has included several parameters that can be varied to create the requisite sensitivity case(s). The draft standards specify that the sensitivities reflect one or more of the following conditions and that documentation be provided explaining the rationale for selecting the sensitivity(ies) employed. The parameters that should be varied include:

- Higher or lower Load forecasts from the Base Case with variability of Load/demand and Load power factors due to season, weather, or time of day.
- Modification of expected transfers.

- Unavailability of long lead time facilities.
- Variability and outages of Reactive Resources.
- Generation additions, retirements, or other dispatch scenarios.
- Decreased effectiveness of controllable Loads and Demand Side Management.
- Modification of planned Transmission outages

To help focus industry discussion, please respond to the questions below:

Q12. Should the standard provide more specific direction regarding the number of sensitivity cases that need to be developed?

Yes ☐ No ☐
Comment:

Q13. Should the standard specify the required changes, such as changes in expected transfers, load forecasts, generation patterns, etc., from the study case to be considered a "reasonably stressed" case?

Yes ☐ No ☐
Comment:

Q14. The SDT proposes to require the use of sensitivity studies for Near-Term Transmission System Planning Horizon stability analysis. Do you concur with the use of sensitivity analysis in dynamic studies?

Yes ☒ No ☐
Comment: Planners should use appropriate sensitivity cases.

Q15. The draft TPL standard does not require the use of sensitivity studies for the Long-Term Transmission System Planning Horizon (year six and beyond) studies. Do you concur with this approach or should there be some level of sensitivity analysis required for the long-term period?

Yes ☐ No ☐
Comment:

C. Corrective Action Plans

Requirement R2.7 of the standard states that when analysis shows that the performance requirements in Table 1 and Table 2 are not fully met, a Corrective Action Plan that utilizes all or some of the Transmission System enhancements, generation additions, DSM, new technologies and Operating Procedures shall be included in the Planning Assessment. This Corrective Action Plan should ensure that upon its implementation the identified system deficiencies will be corrected so that the performance requirements in Table 1 and Table 2 will be met. Furthermore, studies included in the Planning Assessment should demonstrate that this is indeed the case.

Q16. Requirement R2.7.1: Such Corrective Action Plans shall "Identify System deficiencies and the associated actions needed to achieve required System performance including Transmission and generation improvements, DSM, new technologies, or Operating Procedures including the duration of Interim Operating Procedures". System deficiencies may be corrected using an integrated plan, i.e., an optimal mix of Transmission, generation, DSM and Operating Procedures. Should DSM be considered in

conjunction with other measures in developing Corrective Action Plans? If yes, please comment on how the impact of DSM should be included.

Yes ☒ No ☐
Comment:

Q17. Requirement R2.7.2: Such Corrective Action Plans shall "Be added to study cases and the cases re-tested to show that the System with planned additions meets the performance requirements in the tables". Should new studies, including the facilities comprising the Corrective Action Plan, be performed to assess System normal performance and Contingency response for conditions that previously resulted in the System deficiencies (without the planned additions) and also demonstrate that the changes would not result in inadvertent negative impacts on the System. If you "agree", please comment on how a study area should be determined.

Yes ☐ No ☐
Comment:

Q18. Requirement R2.7.3: The standard calls for a differentiation between committed and proposed projects. Do you agree that they should be treated separately? If not, please state why not.

Yes ☒ No ☐
Comment:

Q19. Requirement R2.7.4: For such Corrective Action Plans "Committed projects shall not be removed without documentation to show that the revised plan meets the performance requirements". Do you agree or disagree with this requirement? If you disagree, please explain why.

Yes ☒ No ☐
Comment:

D. Performance Requirements

The proposed revised planning standard (TPL-001-1) incorporates a number of changes in requirements as compared to the current planning standards (TPL-001-0 through TPL-004-0), which it is expected to replace. Among other things these changes are intended to clarify the standard, address issues described by FERC, and, in particular, to "raise the bar." Strengthening the planning standards in selected areas is necessary to maintain a reliable Bulk Electric System that is up to the challenges of the 21st Century. In proposing the requirements in this draft, the standard drafting team attempted to balance the value of increased reliability against any potential increase in work and costs to meet the new proposed standard.

The standard drafting team is seeking input from the industry to determine whether a proper balance has been achieved. The areas where material changes are proposed in this draft are enumerated below, and questions are posed by the standard drafting team to obtain industry comment. In formulating your responses, please keep in mind that material changes in the final standard will be accompanied by a transition plan to provide for an orderly implementation of the final standard.

The performance requirements relative to Non-Consequential Loss of Load for the following events enumerated in the two tables can be considered more stringent than the existing TPL

standards. Furthermore, the proposed standard is based on an assumption that performance requirements for EHV facilities should be more stringent than for lower voltage facilities.

Do you agree that Non-Consequential Loss of Load should not be permitted for the following events? If you disagree, please provide a reason for your disagreement.

Event	Agree or Disagree	Comment
Q20. P2-1: Loss of bus section (SLG for stability) above 300 kV	☒Agree. ☐Do not agree.	
Q21. P5-1: For facilities above 300 kV, loss of a Transmission circuit followed by System adjustment[1] followed by loss of another Transmission circuit	☒Agree. ☐Do not agree.	
Q22. P5-2: For facilities above 300 kV, loss of a Transmission circuit followed by System adjustment followed by loss of a transformer with low side voltage rating above 300 kV	☒Agree. ☐Do not agree.	
Q23. P5-3: For facilities above 300 kV, loss of a transformer with low side voltage rating above 300 kV followed by System adjustment followed by loss of another transformer	☒Agree. ☐Do not agree.	

[1]System adjustment can be manual or automatic.

The proposed standard is based on an assumption that performance requirements for non-bus tie EHV breakers should be distinguished from other breakers. Do you agree that Non-Consequential Loss of Load should not be permitted for this event?

Q24. Loss of non-bus tie breaker (above 300 kV) due to internal fault

Yes ☒ No ☐
Comment:

The proposed standard is based on an assumption that performance requirements for non-bus tie EHV breakers should be distinguished from other breakers and that performance requirements for EHV facilities should be more stringent than for lower voltage facilities. Do you agree that Non-Consequential Loss of Load should not be permitted for this event?

Q25. P3-1: Loss of (SLG for stability) either a generator, a Transmission circuit, a transformer, or a bus and a stuck non-bus tie breaker (above 300 kV)

Yes ☒ No ☐
Comment:

The proposed standard is based on an assumption that the following events are relatively high probability events and, therefore, Non-Consequential Loss of Load should not be permitted. Do you agree? If you disagree, please provide a reason for your disagreement.

Event	Agree or Disagree	Comment
Q26. P4-1: Loss of a Generator followed by System adjustment[1] followed by loss of another Generator	☒Agree. ☐Do not agree.	
Q27. P4-2: Loss of a generator followed by a System adjustment followed by the loss of a monopolar DC line	☒Agree. ☐Do not agree.	
Q28. P4-3: Loss of a generator followed by System adjustment followed by loss of a Transmission circuit	☒Agree. ☐Do not agree.	
Q29. P4-4: Loss of a generator followed by System adjustment followed by loss of a transformer	☒Agree. ☐Do not agree.	

The performance requirement for the following event may be considered less stringent than the existing TPL Standards — P2-3: Loss of a single pole of a DC line. Interruption of firm transactions (without Loss of firm Load) if the transaction is dependent on the faulted DC line is now allowed for this initiating event/Contingency.

Q30. Do you agree that interruption of any firm transfers that are dependent on the outaged DC line that is taken out of service should be permitted?

Yes ☐ No ☐
Comment:

E. Stability

Q31. The proposed standard is based on an assumption that steady state analysis and stability analysis are different from each other and that therefore, two tables of Contingencies and performance requirements were needed. It is also based on an assumption that stability study requirements should be clearly separated from the

[1] System adjustment can be manual or automatic

steady state study requirements. Do you agree with the action taken in separating stability analysis from steady state analysis? If not, please explain.

Yes ☐ No ☐
Comment:

Q32. The SDT has added requirements for plant stability studies and has drawn a distinction in these studies from System stability studies. Do you agree with this approach? If not, please explain.

Yes ☐ No ☐
Comment:

Q33. The existing TPL-004-0 standard has a requirement to consider the Loss of all generating units at a plant, but it was not clear whether this requirement should apply to stability studies. The SDT did not include this requirement in the stability table, because it is hard to envision a condition when all units would trip simultaneously within the timeframe of a stability simulation. Do you think this condition should be required in stability analysis of extreme events? If not, please explain.

Yes ☐ No ☐
Comment:

Q34. There are an increasing number of events with slow voltage recovery after faults on the Transmission System. The dynamic behavior of induction motor loads is a major factor in this phenomenon. The proposed standard therefore requires that the load model for stability studies of peak Load conditions include the dynamic effects of induction motors. Do you agree with this requirement? If not, please explain?

Yes ☐ No ☐
Comment:

Q35. What type of manual or automatic adjustments of generators should be allowed for single and multiple Contingencies?

Comment:

F. Generation Runback and Tripping

The SDT has discussed the automatic and manual readjustments of generators that should be permissible for single contingencies and multiple contingencies. The existing TPL-001-0 through TPL-004-0 standards through footnote (a) of Table I could include emergency ratings applicable for short durations as required to permit operating steps necessary to maintain system control. The footnote is silent about allowable generation adjustments in response to the Category B events. However, it does indicate that system adjustments are permitted to prepare for the next Contingency. These system adjustments could include manual or automatic adjustments involving generation.

The SDT has learned that many transmission owners use System Protection Systems (SPS) or Remedial Action Schemes (RAS) to trip generation for single and multiple Contingency outage events to prevent overloads, low voltage, and instability in the Interconnected

Transmission network for N-1 and N-2 events. In some cases, the RAS are used to prepare for the next Contingency; but in some cases, the RAS are used to simultaneously avoid exceeding emergency ratings.

Q36. The proposed standard allows generation runback after the disturbance that causes a single Contingency (or due to a single Contingency outage) to move the Interconnected Transmission System from an emergency state (within emergency ratings) to a normal state (within normal ratings), assuming that the disturbance does not result in instability? Do you agree? If not, please explain.

Yes ☒ No ☐
Comment: As long as the system would be within normal ratings after runback.

Q37. Since emergency ratings are thermal ratings, should this standard allow an automatic generation runback scheme (that is initiated immediately after the disturbance causing the single Contingency) to prevent thermal overloads (assuming that the disturbance does not result in instability)? If yes, what are the conditions that must be met in order to allow such a runback scheme to meet the System performance criteria for single Contingencies? Please explain the reason for your answer.

Yes ☐ No ☐
Comment:

The standard drafting team has considered that RAS or SPS may be allowable under certain situations for single Contingencies, but proposes that their use should be limited.

Q38. Do you agree that RAS or SPS may be allowed for single Contingencies? If not, please explain.

Yes ☐ No ☐
Comment:

Q39. Please describe the limitations that you believe should be placed on the use of RAS or SPS for single Contingency events.

Comment:

Q40. When RAS or SPS are allowed, what conditions should be met when these systems are used in system adjustments to meet performance requirements?

Comment:

G. General Questions

Q41. If you are aware of any regional variances that would be required as a result of these standards, please identify them here.

Yes ☐ No ☐
Comment:

Q42. If you are aware of any conflicts between the proposed standards and any regulatory function, rule order, tariff, rate schedule, legislative requirement or agreement, please identify them here.

Yes ☐ No ☐
Comment:

Q43. Do you have any other questions or concerns with the proposed standard that have not been addressed? If yes, please explain.

Yes ☐ No ☐
Comment:

NERC
NORTH AMERICAN ELECTRIC RELIABILITY CORPORATION

Comment Form for First Draft of TPL-001-1 — Transmission System Planning Performance Requirements

Please use this form to submit comments on the proposed draft of TPL-001-1. Comments must be submitted by **Friday, October 26, 2007**. You may submit the completed form by e-mail to sarcomm@nerc.net with the words "TPL-001 Draft 1" in the subject line. If you have questions please contact Ed Dobrowolski at ed.dobrowolksi@nerc.net or by telephone at 609-947-3673.

Individual Commenter Information **(Complete this page for comments from one organization or individual.)**		
Name:	Charles W. Long or Doug Powell	
Organization:	Entergy Services, Inc.	
Telephone:	601-969-2324 or 504-576-3584	
E-mail:	clong1@entergy.com or rpowel1@entergy.com	
NERC Region (check all Regions in which your company operates)		**Registered Ballot Body Segment (check all industry segments in which your company is registered)**
☐ **ERCOT**	☒	1 — Transmission Owners
☐ **FRCC**	☐	2 — RTOs and ISOs
☐ **MRO**	☒	3 — Load-serving Entities
☐ **NPCC**	☐	4 — Transmission-dependent Utilities
☐ **RFC**	☒	5 — Electric Generators
☒ **SERC**	☐	6 — Electricity Brokers, Aggregators, and Marketers
☐ **SPP**	☐	7 — Large Electricity End Users
☐ **WECC**	☐	8 — Small Electricity End Users
☐ **NA – Not Applicable**	☐	9 — Federal, State, Provincial Regulatory or other Government Entities
	☐	10 — Regional Reliability Organizations and Regional Entities

Group Comments (Complete this page if comments are from a group.)

Group Name:

Lead Contact:

Contact Organization:

Contact Segment:

Contact Telephone:

Contact E-mail:

Additional Member Name	Additional Member Organization	Region*	Segment*

*If more than one Region or Segment applies, please list all that apply. Regional acronyms and segment numbers are shown on prior page.

Background

The purpose of this standard is to establish Transmission System planning performance requirements within the planning horizon to develop a Bulk Electric System that will operate reliably over a broad spectrum of System conditions and following a wide range of probable Contingencies. This standard will replace TPL-001-0, TPL-002-0, TPL-003-0, and TPL-004-0. The standard drafting team has not yet addressed TPL-005-0 and TPL-006-0, but will address these two standards during the next phase of the drafting process.

The major objectives of the standard drafting team are to:

1) Ensure the standard is complete and the requirements are set at an appropriate level to ensure reliability (Not Least Common Denominator)
2) Ensure that the standard is enforceable by having clearly defined requirements with unambiguous language
3) Address the issues raised by FERC Order 693, 890, and other applicable orders
4) Address the issues raised in the original Standards Authorization Request (SAR) and the Supplemental SAR.

The standard drafting team did not attempt to edit the existing standards but rather chose to write one standard that addresses all aspects of transmission planning in the existing TPL-001-0, TPL-002-0, TPL-003-0, and TPL-004-0. The standard drafting team organized the new standard in the following sections:

R1 – Modeling requirements
R2 – Assessment and Corrective Plan requirements
R3 – Steady State Analysis requirements
R4 – Stability Analysis requirements
R5 – Coordination requirements

The standard drafting team determined that the requirements and analysis for Steady State are different from those for stability. As such, the standard drafting team separated the analysis requirements and created two performance requirement tables.

The standard drafting team recognizes that this draft standard is a starting point for industry input into the standard and that there is still a lot of work required to complete the process. The standard drafting team has made many changes to clarify requirements, add requirements, and make some of the performance requirements stricter. The standard drafting team has not addressed Measures, Risk Factors, Violation Severity Factors, or Time Horizons at this time. These will be addressed when the standard drafting team has better defined the requirements of the standard.

For questions where you agree with the standard drafting team, please state that you agree and if available, please provide supporting documentation. If you disagree with the standard drafting team, please explain why you disagree and provide data to support your position, such as outage data or analysis. If you believe that we have made a performance requirement too strict please provide supporting documentation. If applicable, please include the approximate cost in man-hours for additional studies and/or cost in $Millions for additional transmission investment to meet the new requirements or the stricter requirements. If you believe that the standard should be stricter, please provide the rationale along with any supporting data, including existing practices, cost estimates or additional analysis.

To improve the standard, the standard drafting team would appreciate responses to as many of these questions as you can answer.

A. New Definitions

Many of the concerns about the existing TPL standards come from the fact that a number of generally understood concepts are embedded in undefined terms, tables, and footnotes. To clarify some of these concerns, the standard drafting team is proposing new definitions. Please indicate whether you agree with the following proposed definitions and provide proposed changes to the definitions if you disagree:

Definition	**Agree or Disagree**
Q1. **Base Case**: Computer representation of the projected initial or starting Transmission System conditions for a specific point in time. Each base case reflects the forecasted Load at each bus (or node) on the interconnected Transmission System, the transmission facilities which deliver the generation and reactive resources to the connected Load, and the generation dispatch including firm transaction obligations assumed to supply the connected Load. The models also reflect facility ratings in accordance with FAC-008 & FAC-009.	☒Agree. ☐Do not agree.
Q1. **Comment:**	
Q2. **Consequential Load Loss:** Load that is no longer served because it is directly connected to an element(s) that is removed from service due to fault clearing action or mis-operation.	☐Agree. ☒Do not agree.
Q2. **Comment: Delete "mis-operation". For purposes of planning, all consequential load loss should reflect intended fault clearing actions and not unintended fault clearing actions (i.e., mis-operations). Include load loss due to UVLS & SPS in consequential load loss category.** **Consider using the terms in the existing standard; "Planned Load Loss" and "Unplanned Load Loss" in lieu of Consequential and Non-consequential as they may be easier to define with each Transmission Owner/Planning Authority responsible for defining the terms considering the impact on the Bulk Electric System.** **If the terms remain as proposed, the definition needs further clarification for consequential and non-consequential loads. For example, loads entirely dependent on the faulted element but not directly connected should also be defined to be consequential loads.**	
Q3. **Extreme Events:** Events which are more severe than Planning Events and have a low probability of occurrence.	☐Agree. ☒Do not agree.
Q3. **Comment: Revise to, "Events which are beyond the normal scope of Planning Events and have a lower probability of occurrence."**	
Q4. **Long-Term Transmission Planning Horizon:** Transmission planning period that covers years six through ten or beyond.	☒Agree. ☐Do not agree.

Q4. **Comment:**	
Q5. **Near-Term Transmission Planning Horizon:** Transmission planning period that covers years One through five.	☒Agree. ☐Do not agree.
Q5. **Comment:**	
Q6. **Non-Consequential Load Loss:** Load loss other than Consequential Load Loss. For example, Load loss that occurs through manual (operator initiated) or automatic operations such as under-voltage Load shedding, under-frequency Load shedding, or Special Protection Systems.	☐Agree. ☒Do not agree.
Q6. **Comment: We recommend to treat load losses due to UVLS & SPS as examples of consequential load loss (refer to question 2).**	
Q7. **Planning Assessment:** Documented evaluation of future Bulk Electric System needs by the use of performance studies that cover a range of assumptions regarding system conditions, time frames, future plans including capital reinforcements and operating procedures and other factors, such as asset conditions and age.	☐Agree. ☒Do not agree.
Q7. **Comment: Remove "and other factors, such as asset conditions and age" from definition. The terms "age" and "condition" are subjective and the age of equipment, if it is well maintained, has little impact on reliability.**	
Q8. **Planning Events:** Events which require Transmission system performance requirements to be met.	☒Agree. ☐Do not agree.
Q8. **Comment:**	
Q9. **Plant Stability Study:** Study of an individual plant's Stability for various Contingencies in the vicinity of the plant; concerned with the effect on the System of the generating units' loss of synchronism and the damping of the generating units' power oscillations.	☐Agree. ☒Do not agree.
Q9. **Comment: Delete the term "the effect on the System of." The reference to "System" causes confusion with the term "System Stability Study."** **Section R4.6 should identify the Generator Owner as the applicable party for doing the Plant Stability Studies.**	
Q10. **System Stability Study:** Study of the System or portions of the System to ensure that angular Stability is maintained, inter-area power oscillations are damped, and voltages during the dynamic simulation stay within acceptable performance limits.	☒Agree. ☐Do not agree.
Q10. **Comment:**	
Q11. **Year One:** The first year that a Transmission Planner is responsible for studying. This is further defined as the planning window that begins the next calendar year from the time the Transmission Planner submits their annual studies. Analysis conducted for time horizons within the calendar year from the study publication are assumed to be conducted under the auspices of Operations Planning.	☐Agree. ☒Do not agree.
Q11. **Comment: The last sentence in the above definition was not included in the definition listed in the draft standard. Consider deleting the last**	

sentence or providing additional examples.

B. Sensitivity Studies

The draft planning standard includes the requirement, as specified in FERC Order 693, that planning decisions be based on a portfolio of analyses. In section 12.a.ii "Sensitivity studies and critical system conditions" FERC provided direction to consider a full range of variables considered to be significant that need to be assessed and documentation provided that explains the rationale for the selection of variables assessed.

In addition to the firm obligation scenario, the portfolio of analyses should be supplemented to include information from sensitivity analysis. The sensitivity analysis should be developed using additional cases that simulate reasonably stressed system conditions. The standard drafting team has included several parameters that can be varied to create the requisite sensitivity case(s). The draft standards specify that the sensitivities reflect one or more of the following conditions and that documentation be provided explaining the rationale for selecting the sensitivity(ies) employed. The parameters that should be varied include:

- Higher or lower Load forecasts from the Base Case with variability of Load/demand and Load power factors due to season, weather, or time of day.
- Modification of expected transfers.
- Unavailability of long lead time facilities.
- Variability and outages of Reactive Resources.
- Generation additions, retirements, or other dispatch scenarios.
- Decreased effectiveness of controllable Loads and Demand Side Management.
- Modification of planned Transmission outages

To help focus industry discussion, please respond to the questions below:

Q12. Should the standard provide more specific direction regarding the number of sensitivity cases that need to be developed?

Yes ☐ No ☒

Comment: The appropriate studies that should be done by each applicable entity is highly dependent on the transmission system being studied. Being too prescriptive may cause irrelevant studies to be completed while diverting resources and attention from sensitivity studes that the entity most familiar with the transmission system believes could result in more meaningful analysis. The Committee should not lose sight of the importance of good engineering judgment exercised by those most familiar with the characteristics of the particular system. While appropriate sensitivity analyses are beneficial in evaluating system performance, it should be clearly stated that projects and/or mitigation plans are left to the discretion of the Transmission Planners.

Q13. Should the standard specify the required changes, such as changes in expected transfers, load forecasts, generation patterns, etc., from the study case to be considered a "reasonably stressed" case?

Yes ☐ No ☒

Comment: Should be left to Transmission Planners discretion and good engineering judgement. (see response to Q12)

Q14. The SDT proposes to require the use of sensitivity studies for Near-Term Transmission System Planning Horizon stability analysis. Do you concur with the use of sensitivity analysis in dynamic studies?

Yes ☐ No ☒

Comment: The new requirements for stability studies, including but not limited to the sensitivity studies, will result in a tremendous increase in workload. Because stability studies are so much more time intensive that steady state analysis and because they require personnel with a highly specialized skill set, the number of stability studies required should be increaed only as determined necesssary to evaluate worst-case contingencies. It would seem that the sensitivity analyses as well as many of the multiple contingency analyses could be done for steady state and only worst cases analyzed again by dynamic studies.

Q15. The draft TPL standard does not require the use of sensitivity studies for the Long-Term Transmission System Planning Horizon (year six and beyond) studies. Do you concur with this approach or should there be some level of sensitivity analysis required for the long-term period?

Yes ☒ No ☐

Comment:

C. Corrective Action Plans

Requirement R2.7 of the standard states that when analysis shows that the performance requirements in Table 1 and Table 2 are not fully met, a Corrective Action Plan that utilizes all or some of the Transmission System enhancements, generation additions, DSM, new technologies and Operating Procedures shall be included in the Planning Assessment. This Corrective Action Plan should ensure that upon its implementation the identified system deficiencies will be corrected so that the performance requirements in Table 1 and Table 2 will be met. Furthermore, studies included in the Planning Assessment should demonstrate that this is indeed the case.

Q16. Requirement R2.7.1: Such Corrective Action Plans shall "Identify System deficiencies and the associated actions needed to achieve required System performance including Transmission and generation improvements, DSM, new technologies, or Operating Procedures including the duration of Interim Operating Procedures". System deficiencies may be corrected using an integrated plan, i.e., an optimal mix of Transmission, generation, DSM and Operating Procedures. Should DSM be considered in conjunction with other measures in developing Corrective Action Plans? If yes, please comment on how the impact of DSM should be included.

Yes ☒ No ☐

Comment: DSM should be considered, but it should be done prudently and in accordance with the contracts that govern the specific DSM program and only in cases where the Transmission Owner has direct load control. Transmission Owners should be allowed to include UVLS and SPS systems as a part of their Corrective Action Plans.

Q17. Requirement R2.7.2: Such Corrective Action Plans shall "Be added to study cases and the cases re-tested to show that the System with planned additions meets the performance requirements in the tables". Should new studies, including the facilities comprising the Corrective Action Plan, be performed to assess System normal performance and Contingency response for conditions that previously resulted in the System deficiencies (without the planned additions) and also demonstrate that the changes would not result in inadvertent negative impacts on the System. If you "agree", please comment on how a study area should be determined.

Yes ☒ No ☐
Comment: Study area should be determined on a case by case basis by the Transmission Planner. SEAMS agreements and other regional planning coordination activities should provide for adequate cooperation.

Q18. Requirement R2.7.3: The standard calls for a differentiation between committed and proposed projects. Do you agree that they should be treated separately? If not, please state why not.

Yes ☒ No ☐
Comment: Committed projects should be tested for effectiveness, however, the effectiveness of Proposed projects, as they are subject to change, should not require the same level of documentation as committed projects.

Q19. Requirement R2.7.4: For such Corrective Action Plans "Committed projects shall not be removed without documentation to show that the revised plan meets the performance requirements". Do you agree or disagree with this requirement? If you disagree, please explain why.

Yes ☒ No ☐
Comment:

D. Performance Requirements

The proposed revised planning standard (TPL-001-1) incorporates a number of changes in requirements as compared to the current planning standards (TPL-001-0 through TPL-004-0), which it is expected to replace. Among other things these changes are intended to clarify the standard, address issues described by FERC, and, in particular, to "raise the bar." Strengthening the planning standards in selected areas is necessary to maintain a reliable Bulk Electric System that is up to the challenges of the 21st Century. In proposing the requirements in this draft, the standard drafting team attempted to balance the value of increased reliability against any potential increase in work and costs to meet the new proposed standard.

The standard drafting team is seeking input from the industry to determine whether a proper balance has been achieved. The areas where material changes are proposed in this draft are enumerated below, and questions are posed by the standard drafting team to obtain industry comment. In formulating your responses, please keep in mind that material changes in the final standard will be accompanied by a transition plan to provide for an orderly implementation of the final standard.

The performance requirements relative to Non-Consequential Loss of Load for the following events enumerated in the two tables can be considered more stringent than the existing TPL standards. Furthermore, the proposed standard is based on an assumption that performance requirements for EHV facilities should be more stringent than for lower voltage facilities.

Do you agree that Non-Consequential Loss of Load should not be permitted for the following events? If you disagree, please provide a reason for your disagreement.

Event	Agree or Disagree	Comment
Q20. P2-1: Loss of bus	☒Agree.	Table 1 does not specify "SLG"

section (SLG for stability) above 300 kV	☐Do not agree.	
Q21. P5-1: For facilities above 300 kV, loss of a Transmission circuit followed by System adjustment[1] followed by loss of another Transmission circuit	☐Agree. ☒Do not agree.	N-1-1 requires an increase in investment that will place an undue cost burden on all customers for low probability events. See comments to Q43.
Q22. P5-2: For facilities above 300 kV, loss of a Transmission circuit followed by System adjustment followed by loss of a transformer with low side voltage rating above 300 kV	☐Agree. ☒Do not agree.	N-1-1 requires an increase in investment that will place an undue cost burden on all customers for low probability events. See comments to Q43.
Q23. P5-3: For facilities above 300 kV, loss of a transformer with low side voltage rating above 300 kV followed by System adjustment followed by loss of another transformer	☐Agree. ☒Do not agree.	N-1-1 requires an increase in investment that will place an undue cost burden on all customers for low probability events. See comments to Q43.

[1]System adjustment can be manual or automatic.

The proposed standard is based on an assumption that performance requirements for non-bus tie EHV breakers should be distinguished from other breakers. Do you agree that Non-Consequential Loss of Load should not be permitted for this event?

Q24. Loss of non-bus tie breaker (above 300 kV) due to internal fault

Yes ☐ No ☒
Comment: N-1-1 requires an increase in investment that will place an undue cost burden on all customers for low probability events.
See comments to Q43.

The proposed standard is based on an assumption that performance requirements for non-bus tie EHV breakers should be distinguished from other breakers and that performance requirements for EHV facilities should be more stringent than for lower voltage facilities. Do you agree that Non-Consequential Loss of Load should not be permitted for this event?

Q25. P3-1: Loss of (SLG for stability) either a generator, a Transmission circuit, a transformer, or a bus and a stuck non-bus tie breaker (above 300 kV)

Yes ☐ No ☒
Comment: N-1-1 requires an increase in investment that will place an undue cost burden on all customers for low probability events.
See comments to Q43..

The proposed standard is based on an assumption that the following events are relatively high probability events and, therefore, Non-Consequential Loss of Load should not be permitted. Do you agree? If you disagree, please provide a reason for your disagreement.

Event	Agree or Disagree	Comment
Q26. P4-1: Loss of a Generator followed by System adjustment[1] followed by loss of another Generator	☐Agree. ☒Do not agree.	This would require an increase in investment that will place an undue cost burden on all customers for low probability events. It does not appear that there has been any meaningful balancing of the potential benefits against the significant increase in cost that will be required. See comments to Q43.
Q27. P4-2: Loss of a generator followed by a System adjustment followed by the loss of a monopolar DC line	☐Agree. ☒Do not agree.	This would require an increase in investment that will place an undue cost burden on all customers for low probability events. It does not appear that there has been any meaningful balancing of the potential benefits agains the significant increase in cost that will be required. See comments to Q43.
Q28. P4-3: Loss of a generator followed by System adjustment followed by loss of a Transmission circuit	☐Agree. ☒Do not agree.	This would require an increase in investment that will place an undue cost burden on all customers for low probability events. It does not appear that there has been any meaningful balancing of the potential benefits against the significant increase in cost that will be required. See comments to Q43.
Q29. P4-4: Loss of a generator followed by System adjustment followed by loss of a transformer with low side voltage rating above 300 kV	☐Agree. ☒Do not agree.	This would require an increase in investment that will place an undue cost burden on all customers for low probability events. It does not appear that there has been any meaningful blancing of the potential benefits against the significant increase in cost that will be required See comments to Q43.

The performance requirement for the following event may be considered less stringent than the existing TPL Standards — P2-3: Loss of a single pole of a DC line. Interruption of firm transactions (without Loss of firm Load) if the transaction is dependent on the faulted DC line is now allowed for this initiating event/Contingency.

[1] System adjustment can be manual or automatic

Q30. Do you agree that interruption of any firm transfers that are dependent on the outaged DC line that is taken out of service should be permitted?

Yes ☒ No ☒
Comment: Why are only DC lines exempt for this requirement? Consider exemptions for AC transmission elements as well.

E. Stability

Q31. The proposed standard is based on an assumption that steady state analysis and stability analysis are different from each other and that therefore, two tables of Contingencies and performance requirements were needed. It is also based on an assumption that stability study requirements should be clearly separated from the steady state study requirements. Do you agree with the action taken in separating stability analysis from steady state analysis? If not, please explain.

Yes ☒ No ☐
Comment: This approach clarifies the types of stability studies/simulations to be performed. The performance criteria/guidelines are more explicit under the proposed Standard.

Q32. The SDT has added requirements for plant stability studies and has drawn a distinction in these studies from System stability studies. Do you agree with this approach? If not, please explain.

Yes ☒ No ☐
Comment: See response to Q9

Q33. The existing TPL-004-0 standard has a requirement to consider the Loss of all generating units at a plant, but it was not clear whether this requirement should apply to stability studies. The SDT did not include this requirement in the stability table, because it is hard to envision a condition when all units would trip simultaneously within the timeframe of a stability simulation. Do you think this condition should be required in stability analysis of extreme events? If not, please explain.

Yes ☐ No ☒
Comment: This question conflicts with Table 2 item 9. However, we feel it is not necessary to simulate loss of all units at a station. The Transmission Planner or Planning Authority should have the discretion to consider the appropriate number of units to be tripped based on station design, relay design, etc.

Since there is no specific question related to R3.4 that requires an evaluation be conducted of implementing a change designed to reduce or mitigate the likelihood of such consequences. More specific direction should be provided in this regard.

Q34. There are an increasing number of events with slow voltage recovery after faults on the Transmission System. The dynamic behavior of induction motor loads is a major factor in this phenomenon. The proposed standard therefore requires that the load model for stability studies of peak Load conditions include the dynamic effects of induction motors. Do you agree with this requirement? If not, please explain?

Yes ☐ No ☒
Comment: In general this is a good practice. Dynamic studies of seasonal load conditions should include the effects of induction motors, and particularly in areas where

traditional load models have indicated a problem. Unfortunately, there is a lack of data to support the amount and characteristics of the detailed induction load models in many areas. In addition to the consideration of the dynamic effects of induction motor loads, the effects of static capacitor banks installed at distribution voltage levels would need to be considered as well. Prior to making this a requirement in the reliability standards, the industry needs guidance as to how this data should be developed and maintained for models in future years. This should be a business practice and thus removed from the standard. While we agree that each entity should appropriately model their loads, it would seem appropriate for the MMWG to address the issues of induction motor load modeling.

Note that meeting such a requirement would necessitate a significant increase in the dynamic data needed to represent the system. Maintenance of such load model data would require significant resources. Load characteristics valid for a near term model might not be valid for future years.

Q35. What type of manual or automatic adjustments of generators should be allowed for single and multiple Contingencies?

Comment: This question is not clear and more explanation should be provided, such as, whether the adjustments are pre or post contingency, whether the contingency involves faults etc. Does this question pertain to plant or system stability?

F. Generation Runback and Tripping

The SDT has discussed the automatic and manual readjustments of generators that should be permissible for single contingencies and multiple contingencies. The existing TPL-001-0 through TPL-004-0 standards through footnote (a) of Table I could include emergency ratings applicable for short durations as required to permit operating steps necessary to maintain system control. The footnote is silent about allowable generation adjustments in response to the Category B events. However, it does indicate that system adjustments are permitted to prepare for the next Contingency. These system adjustments could include manual or automatic adjustments involving generation.

The SDT has learned that many transmission owners use System Protection Systems (SPS) or Remedial Action Schemes (RAS) to trip generation for single and multiple Contingency outage events to prevent overloads, low voltage, and instability in the Interconnected Transmission network for N-1 and N-2 events. In some cases, the RAS are used to prepare for the next Contingency; but in some cases, the RAS are used to simultaneously avoid exceeding emergency ratings.

Q36. The proposed standard allows generation runback after the disturbance that causes a single Contingency (or due to a single Contingency outage) to move the Interconnected Transmission System from an emergency state (within emergency ratings) to a normal state (within normal ratings), assuming that the disturbance does not result in instability? Do you agree? If not, please explain.

Yes ☒ No ☐
Comment:

Q37. Since emergency ratings are thermal ratings, should this standard allow an automatic generation runback scheme (that is initiated immediately after the disturbance causing the single Contingency) to prevent thermal overloads (assuming that the disturbance does not result in instability)? If yes, what are the conditions that must be met in order to allow such a runback scheme to meet the System performance criteria for single Contingencies? Please explain the reason for your answer.

Yes ☒ No ☒
Comment: The question is not clear. Generation runback schemes are acceptable as long as emergency ratings are not violated. Runbacks should not be used to restore an element to within emergency ratings.

The standard drafting team has considered that RAS or SPS may be allowable under certain situations for single Contingencies, but proposes that their use should be limited.

Q38. Do you agree that RAS or SPS may be allowed for single Contingencies? If not, please explain.

Yes ☒ No ☐
Comment: RAS or SPS may be allowed for single contingencies when they aid in meeting System Performance requirements. RAS and SPS should not be used to restore an element to within emergency ratings.

Q39. Please describe the limitations that you believe should be placed on the use of RAS or SPS for single Contingency events.

Comment: RAS or SPS may be allowed for single contingencies when they aid in meeting System Performance requirements. RAS and SPS should not be used to restore an element to within emergency ratings.

Q40. When RAS or SPS are allowed, what conditions should be met when these systems are used in system adjustments to meet performance requirements?

Comment: Following a contingency, power flows on lines should be within their emergency ratings, voltages should be at adequate levels and system should be stable.

G. General Questions

Q41. If you are aware of any regional variances that would be required as a result of these standards, please identify them here.

Yes ☐ No ☒
Comment:

Q42. If you are aware of any conflicts between the proposed standards and any regulatory function, rule order, tariff, rate schedule, legislative requirement or agreement, please identify them here.

Yes ☐ No ☐
Comment:

Q43. Do you have any other questions or concerns with the proposed standard that have not been addressed? If yes, please explain.

Yes ☒ No ☐
Comment:

Significant Increase in Study Activity Workload on Transmission Planners

The increase in both steady state and dynamic studies required to ensure compliance with the proposed standards will result in increased costs and staff additions. The more specific format and additional requirements of the "Corrective Action Plan" require the TP to provide a significant amount of documentation for each deficiency identified by the studies. Also, R3.2 requires that the studies simulate the protection scheme for all events. The current software tools cannot automate these studies for bus faults and breaker failure events, requiring each scenario to be studied manually. Additionally, experienced staff capable of performing analyses as described in the proposed standard have become increasingly difficult to find and retain and the talent pool of people with these skills has recently become depleted to alarming levels.

Implementation Plan

Given the intent of the proposed standard to encourage large scale investment in the EHV system, full implementation will take years, perhaps decades. Acquirement of right-of-way for new EHV lines has become increasingly difficult in recent years and increasingly expensive due to the environmental and social issues associated with new Transmission. Legal, regulatory, and other difficult issues often take several years to navigate, even for 115kV lines. The Implementation Plan timeframe, if set too short, would be unduly burdensome on Transmission Owners, extraordinarily expensive, and possibly unachievable. The proposed implementation plan should include provisions for those cases where viable solutions simply can not be implemented in time due to circumstances beyond the control of Transmission owners. We recommend a minimum of 15 years for the transition.

Design and Construction Constraints

Even if right-of-way and other legal and regulatory hurdles are cleared, and the capital funding for such a tremendous level of investment was not an issue, the other resources required to actually construct the projects are equally difficult and costly to secure. Raw material prices on commodities like copper and steel have skyrocketed in recent years. Additionally, the skilled labor and Engineering resources are constrained with labor rates almost keeping up with other resource costs. Overall project costs have more than doubled over the last 7-10 years. Recent press releases concerning new generation being planned and then scrapped due to the rapid escalation of project costs are public evidence of this. The inflationary mark-up is impossible to estimate but much less will be built with the same capital investment than is currently envisioned due to the competition for both human and material resources.

Cost-Benefit Analysis

It will be extremely expensive, requiring unprecedented levels of capital investment in Transmission facilities, to become compliant with a proposed standard without any evidence that such increased requirements are justified. Before the standard comes to official vote, it would be prudent for a cost-benefit analysis to be performed to

determine if the reliability improvements justify the huge expenditures certain under the proposed standard. A clear understanding of the reliability benefits and economic costs to customers is critical prior to final action on the proposed standard. While tightening standards will result in a more secure system, overbuilding the system at a significant cost to withstand more severe but less likely contingencies may not be in the public interest. Additionally, it is unclear whether the propose standard is in conflict with section 215 of the Energy Policy Act of 2005.

System Adjustment Clarification

The term "System Adjustment" as outlined in the tables should be better defined. The use of generation for redispatch may have nuances which preclude or otherwise limit their use for studies. Perhaps some clearer guidelines on what is allowed such as committing units, de-committing units, firm and non-firm use, etc. would facilitate transparency and coordination between Transmission Planners.

Transmission Service Evaluation

Another concern is that the proposed standard appears to be inconsistent with the current requirements for evaluating firm transmission service, generally based on an N-1 standard. To the extent this standard is adopted as proposed, the new standard would also need to be incorporated into the standards against which new transmission service is granted.

NERC
NORTH AMERICAN ELECTRIC RELIABILITY CORPORATION

Comment Form for First Draft of TPL-001-1 — Transmission System Planning Performance Requirements

Please use this form to submit comments on the proposed draft of TPL-001-1. Comments must be submitted by **Friday, October 26, 2007**. You may submit the completed form by e-mail to sarcomm@nerc.net with the words "TPL-001 Draft 1" in the subject line. If you have questions please contact Ed Dobrowolski at ed.dobrowolksi@nerc.net or by telephone at 609-947-3673.

Individual Commenter Information **(Complete this page for comments from one organization or individual.)**		
Name:	H. Steven Myers	
Organization:	ERCOT ISO	
Telephone:	512-248-3077	
E-mail:	smyers@ercot.com	
NERC Region (check all Regions in which your company operates)		**Registered Ballot Body Segment (check all industry segments in which your company is registered)**
☒ **ERCOT**	☐	1 — Transmission Owners
☐ **FRCC**	☒	2 — RTOs and ISOs
☐ **MRO**	☐	3 — Load-serving Entities
☐ **NPCC**	☐	4 — Transmission-dependent Utilities
☐ **RFC**	☐	5 — Electric Generators
☐ **SERC**	☐	6 — Electricity Brokers, Aggregators, and Marketers
☐ **SPP**	☐	7 — Large Electricity End Users
☒ **WECC**	☐	8 — Small Electricity End Users
☐ **NA – Not Applicable**	☐	9 — Federal, State, Provincial Regulatory or other Government Entities
	☒	10 — Regional Reliability Organizations and Regional Entities

Group Comments (Complete this page if comments are from a group.)

Group Name:

Lead Contact:

Contact Organization:

Contact Segment:

Contact Telephone:

Contact E-mail:

Additional Member Name	Additional Member Organization	Region*	Segment*

*If more than one Region or Segment applies, please list all that apply. Regional acronyms and segment numbers are shown on prior page.

Background

The purpose of this standard is to establish Transmission System planning performance requirements within the planning horizon to develop a Bulk Electric System that will operate reliably over a broad spectrum of System conditions and following a wide range of probable Contingencies. This standard will replace TPL-001-0, TPL-002-0, TPL-003-0, and TPL-004-0. The standard drafting team has not yet addressed TPL-005-0 and TPL-006-0, but will address these two standards during the next phase of the drafting process.

The major objectives of the standard drafting team are to:

1) Ensure the standard is complete and the requirements are set at an appropriate level to ensure reliability (Not Least Common Denominator)
2) Ensure that the standard is enforceable by having clearly defined requirements with unambiguous language
3) Address the issues raised by FERC Order 693, 890, and other applicable orders
4) Address the issues raised in the original Standards Authorization Request (SAR) and the Supplemental SAR.

The standard drafting team did not attempt to edit the existing standards but rather chose to write one standard that addresses all aspects of transmission planning in the existing TPL-001-0, TPL-002-0, TPL-003-0, and TPL-004-0. The standard drafting team organized the new standard in the following sections:

R1 – Modeling requirements
R2 – Assessment and Corrective Plan requirements
R3 – Steady State Analysis requirements
R4 – Stability Analysis requirements
R5 – Coordination requirements

The standard drafting team determined that the requirements and analysis for Steady State are different from those for stability. As such, the standard drafting team separated the analysis requirements and created two performance requirement tables.

The standard drafting team recognizes that this draft standard is a starting point for industry input into the standard and that there is still a lot of work required to complete the process. The standard drafting team has made many changes to clarify requirements, add requirements, and make some of the performance requirements stricter. The standard drafting team has not addressed Measures, Risk Factors, Violation Severity Factors, or Time Horizons at this time. These will be addressed when the standard drafting team has better defined the requirements of the standard.

For questions where you agree with the standard drafting team, please state that you agree and if available, please provide supporting documentation. If you disagree with the standard drafting team, please explain why you disagree and provide data to support your position, such as outage data or analysis. If you believe that we have made a performance requirement too strict please provide supporting documentation. If applicable, please include the approximate cost in man-hours for additional studies and/or cost in $Millions for additional transmission investment to meet the new requirements or the stricter requirements. If you believe that the standard should be stricter, please provide the rationale along with any supporting data, including existing practices, cost estimates or additional analysis.

To improve the standard, the standard drafting team would appreciate responses to as many of these questions as you can answer.

A. New Definitions

Many of the concerns about the existing TPL standards come from the fact that a number of generally understood concepts are embedded in undefined terms, tables, and footnotes. To clarify some of these concerns, the standard drafting team is proposing new definitions. Please indicate whether you agree with the following proposed definitions and provide proposed changes to the definitions if you disagree:

Definition	**Agree or Disagree**
Q1. **Base Case**: Computer representation of the projected initial or starting Transmission System conditions for a specific point in time. Each base case reflects the forecasted Load at each bus (or node) on the interconnected Transmission System, the transmission facilities which deliver the generation and reactive resources to the connected Load, and the generation dispatch including firm transaction obligations assumed to supply the connected Load. The models also reflect facility ratings in accordance with FAC-008 & FAC-009.	☒Agree. ☐Do not agree.
Q1. **Comment: It is a fair description for an initial base case.**	
Q2. **Consequential Load Loss:** Load that is no longer served because it is directly connected to an element(s) that is removed from service due to fault clearing action or mis-operation.	☒Agree. ☐Do not agree.
Q2. **Comment: Agree with the definition**	
Q3. **Extreme Events:** Events which are more severe than Planning Events and have a low probability of occurrence.	☐Agree. ☒Do not agree.
Q3. **Comment: Add specificity in this definition. Suggest the following wording: Outage of two or more elements from service with lower probability of occurrence than Planning Events**	
Q4. **Long-Term Transmission Planning Horizon:** Transmission planning period that covers years six through ten or beyond.	☒Agree. ☐Do not agree.
Q4. **Comment: Agree with the definition**	
Q5. **Near-Term Transmission Planning Horizon:** Transmission planning period that covers years One through five.	☒Agree. ☐Do not agree.
Q5. **Comment: Agree with the definition**	
Q6. **Non-Consequential Load Loss:** Load loss other than Consequential Load Loss. For example, Load loss that occurs through manual (operator initiated) or automatic operations such as under-voltage Load shedding, under-frequency Load shedding, or Special Protection Systems.	☐Agree. ☒Do not agree.
Q6. **Comment: Add Remedial Action Schemes (RAS) after "Systems" Amend sentence beginning "For example, Load loss that "directly"**	

occurs……	
Q7. **Planning Assessment:** Documented evaluation of future Bulk Electric System needs by the use of performance studies that cover a range of assumptions regarding system conditions, time frames, future plans including capital reinforcements and operating procedures and other factors, such as asset conditions and age.	☒Agree. ☐Do not agree.
Q7. **Comment: Agree with the definition**	
Q8. **Planning Events:** Events which require Transmission system performance requirements to be met.	☐Agree. ☒Do not agree.
Q8. **Comment: Needs clarity. Suggest the following wording: Outage of power system elements such as shown in Tables 1 and 2 that need to be considered and simulated to assess Transmission System Performance**	
Q9. **Plant Stability Study:** Study of an individual plant's Stability for various Contingencies in the vicinity of the plant; concerned with the effect on the System of the generating units' loss of synchronism and the damping of the generating units' power oscillations.	☐Agree. ☒Do not agree.
Q9. **Comment: Definition is not clear. Suggest the following wording: Study of an individual generating plant's capability to remain in synchronism and exhibit damping of the generating units' power oscillations for various contingencies in the vicinity of the plant**	
Q10. **System Stability Study:** Study of the System or portions of the System to ensure that angular Stability is maintained, inter-area power oscillations are damped, and voltages during the dynamic simulation stay within acceptable performance limits.	☐Agree. ☒Do not agree.
Q10. **Comment: This definition is for a stable system. Study is performed to determine whether system is stable or not. Suggest the following wording: Study of the system or portions of the system to assess the system's performance in terms of angular stability, power oscillations and voltage limits during dynamic simulation**	
Q11. **Year One:** The first year that a Transmission Planner is responsible for studying. This is further defined as the planning window that begins the next calendar year from the time the Transmission Planner submits their annual studies. Analysis conducted for time horizons within the calendar year from the study publication are assumed to be conducted under the auspices of Operations Planning.	☐Agree. ☒Do not agree.
Q11. **Comment: Suggest a shorter definition: Planning window beginning next calendar year**	

B. Sensitivity Studies

The draft planning standard includes the requirement, as specified in FERC Order 693, that planning decisions be based on a portfolio of analyses. In section 12.a.ii "Sensitivity studies and critical system conditions" FERC provided direction to consider a full range of variables considered to be significant that need to be assessed and documentation provided that explains the rationale for the selection of variables assessed.

In addition to the firm obligation scenario, the portfolio of analyses should be supplemented to include information from sensitivity analysis. The sensitivity analysis should be developed using additional cases that simulate reasonably stressed system conditions. The standard drafting team has included several parameters that can be varied to create the requisite sensitivity case(s). The draft standards specify that the sensitivities reflect one or more of the following conditions and that documentation be provided explaining the rationale for selecting the sensitivity(ies) employed. The parameters that should be varied include:

- Higher or lower Load forecasts from the Base Case with variability of Load/demand and Load power factors due to season, weather, or time of day.
- Modification of expected transfers.
- Unavailability of long lead time facilities.
- Variability and outages of Reactive Resources.
- Generation additions, retirements, or other dispatch scenarios.
- Decreased effectiveness of controllable Loads and Demand Side Management.
- Modification of planned Transmission outages

To help focus industry discussion, please respond to the questions below:

Q12. Should the standard provide more specific direction regarding the number of sensitivity cases that need to be developed?

Yes ☐ No ☒
Comment: The TP or PA is the best to determine the number and type of sensitivities that are more applicable to their system.

Q13. Should the standard specify the required changes, such as changes in expected transfers, load forecasts, generation patterns, etc., from the study case to be considered a "reasonably stressed" case?

Yes ☐ No ☒
Comment: Let the TP or PA decide the type of stressing needed for a particular case

Q14. The SDT proposes to require the use of sensitivity studies for Near-Term Transmission System Planning Horizon stability analysis. Do you concur with the use of sensitivity analysis in dynamic studies?

Yes ☐ No ☒
Comment: Although we concur with the sensitivity analysis,the TP should determine what sensitivities are more appropriate for their system. Sensitivities should not be scripted in the Standard.

Q15. The draft TPL standard does not require the use of sensitivity studies for the Long-Term Transmission System Planning Horizon (year six and beyond) studies. Do you concur with this approach or should there be some level of sensitivity analysis required for the long-term period?

Yes ☒ No ☐
Comment: Agree. The Standard should state that sensitivity studies are not required but the TP or PA could use sensitivities if desired.

C. Corrective Action Plans

Requirement R2.7 of the standard states that when analysis shows that the performance requirements in Table 1 and Table 2 are not fully met, a Corrective Action Plan that utilizes all or some of the Transmission System enhancements, generation additions, DSM, new technologies and Operating Procedures shall be included in the Planning Assessment. This Corrective Action Plan should ensure that upon its implementation the identified system deficiencies will be corrected so that the performance requirements in Table 1 and Table 2 will be met. Furthermore, studies included in the Planning Assessment should demonstrate that this is indeed the case.

Q16. Requirement R2.7.1: Such Corrective Action Plans shall "Identify System deficiencies and the associated actions needed to achieve required System performance including Transmission and generation improvements, DSM, new technologies, or Operating Procedures including the duration of Interim Operating Procedures". System deficiencies may be corrected using an integrated plan, i.e., an optimal mix of Transmission, generation, DSM and Operating Procedures. Should DSM be considered in conjunction with other measures in developing Corrective Action Plans? If yes, please comment on how the impact of DSM should be included.

Yes ☒ No ☐
Comment:

Q17. Requirement R2.7.2: Such Corrective Action Plans shall "Be added to study cases and the cases re-tested to show that the System with planned additions meets the performance requirements in the tables". Should new studies, including the facilities comprising the Corrective Action Plan, be performed to assess System normal performance and Contingency response for conditions that previously resulted in the System deficiencies (without the planned additions) and also demonstrate that the changes would not result in inadvertent negative impacts on the System. If you "agree", please comment on how a study area should be determined.

Yes ☒ No ☐
Comment: We agree that the system should be retested with the corrective measures to ensure that the defficiency has been cured and that there are no inadvertant negative impacts. Regarding Study Area, it is not a defined term, and it could vary depending on the size of the project or nature of the disturbance being evaluated.

Q18. Requirement R2.7.3: The standard calls for a differentiation between committed and proposed projects. Do you agree that they should be treated separately? If not, please state why not.

Yes ☐ No ☒
Comment: The definition of "committed" projects varies from TP to TP. Also projects that are proposed today become committed in the planning horizon. Similarly, committed projects drop out due to variety of reasons. In terms of system studies, both committed and proposed projects are modeled and evaluated in the same system. How do we distinguish between the two?

Q19. Requirement R2.7.4: For such Corrective Action Plans "Committed projects shall not be removed without documentation to show that the revised plan meets the performance requirements". Do you agree or disagree with this requirement? If you disagree, please explain why.

Yes ☒ No ☐
Comment: We agree that committed projects should not be removed from the revised plan. These are supposed to be included in the planning studies which determine the system performance in the first place.

The definition of "committed" projects varies from TP to TP so this would require a standard definition.

D. Performance Requirements

The proposed revised planning standard (TPL-001-1) incorporates a number of changes in requirements as compared to the current planning standards (TPL-001-0 through TPL-004-0), which it is expected to replace. Among other things these changes are intended to clarify the standard, address issues described by FERC, and, in particular, to "raise the bar." Strengthening the planning standards in selected areas is necessary to maintain a reliable Bulk Electric System that is up to the challenges of the 21st Century. In proposing the requirements in this draft, the standard drafting team attempted to balance the value of increased reliability against any potential increase in work and costs to meet the new proposed standard.

The standard drafting team is seeking input from the industry to determine whether a proper balance has been achieved. The areas where material changes are proposed in this draft are enumerated below, and questions are posed by the standard drafting team to obtain industry comment. In formulating your responses, please keep in mind that material changes in the final standard will be accompanied by a transition plan to provide for an orderly implementation of the final standard.

The performance requirements relative to Non-Consequential Loss of Load for the following events enumerated in the two tables can be considered more stringent than the existing TPL standards. Furthermore, the proposed standard is based on an assumption that performance requirements for EHV facilities should be more stringent than for lower voltage facilities.

Do you agree that Non-Consequential Loss of Load should not be permitted for the following events? If you disagree, please provide a reason for your disagreement.

Event	Agree or Disagree	Comment
Q20. P2-1: Loss of bus section (SLG for stability) above 300 kV	☒Agree. ☐Do not agree.	
Q21. P5-1: For facilities above 300 kV, loss of a Transmission circuit followed by System adjustment[1] followed by loss of another Transmission circuit	☐Agree. ☒Do not agree.	This event falls under Category C for which controlled loss of load is allowed. Clear net benefits should be demonstrated to justify adapting to a new stringent criteria.
Q22. P5-2: For facilities above 300 kV, loss of a Transmission circuit followed by System adjustment followed by loss of a transformer with low side voltage rating above 300 kV	☐Agree. ☐Do not agree.	We will comment on this at a later date
Q23. P5-3: For facilities	☐Agree.	We will comment on this at a later date

above 300 kV, loss of a transformer with low side voltage rating above 300 kV followed by System adjustment followed by loss of another transformer	☐Do not agree.	

[1]System adjustment can be manual or automatic.

The proposed standard is based on an assumption that performance requirements for non-bus tie EHV breakers should be distinguished from other breakers. Do you agree that Non-Consequential Loss of Load should not be permitted for this event?

Q24. Loss of non-bus tie breaker (above 300 kV) due to internal fault

Yes ☐ No ☒
Comment: Same response as for Q21, and
What is the definition of non-bus tie breaker? Doesn't it just refer to line, transformer, and generation breakers?

The proposed standard is based on an assumption that performance requirements for non-bus tie EHV breakers should be distinguished from other breakers and that performance requirements for EHV facilities should be more stringent than for lower voltage facilities. Do you agree that Non-Consequential Loss of Load should not be permitted for this event?

Q25. P3-1: Loss of (SLG for stability) either a generator, a Transmission circuit, a transformer, or a bus and a stuck non-bus tie breaker (above 300 kV)

Yes ☐ No ☒
Comment: Do not agree for loss of a bus, or loss of a stuck non-bus tie breaker for the reasons as in the response to Q21.

The proposed standard is based on an assumption that the following events are relatively high probability events and, therefore, Non-Consequential Loss of Load should not be permitted. Do you agree? If you disagree, please provide a reason for your disagreement.

Event	Agree or Disagree	Comment
Q26. P4-1: Loss of a Generator followed by System adjustment[1] followed by loss of another Generator	☒Agree. ☐Do not agree.	Non consequential loss of load should not be permitted for this type of event. Loss of a generator has higher probability and longer duration than many other contingencies. Overlapping outage of a second element while one generator is already out of service and system adjusted would likewise have higher probability than other multiple contingency events.
Q27. P4-2: Loss of a	☒Agree.	Agree that non consequential loss of

[1] System adjustment can be manual or automatic

generator followed by a System adjustment followed by the loss of a monopolar DC line	☐Do not agree.	load should not be permitted due to higher probability of generator outage.
Q28. P4-3: Loss of a generator followed by System adjustment followed by loss of a Transmission circuit	☒Agree. ☐Do not agree.	Same reason as in Q26.
Q29. P4-4: Loss of a generator followed by System adjustment followed by loss of a transformer	☐Agree. ☐Do not agree.	Same reason as in Q26.

The performance requirement for the following event may be considered less stringent than the existing TPL Standards — P2-3: Loss of a single pole of a DC line. Interruption of firm transactions (without Loss of firm Load) if the transaction is dependent on the faulted DC line is now allowed for this initiating event/Contingency.

Q30. Do you agree that interruption of any firm transfers that are dependent on the outaged DC line that is taken out of service should be permitted?

Yes ☒ No ☐
Comment: In addition, the interruptible and other negotiated transactions should also be allowed.

E. Stability

Q31. The proposed standard is based on an assumption that steady state analysis and stability analysis are different from each other and that therefore, two tables of Contingencies and performance requirements were needed. It is also based on an assumption that stability study requirements should be clearly separated from the steady state study requirements. Do you agree with the action taken in separating stability analysis from steady state analysis? If not, please explain.

Yes ☒ No ☐
Comment: Agree that the two analysis should be treated separately.
It is not clearly defined what is steady state and what is stability. For example are Voltage Stability (PV analysis) studies steady state or stability? Also what are the differences between System Stability and Plant Stability? Are stability studies only required for the near term planning horizon?.

Q32. The SDT has added requirements for plant stability studies and has drawn a distinction in these studies from System stability studies. Do you agree with this approach? If not, please explain.

Yes ☒ No ☐
Comment: Agree with this additional analysis

Q33. The existing TPL-004-0 standard has a requirement to consider the Loss of all generating units at a plant, but it was not clear whether this requirement should apply to stability studies. The SDT did not include this requirement in the stability table, because it is hard to envision a condition when all units would trip simultaneously within the timeframe of a stability simulation. Do you think this condition should be required in stability analysis of extreme events? If not, please explain.

Yes ☒ No ☐
Comment: It will be consistent with the performance requirements under Steady State conditions. Also, loss of entire generating station is possible for a variety of reasons such as, loss of all lines emanating from the station, loss of the gas pipeline feeding the plant, etc.

Q34. There are an increasing number of events with slow voltage recovery after faults on the Transmission System. The dynamic behavior of induction motor loads is a major factor in this phenomenon. The proposed standard therefore requires that the load model for stability studies of peak Load conditions include the dynamic effects of induction motors. Do you agree with this requirement? If not, please explain?

Yes ☒ No ☐
Comment: The requirement to include motor load should be extended to other load levels as appropriate.

Q35. What type of manual or automatic adjustments of generators should be allowed for single and multiple Contingencies?

Comment: Manual such as tripping the generators, automatic such as AVR, excitation systems, stabilizer, and governor adjustments.
From a Planning perspective, you would not want to allow for manual tripping in the time frame of a stability study.

F. Generation Runback and Tripping

The SDT has discussed the automatic and manual readjustments of generators that should be permissible for single contingencies and multiple contingencies. The existing TPL-001-0 through TPL-004-0 standards through footnote (a) of Table I could include emergency ratings applicable for short durations as required to permit operating steps necessary to maintain system control. The footnote is silent about allowable generation adjustments in response to the Category B events. However, it does indicate that system adjustments are permitted to prepare for the next Contingency. These system adjustments could include manual or automatic adjustments involving generation.

The SDT has learned that many transmission owners use System Protection Systems (SPS) or Remedial Action Schemes (RAS) to trip generation for single and multiple Contingency outage events to prevent overloads, low voltage, and instability in the Interconnected Transmission network for N-1 and N-2 events. In some cases, the RAS are used to prepare for the next Contingency; but in some cases, the RAS are used to simultaneously avoid exceeding emergency ratings.

Q36. The proposed standard allows generation runback after the disturbance that causes a single Contingency (or due to a single Contingency outage) to move the Interconnected Transmission System from an emergency state (within emergency ratings) to a normal state (within normal ratings), assuming that the disturbance does not result in instability? Do you agree? If not, please explain.

Yes ☒ No ☐
Comment: Agree

Q37. Since emergency ratings are thermal ratings, should this standard allow an automatic generation runback scheme (that is initiated immediately after the disturbance causing the single Contingency) to prevent thermal overloads (assuming that the disturbance does not result in instability)? If yes, what are the conditions that must be met in order to allow such a runback scheme to meet the System performance criteria for single Contingencies? Please explain the reason for your answer.

Yes ☒ No ☐
Comment: 1. Run back of generation should not result in tripping of firm load, 2. Power flow should be within the applicable ratings, 3. Frequency should be within the allowable limits

The standard drafting team has considered that RAS or SPS may be allowable under certain situations for single Contingencies, but proposes that their use should be limited.

Q38. Do you agree that RAS or SPS may be allowed for single Contingencies? If not, please explain.

Yes ☒ No ☐
Comment: Agree

Q39. Please describe the limitations that you believe should be placed on the use of RAS or SPS for single Contingency events.

Comment: RAS or SPS should generally be regarded as a stop gap measure before transmission expansion or reinforcement becomes available. It should not be used as a substitute for transmission facilities.

Q40. When RAS or SPS are allowed, what conditions should be met when these systems are used in system adjustments to meet performance requirements?

Comment: 1. RAS or SPS must be simple and manageable. 2. Number of contingencies triggering a RAS or SPS should be very limited (4 allowed by CAISO). 3. RAS or SPS should generally monitor only local facilities that are either directly connected to the plant or one bus away.

G. General Questions

Q41. If you are aware of any regional variances that would be required as a result of these standards, please identify them here.

Yes ☒ No ☐
Comment: ISO relies upon tripping of generators to meet single contingency performance requirements. ISO also relies upon planned and controlled load shedding for the proposed Planning Events P4 and P5.

Q42. If you are aware of any conflicts between the proposed standards and any regulatory function, rule order, tariff, rate schedule, legislative requirement or agreement, please identify them here.

Yes ☐ No ☒
Comment: Not aware of any

Q43. Do you have any other questions or concerns with the proposed standard that have not been addressed? If yes, please explain.

Yes ☐ No ☒

Comment:

R1.1.1 - Are percentage of load that is industrial, commercial, and residential needed?

R1.2 - The wording is confusing. If the power factor is based on historical measured values, does it have to be during contingency (stressed)?

R1.5 - "Planned Facilities defined in accordance with the documented criteria of the Planning Coordinator" - what is meant by this?

R2.1.1, R2.1.2, R2.1.3.1 - are all studies to be run using all the contingencies defined in Table 1 - Steady State Performance?

R2.6.1, R2.6.2, R2.6.3 - past studies will never be able to be used if the addition of a transmission line makes them invalid!

R3.2.1 - What is meant by "minimum steady state voltage limitations of all generators"?

R3.2.2 - Relay "loadability"?? What is meant by this? Sounds unreasonable for steady state studies as facility rating should reflect limitations of relay equipments such as CT"s.

General comment: If this proposed standard is approved, since it contains requirements that are more restrictive than current standards, there will need to be a transition period to allow transmission to be built to allow systems to meet the new requirements.

NERC
NORTH AMERICAN ELECTRIC RELIABILITY CORPORATION

Comment Form for First Draft of TPL-001-1 — Transmission System Planning Performance Requirements

Please use this form to submit comments on the proposed draft of TPL-001-1. Comments must be submitted by **Friday, October 26, 2007**. You may submit the completed form by e-mail to sarcomm@nerc.net with the words "TPL-001 Draft 1" in the subject line. If you have questions please contact Ed Dobrowolski at ed.dobrowolksi@nerc.net or by telephone at 609-947-3673.

Individual Commenter Information **(Complete this page for comments from one organization or individual.)**		
Name:	Eric Mortenson	
Organization:	Exelon	
Telephone:	(630) 576-6898	
E-mail:	eric.mortenson@exeloncorp.com	
NERC Region (check all Regions in which your company operates)		**Registered Ballot Body Segment (check all industry segments in which your company is registered)**
☐ **ERCOT**	☒	1 — Transmission Owners
☐ **FRCC**	☐	2 — RTOs and ISOs
☐ **MRO**	☒	3 — Load-serving Entities
☐ **NPCC**	☐	4 — Transmission-dependent Utilities
☒ **RFC**	☐	5 — Electric Generators
☐ **SERC**	☐	6 — Electricity Brokers, Aggregators, and Marketers
☐ **SPP**	☐	7 — Large Electricity End Users
☐ **WECC**	☐	8 — Small Electricity End Users
☐ **NA – Not Applicable**	☐	9 — Federal, State, Provincial Regulatory or other Government Entities
	☐	10 — Regional Reliability Organizations and Regional Entities

Group Comments (Complete this page if comments are from a group.)

Group Name:

Lead Contact:

Contact Organization:

Contact Segment:

Contact Telephone:

Contact E-mail:

Additional Member Name	Additional Member Organization	Region*	Segment*

*If more than one Region or Segment applies, please list all that apply. Regional acronyms and segment numbers are shown on prior page.

Background

The purpose of this standard is to establish Transmission System planning performance requirements within the planning horizon to develop a Bulk Electric System that will operate reliably over a broad spectrum of System conditions and following a wide range of probable Contingencies. This standard will replace TPL-001-0, TPL-002-0, TPL-003-0, and TPL-004-0. The standard drafting team has not yet addressed TPL-005-0 and TPL-006-0, but will address these two standards during the next phase of the drafting process.

The major objectives of the standard drafting team are to:

1) Ensure the standard is complete and the requirements are set at an appropriate level to ensure reliability (Not Least Common Denominator)
2) Ensure that the standard is enforceable by having clearly defined requirements with unambiguous language
3) Address the issues raised by FERC Order 693, 890, and other applicable orders
4) Address the issues raised in the original Standards Authorization Request (SAR) and the Supplemental SAR.

The standard drafting team did not attempt to edit the existing standards but rather chose to write one standard that addresses all aspects of transmission planning in the existing TPL-001-0, TPL-002-0, TPL-003-0, and TPL-004-0. The standard drafting team organized the new standard in the following sections:

R1 – Modeling requirements
R2 – Assessment and Corrective Plan requirements
R3 – Steady State Analysis requirements
R4 – Stability Analysis requirements
R5 – Coordination requirements

The standard drafting team determined that the requirements and analysis for Steady State are different from those for stability. As such, the standard drafting team separated the analysis requirements and created two performance requirement tables.

The standard drafting team recognizes that this draft standard is a starting point for industry input into the standard and that there is still a lot of work required to complete the process. The standard drafting team has made many changes to clarify requirements, add requirements, and make some of the performance requirements stricter. The standard drafting team has not addressed Measures, Risk Factors, Violation Severity Factors, or Time Horizons at this time. These will be addressed when the standard drafting team has better defined the requirements of the standard.

For questions where you agree with the standard drafting team, please state that you agree and if available, please provide supporting documentation. If you disagree with the standard drafting team, please explain why you disagree and provide data to support your position, such as outage data or analysis. If you believe that we have made a performance requirement too strict please provide supporting documentation. If applicable, please include the approximate cost in man-hours for additional studies and/or cost in $Millions for additional transmission investment to meet the new requirements or the stricter requirements. If you believe that the standard should be stricter, please provide the rationale along with any supporting data, including existing practices, cost estimates or additional analysis.

To improve the standard, the standard drafting team would appreciate responses to as many of these questions as you can answer.

A. New Definitions

Many of the concerns about the existing TPL standards come from the fact that a number of generally understood concepts are embedded in undefined terms, tables, and footnotes. To clarify some of these concerns, the standard drafting team is proposing new definitions. Please indicate whether you agree with the following proposed definitions and provide proposed changes to the definitions if you disagree:

Definition	**Agree or Disagree**
Q1. **Base Case**: Computer representation of the projected initial or starting Transmission System conditions for a specific point in time. Each base case reflects the forecasted Load at each bus (or node) on the interconnected Transmission System, the transmission facilities which deliver the generation and reactive resources to the connected Load, and the generation dispatch including firm transaction obligations assumed to supply the connected Load. The models also reflect facility ratings in accordance with FAC-008 & FAC-009.	☒Agree. ☐Do not agree.
Q1. **Comment:**	
Q2. **Consequential Load Loss:** Load that is no longer served because it is directly connected to an element(s) that is removed from service due to fault clearing action or mis-operation.	☒Agree. ☐Do not agree.
Q2. **Comment:**	
Q3. **Extreme Events:** Events which are more severe than Planning Events and have a low probability of occurrence.	☒Agree. ☐Do not agree.
Q3. **Comment:**	
Q4. **Long-Term Transmission Planning Horizon:** Transmission planning period that covers years six through ten or beyond.	☒Agree. ☐Do not agree.
Q4. **Comment:**	
Q5. **Near-Term Transmission Planning Horizon:** Transmission planning period that covers years One through five.	☒Agree. ☐Do not agree.
Q5. **Comment:**	
Q6. **Non-Consequential Load Loss:** Load loss other than Consequential Load Loss. For example, Load loss that occurs through manual (operator initiated) or automatic operations such as under-voltage Load shedding, under-frequency Load shedding, or Special Protection Systems.	☒Agree. ☐Do not agree.
Q6. **Comment:**	
Q7. **Planning Assessment:** Documented evaluation of future Bulk Electric System needs by the use of performance studies that cover a range of assumptions regarding system conditions, time	☐Agree. ☒Do not

frames, future plans including capital reinforcements and operating procedures and other factors, such as asset conditions and age.	agree.
Q7. **Comment: 'Other factors' such as condition and age should not be required, but may be utilized if these factors are an integral component of the study.**	
Q8. **Planning Events:** Events which require Transmission system performance requirements to be met.	☒Agree. ☐Do not agree.
Q8. **Comment:**	
Q9. **Plant Stability Study:** Study of an individual plant's Stability for various Contingencies in the vicinity of the plant; concerned with the effect on the System of the generating units' loss of synchronism and the damping of the generating units' power oscillations.	☐Agree. ☒Do not agree.
Q9. **Comment: Wording should be changed to allow for engineering judgment to determine which contingencies are applied. There may be instances where contingencies outside of the immediate vicinity of the plant may be significant to its stability. Suggest replacing the word 'System' with 'Transmission System'.**	
Q10. **System Stability Study:** Study of the System or portions of the System to ensure that angular Stability is maintained, inter-area power oscillations are damped, and voltages during the dynamic simulation stay within acceptable performance limits.	☒Agree. ☐Do not agree.
Q10. **Comment: Suggest replacing 'System' with 'Transmission System'.**	
Q11. **Year One:** The first year that a Transmission Planner is responsible for studying. This is further defined as the planning window that begins the next calendar year from the time the Transmission Planner submits their annual studies. Analysis conducted for time horizons within the calendar year from the study publication are assumed to be conducted under the auspices of Operations Planning.	☒Agree. ☐Do not agree.
Q11. **Comment:**	

B. Sensitivity Studies

The draft planning standard includes the requirement, as specified in FERC Order 693, that planning decisions be based on a portfolio of analyses. In section 12.a.ii "Sensitivity studies and critical system conditions" FERC provided direction to consider a full range of variables considered to be significant that need to be assessed and documentation provided that explains the rationale for the selection of variables assessed.

In addition to the firm obligation scenario, the portfolio of analyses should be supplemented to include information from sensitivity analysis. The sensitivity analysis should be developed using additional cases that simulate reasonably stressed system conditions. The standard drafting team has included several parameters that can be varied to create the requisite sensitivity case(s). The draft standards specify that the sensitivities reflect one or more of the following conditions and that documentation be provided explaining the rationale for selecting the sensitivity(ies) employed. The parameters that should be varied include:

- Higher or lower Load forecasts from the Base Case with variability of Load/demand and Load power factors due to season, weather, or time of day.
- Modification of expected transfers.
- Unavailability of long lead time facilities.
- Variability and outages of Reactive Resources.
- Generation additions, retirements, or other dispatch scenarios.
- Decreased effectiveness of controllable Loads and Demand Side Management.
- Modification of planned Transmission outages

To help focus industry discussion, please respond to the questions below:

Q12. Should the standard provide more specific direction regarding the number of sensitivity cases that need to be developed?

Yes ☐ No ☒
Comment:

Q13. Should the standard specify the required changes, such as changes in expected transfers, load forecasts, generation patterns, etc., from the study case to be considered a "reasonably stressed" case?

Yes ☐ No ☒
Comment: The required changes should not be specified because they may not impact a particular transmission system based upon its geographic location within the interconnection. Required changes should be determined by the entity performing the study.

Q14. The SDT proposes to require the use of sensitivity studies for Near-Term Transmission System Planning Horizon stability analysis. Do you concur with the use of sensitivity analysis in dynamic studies?

Yes ☒ No ☐
Comment:

Q15. The draft TPL standard does not require the use of sensitivity studies for the Long-Term Transmission System Planning Horizon (year six and beyond) studies. Do you concur with this approach or should there be some level of sensitivity analysis required for the long-term period?

Yes ☒ No ☐
Comment:

C. Corrective Action Plans

Requirement R2.7 of the standard states that when analysis shows that the performance requirements in Table 1 and Table 2 are not fully met, a Corrective Action Plan that utilizes all or some of the Transmission System enhancements, generation additions, DSM, new technologies and Operating Procedures shall be included in the Planning Assessment. This Corrective Action Plan should ensure that upon its implementation the identified system deficiencies will be corrected so that the performance requirements in Table 1 and Table 2 will be met. Furthermore, studies included in the Planning Assessment should demonstrate that this is indeed the case.

Q16. Requirement R2.7.1: Such Corrective Action Plans shall "Identify System deficiencies and the associated actions needed to achieve required System performance including Transmission and generation improvements, DSM, new technologies, or Operating Procedures including the duration of Interim Operating Procedures". System deficiencies may be corrected using an integrated plan, i.e., an optimal mix of Transmission, generation, DSM and Operating Procedures. Should DSM be considered in conjunction with other measures in developing Corrective Action Plans? If yes, please comment on how the impact of DSM should be included.

Yes ☒ No ☐
Comment: DSM should be directly controllable with accurate information as the the magnitude and location. System stability should not be dependent on the operation of DSM.

Q17. Requirement R2.7.2: Such Corrective Action Plans shall "Be added to study cases and the cases re-tested to show that the System with planned additions meets the performance requirements in the tables". Should new studies, including the facilities comprising the Corrective Action Plan, be performed to assess System normal performance and Contingency response for conditions that previously resulted in the System deficiencies (without the planned additions) and also demonstrate that the changes would not result in inadvertent negative impacts on the System. If you "agree", please comment on how a study area should be determined.

Yes ☒ No ☐
Comment: The study area should be at least the size of the original study area. Some engineering judgment is required to determine the subset of studies. Next year's study would include the full set of screenings for the future additions.

Q18. Requirement R2.7.3: The standard calls for a differentiation between committed and proposed projects. Do you agree that they should be treated separately? If not, please state why not.

Yes ☒ No ☐
Comment:

Q19. Requirement R2.7.4: For such Corrective Action Plans "Committed projects shall not be removed without documentation to show that the revised plan meets the performance requirements". Do you agree or disagree with this requirement? If you disagree, please explain why.

Yes ☒ No ☐
Comment:

D. Performance Requirements

The proposed revised planning standard (TPL-001-1) incorporates a number of changes in requirements as compared to the current planning standards (TPL-001-0 through TPL-004-0), which it is expected to replace. Among other things these changes are intended to clarify the standard, address issues described by FERC, and, in particular, to "raise the bar." Strengthening the planning standards in selected areas is necessary to maintain a reliable Bulk Electric System that is up to the challenges of the 21st Century. In proposing the requirements in this draft, the standard drafting team attempted to balance the value of increased reliability against any potential increase in work and costs to meet the new proposed standard.

The standard drafting team is seeking input from the industry to determine whether a proper balance has been achieved. The areas where material changes are proposed in this draft are enumerated below, and questions are posed by the standard drafting team to obtain industry comment. In formulating your responses, please keep in mind that material changes in the final standard will be accompanied by a transition plan to provide for an orderly implementation of the final standard.

The performance requirements relative to Non-Consequential Loss of Load for the following events enumerated in the two tables can be considered more stringent than the existing TPL standards. Furthermore, the proposed standard is based on an assumption that performance requirements for EHV facilities should be more stringent than for lower voltage facilities.

Do you agree that Non-Consequential Loss of Load should not be permitted for the following events? If you disagree, please provide a reason for your disagreement.

Event	Agree or Disagree	Comment
Q20. P2-1: Loss of bus section (SLG for stability) above 300 kV	☒Agree. ☒Do not agree.	We do not agree with disallowing non-consequential load loss for these scenarios for the peak load conditions. These are very low probability contingencies, and some non-consequential load loss should be allowed at peak load. We would agree that it would be reasonable to dis-allow non-consequential load loss for these contingencies at a lower load level, such as 75% of peak load.
Q21. P5-1: For facilities above 300 kV, loss of a Transmission circuit followed by System adjustment[1] followed by loss of another Transmission circuit	☒Agree. ☒Do not agree.	We do not agree with disallowing non-consequential load loss for these scenarios for the peak load conditions. These are very low probability contingencies, and some non-consequential load loss should be allowed at peak load. We would agree that it would be reasonable to dis-allow non-consequential load loss for these contingencies at a lower load level, such as 75% of peak load.
Q22. P5-2: For facilities above 300 kV, loss of a Transmission circuit followed by System adjustment followed by loss of a transformer with low side voltage rating above 300 kV	☒Agree. ☒Do not agree.	We do not agree with disallowing non-consequential load loss for these scenarios for the peak load conditions. These are very low probability contingencies, and some non-consequential load loss should be allowed at peak load. We would agree that it would be reasonable to dis-allow non-consequential load loss for these contingencies at a lower load level, such as 75% of peak load.
Q23. P5-3: For facilities	☒Agree.	We do not agree with disallowing non-

above 300 kV, loss of a transformer with low side voltage rating above 300 kV followed by System adjustment followed by loss of another transformer	☒Do not agree.	consequential load loss for these scenarios for the peak load conditions. These are very low probability contingencies, and some non-consequential load loss should be allowed at peak load. We would agree that it would be reasonable to dis-allow non-consequential load loss for these contingencies at a lower load level, such as 75% of peak load.

[1]System adjustment can be manual or automatic.

The proposed standard is based on an assumption that performance requirements for non-bus tie EHV breakers should be distinguished from other breakers. Do you agree that Non-Consequential Loss of Load should not be permitted for this event?

Q24. Loss of non-bus tie breaker (above 300 kV) due to internal fault

Yes ☐ No ☒
Comment: P6 allows for non-consequential load loss for a bus tie breaker, which has the same probability of failure as a non-bus tie breaker.

The proposed standard is based on an assumption that performance requirements for non-bus tie EHV breakers should be distinguished from other breakers and that performance requirements for EHV facilities should be more stringent than for lower voltage facilities. Do you agree that Non-Consequential Loss of Load should not be permitted for this event?

Q25. P3-1: Loss of (SLG for stability) either a generator, a Transmission circuit, a transformer, or a bus and a stuck non-bus tie breaker (above 300 kV)

Yes ☒ No ☒
Comment: We do not agree with disallowing non-consequential load loss for these scenarios for the peak load conditions. These are very low probability contingencies, and some non-consequential load loss should be allowed at peak load. We would agree that it would be reasonable to dis-allow non-consequential load loss for these contingencies at a lower load level, such as 75% of peak load.

The proposed standard is based on an assumption that the following events are relatively high probability events and, therefore, Non-Consequential Loss of Load should not be permitted. Do you agree? If you disagree, please provide a reason for your disagreement.

Event	Agree or Disagree	Comment
Q26. P4-1: Loss of a Generator followed by System adjustment[1] followed by loss of another Generator	☒Agree. ☐Do not agree.	
Q27. P4-2: Loss of a generator followed by a	☒Agree.	

[1] System adjustment can be manual or automatic

System adjustment followed by the loss of a monopolar DC line	☐Do not agree.	
Q28. P4-3: Loss of a generator followed by System adjustment followed by loss of a Transmission circuit	☒Agree. ☐Do not agree.	
Q29. P4-4: Loss of a generator followed by System adjustment followed by loss of a transformer	☒Agree. ☐Do not agree.	

The performance requirement for the following event may be considered less stringent than the existing TPL Standards — P2-3: Loss of a single pole of a DC line. Interruption of firm transactions (without Loss of firm Load) if the transaction is dependent on the faulted DC line is now allowed for this initiating event/Contingency.

Q30. Do you agree that interruption of any firm transfers that are dependent on the outaged DC line that is taken out of service should be permitted?

Yes ☒ No ☐
Comment:

E. Stability

Q31. The proposed standard is based on an assumption that steady state analysis and stability analysis are different from each other and that therefore, two tables of Contingencies and performance requirements were needed. It is also based on an assumption that stability study requirements should be clearly separated from the steady state study requirements. Do you agree with the action taken in separating stability analysis from steady state analysis? If not, please explain.

Yes ☒ No ☐
Comment:

Q32. The SDT has added requirements for plant stability studies and has drawn a distinction in these studies from System stability studies. Do you agree with this approach? If not, please explain.

Yes ☒ No ☐
Comment:

Q33. The existing TPL-004-0 standard has a requirement to consider the Loss of all generating units at a plant, but it was not clear whether this requirement should apply to stability studies. The SDT did not include this requirement in the stability table, because it is hard to envision a condition when all units would trip simultaneously within the timeframe of a stability simulation. Do you think this condition should be required in stability analysis of extreme events? If not, please explain.

Yes ☒ No ☐
Comment:

Q34. There are an increasing number of events with slow voltage recovery after faults on the Transmission System. The dynamic behavior of induction motor loads is a major factor in this phenomenon. The proposed standard therefore requires that the load model for stability studies of peak Load conditions include the dynamic effects of induction motors. Do you agree with this requirement? If not, please explain?

Yes ☒ No ☒
Comment: This is more pertinent to longer term voltage stability, so the load model should be developed and available for these types of studies.

Q35. What type of manual or automatic adjustments of generators should be allowed for single and multiple Contingencies?

Comment: Generator MW and Mvar output adjustments should be allowed, both manual and automatic.

F. Generation Runback and Tripping

The SDT has discussed the automatic and manual readjustments of generators that should be permissible for single contingencies and multiple contingencies. The existing TPL-001-0 through TPL-004-0 standards through footnote (a) of Table I could include emergency ratings applicable for short durations as required to permit operating steps necessary to maintain system control. The footnote is silent about allowable generation adjustments in response to the Category B events. However, it does indicate that system adjustments are permitted to prepare for the next Contingency. These system adjustments could include manual or automatic adjustments involving generation.

The SDT has learned that many transmission owners use System Protection Systems (SPS) or Remedial Action Schemes (RAS) to trip generation for single and multiple Contingency outage events to prevent overloads, low voltage, and instability in the Interconnected Transmission network for N-1 and N-2 events. In some cases, the RAS are used to prepare for the next Contingency; but in some cases, the RAS are used to simultaneously avoid exceeding emergency ratings.

Q36. The proposed standard allows generation runback after the disturbance that causes a single Contingency (or due to a single Contingency outage) to move the Interconnected Transmission System from an emergency state (within emergency ratings) to a normal state (within normal ratings), assuming that the disturbance does not result in instability? Do you agree? If not, please explain.

Yes ☒ No ☐
Comment: An automated run-back scheme should be allowed but not required for these scenarios - an operator should be able to manually adjust unit output.

Q37. Since emergency ratings are thermal ratings, should this standard allow an automatic generation runback scheme (that is initiated immediately after the disturbance causing the single Contingency) to prevent thermal overloads (assuming that the disturbance does not result in instability)? If yes, what are the conditions that must be met in order to allow such a runback scheme to meet the System performance criteria for single Contingencies? Please explain the reason for your answer.

Yes ☒ No ☐
Comment: Run-back schemes should be allowed for certain single contingencies that can result in unit outlet constraints. Not all emergency ratings are thermal - some are relay or stability limits. In these instances, generator run-back should not be allowed.

The standard drafting team has considered that RAS or SPS may be allowable under certain situations for single Contingencies, but proposes that their use should be limited.

Q38. Do you agree that RAS or SPS may be allowed for single Contingencies? If not, please explain.

Yes ☒ No ☐
Comment:

Q39. Please describe the limitations that you believe should be placed on the use of RAS or SPS for single Contingency events.

Comment:

Q40. When RAS or SPS are allowed, what conditions should be met when these systems are used in system adjustments to meet performance requirements?

Comment:

G. General Questions

Q41. If you are aware of any regional variances that would be required as a result of these standards, please identify them here.

Yes ☐ No ☐
Comment:

Q42. If you are aware of any conflicts between the proposed standards and any regulatory function, rule order, tariff, rate schedule, legislative requirement or agreement, please identify them here.

Yes ☐ No ☐
Comment:

Q43. Do you have any other questions or concerns with the proposed standard that have not been addressed? If yes, please explain.

Yes ☒ No ☐
Comment: There should be more specific requirements for the long-range studies. The P requirements should be run on the long range case but corrective action plans need only be proposed and not committed.

R3.3.2.1 appears to require consequential load loss identification including peak demand and duration. however there is no requirement addressing the use of this information. Why is this required?

R3.3.3 should be clarified. It is our interpretation that not each of the P contingencies be studied if sufficient rationale is provided to determine the most critical. It would seem that each of the planning category events would need to be addressed.

What is the expectation regarding sensitivity analysis in R2.1.3 and R.2.4.3 if there are no performance requirements defined?

It should be clear in the performance tables that the 'event column' contingencies are logically 'or' events.

NERC
NORTH AMERICAN ELECTRIC RELIABILITY CORPORATION

Comment Form for First Draft of TPL-001-1 — Transmission System Planning Performance Requirements

Please use this form to submit comments on the proposed draft of TPL-001-1. Comments must be submitted by **Friday, October 26, 2007**. You may submit the completed form by e-mail to sarcomm@nerc.net with the words "TPL-001 Draft 1" in the subject line. If you have questions please contact Ed Dobrowolski at ed.dobrowolksi@nerc.net or by telephone at 609-947-3673.

Individual Commenter Information **(Complete this page for comments from one organization or individual.)**		
Name:	Doug Hohlbaugh	
Organization:	FirstEnergy Corporation	
Telephone:	330-384-4698	
E-mail:	hohlbaughdg@firstenergycorp.com	
NERC Region (check all Regions in which your company operates)		**Registered Ballot Body Segment (check all industry segments in which your company is registered)**
☐ **ERCOT**	☒	1 — Transmission Owners
☐ **FRCC**	☐	2 — RTOs and ISOs
☐ **MRO**	☒	3 — Load-serving Entities
☐ **NPCC**	☐	4 — Transmission-dependent Utilities
☒ **RFC**	☒	5 — Electric Generators
☐ **SERC**	☒	6 — Electricity Brokers, Aggregators, and Marketers
☐ **SPP**	☐	7 — Large Electricity End Users
☐ **WECC**	☐	8 — Small Electricity End Users
☐ **NA – Not Applicable**	☐	9 — Federal, State, Provincial Regulatory or other Government Entities
	☐	10 — Regional Reliability Organizations and Regional Entities

Group Comments (Complete this page if comments are from a group.)

Group Name: **FirstEnergy Corp**

Lead Contact: **Doug Hohlbaugh**

Contact Organization:

Contact Segment: **1-Transmission Owner**

Contact Telephone: **330-384-4698**

Contact E-mail: **hohlbaughdg@firstenergycorp.com**

Additional Member Name	Additional Member Organization	Region*	Segment*
John Stephens	FE	**RFC**	1
Dave Folk	FE	RFC	1
Sam Ciccone	FE	RFC	1

*If more than one Region or Segment applies, please list all that apply. Regional acronyms and segment numbers are shown on prior page.

Background

The purpose of this standard is to establish Transmission System planning performance requirements within the planning horizon to develop a Bulk Electric System that will operate reliably over a broad spectrum of System conditions and following a wide range of probable Contingencies. This standard will replace TPL-001-0, TPL-002-0, TPL-003-0, and TPL-004-0. The standard drafting team has not yet addressed TPL-005-0 and TPL-006-0, but will address these two standards during the next phase of the drafting process.

The major objectives of the standard drafting team are to:

1) Ensure the standard is complete and the requirements are set at an appropriate level to ensure reliability (Not Least Common Denominator)
2) Ensure that the standard is enforceable by having clearly defined requirements with unambiguous language
3) Address the issues raised by FERC Order 693, 890, and other applicable orders
4) Address the issues raised in the original Standards Authorization Request (SAR) and the Supplemental SAR.

The standard drafting team did not attempt to edit the existing standards but rather chose to write one standard that addresses all aspects of transmission planning in the existing TPL-001-0, TPL-002-0, TPL-003-0, and TPL-004-0. The standard drafting team organized the new standard in the following sections:

R1 – Modeling requirements
R2 – Assessment and Corrective Plan requirements
R3 – Steady State Analysis requirements
R4 – Stability Analysis requirements
R5 – Coordination requirements

The standard drafting team determined that the requirements and analysis for Steady State are different from those for stability. As such, the standard drafting team separated the analysis requirements and created two performance requirement tables.

The standard drafting team recognizes that this draft standard is a starting point for industry input into the standard and that there is still a lot of work required to complete the process. The standard drafting team has made many changes to clarify requirements, add requirements, and make some of the performance requirements stricter. The standard drafting team has not addressed Measures, Risk Factors, Violation Severity Factors, or Time Horizons at this time. These will be addressed when the standard drafting team has better defined the requirements of the standard.

For questions where you agree with the standard drafting team, please state that you agree and if available, please provide supporting documentation. If you disagree with the standard drafting team, please explain why you disagree and provide data to support your position, such as outage data or analysis. If you believe that we have made a performance requirement too strict please provide supporting documentation. If applicable, please include the approximate cost in man-hours for additional studies and/or cost in $Millions for additional transmission investment to meet the new requirements or the stricter requirements. If you believe that the standard should be stricter, please provide the rationale along with any supporting data, including existing practices, cost estimates or additional analysis.

To improve the standard, the standard drafting team would appreciate responses to as many of these questions as you can answer.

A. New Definitions

Many of the concerns about the existing TPL standards come from the fact that a number of generally understood concepts are embedded in undefined terms, tables, and footnotes. To clarify some of these concerns, the standard drafting team is proposing new definitions. Please indicate whether you agree with the following proposed definitions and provide proposed changes to the definitions if you disagree:

Definition	**Agree or Disagree**
Q1. **Base Case**: Computer representation of the projected initial or starting Transmission System conditions for a specific point in time. Each base case reflects the forecasted Load at each bus (or node) on the interconnected Transmission System, the transmission facilities which deliver the generation and reactive resources to the connected Load, and the generation dispatch including firm transaction obligations assumed to supply the connected Load. The models also reflect facility ratings in accordance with FAC-008 & FAC-009.	☒Agree. ☐Do not agree.
Q1. **Comment:**	
Q2. **Consequential Load Loss:** Load that is no longer served because it is directly connected to an element(s) that is removed from service due to fault clearing action or mis-operation.	☐Agree. ☒Do not agree.
Q2. **Comment: We suggest that the team remove "or misoperation" from the definition. This could suggest that an overtrip of protection equipment could result in consequential load loss.**	
Q3. **Extreme Events:** Events which are more severe than Planning Events and have a low probability of occurrence.	☒Agree. ☐Do not agree.
Q3. **Comment: The definition is OK, but we question its use in the standard. Many of the items listed as extreme events are not considered events. For example, high river temperature is not really an event, it is a condition. The resulting event might be the shut-down of multiple generators.**	
Q4. **Long-Term Transmission Planning Horizon:** Transmission planning period that covers years six through ten or beyond.	☒Agree. ☐Do not agree.
Q4. **Comment:**	
Q5. **Near-Term Transmission Planning Horizon:** Transmission planning period that covers years One through five.	☒Agree. ☐Do not agree.
Q5. **Comment:**	
Q6. **Non-Consequential Load Loss:** Load loss other than Consequential Load Loss. For example, Load loss that occurs through manual (operator initiated) or automatic operations such as under-voltage Load shedding, under-frequency Load shedding,	☐Agree. ☒Do not agree.

or Special Protection Systems.	
Q6. **Comment: We suggest eliminating the reference to Special Protection Systems (SPS). Some SPSs could result in tripping of load in association with a fault. By specifically listing SPSs here, it could imply that if that situation occurs, it would not be considered consequential load drop.**	
Q7. **Planning Assessment:** Documented evaluation of future Bulk Electric System needs by the use of performance studies that cover a range of assumptions regarding system conditions, time frames, future plans including capital reinforcements and operating procedures and other factors, such as asset conditions and age.	☐Agree. ☒Do not agree.
Q7. **Comment: We suggest replacing "performance studies" with "past or present studies or information".**	
Q8. **Planning Events:** Events which require Transmission system performance requirements to be met.	☐Agree. ☒Do not agree.
Q8. **Comment: We ask that the SDT reword the definition to include reference to the planning events in Table 1 and 2 of this standard. This definition should be specific to this standard and not be included in the NERC glossary.**	
Q9. **Plant Stability Study:** Study of an individual plant's Stability for various Contingencies in the vicinity of the plant; concerned with the effect on the System of the generating units' loss of synchronism and the damping of the generating units' power oscillations.	☐Agree. ☒Do not agree.
Q9. **Comment: We believe that this definition is not needed. The Plant Stability Study is similar to the System Stability Study.**	
Q10. **System Stability Study:** Study of the System or portions of the System to ensure that angular Stability is maintained, inter-area power oscillations are damped, and voltages during the dynamic simulation stay within acceptable performance limits.	☒Agree. ☐Do not agree.
Q10. **Comment:**	
Q11. **Year One:** The first year that a Transmission Planner is responsible for studying. This is further defined as the planning window that begins the next calendar year from the time the Transmission Planner submits their annual studies. Analysis conducted for time horizons within the calendar year from the study publication are assumed to be conducted under the auspices of Operations Planning.	☐Agree. ☒Do not agree.
Q11. **Comment: Although we agree with the concept, the definition is confusing. We suggest simplifying the definition to "The first 12 month period that begins one year and one day from the completion of the study."**	

B. Sensitivity Studies

The draft planning standard includes the requirement, as specified in FERC Order 693, that planning decisions be based on a portfolio of analyses. In section 12.a.ii "Sensitivity studies and critical system conditions" FERC provided direction to consider a full range of variables considered to be significant that need to be assessed and documentation provided that explains the rationale for the selection of variables assessed.

In addition to the firm obligation scenario, the portfolio of analyses should be supplemented to include information from sensitivity analysis. The sensitivity analysis should be developed using additional cases that simulate reasonably stressed system conditions. The standard drafting team has included several parameters that can be varied to create the requisite sensitivity case(s). The draft standards specify that the sensitivities reflect one or more of the following conditions and that documentation be provided explaining the rationale for selecting the sensitivity(ies) employed. The parameters that should be varied include:

- Higher or lower Load forecasts from the Base Case with variability of Load/demand and Load power factors due to season, weather, or time of day.
- Modification of expected transfers.
- Unavailability of long lead time facilities.
- Variability and outages of Reactive Resources.
- Generation additions, retirements, or other dispatch scenarios.
- Decreased effectiveness of controllable Loads and Demand Side Management.
- Modification of planned Transmission outages

To help focus industry discussion, please respond to the questions below:

Q12. Should the standard provide more specific direction regarding the number of sensitivity cases that need to be developed?

Yes ☐ No ☒
Comment: We suggest that the SDT reword the standard to allow the Transmission Owner additional latitude as to which stress conditions to study. We suggest modifying R2.4.3 to indicate sensitivities "such as those listed below" be studied. That way the standard would be providing examples but would not dictate specific sensitivity studies that should be performed.

Q13. Should the standard specify the required changes, such as changes in expected transfers, load forecasts, generation patterns, etc., from the study case to be considered a "reasonably stressed" case?

Yes ☐ No ☒
Comment:

Q14. The SDT proposes to require the use of sensitivity studies for Near-Term Transmission System Planning Horizon stability analysis. Do you concur with the use of sensitivity analysis in dynamic studies?

Yes ☒ No ☐
Comment: Although we concur with the use of sensitivity analysis in dynamic studies, the standard should not dictate the specific sensitivities studies to be performed.

Q15. The draft TPL standard does not require the use of sensitivity studies for the Long-Term Transmission System Planning Horizon (year six and beyond) studies. Do you concur with this approach or should there be some level of sensitivity analysis required for the long-term period?

Yes ☒ No ☐
Comment: Yes, we concur with this approach and sensitivity analysis should not be required.

C. Corrective Action Plans

Requirement R2.7 of the standard states that when analysis shows that the performance requirements in Table 1 and Table 2 are not fully met, a Corrective Action Plan that utilizes all or some of the Transmission System enhancements, generation additions, DSM, new technologies and Operating Procedures shall be included in the Planning Assessment. This Corrective Action Plan should ensure that upon its implementation the identified system deficiencies will be corrected so that the performance requirements in Table 1 and Table 2 will be met. Furthermore, studies included in the Planning Assessment should demonstrate that this is indeed the case.

Q16. Requirement R2.7.1: Such Corrective Action Plans shall "Identify System deficiencies and the associated actions needed to achieve required System performance including Transmission and generation improvements, DSM, new technologies, or Operating Procedures including the duration of Interim Operating Procedures". System deficiencies may be corrected using an integrated plan, i.e., an optimal mix of Transmission, generation, DSM and Operating Procedures. Should DSM be considered in conjunction with other measures in developing Corrective Action Plans? If yes, please comment on how the impact of DSM should be included.

Yes ☐ No ☒
Comment: We do not feel that the standard should specify, limit, or suggest methods for mitigating system performance deficiencies. We suggest rewording R2.7.1 by ending the first sentence after the words "System performance". The items currently described could be moved to a reference document which could include DSM and other mitigation methods.

Q17. Requirement R2.7.2: Such Corrective Action Plans shall "Be added to study cases and the cases re-tested to show that the System with planned additions meets the performance requirements in the tables". Should new studies, including the facilities comprising the Corrective Action Plan, be performed to assess System normal performance and Contingency response for conditions that previously resulted in the System deficiencies (without the planned additions) and also demonstrate that the changes would not result in inadvertent negative impacts on the System. If you "agree", please comment on how a study area should be determined.

Yes ☒ No ☐
Comment: Although we agree with the concept of retesting, the standard should reference that a re-study is only required in the vicinity or portion of the system affected by new facility additions. Determination of the study area should be left to the Transmission Planner's judgement.

Q18. Requirement R2.7.3: The standard calls for a differentiation between committed and proposed projects. Do you agree that they should be treated separately? If not, please state why not.

Yes ☐ No ☒
Comment: Unless there is an industry agreed upon distinction and definition between "committed" and "proposed" projects, we do not agree that they should be introduced in this standard.

Q19. Requirement R2.7.4: For such Corrective Action Plans "Committed projects shall not be removed without documentation to show that the revised plan meets the

performance requirements". Do you agree or disagree with this requirement? If you disagree, please explain why.

Yes ☐ No ☒
Comment: Unless there is an industry agreed upon distinction and definition between "committed" and "proposed" projects, we do not agree that they should be introduced in this standard.

D. Performance Requirements

The proposed revised planning standard (TPL-001-1) incorporates a number of changes in requirements as compared to the current planning standards (TPL-001-0 through TPL-004-0), which it is expected to replace. Among other things these changes are intended to clarify the standard, address issues described by FERC, and, in particular, to "raise the bar." Strengthening the planning standards in selected areas is necessary to maintain a reliable Bulk Electric System that is up to the challenges of the 21st Century. In proposing the requirements in this draft, the standard drafting team attempted to balance the value of increased reliability against any potential increase in work and costs to meet the new proposed standard.

The standard drafting team is seeking input from the industry to determine whether a proper balance has been achieved. The areas where material changes are proposed in this draft are enumerated below, and questions are posed by the standard drafting team to obtain industry comment. In formulating your responses, please keep in mind that material changes in the final standard will be accompanied by a transition plan to provide for an orderly implementation of the final standard.

The performance requirements relative to Non-Consequential Loss of Load for the following events enumerated in the two tables can be considered more stringent than the existing TPL standards. Furthermore, the proposed standard is based on an assumption that performance requirements for EHV facilities should be more stringent than for lower voltage facilities.

Do you agree that Non-Consequential Loss of Load should not be permitted for the following events? If you disagree, please provide a reason for your disagreement.

Event	Agree or Disagree	Comment
Q20. P2-1: Loss of bus section (SLG for stability) above 300 kV	☒Agree. ☐Do not agree.	
Q21. P5-1: For facilities above 300 kV, loss of a Transmission circuit followed by System adjustment[1] followed by loss of another Transmission circuit	☐Agree. ☒Do not agree.	Shedding load could be part of the system adjustment in preparation for the next possible contingency but load drop would not be acceptable for problems caused soley by the first contingency.
Q22. P5-2: For facilities above 300 kV, loss of a Transmission circuit followed by System	☐Agree. ☒Do not agree.	Shedding load could be part of the system adjustment in preparation for the next possible contingency but load drop would not be acceptable for problems caused

adjustment followed by loss of a transformer with low side voltage rating above 300 kV		soley by the first contingency.
Q23. P5-3: For facilities above 300 kV, loss of a transformer with low side voltage rating above 300 kV followed by System adjustment followed by loss of another transformer	☐Agree. ☒Do not agree.	Shedding load could be part of the system adjustment in preparation for the next possible contingency but load drop would not be acceptable for problems caused soley by the first contingency.

[1]System adjustment can be manual or automatic.

The proposed standard is based on an assumption that performance requirements for non-bus tie EHV breakers should be distinguished from other breakers. Do you agree that Non-Consequential Loss of Load should not be permitted for this event?

Q24. Loss of non-bus tie breaker (above 300 kV) due to internal fault

Yes ☒ No ☐
Comment: The tables' use of internal faults and stuck breaker faults is confusing since they have the same result.

The proposed standard is based on an assumption that performance requirements for non-bus tie EHV breakers should be distinguished from other breakers and that performance requirements for EHV facilities should be more stringent than for lower voltage facilities. Do you agree that Non-Consequential Loss of Load should not be permitted for this event?

Q25. P3-1: Loss of (SLG for stability) either a generator, a Transmission circuit, a transformer, or a bus and a stuck non-bus tie breaker (above 300 kV)

Yes ☐ No ☒
Comment: The wording of P3-1 is unclear. We suggest rewording to say "Fault on a generator, line, transformer, or bus and a stuck breaker when the fault is being cleared". We agree with the concept of not dropping load for an EHV stuck breaker with the exception of the bus fault item. We do not believe that it is very realistic to postulate a bus fault along with a stuck breaker and believe that it is a very low probability event.

The proposed standard is based on an assumption that the following events are relatively high probability events and, therefore, Non-Consequential Loss of Load should not be permitted. Do you agree? If you disagree, please provide a reason for your disagreement.

Event	Agree or Disagree	Comment
Q26. P4-1: Loss of a Generator followed by System adjustment[1] followed by loss of another Generator	☐Agree. ☒Do not agree.	Shedding load could be part of the system adjustment in preparation for the next possible contingency but load drop would not be acceptable for

[1] System adjustment can be manual or automatic

		problems caused soley by the first contingency.
Q27. P4-2: Loss of a generator followed by a System adjustment followed by the loss of a monopolar DC line	☐Agree. ☒Do not agree.	Shedding load could be part of the system adjustment in preparation for the next possible contingency but load drop would not be acceptable for problems caused soley by the first contingency.
Q28. P4-3: Loss of a generator followed by System adjustment followed by loss of a Transmission circuit	☐Agree. ☒Do not agree.	Shedding load could be part of the system adjustment in preparation for the next possible contingency but load drop would not be acceptable for problems caused soley by the first contingency.
Q29. P4-4: Loss of a generator followed by System adjustment followed by loss of a transformer with low side voltage rating above 300 kV	☐Agree. ☒Do not agree.	Shedding load could be part of the system adjustment in preparation for the next possible contingency but load drop would not be acceptable for problems caused soley by the first contingency.

The performance requirement for the following event may be considered less stringent than the existing TPL Standards — P2-3: Loss of a single pole of a DC line. Interruption of firm transactions (without Loss of firm Load) if the transaction is dependent on the faulted DC line is now allowed for this initiating event/Contingency.

Q30. Do you agree that interruption of any firm transfers that are dependent on the outaged DC line that is taken out of service should be permitted?

Yes ☒ No ☐
Comment:

E. Stability

Q31. The proposed standard is based on an assumption that steady state analysis and stability analysis are different from each other and that therefore, two tables of Contingencies and performance requirements were needed. It is also based on an assumption that stability study requirements should be clearly separated from the steady state study requirements. Do you agree with the action taken in separating stability analysis from steady state analysis? If not, please explain.

Yes ☐ No ☒
Comment: While we agree that steady-state and stability are different situations, in general we believe that the tables are confusing, overly worded, and should be combined. The initiating events are the same regardless of steady-state or stability so there should be no reason not to combine the tables as was done in the previous standards.

Q32. The SDT has added requirements for plant stability studies and has drawn a distinction in these studies from System stability studies. Do you agree with this approach? If not, please explain.

Yes ☐ No ☒
Comment: We do not see the difference between plant stability and system stability. Both are based on anuglar stability of machines connected to the system and therefore, they should be treated the same.

Q33. The existing TPL-004-0 standard has a requirement to consider the Loss of all generating units at a plant, but it was not clear whether this requirement should apply to stability studies. The SDT did not include this requirement in the stability table, because it is hard to envision a condition when all units would trip simultaneously within the timeframe of a stability simulation. Do you think this condition should be required in stability analysis of extreme events? If not, please explain.

Yes ☐ No ☒
Comment: We do not believe that this condition should be required to be tested using stability analysis of extreme events. This is due to the fact that these events should be required to be studied using steady state analysis, and stability analysis results would not add value.

Q34. There are an increasing number of events with slow voltage recovery after faults on the Transmission System. The dynamic behavior of induction motor loads is a major factor in this phenomenon. The proposed standard therefore requires that the load model for stability studies of peak Load conditions include the dynamic effects of induction motors. Do you agree with this requirement? If not, please explain?

Yes ☒ No ☐
Comment: We agree with this concept but believe that enforcing it would be very difficult. There are no standards on modeling induction motor load, be it type of models, percentage of load that is motor load, or percentage of large vs small motors.

Q35. What type of manual or automatic adjustments of generators should be allowed for single and multiple Contingencies?

Comment: As long as thermal, voltage, and stability requirements are met, either automatic or manual runback of the unit should be allowed. Tripping of the unit should be allowed also if the particular unit(s) can be restarted within some relatively short time - say one hour. With this requirement, it appears that only CTs and hydro units would be allowed to be tripped.

F. Generation Runback and Tripping

The SDT has discussed the automatic and manual readjustments of generators that should be permissible for single contingencies and multiple contingencies. The existing TPL-001-0 through TPL-004-0 standards through footnote (a) of Table I could include emergency ratings applicable for short durations as required to permit operating steps necessary to maintain system control. The footnote is silent about allowable generation adjustments in response to the Category B events. However, it does indicate that system adjustments are permitted to prepare for the next Contingency. These system adjustments could include manual or automatic adjustments involving generation.

The SDT has learned that many transmission owners use System Protection Systems (SPS) or Remedial Action Schemes (RAS) to trip generation for single and multiple Contingency

outage events to prevent overloads, low voltage, and instability in the Interconnected Transmission network for N-1 and N-2 events. In some cases, the RAS are used to prepare for the next Contingency; but in some cases, the RAS are used to simultaneously avoid exceeding emergency ratings.

Q36. The proposed standard allows generation runback after the disturbance that causes a single Contingency (or due to a single Contingency outage) to move the Interconnected Transmission System from an emergency state (within emergency ratings) to a normal state (within normal ratings), assuming that the disturbance does not result in instability? Do you agree? If not, please explain.

Yes ☒ No ☐
Comment: As long as thermal, voltage, and stability requirements are met, either automatic or manual runback of the unit should be allowed. Tripping of the unit should be allowed also if the particular unit(s) can be restarted within some relatively short time - say one hour. With this requirement, it appears that only CTs and hydro units would be allowed to be tripped.

Q37. Since emergency ratings are thermal ratings, should this standard allow an automatic generation runback scheme (that is initiated immediately after the disturbance causing the single Contingency) to prevent thermal overloads (assuming that the disturbance does not result in instability)? If yes, what are the conditions that must be met in order to allow such a runback scheme to meet the System performance criteria for single Contingencies? Please explain the reason for your answer.

Yes ☒ No ☐
Comment: Yes, only if the Transmission Owner has documented short term ratings that would not be exceeded during the runback.

The standard drafting team has considered that RAS or SPS may be allowable under certain situations for single Contingencies, but proposes that their use should be limited.

Q38. Do you agree that RAS or SPS may be allowed for single Contingencies? If not, please explain.

Yes ☒ No ☐
Comment: As long as thermal, voltage, and stability requirements are met, RAS or SPS should be allowed provided it does not shed load for a single contingency event.

Q39. Please describe the limitations that you believe should be placed on the use of RAS or SPS for single Contingency events.

Comment: As long as thermal, voltage, and stability requirements are met, RAS or SPS should be allowed provided it does not shed load for a single contingency event.

Q40. When RAS or SPS are allowed, what conditions should be met when these systems are used in system adjustments to meet performance requirements?

Comment: As long as thermal, voltage, and stability requirements are met, RAS or SPS should be allowed provided it does not shed load for a single contingency event, and only if the Transmission Owner has documented short term ratings that would not be exceeded during the runback.

G. General Questions

Q41. If you are aware of any regional variances that would be required as a result of these standards, please identify them here.

Yes ☐ No ☒
Comment:

Q42. If you are aware of any conflicts between the proposed standards and any regulatory function, rule order, tariff, rate schedule, legislative requirement or agreement, please identify them here.

Yes ☐ No ☒
Comment:

Q43. Do you have any other questions or concerns with the proposed standard that have not been addressed? If yes, please explain.

Yes ☒ No ☐
Comment:
- R1. Load flow model submittal is redundant with various MOD standards and should not be required by this standard. To the extent any new requirements are introduced, we suggest that existing MOD standards be revised or new MOD standards be created as needed.

- R2 Organization of this requirement could be improved by grouping by Near Term and Long Term and then by steady state, short circuit, and stability requirements.

- R2.1 Too many annual studies are being required by this standard for the Near Term. We suggest limiting the current study year requirement be limited to one Near Term study. As written, it appears that this requirement forces a study for each of the 5 years, however the requirement should to be able to assess the entire 5 year period but not study each year.

- R2.1.1: As written, 2 studies are needed to meet this Near Term assessment requirement. It should be left up to the TO to determine the appropriate year in the short and long term periods. It's particularly odd given the fact that the TO could select year six for the Long Term study which would end up giving him back to back year 5 and 6 studies. The requirement should be to study one year in the 1 to 5 and one year in the 6 to 10 year periods.

- R2.2: This wording is very confusing. We are assuming that it means that you must continuously have to have a study that is less than one year old for the year 6 to 10 period. If so, wording needs to be clarified.

- R2.4.1: The idea of modeling induction motor loads is good in concept, be we question the practicality for an auditor to enforce. To date, a definitive way to model induction motor load does not exist. For example, what is the right mix for percent of load to be motor load or percent of large vs small induction motors.

- R2.6.1: Unless "material change" is specifically defined, the requirement is ambiquous and difficult to enforce consistently. What constitutes a "topology" change?

- R2.6.2: Same comment as R2.6.1 above, material change needs to be defined.

- R2.6.3. Same comment as R2.6.1 above, material change needs to be defined.

- R.2.7.1.1: We don't think it is reasonable nor necessary for the TO to provide an initiation date. No one should care when it was initiated as long as it is in service by the time it is needed.

- R2.7.1.2. Requiring an in-service year for the long-term may not be feasible for the initial study assessment. Based on the number of issues that could occur in the long-term horizon it may take a TP another 6 months to a year of more detailed area studies study to find the optimal solution(s) to resolve multiple system deficiences. In the long-term, only a list of SOLs problems along with year problem is initially anticipated should be required.

- R3.2.1: We suggest the following rewording "R3.2.1. Studies shall include the minimum steady state voltage limitations for all generators, and generators shall be simulated to trip for voltage below the minimum steady state limitation."

- R3.2.2: This is unnecessary in this standard. This is already addressed in the FAC standards dealing with equipment rating. Additionally, the proposed PRC-023 relay loadability standard addresses this concern. Alternatively, reword the requirement to say "if a relay is expected to trip because of an overload then the resulting facility shall be simulated in addition to the initiating event".

- R3.3.3. How do you know which events beyond single contingencies result in producing "more severe" impacts without running all? Either you test or you don't. We suggest some type of cyclical expectation for testing each of the less probable Planning Events, i.e. every three years each must be covered etc.the most critical

- R3.4 Same comment as R3.3.3, you need to test each to understand which produces the most severe impact. We suggest some type of cyclical expectation for testing each of the Extreme Events. The frequency of testing should be less often that the items covered in R3.3.3. It appears the only expectation is to consider some type of change to reduce or mitigate potential Cascade for Extreme Events. It should be clearly written that there in no mandatory expectation to remove the Cascade risk that may be associated with an Extreme Event.

- R4.5.1. Same comment as R3.3.3 (Steady-State) applies for this Stability requirement.

- R4.5.2. Same comment as R3.4 (Steady-State) applies for this Stability requirement.

- R4.6.1. We agree with the requirement but the SDT should assure consistency with data submittal requirements in the MOD standards.

PERFORMANCE TABLES - General
1. In general, we feel the tables are overly complicated and difficult to follow. We suggest the SDT give consideration to merging the proposed tables back together to a single performance table. We also question why the team chose to leave the NERC A, B, C, D concept. The concept of Planning Events could reflect that NERC A, B & C categories must be met for Planning Events and that Category D are Extreme Events. Drastic deviation from the historical NERC performance classifications will require significant re-write of existing TP planning criteria documentation.

2. 300kV Level - It is confusing how the 300kV level requirements are placed within the tables. We suggest separate columns for performance requirements for 300kV and higher and below 300kV. This way, the same Planning Event could easily be reference on the same line and the expectations for each system level could be more readily determined.

TABLE 1 - Steady-State Performance Table

1. We suggest that the "Initial Condition" column that is included in Table 2 - Stability Performance Table - also be added to Table 1. This would allow each to have the same look and feel, and would cut down on the lengthy wording such as: "Loss of a generator followed by System adjustment followed by loss of a generator"

2. Bullet 1 - "Equipment Ratings should not be exceeded." It is not clear which equipment rating would be the applicable rating.

3. Bullet 3 - "Voltage instability, cascading outages and uncontrolled islanding shall not occur". These terms require a definition to ensure consistent interpretation and application from an auditor.

4. It is not clear why stuck breaker items are distinguished from an internal breaker fault. Each will create the same resulting system condition.

5. Why are non-bus tie breakers treated separate from other breakers?

6: P2: Why is a stuck breaker listed as a single contingency?

7. P8: What about a transformer followed by a line outage? Why not just simply list the components and say any combination of the two.

8. P9: "Loss of a transformer followed by a System adjustment with a spare transformer available followed by the loss of another transformer." It is not clear why this is needed? Wouldn't the spare be a possible mitigation of the initial contingency?

9. Extreme Event Descriptions:

A) For item 1, it’s understood that for the N-2 items listed, the "extreme" aspect is that the second event occurs without system adjustment. However, we question whether a two generators simultaneously out should be considered an extreme condition.

B) We agree with the items listed in item 2 as they line-up well with the prior category D events from the existing TPL standards performance table.

C) Many of the classifications listed in item 3 are subjective and can not be tested. We propose that these items should not be requirements.

TABLE 2 - Stability Performance Table

1. With regard to Table 2, much of the proposed testing required for stability are not necessary from a reliability standpoint. Some test items are included that are not, at least in the eastern interconnection, going to impact stability any worse than the relatively simpler requirements of the present standards. By testing single phase local faults in conjunction with a stuck breaker and remote faults with back up clearing for each line emanating from a power plant, you'll cover 99% of your stability issues. Also, this table does not adress relay scheme failures (back up clearing) that were covered in the present standard and which can have a significant impact on the stability of a unit/system.

2. Under the "Event Column", it is inconvenient to need to look back and forth on the table to reference other events, the items should be written in full text. For example, under P4 it is indicated that the "Initial Condition" is a single generator out and the "Event Column" indicates apply "P1.2 Contingency, P1.3 Contingency, etc." These items should be written out so that the user of the Table does not need to flip back and forth to see what the referenced contingencies entail.

3. Regarding P1, why require dynamic analysis for an unexpected loss of the listed equipment without a fault? The fault iniated outage will always be worse.

4. As stated above for Table 1, It is not clear why stuck breaker items are distinguished from an internal breaker fault. Each will create the same resulting system condition.

5.: P5, P8, P9: The analysis suggested to run these multiple contingencies in dynamics would be extremely time consuming and produce little value. We suggest that the steady-state anlysis be used to screen those contingencies which show the potential to cause system cascade and then run dynamic analysis on those items.

6. As stated for Table 1 above, "Loss of a transformer followed by a System adjustment with a spare transformer available followed by the loss of another transformer." It is not clear why this is needed? Wouldn't the spare be a possible mitigation of the initial contingency?

7. In the Notes section shown under Table 2, for item "ii", we are not sure this could be accomplished as our relay models are not reflected in our data set used for dynamics simulation analysis. Two separate and unique software tools house the data and we believe this to be common among most companies.

NERC
NORTH AMERICAN ELECTRIC RELIABILITY CORPORATION

Comment Form for First Draft of TPL-001-1 — Transmission System Planning Performance Requirements

Please use this form to submit comments on the proposed draft of TPL-001-1. Comments must be submitted by **Friday, October 26, 2007**. You may submit the completed form by e-mail to sarcomm@nerc.net with the words "TPL-001 Draft 1" in the subject line. If you have questions please contact Ed Dobrowolski at ed.dobrowolksi@nerc.net or by telephone at 609-947-3673.

Individual Commenter Information **(Complete this page for comments from one organization or individual.)**		
Name:	Hector Sanchez	
Organization:	Florida Power and Light	
Telephone:	305 442 5062	
E-mail:	Hector_Sanchez@fpl.com	
NERC Region (check all Regions in which your company operates)		**Registered Ballot Body Segment (check all industry segments in which your company is registered)**
☐ **ERCOT**	☒	1 — Transmission Owners
☒ **FRCC**	☐	2 — RTOs and ISOs
☐ **MRO**	☒	3 — Load-serving Entities
☐ **NPCC**	☐	4 — Transmission-dependent Utilities
☐ **RFC**	☒	5 — Electric Generators
☐ **SERC**	☐	6 — Electricity Brokers, Aggregators, and Marketers
☐ **SPP**	☐	7 — Large Electricity End Users
☐ **WECC**	☐	8 — Small Electricity End Users
☐ **NA – Not Applicable**	☐	9 — Federal, State, Provincial Regulatory or other Government Entities
	☐	10 — Regional Reliability Organizations and Regional Entities

Group Comments (Complete this page if comments are from a group.)

Group Name:

Lead Contact:

Contact Organization:

Contact Segment:

Contact Telephone:

Contact E-mail:

Additional Member Name	Additional Member Organization	Region*	Segment*
Marty Mennes	Florida Power & Light Company	**FRCC**	Transmission
W. R. Schoneck	Florida Power & Light Company	FRCC	LSE
R. A. Birch	Florida Power & Light Company	FRCC	GO
A. L. Barredo	Florida Power & Light Company	FRCC	LSE
C. Candelaria	Florida Power & Light Company	FRCC	LSE
J. W. Shaffer	Florida Power & Light Company	FRCC	LSE

*If more than one Region or Segment applies, please list all that apply. Regional acronyms and segment numbers are shown on prior page.

Background

The purpose of this standard is to establish Transmission System planning performance requirements within the planning horizon to develop a Bulk Electric System that will operate reliably over a broad spectrum of System conditions and following a wide range of probable Contingencies. This standard will replace TPL-001-0, TPL-002-0, TPL-003-0, and TPL-004-0. The standard drafting team has not yet addressed TPL-005-0 and TPL-006-0, but will address these two standards during the next phase of the drafting process.

The major objectives of the standard drafting team are to:

1) Ensure the standard is complete and the requirements are set at an appropriate level to ensure reliability (Not Least Common Denominator)
2) Ensure that the standard is enforceable by having clearly defined requirements with unambiguous language
3) Address the issues raised by FERC Order 693, 890, and other applicable orders
4) Address the issues raised in the original Standards Authorization Request (SAR) and the Supplemental SAR.

The standard drafting team did not attempt to edit the existing standards but rather chose to write one standard that addresses all aspects of transmission planning in the existing TPL-001-0, TPL-002-0, TPL-003-0, and TPL-004-0. The standard drafting team organized the new standard in the following sections:

R1 – Modeling requirements
R2 – Assessment and Corrective Plan requirements
R3 – Steady State Analysis requirements
R4 – Stability Analysis requirements
R5 – Coordination requirements

The standard drafting team determined that the requirements and analysis for Steady State are different from those for stability. As such, the standard drafting team separated the analysis requirements and created two performance requirement tables.

The standard drafting team recognizes that this draft standard is a starting point for industry input into the standard and that there is still a lot of work required to complete the process. The standard drafting team has made many changes to clarify requirements, add requirements, and make some of the performance requirements stricter. The standard drafting team has not addressed Measures, Risk Factors, Violation Severity Factors, or Time Horizons at this time. These will be addressed when the standard drafting team has better defined the requirements of the standard.

For questions where you agree with the standard drafting team, please state that you agree and if available, please provide supporting documentation. If you disagree with the standard drafting team, please explain why you disagree and provide data to support your position, such as outage data or analysis. If you believe that we have made a performance

requirement too strict please provide supporting documentation. If applicable, please include the approximate cost in man-hours for additional studies and/or cost in $Millions for additional transmission investment to meet the new requirements or the stricter requirements. If you believe that the standard should be stricter, please provide the rationale along with any supporting data, including existing practices, cost estimates or additional analysis.

To improve the standard, the standard drafting team would appreciate responses to as many of these questions as you can answer.

A. New Definitions

Many of the concerns about the existing TPL standards come from the fact that a number of generally understood concepts are embedded in undefined terms, tables, and footnotes. To clarify some of these concerns, the standard drafting team is proposing new definitions. Please indicate whether you agree with the following proposed definitions and provide proposed changes to the definitions if you disagree:

Definition	**Agree or Disagree**
Q1. **Base Case**: Computer representation of the projected initial or starting Transmission System conditions for a specific point in time. Each base case reflects the forecasted Load at each bus (or node) on the interconnected Transmission System, the transmission facilities which deliver the generation and reactive resources to the connected Load, and the generation dispatch including firm transaction obligations assumed to supply the connected Load. The models also reflect facility ratings in accordance with FAC-008 & FAC-009.	☐Agree. ☒Do not agree.
Q1. **Comment: "Computer" is not appropriate. Replace with "Data model" or "Database model". The last sentence is not clear as to what type of ratings (i.e., normal, short-term emergency, long-term emergency, etc.). Suggest removing sentence completely or rewording as follows: "... in accordance with the documented methodologies required by FAC-008 for each Transmission Owner and Generator Owner."**	
Q2. **Consequential Load Loss:** Load that is no longer served because it is directly connected to an element(s) that is removed from service due to fault clearing action or mis-operation.	☐Agree. ☒Do not agree.
Q2. **Comment: Need to clarify what constitues an element (e.g., breaker-to-breaker, line segment to line segment, transformer or capacitor bank)**	
Q3. **Extreme Events:** Events which are more severe than Planning Events and have a low probability of occurrence.	☐Agree. ☒Do not agree.
Q3. **Comment: Suggest reword as follows: "Events which are more severe and have a lower probability of occurrence than planning events."**	
Q4. **Long-Term Transmission Planning Horizon:** Transmission planning period that covers years six through ten or beyond.	☒Agree. ☐Do not agree.
Q4. **Comment:**	

Q5. **Near-Term Transmission Planning Horizon:** Transmission planning period that covers years One through five.	☒Agree. ☐Do not agree.
Q5. **Comment:**	
Q6. **Non-Consequential Load Loss:** Load loss other than Consequential Load Loss. For example, Load loss that occurs through manual (operator initiated) or automatic operations such as under-voltage Load shedding, under-frequency Load shedding, or Special Protection Systems.	☐Agree. ☒Do not agree.
Q6. **Comment: Reword as follows: "Firm load loss other than Consequential Load Loss. For example, Load loss that occurs through manual (operator initiated) or automatic operations such as under-voltage Load shedding, under-frequency Load shedding, or Special Protection Systems, excluding curtailments, DSM, and voltage reduction."**	
Q7. **Planning Assessment:** Documented evaluation of future Bulk Electric System needs by the use of performance studies that cover a range of assumptions regarding system conditions, time frames, future plans including capital reinforcements and operating procedures and other factors, such as asset conditions and age.	☐Agree. ☒Do not agree.
Q7. **Comment: Last part of the last sentence should be removed "… and other factors, such as asset conditions and age" does not make sense for planning studies. Equipment condition and age are maintenance issues not transmission planning issues.**	
Q8. **Planning Events:** Events which require Transmission system performance requirements to be met.	☒Agree. ☐Do not agree.
Q8. **Comment:**	
Q9. **Plant Stability Study:** Study of an individual plant's Stability for various Contingencies in the vicinity of the plant; concerned with the effect on the System of the generating units' loss of synchronism and the damping of the generating units' power oscillations.	☐Agree. ☒Do not agree.
Q9. **Comment: There should be no distinction between Plant Stability and System Stability. All stability studies must meet the Performance Requirements for Planning Events in Table 2 - Stability Performance. If there were different Performance Requirements then the distinction would be warranted.**	
Q10. **System Stability Study:** Study of the System or portions of the System to ensure that angular Stability is maintained, inter-area power oscillations are damped, and voltages during the dynamic simulation stay within acceptable performance limits.	☐Agree. ☒Do not agree.
Q10. **Comment: Dynamic voltage ratings do not add value and are only an approximation for modeling limitations. The definition should not address performance and should only seek to define the term. Reword as follows: "Study of the System or portions of the System to assess angular Stability and inter-area power oscillations."**	
Q11. **Year One:** The first year that a Transmission Planner is responsible for studying. This is further defined as the planning window that begins the next calendar year from the time the	☐Agree. ☒Do not

Transmission Planner submits their annual studies. Analysis conducted for time horizons within the calendar year from the study publication are assumed to be conducted under the auspices of Operations Planning.	agree.
Q11. **Comment: The last sentence of this definition is not included in the Standard. Reword as follows: "The first year that a Transmission Planner is responsible for studying. This is further defined as the planning window that begins the next calendar year from the time the Transmission Planner performs their annual studies and submits the results to the RRO."**	

B. Sensitivity Studies

The draft planning standard includes the requirement, as specified in FERC Order 693, that planning decisions be based on a portfolio of analyses. In section 12.a.ii "Sensitivity studies and critical system conditions" FERC provided direction to consider a full range of variables considered to be significant that need to be assessed and documentation provided that explains the rationale for the selection of variables assessed.

In addition to the firm obligation scenario, the portfolio of analyses should be supplemented to include information from sensitivity analysis. The sensitivity analysis should be developed using additional cases that simulate reasonably stressed system conditions. The standard drafting team has included several parameters that can be varied to create the requisite sensitivity case(s). The draft standards specify that the sensitivities reflect one or more of the following conditions and that documentation be provided explaining the rationale for selecting the sensitivity(ies) employed. The parameters that should be varied include:

- Higher or lower Load forecasts from the Base Case with variability of Load/demand and Load power factors due to season, weather, or time of day.
- Modification of expected transfers.
- Unavailability of long lead time facilities.
- Variability and outages of Reactive Resources.
- Generation additions, retirements, or other dispatch scenarios.
- Decreased effectiveness of controllable Loads and Demand Side Management.
- Modification of planned Transmission outages

To help focus industry discussion, please respond to the questions below:

Q12. Should the standard provide more specific direction regarding the number of sensitivity cases that need to be developed?

Yes ☐ No ☒
Comment: Not all Regions' sensitivity concerns are the same.

Q13. Should the standard specify the required changes, such as changes in expected transfers, load forecasts, generation patterns, etc., from the study case to be considered a "reasonably stressed" case?

Yes ☐ No ☒
Comment: The Transmission Planner needs the flexibility to define what are considered "reasonably stressed" cases for their respective systems. This would not a be a proper application of a one size fits all definition.

Q14. The SDT proposes to require the use of sensitivity studies for Near-Term Transmission System Planning Horizon stability analysis. Do you concur with the use of sensitivity analysis in dynamic studies?

Yes ☐ No ☒

Comment: The standards require near term base case cases to be studied for a broad range of planning and extreme events. The sensitivity analysis requirements contained R.2.4.3. will essentially require every dynamic simulation to be run at least twice regardless of whether or not there is any engineering insight to be gained. While improved understanding may result from sensitivity analysis of certain key event scenarios, the overall benefits of the sensitivity study requirements contained in section R.2.4.3 do not justify the huge increase in engineering effort to conduct and document these simulations.

Q15. The draft TPL standard does not require the use of sensitivity studies for the Long-Term Transmission System Planning Horizon (year six and beyond) studies. Do you concur with this approach or should there be some level of sensitivity analysis required for the long-term period?

Yes ☒ No ☐

Comment: There should be no sensitivity studies/analyses for the Long-Term Transmission System Planning Horizon.

C. Corrective Action Plans

Requirement R2.7 of the standard states that when analysis shows that the performance requirements in Table 1 and Table 2 are not fully met, a Corrective Action Plan that utilizes all or some of the Transmission System enhancements, generation additions, DSM, new technologies and Operating Procedures shall be included in the Planning Assessment. This Corrective Action Plan should ensure that upon its implementation the identified system deficiencies will be corrected so that the performance requirements in Table 1 and Table 2 will be met. Furthermore, studies included in the Planning Assessment should demonstrate that this is indeed the case.

Q16. Requirement R2.7.1: Such Corrective Action Plans shall "Identify System deficiencies and the associated actions needed to achieve required System performance including Transmission and generation improvements, DSM, new technologies, or Operating Procedures including the duration of Interim Operating Procedures". System deficiencies may be corrected using an integrated plan, i.e., an optimal mix of Transmission, generation, DSM and Operating Procedures. Should DSM be considered in conjunction with other measures in developing Corrective Action Plans? If yes, please comment on how the impact of DSM should be included.

Yes ☒ No ☐

Comment: If DSM is included as part of an integrated Corrective Action plan, then the impact of DSM should be included by specifying the location and expected quantity of DSM that will mitigate a system deficiency. The use of DSM, whether exclusively or in conjunction with other measures, is an acceptable operating procedure for use in a Corrective Action Plan, as long as the Transmission Owner demonstrates availability and accuracy of DSM data and its viability as an operating procedure for each applicable scenario.

Q17. Requirement R2.7.2: Such Corrective Action Plans shall "Be added to study cases and the cases re-tested to show that the System with planned additions meets the performance requirements in the tables". Should new studies, including the facilities comprising the Corrective Action Plan, be performed to assess System normal performance and Contingency response for conditions that previously resulted in the System deficiencies (without the planned additions) and also demonstrate that the

changes would not result in inadvertent negative impacts on the System. If you "agree", please comment on how a study area should be determined.

Yes ☐ No ☒
Comment: Incremental benefits do not justify the magnitude of additional studies. Corrective Action plans should be tested, but not as a new study with all of the Corrective Action Plans included simultaneously. The proposed language is inferior to the existing language (TPL-002-0 R2) and suggest replacing with language from TPL-002-0 R2.

Q18. Requirement R2.7.3: The standard calls for a differentiation between committed and proposed projects. Do you agree that they should be treated separately? If not, please state why not.

Yes ☐ No ☒
Comment: All projects should be called "Planned" projects. There is no distinction in a model between committed and proposed projects that would treat them differently. They are either in the model or not in the model. This sub-requirement does not follow the major requirement wording in R2.7 ".....Such plans shall:" The intent of Requirements R2.7.3 and R2.7.4 should be combined and added into R2.7.1.1. Rather than adding the addtional requirement to document a criteria, the requirement should be that in the Near-Term Planning Horizon, projects cannot be removed (or modified) without demonstrating that the revised plan meets performance criteria. Suggested wording for R2.7.1.1. "Transmission and generation improvement projects for the Near-Term Transmission Planning Horizon, shall have in-service dates provided (to whom?), and shall not have in-service dates changed, or be removed from planning models, without documentation to show that the revised plan meets performance requirements."

Q19. Requirement R2.7.4: For such Corrective Action Plans "Committed projects shall not be removed without documentation to show that the revised plan meets the performance requirements". Do you agree or disagree with this requirement? If you disagree, please explain why.

Yes ☐ No ☒
Comment: All projects should be called "Planned" projects. Additionally, see response to question 18.

D. Performance Requirements

The proposed revised planning standard (TPL-001-1) incorporates a number of changes in requirements as compared to the current planning standards (TPL-001-0 through TPL-004-0), which it is expected to replace. Among other things these changes are intended to clarify the standard, address issues described by FERC, and, in particular, to "raise the bar." Strengthening the planning standards in selected areas is necessary to maintain a reliable Bulk Electric System that is up to the challenges of the 21st Century. In proposing the requirements in this draft, the standard drafting team attempted to balance the value of increased reliability against any potential increase in work and costs to meet the new proposed standard.

The standard drafting team is seeking input from the industry to determine whether a proper balance has been achieved. The areas where material changes are proposed in this draft are enumerated below, and questions are posed by the standard drafting team to obtain industry comment. In formulating your responses, please keep in mind that material changes in the final standard will be accompanied by a transition plan to provide for an orderly implementation of the final standard.

The performance requirements relative to Non-Consequential Loss of Load for the following events enumerated in the two tables can be considered more stringent than the existing TPL standards. Furthermore, the proposed standard is based on an assumption that performance requirements for EHV facilities should be more stringent than for lower voltage facilities.

Do you agree that Non-Consequential Loss of Load should not be permitted for the following events? If you disagree, please provide a reason for your disagreement.

Event	Agree or Disagree	Comment
Q20. P2-1: Loss of bus section (SLG for stability) above 300 kV	☐Agree. ☒Do not agree.	This loss is currently distinguished from other single contingencies because of its lower probability of occurrence and a more stringent performance requirement than currently exists is not warranted.
Q21. P5-1: For facilities above 300 kV, loss of a Transmission circuit followed by System adjustment[1] followed by loss of another Transmission circuit	☐Agree. ☒Do not agree.	Systems have been designed such that Multiple Contingency events (N-2) may result in Planned/Controlled Loss of Demand or Curtailed Firm Transfers. Such Non-Consequential Load Loss should be assessed for severity on a risk vs. consequence basis. In addition, by not allowing loss of non-consequential load, the system may remain in a less secure state or condition.
Q22. P5-2: For facilities above 300 kV, loss of a Transmission circuit followed by System adjustment followed by loss of a transformer with low side voltage rating above 300 kV	☐Agree. ☒Do not agree.	Systems have been designed such that Multiple Contingency events (N-2) may result in Planned/Controlled Loss of Demand or Curtailed Firm Transfers. Such Non-Consequential Load Loss should be assessed for severity on a risk vs. consequence basis. In addition, by not allowing loss of non-consequential load, the system may remain in a less secure state or condition.
Q23. P5-3: For facilities above 300 kV, loss of a transformer with low side voltage rating above 300 kV followed by System adjustment followed by loss of another transformer	☐Agree. ☒Do not agree.	Systems have been designed such that Multiple Contingency events (N-2) may result in Planned/Controlled Loss of Demand or Curtailed Firm Transfers. Such Non-Consequential Load Loss should be assessed for severity on a risk vs. consequence basis. In addition, by not allowing loss of non-consequential load, the system may remain in a less secure state or condition.

[1]System adjustment can be manual or automatic.

The proposed standard is based on an assumption that performance requirements for non-bus tie EHV breakers should be distinguished from other breakers. Do you agree that Non-Consequential Loss of Load should not be permitted for this event?

Q24. Loss of non-bus tie breaker (above 300 kV) due to internal fault

Yes ☐ No ☒
Comment: This loss is currently distinguished from other single contingencies because of its lower probability of occurrence and a more stringent performance requirement than currently exists is not warranted.

The proposed standard is based on an assumption that performance requirements for non-bus tie EHV breakers should be distinguished from other breakers and that performance requirements for EHV facilities should be more stringent than for lower voltage facilities. Do you agree that Non-Consequential Loss of Load should not be permitted for this event?

Q25. P3-1: Loss of (SLG for stability) either a generator, a Transmission circuit, a transformer, or a bus and a stuck non-bus tie breaker (above 300 kV)

Yes ☐ No ☒
Comment: Systems have been designed such that Multiple Contingency events (N-2) above 300 kV may result in Planned/Controlled Loss of Demand or Curtailed Firm Transfers. Such Non-Consequential Load Loss should be assessed for severity on a risk vs. consequence basis. In addition, by not allowing loss of non-consequential load, the system may remain in a less secure state or condition. This new category P3-1 is essentially a replacement for Category C5-9 except the only protection element failure to be considered is the failure of a circuit breaker to open. This definition eliminates the need to examine failure of the relay to operate which in many cases has a more serious impact on grid reliability.

The proposed standard is based on an assumption that the following events are relatively high probability events and, therefore, Non-Consequential Loss of Load should not be permitted. Do you agree? If you disagree, please provide a reason for your disagreement.

Event	Agree or Disagree	Comment
Q26. P4-1: Loss of a Generator followed by System adjustment[1] followed by loss of another Generator	☐Agree. ☒Do not agree.	Systems should be planned such that the loss of a generator, followed by System adjustment, followed by the loss of another generator would not result in Non-consequential Load Loss, and equipment ratings would not be exceeded etc. However, the initial state of the system must be clarified in all performance table scenarios (including P4-1).If the Base Case contained known planned outages of generating units, as implied by the requirement R1.4, then the standard performance requirements could be interpreted to require planning for all G-1-1-1 events.
Q27. P4-2: Loss of a generator followed by a	☐Agree.	Systems should be planned such that the loss of a generator, followed by

[1] System adjustment can be manual or automatic

System adjustment followed by the loss of a monopolar DC line	☒Do not agree.	System adjustment, followed by the loss of another generator would not result in Non-consequential Load Loss, and equipment ratings would not be exceeded etc. However, the initial state of the system must be clarified in all performance table scenarios (including P4-1).If the Base Case contained known planned outages of generating units, as implied by the requirement R1.4, then the standard performance requirements could be interpreted to require planning for all G-1-1-1 events.
Q28. P4-3: Loss of a generator followed by System adjustment followed by loss of a Transmission circuit	☐Agree. ☒Do not agree.	Systems should be planned such that the loss of a generator, followed by System adjustment, followed by the loss of another generator would not result in Non-consequential Load Loss, and equipment ratings would not be exceeded etc. However, the initial state of the system must be clarified in all performance table scenarios (including P4-1).If the Base Case contained known planned outages of generating units, as implied by the requirement R1.4, then the standard performance requirements could be interpreted to require planning for all G-1-1-1 events.
Q29. P4-4: Loss of a generator followed by System adjustment followed by loss of a transformer with low side voltage rating above 300 kV	☐Agree. ☒Do not agree.	Systems should be planned such that the loss of a generator, followed by System adjustment, followed by the loss of another generator would not result in Non-consequential Load Loss, and equipment ratings would not be exceeded etc. However, the initial state of the system must be clarified in all performance table scenarios (including P4-1).If the Base Case contained known planned outages of generating units, as implied by the requirement R1.4, then the standard performance requirements could be interpreted to require planning for all G-1-1-1 events.

The performance requirement for the following event may be considered less stringent than the existing TPL Standards — P2-3: Loss of a single pole of a DC line. Interruption of firm transactions (without Loss of firm Load) if the transaction is dependent on the faulted DC line is now allowed for this initiating event/Contingency.

Q30. Do you agree that interruption of any firm transfers that are dependent on the outaged DC line that is taken out of service should be permitted?

Yes ☐ No ☒

Comment: The proposed standard does not distinguish between asynchronous DC ties and the more common parallel connected DC tie. With an asynchronous DC tie, the transfer is lost with the tie. With a parallel DC tie, the transfer will be shifted to the parallel AC system, therefore, AC lines should have the same performance criteria as DC lines.

E. Stability

Q31. The proposed standard is based on an assumption that steady state analysis and stability analysis are different from each other and that therefore, two tables of Contingencies and performance requirements were needed. It is also based on an assumption that stability study requirements should be clearly separated from the steady state study requirements. Do you agree with the action taken in separating stability analysis from steady state analysis? If not, please explain.

Yes ☐ No ☒

Comment: The separation of steady state and dynamic response analysis requirements into two tables (with different contingencies) is inferior to the analysis requirements outlined in Table 1 of the existing TPL Standard. The structure of Table 1 reinforces the requirement for grid stability and maintaining the grid within applicable limits for Category B and C contingencies. Dynamic simulations of Category B and C contingencies that demonstrate grid stability should be followed up with post transient power flow analysis to assess voltage and thermal limits.

Q32. The SDT has added requirements for plant stability studies and has drawn a distinction in these studies from System stability studies. Do you agree with this approach? If not, please explain.

Yes ☐ No ☒

Comment: There should be no such distinction. All stability studies must meet the Performance Requirements for Planning Events in Table 2 - Stability Performance. If there were different Performance Requirements then the distinction may be warranted. However system stability studies should be sufficient and not warrant additional work.

Q33. The existing TPL-004-0 standard has a requirement to consider the Loss of all generating units at a plant, but it was not clear whether this requirement should apply to stability studies. The SDT did not include this requirement in the stability table, because it is hard to envision a condition when all units would trip simultaneously within the timeframe of a stability simulation. Do you think this condition should be required in stability analysis of extreme events? If not, please explain.

Yes ☐ No ☒

Comment: The question does not match what is included the Extreme Events section of Table 2. Loss of all generating units at a plant should be considered in the Steady State Performance - Extreme Events but not in the Stability Performance - Extreme Events because of the very low probability of the event ocurring within the timeframe of the Stability simulation. Therefore, the performance requirement number 9 for Extreme Events in Table 2 - Stability Performance should be deleted.

Q34. There are an increasing number of events with slow voltage recovery after faults on the Transmission System. The dynamic behavior of induction motor loads is a major factor in this phenomenon. The proposed standard therefore requires that the load

model for stability studies of peak Load conditions include the dynamic effects of induction motors. Do you agree with this requirement? If not, please explain?

Yes ☐ No ☒

Comment: The issue of delayed voltage recovery is a special phenomenon that can occur in some large urban areas under peak conditions. The modeling of the delayed voltage recovery response is considerably more complex than simply representing induction motor effects. The scope of the delayed voltage recovery issue is extremely limited and its effect on the grid is generally self correcting due to automatic disconnection of the affected air conditioners. While improvements in the accuracy of load models used for the study of grid dynamic response are desireable, this area is not suitable for compliance enforcement. Requirements for specific types of load models are not appropriate in the TPL standard.

Q35. What type of manual or automatic adjustments of generators should be allowed for single and multiple Contingencies?

Comment: Manual and automatic adjustment (increase or decrease) of Var output and manual and automatic tripping or reduction of overall MW output of generators should be allowed.

F. Generation Runback and Tripping

The SDT has discussed the automatic and manual readjustments of generators that should be permissible for single contingencies and multiple contingencies. The existing TPL-001-0 through TPL-004-0 standards through footnote (a) of Table I could include emergency ratings applicable for short durations as required to permit operating steps necessary to maintain system control. The footnote is silent about allowable generation adjustments in response to the Category B events. However, it does indicate that system adjustments are permitted to prepare for the next Contingency. These system adjustments could include manual or automatic adjustments involving generation.

The SDT has learned that many transmission owners use System Protection Systems (SPS) or Remedial Action Schemes (RAS) to trip generation for single and multiple Contingency outage events to prevent overloads, low voltage, and instability in the Interconnected Transmission network for N-1 and N-2 events. In some cases, the RAS are used to prepare for the next Contingency; but in some cases, the RAS are used to simultaneously avoid exceeding emergency ratings.

Q36. The proposed standard allows generation runback after the disturbance that causes a single Contingency (or due to a single Contingency outage) to move the Interconnected Transmission System from an emergency state (within emergency ratings) to a normal state (within normal ratings), assuming that the disturbance does not result in instability? Do you agree? If not, please explain.

Yes ☒ No ☐

Comment:

Q37. Since emergency ratings are thermal ratings, should this standard allow an automatic generation runback scheme (that is initiated immediately after the disturbance causing the single Contingency) to prevent thermal overloads (assuming that the disturbance does not result in instability)? If yes, what are the conditions that must be met in order to allow such a runback scheme to meet the System performance criteria for single Contingencies? Please explain the reason for your answer.

Yes ☒ No ☐
Comment: At a minimum the emergency ratings should allow sufficient time for the runback scheme to operate reliably.

The standard drafting team has considered that RAS or SPS may be allowable under certain situations for single Contingencies, but proposes that their use should be limited.

Q38. Do you agree that RAS or SPS may be allowed for single Contingencies? If not, please explain.

Yes ☒ No ☐
Comment: The performance requirements for SPS are appropriately stated in standards PRC-012-0 and PRC-015-0. If the proposed TPL standard is adopted the contingency references in PRC-012-0 would need to be updated.

Q39. Please describe the limitations that you believe should be placed on the use of RAS or SPS for single Contingency events.

Comment: The performance requirements for SPS are appropriately stated in standards PRC-012-0 and PRC-015-0. If the proposed TPL standard is adopted the contingency references in PRC-012-0 would need to be updated.

Q40. When RAS or SPS are allowed, what conditions should be met when these systems are used in system adjustments to meet performance requirements?

Comment: The performance requirements for SPS are appropriately stated in standards PRC-012-0 and PRC-015-0. If the proposed TPL standard is adopted the contingency references in PRC-012-0 would need to be updated.

G. General Questions

Q41. If you are aware of any regional variances that would be required as a result of these standards, please identify them here.

Yes ☐ No ☒
Comment: No, if the comments to the above questions are incorporated. The FRCC system is a peninsular system having only one interface with the rest of the interconnected NERC system, and has historically demonstrated exceptionally high reliability with no events in recent history cascading beyond the FRCC system. The adequacy of the existing TPL standards as they apply to the FRCC System have been extensively documented.

Q42. If you are aware of any conflicts between the proposed standards and any regulatory function, rule order, tariff, rate schedule, legislative requirement or agreement, please identify them here.

Yes ☐ No ☒
Comment:

Q43. Do you have any other questions or concerns with the proposed standard that have not been addressed? If yes, please explain.

Yes ☒ No ☐

Comment: General Comment: NERC Standards TPL 001-0 through TPL 004-0 are approved standards that only required modifications pursuant to FERC Order 693. In this proposed draft standard TPL 001-1 the Standard Drafting Team (SDT) has far exceeded the recommendations suggested by FERC in that Order as well as created unnecessary confusion. FPL believes that the SDT's decision to combine NERC Standards TPL 001-0 through TPL 004-0 into one standard was not a specific requirement by FERC Order 693 and may not have been a good decision by the STD, therefore it should be reconsidered after reviewing all of the comments. At a minimun, the team should somehow clearly demonstrate changes in the standard's wording and required performance levels as compared to the existing standards. The new proposed draft of TPL-001 creates unnecessary confusion and interpretation of new ambiguous language, which is inconsistant with the stated objectives, instead of providing clarity to the standards. As an example of how to provide additional clarity, the existing standards have unnecessary redundancy in the tables, for example, it would have been nice to clean up (clarify) the tables such that the table for TPL-001 would only contain the performance criteria for Category A, with footnotes only applicable to that category, clarified as directed by FERC in Order 693. Similarly, TPL-002 would only contain performance criteria for Category B, and so on.

In addition to combining the standards, the SDT has significantly changed contingency specifications and required performance levels. In many cases the changes represent a very significant increase in required performance standards that will require unjustified major capital expenditures and/or reductions in ATC. This also could have an adverse impact on commercial transactions. In other cases, the performance criteria are not clearly defined, such as the timing between multiple contingencies, and the level of readiness of the system after Planning Events. The benefits from the additional performance requirements have not been identified in the proposed standard. Is there a planned phased in approachto move from the existing standard to the new proposed standards. If so, what is it?

Finally, the SDT has chosen to eliminate the footnotes in the current standards, contrary to the direction of FERC in Order 693 to "clarify" the footnotes. The purpose of the footnotes is to further explain terms in the tables, provide guidance in interpreting the expected performance criteria, and specify any exceptions to the criteria. Footnotes also serve the purpose of keeping the standard concise by eliminating repetitiveness.

Specific comments on the Draft Standard
Performance Criteria
The performance requirements table should clearly define what the initial state of the system is assumed to be before any Planning Events, and what the state of the system is assumed to be after the Planning Event. For example, P1 (single contingency) events: assuming that the system is to be compliant, the state of the system prior to the event must be "secure" such that the event could occur and there is no interruption of firm transfer or loss of load, Equipment Ratings are not exceeded, System steady state voltages and post-transient voltage deviation are within acceptable limits. However, the system is not as it was before the event. The system could be described as "normal" but perhaps not "secure". If the requirement is that the system must also be "secure" after the event, then the standard must clarify what is allowed for "system adjustments" after the first Planning event to prepare for the next. FERC Order 693 directed the ERO to modify the second sentence of footnote (b) to clarify that manual system adjustments other than shedding of firm load or curtailment of firm transfers are permitted to return the system to a normal operating state after the first contingency. However, in order to bring the system to a secure state, as is necessary for the second contingency of a

category C3 or C5 event, footnote (c) allows curtailment of firm transfers, and FERC Order 693 only required footnote (c) to be clarify the term "controlled load interruption", leaving the curtailment language intact. The implication of this interpretation is critical to peninsular Florida. The Category B loss of one 500 kV line from Florida to Georgia is sustainable, such that the system is "normal" after the event. However, in order to be prepared for the next contingency, (the loss of the second 500 kV line), firm transfers must be curtailed. (Interruption of Firm Transfer) Without the ability to curtail firm transfers, a "super-firm" priority of service is created, which is unjustified.

Comments on New Performance Tables:
The draft TPL standard represents a major change in the Table 1 contingency definitions and required performance levels.

Table 1 Contingencies C1 and C2 are being moved to the single contingency category. While C1 and C2 represent single element outages, their probability of occurrence is much lower than the other Category B contingencies and they do not belong in the single contingency performance requirements group.

Footnote (b) which permits, as a limited exception in unique circumstances with a sound rational basis, some localized load reduction for single contingencies, has been removed. This is a very significant change for some utilities. Footnote (c) which permits load shedding and curtailment of firm transfers has been removed from C1, C2 and most of C3. This is a very significant increase in required performance level that is not justified.

The "applicable rating" for loading and voltages in Table 1 has been removed so that essentially, the same ratings and voltage restrictions apply to both B and C contingencies. Some utilities plan to a normal rating for single contingencies but will allow a higher short term rating for Category C events. This practice will apparently be disallowed.

Several new Category D "extreme events" have been added which greatly expand the scope and complexity of Category D studies. These are (1) any two unrelated single element outages and (3) wide area events a. through h. These represent a major increase in the scope of Category D studies and probably a doubling of required SWG studies.
The fault with protection element failure categories D1 through D4 have been substantially changed to eliminate analysis of relay failure contingencies. The philosophy contained in the existing TPL-004 standard is that faults with a protection failure should be evaluated whether that failure is a circuit breaker, relay or CT; the proposed standard restricts the analysis to breaker failure.

300 kV Threshold Performance Level
The TPL-001-1 draft sets a threshold of higher performance to facilities above 300 kV than previously established in the existing standard. We do not agree that such a threshold is necessary or warranted nor have they been justified. Requirements which are more stringent for these facilities may wrongly influence decisions on project alternatives in favor of facilities with less stringent requirements.

DC Line Performance Requirement
The TPL-001-1 draft sets a lower performance requirement for the loss of a single pole of a DC line than in the existing standard by allowing interruption of firm transfer if the transfer is deemed to be dependent on the outaged line. Firm transfers are also dependent upon AC lines. The proposed standard does not distinguish between

asynchronous DC ties and the more common parallel connected DC tie. With an asynchronous DC tie, the transfer is lost with the tie. With a parallel DC tie, the transfer will be shifted to the parallel AC system and should have the same performance requirements. We do not agree that such an exception for DC lines is necessary or warranted. The decision in selecting DC vs. AC in transmission lines has traditionally been based on the break-even cost and performance of the two alternatives. The lower performance requirement may wrongly influence decisions on project alternatives in favor of DC facilities with less stringent requirements.

Distinction Between Committed and Proposed Projects:
Models cannot discern the difference between a "committed" project, and a "proposed" project in a performance analysis. The standard should instead set criteria for when models can be relied upon for planning purposes such that changes to the future plan will not have an impact on reliability. The intent of Requirements R2.7.3 and R2.7.4 should be combined and added into R2.7.1.1. Rather than adding the additional requirement to document a criteria, the requirement should be that in the Near-Term Planning Horizon, projects cannot be removed (or modified) without demonstrating that the revised plan meets performance criteria. In addition, the requirement in R2.7.1.1 to supply a "project initiation date" is ambiguous. What will constitute "project initiation" …construction start date? …Engineering complete date? …Land procurement date? Funds allocated date (budgeted)? Suggested wording for R2.7.1.1. "Transmission and generation improvement projects for the Near-Term Transmission Planning Horizon, shall have in-service dates provided, and shall not have in-service dates changed, or be removed from planning models, without documentation to show that the revised plan meets performance requirements." In addition to the concerns mentioned above, how are delays in meeting project in-service dates, which are not in the direct control of the Transmission Owner, caused by siting and Right of Way difficulties (public outcry, exercising eminent domain, court process, etc) addressed? The standard needs to have provisions to recognize these types of issues allowing a Transmission Owner to be compliant as long as he is using due diligence to overcome these types of delays.

Analysis of Relay Protection Failures:
This draft of the TPL standard ignores studies required for analysis of relay protection failures. There is a widespread misconception that studying breaker failure scenarios covers for relay protection failures. This is a false assumption. Typical delayed clearing for a stuck breaker is in the order of 8 to 20 cycles. This is accomplished by the local relay system sensing the stuck breaker and tripping the adjacent elements. However in the case of a protective relay failure the fault must usually be cleared remotely by tripping all lines connected to the station. Typical delays for a relay failure can easily be greater than 30 cycles. Where as breaker failure action just trips a couple of adjoining elements and leaves the rest of the station intact. A typical example of this difference is to assume a bus fault. For breaker failure, all bus breakers except the stuck one would trip. The breaker failure relay scheme then would time out and trip the adjoining breaker and the remote end of the adjoining line would trip. This could all happen in less than 20 cycles. Now consider a bus fault with the differential relay failed. The local relays don't sense the fault because they have failed, nor does the local breaker failure scheme activate because no local detection has occurred. The only way to clear this fault is to trip all lines from the remote terminals. This may take 30 cycles or more. With breaker failure, the bus and one line trips in about 20 cycles. With relay failure, all lines trip remotely isolating the substation in about 30 cycles. Both scenarios must be studied with relay failure being the worse case. Generally, different solutions are required to address relay failure verses breaker failure.

Load Modeling Requirements:
The proposed TPL Standard contains numerous references to load modeling. The goal of improving and verifying the load model is worthwhile but is not appropriate for the TPL standards. Assessment of load model accuracy is best accomplished through detailed analysis of grid disturbance events. The main difficulties in accomplishing this are (1) grid events that significant reduce transmission voltages throughout a load area are infrequently occurring and (2) the process of Recreating the event through simulation studies is extremely complex and time consuming. While these efforts should be encouraged they should remain a RRO prerogative.

R1.1.1 Use of expected Load mix based on the actual or expected aggregate mix of industrial, commercial, and residential Loads. – This requirement is not justified as the load model may be developed through disturbance analysis rather than load type synthesis by customer class. Some LSE's may have great difficulties in creating load forecasts based on customer class. Load forecasting requirements are adequately addressed in the existing MOD standards and do not belong in the proposed TPL standard.

R1.2. Load models with supporting rationale that include power factor data that may be based on historical System performance, validated by measurement during stressed System conditions, or documented Transmission planning area requirements. This requirement is not appropriate fot the TPL standarsds.

R2.4.1. System peak Load for one of the five years. For peak System Load levels, the Load model shall include the dynamic effects of induction motor Loads.

Specific types of load models should not be required in this standard.

Short Circuit Requirements: The new TPL standard also contains numerous references to short circuit analysis, which are new requirements that expand the TPL standards, but without specific testing or performance criteria. Evidence that short circuit studies have been performed is currently required in the existing FAC-002-0 Standard. Since the primary concern is the appropriate sizing of equipment and the prevention of equipment damage as opposed to overall grid reliability, we do not see the need for a set of requirements within the proposed TPL standard for short circuit studies.

Given the aforementioned issues, we believe the proposed TPL standard is inferior to the existing Board approved TPL Standards, creates unnecessary confusion, and will require many iterations of industry comment and revision. As an intermediate approach, we would strongly urge the Standard Drafting Team that the existing TPL standards be modified to respond to FERC Order 693 directives, clarify any ambiguities, and not pursue the proposed new standard any further. This would bring a much needed part of the Reliability Standards into the framework of mandatory enforcement and provide guidance on this longer term effort to improve the TPL standards.

NERC
NORTH AMERICAN ELECTRIC RELIABILITY CORPORATION

Comment Form for First Draft of TPL-001-1 — Transmission System Planning Performance Requirements

Please use this form to submit comments on the proposed draft of TPL-001-1. Comments must be submitted by **Friday, October 26, 2007**. You may submit the completed form by e-mail to sarcomm@nerc.net with the words "TPL-001 Draft 1" in the subject line. If you have questions please contact Ed Dobrowolski at ed.dobrowolksi@nerc.net or by telephone at 609-947-3673.

Individual Commenter Information **(Complete this page for comments from one organization or individual.)**		
Name:		
Organization:		
Telephone:		
E-mail:		
NERC Region (check all Regions in which your company operates)		**Registered Ballot Body Segment (check all industry segments in which your company is registered)**
☐ **ERCOT**	☐	1 — Transmission Owners
☐ **FRCC**	☐	2 — RTOs and ISOs
☐ **MRO**	☐	3 — Load-serving Entities
☐ **NPCC**	☐	4 — Transmission-dependent Utilities
☐ **RFC**	☐	5 — Electric Generators
☐ **SERC**	☐	6 — Electricity Brokers, Aggregators, and Marketers
☐ **SPP**	☐	7 — Large Electricity End Users
☐ **WECC**	☐	8 — Small Electricity End Users
☐ **NA – Not Applicable**	☐	9 — Federal, State, Provincial Regulatory or other Government Entities
	☐	10 — Regional Reliability Organizations and Regional Entities

Group Comments (Complete this page if comments are from a group.)

Group Name: **FRCC**

Lead Contact: **Vicente Ordax**

Contact Organization: **FRCC**

Contact Segment: **10**

Contact Telephone: **813-207-7988**

Contact E-mail: **vordax@frcc.com**

Additional Member Name	Additional Member Organization	Region*	Segment*
W. R. Schoneck	Florida Power & Light Company	**FRCC**	3
Earl Fair	Gainesville Regional Utilities	FRCC	1
Keith Mutters	Orlando Utilities Commission	FRCC	3
Donald Gilbert	JEA	FRCC	5
Gary Brinkworth	City of Tallahassee	FRCC	1
C. Martin Mennes	Florida Power & Light Company	FRCC	1
Robert A. Birch	Florida Power & Light Company	FRCC	5
John W. Shaffer	Florida Power & Light Company	FRCC	3
Ronald L. Donahey	Tampa Electric Company	FRCC	3
A. L. Barredo	Florida Power & Light Company	FRCC	3
Lee Schuster	Progress Energy Florida	FRCC	3
Bart White	Progress Energy Florida	FRCC	3
Paul Elwing	Lakeland Electric	FRCC	5
Richard Gilbert	Lakeland Electric	FRCC	3
Larry E. Watt	Lakeland Electric	FRCC	1
Paul Shipps	Lakeland Electric	FRCC	6
Thomas J. Szelistowski	Tampa Electric Company	FRCC	1
Fred McNeill	Florida Reliability Coordinating Council	FRCC	10
Ted E. Hobson	JEA	FRCC	1
Gary Baker	JEA	FRCC	3

*If more than one Region or Segment applies, please list all that apply. Regional acronyms and segment numbers are shown on prior page.

Background

The purpose of this standard is to establish Transmission System planning performance requirements within the planning horizon to develop a Bulk Electric System that will operate reliably over a broad spectrum of System conditions and following a wide range of probable Contingencies. This standard will replace TPL-001-0, TPL-002-0, TPL-003-0, and TPL-004-0. The standard drafting team has not yet addressed TPL-005-0 and TPL-006-0, but will address these two standards during the next phase of the drafting process.

The major objectives of the standard drafting team are to:

1) Ensure the standard is complete and the requirements are set at an appropriate level to ensure reliability (Not Least Common Denominator)
2) Ensure that the standard is enforceable by having clearly defined requirements with unambiguous language
3) Address the issues raised by FERC Order 693, 890, and other applicable orders
4) Address the issues raised in the original Standards Authorization Request (SAR) and the Supplemental SAR.

The standard drafting team did not attempt to edit the existing standards but rather chose to write one standard that addresses all aspects of transmission planning in the existing TPL-001-0, TPL-002-0, TPL-003-0, and TPL-004-0. The standard drafting team organized the new standard in the following sections:

R1 – Modeling requirements
R2 – Assessment and Corrective Plan requirements
R3 – Steady State Analysis requirements
R4 – Stability Analysis requirements
R5 – Coordination requirements

The standard drafting team determined that the requirements and analysis for Steady State are different from those for stability. As such, the standard drafting team separated the analysis requirements and created two performance requirement tables.

The standard drafting team recognizes that this draft standard is a starting point for industry input into the standard and that there is still a lot of work required to complete the process. The standard drafting team has made many changes to clarify requirements, add requirements, and make some of the performance requirements stricter. The standard drafting team has not addressed Measures, Risk Factors, Violation Severity Factors, or Time Horizons at this time. These will be addressed when the standard drafting team has better defined the requirements of the standard.

For questions where you agree with the standard drafting team, please state that you agree and if available, please provide supporting documentation. If you disagree with the standard drafting team, please explain why you disagree and provide data to support your position, such as outage data or analysis. If you believe that we have made a performance requirement too strict please provide supporting documentation. If applicable, please include the approximate cost in man-hours for additional studies and/or cost in $Millions for additional transmission investment to meet the new requirements or the stricter requirements. If you believe that the standard should be stricter, please provide the

rationale along with any supporting data, including existing practices, cost estimates or additional analysis.

To improve the standard, the standard drafting team would appreciate responses to as many of these questions as you can answer.

A. New Definitions

Many of the concerns about the existing TPL standards come from the fact that a number of generally understood concepts are embedded in undefined terms, tables, and footnotes. To clarify some of these concerns, the standard drafting team is proposing new definitions. Please indicate whether you agree with the following proposed definitions and provide proposed changes to the definitions if you disagree:

Definition	**Agree or Disagree**
Q1. **Base Case**: Computer representation of the projected initial or starting Transmission System conditions for a specific point in time. Each base case reflects the forecasted Load at each bus (or node) on the interconnected Transmission System, the transmission facilities which deliver the generation and reactive resources to the connected Load, and the generation dispatch including firm transaction obligations assumed to supply the connected Load. The models also reflect facility ratings in accordance with FAC-008 & FAC-009.	☐Agree. ☒Do not agree.
Q1. **Comment: "Computer" is not appropriate. Replace with "Data model" or "Database model". The last sentence is not clear as to what type of ratings (i.e., normal, short-term emergency, long-term emergency, etc.). Suggest removing sentence completely or rewording as follows: "... in accordance with the documented methodologies required by FAC-008 for each Transmission Owner and Generator Owner."**	
Q2. **Consequential Load Loss:** Load that is no longer served because it is directly connected to an element(s) that is removed from service due to fault clearing action or mis-operation.	☐Agree. ☒Do not agree.
Q2. **Comment: Need to clarify what constitues an element (e.g., breaker-to-breaker, line segment to line segment, transformer or capacitor bank)**	
Q3. **Extreme Events:** Events which are more severe than Planning Events and have a low probability of occurrence.	☐Agree. ☒Do not agree.
Q3. **Comment: Reword as follows: "Events which are more severe and have a lower probability of occurrence than planning events."**	
Q4. **Long-Term Transmission Planning Horizon:** Transmission planning period that covers years six through ten or beyond.	☐Agree. ☒Do not agree.
Q4. **Comment: The definition does not have a reference year when the counting starts. Add the following to the end of the sentence: "… from the current study year."**	
Q5. **Near-Term Transmission Planning Horizon:** Transmission planning period that covers years One through five.	☒Agree.

	☐Do not agree.
Q5. **Comment:**	
Q6. **Non-Consequential Load Loss:** Load loss other than Consequential Load Loss. For example, Load loss that occurs through manual (operator initiated) or automatic operations such as under-voltage Load shedding, under-frequency Load shedding, or Special Protection Systems.	☐Agree. ☒Do not agree.
Q6. **Comment: Reword as follows: "Firm load loss other than Consequential Load Loss. For example, Load loss that occurs through manual (operator initiated) or automatic operations such as under-voltage Load shedding, under-frequency Load shedding, or Special Protection Systems, excluding (arranged or contracted) curtailments, DSM, and voltage reduction."**	
Q7. **Planning Assessment:** Documented evaluation of future Bulk Electric System needs by the use of performance studies that cover a range of assumptions regarding system conditions, time frames, future plans including capital reinforcements and operating procedures and other factors, such as asset conditions and age.	☐Agree. ☒Do not agree.
Q7. **Comment: Last part of the last sentence should be removed "… and other factors, such as asset conditions and age" does not make sense for planning studies. Equipment condition and age are maintenance issues not transmission planning issues.**	
Q8. **Planning Events:** Events which require Transmission system performance requirements to be met.	☒Agree. ☐Do not agree.
Q8. **Comment:**	
Q9. **Plant Stability Study:** Study of an individual plant's Stability for various Contingencies in the vicinity of the plant; concerned with the effect on the System of the generating units' loss of synchronism and the damping of the generating units' power oscillations.	☐Agree. ☒Do not agree.
Q9. **Comment: There should be no distinction between Plant Stability and System Stability. All stability studies must meet the Performance Requirements for Planning Events in Table 2 - Stability Performance. If there were different Performance Requirements then the distinction would be warranted.**	
Q10. **System Stability Study:** Study of the System or portions of the System to ensure that angular Stability is maintained, inter-area power oscillations are damped, and voltages during the dynamic simulation stay within acceptable performance limits.	☐Agree. ☒Do not agree.
Q10. **Comment: Dynamic voltage ratings are most often used as a proxy for lack of relay models or other modeling limitations. The definition should not address performance and should only seek to define the term. Reword as follows: "Study of the System or portions of the System to assess angular Stability and inter-area power oscillations."**	
Q11. **Year One:** The first year that a Transmission Planner is responsible for studying. This is further defined as the planning window that begins the next calendar year from the time the Transmission Planner submits their annual studies. Analysis conducted for time horizons within the calendar year from the	☐Agree. ☒Do not agree.

study publication are assumed to be conducted under the auspices of Operations Planning.	
Q11. **Comment: The last sentence of this definition is not included in the Standard and should be deleted.**	

B. Sensitivity Studies

The draft planning standard includes the requirement, as specified in FERC Order 693, that planning decisions be based on a portfolio of analyses. In section 12.a.ii "Sensitivity studies and critical system conditions" FERC provided direction to consider a full range of variables considered to be significant that need to be assessed and documentation provided that explains the rationale for the selection of variables assessed.

In addition to the firm obligation scenario, the portfolio of analyses should be supplemented to include information from sensitivity analysis. The sensitivity analysis should be developed using additional cases that simulate reasonably stressed system conditions. The standard drafting team has included several parameters that can be varied to create the requisite sensitivity case(s). The draft standards specify that the sensitivities reflect one or more of the following conditions and that documentation be provided explaining the rationale for selecting the sensitivity(ies) employed. The parameters that should be varied include:

- Higher or lower Load forecasts from the Base Case with variability of Load/demand and Load power factors due to season, weather, or time of day.
- Modification of expected transfers.
- Unavailability of long lead time facilities.
- Variability and outages of Reactive Resources.
- Generation additions, retirements, or other dispatch scenarios.
- Decreased effectiveness of controllable Loads and Demand Side Management.
- Modification of planned Transmission outages

To help focus industry discussion, please respond to the questions below:

Q12. Should the standard provide more specific direction regarding the number of sensitivity cases that need to be developed?

Yes ☐ No ☒

Comment: Not all Regions' concerns are the same and therefore each Region should determine which sensitivities are appropriate.

Q13. Should the standard specify the required changes, such as changes in expected transfers, load forecasts, generation patterns, etc., from the study case to be considered a "reasonably stressed" case?

Yes ☐ No ☒

Comment: The Transmission Planner needs the flexibility to define what are considered "reasonably stressed" cases for their respective systems. This would not a be a proper application of a one size fits all definition.

Q14. The SDT proposes to require the use of sensitivity studies for Near-Term Transmission System Planning Horizon stability analysis. Do you concur with the use of sensitivity analysis in dynamic studies?

Yes ☐ No ☒

Comment: The standards require near term base case cases to be studied for a broad range of planning and extreme events. The sensitivity analysis requirements contained R.2.4.3. will essentially require every dynamic simulation to be run at least twice regardless of whether or not there is any engineering insight to be gained. While improved understanding may result from sensitivity analysis of certain key event scenarios, the overall benefits of the sensitivity study requirements contained in section R.2.4.3 do not justify the huge increase in engineering effort to conduct and document these simulations with minimum to no increase in reliability.

Q15. The draft TPL standard does not require the use of sensitivity studies for the Long-Term Transmission System Planning Horizon (year six and beyond) studies. Do you concur with this approach or should there be some level of sensitivity analysis required for the long-term period?

Yes ☒ No ☐
Comment:

C. Corrective Action Plans

Requirement R2.7 of the standard states that when analysis shows that the performance requirements in Table 1 and Table 2 are not fully met, a Corrective Action Plan that utilizes all or some of the Transmission System enhancements, generation additions, DSM, new technologies and Operating Procedures shall be included in the Planning Assessment. This Corrective Action Plan should ensure that upon its implementation the identified system deficiencies will be corrected so that the performance requirements in Table 1 and Table 2 will be met. Furthermore, studies included in the Planning Assessment should demonstrate that this is indeed the case.

Q16. Requirement R2.7.1: Such Corrective Action Plans shall "Identify System deficiencies and the associated actions needed to achieve required System performance including Transmission and generation improvements, DSM, new technologies, or Operating Procedures including the duration of Interim Operating Procedures". System deficiencies may be corrected using an integrated plan, i.e., an optimal mix of Transmission, generation, DSM and Operating Procedures. Should DSM be considered in conjunction with other measures in developing Corrective Action Plans? If yes, please comment on how the impact of DSM should be included.

Yes ☒ No ☐
Comment: If DSM is included as part of an integrated Corrective Action plan, then the impact of DSM should be included by specifying the location and expected quantity of DSM that will mitigate a system deficiency. Should be permitted only if the tariff allows it and the magnitude is appropriately identified at each load bus. DSM response is limited to transmission provider's territorial customers. The use of DSM, whether exclusively or in conjunction with other measures, is an acceptable operating procedure for use in a Corrective Action Plan, as long as the Transmission Owner demonstrates availability and accuracy of DSM data and its viability as an operating procedure for each applicable scenario.

Q17. Requirement R2.7.2: Such Corrective Action Plans shall "Be added to study cases and the cases re-tested to show that the System with planned additions meets the performance requirements in the tables". Should new studies, including the facilities comprising the Corrective Action Plan, be performed to assess System normal performance and Contingency response for conditions that previously resulted in the System deficiencies (without the planned additions) and also demonstrate that the changes would not result in inadvertent negative impacts on the System. If you "agree", please comment on how a study area should be determined.

Yes ☐ No ☒

Comment: Incremental benefits do not justify the magnitude of additional studies. Corrective Action plans should be tested, but not as a new study with all of the Corrective Action Plans included simultaneously. Suggest replacing with language from TPL-002-0 R2..

Q18. Requirement R2.7.3: The standard calls for a differentiation between committed and proposed projects. Do you agree that they should be treated separately? If not, please state why not.

Yes ☐ No ☒

Comment: All projects should be called "Planned" projects. There is no distinction in a model between committed and proposed projects that would treat them differently. The standard should instead set criteria for when models can be relied upon for planning purposes such that changes to the future plan will not have an impact on reliability. The intent of Requirements R2.7.3 and R2.7.4 should be combined and added into R2.7.1.1. Rather than adding the additional requirement to document a criteria, the requirement should be that in the Near-Term Planning Horizon, projects cannot be removed (or modified) without demonstrating that the revised plan meets performance criteria. In addition, the requirement in R2.7.1.1 to supply a "project initiation date" is ambiguous. What will constitute "project initiation" …construction start date? …Engineering complete date? …Land procurement date? Funds allocated date (budgeted)? Suggested wording for R2.7.1.1. "Transmission and generation improvement projects for the Near-Term Transmission Planning Horizon, shall have in-service dates provided, and shall not have in-service dates changed, or be removed from planning models, without documentation to show that the revised plan meets performance requirements."

Q19. Requirement R2.7.4: For such Corrective Action Plans "Committed projects shall not be removed without documentation to show that the revised plan meets the performance requirements". Do you agree or disagree with this requirement? If you disagree, please explain why.

Yes ☐ No ☒

Comment: See response to question 18.

D. Performance Requirements

The proposed revised planning standard (TPL-001-1) incorporates a number of changes in requirements as compared to the current planning standards (TPL-001-0 through TPL-004-0), which it is expected to replace. Among other things these changes are intended to clarify the standard, address issues described by FERC, and, in particular, to "raise the bar." Strengthening the planning standards in selected areas is necessary to maintain a reliable Bulk Electric System that is up to the challenges of the 21st Century. In proposing the requirements in this draft, the standard drafting team attempted to balance the value of increased reliability against any potential increase in work and costs to meet the new proposed standard.

The standard drafting team is seeking input from the industry to determine whether a proper balance has been achieved. The areas where material changes are proposed in this draft are enumerated below, and questions are posed by the standard drafting team to obtain industry comment. In formulating your responses, please keep in mind that material changes in the final standard will be accompanied by a transition plan to provide for an orderly implementation of the final standard.

The performance requirements relative to Non-Consequential Loss of Load for the following events enumerated in the two tables can be considered more stringent than the existing TPL standards. Furthermore, the proposed standard is based on an assumption that performance requirements for EHV facilities should be more stringent than for lower voltage facilities.

Do you agree that Non-Consequential Loss of Load should not be permitted for the following events? If you disagree, please provide a reason for your disagreement.

Event	Agree or Disagree	Comment
Q20. P2-1: Loss of bus section (SLG for stability) above 300 kV	☐Agree. ☒Do not agree.	This loss is currently distinguished from other single contingencies because of its lower probability of occurrence and a more stringent performance requirement than currently exists is not warranted.
Q21. P5-1: For facilities above 300 kV, loss of a Transmission circuit followed by System adjustment[1] followed by loss of another Transmission circuit	☐Agree. ☒Do not agree.	Systems have been designed such that Multiple Contingency events (N-2) may result in Planned/Controlled Loss of Demand or Curtailed Firm Transfers. Such Non-Consequential Load Loss should be assessed for severity on a risk vs. consequence basis.
Q22. P5-2: For facilities above 300 kV, loss of a Transmission circuit followed by System adjustment followed by loss of a transformer with low side voltage rating above 300 kV	☐Agree. ☒Do not agree.	Systems have been designed such that Multiple Contingency events (N-2) may result in Planned/Controlled Loss of Demand or Curtailed Firm Transfers. Such Non-Consequential Load Loss should be assessed for severity on a risk vs. consequence basis.
Q23. P5-3: For facilities above 300 kV, loss of a transformer with low side voltage rating above 300 kV followed by System adjustment followed by loss of another transformer	☐Agree. ☒Do not agree.	Systems have been designed such that Multiple Contingency events (N-2) may result in Planned/Controlled Loss of Demand or Curtailed Firm Transfers. Such Non-Consequential Load Loss should be assessed for severity on a risk vs. consequence basis.

[1]System adjustment can be manual or automatic.

The proposed standard is based on an assumption that performance requirements for non-bus tie EHV breakers should be distinguished from other breakers. Do you agree that Non-Consequential Loss of Load should not be permitted for this event?

Q24. Loss of non-bus tie breaker (above 300 kV) due to internal fault

Yes ☐ No ☒

Comment: This loss is currently distinguished from other single contingencies because of its lower probability of occurrence and a more stringent performance requirement than currently exists is not warranted.

The proposed standard is based on an assumption that performance requirements for non-bus tie EHV breakers should be distinguished from other breakers and that performance requirements for EHV facilities should be more stringent than for lower voltage facilities. Do you agree that Non-Consequential Loss of Load should not be permitted for this event?

Q25. P3-1: Loss of (SLG for stability) either a generator, a Transmission circuit, a transformer, or a bus and a stuck non-bus tie breaker (above 300 kV)

Yes ☐ No ☒

Comment: This new category P3-1 is essentially a replacement for Category C5-9 except the only protection element failure to be considered is the failure of a circuit breaker to open. This definition eliminates the need to examine failure of the relay to operate which in many cases has a more serious impact on grid reliability.

The proposed standard is based on an assumption that the following events are relatively high probability events and, therefore, Non-Consequential Loss of Load should not be permitted. Do you agree? If you disagree, please provide a reason for your disagreement.

Event	Agree or Disagree	Comment
Q26. P4-1: Loss of a Generator followed by System adjustment[1] followed by loss of another Generator	☐Agree. ☒Do not agree.	Systems should be planned such that the loss of a generator, followed by System adjustment, followed by the loss of another generator would not result in Non-consequential Load Loss, and equipment ratings would not be exceeded etc. However, the initial state of the system must be clarified in all performance table scenarios (including P4-1).If the Base Case contained known planned outages of generating units, as implied by the requirement R1.4, then the standard performance requirements could be interpreted to require planning for all G-1-1-1 events.
Q27. P4-2: Loss of a generator followed by a System adjustment followed by the loss of a monopolar DC line	☐Agree. ☒Do not agree.	Systems should be planned such that the loss of a generator, followed by System adjustment, followed by the loss of a monopolar DC line would not result in Non-consequential Load Loss, and equipment ratings would not be exceeded etc. However, the initial state of the system must be clarified in all performance table scenarios (including P4-2).If the Base Case contained known planned outages of generating units, as implied by the requirement R1.4, then the standard

[1] System adjustment can be manual or automatic

		performance requirements could be interpreted to require planning for all G-1-1 L-1 events.
Q28. P4-3: Loss of a generator followed by System adjustment followed by loss of a Transmission circuit	☐Agree. ☒Do not agree.	Systems should be planned such that the loss of a generator, followed by System adjustment, followed by the loss of a transmission circuit would not result in Non-consequential Load Loss, and equipment ratings would not be exceeded etc. However, the initial state of the system must be clarified in all performance table scenarios (including P4-3).If the Base Case contained known planned outages of generating units, as implied by the requirement R1.4, then the standard performance requirements could be interpreted to require planning for all G-1-1 L-1 events.
Q29. P4-4: Loss of a generator followed by System adjustment followed by loss of a transformer	☐Agree. ☒Do not agree.	Systems should be planned such that the loss of a generator, followed by System adjustment, followed by the loss of a transformer would not result in Non-consequential Load Loss, and equipment ratings would not be exceeded etc. However, the initial state of the system must be clarified in all performance table scenarios (including P4-4).If the Base Case contained known planned outages of generating units, as implied by the requirement R1.4, then the standard performance requirements could be interpreted to require planning for all G-1-1 T-1 events.

The performance requirement for the following event may be considered less stringent than the existing TPL Standards — P2-3: Loss of a single pole of a DC line. Interruption of firm transactions (without Loss of firm Load) if the transaction is dependent on the faulted DC line is now allowed for this initiating event/Contingency.

Q30. Do you agree that interruption of any firm transfers that are dependent on the outaged DC line that is taken out of service should be permitted?

Yes ☐ No ☒

Comment: DC and AC lines should not be treated differently. System response is similar for the loss of an AC line versus the loss of a parallel connected DC tie. For the loss of a parallel DC tie the transfer is shifted to the parallel AC system in the same manner as a loss of an AC line. The decision in selecting DC vs. AC in transmission lines has traditionally been based on the break-even cost and performance of the two alternatives. The lower performance requirement may wrongly influence decisions on project alternatives in favor of DC facilities with less stringent requirements. Therefore, AC lines should have the same performance criteria as DC lines.

E. Stability

Q31. The proposed standard is based on an assumption that steady state analysis and stability analysis are different from each other and that therefore, two tables of Contingencies and performance requirements were needed. It is also based on an assumption that stability study requirements should be clearly separated from the steady state study requirements. Do you agree with the action taken in separating stability analysis from steady state analysis? If not, please explain.

Yes ☒ No ☒

Comment: There are two points of view for this question. One view is that having the persformance requirement for steady state and dynamics on two separate tables is a good idea. It makes it easier to identify the performance requirements for steady state and dynamics. The other view is that separation of these requirements into two tables is not necessary because the existing tables are clear and FERC Order 693 only required the footnotes to be clarified not to redevelop the tables. The structure of existing Table 1 reinforces the requirement for grid stability and maintaining the grid within applicable limits.

Q32. The SDT has added requirements for plant stability studies and has drawn a distinction in these studies from System stability studies. Do you agree with this approach? If not, please explain.

Yes ☐ No ☒

Comment: There should be no such distinction. All stability studies must meet the Performance Requirements for Planning Events in Table 2 - Stability Performance. If there were different Performance Requirements then the distinction may be warranted. However system stability studies should be sufficient and not warrant additional work.

Q33. The existing TPL-004-0 standard has a requirement to consider the Loss of all generating units at a plant, but it was not clear whether this requirement should apply to stability studies. The SDT did not include this requirement in the stability table, because it is hard to envision a condition when all units would trip simultaneously within the timeframe of a stability simulation. Do you think this condition should be required in stability analysis of extreme events? If not, please explain.

Yes ☐ No ☒

Comment: The question does not match what is included the Extreme Events section of Table 2. The draft proposed TPL standard DOES include the loss of all generating units as Extreme Event 9 in Table 2. We agree that it is highly unlikely that all units at a plant would trip simultaneously. The preceding Extreme Event (8. Loss of a switching station - one voltage level) will in most cases adequately represent generating plant outages .

Q34. There are an increasing number of events with slow voltage recovery after faults on the Transmission System. The dynamic behavior of induction motor loads is a major factor in this phenomenon. The proposed standard therefore requires that the load model for stability studies of peak Load conditions include the dynamic effects of induction motors. Do you agree with this requirement? If not, please explain?

Yes ☐ No ☒

Comment: The modeling of the delayed voltage recovery response that has been observed in some large urban areas during periods of high air conditioning usage is considerably more complex than simply representing induction motor effects. The scope of the delayed voltage recovery issue is extremely limited and its effect on the grid is generally self correcting due to the automatic disconnection of the affected air conditioners. Requirements for specific types of load models are not appropriate in the TPL standard.

Q35. What type of manual or automatic adjustments of generators should be allowed for single and multiple Contingencies?

Comment: Manual and automatic adjustment (increase or decrease) of Var output and manual and automatic tripping or reduction of overall MW output of generators should be allowed.

F. Generation Runback and Tripping

The SDT has discussed the automatic and manual readjustments of generators that should be permissible for single contingencies and multiple contingencies. The existing TPL-001-0 through TPL-004-0 standards through footnote (a) of Table I could include emergency ratings applicable for short durations as required to permit operating steps necessary to maintain system control. The footnote is silent about allowable generation adjustments in response to the Category B events. However, it does indicate that system adjustments are permitted to prepare for the next Contingency. These system adjustments could include manual or automatic adjustments involving generation.

The SDT has learned that many transmission owners use System Protection Systems (SPS) or Remedial Action Schemes (RAS) to trip generation for single and multiple Contingency outage events to prevent overloads, low voltage, and instability in the Interconnected Transmission network for N-1 and N-2 events. In some cases, the RAS are used to prepare for the next Contingency; but in some cases, the RAS are used to simultaneously avoid exceeding emergency ratings.

Q36. The proposed standard allows generation runback after the disturbance that causes a single Contingency (or due to a single Contingency outage) to move the Interconnected Transmission System from an emergency state (within emergency ratings) to a normal state (within normal ratings), assuming that the disturbance does not result in instability? Do you agree? If not, please explain.

Yes ☒ No ☐
Comment:

Q37. Since emergency ratings are thermal ratings, should this standard allow an automatic generation runback scheme (that is initiated immediately after the disturbance causing the single Contingency) to prevent thermal overloads (assuming that the disturbance does not result in instability)? If yes, what are the conditions that must be met in order to allow such a runback scheme to meet the System performance criteria for single Contingencies? Please explain the reason for your answer.

Yes ☒ No ☐
Comment: At a minimum the emergency ratings should allow sufficient time for the runback scheme to operate reliably.

The standard drafting team has considered that RAS or SPS may be allowable under certain situations for single Contingencies, but proposes that their use should be limited.

Q38. Do you agree that RAS or SPS may be allowed for single Contingencies? If not, please explain.

Yes ☒ No ☐
Comment: The performance requirements for SPS are appropriately stated in standards PRC-012-0 and PRC-015-0. If the proposed TPL standard is adopted the contingency references in PRC-012-0 would need to be updated.

Q39. Please describe the limitations that you believe should be placed on the use of RAS or SPS for single Contingency events.

Comment: The performance requirements for SPS are appropriately stated in standards PRC-012-0 and PRC-015-0. If the proposed TPL standard is adopted the contingency references in PRC-012-0 would need to be updated.

Q40. When RAS or SPS are allowed, what conditions should be met when these systems are used in system adjustments to meet performance requirements?

Comment: The performance requirements for SPS are appropriately stated in standards PRC-012-0 and PRC-015-0. If the proposed TPL standard is adopted the contingency references in PRC-012-0 would need to be updated.

G. General Questions

Q41. If you are aware of any regional variances that would be required as a result of these standards, please identify them here.

Yes ☐ No ☒
Comment: No, if the comments to the above questions are incorporated. The FRCC system is a peninsular system having only one interface with the rest of the interconnected NERC system, and has historically demonstrated exceptionally high reliability with no events in recent history cascading beyond the FRCC system. The adequacy of the existing TPL standards as they apply to the FRCC System have been extensively documented.

Q42. If you are aware of any conflicts between the proposed standards and any regulatory function, rule order, tariff, rate schedule, legislative requirement or agreement, please identify them here.

Yes ☐ No ☒
Comment:

Q43. Do you have any other questions or concerns with the proposed standard that have not been addressed? If yes, please explain.

Yes ☒ No ☐
Comment: General Comment:

The SDT has significantly changed contingency specifications and required performance levels. In many cases the changes represent a very significant increase in required performance standards that will require unnecessary major capital expenditures and/or reductions in ATC which will have an adverse impact on commerce. Neither of these outcomes is desirable.

Specific comments on the Draft Standard
Performance Criteria

The performance requirements table should clearly define what the initial state of the system is assumed to be before any Planning Events, and what the state of the system is assumed to be after the Planning Event. For example, P1 (single contingency) events: assuming that the system is to be compliant, the state of the system prior to the event must be "secure" such that the event could occur and there is no interruption of firm transfer or loss of load, Equipment Ratings are not exceeded, System steady state voltages and post-transient voltage deviation are within acceptable limits. However, the system is not as it was before the event. The system could be described as "normal" but perhaps not "secure". If the requirement is that the system must also be "secure" after the event, then the standard must clarify what is allowed for "system adjustments" after the first Planning event to prepare for the next. FERC Order 693 directed the ERO to modify the second sentence of footnote (b) to clarify that manual system adjustments other than shedding of firm load or curtailment of firm transfers are permitted to return the system to a normal operating state after the first contingency. However, in order to bring the system to a secure state, as is necessary for the second contingency of a category C3 or C5 event, footnote (c) allows curtailment of firm transfers, and FERC Order 693 only required footnote (c) to be clarify the term "controlled load interruption", leaving the curtailment language intact. The implication of this interpretation is critical to peninsular Florida. The Category B loss of one 500 kV line from Florida to Georgia is sustainable, such that the system is "normal" after the event. However, in order to be prepared for the next contingency, (the loss of the second 500 kV line), firm transfers must be curtailed. (Interruption of Firm Transfer) Without the ability to curtail firm transfers, a "super-firm" priority of transmission service is created for non-native load customers.

Comments on New Performance Tables:
The draft TPL standard represents a major change in the Table 1 contingency definitions and required performance levels.

Table 1 Contingencies C1 and C2 are being moved to the single contingency category. While C1 and C2 represent single element outages, their probability of occurrence is much lower than the other Category B contingencies and they do not belong in the single contingency performance requirements group.

Footnote (b) which permits, as a limited exception in unique circumstances with a sound rational basis, some localized load reduction for single contingencies, has been removed. This is a very significant change for some utilities and this limited exception should be maintained. Footnote (b) was worked on extensive and achieved industry consensus at one time defining the maximum amount of load that could be shed at 100 MW. Footnote (c) which permits load shedding and curtailment of firm transfers has been removed from C1, C2 and most of C3. This is a very significant increase in required performance level that is not justified.

It is not clear what is meant by the phrase "Equipment Ratings" found in the performance requirements of Table 1. Utilities have different equipment ratings such as normal, long term, short term and emergency ratings. It is not clear that these type of ratings will be permitted in the proposed standard.

Several new Category D "extreme events" have been added which greatly expand the scope and complexity of Category D studies. These are (1) any two unrelated single element outages and (3) wide area events a. through h. These represent a major increase in the scope of Category D studies and probably a doubling of required stability studies.

Analysis of Relay Protection Failures:
The fault with protection element failures have been substantially changed to eliminate analysis of relay failure contingencies. The philosophy contained in the existing standards is that faults with a protection failure should be evaluated whether that failure is a circuit breaker, relay or CT; the proposed standard does not require the analysis of any protection failure. This draft of the TPL standard ignores studies required for analysis of relay protection failures. There is a widespread misconception that studying breaker failure scenarios covers for relay protection failures. This is a false assumption. Typical delayed clearing for a stuck breaker is in the order of 8 to 20 cycles. This is accomplished by the local relay system sensing the stuck breaker and tripping the adjacent elements. However in the case of a protective relay failure the fault must usually be cleared remotely by tripping all lines connected to the station. Typical delays for a relay failure can easily be greater than 30 cycles. Where as breaker failure action just trips a couple of adjoining elements and leaves the rest of the station intact. A typical example of this difference is to assume a bus fault. For breaker failure, all bus breakers except the stuck one would trip. The breaker failure relay scheme then would time out and trip the adjoining breaker and the remote end of the adjoining line would trip. This could all happen in less than 20 cycles. Now consider a bus fault with the differential relay failed. The local relays don't sense the fault because they have failed, nor does the local breaker failure scheme activate because no local detection has occurred. The only way to clear this fault is to trip all lines from the remote terminals. This may take 30 cycles or more. With breaker failure, the bus and one line trips in about 20 cycles. With relay failure, all lines trip remotely isolating the substation in about 30 cycles. Both scenarios must be studied with relay failure being the worse case. Generally, different solutions are required to address relay failure verses breaker failure.

300 kV Threshold Performance Level
The TPL-001-1 draft sets a threshold of higher performance to facilities above 300 kV than previously established in the existing standard. We do not agree that such a threshold is necessary or warranted. Requirements which are more stringent for these facilities may wrongly influence decisions on project alternatives in favor of facilities with less stringent requirements.

Load Modeling Requirements:
The proposed TPL Standard contains numerous references to load modeling. These modeling requirements should be addressed in the MOD Standards. The goal of improving and verifying the load model is worthwhile but is not appropriate for the TPL standards. Assessment of load model accuracy is best accomplished through detailed analysis of grid disturbance events. The main difficulties in accomplishing this are (1) grid events that significant reduce transmission voltages throughout a load area are infrequently occurring and (2) the process of Recreating the event through simulation studies is extremely complex and time consuming. While these efforts should be encouraged they should remain a RRO prerogative.

* R1.1.1 Use of expected Load mix based on the actual or expected aggregate mix of industrial, commercial, and residential Loads. – This requirement is not justified as the load model may be developed through disturbance analysis rather than load type synthesis by customer class. Some LSE's may have great difficulties in creating load forecasts based on customer class. Load forecasting requirements are adequately addressed in the existing MOD standards and do not belong in the proposed TPL standard.

* R1.2. Load models with supporting rationale that include power factor data that may be based on historical System performance, validated by measurement during stressed System conditions, or documented Transmission planning area requirements. This requirement is not appropriate for the TPL standards.

* R2.4.1. System peak Load for one of the five years. For peak System Load levels, the Load model shall include the dynamic effects of induction motor Loads. Prescribing specific types of load models in this standard is not appropriate because system topology and load make up may be unique from area to area.

Short Circuit Requirements: The new TPL standard also contains numerous references to short circuit analysis, which are new requirements that expand the TPL standards, but without specific testing or performance criteria. These performance criteria are better suited in the FAC Standards since evidence that short circuit studies have been performed is currently required in the existing FAC-002-0 Standard. Since the primary concern is the appropriate sizing of equipment and the prevention of equipment damage as opposed to overall grid reliability, we do not see the need for a set of requirements within the proposed TPL standard for short circuit studies.

Table 2 Angular Stability Notes: The requirement of generation loss not exceeding BA spinning reserve requirement (1.a.ii.) is an unjustified increase in required performance level from the existing TPL Standard which require the grid response to be stable and within applicable ratings. The portion of the notes requiring generator out-of-step protection are inappropriate and unwarranted. First, the simulation result may show the generator being tripped by backup distance or loss of field protection which may be acceptable to the generator owner. Second, the requirement for impedance swings not causing other transmission elements to trip is inappropriate and in conflict with manufacturer recommendations and prevailing practice for generator out of step protection. Most generator out of step relays are set to trip on the "way out" so as to limit phase angle difference across the opening contacts. With this practice, one can not prevent transmission line tripping due to zone 1 pickup without installing out of step blocking should the swing impedance passes through zone 1 relay. Out of step blocking of zone 1 relays is a bad idea as it opens the door to prolonged asynchronous connection of generators.

Circuit Breaker Contingencies: The proposed TPL standard separates circuit breaker related contingencies based on the intended use of the circuit breaker. If the circuit breaker is used to connect busses together (i.e. bus tie breaker) a lower level of performance is required than for other uses and configurations. The existing TPL standards have the contingency events and required level of performance appropriately ordered based on the probability of occurrence. We are not aware of different failure rates for bus ties breakers as opposed to the general circuit breaker population. The proposed standard requires an unjustified higher level of performance for non bus tie breakers and would encourage the use of low cost switching station arrangements such as single breaker/single bus which are less reliable.

Need to clarify the performance requirements that apply to sensitivity studies. These requirements should not be the same.

A.3. - Suggest replacing the word "probable" with "credible" for consistency with the white paper from the Operating Limit Definitions Task Force.

R2.1 - It is not clear how the requirement to address all 5 years can be accomplished when the annual studies do not require all 5 years to be studied. Is the planner expected to study the other years also, but that the required set of cases does not link to each of the 5 years?

R2.2.1 - This requirement creates compliance concerns. Therefore, it is suggested that the SDT clarify that the Long Term Assessment is not required beyond 10 years.

R2.7.3 - The term "proposed" may not be a good choice here ... especially since that's not a term used in other reliability assessments .... should another term be chosen or perhaps this definition could be matched up with work being done now on classification of resources for RAS.

Steady State Performance Table:

P1 - If the transmission line outaged is the facility defined by contract as being the only contract path for the firm transfer, then the firm transfer will be interrupted. P1 should be clarified that this is acceptable.

P3 - Are these elements meant to be combined into a multiple contingency or considered separately (since they are listed with commas)? Or is this meant to be one of the 3 elements listed first AND the stuck breaker? Not clear the way this is worded. Or maybe the structure needs to be different in the sentence (like bullets for the first 3 that would make the "and" stick out more).

NERC Standards TPL 001-0 through TPL 004-0 are approved standards that only required modifications pursuant to FERC Order 693. In this proposed draft standard TPL 001-1 the Standard Drafting Team (SDT) has far exceeded the recommendations suggested by FERC in that Order. The proposed draft standard is a large change in the magnitude of the performance requirements from the exiting TPL Standards. The SDT needs to consider how this proposed standard will be implemented in this new mandatory compliance environment and ensure that reasonable compliance measures can be developed from the proposed standard.

NERC
NORTH AMERICAN ELECTRIC RELIABILITY CORPORATION

Comment Form for First Draft of TPL-001-1 — Transmission System Planning Performance Requirements

Please use this form to submit comments on the proposed draft of TPL-001-1. Comments must be submitted by **Friday, October 26, 2007**. You may submit the completed form by e-mail to sarcomm@nerc.net with the words "TPL-001 Draft 1" in the subject line. If you have questions please contact Ed Dobrowolski at ed.dobrowolksi@nerc.net or by telephone at 609-947-3673.

Individual Commenter Information **(Complete this page for comments from one organization or individual.)**		
Name:		
Organization: Georgia Transmission Corporation		
Telephone: 770-270-7824		
E-mail: angela.battle@gatrans.com		
NERC Region (check all Regions in which your company operates)		**Registered Ballot Body Segment (check all industry segments in which your company is registered)**
☐ **ERCOT**	☒	1 — Transmission Owners
☐ **FRCC**	☐	2 — RTOs and ISOs
☐ **MRO**	☐	3 — Load-serving Entities
☐ **NPCC**	☐	4 — Transmission-dependent Utilities
☐ **RFC**	☐	5 — Electric Generators
☐ **SERC**	☐	6 — Electricity Brokers, Aggregators, and Marketers
☐ **SPP**	☐	7 — Large Electricity End Users
☐ **WECC**	☐	8 — Small Electricity End Users
☐ **NA – Not Applicable**	☐	9 — Federal, State, Provincial Regulatory or other Government Entities
	☐	10 — Regional Reliability Organizations and Regional Entities

Group Comments (Complete this page if comments are from a group.)

Group Name:

Lead Contact:

Contact Organization:

Contact Segment:

Contact Telephone:

Contact E-mail:

Additional Member Name	Additional Member Organization	Region*	Segment*

*If more than one Region or Segment applies, please list all that apply. Regional acronyms and segment numbers are shown on prior page.

Background

The purpose of this standard is to establish Transmission System planning performance requirements within the planning horizon to develop a Bulk Electric System that will operate reliably over a broad spectrum of System conditions and following a wide range of probable Contingencies. This standard will replace TPL-001-0, TPL-002-0, TPL-003-0, and TPL-004-0. The standard drafting team has not yet addressed TPL-005-0 and TPL-006-0, but will address these two standards during the next phase of the drafting process.

The major objectives of the standard drafting team are to:

1) Ensure the standard is complete and the requirements are set at an appropriate level to ensure reliability (Not Least Common Denominator)
2) Ensure that the standard is enforceable by having clearly defined requirements with unambiguous language
3) Address the issues raised by FERC Order 693, 890, and other applicable orders
4) Address the issues raised in the original Standards Authorization Request (SAR) and the Supplemental SAR.

The standard drafting team did not attempt to edit the existing standards but rather chose to write one standard that addresses all aspects of transmission planning in the existing TPL-001-0, TPL-002-0, TPL-003-0, and TPL-004-0. The standard drafting team organized the new standard in the following sections:

R1 – Modeling requirements
R2 – Assessment and Corrective Plan requirements
R3 – Steady State Analysis requirements
R4 – Stability Analysis requirements
R5 – Coordination requirements

The standard drafting team determined that the requirements and analysis for Steady State are different from those for stability. As such, the standard drafting team separated the analysis requirements and created two performance requirement tables.

The standard drafting team recognizes that this draft standard is a starting point for industry input into the standard and that there is still a lot of work required to complete the process. The standard drafting team has made many changes to clarify requirements, add requirements, and make some of the performance requirements stricter. The standard drafting team has not addressed Measures, Risk Factors, Violation Severity Factors, or Time Horizons at this time. These will be addressed when the standard drafting team has better defined the requirements of the standard.

For questions where you agree with the standard drafting team, please state that you agree and if available, please provide supporting documentation. If you disagree with the standard drafting team, please explain why you disagree and provide data to support your position, such as outage data or analysis. If you believe that we have made a performance requirement too strict please provide supporting documentation. If applicable, please include the approximate cost in man-hours for additional studies and/or cost in $Millions for additional transmission investment to meet the new requirements or the stricter requirements. If you believe that the standard should be stricter, please provide the rationale along with any supporting data, including existing practices, cost estimates or additional analysis.

To improve the standard, the standard drafting team would appreciate responses to as many of these questions as you can answer.

A. New Definitions

Many of the concerns about the existing TPL standards come from the fact that a number of generally understood concepts are embedded in undefined terms, tables, and footnotes. To clarify some of these concerns, the standard drafting team is proposing new definitions. Please indicate whether you agree with the following proposed definitions and provide proposed changes to the definitions if you disagree:

Definition	**Agree or Disagree**
Q1. **Base Case**: Computer representation of the projected initial or starting Transmission System conditions for a specific point in time. Each base case reflects the forecasted Load at each bus (or node) on the interconnected Transmission System, the transmission facilities which deliver the generation and reactive resources to the connected Load, and the generation dispatch including firm transaction obligations assumed to supply the connected Load. The models also reflect facility ratings in accordance with FAC-008 & FAC-009.	☐Agree. ☒Do not agree.
Q1. **Comment: The base case is also a representation of firm transactions through a BES, generation resources, and models reactive components.**	
Q2. **Consequential Load Loss:** Load that is no longer served because it is directly connected to an element(s) that is removed from service due to fault clearing action or mis-operation.	☐Agree. ☒Do not agree.
Q2. **Comment: This definition implies that load that is lost past the directly connected load is allowed. Therefore the definition should be changed to include radially connected load and load that is radialized as a result of a contingency or mis-operation.**	
Q3. **Extreme Events:** Events which are more severe than Planning Events and have a low probability of occurrence.	☐Agree. ☒Do not agree.
Q3. **Comment: All events on the BES have a low probability of occurrence. Extreme events are those events that have a high consequence to the BES if they were to occur.**	
Q4. **Long-Term Transmission Planning Horizon:** Transmission planning period that covers years six through ten or beyond.	☒Agree. ☐Do not agree.
Q4. **Comment:**	
Q5. **Near-Term Transmission Planning Horizon:** Transmission planning period that covers years One through five.	☒Agree. ☐Do not agree.
Q5. **Comment:**	
Q6. **Non-Consequential Load Loss:** Load loss other than Consequential Load Loss. For example, Load loss that occurs through manual (operator initiated) or automatic operations such	☐Agree. ☒Do not

as under-voltage Load shedding, under-frequency Load shedding, or Special Protection Systems.	agree.
Q6. **Comment: Suggest a change in title to Indirect Load Loss**	
Q7. **Planning Assessment:** Documented evaluation of future Bulk Electric System needs by the use of performance studies that cover a range of assumptions regarding system conditions, time frames, future plans including capital reinforcements and operating procedures and other factors, such as asset conditions and age.	☐Agree. ☒Do not agree.
Q7. **Comment: Asset conditions and age should not be included in the definition. Equipment replacement, in general, is dependent on performance, not age.**	
Q8. **Planning Events:** Events which require Transmission system performance requirements to be met.	☐Agree. ☒Do not agree.
Q8. **Comment: Performance requirements should be added to the definition.**	
Q9. **Plant Stability Study:** Study of an individual plant's Stability for various Contingencies in the vicinity of the plant; concerned with the effect on the System of the generating units' loss of synchronism and the damping of the generating units' power oscillations.	☒Agree. ☐Do not agree.
Q9. **Comment:**	
Q10. **System Stability Study:** Study of the System or portions of the System to ensure that angular Stability is maintained, inter-area power oscillations are damped, and voltages during the dynamic simulation stay within acceptable performance limits.	☒Agree. ☐Do not agree.
Q10. **Comment:**	
Q11. **Year One:** The first year that a Transmission Planner is responsible for studying. This is further defined as the planning window that begins the next calendar year from the time the Transmission Planner submits their annual studies. Analysis conducted for time horizons within the calendar year from the study publication are assumed to be conducted under the auspices of Operations Planning.	☐Agree. ☒Do not agree.
Q11. **Comment: The first sentence in not necessary. A Planner may use the base case to further assess a problem in the current year. The definition should begin with "The next planning year following current annual studies".**	

B. Sensitivity Studies

The draft planning standard includes the requirement, as specified in FERC Order 693, that planning decisions be based on a portfolio of analyses. In section 12.a.ii "Sensitivity studies and critical system conditions" FERC provided direction to consider a full range of variables considered to be significant that need to be assessed and documentation provided that explains the rationale for the selection of variables assessed.

In addition to the firm obligation scenario, the portfolio of analyses should be supplemented to include information from sensitivity analysis. The sensitivity analysis should be developed using additional cases that simulate reasonably stressed system conditions. The standard drafting team has included several parameters that can be varied to create the

requisite sensitivity case(s). The draft standards specify that the sensitivities reflect one or more of the following conditions and that documentation be provided explaining the rationale for selecting the sensitivity(ies) employed. The parameters that should be varied include:

- Higher or lower Load forecasts from the Base Case with variability of Load/demand and Load power factors due to season, weather, or time of day.
- Modification of expected transfers.
- Unavailability of long lead time facilities.
- Variability and outages of Reactive Resources.
- Generation additions, retirements, or other dispatch scenarios.
- Decreased effectiveness of controllable Loads and Demand Side Management.
- Modification of planned Transmission outages

To help focus industry discussion, please respond to the questions below:

Q12. Should the standard provide more specific direction regarding the number of sensitivity cases that need to be developed?

Yes ☐ No ☒
Comment: Sensitivity analyses should not be prescribed. In one system there may be various sensitivites based on region, generation location, number of long range projects, etc. The Planner should provide a summary of the critical sensitivities and documentation supporting their definitionis.

Q13. Should the standard specify the required changes, such as changes in expected transfers, load forecasts, generation patterns, etc., from the study case to be considered a "reasonably stressed" case?

Yes ☐ No ☒
Comment: See comment to Q12.

Q14. The SDT proposes to require the use of sensitivity studies for Near-Term Transmission System Planning Horizon stability analysis. Do you concur with the use of sensitivity analysis in dynamic studies?

Yes ☒ No ☐
Comment:

Q15. The draft TPL standard does not require the use of sensitivity studies for the Long-Term Transmission System Planning Horizon (year six and beyond) studies. Do you concur with this approach or should there be some level of sensitivity analysis required for the long-term period?

Yes ☒ No ☐
Comment: The sensitivities should be determined by the Planner. As part of the development of long range projects, sensitivity analyses should be performed.

C. Corrective Action Plans

Requirement R2.7 of the standard states that when analysis shows that the performance requirements in Table 1 and Table 2 are not fully met, a Corrective Action Plan that utilizes all or some of the Transmission System enhancements, generation additions, DSM, new technologies and Operating Procedures shall be included in the Planning Assessment. This Corrective Action Plan should ensure that upon its implementation the identified system

deficiencies will be corrected so that the performance requirements in Table 1 and Table 2 will be met. Furthermore, studies included in the Planning Assessment should demonstrate that this is indeed the case.

Q16. Requirement R2.7.1: Such Corrective Action Plans shall "Identify System deficiencies and the associated actions needed to achieve required System performance including Transmission and generation improvements, DSM, new technologies, or Operating Procedures including the duration of Interim Operating Procedures". System deficiencies may be corrected using an integrated plan, i.e., an optimal mix of Transmission, generation, DSM and Operating Procedures. Should DSM be considered in conjunction with other measures in developing Corrective Action Plans? If yes, please comment on how the impact of DSM should be included.

Yes ☐ No ☒
Comment: DSM should not be a requirement in considering Corrective Action Plans. Because DSM cannot be counted on or controlled, its use as a Corrective Action Plan should not be assumed.

Q17. Requirement R2.7.2: Such Corrective Action Plans shall "Be added to study cases and the cases re-tested to show that the System with planned additions meets the performance requirements in the tables". Should new studies, including the facilities comprising the Corrective Action Plan, be performed to assess System normal performance and Contingency response for conditions that previously resulted in the System deficiencies (without the planned additions) and also demonstrate that the changes would not result in inadvertent negative impacts on the System. If you "agree", please comment on how a study area should be determined.

Yes ☐ No ☒
Comment: This is the essence of planning. All entities should ensure that Corrective Action Plans address the identified constraints and work within the BES infrastructure. It is not clear what the intent of "new" studies is. Since the evaluation of Corrective Action Plans is part of the planning process, what new studies is this requirement referring to. The determination of the study area should be by the Planner.

Q18. Requirement R2.7.3: The standard calls for a differentiation between committed and proposed projects. Do you agree that they should be treated separately? If not, please state why not.

Yes ☒ No ☐
Comment: They are inherently treated differently. "Committed" projects are a part of the base assumptions in the base case, while "proposed" projects are evaluated until a point where corporate commitment has been made.

Q19. Requirement R2.7.4: For such Corrective Action Plans "Committed projects shall not be removed without documentation to show that the revised plan meets the performance requirements". Do you agree or disagree with this requirement? If you disagree, please explain why.

Yes ☐ No ☒
Comment: See responses to Q17 and Q18.

D. Performance Requirements

The proposed revised planning standard (TPL-001-1) incorporates a number of changes in requirements as compared to the current planning standards (TPL-001-0 through TPL-004-0), which it is expected to replace. Among other things these changes are intended to

clarify the standard, address issues described by FERC, and, in particular, to "raise the bar." Strengthening the planning standards in selected areas is necessary to maintain a reliable Bulk Electric System that is up to the challenges of the 21st Century. In proposing the requirements in this draft, the standard drafting team attempted to balance the value of increased reliability against any potential increase in work and costs to meet the new proposed standard.

The standard drafting team is seeking input from the industry to determine whether a proper balance has been achieved. The areas where material changes are proposed in this draft are enumerated below, and questions are posed by the standard drafting team to obtain industry comment. In formulating your responses, please keep in mind that material changes in the final standard will be accompanied by a transition plan to provide for an orderly implementation of the final standard.

The performance requirements relative to Non-Consequential Loss of Load for the following events enumerated in the two tables can be considered more stringent than the existing TPL standards. Furthermore, the proposed standard is based on an assumption that performance requirements for EHV facilities should be more stringent than for lower voltage facilities.

Do you agree that Non-Consequential Loss of Load should not be permitted for the following events? If you disagree, please provide a reason for your disagreement.

Event	Agree or Disagree	Comment
Q20. P2-1: Loss of bus section (SLG for stability) above 300 kV	☒Agree. ☐Do not agree.	No change from current standards.
Q21. P5-1: For facilities above 300 kV, loss of a Transmission circuit followed by System adjustment[1] followed by loss of another Transmission circuit	☐Agree. ☒Do not agree.	This requirement appears unreasonable for a network system and, particularly, for a series of events. This requirement would be well above current reliability standards. The requirement would also result in higher investment costs for the utilities.
Q22. P5-2: For facilities above 300 kV, loss of a Transmission circuit followed by System adjustment followed by loss of a transformer with low side voltage rating above 300 kV	☐Agree. ☐Do not agree.	Not applicable to our existing system
Q23. P5-3: For facilities above 300 kV, loss of a transformer with low side voltage rating above 300 kV followed by System adjustment followed by loss of another transformer	☐Agree. ☐Do not agree.	Not applicable to our existing system

[1]System adjustment can be manual or automatic.

The proposed standard is based on an assumption that performance requirements for non-bus tie EHV breakers should be distinguished from other breakers. Do you agree that Non-Consequential Loss of Load should not be permitted for this event?

Q24. Loss of non-bus tie breaker (above 300 kV) due to internal fault

Yes ☐ No ☒
Comment: The standard needs to clearly define a non-bus tie breaker. It is also not clear whether the focus of the standard is the kV level or the equipment type. A material change to build new facilities would be needed to meet this new requirement.

The proposed standard is based on an assumption that performance requirements for non-bus tie EHV breakers should be distinguished from other breakers and that performance requirements for EHV facilities should be more stringent than for lower voltage facilities. Do you agree that Non-Consequential Loss of Load should not be permitted for this event?

Q25. P3-1: Loss of (SLG for stability) either a generator, a Transmission circuit, a transformer, or a bus and a stuck non-bus tie breaker (above 300 kV)

Yes ☐ No ☒
Comment: A material change to build new facilities would be needed to meet this new requirement.

The proposed standard is based on an assumption that the following events are relatively high probability events and, therefore, Non-Consequential Loss of Load should not be permitted. Do you agree? If you disagree, please provide a reason for your disagreement.

Event	Agree or Disagree	Comment
Q26. P4-1: Loss of a Generator followed by System adjustment[1] followed by loss of another Generator	☒Agree. ☐Do not agree.	
Q27. P4-2: Loss of a generator followed by a System adjustment followed by the loss of a monopolar DC line	☒Agree. ☐Do not agree.	
Q28. P4-3: Loss of a generator followed by System adjustment followed by loss of a Transmission circuit	☒Agree. ☐Do not agree.	
Q29. P4-4: Loss of a generator followed by System adjustment followed by loss of a transformer	☒Agree. ☐Do not agree.	

[1] System adjustment can be manual or automatic

The performance requirement for the following event may be considered less stringent than the existing TPL Standards — P2-3: Loss of a single pole of a DC line. Interruption of firm transactions (without Loss of firm Load) if the transaction is dependent on the faulted DC line is now allowed for this initiating event/Contingency.

Q30. Do you agree that interruption of any firm transfers that are dependent on the outaged DC line that is taken out of service should be permitted?

Yes ☐ No ☐
Comment:

E. Stability

Q31. The proposed standard is based on an assumption that steady state analysis and stability analysis are different from each other and that therefore, two tables of Contingencies and performance requirements were needed. It is also based on an assumption that stability study requirements should be clearly separated from the steady state study requirements. Do you agree with the action taken in separating stability analysis from steady state analysis? If not, please explain.

Yes ☒ No ☐
Comment:

Q32. The SDT has added requirements for plant stability studies and has drawn a distinction in these studies from System stability studies. Do you agree with this approach? If not, please explain.

Yes ☒ No ☐
Comment:

Q33. The existing TPL-004-0 standard has a requirement to consider the Loss of all generating units at a plant, but it was not clear whether this requirement should apply to stability studies. The SDT did not include this requirement in the stability table, because it is hard to envision a condition when all units would trip simultaneously within the timeframe of a stability simulation. Do you think this condition should be required in stability analysis of extreme events? If not, please explain.

Yes ☐ No ☒
Comment:

Q34. There are an increasing number of events with slow voltage recovery after faults on the Transmission System. The dynamic behavior of induction motor loads is a major factor in this phenomenon. The proposed standard therefore requires that the load model for stability studies of peak Load conditions include the dynamic effects of induction motors. Do you agree with this requirement? If not, please explain?

Yes ☒ No ☐
Comment:

Q35. What type of manual or automatic adjustments of generators should be allowed for single and multiple Contingencies?

Comment: Special Protection Schemes should be allowed for single and multiple contingencies.

F. Generation Runback and Tripping

The SDT has discussed the automatic and manual readjustments of generators that should be permissible for single contingencies and multiple contingencies. The existing TPL-001-0 through TPL-004-0 standards through footnote (a) of Table I could include emergency ratings applicable for short durations as required to permit operating steps necessary to maintain system control. The footnote is silent about allowable generation adjustments in response to the Category B events. However, it does indicate that system adjustments are permitted to prepare for the next Contingency. These system adjustments could include manual or automatic adjustments involving generation.

The SDT has learned that many transmission owners use System Protection Systems (SPS) or Remedial Action Schemes (RAS) to trip generation for single and multiple Contingency outage events to prevent overloads, low voltage, and instability in the Interconnected Transmission network for N-1 and N-2 events. In some cases, the RAS are used to prepare for the next Contingency; but in some cases, the RAS are used to simultaneously avoid exceeding emergency ratings.

Q36. The proposed standard allows generation runback after the disturbance that causes a single Contingency (or due to a single Contingency outage) to move the Interconnected Transmission System from an emergency state (within emergency ratings) to a normal state (within normal ratings), assuming that the disturbance does not result in instability? Do you agree? If not, please explain.

Yes ☒ No ☐
Comment:

Q37. Since emergency ratings are thermal ratings, should this standard allow an automatic generation runback scheme (that is initiated immediately after the disturbance causing the single Contingency) to prevent thermal overloads (assuming that the disturbance does not result in instability)? If yes, what are the conditions that must be met in order to allow such a runback scheme to meet the System performance criteria for single Contingencies? Please explain the reason for your answer.

Yes ☒ No ☐
Comment: Generation curtailment should allow the system to operate within the facility capabilities and should not put the generator at risk of violating its NERC requirements during curtailment.

The standard drafting team has considered that RAS or SPS may be allowable under certain situations for single Contingencies, but proposes that their use should be limited.

Q38. Do you agree that RAS or SPS may be allowed for single Contingencies? If not, please explain.

Yes ☒ No ☐
Comment:

Q39. Please describe the limitations that you believe should be placed on the use of RAS or SPS for single Contingency events.

Comment: None.

Q40. When RAS or SPS are allowed, what conditions should be met when these systems are used in system adjustments to meet performance requirements?

Comment: PRC Standards

G. General Questions

Q41. If you are aware of any regional variances that would be required as a result of these standards, please identify them here.

Yes ☐ No ☒
Comment:

Q42. If you are aware of any conflicts between the proposed standards and any regulatory function, rule order, tariff, rate schedule, legislative requirement or agreement, please identify them here.

Yes ☐ No ☒
Comment:

Q43. Do you have any other questions or concerns with the proposed standard that have not been addressed? If yes, please explain.

Yes ☒ No ☐
Comment:
R1.4: The planning assessment is to identify the needs of the BES. A spare equipment strategy should support the needs of the BES, not vice versa. Long-term outages need to be defined.

R2.2.1 Not clear on the purpose of this requirement. Is the concern that the Planner perform a ten year analysis even when the in - service years are outside of the current ten-year planning horizon? The extension period should be defined.

R3.2 Current models do not have the capability of performing the assessments necessary to meet this requirement.

NERC
NORTH AMERICAN ELECTRIC RELIABILITY CORPORATION

Comment Form for First Draft of TPL-001-1 — Transmission System Planning Performance Requirements

Please use this form to submit comments on the proposed draft of TPL-001-1. Comments must be submitted by **Friday, October 26, 2007**. You may submit the completed form by e-mail to sarcomm@nerc.net with the words "TPL-001 Draft 1" in the subject line. If you have questions please contact Ed Dobrowolski at ed.dobrowolksi@nerc.net or by telephone at 609-947-3673.

Individual Commenter Information **(Complete this page for comments from one organization or individual.)**		
Name:	Roger Champagne	
Organization:	Hydro-Québec TransÉnergie	
Telephone:	514 289-2211, X 2766	
E-mail:	champagne.roger.2@hydro.qc.ca	
NERC Region (check all Regions in which your company operates)		**Registered Ballot Body Segment (check all industry segments in which your company is registered)**
☐ **ERCOT**	☒	1 — Transmission Owners
☐ **FRCC**	☐	2 — RTOs and ISOs
☐ **MRO**	☐	3 — Load-serving Entities
☒ **NPCC**	☐	4 — Transmission-dependent Utilities
☐ **RFC**	☐	5 — Electric Generators
☐ **SERC**	☐	6 — Electricity Brokers, Aggregators, and Marketers
☐ **SPP**	☐	7 — Large Electricity End Users
☐ **WECC**	☐	8 — Small Electricity End Users
☐ **NA – Not Applicable**	☐	9 — Federal, State, Provincial Regulatory or other Government Entities
	☐	10 — Regional Reliability Organizations and Regional Entities

Group Comments (Complete this page if comments are from a group.)

Group Name:

Lead Contact:

Contact Organization:

Contact Segment:

Contact Telephone:

Contact E-mail:

Additional Member Name	Additional Member Organization	Region*	Segment*

*If more than one Region or Segment applies, please list all that apply. Regional acronyms and segment numbers are shown on prior page.

Background

The purpose of this standard is to establish Transmission System planning performance requirements within the planning horizon to develop a Bulk Electric System that will operate reliably over a broad spectrum of System conditions and following a wide range of probable Contingencies. This standard will replace TPL-001-0, TPL-002-0, TPL-003-0, and TPL-004-0. The standard drafting team has not yet addressed TPL-005-0 and TPL-006-0, but will address these two standards during the next phase of the drafting process.

The major objectives of the standard drafting team are to:

1) Ensure the standard is complete and the requirements are set at an appropriate level to ensure reliability (Not Least Common Denominator)
2) Ensure that the standard is enforceable by having clearly defined requirements with unambiguous language
3) Address the issues raised by FERC Order 693, 890, and other applicable orders
4) Address the issues raised in the original Standards Authorization Request (SAR) and the Supplemental SAR.

The standard drafting team did not attempt to edit the existing standards but rather chose to write one standard that addresses all aspects of transmission planning in the existing TPL-001-0, TPL-002-0, TPL-003-0, and TPL-004-0. The standard drafting team organized the new standard in the following sections:

R1 – Modeling requirements
R2 – Assessment and Corrective Plan requirements
R3 – Steady State Analysis requirements
R4 – Stability Analysis requirements
R5 – Coordination requirements

The standard drafting team determined that the requirements and analysis for Steady State are different from those for stability. As such, the standard drafting team separated the analysis requirements and created two performance requirement tables.

The standard drafting team recognizes that this draft standard is a starting point for industry input into the standard and that there is still a lot of work required to complete the process. The standard drafting team has made many changes to clarify requirements, add requirements, and make some of the performance requirements stricter. The standard drafting team has not addressed Measures, Risk Factors, Violation Severity Factors, or Time Horizons at this time. These will be addressed when the standard drafting team has better defined the requirements of the standard.

For questions where you agree with the standard drafting team, please state that you agree and if available, please provide supporting documentation. If you disagree with the standard drafting team, please explain why you disagree and provide data to support your position, such as outage data or analysis. If you believe that we have made a performance requirement too strict please provide supporting documentation. If applicable, please include the approximate cost in man-hours for additional studies and/or cost in $Millions for additional transmission investment to meet the new requirements or the stricter requirements. If you believe that the standard should be stricter, please provide the rationale along with any supporting data, including existing practices, cost estimates or additional analysis.

To improve the standard, the standard drafting team would appreciate responses to as many of these questions as you can answer.

A. New Definitions

Many of the concerns about the existing TPL standards come from the fact that a number of generally understood concepts are embedded in undefined terms, tables, and footnotes. To clarify some of these concerns, the standard drafting team is proposing new definitions. Please indicate whether you agree with the following proposed definitions and provide proposed changes to the definitions if you disagree:

Definition	**Agree or Disagree**
Q1. **Base Case**: Computer representation of the projected initial or starting Transmission System conditions for a specific point in time. Each base case reflects the forecasted Load at each bus (or node) on the interconnected Transmission System, the transmission facilities which deliver the generation and reactive resources to the connected Load, and the generation dispatch including firm transaction obligations assumed to supply the connected Load. The models also reflect facility ratings in accordance with FAC-008 & FAC-009.	☐Agree. ☒Do not agree.
Q1. **Comment: There are a two undefined terms in this definition: "Transmission System" and "interconnected Transmission System". The definition needs to specifically identify what should be modeled applicable to the subject area and in a manner consistent with other NERC definitions. The definition refers to Facility ratings rather than the general reference to FAC-008 & FAC-009**	
Q2. **Consequential Load Loss:** Load that is no longer served because it is directly connected to an element(s) that is removed from service due to fault clearing action or mis-operation.	☒Agree. ☒Do not agree.
Q2. **Comment: ``directly-connected`` load loss would be more clear**	
Q3. **Extreme Events:** Events which are more severe than Planning Events and have a low probability of occurrence.	☐Agree. ☒Do not agree.
Q3. **Comment: Modify to "Events which are more severe,but have a lower probability of occurrence, than Planning Events".**	
Q4. **Long-Term Transmission Planning Horizon:** Transmission planning period that covers years six through ten or beyond.	☒Agree. ☐Do not agree.
Q4. **Comment:**	
Q5. **Near-Term Transmission Planning Horizon:** Transmission planning period that covers years One through five.	☒Agree. ☐Do not agree.
Q5. **Comment:**	
Q6. **Non-Consequential Load Loss:** Load loss other than Consequential Load Loss. For example, Load loss that occurs through manual (operator initiated) or automatic operations such	☒Agree. ☒Do not

as under-voltage Load shedding, under-frequency Load shedding, or Special Protection Systems.	agree.
Q6. **Comment: A better name for this would be "indirect load loss".**	
Q7. **Planning Assessment:** Documented evaluation of future Bulk Electric System needs by the use of performance studies that cover a range of assumptions regarding system conditions, time frames, future plans including capital reinforcements and operating procedures and other factors, such as asset conditions and age.	☐Agree. ☒Do not agree.
Q7. **Comment: Eliminate "capital" from the definition. It is not defined or consistently applicable to the standard. Reference too vague "other factors, such as asset conditions and age" should be removed from this standard; there are no consistent definitions or industry standards on which to base this requirement, nor does it appear to be a necessary addition to the standard.**	
Q8. **Planning Events:** Events which require Transmission system performance requirements to be met.	☐Agree. ☒Do not agree.
Q8. **Comment: Propose, "Events for which Transmission performance requirements must be met".**	
Q9. **Plant Stability Study:** Study of an individual plant's Stability for various Contingencies in the vicinity of the plant; concerned with the effect on the System of the generating units' loss of synchronism and the damping of the generating units' power oscillations.	☐Agree. ☒Do not agree.
Q9. **Comment: A Plant Stability Study should be a part of a System Stability Study. How should and why would they be differentiated? The analysis and performance constraints are the same in both cases; it's just a matter of whether one or more generating units are involved.**	
Q10. **System Stability Study:** Study of the System or portions of the System to ensure that angular Stability is maintained, inter-area power oscillations are damped, and voltages during the dynamic simulation stay within acceptable performance limits.	☐Agree. ☒Do not agree.
Q10. **Comment: See comment on Q9; proposed modification, "Study of the System or portions of the System to determine whether system angular Stability is maintained, power oscillations are damped, and voltages during the dynamic simulation stay within acceptable perfomance limits.**	
Q11. **Year One:** The first year that a Transmission Planner is responsible for studying. This is further defined as the planning window that begins the next calendar year from the time the Transmission Planner submits their annual studies. Analysis conducted for time horizons within the calendar year from the study publication are assumed to be conducted under the auspices of Operations Planning.	☒Agree. ☒Do not agree.
Q11. **Comment: Modify to, "The first year that a Tranmission Planner is responsible for studying. This is further defined as the planning window that begins the next calendar year from the time the Transmission Planner completes and communicates its annual studies."**	

B. Sensitivity Studies

The draft planning standard includes the requirement, as specified in FERC Order 693, that planning decisions be based on a portfolio of analyses. In section 12.a.ii "Sensitivity studies and critical system conditions" FERC provided direction to consider a full range of variables considered to be significant that need to be assessed and documentation provided that explains the rationale for the selection of variables assessed.

In addition to the firm obligation scenario, the portfolio of analyses should be supplemented to include information from sensitivity analysis. The sensitivity analysis should be developed using additional cases that simulate reasonably stressed system conditions. The standard drafting team has included several parameters that can be varied to create the requisite sensitivity case(s). The draft standards specify that the sensitivities reflect one or more of the following conditions and that documentation be provided explaining the rationale for selecting the sensitivity(ies) employed. The parameters that should be varied include:

- Higher or lower Load forecasts from the Base Case with variability of Load/demand and Load power factors due to season, weather, or time of day.
- Modification of expected transfers.
- Unavailability of long lead time facilities.
- Variability and outages of Reactive Resources.
- Generation additions, retirements, or other dispatch scenarios.
- Decreased effectiveness of controllable Loads and Demand Side Management.
- Modification of planned Transmission outages

To help focus industry discussion, please respond to the questions below:

Q12. Should the standard provide more specific direction regarding the number of sensitivity cases that need to be developed?

Yes ☐ No ☒

Comment: The standard is unclear whether or not it mandates the requirement to develop action plans in accordance with consequences of problems highlighted as a result of one of the sensitivity case study.

Suggest modification to, "…sensitivity testing that stresses the System shall be considered, and documentation with the rationale for the sensitivity testing shall be supplied. The sensitivity case(s) may include one or more of the following conditions:"

Q13. Should the standard specify the required changes, such as changes in expected transfers, load forecasts, generation patterns, etc., from the study case to be considered a "reasonably stressed" case?

Yes ☐ No ☒

Comment: The standard is unclear whether or not it mandates the requirement to develop action plans in accordance with consequences of problems highlighted as a result of one of the sensitivity case study.

Reasonably stressed conditions are dependent upon the study area under review and the standard is not likely to be able to be crafted to provide sufficent and consistent direction. However, it might be helpful if the standard clarified whether the base case should include any unplanned generator outages or whether, aside from potential sensitivities, unplanned generator outages are considered only through P1, P3 or P4 Contingencies. If the standard addresses unplanned generator outages only through P1, P3 and P4, then it is recommended that a mandatory sensitivity analysis, with required mitigation, include various potential combinations of a reasonable amount of unplanned outages. The combinations should be based on the part of the system that is under study.

Q14. The SDT proposes to require the use of sensitivity studies for Near-Term Transmission System Planning Horizon stability analysis. Do you concur with the use of sensitivity analysis in dynamic studies?

Yes ☒ No ☐
Comment: The standard is unclear whether or not it mandates the requirement to develop action plans in accordance with the consequences of problems highlighted as a result of one of the sensitivity case study.

Suggest modification to, "…sensitivity testing that stresses the System should be considered. Sensitivity case(s) might include among the following conditions:" 2.4.3 shold mimic 2.1.3 except in regard to load models.

Q15. The draft TPL standard does not require the use of sensitivity studies for the Long-Term Transmission System Planning Horizon (year six and beyond) studies. Do you concur with this approach or should there be some level of sensitivity analysis required for the long-term period?

Yes ☒ No ☐
Comment: There is no need for sensitivity analysis.

C. Corrective Action Plans

Requirement R2.7 of the standard states that when analysis shows that the performance requirements in Table 1 and Table 2 are not fully met, a Corrective Action Plan that utilizes all or some of the Transmission System enhancements, generation additions, DSM, new technologies and Operating Procedures shall be included in the Planning Assessment. This Corrective Action Plan should ensure that upon its implementation the identified system deficiencies will be corrected so that the performance requirements in Table 1 and Table 2 will be met. Furthermore, studies included in the Planning Assessment should demonstrate that this is indeed the case.

Q16. Requirement R2.7.1: Such Corrective Action Plans shall "Identify System deficiencies and the associated actions needed to achieve required System performance including Transmission and generation improvements, DSM, new technologies, or Operating Procedures including the duration of Interim Operating Procedures". System deficiencies may be corrected using an integrated plan, i.e., an optimal mix of Transmission, generation, DSM and Operating Procedures. Should DSM be considered in conjunction with other measures in developing Corrective Action Plans? If yes, please comment on how the impact of DSM should be included.

Yes ☒ No ☐
Comment: DSM should be included to the extent that its performance is sufficiently and consistently understood. The standard does not use the term "optimal" Therefore, the Drafting Team appears to be interpreting the Standard to require a vertically-integrated Planner to produce a so-called optimal-mix of resources plan. This would be an incorrect assumption and is not required. In areas with independent planners and competitive wholesale markets, it is sufficent to identify system needs and produce a plan that identifies regulated transmission solutions in the event that market-based resources (such as DSM) do not address those identified needs. Therefore, while DSM can be as effective a resource as generation, per Commission Orders, in areas with ISOs/RTOs and a competitive wholesale market, the NERC Standard cannot prescribe the development so-called optimized (as is suggested by the Drafting Team) resource-mix plans, as identified by a central planner.

Q17. Requirement R2.7.2: Such Corrective Action Plans shall "Be added to study cases and the cases re-tested to show that the System with planned additions meets the performance requirements in the tables". Should new studies, including the facilities comprising the Corrective Action Plan, be performed to assess System normal performance and Contingency response for conditions that previously resulted in the System deficiencies (without the planned additions) and also demonstrate that the changes would not result in inadvertent negative impacts on the System. If you "agree", please comment on how a study area should be determined.

Yes ☒ No ☐
Comment: The study area should be based upon planning expertise and knowledge of the system, giving due consideration to external impacts.

Q18. Requirement R2.7.3: The standard calls for a differentiation between committed and proposed projects. Do you agree that they should be treated separately? If not, please state why not.

Yes ☒ No ☐
Comment: They should be viewed differently in the Near-Term.

Q19. Requirement R2.7.4: For such Corrective Action Plans "Committed projects shall not be removed without documentation to show that the revised plan meets the performance requirements". Do you agree or disagree with this requirement? If you disagree, please explain why.

Yes ☒ No ☐
Comment: It is unclear as to what the committed project is being removed from. Suggested language "…removed from the plan…".

D. Performance Requirements

The proposed revised planning standard (TPL-001-1) incorporates a number of changes in requirements as compared to the current planning standards (TPL-001-0 through TPL-004-0), which it is expected to replace. Among other things these changes are intended to clarify the standard, address issues described by FERC, and, in particular, to "raise the bar." Strengthening the planning standards in selected areas is necessary to maintain a reliable Bulk Electric System that is up to the challenges of the 21st Century. In proposing the requirements in this draft, the standard drafting team attempted to balance the value of increased reliability against any potential increase in work and costs to meet the new proposed standard.

The standard drafting team is seeking input from the industry to determine whether a proper balance has been achieved. The areas where material changes are proposed in this draft are enumerated below, and questions are posed by the standard drafting team to obtain industry comment. In formulating your responses, please keep in mind that material changes in the final standard will be accompanied by a transition plan to provide for an orderly implementation of the final standard.

The performance requirements relative to Non-Consequential Loss of Load for the following events enumerated in the two tables can be considered more stringent than the existing TPL standards. Furthermore, the proposed standard is based on an assumption that performance requirements for EHV facilities should be more stringent than for lower voltage facilities.

Do you agree that Non-Consequential Loss of Load should not be permitted for the following events? If you disagree, please provide a reason for your disagreement.

Event	Agree or Disagree	Comment
Q20. P2-1: Loss of bus section (SLG for stability) above 300 kV	☒Agree. ☒Do not agree.	The term "bus section" needs to be clarified. Some examples should be given showing actual diagram of substation layout.
Q21. P5-1: For facilities above 300 kV, loss of a Transmission circuit followed by System adjustment[1] followed by loss of another Transmission circuit	☐Agree. ☒Do not agree.	Given the low probability of extended overlapping outages of overhead facilities, systems have been designed assuming that load shedding following the loss of a second transmission line is permissible. Eliminating any allowance for load shedding for this condition may require significant system expansion and cost to to customers.
Q22. P5-2: For facilities above 300 kV, loss of a Transmission circuit followed by System adjustment followed by loss of a transformer with low side voltage rating above 300 kV	☒Agree. ☐Do not agree.	
Q23. P5-3: For facilities above 300 kV, loss of a transformer with low side voltage rating above 300 kV followed by System adjustment followed by loss of another transformer	☒Agree. ☐Do not agree.	

[1]System adjustment can be manual or automatic.

The proposed standard is based on an assumption that performance requirements for non-bus tie EHV breakers should be distinguished from other breakers. Do you agree that Non-Consequential Loss of Load should not be permitted for this event?

Q24. Loss of non-bus tie breaker (above 300 kV) due to internal fault

Yes ☒ No ☐

Comment: It is unclear why bus tie breakers are being treated differently than other breakers. They should be treated the same.

The proposed standard is based on an assumption that performance requirements for non-bus tie EHV breakers should be distinguished from other breakers and that performance requirements for EHV facilities should be more stringent than for lower voltage facilities. Do you agree that Non-Consequential Loss of Load should not be permitted for this event?

Q25. P3-1: Loss of (SLG for stability) either a generator, a Transmission circuit, a transformer, or a bus and a stuck non-bus tie breaker (above 300 kV)

Yes ☐ No ☒
Comment: It is unclear why bus tie breakers are being treated differently than other breakers. They should be treated the same.

The proposed standard is based on an assumption that the following events are relatively high probability events and, therefore, Non-Consequential Loss of Load should not be permitted. Do you agree? If you disagree, please provide a reason for your disagreement.

Event	Agree or Disagree	Comment
Q26. P4-1: Loss of a Generator followed by System adjustment[1] followed by loss of another Generator	☒Agree. ☐Do not agree.	Load curtailment may need to be implemented during system adjustment to ensure reliability for the next contingency and may be reasonable following the subsequent loss of 2 additional generators.
Q27. P4-2: Loss of a generator followed by a System adjustment followed by the loss of a monopolar DC line	☒Agree. ☐Do not agree.	Load curtailment may need to be implemented during system adjustment to ensure reliability for the next contingency and may be reasonable following the subsequent loss of an additional generator and a monopolar DC line
Q28. P4-3: Loss of a generator followed by System adjustment followed by loss of a Transmission circuit	☒Agree. ☐Do not agree.	Load curtailment may need to be implemented during system adjustment to ensure reliability for the next contingency and may be reasonable following the subsequent loss of an additional generator and a Transmission circuit
Q29. P4-4: Loss of a generator followed by System adjustment followed by loss of a transformer	☒Agree. ☐Do not agree.	Load curtailment may need to be implemented during system adjustment to ensure reliability for the next contingency and may be reasonable following the subsequent loss of an additional generator and a transformer

The performance requirement for the following event may be considered less stringent than the existing TPL Standards — P2-3: Loss of a single pole of a DC line. Interruption of firm transactions (without Loss of firm Load) if the transaction is dependent on the faulted DC line is now allowed for this initiating event/Contingency.

Q30. Do you agree that interruption of any firm transfers that are dependent on the outaged DC line that is taken out of service should be permitted?

Yes ☒ No ☐

[1] System adjustment can be manual or automatic

Comment: This should also apply to firm transfers via single or double ac facilities as well. In either case, the transfer could be linked to dedicated facilities.

E. Stability

Q31. The proposed standard is based on an assumption that steady state analysis and stability analysis are different from each other and that therefore, two tables of Contingencies and performance requirements were needed. It is also based on an assumption that stability study requirements should be clearly separated from the steady state study requirements. Do you agree with the action taken in separating stability analysis from steady state analysis? If not, please explain.

Yes ☐ No ☒
Comment: The contingency studied are the same and as a result should be combined into one table. Only the performance might be different.
We understand the need to clarify the different requirements in the steadystate vs. the stability analyses. However, for each contingency category we expect to see both the steady-state requirements and the corresponding stability requirements in the same table. We believe that it would be better to recombine the steady-state and stability tables and present the information in a landscape format.

Q32. The SDT has added requirements for plant stability studies and has drawn a distinction in these studies from System stability studies. Do you agree with this approach? If not, please explain.

Yes ☐ No ☒
Comment: A Plant Stability Study should be a part of a System Stability Study. How should and why would they be differentiated? The analysis and performance constraints are the same in both cases; it's just a matter of whether one or more generating units are involved.

Q33. The existing TPL-004-0 standard has a requirement to consider the Loss of all generating units at a plant, but it was not clear whether this requirement should apply to stability studies. The SDT did not include this requirement in the stability table, because it is hard to envision a condition when all units would trip simultaneously within the timeframe of a stability simulation. Do you think this condition should be required in stability analysis of extreme events? If not, please explain.

Yes ☐ No ☒
Comment: Difficult to envision how such an event would occur.

Q34. There are an increasing number of events with slow voltage recovery after faults on the Transmission System. The dynamic behavior of induction motor loads is a major factor in this phenomenon. The proposed standard therefore requires that the load model for stability studies of peak Load conditions include the dynamic effects of induction motors. Do you agree with this requirement? If not, please explain?

Yes ☐ No ☒
Comment: This requirement is too specific and limited. Induction motors are only one component of a complex load model. Complex load models are not always necessary, nor are they always the most conservative, depending on the analysis that is being conducted. Where complex load models are required, they should be considered; this may involve use of complex motor and lighting loads or polynomial load representations

with or without frequency dependence. This question also suggests the need for an industry standard regarding transient voltage recovery.

Q35. What type of manual or automatic adjustments of generators should be allowed for single and multiple Contingencies?

Comment: Manual or automatic adjustments should be permissible to allow redispatch to return the system to below normal/load cycle based ratings; however, the system should not exceed applicable emergency ratings prior to the adjustment. Manual system adjustment should be allowed in between the multiple Contingencies described in P5, provided that the adjustment can be made between contingencies using short-term reserves (10-30 minute).

F. Generation Runback and Tripping

The SDT has discussed the automatic and manual readjustments of generators that should be permissible for single contingencies and multiple contingencies. The existing TPL-001-0 through TPL-004-0 standards through footnote (a) of Table I could include emergency ratings applicable for short durations as required to permit operating steps necessary to maintain system control. The footnote is silent about allowable generation adjustments in response to the Category B events. However, it does indicate that system adjustments are permitted to prepare for the next Contingency. These system adjustments could include manual or automatic adjustments involving generation.

The SDT has learned that many transmission owners use System Protection Systems (SPS) or Remedial Action Schemes (RAS) to trip generation for single and multiple Contingency outage events to prevent overloads, low voltage, and instability in the Interconnected Transmission network for N-1 and N-2 events. In some cases, the RAS are used to prepare for the next Contingency; but in some cases, the RAS are used to simultaneously avoid exceeding emergency ratings.

Q36. The proposed standard allows generation runback after the disturbance that causes a single Contingency (or due to a single Contingency outage) to move the Interconnected Transmission System from an emergency state (within emergency ratings) to a normal state (within normal ratings), assuming that the disturbance does not result in instability? Do you agree? If not, please explain.

Yes ☒ No ☐

Comment: Generation runback should be permissible to allow redispatch to return the system to below normal/load cycle based ratings; however, the system should not exceed applicable emergency ratings prior to the adjustment

Q37. Since emergency ratings are thermal ratings, should this standard allow an automatic generation runback scheme (that is initiated immediately after the disturbance causing the single Contingency) to prevent thermal overloads (assuming that the disturbance does not result in instability)? If yes, what are the conditions that must be met in order to allow such a runback scheme to meet the System performance criteria for single Contingencies? Please explain the reason for your answer.

Yes ☒ No ☐

Comment: However, this should only be allowed where failure of an automatic runback that is not functionally redundant would not have significant adverse impact on the Bulk Power System.

The standard drafting team has considered that RAS or SPS may be allowable under certain situations for single Contingencies, but proposes that their use should be limited.

Q38. Do you agree that RAS or SPS may be allowed for single Contingencies? If not, please explain.

Yes ☒ No ☐
Comment: A SPS may be used to provide protection for infrequent contingencies, or for temporary conditions that may exist such as project delays, unusual combinations of system demand and equipment outages or availability, or specific equipment maintenance outages. An SPS may also be applied to preserve system integrity in the event of severe facility outages and extreme contingencies. The decision to employ an SPS shall take into account the complexity of the scheme and the consequences of correct or incorrect operation as well as its benefits.

Q39. Please describe the limitations that you believe should be placed on the use of RAS or SPS for single Contingency events.

Comment: See response to Q38.

Q40. When RAS or SPS are allowed, what conditions should be met when these systems are used in system adjustments to meet performance requirements?

Comment: System must remain stable with acceptable voltages and all equipment within applicable emergency limits.

G. General Questions

Q41. If you are aware of any regional variances that would be required as a result of these standards, please identify them here.

Yes ☒ No ☒
Comment: Until section R3.6.1 is finalized, we will be unable to determine whether a regional variance is required.

Q42. If you are aware of any conflicts between the proposed standards and any regulatory function, rule order, tariff, rate schedule, legislative requirement or agreement, please identify them here.

Yes ☐ No ☒
Comment:

Q43. Do you have any other questions or concerns with the proposed standard that have not been addressed? If yes, please explain.

Yes ☒ No ☐
Comment:
We think that the proposed fusion of previous TPL-001 to TPL-004 and the addition of more specific contingencies involves too much change at once. It would have been better to make specific change to each individual standards. That way, it would have been more practical to evaluate the impact of the proposed changes.

A major concept before evaluating the impact of a standard is to know on what system it will be applied to. In the tables, the notion of a voltage treshold (>300 kV) is introduced. It is our interpretation that the standard as drafted applies only to BPS elements part of that treshold (>300 kV) and not every ">300 kV" element. The SDT should indicate if they have the same interpretation as ours.

We reiterate our comment that it would be preferable to have only one table that would include both steady state and stability contingencies with their respective expected performance.

There might be some protection standards that would need to be developped/clarified before some proposed changes in this standard.

The SDT has made an effort to define Base Case, yet has not used the term in the standard. At a minimum, Base Case should be referred to in sections 2.1.1, 2.1.2

R.1.1 Load forecasts should be addressed in MOD standards, not TPL.

R 1.4 This should only refer to known long-term outages, not planned outages. Delete "including protective relays"; this is addressed through other provisions.

R2.1, 2.2, 2.3 & 2.4 – The initial paragraph should have identical language regarding 'annual', and 'current or past' aspects.

R2.1 There should not be a requirement to look at years one and two; a 5 year study should be sufficient. If there has been an ongoing 5 year study, there should be no major unexpected problems occurring in years 1 and 2. Studies of earlier years should only be required if an unanticipated event occurred that had not been considered in prior studies. The TPL should not address shorter term "Operating Studies" or operating issues.

R 2.2.1 Modify to "If any known projects have a lead time that is longer than ten years, the Planning Assessment shall be extended accordingly."

R 2.6.1 Remove reference to "market structure changes". The purpose of its inclusion is unclear.

R 2.7.1.1 Project initiation date should be deleted. If it is retained, it needs to be defined.

R 3.2.1/R 4.3 - What is the intent of this requirement? There should probably be an MOD associated with Generator Owner requirement to provide related generator protection/ limiter data or other plant information.

R 3.4/R 4.5.2 Remove the requirement to implement changes to reduce or mitigate the likelihood of such consequences of Extreme Events. This may not be reasonable or achieveable.

R 3.2 Sectionalizing schemes shall be considered when reflecting the post-contingent system.

R 3.3.2.1 - Proposed deleting "expected duration". This would be dependent upon the damage to the element due to the iniating event and other factors.

R 3.3.3 - Change introductory language to read "Those multiple Contingencies that are…"

R 3.5 - Generation tripping should be allowed as well as generation run-back. In addition, all performance requirements shall be met, rather than just meeting facility rating requirements. Suggested language "Manual and automatic generation run-back and/or generation tripping is allowed as a response to single and multiple Contingencies as long as the performance requirements of this standard are met." If these changes are accepted, R 3.6 can be deleted.

R 4 and R 4.1 - The language should be made similar to R 3 and R 3.1.

Suggest bringing language similar R4.4 into the R 3, the steady state section.

R 4.2 - High speed automatic reclosing schemes shall be considered.

R 6.2 - Change to read "Transmission Planners of neighboring areas".

Table 1 3 b and c Extreme Event descriptions are vague concepts that cannot be practically simulated. 3 d and e are not reasonable or practically useful to simulate.

Table 1, P8 - Language needs to be clarifed as to how the 300 kV threshold is to be treated for transformers. Is this for the high side, low side, or both sides? P5 is much clearer.

Table 2 P9. Recommend that this be changed to require that faults should be on different phases of each of two adjacent transmission circuits on a multiple circuit transmission tower

Table 1, P9(6) and Table 2 P9 - It is unclear as to what is meant by "A spare transformer inserted to replace an outaged transformer followed by System adjustments". Unclear as to what is to be tested.

General comment - Transmission System is used throughout the document and is an undefined term, both "Transmission" and "System" are defined NERC terms. We recommend that the SDT use the term "System" to replace "Transmission System". System is defined as "A combination of generation, transmission, and distribution components".

NERC
NORTH AMERICAN ELECTRIC RELIABILITY CORPORATION

Comment Form for First Draft of TPL-001-1 — Transmission System Planning Performance Requirements

Please use this form to submit comments on the proposed draft of TPL-001-1. Comments must be submitted by **Friday, October 26, 2007**. You may submit the completed form by e-mail to sarcomm@nerc.net with the words "TPL-001 Draft 1" in the subject line. If you have questions please contact Ed Dobrowolski at ed.dobrowolksi@nerc.net or by telephone at 609-947-3673.

Individual Commenter Information **(Complete this page for comments from one organization or individual.)**		
Name:	Ron Falsetti	
Organization:	IESO	
Telephone:	905-855-6187	
E-mail:	ron.falsetti@ieso.ca	
NERC Region (check all Regions in which your company operates)		**Registered Ballot Body Segment (check all industry segments in which your company is registered)**
☐ **ERCOT**	☐	1 — Transmission Owners
☐ **FRCC**	☒	2 — RTOs and ISOs
☐ **MRO**	☐	3 — Load-serving Entities
☒ **NPCC**	☐	4 — Transmission-dependent Utilities
☐ **RFC**	☐	5 — Electric Generators
☐ **SERC**	☐	6 — Electricity Brokers, Aggregators, and Marketers
☐ **SPP**	☐	7 — Large Electricity End Users
☐ **WECC**	☐	8 — Small Electricity End Users
☐ **NA – Not Applicable**	☐	9 — Federal, State, Provincial Regulatory or other Government Entities
	☐	10 — Regional Reliability Organizations and Regional Entities

Group Comments (Complete this page if comments are from a group.)

Group Name:

Lead Contact:

Contact Organization:

Contact Segment:

Contact Telephone:

Contact E-mail:

Additional Member Name	Additional Member Organization	Region*	Segment*

*If more than one Region or Segment applies, please list all that apply. Regional acronyms and segment numbers are shown on prior page.

Background

The purpose of this standard is to establish Transmission System planning performance requirements within the planning horizon to develop a Bulk Electric System that will operate reliably over a broad spectrum of System conditions and following a wide range of probable Contingencies. This standard will replace TPL-001-0, TPL-002-0, TPL-003-0, and TPL-004-0. The standard drafting team has not yet addressed TPL-005-0 and TPL-006-0, but will address these two standards during the next phase of the drafting process.

The major objectives of the standard drafting team are to:

1) Ensure the standard is complete and the requirements are set at an appropriate level to ensure reliability (Not Least Common Denominator)
2) Ensure that the standard is enforceable by having clearly defined requirements with unambiguous language
3) Address the issues raised by FERC Order 693, 890, and other applicable orders
4) Address the issues raised in the original Standards Authorization Request (SAR) and the Supplemental SAR.

The standard drafting team did not attempt to edit the existing standards but rather chose to write one standard that addresses all aspects of transmission planning in the existing TPL-001-0, TPL-002-0, TPL-003-0, and TPL-004-0. The standard drafting team organized the new standard in the following sections:

R1 – Modeling requirements
R2 – Assessment and Corrective Plan requirements
R3 – Steady State Analysis requirements
R4 – Stability Analysis requirements
R5 – Coordination requirements

The standard drafting team determined that the requirements and analysis for Steady State are different from those for stability. As such, the standard drafting team separated the analysis requirements and created two performance requirement tables.

The standard drafting team recognizes that this draft standard is a starting point for industry input into the standard and that there is still a lot of work required to complete the process. The standard drafting team has made many changes to clarify requirements, add requirements, and make some of the performance requirements stricter. The standard drafting team has not addressed Measures, Risk Factors, Violation Severity Factors, or Time Horizons at this time. These will be addressed when the standard drafting team has better defined the requirements of the standard.

For questions where you agree with the standard drafting team, please state that you agree and if available, please provide supporting documentation. If you disagree with the standard drafting team, please explain why you disagree and provide data to support your position, such as outage data or analysis. If you believe that we have made a performance requirement too strict please provide supporting documentation. If applicable, please include the approximate cost in man-hours for additional studies and/or cost in $Millions for additional transmission investment to meet the new requirements or the stricter requirements. If you believe that the standard should be stricter, please provide the rationale along with any supporting data, including existing practices, cost estimates or additional analysis.

To improve the standard, the standard drafting team would appreciate responses to as many of these questions as you can answer.

A. New Definitions

Many of the concerns about the existing TPL standards come from the fact that a number of generally understood concepts are embedded in undefined terms, tables, and footnotes. To clarify some of these concerns, the standard drafting team is proposing new definitions. Please indicate whether you agree with the following proposed definitions and provide proposed changes to the definitions if you disagree:

Definition	**Agree or Disagree**
Q1. **Base Case**: Computer representation of the projected initial or starting Transmission System conditions for a specific point in time. Each base case reflects the forecasted Load at each bus (or node) on the interconnected Transmission System, the transmission facilities which deliver the generation and reactive resources to the connected Load, and the generation dispatch including firm transaction obligations assumed to supply the connected Load. The models also reflect facility ratings in accordance with FAC-008 & FAC-009.	☒Agree. ☐Do not agree.
Q1. **Comment: The proposed definition fairly reflects the starting point system model used for planning and operations studies.**	
Q2. **Consequential Load Loss:** Load that is no longer served because it is directly connected to an element(s) that is removed from service due to fault clearing action or mis-operation.	☒Agree. ☐Do not agree.
Q2. **Comment: This is the same understanding of the IESO.**	
Q3. **Extreme Events:** Events which are more severe than Planning Events and have a low probability of occurrence.	☐Agree. ☒Do not agree.
Q3. **Comment: We offer alternative wording to more accurately reflect the lower probability of extreme contingencies than their Planning counterparts, as follows:** **Events which are more severe and have a lower probability of occurrence than Planning Events.**	
Q4. **Long-Term Transmission Planning Horizon:** Transmission planning period that covers years six through ten or beyond.	☒Agree. ☐Do not agree.
Q4. **Comment: Consistent with the IESO's understanding.**	
Q5. **Near-Term Transmission Planning Horizon:** Transmission planning period that covers years One through five.	☒Agree. ☐Do not agree.
Q5. **Comment: Same as above.**	
Q6. **Non-Consequential Load Loss:** Load loss other than Consequential Load Loss. For example, Load loss that occurs	☐Agree.

through manual (operator initiated) or automatic operations such as under-voltage Load shedding, under-frequency Load shedding, or Special Protection Systems.	☒Do not agree.
Q6. **Comment: Suggest to either stop at "automatic operations" or to include other examples since the list is not exhaustive, for example: load that drops out due to unacceptable voltage levels (not tripped intentionally by UVLS.**	
Q7. **Planning Assessment:** Documented evaluation of future Bulk Electric System needs by the use of performance studies that cover a range of assumptions regarding system conditions, time frames, future plans including capital reinforcements and operating procedures and other factors, such as asset conditions and age.	☒Agree. ☒Do not agree.
Q7. **Comment: The definition covers too much detail on the "how" part, and the "documented" qualifier doesn't seem to be required. Suggest to change it to: Evaluation of future Bulk Electric System needs to meet forecast demand under the assumed system conditions for the time frame studied.**	
Q8. **Planning Events:** Events which require Transmission system performance requirements to be met.	☐Agree. ☒Do not agree.
Q8. **Comment: Linking it to Transmission system performance requirements presents "loop around" argument. Suggest to change it to: Events which need to be considered and simulated in planning assessments to evaluate Transmission system performance.**	
Q9. **Plant Stability Study:** Study of an individual plant's Stability for various Contingencies in the vicinity of the plant; concerned with the effect on the System of the generating units' loss of synchronism and the damping of the generating units' power oscillations.	☐Agree. ☒Do not agree.
Q9. **Comment: Suggest to replace "Contingencies" with "Planning events", and change the definition as follows:** **Study of an individual generating plant's capability to remain in synchronism and exhibit damping of the generating units' power oscillation for various Planning events.** **Note that "in the vicinity of the plant" is removed to not restrict simulations of events only in the vicinity of the plants as experience has shown that an event remote from the plant could also subject the plant to lose synchronism and/or oscillate without acceptable damping.**	
Q10. **System Stability Study:** Study of the System or portions of the System to ensure that angular Stability is maintained, inter-area power oscillations are damped, and voltages during the dynamic simulation stay within acceptable performance limits.	☐Agree. ☒Do not agree.
Q10. **Comment: This definition contains requirements that the system must exhibit acceptable performance. The study itself is a tool to assess how the system behaves when subject to Planning events. Suggest to change it to:** **Study of the System or portions of the System to assess the System's performance in the domain of angular Stability, inter-area oscillations and voltage profile during dynamic simulation.**	

Q11. **Year One:** The first year that a Transmission Planner is responsible for studying. This is further defined as the planning window that begins the next calendar year from the time the Transmission Planner submits their annual studies. Analysis conducted for time horizons within the calendar year from the study publication are assumed to be conducted under the auspices of Operations Planning.	☐Agree. ☒Do not agree.
Q11. **Comment: Not sure why we need this definition. The standard can simply be worded such that a Transmission Planner is responsible for assessing system needs for time frame beyond the current year. Introducing Operations Planning creates confusion as it is unclear whether this term describes a function or an entity in the context of the proposed definition. Further, the sentence "Analysis conducted for time horizon within the current year from the study publication are assumed to be conducted under the auspices of Operations Planning" is (a) confusing time frame wise, (b) invites debates on the role and responsibility for a term that is not defined in NERC standard or the Functional Model, and (c) is perceived to be prescriptive in organizational setup/responsibility allocation (e.g. why can't a transmission planner conduct operational planning studies?).**	

B. Sensitivity Studies

The draft planning standard includes the requirement, as specified in FERC Order 693, that planning decisions be based on a portfolio of analyses. In section 12.a.ii "Sensitivity studies and critical system conditions" FERC provided direction to consider a full range of variables considered to be significant that need to be assessed and documentation provided that explains the rationale for the selection of variables assessed.

In addition to the firm obligation scenario, the portfolio of analyses should be supplemented to include information from sensitivity analysis. The sensitivity analysis should be developed using additional cases that simulate reasonably stressed system conditions. The standard drafting team has included several parameters that can be varied to create the requisite sensitivity case(s). The draft standards specify that the sensitivities reflect one or more of the following conditions and that documentation be provided explaining the rationale for selecting the sensitivity(ies) employed. The parameters that should be varied include:

- Higher or lower Load forecasts from the Base Case with variability of Load/demand and Load power factors due to season, weather, or time of day.
- Modification of expected transfers.
- Unavailability of long lead time facilities.
- Variability and outages of Reactive Resources.
- Generation additions, retirements, or other dispatch scenarios.
- Decreased effectiveness of controllable Loads and Demand Side Management.
- Modification of planned Transmission outages

To help focus industry discussion, please respond to the questions below:

Q12. Should the standard provide more specific direction regarding the number of sensitivity cases that need to be developed?

Yes ☐ No ☒
Comment: We do not support introducing sensitivity testing as requirements in the standard, let alone specifying the number of sensitivity cases that need to be developed.

In general, there are two interpretations of sensitivity testing - the type to assist in scoping out planning studies and the type to test the stretched capability of the proposed plans. In the first case, sensitivity testing is conducted to assist in identifying restricting parameters/phenomena, critical faults, and scoping out the conditions that need to be assessed, etc. As such, the scenarios to be included in sensitivity testing vary from one Transmission Planner to another depending on local needs and system characteristics, and even from one study to another for the same area to be assessed. The scope of sensitivity testing is therefore difficult to pin down.

In the second case, while variations such as percentage of forecast peak demand can be picked as a common parameter for sensitivity testing, the follow-on actions, or inactions, after obtaining the test results would be at the sole discretion of the Transmission Planner unless they are specifically addressed by reliability standards. Requiring a Transmission Planner to conduct sensitivity testing, and even to require it to study a specific number of cases case may put a Transmission Planner in a quandary. For example, if sensitivity testing for a case with 5% higher than forecast peak load shows that the system needs a new 500 kV line in a certain area, should the Transmission Planner propose the new line? If so, what are the reliability and economic justifications when it is clearly demonstrated that the line is needed only if the load for that studied time frame turns out to be 5% higher than forecast? If the answer is yes (to propose adding the line), then why don't we simply require that all planning studies assume a condition that is more conservative than that forecast, and stipulate these conditions in the standard accordingly? If not, will the Transmission Planner be criticized for not taking proactive action to manage the potential risk?

Similarly, a Transmission Planner is faced with a much wider study scope if it is required to study the condition assuming one or more major transmission facility is unavailable due to forced outages. These scenarios are more aptly addressed in operations planning or near operations time frame when transmission facility and other system conditions become more predictable. Studies conducted well in advance of real time already rely on many enabling assumptions. Introducing a requirement for sensitivity testing and with specific number of test cases would render the study task difficult to manage, and may put the Transmission Planner in a quandary dealing with the test results. If the standard should require a Transmission Planner to study up to one transmission facility out of service, then this requirement should be clearly stipulated.

Q13. Should the standard specify the required changes, such as changes in expected transfers, load forecasts, generation patterns, etc., from the study case to be considered a “reasonably stressed” case?

Yes ☐ No ☒
Comment: See comments above. Also, the term "reasonably stressed" is not measurable.

Q14. The SDT proposes to require the use of sensitivity studies for Near-Term Transmission System Planning Horizon stability analysis. Do you concur with the use of sensitivity analysis in dynamic studies?

Yes ☐ No ☒
Comment: For similar reasons stated in Q13, above.

Q15. The draft TPL standard does not require the use of sensitivity studies for the Long-Term Transmission System Planning Horizon (year six and beyond) studies. Do you concur with this approach or should there be some level of sensitivity analysis required for the long-term period?

Yes ☒ No ☐
Comment: We agree, but this raised a question on why did the SDT introduce a requirement for sensitivity testing for year one to year 5 studies but not the year 6 and beyond studies. Wouldn't the degree of uncertainty be higher in the longer time frame?

C. Corrective Action Plans

Requirement R2.7 of the standard states that when analysis shows that the performance requirements in Table 1 and Table 2 are not fully met, a Corrective Action Plan that utilizes all or some of the Transmission System enhancements, generation additions, DSM, new technologies and Operating Procedures shall be included in the Planning Assessment. This Corrective Action Plan should ensure that upon its implementation the identified system deficiencies will be corrected so that the performance requirements in Table 1 and Table 2 will be met. Furthermore, studies included in the Planning Assessment should demonstrate that this is indeed the case.

Q16. Requirement R2.7.1: Such Corrective Action Plans shall "Identify System deficiencies and the associated actions needed to achieve required System performance including Transmission and generation improvements, DSM, new technologies, or Operating Procedures including the duration of Interim Operating Procedures". System deficiencies may be corrected using an integrated plan, i.e., an optimal mix of Transmission, generation, DSM and Operating Procedures. Should DSM be considered in conjunction with other measures in developing Corrective Action Plans? If yes, please comment on how the impact of DSM should be included.

Yes ☐ No ☒
Comment: No, the amount DSM is, in some established markets, a market-arranged quantity that depends on both the offered price and the discretion of the LSE or load customer at the time such a price signal presents itself. The resultant amount of DSM that can actually be realized when needed is unpredictable.

This requirement also brings up a broader issue. Requirement 2 generally applies to Planning Coordinator and Transmission Planner, there is no distinction made as to which sub-requirements apply to which entity. In some markets, the Transmission Planner is responsible for assessing future needs for transmission facility only. It does not have the authority to even suggest a corrective plan that involves generation improvement or DSM. The way R2 and its sub-requirements is written is more suited for an integrated planning process, which may not exist in some places/developed markets.

Q17. Requirement R2.7.2: Such Corrective Action Plans shall "Be added to study cases and the cases re-tested to show that the System with planned additions meets the performance requirements in the tables". Should new studies, including the facilities comprising the Corrective Action Plan, be performed to assess System normal performance and Contingency response for conditions that previously resulted in the System deficiencies (without the planned additions) and also demonstrate that the changes would not result in inadvertent negative impacts on the System. If you "agree", please comment on how a study area should be determined.

Yes ☒ No ☐
Comment: We feel that having the requirement to retest the conditions which show a performance deficiency, but now with the proposed corrective measures, would suffice. To illustrate or require "how a study area should be determined" would be micro-managing, and the term "a study area" is not defined anywhere in the standard and is subject to different interpretation. For example, does it mean the physical area of study or does it mean the various areas in the study that need to be explored. We are therefore unable to offer any view as to "how a study area should be determined".

Q18. Requirement R2.7.3: The standard calls for a differentiation between committed and proposed projects. Do you agree that they should be treated separately? If not, please state why not.

Yes ☒ No ☒
Comment: Yes, the distinction should be made as committed projects have a higher degree of certainty to be available for the period under study, whereas a proposed project is one that is supported by the assessment but the commitment to proceed is not yet secured. However, we do not see the need (a) to establish criteria for committed projects and proposed projects, and (b) to distinguish between the criteria between them. If the standard should require a TP to assess both scenarios - with and without proposed projects, then this should be clearly stipulated.

Q19. Requirement R2.7.4: For such Corrective Action Plans "Committed projects shall not be removed without documentation to show that the revised plan meets the performance requirements". Do you agree or disagree with this requirement? If you disagree, please explain why.

Yes ☒ No ☒
Comment: We agree that committed projects should not be removed from the revised plan. But we question the need for this sub-requirement which calls for: "Revisions to the Corrective Action Plans are allowed over time but shall meet the performance requirements.." Committed projects are normally included in the planning studies for which the performance is assessed. Deficiency, if identified, will have a corrective plans developed. We do not understand the need to remove or revise the committed plan in this context.

D. Performance Requirements

The proposed revised planning standard (TPL-001-1) incorporates a number of changes in requirements as compared to the current planning standards (TPL-001-0 through TPL-004-0), which it is expected to replace. Among other things these changes are intended to clarify the standard, address issues described by FERC, and, in particular, to "raise the bar." Strengthening the planning standards in selected areas is necessary to maintain a reliable Bulk Electric System that is up to the challenges of the 21st Century. In proposing the requirements in this draft, the standard drafting team attempted to balance the value of increased reliability against any potential increase in work and costs to meet the new proposed standard.

The standard drafting team is seeking input from the industry to determine whether a proper balance has been achieved. The areas where material changes are proposed in this draft are enumerated below, and questions are posed by the standard drafting team to obtain industry comment. In formulating your responses, please keep in mind that material changes in the final standard will be accompanied by a transition plan to provide for an orderly implementation of the final standard.

The performance requirements relative to Non-Consequential Loss of Load for the following events enumerated in the two tables can be considered more stringent than the existing TPL standards. Furthermore, the proposed standard is based on an assumption that performance requirements for EHV facilities should be more stringent than for lower voltage facilities.

Do you agree that Non-Consequential Loss of Load should not be permitted for the following events? If you disagree, please provide a reason for your disagreement.

Event	Agree or Disagree	Comment
Q20. P2-1: Loss of bus section (SLG for stability) above 300 kV	☒Agree. ☐Do not agree.	We agree, since the loss of a bus is a single contingency. This is a criterion already adopted by the IESO and other members in the NPCC region, for which non-consequential loss of load is not permitted.
Q21. P5-1: For facilities above 300 kV, loss of a Transmission circuit followed by System adjustment[1] followed by loss of another Transmission circuit	☒Agree. ☒Do not agree.	The sequence of events is too general that under some condition, it contradicts with the loss of 2 circuits on the same tower for which non-consequential loss of load is permitted. If the sequence of events is specified such that the two transmission circuits that can be lost are unrelated, then non-consequential loss of load should generally not be allowed following system adjustments after the loss of the first transmission circuit.
Q22. P5-2: For facilities above 300 kV, loss of a Transmission circuit followed by System adjustment followed by loss of a transformer with low side voltage rating above 300 kV	☒Agree. ☒Do not agree.	Similar reason as above. In this case, the first transmission may also remove a transformer from service if they are in the same protection zone. The next contingency can be the loss of the companion transformer, without a fault on the transformer itself but not on the transmission circuit. If the transmission circuit and the transformer are unrelated, then we would agree that non-consequential loss of load should not be allowed.
Q23. P5-3: For facilities above 300 kV, loss of a transformer with low side voltage rating above 300 kV followed by System adjustment followed by loss of another transformer	☒Agree. ☒Do not agree.	Similar reason as above.

[1]System adjustment can be manual or automatic.

The proposed standard is based on an assumption that performance requirements for non-bus tie EHV breakers should be distinguished from other breakers. Do you agree that Non-Consequential Loss of Load should not be permitted for this event?

Q24. Loss of non-bus tie breaker (above 300 kV) due to internal fault

Yes ☒ No ☐
Comment: Agree. In general, non-consequential loss of load should not be permitted for any single contingencies.

The proposed standard is based on an assumption that performance requirements for non-bus tie EHV breakers should be distinguished from other breakers and that performance requirements for EHV facilities should be more stringent than for lower voltage facilities. Do you agree that Non-Consequential Loss of Load should not be permitted for this event?

Q25. P3-1: Loss of (SLG for stability) either a generator, a Transmission circuit, a transformer, or a bus and a stuck non-bus tie breaker (above 300 kV)

Yes ☒ No ☐
Comment: See reason stated for Q24, above.

The proposed standard is based on an assumption that the following events are relatively high probability events and, therefore, Non-Consequential Loss of Load should not be permitted. Do you agree? If you disagree, please provide a reason for your disagreement.

Event	Agree or Disagree	Comment
Q26. P4-1: Loss of a Generator followed by System adjustment[1] followed by loss of another Generator	☒Agree. ☐Do not agree.	The loss of a generator is different from the loss of a transmission facility. The former usually does not result in changes to the system topology nor system operating limits. While loss of 2 generators may result in resource deficiency, the decision to shed load would only be made when operating reserve cannot be replenished after the first contingency, and when the second contingency would result in violation of any SOLs or IROLs or BAL standards for which adjustment cannot be made within the required time line.
Q27. P4-2: Loss of a generator followed by a System adjustment followed by the loss of a monopolar DC line	☒Agree. ☐Do not agree.	Same reason as above except in this case, the loss of a monopolar dc line could interrupt import. Again, it is a resource issue, not a transmission reliability issue.
Q28. P4-3: Loss of a generator followed by System adjustment followed by loss of a Transmission	☒Agree. ☐Do not agree.	Similar reason as above. In this case, while the second contingency is the loss of a transmission circuit, the first contingency (loss of a generator) has

[1] System adjustment can be manual or automatic

circuit		not changed the system topology. Hence, the system condition after having been adjusted following the first contingency should in essence be similar to the all transmission facilities in service condition for which the non-consequential loss of load performance for single contingencies is expected.
Q29. P4-4: Loss of a generator followed by System adjustment followed by loss of a transformer with low side voltage rating above 300 kV	☒Agree. ☐Do not agree.	Similar reason as above.

The performance requirement for the following event may be considered less stringent than the existing TPL Standards — P2-3: Loss of a single pole of a DC line. Interruption of firm transactions (without Loss of firm Load) if the transaction is dependent on the faulted DC line is now allowed for this initiating event/Contingency.

Q30. Do you agree that interruption of any firm transfers that are dependent on the outaged DC line that is taken out of service should be permitted?

Yes ☐ No ☒
Comment: Whether or not interruption of firm transfers should be allowed is more a business arrangement issue than a transmission reliability issue. Usually, delivery over a DC line, either as an import or access to internal or external resources, is factored into the resource integration plan to support meeting demand and energy transfers. The commitment for firm transfers may be made on the reliance of this delivery. However, the contingent loss of any resources including import is assessed in determining the amount and terms of firm transfers to a third part. This is a business and resource allocation issue, not a transmission reliability issue.

E. Stability

Q31. The proposed standard is based on an assumption that steady state analysis and stability analysis are different from each other and that therefore, two tables of Contingencies and performance requirements were needed. It is also based on an assumption that stability study requirements should be clearly separated from the steady state study requirements. Do you agree with the action taken in separating stability analysis from steady state analysis? If not, please explain.

Yes ☒ No ☒
Comment: We agree that the performance requirements for steady state analysis differ from those for stability analysis, but not the contingency requirements. While the specification of, for example, a line to ground fault on a single facility does not mean much to a steady state analysis, and in fact the loss of a single facility is all that it matters, the system is subject to the same type of contingency regardless of the type of analysis to be performed and hence the same contingency needs to be tested in both steady-state and dynamic simulations.

Q32. The SDT has added requirements for plant stability studies and has drawn a distinction in these studies from System stability studies. Do you agree with this approach? If not, please explain.

Yes ☒ No ☒
Comment: We agree that both plant stability and system stability have to be studied and that both must exhibit acceptable performance to deem a testing acceptable. The performance requirements for the two could be different, but not the contingency set that must be tested.

Q33. The existing TPL-004-0 standard has a requirement to consider the Loss of all generating units at a plant, but it was not clear whether this requirement should apply to stability studies. The SDT did not include this requirement in the stability table, because it is hard to envision a condition when all units would trip simultaneously within the timeframe of a stability simulation. Do you think this condition should be required in stability analysis of extreme events? If not, please explain.

Yes ☒ No ☐
Comment: Consistent with our comments provided under Q31, while the performance requirements may be different, there should be no distinction made to the type of contingencies that need to be applied to steady state testing and stability testing. An entire generating station may be lost due to various possible reasons: lost of right of way of transmission lines emanating from the generating station; generic protective relaying problems which cause all relays to operate due to a common cause or common mode event.

Q34. There are an increasing number of events with slow voltage recovery after faults on the Transmission System. The dynamic behavior of induction motor loads is a major factor in this phenomenon. The proposed standard therefore requires that the load model for stability studies of peak Load conditions include the dynamic effects of induction motors. Do you agree with this requirement? If not, please explain?

Yes ☒ No ☐
Comment: Dynamic testing should assess response of moving equipment including induction motor loads.

Q35. What type of manual or automatic adjustments of generators should be allowed for single and multiple Contingencies?

Comment: Automatic adjustments should include AVR, excitation system, stabilizer and governor, all of which have pre-determined settings. These adjustments should be allowed for any type of contingencies. Manual adjustments that should or can be made other than removal of the generating units from service could include manual switching of transmission and adjustment to Phase Angle Regulators for so long that these actions are documented as applicable operating procedures.

F. Generation Runback and Tripping

The SDT has discussed the automatic and manual readjustments of generators that should be permissible for single contingencies and multiple contingencies. The existing TPL-001-0 through TPL-004-0 standards through footnote (a) of Table I could include emergency ratings applicable for short durations as required to permit operating steps necessary to

maintain system control. The footnote is silent about allowable generation adjustments in response to the Category B events. However, it does indicate that system adjustments are permitted to prepare for the next Contingency. These system adjustments could include manual or automatic adjustments involving generation.

The SDT has learned that many transmission owners use System Protection Systems (SPS) or Remedial Action Schemes (RAS) to trip generation for single and multiple Contingency outage events to prevent overloads, low voltage, and instability in the Interconnected Transmission network for N-1 and N-2 events. In some cases, the RAS are used to prepare for the next Contingency; but in some cases, the RAS are used to simultaneously avoid exceeding emergency ratings.

Q36. The proposed standard allows generation runback after the disturbance that causes a single Contingency (or due to a single Contingency outage) to move the Interconnected Transmission System from an emergency state (within emergency ratings) to a normal state (within normal ratings), assuming that the disturbance does not result in instability? Do you agree? If not, please explain.

Yes ☒ No ☐
Comment: Generation rejection and runback are not uncommon to be employed as special protection systems (SPS) to achieve a stable state and/or reduce transmission loading to within pre-determined levels. SPSs, when employed, are designed to operate in order to meet performance requirements following specific contingencies or when specific system conditions are present. As such, when a contingency occurs or when the conditions should arise for which the SPS (in this case, generation runback) is designed to operate, such actions should be simulated.

Q37. Since emergency ratings are thermal ratings, should this standard allow an automatic generation runback scheme (that is initiated immediately after the disturbance causing the single Contingency) to prevent thermal overloads (assuming that the disturbance does not result in instability)? If yes, what are the conditions that must be met in order to allow such a runback scheme to meet the System performance criteria for single Contingencies? Please explain the reason for your answer.

Yes ☒ No ☐
Comment: Please see our response to Q36 for the rationale for allowing the runback scheme to operate. The conditions that need to be met in order to allow the scheme to operate depends specifically on what that SPS (runback scheme) is designed for. Some schemes are designed to operate upon detecting the opening of specific transmission lines, others are designed to operate upon detection of circuit loading reaching a particular threshold. There is no universal rule as to the conditions that must be met for a runback scheme to operate. The use of runback scheme is similar to using special operating procedure, such as cross tripping, operator instructions to open a circuit, etc. There might be design requirements to ensure the scheme meet certain performance criteria. However, these should be covered in the standards for special protection system. In TPL-001, the requirement would be to include simulation of the runback scheme operation only as the conditions that would prompt the scheme to operate occur, and a requirement to include SPS misoperation, i.e., failure to operate and operate when not initiated, as a contingency.

The standard drafting team has considered that RAS or SPS may be allowable under certain situations for single Contingencies, but proposes that their use should be limited.

Q38. Do you agree that RAS or SPS may be allowed for single Contingencies? If not, please explain.

Yes ☒ No ☐
Comment: SPS and RAS should be allowed for single contingencies. However, a more fundamental requirement is that the SPS (and RAS) should generally be regarded as a stop gap measure before planned transmission expansion or reinforcement becomes available. SPS should in general not be used as a substitute for transmission facilities.

Q39. Please describe the limitations that you believe should be placed on the use of RAS or SPS for single Contingency events.

Comment: Please see comments provided under Q38, above, regarding the use of SPS not as a substitute for transmission facilities. In addition, there should be requirements to simulate failure of SPS operation as a contingency in addition to the initiating single contingency. In cases where an SPS is intended to achieve acceptable stability performance which can affect interconnection reliability, the SPS should be classified as BES impactive and as such, redundancy may be required. When redundancy is provided, simulation of SPS failing to operate may be waived.

Q40. When RAS or SPS are allowed, what conditions should be met when these systems are used in system adjustments to meet performance requirements?

Comment: As indicated in the comments provided under Q38 and Q39, the conditions to simulate operation of the RAS and SPS would depend on the conditions they are designed to protect. We do not believe such conditions can be generalized.

G. General Questions

Q41. If you are aware of any regional variances that would be required as a result of these standards, please identify them here.

Yes ☐ No ☒
Comment:

Q42. If you are aware of any conflicts between the proposed standards and any regulatory function, rule order, tariff, rate schedule, legislative requirement or agreement, please identify them here.

Yes ☐ No ☒
Comment:

Q43. Do you have any other questions or concerns with the proposed standard that have not been addressed? If yes, please explain.

Yes ☒ No ☐
Comment:

(1) Pertaining to Q1 to Q11: we do not see the need to define this many terms for this standard. Many of the terms are easily understood and have been used in transmission planning for years that the majority of planners in the industry know what they mean. For example: base case, extreme contingencies (these are in fact listed in the table),

planning assessment, planning event, etc. Furthermore, the terms plant stability and system stability are also well understood to mean "machine synchronism" and "system oscillation/damping".

Among the proposed definitions, only the following terms need to be defined to add clarity:

a. Consequential (and non-consequential) loss of load
b. Long-term vs near-term (suggest to change it to short-term) planning horizons

(2) We do not see the need to use the term RAS (Remedial Action Scheme). The term SPS (Special Protection System) is common used in the industry to generally mean any protection scheme that is designed to initiate actions to control flows, voltage, generation runback or high speed rejection, switching of shunt devices, cross-tripping in response to some pre-determined parameters such as loss of a circuit or some threshold voltage or line flow level. Introducing the term RAS would be confusing to suggest that they do not equate to or are not a part of the SPS.

(3) We interpret the requirement stipulated in R1.1.1 is intended to enable more accurate simulations of load response - both in steady state and dynamic analyses. However, we do not support having this level of granularity (eg: industrial, commercial, residential etc.) stipulated in a planning assessment standard as similar requirements already exist in several MOD standards that deal with forecasted load and modeling. We suggest the mix of load detailed requirements be addressed in the latter set of standards. Similarly, R1.2 is best addressed in the MOD standards. Specific to R1.2, we do not agree with the requirement to provide supporting rationale that include power factor data based on historical System performance, validated by measurement during stressed System conditions, or documented Transmission planning area requirements. Load forecast data already provides projected mix of real and reactive demands and type of load.

(4) R1.4 and R2.1.3 require outages be considered in the planning process. We suggest the SDT clearly stipulate that only known planned long term outages (with a minimum duration to be defined) need to be considered. This suggests is made on the basis that:

- Only known outages should be modeled. The need to model unknown outages would render study scope to be too wide to manage
- Only planned outages should be modeled for the same reason.
- Only known planned outages > a certain period should be modeled since it would be unrealistic and unmanageable to model and propose planning solutions to system constraints that appear to last less than, say, 2 weeks. As a general practice, many planners apply a 4 week period as the minimum for inclusion in planning assessment.

Without narrowing the scope, planning assessment will be an enormous task and difficult to manage.

NERC
NORTH AMERICAN ELECTRIC RELIABILITY CORPORATION

Comment Form for First Draft of TPL-001-1 — Transmission System Planning Performance Requirements

Please use this form to submit comments on the proposed draft of TPL-001-1. Comments must be submitted by **Friday, October 26, 2007**. You may submit the completed form by e-mail to sarcomm@nerc.net with the words "TPL-001 Draft 1" in the subject line. If you have questions please contact Ed Dobrowolski at ed.dobrowolksi@nerc.net or by telephone at 609-947-3673.

Individual Commenter Information **(Complete this page for comments from one organization or individual.)**		
Name: Brian F. Thumm		
Organization: ITC Holdings		
Telephone:		
E-mail:		
NERC Region (check all Regions in which your company operates)		**Registered Ballot Body Segment (check all industry segments in which your company is registered)**
☐ **ERCOT** ☐ **FRCC** ☐ **MRO** ☐ **NPCC** ☐ **RFC** ☐ **SERC** ☐ **SPP** ☐ **WECC** ☐ **NA – Not Applicable**	☐	1 — Transmission Owners
	☐	2 — RTOs and ISOs
	☐	3 — Load-serving Entities
	☐	4 — Transmission-dependent Utilities
	☐	5 — Electric Generators
	☐	6 — Electricity Brokers, Aggregators, and Marketers
	☐	7 — Large Electricity End Users
	☐	8 — Small Electricity End Users
	☐	9 — Federal, State, Provincial Regulatory or other Government Entities
	☐	10 — Regional Reliability Organizations and Regional Entities

Group Comments (Complete this page if comments are from a group.)

Group Name:

Lead Contact:

Contact Organization:

Contact Segment:

Contact Telephone:

Contact E-mail:

Additional Member Name	Additional Member Organization	Region*	Segment*

*If more than one Region or Segment applies, please list all that apply. Regional acronyms and segment numbers are shown on prior page.

Background

The purpose of this standard is to establish Transmission System planning performance requirements within the planning horizon to develop a Bulk Electric System that will operate reliably over a broad spectrum of System conditions and following a wide range of probable Contingencies. This standard will replace TPL-001-0, TPL-002-0, TPL-003-0, and TPL-004-0. The standard drafting team has not yet addressed TPL-005-0 and TPL-006-0, but will address these two standards during the next phase of the drafting process.

The major objectives of the standard drafting team are to:

1) Ensure the standard is complete and the requirements are set at an appropriate level to ensure reliability (Not Least Common Denominator)
2) Ensure that the standard is enforceable by having clearly defined requirements with unambiguous language
3) Address the issues raised by FERC Order 693, 890, and other applicable orders
4) Address the issues raised in the original Standards Authorization Request (SAR) and the Supplemental SAR.

The standard drafting team did not attempt to edit the existing standards but rather chose to write one standard that addresses all aspects of transmission planning in the existing TPL-001-0, TPL-002-0, TPL-003-0, and TPL-004-0. The standard drafting team organized the new standard in the following sections:

R1 – Modeling requirements
R2 – Assessment and Corrective Plan requirements
R3 – Steady State Analysis requirements
R4 – Stability Analysis requirements
R5 – Coordination requirements

The standard drafting team determined that the requirements and analysis for Steady State are different from those for stability. As such, the standard drafting team separated the analysis requirements and created two performance requirement tables.

The standard drafting team recognizes that this draft standard is a starting point for industry input into the standard and that there is still a lot of work required to complete the process. The standard drafting team has made many changes to clarify requirements, add requirements, and make some of the performance requirements stricter. The standard drafting team has not addressed Measures, Risk Factors, Violation Severity Factors, or Time Horizons at this time. These will be addressed when the standard drafting team has better defined the requirements of the standard.

For questions where you agree with the standard drafting team, please state that you agree and if available, please provide supporting documentation. If you disagree with the standard drafting team, please explain why you disagree and provide data to support your position, such as outage data or analysis. If you believe that we have made a performance requirement too strict please provide supporting documentation. If applicable, please include the approximate cost in man-hours for additional studies and/or cost in $Millions for additional transmission investment to meet the new requirements or the stricter requirements. If you believe that the standard should be stricter, please provide the rationale along with any supporting data, including existing practices, cost estimates or additional analysis.

To improve the standard, the standard drafting team would appreciate responses to as many of these questions as you can answer.

A. New Definitions

Many of the concerns about the existing TPL standards come from the fact that a number of generally understood concepts are embedded in undefined terms, tables, and footnotes. To clarify some of these concerns, the standard drafting team is proposing new definitions. Please indicate whether you agree with the following proposed definitions and provide proposed changes to the definitions if you disagree:

Definition	**Agree or Disagree**
Q1. **Base Case**: Computer representation of the projected initial or starting Transmission System conditions for a specific point in time. Each base case reflects the forecasted Load at each bus (or node) on the interconnected Transmission System, the transmission facilities which deliver the generation and reactive resources to the connected Load, and the generation dispatch including firm transaction obligations assumed to supply the connected Load. The models also reflect facility ratings in accordance with FAC-008 & FAC-009.	☒Agree. ☐Do not agree.
Q1. **Comment: Firm obligations may possibly include obligations beyond "firm transactions" which most likely means grandfathered transactions and TSRs as you have written it. The planning base cases should have sufficient margins to cover uncertainties as well as "firm transactions". The ATCTDT has "drafts" in place which require that TRM and CBM be included in transmission planning studies for both the near-term and long-term planning horizons. While they are drafts at this stage, consideration should be given to including their requirements in your drafts.**	
Q2. **Consequential Load Loss:** Load that is no longer served because it is directly connected to an element(s) that is removed from service due to fault clearing action or mis-operation.	☒Agree. ☐Do not agree.
Q2. **Comment: Suggest a change in terminology to "direct".**	
Q3. **Extreme Events:** Events which are more severe than Planning Events and have a low probability of occurrence.	☒Agree. ☐Do not agree.
Q3. **Comment: R3.4 implies that "extreme events" will be studied as per the table. The definition seems functionally correct as applied to the standard but somewhat confusing. The existing wording implies that a mitigation plan should be developed if studies show that "extreme events" might cause cascading. If the mitigation plan is a true requirement, saying it is not a planning event can be confusing. "Extreme events are more severe than Planning Events, have a low probability of occurrence and only require___?????_____ in the event of cascade."**	
Q4. **Long-Term Transmission Planning Horizon:** Transmission planning period that covers years six through ten or beyond.	☒Agree. ☐Do not agree.

Q4. **Comment:**	
Q5. **Near-Term Transmission Planning Horizon:** Transmission planning period that covers years One through five.	☒Agree. ☐Do not agree.
Q5. **Comment:**	
Q6. **Non-Consequential Load Loss:** Load loss other than Consequential Load Loss. For example, Load loss that occurs through manual (operator initiated) or automatic operations such as under-voltage Load shedding, under-frequency Load shedding, or Special Protection Systems.	☒Agree. ☐Do not agree.
Q6. **Comment: May want to change the terminology as some may interpret this to mean load that is not important and can routinely be shed for any contingency. Suggest 'direct load loss' and 'indirect load loss'. Potential Definition: Load that is not intended to be lost for normal fault clearing or during mis-operation but could be lost either by design, such as under frequency relaying, SPS or backup breaker clearing, or thru manual operator action.**	
Q7. **Planning Assessment:** Documented evaluation of future Bulk Electric System needs by the use of performance studies that cover a range of assumptions regarding system conditions, time frames, future plans including capital reinforcements and operating procedures and other factors, such as asset conditions and age.	☒Agree. ☐Do not agree.
Q7. **Comment:**	
Q8. **Planning Events:** Events which require Transmission system performance requirements to be met.	☒Agree. ☐Do not agree.
Q8. **Comment:**	
Q9. **Plant Stability Study:** Study of an individual plant's Stability for various Contingencies in the vicinity of the plant; concerned with the effect on the System of the generating units' loss of synchronism and the damping of the generating units' power oscillations.	☒Agree. ☐Do not agree.
Q9. **Comment:**	
Q10. **System Stability Study:** Study of the System or portions of the System to ensure that angular Stability is maintained, inter-area power oscillations are damped, and voltages during the dynamic simulation stay within acceptable performance limits.	☒Agree. ☐Do not agree.
Q10. **Comment:**	
Q11. **Year One:** The first year that a Transmission Planner is responsible for studying. This is further defined as the planning window that begins the next calendar year from the time the Transmission Planner submits their annual studies. Analysis conducted for time horizons within the calendar year from the study publication are assumed to be conducted under the auspices of Operations Planning.	☐Agree. ☐Do not agree.
Q11. **Comment: Adding a statement specifying that this is at least ??? number of months into the future may be prudent.**	

B. Sensitivity Studies

The draft planning standard includes the requirement, as specified in FERC Order 693, that planning decisions be based on a portfolio of analyses. In section 12.a.ii "Sensitivity studies and critical system conditions" FERC provided direction to consider a full range of variables considered to be significant that need to be assessed and documentation provided that explains the rationale for the selection of variables assessed.

In addition to the firm obligation scenario, the portfolio of analyses should be supplemented to include information from sensitivity analysis. The sensitivity analysis should be developed using additional cases that simulate reasonably stressed system conditions. The standard drafting team has included several parameters that can be varied to create the requisite sensitivity case(s). The draft standards specify that the sensitivities reflect one or more of the following conditions and that documentation be provided explaining the rationale for selecting the sensitivity(ies) employed. The parameters that should be varied include:

- Higher or lower Load forecasts from the Base Case with variability of Load/demand and Load power factors due to season, weather, or time of day.
- Modification of expected transfers.
- Unavailability of long lead time facilities.
- Variability and outages of Reactive Resources.
- Generation additions, retirements, or other dispatch scenarios.
- Decreased effectiveness of controllable Loads and Demand Side Management.
- Modification of planned Transmission outages

To help focus industry discussion, please respond to the questions below:

Q12. Should the standard provide more specific direction regarding the number of sensitivity cases that need to be developed?

Yes ☒ No ☐
Comment: The standard should provide a minimum number of sensitivity cases that should be developed and should include at least a higher load forecast (90/10 vs. 50/50) and a higher generator unavailiablity (LOLE - 1 in 10).

Q13. Should the standard specify the required changes, such as changes in expected transfers, load forecasts, generation patterns, etc., from the study case to be considered a "reasonably stressed" case?

Yes ☒ No ☐
Comment: "Modification of expected transfers" should include unexpected loopflow caused by 3rd parties where applicable. In addition to the obvious impacts on system margins, loopflows have been identified as a major reason that FTR feasibility is hard to predict.

Also, see answer to Q12 above.

Some level of flexibility for some of the stressed cases should be left to the individual Planning areas as they would know typical load/stresses seen by their systems that should be studied and solutions identified for problems.

Q14. The SDT proposes to require the use of sensitivity studies for Near-Term Transmission System Planning Horizon stability analysis. Do you concur with the use of sensitivity analysis in dynamic studies?

Yes ☒ No ☐
Comment: Both peak and off-peak models have been historically used for stability analysis and should continue to be used. The need for additional sensitivity studies should be left to the discreton of the Transmission Planner.

Q15. The draft TPL standard does not require the use of sensitivity studies for the Long-Term Transmission System Planning Horizon (year six and beyond) studies. Do you concur with this approach or should there be some level of sensitivity analysis required for the long-term period?

Yes ☒ No ☐
Comment: We believe that both near-term and long-term studies should include sensitivity studies. Near-term studies may produce either operating solutions and more limited transmission solutions. It is just as or more important in a standard like this one to also do sensitivity analysis for the 6-10 year and beyond period. This is necessary to provide the needed advance notice for long-lead time alternatives to problems which are uncovered. Focusing on the next 5 years limits alternatives that can be implemented.

In fact, it makes sense to perform more sensitivity analysis on the longer term as assumptions become less probable the further out into the future you get. If a problem is identified in one snapshot 10 years out it may be less relevant than if it shows up in several varying snapshots 10 years out into the future. The use of sensitivity studies for the 6-10+ year horizon will hopefully have the effect of minimizing the use of band-aid type approaches to identified problems.

C. Corrective Action Plans

Requirement R2.7 of the standard states that when analysis shows that the performance requirements in Table 1 and Table 2 are not fully met, a Corrective Action Plan that utilizes all or some of the Transmission System enhancements, generation additions, DSM, new technologies and Operating Procedures shall be included in the Planning Assessment. This Corrective Action Plan should ensure that upon its implementation the identified system deficiencies will be corrected so that the performance requirements in Table 1 and Table 2 will be met. Furthermore, studies included in the Planning Assessment should demonstrate that this is indeed the case.

Q16. Requirement R2.7.1: Such Corrective Action Plans shall "Identify System deficiencies and the associated actions needed to achieve required System performance including Transmission and generation improvements, DSM, new technologies, or Operating Procedures including the duration of Interim Operating Procedures". System deficiencies may be corrected using an integrated plan, i.e., an optimal mix of Transmission, generation, DSM and Operating Procedures. Should DSM be considered in conjunction with other measures in developing Corrective Action Plans? If yes, please comment on how the impact of DSM should be included.

Yes ☒ No ☐
Comment: DSM alternatives should focus on existing contractual relationships only. DSM is an alternative to "capacity solutions" and you have to give weight to how well you can count on it during capacity emergencies. Will the load be there to cut? How

certain are you (contractually) that the load will be shed voluntarily when called upon to do so?

Q17. Requirement R2.7.2: Such Corrective Action Plans shall "Be added to study cases and the cases re-tested to show that the System with planned additions meets the performance requirements in the tables". Should new studies, including the facilities comprising the Corrective Action Plan, be performed to assess System normal performance and Contingency response for conditions that previously resulted in the System deficiencies (without the planned additions) and also demonstrate that the changes would not result in inadvertent negative impacts on the System. If you "agree", please comment on how a study area should be determined.

Yes ☒ No ☐
Comment: Without further study once a "solution" has been proposed how can one be sure it will work and not create "other" issues? The area of study should be developed using good engineering judgment with input from any neighboring parties that might be impacted.

Q18. Requirement R2.7.3: The standard calls for a differentiation between committed and proposed projects. Do you agree that they should be treated separately? If not, please state why not.

Yes ☐ No ☒
Comment: All projects should naturally become committed projects at some point prior to the need date. The time frame should be dependant on the scale and voltage class of the project.

Q19. Requirement R2.7.4: For such Corrective Action Plans "Committed projects shall not be removed without documentation to show that the revised plan meets the performance requirements". Do you agree or disagree with this requirement? If you disagree, please explain why.

Yes ☒ No ☐
Comment: We agree.

D. Performance Requirements

The proposed revised planning standard (TPL-001-1) incorporates a number of changes in requirements as compared to the current planning standards (TPL-001-0 through TPL-004-0), which it is expected to replace. Among other things these changes are intended to clarify the standard, address issues described by FERC, and, in particular, to "raise the bar." Strengthening the planning standards in selected areas is necessary to maintain a reliable Bulk Electric System that is up to the challenges of the 21st Century. In proposing the requirements in this draft, the standard drafting team attempted to balance the value of increased reliability against any potential increase in work and costs to meet the new proposed standard.

The standard drafting team is seeking input from the industry to determine whether a proper balance has been achieved. The areas where material changes are proposed in this draft are enumerated below, and questions are posed by the standard drafting team to obtain industry comment. In formulating your responses, please keep in mind that material changes in the final standard will be accompanied by a transition plan to provide for an orderly implementation of the final standard.

The performance requirements relative to Non-Consequential Loss of Load for the following events enumerated in the two tables can be considered more stringent than the existing TPL standards. Furthermore, the proposed standard is based on an assumption that performance requirements for EHV facilities should be more stringent than for lower voltage facilities.

Do you agree that Non-Consequential Loss of Load should not be permitted for the following events? If you disagree, please provide a reason for your disagreement.

Event	Agree or Disagree	Comment
Q20. P2-1: Loss of bus section (SLG for stability) above 300 kV	☒Agree. ☐Do not agree.	Should also consider no or limited loss of load for facilities 100 kV and above.
Q21. P5-1: For facilities above 300 kV, loss of a Transmission circuit followed by System adjustment[1] followed by loss of another Transmission circuit	☒Agree. ☐Do not agree.	Should also consider no or limited loss of Non-consequential load for facilities 100 kV and above. This should be no loss for load levels where the TO would expect to perform system maintenance.
Q22. P5-2: For facilities above 300 kV, loss of a Transmission circuit followed by System adjustment followed by loss of a transformer with low side voltage rating above 300 kV	☒Agree. ☐Do not agree.	Should also consider no or limited loss of non-consequential load for facilities 100 kV and above. No loss should be allowed for load levels at which the TO would plan to perform maintenance. Also system adjustment should consider time required for adjustment verses the ratings utilized.
Q23. P5-3: For facilities above 300 kV, loss of a transformer with low side voltage rating above 300 kV followed by System adjustment followed by loss of another transformer	☒Agree. ☐Do not agree.	Should also consider no or limited loss of non-consequential load for facilities 100 kV and above. No loss should be allowed for load levels at which the TO would plan to perform maintenance. Also system adjustment should consider time required for adjust.ment verses the facility ratings utilized.

[1]System adjustment can be manual or automatic.

The proposed standard is based on an assumption that performance requirements for non-bus tie EHV breakers should be distinguished from other breakers. Do you agree that Non-Consequential Loss of Load should not be permitted for this event?

Q24. Loss of non-bus tie breaker (above 300 kV) due to internal fault

Yes ☒ No ☐
Comment: Loss of non-consequential load should not be permited, however this should also apply to other breakers across the system including bus tie breakers.

The proposed standard is based on an assumption that performance requirements for non-bus tie EHV breakers should be distinguished from other breakers and that performance requirements for EHV facilities should be more stringent than for lower voltage facilities. Do you agree that Non-Consequential Loss of Load should not be permitted for this event?

Q25. P3-1: Loss of (SLG for stability) either a generator, a Transmission circuit, a transformer, or a bus and a stuck non-bus tie breaker (above 300 kV)

Yes ☒ No ☐
Comment: Should also consider no loss of non-consequential load for facilities 100 kV and above and this should also apply to other breakers across the system including bus tie breakers.

The proposed standard is based on an assumption that the following events are relatively high probability events and, therefore, Non-Consequential Loss of Load should not be permitted. Do you agree? If you disagree, please provide a reason for your disagreement.

Event	Agree or Disagree	Comment
Q26. P4-1: Loss of a Generator followed by System adjustment[1] followed by loss of another Generator	☒Agree. ☐Do not agree.	Also use of system adjustment should consider time required to complete adjustment.
Q27. P4-2: Loss of a generator followed by a System adjustment followed by the loss of a monopolar DC line	☒Agree. ☐Do not agree.	Also use of system adjustment should consider time required to complete adjustment.
Q28. P4-3: Loss of a generator followed by System adjustment followed by loss of a Transmission circuit	☒Agree. ☐Do not agree.	Also use of system adjustment should consider time required to complete adjustment. Ability for generation adjustment should include the time required for unit startup if applicable.
Q29. P4-4: Loss of a generator followed by System adjustment followed by loss of a transformer	☒Agree. ☐Do not agree.	Also use of system adjustment should consider time required to complete adjustment. Ability for generation adjustment should include the time required for unit startup if applicable.

The performance requirement for the following event may be considered less stringent than the existing TPL Standards — P2-3: Loss of a single pole of a DC line. Interruption of firm transactions (without Loss of firm Load) if the transaction is dependent on the faulted DC line is now allowed for this initiating event/Contingency.

Q30. Do you agree that interruption of any firm transfers that are dependent on the outaged DC line that is taken out of service should be permitted?

Yes ☒ No ☐

[1] System adjustment can be manual or automatic

Comment: However, the owners of the firm transfers may not agree. If they don't, a system impact study needs to be part of the assessment IF THE OWNERS OF THE FIRM TRANSFERS DO NOT AGREE. It must be clear to the original TSR requester that this was truly conditional on the DC line being in service. If it was granted without telling them this, then the interruption of firm transfers should NOT be permitted.

E. Stability

Q31. The proposed standard is based on an assumption that steady state analysis and stability analysis are different from each other and that therefore, two tables of Contingencies and performance requirements were needed. It is also based on an assumption that stability study requirements should be clearly separated from the steady state study requirements. Do you agree with the action taken in separating stability analysis from steady state analysis? If not, please explain.

Yes ☒ No ☐
Comment: We agree but consideration should be given to the amount of work needed by entities to meet these requirements. Full scale annual stability studies may not be needed. If possible, criteria should be developed as to when stability studies need to be repeated (if at all) and to what level (i.e. every bus on the system or just the generator busses or somewhere in between).

Q32. The SDT has added requirements for plant stability studies and has drawn a distinction in these studies from System stability studies. Do you agree with this approach? If not, please explain.

Yes ☒ No ☐
Comment: See response to Q31.

Q33. The existing TPL-004-0 standard has a requirement to consider the Loss of all generating units at a plant, but it was not clear whether this requirement should apply to stability studies. The SDT did not include this requirement in the stability table, because it is hard to envision a condition when all units would trip simultaneously within the timeframe of a stability simulation. Do you think this condition should be required in stability analysis of extreme events? If not, please explain.

Yes ☐ No ☒
Comment: If it is not probable, then why study it. Realistic probabilities need to be established and defined for study.

Q34. There are an increasing number of events with slow voltage recovery after faults on the Transmission System. The dynamic behavior of induction motor loads is a major factor in this phenomenon. The proposed standard therefore requires that the load model for stability studies of peak Load conditions include the dynamic effects of induction motors. Do you agree with this requirement? If not, please explain?

Yes ☒ No ☐
Comment: However this will require the Load Serving Entities provide specific data for each bus on the system which may not be in the direct control of the entity performing the studies. The standard should be written with this understanding in mind. Failure of a LSE to provide such data should not cause a penalty to be imposed on a Transmission Provider.

Q35. What type of manual or automatic adjustments of generators should be allowed for single and multiple Contingencies?

Comment: There should be no change in generation for single contingencies. An approved SPS in those areas that use them might be an exception however system damage for failure to operate should not be allowed beyond the station with the SPS. Also, loss of load should not be allowed for failure to operate. An automated adjustment for multiple contingencies is not unrealistic.

F. Generation Runback and Tripping

The SDT has discussed the automatic and manual readjustments of generators that should be permissible for single contingencies and multiple contingencies. The existing TPL-001-0 through TPL-004-0 standards through footnote (a) of Table I could include emergency ratings applicable for short durations as required to permit operating steps necessary to maintain system control. The footnote is silent about allowable generation adjustments in response to the Category B events. However, it does indicate that system adjustments are permitted to prepare for the next Contingency. These system adjustments could include manual or automatic adjustments involving generation.

The SDT has learned that many transmission owners use System Protection Systems (SPS) or Remedial Action Schemes (RAS) to trip generation for single and multiple Contingency outage events to prevent overloads, low voltage, and instability in the Interconnected Transmission network for N-1 and N-2 events. In some cases, the RAS are used to prepare for the next Contingency; but in some cases, the RAS are used to simultaneously avoid exceeding emergency ratings.

Q36. The proposed standard allows generation runback after the disturbance that causes a single Contingency (or due to a single Contingency outage) to move the Interconnected Transmission System from an emergency state (within emergency ratings) to a normal state (within normal ratings), assuming that the disturbance does not result in instability? Do you agree? If not, please explain.

Yes ☒ No ☐
Comment:

Q37. Since emergency ratings are thermal ratings, should this standard allow an automatic generation runback scheme (that is initiated immediately after the disturbance causing the single Contingency) to prevent thermal overloads (assuming that the disturbance does not result in instability)? If yes, what are the conditions that must be met in order to allow such a runback scheme to meet the System performance criteria for single Contingencies? Please explain the reason for your answer.

Yes ☐ No ☒
Comment: We believe that the BES should be able to operate for N-1 events without reliance on operating schemes. Assuming that some areas allow this, there should be criteria to evaluate the consequences of 2nd contingencies occurring during the runback. In addition, short-time ratings need to be confirmed which limit the time for runback. The system is at risk until the runback is completed and this risk must be evaluated and REQUIRED in the planning assessment.

The standard drafting team has considered that RAS or SPS may be allowable under certain situations for single Contingencies, but proposes that their use should be limited.

Q38. Do you agree that RAS or SPS may be allowed for single Contingencies? If not, please explain.

Yes ☐ No ☒
Comment: We wouldn't agree to this without knowing what you mean by limited use. RAS or SPS as a common practice does not "raise the bar" in planning standard. An RAS or SPS should be allowable as a temporary measure to allow one to meet the standard and two to protect the components of the BES. When used in this capacity, a plan should be being either developed or implemented such that the RAS or SPS can be removed from service.

Q39. Please describe the limitations that you believe should be placed on the use of RAS or SPS for single Contingency events.

Comment: Temporary in nature.

Q40. When RAS or SPS are allowed, what conditions should be met when these systems are used in system adjustments to meet performance requirements?

Comment: This should be limited to the time until a physical solution is possible (i.e., a temporary solution).

G. General Questions

Q41. If you are aware of any regional variances that would be required as a result of these standards, please identify them here.

Yes ☐ No ☒
Comment: Variances should not be a reason to change the standard (lower the bar).

Q42. If you are aware of any conflicts between the proposed standards and any regulatory function, rule order, tariff, rate schedule, legislative requirement or agreement, please identify them here.

Yes ☐ No ☒
Comment:

Q43. Do you have any other questions or concerns with the proposed standard that have not been addressed? If yes, please explain.

Yes ☒ No ☐
Comment: A modeling issue that we would like to see standardized is the modeling of generation resources when the load exceeds or is very near the installed reserve level (low generation reserve margin). This would occur in future years when new resources are unknown or not announced yet. It is a concern of ours because we are an independent transmission company and are not always apprised of new resources. We also have a concern with some models which "assume" where new generation would be located or fake generation has been added to meet the load requirements. This can produce distorted transmission assessments because the generation location assumption is not firm. We would prefer to see generation scaling, or an assumption that the power

will be imported or a combination of scaling and imports. Assuming 100% generator availability is also not a good assumption just to balance load and generation.

Other modeling issues:

1. Should not rely on a single generator being dispatched (redispatched) to solve a problem.

2. Using a single generator for redispatch should not be an acceptable corrective action (i.e. rely on a generator that might not be there or may take an extended period to start up).

3. Sensitivities for both the planning horizons should consider load forecast error and variability. You shouldn't just stick with one assumption, such as a 50/50 probability of occurrence. The system needs to be able to operate to loads exceeding 50/50 probability of occurance.

We would also like to see additional requirements be put on "corrective action" solutions to reliability violations resulting from planning assessments. Any corrective action should be restudied to insure that it does not cause other reliability problems for system conditions other than those for which the corrective action is intended to resolve. For example, if redispatch under a transmission outage condition is acceptable, it should not cause any additional reliability violations for the next contingency.

NERC
NORTH AMERICAN ELECTRIC RELIABILITY CORPORATION

Comment Form for First Draft of TPL-001-1 — Transmission System Planning Performance Requirements

Please use this form to submit comments on the proposed draft of TPL-001-1. Comments must be submitted by **Friday, October 26, 2007**. You may submit the completed form by e-mail to sarcomm@nerc.net with the words "TPL-001 Draft 1" in the subject line. If you have questions please contact Ed Dobrowolski at ed.dobrowolksi@nerc.net or by telephone at 609-947-3673.

Individual Commenter Information **(Complete this page for comments from one organization or individual.)**		
Name:	Don Gilbert	
Organization:	JEA	
Telephone:	904-665-7109	
E-mail:	gilbdc@jea.com	
NERC Region (check all Regions in which your company operates)		**Registered Ballot Body Segment (check all industry segments in which your company is registered)**
☐ **ERCOT**	☒	1 — Transmission Owners
☒ **FRCC**	☐	2 — RTOs and ISOs
☐ **MRO**	☒	3 — Load-serving Entities
☐ **NPCC**	☐	4 — Transmission-dependent Utilities
☐ **RFC**	☒	5 — Electric Generators
☐ **SERC**	☐	6 — Electricity Brokers, Aggregators, and Marketers
☐ **SPP**	☐	7 — Large Electricity End Users
☐ **WECC**	☐	8 — Small Electricity End Users
☐ **NA – Not Applicable**	☐	9 — Federal, State, Provincial Regulatory or other Government Entities
	☐	10 — Regional Reliability Organizations and Regional Entities

Group Comments (Complete this page if comments are from a group.)

Group Name:

Lead Contact:

Contact Organization:

Contact Segment:

Contact Telephone:

Contact E-mail:

Additional Member Name	Additional Member Organization	Region*	Segment*

*If more than one Region or Segment applies, please list all that apply. Regional acronyms and segment numbers are shown on prior page.

Background

The purpose of this standard is to establish Transmission System planning performance requirements within the planning horizon to develop a Bulk Electric System that will operate reliably over a broad spectrum of System conditions and following a wide range of probable Contingencies. This standard will replace TPL-001-0, TPL-002-0, TPL-003-0, and TPL-004-0. The standard drafting team has not yet addressed TPL-005-0 and TPL-006-0, but will address these two standards during the next phase of the drafting process.

The major objectives of the standard drafting team are to:

1) Ensure the standard is complete and the requirements are set at an appropriate level to ensure reliability (Not Least Common Denominator)
2) Ensure that the standard is enforceable by having clearly defined requirements with unambiguous language
3) Address the issues raised by FERC Order 693, 890, and other applicable orders
4) Address the issues raised in the original Standards Authorization Request (SAR) and the Supplemental SAR.

The standard drafting team did not attempt to edit the existing standards but rather chose to write one standard that addresses all aspects of transmission planning in the existing TPL-001-0, TPL-002-0, TPL-003-0, and TPL-004-0. The standard drafting team organized the new standard in the following sections:

R1 – Modeling requirements
R2 – Assessment and Corrective Plan requirements
R3 – Steady State Analysis requirements
R4 – Stability Analysis requirements
R5 – Coordination requirements

The standard drafting team determined that the requirements and analysis for Steady State are different from those for stability. As such, the standard drafting team separated the analysis requirements and created two performance requirement tables.

The standard drafting team recognizes that this draft standard is a starting point for industry input into the standard and that there is still a lot of work required to complete the process. The standard drafting team has made many changes to clarify requirements, add requirements, and make some of the performance requirements stricter. The standard drafting team has not addressed Measures, Risk Factors, Violation Severity Factors, or Time Horizons at this time. These will be addressed when the standard drafting team has better defined the requirements of the standard.

For questions where you agree with the standard drafting team, please state that you agree and if available, please provide supporting documentation. If you disagree with the standard drafting team, please explain why you disagree and provide data to support your position, such as outage data or analysis. If you believe that we have made a performance requirement too strict please provide supporting documentation. If applicable, please include the approximate cost in man-hours for additional studies and/or cost in $Millions for additional transmission investment to meet the new requirements or the stricter requirements. If you believe that the standard should be stricter, please provide the rationale along with any supporting data, including existing practices, cost estimates or additional analysis.

To improve the standard, the standard drafting team would appreciate responses to as many of these questions as you can answer.

A. New Definitions

Many of the concerns about the existing TPL standards come from the fact that a number of generally understood concepts are embedded in undefined terms, tables, and footnotes. To clarify some of these concerns, the standard drafting team is proposing new definitions. Please indicate whether you agree with the following proposed definitions and provide proposed changes to the definitions if you disagree:

Definition	**Agree or Disagree**
Q1. **Base Case**: Computer representation of the projected initial or starting Transmission System conditions for a specific point in time. Each base case reflects the forecasted Load at each bus (or node) on the interconnected Transmission System, the transmission facilities which deliver the generation and reactive resources to the connected Load, and the generation dispatch including firm transaction obligations assumed to supply the connected Load. The models also reflect facility ratings in accordance with FAC-008 & FAC-009.	☐Agree. ☐Do not agree.
Q1. **Comment:**	
Q2. **Consequential Load Loss:** Load that is no longer served because it is directly connected to an element(s) that is removed from service due to fault clearing action or mis-operation.	☐Agree. ☐Do not agree.
Q2. **Comment:**	
Q3. **Extreme Events:** Events which are more severe than Planning Events and have a low probability of occurrence.	☐Agree. ☐Do not agree.
Q3. **Comment:**	
Q4. **Long-Term Transmission Planning Horizon:** Transmission planning period that covers years six through ten or beyond.	☐Agree. ☐Do not agree.
Q4. **Comment:**	
Q5. **Near-Term Transmission Planning Horizon:** Transmission planning period that covers years One through five.	☐Agree. ☐Do not agree.
Q5. **Comment:**	
Q6. **Non-Consequential Load Loss:** Load loss other than Consequential Load Loss. For example, Load loss that occurs through manual (operator initiated) or automatic operations such as under-voltage Load shedding, under-frequency Load shedding, or Special Protection Systems.	☐Agree. ☐Do not agree.
Q6. **Comment:**	
Q7. **Planning Assessment:** Documented evaluation of future Bulk Electric System needs by the use of performance studies that cover a range of assumptions regarding system conditions, time	☐Agree. ☐Do not

frames, future plans including capital reinforcements and operating procedures and other factors, such as asset conditions and age.	agree.
Q7. **Comment:**	
Q8. **Planning Events:** Events which require Transmission system performance requirements to be met.	☐Agree. ☐Do not agree.
Q8. **Comment:**	
Q9. **Plant Stability Study:** Study of an individual plant's Stability for various Contingencies in the vicinity of the plant; concerned with the effect on the System of the generating units' loss of synchronism and the damping of the generating units' power oscillations.	☐Agree. ☐Do not agree.
Q9. **Comment:**	
Q10. **System Stability Study:** Study of the System or portions of the System to ensure that angular Stability is maintained, inter-area power oscillations are damped, and voltages during the dynamic simulation stay within acceptable performance limits.	☐Agree. ☐Do not agree.
Q10. **Comment:**	
Q11. **Year One:** The first year that a Transmission Planner is responsible for studying. This is further defined as the planning window that begins the next calendar year from the time the Transmission Planner submits their annual studies. Analysis conducted for time horizons within the calendar year from the study publication are assumed to be conducted under the auspices of Operations Planning.	☐Agree. ☐Do not agree.
Q11. **Comment:**	

B. Sensitivity Studies

The draft planning standard includes the requirement, as specified in FERC Order 693, that planning decisions be based on a portfolio of analyses. In section 12.a.ii "Sensitivity studies and critical system conditions" FERC provided direction to consider a full range of variables considered to be significant that need to be assessed and documentation provided that explains the rationale for the selection of variables assessed.

In addition to the firm obligation scenario, the portfolio of analyses should be supplemented to include information from sensitivity analysis. The sensitivity analysis should be developed using additional cases that simulate reasonably stressed system conditions. The standard drafting team has included several parameters that can be varied to create the requisite sensitivity case(s). The draft standards specify that the sensitivities reflect one or more of the following conditions and that documentation be provided explaining the rationale for selecting the sensitivity(ies) employed. The parameters that should be varied include:

- Higher or lower Load forecasts from the Base Case with variability of Load/demand and Load power factors due to season, weather, or time of day.
- Modification of expected transfers.
- Unavailability of long lead time facilities.
- Variability and outages of Reactive Resources.
- Generation additions, retirements, or other dispatch scenarios.

- Decreased effectiveness of controllable Loads and Demand Side Management.
- Modification of planned Transmission outages

To help focus industry discussion, please respond to the questions below:

Q12. Should the standard provide more specific direction regarding the number of sensitivity cases that need to be developed?

Yes ☐ No ☒
Comment: Transmission Planners when developing system improvement options should identify their system specific sensitivity cases that best assesses the robustness of the options under consideration. Project evaluation is not addressed in the NERC standards and performing sensitivity assessments that only lead to operational remedies consistent with the standards, are best performed within the operational horizon where information and assumptions are more certain than within the planning horizon.

Q13. Should the standard specify the required changes, such as changes in expected transfers, load forecasts, generation patterns, etc., from the study case to be considered a "reasonably stressed" case?

Yes ☐ No ☒
Comment: Transmission Planners when developing system improvement options should identify their system specific "reasonable stressed" cases including opportunities for additional economic margins that best assesses the economic benefits of the options under consideration. Project evaluation is not addressed in the NERC standards and performing assessments on "reasonable stressed" cases that only lead to operational remedies consistent with the standards, are best performed within the operational horizon where information and assumptions are more certain than within the planning horizon.

Q14. The SDT proposes to require the use of sensitivity studies for Near-Term Transmission System Planning Horizon stability analysis. Do you concur with the use of sensitivity analysis in dynamic studies?

Yes ☐ No ☐
Comment:

Q15. The draft TPL standard does not require the use of sensitivity studies for the Long-Term Transmission System Planning Horizon (year six and beyond) studies. Do you concur with this approach or should there be some level of sensitivity analysis required for the long-term period?

Yes ☒ No ☐
Comment:

C. Corrective Action Plans

Requirement R2.7 of the standard states that when analysis shows that the performance requirements in Table 1 and Table 2 are not fully met, a Corrective Action Plan that utilizes all or some of the Transmission System enhancements, generation additions, DSM, new technologies and Operating Procedures shall be included in the Planning Assessment. This Corrective Action Plan should ensure that upon its implementation the identified system deficiencies will be corrected so that the performance requirements in Table 1 and Table 2 will be met. Furthermore, studies included in the Planning Assessment should demonstrate that this is indeed the case.

Q16. Requirement R2.7.1: Such Corrective Action Plans shall "Identify System deficiencies and the associated actions needed to achieve required System performance including Transmission and generation improvements, DSM, new technologies, or Operating Procedures including the duration of Interim Operating Procedures". System deficiencies may be corrected using an integrated plan, i.e., an optimal mix of Transmission, generation, DSM and Operating Procedures. Should DSM be considered in conjunction with other measures in developing Corrective Action Plans? If yes, please comment on how the impact of DSM should be included.

Yes ☐ No ☐
Comment:

Q17. Requirement R2.7.2: Such Corrective Action Plans shall "Be added to study cases and the cases re-tested to show that the System with planned additions meets the performance requirements in the tables". Should new studies, including the facilities comprising the Corrective Action Plan, be performed to assess System normal performance and Contingency response for conditions that previously resulted in the System deficiencies (without the planned additions) and also demonstrate that the changes would not result in inadvertent negative impacts on the System. If you "agree", please comment on how a study area should be determined.

Yes ☐ No ☐
Comment:

Q18. Requirement R2.7.3: The standard calls for a differentiation between committed and proposed projects. Do you agree that they should be treated separately? If not, please state why not.

Yes ☐ No ☐
Comment:

Q19. Requirement R2.7.4: For such Corrective Action Plans "Committed projects shall not be removed without documentation to show that the revised plan meets the performance requirements". Do you agree or disagree with this requirement? If you disagree, please explain why.

Yes ☐ No ☐
Comment:

D. Performance Requirements

The proposed revised planning standard (TPL-001-1) incorporates a number of changes in requirements as compared to the current planning standards (TPL-001-0 through TPL-004-0), which it is expected to replace. Among other things these changes are intended to clarify the standard, address issues described by FERC, and, in particular, to "raise the bar." Strengthening the planning standards in selected areas is necessary to maintain a reliable Bulk Electric System that is up to the challenges of the 21st Century. In proposing the requirements in this draft, the standard drafting team attempted to balance the value of increased reliability against any potential increase in work and costs to meet the new proposed standard.

The standard drafting team is seeking input from the industry to determine whether a proper balance has been achieved. The areas where material changes are proposed in this draft are enumerated below, and questions are posed by the standard drafting team to

obtain industry comment. In formulating your responses, please keep in mind that material changes in the final standard will be accompanied by a transition plan to provide for an orderly implementation of the final standard.

The performance requirements relative to Non-Consequential Loss of Load for the following events enumerated in the two tables can be considered more stringent than the existing TPL standards. Furthermore, the proposed standard is based on an assumption that performance requirements for EHV facilities should be more stringent than for lower voltage facilities.

Do you agree that Non-Consequential Loss of Load should not be permitted for the following events? If you disagree, please provide a reason for your disagreement.

Event	Agree or Disagree	Comment
Q20. P2-1: Loss of bus section (SLG for stability) above 300 kV	☐Agree. ☐Do not agree.	
Q21. P5-1: For facilities above 300 kV, loss of a Transmission circuit followed by System adjustment[1] followed by loss of another Transmission circuit	☐Agree. ☐Do not agree.	
Q22. P5-2: For facilities above 300 kV, loss of a Transmission circuit followed by System adjustment followed by loss of a transformer with low side voltage rating above 300 kV	☐Agree. ☐Do not agree.	
Q23. P5-3: For facilities above 300 kV, loss of a transformer with low side voltage rating above 300 kV followed by System adjustment followed by loss of another transformer	☐Agree. ☐Do not agree.	

[1]System adjustment can be manual or automatic.

The proposed standard is based on an assumption that performance requirements for non-bus tie EHV breakers should be distinguished from other breakers. Do you agree that Non-Consequential Loss of Load should not be permitted for this event?

Q24. Loss of non-bus tie breaker (above 300 kV) due to internal fault

Yes ☐ No ☐

Comment:

The proposed standard is based on an assumption that performance requirements for non-bus tie EHV breakers should be distinguished from other breakers and that performance requirements for EHV facilities should be more stringent than for lower voltage facilities. Do you agree that Non-Consequential Loss of Load should not be permitted for this event?

Q25. P3-1: Loss of (SLG for stability) either a generator, a Transmission circuit, a transformer, or a bus and a stuck non-bus tie breaker (above 300 kV)

Yes ☐ No ☐
Comment:

The proposed standard is based on an assumption that the following events are relatively high probability events and, therefore, Non-Consequential Loss of Load should not be permitted. Do you agree? If you disagree, please provide a reason for your disagreement.

Event	Agree or Disagree	Comment
Q26. P4-1: Loss of a Generator followed by System adjustment[1] followed by loss of another Generator	☐Agree. ☐Do not agree.	
Q27. P4-2: Loss of a generator followed by a System adjustment followed by the loss of a monopolar DC line	☐Agree. ☐Do not agree.	
Q28. P4-3: Loss of a generator followed by System adjustment followed by loss of a Transmission circuit	☐Agree. ☒Do not agree.	I do agree that long term plans should be implemented with the goal to eliminate non-consequential load shedding as a response to this failure mode. However, it may be more beneficial for investing in system improvements to reach this state of robustness where there may be a few years or seasons of potential exposure for utilizing non-consequential load shedding. This should be prudent utility practice as long as post-contingency response is executed within the time frame allowed by the facility emergency ratings and load shedding is limited to TP's contracted or tarrif loads.
Q29. P4-4: Loss of a generator followed by System adjustment followed by loss of a transformer	☐Agree. ☒Do not agree.	See comment on P4-3

[1] System adjustment can be manual or automatic

The performance requirement for the following event may be considered less stringent than the existing TPL Standards — P2-3: Loss of a single pole of a DC line. Interruption of firm transactions (without Loss of firm Load) if the transaction is dependent on the faulted DC line is now allowed for this initiating event/Contingency.

Q30. Do you agree that interruption of any firm transfers that are dependent on the outaged DC line that is taken out of service should be permitted?

Yes ☐ No ☐
Comment:

E. Stability

Q31. The proposed standard is based on an assumption that steady state analysis and stability analysis are different from each other and that therefore, two tables of Contingencies and performance requirements were needed. It is also based on an assumption that stability study requirements should be clearly separated from the steady state study requirements. Do you agree with the action taken in separating stability analysis from steady state analysis? If not, please explain.

Yes ☐ No ☐
Comment:

Q32. The SDT has added requirements for plant stability studies and has drawn a distinction in these studies from System stability studies. Do you agree with this approach? If not, please explain.

Yes ☐ No ☐
Comment:

Q33. The existing TPL-004-0 standard has a requirement to consider the Loss of all generating units at a plant, but it was not clear whether this requirement should apply to stability studies. The SDT did not include this requirement in the stability table, because it is hard to envision a condition when all units would trip simultaneously within the timeframe of a stability simulation. Do you think this condition should be required in stability analysis of extreme events? If not, please explain.

Yes ☐ No ☐
Comment:

Q34. There are an increasing number of events with slow voltage recovery after faults on the Transmission System. The dynamic behavior of induction motor loads is a major factor in this phenomenon. The proposed standard therefore requires that the load model for stability studies of peak Load conditions include the dynamic effects of induction motors. Do you agree with this requirement? If not, please explain?

Yes ☐ No ☐
Comment:

Q35. What type of manual or automatic adjustments of generators should be allowed for single and multiple Contingencies?

Comment:

F. Generation Runback and Tripping

The SDT has discussed the automatic and manual readjustments of generators that should be permissible for single contingencies and multiple contingencies. The existing TPL-001-0 through TPL-004-0 standards through footnote (a) of Table I could include emergency ratings applicable for short durations as required to permit operating steps necessary to maintain system control. The footnote is silent about allowable generation adjustments in response to the Category B events. However, it does indicate that system adjustments are permitted to prepare for the next Contingency. These system adjustments could include manual or automatic adjustments involving generation.

The SDT has learned that many transmission owners use System Protection Systems (SPS) or Remedial Action Schemes (RAS) to trip generation for single and multiple Contingency outage events to prevent overloads, low voltage, and instability in the Interconnected Transmission network for N-1 and N-2 events. In some cases, the RAS are used to prepare for the next Contingency; but in some cases, the RAS are used to simultaneously avoid exceeding emergency ratings.

Q36. The proposed standard allows generation runback after the disturbance that causes a single Contingency (or due to a single Contingency outage) to move the Interconnected Transmission System from an emergency state (within emergency ratings) to a normal state (within normal ratings), assuming that the disturbance does not result in instability? Do you agree? If not, please explain.

Yes ☐ No ☐
Comment:

Q37. Since emergency ratings are thermal ratings, should this standard allow an automatic generation runback scheme (that is initiated immediately after the disturbance causing the single Contingency) to prevent thermal overloads (assuming that the disturbance does not result in instability)? If yes, what are the conditions that must be met in order to allow such a runback scheme to meet the System performance criteria for single Contingencies? Please explain the reason for your answer.

Yes ☐ No ☐
Comment:

The standard drafting team has considered that RAS or SPS may be allowable under certain situations for single Contingencies, but proposes that their use should be limited.

Q38. Do you agree that RAS or SPS may be allowed for single Contingencies? If not, please explain.

Yes ☐ No ☐
Comment:

Q39. Please describe the limitations that you believe should be placed on the use of RAS or SPS for single Contingency events.

Comment:

Q40. When RAS or SPS are allowed, what conditions should be met when these systems are used in system adjustments to meet performance requirements?

Comment:

G. General Questions

Q41. If you are aware of any regional variances that would be required as a result of these standards, please identify them here.

Yes ☐ No ☐
Comment:

Q42. If you are aware of any conflicts between the proposed standards and any regulatory function, rule order, tariff, rate schedule, legislative requirement or agreement, please identify them here.

Yes ☐ No ☐
Comment:

Q43. Do you have any other questions or concerns with the proposed standard that have not been addressed? If yes, please explain.

Yes ☒ No ☐
Comment:
In reference to the use of Non-consequential load shedding under single contingency events: I do agree that long term plans should be implemented with the goal to eliminate non-consequential load shedding as a response to this failure mode. However, it may be more beneficial for investing in system improvements to reach this state of robustness where there may be a few years (or seasons) of potential exposure for utilizing non-consequential load shedding. This should be prudent utility practice as long as post-contingency response is executed within the time frame allowed by the facility emergency ratings and load shedding is limited to Transmission Provider's contracted or tarrif loads.

For example, adding or upgrading transmission facilities into a load area where future generation additions are planned to be in-service within the short term horizon (mitigating thermal or voltage violations assessed under P1 and P4-1 through P4-4) would not be the best investment for the overall economic benefit of the bulk electric system.

NERC
NORTH AMERICAN ELECTRIC RELIABILITY CORPORATION

Comment Form for First Draft of TPL-001-1 — Transmission System Planning Performance Requirements

Please use this form to submit comments on the proposed draft of TPL-001-1. Comments must be submitted by **Friday, October 26, 2007**. You may submit the completed form by e-mail to sarcomm@nerc.net with the words "TPL-001 Draft 1" in the subject line. If you have questions please contact Ed Dobrowolski at ed.dobrowolksi@nerc.net or by telephone at 609-947-3673.

Individual Commenter Information **(Complete this page for comments from one organization or individual.)**		
Name:	Harold G. Wyble	
Organization:	Kansas City Power and Light	
Telephone:	816-654-1213	
E-mail:	harold.wyble@kcpl.com	
NERC Region (check all Regions in which your company operates)		**Registered Ballot Body Segment (check all industry segments in which your company is registered)**
☐ **ERCOT**	☒	1 — Transmission Owners
☐ **FRCC**	☐	2 — RTOs and ISOs
☐ **MRO**	☐	3 — Load-serving Entities
☐ **NPCC**	☐	4 — Transmission-dependent Utilities
☐ **RFC**	☐	5 — Electric Generators
☐ **SERC**	☐	6 — Electricity Brokers, Aggregators, and Marketers
☒ **SPP**	☐	7 — Large Electricity End Users
☐ **WECC**	☐	8 — Small Electricity End Users
☐ **NA – Not Applicable**	☐	9 — Federal, State, Provincial Regulatory or other Government Entities
	☐	10 — Regional Reliability Organizations and Regional Entities

Group Comments (Complete this page if comments are from a group.)

Group Name:

Lead Contact:

Contact Organization:

Contact Segment:

Contact Telephone:

Contact E-mail:

Additional Member Name	Additional Member Organization	Region*	Segment*

*If more than one Region or Segment applies, please list all that apply. Regional acronyms and segment numbers are shown on prior page.

Background

The purpose of this standard is to establish Transmission System planning performance requirements within the planning horizon to develop a Bulk Electric System that will operate reliably over a broad spectrum of System conditions and following a wide range of probable Contingencies. This standard will replace TPL-001-0, TPL-002-0, TPL-003-0, and TPL-004-0. The standard drafting team has not yet addressed TPL-005-0 and TPL-006-0, but will address these two standards during the next phase of the drafting process.

The major objectives of the standard drafting team are to:

1) Ensure the standard is complete and the requirements are set at an appropriate level to ensure reliability (Not Least Common Denominator)
2) Ensure that the standard is enforceable by having clearly defined requirements with unambiguous language
3) Address the issues raised by FERC Order 693, 890, and other applicable orders
4) Address the issues raised in the original Standards Authorization Request (SAR) and the Supplemental SAR.

The standard drafting team did not attempt to edit the existing standards but rather chose to write one standard that addresses all aspects of transmission planning in the existing TPL-001-0, TPL-002-0, TPL-003-0, and TPL-004-0. The standard drafting team organized the new standard in the following sections:

R1 – Modeling requirements
R2 – Assessment and Corrective Plan requirements
R3 – Steady State Analysis requirements
R4 – Stability Analysis requirements
R5 – Coordination requirements

The standard drafting team determined that the requirements and analysis for Steady State are different from those for stability. As such, the standard drafting team separated the analysis requirements and created two performance requirement tables.

The standard drafting team recognizes that this draft standard is a starting point for industry input into the standard and that there is still a lot of work required to complete the process. The standard drafting team has made many changes to clarify requirements, add requirements, and make some of the performance requirements stricter. The standard drafting team has not addressed Measures, Risk Factors, Violation Severity Factors, or Time Horizons at this time. These will be addressed when the standard drafting team has better defined the requirements of the standard.

For questions where you agree with the standard drafting team, please state that you agree and if available, please provide supporting documentation. If you disagree with the standard drafting team, please explain why you disagree and provide data to support your position, such as outage data or analysis. If you believe that we have made a performance requirement too strict please provide supporting documentation. If applicable, please include the approximate cost in man-hours for additional studies and/or cost in $Millions for additional transmission investment to meet the new requirements or the stricter requirements. If you believe that the standard should be stricter, please provide the rationale along with any supporting data, including existing practices, cost estimates or additional analysis.

To improve the standard, the standard drafting team would appreciate responses to as many of these questions as you can answer.

A. New Definitions

Many of the concerns about the existing TPL standards come from the fact that a number of generally understood concepts are embedded in undefined terms, tables, and footnotes. To clarify some of these concerns, the standard drafting team is proposing new definitions. Please indicate whether you agree with the following proposed definitions and provide proposed changes to the definitions if you disagree:

Definition	**Agree or Disagree**
Q1. **Base Case**: Computer representation of the projected initial or starting Transmission System conditions for a specific point in time. Each base case reflects the forecasted Load at each bus (or node) on the interconnected Transmission System, the transmission facilities which deliver the generation and reactive resources to the connected Load, and the generation dispatch including firm transaction obligations assumed to supply the connected Load. The models also reflect facility ratings in accordance with FAC-008 & FAC-009.	☒Agree. ☐Do not agree.
Q1. **Comment:**	
Q2. **Consequential Load Loss:** Load that is no longer served because it is directly connected to an element(s) that is removed from service due to fault clearing action or mis-operation.	☒Agree. ☐Do not agree.
Q2. **Comment:**	
Q3. **Extreme Events:** Events which are more severe than Planning Events and have a low probability of occurrence.	☒Agree. ☐Do not agree.
Q3. **Comment: Suggest changing "low" to "lower".**	
Q4. **Long-Term Transmission Planning Horizon:** Transmission planning period that covers years six through ten or beyond.	☒Agree. ☐Do not agree.
Q4. **Comment:**	
Q5. **Near-Term Transmission Planning Horizon:** Transmission planning period that covers years One through five.	☒Agree. ☐Do not agree.
Q5. **Comment:**	
Q6. **Non-Consequential Load Loss:** Load loss other than Consequential Load Loss. For example, Load loss that occurs through manual (operator initiated) or automatic operations such as under-voltage Load shedding, under-frequency Load shedding, or Special Protection Systems.	☒Agree. ☐Do not agree.
Q6. **Comment:**	
Q7. **Planning Assessment:** Documented evaluation of future Bulk Electric System needs by the use of performance studies that cover a range of assumptions regarding system conditions, time	☒Agree. ☐Do not

frames, future plans including capital reinforcements and operating procedures and other factors, such as asset conditions and age.	agree.
Q7. **Comment:**	
Q8. **Planning Events:** Events which require Transmission system performance requirements to be met.	☒Agree. ☐Do not agree.
Q8. **Comment:**	
Q9. **Plant Stability Study:** Study of an individual plant's Stability for various Contingencies in the vicinity of the plant; concerned with the effect on the System of the generating units' loss of synchronism and the damping of the generating units' power oscillations.	☒Agree. ☐Do not agree.
Q9. **Comment: Suggest adding "Bulk Electric" before "System".**	
Q10. **System Stability Study:** Study of the System or portions of the System to ensure that angular Stability is maintained, inter-area power oscillations are damped, and voltages during the dynamic simulation stay within acceptable performance limits.	☒Agree. ☐Do not agree.
Q10. **Comment: Suggest adding "Bulk Electric" before "System".**	
Q11. **Year One:** The first year that a Transmission Planner is responsible for studying. This is further defined as the planning window that begins the next calendar year from the time the Transmission Planner submits their annual studies. Analysis conducted for time horizons within the calendar year from the study publication are assumed to be conducted under the auspices of Operations Planning.	☒Agree. ☐Do not agree.
Q11. **Comment:**	

B. Sensitivity Studies

The draft planning standard includes the requirement, as specified in FERC Order 693, that planning decisions be based on a portfolio of analyses. In section 12.a.ii "Sensitivity studies and critical system conditions" FERC provided direction to consider a full range of variables considered to be significant that need to be assessed and documentation provided that explains the rationale for the selection of variables assessed.

In addition to the firm obligation scenario, the portfolio of analyses should be supplemented to include information from sensitivity analysis. The sensitivity analysis should be developed using additional cases that simulate reasonably stressed system conditions. The standard drafting team has included several parameters that can be varied to create the requisite sensitivity case(s). The draft standards specify that the sensitivities reflect one or more of the following conditions and that documentation be provided explaining the rationale for selecting the sensitivity(ies) employed. The parameters that should be varied include:

- Higher or lower Load forecasts from the Base Case with variability of Load/demand and Load power factors due to season, weather, or time of day.
- Modification of expected transfers.
- Unavailability of long lead time facilities.
- Variability and outages of Reactive Resources.
- Generation additions, retirements, or other dispatch scenarios.

- Decreased effectiveness of controllable Loads and Demand Side Management.
- Modification of planned Transmission outages

To help focus industry discussion, please respond to the questions below:

Q12. Should the standard provide more specific direction regarding the number of sensitivity cases that need to be developed?

Yes ☐ No ☒
Comment: N-1 and N-2 analyses should identify any additional sensitivity cases that need to be studied. This standard should not specify the number and type of sensitivities to be studied.

Q13. Should the standard specify the required changes, such as changes in expected transfers, load forecasts, generation patterns, etc., from the study case to be considered a "reasonably stressed" case?

Yes ☐ No ☒
Comment: Transmission Planner has best knowledge of conditions that create greatest stress on local transmission system.

Q14. The SDT proposes to require the use of sensitivity studies for Near-Term Transmission System Planning Horizon stability analysis. Do you concur with the use of sensitivity analysis in dynamic studies?

Yes ☐ No ☒
Comment: Dynamic studies should be performed when new generation or transformers are added to the system. Should be performed on a periodic basis, not annually.

Q15. The draft TPL standard does not require the use of sensitivity studies for the Long-Term Transmission System Planning Horizon (year six and beyond) studies. Do you concur with this approach or should there be some level of sensitivity analysis required for the long-term period?

Yes ☒ No ☐
Comment: Long term planning horizon has significantly greater uncertainty in future conditions and sensitivity studies are unlikely to contribute to reliability because of this.

C. Corrective Action Plans

Requirement R2.7 of the standard states that when analysis shows that the performance requirements in Table 1 and Table 2 are not fully met, a Corrective Action Plan that utilizes all or some of the Transmission System enhancements, generation additions, DSM, new technologies and Operating Procedures shall be included in the Planning Assessment. This Corrective Action Plan should ensure that upon its implementation the identified system deficiencies will be corrected so that the performance requirements in Table 1 and Table 2 will be met. Furthermore, studies included in the Planning Assessment should demonstrate that this is indeed the case.

Q16. Requirement R2.7.1: Such Corrective Action Plans shall "Identify System deficiencies and the associated actions needed to achieve required System performance including Transmission and generation improvements, DSM, new technologies, or Operating Procedures including the duration of Interim Operating Procedures". System deficiencies may be corrected using an integrated plan, i.e., an optimal mix of Transmission, generation, DSM and Operating Procedures. Should DSM be considered in

conjunction with other measures in developing Corrective Action Plans? If yes, please comment on how the impact of DSM should be included.

Yes ☒ No ☐
Comment: Only for DSM that is contractually "firm" and which can demonstrate mitigation performance (comparable to generation resource) as related to the transmission system.

Q17. Requirement R2.7.2: Such Corrective Action Plans shall "Be added to study cases and the cases re-tested to show that the System with planned additions meets the performance requirements in the tables". Should new studies, including the facilities comprising the Corrective Action Plan, be performed to assess System normal performance and Contingency response for conditions that previously resulted in the System deficiencies (without the planned additions) and also demonstrate that the changes would not result in inadvertent negative impacts on the System. If you "agree", please comment on how a study area should be determined.

Yes ☒ No ☐
Comment: Corrective Action Plans taken by a transmission operator should not burden any of its' directly interconnected transmission operators. Study area should include at least all transmission operators directly interconnected to the transmission operator who took the initial corrective action. It may be appropriate to use the entire RTO/ISO/RRO as study area.

Q18. Requirement R2.7.3: The standard calls for a differentiation between committed and proposed projects. Do you agree that they should be treated separately? If not, please state why not.

Yes ☒ No ☐
Comment:

Q19. Requirement R2.7.4: For such Corrective Action Plans "Committed projects shall not be removed without documentation to show that the revised plan meets the performance requirements". Do you agree or disagree with this requirement? If you disagree, please explain why.

Yes ☐ No ☒
Comment: Corrective Action Plans must demonstrate performance based on the expected system configuration. Committed projects can be changed or discontinued before completion.

D. Performance Requirements

The proposed revised planning standard (TPL-001-1) incorporates a number of changes in requirements as compared to the current planning standards (TPL-001-0 through TPL-004-0), which it is expected to replace. Among other things these changes are intended to clarify the standard, address issues described by FERC, and, in particular, to "raise the bar." Strengthening the planning standards in selected areas is necessary to maintain a reliable Bulk Electric System that is up to the challenges of the 21st Century. In proposing the requirements in this draft, the standard drafting team attempted to balance the value of increased reliability against any potential increase in work and costs to meet the new proposed standard.

The standard drafting team is seeking input from the industry to determine whether a proper balance has been achieved. The areas where material changes are proposed in this

draft are enumerated below, and questions are posed by the standard drafting team to obtain industry comment. In formulating your responses, please keep in mind that material changes in the final standard will be accompanied by a transition plan to provide for an orderly implementation of the final standard.

The performance requirements relative to Non-Consequential Loss of Load for the following events enumerated in the two tables can be considered more stringent than the existing TPL standards. Furthermore, the proposed standard is based on an assumption that performance requirements for EHV facilities should be more stringent than for lower voltage facilities.

Do you agree that Non-Consequential Loss of Load should not be permitted for the following events? If you disagree, please provide a reason for your disagreement.

Event	Agree or Disagree	Comment
Q20. P2-1: Loss of bus section (SLG for stability) above 300 kV	☒Agree. ☐Do not agree.	
Q21. P5-1: For facilities above 300 kV, loss of a Transmission circuit followed by System adjustment[1] followed by loss of another Transmission circuit	☒Agree. ☐Do not agree.	
Q22. P5-2: For facilities above 300 kV, loss of a Transmission circuit followed by System adjustment followed by loss of a transformer with low side voltage rating above 300 kV	☒Agree. ☐Do not agree.	
Q23. P5-3: For facilities above 300 kV, loss of a transformer with low side voltage rating above 300 kV followed by System adjustment followed by loss of another transformer	☒Agree. ☐Do not agree.	

[1]System adjustment can be manual or automatic.

The proposed standard is based on an assumption that performance requirements for non-bus tie EHV breakers should be distinguished from other breakers. Do you agree that Non-Consequential Loss of Load should not be permitted for this event?

Q24. Loss of non-bus tie breaker (above 300 kV) due to internal fault

Yes ☒ No ☐
Comment: No Non-Consequential loss of load for N-1 event.

The proposed standard is based on an assumption that performance requirements for non-bus tie EHV breakers should be distinguished from other breakers and that performance requirements for EHV facilities should be more stringent than for lower voltage facilities. Do you agree that Non-Consequential Loss of Load should not be permitted for this event?

Q25. P3-1: Loss of (SLG for stability) either a generator, a Transmission circuit, a transformer, or a bus and a stuck non-bus tie breaker (above 300 kV)

Yes ☒ No ☐
Comment: Must recognize that there may be Consequential loss of load.

The proposed standard is based on an assumption that the following events are relatively high probability events and, therefore, Non-Consequential Loss of Load should not be permitted. Do you agree? If you disagree, please provide a reason for your disagreement.

Event	Agree or Disagree	Comment
Q26. P4-1: Loss of a Generator followed by System adjustment[1] followed by loss of another Generator	☒Agree. ☐Do not agree.	
Q27. P4-2: Loss of a generator followed by a System adjustment followed by the loss of a monopolar DC line	☒Agree. ☐Do not agree.	
Q28. P4-3: Loss of a generator followed by System adjustment followed by loss of a Transmission circuit	☒Agree. ☐Do not agree.	
Q29. P4-4: Loss of a generator followed by System adjustment followed by loss of a transformer with low side voltage rating above 300 kV	☒Agree. ☐Do not agree.	Need voltage limit in Table 1.

The performance requirement for the following event may be considered less stringent than the existing TPL Standards — P2-3: Loss of a single pole of a DC line. Interruption of firm transactions (without Loss of firm Load) if the transaction is dependent on the faulted DC line is now allowed for this initiating event/Contingency.

Q30. Do you agree that interruption of any firm transfers that are dependent on the outaged DC line that is taken out of service should be permitted?

Yes ☒ No ☐

[1] System adjustment can be manual or automatic

Comment: "Firm" capacity dependent on DC line is similar reliability as a generator.

E. Stability

Q31. The proposed standard is based on an assumption that steady state analysis and stability analysis are different from each other and that therefore, two tables of Contingencies and performance requirements were needed. It is also based on an assumption that stability study requirements should be clearly separated from the steady state study requirements. Do you agree with the action taken in separating stability analysis from steady state analysis? If not, please explain.

Yes ☒ No ☐
Comment:

Q32. The SDT has added requirements for plant stability studies and has drawn a distinction in these studies from System stability studies. Do you agree with this approach? If not, please explain.

Yes ☒ No ☐
Comment:

Q33. The existing TPL-004-0 standard has a requirement to consider the Loss of all generating units at a plant, but it was not clear whether this requirement should apply to stability studies. The SDT did not include this requirement in the stability table, because it is hard to envision a condition when all units would trip simultaneously within the timeframe of a stability simulation. Do you think this condition should be required in stability analysis of extreme events? If not, please explain.

Yes ☐ No ☒
Comment: Agree it is difficult to develop scenario where all units trip simultaneously in stability timeframe.

Q34. There are an increasing number of events with slow voltage recovery after faults on the Transmission System. The dynamic behavior of induction motor loads is a major factor in this phenomenon. The proposed standard therefore requires that the load model for stability studies of peak Load conditions include the dynamic effects of induction motors. Do you agree with this requirement? If not, please explain?

Yes ☐ No ☒
Comment: Transmission operators are required to maintain reactive reserve requirements.

Q35. What type of manual or automatic adjustments of generators should be allowed for single and multiple Contingencies?

Comment: Generation redispatch should not be allowed for N-1 events. Generation redispatch is appropriate for multiple contingencies. Appropriate SPS and generation runback schemes should be allowed, where the system is designed with those schemes.

F. Generation Runback and Tripping

The SDT has discussed the automatic and manual readjustments of generators that should be permissible for single contingencies and multiple contingencies. The existing TPL-001-0 through TPL-004-0 standards through footnote (a) of Table I could include emergency

ratings applicable for short durations as required to permit operating steps necessary to maintain system control. The footnote is silent about allowable generation adjustments in response to the Category B events. However, it does indicate that system adjustments are permitted to prepare for the next Contingency. These system adjustments could include manual or automatic adjustments involving generation.

The SDT has learned that many transmission owners use System Protection Systems (SPS) or Remedial Action Schemes (RAS) to trip generation for single and multiple Contingency outage events to prevent overloads, low voltage, and instability in the Interconnected Transmission network for N-1 and N-2 events. In some cases, the RAS are used to prepare for the next Contingency; but in some cases, the RAS are used to simultaneously avoid exceeding emergency ratings.

Q36. The proposed standard allows generation runback after the disturbance that causes a single Contingency (or due to a single Contingency outage) to move the Interconnected Transmission System from an emergency state (within emergency ratings) to a normal state (within normal ratings), assuming that the disturbance does not result in instability? Do you agree? If not, please explain.

Yes ☐ No ☒
Comment: All generators must have "firm" transmission outlet capacity for their nameplate rating. This means delivery of full output under N-1 conditions. A generator that must reduce output for N-1 is not "firm" generation capacity.

Q37. Since emergency ratings are thermal ratings, should this standard allow an automatic generation runback scheme (that is initiated immediately after the disturbance causing the single Contingency) to prevent thermal overloads (assuming that the disturbance does not result in instability)? If yes, what are the conditions that must be met in order to allow such a runback scheme to meet the System performance criteria for single Contingencies? Please explain the reason for your answer.

Yes ☐ No ☒
Comment: All generators must have "firm" transmission outlet capacity.

The standard drafting team has considered that RAS or SPS may be allowable under certain situations for single Contingencies, but proposes that their use should be limited.

Q38. Do you agree that RAS or SPS may be allowed for single Contingencies? If not, please explain.

Yes ☐ No ☒
Comment: Tripping generation for single contingency other than GSU failure or fault is unacceptable.

Q39. Please describe the limitations that you believe should be placed on the use of RAS or SPS for single Contingency events.

Comment: RAS/SPS should not limit generation output for N-1 conditions.

Q40. When RAS or SPS are allowed, what conditions should be met when these systems are used in system adjustments to meet performance requirements?

Comment: RAS/SPS should not limit generation output for N-1 conditions.

G. General Questions

Q41. If you are aware of any regional variances that would be required as a result of these standards, please identify them here.

Yes ☐ No ☒
Comment:

Q42. If you are aware of any conflicts between the proposed standards and any regulatory function, rule order, tariff, rate schedule, legislative requirement or agreement, please identify them here.

Yes ☒ No ☐
Comment: In the past, Missouri Public Service Commission Staff have required KCPL to demonstrate that generators have "firm" transmission outlet capacity.

Q43. Do you have any other questions or concerns with the proposed standard that have not been addressed? If yes, please explain.

Yes ☐ No ☒
Comment: It is redundant to require provision of modeling data in this Standard. This is covered in Standards MOD 10, 12, 16-25.

NERC
NORTH AMERICAN ELECTRIC RELIABILITY CORPORATION

Comment Form for First Draft of TPL-001-1 — Transmission System Planning Performance Requirements

Please use this form to submit comments on the proposed draft of TPL-001-1. Comments must be submitted by **Friday, October 26, 2007**. You may submit the completed form by e-mail to sarcomm@nerc.net with the words "TPL-001 Draft 1" in the subject line. If you have questions please contact Ed Dobrowolski at ed.dobrowolksi@nerc.net or by telephone at 609-947-3673.

Individual Commenter Information **(Complete this page for comments from one organization or individual.)**		
Name:	Scotty Touchette	
Organization:	Lafayette Utilities System	
Telephone:	337-291-5994	
E-mail:	scotty@lus.org	
NERC Region (check all Regions in which your company operates)		**Registered Ballot Body Segment (check all industry segments in which your company is registered)**
☐ **ERCOT**	☒	1 — Transmission Owners
☐ **FRCC**	☐	2 — RTOs and ISOs
☐ **MRO**	☒	3 — Load-serving Entities
☐ **NPCC**	☐	4 — Transmission-dependent Utilities
☐ **RFC**	☒	5 — Electric Generators
☐ **SERC**	☐	6 — Electricity Brokers, Aggregators, and Marketers
☒ **SPP**	☐	7 — Large Electricity End Users
☐ **WECC**	☐	8 — Small Electricity End Users
☐ **NA – Not Applicable**	☐	9 — Federal, State, Provincial Regulatory or other Government Entities
	☐	10 — Regional Reliability Organizations and Regional Entities

Group Comments (Complete this page if comments are from a group.)

Group Name:

Lead Contact:

Contact Organization:

Contact Segment:

Contact Telephone:

Contact E-mail:

Additional Member Name	Additional Member Organization	Region*	Segment*

*If more than one Region or Segment applies, please list all that apply. Regional acronyms and segment numbers are shown on prior page.

Background

The purpose of this standard is to establish Transmission System planning performance requirements within the planning horizon to develop a Bulk Electric System that will operate reliably over a broad spectrum of System conditions and following a wide range of probable Contingencies. This standard will replace TPL-001-0, TPL-002-0, TPL-003-0, and TPL-004-0. The standard drafting team has not yet addressed TPL-005-0 and TPL-006-0, but will address these two standards during the next phase of the drafting process.

The major objectives of the standard drafting team are to:

1) Ensure the standard is complete and the requirements are set at an appropriate level to ensure reliability (Not Least Common Denominator)
2) Ensure that the standard is enforceable by having clearly defined requirements with unambiguous language
3) Address the issues raised by FERC Order 693, 890, and other applicable orders
4) Address the issues raised in the original Standards Authorization Request (SAR) and the Supplemental SAR.

The standard drafting team did not attempt to edit the existing standards but rather chose to write one standard that addresses all aspects of transmission planning in the existing TPL-001-0, TPL-002-0, TPL-003-0, and TPL-004-0. The standard drafting team organized the new standard in the following sections:

R1 – Modeling requirements
R2 – Assessment and Corrective Plan requirements
R3 – Steady State Analysis requirements
R4 – Stability Analysis requirements
R5 – Coordination requirements

The standard drafting team determined that the requirements and analysis for Steady State are different from those for stability. As such, the standard drafting team separated the analysis requirements and created two performance requirement tables.

The standard drafting team recognizes that this draft standard is a starting point for industry input into the standard and that there is still a lot of work required to complete the process. The standard drafting team has made many changes to clarify requirements, add requirements, and make some of the performance requirements stricter. The standard drafting team has not addressed Measures, Risk Factors, Violation Severity Factors, or Time Horizons at this time. These will be addressed when the standard drafting team has better defined the requirements of the standard.

For questions where you agree with the standard drafting team, please state that you agree and if available, please provide supporting documentation. If you disagree with the standard drafting team, please explain why you disagree and provide data to support your position, such as outage data or analysis. If you believe that we have made a performance requirement too strict please provide supporting documentation. If applicable, please include the approximate cost in man-hours for additional studies and/or cost in $Millions for additional transmission investment to meet the new requirements or the stricter requirements. If you believe that the standard should be stricter, please provide the rationale along with any supporting data, including existing practices, cost estimates or additional analysis.

To improve the standard, the standard drafting team would appreciate responses to as many of these questions as you can answer.

A. New Definitions

Many of the concerns about the existing TPL standards come from the fact that a number of generally understood concepts are embedded in undefined terms, tables, and footnotes. To clarify some of these concerns, the standard drafting team is proposing new definitions. Please indicate whether you agree with the following proposed definitions and provide proposed changes to the definitions if you disagree:

Definition	**Agree or Disagree**
Q1. **Base Case**: Computer representation of the projected initial or starting Transmission System conditions for a specific point in time. Each base case reflects the forecasted Load at each bus (or node) on the interconnected Transmission System, the transmission facilities which deliver the generation and reactive resources to the connected Load, and the generation dispatch including firm transaction obligations assumed to supply the connected Load. The models also reflect facility ratings in accordance with FAC-008 & FAC-009.	☒Agree. ☐Do not agree.
Q1. **Comment:**	
Q2. **Consequential Load Loss:** Load that is no longer served because it is directly connected to an element(s) that is removed from service due to fault clearing action or mis-operation.	☒Agree. ☐Do not agree.
Q2. **Comment:**	
Q3. **Extreme Events:** Events which are more severe than Planning Events and have a low probability of occurrence.	☒Agree. ☐Do not agree.
Q3. **Comment:**	
Q4. **Long-Term Transmission Planning Horizon:** Transmission planning period that covers years six through ten or beyond.	☒Agree. ☐Do not agree.
Q4. **Comment:**	
Q5. **Near-Term Transmission Planning Horizon:** Transmission planning period that covers years One through five.	☒Agree. ☐Do not agree.
Q5. **Comment:**	
Q6. **Non-Consequential Load Loss:** Load loss other than Consequential Load Loss. For example, Load loss that occurs through manual (operator initiated) or automatic operations such as under-voltage Load shedding, under-frequency Load shedding, or Special Protection Systems.	☒Agree. ☐Do not agree.
Q6. **Comment:**	
Q7. **Planning Assessment:** Documented evaluation of future Bulk Electric System needs by the use of performance studies that cover a range of assumptions regarding system conditions, time	☒Agree. ☐Do not

frames, future plans including capital reinforcements and operating procedures and other factors, such as asset conditions and age.	agree.
Q7. **Comment:**	
Q8. **Planning Events:** Events which require Transmission system performance requirements to be met.	☒Agree. ☐Do not agree.
Q8. **Comment:**	
Q9. **Plant Stability Study:** Study of an individual plant's Stability for various Contingencies in the vicinity of the plant; concerned with the effect on the System of the generating units' loss of synchronism and the damping of the generating units' power oscillations.	☒Agree. ☐Do not agree.
Q9. **Comment:**	
Q10. **System Stability Study:** Study of the System or portions of the System to ensure that angular Stability is maintained, inter-area power oscillations are damped, and voltages during the dynamic simulation stay within acceptable performance limits.	☒Agree. ☐Do not agree.
Q10. **Comment:**	
Q11. **Year One:** The first year that a Transmission Planner is responsible for studying. This is further defined as the planning window that begins the next calendar year from the time the Transmission Planner submits their annual studies. Analysis conducted for time horizons within the calendar year from the study publication are assumed to be conducted under the auspices of Operations Planning.	☒Agree. ☐Do not agree.
Q11. **Comment:**	

B. Sensitivity Studies

The draft planning standard includes the requirement, as specified in FERC Order 693, that planning decisions be based on a portfolio of analyses. In section 12.a.ii "Sensitivity studies and critical system conditions" FERC provided direction to consider a full range of variables considered to be significant that need to be assessed and documentation provided that explains the rationale for the selection of variables assessed.

In addition to the firm obligation scenario, the portfolio of analyses should be supplemented to include information from sensitivity analysis. The sensitivity analysis should be developed using additional cases that simulate reasonably stressed system conditions. The standard drafting team has included several parameters that can be varied to create the requisite sensitivity case(s). The draft standards specify that the sensitivities reflect one or more of the following conditions and that documentation be provided explaining the rationale for selecting the sensitivity(ies) employed. The parameters that should be varied include:

- Higher or lower Load forecasts from the Base Case with variability of Load/demand and Load power factors due to season, weather, or time of day.
- Modification of expected transfers.
- Unavailability of long lead time facilities.
- Variability and outages of Reactive Resources.
- Generation additions, retirements, or other dispatch scenarios.

- Decreased effectiveness of controllable Loads and Demand Side Management.
- Modification of planned Transmission outages

To help focus industry discussion, please respond to the questions below:

Q12. Should the standard provide more specific direction regarding the number of sensitivity cases that need to be developed?

Yes ☐ No ☐
Comment:

Q13. Should the standard specify the required changes, such as changes in expected transfers, load forecasts, generation patterns, etc., from the study case to be considered a "reasonably stressed" case?

Yes ☐ No ☐
Comment:

Q14. The SDT proposes to require the use of sensitivity studies for Near-Term Transmission System Planning Horizon stability analysis. Do you concur with the use of sensitivity analysis in dynamic studies?

Yes ☐ No ☐
Comment:

Q15. The draft TPL standard does not require the use of sensitivity studies for the Long-Term Transmission System Planning Horizon (year six and beyond) studies. Do you concur with this approach or should there be some level of sensitivity analysis required for the long-term period?

Yes ☐ No ☐
Comment:

C. Corrective Action Plans

Requirement R2.7 of the standard states that when analysis shows that the performance requirements in Table 1 and Table 2 are not fully met, a Corrective Action Plan that utilizes all or some of the Transmission System enhancements, generation additions, DSM, new technologies and Operating Procedures shall be included in the Planning Assessment. This Corrective Action Plan should ensure that upon its implementation the identified system deficiencies will be corrected so that the performance requirements in Table 1 and Table 2 will be met. Furthermore, studies included in the Planning Assessment should demonstrate that this is indeed the case.

Q16. Requirement R2.7.1: Such Corrective Action Plans shall "Identify System deficiencies and the associated actions needed to achieve required System performance including Transmission and generation improvements, DSM, new technologies, or Operating Procedures including the duration of Interim Operating Procedures". System deficiencies may be corrected using an integrated plan, i.e., an optimal mix of Transmission, generation, DSM and Operating Procedures. Should DSM be considered in conjunction with other measures in developing Corrective Action Plans? If yes, please comment on how the impact of DSM should be included.

Yes ☐ No ☐
Comment:

Q17. Requirement R2.7.2: Such Corrective Action Plans shall "Be added to study cases and the cases re-tested to show that the System with planned additions meets the performance requirements in the tables". Should new studies, including the facilities comprising the Corrective Action Plan, be performed to assess System normal performance and Contingency response for conditions that previously resulted in the System deficiencies (without the planned additions) and also demonstrate that the changes would not result in inadvertent negative impacts on the System. If you "agree", please comment on how a study area should be determined.

Yes ☐ No ☐
Comment:

Q18. Requirement R2.7.3: The standard calls for a differentiation between committed and proposed projects. Do you agree that they should be treated separately? If not, please state why not.

Yes ☐ No ☐
Comment:

Q19. Requirement R2.7.4: For such Corrective Action Plans "Committed projects shall not be removed without documentation to show that the revised plan meets the performance requirements". Do you agree or disagree with this requirement? If you disagree, please explain why.

Yes ☐ No ☐
Comment:

D. Performance Requirements

The proposed revised planning standard (TPL-001-1) incorporates a number of changes in requirements as compared to the current planning standards (TPL-001-0 through TPL-004-0), which it is expected to replace. Among other things these changes are intended to clarify the standard, address issues described by FERC, and, in particular, to "raise the bar." Strengthening the planning standards in selected areas is necessary to maintain a reliable Bulk Electric System that is up to the challenges of the 21st Century. In proposing the requirements in this draft, the standard drafting team attempted to balance the value of increased reliability against any potential increase in work and costs to meet the new proposed standard.

The standard drafting team is seeking input from the industry to determine whether a proper balance has been achieved. The areas where material changes are proposed in this draft are enumerated below, and questions are posed by the standard drafting team to obtain industry comment. In formulating your responses, please keep in mind that material changes in the final standard will be accompanied by a transition plan to provide for an orderly implementation of the final standard.

The performance requirements relative to Non-Consequential Loss of Load for the following events enumerated in the two tables can be considered more stringent than the existing TPL standards. Furthermore, the proposed standard is based on an assumption that performance requirements for EHV facilities should be more stringent than for lower voltage facilities.

Do you agree that Non-Consequential Loss of Load should not be permitted for the following events? If you disagree, please provide a reason for your disagreement.

Event	Agree or Disagree	Comment
Q20. P2-1: Loss of bus section (SLG for stability) above 300 kV	☐Agree. ☐Do not agree.	
Q21. P5-1: For facilities above 300 kV, loss of a Transmission circuit followed by System adjustment[1] followed by loss of another Transmission circuit	☐Agree. ☐Do not agree.	
Q22. P5-2: For facilities above 300 kV, loss of a Transmission circuit followed by System adjustment followed by loss of a transformer with low side voltage rating above 300 kV	☐Agree. ☐Do not agree.	
Q23. P5-3: For facilities above 300 kV, loss of a transformer with low side voltage rating above 300 kV followed by System adjustment followed by loss of another transformer	☐Agree. ☐Do not agree.	

[1]System adjustment can be manual or automatic.

The proposed standard is based on an assumption that performance requirements for non-bus tie EHV breakers should be distinguished from other breakers. Do you agree that Non-Consequential Loss of Load should not be permitted for this event?

Q24. Loss of non-bus tie breaker (above 300 kV) due to internal fault

Yes ☐ No ☐
Comment:

The proposed standard is based on an assumption that performance requirements for non-bus tie EHV breakers should be distinguished from other breakers and that performance requirements for EHV facilities should be more stringent than for lower voltage facilities. Do you agree that Non-Consequential Loss of Load should not be permitted for this event?

Q25. P3-1: Loss of (SLG for stability) either a generator, a Transmission circuit, a transformer, or a bus and a stuck non-bus tie breaker (above 300 kV)

Yes ☐ No ☐
Comment:

The proposed standard is based on an assumption that the following events are relatively high probability events and, therefore, Non-Consequential Loss of Load should not be permitted. Do you agree? If you disagree, please provide a reason for your disagreement.

Event	Agree or Disagree	Comment
Q26. P4-1: Loss of a Generator followed by System adjustment[1] followed by loss of another Generator	☐Agree. ☐Do not agree.	
Q27. P4-2: Loss of a generator followed by a System adjustment followed by the loss of a monopolar DC line	☐Agree. ☐Do not agree.	
Q28. P4-3: Loss of a generator followed by System adjustment followed by loss of a Transmission circuit	☐Agree. ☐Do not agree.	
Q29. P4-4: Loss of a generator followed by System adjustment followed by loss of a transformer	☐Agree. ☐Do not agree.	

The performance requirement for the following event may be considered less stringent than the existing TPL Standards — P2-3: Loss of a single pole of a DC line. Interruption of firm transactions (without Loss of firm Load) if the transaction is dependent on the faulted DC line is now allowed for this initiating event/Contingency.

Q30. Do you agree that interruption of any firm transfers that are dependent on the outaged DC line that is taken out of service should be permitted?

Yes ☐ No ☐
Comment:

E. Stability

Q31. The proposed standard is based on an assumption that steady state analysis and stability analysis are different from each other and that therefore, two tables of Contingencies and performance requirements were needed. It is also based on an assumption that stability study requirements should be clearly separated from the steady state study requirements. Do you agree with the action taken in separating stability analysis from steady state analysis? If not, please explain.

Yes ☐ No ☐
Comment:

[1] System adjustment can be manual or automatic

Q32. The SDT has added requirements for plant stability studies and has drawn a distinction in these studies from System stability studies. Do you agree with this approach? If not, please explain.

Yes ☐ No ☐
Comment:

Q33. The existing TPL-004-0 standard has a requirement to consider the Loss of all generating units at a plant, but it was not clear whether this requirement should apply to stability studies. The SDT did not include this requirement in the stability table, because it is hard to envision a condition when all units would trip simultaneously within the timeframe of a stability simulation. Do you think this condition should be required in stability analysis of extreme events? If not, please explain.

Yes ☐ No ☐
Comment:

Q34. There are an increasing number of events with slow voltage recovery after faults on the Transmission System. The dynamic behavior of induction motor loads is a major factor in this phenomenon. The proposed standard therefore requires that the load model for stability studies of peak Load conditions include the dynamic effects of induction motors. Do you agree with this requirement? If not, please explain?

Yes ☐ No ☐
Comment:

Q35. What type of manual or automatic adjustments of generators should be allowed for single and multiple Contingencies?

Comment:

F. Generation Runback and Tripping

The SDT has discussed the automatic and manual readjustments of generators that should be permissible for single contingencies and multiple contingencies. The existing TPL-001-0 through TPL-004-0 standards through footnote (a) of Table I could include emergency ratings applicable for short durations as required to permit operating steps necessary to maintain system control. The footnote is silent about allowable generation adjustments in response to the Category B events. However, it does indicate that system adjustments are permitted to prepare for the next Contingency. These system adjustments could include manual or automatic adjustments involving generation.

The SDT has learned that many transmission owners use System Protection Systems (SPS) or Remedial Action Schemes (RAS) to trip generation for single and multiple Contingency outage events to prevent overloads, low voltage, and instability in the Interconnected Transmission network for N-1 and N-2 events. In some cases, the RAS are used to prepare for the next Contingency; but in some cases, the RAS are used to simultaneously avoid exceeding emergency ratings.

Q36. The proposed standard allows generation runback after the disturbance that causes a single Contingency (or due to a single Contingency outage) to move the Interconnected Transmission System from an emergency state (within emergency ratings) to a normal state (within normal ratings), assuming that the disturbance does not result in instability? Do you agree? If not, please explain.

Yes ☐ No ☐
Comment:

Q37. Since emergency ratings are thermal ratings, should this standard allow an automatic generation runback scheme (that is initiated immediately after the disturbance causing the single Contingency) to prevent thermal overloads (assuming that the disturbance does not result in instability)? If yes, what are the conditions that must be met in order to allow such a runback scheme to meet the System performance criteria for single Contingencies? Please explain the reason for your answer.

Yes ☐ No ☐
Comment:

The standard drafting team has considered that RAS or SPS may be allowable under certain situations for single Contingencies, but proposes that their use should be limited.

Q38. Do you agree that RAS or SPS may be allowed for single Contingencies? If not, please explain.

Yes ☐ No ☐
Comment:

Q39. Please describe the limitations that you believe should be placed on the use of RAS or SPS for single Contingency events.

Comment:

Q40. When RAS or SPS are allowed, what conditions should be met when these systems are used in system adjustments to meet performance requirements?

Comment:

G. General Questions

Q41. If you are aware of any regional variances that would be required as a result of these standards, please identify them here.

Yes ☐ No ☐
Comment:

Q42. If you are aware of any conflicts between the proposed standards and any regulatory function, rule order, tariff, rate schedule, legislative requirement or agreement, please identify them here.

Yes ☐ No ☐
Comment:

Q43. Do you have any other questions or concerns with the proposed standard that have not been addressed? If yes, please explain.

Yes ☒ No ☐

Comment: The Planning Authority/Transmission Planner should use valid acceptable assessments to plan their systems to operate and supply customer demand and Firm Transmission Service. If the Planning Authority/Transmission Planner determines other methods (such as operational guides) to resolve system overloads for "N-1 Contingency", the operational guides should be limited to only native network facilities that are in direct control and ownership of the Planning Authority/Transmission Planner. Operational guides should be considered only as short term solution to resolve the overloads and shall be used in all studies and approval for transmission service requests. If the operational guide do not completely resolve the overload or restricts access to transmission service, then the Planning Authority/Transmission Planner shall determine facilities to be constructed to resolve the overloaded or restricted facility.

NERC
NORTH AMERICAN ELECTRIC RELIABILITY CORPORATION

Comment Form for First Draft of TPL-001-1 — Transmission System Planning Performance Requirements

Please use this form to submit comments on the proposed draft of TPL-001-1. Comments must be submitted by **Friday, October 26, 2007**. You may submit the completed form by e-mail to sarcomm@nerc.net with the words "TPL-001 Draft 1" in the subject line. If you have questions please contact Ed Dobrowolski at ed.dobrowolksi@nerc.net or by telephone at 609-947-3673.

Individual Commenter Information **(Complete this page for comments from one organization or individual.)**		
Name:	Tim Wu	
Organization:	LADWP	
Telephone:	2133670650	
E-mail:	chuan-hsier.wu@ladwp.com	
NERC Region (check all Regions in which your company operates)		**Registered Ballot Body Segment (check all industry segments in which your company is registered)**
☐ **ERCOT**	☒	1 — Transmission Owners
☐ **FRCC**	☐	2 — RTOs and ISOs
☐ **MRO**	☒	3 — Load-serving Entities
☐ **NPCC**	☐	4 — Transmission-dependent Utilities
☐ **RFC**	☒	5 — Electric Generators
☐ **SERC**	☐	6 — Electricity Brokers, Aggregators, and Marketers
☐ **SPP**	☐	7 — Large Electricity End Users
☒ **WECC**	☐	8 — Small Electricity End Users
☐ **NA – Not Applicable**	☐	9 — Federal, State, Provincial Regulatory or other Government Entities
	☐	10 — Regional Reliability Organizations and Regional Entities

Group Comments (Complete this page if comments are from a group.)

Group Name:

Lead Contact:

Contact Organization:

Contact Segment:

Contact Telephone:

Contact E-mail:

Additional Member Name	Additional Member Organization	Region*	Segment*

*If more than one Region or Segment applies, please list all that apply. Regional acronyms and segment numbers are shown on prior page.

Background

The purpose of this standard is to establish Transmission System planning performance requirements within the planning horizon to develop a Bulk Electric System that will operate reliably over a broad spectrum of System conditions and following a wide range of probable Contingencies. This standard will replace TPL-001-0, TPL-002-0, TPL-003-0, and TPL-004-0. The standard drafting team has not yet addressed TPL-005-0 and TPL-006-0, but will address these two standards during the next phase of the drafting process.

The major objectives of the standard drafting team are to:

1) Ensure the standard is complete and the requirements are set at an appropriate level to ensure reliability (Not Least Common Denominator)
2) Ensure that the standard is enforceable by having clearly defined requirements with unambiguous language
3) Address the issues raised by FERC Order 693, 890, and other applicable orders
4) Address the issues raised in the original Standards Authorization Request (SAR) and the Supplemental SAR.

The standard drafting team did not attempt to edit the existing standards but rather chose to write one standard that addresses all aspects of transmission planning in the existing TPL-001-0, TPL-002-0, TPL-003-0, and TPL-004-0. The standard drafting team organized the new standard in the following sections:

R1 – Modeling requirements
R2 – Assessment and Corrective Plan requirements
R3 – Steady State Analysis requirements
R4 – Stability Analysis requirements
R5 – Coordination requirements

The standard drafting team determined that the requirements and analysis for Steady State are different from those for stability. As such, the standard drafting team separated the analysis requirements and created two performance requirement tables.

The standard drafting team recognizes that this draft standard is a starting point for industry input into the standard and that there is still a lot of work required to complete the process. The standard drafting team has made many changes to clarify requirements, add requirements, and make some of the performance requirements stricter. The standard drafting team has not addressed Measures, Risk Factors, Violation Severity Factors, or Time Horizons at this time. These will be addressed when the standard drafting team has better defined the requirements of the standard.

For questions where you agree with the standard drafting team, please state that you agree and if available, please provide supporting documentation. If you disagree with the standard drafting team, please explain why you disagree and provide data to support your position, such as outage data or analysis. If you believe that we have made a performance requirement too strict please provide supporting documentation. If applicable, please include the approximate cost in man-hours for additional studies and/or cost in $Millions for additional transmission investment to meet the new requirements or the stricter requirements. If you believe that the standard should be stricter, please provide the rationale along with any supporting data, including existing practices, cost estimates or additional analysis.

To improve the standard, the standard drafting team would appreciate responses to as many of these questions as you can answer.

A. New Definitions

Many of the concerns about the existing TPL standards come from the fact that a number of generally understood concepts are embedded in undefined terms, tables, and footnotes. To clarify some of these concerns, the standard drafting team is proposing new definitions. Please indicate whether you agree with the following proposed definitions and provide proposed changes to the definitions if you disagree:

Definition	**Agree or Disagree**
Q1. **Base Case**: Computer representation of the projected initial or starting Transmission System conditions for a specific point in time. Each base case reflects the forecasted Load at each bus (or node) on the interconnected Transmission System, the transmission facilities which deliver the generation and reactive resources to the connected Load, and the generation dispatch including firm transaction obligations assumed to supply the connected Load. The models also reflect facility ratings in accordance with FAC-008 & FAC-009.	☐Agree. ☒Do not agree.
Q1. **Comment: A basecase is a representation of the interconnected power system network at a given instant of time which correctly models an expected network topology in sufficient details (transmission lines, shunt and series compensations, transformers, breakers, phase-shifting transformers, etc.) , the forecasted loads, and a dispatch of connected generations that would achieve load-generation balance to allow a numerical solution without violation of any reliability standards. The resultant flows on the transmission lines are dictated by the Kirchhoff's laws, not laws of commerce, and therefore, cannot be interpreted as either firm or non-firm commercial transactions. A basecase is just a starting point from which transmission planners can make use of to further stress the portion of the systems that are of interests, to properly evaluate the robustness and reliability of the system and to determine line (non-thermal) ratings or network expansions, as needed.**	
Q2. **Consequential Load Loss:** Load that is no longer served because it is directly connected to an element(s) that is removed from service due to fault clearing action or mis-operation.	☐Agree. ☒Do not agree.
Q2. **Comment: The existing standards does not allow load loss for N-1 contingency unless the load is a radial load of the outage element. This new definition appears an attempt to weaken the requirement by broadening it to anything "directly connected" to an element that is removed from service. While it may be argued that probably only radially connected loads fit this definition, this new definition will lead to more creative interpretation of the word "consequential" and leads all of us down unintended consequence. A radial load is a very specific and clearly defined technical term and should not be changed to a new term that is less precise.**	
Q3. **Extreme Events:** Events which are more severe than Planning Events and have a low probability of occurrence.	☐Agree.

	☒Do not agree.
Q3. **Comment: Extreme events for transmission planning should be defined as anything more than N-2. The proposed definition is subjective and not precise. There are examples in this standard as to how this definition can be mis-construed, e.g., cyber attack, wild-fire, hurricanes, etc. These are extreme events that belong in emergency planning, not transmission planning.**	
Q4. **Long-Term Transmission Planning Horizon:** Transmission planning period that covers years six through ten or beyond.	☐Agree. ☒Do not agree.
Q4. **Comment: The objection is not so much about the definition as about what comes after the definition. This standard proposed to include operating and market studies (calling them sensitivities) in the "nera-term" planning studies. It appears that the SDT believes this would be easier to justify if the sensitivities is limited to near-term and not long-term, hence the motivation for breaking the planning horizon. But this is mis-guided; operating studies belongs in operating standards. They should be addressed appropriately in the TOP for operating scenarios and Market related studies should be addressed in MOD, for example. There are no benefits to include these in transmission palnning studies and therefore no need to break up the planning horizon.**	
Q5. **Near-Term Transmission Planning Horizon:** Transmission planning period that covers years One through five.	☐Agree. ☒Do not agree.
Q5. **Comment: See my comment above; the only part about the definition that I would retain is to require each of the first five years in a typical ten-year plan be studied instead of just picking one or two years out of the first five years.**	
Q6. **Non-Consequential Load Loss:** Load loss other than Consequential Load Loss. For example, Load loss that occurs through manual (operator initiated) or automatic operations such as under-voltage Load shedding, under-frequency Load shedding, or Special Protection Systems.	☐Agree. ☒Do not agree.
Q6. **Comment: See my comment on the Consequential load loss. Why introduce two new and less precise definitions to replace one existing clearly defined definition? Radial load is precise and clearly defined to transmission planners.**	
Q7. **Planning Assessment:** Documented evaluation of future Bulk Electric System needs by the use of performance studies that cover a range of assumptions regarding system conditions, time frames, future plans including capital reinforcements and operating procedures and other factors, such as asset conditions and age.	☐Agree. ☒Do not agree.
Q7. **Comment: The assessment of asset conditions and age of equipment belongs in maintenance practices, not a transmission planning issue. Similarly, Operating procedures is an operating matter, not planning studies. They have their own standards that could and should address any issue the SDT may have in mind. Using transmission planning as a catch-all is a wrong headed approach.**	

Q8. **Planning Events:** Events which require Transmission system performance requirements to be met.	☐Agree. ☒Do not agree.
Q8. **Comment: The term Event has such a broad connotation that it can be misused by layperson. In fact, it is already misused in this standard as evidenced by including events such as cyber attacks, hurricans, tonados, etc as transmission planning events. These events belongs in "emergency" planning, not transmission planning.**	
Q9. **Plant Stability Study:** Study of an individual plant's Stability for various Contingencies in the vicinity of the plant; concerned with the effect on the System of the generating units' loss of synchronism and the damping of the generating units' power oscillations.	☐Agree. ☒Do not agree.
Q9. **Comment: When performing transient stablity studies using either PSSE or PSLF, loss of synchronism and oscillation damping are automatically part of the performance evaluation; it is not a separate study and should not be classifed as a separate study. In the context of transmission planning, unless someone on the SDT use programs that do not have transient stability package similar to PSSE and PSLF, or has a completely different understanding on the meaning of loss of synchronism and/or damping, there is no need to introduce two new terms to explain a very well understood and established single term known as "transient stability" .**	
Q10. **System Stability Study:** Study of the System or portions of the System to ensure that angular Stability is maintained, inter-area power oscillations are damped, and voltages during the dynamic simulation stay within acceptable performance limits.	☐Agree. ☒Do not agree.
Q10. **Comment: This comment should be taken together with the comment on Plant stability and I would recommend not to creat new terms and go back to use well established engineering terms like Transient Stability Study which covers synchronism, damping, voltage limits, angular stability, etc. There are many text books that could be used to support this.**	
Q11. **Year One:** The first year that a Transmission Planner is responsible for studying. This is further defined as the planning window that begins the next calendar year from the time the Transmission Planner submits their annual studies. Analysis conducted for time horizons within the calendar year from the study publication are assumed to be conducted under the auspices of Operations Planning.	☒Agree. ☐Do not agree.
Q11. **Comment: very good clarification!**	

B. Sensitivity Studies

The draft planning standard includes the requirement, as specified in FERC Order 693, that planning decisions be based on a portfolio of analyses. In section 12.a.ii "Sensitivity studies and critical system conditions" FERC provided direction to consider a full range of variables considered to be significant that need to be assessed and documentation provided that explains the rationale for the selection of variables assessed.

In addition to the firm obligation scenario, the portfolio of analyses should be supplemented to include information from sensitivity analysis. The sensitivity analysis should be

developed using additional cases that simulate reasonably stressed system conditions. The standard drafting team has included several parameters that can be varied to create the requisite sensitivity case(s). The draft standards specify that the sensitivities reflect one or more of the following conditions and that documentation be provided explaining the rationale for selecting the sensitivity(ies) employed. The parameters that should be varied include:

- Higher or lower Load forecasts from the Base Case with variability of Load/demand and Load power factors due to season, weather, or time of day.
- Modification of expected transfers.
- Unavailability of long lead time facilities.
- Variability and outages of Reactive Resources.
- Generation additions, retirements, or other dispatch scenarios.
- Decreased effectiveness of controllable Loads and Demand Side Management.
- Modification of planned Transmission outages

To help focus industry discussion, please respond to the questions below:

Q12. Should the standard provide more specific direction regarding the number of sensitivity cases that need to be developed?

Yes ☐ No ☒

Comment: the FERC orders are market focused, not reliability focused; to the extent that these orders require sensitivity studies as outlined in this proposed standards, they belongs in operating studies and real time market studies, not transmission planning studies which are to meet reliability based criteria.

Q13. Should the standard specify the required changes, such as changes in expected transfers, load forecasts, generation patterns, etc., from the study case to be considered a "reasonably stressed" case?

Yes ☐ No ☒

Comment: A "reasnably stressed" case in transmission planning is whether or not the transmission system is stressed. To stress a transmission system, the key parameter to monitor are the line flows. Line flows are dictated by network topology and physics of electricity and very much depends on the objectives of each study, i.e., it is case by case. Standard should focus on what criteria shall be complied, not how to comply. This proposed standard is so prescriptive on how to comply that it reads like a tutorial.

Q14. The SDT proposes to require the use of sensitivity studies for Near-Term Transmission System Planning Horizon stability analysis. Do you concur with the use of sensitivity analysis in dynamic studies?

Yes ☐ No ☒

Comment: This standard is mixing operational studies with planning studies. The suggested sensitivities in this proposed standards are what operating studies would and should address. It adds no value to the transmission planning by requiring sensitivities in transmission planning just for the sake of it. In addition, performing operating studies more than one year ahead, generally, is quite useless as a general requirement.

Q15. The draft TPL standard does not require the use of sensitivity studies for the Long-Term Transmission System Planning Horizon (year six and beyond) studies. Do you concur with this approach or should there be some level of sensitivity analysis required for the long-term period?

Yes ☒ No ☐

Comment: This applies to both long- and near- term, the type of sensitivities proposed here do not belong in transmission planning studies.

C. Corrective Action Plans

Requirement R2.7 of the standard states that when analysis shows that the performance requirements in Table 1 and Table 2 are not fully met, a Corrective Action Plan that utilizes all or some of the Transmission System enhancements, generation additions, DSM, new technologies and Operating Procedures shall be included in the Planning Assessment. This Corrective Action Plan should ensure that upon its implementation the identified system deficiencies will be corrected so that the performance requirements in Table 1 and Table 2 will be met. Furthermore, studies included in the Planning Assessment should demonstrate that this is indeed the case.

Q16. Requirement R2.7.1: Such Corrective Action Plans shall "Identify System deficiencies and the associated actions needed to achieve required System performance including Transmission and generation improvements, DSM, new technologies, or Operating Procedures including the duration of Interim Operating Procedures". System deficiencies may be corrected using an integrated plan, i.e., an optimal mix of Transmission, generation, DSM and Operating Procedures. Should DSM be considered in conjunction with other measures in developing Corrective Action Plans? If yes, please comment on how the impact of DSM should be included.

Yes ☐ No ☒

Comment: We should be very careful about using DSM as Corrective Action for transmission problem. What this would lead to is to have a "built-in" transmission problem which would require DSM as the de facto rolling brown-outs or black-outs. DSM should be part of the resource and load forecasting consideration; transmission planning should design tranmission that can properly serve the forecasted loads with the expected resources; not to "live with" or include transmission contraints that rely on DSM as a solution. If the industry truly wants to use DSM as mitigation for transmission deficiencies, let's do it as a deliberate action, not an unintended consequence.

"System deficiencies" may be corrected with an integrated approach as suggested, but "transmission deficiencies" are solved by transmission improvement. The classic example is Path 15 in WSCC/WECC. The transmssion deficiency of PAth15 was well known for many years (like since '80s) and in the "pre-deregulated" dates, the deficiency was indeed managed by an integrated approach when the utility can operate its assets integrally. Then de-regulation happened and the integrated approach became unbundled and impossible resulted in numerous brown-outs and black-outs in California in 2000-01 until a third transmission line is added. Transmission deficiencies, if not mitigated, will significantly affect the accessibility to transmission services, a key concern of ferc 890.

As for new technology, just how the SDT proposes to define what constitutes a new technology? And how to measure for compliance against such a requirement? Hopefully, this is just another case of overly prescriptive standard.

Q17. Requirement R2.7.2: Such Corrective Action Plans shall "Be added to study cases and the cases re-tested to show that the System with planned additions meets the performance requirements in the tables". Should new studies, including the facilities comprising the Corrective Action Plan, be performed to assess System normal performance and Contingency response for conditions that previously resulted in the System deficiencies (without the planned additions) and also demonstrate that the changes would not result in inadvertent negative impacts on the System. If you "agree", please comment on how a study area should be determined.

Yes ☐ No ☒

Comment: This is a redundant and unnecessary requirement. How can one come up with a corrective action plan if it has not been demonstrated the plan can mitigate the problem? And if the corrective plan has been able to demonstrate that it can mitigate the problem, why repeat the study again.

Q18. Requirement R2.7.3: The standard calls for a differentiation between committed and proposed projects. Do you agree that they should be treated separately? If not, please state why not.

Yes ☐ No ☒
Comment: Seems like every company would have its own definition of committed vs propsoed project.

Q19. Requirement R2.7.4: For such Corrective Action Plans "Committed projects shall not be removed without documentation to show that the revised plan meets the performance requirements". Do you agree or disagree with this requirement? If you disagree, please explain why.

Yes ☐ No ☒
Comment: All this does is create more bureaucratic tracking and paper pushing. People probably won't classify anything as committed until concrete has been poured just so not to have to deal with all these paperwork.

D. Performance Requirements

The proposed revised planning standard (TPL-001-1) incorporates a number of changes in requirements as compared to the current planning standards (TPL-001-0 through TPL-004-0), which it is expected to replace. Among other things these changes are intended to clarify the standard, address issues described by FERC, and, in particular, to "raise the bar." Strengthening the planning standards in selected areas is necessary to maintain a reliable Bulk Electric System that is up to the challenges of the 21st Century. In proposing the requirements in this draft, the standard drafting team attempted to balance the value of increased reliability against any potential increase in work and costs to meet the new proposed standard.

The standard drafting team is seeking input from the industry to determine whether a proper balance has been achieved. The areas where material changes are proposed in this draft are enumerated below, and questions are posed by the standard drafting team to obtain industry comment. In formulating your responses, please keep in mind that material changes in the final standard will be accompanied by a transition plan to provide for an orderly implementation of the final standard.

The performance requirements relative to Non-Consequential Loss of Load for the following events enumerated in the two tables can be considered more stringent than the existing TPL standards. Furthermore, the proposed standard is based on an assumption that performance requirements for EHV facilities should be more stringent than for lower voltage facilities.

Do you agree that Non-Consequential Loss of Load should not be permitted for the following events? If you disagree, please provide a reason for your disagreement.

Event	Agree or Disagree	Comment
Q20. P2-1: Loss of bus section (SLG for stability) above 300 kV	☐Agree. ☐Do not agree.	There is a fundamental fatal flaw in having different reliability requirements using an arbitrary separation of the connected bulk electrical systems into above 300kV and below 300kV. The

		standard should be re-draft without this separation and comments be solicitated at that time. These questions are fundamentally unfair without first settling whether or not it is wise to arbitrary separate the bulk system into two different classes. This is like asking someone "Did you hit your spouse today?"
Q21. P5-1: For facilities above 300 kV, loss of a Transmission circuit followed by System adjustment[1] followed by loss of another Transmission circuit	☐Agree. ☐Do not agree.	ditto
Q22. P5-2: For facilities above 300 kV, loss of a Transmission circuit followed by System adjustment followed by loss of a transformer with low side voltage rating above 300 kV	☐Agree. ☐Do not agree.	ditto
Q23. P5-3: For facilities above 300 kV, loss of a transformer with low side voltage rating above 300 kV followed by System adjustment followed by loss of another transformer	☐Agree. ☐Do not agree.	ditto

[1]System adjustment can be manual or automatic.

The proposed standard is based on an assumption that performance requirements for non-bus tie EHV breakers should be distinguished from other breakers. Do you agree that Non-Consequential Loss of Load should not be permitted for this event?

Q24. Loss of non-bus tie breaker (above 300 kV) due to internal fault

Yes ☐ No ☒
Comment: Don't understand why there is such an obsession with bus tie breakers? Is this a common practice in the East? I am not aware of any issue in WECC, let alone at above 300kV systems.

The proposed standard is based on an assumption that performance requirements for non-bus tie EHV breakers should be distinguished from other breakers and that performance requirements for EHV facilities should be more stringent than for lower voltage facilities. Do you agree that Non-Consequential Loss of Load should not be permitted for this event?

Q25. P3-1: Loss of (SLG for stability) either a generator, a Transmission circuit, a transformer, or a bus and a stuck non-bus tie breaker (above 300 kV)

Yes ☐ No ☒
Comment: ditto

The proposed standard is based on an assumption that the following events are relatively high probability events and, therefore, Non-Consequential Loss of Load should not be permitted. Do you agree? If you disagree, please provide a reason for your disagreement.

Event	Agree or Disagree	Comment
Q26. P4-1: Loss of a Generator followed by System adjustment[1] followed by loss of another Generator	☐Agree. ☒Do not agree.	This is N-2 and load loss should be permitted. As for whether or not this is a high probability event, there should be an objective measure (such as 1 in 5, 1 in 50, or 1 in 100, etc.) as to what constitute high probability, i.e., are there any outage history that would support any of the contention here that these are high probablity events? It is a mistake to arbitrary injecting "subjective" probability into a deterministic based reliability standard unless the industry is ready to move into 100% probabilistic based reliability standards.
Q27. P4-2: Loss of a generator followed by a System adjustment followed by the loss of a monopolar DC line	☐Agree. ☒Do not agree.	ditto
Q28. P4-3: Loss of a generator followed by System adjustment followed by loss of a Transmission circuit	☐Agree. ☒Do not agree.	ditto
Q29. P4-4: Loss of a generator followed by System adjustment followed by loss of a transformer with low side voltage rating above 300 kV	☐Agree. ☒Do not agree.	ditto

The performance requirement for the following event may be considered less stringent than the existing TPL Standards — P2-3: Loss of a single pole of a DC line. Interruption of firm transactions (without Loss of firm Load) if the transaction is dependent on the faulted DC line is now allowed for this initiating event/Contingency.

[1] System adjustment can be manual or automatic

Q30. Do you agree that interruption of any firm transfers that are dependent on the outaged DC line that is taken out of service should be permitted?

Yes ☐ No ☒
Comment: If the transfer is on a line experiencing outage, then the transfer is interrupted. Whether or not the transfer is firm is inmaterial. Whether or not it is on the dc or ac line is also inmaterial.

E. Stability

Q31. The proposed standard is based on an assumption that steady state analysis and stability analysis are different from each other and that therefore, two tables of Contingencies and performance requirements were needed. It is also based on an assumption that stability study requirements should be clearly separated from the steady state study requirements. Do you agree with the action taken in separating stability analysis from steady state analysis? If not, please explain.

Yes ☐ No ☐
Comment: There is no vote needed here because even under the current standards, the performance requirements for steady state and stability are clearly separated. So what is being added?

Q32. The SDT has added requirements for plant stability studies and has drawn a distinction in these studies from System stability studies. Do you agree with this approach? If not, please explain.

Yes ☐ No ☒
Comment: See my comment on the definition of Plant Stability. Unless the standard drafting team has something completely different from the common understanding of loss of synchronism and so on, transient stability covers both the so called Plant Stability and System Stability Studies.

Q33. The existing TPL-004-0 standard has a requirement to consider the Loss of all generating units at a plant, but it was not clear whether this requirement should apply to stability studies. The SDT did not include this requirement in the stability table, because it is hard to envision a condition when all units would trip simultaneously within the timeframe of a stability simulation. Do you think this condition should be required in stability analysis of extreme events? If not, please explain.

Yes ☐ No ☒
Comment: Loss of a plant as an extreme contingency has been on the book forever and it has never been interpreted as exempted from stability simulation (at least not in WECC) if this secenario is chosen as an extreme event. However, there is no mandatory requirement that loss of all generating units at a plant must be studies for every generating plant. If the design of a generating plant, such as use of redundancy, separate control console/rooms, etc., are such that all unit tripping simultaneously is unlikely, then it should not be requried to be studied just because all the units are inside the fence.

Q34. There are an increasing number of events with slow voltage recovery after faults on the Transmission System. The dynamic behavior of induction motor loads is a major factor in this phenomenon. The proposed standard therefore requires that the load model for stability studies of peak Load conditions include the dynamic effects of induction motors. Do you agree with this requirement? If not, please explain?

Yes ☒ No ☐
Comment: This is a qualified yes to the extent that accurate induction motor models are available and the overall load modeling (non-induction motor loads) allow such analysis. Otherwise, focusing only on induction

motors would not provide added information than what is being performed today. The current WECC requriement concerning induction motor modeling should be deemed adequate to meet this requirement.

Q35. What type of manual or automatic adjustments of generators should be allowed for single and multiple Contingencies?

Comment: Whatever is needed to bring the system into balance.

F. Generation Runback and Tripping

The SDT has discussed the automatic and manual readjustments of generators that should be permissible for single contingencies and multiple contingencies. The existing TPL-001-0 through TPL-004-0 standards through footnote (a) of Table I could include emergency ratings applicable for short durations as required to permit operating steps necessary to maintain system control. The footnote is silent about allowable generation adjustments in response to the Category B events. However, it does indicate that system adjustments are permitted to prepare for the next Contingency. These system adjustments could include manual or automatic adjustments involving generation.

The SDT has learned that many transmission owners use System Protection Systems (SPS) or Remedial Action Schemes (RAS) to trip generation for single and multiple Contingency outage events to prevent overloads, low voltage, and instability in the Interconnected Transmission network for N-1 and N-2 events. In some cases, the RAS are used to prepare for the next Contingency; but in some cases, the RAS are used to simultaneously avoid exceeding emergency ratings.

Q36. The proposed standard allows generation runback after the disturbance that causes a single Contingency (or due to a single Contingency outage) to move the Interconnected Transmission System from an emergency state (within emergency ratings) to a normal state (within normal ratings), assuming that the disturbance does not result in instability? Do you agree? If not, please explain.

Yes ☒ No ☐

Comment: Generator runback is allowed under the current standards, why single this out? Hopefully this is not a sign of equating generator runback with generator tripping as the title of this section might suggested. Generator runback is not and should not be classified as an SPS!
It is critical to keep as many units on line as possible post contingency. In many instances, use of generator runback would avoid the need to trip a unit if that was the only way to reduce the generations to return to load-generation balances.

Q37. Since emergency ratings are thermal ratings, should this standard allow an automatic generation runback scheme (that is initiated immediately after the disturbance causing the single Contingency) to prevent thermal overloads (assuming that the disturbance does not result in instability)? If yes, what are the conditions that must be met in order to allow such a runback scheme to meet the System performance criteria for single Contingencies? Please explain the reason for your answer.

Yes ☒ No ☐

Comment: It was never disallowed under the current standards.

The standard drafting team has considered that RAS or SPS may be allowable under certain situations for single Contingencies, but proposes that their use should be limited.

Q38. Do you agree that RAS or SPS may be allowed for single Contingencies? If not, please explain.

Yes ☐ No ☐
Comment: no comment

Q39. Please describe the limitations that you believe should be placed on the use of RAS or SPS for single Contingency events.

Comment:

Q40. When RAS or SPS are allowed, what conditions should be met when these systems are used in system adjustments to meet performance requirements?

Comment:

G. General Questions

Q41. If you are aware of any regional variances that would be required as a result of these standards, please identify them here.

Yes ☒ No ☐
Comment: Too many to be listed with the separation above and below 300kV being the worst one that will undermine the overall reliability of the electric system in North America. Another major omission in this proposed standard is the complete lack of recognition of the importance of post-transient requirements. Mixing commercial (firm or non-firm transsactions, etc.) and reliability in transmission planning criteria would be in conflicts with WECC rules and practices.

Q42. If you are aware of any conflicts between the proposed standards and any regulatory function, rule order, tariff, rate schedule, legislative requirement or agreement, please identify them here.

Yes ☐ No ☐
Comment:

Q43. Do you have any other questions or concerns with the proposed standard that have not been addressed? If yes, please explain.

Yes ☒ No ☐
Comment: This proposed standard is very tutorial in nature and far too prescriptive for a standard. A standard should be about what are the criteria and measurables, not about how to meet the criteria.
This propsoed standard should also recognized that it is just a part of many standards being formulated by NERC, know its boundary as transmission planning standard, and not try to be an all encompassing standard for every facit of the power system. Do what we do best as transmission planner and not try to take over others like marketer, operator, generators, etc.

NERC
NORTH AMERICAN ELECTRIC RELIABILITY CORPORATION

Comment Form for First Draft of TPL-001-1 — Transmission System Planning Performance Requirements

Please use this form to submit comments on the proposed draft of TPL-001-1. Comments must be submitted by **Friday, October 26, 2007**. You may submit the completed form by e-mail to sarcomm@nerc.net with the words "TPL-001 Draft 1" in the subject line. If you have questions please contact Ed Dobrowolski at ed.dobrowolksi@nerc.net or by telephone at 609-947-3673.

Individual Commenter Information **(Complete this page for comments from one organization or individual.)**		
Name:	Sergio Garza	
Organization:	LCRA TSC	
Telephone:	512-369-4149	
E-mail:	sergio.garza@lcra.org	
NERC Region (check all Regions in which your company operates)		**Registered Ballot Body Segment (check all industry segments in which your company is registered)**
☒ **ERCOT**	☒	1 — Transmission Owners
☐ **FRCC**	☐	2 — RTOs and ISOs
☐ **MRO**	☐	3 — Load-serving Entities
☐ **NPCC**	☐	4 — Transmission-dependent Utilities
☐ **RFC**	☐	5 — Electric Generators
☐ **SERC**	☐	6 — Electricity Brokers, Aggregators, and Marketers
☐ **SPP**	☐	7 — Large Electricity End Users
☐ **WECC**	☐	8 — Small Electricity End Users
☐ **NA – Not Applicable**	☐	9 — Federal, State, Provincial Regulatory or other Government Entities
	☐	10 — Regional Reliability Organizations and Regional Entities

Group Comments (Complete this page if comments are from a group.)

Group Name:

Lead Contact:

Contact Organization:

Contact Segment:

Contact Telephone:

Contact E-mail:

Additional Member Name	Additional Member Organization	Region*	Segment*

*If more than one Region or Segment applies, please list all that apply. Regional acronyms and segment numbers are shown on prior page.

Background

The purpose of this standard is to establish Transmission System planning performance requirements within the planning horizon to develop a Bulk Electric System that will operate reliably over a broad spectrum of System conditions and following a wide range of probable Contingencies. This standard will replace TPL-001-0, TPL-002-0, TPL-003-0, and TPL-004-0. The standard drafting team has not yet addressed TPL-005-0 and TPL-006-0, but will address these two standards during the next phase of the drafting process.

The major objectives of the standard drafting team are to:

1) Ensure the standard is complete and the requirements are set at an appropriate level to ensure reliability (Not Least Common Denominator)
2) Ensure that the standard is enforceable by having clearly defined requirements with unambiguous language
3) Address the issues raised by FERC Order 693, 890, and other applicable orders
4) Address the issues raised in the original Standards Authorization Request (SAR) and the Supplemental SAR.

The standard drafting team did not attempt to edit the existing standards but rather chose to write one standard that addresses all aspects of transmission planning in the existing TPL-001-0, TPL-002-0, TPL-003-0, and TPL-004-0. The standard drafting team organized the new standard in the following sections:

R1 – Modeling requirements
R2 – Assessment and Corrective Plan requirements
R3 – Steady State Analysis requirements
R4 – Stability Analysis requirements
R5 – Coordination requirements

The standard drafting team determined that the requirements and analysis for Steady State are different from those for stability. As such, the standard drafting team separated the analysis requirements and created two performance requirement tables.

The standard drafting team recognizes that this draft standard is a starting point for industry input into the standard and that there is still a lot of work required to complete the process. The standard drafting team has made many changes to clarify requirements, add requirements, and make some of the performance requirements stricter. The standard drafting team has not addressed Measures, Risk Factors, Violation Severity Factors, or Time Horizons at this time. These will be addressed when the standard drafting team has better defined the requirements of the standard.

For questions where you agree with the standard drafting team, please state that you agree and if available, please provide supporting documentation. If you disagree with the standard drafting team, please explain why you disagree and provide data to support your position, such as outage data or analysis. If you believe that we have made a performance requirement too strict please provide supporting documentation. If applicable, please include the approximate cost in man-hours for additional studies and/or cost in $Millions for additional transmission investment to meet the new requirements or the stricter requirements. If you believe that the standard should be stricter, please provide the rationale along with any supporting data, including existing practices, cost estimates or additional analysis.

To improve the standard, the standard drafting team would appreciate responses to as many of these questions as you can answer.

A. New Definitions

Many of the concerns about the existing TPL standards come from the fact that a number of generally understood concepts are embedded in undefined terms, tables, and footnotes. To clarify some of these concerns, the standard drafting team is proposing new definitions. Please indicate whether you agree with the following proposed definitions and provide proposed changes to the definitions if you disagree:

Definition	**Agree or Disagree**
Q1. **Base Case**: Computer representation of the projected initial or starting Transmission System conditions for a specific point in time. Each base case reflects the forecasted Load at each bus (or node) on the interconnected Transmission System, the transmission facilities which deliver the generation and reactive resources to the connected Load, and the generation dispatch including firm transaction obligations assumed to supply the connected Load. The models also reflect facility ratings in accordance with FAC-008 & FAC-009.	☒Agree. ☐Do not agree.
Q1. **Comment: Should read "Computer model representation of…"**	
Q2. **Consequential Load Loss:** Load that is no longer served because it is directly connected to an element(s) that is removed from service due to fault clearing action or mis-operation.	☒Agree. ☐Do not agree.
Q2. **Comment:**	
Q3. **Extreme Events:** Events which are more severe than Planning Events and have a low probability of occurrence.	☒Agree. ☐Do not agree.
Q3. **Comment: Define "low probability of occurrence"**	
Q4. **Long-Term Transmission Planning Horizon:** Transmission planning period that covers years six through ten or beyond.	☒Agree. ☐Do not agree.
Q4. **Comment:**	
Q5. **Near-Term Transmission Planning Horizon:** Transmission planning period that covers years One through five.	☒Agree. ☐Do not agree.
Q5. **Comment:**	
Q6. **Non-Consequential Load Loss:** Load loss other than Consequential Load Loss. For example, Load loss that occurs through manual (operator initiated) or automatic operations such as under-voltage Load shedding, under-frequency Load shedding, or Special Protection Systems.	☒Agree. ☐Do not agree.
Q6. **Comment:**	
Q7. **Planning Assessment:** Documented evaluation of future Bulk Electric System needs by the use of performance studies that cover a range of assumptions regarding system conditions, time	☐Agree. ☐Do not

frames, future plans including capital reinforcements and operating procedures and other factors, such as asset conditions and age.	agree.
Q7. **Comment: "Documented evaluation of future Bulk Electric System performance conducted through performance studies…"**	
Q8. **Planning Events:** Events which require Transmission system performance requirements to be met.	☒Agree. ☐Do not agree.
Q8. **Comment:**	
Q9. **Plant Stability Study:** Study of an individual plant's Stability for various Contingencies in the vicinity of the plant; concerned with the effect on the System of the generating units' loss of synchronism and the damping of the generating units' power oscillations.	☒Agree. ☐Do not agree.
Q9. **Comment:**	
Q10. **System Stability Study:** Study of the System or portions of the System to ensure that angular Stability is maintained, inter-area power oscillations are damped, and voltages during the dynamic simulation stay within acceptable performance limits.	☒Agree. ☐Do not agree.
Q10. **Comment:**	
Q11. **Year One:** The first year that a Transmission Planner is responsible for studying. This is further defined as the planning window that begins the next calendar year from the time the Transmission Planner submits their annual studies. Analysis conducted for time horizons within the calendar year from the study publication are assumed to be conducted under the auspices of Operations Planning.	☒Agree. ☐Do not agree.
Q11. **Comment:**	

B. Sensitivity Studies

The draft planning standard includes the requirement, as specified in FERC Order 693, that planning decisions be based on a portfolio of analyses. In section 12.a.ii "Sensitivity studies and critical system conditions" FERC provided direction to consider a full range of variables considered to be significant that need to be assessed and documentation provided that explains the rationale for the selection of variables assessed.

In addition to the firm obligation scenario, the portfolio of analyses should be supplemented to include information from sensitivity analysis. The sensitivity analysis should be developed using additional cases that simulate reasonably stressed system conditions. The standard drafting team has included several parameters that can be varied to create the requisite sensitivity case(s). The draft standards specify that the sensitivities reflect one or more of the following conditions and that documentation be provided explaining the rationale for selecting the sensitivity(ies) employed. The parameters that should be varied include:

- Higher or lower Load forecasts from the Base Case with variability of Load/demand and Load power factors due to season, weather, or time of day.
- Modification of expected transfers.
- Unavailability of long lead time facilities.
- Variability and outages of Reactive Resources.

- Generation additions, retirements, or other dispatch scenarios.
- Decreased effectiveness of controllable Loads and Demand Side Management.
- Modification of planned Transmission outages

To help focus industry discussion, please respond to the questions below:

Q12. Should the standard provide more specific direction regarding the number of sensitivity cases that need to be developed?

Yes ☐ No ☒
Comment:

Q13. Should the standard specify the required changes, such as changes in expected transfers, load forecasts, generation patterns, etc., from the study case to be considered a "reasonably stressed" case?

Yes ☐ No ☒
Comment:

Q14. The SDT proposes to require the use of sensitivity studies for Near-Term Transmission System Planning Horizon stability analysis. Do you concur with the use of sensitivity analysis in dynamic studies?

Yes ☐ No ☒
Comment:

Q15. The draft TPL standard does not require the use of sensitivity studies for the Long-Term Transmission System Planning Horizon (year six and beyond) studies. Do you concur with this approach or should there be some level of sensitivity analysis required for the long-term period?

Yes ☒ No ☐
Comment: There are two questions asked and the response is yes to both. In the ERCOT region, load flow cases are not currently availbale for years 6-10 and this limits the long-term study activity that Transmsion Owners and Transmission Planners can acarry out. As currently proposed (R2.2) is appropriate.

C. Corrective Action Plans

Requirement R2.7 of the standard states that when analysis shows that the performance requirements in Table 1 and Table 2 are not fully met, a Corrective Action Plan that utilizes all or some of the Transmission System enhancements, generation additions, DSM, new technologies and Operating Procedures shall be included in the Planning Assessment. This Corrective Action Plan should ensure that upon its implementation the identified system deficiencies will be corrected so that the performance requirements in Table 1 and Table 2 will be met. Furthermore, studies included in the Planning Assessment should demonstrate that this is indeed the case.

Q16. Requirement R2.7.1: Such Corrective Action Plans shall "Identify System deficiencies and the associated actions needed to achieve required System performance including Transmission and generation improvements, DSM, new technologies, or Operating Procedures including the duration of Interim Operating Procedures". System deficiencies may be corrected using an integrated plan, i.e., an optimal mix of Transmission, generation, DSM and Operating Procedures. Should DSM be considered in

conjunction with other measures in developing Corrective Action Plans? If yes, please comment on how the impact of DSM should be included.

Yes ☐ No ☒
Comment:

Q17. Requirement R2.7.2: Such Corrective Action Plans shall "Be added to study cases and the cases re-tested to show that the System with planned additions meets the performance requirements in the tables". Should new studies, including the facilities comprising the Corrective Action Plan, be performed to assess System normal performance and Contingency response for conditions that previously resulted in the System deficiencies (without the planned additions) and also demonstrate that the changes would not result in inadvertent negative impacts on the System. If you "agree", please comment on how a study area should be determined.

Yes ☒ No ☐
Comment: The question is not clear regarding "study area"; however, re-testing with corrective action / system improvement(s) in place is a must. The re-test must consider the same simulations that idenitifed the initial deficiency.

In addition, in the re-test, the action/ system inprovement must be considered as a Planning Event itself (i.e., if the initial test showed a specific contingency causing a deficiency, then a physical connection of the system improvement to the identified continegncy should be avoided or minimized - minimize the creation of extreme events.). In other words, planning solutions should be long-term and a system "fix" for the present should not result in a system problem in the foreseeable future.

Q18. Requirement R2.7.3: The standard calls for a differentiation between committed and proposed projects. Do you agree that they should be treated separately? If not, please state why not.

Yes ☒ No ☐
Comment:

Q19. Requirement R2.7.4: For such Corrective Action Plans "Committed projects shall not be removed without documentation to show that the revised plan meets the performance requirements". Do you agree or disagree with this requirement? If you disagree, please explain why.

Yes ☒ No ☐
Comment:

D. Performance Requirements

The proposed revised planning standard (TPL-001-1) incorporates a number of changes in requirements as compared to the current planning standards (TPL-001-0 through TPL-004-0), which it is expected to replace. Among other things these changes are intended to clarify the standard, address issues described by FERC, and, in particular, to "raise the bar." Strengthening the planning standards in selected areas is necessary to maintain a reliable Bulk Electric System that is up to the challenges of the 21st Century. In proposing the requirements in this draft, the standard drafting team attempted to balance the value of increased reliability against any potential increase in work and costs to meet the new proposed standard.

The standard drafting team is seeking input from the industry to determine whether a proper balance has been achieved. The areas where material changes are proposed in this draft are enumerated below, and questions are posed by the standard drafting team to obtain industry comment. In formulating your responses, please keep in mind that material changes in the final standard will be accompanied by a transition plan to provide for an orderly implementation of the final standard.

The performance requirements relative to Non-Consequential Loss of Load for the following events enumerated in the two tables can be considered more stringent than the existing TPL standards. Furthermore, the proposed standard is based on an assumption that performance requirements for EHV facilities should be more stringent than for lower voltage facilities.

Do you agree that Non-Consequential Loss of Load should not be permitted for the following events? If you disagree, please provide a reason for your disagreement.

Event	Agree or Disagree	Comment
Q20. P2-1: Loss of bus section (SLG for stability) above 300 kV	☒Agree. ☐Do not agree.	
Q21. P5-1: For facilities above 300 kV, loss of a Transmission circuit followed by System adjustment[1] followed by loss of another Transmission circuit	☒Agree. ☐Do not agree.	
Q22. P5-2: For facilities above 300 kV, loss of a Transmission circuit followed by System adjustment followed by loss of a transformer with low side voltage rating above 300 kV	☒Agree. ☐Do not agree.	
Q23. P5-3: For facilities above 300 kV, loss of a transformer with low side voltage rating above 300 kV followed by System adjustment followed by loss of another transformer	☒Agree. ☐Do not agree.	

[1]System adjustment can be manual or automatic.

The proposed standard is based on an assumption that performance requirements for non-bus tie EHV breakers should be distinguished from other breakers. Do you agree that Non-Consequential Loss of Load should not be permitted for this event?

Q24. Loss of non-bus tie breaker (above 300 kV) due to internal fault

Yes ☒ No ☐
Comment:

The proposed standard is based on an assumption that performance requirements for non-bus tie EHV breakers should be distinguished from other breakers and that performance requirements for EHV facilities should be more stringent than for lower voltage facilities. Do you agree that Non-Consequential Loss of Load should not be permitted for this event?

Q25. P3-1: Loss of (SLG for stability) either a generator, a Transmission circuit, a transformer, or a bus and a stuck non-bus tie breaker (above 300 kV)

Yes ☒ No ☐
Comment:

The proposed standard is based on an assumption that the following events are relatively high probability events and, therefore, Non-Consequential Loss of Load should not be permitted. Do you agree? If you disagree, please provide a reason for your disagreement.

Event	Agree or Disagree	Comment
Q26. P4-1: Loss of a Generator followed by System adjustment[1] followed by loss of another Generator	☒Agree. ☐Do not agree.	
Q27. P4-2: Loss of a generator followed by a System adjustment followed by the loss of a monopolar DC line	☒Agree. ☐Do not agree.	
Q28. P4-3: Loss of a generator followed by System adjustment followed by loss of a Transmission circuit	☒Agree. ☐Do not agree.	
Q29. P4-4: Loss of a generator followed by System adjustment followed by loss of a transformer	☒Agree. ☐Do not agree.	

The performance requirement for the following event may be considered less stringent than the existing TPL Standards — P2-3: Loss of a single pole of a DC line. Interruption of firm transactions (without Loss of firm Load) if the transaction is dependent on the faulted DC line is now allowed for this initiating event/Contingency.

Q30. Do you agree that interruption of any firm transfers that are dependent on the outaged DC line that is taken out of service should be permitted?

Yes ☐ No ☐

[1] System adjustment can be manual or automatic

Comment:

E. Stability

Q31. The proposed standard is based on an assumption that steady state analysis and stability analysis are different from each other and that therefore, two tables of Contingencies and performance requirements were needed. It is also based on an assumption that stability study requirements should be clearly separated from the steady state study requirements. Do you agree with the action taken in separating stability analysis from steady state analysis? If not, please explain.

Yes ☒ No ☐
Comment:

Q32. The SDT has added requirements for plant stability studies and has drawn a distinction in these studies from System stability studies. Do you agree with this approach? If not, please explain.

Yes ☒ No ☐
Comment:

Q33. The existing TPL-004-0 standard has a requirement to consider the Loss of all generating units at a plant, but it was not clear whether this requirement should apply to stability studies. The SDT did not include this requirement in the stability table, because it is hard to envision a condition when all units would trip simultaneously within the timeframe of a stability simulation. Do you think this condition should be required in stability analysis of extreme events? If not, please explain.

Yes ☒ No ☐
Comment:

Q34. There are an increasing number of events with slow voltage recovery after faults on the Transmission System. The dynamic behavior of induction motor loads is a major factor in this phenomenon. The proposed standard therefore requires that the load model for stability studies of peak Load conditions include the dynamic effects of induction motors. Do you agree with this requirement? If not, please explain?

Yes ☒ No ☐
Comment:

Q35. What type of manual or automatic adjustments of generators should be allowed for single and multiple Contingencies?

Comment:

F. Generation Runback and Tripping

The SDT has discussed the automatic and manual readjustments of generators that should be permissible for single contingencies and multiple contingencies. The existing TPL-001-0 through TPL-004-0 standards through footnote (a) of Table I could include emergency ratings applicable for short durations as required to permit operating steps necessary to

maintain system control. The footnote is silent about allowable generation adjustments in response to the Category B events. However, it does indicate that system adjustments are permitted to prepare for the next Contingency. These system adjustments could include manual or automatic adjustments involving generation.

The SDT has learned that many transmission owners use System Protection Systems (SPS) or Remedial Action Schemes (RAS) to trip generation for single and multiple Contingency outage events to prevent overloads, low voltage, and instability in the Interconnected Transmission network for N-1 and N-2 events. In some cases, the RAS are used to prepare for the next Contingency; but in some cases, the RAS are used to simultaneously avoid exceeding emergency ratings.

Q36. The proposed standard allows generation runback after the disturbance that causes a single Contingency (or due to a single Contingency outage) to move the Interconnected Transmission System from an emergency state (within emergency ratings) to a normal state (within normal ratings), assuming that the disturbance does not result in instability? Do you agree? If not, please explain.

Yes ☐ No ☐
Comment:

Q37. Since emergency ratings are thermal ratings, should this standard allow an automatic generation runback scheme (that is initiated immediately after the disturbance causing the single Contingency) to prevent thermal overloads (assuming that the disturbance does not result in instability)? If yes, what are the conditions that must be met in order to allow such a runback scheme to meet the System performance criteria for single Contingencies? Please explain the reason for your answer.

Yes ☐ No ☐
Comment:

The standard drafting team has considered that RAS or SPS may be allowable under certain situations for single Contingencies, but proposes that their use should be limited.

Q38. Do you agree that RAS or SPS may be allowed for single Contingencies? If not, please explain.

Yes ☐ No ☒
Comment: Only until plans are implemented to address a single continegcy-identified deficiency. In general, plans should always be developed to exit SPS or RAS when economically feasible

Q39. Please describe the limitations that you believe should be placed on the use of RAS or SPS for single Contingency events.

Comment: Short-term with exit plans; Loss of significant generation or load resulting from SPS /RAS action

Q40. When RAS or SPS are allowed, what conditions should be met when these systems are used in system adjustments to meet performance requirements?

Comment: Systems must have a balance between security and dependabiliyt. System must be reviewed annually or as system conditions change.

G. General Questions

Q41. If you are aware of any regional variances that would be required as a result of these standards, please identify them here.

Yes ☒ No ☐
Comment: See ERCOT Planning Criteria. Also, through the regional coordinators, NERC recently conducted a survey of transmision planners/owners regarding use of more stringent criteria used in their own systems. The std. drafting team should include a review of the survey results and incorporate into this NERC std as necessary.

Q42. If you are aware of any conflicts between the proposed standards and any regulatory function, rule order, tariff, rate schedule, legislative requirement or agreement, please identify them here.

Yes ☐ No ☐
Comment:

Q43. Do you have any other questions or concerns with the proposed standard that have not been addressed? If yes, please explain.

Yes ☒ No ☐
Comment: The NERC PC and OC are currently working on a definiton that defines "adequate levels of reliability". The SDT should take this definition into consideration and ensure it is applied in the proposed NERC Std. revision. Along the same lines, if this has not been done yet, the SDT needs to consider the NERC "Reliability Criteria and Operating Limits Concepts" white paper and incorporate applicable elemetns of that white paper to the propsoed NERC Std. revision accordingly. It would not make sense for these (the propsoed NERC std. and the noted white paper to be inconsistent or at opposite ends in terms of what is expected of a reliability-based planned transmission system).

other editorial comments:
1. R1. Delete one of the "each"

2. R1. Should state that data submittals should be "in accordance with regional procedures or process". This will eliminate the region getting data in all sorts of formats.

3. Table 1 - the allowance of loosing "consequential load" should be evaluated based on options to provide temporary emergency back-up support as well as size of load, for example. Structure failures can take an extended period of time to restore and can have significant impacts on a raial load that does not have remote or distribution back-up support. This performance requirment of transmisssion radial-supplied loads should be left to regions or to transmission owners/planners for their own areas based on specific area needs (type and size of load, back-up availbailiyt, etc.).

4. Table 1 - How does NERC define a "transmission circuit"? Does it include a sinlge transmission line as well as a double circuit transmission line?

5. Other than the probability of occurrence, what is the difference between a structure failure of a single circuit and a structure failure on a double circuit configuration? Why is a double circuit not considered a single contingency?

NERC
NORTH AMERICAN ELECTRIC RELIABILITY CORPORATION

Comment Form for First Draft of TPL-001-1 — Transmission System Planning Performance Requirements

Please use this form to submit comments on the proposed draft of TPL-001-1. Comments must be submitted by **Friday, October 26, 2007**. You may submit the completed form by e-mail to sarcomm@nerc.net with the words "TPL-001 Draft 1" in the subject line. If you have questions please contact Ed Dobrowolski at ed.dobrowolksi@nerc.net or by telephone at 609-947-3673.

Individual Commenter Information **(Complete this page for comments from one organization or individual.)**		
Name:	Ron Mazur	
Organization:	Manitoba Hydro	
Telephone:	204 474 3113	
E-mail:	rwmazur@hydro.mb.ca	
NERC Region (check all Regions in which your company operates)		**Registered Ballot Body Segment (check all industry segments in which your company is registered)**
☐ **ERCOT**	☒	1 — Transmission Owners
☐ **FRCC**	☐	2 — RTOs and ISOs
☒ **MRO**	☒	3 — Load-serving Entities
☐ **NPCC**	☐	4 — Transmission-dependent Utilities
☐ **RFC**	☒	5 — Electric Generators
☐ **SERC**	☒	6 — Electricity Brokers, Aggregators, and Marketers
☐ **SPP**	☐	7 — Large Electricity End Users
☐ **WECC**	☐	8 — Small Electricity End Users
☐ **NA – Not Applicable**	☐	9 — Federal, State, Provincial Regulatory or other Government Entities
	☐	10 — Regional Reliability Organizations and Regional Entities

Group Comments (Complete this page if comments are from a group.)

Group Name:

Lead Contact:

Contact Organization:

Contact Segment:

Contact Telephone:

Contact E-mail:

Additional Member Name	Additional Member Organization	Region*	Segment*

*If more than one Region or Segment applies, please list all that apply. Regional acronyms and segment numbers are shown on prior page.

Background

The purpose of this standard is to establish Transmission System planning performance requirements within the planning horizon to develop a Bulk Electric System that will operate reliably over a broad spectrum of System conditions and following a wide range of probable Contingencies. This standard will replace TPL-001-0, TPL-002-0, TPL-003-0, and TPL-004-0. The standard drafting team has not yet addressed TPL-005-0 and TPL-006-0, but will address these two standards during the next phase of the drafting process.

The major objectives of the standard drafting team are to:

1) Ensure the standard is complete and the requirements are set at an appropriate level to ensure reliability (Not Least Common Denominator)
2) Ensure that the standard is enforceable by having clearly defined requirements with unambiguous language
3) Address the issues raised by FERC Order 693, 890, and other applicable orders
4) Address the issues raised in the original Standards Authorization Request (SAR) and the Supplemental SAR.

The standard drafting team did not attempt to edit the existing standards but rather chose to write one standard that addresses all aspects of transmission planning in the existing TPL-001-0, TPL-002-0, TPL-003-0, and TPL-004-0. The standard drafting team organized the new standard in the following sections:

R1 – Modeling requirements
R2 – Assessment and Corrective Plan requirements
R3 – Steady State Analysis requirements
R4 – Stability Analysis requirements
R5 – Coordination requirements

The standard drafting team determined that the requirements and analysis for Steady State are different from those for stability. As such, the standard drafting team separated the analysis requirements and created two performance requirement tables.

The standard drafting team recognizes that this draft standard is a starting point for industry input into the standard and that there is still a lot of work required to complete the process. The standard drafting team has made many changes to clarify requirements, add requirements, and make some of the performance requirements stricter. The standard drafting team has not addressed Measures, Risk Factors, Violation Severity Factors, or Time Horizons at this time. These will be addressed when the standard drafting team has better defined the requirements of the standard.

For questions where you agree with the standard drafting team, please state that you agree and if available, please provide supporting documentation. If you disagree with the standard drafting team, please explain why you disagree and provide data to support your position, such as outage data or analysis. If you believe that we have made a performance requirement too strict please provide supporting documentation. If applicable, please include the approximate cost in man-hours for additional studies and/or cost in $Millions for additional transmission investment to meet the new requirements or the stricter requirements. If you believe that the standard should be stricter, please provide the rationale along with any supporting data, including existing practices, cost estimates or additional analysis.

To improve the standard, the standard drafting team would appreciate responses to as many of these questions as you can answer.

A. New Definitions

Many of the concerns about the existing TPL standards come from the fact that a number of generally understood concepts are embedded in undefined terms, tables, and footnotes. To clarify some of these concerns, the standard drafting team is proposing new definitions. Please indicate whether you agree with the following proposed definitions and provide proposed changes to the definitions if you disagree:

Definition	**Agree or Disagree**
Q1. **Base Case**: Computer representation of the projected initial or starting Transmission System conditions for a specific point in time. Each base case reflects the forecasted Load at each bus (or node) on the interconnected Transmission System, the transmission facilities which deliver the generation and reactive resources to the connected Load, and the generation dispatch including firm transaction obligations assumed to supply the connected Load. The models also reflect facility ratings in accordance with FAC-008 & FAC-009.	☒Agree. ☐Do not agree.
Q1. **Comment:**	
Q2. **Consequential Load Loss:** Load that is no longer served because it is directly connected to an element(s) that is removed from service due to fault clearing action or mis-operation.	☒Agree. ☐Do not agree.
Q2. **Comment: If load losses due to stuck breaker and back-up breaker operations (which would frequently result in the loss of two or more network transmission elements) are not going to be qualified as "Consequential", where should they be placed? MH cannot visualize them as "Non-Consequential", as defined in Q6. Either another "load" category must be developed for these loads, or they should remain as "Consequential".** **In addition, Consequential Load Loss should include the concept of local area load loss to cover a scenario of islanding with a UFLS in the island, or a small network served at the end of a radial line.Can the SDT comment on why this Local Area defined in the existing TPL stds has been removed?**	
Q3. **Extreme Events:** Events which are more severe than Planning Events and have a low probability of occurrence.	☐Agree. ☒Do not agree.
Q3. **Comment: Change to "Events which are more severe than Planning Events and have a lower probability of occurrence than Planning Events."**	
Q4. **Long-Term Transmission Planning Horizon:** Transmission planning period that covers years six through ten or beyond.	☒Agree. ☐Do not agree.
Q4. **Comment:**	
Q5. **Near-Term Transmission Planning Horizon:** Transmission planning period that covers years One through five.	☒Agree. ☐Do not

	agree.
Q5. **Comment:**	
Q6. **Non-Consequential Load Loss:** Load loss other than Consequential Load Loss. For example, Load loss that occurs through manual (operator initiated) or automatic operations such as under-voltage Load shedding, under-frequency Load shedding, or Special Protection Systems.	☒Agree. ☐Do not agree.
Q6. **Comment:**	
Q7. **Planning Assessment:** Documented evaluation of future Bulk Electric System needs by the use of performance studies that cover a range of assumptions regarding system conditions, time frames, future plans including capital reinforcements and operating procedures and other factors, such as asset conditions and age.	☒Agree. ☐Do not agree.
Q7. **Comment: A planning assessment should include performance studies.**	
Q8. **Planning Events:** Events which require Transmission system performance requirements to be met.	☐Agree. ☒Do not agree.
Q8. **Comment: The definition of a planned event should relate to the probablity of occurance. Table shows single contingency planned events and multiple contingency planned events. Why has the SDT gone away from the existing categories of events which sorted the events into categories with different levels probability.**	
Q9. **Plant Stability Study:** Study of an individual plant's Stability for various Contingencies in the vicinity of the plant; concerned with the effect on the System of the generating units' loss of synchronism and the damping of the generating units' power oscillations.	☐Agree. ☒Do not agree.
Q9. **Comment: The words "Bulk Electric" should be added before "System".**	
Q10. **System Stability Study:** Study of the System or portions of the System to ensure that angular Stability is maintained, inter-area power oscillations are damped, and voltages during the dynamic simulation stay within acceptable performance limits.	☐Agree. ☒Do not agree.
Q10. **Comment: The words "Bulk Electric" should be added before both occurances of "System".**	
Q11. **Year One:** The first year that a Transmission Planner is responsible for studying. This is further defined as the planning window that begins the next calendar year from the time the Transmission Planner submits their annual studies. Analysis conducted for time horizons within the calendar year from the study publication are assumed to be conducted under the auspices of Operations Planning.	☒Agree. ☐Do not agree.
Q11. **Comment:**	

B. Sensitivity Studies

The draft planning standard includes the requirement, as specified in FERC Order 693, that planning decisions be based on a portfolio of analyses. In section 12.a.ii "Sensitivity studies and critical system conditions" FERC provided direction to consider a full range of variables considered to be significant that need to be assessed and documentation provided that explains the rationale for the selection of variables assessed.

In addition to the firm obligation scenario, the portfolio of analyses should be supplemented to include information from sensitivity analysis. The sensitivity analysis should be developed using additional cases that simulate reasonably stressed system conditions. The standard drafting team has included several parameters that can be varied to create the requisite sensitivity case(s). The draft standards specify that the sensitivities reflect one or more of the following conditions and that documentation be provided explaining the rationale for selecting the sensitivity(ies) employed. The parameters that should be varied include:

- Higher or lower Load forecasts from the Base Case with variability of Load/demand and Load power factors due to season, weather, or time of day.
- Modification of expected transfers.
- Unavailability of long lead time facilities.
- Variability and outages of Reactive Resources.
- Generation additions, retirements, or other dispatch scenarios.
- Decreased effectiveness of controllable Loads and Demand Side Management.
- Modification of planned Transmission outages

To help focus industry discussion, please respond to the questions below:

Q12. Should the standard provide more specific direction regarding the number of sensitivity cases that need to be developed?

Yes ☐ No ☒
Comment: Sensitivity analysis that could be considered will vary from region to region or subregion to subregion.

Q13. Should the standard specify the required changes, such as changes in expected transfers, load forecasts, generation patterns, etc., from the study case to be considered a "reasonably stressed" case?

Yes ☒ No ☐
Comment: R.2.1.3.2: clarify the intent of modification of expected transfers. Does this apply to firm transfers only, or does it also encompass non-firm transfers? Should this encompass simultaneous non-firm transfers? Planning for non-firm falls into an economic study of cost/benefit and not a relibility requirement.
R2.1.3.3: There is little value in identifying the impact of unavailability of planned facilities. From a reliability perspective, these facilities are required to meet performance requirements. Near term SOLs and IROLs will insure reliability if the facility is late.
R.2.1.3.4: This requirement should be removed and outages of reactive resources should be included in the Table 1 contingencies (assuming the intent is to investigate robustness to voltage instability).
R.2.1.3.5: This requirement should be removed as this is covered, or should be, by the facility connection standard(s).
R.2.1.3.6: This requirement should be removed as this is covered by requirement R2.1.3.1. There is no need to list "decreased effectiveness of controllable loads or DSM" as this is already covered by sensitivity to forecast load and power factor - this will cause confusion.
R.2.1.3.7: Modification of planned Transmission outages should be deleted. The need to assess outages in the planning horizon is questionable, so assessing sensitivity to timing of these outages is of very little value. Furthernmore, this standard already covers prior outages in its other requirements.

Q14. The SDT proposes to require the use of sensitivity studies for Near-Term Transmission System Planning Horizon stability analysis. Do you concur with the use of sensitivity analysis in dynamic studies?

Yes ☒ No ☐

Comment: R2.4.3.1: This requirement should include variation in load power factor, as this has a significant impact on transient performance.
R2.4.3.3: There is little value in identifying the impact of unavailability of planned facilities. From a reliability perspective, these facilities are required to meet performance requirements. Near term SOLs and IROLs will insure reliability if the facility is late.
R.2.4.3.4: This requirement should be removed and dispatch of reactive power devices should be included in the Table 2 contingencies (assuming the intent is to investigate robustness to voltage instability).
R.2.4.3.5: This requirement should be removed as this is covered, or should be, by the facility connection standard(s).

Q15. The draft TPL standard does not require the use of sensitivity studies for the Long-Term Transmission System Planning Horizon (year six and beyond) studies. Do you concur with this approach or should there be some level of sensitivity analysis required for the long-term period?

Yes ☒ No ☐

Comment: The models for Long-Term Transmission System Planning Horizon typically contain such uncertainty that the base planning is a sensitivity study itself. Sensitivity studies in these years would be a waste of time. The long term analysis should be used to indicate trends such as a reduction in transfer capability, reduction in damping, etc, but not necessarily seek mitigation of such trends.

C. Corrective Action Plans

Requirement R2.7 of the standard states that when analysis shows that the performance requirements in Table 1 and Table 2 are not fully met, a Corrective Action Plan that utilizes all or some of the Transmission System enhancements, generation additions, DSM, new technologies and Operating Procedures shall be included in the Planning Assessment. This Corrective Action Plan should ensure that upon its implementation the identified system deficiencies will be corrected so that the performance requirements in Table 1 and Table 2 will be met. Furthermore, studies included in the Planning Assessment should demonstrate that this is indeed the case.

Q16. Requirement R2.7.1: Such Corrective Action Plans shall "Identify System deficiencies and the associated actions needed to achieve required System performance including Transmission and generation improvements, DSM, new technologies, or Operating Procedures including the duration of Interim Operating Procedures". System deficiencies may be corrected using an integrated plan, i.e., an optimal mix of Transmission, generation, DSM and Operating Procedures. Should DSM be considered in conjunction with other measures in developing Corrective Action Plans? If yes, please comment on how the impact of DSM should be included.

Yes ☐ No ☒

Comment: DSM and generation improvements should be removed from Requirement R2.7.1, as they should not be mandated by a NERC standard are not in the tool box of the transmission planner.
DSM may already be in the load forecast and sensitivities to load forecast variations are included in near term planning horizon sensitivity analysis. Additional DSM shouldn't be part of transmission planners mitigation

plan. If the corrective plan is too expensive the load serving entity could consider DSM and revise their forecast in the next planning cycle.

Q17. Requirement R2.7.2: Such Corrective Action Plans shall "Be added to study cases and the cases re-tested to show that the System with planned additions meets the performance requirements in the tables". Should new studies, including the facilities comprising the Corrective Action Plan, be performed to assess System normal performance and Contingency response for conditions that previously resulted in the System deficiencies (without the planned additions) and also demonstrate that the changes would not result in inadvertent negative impacts on the System. If you "agree", please comment on how a study area should be determined.

Yes ☒ No ☐

Comment: At some point the corrective action plan should be tested to verify the plan meets the performance requirements. The way the standard is written is that the transmission plan should be perfect for the entire planning horizon for all sensitivities tested. Any issues should be immediately addressed. The standard does not allow any time to develop a corrective plan through an open and transparent process. Based on the NERC definition, a Corrective Action Plan is the list of actions and an associated timetable for implementation to remedy a specific problem. A Corrective Action Plan could mean that load forecasts at the station will be verified, facility ratings verified and alternatives to fix the identified problem to be determined before the next Planning Assessment. Standard R2.7 seems to be mixing the idea of a Corrective Action Plan with the original TPL idea of determining corrective plans to achieve required performance. A corrective plan wil be the end goal of a Corrective Action Plan.
Furthermore, corrective action plans should not be requierd to address issues raised by sensitivity studies. Corrective action plans are developed to meet base case needs which are based on expected load forecasts, transfers, etc. Sensitivity studies are done to measure the robustness of the base case plan. It should be left up to the Planner to decide if the corrective action plan is adequate based on the likelihood of the scenario studied, even if the sensitivity analysis shows some performance violations.

Q18. Requirement R2.7.3: The standard calls for a differentiation between committed and proposed projects. Do you agree that they should be treated separately? If not, please state why not.

Yes ☒ No ☐

Comment: However, since each planner is allowed to define the criteria, there will be no consistency as to what is included in the base case models.

Q19. Requirement R2.7.4: For such Corrective Action Plans "Committed projects shall not be removed without documentation to show that the revised plan meets the performance requirements". Do you agree or disagree with this requirement? If you disagree, please explain why.

Yes ☐ No ☒

Comment: The standard does not allow any time to develop a corrective plan through an open and transparent process. Based on the NERC definition, a Corrective Action Plan is the list of actions and an associated timetable for implementation to remedy a specific problem. A Corrective Action Plan could mean that load forecasts at the station will be verified, facility ratings verified and alternatives to fix the identified problem to be determined before the next Planning Assessment. This standard seems to be mixing the idea of a Corrective Action Plan with the original TPL idea of determining corrective plans to achieve required performance. A corrective plan wil be the end goal of a Corrective Action Plan.

D. Performance Requirements

The proposed revised planning standard (TPL-001-1) incorporates a number of changes in requirements as compared to the current planning standards (TPL-001-0 through TPL-004-

0), which it is expected to replace. Among other things these changes are intended to clarify the standard, address issues described by FERC, and, in particular, to "raise the bar." Strengthening the planning standards in selected areas is necessary to maintain a reliable Bulk Electric System that is up to the challenges of the 21st Century. In proposing the requirements in this draft, the standard drafting team attempted to balance the value of increased reliability against any potential increase in work and costs to meet the new proposed standard.

The standard drafting team is seeking input from the industry to determine whether a proper balance has been achieved. The areas where material changes are proposed in this draft are enumerated below, and questions are posed by the standard drafting team to obtain industry comment. In formulating your responses, please keep in mind that material changes in the final standard will be accompanied by a transition plan to provide for an orderly implementation of the final standard.

The performance requirements relative to Non-Consequential Loss of Load for the following events enumerated in the two tables can be considered more stringent than the existing TPL standards. Furthermore, the proposed standard is based on an assumption that performance requirements for EHV facilities should be more stringent than for lower voltage facilities.

Do you agree that Non-Consequential Loss of Load should not be permitted for the following events? If you disagree, please provide a reason for your disagreement.

Event	Agree or Disagree	Comment
Q20. P2-1: Loss of bus section (SLG for stability) above 300 kV	☒Agree. ☐Do not agree.	With the caveat that if the loss of load is localized, it is acceptable. Raising the bar will result in a cost increase for owners and users of the transmission system. What evidence does the SDT have to show this is justified.
Q21. P5-1: For facilities above 300 kV, loss of a Transmission circuit followed by System adjustment[1] followed by loss of another Transmission circuit	☒Agree. ☐Do not agree.	
Q22. P5-2: For facilities above 300 kV, loss of a Transmission circuit followed by System adjustment followed by loss of a transformer with low side voltage rating above 300 kV	☒Agree. ☐Do not agree.	
Q23. P5-3: For facilities above 300 kV, loss of a transformer with low side voltage rating above 300 kV followed	☒Agree. ☐Do not agree.	

by System adjustment followed by loss of another transformer		

[1]System adjustment can be manual or automatic.

The proposed standard is based on an assumption that performance requirements for non-bus tie EHV breakers should be distinguished from other breakers. Do you agree that Non-Consequential Loss of Load should not be permitted for this event?

Q24. Loss of non-bus tie breaker (above 300 kV) due to internal fault

Yes ☐ No ☐
Comment: Until the SDT should defines a non-bus tie breaker this is impossible to answer.

The proposed standard is based on an assumption that performance requirements for non-bus tie EHV breakers should be distinguished from other breakers and that performance requirements for EHV facilities should be more stringent than for lower voltage facilities. Do you agree that Non-Consequential Loss of Load should not be permitted for this event?

Q25. P3-1: Loss of (SLG for stability) either a generator, a Transmission circuit, a transformer, or a bus and a stuck non-bus tie breaker (above 300 kV)

Yes ☐ No ☒
Comment: The SDT seems fixated on loss of load. The existing std for this type of event allowed for loss of load and firm transfer could be adjusted. While MH could rationalize that load should not be interrupted, we could not agree that firm transfer can not be reduced. This would amount to n-2 planning to maintain a firm transfer that is backed up by reserves. The requirement to maintain firm transfer will cost MH and the industry millions of dollars with no reliability benefit - a show stopper.

The proposed standard is based on an assumption that the following events are relatively high probability events and, therefore, Non-Consequential Loss of Load should not be permitted. Do you agree? If you disagree, please provide a reason for your disagreement.

Event	Agree or Disagree	Comment
Q26. P4-1: Loss of a Generator followed by System adjustment[1] followed by loss of another Generator	☒Agree. ☐Do not agree.	With the caveat that firm transfer is included in the adjustment, otherwise there is a hugh cost with minimal reliability benefit. A further comment is what rationale was applied by the SDT to come up with these combinations of events? is there a statistical basis? the vible combinations of multiple contigency events should be left to the experience of the transmission planner.
Q27. P4-2: Loss of a generator followed by a	☒Agree.	With the caveat that firm transfer is included in the adjustment, otherwise

[1] System adjustment can be manual or automatic

System adjustment followed by the loss of a monopolar DC line	☐Do not agree.	there is a hugh cost with minimal reliability benefit.
Q28. P4-3: Loss of a generator followed by System adjustment followed by loss of a Transmission circuit	☒Agree. ☐Do not agree.	With the caveat that firm transfer is included in the adjustment, otherwise there is a hugh cost with minimal reliability benefit.
Q29. P4-4: Loss of a generator followed by System adjustment followed by loss of a transformer	☒Agree. ☐Do not agree.	With the caveat that firm transfer is included in the adjustment, otherwise there is a hugh cost with minimal reliability benefit.

The performance requirement for the following event may be considered less stringent than the existing TPL Standards — P2-3: Loss of a single pole of a DC line. Interruption of firm transactions (without Loss of firm Load) if the transaction is dependent on the faulted DC line is now allowed for this initiating event/Contingency.

Q30. Do you agree that interruption of any firm transfers that are dependent on the outaged DC line that is taken out of service should be permitted?

Yes ☒ No ☐
Comment: MH agrees that reduction of firm transfer to readjust the system after a contingency should be allowed for all events. The requirement to maintain firm transfer is a more stringent requirement that in the existing standard. The need to maintain firm transfer amounts to N-2 planning with no reliability benefit. Reduction in firm transfer is not equivalent to loss of load as the transfer is backed up by reserves. MH could not accept a standard mandating that firm transfer can not be interrupted.

MH also recommends P2-3 be moved into the P1 bucket as loss of a single pole of a dc line is similar to loss of a generator or transmission circuit.

E. Stability

Q31. The proposed standard is based on an assumption that steady state analysis and stability analysis are different from each other and that therefore, two tables of Contingencies and performance requirements were needed. It is also based on an assumption that stability study requirements should be clearly separated from the steady state study requirements. Do you agree with the action taken in separating stability analysis from steady state analysis? If not, please explain.

Yes ☒ No ☐
Comment: Yes but the definition of contingencies in table 1 and table 2 should be identical

Q32. The SDT has added requirements for plant stability studies and has drawn a distinction in these studies from System stability studies. Do you agree with this approach? If not, please explain.

Yes ☐ No ☒
Comment: The need to assess Plant Stability should be removed from this standard. The generator connection standard and the proforma tariff interconnection process ensure the plant stability meets performance requirements. Furthermore, the System Assessment provides an overall assessment of the integrated system performance, which includes the impact of the plant. The requirement for plant stability studies appears to be redundant and would be a waste of assessment resources.

Q33. The existing TPL-004-0 standard has a requirement to consider the Loss of all generating units at a plant, but it was not clear whether this requirement should apply to stability studies. The SDT did not include this requirement in the stability table, because it is hard to envision a condition when all units would trip simultaneously within the timeframe of a stability simulation. Do you think this condition should be required in stability analysis of extreme events? If not, please explain.

Yes ☒ No ☐

Comment: Isn't 2.d such an event? In a breaker-and-1/3 or 1/2 generating station, if one station bus is off-line for maintenance, faulting the other bus will kill the station, or at least cause a major disruption with individual generators connected to other stations by separated lines. That is certainly worthy of consideration as a feasible "extreme" event Further, the same low likeihood argument could be applied for the majority of extreme events in Table 2.The emphasis should be on what the response is for extreme events rather than the likelihood of the event. .

Q34. There are an increasing number of events with slow voltage recovery after faults on the Transmission System. The dynamic behavior of induction motor loads is a major factor in this phenomenon. The proposed standard therefore requires that the load model for stability studies of peak Load conditions include the dynamic effects of induction motors. Do you agree with this requirement? If not, please explain?

Yes ☒ No ☐

Comment: R2.4.1 should be clarified to limit a requirement for detailed modeling (for example, dynamic effects of induction motors loads) to local areas where the planner expects a local emerging voltage recovery issue.

Q35. What type of manual or automatic adjustments of generators should be allowed for single and multiple Contingencies?

Comment: 1) Reducing or increasing generation while keeping the units on-line or by bringing additional units on line. The amount of generation change should be limited to that amount that can be accomplished within the allowed readjustment period. Due consideration should be given to start up time and ramp rates of the units.
2) Generator tripping should be added to requirement R3.5 in addition to runback. Generator tripping is used extensively in regions where remote generation is delivered via long transmission.
3) Adjustment of firm transfer must be allowed for single and multiple contingency events. MH could not accept the revised standard that removed this existing requirement.

F. Generation Runback and Tripping

The SDT has discussed the automatic and manual readjustments of generators that should be permissible for single contingencies and multiple contingencies. The existing TPL-001-0 through TPL-004-0 standards through footnote (a) of Table I could include emergency ratings applicable for short durations as required to permit operating steps necessary to maintain system control. The footnote is silent about allowable generation adjustments in response to the Category B events. However, it does indicate that system adjustments are permitted to prepare for the next Contingency. These system adjustments could include manual or automatic adjustments involving generation.

The SDT has learned that many transmission owners use System Protection Systems (SPS) or Remedial Action Schemes (RAS) to trip generation for single and multiple Contingency

outage events to prevent overloads, low voltage, and instability in the Interconnected Transmission network for N-1 and N-2 events. In some cases, the RAS are used to prepare for the next Contingency; but in some cases, the RAS are used to simultaneously avoid exceeding emergency ratings.

Q36. The proposed standard allows generation runback after the disturbance that causes a single Contingency (or due to a single Contingency outage) to move the Interconnected Transmission System from an emergency state (within emergency ratings) to a normal state (within normal ratings), assuming that the disturbance does not result in instability? Do you agree? If not, please explain.

Yes ☒ No ☐

Comment: Generator tripping should be added in addition to runback. Generator tripping is used extensively in regions where remote generation is delivered via long transmission There will be a large cost penalty to construct transmisison to remote generation if generator tripping is not allowed. Since the amount of tripping is covered by operating eserves, there is no impact on reliability. Generator tripping should be an option for the planner in the standard as opposed to a regional difference or the need to install an SPS. .

Q37. Since emergency ratings are thermal ratings, should this standard allow an automatic generation runback scheme (that is initiated immediately after the disturbance causing the single Contingency) to prevent thermal overloads (assuming that the disturbance does not result in instability)? If yes, what are the conditions that must be met in order to allow such a runback scheme to meet the System performance criteria for single Contingencies? Please explain the reason for your answer.

Yes ☒ No ☐

Comment: I see no problem in using a runback scheme to prevent thermal overloads. Most emergency ratings are based on 30 minute values to allow for operator action. An automatic runback could be accomplished in 5-15 minutes depending on the ramp rate of the generator. The runback scheme may allow higher emergency ratings depending on the rating methodology. At no point would emergency ratings be exceeded and at the end, loading would be within normal values.

The standard drafting team has considered that RAS or SPS may be allowable under certain situations for single Contingencies, but proposes that their use should be limited.

Q38. Do you agree that RAS or SPS may be allowed for single Contingencies? If not, please explain.

Yes ☒ No ☐

Comment: MH sees no reason to limit the application of SPSs. The SPS is a viable planning option that allows large savings in cost in stability limited system where there is no need to increase thermal capability.

Q39. Please describe the limitations that you believe should be placed on the use of RAS or SPS for single Contingency events.

Comment: An automatic runback should be accomplished in 5-15 minutes depending on the ramp rate of the generator. The runback scheme may allow higher emergency ratings depending on the rating methodology. At no point would emergency ratings be exceeded and at the end, loading would be within normal values. Generator tripping should be allowed. Generator tripping is used extensively in regions where remote generation is delivered via long transmission. MH sees no reason to limit the application of SPSs. The SPS is a viable planning option that allows large savings in cost in stability limited system where there is no need to increase thermal capability. .

Q40. When RAS or SPS are allowed, what conditions should be met when these systems are used in system adjustments to meet performance requirements?

Comment: 1) Reducing or increasing generation while keeping the units on-line or by bringing additional units on line. The amount of generation change should be limited to that amount that can be accomplished within the allowed readjustment period. Due consideration should be given to start up time and ramp rates of the units.
2) Generator tripping should be added to requirement R3.5 in addition to runback. Generator tripping is used extensively in regions where remote generation is delivered via long transmission.
3) Capacitor and reactor switching - The number of capacitors and reactors, which may be switched, should be limited to those which could be switched during the allowed readjustment period.
4) Adjustment of load tap changers (LTCs) to the extent possible within the allowed readjustment period.
5) Adjustment of phase shifters to the extent possible within the allowed readjustment period.
6) An increase or decrease to the flow on HVDC facilities to the extent possible within the allowed readjustment period.
7) Transmission reconfiguration - Automatic tripping of transmission lines or transformers to the extent possible within the allowed readjustment period.
8) Automatic tripping of interruptible load or curtailment of or redispatching of Firm Transmission Service to the extent possible within the allowed readjustment period.

G. General Questions

Q41. If you are aware of any regional variances that would be required as a result of these standards, please identify them here.

Yes ☒ No ☒
Comment: MH does not like the idea of a long transition period. Either NERC adopts the concept of generation rejection or the MRO will need to submit a regional variation. I much prefer the planned loss of generation via an SPS rather than via out-of-step tripping as proposed in the Table 2. In certain areas of the MRO that are stability limited because of long lines to bring generation at the energy source (such as mine mouth plants, hydro plants, etc.) to the load, generation rejection is used to return from an emergency state to a normal state. If generation rejection is not allowed in these cases, extraordinary cost and extraordinary negative environmental impacts will result. As an example, removing one SPS will require new 500 kV transmission between Winnipeg and Minneapolis at a cost of $1 billion to MRO utilities.

Q42. If you are aware of any conflicts between the proposed standards and any regulatory function, rule order, tariff, rate schedule, legislative requirement or agreement, please identify them here.

Yes ☐ No ☒
Comment:

Q43. Do you have any other questions or concerns with the proposed standard that have not been addressed? If yes, please explain.

Yes ☒ No ☐
Comment: MH would prefer that many of the categories in the existing Table 1 be retained. The SDT has resort the contingency buckets with no explanation as to how this was done. can the SDT provide statistical outage date to justify the changes. MH is not convinced the SDT has addressed the few confusioning issues in Table 1.

R1: MH does not believe R1 is required in this standard. The modelling standards should cover the requirement of the data owners to provide data to the PC.
Further this data needs to be provided to the TP as well.

R1.4: requires planned outage data to be provided to planners. I do not believe this is a requirement for planning. It is not economic to add facilities to accommodate future planned outages. Secondly, the Table 1 multiple contingencies already mandate that planners consider the impacts of an outage with system adjustment followed by testing for the next contingency.

R1.5: requires the PC to define "planned facilities" which should be included in the model. This will lead to inconsistency in what is modelled, as experience has shown that there will be a wide range of assumptions in the definition. This standard should offer a definition for stakeholder debate. The SDT should clarify what is intended by including Protection System Equipment and control devices.

R2.1: It is not necessary to assess all five years of the near term planning horizon – year one, three and five will be more than sufficient. What is the reliability benefit driving the SDT to mandate each of the first five years be assessed?

R2.1.2 and R2.4.2 -- It is important to assess off peak loads with high simultaneous transfers as this is the period where extensive economic interchange occurs, and transient stability issues arise as less uneconomic peak units are off, leaving the load to be supplied by remote generation with reduced local reactive supply, voltage and damping control.

R2.2: The long term assessment should also include an off peak case with simultaneous transfers to provide some indication if the system performance is expected to degrade.

R2.3: The short circuit study is a design issue that would more appropriately covered by a FAC standard. MH recommends it be removed from the Planning standard.

R2.6.1: Why would a past study be invalidated if there is a change in market structure? It would seem that the operation of any market would have to respect reliability criteria.

R.3.3.2.2: Curtailment of firm transfers is allowed as a system adjustment in the existing standard. This ability must be retained in the new standard. Curtailment of a firm transaction is not equivalent to curtailment of load, but is more comparable to runback/tripping of generators. Both are events that can be backed up by contingency reserves and do not result in consequential load loss. Disallowing firm transfer curtailment will result in numerous violations of the performance requirements and result in a requirement to build millions of dollars of transmission. MH can not accept a standard which mandates that firm transfers can not be curtialed following a contingency.

R3.3.3: If rationale for the contingencies selected for evaluation is available then this rationale will state why the selected contingencies are expected to be the most severe. The requirement does not need to state "and shall include an explanation of why the remaining Contingencies would produce less severe System resuts".This is redundant.

R3.4 and R4.5.2: Evaluating a change designed to mitigate the consequences of an exteme event can require significant work. Since there is no requirement to implement corrective plans for extreme events, what is the purpose of this evaluation?

R3.5: Generator tripping should be added in addition to runback. Generator tripping is used extensively in regions where remote generation is delivered via long transmission.

R6: Requires distribution of results and "coordinating analysis of these results through an open and transparent process". Can the SDT clarify what the intent is? As written, it implies the PC/TP just shares assessment results with neighbours. There should be a requirement to conduct joint assessments on inter-regional transfer capability. The assessments should also be provided to the Regional Entities/NERC.

Table 1 -Steady State Performance

MH requests the SDT to provide rationale for how the planning events where resorted from the existing Table 1 Categories to the proposed Planned events.

Performance Requirements: As this is a steady state table, how does one assess if voltage instability, cascading outages or islanding occurs? "Simulate Normal Clearing unless otherwise specified." should be deleted from this Steady State Performance table.

This table should have an Initial Condition column as well as an Event column, as in Table 2. The wording of event descriptions in Table 1 should follow the wording of similar event descriptions in Table 2.

Event: What is a non-bus tie breaker? Is this any breaker that is not a bus tie breaker?

Interruption of Firm Transfer Allowed: Interruption of firm transfer should be allowed following a single contingency – this is a change from the existing standard where system adjustment after a Cat B event could include reduction of firm transfer. Similar to generation tripping/runback, the loss of a firm transaction does not result in Consequential load loss as it is backed up by contingency reserve.

P6-2: What is the justification for classifing a bipolar DC line loss as a single contingency? The existing standard classifies this event as a Cat C multiple contingency event.

P6-3: Why is a breaker internal fault classified as a single contingency? One would assume such a fault would be cleared by backup protection resulting in the loss of multiple elements.

P9-1: Is there any justification for the selection of one mile? Would the fact that there is line shielding be justification for increasing this length? A more reasonable selection could be 5% of the length of the longer of the two circuits.

P9-2: A monopolar DC line loss may be covered in P4-2 (and no non-consequential load loss is allowed). Does loss of a monopolar DC line refer to loss of a single pole of a bipolar line or a bipolar dc line? Can the PC/TP choose between the loss of a monopolar DC line and the loss of a bipolar DC line?

P9-3, P9-4 and P9-5: When the DC line loss is bipolar, the event should be moved to the extreme event category. Does loss of a monopolar DC line refer to loss of a single pole of a bipolar line or a bipolar dc line? Can the PC/TP choose between the loss of a monopolar DC line and the loss of a bipolar DC line?

Exteme Events Evaluation Requirements 3: This should be removed as this is the Steady State Performance table.

Extreme Event Descriptions: How did the SDT determine what events should be classified as extreme events? Was statistical data analyzed?

Extreme Event 1: In the existing TPL standards, the simultaneous loss of two elements was considered a Cat C multiple element event. What is the SDT rational for the change?

Extreme Event 2c: Why is the loss of a single large load an Extreme Event?

Extreme Event 3f: This is a repeat of Extreme Event 3d.

Extreme Event 3g: What is the rationale for distinguishing between old vs. new design for the loss of multiple lines due to icing? Is the SDT implying that new lines must be desined to prevent multiple line loss due to icing?

Table 2 - Stability Performance Table

Performance Requirements: The MRO adds 1/2 to 1 cycle to the Normal Clearing time during simluations as an additional safety margin. The SDT should consider enforcing this practice.

Event: What is a non-bus tie breaker? Is this any breaker that is not a bus tie breaker?

P1: There should be a P1-4 event for a shunt device (ie. "4. A shunt device (including FACTS devices)").

P6-2: What is the justification for classifing a bipolar DC line loss as a single contingency? The existing standard classifies this event as a Cat C multiple contingency event.

P6-3: Why is a breaker internal fault classified as a single contingency? One would assume such a fault would be cleared by backup protection resulting in the loss of multiple elements.

P9-1: Is there any justification for the selection of one mile? Would the fact that there is line shielding be justification for increasing this length? A more reasonable selection could be 5% of the length of the longer of the two circuits.

P9-3: This contingency should be classified as an Extreme Event since statistically, the outage duration of a dc circuit (assume you mean a bipole) is less than 2 hours for MH bipoles, so the probability of a second outage is very low. .

P9-6: Isn't this the same as P1-3? If the outaged tranformer is replaced by a spare transformer, this restores the system to a normal state prior to the event ("Apply a P1.3 Contingency."). What is the point?

Note 1.a.i.: Planning Event P3.2 does not exist.

Note 1.a.ii: This definition of angular stability should be deleted and the definition in Note 1.a.i. should apply to all Planning Events. The system should not be considered to be angular stable when generators are pulling out of synchronism.

Note 1.a.iii.: This standard should define a minimum damping factor and allow the PC/TP to have a more restrictive damping requirement if they choose to.

NERC
NORTH AMERICAN ELECTRIC RELIABILITY CORPORATION

Comment Form for First Draft of TPL-001-1 — Transmission System Planning Performance Requirements

Please use this form to submit comments on the proposed draft of TPL-001-1. Comments must be submitted by **Friday, October 26, 2007**. You may submit the completed form by e-mail to sarcomm@nerc.net with the words "TPL-001 Draft 1" in the subject line. If you have questions please contact Ed Dobrowolski at ed.dobrowolksi@nerc.net or by telephone at 609-947-3673.

Individual Commenter Information **(Complete this page for comments from one organization or individual.)**		
Name:	Jerry Tang	
Organization:	Municipal Electric Authority of Georgia	
Telephone:	770-563-8190	
E-mail:	jtang@meagpower.org	
NERC Region (check all Regions in which your company operates)		**Registered Ballot Body Segment (check all industry segments in which your company is registered)**
☐ **ERCOT**	☒	1 — Transmission Owners
☐ **FRCC**	☐	2 — RTOs and ISOs
☐ **MRO**	☐	3 — Load-serving Entities
☐ **NPCC**	☐	4 — Transmission-dependent Utilities
☐ **RFC**	☐	5 — Electric Generators
☒ **SERC**	☐	6 — Electricity Brokers, Aggregators, and Marketers
☐ **SPP**	☐	7 — Large Electricity End Users
☐ **WECC**	☐	8 — Small Electricity End Users
☐ **NA – Not Applicable**	☐	9 — Federal, State, Provincial Regulatory or other Government Entities
	☐	10 — Regional Reliability Organizations and Regional Entities

Group Comments (Complete this page if comments are from a group.)

Group Name:

Lead Contact:

Contact Organization:

Contact Segment:

Contact Telephone:

Contact E-mail:

Additional Member Name	Additional Member Organization	Region*	Segment*

*If more than one Region or Segment applies, please list all that apply. Regional acronyms and segment numbers are shown on prior page.

Background

The purpose of this standard is to establish Transmission System planning performance requirements within the planning horizon to develop a Bulk Electric System that will operate reliably over a broad spectrum of System conditions and following a wide range of probable Contingencies. This standard will replace TPL-001-0, TPL-002-0, TPL-003-0, and TPL-004-0. The standard drafting team has not yet addressed TPL-005-0 and TPL-006-0, but will address these two standards during the next phase of the drafting process.

The major objectives of the standard drafting team are to:

1) Ensure the standard is complete and the requirements are set at an appropriate level to ensure reliability (Not Least Common Denominator)
2) Ensure that the standard is enforceable by having clearly defined requirements with unambiguous language
3) Address the issues raised by FERC Order 693, 890, and other applicable orders
4) Address the issues raised in the original Standards Authorization Request (SAR) and the Supplemental SAR.

The standard drafting team did not attempt to edit the existing standards but rather chose to write one standard that addresses all aspects of transmission planning in the existing TPL-001-0, TPL-002-0, TPL-003-0, and TPL-004-0. The standard drafting team organized the new standard in the following sections:

R1 – Modeling requirements
R2 – Assessment and Corrective Plan requirements
R3 – Steady State Analysis requirements
R4 – Stability Analysis requirements
R5 – Coordination requirements

The standard drafting team determined that the requirements and analysis for Steady State are different from those for stability. As such, the standard drafting team separated the analysis requirements and created two performance requirement tables.

The standard drafting team recognizes that this draft standard is a starting point for industry input into the standard and that there is still a lot of work required to complete the process. The standard drafting team has made many changes to clarify requirements, add requirements, and make some of the performance requirements stricter. The standard drafting team has not addressed Measures, Risk Factors, Violation Severity Factors, or Time Horizons at this time. These will be addressed when the standard drafting team has better defined the requirements of the standard.

For questions where you agree with the standard drafting team, please state that you agree and if available, please provide supporting documentation. If you disagree with the standard drafting team, please explain why you disagree and provide data to support your position, such as outage data or analysis. If you believe that we have made a performance requirement too strict please provide supporting documentation. If applicable, please include the approximate cost in man-hours for additional studies and/or cost in $Millions for additional transmission investment to meet the new requirements or the stricter requirements. If you believe that the standard should be stricter, please provide the rationale along with any supporting data, including existing practices, cost estimates or additional analysis.

To improve the standard, the standard drafting team would appreciate responses to as many of these questions as you can answer.

A. New Definitions

Many of the concerns about the existing TPL standards come from the fact that a number of generally understood concepts are embedded in undefined terms, tables, and footnotes. To clarify some of these concerns, the standard drafting team is proposing new definitions. Please indicate whether you agree with the following proposed definitions and provide proposed changes to the definitions if you disagree:

Definition	**Agree or Disagree**
Q1. **Base Case**: Computer representation of the projected initial or starting Transmission System conditions for a specific point in time. Each base case reflects the forecasted Load at each bus (or node) on the interconnected Transmission System, the transmission facilities which deliver the generation and reactive resources to the connected Load, and the generation dispatch including firm transaction obligations assumed to supply the connected Load. The models also reflect facility ratings in accordance with FAC-008 & FAC-009.	☒Agree. ☐Do not agree.
Q1. **Comment:**	
Q2. **Consequential Load Loss:** Load that is no longer served because it is directly connected to an element(s) that is removed from service due to fault clearing action or mis-operation.	☒Agree. ☐Do not agree.
Q2. **Comment: MEAG believes that deleting the term "mis-operation" as some may have suggested, would significantly narrow the definition of Consequential Load Loss, which in turn would unreasonably increase the amount of load that is Non-Consequential. The Non-consequestial load loss, which is not allowed in P1-P5. For example, if mis-operation is deleted from the definition and we consider a relay mis-operation where a breaker fails to clear a fault, then any additional load interrupted by the back-up to the failed breaker/relay is Non-Consequential Load (and the standard appears to be violated since only a single transmission circuit was faulted and Non-Consequential Load was lost).**	
Q3. **Extreme Events:** Events which are more severe than Planning Events and have a low probability of occurrence.	☐Agree. ☒Do not agree.
Q3. **Comment: A number of the non-extreme events also have a low probability. Recommend change the word to "lower." The definition for "Extreme Events" should reference Table 1.**	
Q4. **Long-Term Transmission Planning Horizon:** Transmission planning period that covers years six through ten or beyond.	☒Agree. ☐Do not agree.
Q4. **Comment:**	
Q5. **Near-Term Transmission Planning Horizon:** Transmission planning period that covers years One through five.	☒Agree. ☐Do not

	agree.
Q5. **Comment:**	
Q6. **Non-Consequential Load Loss:** Load loss other than Consequential Load Loss. For example, Load loss that occurs through manual (operator initiated) or automatic operations such as under-voltage Load shedding, under-frequency Load shedding, or Special Protection Systems.	☒Agree. ☐Do not agree.
Q6. **Comment:**	
Q7. **Planning Assessment:** Documented evaluation of future Bulk Electric System needs by the use of performance studies that cover a range of assumptions regarding system conditions, time frames, future plans including capital reinforcements and operating procedures and other factors, such as asset conditions and age.	☐Agree. ☒Do not agree.
Q7. **Comment: Bulk Electric System deficiencies rather than needs should be evaluated. We do not agree that the planning assessment should include asset conditions and age. This is a preventive maintenace issue. The age of equipment, if it is well maintained, has little impact on reliability.**	
Q8. **Planning Events:** Events which require Transmission system performance requirements to be met.	☐Agree. ☒Do not agree.
Q8. **Comment: Change to: "Events that are simulated or assessed to test the transmission system to ensure that performance requirements are met."**	
Q9. **Plant Stability Study:** Study of an individual plant's Stability for various Contingencies in the vicinity of the plant; concerned with the effect on the System of the generating units' loss of synchronism and the damping of the generating units' power oscillations.	☒Agree. ☐Do not agree.
Q9. **Comment: Change " the System" to "local area of the Bulk Electric System." It also need a definition for "plant."**	
Q10. **System Stability Study:** Study of the System or portions of the System to ensure that angular Stability is maintained, inter-area power oscillations are damped, and voltages during the dynamic simulation stay within acceptable performance limits.	☒Agree. ☐Do not agree.
Q10. **Comment: Change "System or portions of the system" to "Bulk Electric System's components associated with the Transmission Planer."**	
Q11. **Year One:** The first year that a Transmission Planner is responsible for studying. This is further defined as the planning window that begins the next calendar year from the time the Transmission Planner submits their annual studies. Analysis conducted for time horizons within the calendar year from the study publication are assumed to be conducted under the auspices of Operations Planning.	☒Agree. ☐Do not agree.
Q11. **Comment: The last sentence in the above definition was not included in the definition listed in the draft standard, nor should it be.**	

B. Sensitivity Studies

The draft planning standard includes the requirement, as specified in FERC Order 693, that planning decisions be based on a portfolio of analyses. In section 12.a.ii "Sensitivity

studies and critical system conditions" FERC provided direction to consider a full range of variables considered to be significant that need to be assessed and documentation provided that explains the rationale for the selection of variables assessed.

In addition to the firm obligation scenario, the portfolio of analyses should be supplemented to include information from sensitivity analysis. The sensitivity analysis should be developed using additional cases that simulate reasonably stressed system conditions. The standard drafting team has included several parameters that can be varied to create the requisite sensitivity case(s). The draft standards specify that the sensitivities reflect one or more of the following conditions and that documentation be provided explaining the rationale for selecting the sensitivity(ies) employed. The parameters that should be varied include:

- Higher or lower Load forecasts from the Base Case with variability of Load/demand and Load power factors due to season, weather, or time of day.
- Modification of expected transfers.
- Unavailability of long lead time facilities.
- Variability and outages of Reactive Resources.
- Generation additions, retirements, or other dispatch scenarios.
- Decreased effectiveness of controllable Loads and Demand Side Management.
- Modification of planned Transmission outages

To help focus industry discussion, please respond to the questions below:

Q12. Should the standard provide more specific direction regarding the number of sensitivity cases that need to be developed?

Yes ☐ No ☒

Comment: The entity performing the studies should be allowed to determine the appropriate number of cases that need to be evaluated. Different utilities have different input assumptions, therefore the selection of sensitivities to study are different. For example, some utility needs to study the water availability for its hydro units, while other utility needs to evalauate the sensitivity of gas availability.

Q13. Should the standard specify the required changes, such as changes in expected transfers, load forecasts, generation patterns, etc., from the study case to be considered a "reasonably stressed" case?

Yes ☐ No ☒

Comment: The standard may offer guidance but what constitutes a "reasonably stressed" case will vary from Transmission Planner to Transmission Planner. Therefore, it should be left to the discretion of the entity performing the study.

Q14. The SDT proposes to require the use of sensitivity studies for Near-Term Transmission System Planning Horizon stability analysis. Do you concur with the use of sensitivity analysis in dynamic studies?

Yes ☒ No ☐

Comment: The entity performing the studies should be allowed to determine the appropriate sensitivity studies that need to be evaluated. An alternate approach is to include pre-existing system conditions that additionally stress the system during the contingencies under study so as to verify that stability is preserved under conditions that go beyond those envisioned for the contingency. Stability studies are more time consuming than conventional power flow studies. A single 20 second stability simulation is computationally equivalent to running 80 steady-state powerflow cases and has significantly larger pre-analysis preparation effort.

Q15. The draft TPL standard does not require the use of sensitivity studies for the Long-Term Transmission System Planning Horizon (year six and beyond) studies. Do you concur with this approach or should there be some level of sensitivity analysis required for the long-term period?

Yes ☒ No ☐
Comment: We concur with the current approach.

C. Corrective Action Plans

Requirement R2.7 of the standard states that when analysis shows that the performance requirements in Table 1 and Table 2 are not fully met, a Corrective Action Plan that utilizes all or some of the Transmission System enhancements, generation additions, DSM, new technologies and Operating Procedures shall be included in the Planning Assessment. This Corrective Action Plan should ensure that upon its implementation the identified system deficiencies will be corrected so that the performance requirements in Table 1 and Table 2 will be met. Furthermore, studies included in the Planning Assessment should demonstrate that this is indeed the case.

Q16. Requirement R2.7.1: Such Corrective Action Plans shall "Identify System deficiencies and the associated actions needed to achieve required System performance including Transmission and generation improvements, DSM, new technologies, or Operating Procedures including the duration of Interim Operating Procedures". System deficiencies may be corrected using an integrated plan, i.e., an optimal mix of Transmission, generation, DSM and Operating Procedures. Should DSM be considered in conjunction with other measures in developing Corrective Action Plans? If yes, please comment on how the impact of DSM should be included.

Yes ☒ No ☐
Comment: DSM should be included if it is a tool made available to the TP for this purpose, but only to the extent that it is available for curtailment by the System Operator and without the option to buy through and remain in service.

Q17. Requirement R2.7.2: Such Corrective Action Plans shall "Be added to study cases and the cases re-tested to show that the System with planned additions meets the performance requirements in the tables". Should new studies, including the facilities comprising the Corrective Action Plan, be performed to assess System normal performance and Contingency response for conditions that previously resulted in the System deficiencies (without the planned additions) and also demonstrate that the changes would not result in inadvertent negative impacts on the System. If you "agree", please comment on how a study area should be determined.

Yes ☒ No ☐
Comment: Re-testing should be required only where the correction may impact network flows. The study area should be determined by the TP. The TP has the most knowledge of how the system responds to changes and should be allowed to choose the study area based on the prudent utility practice.

Q18. Requirement R2.7.3: The standard calls for a differentiation between committed and proposed projects. Do you agree that they should be treated separately? If not, please state why not.

Yes ☐ No ☒
Comment: The goal is to meet the system performance requirements outlined in the standard. Whether a project is proposed or committed is not relevant.

Q19. Requirement R2.7.4: For such Corrective Action Plans "Committed projects shall not be removed without documentation to show that the revised plan meets the performance requirements". Do you agree or disagree with this requirement? If you disagree, please explain why.

Yes ☐ No ☒
Comment: See response to Q18.

D. Performance Requirements

The proposed revised planning standard (TPL-001-1) incorporates a number of changes in requirements as compared to the current planning standards (TPL-001-0 through TPL-004-0), which it is expected to replace. Among other things these changes are intended to clarify the standard, address issues described by FERC, and, in particular, to "raise the bar." Strengthening the planning standards in selected areas is necessary to maintain a reliable Bulk Electric System that is up to the challenges of the 21st Century. In proposing the requirements in this draft, the standard drafting team attempted to balance the value of increased reliability against any potential increase in work and costs to meet the new proposed standard.

The standard drafting team is seeking input from the industry to determine whether a proper balance has been achieved. The areas where material changes are proposed in this draft are enumerated below, and questions are posed by the standard drafting team to obtain industry comment. In formulating your responses, please keep in mind that material changes in the final standard will be accompanied by a transition plan to provide for an orderly implementation of the final standard.

The performance requirements relative to Non-Consequential Loss of Load for the following events enumerated in the two tables can be considered more stringent than the existing TPL standards. Furthermore, the proposed standard is based on an assumption that performance requirements for EHV facilities should be more stringent than for lower voltage facilities.

Do you agree that Non-Consequential Loss of Load should not be permitted for the following events? If you disagree, please provide a reason for your disagreement.

Event	Agree or Disagree	Comment
Q20. P2-1: Loss of bus section (SLG for stability) above 300 kV	☐Agree. ☒Do not agree.	By not allowing non-consequential load loss, utilities will incur significant expenditures to solve a problem with an extremely low probability of occurrence. The benefit will not justify the cost.
Q21. P5-1: For facilities above 300 kV, loss of a Transmission circuit followed by System adjustment[1] followed by loss of another Transmission circuit	☐Agree. ☒Do not agree.	see Q20 above.
Q22. P5-2: For facilities above 300 kV, loss of a	☐Agree.	see Q20 above.

Transmission circuit followed by System adjustment followed by loss of a transformer with low side voltage rating above 300 kV	☒Do not agree.	
Q23. P5-3: For facilities above 300 kV, loss of a transformer with low side voltage rating above 300 kV followed by System adjustment followed by loss of another transformer	☐Agree. ☒Do not agree.	see Q20 above.

[1]System adjustment can be manual or automatic.

The proposed standard is based on an assumption that performance requirements for non-bus tie EHV breakers should be distinguished from other breakers. Do you agree that Non-Consequential Loss of Load should not be permitted for this event?

Q24. Loss of non-bus tie breaker (above 300 kV) due to internal fault

Yes ☐ No ☒
Comment: See response to Q20.

The proposed standard is based on an assumption that performance requirements for non-bus tie EHV breakers should be distinguished from other breakers and that performance requirements for EHV facilities should be more stringent than for lower voltage facilities. Do you agree that Non-Consequential Loss of Load should not be permitted for this event?

Q25. P3-1: Loss of (SLG for stability) either a generator, a Transmission circuit, a transformer, or a bus and a stuck non-bus tie breaker (above 300 kV)

Yes ☐ No ☒
Comment: See response to Q20.

The proposed standard is based on an assumption that the following events are relatively high probability events and, therefore, Non-Consequential Loss of Load should not be permitted. Do you agree? If you disagree, please provide a reason for your disagreement.

Event	Agree or Disagree	Comment
Q26. P4-1: Loss of a Generator followed by System adjustment[1] followed by loss of another Generator	☒Agree. ☐Do not agree.	
Q27. P4-2: Loss of a generator followed by a System adjustment followed	☐Agree. ☐Do not agree.	

[1] System adjustment can be manual or automatic

by the loss of a monopolar DC line		
Q28. P4-3: Loss of a generator followed by System adjustment followed by loss of a Transmission circuit	☒Agree. ☐Do not agree.	
Q29. P4-4: Loss of a generator followed by System adjustment followed by loss of a transformer	☒Agree. ☐Do not agree.	

The performance requirement for the following event may be considered less stringent than the existing TPL Standards — P2-3: Loss of a single pole of a DC line. Interruption of firm transactions (without Loss of firm Load) if the transaction is dependent on the faulted DC line is now allowed for this initiating event/Contingency.

Q30. Do you agree that interruption of any firm transfers that are dependent on the outaged DC line that is taken out of service should be permitted?

Yes ☐ No ☐
Comment:

E. Stability

Q31. The proposed standard is based on an assumption that steady state analysis and stability analysis are different from each other and that therefore, two tables of Contingencies and performance requirements were needed. It is also based on an assumption that stability study requirements should be clearly separated from the steady state study requirements. Do you agree with the action taken in separating stability analysis from steady state analysis? If not, please explain.

Yes ☒ No ☐
Comment:

Q32. The SDT has added requirements for plant stability studies and has drawn a distinction in these studies from System stability studies. Do you agree with this approach? If not, please explain.

Yes ☒ No ☐
Comment:

Q33. The existing TPL-004-0 standard has a requirement to consider the Loss of all generating units at a plant, but it was not clear whether this requirement should apply to stability studies. The SDT did not include this requirement in the stability table, because it is hard to envision a condition when all units would trip simultaneously within the timeframe of a stability simulation. Do you think this condition should be required in stability analysis of extreme events? If not, please explain.

Yes ☐ No ☒

Comment: Generator protection is designed to trip only those units required. In addition, it is the magnitude of generation tripped rather than the number of units tripped that is of the greatest significance to the stability of the grid.

Q34. There are an increasing number of events with slow voltage recovery after faults on the Transmission System. The dynamic behavior of induction motor loads is a major factor in this phenomenon. The proposed standard therefore requires that the load model for stability studies of peak Load conditions include the dynamic effects of induction motors. Do you agree with this requirement? If not, please explain?

Yes ☐ No ☒

Comment: Dynamic studies of seasonal load conditions should include the effects of induction motors, and particularly in areas where traditional load models have indicated a problem. Unfortunately, there is a lack of data to support the amount and characteristics of the detailed induction load models in many areas. In addition to the consideration of the dynamic effects of induction motor loads, the effects of static capacitor banks installed at distribution voltage levels would need to be considered as well. Prior to making this a requirement in the reliability standards, the industry needs guidance as to how this data should be developed and maintained for models in future years.

Note that meeting such a requirement would necessitate a significant increase in the dynamic data needed to represent the system. Maintenance of such load model data would require significant resources. Load characteristics valid for a near term model might not be valid for future years. Also, summer peak load, winter peak load, and off-peak load characteristics would differ.

Q35. What type of manual or automatic adjustments of generators should be allowed for single and multiple Contingencies?

Comment: Adjustments that should be allowed are those that can be performed in time to prevent the system from failing to meet performance requirements. These adjustments may include automatic voltage regulator action, governor action, generator runback, and generator tripping.

F. Generation Runback and Tripping

The SDT has discussed the automatic and manual readjustments of generators that should be permissible for single contingencies and multiple contingencies. The existing TPL-001-0 through TPL-004-0 standards through footnote (a) of Table I could include emergency ratings applicable for short durations as required to permit operating steps necessary to maintain system control. The footnote is silent about allowable generation adjustments in response to the Category B events. However, it does indicate that system adjustments are permitted to prepare for the next Contingency. These system adjustments could include manual or automatic adjustments involving generation.

The SDT has learned that many transmission owners use System Protection Systems (SPS) or Remedial Action Schemes (RAS) to trip generation for single and multiple Contingency outage events to prevent overloads, low voltage, and instability in the Interconnected Transmission network for N-1 and N-2 events. In some cases, the RAS are used to prepare for the next Contingency; but in some cases, the RAS are used to simultaneously avoid exceeding emergency ratings.

Q36. The proposed standard allows generation runback after the disturbance that causes a single Contingency (or due to a single Contingency outage) to move the Interconnected Transmission System from an emergency state (within emergency

ratings) to a normal state (within normal ratings), assuming that the disturbance does not result in instability? Do you agree? If not, please explain.

Yes ☒ No ☐
Comment:

Q37. Since emergency ratings are thermal ratings, should this standard allow an automatic generation runback scheme (that is initiated immediately after the disturbance causing the single Contingency) to prevent thermal overloads (assuming that the disturbance does not result in instability)? If yes, what are the conditions that must be met in order to allow such a runback scheme to meet the System performance criteria for single Contingencies? Please explain the reason for your answer.

Yes ☒ No ☐
Comment: The generator runback scheme should complete its action within the time allowed by the emergency ratings of elements that exceed their normal thermal ratings.

The standard drafting team has considered that RAS or SPS may be allowable under certain situations for single Contingencies, but proposes that their use should be limited.

Q38. Do you agree that RAS or SPS may be allowed for single Contingencies? If not, please explain.

Yes ☒ No ☐
Comment:

Q39. Please describe the limitations that you believe should be placed on the use of RAS or SPS for single Contingency events.

Comment: RAS or SPS should meet the same criteria as any protection system.

Q40. When RAS or SPS are allowed, what conditions should be met when these systems are used in system adjustments to meet performance requirements?

Comment: The conditions required by SPS standards (PRC).

G. General Questions

Q41. If you are aware of any regional variances that would be required as a result of these standards, please identify them here.

Yes ☒ No ☐
Comment: Facilities rating methodology are different from region to region and company to company.

Q42. If you are aware of any conflicts between the proposed standards and any regulatory function, rule order, tariff, rate schedule, legislative requirement or agreement, please identify them here.

Yes ☐ No ☐
Comment:

Q43. Do you have any other questions or concerns with the proposed standard that have not been addressed? If yes, please explain.

Yes ☒ No ☐

Comment: To the extent that the new standard is more stringent, additional time should be allowed to implement the corrective action plan, with fines suspended until reasonable time has passed to allow implementation. I.E., If the solution is 20 miles of new 500 kV T/L, then allowing fines to the short-term horizon is unreasonable – building 20 miles of 500 kV T/L is not possible in 2 or 3 years.

NERC
NORTH AMERICAN ELECTRIC RELIABILITY CORPORATION

Comment Form for First Draft of TPL-001-1 — Transmission System Planning Performance Requirements

Please use this form to submit comments on the proposed draft of TPL-001-1. Comments must be submitted by **Friday, October 26, 2007**. You may submit the completed form by e-mail to sarcomm@nerc.net with the words "TPL-001 Draft 1" in the subject line. If you have questions please contact Ed Dobrowolski at ed.dobrowolksi@nerc.net or by telephone at 609-947-3673.

Individual Commenter Information **(Complete this page for comments from one organization or individual.)**		
Name:		
Organization:		
Telephone:		
E-mail:		
NERC Region (check all Regions in which your company operates)		**Registered Ballot Body Segment (check all industry segments in which your company is registered)**
☐ **ERCOT**	☐	1 — Transmission Owners
☐ **FRCC**	☒	2 — RTOs and ISOs
☒ **MRO**	☐	3 — Load-serving Entities
☐ **NPCC**	☐	4 — Transmission-dependent Utilities
☒ **RFC**	☐	5 — Electric Generators
☒ **SERC**	☐	6 — Electricity Brokers, Aggregators, and Marketers
☐ **SPP**	☐	7 — Large Electricity End Users
☐ **WECC**	☐	8 — Small Electricity End Users
☐ **NA – Not Applicable**	☐	9 — Federal, State, Provincial Regulatory or other Government Entities
	☐	10 — Regional Reliability Organizations and Regional Entities

Group Comments (Complete this page if comments are from a group.)

Group Name: **Midwest ISO, Inc.**

Lead Contact: **Allen McKee**

Contact Organization: **Midwest ISO, Inc.**

Contact Segment: **RTOs and ISOs**

Contact Telephone: **(317) 249-5220**

Contact E-mail: **amckee@midwestiso.org**

Additional Member Name	Additional Member Organization	Region*	Segment*
Karl Kohlrus	City Water, Light & Power-Springfield, Illinois	**SERC**	5
Jim Cyrulewski, P.E.	JDRJC Associates	RFC	8
Joseph DePoorter	Madison Gas & Electric	MRO	4

*If more than one Region or Segment applies, please list all that apply. Regional acronyms and segment numbers are shown on prior page.

Background

The purpose of this standard is to establish Transmission System planning performance requirements within the planning horizon to develop a Bulk Electric System that will operate reliably over a broad spectrum of System conditions and following a wide range of probable Contingencies. This standard will replace TPL-001-0, TPL-002-0, TPL-003-0, and TPL-004-0. The standard drafting team has not yet addressed TPL-005-0 and TPL-006-0, but will address these two standards during the next phase of the drafting process.

The major objectives of the standard drafting team are to:

1) Ensure the standard is complete and the requirements are set at an appropriate level to ensure reliability (Not Least Common Denominator)
2) Ensure that the standard is enforceable by having clearly defined requirements with unambiguous language
3) Address the issues raised by FERC Order 693, 890, and other applicable orders
4) Address the issues raised in the original Standards Authorization Request (SAR) and the Supplemental SAR.

The standard drafting team did not attempt to edit the existing standards but rather chose to write one standard that addresses all aspects of transmission planning in the existing TPL-001-0, TPL-002-0, TPL-003-0, and TPL-004-0. The standard drafting team organized the new standard in the following sections:

R1 – Modeling requirements
R2 – Assessment and Corrective Plan requirements
R3 – Steady State Analysis requirements
R4 – Stability Analysis requirements
R5 – Coordination requirements

The standard drafting team determined that the requirements and analysis for Steady State are different from those for stability. As such, the standard drafting team separated the analysis requirements and created two performance requirement tables.

The standard drafting team recognizes that this draft standard is a starting point for industry input into the standard and that there is still a lot of work required to complete the process. The standard drafting team has made many changes to clarify requirements, add requirements, and make some of the performance requirements stricter. The standard drafting team has not addressed Measures, Risk Factors, Violation Severity Factors, or Time Horizons at this time. These will be addressed when the standard drafting team has better defined the requirements of the standard.

For questions where you agree with the standard drafting team, please state that you agree and if available, please provide supporting documentation. If you disagree with the standard drafting team, please explain why you disagree and provide data to support your position, such as outage data or analysis. If you believe that we have made a performance requirement too strict please provide supporting documentation. If applicable, please include the approximate cost in man-hours for additional studies and/or cost in $Millions for additional transmission investment to meet the new requirements or the stricter requirements. If you believe that the standard should be stricter, please provide the

rationale along with any supporting data, including existing practices, cost estimates or additional analysis.

To improve the standard, the standard drafting team would appreciate responses to as many of these questions as you can answer.

A. New Definitions

Many of the concerns about the existing TPL standards come from the fact that a number of generally understood concepts are embedded in undefined terms, tables, and footnotes. To clarify some of these concerns, the standard drafting team is proposing new definitions. Please indicate whether you agree with the following proposed definitions and provide proposed changes to the definitions if you disagree:

Definition	**Agree or Disagree**
Q1. **Base Case**: Computer representation of the projected initial or starting Transmission System conditions for a specific point in time. Each base case reflects the forecasted Load at each bus (or node) on the interconnected Transmission System, the transmission facilities which deliver the generation and reactive resources to the connected Load, and the generation dispatch including firm transaction obligations assumed to supply the connected Load. The models also reflect facility ratings in accordance with FAC-008 & FAC-009.	☒Agree. ☐Do not agree.
Q1. **Comment:**	
Q2. **Consequential Load Loss:** Load that is no longer served because it is directly connected to an element(s) that is removed from service due to fault clearing action or mis-operation.	☐Agree. ☒Do not agree.
Q2. **Comment: Midwest ISO suggests this definition be changed to "Direct Load Loss", as "Consequential Load Loss" may include elements that are not directly connected to the faulted element.**	
Q3. **Extreme Events:** Events which are more severe than Planning Events and have a low probability of occurrence.	☐Agree. ☒Do not agree.
Q3. **Comment: Extreme Events are clearly described on Table 1. Change definition from "low probability of occurrence to "lower probability of occurrence".**	
Q4. **Long-Term Transmission Planning Horizon:** Transmission planning period that covers years six through ten or beyond.	☒Agree. ☐Do not agree.
Q4. **Comment:**	
Q5. **Near-Term Transmission Planning Horizon:** Transmission planning period that covers years One through five.	☒Agree. ☐Do not agree.
Q5. **Comment:**	
Q6. **Non-Consequential Load Loss:** Load loss other than Consequential Load Loss. For example, Load loss that occurs	☐Agree.

through manual (operator initiated) or automatic operations such as under-voltage Load shedding, under-frequency Load shedding, or Special Protection Systems.	☒Do not agree.
Q6. **Comment: Midwest ISO suggests this definition be changed to "Indirect Load Loss", as "Non-Consequential Load Loss" may be confusing regarding the cause-and-effect relationship between a faulted element and subsequent loss of load.**	
Q7. **Planning Assessment:** Documented evaluation of future Bulk Electric System needs by the use of performance studies that cover a range of assumptions regarding system conditions, time frames, future plans including capital reinforcements and operating procedures and other factors, such as asset conditions and age.	☒Agree. ☐Do not agree.
Q7. **Comment:**	
Q8. **Planning Events:** Events which require Transmission system performance requirements to be met.	☒Agree. ☐Do not agree.
Q8. **Comment:**	
Q9. **Plant Stability Study:** Study of an individual plant's Stability for various Contingencies in the vicinity of the plant; concerned with the effect on the System of the generating units' loss of synchronism and the damping of the generating units' power oscillations.	☐Agree. ☒Do not agree.
Q9. **Comment: The words "Bulk Electric" should be added before "System".**	
Q10. **System Stability Study:** Study of the System or portions of the System to ensure that angular Stability is maintained, inter-area power oscillations are damped, and voltages during the dynamic simulation stay within acceptable performance limits.	☐Agree. ☒Do not agree.
Q10. **Comment: The words "Bulk Electric" should be added before both occurences of "System".**	
Q11. **Year One:** The first year that a Transmission Planner is responsible for studying. This is further defined as the planning window that begins the next calendar year from the time the Transmission Planner submits their annual studies. Analysis conducted for time horizons within the calendar year from the study publication are assumed to be conducted under the auspices of Operations Planning.	☒Agree. ☐Do not agree.
Q11. **Comment:**	

B. Sensitivity Studies

The draft planning standard includes the requirement, as specified in FERC Order 693, that planning decisions be based on a portfolio of analyses. In section 12.a.ii "Sensitivity studies and critical system conditions" FERC provided direction to consider a full range of variables considered to be significant that need to be assessed and documentation provided that explains the rationale for the selection of variables assessed.

In addition to the firm obligation scenario, the portfolio of analyses should be supplemented to include information from sensitivity analysis. The sensitivity analysis should be developed using additional cases that simulate reasonably stressed system conditions. The standard drafting team has included several parameters that can be varied to create the

requisite sensitivity case(s). The draft standards specify that the sensitivities reflect one or more of the following conditions and that documentation be provided explaining the rationale for selecting the sensitivity(ies) employed. The parameters that should be varied include:

- Higher or lower Load forecasts from the Base Case with variability of Load/demand and Load power factors due to season, weather, or time of day.
- Modification of expected transfers.
- Unavailability of long lead time facilities.
- Variability and outages of Reactive Resources.
- Generation additions, retirements, or other dispatch scenarios.
- Decreased effectiveness of controllable Loads and Demand Side Management.
- Modification of planned Transmission outages

To help focus industry discussion, please respond to the questions below:

Q12. Should the standard provide more specific direction regarding the number of sensitivity cases that need to be developed?

Yes ☐ No ☒

Comment: Requirements 2.1.3 and 2.4.3 call for sensitivity cases that stress the system, with documentation as to the rationale for why a particular sensitivity was selected. Midwest ISO believes that the standard must balance clarity and specificity with flexibility and discretion. If the standard is too prescriptive in the system conditions to be evaluated, sensitivity studies that reflect critical system conditions that experience dictates are appropriate for a given system could be construed as being outside of the standards. Such a determination could make the regulatory approvals of facilties needed for reliability purposes difficult or impossible to obtain. Midwest ISO believes hat the language in the existing standard TPL-001-0, R1.3.2, which states that "PA and TP assessments shall cover critical system conditions and study years as deemed appropriate by the responsible entity" provides the proper balance of these issues.

Q13. Should the standard specify the required changes, such as changes in expected transfers, load forecasts, generation patterns, etc., from the study case to be considered a "reasonably stressed" case?

Yes ☐ No ☒

Comment: This appears to be a case of expecting that "one size fits all" in requiring that certain scenarios be evaluated. Since the goal here is to improve reliability, it makes more sense to have transmission planners identify appropriate sentivities for area under study. The appropriate sensitivity is likely to vary depending on the portion of system being studied.

Q14. The SDT proposes to require the use of sensitivity studies for Near-Term Transmission System Planning Horizon stability analysis. Do you concur with the use of sensitivity analysis in dynamic studies?

Yes ☐ No ☒

Comment: Use of sensitivities should not be required for Stability analysis, but the Standard should rather allow sensitivities at the discretion of the planning engineer. Due to the computationally intensive nature of these studies, a study rotation would be appropriate. For example, one year would be peak base case, next year off-peak case, and following year a sensitivity case. A single 20 second stability simulation is computationally equivalent to running 80 steady-state powerflow cases and has significantly larger pre-analysis preparation effort.

Q15. The draft TPL standard does not require the use of sensitivity studies for the Long-Term Transmission System Planning Horizon (year six and beyond) studies. Do you concur with this approach or should there be some level of sensitivity analysis required for the long-term period?

Yes ☒ No ☐
Comment: Long-term planning horizon studies are typically based on a number of assumptions regarding future conditions and uncertainties. While testing various load conditions, generator operation assumptions, and power interchange variables may be useful for modeling expected economic value, such analysis does not contribute to reliability.

C. Corrective Action Plans

Requirement R2.7 of the standard states that when analysis shows that the performance requirements in Table 1 and Table 2 are not fully met, a Corrective Action Plan that utilizes all or some of the Transmission System enhancements, generation additions, DSM, new technologies and Operating Procedures shall be included in the Planning Assessment. This Corrective Action Plan should ensure that upon its implementation the identified system deficiencies will be corrected so that the performance requirements in Table 1 and Table 2 will be met. Furthermore, studies included in the Planning Assessment should demonstrate that this is indeed the case.

Q16. Requirement R2.7.1: Such Corrective Action Plans shall "Identify System deficiencies and the associated actions needed to achieve required System performance including Transmission and generation improvements, DSM, new technologies, or Operating Procedures including the duration of Interim Operating Procedures". System deficiencies may be corrected using an integrated plan, i.e., an optimal mix of Transmission, generation, DSM and Operating Procedures. Should DSM be considered in conjunction with other measures in developing Corrective Action Plans? If yes, please comment on how the impact of DSM should be included.

Yes ☒ No ☒
Comment: Yes, DSM should be considered in transmission studies, but should be limited to firmly contracted DSM resources that are demonstrably applicable for transmission capacity mitigation. DSM is better compared to supply-side resources as they are evaluated for reserve margin contribution. No, the challenge in considering DSM, is that Transmission Planners are not aware of DSM potential on the system and it must be communicated to them for consideration.

Q17. Requirement R2.7.2: Such Corrective Action Plans shall "Be added to study cases and the cases re-tested to show that the System with planned additions meets the performance requirements in the tables". Should new studies, including the facilities comprising the Corrective Action Plan, be performed to assess System normal performance and Contingency response for conditions that previously resulted in the System deficiencies (without the planned additions) and also demonstrate that the changes would not result in inadvertent negative impacts on the System. If you "agree", please comment on how a study area should be determined.

Yes ☐ No ☒
Comment: Sufficient analysis, including re-testing, must have been performed in creating the Corrective Action Plans. Requiring demonstration by the transmission planner that this is the basis of the Plans is superfluous.

Q18. Requirement R2.7.3: The standard calls for a differentiation between committed and proposed projects. Do you agree that they should be treated separately? If not, please state why not.

Yes ☒ No ☐
Comment:

Q19. Requirement R2.7.4: For such Corrective Action Plans "Committed projects shall not be removed without documentation to show that the revised plan meets the performance requirements". Do you agree or disagree with this requirement? If you disagree, please explain why.

Yes ☐ No ☒
Comment: The current Corrective Action Plan should show the performance of the system with the best information available. These Plans will change year by year as conditions change and new information becomes available. Requiring that Plan projects from previous years may not be modified "without documentation" adds a additional unneeded paperwork.

D. Performance Requirements

The proposed revised planning standard (TPL-001-1) incorporates a number of changes in requirements as compared to the current planning standards (TPL-001-0 through TPL-004-0), which it is expected to replace. Among other things these changes are intended to clarify the standard, address issues described by FERC, and, in particular, to "raise the bar." Strengthening the planning standards in selected areas is necessary to maintain a reliable Bulk Electric System that is up to the challenges of the 21st Century. In proposing the requirements in this draft, the standard drafting team attempted to balance the value of increased reliability against any potential increase in work and costs to meet the new proposed standard.

The standard drafting team is seeking input from the industry to determine whether a proper balance has been achieved. The areas where material changes are proposed in this draft are enumerated below, and questions are posed by the standard drafting team to obtain industry comment. In formulating your responses, please keep in mind that material changes in the final standard will be accompanied by a transition plan to provide for an orderly implementation of the final standard.

The performance requirements relative to Non-Consequential Loss of Load for the following events enumerated in the two tables can be considered more stringent than the existing TPL standards. Furthermore, the proposed standard is based on an assumption that performance requirements for EHV facilities should be more stringent than for lower voltage facilities.

Do you agree that Non-Consequential Loss of Load should not be permitted for the following events? If you disagree, please provide a reason for your disagreement.

Event	Agree or Disagree	Comment
Q20. P2-1: Loss of bus section (SLG for stability) above 300 kV	☒Agree. ☐Do not	No indirect (non-consequential) loss of load for single contingency events, else operator is in SOL precontingency without

	agree.	such planning.
Q21. P5-1: For facilities above 300 kV, loss of a Transmission circuit followed by System adjustment[1] followed by loss of another Transmission circuit	☐Agree. ☒Do not agree.	Allow indirect (Non-Consequential) loss of load for events involving short duration outages, such as typical line outages.
Q22. P5-2: For facilities above 300 kV, loss of a Transmission circuit followed by System adjustment followed by loss of a transformer with low side voltage rating above 300 kV	☒Agree. ☐Do not agree.	Do not allow indirect (Non-Consequential) loss of load for events involving long duration outages, such as transformer outages. (Tranformer outage could occur first).
Q23. P5-3: For facilities above 300 kV, loss of a transformer with low side voltage rating above 300 kV followed by System adjustment followed by loss of another transformer	☒Agree. ☐Do not agree.	Do not allow indirect (Non-Consequential) loss of load for events involving long duration outages, such as transformer outages.

[1]System adjustment can be manual or automatic.

The proposed standard is based on an assumption that performance requirements for non-bus tie EHV breakers should be distinguished from other breakers. Do you agree that Non-Consequential Loss of Load should not be permitted for this event?

Q24. Loss of non-bus tie breaker (above 300 kV) due to internal fault

Yes ☒ No ☐
Comment: No indirect (Non-Consequential) loss of load for outage of single EHV element.

The proposed standard is based on an assumption that performance requirements for non-bus tie EHV breakers should be distinguished from other breakers and that performance requirements for EHV facilities should be more stringent than for lower voltage facilities. Do you agree that Non-Consequential Loss of Load should not be permitted for this event?

Q25. P3-1: Loss of (SLG for stability) either a generator, a Transmission circuit, a transformer, or a bus and a stuck non-bus tie breaker (above 300 kV)

Yes ☒ No ☐
Comment: With the clarification that direct (Consequential) loss of load is associated with all outage elements: both SLG element and stuck breaker element.

The proposed standard is based on an assumption that the following events are relatively high probability events and, therefore, Non-Consequential Loss of Load should not be permitted. Do you agree? If you disagree, please provide a reason for your disagreement.

Event	Agree or Disagree	Comment
Q26. P4-1: Loss of a Generator followed by System adjustment[1] followed by loss of another Generator	☒Agree. ☐Do not agree.	
Q27. P4-2: Loss of a generator followed by a System adjustment followed by the loss of a monopolar DC line	☒Agree. ☐Do not agree.	
Q28. P4-3: Loss of a generator followed by System adjustment followed by loss of a Transmission circuit	☒Agree. ☐Do not agree.	
Q29. P4-4: Loss of a generator followed by System adjustment followed by loss of a transformer with low side voltage rating above 300 kV	☒Agree. ☐Do not agree.	Note - No voltage limit for generator and transformer per Table 1, P4-4

The performance requirement for the following event may be considered less stringent than the existing TPL Standards — P2-3: Loss of a single pole of a DC line. Interruption of firm transactions (without Loss of firm Load) if the transaction is dependent on the faulted DC line is now allowed for this initiating event/Contingency.

Q30. Do you agree that interruption of any firm transfers that are dependent on the outaged DC line that is taken out of service should be permitted?

Yes ☒ No ☐
Comment: The key word in this question is "dependent". Transfer is "firm" if DC line is in service.

E. Stability

Q31. The proposed standard is based on an assumption that steady state analysis and stability analysis are different from each other and that therefore, two tables of Contingencies and performance requirements were needed. It is also based on an assumption that stability study requirements should be clearly separated from the steady state study requirements. Do you agree with the action taken in separating stability analysis from steady state analysis? If not, please explain.

Yes ☒ No ☐
Comment:

Q32. The SDT has added requirements for plant stability studies and has drawn a distinction in these studies from System stability studies. Do you agree with this approach? If not, please explain.

[1] System adjustment can be manual or automatic

Yes ☒ No ☐
Comment:

Q33. The existing TPL-004-0 standard has a requirement to consider the Loss of all generating units at a plant, but it was not clear whether this requirement should apply to stability studies. The SDT did not include this requirement in the stability table, because it is hard to envision a condition when all units would trip simultaneously within the timeframe of a stability simulation. Do you think this condition should be required in stability analysis of extreme events? If not, please explain.

Yes ☒ No ☐
Comment:

Q34. There are an increasing number of events with slow voltage recovery after faults on the Transmission System. The dynamic behavior of induction motor loads is a major factor in this phenomenon. The proposed standard therefore requires that the load model for stability studies of peak Load conditions include the dynamic effects of induction motors. Do you agree with this requirement? If not, please explain?

Yes ☒ No ☒
Comment: Yes, we agree that appropriate induction motor loads should be modeled. No, it is not be practical to model all induction motor loads. There needs to be size and location considerations. Data is not readily available today.

Q35. What type of manual or automatic adjustments of generators should be allowed for single and multiple Contingencies?

Comment: Generation redispatch should not be performed for single contingencies. Generation redispatch is appropriate for multiple contingencies. Appropriate SPS and generation runback schemes should be allowed, where the system is designed with those schemes.

F. Generation Runback and Tripping

The SDT has discussed the automatic and manual readjustments of generators that should be permissible for single contingencies and multiple contingencies. The existing TPL-001-0 through TPL-004-0 standards through footnote (a) of Table I could include emergency ratings applicable for short durations as required to permit operating steps necessary to maintain system control. The footnote is silent about allowable generation adjustments in response to the Category B events. However, it does indicate that system adjustments are permitted to prepare for the next Contingency. These system adjustments could include manual or automatic adjustments involving generation.

The SDT has learned that many transmission owners use System Protection Systems (SPS) or Remedial Action Schemes (RAS) to trip generation for single and multiple Contingency outage events to prevent overloads, low voltage, and instability in the Interconnected Transmission network for N-1 and N-2 events. In some cases, the RAS are used to prepare for the next Contingency; but in some cases, the RAS are used to simultaneously avoid exceeding emergency ratings.

Q36. The proposed standard allows generation runback after the disturbance that causes a single Contingency (or due to a single Contingency outage) to move the Interconnected Transmission System from an emergency state (within emergency ratings) to a normal state (within normal ratings), assuming that the disturbance does not result in instability? Do you agree? If not, please explain.

Yes ☒ No ☒
Comment: Yes, where the transmission system is designed with these schemes. No, in general when there is no designed SPS or runback for the generator.

Q37. Since emergency ratings are thermal ratings, should this standard allow an automatic generation runback scheme (that is initiated immediately after the disturbance causing the single Contingency) to prevent thermal overloads (assuming that the disturbance does not result in instability)? If yes, what are the conditions that must be met in order to allow such a runback scheme to meet the System performance criteria for single Contingencies? Please explain the reason for your answer.

Yes ☒ No ☒
Comment: No, this should be the exception, not the rule. Yes, there are mine mouth plants with DC outlet lines, which must be runback if the DC line trips. There are also generators which used to serve large on site loads. The large loads are gone (plants retired) and generator outlet is limited. There are also some generators which have known contingent outlet limits and the generators are OK with runback, if the contingency occurs.

The standard drafting team has considered that RAS or SPS may be allowable under certain situations for single Contingencies, but proposes that their use should be limited.

Q38. Do you agree that RAS or SPS may be allowed for single Contingencies? If not, please explain.

Yes ☒ No ☐
Comment:

Q39. Please describe the limitations that you believe should be placed on the use of RAS or SPS for single Contingency events.

Comment: The use of SPS/RAS may be the appropriate transmission system design. If it is economic to mitigate the SPS, then upgrades should be made.

Q40. When RAS or SPS are allowed, what conditions should be met when these systems are used in system adjustments to meet performance requirements?

Comment: SPS may be used if it maintains similar level of system reliability and security as transmission upgrades.

G. General Questions

Q41. If you are aware of any regional variances that would be required as a result of these standards, please identify them here.

Yes ☐ No ☒
Comment:

Q42. If you are aware of any conflicts between the proposed standards and any regulatory function, rule order, tariff, rate schedule, legislative requirement or agreement, please identify them here.

Yes ☐ No ☒
Comment:

Q43. Do you have any other questions or concerns with the proposed standard that have not been addressed? If yes, please explain.

Yes ☒ No ☐
Comment: The Midwest ISO appreciates the opportunity to offer the following recommendations:

1. Requirements for providing modeling data in R1. are redundant with the exising requirements of MOD-010-0, MOD-012-0, and MOD-016-0 through MOD-025-1. Adding these requirements to the TPL Standard is unnecessary and may create confusion.

2. The Standard does not address the return of direct (consequential) load loss following a contingent event. How long of an outage event acceptable?

NERC
NORTH AMERICAN ELECTRIC RELIABILITY CORPORATION

Comment Form for First Draft of TPL-001-1 — Transmission System Planning Performance Requirements

Please use this form to submit comments on the proposed draft of TPL-001-1. Comments must be submitted by **Friday, October 26, 2007**. You may submit the completed form by e-mail to sarcomm@nerc.net with the words "TPL-001 Draft 1" in the subject line. If you have questions please contact Ed Dobrowolski at ed.dobrowolksi@nerc.net or by telephone at 609-947-3673.

Individual Commenter Information **(Complete this page for comments from one organization or individual.)**		
Name:		
Organization:		
Telephone:		
E-mail:		
NERC Region (check all Regions in which your company operates)		**Registered Ballot Body Segment (check all industry segments in which your company is registered)**
☐ **ERCOT**	☐	1 — Transmission Owners
☐ **FRCC**	☐	2 — RTOs and ISOs
☐ **MRO**	☐	3 — Load-serving Entities
☐ **NPCC**	☐	4 — Transmission-dependent Utilities
☐ **RFC**	☐	5 — Electric Generators
☐ **SERC**	☐	6 — Electricity Brokers, Aggregators, and Marketers
☐ **SPP**	☐	7 — Large Electricity End Users
☐ **WECC**	☐	8 — Small Electricity End Users
☐ **NA – Not Applicable**	☐	9 — Federal, State, Provincial Regulatory or other Government Entities
	☐	10 — Regional Reliability Organizations and Regional Entities

Group Comments (Complete this page if comments are from a group.)

Group Name: **Midwest Reliability Organization (MRO)**

Lead Contact: **Tom Mielnik**

Contact Organization: **MRO**

Contact Segment: **10**

Contact Telephone: **563-333-8129**

Contact E-mail: **tcmielnik@midamerican.com**

Additional Member Name	Additional Member Organization	Region*	Segment*
Neal Balu	WPS	**MRO**	10
Terry Bilke	MISO	MRO	10
Robert Coish	MHEB	MRO	10
Carol Gerou	MP	MRO	10
Jim Haigh	WAPA	MRO	10
Ken Goldsmith	ALTW	MRO	10
Tom Mielnik	MEC	MRO	10
Pam Oreschnick	XCEL	MRO	10
Dave Rudolph	BEPC	MRO	10
Eric Ruskamp	LES	MRO	10
Michael Brytowski	MRO	MRO	10
David Jacobson	MHEB	MRO	10
Ron Mazur	MHEB	MRO	10
27 additional MRO members	not mentioned above	MRO	10

*If more than one Region or Segment applies, please list all that apply. Regional acronyms and segment numbers are shown on prior page.

Background

The purpose of this standard is to establish Transmission System planning performance requirements within the planning horizon to develop a Bulk Electric System that will operate reliably over a broad spectrum of System conditions and following a wide range of probable Contingencies. This standard will replace TPL-001-0, TPL-002-0, TPL-003-0, and TPL-004-0. The standard drafting team has not yet addressed TPL-005-0 and TPL-006-0, but will address these two standards during the next phase of the drafting process.

The major objectives of the standard drafting team are to:

1) Ensure the standard is complete and the requirements are set at an appropriate level to ensure reliability (Not Least Common Denominator)
2) Ensure that the standard is enforceable by having clearly defined requirements with unambiguous language
3) Address the issues raised by FERC Order 693, 890, and other applicable orders
4) Address the issues raised in the original Standards Authorization Request (SAR) and the Supplemental SAR.

The standard drafting team did not attempt to edit the existing standards but rather chose to write one standard that addresses all aspects of transmission planning in the existing TPL-001-0, TPL-002-0, TPL-003-0, and TPL-004-0. The standard drafting team organized the new standard in the following sections:

R1 – Modeling requirements
R2 – Assessment and Corrective Plan requirements
R3 – Steady State Analysis requirements
R4 – Stability Analysis requirements
R5 – Coordination requirements

The standard drafting team determined that the requirements and analysis for Steady State are different from those for stability. As such, the standard drafting team separated the analysis requirements and created two performance requirement tables.

The standard drafting team recognizes that this draft standard is a starting point for industry input into the standard and that there is still a lot of work required to complete the process. The standard drafting team has made many changes to clarify requirements, add requirements, and make some of the performance requirements stricter. The standard drafting team has not addressed Measures, Risk Factors, Violation Severity Factors, or Time Horizons at this time. These will be addressed when the standard drafting team has better defined the requirements of the standard.

For questions where you agree with the standard drafting team, please state that you agree and if available, please provide supporting documentation. If you disagree with the standard drafting team, please explain why you disagree and provide data to support your position, such as outage data or analysis. If you believe that we have made a performance requirement too strict please provide supporting documentation. If applicable, please include the approximate cost in man-hours for additional studies and/or cost in $Millions for additional transmission investment to meet the new requirements or the stricter requirements. If you believe that the standard should be stricter, please provide the rationale along with any supporting data, including existing practices, cost estimates or additional analysis.

To improve the standard, the standard drafting team would appreciate responses to as many of these questions as you can answer.

A. New Definitions

Many of the concerns about the existing TPL standards come from the fact that a number of generally understood concepts are embedded in undefined terms, tables, and footnotes. To clarify some of these concerns, the standard drafting team is proposing new definitions. Please indicate whether you agree with the following proposed definitions and provide proposed changes to the definitions if you disagree:

Definition	**Agree or Disagree**
Q1. **Base Case**: Computer representation of the projected initial or starting Transmission System conditions for a specific point in time. Each base case reflects the forecasted Load at each bus (or node) on the interconnected Transmission System, the transmission facilities which deliver the generation and reactive resources to the connected Load, and the generation dispatch including firm transaction obligations assumed to supply the connected Load. The models also reflect facility ratings in accordance with FAC-008 & FAC-009.	☒Agree. ☐Do not agree.
Q1. **Comment:**	
Q2. **Consequential Load Loss:** Load that is no longer served because it is directly connected to an element(s) that is removed from service due to fault clearing action or mis-operation.	☐Agree. ☒Do not agree.
Q2. **Comment: The MRO could not agree on the correct definition.**	
Q3. **Extreme Events:** Events which are more severe than Planning Events and have a low probability of occurrence.	☐Agree. ☒Do not agree.
Q3. **Comment: Low probability of occurrence should be in reference to something to be more meaningful. The MRO suggests that the definition be changed to state "lower probability of occurrence than Planning Events."**	
Q4. **Long-Term Transmission Planning Horizon:** Transmission planning period that covers years six through ten or beyond.	☒Agree. ☐Do not agree.
Q4. **Comment:**	
Q5. **Near-Term Transmission Planning Horizon:** Transmission planning period that covers years One through five.	☒Agree. ☐Do not agree.
Q5. **Comment:**	
Q6. **Non-Consequential Load Loss:** Load loss other than Consequential Load Loss. For example, Load loss that occurs through manual (operator initiated) or automatic operations such as under-voltage Load shedding, under-frequency Load shedding, or Special Protection Systems.	☒Agree. ☐Do not agree.
Q6. **Comment:**	

Q7. **Planning Assessment:** Documented evaluation of future Bulk Electric System needs by the use of performance studies that cover a range of assumptions regarding system conditions, time frames, future plans including capital reinforcements and operating procedures and other factors, such as asset conditions and age.	☐Agree. ☒Do not agree.
Q7. **Comment: This definition is too general. It could be interpreted that the performance studies include resource planning rather than transmission system planning, as well as, asset management. Asset management issues should be beyond the scope of this transmission planning standard. Asset management is an engineering discipline that would require a separate standard or standards and is still a developing activity, for example, there is no industry-wide practice for studying aging issues of transmission equipment while there are industry-wide practices for steady-state, stability, and short circuit modeling and planning of transmission systems. The MRO suggests that the word transmission be added to the definition when referring to needs, performance, and reinforcements and that references to asset management be deleted. Here is a proposed definition "Documented evalution of future Bulk Electric System TRANSMISSION needs by the use of TRANSMISSION SYSTEM performance studies that cover a range of assumptions regarding TRANSMISSION system conditions, time frames, future plans including TRANSMISSION IMPROVEMENTS and operating procedures and other factors." The words in all caps were added or inserted to replace the Drafting Team's original words.**	
Q8. **Planning Events:** Events which require Transmission system performance requirements to be met.	☒Agree. ☐Do not agree.
Q8. **Comment:**	
Q9. **Plant Stability Study:** Study of an individual plant's Stability for various Contingencies in the vicinity of the plant; concerned with the effect on the System of the generating units' loss of synchronism and the damping of the generating units' power oscillations.	☐Agree. ☒Do not agree.
Q9. **Comment: The words "Bulk Electric" should be added before "System".**	
Q10. **System Stability Study:** Study of the System or portions of the System to ensure that angular Stability is maintained, inter-area power oscillations are damped, and voltages during the dynamic simulation stay within acceptable performance limits.	☐Agree. ☒Do not agree.
Q10. **Comment: The words "Bulk Electric" should be added before both occurences of "System".**	
Q11. **Year One:** The first year that a Transmission Planner is responsible for studying. This is further defined as the planning window that begins the next calendar year from the time the Transmission Planner submits their annual studies. Analysis conducted for time horizons within the calendar year from the study publication are assumed to be conducted under the auspices of Operations Planning.	☒Agree. ☐Do not agree.
Q11. **Comment:**	

B. Sensitivity Studies

The draft planning standard includes the requirement, as specified in FERC Order 693, that planning decisions be based on a portfolio of analyses. In section 12.a.ii "Sensitivity studies and critical system conditions" FERC provided direction to consider a full range of variables considered to be significant that need to be assessed and documentation provided that explains the rationale for the selection of variables assessed.

In addition to the firm obligation scenario, the portfolio of analyses should be supplemented to include information from sensitivity analysis. The sensitivity analysis should be developed using additional cases that simulate reasonably stressed system conditions. The standard drafting team has included several parameters that can be varied to create the requisite sensitivity case(s). The draft standards specify that the sensitivities reflect one or more of the following conditions and that documentation be provided explaining the rationale for selecting the sensitivity(ies) employed. The parameters that should be varied include:

- Higher or lower Load forecasts from the Base Case with variability of Load/demand and Load power factors due to season, weather, or time of day.
- Modification of expected transfers.
- Unavailability of long lead time facilities.
- Variability and outages of Reactive Resources.
- Generation additions, retirements, or other dispatch scenarios.
- Decreased effectiveness of controllable Loads and Demand Side Management.
- Modification of planned Transmission outages

To help focus industry discussion, please respond to the questions below:

Q12. Should the standard provide more specific direction regarding the number of sensitivity cases that need to be developed?

Yes ☐ No ☒

Comment: The Drafting Team has provided the appropriate level of detail by indicating that one or more of the following conditions are to be used. However, the MRO notes that R.2.1.3.1 should be changed to match R.2.4.3.1, that is, R.2.1.3. 1 should be changed to state "Variations in Load model assumptions."

Q13. Should the standard specify the required changes, such as changes in expected transfers, load forecasts, generation patterns, etc., from the study case to be considered a "reasonably stressed" case?

Yes ☐ No ☒

Comment: This is unnecessary micro-management of the planning process. The MRO recommends that the Drafting Team proceed with the high-level requirement as provided with the minor changes recommended by the MRO in other parts of this comment form.

Q14. The SDT proposes to require the use of sensitivity studies for Near-Term Transmission System Planning Horizon stability analysis. Do you concur with the use of sensitivity analysis in dynamic studies?

Yes ☐ No ☒

Comment: The MRO is okay with requiring the sensitivity studies but is concerned with the R.2.4.3.2 requirement as written in that it unnecessarily requires that the sensitivity studies to "simultaneous transfer" to include "non-firm transfers". The MRO recommends that this be changed to match R.2.1.3.2 "Modification of expected TRANSFERS." The MRO also questions the wording of R.2.4.3.4 which provides a more limiting

description of the sensitivity to reactive. The MRO recommends that the wording of this requirement be changed to match R.2.1.3.4, "Variability and outages of reactive resources."

Q15. The draft TPL standard does not require the use of sensitivity studies for the Long-Term Transmission System Planning Horizon (year six and beyond) studies. Do you concur with this approach or should there be some level of sensitivity analysis required for the long-term period?

Yes ☒ No ☐

Comment: The models for Long-Term Transmission System Planning Horizon typically contain such uncertainy that the base planning is a sensitivity study iteself. The MRO believes that sensitivity studies in these years would be a waste of time.

C. Corrective Action Plans

Requirement R2.7 of the standard states that when analysis shows that the performance requirements in Table 1 and Table 2 are not fully met, a Corrective Action Plan that utilizes all or some of the Transmission System enhancements, generation additions, DSM, new technologies and Operating Procedures shall be included in the Planning Assessment. This Corrective Action Plan should ensure that upon its implementation the identified system deficiencies will be corrected so that the performance requirements in Table 1 and Table 2 will be met. Furthermore, studies included in the Planning Assessment should demonstrate that this is indeed the case.

Q16. Requirement R2.7.1: Such Corrective Action Plans shall "Identify System deficiencies and the associated actions needed to achieve required System performance including Transmission and generation improvements, DSM, new technologies, or Operating Procedures including the duration of Interim Operating Procedures". System deficiencies may be corrected using an integrated plan, i.e., an optimal mix of Transmission, generation, DSM and Operating Procedures. Should DSM be considered in conjunction with other measures in developing Corrective Action Plans? If yes, please comment on how the impact of DSM should be included.

Yes ☐ No ☒

Comment: DSM should already be in the load forecast and sensitivities to the load forecast variations are included in the near term planning horizon sensitivity analysis. Additional DSM shouldn't be part of the transmission planner's corrective plan. Additional DSM can be considered in the next planning cycle.

Q17. Requirement R2.7.2: Such Corrective Action Plans shall "Be added to study cases and the cases re-tested to show that the System with planned additions meets the performance requirements in the tables". Should new studies, including the facilities comprising the Corrective Action Plan, be performed to assess System normal performance and Contingency response for conditions that previously resulted in the System deficiencies (without the planned additions) and also demonstrate that the changes would not result in inadvertent negative impacts on the System. If you "agree", please comment on how a study area should be determined.

Yes ☐ No ☒

Comment: The MRO is concerned with this requirement particularly since the standard indicates that System Assessment shall be conducted each year while studies are not required each year. MRO members typically conduct this exercise at the time that studies are originally conducted with regard to improvements. By requiring a new study with improvements (some of which were justified in past studies) demonstrating that these improvements work essentially results in the Transmission Owner needing to clear a new unfair hurdle for improvements. This results in a requirement which will result in wide-spread non-compliance. The SDT

should clarify that this requirement can be met by past studies. The MRO recommends that R2.7.2 be removed because it is redundant since development of the corrective action plan will have included these studies.

At some point the corrective action plan should be tested to verify the plan meets the performance requirements. The way the standard is written is that the transmission plan should be perfect for the entire planning horizon for all sensitivities tested. Any issues should be immediately addressed. The standard does not allow any time to develop the corrective plan through an open and transparent process. Based on the Nerc definition, a Corrective Action Plan is the list of actions and an associated timetable for implementation to remedy a specific problem. A Corrective Action Plan could mean that load forecasts at the station will be verified, facility ratings verified and alternatives to fix the identified problem to be determined before the next Planning Assessment. Standard R2.7 seems to be mixing the idea of a Corrective Action Plan with the original TPL idea of determining corrective plans to achieve required performance. A corrective plan wil be the end goal of a Corrective Action Plan.

Q18. Requirement R2.7.3: The standard calls for a differentiation between committed and proposed projects. Do you agree that they should be treated separately? If not, please state why not.

Yes ☒ No ☐

Comment:

Q19. Requirement R2.7.4: For such Corrective Action Plans "Committed projects shall not be removed without documentation to show that the revised plan meets the performance requirements". Do you agree or disagree with this requirement? If you disagree, please explain why.

Yes ☐ No ☒

Comment: The MRO disagrees with this requirement. This is an unnecessary requirement since each year Corrective Action Plans must meet the system performance requirements.

D. Performance Requirements

The proposed revised planning standard (TPL-001-1) incorporates a number of changes in requirements as compared to the current planning standards (TPL-001-0 through TPL-004-0), which it is expected to replace. Among other things these changes are intended to clarify the standard, address issues described by FERC, and, in particular, to "raise the bar." Strengthening the planning standards in selected areas is necessary to maintain a reliable Bulk Electric System that is up to the challenges of the 21st Century. In proposing the requirements in this draft, the standard drafting team attempted to balance the value of increased reliability against any potential increase in work and costs to meet the new proposed standard.

The standard drafting team is seeking input from the industry to determine whether a proper balance has been achieved. The areas where material changes are proposed in this draft are enumerated below, and questions are posed by the standard drafting team to obtain industry comment. In formulating your responses, please keep in mind that material changes in the final standard will be accompanied by a transition plan to provide for an orderly implementation of the final standard.

The performance requirements relative to Non-Consequential Loss of Load for the following events enumerated in the two tables can be considered more stringent than the existing TPL standards. Furthermore, the proposed standard is based on an assumption that performance requirements for EHV facilities should be more stringent than for lower voltage facilities.

Do you agree that Non-Consequential Loss of Load should not be permitted for the following events? If you disagree, please provide a reason for your disagreement.

Event	Agree or Disagree	Comment
Q20. P2-1: Loss of bus section (SLG for stability) above 300 kV	☐Agree. ☒Do not agree.	This is a low probability event that could have significant impact on the system which historically have been designed to allow local load dropping including non-consequential load. The SDT should justify that the benefit to customers of this increased reliability justifies the cost of this change to customers. Alternatively, the SDT should define a level (such as 1000 MW) of non-consequential load that is acceptable for such low probability events.
Q21. P5-1: For facilities above 300 kV, loss of a Transmission circuit followed by System adjustment[1] followed by loss of another Transmission circuit	☐Agree. ☒Do not agree.	This is a low probability event that could have significant impact on the system which historically have been designed to allow local load dropping including non-consequential load. The SDT should justify that the benefit to customers of this increased reliability justifies the cost of this change to customers. Alternatively, the SDT should define a level (such as 1000 MW) of non-consequential load that is acceptable for such low probability events.
Q22. P5-2: For facilities above 300 kV, loss of a Transmission circuit followed by System adjustment followed by loss of a transformer with low side voltage rating above 300 kV	☐Agree. ☒Do not agree.	This is a low probability event that could have significant impact on the system which historically have been designed to allow local load dropping including non-consequential load. The SDT should justify that the benefit to customers of this increased reliability justifies the cost of this change to customers. Alternatively, the SDT should define a level (such as 1000 MW) of non-consequential load that is acceptable for such low probability events.
Q23. P5-3: For facilities above 300 kV, loss of a transformer with low side voltage rating above 300 kV followed by System adjustment followed by loss of another transformer	☐Agree. ☒Do not agree.	This is a low probability event that could have significant impact on the system which historically have been designed to allow local load dropping including non-consequential load. The SDT should justify that the benefit to customers of this increased reliability justifies the cost of this change to customers. Alternatively, the SDT should define a level (such as 1000 MW) of non-

		consequential load that is acceptable for such low probability events.

[1]System adjustment can be manual or automatic.

The proposed standard is based on an assumption that performance requirements for non-bus tie EHV breakers should be distinguished from other breakers. Do you agree that Non-Consequential Loss of Load should not be permitted for this event?

Q24. Loss of non-bus tie breaker (above 300 kV) due to internal fault

Yes ☐ No ☒
Comment: This is a low probability event that could have significant impact on the system which historically have been designed to allow local load dropping including non-consequential load. The SDT should justify that the benefit to customers of this increased reliability justifies the cost of this change to customers. Alternatively, the SDT should define a level of non-consequential load that is acceptable for such low probability events such as 1000 MW.

The proposed standard is based on an assumption that performance requirements for non-bus tie EHV breakers should be distinguished from other breakers and that performance requirements for EHV facilities should be more stringent than for lower voltage facilities. Do you agree that Non-Consequential Loss of Load should not be permitted for this event?

Q25. P3-1: Loss of (SLG for stability) either a generator, a Transmission circuit, a transformer, or a bus and a stuck non-bus tie breaker (above 300 kV)

Yes ☐ No ☒
Comment: This is a low probability event that could have significant impact on the system which historically have been designed to allow local load dropping including non-consequential load. The SDT should justify that the benefit to customers of this increased reliability justifies the cost of this change to customers. Alternatively, the SDT should define a level of non-consequential load that is acceptable for such low probability events such as 1000 MW.

The proposed standard is based on an assumption that the following events are relatively high probability events and, therefore, Non-Consequential Loss of Load should not be permitted. Do you agree? If you disagree, please provide a reason for your disagreement.

Event	Agree or Disagree	Comment
Q26. P4-1: Loss of a Generator followed by System adjustment[1] followed by loss of another Generator	☒Agree. ☐Do not agree.	
Q27. P4-2: Loss of a generator followed by a System adjustment followed by the loss of a monopolar DC line	☒Agree. ☐Do not agree.	The monopolar DC line words should be revised to "a single pole of a DC line".
Q28. P4-3: Loss of a generator followed by System adjustment followed	☒Agree. ☐Do not agree.	

[1] System adjustment can be manual or automatic

by loss of a Transmission circuit		
Q29. P4-4: Loss of a generator followed by System adjustment followed by loss of a transformer with low side voltage rating above 300 kV	☒Agree. ☐Do not agree.	

The performance requirement for the following event may be considered less stringent than the existing TPL Standards — P2-3: Loss of a single pole of a DC line. Interruption of firm transactions (without Loss of firm Load) if the transaction is dependent on the faulted DC line is now allowed for this initiating event/Contingency.

Q30. Do you agree that interruption of any firm transfers that are dependent on the outaged DC line that is taken out of service should be permitted?

Yes ☒ No ☐
Comment: The MRO questions why interruptions of firm transfers are not allowed in other cases since load dropping is allowed for these cases.

E. Stability

Q31. The proposed standard is based on an assumption that steady state analysis and stability analysis are different from each other and that therefore, two tables of Contingencies and performance requirements were needed. It is also based on an assumption that stability study requirements should be clearly separated from the steady state study requirements. Do you agree with the action taken in separating stability analysis from steady state analysis? If not, please explain.

Yes ☒ No ☐
Comment: The MRO commends the SDT in separating the two tables. The single table for both types of studies has generated confusion in the industry.

Q32. The SDT has added requirements for plant stability studies and has drawn a distinction in these studies from System stability studies. Do you agree with this approach? If not, please explain.

Yes ☐ No ☒
Comment: The MRO sees the need for plant stability study requirements somewhere in NERC standards although adding this requirement into this study requires a rehash of the plant stability studies that are conducted throughout ten years or more in an annual assessment. This seems to be an unnecessary duplication. The MRO recommends that this requirement be deleted from this standard and that the SDT recommend to the NERC SAC that this requirement be covered by the appropriate future SAR.

Q33. The existing TPL-004-0 standard has a requirement to consider the Loss of all generating units at a plant, but it was not clear whether this requirement should apply to stability studies. The SDT did not include this requirement in the stability table, because it is hard to envision a condition when all units would trip simultaneously within the timeframe of a stability simulation. Do you think this condition should be required in stability analysis of extreme events? If not, please explain.

Yes ☒ No ☐
Comment: In a breaker-and-1/3 or breaker-and-1/2 generating station, if one station bus is off-line for maintenance, faulting the other bus will kill the station, or at least cause major disruption with individual generators connected to other stations by separated lines or AC separated DC converter transformers via isolated station bays. That is certainly worthy of consideration as a feasible "extreme" event.

Q34. There are an increasing number of events with slow voltage recovery after faults on the Transmission System. The dynamic behavior of induction motor loads is a major factor in this phenomenon. The proposed standard therefore requires that the load model for stability studies of peak Load conditions include the dynamic effects of induction motors. Do you agree with this requirement? If not, please explain?

Yes ☒ No ☐
Comment: The MRO agrees that R2.4.1 should provide for the inclusion of dynamic behavior of induction motor loads, however, recommends that there should be a limitation on only requiring such behavior where significant such as large motor loads over a certain MW amount. As written, it could be interpreted that the Transmission Planner is non-compliant if all induction motors are not represented.

Q35. What type of manual or automatic adjustments of generators should be allowed for single and multiple Contingencies?

Comment: Here are the adjustments that the MRO believes the MRO systems are presently designed to meet and what an MRO Augmentation Drafting Team is proposing to require its members to follow for Category B and C events: 1. Generation adjustments - Reducing or increasing generation while keeping the units on-line or by bringing additional units on line. The amount of generation change is limited to that amount that can be accomplished within the allowed readjustment period. Due consideration shall be given to start up time and ramp rates of the units. 2. Generation rejection to the extent possible within the allowed readjustment period. Generation rejection shall not exceed the normal operating reserve of the generation reserve sharing pool to which the MRO Member belongs or of the MRO Member itself if the MRO Member self-provides generation reserves.

F. Generation Runback and Tripping

The SDT has discussed the automatic and manual readjustments of generators that should be permissible for single contingencies and multiple contingencies. The existing TPL-001-0 through TPL-004-0 standards through footnote (a) of Table I could include emergency ratings applicable for short durations as required to permit operating steps necessary to maintain system control. The footnote is silent about allowable generation adjustments in response to the Category B events. However, it does indicate that system adjustments are permitted to prepare for the next Contingency. These system adjustments could include manual or automatic adjustments involving generation.

The SDT has learned that many transmission owners use System Protection Systems (SPS) or Remedial Action Schemes (RAS) to trip generation for single and multiple Contingency outage events to prevent overloads, low voltage, and instability in the Interconnected Transmission network for N-1 and N-2 events. In some cases, the RAS are used to prepare for the next Contingency; but in some cases, the RAS are used to simultaneously avoid exceeding emergency ratings.

Q36. The proposed standard allows generation runback after the disturbance that causes a single Contingency (or due to a single Contingency outage) to move the Interconnected Transmission System from an emergency state (within emergency ratings) to a normal state (within normal ratings), assuming that the disturbance does not result in instability? Do you agree? If not, please explain.

Yes ☒ No ☐
Comment:

Q37. Since emergency ratings are thermal ratings, should this standard allow an automatic generation runback scheme (that is initiated immediately after the disturbance causing the single Contingency) to prevent thermal overloads (assuming that the disturbance does not result in instability)? If yes, what are the conditions that must be met in order to allow such a runback scheme to meet the System performance criteria for single Contingencies? Please explain the reason for your answer.

Yes ☒ No ☐
Comment:
Generally, the historical MRO practices and requirements have been to require that following a single contingency the loading of facilities are to be maintained within emergency ratings. Adjustments are allowed to move the system from conditions within emergency ratings to conditions within normal ratings. However, in a limited number of cases, the use of Special Protection Systems are used to initiate fast generation run back, generation rejection, or automatic tripping of a remote transmission facility to get below a longer term emergency rating (30 minutes or longer.) In some cases, these involve parts of the network where remote generation is connected to load where the costs of not using the SPS would involve substantial increased investments and environmental impacts.

Requirement 3.5 needs more clarification. What rating should not be exceeded?

The standard drafting team has considered that RAS or SPS may be allowable under certain situations for single Contingencies, but proposes that their use should be limited.

Q38. Do you agree that RAS or SPS may be allowed for single Contingencies? If not, please explain.

Yes ☒ No ☐
Comment:

Q39. Please describe the limitations that you believe should be placed on the use of RAS or SPS for single Contingency events.

Comment: The MRO believes the MRO systems are presently designed to meet system performance, in some cases, with the use of SPS to initiate fast generation runback, generation rejection, and automatic tripping of a remote transmission facility for a single contingency event. The fast generation runback or generation rejection should not exceed the normal operating reserve of the generation reserve sharing pool to which the planner belongs or of the planner itself if the planner self-provides generation reserves.

Q40. When RAS or SPS are allowed, what conditions should be met when these systems are used in system adjustments to meet performance requirements?

Comment: SPS are often used in the MRO area to avoid unnecessary expenditures and environmental impacts. SPS are sometimes used to prevent instability. The SPS may intiate fast generation run back, automatic generation rejection, or automatic tripping of a facility for a remote event. The MRO notes that the scheme must be automatic, fast acting, consistent with short term equipment ratings. The MRO notes the folowing general conditions for adjustments, that perhaps would be useful in designing performance requirements for allowable system adjustments in addition to the description in Question 39: 1. Generation adjustments - Reducing or increasing generation while keeping the units on-line or by bringing additional units on line. The amount of generation change is limited to that amount that can be accomplished within the allowed readjustment period. Due consideration shall be given to start up time and ramp rates of the units. 2. Capacitor and reactor switching - The number of capacitors and reactors, which may be switched, is limited to those which could be switched during the allowed readjustment period. This includes those capacitors and reactors that would be switched by automatic controls within the same period. 3. Adjustment of load tap changers (LTCs) to the extent possible within the allowed readjustment period. This includes both LTCs which would automatically adjust and those under operator control which could be adjusted within the readjustment period.
4. Adjustment of phase shifters to the extent possible within the allowed readjustment period.
5. An increase or decrease to the flow on HVDC facilities to the extent possible within the allowed readjustment period. 6. Transmission reconfiguration - Automatic tripping of transmission lines or transformers to the extent possible within the allowed readjustment period. 7. Automatic tripping of interruptible load or curtailment of or pre-determined redispatching of Firm Transmission Service to the extent possible within the allowed readjustment period.

G. General Questions

Q41. If you are aware of any regional variances that would be required as a result of these standards, please identify them here.

Yes ☒ No ☐
Comment: If the SDT proceeds with an approach that does not allow generation rejection for contingencies, the MRO will need to submit a regional difference. In certain areas of the MRO that are stability limited because of long lines to bring generation at the energy source (such as mine mouth plants, hydro plants, etc.) to the load, generation rejection is used to return from an emergency state to a normal state. If generation rejection is not allowed in these cases, extraordinary cost and extraordinary negative environmental impacts will result.

As an example, if one particular SPS is removed, new 500 kV transmission will be required between Winnipeg and Minneapolis at a cost of $1billion to the customers of MRO utilities.
.

Q42. If you are aware of any conflicts between the proposed standards and any regulatory function, rule order, tariff, rate schedule, legislative requirement or agreement, please identify them here.

Yes ☐ No ☒
Comment:

Q43. Do you have any other questions or concerns with the proposed standard that have not been addressed? If yes, please explain.

Yes ☒ No ☐

Comment: The MRO commends the SDT on the difficult task of rewriting some of the most important NERC standards: the TPL standards. The MRO has a number of comments and suggestions.

1. Load modeling data in R1.1 and R1.2 do not belong in the TPL standards. It should be provided for in the MOD standards which provide the numerous load model data requirements. At a minimum, R1.2 should be revised to only require documentation of stressed system conditions. It is unnecessary and micro management to provide for "measurement during stressed System conditions". Further, it is unusual standards drafting to provide for a measurement of load in an assessment standard.

2. R1.4 should be revised to separate "known planned outages" from the rest of the requirement in separate sentences. This is because the reference to spare equipment outages does not have any bearing on the "known planned outages" requirement. Further the consideration of spare equipment strategy is not explained enough to understand what is required here. Further it is not clear as to what equipment must have consideration of spare equipment. The MRO recommends that R1.4 be rewritten as follows: "Known planned outages. Long-term forced outages for transformers with low-side voltages of 100 kV and above and generator step-up transformers should be identified where lack of spare transformers could result in outages of the transformers over the annual peak demand hour."

3. It is unreasonable for R1.5 to provide that planned facilities that are included in System Assessments include circuit breakers, and protection system equipment. These two items should be dropped from R1.5 since these are engineering details that are typically not available at the time that the System Assessment is made.

4. R.2.1.1 - The system peak load study requirements for studies for two of the near-term period seems to be excessive. The MRO recommends that only one year in the near-term period be required.

5. R2.6 should be deleted. The MRO believes that R2.1 and R2.4 are sufficient in describing when current studies are required. R2.6 will result in unnecessary restudy of the system. Alternatively, if R2.6 is kept, then the requirement should be a performance requirement, that as long as material changes do not require restudy then restudy is not required. The Transmission Planner and Planning Coordinator could be required to document why restudy is not required. Material changes should be expanded to refer to only those "significant" transmission line additions or generator additions.

6. R2.71 should be revised to delete "including the duration of interim Operating Procedures" or else the SDT should explain what is meant by this with additional information about what interim Operating Procedures are.

7. R2.7.1.1. should be revised to delete the requirement for project initiation date. This information is not typically available at the time of performing a System Assessment since this is detailed engineering information not pertinent to planning.

8. R2.7.5 should be deleted. The MRO believes the such detailed review of the status of the installation of projects to be beyond the scope of the TPL standard. Since NERC has no authority to require the installation of facilities, how does NERC have authority to require a review of the status of such facilities?

9. R3.2.1 and R3.2.2 seem unnecessary details that are micro-management of the planning process. Both requirements could be met by the transmission planner and planning coordinator with general statements of little value. Also, relay loadability is included in facility ratings and does not need to be covered in TPL.

10. In Table 1, "a shunt device (including FACTS devices)" is too general. Arresters and potential devices for metering and relaying are shunt devices. This should be changed to a specific listing such as: transmission capacitors (100 kV and above), transmission reactors (100 kV and above), …" and whatever other devices that the SDT intends to be included here.

11. In Table 1, Single pole of DC line should be moved to P1.

12. In both tables, "monopolar DC line" should be replaced with a "single pole of a DC line".

13. The revised tables are confusing in descriptions of various outages particularly since the interconnected transmission system has been planned for the past decade using the previous Table I. The SDT should limit its changes to Table I to a limited number of changes that have been known to cause issues in the past rather than raising the bar in a number of cases.

14. The Extreme Event descriptions in Table 1 should be revised to provide definitions of local area and wide area. 3 d. (3f.) and 3 c. (3 e.) are duplicates and should be combined. Wide area events as listed are such unusual events, which are difficult to analyze or model. The requirement should provide that the number of these wide area events to be studied is limited to a minimum of one.

15. The MRO does not believe that contingency reserve is necessarily synonymous with spinning reserve. The SDT should clarify note ii to Table 2.

16. The SDT should clarify the wording in the tables to better explain the events which are either above or below 300 kV. For example, in P5 change 1. IS IT "A Transmission circuit followed by a System adjustment above 300 kV followed by the loss of another Transmission circuit above 300 kV." or is it "A Transmission circuit followed by another Transmission circuit resulting in impacts on 300 kV facilities"?

P5 3. should be revised to say, "A transformer with a low side voltage rating above 300 kV followed by a System adjustment followed by the loss of another transformer with low side voltage rating above 300 kV." or is it "A transformer followed by the loss of another transformer resulting in impacts on 300 kV facilities."

17. R2.1.3 - R2.1.3 reguires sensitivity studies that involve many potential scenarios that would be difficult to create in a Planning Assessment. Planners can not model the unknown and to assume the unknown may be a difficult task to complete. Instead of "shall be run and", the language should be "shall be considered based on current knowledge of system including"

18. Extreme events description for common right-of-way should be defined. Does this include line crossing points? Suggest exclusion for corridors one mile or less similar to P9.1.

19. The language description of the even should be substantially the same between Table 1 and Table 2. Table 2 format is a bit cleaner with initial condition and event separated. Table 1 should follow this format.

20. The loss of a shunt device (e.g. SVC) should be added to Table 2 (P1.4).

21. Note 1ai. to Table 2 refers to event P3.2 which doesn't exist in the Table 2.

22. Note 1aii. to Table 2 allows generating units to "cascade trip" for certain events that were this would not be allowed in the existing TPL standards. The MRO recommends that the more of the events be listed in 1ai. so as to at least maintain reliability.

23. Note 1aiii talks about acceptable damping. NERC should have a standard requiring development and documentation of damping criteria by the planning coordinator.

24. P9 should be changed from referring to a monopolar or bipolar dc line to a single pole of a DC line.

THE FOLLOWING ARE RON MAZUR'S COMMENTS.

25. The MRO does not believe R1 is required in this standard. The modelling standards should cover the requirement of the data owners to provide data to the PC. Further this data needs to be provided to the TP as well.

26. R1.4: requires planned outage data to be provided to planners. The MRO does not believe this is a requirement for planning. It is not economic to add facilities to accommodate future planned outages. Secondly, the Table 1 multiple contingencies already mandate that planners consider the impacts of an outage with system adjustment followed by testing for the next contingency.

27. R1.5: requires the PC to define “planned facilities” which should be included in the model. This will lead to inconsistency what is modelled, as experience has shown that there will be a wide range of assumptions in the definition. This standard should offer a definition for stakeholder debate. The SDT should clarify what is intended by including Protection System Equipment and control devices.

28. R2: The SDT should define the elements of an acceptable assessment in more detail.

29. The MRO recommends that the need to assess Plant Stability be removed from this standard. The generator connection standard and the proforma tariff interconnection process ensure the plant stability meets performance requirements. The System Assessment provides an overall assessment of the integrated system performance, which includes the impact of the plant. This requirement appears to be redundant.

30. R2.1: It is important to assess off peak loads with high simultaneous transfers as this is the period where extensive economic interchange occurs, and transient stability issues arise as less uneconomic peak units are off, leaving the load to be supplied by remote generation with reduced local reactive supply, voltage and damping control.

31. R2.1.3: The requirement for sensitivity cases is excellent. The SDT should consider:
R.2.1.3.1: separate real MW load variation and Power Factor variation
R.2.1.3.2: clarify the intent of modification of expected transfers. Does this apply to firm transfers only, or does it also encompass non-firm transfers.
..R.2.1.3.4: Instead of a sensitivity, the reactive devices should be included in the Table 1 &2 contingencies. If the intent is to investigate robustness to voltage instability, the SDT should clarify.
R.2.1.3.5: Generation additions/retirements should be removed as this is covered, or should be, by the interconnection standards. The SDT should clarify.the need for generation additions/retirement.

32. R2.2: The long term assessment should also include an off peak case with simultaneous transfers to provide some indication if the system performance is expected to degrade.

33. R2.3: The short circuit study is not a reliability assessment issue but a design issue that is more appropriately covered by a Facility Rating Standard. The time required to conduct and report on this analysis in an assessment is better spent on more contingency or sensitivity analysis.

34..R2.4: Similar to the comment on R2.1,. It is important to assess off peak loads with high simultaneous transfers as this is the period where extensive economic interchange occurs, and transient stability issues arise as less uneconomic peak units are off, leaving the load to be supplied by remote generation with reduced local reactive supply, voltage and damping control.

35. R2.4.1: Should be clarified to limit the detailed modeling to local areas where the planner expects an emerging voltage recovery issue due to unusually high concentration of induction motor load. This is a local issue, and a bulk system reliability issue that is imposed system wide. The MRO believes this should be moved to the sensitivity case requirements R2.4.3.

36. R2.4.3: Sensitivity Case requirements should mirror the steady state comments, subject to the suggestion provided above for R2.1.3. That is:
..R.2.4.3.1: should also include power factor variation (actually a separate requirement) as in the stability world, the dynamic modelling of load has a significant influence in meeting transient performance requirements.
R.2.4.3.2: I agree it should simultaneous non-firm transfers. This should be applied to the steady state sensitivity as well (see R.2.1.3.2).
..R.2.4.3.3: delete
..R.2.4.3.4: Needs to be clarified. See R.2.1.3.4.
. R.2.4.3.5: see R.2.1.3.5

37. R2.5: Plant stability analysis should be deleted.

38. R2.6.1: Nowhere else in the standard is there a requirement to assess reliability impacts of market structure changes, so why would a study become invalidated if there is a change in market structure. It would seem to me that the operation of any market would have to respect the reliability criteria.

39. R2.7: Corrective Action Plans: Is the intent that corrective action plans also address issues raised by the sensitivity studies. The MRO argument would be that it should not

be mandated. The plans are developed to meet base case needs which are based on expected load forecasts, transfers, etc. Sensitivity studies are done to measure the robustness of the base case plan. It should be left up to the Planner to decide if the plan is adequate based on the likelihood of the scenario studied, even if the sensitivity analysis shows some performance violations.

40 Also, if rationale is provided for contingencies selected as they are expected to be most severe, then by default those not selected are less severe. Why is there a requirement to explain why you did not select a contingency.

41. R3.4: Requires extra analysis compared to TPL-004-0. Developing mitigation for extreme events can require significant work. Since there is no requirement to implement corrective plans for extreme events, what is the purpose?

42. R3.5: Generator tripping should be added in addition to runback. Generator tripping is used extensively in regions where remote generation is delivered via long transmission. Generator tripping should be an available option for the planner to use as opposed to requiring justification as a regional difference.

43. R4: The requirement to assess Plant stability is redundant as this is assessed as part of the generator interconnection. It should be deleted.

44. R4.5.2: The MRO disagrees on the need to define mitigation for extreme events.

45. R4.6: Should be deleted.

46. R6: Requires distribution of results and "coordinating analysis of these results through an open and transparent process". Can the SDT clarify what the intent is? As written, it implies the PC/TP just shares assessment results with neighbours. The MRO believes there should be a requirement to conduct joint assessments on inter-regional transfer capability.

47. Table 1
Performance Requirements:

- As this is a steady state table, how does one assess if voltage instability, cascading outages or islanding occurs?
- Generator tripping for single contingencies should be added to the allowable actions.
- How did the SDT classify which event was single contingency vs. multiple contingency vs. extreme? Was statistical data analysed?
- What is a non-bus tie breaker? Is this any breaker that is not a bus tie breaker?
- Event P2-3 should be relocated to the P1 event category.
- What is the SDT rationale for defining bus faults >300 k as single contingency events? Is there any statistical dat to warrant this extra requirement? Now a Cat C? Since little load is served off >300 kV it may be a moot point.
- P6 single contingency: What is the justification for classify P6-2, a bipolar dc loss as a single contingency? The existing standard classifies this event as a Cat C multiple contingency event?
- P6-3: Why is a breaker fault classified as a single contingency? One would assume such a fault would be cleared by backup protection resulting in the loss of multiple elements?
- P9-1; Is there any justification for selection of one mile? Can it be two miles? More? Why not no more than 5% of line length? Would the fact that there is line shielding be justification for increased length?

48. Extreme Events

- Event 3.g: what is the rationale for distinguishing between old vs. new design for the loss of multiple lines due to icing? Is the SDT implying that new lines must be designed to prevent multiple line loss due to icing?

49. Table 2 Stability Performance

- MRO Comments on Table one for the same contingencies should also be applied here.

50. P6-2 should be a multiple contingency, as it is in the existing TPL standards.

51. P9-3: should be an extreme event.

52. P9-6: Please clarify the requirement to indicate that it relates to long lead times.

53. The definition for Angular Stability should be modified to allow planned tripping of a generator following a line trip. Why are generators allowed to pull out of synchronism for other planning events? This is cascading. The SDT should clarify if they are refering to local or regional damping modes in 1.a.iii.

NERC
NORTH AMERICAN ELECTRIC RELIABILITY CORPORATION

Comment Form for First Draft of TPL-001-1 — Transmission System Planning Performance Requirements

Please use this form to submit comments on the proposed draft of TPL-001-1. Comments must be submitted by **Friday, October 26, 2007**. You may submit the completed form by e-mail to sarcomm@nerc.net with the words "TPL-001 Draft 1" in the subject line. If you have questions please contact Ed Dobrowolski at ed.dobrowolksi@nerc.net or by telephone at 609-947-3673.

Individual Commenter Information **(Complete this page for comments from one organization or individual.)**		
Name:	Lewis Ross	
Organization:	Muscatine Power and Water	
Telephone:	563-262-3311	
E-mail:	lross@mpw.org	
NERC Region (check all Regions in which your company operates)		**Registered Ballot Body Segment (check all industry segments in which your company is registered)**
☐ **ERCOT**	☒	1 — Transmission Owners
☐ **FRCC**	☐	2 — RTOs and ISOs
☒ **MRO**	☒	3 — Load-serving Entities
☐ **NPCC**	☐	4 — Transmission-dependent Utilities
☐ **RFC**	☒	5 — Electric Generators
☐ **SERC**	☐	6 — Electricity Brokers, Aggregators, and Marketers
☐ **SPP**	☐	7 — Large Electricity End Users
☐ **WECC**	☒	8 — Small Electricity End Users
☐ **NA – Not Applicable**	☐	9 — Federal, State, Provincial Regulatory or other Government Entities
	☐	10 — Regional Reliability Organizations and Regional Entities

Group Comments (Complete this page if comments are from a group.)

Group Name:

Lead Contact:

Contact Organization:

Contact Segment:

Contact Telephone:

Contact E-mail:

Additional Member Name	Additional Member Organization	Region*	Segment*

*If more than one Region or Segment applies, please list all that apply. Regional acronyms and segment numbers are shown on prior page.

Background

The purpose of this standard is to establish Transmission System planning performance requirements within the planning horizon to develop a Bulk Electric System that will operate reliably over a broad spectrum of System conditions and following a wide range of probable Contingencies. This standard will replace TPL-001-0, TPL-002-0, TPL-003-0, and TPL-004-0. The standard drafting team has not yet addressed TPL-005-0 and TPL-006-0, but will address these two standards during the next phase of the drafting process.

The major objectives of the standard drafting team are to:

1) Ensure the standard is complete and the requirements are set at an appropriate level to ensure reliability (Not Least Common Denominator)
2) Ensure that the standard is enforceable by having clearly defined requirements with unambiguous language
3) Address the issues raised by FERC Order 693, 890, and other applicable orders
4) Address the issues raised in the original Standards Authorization Request (SAR) and the Supplemental SAR.

The standard drafting team did not attempt to edit the existing standards but rather chose to write one standard that addresses all aspects of transmission planning in the existing TPL-001-0, TPL-002-0, TPL-003-0, and TPL-004-0. The standard drafting team organized the new standard in the following sections:

R1 – Modeling requirements
R2 – Assessment and Corrective Plan requirements
R3 – Steady State Analysis requirements
R4 – Stability Analysis requirements
R5 – Coordination requirements

The standard drafting team determined that the requirements and analysis for Steady State are different from those for stability. As such, the standard drafting team separated the analysis requirements and created two performance requirement tables.

The standard drafting team recognizes that this draft standard is a starting point for industry input into the standard and that there is still a lot of work required to complete the process. The standard drafting team has made many changes to clarify requirements, add requirements, and make some of the performance requirements stricter. The standard drafting team has not addressed Measures, Risk Factors, Violation Severity Factors, or Time Horizons at this time. These will be addressed when the standard drafting team has better defined the requirements of the standard.

For questions where you agree with the standard drafting team, please state that you agree and if available, please provide supporting documentation. If you disagree with the standard drafting team, please explain why you disagree and provide data to support your position, such as outage data or analysis. If you believe that we have made a performance requirement too strict please provide supporting documentation. If applicable, please include the approximate cost in man-hours for additional studies and/or cost in $Millions for additional transmission investment to meet the new requirements or the stricter requirements. If you believe that the standard should be stricter, please provide the rationale along with any supporting data, including existing practices, cost estimates or additional analysis.

To improve the standard, the standard drafting team would appreciate responses to as many of these questions as you can answer.

A. New Definitions

Many of the concerns about the existing TPL standards come from the fact that a number of generally understood concepts are embedded in undefined terms, tables, and footnotes. To clarify some of these concerns, the standard drafting team is proposing new definitions. Please indicate whether you agree with the following proposed definitions and provide proposed changes to the definitions if you disagree:

Definition	**Agree or Disagree**
Q1. **Base Case**: Computer representation of the projected initial or starting Transmission System conditions for a specific point in time. Each base case reflects the forecasted Load at each bus (or node) on the interconnected Transmission System, the transmission facilities which deliver the generation and reactive resources to the connected Load, and the generation dispatch including firm transaction obligations assumed to supply the connected Load. The models also reflect facility ratings in accordance with FAC-008 & FAC-009.	☒Agree. ☐Do not agree.
Q1. **Comment:**	
Q2. **Consequential Load Loss:** Load that is no longer served because it is directly connected to an element(s) that is removed from service due to fault clearing action or mis-operation.	☒Agree. ☐Do not agree.
Q2. **Comment:**	
Q3. **Extreme Events:** Events which are more severe than Planning Events and have a low probability of occurrence.	☒Agree. ☐Do not agree.
Q3. **Comment:**	
Q4. **Long-Term Transmission Planning Horizon:** Transmission planning period that covers years six through ten or beyond.	☒Agree. ☐Do not agree.
Q4. **Comment:**	
Q5. **Near-Term Transmission Planning Horizon:** Transmission planning period that covers years One through five.	☒Agree. ☐Do not agree.
Q5. **Comment:**	
Q6. **Non-Consequential Load Loss:** Load loss other than Consequential Load Loss. For example, Load loss that occurs through manual (operator initiated) or automatic operations such as under-voltage Load shedding, under-frequency Load shedding, or Special Protection Systems.	☒Agree. ☐Do not agree.
Q6. **Comment:**	
Q7. **Planning Assessment:** Documented evaluation of future Bulk Electric System needs by the use of performance studies that cover a range of assumptions regarding system conditions, time	☒Agree. ☐Do not

frames, future plans including capital reinforcements and operating procedures and other factors, such as asset conditions and age.	agree.
Q7. **Comment:**	
Q8. **Planning Events:** Events which require Transmission system performance requirements to be met.	☒Agree. ☐Do not agree.
Q8. **Comment:**	
Q9. **Plant Stability Study:** Study of an individual plant's Stability for various Contingencies in the vicinity of the plant; concerned with the effect on the System of the generating units' loss of synchronism and the damping of the generating units' power oscillations.	☒Agree. ☐Do not agree.
Q9. **Comment:**	
Q10. **System Stability Study:** Study of the System or portions of the System to ensure that angular Stability is maintained, inter-area power oscillations are damped, and voltages during the dynamic simulation stay within acceptable performance limits.	☒Agree. ☐Do not agree.
Q10. **Comment:**	
Q11. **Year One:** The first year that a Transmission Planner is responsible for studying. This is further defined as the planning window that begins the next calendar year from the time the Transmission Planner submits their annual studies. Analysis conducted for time horizons within the calendar year from the study publication are assumed to be conducted under the auspices of Operations Planning.	☒Agree. ☐Do not agree.
Q11. **Comment:**	

B. Sensitivity Studies

The draft planning standard includes the requirement, as specified in FERC Order 693, that planning decisions be based on a portfolio of analyses. In section 12.a.ii "Sensitivity studies and critical system conditions" FERC provided direction to consider a full range of variables considered to be significant that need to be assessed and documentation provided that explains the rationale for the selection of variables assessed.

In addition to the firm obligation scenario, the portfolio of analyses should be supplemented to include information from sensitivity analysis. The sensitivity analysis should be developed using additional cases that simulate reasonably stressed system conditions. The standard drafting team has included several parameters that can be varied to create the requisite sensitivity case(s). The draft standards specify that the sensitivities reflect one or more of the following conditions and that documentation be provided explaining the rationale for selecting the sensitivity(ies) employed. The parameters that should be varied include:

- Higher or lower Load forecasts from the Base Case with variability of Load/demand and Load power factors due to season, weather, or time of day.
- Modification of expected transfers.
- Unavailability of long lead time facilities.
- Variability and outages of Reactive Resources.
- Generation additions, retirements, or other dispatch scenarios.

- Decreased effectiveness of controllable Loads and Demand Side Management.
- Modification of planned Transmission outages

To help focus industry discussion, please respond to the questions below:

Q12. Should the standard provide more specific direction regarding the number of sensitivity cases that need to be developed?

Yes ☐ No ☐
Comment: Leave it open so it can be driven by local issues including those not in the standards. i.e. Running near term criteria on the long term horizon, additional contingencies beyond currently required, etc. as appropriate for the area.

Q13. Should the standard specify the required changes, such as changes in expected transfers, load forecasts, generation patterns, etc., from the study case to be considered a "reasonably stressed" case?

Yes ☐ No ☐
Comment: Leave it open so it can be driven by local issues including those not in the standards. i.e. Running near term criteria on the long term horizon, additional contingencies beyond currently required, etc. as appropriate for the area.

Q14. The SDT proposes to require the use of sensitivity studies for Near-Term Transmission System Planning Horizon stability analysis. Do you concur with the use of sensitivity analysis in dynamic studies?

Yes ☐ No ☐
Comment: If reasonable and appropriate and allow for local issues including those not in the standards..

Q15. The draft TPL standard does not require the use of sensitivity studies for the Long-Term Transmission System Planning Horizon (year six and beyond) studies. Do you concur with this approach or should there be some level of sensitivity analysis required for the long-term period?

Yes ☒ No ☐
Comment: Local issues may drive a different approach

C. Corrective Action Plans

Requirement R2.7 of the standard states that when analysis shows that the performance requirements in Table 1 and Table 2 are not fully met, a Corrective Action Plan that utilizes all or some of the Transmission System enhancements, generation additions, DSM, new technologies and Operating Procedures shall be included in the Planning Assessment. This Corrective Action Plan should ensure that upon its implementation the identified system deficiencies will be corrected so that the performance requirements in Table 1 and Table 2 will be met. Furthermore, studies included in the Planning Assessment should demonstrate that this is indeed the case.

Q16. Requirement R2.7.1: Such Corrective Action Plans shall "Identify System deficiencies and the associated actions needed to achieve required System performance including Transmission and generation improvements, DSM, new technologies, or Operating Procedures including the duration of Interim Operating Procedures". System deficiencies may be corrected using an integrated plan, i.e., an optimal mix of Transmission, generation, DSM and Operating Procedures. Should DSM be considered in

conjunction with other measures in developing Corrective Action Plans? If yes, please comment on how the impact of DSM should be included.

Yes ☒ No ☐
Comment: We do not have DSM but I could see where it could be used to relieve overloads or low voltage.

Q17. Requirement R2.7.2: Such Corrective Action Plans shall "Be added to study cases and the cases re-tested to show that the System with planned additions meets the performance requirements in the tables". Should new studies, including the facilities comprising the Corrective Action Plan, be performed to assess System normal performance and Contingency response for conditions that previously resulted in the System deficiencies (without the planned additions) and also demonstrate that the changes would not result in inadvertent negative impacts on the System. If you "agree", please comment on how a study area should be determined.

Yes ☒ No ☒
Comment: Large enough to ensure negative impacts will not occur. This could best be covered in regional studies. (See Q43 Comment #3)

Q18. Requirement R2.7.3: The standard calls for a differentiation between committed and proposed projects. Do you agree that they should be treated separately? If not, please state why not.

Yes ☒ No ☐
Comment:

Q19. Requirement R2.7.4: For such Corrective Action Plans "Committed projects shall not be removed without documentation to show that the revised plan meets the performance requirements". Do you agree or disagree with this requirement? If you disagree, please explain why.

Yes ☒ No ☐
Comment:

D. Performance Requirements

The proposed revised planning standard (TPL-001-1) incorporates a number of changes in requirements as compared to the current planning standards (TPL-001-0 through TPL-004-0), which it is expected to replace. Among other things these changes are intended to clarify the standard, address issues described by FERC, and, in particular, to "raise the bar." Strengthening the planning standards in selected areas is necessary to maintain a reliable Bulk Electric System that is up to the challenges of the 21st Century. In proposing the requirements in this draft, the standard drafting team attempted to balance the value of increased reliability against any potential increase in work and costs to meet the new proposed standard.

The standard drafting team is seeking input from the industry to determine whether a proper balance has been achieved. The areas where material changes are proposed in this draft are enumerated below, and questions are posed by the standard drafting team to obtain industry comment. In formulating your responses, please keep in mind that material changes in the final standard will be accompanied by a transition plan to provide for an orderly implementation of the final standard.

The performance requirements relative to Non-Consequential Loss of Load for the following events enumerated in the two tables can be considered more stringent than the existing TPL standards. Furthermore, the proposed standard is based on an assumption that performance requirements for EHV facilities should be more stringent than for lower voltage facilities.

Do you agree that Non-Consequential Loss of Load should not be permitted for the following events? If you disagree, please provide a reason for your disagreement.

Event	Agree or Disagree	Comment
Q20. P2-1: Loss of bus section (SLG for stability) above 300 kV	☐Agree. ☐Do not agree.	See Q43 Comment #5.
Q21. P5-1: For facilities above 300 kV, loss of a Transmission circuit followed by System adjustment[1] followed by loss of another Transmission circuit	☐Agree. ☐Do not agree.	See Q43 Comment #5.
Q22. P5-2: For facilities above 300 kV, loss of a Transmission circuit followed by System adjustment followed by loss of a transformer with low side voltage rating above 300 kV	☐Agree. ☐Do not agree.	See Q43 Comment #5.
Q23. P5-3: For facilities above 300 kV, loss of a transformer with low side voltage rating above 300 kV followed by System adjustment followed by loss of another transformer	☐Agree. ☐Do not agree.	See Q43 Comment #5.

[1]System adjustment can be manual or automatic.

The proposed standard is based on an assumption that performance requirements for non-bus tie EHV breakers should be distinguished from other breakers. Do you agree that Non-Consequential Loss of Load should not be permitted for this event?

Q24. Loss of non-bus tie breaker (above 300 kV) due to internal fault

Yes ☐ No ☐
Comment: See Q43 Comment #5.

The proposed standard is based on an assumption that performance requirements for non-bus tie EHV breakers should be distinguished from other breakers and that performance

requirements for EHV facilities should be more stringent than for lower voltage facilities. Do you agree that Non-Consequential Loss of Load should not be permitted for this event?

Q25. P3-1: Loss of (SLG for stability) either a generator, a Transmission circuit, a transformer, or a bus and a stuck non-bus tie breaker (above 300 kV)

Yes ☐ No ☐
Comment: See Q43 Comment #5.

The proposed standard is based on an assumption that the following events are relatively high probability events and, therefore, Non-Consequential Loss of Load should not be permitted. Do you agree? If you disagree, please provide a reason for your disagreement.

Event	Agree or Disagree	Comment
Q26. P4-1: Loss of a Generator followed by System adjustment[1] followed by loss of another Generator	☐Agree. ☐Do not agree.	See Q43 Comment #5.
Q27. P4-2: Loss of a generator followed by a System adjustment followed by the loss of a monopolar DC line	☐Agree. ☐Do not agree.	See Q43 Comment #5.
Q28. P4-3: Loss of a generator followed by System adjustment followed by loss of a Transmission circuit	☐Agree. ☐Do not agree.	See Q43 Comment #5.
Q29. P4-4: Loss of a generator followed by System adjustment followed by loss of a transformer	☐Agree. ☐Do not agree.	See Q43 Comment #5.

The performance requirement for the following event may be considered less stringent than the existing TPL Standards — P2-3: Loss of a single pole of a DC line. Interruption of firm transactions (without Loss of firm Load) if the transaction is dependent on the faulted DC line is now allowed for this initiating event/Contingency.

Q30. Do you agree that interruption of any firm transfers that are dependent on the outaged DC line that is taken out of service should be permitted?

Yes ☐ No ☐
Comment: See Q43 Comment #5.

E. Stability

Q31. The proposed standard is based on an assumption that steady state analysis and stability analysis are different from each other and that therefore, two tables of Contingencies and performance requirements were needed. It is also based on an

[1] System adjustment can be manual or automatic

assumption that stability study requirements should be clearly separated from the steady state study requirements. Do you agree with the action taken in separating stability analysis from steady state analysis? If not, please explain.

Yes ☒ No ☐
Comment:

Q32. The SDT has added requirements for plant stability studies and has drawn a distinction in these studies from System stability studies. Do you agree with this approach? If not, please explain.

Yes ☒ No ☐
Comment:

Q33. The existing TPL-004-0 standard has a requirement to consider the Loss of all generating units at a plant, but it was not clear whether this requirement should apply to stability studies. The SDT did not include this requirement in the stability table, because it is hard to envision a condition when all units would trip simultaneously within the timeframe of a stability simulation. Do you think this condition should be required in stability analysis of extreme events? If not, please explain.

Yes ☐ No ☒
Comment: Unless there is a reasonable reason to expect all the units to trip.

Q34. There are an increasing number of events with slow voltage recovery after faults on the Transmission System. The dynamic behavior of induction motor loads is a major factor in this phenomenon. The proposed standard therefore requires that the load model for stability studies of peak Load conditions include the dynamic effects of induction motors. Do you agree with this requirement? If not, please explain?

Yes ☐ No ☐
Comment: We have not seen this on our system based on the review of digital fault recorders (DFR). The difficulty with including induction motors is getting reasonable data from customers about their motors so they can be adequately modeled. (We did ask our consultant to include motor effect in our coordination study since the motors could act as a weak source.)

Q35. What type of manual or automatic adjustments of generators should be allowed for single and multiple Contingencies?

Comment: Whatever the local entity sees as appropriate and is reasonable versus the cost of fixing the problem. (See Q43 Comment #3)

F. Generation Runback and Tripping

The SDT has discussed the automatic and manual readjustments of generators that should be permissible for single contingencies and multiple contingencies. The existing TPL-001-0 through TPL-004-0 standards through footnote (a) of Table I could include emergency ratings applicable for short durations as required to permit operating steps necessary to maintain system control. The footnote is silent about allowable generation adjustments in response to the Category B events. However, it does indicate that system adjustments are permitted to prepare for the next Contingency. These system adjustments could include manual or automatic adjustments involving generation.

The SDT has learned that many transmission owners use System Protection Systems (SPS) or Remedial Action Schemes (RAS) to trip generation for single and multiple Contingency outage events to prevent overloads, low voltage, and instability in the Interconnected Transmission network for N-1 and N-2 events. In some cases, the RAS are used to prepare for the next Contingency; but in some cases, the RAS are used to simultaneously avoid exceeding emergency ratings.

Q36. The proposed standard allows generation runback after the disturbance that causes a single Contingency (or due to a single Contingency outage) to move the Interconnected Transmission System from an emergency state (within emergency ratings) to a normal state (within normal ratings), assuming that the disturbance does not result in instability? Do you agree? If not, please explain.

Yes ☒ No ☐
Comment:

Q37. Since emergency ratings are thermal ratings, should this standard allow an automatic generation runback scheme (that is initiated immediately after the disturbance causing the single Contingency) to prevent thermal overloads (assuming that the disturbance does not result in instability)? If yes, what are the conditions that must be met in order to allow such a runback scheme to meet the System performance criteria for single Contingencies? Please explain the reason for your answer.

Yes ☒ No ☐
Comment: Reasonable and workable.

The standard drafting team has considered that RAS or SPS may be allowable under certain situations for single Contingencies, but proposes that their use should be limited.

Q38. Do you agree that RAS or SPS may be allowed for single Contingencies? If not, please explain.

Yes ☒ No ☐
Comment:

Q39. Please describe the limitations that you believe should be placed on the use of RAS or SPS for single Contingency events.

Comment: As long as they work and are reasonable - none. (See Q43 Comment #3)

Q40. When RAS or SPS are allowed, what conditions should be met when these systems are used in system adjustments to meet performance requirements?

Comment: Reasonable and workable. (See Q43 Comment #3)

G. General Questions

Q41. If you are aware of any regional variances that would be required as a result of these standards, please identify them here.

Yes ☐ No ☐

Comment:

Q42. If you are aware of any conflicts between the proposed standards and any regulatory function, rule order, tariff, rate schedule, legislative requirement or agreement, please identify them here.

Yes ☐ No ☐
Comment:

Q43. Do you have any other questions or concerns with the proposed standard that have not been addressed? If yes, please explain.

Yes ☒ No ☐
Comment: Muscatine Power & Water (MPW) is a municipal utility with approximately 33 miles of 161 kV lines (2 lines) and 33 miles of 69 kV lines with three – 161/69 kV substations and seven – 69/13.8 kV substations. The service territory is approximately 24 square miles. Our last system peak was 149.9 MW on July 29, 1999 with a more recent peak of 146.9 MW on July 17, 2006 with generating capacity of approximately 253 MW from four units. The main problem we have is keeping up with the standards changes with our limited resources. We would suggest:

1. It was good to see the definitions section. We would also suggest including all acronyms including those in common use. Acronyms have become so common and they are now being reused to mean different things to different groups that for new people, multitasking individuals, or those not dedicated to a specific standard acronyms add confusion. Where possible, we would suggest using existing terms and, if appropriate, preferably already defined or have them defined in IEEE standard #100 dictionary.

2. Can you address adequate documentation? I'm not looking for detail formats or requirements but more minimum requirements and suggested layout etc. One of the problems I have during audits is how much documentation to provide without going over board. More is not good considering time requirements. Our goal is to make it easy for us and the auditors. We met the standard but have we proved it. Being a small utility with little impact on the bulk system how much should we provide?

3. In our region the MAPP Design Review Subcommittee (DRS) and in some cases the Subregional Planning Groups (SPGs) review new and proposed changes to facilities. In many cases they would have to approve any RAS or SPS and thus provide a peer review/reasonable and workable check.

4. R.2.6.1 - Being a small utility we are concerned about the planning study must be less than 3 years old. We budget for studies every three years but adjust that based on whether material changes have occurred to the system. Our last cycle was 6 years only because our load hasn't been growing and we still haven't hit our peak of 1999. Since we are dependent on consultants, we also have a concern for how long it can take for them to complete the study. Since we are small the bigger customer gets the attention. We do use the same criteria for near and long term planning horizons. We also participate in MAPP and ITWG studies for the annual and bulk system review and since our issues in studies are more local rather than the bulk transmission system. How should/could the sensitivity studies be covered for us at the regional level?

5. 300 kV and above questions: MPW is a small utility that doesn't have any facilities above 161 kV or any DC lines. I can see requiring more stringent performance for EHV

and possibly lower voltage facilities in some cases, however, whether to allow the loss of Non-Consequential load should be left to local entities to decide since the cost of the "corrective action" could exceed the cost of the load loss and put undo burden on the customers. Depending on the type of load the customer may not want/be willing to pay for the extra reliability. If ordered, how will the cost be recovered? The cost should be recovered by the users not just the local customers.

Thanks for the opportunity to comment!

NERC
NORTH AMERICAN ELECTRIC RELIABILITY CORPORATION

Comment Form for First Draft of TPL-001-1 — Transmission System Planning Performance Requirements

Please use this form to submit comments on the proposed draft of TPL-001-1. Comments must be submitted by **Friday, October 26, 2007**. You may submit the completed form by e-mail to sarcomm@nerc.net with the words "TPL-001 Draft 1" in the subject line. If you have questions please contact Ed Dobrowolski at ed.dobrowolksi@nerc.net or by telephone at 609-947-3673.

Individual Commenter Information **(Complete this page for comments from one organization or individual.)**		
Name:	Carol Sedewitz	
Organization:	National Grid	
Telephone:	(508) 389-3108	
E-mail:	carol.sedewitz@us.ngrid.com	
NERC Region (check all Regions in which your company operates)		**Registered Ballot Body Segment (check all industry segments in which your company is registered)**
☐ **ERCOT**	☒	1 — Transmission Owners
☐ **FRCC**	☐	2 — RTOs and ISOs
☐ **MRO**	☐	3 — Load-serving Entities
☒ **NPCC**	☐	4 — Transmission-dependent Utilities
☐ **RFC**	☐	5 — Electric Generators
☐ **SERC**	☐	6 — Electricity Brokers, Aggregators, and Marketers
☐ **SPP**	☐	7 — Large Electricity End Users
☐ **WECC**	☐	8 — Small Electricity End Users
☐ **NA – Not Applicable**	☐	9 — Federal, State, Provincial Regulatory or other Government Entities
	☐	10 — Regional Reliability Organizations and Regional Entities

Group Comments (Complete this page if comments are from a group.)

Group Name:

Lead Contact:

Contact Organization:

Contact Segment:

Contact Telephone:

Contact E-mail:

Additional Member Name	Additional Member Organization	Region*	Segment*

*If more than one Region or Segment applies, please list all that apply. Regional acronyms and segment numbers are shown on prior page.

Background

The purpose of this standard is to establish Transmission System planning performance requirements within the planning horizon to develop a Bulk Electric System that will operate reliably over a broad spectrum of System conditions and following a wide range of probable Contingencies. This standard will replace TPL-001-0, TPL-002-0, TPL-003-0, and TPL-004-0. The standard drafting team has not yet addressed TPL-005-0 and TPL-006-0, but will address these two standards during the next phase of the drafting process.

The major objectives of the standard drafting team are to:

1) Ensure the standard is complete and the requirements are set at an appropriate level to ensure reliability (Not Least Common Denominator)
2) Ensure that the standard is enforceable by having clearly defined requirements with unambiguous language
3) Address the issues raised by FERC Order 693, 890, and other applicable orders
4) Address the issues raised in the original Standards Authorization Request (SAR) and the Supplemental SAR.

The standard drafting team did not attempt to edit the existing standards but rather chose to write one standard that addresses all aspects of transmission planning in the existing TPL-001-0, TPL-002-0, TPL-003-0, and TPL-004-0. The standard drafting team organized the new standard in the following sections:

R1 – Modeling requirements
R2 – Assessment and Corrective Plan requirements
R3 – Steady State Analysis requirements
R4 – Stability Analysis requirements
R5 – Coordination requirements

The standard drafting team determined that the requirements and analysis for Steady State are different from those for stability. As such, the standard drafting team separated the analysis requirements and created two performance requirement tables.

The standard drafting team recognizes that this draft standard is a starting point for industry input into the standard and that there is still a lot of work required to complete the process. The standard drafting team has made many changes to clarify requirements, add requirements, and make some of the performance requirements stricter. The standard drafting team has not addressed Measures, Risk Factors, Violation Severity Factors, or Time Horizons at this time. These will be addressed when the standard drafting team has better defined the requirements of the standard.

For questions where you agree with the standard drafting team, please state that you agree and if available, please provide supporting documentation. If you disagree with the standard drafting team, please explain why you disagree and provide data to support your position, such as outage data or analysis. If you believe that we have made a performance requirement too strict please provide supporting documentation. If applicable, please include the approximate cost in man-hours for additional studies and/or cost in $Millions for additional transmission investment to meet the new requirements or the stricter requirements. If you believe that the standard should be stricter, please provide the rationale along with any supporting data, including existing practices, cost estimates or additional analysis.

To improve the standard, the standard drafting team would appreciate responses to as many of these questions as you can answer.

A. New Definitions

Many of the concerns about the existing TPL standards come from the fact that a number of generally understood concepts are embedded in undefined terms, tables, and footnotes. To clarify some of these concerns, the standard drafting team is proposing new definitions. Please indicate whether you agree with the following proposed definitions and provide proposed changes to the definitions if you disagree:

Definition	**Agree or Disagree**
Q1. **Base Case**: Computer representation of the projected initial or starting Transmission System conditions for a specific point in time. Each base case reflects the forecasted Load at each bus (or node) on the interconnected Transmission System, the transmission facilities which deliver the generation and reactive resources to the connected Load, and the generation dispatch including firm transaction obligations assumed to supply the connected Load. The models also reflect facility ratings in accordance with FAC-008 & FAC-009.	☐Agree. ☒Do not agree.
Q1. **Comment: There are a few undefined terms in this definition: "Transmission System" and "interconnected Transmission System". The definition needs to specifically identify what should be modeled and in a manner consistent with other NERC definitions. The definition refers to Facility ratings rather than the general reference to FAC-008 & FAC-009**	
Q2. **Consequential Load Loss:** Load that is no longer served because it is directly connected to an element(s) that is removed from service due to fault clearing action or mis-operation.	☒Agree. ☐Do not agree.
Q2. **Comment:**	
Q3. **Extreme Events:** Events which are more severe than Planning Events and have a low probability of occurrence.	☐Agree. ☒Do not agree.
Q3. **Comment: Modify to "Events which are more severe,but have a lower probability of occurrence, than Planning Events".**	
Q4. **Long-Term Transmission Planning Horizon:** Transmission planning period that covers years six through ten or beyond.	☐Agree. ☒Do not agree.
Q4. **Comment: "Transmission planning period that covers years six through ten", is sufficient for the standard."**	
Q5. **Near-Term Transmission Planning Horizon:** Transmission planning period that covers years One through five.	☒Agree. ☐Do not agree.
Q5. **Comment:**	
Q6. **Non-Consequential Load Loss:** Load loss other than Consequential Load Loss. For example, Load loss that occurs through manual (operator initiated) or automatic operations such	☒Agree. ☐Do not

as under-voltage Load shedding, under-frequency Load shedding, or Special Protection Systems.	agree.
Q6. **Comment:**	
Q7. **Planning Assessment:** Documented evaluation of future Bulk Electric System needs by the use of performance studies that cover a range of assumptions regarding system conditions, time frames, future plans including capital reinforcements and operating procedures and other factors, such as asset conditions and age.	☐Agree. ☒Do not agree.
Q7. **Comment: Eliminate "capital" from the definition. Suggest changing wording to "Documented evaluation of future Bulk Electric System needs by use of performance studies that cover a range of assumptions regarding system conditions, time frames, future plans including reinforcements and operating procedures. The corrective action plans may consider factors such as asset conditions and age."**	
Q8. **Planning Events:** Events which require Transmission system performance requirements to be met.	☐Agree. ☒Do not agree.
Q8. **Comment: Propose, "Events for which Transmission performance requirements must be met".**	
Q9. **Plant Stability Study:** Study of an individual plant's Stability for various Contingencies in the vicinity of the plant; concerned with the effect on the System of the generating units' loss of synchronism and the damping of the generating units' power oscillations.	☐Agree. ☒Do not agree.
Q9. **Comment: A Plant Stability Study should be a part of a System Stability Study. The analysis and performance constraints are the same in both cases; it's just a matter of whether one or more generating units are involved.**	
Q10. **System Stability Study:** Study of the System or portions of the System to ensure that angular Stability is maintained, inter-area power oscillations are damped, and voltages during the dynamic simulation stay within acceptable performance limits.	☐Agree. ☒Do not agree.
Q10. **Comment: See comment on Q9; proposed modification, "Study of the System or portions of the System to determine whether unit and system angular Stability is maintained, power oscillations are damped, and voltages during the dynamic simulation stay within acceptable perfomance limits.**	
Q11. **Year One:** The first year that a Transmission Planner is responsible for studying. This is further defined as the planning window that begins the next calendar year from the time the Transmission Planner submits their annual studies. Analysis conducted for time horizons within the calendar year from the study publication are assumed to be conducted under the auspices of Operations Planning.	☐Agree. ☒Do not agree.
Q11. **Comment: Modify to, "The first year that a Tranmission Planner is responsible for studying. This is further defined as the planning window that begins the next calendar year from the time the Transmission Planner completes its annual studies."**	

B. Sensitivity Studies

The draft planning standard includes the requirement, as specified in FERC Order 693, that planning decisions be based on a portfolio of analyses. In section 12.a.ii "Sensitivity studies and critical system conditions" FERC provided direction to consider a full range of variables considered to be significant that need to be assessed and documentation provided that explains the rationale for the selection of variables assessed.

In addition to the firm obligation scenario, the portfolio of analyses should be supplemented to include information from sensitivity analysis. The sensitivity analysis should be developed using additional cases that simulate reasonably stressed system conditions. The standard drafting team has included several parameters that can be varied to create the requisite sensitivity case(s). The draft standards specify that the sensitivities reflect one or more of the following conditions and that documentation be provided explaining the rationale for selecting the sensitivity(ies) employed. The parameters that should be varied include:

- Higher or lower Load forecasts from the Base Case with variability of Load/demand and Load power factors due to season, weather, or time of day.
- Modification of expected transfers.
- Unavailability of long lead time facilities.
- Variability and outages of Reactive Resources.
- Generation additions, retirements, or other dispatch scenarios.
- Decreased effectiveness of controllable Loads and Demand Side Management.
- Modification of planned Transmission outages

To help focus industry discussion, please respond to the questions below:

Q12. Should the standard provide more specific direction regarding the number of sensitivity cases that need to be developed?

Yes ☐ No ☒

Comment: The standard is unclear whether or not it mandates the requirement to develop action plans for problems highlighted as a result of one of the sensitivities.

Suggest modification to, "…sensitivity testing that stresses the System shall be considered, and documentation with the rationale for the sensitivity testing shall be supplied. The sensitivity case(s) may include one or more of the following conditions:"

2.1.3.3 should refer only to planned facilities that may be delayed. 2.1.3.4 - "variability" is too vague for a standard; the standard needs to be more specific as to the intent. 2.1.3.7 should be consistent with 1.4. These comments also apply to 2.4.3.

Q13. Should the standard specify the required changes, such as changes in expected transfers, load forecasts, generation patterns, etc., from the study case to be considered a "reasonably stressed" case?

Yes ☐ No ☒

Comment: The standard is unclear whether or not it mandates the requirement to develop action plans for problems highlighted as a result of one of the sensitivities.

Reasonably stressed conditions are dependent upon the study area under review and the standard is not likely to be able to be crafted to provide sufficent and consistent direction. However, it might be helpful if the standard clarified whether the base case should include any unplanned generator outages or whether, aside from potential

sensitivities, unplanned generator outages are considered only through P1, P3 or P4 Contingencies. If the standard addresses unplanned generator outages only through P1, P3 and P4, then it is recommended that a mandatory sensitivity analysis, with required mitigation, include various potential combinations of a reasonable amount of unplanned outages. The combinations should be based on the part of the system that is under study.

Q14. The SDT proposes to require the use of sensitivity studies for Near-Term Transmission System Planning Horizon stability analysis. Do you concur with the use of sensitivity analysis in dynamic studies?

Yes ☒ No ☐
Comment: The standard is unclear whether or not it mandates the requirement to devleop action plans for problems highlighted as a result of one of the sensitivities.

Suggest modification to, "…sensitivity testing that stresses the System should be considered. Sensitivity case(s) might include among the following conditions:" 2.4.3 shold mimic 2.1.3 except in regard to load models.

Q15. The draft TPL standard does not require the use of sensitivity studies for the Long-Term Transmission System Planning Horizon (year six and beyond) studies. Do you concur with this approach or should there be some level of sensitivity analysis required for the long-term period?

Yes ☒ No ☐
Comment: There is no need for sensitivity analysis.

C. Corrective Action Plans

Requirement R2.7 of the standard states that when analysis shows that the performance requirements in Table 1 and Table 2 are not fully met, a Corrective Action Plan that utilizes all or some of the Transmission System enhancements, generation additions, DSM, new technologies and Operating Procedures shall be included in the Planning Assessment. This Corrective Action Plan should ensure that upon its implementation the identified system deficiencies will be corrected so that the performance requirements in Table 1 and Table 2 will be met. Furthermore, studies included in the Planning Assessment should demonstrate that this is indeed the case.

Q16. Requirement R2.7.1: Such Corrective Action Plans shall "Identify System deficiencies and the associated actions needed to achieve required System performance including Transmission and generation improvements, DSM, new technologies, or Operating Procedures including the duration of Interim Operating Procedures". System deficiencies may be corrected using an integrated plan, i.e., an optimal mix of Transmission, generation, DSM and Operating Procedures. Should DSM be considered in conjunction with other measures in developing Corrective Action Plans? If yes, please comment on how the impact of DSM should be included.

Yes ☒ No ☐
Comment: DSM should be included to the extent that its performance is sufficiently and consistently understood. The standard does not use the term "optimal" Therefore, the Drafting Team appears to be interpreting the Standard to require a vertically-integrated Planner to produce a so-called optimal-mix of resources plan. This would be an incorrect assumption and is not required. In areas with independent planners and competitive wholesale markets, it is sufficent to identify system needs and produce a plan that identifies regulated transmission solutions in the event that market-based resources (such as DSM) do not address those identified needs. Therefore, while DSM can be as effective a resource as generation, per Commission Orders, in areas with ISOs/RTOs and a competitive wholesale market, the NERC Standard cannot prescribe the development so-called optimized (as is suggesgted by the Drafting Team) resource-mix plans, as identified by a central planner.

Q17. Requirement R2.7.2: Such Corrective Action Plans shall "Be added to study cases and the cases re-tested to show that the System with planned additions meets the performance requirements in the tables". Should new studies, including the facilities comprising the Corrective Action Plan, be performed to assess System normal performance and Contingency response for conditions that previously resulted in the System deficiencies (without the planned additions) and also demonstrate that the changes would not result in inadvertent negative impacts on the System. If you "agree", please comment on how a study area should be determined.

Yes ☒ No ☐
Comment: The study area should be based upon planning expertise and knowledge of the system, giving due consideration to external impacts.

Q18. Requirement R2.7.3: The standard calls for a differentiation between committed and proposed projects. Do you agree that they should be treated separately? If not, please state why not.

Yes ☒ No ☐
Comment: They should be viewed differently in the Near-Term. However, these should be defined terms.

Q19. Requirement R2.7.4: For such Corrective Action Plans "Committed projects shall not be removed without documentation to show that the revised plan meets the performance requirements". Do you agree or disagree with this requirement? If you disagree, please explain why.

Yes ☒ No ☐
Comment: It is unclear as to what the commited project is being removed from. Suggested language "…removed from the plan…".

D. Performance Requirements

The proposed revised planning standard (TPL-001-1) incorporates a number of changes in requirements as compared to the current planning standards (TPL-001-0 through TPL-004-0), which it is expected to replace. Among other things these changes are intended to clarify the standard, address issues described by FERC, and, in particular, to "raise the bar." Strengthening the planning standards in selected areas is necessary to maintain a reliable Bulk Electric System that is up to the challenges of the 21st Century. In proposing the requirements in this draft, the standard drafting team attempted to balance the value of increased reliability against any potential increase in work and costs to meet the new proposed standard.

The standard drafting team is seeking input from the industry to determine whether a proper balance has been achieved. The areas where material changes are proposed in this draft are enumerated below, and questions are posed by the standard drafting team to obtain industry comment. In formulating your responses, please keep in mind that material changes in the final standard will be accompanied by a transition plan to provide for an orderly implementation of the final standard.

The performance requirements relative to Non-Consequential Loss of Load for the following events enumerated in the two tables can be considered more stringent than the existing TPL standards. Furthermore, the proposed standard is based on an assumption that

performance requirements for EHV facilities should be more stringent than for lower voltage facilities.

Do you agree that Non-Consequential Loss of Load should not be permitted for the following events? If you disagree, please provide a reason for your disagreement.

Event	Agree or Disagree	Comment
Q20. P2-1: Loss of bus section (SLG for stability) above 300 kV	☒Agree. ☐Do not agree.	
Q21. P5-1: For facilities above 300 kV, loss of a Transmission circuit followed by System adjustment[1] followed by loss of another Transmission circuit	☒Agree. ☐Do not agree.	
Q22. P5-2: For facilities above 300 kV, loss of a Transmission circuit followed by System adjustment followed by loss of a transformer with low side voltage rating above 300 kV	☒Agree. ☐Do not agree.	Should also consider the initial loss of a transformer, followed by the loss of a Transmission circuit. This should state a transformer with a "high-side" rating above 300 kV.
Q23. P5-3: For facilities above 300 kV, loss of a transformer with low side voltage rating above 300 kV followed by System adjustment followed by loss of another transformer	☒Agree. ☐Do not agree.	This should state a transformer with a "high-side" rating above 300 kV.

[1]System adjustment can be manual or automatic.

The proposed standard is based on an assumption that performance requirements for non-bus tie EHV breakers should be distinguished from other breakers. Do you agree that Non-Consequential Loss of Load should not be permitted for this event?

Q24. Loss of non-bus tie breaker (above 300 kV) due to internal fault

Yes ☒ No ☐

Comment: It is unclear why bus tie breakers are being treated differently than other breakers. They should be treated the same.

The proposed standard is based on an assumption that performance requirements for non-bus tie EHV breakers should be distinguished from other breakers and that performance requirements for EHV facilities should be more stringent than for lower voltage facilities. Do you agree that Non-Consequential Loss of Load should not be permitted for this event?

Q25. P3-1: Loss of (SLG for stability) either a generator, a Transmission circuit, a transformer, or a bus and a stuck non-bus tie breaker (above 300 kV)

Yes ☒ No ☐
Comment: It is unclear why bus tie breakers are being treated differently than other breakers. They should be treated the same.

The proposed standard is based on an assumption that the following events are relatively high probability events and, therefore, Non-Consequential Loss of Load should not be permitted. Do you agree? If you disagree, please provide a reason for your disagreement.

Event	Agree or Disagree	Comment
Q26. P4-1: Loss of a Generator followed by System adjustment[1] followed by loss of another Generator	☐Agree. ☒Do not agree.	If mitigation plans are required that are based on studies that already include unplanned generator outages, then some load loss may be reasonable following the subsequent loss of 2 additional generators.
Q27. P4-2: Loss of a generator followed by a System adjustment followed by the loss of a monopolar DC line	☐Agree. ☒Do not agree.	If mitigation plans are required that are based on studies that already include unplanned generator outages, then some load loss may be reasonable following the subsequent loss of an additional generator and a monopolar DC line
Q28. P4-3: Loss of a generator followed by System adjustment followed by loss of a Transmission circuit	☐Agree. ☒Do not agree.	If mitigation plans are required that are based on studies that already include unplanned generator outages, then some load loss may be reasonable following the subsequent loss of an additional generator and a Transmission circuit
Q29. P4-4: Loss of a generator followed by System adjustment followed by loss of a transformer	☐Agree. ☒Do not agree.	If mitigation plans are required that are based on studies that already include unplanned generator outages, then some load loss may be reasonable following the subsequent loss of an additional generator and a transformer

The performance requirement for the following event may be considered less stringent than the existing TPL Standards — P2-3: Loss of a single pole of a DC line. Interruption of firm transactions (without Loss of firm Load) if the transaction is dependent on the faulted DC line is now allowed for this initiating event/Contingency.

Q30. Do you agree that interruption of any firm transfers that are dependent on the outaged DC line that is taken out of service should be permitted?

Yes ☒ No ☐

[1] System adjustment can be manual or automatic

Comment: This should also apply to firm transfers via single or double circuit ac facilities as well. In either case, the transfer could be linked to dedicated facilities.

E. Stability

Q31. The proposed standard is based on an assumption that steady state analysis and stability analysis are different from each other and that therefore, two tables of Contingencies and performance requirements were needed. It is also based on an assumption that stability study requirements should be clearly separated from the steady state study requirements. Do you agree with the action taken in separating stability analysis from steady state analysis? If not, please explain.

Yes ☒ No ☐
Comment:

Q32. The SDT has added requirements for plant stability studies and has drawn a distinction in these studies from System stability studies. Do you agree with this approach? If not, please explain.

Yes ☐ No ☒
Comment: As defined in R2.5, a Plant Stability Study should be a part of a System Stability Study. The analysis and performance constraints are the same in both cases; it's just a matter of whether one or more generating units are involved.

Q33. The existing TPL-004-0 standard has a requirement to consider the Loss of all generating units at a plant, but it was not clear whether this requirement should apply to stability studies. The SDT did not include this requirement in the stability table, because it is hard to envision a condition when all units would trip simultaneously within the timeframe of a stability simulation. Do you think this condition should be required in stability analysis of extreme events? If not, please explain.

Yes ☐ No ☒
Comment: Difficult to envision how such an event would occur.

Q34. There are an increasing number of events with slow voltage recovery after faults on the Transmission System. The dynamic behavior of induction motor loads is a major factor in this phenomenon. The proposed standard therefore requires that the load model for stability studies of peak Load conditions include the dynamic effects of induction motors. Do you agree with this requirement? If not, please explain?

Yes ☐ No ☒
Comment: This requirement is too specific and limited. Induction motors are only one component of a complex load model. Complex load models are not always necessary, nor are they always the most conservative, depending on the analysis that is being conducted. Where complex load models are required, they should be considered; this may involve use of complex motor and lighting loads or polynomial load representations with or without frequency dependence. This question also suggests the need for an industry standard regarding transient voltage recovery.

Q35. What type of manual or automatic adjustments of generators should be allowed for single and multiple Contingencies?

Comment: Manual or automatic adjustments should be permissible to allow redispatch to return the system to below normal/load cycle based ratings; however, the system should not exceed applicable emergency ratings prior to the adjustment. Manual system adjustment should be allowed in between the multiple Contingencies described in P5, provided that the adjustment can be made between contingencies using short-term reserves (10-30 minute).

F. Generation Runback and Tripping

The SDT has discussed the automatic and manual readjustments of generators that should be permissible for single contingencies and multiple contingencies. The existing TPL-001-0 through TPL-004-0 standards through footnote (a) of Table I could include emergency ratings applicable for short durations as required to permit operating steps necessary to maintain system control. The footnote is silent about allowable generation adjustments in response to the Category B events. However, it does indicate that system adjustments are permitted to prepare for the next Contingency. These system adjustments could include manual or automatic adjustments involving generation.

The SDT has learned that many transmission owners use System Protection Systems (SPS) or Remedial Action Schemes (RAS) to trip generation for single and multiple Contingency outage events to prevent overloads, low voltage, and instability in the Interconnected Transmission network for N-1 and N-2 events. In some cases, the RAS are used to prepare for the next Contingency; but in some cases, the RAS are used to simultaneously avoid exceeding emergency ratings.

Q36. The proposed standard allows generation runback after the disturbance that causes a single Contingency (or due to a single Contingency outage) to move the Interconnected Transmission System from an emergency state (within emergency ratings) to a normal state (within normal ratings), assuming that the disturbance does not result in instability? Do you agree? If not, please explain.

Yes ☒ No ☐

Comment: Generation runback should be permissible to allow redispatch to return the system to below normal/load cycle based ratings; however, the system should not exceed applicable emergency ratings prior to the adjustment

Q37. Since emergency ratings are thermal ratings, should this standard allow an automatic generation runback scheme (that is initiated immediately after the disturbance causing the single Contingency) to prevent thermal overloads (assuming that the disturbance does not result in instability)? If yes, what are the conditions that must be met in order to allow such a runback scheme to meet the System performance criteria for single Contingencies? Please explain the reason for your answer.

Yes ☒ No ☐

Comment: However, this should only be allowed where failure of an automatic runback that is not functionally redundant would not have significant adverse impact on the Bulk Electric System.

The standard drafting team has considered that RAS or SPS may be allowable under certain situations for single Contingencies, but proposes that their use should be limited.

Q38. Do you agree that RAS or SPS may be allowed for single Contingencies? If not, please explain.

Yes ☒ No ☐
Comment: Only allowed where the failure of an SPS that is not functionally redundant would not have significant adverse impact on the Bulk Electric System.

Q39. Please describe the limitations that you believe should be placed on the use of RAS or SPS for single Contingency events.

Comment: Only allowed where SPS failure would not have significant adverse impact on the Bulk Electric System; non-Consequential loss of load should be allowed up to an amount potentially specified in the standard.

Q40. When RAS or SPS are allowed, what conditions should be met when these systems are used in system adjustments to meet performance requirements?

Comment: System must remain stable with acceptable voltages and all equipment within applicable emergency limits.

G. General Questions

Q41. If you are aware of any regional variances that would be required as a result of these standards, please identify them here.

Yes ☐ No ☒
Comment: We're not aware of any at this time. However, future modifications of the standard may highlight a need for regional variances.

Q42. If you are aware of any conflicts between the proposed standards and any regulatory function, rule order, tariff, rate schedule, legislative requirement or agreement, please identify them here.

Yes ☐ No ☒
Comment:

Q43. Do you have any other questions or concerns with the proposed standard that have not been addressed? If yes, please explain.

Yes ☒ No ☐
Comment: There should be a "P0" standard that applies to system performance without any contingencies.

Standard should be clear that stabiltiy analysis is not required for Long-Term Planning Assessment.

R.1.1 Load forecasts should be addressed in MOD standards, not TPL.

R 1.4 This should only refer to known long-term outages, not planned outages. Delete "including protective relays"; this is addressed through other provisions.

R.2.1 Shorten "Near-Term Transmission Planning Horizon Planning Assessment" to "Near-Term Planning Assessment".

R 2.2 Shorten "Long-Term Transmission Planning Horizon Planning Assessment" to "Long-Term Planning Assessment".

R2.1, 2.2, 2.3 & 2.4 – The initial paragraph should have identical language regarding 'annual', and 'current or past' aspects.

R2.1.1 There should not be a requirement to look at years one and two; a 5 year study should be sufficient. If there has been an ongoing 5 year study, there should be no major unexpected problems occurring in years 1 and 2. Studies of earlier years should only be required if an unanticipated event occurred that had not been considered in prior studies. The TPL should not address shorter term "Operating Studies" or operating issues.

R 2.2.1 Modify to "If any known projects have a lead time that is longer than ten years, the Planning Assessment shall be extended accordingly."

R 2.6 Steady-state, short circuit, and stability analysis should be required no more than every 5 years unless there is a significant change the system.

R 2.6.1 Remove reference to "market structure changes". The purpose of it's inclusion is unclear.

R 2.7.1.1 Project initiation date should be deleted. If it is retainted, it needs to be defined.

R 2.7.3 Committed and Proposed projects should be defined.

R 3.2.1/R 4.3 - What is the intent of this requirement? There should probably be an MOD associated with Generator Owner requirement to provide related generator protection/ limiter data or other plant information.

R 3.4/R 4.5.2 Remove the requirement to implement changes to reduce or mitigate the likelihood of such consequences of Extreme Events. This may not be reasonable or achieveable.

R 3.2 Sectionalizing schemes shall be considered when reflecting the post-contingent system.

R 3.2.2 - Propose deleting this. Line ratings should already take relay loadability into account.

R 3.3.2.1 - Propose deleting "expected duration". This would be dependent upon the damage to the element due to the iniating event and other factors.

R 3.3.2.2 - The requirements of this section do not match P6.

R 3.3.3 - Change introductory language to read "Those multiple Contingencies that are…"

R 3.5 - Generation tripping should be allowed as well as generation run-back. In addition, all performance requirements shall be met, rather than just meeting facility rating requirements. Suggested lanague "Manual and automatic generation run-back and/or generation tripping is allowed as a response to single and multiple Contingencies as long as the performance requirements of this standard are met." If these changes are accepted, R 3.6 can be deleted.

R 4 and R 4.1 - The language should be made similar to R 3 and R 3.1.

Suggest bringing language similar to R4.4 into R 3, the steady state section.

R 4.2 - High speed automatic reclosing schemes shall be considered.

R 6.3 - Change to read "Planning Coordinators of neighboring impacted areas".

Table 1 3 b and c Extreme Event descriptions are vague concepts that cannot be practically simulated. 3 d and e are not reasonable or practically useful to simulate.

Table 1, P8 - Language needs to be clarifed as to how the 300 kV threshold is to be treated for transformers. Is this for the high side, low side, or both sides? P5 is much clearer.

Table 2 - Clarification needs to be made that the faults being simulated are permanent faults. This can be addressed under the "Performance Requirements" portion at the beginning of the table, or modify each fault description.

Table 2 P9. Recommend that this be changed to require that faults should be on different phases of each of two adjacent transmission circuits on a multiple circuit transmission tower

Table 1, P9(6) and Table 2 P9 - It is unclear as to what is meant by "A spare transformer inserted to replace an outaged transformer followed by System adjustments". Unclear as to what is to be tested.

General comment - Transmission System is used throughout the document and is an undefined term

For any of the items when the standards may become more stringent, try to recognize that there is going to need to be a transition plan to meet compliance.

NERC
NORTH AMERICAN ELECTRIC RELIABILITY CORPORATION

Comment Form for First Draft of TPL-001-1 — Transmission System Planning Performance Requirements

Please use this form to submit comments on the proposed draft of TPL-001-1. Comments must be submitted by **Friday, October 26, 2007**. You may submit the completed form by e-mail to sarcomm@nerc.net with the words "TPL-001 Draft 1" in the subject line. If you have questions please contact Ed Dobrowolski at ed.dobrowolksi@nerc.net or by telephone at 609-947-3673.

Individual Commenter Information **(Complete this page for comments from one organization or individual.)**		
Name:	NERC Transmission Issues Subcommittee	
Organization:	NERC	
Telephone:		
E-mail:	TIS@nerc.com	
NERC Region (check all Regions in which your company operates)		**Registered Ballot Body Segment (check all industry segments in which your company is registered)**
☐ **ERCOT**	☐	1 — Transmission Owners
☐ **FRCC**	☐	2 — RTOs and ISOs
☐ **MRO**	☐	3 — Load-serving Entities
☐ **NPCC**	☐	4 — Transmission-dependent Utilities
☐ **RFC**	☐	5 — Electric Generators
☐ **SERC**	☐	6 — Electricity Brokers, Aggregators, and Marketers
☐ **SPP**	☐	7 — Large Electricity End Users
☐ **WECC**	☐	8 — Small Electricity End Users
☒ **NA – Not Applicable**	☐	9 — Federal, State, Provincial Regulatory or other Government Entities
	☐	10 — Regional Reliability Organizations and Regional Entities

Group Comments (Complete this page if comments are from a group.)

Group Name: **NERC Transmission Issues Subcommittee (TIS)**

Lead Contact: **David Till**

Contact Organization: **TVA**

Contact Segment: **Chairman of TIS**

Contact Telephone: **(423) 751-7147**

Contact E-mail: **bdtill@tva.gov**

Additional Member Name	Additional Member Organization	Region*	Segment*
See attached TIS Roster			

*If more than one Region or Segment applies, please list all that apply. Regional acronyms and segment numbers are shown on prior page.

Background

The purpose of this standard is to establish Transmission System planning performance requirements within the planning horizon to develop a Bulk Electric System that will operate reliably over a broad spectrum of System conditions and following a wide range of probable Contingencies. This standard will replace TPL-001-0, TPL-002-0, TPL-003-0, and TPL-004-0. The standard drafting team has not yet addressed TPL-005-0 and TPL-006-0, but will address these two standards during the next phase of the drafting process.

The major objectives of the standard drafting team are to:

1) Ensure the standard is complete and the requirements are set at an appropriate level to ensure reliability (Not Least Common Denominator)
2) Ensure that the standard is enforceable by having clearly defined requirements with unambiguous language
3) Address the issues raised by FERC Order 693, 890, and other applicable orders
4) Address the issues raised in the original Standards Authorization Request (SAR) and the Supplemental SAR.

The standard drafting team did not attempt to edit the existing standards but rather chose to write one standard that addresses all aspects of transmission planning in the existing TPL-001-0, TPL-002-0, TPL-003-0, and TPL-004-0. The standard drafting team organized the new standard in the following sections:

R1 – Modeling requirements
R2 – Assessment and Corrective Plan requirements
R3 – Steady State Analysis requirements
R4 – Stability Analysis requirements
R5 – Coordination requirements

The standard drafting team determined that the requirements and analysis for Steady State are different from those for stability. As such, the standard drafting team separated the analysis requirements and created two performance requirement tables.

The standard drafting team recognizes that this draft standard is a starting point for industry input into the standard and that there is still a lot of work required to complete the process. The standard drafting team has made many changes to clarify requirements, add requirements, and make some of the performance requirements stricter. The standard drafting team has not addressed Measures, Risk Factors, Violation Severity Factors, or Time Horizons at this time. These will be addressed when the standard drafting team has better defined the requirements of the standard.

For questions where you agree with the standard drafting team, please state that you agree and if available, please provide supporting documentation. If you disagree with the standard drafting team, please explain why you disagree and provide data to support your position, such as outage data or analysis. If you believe that we have made a performance requirement too strict please provide supporting documentation. If applicable, please include the approximate cost in man-hours for additional studies and/or cost in $Millions for additional transmission investment to meet the new requirements or the stricter requirements. If you believe that the standard should be stricter, please provide the rationale along with any supporting data, including existing practices, cost estimates or additional analysis.

To improve the standard, the standard drafting team would appreciate responses to as many of these questions as you can answer.

A. New Definitions

Many of the concerns about the existing TPL standards come from the fact that a number of generally understood concepts are embedded in undefined terms, tables, and footnotes. To clarify some of these concerns, the standard drafting team is proposing new definitions. Please indicate whether you agree with the following proposed definitions and provide proposed changes to the definitions if you disagree:

Definition	**Agree or Disagree**
Q1. **Base Case**: Computer representation of the projected initial or starting Transmission System conditions for a specific point in time. Each base case reflects the forecasted Load at each bus (or node) on the interconnected Transmission System, the transmission facilities which deliver the generation and reactive resources to the connected Load, and the generation dispatch including firm transaction obligations assumed to supply the connected Load. The models also reflect facility ratings in accordance with FAC-008 & FAC-009.	☒Agree. ☐Do not agree.
Q1. **Comment: The definition should differentiate between powerflow and dynamics base cases**	
Q2. **Consequential Load Loss:** Load that is no longer served because it is directly connected to an element(s) that is removed from service due to fault clearing action or mis-operation.	☒Agree. ☐Do not agree.
Q2. **Comment: MISOPERATION has to be qualified as being a misoperaiton on the system element that trips**	
Q3. **Extreme Events:** Events which are more severe than Planning Events and have a low probability of occurrence.	☐Agree. ☒Do not agree.
Q3. **Comment: The use of the term Extreme should be limited to those events that are truly extreme. A single line-to-ground fault with delayed clearing (for whatever reason) may require remote clearing of the fault, and trips multiple system elements, without time between elements being outaged. Such events are far too common occurrences to call them extreme.**	
Q4. **Long-Term Transmission Planning Horizon:** Transmission planning period that covers years six through ten or beyond.	☒Agree. ☐Do not agree.
Q4. **Comment:**	
Q5. **Near-Term Transmission Planning Horizon:** Transmission planning period that covers years One through five.	☒Agree. ☐Do not agree.
Q5. **Comment:**	
Q6. **Non-Consequential Load Loss:** Load loss other than Consequential Load Loss. For example, Load loss that occurs	☒Agree.

through manual (operator initiated) or automatic operations such as under-voltage Load shedding, under-frequency Load shedding, or Special Protection Systems.	☐Do not agree.
Q6. **Comment:**	
Q7. **Planning Assessment:** Documented evaluation of future Bulk Electric System needs by the use of performance studies that cover a range of assumptions regarding system conditions, time frames, future plans including capital reinforcements and operating procedures and other factors, such as asset conditions and age.	☒Agree. ☐Do not agree.
Q7. **Comment:**	
Q8. **Planning Events:** Events which require Transmission system performance requirements to be met.	☒Agree. ☐Do not agree.
Q8. **Comment:**	
Q9. **Plant Stability Study:** Study of an individual plant's Stability for various Contingencies in the vicinity of the plant; concerned with the effect on the System of the generating units' loss of synchronism and the damping of the generating units' power oscillations.	☐Agree. ☒Do not agree.
Q9. **Comment: Should not be limited to contingencies in the vicinity of the plant. Remove the terms "in the vicinity of the plant." Engineering judgement can then be used without having to define "vicinity." Plant instability can be caused by system events many (sometimes hundreds of) miles away. Plants were shaken off line in British Columbia due to the tripping of units in Arizona in June 2004.**	
Q10. **System Stability Study:** Study of the System or portions of the System to ensure that angular Stability is maintained, inter-area power oscillations are damped, and voltages during the dynamic simulation stay within acceptable performance limits.	☒Agree. ☐Do not agree.
Q10. **Comment:**	
Q11. **Year One:** The first year that a Transmission Planner is responsible for studying. This is further defined as the planning window that begins the next calendar year from the time the Transmission Planner submits their annual studies. Analysis conducted for time horizons within the calendar year from the study publication are assumed to be conducted under the auspices of Operations Planning.	☒Agree. ☐Do not agree.
Q11. **Comment:**	

B. Sensitivity Studies

The draft planning standard includes the requirement, as specified in FERC Order 693, that planning decisions be based on a portfolio of analyses. In section 12.a.ii "Sensitivity studies and critical system conditions" FERC provided direction to consider a full range of variables considered to be significant that need to be assessed and documentation provided that explains the rationale for the selection of variables assessed.

In addition to the firm obligation scenario, the portfolio of analyses should be supplemented to include information from sensitivity analysis. The sensitivity analysis should be developed using additional cases that simulate reasonably stressed system conditions. The

standard drafting team has included several parameters that can be varied to create the requisite sensitivity case(s). The draft standards specify that the sensitivities reflect one or more of the following conditions and that documentation be provided explaining the rationale for selecting the sensitivity(ies) employed. The parameters that should be varied include:

- Higher or lower Load forecasts from the Base Case with variability of Load/demand and Load power factors due to season, weather, or time of day.
- Modification of expected transfers.
- Unavailability of long lead time facilities.
- Variability and outages of Reactive Resources.
- Generation additions, retirements, or other dispatch scenarios.
- Decreased effectiveness of controllable Loads and Demand Side Management.
- Modification of planned Transmission outages

To help focus industry discussion, please respond to the questions below:

Q12. Should the standard provide more specific direction regarding the number of sensitivity cases that need to be developed?

Yes ☐ No ☒
Comment:

Q13. Should the standard specify the required changes, such as changes in expected transfers, load forecasts, generation patterns, etc., from the study case to be considered a "reasonably stressed" case?

Yes ☐ No ☒
Comment:

Q14. The SDT proposes to require the use of sensitivity studies for Near-Term Transmission System Planning Horizon stability analysis. Do you concur with the use of sensitivity analysis in dynamic studies?

Yes ☒ No ☐
Comment:

Q15. The draft TPL standard does not require the use of sensitivity studies for the Long-Term Transmission System Planning Horizon (year six and beyond) studies. Do you concur with this approach or should there be some level of sensitivity analysis required for the long-term period?

Yes ☐ No ☒
Comment: Since the long-term planning is completely couched in uncertainty, at least some generalized sensitivities should be required.

C. Corrective Action Plans

Requirement R2.7 of the standard states that when analysis shows that the performance requirements in Table 1 and Table 2 are not fully met, a Corrective Action Plan that utilizes all or some of the Transmission System enhancements, generation additions, DSM, new technologies and Operating Procedures shall be included in the Planning Assessment. This Corrective Action Plan should ensure that upon its implementation the identified system deficiencies will be corrected so that the performance requirements in Table 1 and Table 2

will be met. Furthermore, studies included in the Planning Assessment should demonstrate that this is indeed the case.

Q16. Requirement R2.7.1: Such Corrective Action Plans shall "Identify System deficiencies and the associated actions needed to achieve required System performance including Transmission and generation improvements, DSM, new technologies, or Operating Procedures including the duration of Interim Operating Procedures". System deficiencies may be corrected using an integrated plan, i.e., an optimal mix of Transmission, generation, DSM and Operating Procedures. Should DSM be considered in conjunction with other measures in developing Corrective Action Plans? If yes, please comment on how the impact of DSM should be included.

Yes ☒ No ☒
Comment: Yes, if it can be counted on for relieving transmission constraints. Some DSM contracts do not allow for interruption for anything other than resource adequacy events, or have time-based or economics-based implementation limitations.

Q17. Requirement R2.7.2: Such Corrective Action Plans shall "Be added to study cases and the cases re-tested to show that the System with planned additions meets the performance requirements in the tables". Should new studies, including the facilities comprising the Corrective Action Plan, be performed to assess System normal performance and Contingency response for conditions that previously resulted in the System deficiencies (without the planned additions) and also demonstrate that the changes would not result in inadvertent negative impacts on the System. If you "agree", please comment on how a study area should be determined.

Yes ☒ No ☐
Comment: All Corrective Action Plans should be tested on an interconnection-wide basis to screen for potential adverse impacts throughout the interconnection, not just the TOs area.

Q18. Requirement R2.7.3: The standard calls for a differentiation between committed and proposed projects. Do you agree that they should be treated separately? If not, please state why not.

Yes ☒ No ☒
Comment: No concensus in TIS after extensive disucussion, but it will be discussed further.

Q19. Requirement R2.7.4: For such Corrective Action Plans "Committed projects shall not be removed without documentation to show that the revised plan meets the performance requirements". Do you agree or disagree with this requirement? If you disagree, please explain why.

Yes ☒ No ☒
Comment: Any revision to the Corrective Action Plan should be tested to ensure that the revised plan meets the precribed performance requirments. Documentation of that testing is appropriate.

D. Performance Requirements

The proposed revised planning standard (TPL-001-1) incorporates a number of changes in requirements as compared to the current planning standards (TPL-001-0 through TPL-004-0), which it is expected to replace. Among other things these changes are intended to clarify the standard, address issues described by FERC, and, in particular, to "raise the bar."

Strengthening the planning standards in selected areas is necessary to maintain a reliable Bulk Electric System that is up to the challenges of the 21st Century. In proposing the requirements in this draft, the standard drafting team attempted to balance the value of increased reliability against any potential increase in work and costs to meet the new proposed standard.

The standard drafting team is seeking input from the industry to determine whether a proper balance has been achieved. The areas where material changes are proposed in this draft are enumerated below, and questions are posed by the standard drafting team to obtain industry comment. In formulating your responses, please keep in mind that material changes in the final standard will be accompanied by a transition plan to provide for an orderly implementation of the final standard.

The performance requirements relative to Non-Consequential Loss of Load for the following events enumerated in the two tables can be considered more stringent than the existing TPL standards. Furthermore, the proposed standard is based on an assumption that performance requirements for EHV facilities should be more stringent than for lower voltage facilities.

Do you agree that Non-Consequential Loss of Load should not be permitted for the following events? If you disagree, please provide a reason for your disagreement.

Event	Agree or Disagree	Comment
Q20. P2-1: Loss of bus section (SLG for stability) above 300 kV	☒Agree. ☐Do not agree.	Loss of a bus section is a single contingency. Non-consequential load loss should not be allowed.
Q21. P5-1: For facilities above 300 kV, loss of a Transmission circuit followed by System adjustment[1] followed by loss of another Transmission circuit	☒Agree. ☐Do not agree.	This becomes a differentiation between an event and a contingency - if there is time to adjust the system, it is really two events. Non-consequential load loss based on the first event is hard to fathom. Loss of load following the second event is either consequential to the second event (even if load was isolated by the first event) or non-consequential to the second event.
Q22. P5-2: For facilities above 300 kV, loss of a Transmission circuit followed by System adjustment followed by loss of a transformer with low side voltage rating above 300 kV	☒Agree. ☐Do not agree.	See Q 21 Comment
Q23. P5-3: For facilities above 300 kV, loss of a transformer with low side voltage rating above 300 kV followed by System adjustment	☐Agree. ☐Do not agree.	See Q 21 Comment

followed by loss of another transformer		

[1]System adjustment can be manual or automatic.

The proposed standard is based on an assumption that performance requirements for non-bus tie EHV breakers should be distinguished from other breakers. Do you agree that Non-Consequential Loss of Load should not be permitted for this event?

Q24. Loss of non-bus tie breaker (above 300 kV) due to internal fault

Yes ☒ No ☐
Comment: By its very nature, the event described is a breaker failure and the fault will typically need to be cleared by the next set of breakers, often remotely. Tripping out to the backup protection breakers typically can cause significant Consequential load loss. That should not be misconstrued as non-consequential load loss. Non-consequential load loss beyond that is unaceptable.

The proposed standard is based on an assumption that performance requirements for non-bus tie EHV breakers should be distinguished from other breakers and that performance requirements for EHV facilities should be more stringent than for lower voltage facilities. Do you agree that Non-Consequential Loss of Load should not be permitted for this event?

Q25. P3-1: Loss of (SLG for stability) either a generator, a Transmission circuit, a transformer, or a bus and a stuck non-bus tie breaker (above 300 kV)

Yes ☒ No ☐
Comment: See comment to Q24.

The proposed standard is based on an assumption that the following events are relatively high probability events and, therefore, Non-Consequential Loss of Load should not be permitted. Do you agree? If you disagree, please provide a reason for your disagreement.

Event	Agree or Disagree	Comment
Q26. P4-1: Loss of a Generator followed by System adjustment[1] followed by loss of another Generator	☒Agree. ☐Do not agree.	
Q27. P4-2: Loss of a generator followed by a System adjustment followed by the loss of a monopolar DC line	☒Agree. ☐Do not agree.	
Q28. P4-3: Loss of a generator followed by System adjustment followed by loss of a Transmission circuit	☒Agree. ☐Do not agree.	
Q29. P4-4: Loss of a	☒Agree.	

[1] System adjustment can be manual or automatic

generator followed by System adjustment followed by loss of a transformer	☐Do not agree.	

The performance requirement for the following event may be considered less stringent than the existing TPL Standards — P2-3: Loss of a single pole of a DC line. Interruption of firm transactions (without Loss of firm Load) if the transaction is dependent on the faulted DC line is now allowed for this initiating event/Contingency.

Q30. Do you agree that interruption of any firm transfers that are dependent on the outaged DC line that is taken out of service should be permitted?

Yes ☐ No ☐
Comment: TIS will discuss this in further review of the standards developement

E. Stability

Q31. The proposed standard is based on an assumption that steady state analysis and stability analysis are different from each other and that therefore, two tables of Contingencies and performance requirements were needed. It is also based on an assumption that stability study requirements should be clearly separated from the steady state study requirements. Do you agree with the action taken in separating stability analysis from steady state analysis? If not, please explain.

Yes ☒ No ☐
Comment: Although there are many simularities, separation of the testing requirements makes the standard far more understandable.

Q32. The SDT has added requirements for plant stability studies and has drawn a distinction in these studies from System stability studies. Do you agree with this approach? If not, please explain.

Yes ☒ No ☐
Comment: Planning Coordinators should study plant stability at the time of interconnection, and it should be reviewed for significant system or plant modifications that may impact the plant's stability.

Q33. The existing TPL-004-0 standard has a requirement to consider the Loss of all generating units at a plant, but it was not clear whether this requirement should apply to stability studies. The SDT did not include this requirement in the stability table, because it is hard to envision a condition when all units would trip simultaneously within the timeframe of a stability simulation. Do you think this condition should be required in stability analysis of extreme events? If not, please explain.

Yes ☒ No ☐
Comment: Simultaneous loss of the entire generating stations have occurred on 4 occasions in the last 3 years, with simultaneous losses ranging from 1,100 MW to over 3,700 MW. It is imporatant to understand the stability implications to the system and other plants.

Q34. There are an increasing number of events with slow voltage recovery after faults on the Transmission System. The dynamic behavior of induction motor loads is a major

factor in this phenomenon. The proposed standard therefore requires that the load model for stability studies of peak Load conditions include the dynamic effects of induction motors. Do you agree with this requirement? If not, please explain?

Yes ☒ No ☐
Comment: If such known phenomena are not properly modeled, how can the resultant study results be expected to be correct and a proper prediction of future system behavior. The modeling shortcomings of the Western Interconnection prior to the August 1996 western blackout showed no potential stability problems for the events that occurred; the system proved otherwise.

Q35. What type of manual or automatic adjustments of generators should be allowed for single and multiple Contingencies?

Comment: If system adjustments are allowed between events in steady state analysis, manual and automatic adjustments should both be allowed. However, in stability analysis, only automatic adjustments capabilities that are actually in place should be used.

F. Generation Runback and Tripping

The SDT has discussed the automatic and manual readjustments of generators that should be permissible for single contingencies and multiple contingencies. The existing TPL-001-0 through TPL-004-0 standards through footnote (a) of Table I could include emergency ratings applicable for short durations as required to permit operating steps necessary to maintain system control. The footnote is silent about allowable generation adjustments in response to the Category B events. However, it does indicate that system adjustments are permitted to prepare for the next Contingency. These system adjustments could include manual or automatic adjustments involving generation.

The SDT has learned that many transmission owners use System Protection Systems (SPS) or Remedial Action Schemes (RAS) to trip generation for single and multiple Contingency outage events to prevent overloads, low voltage, and instability in the Interconnected Transmission network for N-1 and N-2 events. In some cases, the RAS are used to prepare for the next Contingency; but in some cases, the RAS are used to simultaneously avoid exceeding emergency ratings.

Q36. The proposed standard allows generation runback after the disturbance that causes a single Contingency (or due to a single Contingency outage) to move the Interconnected Transmission System from an emergency state (within emergency ratings) to a normal state (within normal ratings), assuming that the disturbance does not result in instability? Do you agree? If not, please explain.

Yes ☒ No ☐
Comment: This is simply a recognition that the system operators will take action to return the system to a stable and secure operating posture following an event.

Q37. Since emergency ratings are thermal ratings, should this standard allow an automatic generation runback scheme (that is initiated immediately after the disturbance causing the single Contingency) to prevent thermal overloads (assuming that the disturbance does not result in instability)? If yes, what are the conditions that

must be met in order to allow such a runback scheme to meet the System performance criteria for single Contingencies? Please explain the reason for your answer.

Yes ☒ No ☐
Comment: This is simply a recognition that the system operators will take action to return the system to a stable and secure operating posture following an event. This is also common practice in generator protection/controls for generators with multiple GSUs for loss of one of the GSUs.

The standard drafting team has considered that RAS or SPS may be allowable under certain situations for single Contingencies, but proposes that their use should be limited.

Q38. Do you agree that RAS or SPS may be allowed for single Contingencies? If not, please explain.

Yes ☒ No ☐
Comment:

Q39. Please describe the limitations that you believe should be placed on the use of RAS or SPS for single Contingency events.

Comment:

Q40. When RAS or SPS are allowed, what conditions should be met when these systems are used in system adjustments to meet performance requirements?

Comment: No special conditions required as long as the RAS or SPS are tested to meet the performance requirements.

G. General Questions

Q41. If you are aware of any regional variances that would be required as a result of these standards, please identify them here.

Yes ☒ No ☐
Comment: There may be some in the application of RAS or SPS for N-1 contingencies.

Q42. If you are aware of any conflicts between the proposed standards and any regulatory function, rule order, tariff, rate schedule, legislative requirement or agreement, please identify them here.

Yes ☐ No ☐
Comment:

Q43. Do you have any other questions or concerns with the proposed standard that have not been addressed? If yes, please explain.

Yes ☒ No ☐
Comment:

TIS Additional Comments to First Draft of TPL-001-1 — Transmission System Planning Performance Requirements

October 26, 2007

1. In definition of "CONSEQUENTIAL LOAD," misoperations need to be defined better or removed, i.e. inadvertent tripping of elements due to protection system failure, including inadvertent SPS operation, may cause loss of load NOT connected to the element tripped off. In context of the definition, it appears that the misoperation should be on the protection system for the element that is tripped. {PARTLY COVERED}
2. Even when post-contingency voltage remains within prescribed limits, some voltage-sensitive customer load could still be dropped off due to their inherent sensitivity to allowed changes in voltage. Should such cases be considered as dropping non-consequential load or are the performance requirements met as long as post-contingency voltage stays within the prescribed limits? Such load losses can rarely be predicted by steady state analysis unless the loads and their distinct characteristics are explicitly modeled, but may be detectible in dynamic analysis since it is often the first swing voltage excursion that trips such loads.
3. Assuming the standard is passed, especially if the bar is raised, there should be some reasonable implementation period specified to allow entities that do not meet the standard's requirements presently and time to implement changes to become compliant.
4. Why is there a 300 kV threshold? Is there evidence that increasing the redundancy of the high voltage network will provide the largest reliability benefits?
5. Need to specifically define when it is OK to use "permanent" SPSs to meet performance requirements following the first contingency, i.e. separating a balance island should be OK. It is OK to utilize temporary SPS while the permanent corrective measure is being put in place.
6. Need to define, perhaps in the list of definitions, what is the "bus-tie breaker." Differentiation of center breakers in breaker-and-one-half schemes is a crucial item not to be subject to interpretation and possible confusion.
7. Need to clarify that "stuck breaker", regardless of whether cause by protection system failure, breaker failure to operate, or a slow breaker, is de-facto delayed clearance and causes additional contingency (ies).
8. Firm Transfer Cell for P3 does not make sense.
9. Need to strengthen the notion, in the bullets at the top of Table 1, that the assessment should also cover n-0 or "normal state (seems to be adequately covered in the body of the standard, but does not jump out from the Table 1 bullets at the head of the table.)
10. Include SHUNT DEVICES in P3–P9 planning contingencies. The same comment is applicable for stability table.

11. Need to clearly specify what documentation would be required to fulfill the standard's requirements for assessing extreme contingencies.
12. Replace "all" in the Extreme Events subheading with a more appropriate term.
13. Replace "all" in the table for Extreme Events for both Steady State and Stability tables with a more appropriate term to manage documentation requirements.
14. Use different designations for planned and extreme events in steady state and stability tables, e.g. PS and ES for steady state and PD and ED for stability (D for dynamic).
15. Throughout the tables, do not refer to "internal" breaker faults but use breaker fault instead. Faults can occur internal to the breaker, flashed bushings, or a fault (on or within) a free-standing CT associated with the breaker.
16. Modify bullet 5 in the Stability Table to include SPS failures to read:

    > "Simulate the removal of all elements that Protection Systems, SPS or RAS systems, and controls are expected to disconnect for each Contingency."

    If an SPS or RAS is expected to operate for a contingency, it must be modeled as such for that contingency study.
17. In R1.2 need to add "for the period analyzed" and defined what "stressed" conditions means.
18. In R 2.1.3.7 need to insert "long-term" in front of "transmission outages." There is also a need to clarify/describe/define what long-term transmission outage is.
19. There are concerns, particularly for NON-vertically integrated TPs, about need of including Plant Stability requirements.
20. Define what "material" change is in R2.5.2.
21. Presumably the standard will be stamped with a CEII designation
22. Additional granularity should be included showing the correlation between Requirements and their applicability to any of the Functional Model Entities cited in the Standard.

23. Obligations to study and share results of the following should be clear in the TPL Standards:
    - Analysis of impacts on your system for contingencies outside of your system footprint.
    - Analysis of impacts on other systems for contingencies within your system. The owners of the other systems should be notified of your findings and joint analysis should be done if warranted.
    - Powerflow and stability analysis of contingencies that have interconnection-wide impacts. This may best be accomplished through modifications to existing standard TPL-005.

Transmission Issues Subcommittee

Chairman	David Till Manager, Transmission Planning	Tennessee Valley Authority 1101 Market Street MR 5G Chattanooga, Tennessee 37402	(423) 751-7147 bdtill@tva.gov
Past Chairman	Kenneth A. Donohoo, P.E. Director System Planning	Oncor Electric Delivery 2233-B Mountain Creek Parkway Dallas, Texas 75211	(214) 743-6823 (972) 263-6710 Fx kdonoho1@ oncor.com
Correspondent	Kirit S. Shah	P.O. Box 66149 (Mail code 635) St. Louis, Missouri 63166	(314) 554-3542 (314) 554-3268 Fx kshah@ameren.com
Correspondent	Anthony Alford Staff Engineer	CenterPoint Energy P.O. Box 1700 Houston, Texas 77251	(713) 207-2265 anthony.alford@ centerpointenergy.co m
ERCOT	Wesley Woitt Supervising Engineer	CenterPoint Energy P.O. Box 1700 Houston, Texas 77251	(713) 207-2760 wesley.woitt@ centerpointenergy.co m
FRCC	Hector Sanchez Supervisor, Bulk Transmission	Florida Power & Light Co. 4200 W. Flagler Street, TSP/LFO Miami, Florida 33134	(305) 442-5062 (305) 442-5790 Fx hector_sanchez@ fpl.com
MRO	Dale Burmester Manager, Access/Transmission Planning	American Transmission Company, LLC 2 Fen Oak Court Madison, Wisconsin 53718	(608) 877-8109 (608) 444-2447 Fx dburmester@ atcllc.com
NPCC	Thomas J. Gentile Director, Technology Transfer	National Grid USA 25 Research Drive Westborough, Massachusetts 01582	(508) 389-3799 (508) 389-4405 Fx thomas.gentile@ us.ngrid.com
RFC	Eric M. Mortenson Senior Engineer	Exelon Energy Delivery Two Lincoln Centre 9th Floor Oakbrook Terrace, Illinois 60181	(630) 576-6898 (630) 576-6354 Fx eric.mortenson@ exeloncorp.com
RFC	Bernard M. Pasternack, P.E. Managing Director - Transmission Asset Management	American Electric Power 700 Morrison Road Gahanna, Ohio 43230-8250	(614) 552-1600 (614) 552-2602 Fx bmpasternack@ aep.com
RFC	William Whitehead General Manager, Transmission and Interconnection Planning	PJM Interconnection, L.L.C. 955 Jefferson Avenue Valley Forge Corporate Center Norristown, Pennsylvania 19403-2497	(610) 666-4561 (610) 666-2296 Fx whitew@pjm.com

SERC	Mark Byrd Manager - Transmission Planning	Progress Energy Carolinas	(919) 546-7937 (919) 546-2684 Fx mark.byrd@ pgnmail.com
SPP	Jay Caspary Director, Engineering	Southwest Power Pool 415 North McKinley Suite 140 Little Rock, Arkansas 72205	(501) 614-3220 (501) 666-0376 Fx jcaspary@spp.org
WECC	Branden Sudduth Associate Staff Engineer	Western Electricity Coordinating Council 615 Arapeen Drive Suite 210 Salt Lake City, Utah 84108	(801) 582-0353 (801) 582-3918 Fx branden@wecc.biz
Cooperative	To Be Named		
Customer	To Be Named		
Federal	To Be Named		
Investor Owned Utility	W. Perry Stowe Director, Transmission Planning Department	Southern Company Transmission Company Bin 13N-8183 P.O. Box 2641 Birmingham, Alabama 35291-8183	(205) 257-6138 (205) 257-1040 Fx wpstowe@ southernco.com
IPP	Scott M. Helyer Vice President, Transmission	Tenaska, Inc. 1701 E. Lamar Blvd. Suite 100 Arlington, Texas 76006	(817) 462-1512 (817) 462-1510 Fx shelyer@tnsk.com
ISO/RTO	Jeffrey R. Webb Director of Planning	Midwest ISO, Inc. 701 City Center Drive Carmel, Indiana 46032	(317) 249-5412 (317) 249-5910 Fx jwebb@ midwestiso.org
Power Marketer	Israel Melendez Vice President, Grid Optimization	Constellation Energy Commodities Group 111 Market Place, Suite 500 Baltimore, Maryland 21202	(410) 470-5268 (410) 468-3540 Fx izzy.melendez@ constellation.com
State/Municipal	To Be Named		
TDU	To Be Named		
Canada	Yury Tsimberg Manager, Asset Strategies and Standards	Hydro One, Inc. 483 Bay Street North Tower, 15th Floor M5G 2P5 Toronto, Ontario M5G 2P5	416-345-5867 416-345-5443 Fx Yury.Tsimberg@ HydroOne.com
Correspondent	Thomas W. Green Principal Transmission Planning Engineer	Xcel Energy, Inc. 550 15th Street Suite 700 Denver, Colorado 80202-4205	(303) 571-7223 (303) 571-7877 Fx thomas.green@ xcelenergy.com

Correspondent	I. Paul McCurley Manager, Power Supply	National Rural Electric Cooperative Association 4301 Wilson Boulevard MC EP11-252 Arlington, Virginia 22203-1860	(703) 907-5867 (703) 907-5517 Fx paul.mccurley@ nreca.coop
NRECA	Patricia E. Metro	National Rural Electric Cooperative Association 4301 Wilson Blvd. Mail Code EP11-253 Arlington, Virginia 22203	(703) 907-5817 (703) 907-5517 Fx patti.metro@ nreca.coop
Correspondent	Guy V. Zito Assistant Vice President of Standards	Northeast Power Coordinating Council, Inc. 1515 Broadway 43rd Floor New York, New York 10036	(212) 840-1070 (212) 302-2782 Fx gzito@npcc.org
NPCC Alternate	Hai Quoc Le Manager, System Planning and Protection	Northeast Power Coordinating Council, Inc. 1515 Broadway 43rd Floor New York, New York 10036-8901	(212) 840-1070 (212) 302-2782 Fx quoc@npcc.org
ISO/RTO Alternate	Steve Corey Manager, Transmission Planning	New York Independent System Operator 5172 Western Turnpike Altamont, New York 12009	(518) 356-6134 (518) 356-6208 Fx scorey@nyiso.com
OC Liaison	To Be Named		
	Eric H. Allen Senior Engineer of Reliability Performance and Events Analysis	North American Electric Reliability Corporation 116-390 Village Boulevard Princeton, New Jersey 08540-5721	(609) 452-8060 (609) 452-9550 Fx eric.allen@ nerc.net
PC Observer	James K. Robinson Bulk Power Analysis Manager	PPL Electric Utilities Corp. 2 North 9th Street Allentown, Pennsylvania 18101	(610) 774-4554 (610) 774-4116 Fx jkrobinson@ ieee.org
NERC Staff Coordinator	Robert Cummings Director of Event Analysis & Information Exchange	North American Electric Reliability Corporation 116-390 Village Boulevard Princeton, New Jersey 08540-5721	(609) 452-8060 (609) 452-9550 Fx bob.cummings@ nerc.net
NERC Staff	John L. Seelke, Jr. Manager of Planning	North American Electric Reliability Corporation 116-390 Village Boulevard Princeton, New Jersey 08540	(609) 452-8060 (609) 452-9550 Fx john.seelke@ nerc.net

NERC
NORTH AMERICAN ELECTRIC RELIABILITY CORPORATION

Comment Form for First Draft of TPL-001-1 — Transmission System Planning Performance Requirements

Please use this form to submit comments on the proposed draft of TPL-001-1. Comments must be submitted by **Friday, October 26, 2007**. You may submit the completed form by e-mail to sarcomm@nerc.net with the words "TPL-001 Draft 1" in the subject line. If you have questions please contact Ed Dobrowolski at ed.dobrowolksi@nerc.net or by telephone at 609-947-3673.

Individual Commenter Information **(Complete this page for comments from one organization or individual.)**		
Name:	Kathleen Goodman	
Organization:	ISO New England	
Telephone:	(413) 535-4111	
E-mail:	kgoodman@iso-ne.com	
NERC Region (check all Regions in which your company operates)		**Registered Ballot Body Segment (check all industry segments in which your company is registered)**
☐ **ERCOT**	☐	1 — Transmission Owners
☐ **FRCC**	☒	2 — RTOs and ISOs
☐ **MRO**	☐	3 — Load-serving Entities
☒ **NPCC**	☐	4 — Transmission-dependent Utilities
☐ **RFC**	☐	5 — Electric Generators
☐ **SERC**	☐	6 — Electricity Brokers, Aggregators, and Marketers
☐ **SPP**	☐	7 — Large Electricity End Users
☐ **WECC**	☐	8 — Small Electricity End Users
☐ **NA – Not Applicable**	☐	9 — Federal, State, Provincial Regulatory or other Government Entities
	☐	10 — Regional Reliability Organizations and Regional Entities

Group Comments (Complete this page if comments are from a group.)

Group Name:

Lead Contact:

Contact Organization:

Contact Segment:

Contact Telephone:

Contact E-mail:

Additional Member Name	Additional Member Organization	Region*	Segment*

*If more than one Region or Segment applies, please list all that apply. Regional acronyms and segment numbers are shown on prior page.

Background

The purpose of this standard is to establish Transmission System planning performance requirements within the planning horizon to develop a Bulk Electric System that will operate reliably over a broad spectrum of System conditions and following a wide range of probable Contingencies. This standard will replace TPL-001-0, TPL-002-0, TPL-003-0, and TPL-004-0. The standard drafting team has not yet addressed TPL-005-0 and TPL-006-0, but will address these two standards during the next phase of the drafting process.

The major objectives of the standard drafting team are to:

1) Ensure the standard is complete and the requirements are set at an appropriate level to ensure reliability (Not Least Common Denominator)
2) Ensure that the standard is enforceable by having clearly defined requirements with unambiguous language
3) Address the issues raised by FERC Order 693, 890, and other applicable orders
4) Address the issues raised in the original Standards Authorization Request (SAR) and the Supplemental SAR.

The standard drafting team did not attempt to edit the existing standards but rather chose to write one standard that addresses all aspects of transmission planning in the existing TPL-001-0, TPL-002-0, TPL-003-0, and TPL-004-0. The standard drafting team organized the new standard in the following sections:

R1 – Modeling requirements
R2 – Assessment and Corrective Plan requirements
R3 – Steady State Analysis requirements
R4 – Stability Analysis requirements
R5 – Coordination requirements

The standard drafting team determined that the requirements and analysis for Steady State are different from those for stability. As such, the standard drafting team separated the analysis requirements and created two performance requirement tables.

The standard drafting team recognizes that this draft standard is a starting point for industry input into the standard and that there is still a lot of work required to complete the process. The standard drafting team has made many changes to clarify requirements, add requirements, and make some of the performance requirements stricter. The standard drafting team has not addressed Measures, Risk Factors, Violation Severity Factors, or Time Horizons at this time. These will be addressed when the standard drafting team has better defined the requirements of the standard.

For questions where you agree with the standard drafting team, please state that you agree and if available, please provide supporting documentation. If you disagree with the standard drafting team, please explain why you disagree and provide data to support your position, such as outage data or analysis. If you believe that we have made a performance requirement too strict please provide supporting documentation. If applicable, please include the approximate cost in man-hours for additional studies and/or cost in $Millions for additional transmission investment to meet the new requirements or the stricter requirements. If you believe that the standard should be stricter, please provide the rationale along with any supporting data, including existing practices, cost estimates or additional analysis.

To improve the standard, the standard drafting team would appreciate responses to as many of these questions as you can answer.

A. New Definitions

Many of the concerns about the existing TPL standards come from the fact that a number of generally understood concepts are embedded in undefined terms, tables, and footnotes. To clarify some of these concerns, the standard drafting team is proposing new definitions. Please indicate whether you agree with the following proposed definitions and provide proposed changes to the definitions if you disagree:

Definition	**Agree or Disagree**
Q1. **Base Case**: Computer representation of the projected initial or starting Transmission System conditions for a specific point in time. Each base case reflects the forecasted Load at each bus (or node) on the interconnected Transmission System, the transmission facilities which deliver the generation and reactive resources to the connected Load, and the generation dispatch including firm transaction obligations assumed to supply the connected Load. The models also reflect facility ratings in accordance with FAC-008 & FAC-009.	☐Agree. ☒Do not agree.
Q1. **Comment: There are a few undefined terms in this definition: "Transmission System" and "interconnected Transmission System". The definition needs to specifically identify what should be modeled and in a manner consistent with other NERC definitions. The definition refers to Facility ratings rather than the general reference to FAC-008 & FAC-009**	
Q2. **Consequential Load Loss:** Load that is no longer served because it is directly connected to an element(s) that is removed from service due to fault clearing action or mis-operation.	☒Agree. ☐Do not agree.
Q2. **Comment:**	
Q3. **Extreme Events:** Events which are more severe than Planning Events and have a low probability of occurrence.	☐Agree. ☒Do not agree.
Q3. **Comment: Modify to "Events which are more severe,but have a lower probability of occurrence, than Planning Events".**	
Q4. **Long-Term Transmission Planning Horizon:** Transmission planning period that covers years six through ten or beyond.	☐Agree. ☒Do not agree.
Q4. **Comment: "Transmission planning period that covers years six through ten", is sufficient for the standard." Suggest changing the name to Long-Term Planning Assessment.**	
Q5. **Near-Term Transmission Planning Horizon:** Transmission planning period that covers years One through five.	☒Agree. ☐Do not agree.
Q5. **Comment: Suggest changing the name to Near-Term Planning Assessment.**	
Q6. **Non-Consequential Load Loss:** Load loss other than	☒Agree.

Consequential Load Loss. For example, Load loss that occurs through manual (operator initiated) or automatic operations such as under-voltage Load shedding, under-frequency Load shedding, or Special Protection Systems.	☐Do not agree.
Q6. **Comment:**	
Q7. **Planning Assessment:** Documented evaluation of future Bulk Electric System needs by the use of performance studies that cover a range of assumptions regarding system conditions, time frames, future plans including capital reinforcements and operating procedures and other factors, such as asset conditions and age.	☐Agree. ☒Do not agree.
Q7. **Comment: Eliminate "capital" from the definition. It is not defined or consistently applicable to the standard. Reference to vague "other factors, such as asset conditions and age" should be removed from this standard; there are no consistent definitions or industry standards on which to base this requirement, nor does it appear to be a necessary addition to the standard.**	
Q8. **Planning Events:** Events which require Transmission system performance requirements to be met.	☐Agree. ☒Do not agree.
Q8. **Comment: Propose, "Events for which Transmission performance requirements must be met".**	
Q9. **Plant Stability Study:** Study of an individual plant's Stability for various Contingencies in the vicinity of the plant; concerned with the effect on the System of the generating units' loss of synchronism and the damping of the generating units' power oscillations.	☐Agree. ☒Do not agree.
Q9. **Comment: A Plant Stability Study should be a part of a System Stability Study. How should and why would they be differentiated? The analysis and performance constraints are the same in both cases; it's just a matter of whether one or more generating units are involved.**	
Q10. **System Stability Study:** Study of the System or portions of the System to ensure that angular Stability is maintained, inter-area power oscillations are damped, and voltages during the dynamic simulation stay within acceptable performance limits.	☐Agree. ☒Do not agree.
Q10. **Comment: See comment on Q9; proposed modification, "Study of the System or portions of the System to determine whether unit and system angular Stability is maintained, power oscillations are damped, and voltages during the dynamic simulation stay within acceptable perfomance limits.**	
Q11. **Year One:** The first year that a Transmission Planner is responsible for studying. This is further defined as the planning window that begins the next calendar year from the time the Transmission Planner submits their annual studies. Analysis conducted for time horizons within the calendar year from the study publication are assumed to be conducted under the auspices of Operations Planning.	☐Agree. ☒Do not agree.
Q11. **Comment: Modify to, "The first year that a Tranmission Planner is responsible for studying. This is further defined as the planning window that begins the next calendar year from the time the Transmission Planner completes its annual studies."**	

B. Sensitivity Studies

The draft planning standard includes the requirement, as specified in FERC Order 693, that planning decisions be based on a portfolio of analyses. In section 12.a.ii "Sensitivity studies and critical system conditions" FERC provided direction to consider a full range of variables considered to be significant that need to be assessed and documentation provided that explains the rationale for the selection of variables assessed.

In addition to the firm obligation scenario, the portfolio of analyses should be supplemented to include information from sensitivity analysis. The sensitivity analysis should be developed using additional cases that simulate reasonably stressed system conditions. The standard drafting team has included several parameters that can be varied to create the requisite sensitivity case(s). The draft standards specify that the sensitivities reflect one or more of the following conditions and that documentation be provided explaining the rationale for selecting the sensitivity(ies) employed. The parameters that should be varied include:

- Higher or lower Load forecasts from the Base Case with variability of Load/demand and Load power factors due to season, weather, or time of day.
- Modification of expected transfers.
- Unavailability of long lead time facilities.
- Variability and outages of Reactive Resources.
- Generation additions, retirements, or other dispatch scenarios.
- Decreased effectiveness of controllable Loads and Demand Side Management.
- Modification of planned Transmission outages

To help focus industry discussion, please respond to the questions below:

Q12. Should the standard provide more specific direction regarding the number of sensitivity cases that need to be developed?

Yes ☐ No ☒

Comment: The standard is unclear whether or not it mandates the requirement to develop action plans for problems highlighted as a result of one of the sensitivities.

Suggest modification to, "…sensitivity testing that stresses the System shall be considered, and documentation with the rationale for the sensitivity testing shall be supplied. The sensitivity case(s) may include one or more of the following conditions:"

2.1.3.3 should refer only to planned facilities that may be delayed. 2.1.3.4 - "variability" is too vague for a standard; the standard needs to be more specific as to the intent. 2.1.3.7 should be consistent with 1.4. These comments also apply to 2.4.3.

Q13. Should the standard specify the required changes, such as changes in expected transfers, load forecasts, generation patterns, etc., from the study case to be considered a "reasonably stressed" case?

Yes ☐ No ☒

Comment: The standard is unclear whether or not it mandates the requirement develop action plans for problems highlighted as a result of one of the sensitivities.

Reasonably stressed conditions are dependent upon the study area under review and the standard is not likely to be able to be crafted to provide sufficent and consistent direction. However, it might be helpful if the standard clarified whether the base case should include any unplanned generator outages or whether, aside from potential sensitivities, unplanned generator outages are considered only through P1, P3 or P4 Contingencies. If the standard addresses unplanned generator outages only through P1, P3 and P4, then it is recommended that a mandatory sensitivity analysis, with required mitigation, include various potential combinations of a reasonable amount of unplanned outages. The combinations should be based on the part of the system that is under study.

Q14. The SDT proposes to require the use of sensitivity studies for Near-Term Transmission System Planning Horizon stability analysis. Do you concur with the use of sensitivity analysis in dynamic studies?

Yes ☒ No ☐
Comment: The standard is unclear whether or not it mandates the requirement to devleop action plans for problems highlighted as a result of one of the sensitivities.

Suggest modification to, "…sensitivity testing that stresses the System should be considered. Sensitivity case(s) might include among the following conditions:" 2.4.3 should mimic 2.1.3 except in regard to load models.

Q15. The draft TPL standard does not require the use of sensitivity studies for the Long-Term Transmission System Planning Horizon (year six and beyond) studies. Do you concur with this approach or should there be some level of sensitivity analysis required for the long-term period?

Yes ☒ No ☐
Comment: There is no need for sensitivity analysis.

C. Corrective Action Plans

Requirement R2.7 of the standard states that when analysis shows that the performance requirements in Table 1 and Table 2 are not fully met, a Corrective Action Plan that utilizes all or some of the Transmission System enhancements, generation additions, DSM, new technologies and Operating Procedures shall be included in the Planning Assessment. This Corrective Action Plan should ensure that upon its implementation the identified system deficiencies will be corrected so that the performance requirements in Table 1 and Table 2 will be met. Furthermore, studies included in the Planning Assessment should demonstrate that this is indeed the case.

Q16. Requirement R2.7.1: Such Corrective Action Plans shall "Identify System deficiencies and the associated actions needed to achieve required System performance including Transmission and generation improvements, DSM, new technologies, or Operating Procedures including the duration of Interim Operating Procedures". System deficiencies may be corrected using an integrated plan, i.e., an optimal mix of Transmission, generation, DSM and Operating Procedures. Should DSM be considered in conjunction with other measures in developing Corrective Action Plans? If yes, please comment on how the impact of DSM should be included.

Yes ☒ No ☐
Comment: DSM should be included to the extent that its performance is sufficiently and consistently understood. The standard does not use the term "optimal" Therefore, the Drafting Team appears to be interpreting the Standard to require a vertically-integrated Planner to produce a so-called optimal-mix of resources plan. This would be an incorrect assumption and is not required. In areas with independent planners and competitive wholesale markets, it is sufficent to identify system needs and produce a plan that identifies regulated transmission solutions in the event that market-based resources (such as DSM) do not address those identified needs. Therefore, while DSM can be as effective a resource as generation, per Commission Orders,

in areas with ISOs/RTOs and a competitive wholesale market, the NERC Standard cannot prescribe the development so-called optimized (as is suggesgted by the Drafting Team) resource-mix plans, as identified by a central planner.

Q17. Requirement R2.7.2: Such Corrective Action Plans shall "Be added to study cases and the cases re-tested to show that the System with planned additions meets the performance requirements in the tables". Should new studies, including the facilities comprising the Corrective Action Plan, be performed to assess System normal performance and Contingency response for conditions that previously resulted in the System deficiencies (without the planned additions) and also demonstrate that the changes would not result in inadvertent negative impacts on the System. If you "agree", please comment on how a study area should be determined.

Yes ☒ No ☐
Comment: The study area should be based upon planning expertise and knowledge of the system, giving due consideration to external impacts.

Q18. Requirement R2.7.3: The standard calls for a differentiation between committed and proposed projects. Do you agree that they should be treated separately? If not, please state why not.

Yes ☒ No ☐
Comment: They should be viewed differently in the Near-Term. However, these should be defined terms.

Q19. Requirement R2.7.4: For such Corrective Action Plans "Committed projects shall not be removed without documentation to show that the revised plan meets the performance requirements". Do you agree or disagree with this requirement? If you disagree, please explain why.

Yes ☒ No ☐
Comment: It is unclear as to what the commited project is being removed from. Suggested language "…removed from the plan…".

D. Performance Requirements

The proposed revised planning standard (TPL-001-1) incorporates a number of changes in requirements as compared to the current planning standards (TPL-001-0 through TPL-004-0), which it is expected to replace. Among other things these changes are intended to clarify the standard, address issues described by FERC, and, in particular, to "raise the bar." Strengthening the planning standards in selected areas is necessary to maintain a reliable Bulk Electric System that is up to the challenges of the 21st Century. In proposing the requirements in this draft, the standard drafting team attempted to balance the value of increased reliability against any potential increase in work and costs to meet the new proposed standard.

The standard drafting team is seeking input from the industry to determine whether a proper balance has been achieved. The areas where material changes are proposed in this draft are enumerated below, and questions are posed by the standard drafting team to obtain industry comment. In formulating your responses, please keep in mind that material changes in the final standard will be accompanied by a transition plan to provide for an orderly implementation of the final standard.

The performance requirements relative to Non-Consequential Loss of Load for the following events enumerated in the two tables can be considered more stringent than the existing TPL standards. Furthermore, the proposed standard is based on an assumption that performance requirements for EHV facilities should be more stringent than for lower voltage facilities.

Do you agree that Non-Consequential Loss of Load should not be permitted for the following events? If you disagree, please provide a reason for your disagreement.

Event	Agree or Disagree	Comment
Q20. P2-1: Loss of bus section (SLG for stability) above 300 kV	☒Agree. ☐Do not agree.	
Q21. P5-1: For facilities above 300 kV, loss of a Transmission circuit followed by System adjustment[1] followed by loss of another Transmission circuit	☐Agree. ☒Do not agree.	Given the low probability of extended overlapping outages of overhead facilities, systems have been designed assuming that load shedding following the loss of a second transmission line is permissible. Eliminating any allowance for load shedding for this condition may require significant system expansion and cost to to customers. However, it would be reasonable to consider establishing an upper bound to the amount of load that could be shed for these purposes.
Q22. P5-2: For facilities above 300 kV, loss of a Transmission circuit followed by System adjustment followed by loss of a transformer with low side voltage rating above 300 kV	☐Agree. ☒Do not agree.	Should also consider the initial loss of a transformer, followed by the loss of a Transmission circuit. This should state a transformer with a "high-side" rating above 300 kV.
Q23. P5-3: For facilities above 300 kV, loss of a transformer with low side voltage rating above 300 kV followed by System adjustment followed by loss of another transformer	☐Agree. ☒Do not agree.	This should state a transformer with a "high-side" rating above 300 kV.

[1]System adjustment can be manual or automatic.

The proposed standard is based on an assumption that performance requirements for non-bus tie EHV breakers should be distinguished from other breakers. Do you agree that Non-Consequential Loss of Load should not be permitted for this event?

Q24. Loss of non-bus tie breaker (above 300 kV) due to internal fault

Yes ☒ No ☐
Comment: It is unclear why bus tie breakers are being treated differently than other breakers. They should be treated the same.

The proposed standard is based on an assumption that performance requirements for non-bus tie EHV breakers should be distinguished from other breakers and that performance requirements for EHV facilities should be more stringent than for lower voltage facilities. Do you agree that Non-Consequential Loss of Load should not be permitted for this event?

Q25. P3-1: Loss of (SLG for stability) either a generator, a Transmission circuit, a transformer, or a bus and a stuck non-bus tie breaker (above 300 kV)

Yes ☐ No ☒
Comment: It is unclear why bus tie breakers are being treated differently than other breakers. They should be treated the same.

The proposed standard is based on an assumption that the following events are relatively high probability events and, therefore, Non-Consequential Loss of Load should not be permitted. Do you agree? If you disagree, please provide a reason for your disagreement.

Event	Agree or Disagree	Comment
Q26. P4-1: Loss of a Generator followed by System adjustment[1] followed by loss of another Generator	☐Agree. ☒Do not agree.	If the base case or a mandatory sensitivity case already includes unplanned generator outages, some load loss may be reasonable following the subsequent loss of 2 additional generators.
Q27. P4-2: Loss of a generator followed by a System adjustment followed by the loss of a monopolar DC line	☐Agree. ☒Do not agree.	If the base case or a mandatory sensitivity case already includes unplanned generator outages, some load loss may be reasonable following the subsequent loss of an additional generators and a monopolar DC line
Q28. P4-3: Loss of a generator followed by System adjustment followed by loss of a Transmission circuit	☐Agree. ☒Do not agree.	If the base case or a mandatory sensitivity case already includes unplanned generator outages, some load loss may be reasonable following the subsequent loss of an additional generators and a Transmission circuit
Q29. P4-4: Loss of a generator followed by System adjustment followed by loss of a transformer	☐Agree. ☒Do not agree.	If the base case or a mandatory sensitivity case already includes unplanned generator outages, some load loss may be reasonable following the subsequent loss of an additional generators and a transformer

The performance requirement for the following event may be considered less stringent than the existing TPL Standards — P2-3: Loss of a single pole of a DC line. Interruption of firm

[1] System adjustment can be manual or automatic

transactions (without Loss of firm Load) if the transaction is dependent on the faulted DC line is now allowed for this initiating event/Contingency.

Q30. Do you agree that interruption of any firm transfers that are dependent on the outaged DC line that is taken out of service should be permitted?

Yes ☒ No ☐
Comment: This should also apply to firm transfers via single or double ac facilities as well. In either case, the transfer could be linked to dedicated facilities.

E. Stability

Q31. The proposed standard is based on an assumption that steady state analysis and stability analysis are different from each other and that therefore, two tables of Contingencies and performance requirements were needed. It is also based on an assumption that stability study requirements should be clearly separated from the steady state study requirements. Do you agree with the action taken in separating stability analysis from steady state analysis? If not, please explain.

Yes ☒ No ☐
Comment:

Q32. The SDT has added requirements for plant stability studies and has drawn a distinction in these studies from System stability studies. Do you agree with this approach? If not, please explain.

Yes ☐ No ☒
Comment: A Plant Stability Study should be a part of a System Stability Study. How should and why would they be differentiated? The analysis and performance constraints are the same in both cases; it's just a matter of whether one or more generating units are involved.

Q33. The existing TPL-004-0 standard has a requirement to consider the Loss of all generating units at a plant, but it was not clear whether this requirement should apply to stability studies. The SDT did not include this requirement in the stability table, because it is hard to envision a condition when all units would trip simultaneously within the timeframe of a stability simulation. Do you think this condition should be required in stability analysis of extreme events? If not, please explain.

Yes ☐ No ☒
Comment: Difficult to envision how such an event would occur.

Q34. There are an increasing number of events with slow voltage recovery after faults on the Transmission System. The dynamic behavior of induction motor loads is a major factor in this phenomenon. The proposed standard therefore requires that the load model for stability studies of peak Load conditions include the dynamic effects of induction motors. Do you agree with this requirement? If not, please explain?

Yes ☐ No ☒
Comment: This requirement is too specific and limited. Induction motors are only one component of a complex load model. Complex load models are not always necessary, nor are they always the most conservative, depending on the analysis that is being conducted. Where complex load models are required, they should be considered; this may involve use of complex motor and lighting loads or polynomial load representations

with or without frequency dependence. This question also suggests the need for an industry standard regarding transient voltage recovery.

Q35. What type of manual or automatic adjustments of generators should be allowed for single and multiple Contingencies?

Comment: Manual or automatic adjustments should be permissible to allow redispatch to return the system to below normal/load cycle based ratings; however, the system should not exceed applicable emergency ratings prior to the adjustment. Manual system adjustment should be allowed in between the multiple Contingencies described in P5, provided that the adjustment can be made between contingencies using short-term reserves (10-30 minute).

F. Generation Runback and Tripping

The SDT has discussed the automatic and manual readjustments of generators that should be permissible for single contingencies and multiple contingencies. The existing TPL-001-0 through TPL-004-0 standards through footnote (a) of Table I could include emergency ratings applicable for short durations as required to permit operating steps necessary to maintain system control. The footnote is silent about allowable generation adjustments in response to the Category B events. However, it does indicate that system adjustments are permitted to prepare for the next Contingency. These system adjustments could include manual or automatic adjustments involving generation.

The SDT has learned that many transmission owners use System Protection Systems (SPS) or Remedial Action Schemes (RAS) to trip generation for single and multiple Contingency outage events to prevent overloads, low voltage, and instability in the Interconnected Transmission network for N-1 and N-2 events. In some cases, the RAS are used to prepare for the next Contingency; but in some cases, the RAS are used to simultaneously avoid exceeding emergency ratings.

Q36. The proposed standard allows generation runback after the disturbance that causes a single Contingency (or due to a single Contingency outage) to move the Interconnected Transmission System from an emergency state (within emergency ratings) to a normal state (within normal ratings), assuming that the disturbance does not result in instability? Do you agree? If not, please explain.

Yes ☒ No ☐

Comment: Generation runback should be permissible to allow redispatch to return the system to below normal/load cycle based ratings; however, the system should not exceed applicable emergency ratings prior to the adjustment

Q37. Since emergency ratings are thermal ratings, should this standard allow an automatic generation runback scheme (that is initiated immediately after the disturbance causing the single Contingency) to prevent thermal overloads (assuming that the disturbance does not result in instability)? If yes, what are the conditions that must be met in order to allow such a runback scheme to meet the System performance criteria for single Contingencies? Please explain the reason for your answer.

Yes ☒ No ☐

Comment: However, this should only be allowed where failure of an automatic runback that is not functionally redundant would not have significant adverse impact on the Bulk Electric System.

The standard drafting team has considered that RAS or SPS may be allowable under certain situations for single Contingencies, but proposes that their use should be limited.

Q38. Do you agree that RAS or SPS may be allowed for single Contingencies? If not, please explain.

Yes ☒ No ☐
Comment: Only allowed where the failure of an SPS that is not functionally redundant would not have significant adverse impact on the Bulk Electric System.

Q39. Please describe the limitations that you believe should be placed on the use of RAS or SPS for single Contingency events.

Comment: Only allowed where SPS failure would not have significant adverse impact on the Bulk Electric System; non-Consequential loss of load should be allowed up to an amount potentially specified in the standard.

Q40. When RAS or SPS are allowed, what conditions should be met when these systems are used in system adjustments to meet performance requirements?

Comment: System must remain stable with acceptable voltages and all equipment within applicable emergency limits.

G. General Questions

Q41. If you are aware of any regional variances that would be required as a result of these standards, please identify them here.

Yes ☒ No ☒
Comment: Unsure due to ambiguities in the standard. Depending upon the final standard, New England may need exceptions for existing facilities or allowance for a transition period to develop a compliance plan.

Q42. If you are aware of any conflicts between the proposed standards and any regulatory function, rule order, tariff, rate schedule, legislative requirement or agreement, please identify them here.

Yes ☐ No ☒
Comment:

Q43. Do you have any other questions or concerns with the proposed standard that have not been addressed? If yes, please explain.

Yes ☒ No ☐
Comment: There should be a "P0" standard that applies to system performance without any contingencies.

Standard should be clear that stabiltiy analysis is not required for Long-Term Planning Assessment.

R.1.1 Load forecasts should be addressed in MOD standards, not TPL.

R 1.4 This should only refer to known long-term outages, not planned outages. Delete "including protective relays"; this is addressed through other provisions.

R.2.1 Shorten "Near-Term Transmission Planning Horizon Planning Assessment" to "Near-Term Planning Assessment".

R 2.2 Shorten "Long-Term Transmission Planning Horizon Planning Assessment" to "Long-Term Planning Assessment".

R2.1, 2.2, 2.3 & 2.4 – The initial paragraph should have identical language regarding 'annual', and 'current or past' aspects.

R2.1.1 There should not be a requirement to look at years one and two; a 5 year study should be sufficient. If there has been an ongoing 5 year study, there should be no major unexpected problems occurring in years 1 and 2. Studies of earlier years should only be required if an unanticipated event occurred that had not been considered in prior studies. The TPL should not address shorter term "Operating Studies" or operating issues.

R 2.2.1 Modify to "If any known projects have a lead time that is longer than ten years, the Planning Assessment shall be extended accordingly."

R 2.6 Steady-state, short circuit, and stability analysis should be required no more than every 5 years unless there is a significant change the system.

R 2.6.1 Remove reference to "market structure changes". The purpose of it's inclusion is unclear.

R 2.7.1.1 Project initiation date should be deleted. If it is retainted, it needs to be defined.

R 2.7.3 Committed and Proposed projects should be defined.

R 3.2.1/R 4.3 - What is the intent of this requirement? There should probably be an MOD associated with Generator Owner requirement to provide related generator protection/ limiter data or other plant information.

R 3.4/R 4.5.2 Remove the requirement to implement changes to reduce or mitigate the likelihood of such consequences of Extreme Events. This may not be reasonable or achieveable.

R 3.2 Sectionalizing schemes shall be considered when reflecting the post-contingent system.

R 3.2.2 - Propose deleting this. Line ratings should already take relay loadability into account.

R 3.3.2.1 - Proposed deleting "expected duration". This would be dependent upon the damage to the element due to the iniating event and other factors.

R 3.3.2.2 - The requirements of this section do not match P6.

R 3.3.3 - Change introductory language to read "Those multiple Contingencies that are…"

R 3.5 - Generation tripping should be allowed as well as generation run-back. In addition, all performance requirements shall be met, rather than just meeting facility rating requirements. Suggested lanague "Manual and automatic generation run-back and/or generation tripping is allowed as a response to single and multiple Contingencies as long as the performance requirements of this standard are met." If these changes are accepted, R 3.6 can be deleted.

R 4 and R 4.1 - The language should be made similar to R 3 and R 3.1.

Suggest bringing language similar R4.4 into the R 3, the steady state section.

R 4.2 - High speed automatic reclosing schemes shall be considered.

R 6.3 - Change to read "Planning Coordinators of neighboring impacted areas".

Table 1 3 b and c Extreme Event descriptions are vague concepts that cannot be practically simulated. 3 d and e are not reasonable or practically useful to simulate.

Table 1, P8 - Language needs to be clarifed as to how the 300 kV threshold is to be treated for transformers. Is this for the high side, low side, or both sides? P5 is much clearer.

Table 2 - Clarification needs to be made that the faults being simulated are permanent faults. This can be addressed under the "Performance Requirements" portion at the beginning of the table, or modify each fault description.

Table 2 P9. Recommend that this be changed to require that faults should be on different phases of each of two adjacent transmission circuits on a multiple circuit transmission tower

Table 1, P9(6) and Table 2 P9 - It is unclear as to what is meant by "A spare transformer inserted to replace an outaged transformer followed by System adjustments". Unclear as to what is to be tested.

General comment - Transmission System is used throughout the document and is an undefined term

NERC
NORTH AMERICAN ELECTRIC RELIABILITY CORPORATION

Comment Form for First Draft of TPL-001-1 — Transmission System Planning Performance Requirements

Please use this form to submit comments on the proposed draft of TPL-001-1. Comments must be submitted by **[Due Date in bold]**. You may submit the completed form by e-mail to sarcomm@nerc.net with the words "TPL-001 Draft 1" in the subject line. If you have questions please contact Ed Dobrowolski at ed.dobrowolski@nerc.net or by telephone at 609-947-3673.

Individual Commenter Information **(Complete this page for comments from one organization or individual.)**		
Name:	Walter A Pfuntner, PhD, PE	
Organization:	New York Independent System Operator	
Telephone:	518.356.6290	
E-mail:	wpfuntner@nyiso.com	
NERC Region (check all Regions in which your company operates)		**Registered Ballot Body Segment (check all industry segments in which your company is registered)**
☐ **ERCOT** ☐ **FRCC** ☐ **MRO** ☒ **NPCC** ☐ **RFC** ☐ **SERC** ☐ **SPP** ☐ **WECC** ☐ **NA – Not Applicable**	☐	1 — Transmission Owners
	☒	2 — RTOs and ISOs
	☐	3 — Load-serving Entities
	☐	4 — Transmission-dependent Utilities
	☐	5 — Electric Generators
	☐	6 — Electricity Brokers, Aggregators, and Marketers
	☐	7 — Large Electricity End Users
	☐	8 — Small Electricity End Users
	☐	9 — Federal, State, Provincial Regulatory or other Government Entities
	☐	10 — Regional Reliability Organizations and Regional Entities

Group Comments (Complete this page if comments are from a group.)

Group Name:

Lead Contact:

Contact Organization:

Contact Segment:

Contact Telephone:

Contact E-mail:

Additional Member Name	Additional Member Organization	Region*	Segment*

*If more than one Region or Segment applies, please list all that apply. Regional acronyms and segment numbers are shown on prior page.

Background

The purpose of this standard is to establish Transmission System planning performance requirements within the planning horizon to develop a Bulk Electric System that will operate reliably over a broad spectrum of System conditions and following a wide range of probable Contingencies. This standard will replace TPL-001-0, TPL-002-0, TPL-003-0 and TPL-004-0. The SDT has not yet addressed TPL-005-0 and TPL-006-0, but will address these two standards during the next phase of the drafting process.

The major objectives of the SDT are to:

1) Ensure the standard is complete and the requirements are set at an appropriate level to ensure reliability (Not Least Common Denominator)
2) Ensure that the standard is enforceable by having clearly defined requirements with unambiguous language
3) Address the issues raised by FERC Order 693, 890 and other applicable orders
4) Address the issues raised in the original Standards Authorization Request (SAR) and the Supplemental SAR.

The SDT did not attempt to edit the existing standards but rather chose to write one standard that addresses all aspects of transmission planning in the existing TPL-001-0, TPL-002-0, TPL-003-0 and TPL-004-0. The SDT organized the new standard in the following sections:

R1 – Modeling requirements
R2 – Assessment and Corrective Plan requirements
R3 – Steady State Analysis requirements
R4 – Stability Analysis requirements
R5 – Coordination requirements

The SDT determined that the requirements and analysis for Steady State are different from those for stability. As such, the SDT separated the analysis requirements and created two performance requirement tables.

The SDT recognizes that this draft standard is a starting point for industry input into the standard and that there is still a lot of work required to complete the process. The SDT has made many changes to clarify requirements, add requirements, and make some of the performance requirements stricter. The SDT has not addressed Measures, Risk Factors, Violation Severity Factors or Time Horizons at this time. These will be addressed when the SDT has better defined the requirements of the standard.

For questions where you agree with the SDT, please state that you agree and if available, please provide supporting documentation. If you disagree with the SDT, please explain why you disagree and provide data to support your position, such as outage data or analysis. If you

believe that we have made a performance requirement too strict please provide supporting documentation. If applicable, please include the approximate cost in man-hours for additional studies and/or cost in $Millions for additional transmission investment to meet the new requirements or the stricter requirements. If you believe that the standard should be stricter, please provide the rationale along with any supporting data, including existing practices, cost estimates or additional analysis.

To improve the standard, the SDT would appreciate responses to as many of these questions as you can answer.

A. New Definitions

Many of the concerns about the existing TPL standards come from the fact that a number of generally understood concepts are embedded in undefined terms, tables, and footnotes. To clarify some of these concerns, the SDT is proposing new definitions. Please indicate whether you agree with the following proposed definitions and provide proposed changes to the definitions if you disagree:

Definition	**Agree or Disagree**
Q1. **Base Case**: Computer representation of the projected initial or starting Transmission System conditions for a specific point in time. Each base case reflects the forecasted Load at each bus (or node) on the interconnected Transmission System, the transmission facilities which deliver the generation and reactive resources to the connected Load, and the generation dispatch including firm transaction obligations assumed to supply the connected Load. The models also reflect facility ratings in accordance with FAC-008 & FAC-009.	☒ Agree. ☐ Do not agree.
Q1. **Comment: NYISO Agrees**	
Q2. **Consequential Load Loss:** Load that is no longer served because it is directly connected to an element(s) that is removed from service due to fault clearing action or mis-operation.	☒ Agree. ☐ Do not agree.
Q2. **Comment: NYISO Agrees**	
Q3. **Extreme Events:** Events which are more severe than Planning Events and have a low probability of occurrence.	☐ Agree. ☒ Do not agree.
Q3. **Comment: An alternate wording is suggested.** **Events which are more severe and have a lower probability of occurrence than Planning Events.**	
Q4. **Long-Term Transmission Planning Horizon:** Transmission planning period that covers years six through ten or beyond.	☒ Agree. ☐ Do not agree.
Q4. **Comment: NYISO Agrees ~~long-term period should start at five years.~~**	
Q5. **Near-Term Transmission Planning Horizon:** Transmission planning period that covers Years One through five.	☒ Agree.

	☐ Do not agree.
Q5. **Comment: NYISO Agrees**	
Q6. **Non-Consequential Load Loss:** Load loss other than Consequential Load Loss. For example, Load loss that occurs through manual (operator initiated) or automatic operations such as under-voltage Load shedding, under-frequency Load shedding, or Special Protection Systems.	☐ Agree. ☒ Do not agree.
Q6. **Comment:** ~~An element(s) that is removed from service due to fault clearing action or mis-operation may be the cause of the low voltage or frequency. Loss of load in that case should be considered a consequence of the element being removed.~~ Suggest that examples not be listed or a more exhaustive list be developed.	
Q7. **Planning Assessment:** Documented evaluation of future Bulk Electric System needs by the use of performance studies that cover a range of assumptions regarding system conditions, time frames, future plans including capital reinforcements and operating procedures and other factors, such as asset conditions and age.	☐ Agree. ☒ Do not agree.
Q7. **Comment: The word "Documented" is unnecessary. Suggest simplifying the definition to: Evaluation of future BPS needs to meet forecast demand under the assumed system conditions for the time frame studied.**	
Q8. **Planning Events:** Events which require Transmission system performance requirements to be met.	☐ Agree. ☒ Do not agree.
Q8. **Comment: Circular logic. Suggest: Events which need to be considered in planning assessments to evaluate Transmission system performance.**	
Q9. **Plant Stability Study:** Study of an individual plant's Stability for various Contingencies in the vicinity of the plant; concerned with the effect on the System of the generating units' loss of synchronism and the damping of the generating units' power oscillations.	☐ Agree. ☒ Do not agree.
Q9. **Comment: "Contingencies" should be replaced with "Planning Events". "in the vicinity of the plant" is too restrictive.** **Suggest: Study of an individual generating plant's capability to remain in synchronism with damping power oscillation for various Planning Events.**	
Q10. **System Stability Study:** Study of the System or portions of the System to ensure that angular Stability is maintained, inter-area power oscillations are damped, and voltages during the dynamic simulation stay within acceptable performance limits.	☐ Agree. ☒ Do not agree.
Q10. **Comment: The study is an assessment.** **Suggest: Study of the System or portions of the System to assess the System's performance in the domain of angular stability, inter-area oscillations and voltage profile during dynamic simulation.**	
Q11. **Year One:** The first year that a Transmission Planner is responsible for studying. This is further defined as the planning window that begins the next calendar year from the time the Transmission Planner submits their annual studies. Analysis conducted for time horizons within the calendar year from the study publication are assumed to be conducted under the auspices of Operations Planning.	☒ Agree. ☐ Do not agree.
Q11. **Comment: NYISO Agrees**	

B. Sensitivity Studies

The draft planning standard includes the requirement, as specified in FERC Order 693, that planning decisions be based on a portfolio of analyses. In section 12.a.ii "Sensitivity studies and critical system conditions", FERC provided direction to consider a full range of variables considered to be significant that need to be assessed and documentation provided that explains the rationale for the selection of variables assessed.

In addition to the firm obligation scenario, the portfolio of analyses should be supplemented to include information from sensitivity analysis. The sensitivity analysis should be developed using additional cases that simulate reasonably stressed system conditions. The SDT has included several parameters that can be varied to create the requisite sensitivity case(s). The draft standards specify that the sensitivities reflect one or more of the following conditions and that documentation be provided explaining the rationale for selecting the sensitivity(ies) employed. The parameters that should be varied include:

- Higher or lower Load forecasts from the Base Case with variability of Load/demand and Load power factors due to season, weather, or time of day.
- Modification of expected transfers.
- Unavailability of long lead time facilities.
- Variability and outages of Reactive Resources.
- Generation additions, retirements, or other dispatch scenarios.
- Decreased effectiveness of controllable Loads and Demand Side Management.
- Modification of planned Transmission outages

To help focus industry discussion, please respond to the questions below:

Q12. Should the standard provide more specific direction regarding the number of sensitivity cases that need to be developed?

Yes ☐ No ☒
Comment: ——NYISO does not support the introduction of sensitivity testing in the Planning Standards as a requirement. Sensitivity testing should be dictated by the local needs and system characteristics. The nature of planning studies incorporates assumptions that would make sensitivity analysis difficult to interpret.

Q13. Should the standard specify the required changes, such as changes in expected transfers, load forecasts, generation patterns, etc., from the study case to be considered a "reasonably stressed" case?

Yes ☐ No ☒
Comment: ——See comment to Q12. Additionally, what is the definition of "reasonably stressed"?

Q14. The SDT proposes to require the use of sensitivity studies for Near-Term Transmission System Planning Horizon stability analysis. Do you concur with the use of sensitivity analysis in dynamic studies?

Yes ☐ No ☒
Comment: ——See comments to Q12 & Q13.

Q15. The draft TPL standard does not require the use of sensitivity studies for the Long-Term Transmission System Planning Horizon (year 6 and beyond) studies. Do you concur with this approach or should there be some level of sensitivity analysis required for the long-term period?

Yes ☒ No ☐
Comment: ——NYISO does not agree with the requirement of sensitivity studies in the near-term or long-term.

C. Corrective Action Plans

Requirement R2.7 of the standard states that when analysis shows that the performance requirements in Table 1 and Table 2 are not fully met, a Corrective Action Plan that utilizes all or some of the Transmission System enhancements, generation additions, DSM, new technologies and Operating Procedures shall be included in the Planning Assessment. This Corrective Action Plan should ensure that upon its implementation the identified system deficiencies will be corrected so that the performance requirements in Table 1 and Table 2 will be met. Furthermore, studies included in the Planning Assessment should demonstrate that this is indeed the case.

Q16. Requirement R2.7.1: Such Corrective Action Plans shall "Identify System deficiencies and the associated actions needed to achieve required System performance including Transmission and generation improvements, DSM, new technologies, or Operating Procedures including the duration of Interim Operating Procedures". System deficiencies may be corrected using an integrated plan, i.e., an optimal mix of Transmission, generation, DSM and Operating Procedures. Should DSM be considered in conjunction with other measures in developing Corrective Action Plans? If Yes, please comment on how the impact of DSM should be included.

Yes ☒ No ☐

Comment: ——NYISO suggests that the impact included in studies should consider past performance of DSM participants.

Q17. Requirement R2.7.2: Such Corrective Action Plans shall "Be added to study cases and the cases re-tested to show that the System with planned additions meets the performance requirements in the tables". Should new studies, including the facilities comprising the Corrective Action Plan, be performed to assess System normal performance and Contingency

response for conditions that previously resulted in the System deficiencies (without the planned additions) and also demonstrate that the changes would not result in inadvertent negative impacts on the System. If you "agree", please comment on how a study area should be determined.

Yes ☒ No ☐
Comment: **NYISO Agrees**

Q18. Requirement R2.7.3: The standard calls for a differentiation between committed and proposed projects. Do you agree that they should be treated separately? If not, please state why not.

Yes ☒ No ☐
Comment: **NYISO Agrees**

Q19. Requirement R2.7.4: For such Corrective Action Plans "Committed projects shall not be removed without documentation to show that the revised plan meets the performance requirements". Do you agree or disagree with this requirement? If you disagree, please explain why.

Yes ☒ No ☐
Comment: **NYISO Agrees**

D. Performance Requirements

The proposed revised planning standard (TPL-001-1) incorporates a number of changes in requirements as compared to the current planning standards (TPL-001-0 through TPL-004-0), which it is expected to replace. Among other things these changes are intended to clarify the standard, address issues described by FERC, and, in particular, to "raise the bar." Strengthening the planning standards in selected areas is necessary to maintain a reliable BES that is up to the challenges of the 21st Century. In proposing the requirements in this draft, the SDT attempted to balance the value of increased reliability against any potential increase in work and costs to meet the new proposed standard.

The SDT is seeking input from the industry to determine whether a proper balance has been achieved. The areas where material changes are proposed in this draft are enumerated below, and questions are posed by the SDT to obtain industry comment. In formulating your responses, please keep in mind that material changes in the final standard will be accompanied by a transition plan to provide for an orderly implementation of the final standard.

The performance requirements relative to Non-Consequential Loss of Load for the following events enumerated in the two tables can be considered more stringent than the existing TPL Standards. Furthermore, the proposed standard is based on an assumption that performance requirements for EHV facilities should be more stringent than for lower voltage facilities.

Do you agree that Non-Consequential Loss of Load should not be permitted for the following events? If you disagree, please provide a reason for your disagreement.

Event	Agree or Disagree	Comment
Q20. P2-1: Loss of bus section (SLG for stability) above 300 kV	☒Agree. ☐Do not agree.	**NYISO Agrees**
Q21. P5-1: For facilities above 300 kV, loss of a Transmission circuit followed by System adjustment[1] followed by loss of another Transmission circuit	☒Agree. ☐Do not agree.	We are assuming the second circuit is un-related to the first. If that is not the intent then it contracts the loss of multiple related circuits (same tower or protection zone) for which non-consequential load loss is allowed.
Q22. P5-2: For facilities above 300 kV, loss of a Transmission circuit followed by System adjustment followed by loss of a transformer with low side voltage rating above 300 kV	☒Agree. ☐Do not agree.	Same comment as with Q21.
Q23. P5-3: For facilities above 300 kV, loss of a transformer with low side voltage rating above 300 kV followed by System adjustment followed by loss of another transformer	☒Agree. ☐Do not agree.	Same comment as with Q21.

[1]System adjustment can be manual or automatic.

The proposed standard is based on an assumption that performance requirements for non-bus tie EHV breakers should be distinguished from other breakers. Do you agree that Non-Consequential Loss of Load should not be permitted for this event?

Q24. Loss of non-bus tie breaker (above 300 kV) due to internal fault

Yes ☒ No ☐
Comment: **NYISO Agrees**

The proposed standard is based on an assumption that performance requirements for non-bus tie EHV breakers should be distinguished from other breakers and that performance requirements

for EHV facilities should be more stringent than for lower voltage facilities. Do you agree that Non-Consequential Loss of Load should not be permitted for this event?

Q25. P3-1: Loss of (SLG for stability) either a generator, a Transmission circuit, a transformer, or a bus and a stuck non-bus tie breaker (above 300 kV)

Yes ☒ No ☐
Comment: **NYISO Agrees**

The proposed standard is based on an assumption that the following events are relatively high probability events and, therefore, Non-Consequential Loss of Load should not be permitted. Do you agree? If you disagree, please provide a reason for your disagreement.

Event	Agree or Disagree	Comment
Q26. P4-1: Loss of a Generator followed by System adjustment[1] followed by loss of another Generator	☒Agree. ☐Do not agree.	**NYISO Agrees**
Q27. P4-2: Loss of a generator followed by a System adjustment followed by the loss of a monopolar DC line	☒Agree. ☐Do not agree.	**NYISO Agrees**
Q28. P4-3: Loss of a generator followed by System adjustment followed by loss of a Transmission circuit	☒Agree. ☐Do not agree.	**NYISO Agrees**
Q29. P4-4: Loss of a generator followed by System adjustment followed by loss of a transformer with low side voltage rating above 300 kV	☒Agree. ☐Do not agree.	**NYISO Agrees**

The performance requirement for the following event may be considered less stringent than the existing TPL Standards - P2-3: Loss of a single pole of a DC line. Interruption of firm transactions (without Loss of firm Load) if the transaction is dependent on the faulted DC line is now allowed for this initiating event/Contingency.

Q30. Do you agree that interruption of any firm transfers that are dependent on the outaged DC line that is taken out of service should be permitted?

Yes ☒ No ☐
Comment: NYISO agrees from a reliability aspect.

[1] System adjustment can be manual or automatic

E. Stability

Q31. The proposed standard is based on an assumption that steady state analysis and stability analysis are different from each other and that therefore, two tables of Contingencies and performance requirements were needed. It is also based on an assumption that stability study requirements should be clearly separated from the steady state study requirements. Do you agree with the action taken in separating stability analysis from steady state analysis? If not, please explain.

Yes ☐ No ☒
Comment: Only the difference between steady-state and stability analysis should be the performance requirements. The list of contingencies should be identical regardless of the type of analysis.

Q32. The SDT has added requirements for plant stability studies and has drawn a distinction in these studies from System stability studies. Do you agree with this approach? If not, please explain.

Yes ☒ No ☐
Comment: NYISO agrees with the concept of splitting plant and system stability studies, but only in the area of performance requirements. The studied contingencies should be identical.

Q33. The existing TPL-004-0 standard has a requirement to consider the Loss of all generating units at a plant, but it was not clear whether this requirement should apply to stability studies. The SDT did not include this requirement in the stability table, because it is hard to envision a condition when all units would trip simultaneously within the timeframe of a stability simulation. Do you think this condition should be required in stability analysis of extreme events? If not, please explain.

Yes ☐ No ☒
Comment: Examples of loss of entire generation station: Complete loss of right-of-way exiting facility, simultaneous relay operations due to common cause or mode.

Q34. There are an increasing number of events with slow voltage recovery after faults on the Transmission System. The dynamic behavior of induction motor loads is a major factor in this phenomenon. The proposed standard therefore requires that the load model for stability studies of peak Load conditions include the dynamic effects of induction motors. Do you agree with this requirement? If not, please explain?

Yes ☒ No ☐
Comment: **NYISO Agrees**

Q35. What type of manual or automatic adjustments of generators should be allowed for single and multiple Contingencies?

Comment: ———Automatic: Pre-determined ranges of AVR, excitation system, stabilizer and governor. Manual: switching and PAR adjustments covered by applicable operating procedures

F. Generation Runback and Tripping

The SDT has discussed the automatic and manual readjustments of generators that should be permissible for single contingencies and multiple contingencies. The existing TPL-001-0 through TPL-004-0 standards through footnote (a) of Table I could include emergency ratings applicable for short durations as required to permit operating steps necessary to maintain system control. The footnote is silent about allowable generation adjustments in response to the Category B events. However, it does indicate that system adjustments are permitted to prepare for the next Contingency. These system adjustments could include manual or automatic adjustments involving generation.

The SDT has learned that many transmission owners use System Protection Systems (SPS) or Remedial Action Schemes (RAS) to trip generation for single and multiple Contingency outage events to prevent overloads, low voltage, and instability in the Interconnected Transmission network for N-1 and N-2 events. In some cases, the RAS are used to prepare for the next Contingency; but in some cases, the RAS are used to simultaneously avoid exceeding emergency ratings.

Q36. The proposed standard allows generation runback after the disturbance that causes a single Contingency (or due to a single Contingency outage) to move the Interconnected Transmission System from an emergency state (within emergency ratings) to a normal state (within normal ratings), assuming that the disturbance does not result in instability? Do you agree? If not, please explain.

Yes ☒ No ☐

Comment: ———What is the difference between a SPS and RAS? Would not one term be sufficient? SPSs should not be considered a permanent solution. They should only be used as a stop gap before a permanent solution can be implemented.

Q37. Since emergency ratings are thermal ratings, should this standard allow an automatic generation runback scheme (that is initiated immediately after the disturbance causing the single Contingency) to prevent thermal overloads (assuming that the disturbance does not result in instability)? If yes, what are the conditions that must be met in order to allow such a runback scheme to meet the System performance criteria for single Contingencies? Please explain the reason for your answer.

Yes ☒ No ☐

Comment: ———Testing scenarios will have to be developed on a case by case basis depending on the design of the SPS. There is not universal rule that can be made for these unique cases.

The SDT has considered that RAS or SPS may be allowable under certain situations for single Contingencies, but proposes that their use should be limited.

Q38. Do you agree that RAS or SPS may be allowed for single Contingencies? If not, please explain.

Yes ☒ No ☐
Comment: ———As stated previously SPSs shold only be a temporary solution used to protect elements prior to a permanent solution implementation.

Q39. Please describe the limitations that you believe should be placed on the use of RAS or SPS for single Contingency events.

Comment: ———Must be temporary, approved by the NYSRC, tested annually with evidence of preventive maintenance submitted annually.

Q40. When RAS or SPS are allowed, what conditions should be met when these systems are used in system adjustments to meet performance requirements?

Comment: ———This would be dependent on the characteristics of each unique protection scheme.

G. General Questions

Q41. If you are aware of any regional variances that would be required as a result of these standards, please identify them here.

Yes ☐ No ☒
Comment:

Q42. If you are aware of any conflicts between the proposed standards and any regulatory function, rule order, tariff, rate schedule, legislative requirement or agreement, please identify them here.

Yes ☐ No ☒
Comment:

Q43. Do you have any other questions or concerns with the proposed standard that have not been addressed? If yes, please explain.

Yes ☐ No ☒
Comment:

NERC
NORTH AMERICAN ELECTRIC RELIABILITY CORPORATION

Comment Form for First Draft of TPL-001-1 — Transmission System Planning Performance Requirements

Please use this form to submit comments on the proposed draft of TPL-001-1. Comments must be submitted by **Friday, October 26, 2007**. You may submit the completed form by e-mail to sarcomm@nerc.net with the words "TPL-001 Draft 1" in the subject line. If you have questions please contact Ed Dobrowolski at ed.dobrowolksi@nerc.net or by telephone at 609-947-3673.

Individual Commenter Information **(Complete this page for comments from one organization or individual.)**		
Name:	James R. Manning, Robert S. Beadle	
Organization:	North Carolina Electric Membership Corporation	
Telephone:	(919) 645-2415, (919) 875-3135	
E-mail:	james.manning@ncemcs.com, Bob.Beadle@NCEMCS.com	
NERC Region (check all Regions in which your company operates)		**Registered Ballot Body Segment (check all industry segments in which your company is registered)**
☐ **ERCOT**	☐	1 — Transmission Owners
☐ **FRCC**	☐	2 — RTOs and ISOs
☐ **MRO**	☒	3 — Load-serving Entities
☐ **NPCC**	☒	4 — Transmission-dependent Utilities
☒ **RFC**	☒	5 — Electric Generators
☒ **SERC**	☐	6 — Electricity Brokers, Aggregators, and Marketers
☐ **SPP**	☐	7 — Large Electricity End Users
☐ **WECC**	☐	8 — Small Electricity End Users
☐ **NA – Not Applicable**	☐	9 — Federal, State, Provincial Regulatory or other Government Entities
	☐	10 — Regional Reliability Organizations and Regional Entities

Group Comments (Complete this page if comments are from a group.)

Group Name:

Lead Contact:

Contact Organization:

Contact Segment:

Contact Telephone:

Contact E-mail:

Additional Member Name	Additional Member Organization	Region*	Segment*

*If more than one Region or Segment applies, please list all that apply. Regional acronyms and segment numbers are shown on prior page.

Background

The purpose of this standard is to establish Transmission System planning performance requirements within the planning horizon to develop a Bulk Electric System that will operate reliably over a broad spectrum of System conditions and following a wide range of probable Contingencies. This standard will replace TPL-001-0, TPL-002-0, TPL-003-0, and TPL-004-0. The standard drafting team has not yet addressed TPL-005-0 and TPL-006-0, but will address these two standards during the next phase of the drafting process.

The major objectives of the standard drafting team are to:

1) Ensure the standard is complete and the requirements are set at an appropriate level to ensure reliability (Not Least Common Denominator)
2) Ensure that the standard is enforceable by having clearly defined requirements with unambiguous language
3) Address the issues raised by FERC Order 693, 890, and other applicable orders
4) Address the issues raised in the original Standards Authorization Request (SAR) and the Supplemental SAR.

The standard drafting team did not attempt to edit the existing standards but rather chose to write one standard that addresses all aspects of transmission planning in the existing TPL-001-0, TPL-002-0, TPL-003-0, and TPL-004-0. The standard drafting team organized the new standard in the following sections:

R1 – Modeling requirements
R2 – Assessment and Corrective Plan requirements
R3 – Steady State Analysis requirements
R4 – Stability Analysis requirements
R5 – Coordination requirements

The standard drafting team determined that the requirements and analysis for Steady State are different from those for stability. As such, the standard drafting team separated the analysis requirements and created two performance requirement tables.

The standard drafting team recognizes that this draft standard is a starting point for industry input into the standard and that there is still a lot of work required to complete the process. The standard drafting team has made many changes to clarify requirements, add requirements, and make some of the performance requirements stricter. The standard drafting team has not addressed Measures, Risk Factors, Violation Severity Factors, or Time Horizons at this time. These will be addressed when the standard drafting team has better defined the requirements of the standard.

For questions where you agree with the standard drafting team, please state that you agree and if available, please provide supporting documentation. If you disagree with the standard drafting team, please explain why you disagree and provide data to support your position, such as outage data or analysis. If you believe that we have made a performance requirement too strict please provide supporting documentation. If applicable, please include the approximate cost in man-hours for additional studies and/or cost in $Millions for additional transmission investment to meet the new requirements or the stricter requirements. If you believe that the standard should be stricter, please provide the rationale along with any supporting data, including existing practices, cost estimates or additional analysis.

To improve the standard, the standard drafting team would appreciate responses to as many of these questions as you can answer.

A. New Definitions

Many of the concerns about the existing TPL standards come from the fact that a number of generally understood concepts are embedded in undefined terms, tables, and footnotes. To clarify some of these concerns, the standard drafting team is proposing new definitions. Please indicate whether you agree with the following proposed definitions and provide proposed changes to the definitions if you disagree:

Definition	**Agree or Disagree**
Q1. **Base Case**: Computer representation of the projected initial or starting Transmission System conditions for a specific point in time. Each base case reflects the forecasted Load at each bus (or node) on the interconnected Transmission System, the transmission facilities which deliver the generation and reactive resources to the connected Load, and the generation dispatch including firm transaction obligations assumed to supply the connected Load. The models also reflect facility ratings in accordance with FAC-008 & FAC-009.	☒Agree. ☐Do not agree.
Q1. **Comment:**	
Q2. **Consequential Load Loss:** Load that is no longer served because it is directly connected to an element(s) that is removed from service due to fault clearing action or mis-operation.	☐Agree. ☒Do not agree.
Q2. **Comment: The term "mis-operation" introduces ambiguity into the definition, and should be deleted. The definition needs further clarification for consequential and non-consequential loads. For example, loads served downstream from the faulted element but not directly connected should also be considered to be consequential loads.**	
Q3. **Extreme Events:** Events which are more severe than Planning Events and have a low probability of occurrence.	☐Agree. ☒Do not agree.
Q3. **Comment: A number of the non-extreme events also have a low probability. Recommend change the word to "lower." The definition for "Extreme Events" should reference Table 1.**	
Q4. **Long-Term Transmission Planning Horizon:** Transmission planning period that covers years six through ten or beyond.	☒Agree. ☐Do not agree.
Q4. **Comment:**	
Q5. **Near-Term Transmission Planning Horizon:** Transmission planning period that covers years One through five.	☒Agree. ☐Do not agree.
Q5. **Comment:**	
Q6. **Non-Consequential Load Loss:** Load loss other than Consequential Load Loss. For example, Load loss that occurs through manual (operator initiated) or automatic operations such	☒Agree. ☐Do not

as under-voltage Load shedding, under-frequency Load shedding, or Special Protection Systems.	agree.
Q6. **Comment:**	
Q7. **Planning Assessment:** Documented evaluation of future Bulk Electric System needs by the use of performance studies that cover a range of assumptions regarding system conditions, time frames, future plans including capital reinforcements and operating procedures and other factors, such as asset conditions and age.	☒Agree. ☐Do not agree.
Q7. **Comment: Generally, we agree but would request NERC to clarify accounting for asset conditions and age within planning assessments. Wouldn't these already be taken into account in the FAC-008 & FAC-009 ratings?**	
Q8. **Planning Events:** Events which require Transmission system performance requirements to be met.	☐Agree. ☒Do not agree.
Q8. **Comment: Change to: "Events that are simulated or assessed to test the transmission system to ensure that performance requirements are met."**	
Q9. **Plant Stability Study:** Study of an individual plant's Stability for various Contingencies in the vicinity of the plant; concerned with the effect on the System of the generating units' loss of synchronism and the damping of the generating units' power oscillations.	☒Agree. ☐Do not agree.
Q9. **Comment:**	
Q10. **System Stability Study:** Study of the System or portions of the System to ensure that angular Stability is maintained, inter-area power oscillations are damped, and voltages during the dynamic simulation stay within acceptable performance limits.	☒Agree. ☐Do not agree.
Q10. **Comment:**	
Q11. **Year One:** The first year that a Transmission Planner is responsible for studying. This is further defined as the planning window that begins the next calendar year from the time the Transmission Planner submits their annual studies. Analysis conducted for time horizons within the calendar year from the study publication are assumed to be conducted under the auspices of Operations Planning.	☐Agree. ☒Do not agree.
Q11. **Comment: This definition could use further clarification to eliminate inconsistencies in how it may be interpretted. Operations planning horizons may typically be 13 to 18 months from the current date due to the reality that transmission upgrades to address operational performance issues may not be able to be implemented inside this period. Some may assume a 24-36 month operations planning window. Based on this assumption, Year 1 could start anywhere from 13 months from the current date to as much as 37 months from the current date.**	

B. Sensitivity Studies

The draft planning standard includes the requirement, as specified in FERC Order 693, that planning decisions be based on a portfolio of analyses. In section 12.a.ii "Sensitivity studies and critical system conditions" FERC provided direction to consider a full range of

variables considered to be significant that need to be assessed and documentation provided that explains the rationale for the selection of variables assessed.

In addition to the firm obligation scenario, the portfolio of analyses should be supplemented to include information from sensitivity analysis. The sensitivity analysis should be developed using additional cases that simulate reasonably stressed system conditions. The standard drafting team has included several parameters that can be varied to create the requisite sensitivity case(s). The draft standards specify that the sensitivities reflect one or more of the following conditions and that documentation be provided explaining the rationale for selecting the sensitivity(ies) employed. The parameters that should be varied include:

- Higher or lower Load forecasts from the Base Case with variability of Load/demand and Load power factors due to season, weather, or time of day.
- Modification of expected transfers.
- Unavailability of long lead time facilities.
- Variability and outages of Reactive Resources.
- Generation additions, retirements, or other dispatch scenarios.
- Decreased effectiveness of controllable Loads and Demand Side Management.
- Modification of planned Transmission outages

To help focus industry discussion, please respond to the questions below:

Q12. Should the standard provide more specific direction regarding the number of sensitivity cases that need to be developed?

Yes ☐ No ☒

Comment: There should be a stakeholder process for all entities (all Load-Serving Entities and Transmission Customers) involved or impacted within the defined area to provide input to determine which sensitivity cases are to be performed and the appropriate number of cases that need to be evaluated. Not every sensitivity case should be required for every system.

Q13. Should the standard specify the required changes, such as changes in expected transfers, load forecasts, generation patterns, etc., from the study case to be considered a "reasonably stressed" case?

Yes ☐ No ☒

Comment: The standard should offer guidance but what constitutes a "reasonably stressed" case should be left to a stakeholder process as noted in Q12 with some discretion of the entity performing the study.

Q14. The SDT proposes to require the use of sensitivity studies for Near-Term Transmission System Planning Horizon stability analysis. Do you concur with the use of sensitivity analysis in dynamic studies?

Yes ☒ No ☐

Comment: The entity performing the studies should be allowed to determine the appropriate sensitivity studies that need to be evaluated with a stakeholder process for those impacted by these studies as noted above. An alternate approach is to include pre-existing system conditions that additionally stress the system during the contingencies under study so as to verify that stability is preserved under conditions that go beyond those envisioned for the contingency. Stability studies are more time consuming than conventional power flow studies. A single 20 second stability simulation is computationally equivalent to running 80 steady-state powerflow cases and has significantly larger pre-analysis preparation effort.

Q15. The draft TPL standard does not require the use of sensitivity studies for the Long-Term Transmission System Planning Horizon (year six and beyond) studies. Do you concur with this approach or should there be some level of sensitivity analysis required for the long-term period?

Yes ☐ No ☒

Comment: Some sensitivity analysis in the long term years should be done (90/10 load with higher than expected transfers and/or delayed baseload generation) so that higher voltage issues are adequately tested to identify long lead time upgrades, in a similar manner as was done to justify the backbone projects that have been identified in the PJM Interconnection. A stakeholder process should be used by the entity performing the study to complile input on impacted LSEs and other Transmission Customers.

C. Corrective Action Plans

Requirement R2.7 of the standard states that when analysis shows that the performance requirements in Table 1 and Table 2 are not fully met, a Corrective Action Plan that utilizes all or some of the Transmission System enhancements, generation additions, DSM, new technologies and Operating Procedures shall be included in the Planning Assessment. This Corrective Action Plan should ensure that upon its implementation the identified system deficiencies will be corrected so that the performance requirements in Table 1 and Table 2 will be met. Furthermore, studies included in the Planning Assessment should demonstrate that this is indeed the case.

Q16. Requirement R2.7.1: Such Corrective Action Plans shall "Identify System deficiencies and the associated actions needed to achieve required System performance including Transmission and generation improvements, DSM, new technologies, or Operating Procedures including the duration of Interim Operating Procedures". System deficiencies may be corrected using an integrated plan, i.e., an optimal mix of Transmission, generation, DSM and Operating Procedures. Should DSM be considered in conjunction with other measures in developing Corrective Action Plans? If yes, please comment on how the impact of DSM should be included.

Yes ☒ No ☐

Comment: It should be included if it is a tool made available to the TP for this purpose, but only to the extent that it is considered firm.

Q17. Requirement R2.7.2: Such Corrective Action Plans shall "Be added to study cases and the cases re-tested to show that the System with planned additions meets the performance requirements in the tables". Should new studies, including the facilities comprising the Corrective Action Plan, be performed to assess System normal performance and Contingency response for conditions that previously resulted in the System deficiencies (without the planned additions) and also demonstrate that the changes would not result in inadvertent negative impacts on the System. If you "agree", please comment on how a study area should be determined.

Yes ☒ No ☐

Comment: Re-testing should be required particularly where the correction may impact network flows. The study area should be discussed within a stakeholder process to the TP may compile input from network customers or LSEs that might be affected by the analysis.

Q18. Requirement R2.7.3: The standard calls for a differentiation between committed and proposed projects. Do you agree that they should be treated separately? If not, please state why not.

Yes ☒ No ☐
Comment: Projects that are underway (i.e. being built) and are not subject to be potentially delayed and are absolutely needed for reliability should be differentiated between those that are not. Perhaps definitions for each of these terms should be considered for clarification.

Q19. Requirement R2.7.4: For such Corrective Action Plans "Committed projects shall not be removed without documentation to show that the revised plan meets the performance requirements". Do you agree or disagree with this requirement? If you disagree, please explain why.

Yes ☒ No ☐
Comment:

D. Performance Requirements

The proposed revised planning standard (TPL-001-1) incorporates a number of changes in requirements as compared to the current planning standards (TPL-001-0 through TPL-004-0), which it is expected to replace. Among other things these changes are intended to clarify the standard, address issues described by FERC, and, in particular, to "raise the bar." Strengthening the planning standards in selected areas is necessary to maintain a reliable Bulk Electric System that is up to the challenges of the 21st Century. In proposing the requirements in this draft, the standard drafting team attempted to balance the value of increased reliability against any potential increase in work and costs to meet the new proposed standard.

The standard drafting team is seeking input from the industry to determine whether a proper balance has been achieved. The areas where material changes are proposed in this draft are enumerated below, and questions are posed by the standard drafting team to obtain industry comment. In formulating your responses, please keep in mind that material changes in the final standard will be accompanied by a transition plan to provide for an orderly implementation of the final standard.

The performance requirements relative to Non-Consequential Loss of Load for the following events enumerated in the two tables can be considered more stringent than the existing TPL standards. Furthermore, the proposed standard is based on an assumption that performance requirements for EHV facilities should be more stringent than for lower voltage facilities.

Do you agree that Non-Consequential Loss of Load should not be permitted for the following events? If you disagree, please provide a reason for your disagreement.

Event	Agree or Disagree	Comment
Q20. P2-1: Loss of bus section (SLG for stability) above 300 kV	☒Agree. ☐Do not agree.	Although this is a relatively low probability event, we do agree that it should be assessed given the widespread effects. It may not justify the need for a network upgrade but at least deserves consideration for an operating or corrective action procedure should the event occur. Also, given this analysis might be new for some TPs, consideration

		should be given to a transition period after the start of this type of assessment.
Q21. P5-1: For facilities above 300 kV, loss of a Transmission circuit followed by System adjustment[1] followed by loss of another Transmission circuit	☒Agree. ☐Do not agree.	We do agree that given the widespread effects of these facilities above 300 kV that these should be subjected to more rigorous assessments.
Q22. P5-2: For facilities above 300 kV, loss of a Transmission circuit followed by System adjustment followed by loss of a transformer with low side voltage rating above 300 kV	☒Agree. ☐Do not agree.	We do agree that given the widespread effects of these facilities above 300 kV that these should be subjected to more rigorous assessments.
Q23. P5-3: For facilities above 300 kV, loss of a transformer with low side voltage rating above 300 kV followed by System adjustment followed by loss of another transformer	☒Agree. ☐Do not agree.	We do agree that given the widespread effects of these facilities above 300 kV that these should be subjected to more rigorous assessments.

[1]System adjustment can be manual or automatic.

The proposed standard is based on an assumption that performance requirements for non-bus tie EHV breakers should be distinguished from other breakers. Do you agree that Non-Consequential Loss of Load should not be permitted for this event?

Q24. Loss of non-bus tie breaker (above 300 kV) due to internal fault

Yes ☒ No ☐
Comment: see response for Q20.

The proposed standard is based on an assumption that performance requirements for non-bus tie EHV breakers should be distinguished from other breakers and that performance requirements for EHV facilities should be more stringent than for lower voltage facilities. Do you agree that Non-Consequential Loss of Load should not be permitted for this event?

Q25. P3-1: Loss of (SLG for stability) either a generator, a Transmission circuit, a transformer, or a bus and a stuck non-bus tie breaker (above 300 kV)

Yes ☒ No ☐
Comment: see response for Q20.

The proposed standard is based on an assumption that the following events are relatively high probability events and, therefore, Non-Consequential Loss of Load should not be permitted. Do you agree? If you disagree, please provide a reason for your disagreement.

Event	Agree or Disagree	Comment
Q26. P4-1: Loss of a Generator followed by System adjustment[1] followed by loss of another Generator	☒Agree. ☐Do not agree.	In the case of generating capacity replacement, some guidance as to allowable system adjustments might be needed for clarification. Is calling on contingency reserves from a Reserve Sharing Group immediately prior to internal redispatch of available resources OK? What about Network Customer generation not at maximum output but available for redispatch ? What about transmission reconfiguration, cutting firm purchases (pro-rata or in entirety) acceptable?
Q27. P4-2: Loss of a generator followed by a System adjustment followed by the loss of a monopolar DC line	☐Agree. ☐Do not agree.	N/A
Q28. P4-3: Loss of a generator followed by System adjustment followed by loss of a Transmission circuit	☒Agree. ☐Do not agree.	See reply to Q26.
Q29. P4-4: Loss of a generator followed by System adjustment followed by loss of a transformer	☒Agree. ☐Do not agree.	See reply to Q26.

The performance requirement for the following event may be considered less stringent than the existing TPL Standards — P2-3: Loss of a single pole of a DC line. Interruption of firm transactions (without Loss of firm Load) if the transaction is dependent on the faulted DC line is now allowed for this initiating event/Contingency.

Q30. Do you agree that interruption of any firm transfers that are dependent on the outaged DC line that is taken out of service should be permitted?

Yes ☐ No ☐
Comment: Not applicable/

E. Stability

Q31. The proposed standard is based on an assumption that steady state analysis and stability analysis are different from each other and that therefore, two tables of Contingencies and performance requirements were needed. It is also based on an assumption that stability study requirements should be clearly separated from the steady state study requirements. Do you agree with the action taken in separating stability analysis from steady state analysis? If not, please explain.

[1] System adjustment can be manual or automatic

Yes ☒ No ☐
Comment:

Q32. The SDT has added requirements for plant stability studies and has drawn a distinction in these studies from System stability studies. Do you agree with this approach? If not, please explain.

Yes ☒ No ☐
Comment:

Q33. The existing TPL-004-0 standard has a requirement to consider the Loss of all generating units at a plant, but it was not clear whether this requirement should apply to stability studies. The SDT did not include this requirement in the stability table, because it is hard to envision a condition when all units would trip simultaneously within the timeframe of a stability simulation. Do you think this condition should be required in stability analysis of extreme events? If not, please explain.

Yes ☐ No ☒
Comment: Generator protection is designed to trip only those units required. In addition, it is the magnitude of generation tripped rather than the number of units tripped that is of the greatest significance to the stability of the grid.

Q34. There are an increasing number of events with slow voltage recovery after faults on the Transmission System. The dynamic behavior of induction motor loads is a major factor in this phenomenon. The proposed standard therefore requires that the load model for stability studies of peak Load conditions include the dynamic effects of induction motors. Do you agree with this requirement? If not, please explain?

Yes ☐ No ☒
Comment: Dynamic studies of seasonal load conditions should include the effects of induction motors, and particularly in areas where traditional load models have indicated a problem. Unfortunately, there is a lack of data to support the amount and characteristics of the detailed induction load models in many areas. In addition to the consideration of the dynamic effects of induction motor loads, the effects of static capacitor banks installed at distribution voltage levels would need to be considered as well. Prior to making this a requirement in the reliability standards, the industry needs guidance as to how this data should be developed and maintained for models in future years.

Note that meeting such a requirement would necessitate a significant increase in the dynamic data needed to represent the system. Maintenance of such load model data would require significant resources. Load characteristics valid for a near term model might not be valid for future years. Also, summer peak load, winter peak load, and off-peak load characteristics would differ.

Q35. What type of manual or automatic adjustments of generators should be allowed for single and multiple Contingencies?

Comment: Adjustments that should be allowed are those that can be performed in time to prevent the system from failing to meet performance requirements. These adjustments may include automatic voltage regulator action, governor action, generator runback, and generator tripping.

F. Generation Runback and Tripping

The SDT has discussed the automatic and manual readjustments of generators that should be permissible for single contingencies and multiple contingencies. The existing TPL-001-0 through TPL-004-0 standards through footnote (a) of Table I could include emergency ratings applicable for short durations as required to permit operating steps necessary to maintain system control. The footnote is silent about allowable generation adjustments in response to the Category B events. However, it does indicate that system adjustments are permitted to prepare for the next Contingency. These system adjustments could include manual or automatic adjustments involving generation.

The SDT has learned that many transmission owners use System Protection Systems (SPS) or Remedial Action Schemes (RAS) to trip generation for single and multiple Contingency outage events to prevent overloads, low voltage, and instability in the Interconnected Transmission network for N-1 and N-2 events. In some cases, the RAS are used to prepare for the next Contingency; but in some cases, the RAS are used to simultaneously avoid exceeding emergency ratings.

Q36. The proposed standard allows generation runback after the disturbance that causes a single Contingency (or due to a single Contingency outage) to move the Interconnected Transmission System from an emergency state (within emergency ratings) to a normal state (within normal ratings), assuming that the disturbance does not result in instability? Do you agree? If not, please explain.

Yes ☒ No ☐
Comment:

Q37. Since emergency ratings are thermal ratings, should this standard allow an automatic generation runback scheme (that is initiated immediately after the disturbance causing the single Contingency) to prevent thermal overloads (assuming that the disturbance does not result in instability)? If yes, what are the conditions that must be met in order to allow such a runback scheme to meet the System performance criteria for single Contingencies? Please explain the reason for your answer.

Yes ☒ No ☐
Comment: The generator runback scheme should complete its action within the time allowed by the emergency ratings of elements that exceed their normal thermal ratings.

The standard drafting team has considered that RAS or SPS may be allowable under certain situations for single Contingencies, but proposes that their use should be limited.

Q38. Do you agree that RAS or SPS may be allowed for single Contingencies? If not, please explain.

Yes ☒ No ☐
Comment:

Q39. Please describe the limitations that you believe should be placed on the use of RAS or SPS for single Contingency events.

Comment: RAS or SPS should meet the same criteria as any protection system.

Q40. When RAS or SPS are allowed, what conditions should be met when these systems are used in system adjustments to meet performance requirements?

Comment: The conditions required by SPS standards (PRC).

G. General Questions

Q41. If you are aware of any regional variances that would be required as a result of these standards, please identify them here.

Yes ☐ No ☐
Comment:

Q42. If you are aware of any conflicts between the proposed standards and any regulatory function, rule order, tariff, rate schedule, legislative requirement or agreement, please identify them here.

Yes ☒ No ☐
Comment: Modeling data requirements in R1 applicable to many entities may be either redundant with the MOD submittals or may be conflict for entities that are required to submit this data to Transmission Providers to comply with deadlines in their Tarffs. In addition, data submitted by entities named may be confidential so this issue will have to be addressed among those submitting and receiving needed data.

Q43. Do you have any other questions or concerns with the proposed standard that have not been addressed? If yes, please explain.

Yes ☒ No ☐
Comment: Planning Coordinator: The definition of Planning Coordinator should be kept within this document rather than relying on the NERC Functional Model as we believe that this entity has an important role in insuring coordination of transmission and resource plans.

Coordination:
During the teleconference, one issue brought up was the matter of external contingencies being tested as a part of a TP's analysis. The reply was that this issue will be addressed outside this draft standard (TPL-005 and TPL-006) or would be accounted for in the coordination efforts among Transmission Planners. NCEMC is of the opinion that Requirements R5 and R6 need further details to insure adequate anlysis between and among Transmission Planners having varying local planning criteria so that Seams Issues are addressed that are not currently being address in regional and inter-regional studies. To the extent possible, timing of studies should be required to insure coordination between regional and inter-regional groups.

Significant Increase in Study Activity Workload on Transmission Planners:
The increase in both steady state and dynamic studies required to ensure compliance with the proposed standards will result in increased costs and staff additions. The addition of the "Corrective Action Plan" requires the TP to provide a significant amount of documentation for each deficiency identified by the studies. Also, R3.2 requires that the studies simulate the protection scheme for all events. The current software tools cannot automate these studies for bus faults and breaker failure events, requiring each scenario to be studied manually. Additionally, experienced staff capable of performing analyses as described in the proposed standard have become increasingly difficult to find and retain and the talent pool of people with these skills has recently become depleted to alarming levels.

Implementation Plan:
Given the intent of the proposed standard to encourage large scale investment in the EHV system, full implementation will take years, perhaps decades. Acquirement of right-of-way for new EHV lines has become increasingly difficult in recent years and inreasingly expensive. Legal, regulatory, and other difficult issues often take several years to navigate, even for 115kV lines. The Implementation Plan timeframe, if set too short, would be unduly burdensome on Transmission Owners forcing them to be less dicretionary with funds than would be prudent. The proposed implementation plan should include provisions for those cases where viable solutions simply can not be implemented in time due to circumstances beyond the control of Transmission owners. A reasonable period for transition is order.

Design and Construction Constraints:
Even if right-of-way and other legal and regulatory hurdles are cleared, and the capital funding for such a tremendous level of investment was not an issue, the other resources required to actually construct the projects are equally difficult and costly to secure. Raw material prices on comodities like copper and steel have skyrocketed in recent years. Additionally, the skilled labor and Engineering resources are constrained with labor rates almost keeping up with other resource costs. Overall project costs have more than doubled over the last 7-10 years. Recent press releases concerning new generation being planned and then scrapped due to the rapid escalation of project costs are public evidence of this. The inflationary mark-up is impossible to estimate but much less will be built with the same capital investment than is currently envisioned.

Cost-Benefit Analysis:
The proposed standard will be exceedingly expensive to become compliant with unprecedented levels of capital investment in Transmission facilities. Before the standard comes to official vote, it would be prudent for a cost-benefit analysis to be performed to determine if the reliability improvements truly justify the huge expenditures certain under the proposed standard. Additionally, as many jurisdictional rate structures share the cost of such investments between retail and wholesale customers, cost-benefit analyses should be completed for both retail and wholesale customers.

System Adjustment Clarification:
It has already been noted earlier but deserves repeating here: The term "System Adjustment" as outlined in the tables should be better defined. The use of generation for redispatch may have nuances which preclude or otherwise limit their use for studies. Perhaps some clearer guidelines on what is allowed would facilitate transparency and coordination between Transmission Planners.

Transmission Service Evaluation:
A major concern is that the proposed standard appears to be disjointed from the requirements for selling firm Transmission Service. The increase in reliability gained from the proposed standard would, in some regions, quickly be eroded by new firm sales if those sales are based on the historical N-1 ATC requirements. The proposed standard must be applied to long-term firm transmission service requests if Transmission reliability is to be truly enhanced. If the standard is not applied to Transmission Service evaluation, reliability levels for the different classes of firm customers will diverge.

Stakeholder Process:
As a Transmission-Dependent Utility and Network Customer within 3 different Balancing Autorities with one being a Regional Transmission Organization, NCEMC cannot stress

enough the need for a Stakeholder Process for coordination Transmission Planning that may impact Load-Serving Entities and other entities involved. It is critical to address reliability needs of all taking transmission service today and in years to come.

NERC
NORTH AMERICAN ELECTRIC RELIABILITY CORPORATION

Comment Form for First Draft of TPL-001-1 — Transmission System Planning Performance Requirements

Please use this form to submit comments on the proposed draft of TPL-001-1. Comments must be submitted by **Friday, October 26, 2007**. You may submit the completed form by e-mail to sarcomm@nerc.net with the words "TPL-001 Draft 1" in the subject line. If you have questions please contact Ed Dobrowolski at ed.dobrowolksi@nerc.net or by telephone at 609-947-3673.

Individual Commenter Information **(Complete this page for comments from one organization or individual.)**		
Name:	Denise Roeder	
Organization:	North Carolina Municipal Power Agency 1	
Telephone:	919-760-6255	
E-mail:	droeder@electricities.org	
NERC Region (check all Regions in which your company operates)		**Registered Ballot Body Segment (check all industry segments in which your company is registered)**
☐ **ERCOT**	☐	1 — Transmission Owners
☐ **FRCC**	☐	2 — RTOs and ISOs
☐ **MRO**	☒	3 — Load-serving Entities
☐ **NPCC**	☐	4 — Transmission-dependent Utilities
☐ **RFC**	☐	5 — Electric Generators
☒ **SERC**	☐	6 — Electricity Brokers, Aggregators, and Marketers
☐ **SPP**	☐	7 — Large Electricity End Users
☐ **WECC**	☐	8 — Small Electricity End Users
☐ **NA – Not Applicable**	☐	9 — Federal, State, Provincial Regulatory or other Government Entities
	☐	10 — Regional Reliability Organizations and Regional Entities

Group Comments (Complete this page if comments are from a group.)

Group Name:

Lead Contact:

Contact Organization:

Contact Segment:

Contact Telephone:

Contact E-mail:

Additional Member Name	Additional Member Organization	Region*	Segment*

*If more than one Region or Segment applies, please list all that apply. Regional acronyms and segment numbers are shown on prior page.

Background

The purpose of this standard is to establish Transmission System planning performance requirements within the planning horizon to develop a Bulk Electric System that will operate reliably over a broad spectrum of System conditions and following a wide range of probable Contingencies. This standard will replace TPL-001-0, TPL-002-0, TPL-003-0, and TPL-004-0. The standard drafting team has not yet addressed TPL-005-0 and TPL-006-0, but will address these two standards during the next phase of the drafting process.

The major objectives of the standard drafting team are to:

1) Ensure the standard is complete and the requirements are set at an appropriate level to ensure reliability (Not Least Common Denominator)
2) Ensure that the standard is enforceable by having clearly defined requirements with unambiguous language
3) Address the issues raised by FERC Order 693, 890, and other applicable orders
4) Address the issues raised in the original Standards Authorization Request (SAR) and the Supplemental SAR.

The standard drafting team did not attempt to edit the existing standards but rather chose to write one standard that addresses all aspects of transmission planning in the existing TPL-001-0, TPL-002-0, TPL-003-0, and TPL-004-0. The standard drafting team organized the new standard in the following sections:

R1 – Modeling requirements
R2 – Assessment and Corrective Plan requirements
R3 – Steady State Analysis requirements
R4 – Stability Analysis requirements
R5 – Coordination requirements

The standard drafting team determined that the requirements and analysis for Steady State are different from those for stability. As such, the standard drafting team separated the analysis requirements and created two performance requirement tables.

The standard drafting team recognizes that this draft standard is a starting point for industry input into the standard and that there is still a lot of work required to complete the process. The standard drafting team has made many changes to clarify requirements, add requirements, and make some of the performance requirements stricter. The standard drafting team has not addressed Measures, Risk Factors, Violation Severity Factors, or Time Horizons at this time. These will be addressed when the standard drafting team has better defined the requirements of the standard.

For questions where you agree with the standard drafting team, please state that you agree and if available, please provide supporting documentation. If you disagree with the standard drafting team, please explain why you disagree and provide data to support your position, such as outage data or analysis. If you believe that we have made a performance requirement too strict please provide supporting documentation. If applicable, please include the approximate cost in man-hours for additional studies and/or cost in $Millions for additional transmission investment to meet the new requirements or the stricter requirements. If you believe that the standard should be stricter, please provide the rationale along with any supporting data, including existing practices, cost estimates or additional analysis.

To improve the standard, the standard drafting team would appreciate responses to as many of these questions as you can answer.

A. New Definitions

Many of the concerns about the existing TPL standards come from the fact that a number of generally understood concepts are embedded in undefined terms, tables, and footnotes. To clarify some of these concerns, the standard drafting team is proposing new definitions. Please indicate whether you agree with the following proposed definitions and provide proposed changes to the definitions if you disagree:

Definition	**Agree or Disagree**
Q1. **Base Case**: Computer representation of the projected initial or starting Transmission System conditions for a specific point in time. Each base case reflects the forecasted Load at each bus (or node) on the interconnected Transmission System, the transmission facilities which deliver the generation and reactive resources to the connected Load, and the generation dispatch including firm transaction obligations assumed to supply the connected Load. The models also reflect facility ratings in accordance with FAC-008 & FAC-009.	☐Agree. ☐Do not agree.
Q1. **Comment:**	
Q2. **Consequential Load Loss:** Load that is no longer served because it is directly connected to an element(s) that is removed from service due to fault clearing action or mis-operation.	☐Agree. ☐Do not agree.
Q2. **Comment:**	
Q3. **Extreme Events:** Events which are more severe than Planning Events and have a low probability of occurrence.	☐Agree. ☐Do not agree.
Q3. **Comment:**	
Q4. **Long-Term Transmission Planning Horizon:** Transmission planning period that covers years six through ten or beyond.	☐Agree. ☐Do not agree.
Q4. **Comment:**	
Q5. **Near-Term Transmission Planning Horizon:** Transmission planning period that covers years One through five.	☐Agree. ☐Do not agree.
Q5. **Comment:**	
Q6. **Non-Consequential Load Loss:** Load loss other than Consequential Load Loss. For example, Load loss that occurs through manual (operator initiated) or automatic operations such as under-voltage Load shedding, under-frequency Load shedding, or Special Protection Systems.	☐Agree. ☐Do not agree.
Q6. **Comment:**	
Q7. **Planning Assessment:** Documented evaluation of future Bulk Electric System needs by the use of performance studies that cover a range of assumptions regarding system conditions, time	☐Agree. ☐Do not

frames, future plans including capital reinforcements and operating procedures and other factors, such as asset conditions and age.	agree.
Q7. **Comment:**	
Q8. **Planning Events:** Events which require Transmission system performance requirements to be met.	☐Agree. ☐Do not agree.
Q8. **Comment:**	
Q9. **Plant Stability Study:** Study of an individual plant's Stability for various Contingencies in the vicinity of the plant; concerned with the effect on the System of the generating units' loss of synchronism and the damping of the generating units' power oscillations.	☐Agree. ☐Do not agree.
Q9. **Comment:**	
Q10. **System Stability Study:** Study of the System or portions of the System to ensure that angular Stability is maintained, inter-area power oscillations are damped, and voltages during the dynamic simulation stay within acceptable performance limits.	☐Agree. ☐Do not agree.
Q10. **Comment:**	
Q11. **Year One:** The first year that a Transmission Planner is responsible for studying. This is further defined as the planning window that begins the next calendar year from the time the Transmission Planner submits their annual studies. Analysis conducted for time horizons within the calendar year from the study publication are assumed to be conducted under the auspices of Operations Planning.	☐Agree. ☐Do not agree.
Q11. **Comment:**	

B. Sensitivity Studies

The draft planning standard includes the requirement, as specified in FERC Order 693, that planning decisions be based on a portfolio of analyses. In section 12.a.ii "Sensitivity studies and critical system conditions" FERC provided direction to consider a full range of variables considered to be significant that need to be assessed and documentation provided that explains the rationale for the selection of variables assessed.

In addition to the firm obligation scenario, the portfolio of analyses should be supplemented to include information from sensitivity analysis. The sensitivity analysis should be developed using additional cases that simulate reasonably stressed system conditions. The standard drafting team has included several parameters that can be varied to create the requisite sensitivity case(s). The draft standards specify that the sensitivities reflect one or more of the following conditions and that documentation be provided explaining the rationale for selecting the sensitivity(ies) employed. The parameters that should be varied include:

- Higher or lower Load forecasts from the Base Case with variability of Load/demand and Load power factors due to season, weather, or time of day.
- Modification of expected transfers.
- Unavailability of long lead time facilities.
- Variability and outages of Reactive Resources.
- Generation additions, retirements, or other dispatch scenarios.

- Decreased effectiveness of controllable Loads and Demand Side Management.
- Modification of planned Transmission outages

To help focus industry discussion, please respond to the questions below:

Q12. Should the standard provide more specific direction regarding the number of sensitivity cases that need to be developed?

Yes ☐ No ☐
Comment:

Q13. Should the standard specify the required changes, such as changes in expected transfers, load forecasts, generation patterns, etc., from the study case to be considered a "reasonably stressed" case?

Yes ☐ No ☐
Comment:

Q14. The SDT proposes to require the use of sensitivity studies for Near-Term Transmission System Planning Horizon stability analysis. Do you concur with the use of sensitivity analysis in dynamic studies?

Yes ☐ No ☐
Comment:

Q15. The draft TPL standard does not require the use of sensitivity studies for the Long-Term Transmission System Planning Horizon (year six and beyond) studies. Do you concur with this approach or should there be some level of sensitivity analysis required for the long-term period?

Yes ☐ No ☐
Comment:

C. Corrective Action Plans

Requirement R2.7 of the standard states that when analysis shows that the performance requirements in Table 1 and Table 2 are not fully met, a Corrective Action Plan that utilizes all or some of the Transmission System enhancements, generation additions, DSM, new technologies and Operating Procedures shall be included in the Planning Assessment. This Corrective Action Plan should ensure that upon its implementation the identified system deficiencies will be corrected so that the performance requirements in Table 1 and Table 2 will be met. Furthermore, studies included in the Planning Assessment should demonstrate that this is indeed the case.

Q16. Requirement R2.7.1: Such Corrective Action Plans shall "Identify System deficiencies and the associated actions needed to achieve required System performance including Transmission and generation improvements, DSM, new technologies, or Operating Procedures including the duration of Interim Operating Procedures". System deficiencies may be corrected using an integrated plan, i.e., an optimal mix of Transmission, generation, DSM and Operating Procedures. Should DSM be considered in conjunction with other measures in developing Corrective Action Plans? If yes, please comment on how the impact of DSM should be included.

Yes ☐ No ☐
Comment:

Q17. Requirement R2.7.2: Such Corrective Action Plans shall "Be added to study cases and the cases re-tested to show that the System with planned additions meets the performance requirements in the tables". Should new studies, including the facilities comprising the Corrective Action Plan, be performed to assess System normal performance and Contingency response for conditions that previously resulted in the System deficiencies (without the planned additions) and also demonstrate that the changes would not result in inadvertent negative impacts on the System. If you "agree", please comment on how a study area should be determined.

Yes ☐ No ☐
Comment:

Q18. Requirement R2.7.3: The standard calls for a differentiation between committed and proposed projects. Do you agree that they should be treated separately? If not, please state why not.

Yes ☐ No ☐
Comment:

Q19. Requirement R2.7.4: For such Corrective Action Plans "Committed projects shall not be removed without documentation to show that the revised plan meets the performance requirements". Do you agree or disagree with this requirement? If you disagree, please explain why.

Yes ☐ No ☐
Comment:

D. Performance Requirements

The proposed revised planning standard (TPL-001-1) incorporates a number of changes in requirements as compared to the current planning standards (TPL-001-0 through TPL-004-0), which it is expected to replace. Among other things these changes are intended to clarify the standard, address issues described by FERC, and, in particular, to "raise the bar." Strengthening the planning standards in selected areas is necessary to maintain a reliable Bulk Electric System that is up to the challenges of the 21st Century. In proposing the requirements in this draft, the standard drafting team attempted to balance the value of increased reliability against any potential increase in work and costs to meet the new proposed standard.

The standard drafting team is seeking input from the industry to determine whether a proper balance has been achieved. The areas where material changes are proposed in this draft are enumerated below, and questions are posed by the standard drafting team to obtain industry comment. In formulating your responses, please keep in mind that material changes in the final standard will be accompanied by a transition plan to provide for an orderly implementation of the final standard.

The performance requirements relative to Non-Consequential Loss of Load for the following events enumerated in the two tables can be considered more stringent than the existing TPL standards. Furthermore, the proposed standard is based on an assumption that performance requirements for EHV facilities should be more stringent than for lower voltage facilities.

Do you agree that Non-Consequential Loss of Load should not be permitted for the following events? If you disagree, please provide a reason for your disagreement.

Event	Agree or Disagree	Comment
Q20. P2-1: Loss of bus section (SLG for stability) above 300 kV	☐Agree. ☐Do not agree.	
Q21. P5-1: For facilities above 300 kV, loss of a Transmission circuit followed by System adjustment[1] followed by loss of another Transmission circuit	☐Agree. ☐Do not agree.	
Q22. P5-2: For facilities above 300 kV, loss of a Transmission circuit followed by System adjustment followed by loss of a transformer with low side voltage rating above 300 kV	☐Agree. ☐Do not agree.	
Q23. P5-3: For facilities above 300 kV, loss of a transformer with low side voltage rating above 300 kV followed by System adjustment followed by loss of another transformer	☐Agree. ☐Do not agree.	

[1]System adjustment can be manual or automatic.

The proposed standard is based on an assumption that performance requirements for non-bus tie EHV breakers should be distinguished from other breakers. Do you agree that Non-Consequential Loss of Load should not be permitted for this event?

Q24. Loss of non-bus tie breaker (above 300 kV) due to internal fault

Yes ☐ No ☐
Comment:

The proposed standard is based on an assumption that performance requirements for non-bus tie EHV breakers should be distinguished from other breakers and that performance requirements for EHV facilities should be more stringent than for lower voltage facilities. Do you agree that Non-Consequential Loss of Load should not be permitted for this event?

Q25. P3-1: Loss of (SLG for stability) either a generator, a Transmission circuit, a transformer, or a bus and a stuck non-bus tie breaker (above 300 kV)

Yes ☐ No ☐
Comment:

The proposed standard is based on an assumption that the following events are relatively high probability events and, therefore, Non-Consequential Loss of Load should not be permitted. Do you agree? If you disagree, please provide a reason for your disagreement.

Event	Agree or Disagree	Comment
Q26. P4-1: Loss of a Generator followed by System adjustment[1] followed by loss of another Generator	☐Agree. ☐Do not agree.	
Q27. P4-2: Loss of a generator followed by a System adjustment followed by the loss of a monopolar DC line	☐Agree. ☐Do not agree.	
Q28. P4-3: Loss of a generator followed by System adjustment followed by loss of a Transmission circuit	☐Agree. ☐Do not agree.	
Q29. P4-4: Loss of a generator followed by System adjustment followed by loss of a transformer	☐Agree. ☐Do not agree.	

The performance requirement for the following event may be considered less stringent than the existing TPL Standards — P2-3: Loss of a single pole of a DC line. Interruption of firm transactions (without Loss of firm Load) if the transaction is dependent on the faulted DC line is now allowed for this initiating event/Contingency.

Q30. Do you agree that interruption of any firm transfers that are dependent on the outaged DC line that is taken out of service should be permitted?

Yes ☐ No ☐
Comment:

E. Stability

Q31. The proposed standard is based on an assumption that steady state analysis and stability analysis are different from each other and that therefore, two tables of Contingencies and performance requirements were needed. It is also based on an assumption that stability study requirements should be clearly separated from the steady state study requirements. Do you agree with the action taken in separating stability analysis from steady state analysis? If not, please explain.

Yes ☐ No ☐
Comment:

[1] System adjustment can be manual or automatic

Q32. The SDT has added requirements for plant stability studies and has drawn a distinction in these studies from System stability studies. Do you agree with this approach? If not, please explain.

Yes ☐ No ☐
Comment:

Q33. The existing TPL-004-0 standard has a requirement to consider the Loss of all generating units at a plant, but it was not clear whether this requirement should apply to stability studies. The SDT did not include this requirement in the stability table, because it is hard to envision a condition when all units would trip simultaneously within the timeframe of a stability simulation. Do you think this condition should be required in stability analysis of extreme events? If not, please explain.

Yes ☐ No ☐
Comment:

Q34. There are an increasing number of events with slow voltage recovery after faults on the Transmission System. The dynamic behavior of induction motor loads is a major factor in this phenomenon. The proposed standard therefore requires that the load model for stability studies of peak Load conditions include the dynamic effects of induction motors. Do you agree with this requirement? If not, please explain?

Yes ☐ No ☐
Comment:

Q35. What type of manual or automatic adjustments of generators should be allowed for single and multiple Contingencies?

Comment:

F. Generation Runback and Tripping

The SDT has discussed the automatic and manual readjustments of generators that should be permissible for single contingencies and multiple contingencies. The existing TPL-001-0 through TPL-004-0 standards through footnote (a) of Table I could include emergency ratings applicable for short durations as required to permit operating steps necessary to maintain system control. The footnote is silent about allowable generation adjustments in response to the Category B events. However, it does indicate that system adjustments are permitted to prepare for the next Contingency. These system adjustments could include manual or automatic adjustments involving generation.

The SDT has learned that many transmission owners use System Protection Systems (SPS) or Remedial Action Schemes (RAS) to trip generation for single and multiple Contingency outage events to prevent overloads, low voltage, and instability in the Interconnected Transmission network for N-1 and N-2 events. In some cases, the RAS are used to prepare for the next Contingency; but in some cases, the RAS are used to simultaneously avoid exceeding emergency ratings.

Q36. The proposed standard allows generation runback after the disturbance that causes a single Contingency (or due to a single Contingency outage) to move the Interconnected Transmission System from an emergency state (within emergency ratings) to a normal state (within normal ratings), assuming that the disturbance does not result in instability? Do you agree? If not, please explain.

Yes ☐ No ☐
Comment:

Q37. Since emergency ratings are thermal ratings, should this standard allow an automatic generation runback scheme (that is initiated immediately after the disturbance causing the single Contingency) to prevent thermal overloads (assuming that the disturbance does not result in instability)? If yes, what are the conditions that must be met in order to allow such a runback scheme to meet the System performance criteria for single Contingencies? Please explain the reason for your answer.

Yes ☐ No ☐
Comment:

The standard drafting team has considered that RAS or SPS may be allowable under certain situations for single Contingencies, but proposes that their use should be limited.

Q38. Do you agree that RAS or SPS may be allowed for single Contingencies? If not, please explain.

Yes ☐ No ☐
Comment:

Q39. Please describe the limitations that you believe should be placed on the use of RAS or SPS for single Contingency events.

Comment:

Q40. When RAS or SPS are allowed, what conditions should be met when these systems are used in system adjustments to meet performance requirements?

Comment:

G. General Questions

Q41. If you are aware of any regional variances that would be required as a result of these standards, please identify them here.

Yes ☐ No ☐
Comment:

Q42. If you are aware of any conflicts between the proposed standards and any regulatory function, rule order, tariff, rate schedule, legislative requirement or agreement, please identify them here.

Yes ☐ No ☐
Comment:

Q43. Do you have any other questions or concerns with the proposed standard that have not been addressed? If yes, please explain.

Yes ☒ No ☐

Comment: Much of the language in R1 is redundant, because the MOD standards already address what data are required for modeling purposes. Including data requirements here, as well as in the MOD standards, will introduce the possibility of inconsistencies between the two as well as unnecessary duplication of work for entities providing the data. If any changes need to be made to what data are collected or to whom it is provided, those changes should be made in the MOD standards, not by adding data requirements to this standard.

As for most every standard written, some consideration should be given to the cost of meeting the more stringent requirements proposed for this standard. While it might be possible to make incremental improvements in reliability, it may not be cost-effective, particularly given the low probability of some of the events addressed in the standard. Before stakeholders are asked to vote on this standard, a cost-benefit analysis should be performed to provide what would be an otherwise missing, but very important piece, of information about whether the costs of complying with the requirements of this standard are justified based on the reliability improvements that would be achieved.

NERC
NORTH AMERICAN ELECTRIC RELIABILITY CORPORATION

Comment Form for First Draft of TPL-001-1 — Transmission System Planning Performance Requirements

Please use this form to submit comments on the proposed draft of TPL-001-1. Comments must be submitted by **Friday, October 26, 2007**. You may submit the completed form by e-mail to sarcomm@nerc.net with the words "TPL-001 Draft 1" in the subject line. If you have questions please contact Ed Dobrowolski at ed.dobrowolksi@nerc.net or by telephone at 609-947-3673.

Individual Commenter Information **(Complete this page for comments from one organization or individual.)**		
Name:	Rick White	
Organization:	Northeast Utilities	
Telephone:	860-665-2572	
E-mail:	whitefb@nu.com	
NERC Region (check all Regions in which your company operates)		**Registered Ballot Body Segment (check all industry segments in which your company is registered)**
☐ **ERCOT**	☒	1 — Transmission Owners
☐ **FRCC**	☐	2 — RTOs and ISOs
☐ **MRO**	☐	3 — Load-serving Entities
☒ **NPCC**	☐	4 — Transmission-dependent Utilities
☐ **RFC**	☐	5 — Electric Generators
☐ **SERC**	☐	6 — Electricity Brokers, Aggregators, and Marketers
☐ **SPP**	☐	7 — Large Electricity End Users
☐ **WECC**	☐	8 — Small Electricity End Users
☐ **NA – Not Applicable**	☐	9 — Federal, State, Provincial Regulatory or other Government Entities
	☐	10 — Regional Reliability Organizations and Regional Entities

Group Comments (Complete this page if comments are from a group.)

Group Name:

Lead Contact:

Contact Organization:

Contact Segment:

Contact Telephone:

Contact E-mail:

Additional Member Name	Additional Member Organization	Region*	Segment*

*If more than one Region or Segment applies, please list all that apply. Regional acronyms and segment numbers are shown on prior page.

Background

The purpose of this standard is to establish Transmission System planning performance requirements within the planning horizon to develop a Bulk Electric System that will operate reliably over a broad spectrum of System conditions and following a wide range of probable Contingencies. This standard will replace TPL-001-0, TPL-002-0, TPL-003-0, and TPL-004-0. The standard drafting team has not yet addressed TPL-005-0 and TPL-006-0, but will address these two standards during the next phase of the drafting process.

The major objectives of the standard drafting team are to:

1) Ensure the standard is complete and the requirements are set at an appropriate level to ensure reliability (Not Least Common Denominator)
2) Ensure that the standard is enforceable by having clearly defined requirements with unambiguous language
3) Address the issues raised by FERC Order 693, 890, and other applicable orders
4) Address the issues raised in the original Standards Authorization Request (SAR) and the Supplemental SAR.

The standard drafting team did not attempt to edit the existing standards but rather chose to write one standard that addresses all aspects of transmission planning in the existing TPL-001-0, TPL-002-0, TPL-003-0, and TPL-004-0. The standard drafting team organized the new standard in the following sections:

R1 – Modeling requirements
R2 – Assessment and Corrective Plan requirements
R3 – Steady State Analysis requirements
R4 – Stability Analysis requirements
R5 – Coordination requirements

The standard drafting team determined that the requirements and analysis for Steady State are different from those for stability. As such, the standard drafting team separated the analysis requirements and created two performance requirement tables.

The standard drafting team recognizes that this draft standard is a starting point for industry input into the standard and that there is still a lot of work required to complete the process. The standard drafting team has made many changes to clarify requirements, add requirements, and make some of the performance requirements stricter. The standard drafting team has not addressed Measures, Risk Factors, Violation Severity Factors, or Time Horizons at this time. These will be addressed when the standard drafting team has better defined the requirements of the standard.

For questions where you agree with the standard drafting team, please state that you agree and if available, please provide supporting documentation. If you disagree with the standard drafting team, please explain why you disagree and provide data to support your position, such as outage data or analysis. If you believe that we have made a performance requirement too strict please provide supporting documentation. If applicable, please include the approximate cost in man-hours for additional studies and/or cost in $Millions for additional transmission investment to meet the new requirements or the stricter requirements. If you believe that the standard should be stricter, please provide the rationale along with any supporting data, including existing practices, cost estimates or additional analysis.

To improve the standard, the standard drafting team would appreciate responses to as many of these questions as you can answer.

A. New Definitions

Many of the concerns about the existing TPL standards come from the fact that a number of generally understood concepts are embedded in undefined terms, tables, and footnotes. To clarify some of these concerns, the standard drafting team is proposing new definitions. Please indicate whether you agree with the following proposed definitions and provide proposed changes to the definitions if you disagree:

Definition	**Agree or Disagree**
Q1. **Base Case**: Computer representation of the projected initial or starting Transmission System conditions for a specific point in time. Each base case reflects the forecasted Load at each bus (or node) on the interconnected Transmission System, the transmission facilities which deliver the generation and reactive resources to the connected Load, and the generation dispatch including firm transaction obligations assumed to supply the connected Load. The models also reflect facility ratings in accordance with FAC-008 & FAC-009.	☐Agree. ☒Do not agree.
Q1. **Comment: There are a few undefined terms in this definition: "Transmission System" and "interconnected Transmission System". The definition needs to specifically identify what should be modeled and in a manner consistent with other NERC definitions. The definition refers to Facility ratings rather than the general reference to FAC-008 & FAC-009**	
Q2. **Consequential Load Loss:** Load that is no longer served because it is directly connected to an element(s) that is removed from service due to fault clearing action or mis-operation.	☒Agree. ☐Do not agree.
Q2. **Comment:**	
Q3. **Extreme Events:** Events which are more severe than Planning Events and have a low probability of occurrence.	☐Agree. ☒Do not agree.
Q3. **Comment: Modify to "Events which are more severe,but have a lower probability of occurrence, than Planning Events".**	
Q4. **Long-Term Transmission Planning Horizon:** Transmission planning period that covers years six through ten or beyond.	☐Agree. ☒Do not agree.
Q4. **Comment: "Transmission planning period that covers years six through ten", is sufficient for the standard." Suggest changing the name to Long-Term Planning Assessment.**	
Q5. **Near-Term Transmission Planning Horizon:** Transmission planning period that covers years One through five.	☒Agree. ☐Do not agree.
Q5. **Comment: Suggest changing the name to Near-Term Planning Assessment.**	
Q6. **Non-Consequential Load Loss:** Load loss other than	☒Agree.

Consequential Load Loss. For example, Load loss that occurs through manual (operator initiated) or automatic operations such as under-voltage Load shedding, under-frequency Load shedding, or Special Protection Systems.	☐Do not agree.
Q6. **Comment:**	
Q7. **Planning Assessment:** Documented evaluation of future Bulk Electric System needs by the use of performance studies that cover a range of assumptions regarding system conditions, time frames, future plans including capital reinforcements and operating procedures and other factors, such as asset conditions and age.	☐Agree. ☒Do not agree.
Q7. **Comment: Eliminate "capital" from the definition. It is not defined or consistently applicable to the standard. Reference to vague "other factors, such as asset conditions and age" should be removed from this standard; there are no consistent definitions or industry standards on which to base this requirement, nor does it appear to be a necessary addition to the standard.**	
Q8. **Planning Events:** Events which require Transmission system performance requirements to be met.	☐Agree. ☒Do not agree.
Q8. **Comment: Propose, "Events for which Transmission performance requirements must be met".**	
Q9. **Plant Stability Study:** Study of an individual plant's Stability for various Contingencies in the vicinity of the plant; concerned with the effect on the System of the generating units' loss of synchronism and the damping of the generating units' power oscillations.	☐Agree. ☒Do not agree.
Q9. **Comment: A Plant Stability Study should be a part of a System Stability Study. How should and why would they be differentiated? The analysis and performance constraints are the same in both cases; it's just a matter of whether one or more generating units are involved.**	
Q10. **System Stability Study:** Study of the System or portions of the System to ensure that angular Stability is maintained, inter-area power oscillations are damped, and voltages during the dynamic simulation stay within acceptable performance limits.	☐Agree. ☒Do not agree.
Q10. **Comment: See comment on Q9; proposed modification, "Study of the System or portions of the System to determine whether unit and system angular Stability is maintained, power oscillations are damped, and voltages during the dynamic simulation stay within acceptable perfomance limits.**	
Q11. **Year One:** The first year that a Transmission Planner is responsible for studying. This is further defined as the planning window that begins the next calendar year from the time the Transmission Planner submits their annual studies. Analysis conducted for time horizons within the calendar year from the study publication are assumed to be conducted under the auspices of Operations Planning.	☐Agree. ☒Do not agree.
Q11. **Comment: Modify to, "The first year that a Tranmission Planner is responsible for studying. This is further defined as the planning window that begins the next calendar year from the time the Transmission Planner completes its annual studies."**	

B. Sensitivity Studies

The draft planning standard includes the requirement, as specified in FERC Order 693, that planning decisions be based on a portfolio of analyses. In section 12.a.ii "Sensitivity studies and critical system conditions" FERC provided direction to consider a full range of variables considered to be significant that need to be assessed and documentation provided that explains the rationale for the selection of variables assessed.

In addition to the firm obligation scenario, the portfolio of analyses should be supplemented to include information from sensitivity analysis. The sensitivity analysis should be developed using additional cases that simulate reasonably stressed system conditions. The standard drafting team has included several parameters that can be varied to create the requisite sensitivity case(s). The draft standards specify that the sensitivities reflect one or more of the following conditions and that documentation be provided explaining the rationale for selecting the sensitivity(ies) employed. The parameters that should be varied include:

- Higher or lower Load forecasts from the Base Case with variability of Load/demand and Load power factors due to season, weather, or time of day.
- Modification of expected transfers.
- Unavailability of long lead time facilities.
- Variability and outages of Reactive Resources.
- Generation additions, retirements, or other dispatch scenarios.
- Decreased effectiveness of controllable Loads and Demand Side Management.
- Modification of planned Transmission outages

To help focus industry discussion, please respond to the questions below:

Q12. Should the standard provide more specific direction regarding the number of sensitivity cases that need to be developed?

Yes ☐ No ☒

Comment: The standard is unclear whether or not it mandates the requirement to develop action plans for problems highlighted as a result of one of the sensitivities.

Suggest modification to, "…sensitivity testing that stresses the System shall be considered, and documentation with the rationale for the sensitivity testing shall be supplied. The sensitivity case(s) may include one or more of the following conditions:"

2.1.3.3 should refer only to planned facilities that may be delayed. 2.1.3.4 - "variability" is too vague for a standard; the standard needs to be more specific as to the intent. 2.1.3.7 should be consistent with 1.4. These comments also apply to 2.4.3.

Q13. Should the standard specify the required changes, such as changes in expected transfers, load forecasts, generation patterns, etc., from the study case to be considered a "reasonably stressed" case?

Yes ☐ No ☒

Comment: The standard is unclear whether or not it mandates the requirement develop action plans for problems highlighted as a result of one of the sensitivities.

Reasonably stressed conditions are dependent upon the study area under review and the standard is not likely to be able to be crafted to provide sufficent and consistent direction. However, it might be helpful if the standard clarified whether the base case should include any unplanned generator outages or whether, aside from potential sensitivities, unplanned generator outages are considered only through P1, P3 or P4 Contingencies. If the standard addresses unplanned generator outages only through P1, P3 and P4, then it is recommended that a mandatory sensitivity analysis, with required mitigation, include various potential combinations of a reasonable amount of unplanned outages. The combinations should be based on the part of the system that is under study.

Q14. The SDT proposes to require the use of sensitivity studies for Near-Term Transmission System Planning Horizon stability analysis. Do you concur with the use of sensitivity analysis in dynamic studies?

Yes ☒ No ☐
Comment: The standard is unclear whether or not it mandates the requirement to devleop action plans for problems highlighted as a result of one of the sensitivities.

Suggest modification to, "…sensitivity testing that stresses the System should be considered. Sensitivity case(s) might include among the following conditions:" 2.4.3 should mimic 2.1.3 except in regard to load models.

Q15. The draft TPL standard does not require the use of sensitivity studies for the Long-Term Transmission System Planning Horizon (year six and beyond) studies. Do you concur with this approach or should there be some level of sensitivity analysis required for the long-term period?

Yes ☒ No ☐
Comment: There is no need for sensitivity analysis.

C. Corrective Action Plans

Requirement R2.7 of the standard states that when analysis shows that the performance requirements in Table 1 and Table 2 are not fully met, a Corrective Action Plan that utilizes all or some of the Transmission System enhancements, generation additions, DSM, new technologies and Operating Procedures shall be included in the Planning Assessment. This Corrective Action Plan should ensure that upon its implementation the identified system deficiencies will be corrected so that the performance requirements in Table 1 and Table 2 will be met. Furthermore, studies included in the Planning Assessment should demonstrate that this is indeed the case.

Q16. Requirement R2.7.1: Such Corrective Action Plans shall "Identify System deficiencies and the associated actions needed to achieve required System performance including Transmission and generation improvements, DSM, new technologies, or Operating Procedures including the duration of Interim Operating Procedures". System deficiencies may be corrected using an integrated plan, i.e., an optimal mix of Transmission, generation, DSM and Operating Procedures. Should DSM be considered in conjunction with other measures in developing Corrective Action Plans? If yes, please comment on how the impact of DSM should be included.

Yes ☒ No ☐
Comment: DSM should be included to the extent that its performance is sufficiently and consistently understood. The standard does not use the term "optimal" Therefore, the Drafting Team appears to be interpreting the Standard to require a vertically-integrated Planner to produce a so-called optimal-mix of resources plan. This would be an incorrect assumption and is not required. In areas with independent planners and competitive wholesale markets, it is sufficent to identify system needs and produce a plan that identifies regulated transmission solutions in the event that market-based resources (such as DSM) do not address those identified needs. Therefore, while DSM can be as effective a resource as generation, per Commission Orders,

in areas with ISOs/RTOs and a competitive wholesale market, the NERC Standard cannot prescribe the development so-called optimized (as is suggesgted by the Drafting Team) resource-mix plans, as identified by a central planner.

Q17. Requirement R2.7.2: Such Corrective Action Plans shall "Be added to study cases and the cases re-tested to show that the System with planned additions meets the performance requirements in the tables". Should new studies, including the facilities comprising the Corrective Action Plan, be performed to assess System normal performance and Contingency response for conditions that previously resulted in the System deficiencies (without the planned additions) and also demonstrate that the changes would not result in inadvertent negative impacts on the System. If you "agree", please comment on how a study area should be determined.

Yes ☒ No ☐
Comment: The study area should be based upon planning expertise and knowledge of the system, giving due consideration to external impacts.

Q18. Requirement R2.7.3: The standard calls for a differentiation between committed and proposed projects. Do you agree that they should be treated separately? If not, please state why not.

Yes ☒ No ☐
Comment: They should be viewed differently in the Near-Term. However, these should be defined terms.

Q19. Requirement R2.7.4: For such Corrective Action Plans "Committed projects shall not be removed without documentation to show that the revised plan meets the performance requirements". Do you agree or disagree with this requirement? If you disagree, please explain why.

Yes ☒ No ☐
Comment: It is unclear as to what the commited project is being removed from. Suggested language "…removed from the plan…".

D. Performance Requirements

The proposed revised planning standard (TPL-001-1) incorporates a number of changes in requirements as compared to the current planning standards (TPL-001-0 through TPL-004-0), which it is expected to replace. Among other things these changes are intended to clarify the standard, address issues described by FERC, and, in particular, to "raise the bar." Strengthening the planning standards in selected areas is necessary to maintain a reliable Bulk Electric System that is up to the challenges of the 21st Century. In proposing the requirements in this draft, the standard drafting team attempted to balance the value of increased reliability against any potential increase in work and costs to meet the new proposed standard.

The standard drafting team is seeking input from the industry to determine whether a proper balance has been achieved. The areas where material changes are proposed in this draft are enumerated below, and questions are posed by the standard drafting team to obtain industry comment. In formulating your responses, please keep in mind that material changes in the final standard will be accompanied by a transition plan to provide for an orderly implementation of the final standard.

The performance requirements relative to Non-Consequential Loss of Load for the following events enumerated in the two tables can be considered more stringent than the existing TPL standards. Furthermore, the proposed standard is based on an assumption that performance requirements for EHV facilities should be more stringent than for lower voltage facilities.

Do you agree that Non-Consequential Loss of Load should not be permitted for the following events? If you disagree, please provide a reason for your disagreement.

Event	Agree or Disagree	Comment
Q20. P2-1: Loss of bus section (SLG for stability) above 300 kV	☒Agree. ☐Do not agree.	
Q21. P5-1: For facilities above 300 kV, loss of a Transmission circuit followed by System adjustment[1] followed by loss of another Transmission circuit	☐Agree. ☒Do not agree.	Given the low probability of extended overlapping outages of overhead facilities, systems have been designed assuming that load shedding following the loss of a second transmission line is permissible. Eliminating any allowance for load shedding for this condition may require significant system expansion and cost to to customers. However, it would be reasonable to consider establishing an upper bound to the amount of load that could be shed for these purposes.
Q22. P5-2: For facilities above 300 kV, loss of a Transmission circuit followed by System adjustment followed by loss of a transformer with low side voltage rating above 300 kV	☐Agree. ☒Do not agree.	Should also consider the initial loss of a transformer, followed by the loss of a Transmission circuit. This should state a transformer with a "high-side" rating above 300 kV.
Q23. P5-3: For facilities above 300 kV, loss of a transformer with low side voltage rating above 300 kV followed by System adjustment followed by loss of another transformer	☐Agree. ☒Do not agree.	This should state a transformer with a "high-side" rating above 300 kV.

[1]System adjustment can be manual or automatic.

The proposed standard is based on an assumption that performance requirements for non-bus tie EHV breakers should be distinguished from other breakers. Do you agree that Non-Consequential Loss of Load should not be permitted for this event?

Q24. Loss of non-bus tie breaker (above 300 kV) due to internal fault

Yes ☒ No ☐
Comment: It is unclear why bus tie breakers are being treated differently than other breakers. They should be treated the same.

The proposed standard is based on an assumption that performance requirements for non-bus tie EHV breakers should be distinguished from other breakers and that performance requirements for EHV facilities should be more stringent than for lower voltage facilities. Do you agree that Non-Consequential Loss of Load should not be permitted for this event?

Q25. P3-1: Loss of (SLG for stability) either a generator, a Transmission circuit, a transformer, or a bus and a stuck non-bus tie breaker (above 300 kV)

Yes ☐ No ☒
Comment: It is unclear why bus tie breakers are being treated differently than other breakers. They should be treated the same.

The proposed standard is based on an assumption that the following events are relatively high probability events and, therefore, Non-Consequential Loss of Load should not be permitted. Do you agree? If you disagree, please provide a reason for your disagreement.

Event	Agree or Disagree	Comment
Q26. P4-1: Loss of a Generator followed by System adjustment[1] followed by loss of another Generator	☐Agree. ☒Do not agree.	If the base case or a mandatory sensitivity case already includes unplanned generator outages, some load loss may be reasonable following the subsequent loss of 2 additional generators.
Q27. P4-2: Loss of a generator followed by a System adjustment followed by the loss of a monopolar DC line	☐Agree. ☒Do not agree.	If the base case or a mandatory sensitivity case already includes unplanned generator outages, some load loss may be reasonable following the subsequent loss of an additional generators and a monopolar DC line
Q28. P4-3: Loss of a generator followed by System adjustment followed by loss of a Transmission circuit	☐Agree. ☒Do not agree.	If the base case or a mandatory sensitivity case already includes unplanned generator outages, some load loss may be reasonable following the subsequent loss of an additional generators and a Transmission circuit
Q29. P4-4: Loss of a generator followed by System adjustment followed by loss of a transformer	☐Agree. ☒Do not agree.	If the base case or a mandatory sensitivity case already includes unplanned generator outages, some load loss may be reasonable following the subsequent loss of an additional generators and a transformer

The performance requirement for the following event may be considered less stringent than the existing TPL Standards — P2-3: Loss of a single pole of a DC line. Interruption of firm

[1] System adjustment can be manual or automatic

transactions (without Loss of firm Load) if the transaction is dependent on the faulted DC line is now allowed for this initiating event/Contingency.

Q30. Do you agree that interruption of any firm transfers that are dependent on the outaged DC line that is taken out of service should be permitted?

Yes ☒ No ☐
Comment: This should also apply to firm transfers via single or double ac facilities as well. In either case, the transfer could be linked to dedicated facilities.

E. Stability

Q31. The proposed standard is based on an assumption that steady state analysis and stability analysis are different from each other and that therefore, two tables of Contingencies and performance requirements were needed. It is also based on an assumption that stability study requirements should be clearly separated from the steady state study requirements. Do you agree with the action taken in separating stability analysis from steady state analysis? If not, please explain.

Yes ☒ No ☐
Comment:

Q32. The SDT has added requirements for plant stability studies and has drawn a distinction in these studies from System stability studies. Do you agree with this approach? If not, please explain.

Yes ☐ No ☒
Comment: A Plant Stability Study should be a part of a System Stability Study. How should and why would they be differentiated? The analysis and performance constraints are the same in both cases; it's just a matter of whether one or more generating units are involved.

Q33. The existing TPL-004-0 standard has a requirement to consider the Loss of all generating units at a plant, but it was not clear whether this requirement should apply to stability studies. The SDT did not include this requirement in the stability table, because it is hard to envision a condition when all units would trip simultaneously within the timeframe of a stability simulation. Do you think this condition should be required in stability analysis of extreme events? If not, please explain.

Yes ☐ No ☒
Comment: Difficult to envision how such an event would occur.

Q34. There are an increasing number of events with slow voltage recovery after faults on the Transmission System. The dynamic behavior of induction motor loads is a major factor in this phenomenon. The proposed standard therefore requires that the load model for stability studies of peak Load conditions include the dynamic effects of induction motors. Do you agree with this requirement? If not, please explain?

Yes ☐ No ☒
Comment: This requirement is too specific and limited. Induction motors are only one component of a complex load model. Complex load models are not always necessary, nor are they always the most conservative, depending on the analysis that is being conducted. Where complex load models are required, they should be considered; this may involve use of complex motor and lighting loads or polynomial load representations

with or without frequency dependence. This question also suggests the need for an industry standard regarding transient voltage recovery.

Q35. What type of manual or automatic adjustments of generators should be allowed for single and multiple Contingencies?

Comment: Manual or automatic adjustments should be permissible to allow redispatch to return the system to below normal/load cycle based ratings; however, the system should not exceed applicable emergency ratings prior to the adjustment. Manual system adjustment should be allowed in between the multiple Contingencies described in P5, provided that the adjustment can be made between contingencies using short-term reserves (10-30 minute).

F. Generation Runback and Tripping

The SDT has discussed the automatic and manual readjustments of generators that should be permissible for single contingencies and multiple contingencies. The existing TPL-001-0 through TPL-004-0 standards through footnote (a) of Table I could include emergency ratings applicable for short durations as required to permit operating steps necessary to maintain system control. The footnote is silent about allowable generation adjustments in response to the Category B events. However, it does indicate that system adjustments are permitted to prepare for the next Contingency. These system adjustments could include manual or automatic adjustments involving generation.

The SDT has learned that many transmission owners use System Protection Systems (SPS) or Remedial Action Schemes (RAS) to trip generation for single and multiple Contingency outage events to prevent overloads, low voltage, and instability in the Interconnected Transmission network for N-1 and N-2 events. In some cases, the RAS are used to prepare for the next Contingency; but in some cases, the RAS are used to simultaneously avoid exceeding emergency ratings.

Q36. The proposed standard allows generation runback after the disturbance that causes a single Contingency (or due to a single Contingency outage) to move the Interconnected Transmission System from an emergency state (within emergency ratings) to a normal state (within normal ratings), assuming that the disturbance does not result in instability? Do you agree? If not, please explain.

Yes ☒ No ☐

Comment: Generation runback should be permissible to allow redispatch to return the system to below normal/load cycle based ratings; however, the system should not exceed applicable emergency ratings prior to the adjustment

Q37. Since emergency ratings are thermal ratings, should this standard allow an automatic generation runback scheme (that is initiated immediately after the disturbance causing the single Contingency) to prevent thermal overloads (assuming that the disturbance does not result in instability)? If yes, what are the conditions that must be met in order to allow such a runback scheme to meet the System performance criteria for single Contingencies? Please explain the reason for your answer.

Yes ☒ No ☐

Comment: However, this should only be allowed where failure of an automatic runback that is not functionally redundant would not have significant adverse impact on the Bulk Electric System.

The standard drafting team has considered that RAS or SPS may be allowable under certain situations for single Contingencies, but proposes that their use should be limited.

Q38. Do you agree that RAS or SPS may be allowed for single Contingencies? If not, please explain.

Yes ☒ No ☐
Comment: It is not recommended that an SPS be used in this situation, that over time, the proliferation of SPSs may degrade system reliability and unduly complicate system operations. If allowed an SPS should only be used where the failure of the SPS that is not functionally redundant would not have significant adverse impact on the Bulk Electric System.

Q39. Please describe the limitations that you believe should be placed on the use of RAS or SPS for single Contingency events.

Comment: Only allowed where SPS failure would not have significant adverse impact on the Bulk Electric System; non-Consequential loss of load should be allowed up to an amount potentially specified in the standard.

Q40. When RAS or SPS are allowed, what conditions should be met when these systems are used in system adjustments to meet performance requirements?

Comment: System must remain stable with acceptable voltages and all equipment within applicable emergency limits.

G. General Questions

Q41. If you are aware of any regional variances that would be required as a result of these standards, please identify them here.

Yes ☒ No ☒
Comment: Unsure due to ambiguities in the standard. Depending upon the final standard, New England may need exceptions for existing facilities or allowance for a transition period to develop a compliance plan.

Q42. If you are aware of any conflicts between the proposed standards and any regulatory function, rule order, tariff, rate schedule, legislative requirement or agreement, please identify them here.

Yes ☐ No ☒
Comment:

Q43. Do you have any other questions or concerns with the proposed standard that have not been addressed? If yes, please explain.

Yes ☒ No ☐
Comment: There should be a "P0" standard that applies to system performance without any contingencies.

Standard should be clear that stabiltiy analysis is not required for Long-Term Planning Assessment.

R.1.1 Load forecasts should be addressed in MOD standards, not TPL.

R 1.4 This should only refer to known long-term outages, not planned outages. Delete "including protective relays"; this is addressed through other provisions.

R.2.1 Shorten "Near-Term Transmission Planning Horizon Planning Assessment" to "Near-Term Planning Assessment".

R 2.2 Shorten "Long-Term Transmission Planning Horizon Planning Assessment" to "Long-Term Planning Assessment".

R2.1, 2.2, 2.3 & 2.4 – The initial paragraph should have identical language regarding 'annual', and 'current or past' aspects.

R2.1.1 There should not be a requirement to look at years one and two; a 5 year study should be sufficient. If there has been an ongoing 5 year study, there should be no major unexpected problems occurring in years 1 and 2. Studies of earlier years should only be required if an unanticipated event occurred that had not been considered in prior studies. The TPL should not address shorter term "Operating Studies" or operating issues.

R 2.2.1 Modify to "If any known projects have a lead time that is longer than ten years, the Planning Assessment shall be extended accordingly."

R 2.6 Steady-state, short circuit, and stability analysis should be required no more than every 5 years unless there is a significant change the system.

R 2.6.1 Remove reference to "market structure changes". The purpose of it's inclusion is unclear.

R 2.7.1.1 Project initiation date should be deleted. If it is retainted, it needs to be defined.

R 2.7.3 Committed and Proposed projects should be defined.

R 3.2.1/R 4.3 - What is the intent of this requirement? There should probably be an MOD associated with Generator Owner requirement to provide related generator protection/ limiter data or other plant information.

R 3.4/R 4.5.2 Remove the requirement to implement changes to reduce or mitigate the likelihood of such consequences of Extreme Events. This may not be reasonable or achieveable.

R 3.2 Sectionalizing schemes shall be considered when reflecting the post-contingent system.

R 3.2.2 - Propose deleting this. Line ratings should already take relay loadability into account.

R 3.3.2.1 - Proposed deleting "expected duration". This would be dependent upon the damage to the element due to the iniating event and other factors.

R 3.3.2.2 - The requirements of this section do not match P6.

R 3.3.3 - Change introductory language to read "Those multiple Contingencies that are…"

R 3.5 - Generation tripping should be allowed as well as generation run-back. In addition, all performance requirements shall be met, rather than just meeting facility rating requirements. Suggested lanague "Manual and automatic generation run-back and/or generation tripping is allowed as a response to single and multiple Contingencies as long as the performance requirements of this standard are met." If these changes are accepted, R 3.6 can be deleted.

R 4 and R 4.1 - The language should be made similar to R 3 and R 3.1.

Suggest bringing language similar R4.4 into the R 3, the steady state section.

R 4.2 - High speed automatic reclosing schemes shall be considered.

R 6.3 - Change to read "Planning Coordinators of neighboring impacted areas".

Table 1 3 b and c Extreme Event descriptions are vague concepts that cannot be practically simulated. 3 d and e are not reasonable or practically useful to simulate.

Table 1, P8 - Language needs to be clarifed as to how the 300 kV threshold is to be treated for transformers. Is this for the high side, low side, or both sides? P5 is much clearer.

Table 2 - Clarification needs to be made that the faults being simulated are permanent faults. This can be addressed under the "Performance Requirements" portion at the beginning of the table, or modify each fault description.

Table 2 P9. Recommend that this be changed to require that faults should be on different phases of each of two adjacent transmission circuits on a multiple circuit transmission tower

Table 1, P9(6) and Table 2 P9 - It is unclear as to what is meant by "A spare transformer inserted to replace an outaged transformer followed by System adjustments". Unclear as to what is to be tested.

General comment - Transmission System is used throughout the document and is an undefined term

NERC
NORTH AMERICAN ELECTRIC RELIABILITY CORPORATION

Comment Form for First Draft of TPL-001-1 — Transmission System Planning Performance Requirements

Please use this form to submit comments on the proposed draft of TPL-001-1. Comments must be submitted by **Friday, October 26, 2007**. You may submit the completed form by e-mail to sarcomm@nerc.net with the words "TPL-001 Draft 1" in the subject line. If you have questions please contact Ed Dobrowolski at ed.dobrowolksi@nerc.net or by telephone at 609-947-3673.

Individual Commenter Information **(Complete this page for comments from one organization or individual.)**		
Name:	John Leland	
Organization:	Northwestern Energy NWMT	
Telephone:	406-497-3383	
E-mail:	John.Leland@northwestern.com	
NERC Region (check all Regions in which your company operates)		**Registered Ballot Body Segment (check all industry segments in which your company is registered)**
☐ **ERCOT**	☒	1 — Transmission Owners
☐ **FRCC**	☐	2 — RTOs and ISOs
☐ **MRO**	☐	3 — Load-serving Entities
☐ **NPCC**	☐	4 — Transmission-dependent Utilities
☐ **RFC**	☐	5 — Electric Generators
☐ **SERC**	☐	6 — Electricity Brokers, Aggregators, and Marketers
☐ **SPP**	☐	7 — Large Electricity End Users
☒ **WECC**	☐	8 — Small Electricity End Users
☐ **NA – Not Applicable**	☐	9 — Federal, State, Provincial Regulatory or other Government Entities
	☐	10 — Regional Reliability Organizations and Regional Entities

Group Comments (Complete this page if comments are from a group.)

Group Name:

Lead Contact:

Contact Organization:

Contact Segment:

Contact Telephone:

Contact E-mail:

Additional Member Name	Additional Member Organization	Region*	Segment*

*If more than one Region or Segment applies, please list all that apply. Regional acronyms and segment numbers are shown on prior page.

Background

The purpose of this standard is to establish Transmission System planning performance requirements within the planning horizon to develop a Bulk Electric System that will operate reliably over a broad spectrum of System conditions and following a wide range of probable Contingencies. This standard will replace TPL-001-0, TPL-002-0, TPL-003-0, and TPL-004-0. The standard drafting team has not yet addressed TPL-005-0 and TPL-006-0, but will address these two standards during the next phase of the drafting process.

The major objectives of the standard drafting team are to:

1) Ensure the standard is complete and the requirements are set at an appropriate level to ensure reliability (Not Least Common Denominator)
2) Ensure that the standard is enforceable by having clearly defined requirements with unambiguous language
3) Address the issues raised by FERC Order 693, 890, and other applicable orders
4) Address the issues raised in the original Standards Authorization Request (SAR) and the Supplemental SAR.

The standard drafting team did not attempt to edit the existing standards but rather chose to write one standard that addresses all aspects of transmission planning in the existing TPL-001-0, TPL-002-0, TPL-003-0, and TPL-004-0. The standard drafting team organized the new standard in the following sections:

R1 – Modeling requirements
R2 – Assessment and Corrective Plan requirements
R3 – Steady State Analysis requirements
R4 – Stability Analysis requirements
R5 – Coordination requirements

The standard drafting team determined that the requirements and analysis for Steady State are different from those for stability. As such, the standard drafting team separated the analysis requirements and created two performance requirement tables.

The standard drafting team recognizes that this draft standard is a starting point for industry input into the standard and that there is still a lot of work required to complete the process. The standard drafting team has made many changes to clarify requirements, add requirements, and make some of the performance requirements stricter. The standard drafting team has not addressed Measures, Risk Factors, Violation Severity Factors, or Time Horizons at this time. These will be addressed when the standard drafting team has better defined the requirements of the standard.

For questions where you agree with the standard drafting team, please state that you agree and if available, please provide supporting documentation. If you disagree with the standard drafting team, please explain why you disagree and provide data to support your position, such as outage data or analysis. If you believe that we have made a performance requirement too strict please provide supporting documentation. If applicable, please include the approximate cost in man-hours for additional studies and/or cost in $Millions for additional transmission investment to meet the new requirements or the stricter requirements. If you believe that the standard should be stricter, please provide the rationale along with any supporting data, including existing practices, cost estimates or additional analysis.

To improve the standard, the standard drafting team would appreciate responses to as many of these questions as you can answer.

A. New Definitions

Many of the concerns about the existing TPL standards come from the fact that a number of generally understood concepts are embedded in undefined terms, tables, and footnotes. To clarify some of these concerns, the standard drafting team is proposing new definitions. Please indicate whether you agree with the following proposed definitions and provide proposed changes to the definitions if you disagree:

Definition	**Agree or Disagree**
Q1. **Base Case**: Computer representation of the projected initial or starting Transmission System conditions for a specific point in time. Each base case reflects the forecasted Load at each bus (or node) on the interconnected Transmission System, the transmission facilities which deliver the generation and reactive resources to the connected Load, and the generation dispatch including firm transaction obligations assumed to supply the connected Load. The models also reflect facility ratings in accordance with FAC-008 & FAC-009.	☒Agree. ☐Do not agree.
Q1. **Comment: NWE recommends the words "and may include non-firm transactions" after the words "firm transaction obligations".**	
Q2. **Consequential Load Loss:** Load that is no longer served because it is directly connected to an element(s) that is removed from service due to fault clearing action or mis-operation.	☒Agree. ☐Do not agree.
Q2. **Comment:**	
Q3. **Extreme Events:** Events which are more severe than Planning Events and have a low probability of occurrence.	☒Agree. ☐Do not agree.
Q3. **Comment:**	
Q4. **Long-Term Transmission Planning Horizon:** Transmission planning period that covers years six through ten or beyond.	☒Agree. ☐Do not agree.
Q4. **Comment:**	
Q5. **Near-Term Transmission Planning Horizon:** Transmission planning period that covers years One through five.	☒Agree. ☐Do not agree.
Q5. **Comment:**	
Q6. **Non-Consequential Load Loss:** Load loss other than Consequential Load Loss. For example, Load loss that occurs through manual (operator initiated) or automatic operations such as under-voltage Load shedding, under-frequency Load shedding, or Special Protection Systems.	☒Agree. ☒Do not agree.
Q6. **Comment: Include the words "not directly connected" before period of first sentence; and what does "load loss" mean?**	
Q7. **Planning Assessment:** Documented evaluation of future	☒Agree.

Bulk Electric System needs by the use of performance studies that cover a range of assumptions regarding system conditions, time frames, future plans including capital reinforcements and operating procedures and other factors, such as asset conditions and age.	☒Do not agree.
Q7. **Comment: Insert before performance studies the words "current or past that is known to be valid".**	
Q8. **Planning Events:** Events which require Transmission system performance requirements to be met.	☒Agree. ☐Do not agree.
Q8. **Comment:**	
Q9. **Plant Stability Study:** Study of an individual plant's Stability for various Contingencies in the vicinity of the plant; concerned with the effect on the System of the generating units' loss of synchronism and the damping of the generating units' power oscillations.	☐Agree. ☒Do not agree.
Q9. **Comment: System stability studies covers this definition.**	
Q10. **System Stability Study:** Study of the System or portions of the System to ensure that angular Stability is maintained, inter-area power oscillations are damped, and voltages during the dynamic simulation stay within acceptable performance limits.	☒Agree. ☐Do not agree.
Q10. **Comment:**	
Q11. **Year One:** The first year that a Transmission Planner is responsible for studying. This is further defined as the planning window that begins the next calendar year from the time the Transmission Planner submits their annual studies. Analysis conducted for time horizons within the calendar year from the study publication are assumed to be conducted under the auspices of Operations Planning.	☒Agree. ☐Do not agree.
Q11. **Comment:**	

B. Sensitivity Studies

The draft planning standard includes the requirement, as specified in FERC Order 693, that planning decisions be based on a portfolio of analyses. In section 12.a.ii "Sensitivity studies and critical system conditions" FERC provided direction to consider a full range of variables considered to be significant that need to be assessed and documentation provided that explains the rationale for the selection of variables assessed.

In addition to the firm obligation scenario, the portfolio of analyses should be supplemented to include information from sensitivity analysis. The sensitivity analysis should be developed using additional cases that simulate reasonably stressed system conditions. The standard drafting team has included several parameters that can be varied to create the requisite sensitivity case(s). The draft standards specify that the sensitivities reflect one or more of the following conditions and that documentation be provided explaining the rationale for selecting the sensitivity(ies) employed. The parameters that should be varied include:

- Higher or lower Load forecasts from the Base Case with variability of Load/demand and Load power factors due to season, weather, or time of day.
- Modification of expected transfers.

- Unavailability of long lead time facilities.
- Variability and outages of Reactive Resources.
- Generation additions, retirements, or other dispatch scenarios.
- Decreased effectiveness of controllable Loads and Demand Side Management.
- Modification of planned Transmission outages

To help focus industry discussion, please respond to the questions below:

Q12. Should the standard provide more specific direction regarding the number of sensitivity cases that need to be developed?

Yes ☐ No ☒
Comment: The current list is too prescriptive as many may not apply to a specific TP, yet they would be required to study it.

Q13. Should the standard specify the required changes, such as changes in expected transfers, load forecasts, generation patterns, etc., from the study case to be considered a "reasonably stressed" case?

Yes ☐ No ☒
Comment: Each TP's stressed conditions vary, making a list that is applicable to all will not achieve the desired purpose.

Q14. The SDT proposes to require the use of sensitivity studies for Near-Term Transmission System Planning Horizon stability analysis. Do you concur with the use of sensitivity analysis in dynamic studies?

Yes ☒ No ☒
Comment: The TP should have the ability to determine the sensitivity to use.

Q15. The draft TPL standard does not require the use of sensitivity studies for the Long-Term Transmission System Planning Horizon (year six and beyond) studies. Do you concur with this approach or should there be some level of sensitivity analysis required for the long-term period?

Yes ☐ No ☒
Comment: However, the TP should have the abiltiy to determine the sensitivity to use.

C. Corrective Action Plans

Requirement R2.7 of the standard states that when analysis shows that the performance requirements in Table 1 and Table 2 are not fully met, a Corrective Action Plan that utilizes all or some of the Transmission System enhancements, generation additions, DSM, new technologies and Operating Procedures shall be included in the Planning Assessment. This Corrective Action Plan should ensure that upon its implementation the identified system deficiencies will be corrected so that the performance requirements in Table 1 and Table 2 will be met. Furthermore, studies included in the Planning Assessment should demonstrate that this is indeed the case.

Q16. Requirement R2.7.1: Such Corrective Action Plans shall "Identify System deficiencies and the associated actions needed to achieve required System performance including Transmission and generation improvements, DSM, new technologies, or Operating Procedures including the duration of Interim Operating Procedures". System deficiencies may be corrected using an integrated plan, i.e., an optimal mix of

Transmission, generation, DSM and Operating Procedures. Should DSM be considered in conjunction with other measures in developing Corrective Action Plans? If yes, please comment on how the impact of DSM should be included.

Yes ☐ No ☒
Comment: The word "including" should be "may include", mandating what should be studied is not appropriate. Also, including DSM in the list presumes the balancing area is deficient in generation, which may not always be the case.

Q17. Requirement R2.7.2: Such Corrective Action Plans shall "Be added to study cases and the cases re-tested to show that the System with planned additions meets the performance requirements in the tables". Should new studies, including the facilities comprising the Corrective Action Plan, be performed to assess System normal performance and Contingency response for conditions that previously resulted in the System deficiencies (without the planned additions) and also demonstrate that the changes would not result in inadvertent negative impacts on the System. If you "agree", please comment on how a study area should be determined.

Yes ☒ No ☐
Comment: R2.7.2 does not refer to "how a study area should be determined". This added statement should be eliminated.

Q18. Requirement R2.7.3: The standard calls for a differentiation between committed and proposed projects. Do you agree that they should be treated separately? If not, please state why not.

Yes ☐ No ☒
Comment: No, there are no clear guidelines on how to make this distinction.

Q19. Requirement R2.7.4: For such Corrective Action Plans "Committed projects shall not be removed without documentation to show that the revised plan meets the performance requirements". Do you agree or disagree with this requirement? If you disagree, please explain why.

Yes ☐ No ☒
Comment: Same problem as Q18; but it isn't clear what level of documentation is needed.

D. Performance Requirements

The proposed revised planning standard (TPL-001-1) incorporates a number of changes in requirements as compared to the current planning standards (TPL-001-0 through TPL-004-0), which it is expected to replace. Among other things these changes are intended to clarify the standard, address issues described by FERC, and, in particular, to "raise the bar." Strengthening the planning standards in selected areas is necessary to maintain a reliable Bulk Electric System that is up to the challenges of the 21st Century. In proposing the requirements in this draft, the standard drafting team attempted to balance the value of increased reliability against any potential increase in work and costs to meet the new proposed standard.

The standard drafting team is seeking input from the industry to determine whether a proper balance has been achieved. The areas where material changes are proposed in this draft are enumerated below, and questions are posed by the standard drafting team to obtain industry comment. In formulating your responses, please keep in mind that material

changes in the final standard will be accompanied by a transition plan to provide for an orderly implementation of the final standard.

The performance requirements relative to Non-Consequential Loss of Load for the following events enumerated in the two tables can be considered more stringent than the existing TPL standards. Furthermore, the proposed standard is based on an assumption that performance requirements for EHV facilities should be more stringent than for lower voltage facilities.

Do you agree that Non-Consequential Loss of Load should not be permitted for the following events? If you disagree, please provide a reason for your disagreement.

Event	Agree or Disagree	Comment
Q20. P2-1: Loss of bus section (SLG for stability) above 300 kV	☐Agree. ☒Do not agree.	What is non-consequential load loss? Is losing a motor due to motor contactor action a non-consequential load loss? Also, the transmission system was developed under criteria without this requirement and to correct it would be costly.
Q21. P5-1: For facilities above 300 kV, loss of a Transmission circuit followed by System adjustment[1] followed by loss of another Transmission circuit	☐Agree. ☒Do not agree.	What is non-consequential load loss? Is losing a motor due to motor contactor action a non-consequential load loss? Also, the transmission system was developed under criteria without this requirement and to correct it would be costly.
Q22. P5-2: For facilities above 300 kV, loss of a Transmission circuit followed by System adjustment followed by loss of a transformer with low side voltage rating above 300 kV	☐Agree. ☒Do not agree.	What is non-consequential load loss? Is losing a motor due to motor contactor action a non-consequential load loss? Also, the transmission system was developed under criteria without this requirement and to correct it would be costly.
Q23. P5-3: For facilities above 300 kV, loss of a transformer with low side voltage rating above 300 kV followed by System adjustment followed by loss of another transformer	☐Agree. ☒Do not agree.	What is non-consequential load loss? Is losing a motor due to motor contactor action a non-consequential load loss? Also, the transmission system was developed under criteria without this requirement and to correct it would be costly.

[1]System adjustment can be manual or automatic.

The proposed standard is based on an assumption that performance requirements for non-bus tie EHV breakers should be distinguished from other breakers. Do you agree that Non-Consequential Loss of Load should not be permitted for this event?

Q24. Loss of non-bus tie breaker (above 300 kV) due to internal fault

Yes ☐ No ☒
Comment: Non-consequential load loss should be permitted for this contingency.

The proposed standard is based on an assumption that performance requirements for non-bus tie EHV breakers should be distinguished from other breakers and that performance requirements for EHV facilities should be more stringent than for lower voltage facilities. Do you agree that Non-Consequential Loss of Load should not be permitted for this event?

Q25. P3-1: Loss of (SLG for stability) either a generator, a Transmission circuit, a transformer, or a bus and a stuck non-bus tie breaker (above 300 kV)

Yes ☐ No ☒
Comment: Non-consequential load loss should be permitted for this contingency.

The proposed standard is based on an assumption that the following events are relatively high probability events and, therefore, Non-Consequential Loss of Load should not be permitted. Do you agree? If you disagree, please provide a reason for your disagreement.

Event	Agree or Disagree	Comment
Q26. P4-1: Loss of a Generator followed by System adjustment[1] followed by loss of another Generator	☐Agree. ☒Do not agree.	What is non-consequential load loss? Is losing a motor due to motor contactor action a non-consequential load loss? Also, the transmission system was developed under criteria without this requirement and to correct it would be costly.
Q27. P4-2: Loss of a generator followed by a System adjustment followed by the loss of a monopolar DC line	☐Agree. ☒Do not agree.	What is non-consequential load loss? Is losing a motor due to motor contactor action a non-consequential load loss? Also, the transmission system was developed under criteria without this requirement and to correct it would be costly.
Q28. P4-3: Loss of a generator followed by System adjustment followed by loss of a Transmission circuit	☐Agree. ☒Do not agree.	What is non-consequential load loss? Is losing a motor due to motor contactor action a non-consequential load loss? Also, the transmission system was developed under criteria without this requirement and to correct it would be costly.
Q29. P4-4: Loss of a generator followed by System adjustment followed by loss of a transformer with low side voltage rating above 300 kV	☐Agree. ☒Do not agree.	What is non-consequential load loss? Is losing a motor due to motor contactor action a non-consequential load loss? Also, the transmission system was developed under criteria without this requirement and to correct it would be costly.

[1] System adjustment can be manual or automatic

The performance requirement for the following event may be considered less stringent than the existing TPL Standards — P2-3: Loss of a single pole of a DC line. Interruption of firm transactions (without Loss of firm Load) if the transaction is dependent on the faulted DC line is now allowed for this initiating event/Contingency.

Q30. Do you agree that interruption of any firm transfers that are dependent on the outaged DC line that is taken out of service should be permitted?

Yes ☒ No ☐
Comment:

E. Stability

Q31. The proposed standard is based on an assumption that steady state analysis and stability analysis are different from each other and that therefore, two tables of Contingencies and performance requirements were needed. It is also based on an assumption that stability study requirements should be clearly separated from the steady state study requirements. Do you agree with the action taken in separating stability analysis from steady state analysis? If not, please explain.

Yes ☒ No ☐
Comment:

Q32. The SDT has added requirements for plant stability studies and has drawn a distinction in these studies from System stability studies. Do you agree with this approach? If not, please explain.

Yes ☐ No ☒
Comment: Plant stability is an artifical distinction and is a subset of transient stability.

Q33. The existing TPL-004-0 standard has a requirement to consider the Loss of all generating units at a plant, but it was not clear whether this requirement should apply to stability studies. The SDT did not include this requirement in the stability table, because it is hard to envision a condition when all units would trip simultaneously within the timeframe of a stability simulation. Do you think this condition should be required in stability analysis of extreme events? If not, please explain.

Yes ☒ No ☒
Comment: If such a standard is constructed, it should be based on a common mode of failure mechanism.

Q34. There are an increasing number of events with slow voltage recovery after faults on the Transmission System. The dynamic behavior of induction motor loads is a major factor in this phenomenon. The proposed standard therefore requires that the load model for stability studies of peak Load conditions include the dynamic effects of induction motors. Do you agree with this requirement? If not, please explain?

Yes ☒ No ☐
Comment:

Q35. What type of manual or automatic adjustments of generators should be allowed for single and multiple Contingencies?

Comment: All adjustments should be allowed as long as they are realistic and achievable in the time frame required and consistent with other study parameters. Also, if a RAS (or special protection system) is the adjustment and if cascading could result from the event, then redundancy should be required.

F. Generation Runback and Tripping

The SDT has discussed the automatic and manual readjustments of generators that should be permissible for single contingencies and multiple contingencies. The existing TPL-001-0 through TPL-004-0 standards through footnote (a) of Table I could include emergency ratings applicable for short durations as required to permit operating steps necessary to maintain system control. The footnote is silent about allowable generation adjustments in response to the Category B events. However, it does indicate that system adjustments are permitted to prepare for the next Contingency. These system adjustments could include manual or automatic adjustments involving generation.

The SDT has learned that many transmission owners use System Protection Systems (SPS) or Remedial Action Schemes (RAS) to trip generation for single and multiple Contingency outage events to prevent overloads, low voltage, and instability in the Interconnected Transmission network for N-1 and N-2 events. In some cases, the RAS are used to prepare for the next Contingency; but in some cases, the RAS are used to simultaneously avoid exceeding emergency ratings.

Q36. The proposed standard allows generation runback after the disturbance that causes a single Contingency (or due to a single Contingency outage) to move the Interconnected Transmission System from an emergency state (within emergency ratings) to a normal state (within normal ratings), assuming that the disturbance does not result in instability? Do you agree? If not, please explain.

Yes ☒ No ☐
Comment:

Q37. Since emergency ratings are thermal ratings, should this standard allow an automatic generation runback scheme (that is initiated immediately after the disturbance causing the single Contingency) to prevent thermal overloads (assuming that the disturbance does not result in instability)? If yes, what are the conditions that must be met in order to allow such a runback scheme to meet the System performance criteria for single Contingencies? Please explain the reason for your answer.

Yes ☒ No ☐
Comment: Yes, (1) if the failure of the runback scheme results in cascading, then it should not be allowed; (2) the power flow should be within the time-limited equipment ratings; and (3) the frequency should be within allowable limits.

The standard drafting team has considered that RAS or SPS may be allowable under certain situations for single Contingencies, but proposes that their use should be limited.

Q38. Do you agree that RAS or SPS may be allowed for single Contingencies? If not, please explain.

Yes ☒ No ☐

Comment:

Q39. Please describe the limitations that you believe should be placed on the use of RAS or SPS for single Contingency events.

Comment: RAS or SPS should not be allowed for non three phase single line faults. If cascading could result from the failure of the RAS to operate properly, then redundancy should be required.

Q40. When RAS or SPS are allowed, what conditions should be met when these systems are used in system adjustments to meet performance requirements?

Comment: RAS or SPS should meet performance requirements including reserve requirements.

G. General Questions

Q41. If you are aware of any regional variances that would be required as a result of these standards, please identify them here.

Yes ☒ No ☐
Comment: WECC allows N-1 generator tripping, and the transmission systems have been designed around this criteria. Moving away from this criteria is not necessary, and for critical N-1 events, redundancy is in place.

Q42. If you are aware of any conflicts between the proposed standards and any regulatory function, rule order, tariff, rate schedule, legislative requirement or agreement, please identify them here.

Yes ☒ No ☐
Comment: Eliminating the N-1 RAS in the West could cause problems for utilities in the West with local jurisdictional cost recovery.

Q43. Do you have any other questions or concerns with the proposed standard that have not been addressed? If yes, please explain.

Yes ☐ No ☒
Comment:

NERC
NORTH AMERICAN ELECTRIC RELIABILITY CORPORATION

Comment Form for First Draft of TPL-001-1 — Transmission System Planning Performance Requirements

Please use this form to submit comments on the proposed draft of TPL-001-1. Comments must be submitted by **Friday, October 26, 2007**. You may submit the completed form by e-mail to sarcomm@nerc.net with the words "TPL-001 Draft 1" in the subject line. If you have questions please contact Ed Dobrowolski at ed.dobrowolksi@nerc.net or by telephone at 609-947-3673.

Individual Commenter Information **(Complete this page for comments from one organization or individual.)**		
Name:		
Organization:		
Telephone:		
E-mail:		
NERC Region (check all Regions in which your company operates)		**Registered Ballot Body Segment (check all industry segments in which your company is registered)**
☐ **ERCOT**	☐	1 — Transmission Owners
☐ **FRCC**	☐	2 — RTOs and ISOs
☐ **MRO**	☐	3 — Load-serving Entities
☒ **NPCC**	☐	4 — Transmission-dependent Utilities
☐ **RFC**	☐	5 — Electric Generators
☐ **SERC**	☐	6 — Electricity Brokers, Aggregators, and Marketers
☐ **SPP**	☐	7 — Large Electricity End Users
☐ **WECC**	☐	8 — Small Electricity End Users
☐ **NA – Not Applicable**	☐	9 — Federal, State, Provincial Regulatory or other Government Entities
	☒	10 — Regional Reliability Organizations and Regional Entities

Group Comments (Complete this page if comments are from a group.)

Group Name: **NPCC RSC, Regional Standards Committee**

Lead Contact: **Guy V. Zito**

Contact Organization: **Northeast Power Coordinating Council**

Contact Segment: **10**

Contact Telephone: **212-840-1070**

Contact E-mail: **gzito@npcc.org**

Additional Member Name	Additional Member Organization	Region*	Segment*
Al Adamson	New York State Reliability Council	**NPCC**	10
David Kiguel	Hydro One Networks	NPCC	1
Donald Nelson	MA Dept of Public Utilities	NPCC	9
Edwin Thompson	ConEd	NPCC	1
Greg Campoli	New York ISO	NPCC	2
Kathleen Goodman	ISO New England	NPCC	2
Michael Gildea	Constellation Energy	NPCC	6
Michael Ranalli	Ngrid US	NPCC	1
Murale Gopinathan	Northeast Utilities	NPCC	1
Ralph Rufrano	New York Power Authority	NPCC	1
Randy MacDonald	New Brunswick System Operator	NPCC	2
Roger Champagne	HydroQuebec TransEnergie	NPCC	1
Biju Gopi	The IESO, Ontario	NPCC	2
Sylvain Clermont	HydroQuebec TransEnergie	NPCC	1
Reza Rizvi	Northeast Power Coordinating Council	NPCC	10
Guy V. Zito	Northeast Power Coordinating Council	NPCC	10

*If more than one Region or Segment applies, please list all that apply. Regional acronyms and segment numbers are shown on prior page.

Background

The purpose of this standard is to establish Transmission System planning performance requirements within the planning horizon to develop a Bulk Electric System that will operate reliably over a broad spectrum of System conditions and following a wide range of probable Contingencies. This standard will replace TPL-001-0, TPL-002-0, TPL-003-0, and TPL-004-0. The standard drafting team has not yet addressed TPL-005-0 and TPL-006-0, but will address these two standards during the next phase of the drafting process.

The major objectives of the standard drafting team are to:

1) Ensure the standard is complete and the requirements are set at an appropriate level to ensure reliability (Not Least Common Denominator)
2) Ensure that the standard is enforceable by having clearly defined requirements with unambiguous language
3) Address the issues raised by FERC Order 693, 890, and other applicable orders
4) Address the issues raised in the original Standards Authorization Request (SAR) and the Supplemental SAR.

The standard drafting team did not attempt to edit the existing standards but rather chose to write one standard that addresses all aspects of transmission planning in the existing TPL-001-0, TPL-002-0, TPL-003-0, and TPL-004-0. The standard drafting team organized the new standard in the following sections:

R1 – Modeling requirements
R2 – Assessment and Corrective Plan requirements
R3 – Steady State Analysis requirements
R4 – Stability Analysis requirements
R5 – Coordination requirements

The standard drafting team determined that the requirements and analysis for Steady State are different from those for stability. As such, the standard drafting team separated the analysis requirements and created two performance requirement tables.

The standard drafting team recognizes that this draft standard is a starting point for industry input into the standard and that there is still a lot of work required to complete the process. The standard drafting team has made many changes to clarify requirements, add requirements, and make some of the performance requirements stricter. The standard drafting team has not addressed Measures, Risk Factors, Violation Severity Factors, or Time Horizons at this time. These will be addressed when the standard drafting team has better defined the requirements of the standard.

For questions where you agree with the standard drafting team, please state that you agree and if available, please provide supporting documentation. If you disagree with the standard drafting team, please explain why you disagree and provide data to support your position, such as outage data or analysis. If you believe that we have made a performance requirement too strict please provide supporting documentation. If applicable, please include the approximate cost in man-hours for additional studies and/or cost in $Millions for additional transmission investment to meet the new requirements or the stricter requirements. If you believe that the standard should be stricter, please provide the

rationale along with any supporting data, including existing practices, cost estimates or additional analysis.

To improve the standard, the standard drafting team would appreciate responses to as many of these questions as you can answer.

A. New Definitions

Many of the concerns about the existing TPL standards come from the fact that a number of generally understood concepts are embedded in undefined terms, tables, and footnotes. To clarify some of these concerns, the standard drafting team is proposing new definitions. Please indicate whether you agree with the following proposed definitions and provide proposed changes to the definitions if you disagree:

Definition	**Agree or Disagree**
Q1. **Base Case**: Computer representation of the projected initial or starting Transmission System conditions for a specific point in time. Each base case reflects the forecasted Load at each bus (or node) on the interconnected Transmission System, the transmission facilities which deliver the generation and reactive resources to the connected Load, and the generation dispatch including firm transaction obligations assumed to supply the connected Load. The models also reflect facility ratings in accordance with FAC-008 & FAC-009.	☐Agree. ☒Do not agree.
Q1. **Comment: There are a two undefined terms in this definition: "Transmission System" and "interconnected Transmission System". The definition needs to specifically identify what should be modeled applicable to the subject area and in a manner consistent with other NERC definitions. The definition refers to Facility ratings rather than the general reference to FAC-008 & FAC-009**	
Q2. **Consequential Load Loss:** Load that is no longer served because it is directly connected to an element(s) that is removed from service due to fault clearing action or mis-operation.	☒Agree. ☐Do not agree.
Q2. **Comment:**	
Q3. **Extreme Events:** Events which are more severe than Planning Events and have a low probability of occurrence.	☐Agree. ☒Do not agree.
Q3. **Comment: Modify to "Events which are more severe,but have a lower probability of occurrence, than Planning Events".**	
Q4. **Long-Term Transmission Planning Horizon:** Transmission planning period that covers years six through ten or beyond.	☒Agree. ☐Do not agree.
Q4. **Comment:**	
Q5. **Near-Term Transmission Planning Horizon:** Transmission planning period that covers years One through five.	☒Agree. ☐Do not agree.
Q5. **Comment:**	

Q6. **Non-Consequential Load Loss:** Load loss other than Consequential Load Loss. For example, Load loss that occurs through manual (operator initiated) or automatic operations such as under-voltage Load shedding, under-frequency Load shedding, or Special Protection Systems.	☒Agree. ☐Do not agree.
Q6. **Comment:**	
Q7. **Planning Assessment:** Documented evaluation of future Bulk Electric System needs by the use of performance studies that cover a range of assumptions regarding system conditions, time frames, future plans including capital reinforcements and operating procedures and other factors, such as asset conditions and age.	☐Agree. ☒Do not agree.
Q7. **Comment: Eliminate "capital" from the definition. It is not defined or consistently applicable to the standard. Reference too vague "other factors, such as asset conditions and age" should be removed from this standard; there are no consistent definitions or industry standards on which to base this requirement, nor does it appear to be a necessary addition to the standard.**	
Q8. **Planning Events:** Events which require Transmission system performance requirements to be met.	☐Agree. ☒Do not agree.
Q8. **Comment: Propose, "Events for which Transmission performance requirements must be met".**	
Q9. **Plant Stability Study:** Study of an individual plant's Stability for various Contingencies in the vicinity of the plant; concerned with the effect on the System of the generating units' loss of synchronism and the damping of the generating units' power oscillations.	☐Agree. ☒Do not agree.
Q9. **Comment: A Plant Stability Study should be a part of a System Stability Study. How should and why would they be differentiated? The analysis and performance constraints are the same in both cases; it's just a matter of whether one or more generating units are involved.**	
Q10. **System Stability Study:** Study of the System or portions of the System to ensure that angular Stability is maintained, inter-area power oscillations are damped, and voltages during the dynamic simulation stay within acceptable performance limits.	☐Agree. ☒Do not agree.
Q10. **Comment: See comment on Q9; proposed modification, "Study of the System or portions of the System to determine whether system angular Stability is maintained, power oscillations are damped, and voltages during the dynamic simulation stay within acceptable perfomance limits even if unit instability exists.**	
Q11. **Year One:** The first year that a Transmission Planner is responsible for studying. This is further defined as the planning window that begins the next calendar year from the time the Transmission Planner submits their annual studies. Analysis conducted for time horizons within the calendar year from the study publication are assumed to be conducted under the auspices of Operations Planning.	☒Agree. ☒Do not agree.
Q11. **Comment: Modify to, "The first year that a Tranmission Planner is responsible for studying. This is further defined as the planning window that begins the next calendar year from the time the Transmission Planner**	

completes and communicates its annual studies."

B. Sensitivity Studies

The draft planning standard includes the requirement, as specified in FERC Order 693, that planning decisions be based on a portfolio of analyses. In section 12.a.ii "Sensitivity studies and critical system conditions" FERC provided direction to consider a full range of variables considered to be significant that need to be assessed and documentation provided that explains the rationale for the selection of variables assessed.

In addition to the firm obligation scenario, the portfolio of analyses should be supplemented to include information from sensitivity analysis. The sensitivity analysis should be developed using additional cases that simulate reasonably stressed system conditions. The standard drafting team has included several parameters that can be varied to create the requisite sensitivity case(s). The draft standards specify that the sensitivities reflect one or more of the following conditions and that documentation be provided explaining the rationale for selecting the sensitivity(ies) employed. The parameters that should be varied include:

- Higher or lower Load forecasts from the Base Case with variability of Load/demand and Load power factors due to season, weather, or time of day.
- Modification of expected transfers.
- Unavailability of long lead time facilities.
- Variability and outages of Reactive Resources.
- Generation additions, retirements, or other dispatch scenarios.
- Decreased effectiveness of controllable Loads and Demand Side Management.
- Modification of planned Transmission outages

To help focus industry discussion, please respond to the questions below:

Q12. Should the standard provide more specific direction regarding the number of sensitivity cases that need to be developed?

Yes ☐ No ☒

Comment: The standard is unclear whether or not it mandates the requirement to develop action plans in accordance with consequences of problems highlighted as a result of one of the sensitivities.

Suggest modification to, "…sensitivity testing that stresses the System shall be considered, and documentation with the rationale for the sensitivity testing shall be supplied. The sensitivity case(s) may include one or more of the following conditions:"

Q13. Should the standard specify the required changes, such as changes in expected transfers, load forecasts, generation patterns, etc., from the study case to be considered a "reasonably stressed" case?

Yes ☐ No ☒

Comment: The standard is unclear whether or not it mandates the requirement to develop action plans in accordance with consequences of problems highlighted as a result of one of the sensitivities.

Reasonably stressed conditions are dependent upon the study area under review and the standard is not likely to be able to be crafted to provide sufficent and consistent direction. However, it might be helpful if the standard

clarified whether the base case should include any unplanned generator outages or whether, aside from potential sensitivities, unplanned generator outages are considered only through P1, P3 or P4 Contingencies. If the standard addresses unplanned generator outages only through P1, P3 and P4, then it is recommended that a mandatory sensitivity analysis, with required mitigation, include various potential combinations of a reasonable amount of unplanned outages. The combinations should be based on the part of the system that is under study.

Q14. The SDT proposes to require the use of sensitivity studies for Near-Term Transmission System Planning Horizon stability analysis. Do you concur with the use of sensitivity analysis in dynamic studies?

Yes ☒ No ☐
Comment: The standard is unclear whether or not it mandates the requirement to develop action plans in accordance with the consequences of problems highlighted as a result of one of the sensitivities.

Suggest modification to, "…sensitivity testing that stresses the System should be considered. Sensitivity case(s) might include among the following conditions:" 2.4.3 shold mimic 2.1.3 except in regard to load models.

Q15. The draft TPL standard does not require the use of sensitivity studies for the Long-Term Transmission System Planning Horizon (year six and beyond) studies. Do you concur with this approach or should there be some level of sensitivity analysis required for the long-term period?

Yes ☒ No ☐
Comment: There is no need for sensitivity analysis.

C. Corrective Action Plans

Requirement R2.7 of the standard states that when analysis shows that the performance requirements in Table 1 and Table 2 are not fully met, a Corrective Action Plan that utilizes all or some of the Transmission System enhancements, generation additions, DSM, new technologies and Operating Procedures shall be included in the Planning Assessment. This Corrective Action Plan should ensure that upon its implementation the identified system deficiencies will be corrected so that the performance requirements in Table 1 and Table 2 will be met. Furthermore, studies included in the Planning Assessment should demonstrate that this is indeed the case.

Q16. Requirement R2.7.1: Such Corrective Action Plans shall "Identify System deficiencies and the associated actions needed to achieve required System performance including Transmission and generation improvements, DSM, new technologies, or Operating Procedures including the duration of Interim Operating Procedures". System deficiencies may be corrected using an integrated plan, i.e., an optimal mix of Transmission, generation, DSM and Operating Procedures. Should DSM be considered in conjunction with other measures in developing Corrective Action Plans? If yes, please comment on how the impact of DSM should be included.

Yes ☒ No ☐
Comment: DSM should be included to the extent that its performance is sufficiently and consistently understood. The standard does not use the term "optimal" Therefore, the Drafting Team appears to be interpreting the Standard to require a vertically-integrated Planner to produce a so-called optimal-mix of resources plan. This would be an incorrect assumption and is not required. In areas with independent planners and competitive wholesale markets, it is sufficent to identify system needs and produce a plan that identifies regulated transmission solutions in the event that market-based resources (such as DSM) do not address those identified needs. Therefore, while DSM can be as effective a resource as generation, per Commission Orders, in areas with ISOs/RTOs and a competitive wholesale market, the NERC Standard cannot prescribe the

development so-called optimized (as is suggested by the Drafting Team) resource-mix plans, as identified by a central planner.

Q17. Requirement R2.7.2: Such Corrective Action Plans shall "Be added to study cases and the cases re-tested to show that the System with planned additions meets the performance requirements in the tables". Should new studies, including the facilities comprising the Corrective Action Plan, be performed to assess System normal performance and Contingency response for conditions that previously resulted in the System deficiencies (without the planned additions) and also demonstrate that the changes would not result in inadvertent negative impacts on the System. If you "agree", please comment on how a study area should be determined.

Yes ☒ No ☐
Comment: The study area should be based upon planning expertise and knowledge of the system, giving due consideration to external impacts.

Q18. Requirement R2.7.3: The standard calls for a differentiation between committed and proposed projects. Do you agree that they should be treated separately? If not, please state why not.

Yes ☒ No ☐
Comment: They should be viewed differently in the Near-Term.

Q19. Requirement R2.7.4: For such Corrective Action Plans "Committed projects shall not be removed without documentation to show that the revised plan meets the performance requirements". Do you agree or disagree with this requirement? If you disagree, please explain why.

Yes ☒ No ☐
Comment: It is unclear as to what the committed project is being removed from. Suggested language "…removed from the plan…".

D. Performance Requirements

The proposed revised planning standard (TPL-001-1) incorporates a number of changes in requirements as compared to the current planning standards (TPL-001-0 through TPL-004-0), which it is expected to replace. Among other things these changes are intended to clarify the standard, address issues described by FERC, and, in particular, to "raise the bar." Strengthening the planning standards in selected areas is necessary to maintain a reliable Bulk Electric System that is up to the challenges of the 21st Century. In proposing the requirements in this draft, the standard drafting team attempted to balance the value of increased reliability against any potential increase in work and costs to meet the new proposed standard.

The standard drafting team is seeking input from the industry to determine whether a proper balance has been achieved. The areas where material changes are proposed in this draft are enumerated below, and questions are posed by the standard drafting team to obtain industry comment. In formulating your responses, please keep in mind that material changes in the final standard will be accompanied by a transition plan to provide for an orderly implementation of the final standard.

The performance requirements relative to Non-Consequential Loss of Load for the following events enumerated in the two tables can be considered more stringent than the existing TPL

standards. Furthermore, the proposed standard is based on an assumption that performance requirements for EHV facilities should be more stringent than for lower voltage facilities.

Do you agree that Non-Consequential Loss of Load should not be permitted for the following events? If you disagree, please provide a reason for your disagreement.

Event	Agree or Disagree	Comment
Q20. P2-1: Loss of bus section (SLG for stability) above 300 kV	☒Agree. ☐Do not agree.	
Q21. P5-1: For facilities above 300 kV, loss of a Transmission circuit followed by System adjustment[1] followed by loss of another Transmission circuit	☐Agree. ☒Do not agree.	Given the low probability of extended overlapping outages of overhead facilities, systems have been designed assuming that load shedding following the loss of a second transmission line is permissible. Eliminating any allowance for load shedding for this condition may require significant system expansion and cost to to customers.
Q22. P5-2: For facilities above 300 kV, loss of a Transmission circuit followed by System adjustment followed by loss of a transformer with low side voltage rating above 300 kV	☒Agree. ☐Do not agree.	
Q23. P5-3: For facilities above 300 kV, loss of a transformer with low side voltage rating above 300 kV followed by System adjustment followed by loss of another transformer	☒Agree. ☐Do not agree.	

[1]System adjustment can be manual or automatic.

The proposed standard is based on an assumption that performance requirements for non-bus tie EHV breakers should be distinguished from other breakers. Do you agree that Non-Consequential Loss of Load should not be permitted for this event?

Q24. Loss of non-bus tie breaker (above 300 kV) due to internal fault

Yes ☒ No ☐

Comment: It is unclear why bus tie breakers are being treated differently than other breakers. They should be treated the same.

The proposed standard is based on an assumption that performance requirements for non-bus tie EHV breakers should be distinguished from other breakers and that performance requirements for EHV facilities should be more stringent than for lower voltage facilities. Do you agree that Non-Consequential Loss of Load should not be permitted for this event?

Q25. P3-1: Loss of (SLG for stability) either a generator, a Transmission circuit, a transformer, or a bus and a stuck non-bus tie breaker (above 300 kV)

Yes ☐ No ☒
Comment: It is unclear why bus tie breakers are being treated differently than other breakers. They should be treated the same.

The proposed standard is based on an assumption that the following events are relatively high probability events and, therefore, Non-Consequential Loss of Load should not be permitted. Do you agree? If you disagree, please provide a reason for your disagreement.

Event	Agree or Disagree	Comment
Q26. P4-1: Loss of a Generator followed by System adjustment[1] followed by loss of another Generator	☒Agree. ☐Do not agree.	Load curtailment may need to be implemented during system adjustment to ensure reliability for the next contingency and may be reasonable following the subsequent loss of 2 additional generators.
Q27. P4-2: Loss of a generator followed by a System adjustment followed by the loss of a monopolar DC line	☒Agree. ☐Do not agree.	Load curtailment may need to be implemented during system adjustment to ensure reliability for the next contingency and may be reasonable following the subsequent loss of an additional generator and a monopolar DC line
Q28. P4-3: Loss of a generator followed by System adjustment followed by loss of a Transmission circuit	☒Agree. ☐Do not agree.	Load curtailment may need to be implemented during system adjustment to ensure reliability for the next contingency and may be reasonable following the subsequent loss of an additional generator and a Transmission circuit
Q29. P4-4: Loss of a generator followed by System adjustment followed by loss of a transformer	☒Agree. ☐Do not agree.	Load curtailment may need to be implemented during system adjustment to ensure reliability for the next contingency and may be reasonable following the subsequent loss of an additional generator and a transformer

The performance requirement for the following event may be considered less stringent than the existing TPL Standards — P2-3: Loss of a single pole of a DC line. Interruption of firm transactions (without Loss of firm Load) if the transaction is dependent on the faulted DC line is now allowed for this initiating event/Contingency.

[1] System adjustment can be manual or automatic

Q30. Do you agree that interruption of any firm transfers that are dependent on the outaged DC line that is taken out of service should be permitted?

Yes ☒ No ☐
Comment: This should also apply to firm transfers via single or double ac facilities as well. In either case, the transfer could be linked to dedicated facilities.

E. Stability

Q31. The proposed standard is based on an assumption that steady state analysis and stability analysis are different from each other and that therefore, two tables of Contingencies and performance requirements were needed. It is also based on an assumption that stability study requirements should be clearly separated from the steady state study requirements. Do you agree with the action taken in separating stability analysis from steady state analysis? If not, please explain.

Yes ☐ No ☒
Comment: The contingency studied are the same and as a result should be combined into one table.

Q32. The SDT has added requirements for plant stability studies and has drawn a distinction in these studies from System stability studies. Do you agree with this approach? If not, please explain.

Yes ☐ No ☒
Comment: A Plant Stability Study should be a part of a System Stability Study. How should and why would they be differentiated? The analysis and performance constraints are the same in both cases; it's just a matter of whether one or more generating units are involved.

Q33. The existing TPL-004-0 standard has a requirement to consider the Loss of all generating units at a plant, but it was not clear whether this requirement should apply to stability studies. The SDT did not include this requirement in the stability table, because it is hard to envision a condition when all units would trip simultaneously within the timeframe of a stability simulation. Do you think this condition should be required in stability analysis of extreme events? If not, please explain.

Yes ☐ No ☒
Comment: Difficult to envision how such an event would occur.

Q34. There are an increasing number of events with slow voltage recovery after faults on the Transmission System. The dynamic behavior of induction motor loads is a major factor in this phenomenon. The proposed standard therefore requires that the load model for stability studies of peak Load conditions include the dynamic effects of induction motors. Do you agree with this requirement? If not, please explain?

Yes ☐ No ☒
Comment: This requirement is too specific and limited. Induction motors are only one component of a complex load model. Complex load models are not always necessary, nor are they always the most conservative, depending on the analysis that is being conducted. Where complex load models are required, they should be considered; this may involve use of complex motor and lighting loads or polynomial load representations with or without frequency dependence. This question also suggests the need for an industry standard regarding transient voltage recovery.

Q35. What type of manual or automatic adjustments of generators should be allowed for single and multiple Contingencies?

Comment: Manual or automatic adjustments should be permissible to allow redispatch to return the system to below normal/load cycle based ratings; however, the system should not exceed applicable emergency ratings prior to the adjustment. Manual system adjustment should be allowed in between the multiple Contingencies described in P5, provided that the adjustment can be made between contingencies using short-term reserves (10-30 minute).

F. Generation Runback and Tripping

The SDT has discussed the automatic and manual readjustments of generators that should be permissible for single contingencies and multiple contingencies. The existing TPL-001-0 through TPL-004-0 standards through footnote (a) of Table I could include emergency ratings applicable for short durations as required to permit operating steps necessary to maintain system control. The footnote is silent about allowable generation adjustments in response to the Category B events. However, it does indicate that system adjustments are permitted to prepare for the next Contingency. These system adjustments could include manual or automatic adjustments involving generation.

The SDT has learned that many transmission owners use System Protection Systems (SPS) or Remedial Action Schemes (RAS) to trip generation for single and multiple Contingency outage events to prevent overloads, low voltage, and instability in the Interconnected Transmission network for N-1 and N-2 events. In some cases, the RAS are used to prepare for the next Contingency; but in some cases, the RAS are used to simultaneously avoid exceeding emergency ratings.

Q36. The proposed standard allows generation runback after the disturbance that causes a single Contingency (or due to a single Contingency outage) to move the Interconnected Transmission System from an emergency state (within emergency ratings) to a normal state (within normal ratings), assuming that the disturbance does not result in instability? Do you agree? If not, please explain.

Yes ☒ No ☐

Comment: Generation runback should be permissible to allow redispatch to return the system to below normal/load cycle based ratings; however, the system should not exceed applicable emergency ratings prior to the adjustment

Q37. Since emergency ratings are thermal ratings, should this standard allow an automatic generation runback scheme (that is initiated immediately after the disturbance causing the single Contingency) to prevent thermal overloads (assuming that the disturbance does not result in instability)? If yes, what are the conditions that must be met in order to allow such a runback scheme to meet the System performance criteria for single Contingencies? Please explain the reason for your answer.

Yes ☒ No ☐

Comment: However, this should only be allowed where failure of an automatic runback that is not functionally redundant would not have significant adverse impact on the Bulk Power System.

The standard drafting team has considered that RAS or SPS may be allowable under certain situations for single Contingencies, but proposes that their use should be limited.

Q38. Do you agree that RAS or SPS may be allowed for single Contingencies? If not, please explain.

Yes ☒ No ☐
Comment: A SPS may be used to provide protection for infrequent contingencies, or for temporary conditions that may exist such as project delays, unusual combinations of system demand and equipment outages or availability, or specific equipment maintenance outages. An SPS may also be applied to preserve system integrity in the event of severe facility outages and extreme contingencies. The decision to employ an SPS shall take into account the complexity of the scheme and the consequences of correct or incorrect operation as well as its benefits.

Q39. Please describe the limitations that you believe should be placed on the use of RAS or SPS for single Contingency events.

Comment: See response to Q38.

Q40. When RAS or SPS are allowed, what conditions should be met when these systems are used in system adjustments to meet performance requirements?

Comment: System must remain stable with acceptable voltages and all equipment within applicable emergency limits.

G. General Questions

Q41. If you are aware of any regional variances that would be required as a result of these standards, please identify them here.

Yes ☒ No ☒
Comment: Until section R3.6.1 is finalized, we will be unable to determine whether a regional variance is required.

Q42. If you are aware of any conflicts between the proposed standards and any regulatory function, rule order, tariff, rate schedule, legislative requirement or agreement, please identify them here.

Yes ☐ No ☒
Comment:

Q43. Do you have any other questions or concerns with the proposed standard that have not been addressed? If yes, please explain.

Yes ☒ No ☐
Comment:

The SDT has made an effort to define Base Case, yet has not used the term in the standard. At a minimum, Base Case should be referred to in sections 2.1.1, 2.1.2

Standard should be clear that stabiltiy analysis is not required for Long-Term Planning Assessment.

R.1.1 Load forecasts should be addressed in MOD standards, not TPL.

R 1.4 This should only refer to known long-term outages, not planned outages. Delete "including protective relays"; this is addressed through other provisions.

R2.1, 2.2, 2.3 & 2.4 – The initial paragraph should have identical language regarding 'annual', and 'current or past' aspects.

R2.1 There should not be a requirement to look at years one and two; a 5 year study should be sufficient. If there has been an ongoing 5 year study, there should be no major unexpected problems occurring in years 1 and 2. Studies of earlier years should only be required if an unanticipated event occurred that had not been considered in prior studies. The TPL should not address shorter term "Operating Studies" or operating issues.

R 2.2.1 Modify to "If any known projects have a lead time that is longer than ten years, the Planning Assessment shall be extended accordingly."

R 2.6.1 Remove reference to "market structure changes". The purpose of its inclusion is unclear.

R 2.7.1.1 Project initiation date should be deleted. If it is retained, it needs to be defined.

R 3.2.1/R 4.3 - What is the intent of this requirement? There should probably be an MOD associated with Generator Owner requirement to provide related generator protection/ limiter data or other plant information.

R 3.4/R 4.5.2 Remove the requirement to implement changes to reduce or mitigate the likelihood of such consequences of Extreme Events. This may not be reasonable or achieveable.

R 3.2 Sectionalizing schemes shall be considered when reflecting the post-contingent system.

R 3.3.2.1 - Proposed deleting "expected duration". This would be dependent upon the damage to the element due to the iniating event and other factors.

R 3.3.3 - Change introductory language to read "Those multiple Contingencies that are…"

R 3.5 - Generation tripping should be allowed as well as generation run-back. In addition, all performance requirements shall be met, rather than just meeting facility rating requirements. Suggested language "Manual and automatic generation run-back and/or generation tripping is allowed as a response to single and multiple Contingencies as long as the performance requirements of this standard are met." If these changes are accepted, R 3.6 can be deleted.

R 4 and R 4.1 - The language should be made similar to R 3 and R 3.1.

Suggest bringing language similar R4.4 into the R 3, the steady state section.

R 4.2 - High speed automatic reclosing schemes shall be considered.

R 6.2 - Change to read "Transmission Planners of neighboring areas".

Table 1 3 b and c Extreme Event descriptions are vague concepts that cannot be practically simulated. 3 d and e are not reasonable or practically useful to simulate.

Table 1, P8 - Language needs to be clarifed as to how the 300 kV threshold is to be treated for transformers. Is this for the high side, low side, or both sides? P5 is much clearer.

Table 2 P9. Recommend that this be changed to require that faults should be on different phases of each of two adjacent transmission circuits on a multiple circuit transmission tower

Table 1, P9(6) and Table 2 P9 - It is unclear as to what is meant by "A spare transformer inserted to replace an outaged transformer followed by System adjustments". Unclear as to what is to be tested.

General comment - Transmission System is used throughout the document and is an undefined term, both "Transmission" and "System" are defined NERC terms. We recommend that the SDT use the term "System" to replace "Transmission System". System is defined as "A combination of generation, transmission, and distribution components".

NERC
NORTH AMERICAN ELECTRIC RELIABILITY CORPORATION

Comment Form for First Draft of TPL-001-1 — Transmission System Planning Performance Requirements

Please use this form to submit comments on the proposed draft of TPL-001-1. Comments must be submitted by **Friday, October 26, 2007**. You may submit the completed form by e-mail to sarcomm@nerc.net with the words "TPL-001 Draft 1" in the subject line. If you have questions please contact Ed Dobrowolski at ed.dobrowolksi@nerc.net or by telephone at 609-947-3673.

Individual Commenter Information **(Complete this page for comments from one organization or individual.)**		
Name:	Gregory Sullivan	
Organization:	NSTAR Electric and Gas Corporation	
Telephone:	781-441-8515	
E-mail:	gregory.sullivan @nstar.com	
NERC Region (check all Regions in which your company operates)		**Registered Ballot Body Segment (check all industry segments in which your company is registered)**
☐ **ERCOT**	☒	1 — Transmission Owners
☐ **FRCC**	☐	2 — RTOs and ISOs
☐ **MRO**	☒	3 — Load-serving Entities
☒ **NPCC**	☐	4 — Transmission-dependent Utilities
☐ **RFC**	☐	5 — Electric Generators
☐ **SERC**	☐	6 — Electricity Brokers, Aggregators, and Marketers
☐ **SPP**	☐	7 — Large Electricity End Users
☐ **WECC**	☐	8 — Small Electricity End Users
☐ **NA – Not Applicable**	☐	9 — Federal, State, Provincial Regulatory or other Government Entities
	☐	10 — Regional Reliability Organizations and Regional Entities

Group Comments (Complete this page if comments are from a group.)

Group Name:

Lead Contact:

Contact Organization:

Contact Segment:

Contact Telephone:

Contact E-mail:

Additional Member Name	Additional Member Organization	Region*	Segment*

*If more than one Region or Segment applies, please list all that apply. Regional acronyms and segment numbers are shown on prior page.

Background

The purpose of this standard is to establish Transmission System planning performance requirements within the planning horizon to develop a Bulk Electric System that will operate reliably over a broad spectrum of System conditions and following a wide range of probable Contingencies. This standard will replace TPL-001-0, TPL-002-0, TPL-003-0, and TPL-004-0. The standard drafting team has not yet addressed TPL-005-0 and TPL-006-0, but will address these two standards during the next phase of the drafting process.

The major objectives of the standard drafting team are to:

1) Ensure the standard is complete and the requirements are set at an appropriate level to ensure reliability (Not Least Common Denominator)
2) Ensure that the standard is enforceable by having clearly defined requirements with unambiguous language
3) Address the issues raised by FERC Order 693, 890, and other applicable orders
4) Address the issues raised in the original Standards Authorization Request (SAR) and the Supplemental SAR.

The standard drafting team did not attempt to edit the existing standards but rather chose to write one standard that addresses all aspects of transmission planning in the existing TPL-001-0, TPL-002-0, TPL-003-0, and TPL-004-0. The standard drafting team organized the new standard in the following sections:

R1 – Modeling requirements
R2 – Assessment and Corrective Plan requirements
R3 – Steady State Analysis requirements
R4 – Stability Analysis requirements
R5 – Coordination requirements

The standard drafting team determined that the requirements and analysis for Steady State are different from those for stability. As such, the standard drafting team separated the analysis requirements and created two performance requirement tables.

The standard drafting team recognizes that this draft standard is a starting point for industry input into the standard and that there is still a lot of work required to complete the process. The standard drafting team has made many changes to clarify requirements, add requirements, and make some of the performance requirements stricter. The standard drafting team has not addressed Measures, Risk Factors, Violation Severity Factors, or Time Horizons at this time. These will be addressed when the standard drafting team has better defined the requirements of the standard.

For questions where you agree with the standard drafting team, please state that you agree and if available, please provide supporting documentation. If you disagree with the standard drafting team, please explain why you disagree and provide data to support your position, such as outage data or analysis. If you believe that we have made a performance requirement too strict please provide supporting documentation. If applicable, please include the approximate cost in man-hours for additional studies and/or cost in $Millions for additional transmission investment to meet the new requirements or the stricter requirements. If you believe that the standard should be stricter, please provide the rationale along with any supporting data, including existing practices, cost estimates or additional analysis.

To improve the standard, the standard drafting team would appreciate responses to as many of these questions as you can answer.

A. New Definitions

Many of the concerns about the existing TPL standards come from the fact that a number of generally understood concepts are embedded in undefined terms, tables, and footnotes. To clarify some of these concerns, the standard drafting team is proposing new definitions. Please indicate whether you agree with the following proposed definitions and provide proposed changes to the definitions if you disagree:

Definition	**Agree or Disagree**
Q1. **Base Case**: Computer representation of the projected initial or starting Transmission System conditions for a specific point in time. Each base case reflects the forecasted Load at each bus (or node) on the interconnected Transmission System, the transmission facilities which deliver the generation and reactive resources to the connected Load, and the generation dispatch including firm transaction obligations assumed to supply the connected Load. The models also reflect facility ratings in accordance with FAC-008 & FAC-009.	☐Agree. ☒Do not agree.
Q1. **Comment: There are a few undefined terms in this definition: "Transmission System" and "interconnected Transmission System". The definition needs to specifically identify what should be modeled and in a manner consistent with other NERC definitions. The definition refers to Facility ratings rather than the general reference to FAC-008 & FAC-009**	
Q2. **Consequential Load Loss:** Load that is no longer served because it is directly connected to an element(s) that is removed from service due to fault clearing action or mis-operation.	☒Agree. ☐Do not agree.
Q2. **Comment:**	
Q3. **Extreme Events:** Events which are more severe than Planning Events and have a low probability of occurrence.	☐Agree. ☒Do not agree.
Q3. **Comment: Modify to "Events which are more severe,but have a lower probability of occurrence, than Planning Events".**	
Q4. **Long-Term Transmission Planning Horizon:** Transmission planning period that covers years six through ten or beyond.	☐Agree. ☒Do not agree.
Q4. **Comment: "Transmission planning period that covers years six through ten", is sufficient for the standard." Suggest changing the name to Long-Term Planning Assessment.**	
Q5. **Near-Term Transmission Planning Horizon:** Transmission planning period that covers years One through five.	☒Agree. ☐Do not agree.
Q5. **Comment: Suggest changing the name to Near-Term Planning Assessment.**	
Q6. **Non-Consequential Load Loss:** Load loss other than	☒Agree.

Consequential Load Loss. For example, Load loss that occurs through manual (operator initiated) or automatic operations such as under-voltage Load shedding, under-frequency Load shedding, or Special Protection Systems.	☐Do not agree.
Q6. **Comment:**	
Q7. **Planning Assessment:** Documented evaluation of future Bulk Electric System needs by the use of performance studies that cover a range of assumptions regarding system conditions, time frames, future plans including capital reinforcements and operating procedures and other factors, such as asset conditions and age.	☐Agree. ☒Do not agree.
Q7. **Comment: Eliminate "capital" from the definition. It is not defined or consistently applicable to the standard. Reference to vague "other factors, such as asset conditions and age" should be removed from this standard; there are no consistent definitions or industry standards on which to base this requirement, nor does it appear to be a necessary addition to the standard.**	
Q8. **Planning Events:** Events which require Transmission system performance requirements to be met.	☐Agree. ☒Do not agree.
Q8. **Comment: Propose, "Events for which Transmission performance requirements must be met".**	
Q9. **Plant Stability Study:** Study of an individual plant's Stability for various Contingencies in the vicinity of the plant; concerned with the effect on the System of the generating units' loss of synchronism and the damping of the generating units' power oscillations.	☐Agree. ☒Do not agree.
Q9. **Comment: A Plant Stability Study should be a part of a System Stability Study. How should and why would they be differentiated? The analysis and performance constraints are the same in both cases; it's just a matter of whether one or more generating units are involved.**	
Q10. **System Stability Study:** Study of the System or portions of the System to ensure that angular Stability is maintained, inter-area power oscillations are damped, and voltages during the dynamic simulation stay within acceptable performance limits.	☐Agree. ☒Do not agree.
Q10. **Comment: See comment on Q9; proposed modification, "Study of the System or portions of the System to determine whether unit and system angular Stability is maintained, power oscillations are damped, and voltages during the dynamic simulation stay within acceptable perfomance limits.**	
Q11. **Year One:** The first year that a Transmission Planner is responsible for studying. This is further defined as the planning window that begins the next calendar year from the time the Transmission Planner submits their annual studies. Analysis conducted for time horizons within the calendar year from the study publication are assumed to be conducted under the auspices of Operations Planning.	☐Agree. ☒Do not agree.
Q11. **Comment: Modify to, "The first year that a Tranmission Planner is responsible for studying. This is further defined as the planning window that begins the next calendar year from the time the Transmission Planner completes its annual studies."**	

B. Sensitivity Studies

The draft planning standard includes the requirement, as specified in FERC Order 693, that planning decisions be based on a portfolio of analyses. In section 12.a.ii "Sensitivity studies and critical system conditions" FERC provided direction to consider a full range of variables considered to be significant that need to be assessed and documentation provided that explains the rationale for the selection of variables assessed.

In addition to the firm obligation scenario, the portfolio of analyses should be supplemented to include information from sensitivity analysis. The sensitivity analysis should be developed using additional cases that simulate reasonably stressed system conditions. The standard drafting team has included several parameters that can be varied to create the requisite sensitivity case(s). The draft standards specify that the sensitivities reflect one or more of the following conditions and that documentation be provided explaining the rationale for selecting the sensitivity(ies) employed. The parameters that should be varied include:

- Higher or lower Load forecasts from the Base Case with variability of Load/demand and Load power factors due to season, weather, or time of day.
- Modification of expected transfers.
- Unavailability of long lead time facilities.
- Variability and outages of Reactive Resources.
- Generation additions, retirements, or other dispatch scenarios.
- Decreased effectiveness of controllable Loads and Demand Side Management.
- Modification of planned Transmission outages

To help focus industry discussion, please respond to the questions below:

Q12. Should the standard provide more specific direction regarding the number of sensitivity cases that need to be developed?

Yes ☐ No ☒

Comment: The standard is unclear whether or not it mandates the requirement to develop action plans for problems highlighted as a result of one of the sensitivities.

Suggest modification to, "…sensitivity testing that stresses the System shall be considered, and documentation with the rationale for the sensitivity testing shall be supplied. The sensitivity case(s) may include one or more of the following conditions:"

2.1.3.3 should refer only to planned facilities that may be delayed. 2.1.3.4 - "variability" is too vague for a standard; the standard needs to be more specific as to the intent. 2.1.3.7 should be consistent with 1.4. These comments also apply to 2.4.3.

Q13. Should the standard specify the required changes, such as changes in expected transfers, load forecasts, generation patterns, etc., from the study case to be considered a "reasonably stressed" case?

Yes ☐ No ☒

Comment: The standard is unclear whether or not it mandates the requirement develop action plans for problems highlighted as a result of one of the sensitivities.

Reasonably stressed conditions are dependent upon the study area under review and the standard is not likely to be able to be crafted to provide sufficent and consistent direction. However, it might be helpful if the standard clarified whether the base case should include any unplanned generator outages or whether, aside from potential sensitivities, unplanned generator outages are considered only through P1, P3 or P4 Contingencies. If the standard addresses unplanned generator outages only through P1, P3 and P4, then it is recommended that a mandatory sensitivity analysis, with required mitigation, include various potential combinations of a reasonable amount of unplanned outages. The combinations should be based on the part of the system that is under study.

Q14. The SDT proposes to require the use of sensitivity studies for Near-Term Transmission System Planning Horizon stability analysis. Do you concur with the use of sensitivity analysis in dynamic studies?

Yes ☒ No ☐
Comment: The standard is unclear whether or not it mandates the requirement to devleop action plans for problems highlighted as a result of one of the sensitivities.

Suggest modification to, "…sensitivity testing that stresses the System should be considered. Sensitivity case(s) might include among the following conditions:" 2.4.3 shold mimic 2.1.3 except in regard to load models.

Q15. The draft TPL standard does not require the use of sensitivity studies for the Long-Term Transmission System Planning Horizon (year six and beyond) studies. Do you concur with this approach or should there be some level of sensitivity analysis required for the long-term period?

Yes ☒ No ☐
Comment: There is no need for sensitivity analysis.

C. Corrective Action Plans

Requirement R2.7 of the standard states that when analysis shows that the performance requirements in Table 1 and Table 2 are not fully met, a Corrective Action Plan that utilizes all or some of the Transmission System enhancements, generation additions, DSM, new technologies and Operating Procedures shall be included in the Planning Assessment. This Corrective Action Plan should ensure that upon its implementation the identified system deficiencies will be corrected so that the performance requirements in Table 1 and Table 2 will be met. Furthermore, studies included in the Planning Assessment should demonstrate that this is indeed the case.

Q16. Requirement R2.7.1: Such Corrective Action Plans shall "Identify System deficiencies and the associated actions needed to achieve required System performance including Transmission and generation improvements, DSM, new technologies, or Operating Procedures including the duration of Interim Operating Procedures". System deficiencies may be corrected using an integrated plan, i.e., an optimal mix of Transmission, generation, DSM and Operating Procedures. Should DSM be considered in conjunction with other measures in developing Corrective Action Plans? If yes, please comment on how the impact of DSM should be included.

Yes ☒ No ☐
Comment: DSM should be included to the extent that its performance is sufficiently and consistently understood. The standard does not use the term "optimal" Therefore, the Drafting Team appears to be interpreting the Standard to require a vertically-integrated Planner to produce a so-called optimal-mix of resources plan. This would be an incorrect assumption and is not required. In areas with independent planners and competitive wholesale markets, it is sufficent to identify system needs and produce a plan that identifies regulated transmission solutions in the event that market-based resources (such as DSM) do not address those identified needs. Therefore, while DSM can be as effective a resource as generation, per Commission Orders,

in areas with ISOs/RTOs and a competitive wholesale market, the NERC Standard cannot prescribe the development so-called optimized (as is suggesgted by the Drafting Team) resource-mix plans, as identified by a central planner.

Q17. Requirement R2.7.2: Such Corrective Action Plans shall "Be added to study cases and the cases re-tested to show that the System with planned additions meets the performance requirements in the tables". Should new studies, including the facilities comprising the Corrective Action Plan, be performed to assess System normal performance and Contingency response for conditions that previously resulted in the System deficiencies (without the planned additions) and also demonstrate that the changes would not result in inadvertent negative impacts on the System. If you "agree", please comment on how a study area should be determined.

Yes ☒ No ☐
Comment: The study area should be based upon planning expertise and knowledge of the system, giving due consideration to external impacts.

Q18. Requirement R2.7.3: The standard calls for a differentiation between committed and proposed projects. Do you agree that they should be treated separately? If not, please state why not.

Yes ☒ No ☐
Comment: They should be viewed differently in the Near-Term. However, these should be defined terms.

Q19. Requirement R2.7.4: For such Corrective Action Plans "Committed projects shall not be removed without documentation to show that the revised plan meets the performance requirements". Do you agree or disagree with this requirement? If you disagree, please explain why.

Yes ☒ No ☐
Comment: It is unclear as to what the commited project is being removed from. Suggested language "…removed from the plan…".

D. Performance Requirements

The proposed revised planning standard (TPL-001-1) incorporates a number of changes in requirements as compared to the current planning standards (TPL-001-0 through TPL-004-0), which it is expected to replace. Among other things these changes are intended to clarify the standard, address issues described by FERC, and, in particular, to "raise the bar." Strengthening the planning standards in selected areas is necessary to maintain a reliable Bulk Electric System that is up to the challenges of the 21st Century. In proposing the requirements in this draft, the standard drafting team attempted to balance the value of increased reliability against any potential increase in work and costs to meet the new proposed standard.

The standard drafting team is seeking input from the industry to determine whether a proper balance has been achieved. The areas where material changes are proposed in this draft are enumerated below, and questions are posed by the standard drafting team to obtain industry comment. In formulating your responses, please keep in mind that material changes in the final standard will be accompanied by a transition plan to provide for an orderly implementation of the final standard.

The performance requirements relative to Non-Consequential Loss of Load for the following events enumerated in the two tables can be considered more stringent than the existing TPL standards. Furthermore, the proposed standard is based on an assumption that performance requirements for EHV facilities should be more stringent than for lower voltage facilities.

Do you agree that Non-Consequential Loss of Load should not be permitted for the following events? If you disagree, please provide a reason for your disagreement.

Event	Agree or Disagree	Comment
Q20. P2-1: Loss of bus section (SLG for stability) above 300 kV	☒Agree. ☐Do not agree.	
Q21. P5-1: For facilities above 300 kV, loss of a Transmission circuit followed by System adjustment[1] followed by loss of another Transmission circuit	☐Agree. ☒Do not agree.	Given the low probability of extended overlapping outages of overhead facilities, systems have been designed assuming that load shedding following the loss of a second transmission line is permissible. Eliminating any allowance for load shedding for this condition may require significant system expansion and cost to to customers. However, it would be reasonable to consider establishing an upper bound to the amount of load that could be shed for these purposes.
Q22. P5-2: For facilities above 300 kV, loss of a Transmission circuit followed by System adjustment followed by loss of a transformer with low side voltage rating above 300 kV	☐Agree. ☒Do not agree.	Should also consider the initial loss of a transformer, followed by the loss of a Transmission circuit. This should state a transformer with a "high-side" rating above 300 kV.
Q23. P5-3: For facilities above 300 kV, loss of a transformer with low side voltage rating above 300 kV followed by System adjustment followed by loss of another transformer	☐Agree. ☒Do not agree.	This should state a transformer with a "high-side" rating above 300 kV.

[1]System adjustment can be manual or automatic.

The proposed standard is based on an assumption that performance requirements for non-bus tie EHV breakers should be distinguished from other breakers. Do you agree that Non-Consequential Loss of Load should not be permitted for this event?

Q24. Loss of non-bus tie breaker (above 300 kV) due to internal fault

Yes ☒ No ☐
Comment: It is unclear why bus tie breakers are being treated differently than other breakers. They should be treated the same.

The proposed standard is based on an assumption that performance requirements for non-bus tie EHV breakers should be distinguished from other breakers and that performance requirements for EHV facilities should be more stringent than for lower voltage facilities. Do you agree that Non-Consequential Loss of Load should not be permitted for this event?

Q25. P3-1: Loss of (SLG for stability) either a generator, a Transmission circuit, a transformer, or a bus and a stuck non-bus tie breaker (above 300 kV)

Yes ☐ No ☒
Comment: It is unclear why bus tie breakers are being treated differently than other breakers. They should be treated the same.

The proposed standard is based on an assumption that the following events are relatively high probability events and, therefore, Non-Consequential Loss of Load should not be permitted. Do you agree? If you disagree, please provide a reason for your disagreement.

Event	Agree or Disagree	Comment
Q26. P4-1: Loss of a Generator followed by System adjustment[1] followed by loss of another Generator	☐Agree. ☒Do not agree.	If the base case or a mandatory sensitivity case already includes unplanned generator outages, some load loss may be reasonable following the subsequent loss of 2 additional generators.
Q27. P4-2: Loss of a generator followed by a System adjustment followed by the loss of a monopolar DC line	☐Agree. ☒Do not agree.	If the base case or a mandatory sensitivity case already includes unplanned generator outages, some load loss may be reasonable following the subsequent loss of an additional generators and a monopolar DC line
Q28. P4-3: Loss of a generator followed by System adjustment followed by loss of a Transmission circuit	☐Agree. ☒Do not agree.	If the base case or a mandatory sensitivity case already includes unplanned generator outages, some load loss may be reasonable following the subsequent loss of an additional generators and a Transmission circuit
Q29. P4-4: Loss of a generator followed by System adjustment followed by loss of a transformer	☐Agree. ☒Do not agree.	If the base case or a mandatory sensitivity case already includes unplanned generator outages, some load loss may be reasonable following the subsequent loss of an additional generators and a transformer

The performance requirement for the following event may be considered less stringent than the existing TPL Standards — P2-3: Loss of a single pole of a DC line. Interruption of firm

[1] System adjustment can be manual or automatic

transactions (without Loss of firm Load) if the transaction is dependent on the faulted DC line is now allowed for this initiating event/Contingency.

Q30. Do you agree that interruption of any firm transfers that are dependent on the outaged DC line that is taken out of service should be permitted?

Yes ☒ No ☐
Comment: This should also apply to firm transfers via single or double ac facilities as well. In either case, the transfer could be linked to dedicated facilities.

E. Stability

Q31. The proposed standard is based on an assumption that steady state analysis and stability analysis are different from each other and that therefore, two tables of Contingencies and performance requirements were needed. It is also based on an assumption that stability study requirements should be clearly separated from the steady state study requirements. Do you agree with the action taken in separating stability analysis from steady state analysis? If not, please explain.

Yes ☒ No ☐
Comment:

Q32. The SDT has added requirements for plant stability studies and has drawn a distinction in these studies from System stability studies. Do you agree with this approach? If not, please explain.

Yes ☐ No ☒
Comment: A Plant Stability Study should be a part of a System Stability Study. How should and why would they be differentiated? The analysis and performance constraints are the same in both cases; it's just a matter of whether one or more generating units are involved.

Q33. The existing TPL-004-0 standard has a requirement to consider the Loss of all generating units at a plant, but it was not clear whether this requirement should apply to stability studies. The SDT did not include this requirement in the stability table, because it is hard to envision a condition when all units would trip simultaneously within the timeframe of a stability simulation. Do you think this condition should be required in stability analysis of extreme events? If not, please explain.

Yes ☐ No ☒
Comment: Difficult to envision how such an event would occur.

Q34. There are an increasing number of events with slow voltage recovery after faults on the Transmission System. The dynamic behavior of induction motor loads is a major factor in this phenomenon. The proposed standard therefore requires that the load model for stability studies of peak Load conditions include the dynamic effects of induction motors. Do you agree with this requirement? If not, please explain?

Yes ☐ No ☒
Comment: This requirement is too specific and limited. Induction motors are only one component of a complex load model. Complex load models are not always necessary, nor are they always the most conservative, depending on the analysis that is being conducted. Where complex load models are required, they should be considered; this may involve use of complex motor and lighting loads or polynomial load representations

with or without frequency dependence. This question also suggests the need for an industry standard regarding transient voltage recovery.

Q35. What type of manual or automatic adjustments of generators should be allowed for single and multiple Contingencies?

Comment: Manual or automatic adjustments should be permissible to allow redispatch to return the system to below normal/load cycle based ratings; however, the system should not exceed applicable emergency ratings prior to the adjustment. Manual system adjustment should be allowed in between the multiple Contingencies described in P5, provided that the adjustment can be made between contingencies using short-term reserves (10-30 minute).

F. Generation Runback and Tripping

The SDT has discussed the automatic and manual readjustments of generators that should be permissible for single contingencies and multiple contingencies. The existing TPL-001-0 through TPL-004-0 standards through footnote (a) of Table I could include emergency ratings applicable for short durations as required to permit operating steps necessary to maintain system control. The footnote is silent about allowable generation adjustments in response to the Category B events. However, it does indicate that system adjustments are permitted to prepare for the next Contingency. These system adjustments could include manual or automatic adjustments involving generation.

The SDT has learned that many transmission owners use System Protection Systems (SPS) or Remedial Action Schemes (RAS) to trip generation for single and multiple Contingency outage events to prevent overloads, low voltage, and instability in the Interconnected Transmission network for N-1 and N-2 events. In some cases, the RAS are used to prepare for the next Contingency; but in some cases, the RAS are used to simultaneously avoid exceeding emergency ratings.

Q36. The proposed standard allows generation runback after the disturbance that causes a single Contingency (or due to a single Contingency outage) to move the Interconnected Transmission System from an emergency state (within emergency ratings) to a normal state (within normal ratings), assuming that the disturbance does not result in instability? Do you agree? If not, please explain.

Yes ☒ No ☐

Comment: Generation runback should be permissible to allow redispatch to return the system to below normal/load cycle based ratings; however, the system should not exceed applicable emergency ratings prior to the adjustment

Q37. Since emergency ratings are thermal ratings, should this standard allow an automatic generation runback scheme (that is initiated immediately after the disturbance causing the single Contingency) to prevent thermal overloads (assuming that the disturbance does not result in instability)? If yes, what are the conditions that must be met in order to allow such a runback scheme to meet the System performance criteria for single Contingencies? Please explain the reason for your answer.

Yes ☒ No ☐

Comment: However, this should only be allowed where failure of an automatic runback that is not functionally redundant would not have significant adverse impact on the Bulk Electric System.

The standard drafting team has considered that RAS or SPS may be allowable under certain situations for single Contingencies, but proposes that their use should be limited.

Q38. Do you agree that RAS or SPS may be allowed for single Contingencies? If not, please explain.

Yes ☒ No ☐
Comment: Only allowed where the failure of an SPS that is not functionally redundant would not have significant adverse impact on the Bulk Electric System.

Q39. Please describe the limitations that you believe should be placed on the use of RAS or SPS for single Contingency events.

Comment: Only allowed where SPS failure would not have significant adverse impact on the Bulk Electric System; non-Consequential loss of load should be allowed up to an amount potentially specified in the standard.

Q40. When RAS or SPS are allowed, what conditions should be met when these systems are used in system adjustments to meet performance requirements?

Comment: System must remain stable with acceptable voltages and all equipment within applicable emergency limits.

G. General Questions

Q41. If you are aware of any regional variances that would be required as a result of these standards, please identify them here.

Yes ☒ No ☒
Comment: Unsure due to ambiguities in the standard. Depending upon the final standard, New England may need exceptions for existing facilities or allowance for a transition period to develop a compliance plan.

Q42. If you are aware of any conflicts between the proposed standards and any regulatory function, rule order, tariff, rate schedule, legislative requirement or agreement, please identify them here.

Yes ☐ No ☒
Comment:

Q43. Do you have any other questions or concerns with the proposed standard that have not been addressed? If yes, please explain.

Yes ☒ No ☐
Comment: There should be a "P0" standard that applies to system performance without any contingencies.

Standard should be clear that stabiltiy analysis is not required for Long-Term Planning Assessment.

R.1.1 Load forecasts should be addressed in MOD standards, not TPL.

R 1.4 This should only refer to known long-term outages, not planned outages. Delete "including protective relays"; this is addressed through other provisions.

R.2.1 Shorten "Near-Term Transmission Planning Horizon Planning Assessment" to "Near-Term Planning Assessment".

R 2.2 Shorten "Long-Term Transmission Planning Horizon Planning Assessment" to "Long-Term Planning Assessment".

R2.1, 2.2, 2.3 & 2.4 – The initial paragraph should have identical language regarding 'annual', and 'current or past' aspects.

R2.1.1 There should not be a requirement to look at years one and two; a 5 year study should be sufficient. If there has been an ongoing 5 year study, there should be no major unexpected problems occurring in years 1 and 2. Studies of earlier years should only be required if an unanticipated event occurred that had not been considered in prior studies. The TPL should not address shorter term "Operating Studies" or operating issues.

R 2.2.1 Modify to "If any known projects have a lead time that is longer than ten years, the Planning Assessment shall be extended accordingly."

R 2.6 Steady-state, short circuit, and stability analysis should be required no more than every 5 years unless there is a significant change the system.

R 2.6.1 Remove reference to "market structure changes". The purpose of it's inclusion is unclear.

R 2.7.1.1 Project initiation date should be deleted. If it is retainted, it needs to be defined.

R 2.7.3 Committed and Proposed projects should be defined.

R 3.2.1/R 4.3 - What is the intent of this requirement? There should probably be an MOD associated with Generator Owner requirement to provide related generator protection/ limiter data or other plant information.

R 3.4/R 4.5.2 Remove the requirement to implement changes to reduce or mitigate the likelihood of such consequences of Extreme Events. This may not be reasonable or achieveable.

R 3.2 Sectionalizing schemes shall be considered when reflecting the post-contingent system.

R 3.2.2 - Propose deleting this. Line ratings should already take relay loadability into account.

R 3.3.2.1 - Proposed deleting "expected duration". This would be dependent upon the damage to the element due to the iniating event and other factors.

R 3.3.2.2 - The requirements of this section do not match P6.

R 3.3.3 - Change introductory language to read "Those multiple Contingencies that are…"

R 3.5 - Generation tripping should be allowed as well as generation run-back. In addition, all performance requirements shall be met, rather than just meeting facility rating requirements. Suggested lanague "Manual and automatic generation run-back and/or generation tripping is allowed as a response to single and multiple Contingencies as long as the performance requirements of this standard are met." If these changes are accepted, R 3.6 can be deleted.

R 4 and R 4.1 - The language should be made similar to R 3 and R 3.1.

Suggest bringing language similar R4.4 into the R 3, the steady state section.

R 4.2 - High speed automatic reclosing schemes shall be considered.

R 6.3 - Change to read "Planning Coordinators of neighboring impacted areas".

Table 1 3 b and c Extreme Event descriptions are vague concepts that cannot be practically simulated. 3 d and e are not reasonable or practically useful to simulate.

Table 1, P8 - Language needs to be clarifed as to how the 300 kV threshold is to be treated for transformers. Is this for the high side, low side, or both sides? P5 is much clearer.

Table 2 - Clarification needs to be made that the faults being simulated are permanent faults. This can be addressed under the "Performance Requirements" portion at the beginning of the table, or modify each fault description.

Table 2 P9. Recommend that this be changed to require that faults should be on different phases of each of two adjacent transmission circuits on a multiple circuit transmission tower

Table 1, P9(6) and Table 2 P9 - It is unclear as to what is meant by "A spare transformer inserted to replace an outaged transformer followed by System adjustments". Unclear as to what is to be tested.

General comment - Transmission System is used throughout the document and is an undefined term

NERC
NORTH AMERICAN ELECTRIC RELIABILITY CORPORATION

Comment Form for First Draft of TPL-001-1 — Transmission System Planning Performance Requirements

Please use this form to submit comments on the proposed draft of TPL-001-1. Comments must be submitted by **Friday, October 26, 2007**. You may submit the completed form by e-mail to sarcomm@nerc.net with the words "TPL-001 Draft 1" in the subject line. If you have questions please contact Ed Dobrowolski at ed.dobrowolksi@nerc.net or by telephone at 609-947-3673.

Individual Commenter Information **(Complete this page for comments from one organization or individual.)**		
Name:	John Mayhan	
Organization:	Omaha Public Power District	
Telephone:	(402) 552-5173	
E-mail:	jmayhan@oppd.com	
NERC Region (check all Regions in which your company operates)		**Registered Ballot Body Segment (check all industry segments in which your company is registered)**
☐ **ERCOT**	☒	1 — Transmission Owners
☐ **FRCC**	☐	2 — RTOs and ISOs
☒ **MRO**	☒	3 — Load-serving Entities
☐ **NPCC**	☐	4 — Transmission-dependent Utilities
☐ **RFC**	☐	5 — Electric Generators
☐ **SERC**	☒	6 — Electricity Brokers, Aggregators, and Marketers
☐ **SPP**	☐	7 — Large Electricity End Users
☐ **WECC**	☐	8 — Small Electricity End Users
☐ **NA – Not Applicable**	☐	9 — Federal, State, Provincial Regulatory or other Government Entities
	☐	10 — Regional Reliability Organizations and Regional Entities

Group Comments (Complete this page if comments are from a group.)

Group Name:

Lead Contact:

Contact Organization:

Contact Segment:

Contact Telephone:

Contact E-mail:

Additional Member Name	Additional Member Organization	Region*	Segment*

*If more than one Region or Segment applies, please list all that apply. Regional acronyms and segment numbers are shown on prior page.

Background

The purpose of this standard is to establish Transmission System planning performance requirements within the planning horizon to develop a Bulk Electric System that will operate reliably over a broad spectrum of System conditions and following a wide range of probable Contingencies. This standard will replace TPL-001-0, TPL-002-0, TPL-003-0, and TPL-004-0. The standard drafting team has not yet addressed TPL-005-0 and TPL-006-0, but will address these two standards during the next phase of the drafting process.

The major objectives of the standard drafting team are to:

1) Ensure the standard is complete and the requirements are set at an appropriate level to ensure reliability (Not Least Common Denominator)
2) Ensure that the standard is enforceable by having clearly defined requirements with unambiguous language
3) Address the issues raised by FERC Order 693, 890, and other applicable orders
4) Address the issues raised in the original Standards Authorization Request (SAR) and the Supplemental SAR.

The standard drafting team did not attempt to edit the existing standards but rather chose to write one standard that addresses all aspects of transmission planning in the existing TPL-001-0, TPL-002-0, TPL-003-0, and TPL-004-0. The standard drafting team organized the new standard in the following sections:

R1 – Modeling requirements
R2 – Assessment and Corrective Plan requirements
R3 – Steady State Analysis requirements
R4 – Stability Analysis requirements
R5 – Coordination requirements

The standard drafting team determined that the requirements and analysis for Steady State are different from those for stability. As such, the standard drafting team separated the analysis requirements and created two performance requirement tables.

The standard drafting team recognizes that this draft standard is a starting point for industry input into the standard and that there is still a lot of work required to complete the process. The standard drafting team has made many changes to clarify requirements, add requirements, and make some of the performance requirements stricter. The standard drafting team has not addressed Measures, Risk Factors, Violation Severity Factors, or Time Horizons at this time. These will be addressed when the standard drafting team has better defined the requirements of the standard.

For questions where you agree with the standard drafting team, please state that you agree and if available, please provide supporting documentation. If you disagree with the standard drafting team, please explain why you disagree and provide data to support your position, such as outage data or analysis. If you believe that we have made a performance requirement too strict please provide supporting documentation. If applicable, please include the approximate cost in man-hours for additional studies and/or cost in $Millions for additional transmission investment to meet the new requirements or the stricter requirements. If you believe that the standard should be stricter, please provide the rationale along with any supporting data, including existing practices, cost estimates or additional analysis.

To improve the standard, the standard drafting team would appreciate responses to as many of these questions as you can answer.

A. New Definitions

Many of the concerns about the existing TPL standards come from the fact that a number of generally understood concepts are embedded in undefined terms, tables, and footnotes. To clarify some of these concerns, the standard drafting team is proposing new definitions. Please indicate whether you agree with the following proposed definitions and provide proposed changes to the definitions if you disagree:

Definition	**Agree or Disagree**
Q1. **Base Case**: Computer representation of the projected initial or starting Transmission System conditions for a specific point in time. Each base case reflects the forecasted Load at each bus (or node) on the interconnected Transmission System, the transmission facilities which deliver the generation and reactive resources to the connected Load, and the generation dispatch including firm transaction obligations assumed to supply the connected Load. The models also reflect facility ratings in accordance with FAC-008 & FAC-009.	☐Agree. ☐Do not agree.
Q1. **Comment:**	
Q2. **Consequential Load Loss:** Load that is no longer served because it is directly connected to an element(s) that is removed from service due to fault clearing action or mis-operation.	☐Agree. ☐Do not agree.
Q2. **Comment:**	
Q3. **Extreme Events:** Events which are more severe than Planning Events and have a low probability of occurrence.	☐Agree. ☐Do not agree.
Q3. **Comment:**	
Q4. **Long-Term Transmission Planning Horizon:** Transmission planning period that covers years six through ten or beyond.	☐Agree. ☐Do not agree.
Q4. **Comment:**	
Q5. **Near-Term Transmission Planning Horizon:** Transmission planning period that covers years One through five.	☐Agree. ☐Do not agree.
Q5. **Comment:**	
Q6. **Non-Consequential Load Loss:** Load loss other than Consequential Load Loss. For example, Load loss that occurs through manual (operator initiated) or automatic operations such as under-voltage Load shedding, under-frequency Load shedding, or Special Protection Systems.	☐Agree. ☐Do not agree.
Q6. **Comment:**	
Q7. **Planning Assessment:** Documented evaluation of future Bulk Electric System needs by the use of performance studies that cover a range of assumptions regarding system conditions, time	☐Agree. ☐Do not

frames, future plans including capital reinforcements and operating procedures and other factors, such as asset conditions and age.	agree.
Q7. **Comment:**	
Q8. **Planning Events:** Events which require Transmission system performance requirements to be met.	☐Agree. ☐Do not agree.
Q8. **Comment:**	
Q9. **Plant Stability Study:** Study of an individual plant's Stability for various Contingencies in the vicinity of the plant; concerned with the effect on the System of the generating units' loss of synchronism and the damping of the generating units' power oscillations.	☐Agree. ☐Do not agree.
Q9. **Comment:**	
Q10. **System Stability Study:** Study of the System or portions of the System to ensure that angular Stability is maintained, inter-area power oscillations are damped, and voltages during the dynamic simulation stay within acceptable performance limits.	☐Agree. ☐Do not agree.
Q10. **Comment:**	
Q11. **Year One:** The first year that a Transmission Planner is responsible for studying. This is further defined as the planning window that begins the next calendar year from the time the Transmission Planner submits their annual studies. Analysis conducted for time horizons within the calendar year from the study publication are assumed to be conducted under the auspices of Operations Planning.	☐Agree. ☐Do not agree.
Q11. **Comment:**	

B. Sensitivity Studies

The draft planning standard includes the requirement, as specified in FERC Order 693, that planning decisions be based on a portfolio of analyses. In section 12.a.ii "Sensitivity studies and critical system conditions" FERC provided direction to consider a full range of variables considered to be significant that need to be assessed and documentation provided that explains the rationale for the selection of variables assessed.

In addition to the firm obligation scenario, the portfolio of analyses should be supplemented to include information from sensitivity analysis. The sensitivity analysis should be developed using additional cases that simulate reasonably stressed system conditions. The standard drafting team has included several parameters that can be varied to create the requisite sensitivity case(s). The draft standards specify that the sensitivities reflect one or more of the following conditions and that documentation be provided explaining the rationale for selecting the sensitivity(ies) employed. The parameters that should be varied include:

- Higher or lower Load forecasts from the Base Case with variability of Load/demand and Load power factors due to season, weather, or time of day.
- Modification of expected transfers.
- Unavailability of long lead time facilities.
- Variability and outages of Reactive Resources.
- Generation additions, retirements, or other dispatch scenarios.

- Decreased effectiveness of controllable Loads and Demand Side Management.
- Modification of planned Transmission outages

To help focus industry discussion, please respond to the questions below:

Q12. Should the standard provide more specific direction regarding the number of sensitivity cases that need to be developed?

Yes ☐ No ☐
Comment:

Q13. Should the standard specify the required changes, such as changes in expected transfers, load forecasts, generation patterns, etc., from the study case to be considered a "reasonably stressed" case?

Yes ☐ No ☐
Comment:

Q14. The SDT proposes to require the use of sensitivity studies for Near-Term Transmission System Planning Horizon stability analysis. Do you concur with the use of sensitivity analysis in dynamic studies?

Yes ☐ No ☐
Comment:

Q15. The draft TPL standard does not require the use of sensitivity studies for the Long-Term Transmission System Planning Horizon (year six and beyond) studies. Do you concur with this approach or should there be some level of sensitivity analysis required for the long-term period?

Yes ☐ No ☐
Comment:

C. Corrective Action Plans

Requirement R2.7 of the standard states that when analysis shows that the performance requirements in Table 1 and Table 2 are not fully met, a Corrective Action Plan that utilizes all or some of the Transmission System enhancements, generation additions, DSM, new technologies and Operating Procedures shall be included in the Planning Assessment. This Corrective Action Plan should ensure that upon its implementation the identified system deficiencies will be corrected so that the performance requirements in Table 1 and Table 2 will be met. Furthermore, studies included in the Planning Assessment should demonstrate that this is indeed the case.

Q16. Requirement R2.7.1: Such Corrective Action Plans shall "Identify System deficiencies and the associated actions needed to achieve required System performance including Transmission and generation improvements, DSM, new technologies, or Operating Procedures including the duration of Interim Operating Procedures". System deficiencies may be corrected using an integrated plan, i.e., an optimal mix of Transmission, generation, DSM and Operating Procedures. Should DSM be considered in conjunction with other measures in developing Corrective Action Plans? If yes, please comment on how the impact of DSM should be included.

Yes ☐ No ☐
Comment:

Q17. Requirement R2.7.2: Such Corrective Action Plans shall "Be added to study cases and the cases re-tested to show that the System with planned additions meets the performance requirements in the tables". Should new studies, including the facilities comprising the Corrective Action Plan, be performed to assess System normal performance and Contingency response for conditions that previously resulted in the System deficiencies (without the planned additions) and also demonstrate that the changes would not result in inadvertent negative impacts on the System. If you "agree", please comment on how a study area should be determined.

Yes ☐ No ☐
Comment:

Q18. Requirement R2.7.3: The standard calls for a differentiation between committed and proposed projects. Do you agree that they should be treated separately? If not, please state why not.

Yes ☐ No ☐
Comment:

Q19. Requirement R2.7.4: For such Corrective Action Plans "Committed projects shall not be removed without documentation to show that the revised plan meets the performance requirements". Do you agree or disagree with this requirement? If you disagree, please explain why.

Yes ☐ No ☐
Comment:

D. Performance Requirements

The proposed revised planning standard (TPL-001-1) incorporates a number of changes in requirements as compared to the current planning standards (TPL-001-0 through TPL-004-0), which it is expected to replace. Among other things these changes are intended to clarify the standard, address issues described by FERC, and, in particular, to "raise the bar." Strengthening the planning standards in selected areas is necessary to maintain a reliable Bulk Electric System that is up to the challenges of the 21st Century. In proposing the requirements in this draft, the standard drafting team attempted to balance the value of increased reliability against any potential increase in work and costs to meet the new proposed standard.

The standard drafting team is seeking input from the industry to determine whether a proper balance has been achieved. The areas where material changes are proposed in this draft are enumerated below, and questions are posed by the standard drafting team to obtain industry comment. In formulating your responses, please keep in mind that material changes in the final standard will be accompanied by a transition plan to provide for an orderly implementation of the final standard.

The performance requirements relative to Non-Consequential Loss of Load for the following events enumerated in the two tables can be considered more stringent than the existing TPL standards. Furthermore, the proposed standard is based on an assumption that performance requirements for EHV facilities should be more stringent than for lower voltage facilities.

Do you agree that Non-Consequential Loss of Load should not be permitted for the following events? If you disagree, please provide a reason for your disagreement.

Event	Agree or Disagree	Comment
Q20. P2-1: Loss of bus section (SLG for stability) above 300 kV	☐Agree. ☐Do not agree.	
Q21. P5-1: For facilities above 300 kV, loss of a Transmission circuit followed by System adjustment[1] followed by loss of another Transmission circuit	☐Agree. ☐Do not agree.	
Q22. P5-2: For facilities above 300 kV, loss of a Transmission circuit followed by System adjustment followed by loss of a transformer with low side voltage rating above 300 kV	☐Agree. ☐Do not agree.	
Q23. P5-3: For facilities above 300 kV, loss of a transformer with low side voltage rating above 300 kV followed by System adjustment followed by loss of another transformer	☐Agree. ☐Do not agree.	

[1]System adjustment can be manual or automatic.

The proposed standard is based on an assumption that performance requirements for non-bus tie EHV breakers should be distinguished from other breakers. Do you agree that Non-Consequential Loss of Load should not be permitted for this event?

Q24. Loss of non-bus tie breaker (above 300 kV) due to internal fault

Yes ☐ No ☐
Comment:

The proposed standard is based on an assumption that performance requirements for non-bus tie EHV breakers should be distinguished from other breakers and that performance requirements for EHV facilities should be more stringent than for lower voltage facilities. Do you agree that Non-Consequential Loss of Load should not be permitted for this event?

Q25. P3-1: Loss of (SLG for stability) either a generator, a Transmission circuit, a transformer, or a bus and a stuck non-bus tie breaker (above 300 kV)

Yes ☐ No ☐
Comment:

The proposed standard is based on an assumption that the following events are relatively high probability events and, therefore, Non-Consequential Loss of Load should not be permitted. Do you agree? If you disagree, please provide a reason for your disagreement.

Event	Agree or Disagree	Comment
Q26. P4-1: Loss of a Generator followed by System adjustment[1] followed by loss of another Generator	☐Agree. ☐Do not agree.	
Q27. P4-2: Loss of a generator followed by a System adjustment followed by the loss of a monopolar DC line	☐Agree. ☐Do not agree.	
Q28. P4-3: Loss of a generator followed by System adjustment followed by loss of a Transmission circuit	☐Agree. ☐Do not agree.	
Q29. P4-4: Loss of a generator followed by System adjustment followed by loss of a transformer	☐Agree. ☐Do not agree.	

The performance requirement for the following event may be considered less stringent than the existing TPL Standards — P2-3: Loss of a single pole of a DC line. Interruption of firm transactions (without Loss of firm Load) if the transaction is dependent on the faulted DC line is now allowed for this initiating event/Contingency.

Q30. Do you agree that interruption of any firm transfers that are dependent on the outaged DC line that is taken out of service should be permitted?

Yes ☐ No ☐
Comment:

E. Stability

Q31. The proposed standard is based on an assumption that steady state analysis and stability analysis are different from each other and that therefore, two tables of Contingencies and performance requirements were needed. It is also based on an assumption that stability study requirements should be clearly separated from the steady state study requirements. Do you agree with the action taken in separating stability analysis from steady state analysis? If not, please explain.

Yes ☐ No ☐
Comment:

[1] System adjustment can be manual or automatic

Q32. The SDT has added requirements for plant stability studies and has drawn a distinction in these studies from System stability studies. Do you agree with this approach? If not, please explain.

Yes ☐ No ☐
Comment:

Q33. The existing TPL-004-0 standard has a requirement to consider the Loss of all generating units at a plant, but it was not clear whether this requirement should apply to stability studies. The SDT did not include this requirement in the stability table, because it is hard to envision a condition when all units would trip simultaneously within the timeframe of a stability simulation. Do you think this condition should be required in stability analysis of extreme events? If not, please explain.

Yes ☐ No ☐
Comment:

Q34. There are an increasing number of events with slow voltage recovery after faults on the Transmission System. The dynamic behavior of induction motor loads is a major factor in this phenomenon. The proposed standard therefore requires that the load model for stability studies of peak Load conditions include the dynamic effects of induction motors. Do you agree with this requirement? If not, please explain?

Yes ☐ No ☐
Comment:

Q35. What type of manual or automatic adjustments of generators should be allowed for single and multiple Contingencies?

Comment:

F. Generation Runback and Tripping

The SDT has discussed the automatic and manual readjustments of generators that should be permissible for single contingencies and multiple contingencies. The existing TPL-001-0 through TPL-004-0 standards through footnote (a) of Table I could include emergency ratings applicable for short durations as required to permit operating steps necessary to maintain system control. The footnote is silent about allowable generation adjustments in response to the Category B events. However, it does indicate that system adjustments are permitted to prepare for the next Contingency. These system adjustments could include manual or automatic adjustments involving generation.

The SDT has learned that many transmission owners use System Protection Systems (SPS) or Remedial Action Schemes (RAS) to trip generation for single and multiple Contingency outage events to prevent overloads, low voltage, and instability in the Interconnected Transmission network for N-1 and N-2 events. In some cases, the RAS are used to prepare for the next Contingency; but in some cases, the RAS are used to simultaneously avoid exceeding emergency ratings.

Q36. The proposed standard allows generation runback after the disturbance that causes a single Contingency (or due to a single Contingency outage) to move the Interconnected Transmission System from an emergency state (within emergency ratings) to a normal state (within normal ratings), assuming that the disturbance does not result in instability? Do you agree? If not, please explain.

Yes ☐ No ☐
Comment:

Q37. Since emergency ratings are thermal ratings, should this standard allow an automatic generation runback scheme (that is initiated immediately after the disturbance causing the single Contingency) to prevent thermal overloads (assuming that the disturbance does not result in instability)? If yes, what are the conditions that must be met in order to allow such a runback scheme to meet the System performance criteria for single Contingencies? Please explain the reason for your answer.

Yes ☐ No ☐
Comment:

The standard drafting team has considered that RAS or SPS may be allowable under certain situations for single Contingencies, but proposes that their use should be limited.

Q38. Do you agree that RAS or SPS may be allowed for single Contingencies? If not, please explain.

Yes ☐ No ☐
Comment:

Q39. Please describe the limitations that you believe should be placed on the use of RAS or SPS for single Contingency events.

Comment:

Q40. When RAS or SPS are allowed, what conditions should be met when these systems are used in system adjustments to meet performance requirements?

Comment:

G. General Questions

Q41. If you are aware of any regional variances that would be required as a result of these standards, please identify them here.

Yes ☐ No ☐
Comment:

Q42. If you are aware of any conflicts between the proposed standards and any regulatory function, rule order, tariff, rate schedule, legislative requirement or agreement, please identify them here.

Yes ☐ No ☐
Comment:

Q43. Do you have any other questions or concerns with the proposed standard that have not been addressed? If yes, please explain.

Yes ☒ No ☐

Comment: The terms Bus Tie Breaker and Non-Bus Tie Breaker used in Tables 1 and 2 are not well defined. To prevent misinterpretation of the standard, include diagrams that point out examples of bus tie breakers and non-bus tie breakers for each of the following bus schemes: 1) Single bus 2) Ring bus 3) Breaker and a half 4) Double bus double breaker.

NERC
NORTH AMERICAN ELECTRIC RELIABILITY CORPORATION

Comment Form for First Draft of TPL-001-1 — Transmission System Planning Performance Requirements

Please use this form to submit comments on the proposed draft of TPL-001-1. Comments must be submitted by **[Due Date in bold]**. You may submit the completed form by e-mail to sarcomm@nerc.net with the words "TPL-001 Draft 1" in the subject line. If you have questions please contact Ed Dobrowolski at ed.dobrowolski@nerc.net or by telephone at 609-947-3673.

Individual Commenter Information **(Complete this page for comments from one organization or individual.)**		
Name:		
Organization:		
Telephone:		
E-mail:		
NERC Region (check all Regions in which your company operates)		**Registered Ballot Body Segment (check all industry segments in which your company is registered)**
☐ **ERCOT** ☐ **FRCC** ☐ **MRO** ☐ **NPCC** ☒ **RFC** ☐ **SERC** ☐ **SPP** ☐ **WECC** ☐ **NA – Not Applicable**	☐	1 — Transmission Owners
	☒	2 — RTOs and ISOs
	☐	3 — Load-serving Entities
	☐	4 — Transmission-dependent Utilities
	☐	5 — Electric Generators
	☐	6 — Electricity Brokers, Aggregators, and Marketers
	☐	7 — Large Electricity End Users
	☐	8 — Small Electricity End Users
	☐	9 — Federal, State, Provincial Regulatory or other Government Entities
	☐	10 — Regional Reliability Organizations and Regional Entities

Group Comments (Complete this page if comments are from a group.)

Group Name: PJM Planning

Lead Contact: Ganesh Velummylum

Contact Organization: PJM

Contact Segment: RTO / ISO

Contact Telephone: 610-666-4307

Contact E-mail: velumg@pjm.com

Additional Member Name	Additional Member Organization	Region*	Segment*
Mark Kuras		RFC	2
Mahendra Patel		RFC	2
Paul McGlynn		RFC	2
Mohamed Osman		RFC	2
Chuck Liebold		RFC	2
Leanne Harrison		RFC	2
Susan McGill		RFC	2

*If more than one Region or Segment applies, please list all that apply. Regional acronyms and segment numbers are shown on prior page.

Background

The purpose of this standard is to establish Transmission System planning performance requirements within the planning horizon to develop a Bulk Electric System that will operate reliably over a broad spectrum of System conditions and following a wide range of probable Contingencies. This standard will replace TPL-001-0, TPL-002-0, TPL-003-0 and TPL-004-0. The SDT has not yet addressed TPL-005-0 and TPL-006-0, but will address these two standards during the next phase of the drafting process.

The major objectives of the SDT are to:

1) Ensure the standard is complete and the requirements are set at an appropriate level to ensure reliability (Not Least Common Denominator)
2) Ensure that the standard is enforceable by having clearly defined requirements with unambiguous language
3) Address the issues raised by FERC Order 693, 890 and other applicable orders
4) Address the issues raised in the original Standards Authorization Request (SAR) and the Supplemental SAR.

The SDT did not attempt to edit the existing standards but rather chose to write one standard that addresses all aspects of transmission planning in the existing TPL-001-0, TPL-002-0, TPL-003-0 and TPL-004-0. The SDT organized the new standard in the following sections:

R1 – Modeling requirements
R2 – Assessment and Corrective Plan requirements
R3 – Steady State Analysis requirements
R4 – Stability Analysis requirements
R5 – Coordination requirements

The SDT determined that the requirements and analysis for Steady State are different from those for stability. As such, the SDT separated the analysis requirements and created two performance requirement tables.

The SDT recognizes that this draft standard is a starting point for industry input into the standard and that there is still a lot of work required to complete the process. The SDT has made many changes to clarify requirements, add requirements, and make some of the performance requirements stricter. The SDT has not addressed Measures, Risk Factors, Violation Severity Factors or Time Horizons at this time. These will be addressed when the SDT has better defined the requirements of the standard.

For questions where you agree with the SDT, please state that you agree and if available, please provide supporting documentation. If you disagree with the SDT, please explain why you disagree and provide data to support your position, such as outage data or analysis. If you

believe that we have made a performance requirement too strict please provide supporting documentation. If applicable, please include the approximate cost in man-hours for additional studies and/or cost in $Millions for additional transmission investment to meet the new requirements or the stricter requirements. If you believe that the standard should be stricter, please provide the rationale along with any supporting data, including existing practices, cost estimates or additional analysis.

To improve the standard, the SDT would appreciate responses to as many of these questions as you can answer.

A. New Definitions

Many of the concerns about the existing TPL standards come from the fact that a number of generally understood concepts are embedded in undefined terms, tables, and footnotes. To clarify some of these concerns, the SDT is proposing new definitions. Please indicate whether you agree with the following proposed definitions and provide proposed changes to the definitions if you disagree:

Definition	**Agree or Disagree**
Q1. **Base Case**: Computer representation of the projected initial or starting Transmission System conditions for a specific point in time. Each base case reflects the forecasted Load at each bus (or node) on the interconnected Transmission System, the transmission facilities which deliver the generation and reactive resources to the connected Load, and the generation dispatch including firm transaction obligations assumed to supply the connected Load. The models also reflect facility ratings in accordance with FAC-008 & FAC-009.	☒Agree. ☒Do not agree.
Q1. **Comment: Also FAC-010**	
Q2. **Consequential Load Loss:** Load that is no longer served because it is directly connected to an element(s) that is removed from service due to fault clearing action or mis-operation.	☒Agree. ☒Do not agree.
Q2. **Comment: Need to tighten definition example- load that trips in sympathy with fault (motor trips as a direct result but not in protection zone)**	
Q3. **Extreme Events:** Events which are more severe than Planning Events and have a low probability of occurrence.	☒Agree. ☒Do not agree.
Q3. **Comment: Agree with concept but need better definition**	
Q4. **Long-Term Transmission Planning Horizon:** Transmission planning period that covers years six through ten or beyond.	☒Agree. ☐Do not agree.
Q4. **Comment:**	
Q5. **Near-Term Transmission Planning Horizon:** Transmission planning period that covers Years One through five.	☒Agree. ☒Do not agree.
Q5. **Comment: Near Term should cover years two through five. Planning should not study year one because Operation Planning does and one year is too short of a period to mitigate**	

on a permanent basis.	
Q6. **Non-Consequential Load Loss:** Load loss other than Consequential Load Loss. For example, Load loss that occurs through manual (operator initiated) or automatic operations such as under-voltage Load shedding, under-frequency Load shedding, or Special Protection Systems.	☒Agree. ☒Do not agree.
Q6. **Comment: Non-Consequential Load Loss should not include load loss due to manual, UVLS and UFLS.**	
Q7. **Planning Assessment:** Documented evaluation of future Bulk Electric System needs by the use of performance studies that cover a range of assumptions regarding system conditions, time frames, future plans including capital reinforcements and operating procedures and other factors, such as asset conditions and age.	☒Agree. ☐Do not agree.
Q7. **Comment:**	
Q8. **Planning Events:** Events which require Transmission system performance requirements to be met.	☒Agree. ☐Do not agree.
Q8. **Comment:**	
Q9. **Plant Stability Study:** Study of an individual plant's Stability for various Contingencies in the vicinity of the plant; concerned with the effect on the System of the generating units' loss of synchronism and the damping of the generating units' power oscillations.	☒Agree. ☐Do not agree.
Q9. **Comment:**	
Q10. **System Stability Study:** Study of the System or portions of the System to ensure that angular Stability is maintained, inter-area power oscillations are damped, and voltages during the dynamic simulation stay within acceptable performance limits.	☒Agree. ☒Do not agree.
Q10. **Comment: Does "inter-area oscillations are damped" imply that you also have to do frequency domain analysis? (Because some industry experts would claim that without small signal analysis you cannot ensure that inter-area oscillations are damped.)**	
Q11. **Year One:** The first year that a Transmission Planner is responsible for studying. This is further defined as the planning window that begins the next calendar year from the time the Transmission Planner submits their annual studies. Analysis conducted for time horizons within the calendar year from the study publication are assumed to be conducted under the auspices of Operations Planning.	☒Agree. ☐Do not agree.
Q11. **Comment:**	

B. Sensitivity Studies

The draft planning standard includes the requirement, as specified in FERC Order 693, that planning decisions be based on a portfolio of analyses. In section 12.a.ii "Sensitivity studies and critical system conditions", FERC provided direction to consider a full range of variables considered to be significant that need to be assessed and documentation provided that explains the rationale for the selection of variables assessed.

In addition to the firm obligation scenario, the portfolio of analyses should be supplemented to include information from sensitivity analysis. The sensitivity analysis should be developed using additional cases that simulate reasonably stressed system conditions. The SDT has

included several parameters that can be varied to create the requisite sensitivity case(s). The draft standards specify that the sensitivities reflect one or more of the following conditions and that documentation be provided explaining the rationale for selecting the sensitivity(ies) employed. The parameters that should be varied include:

- Higher or lower Load forecasts from the Base Case with variability of Load/demand and Load power factors due to season, weather, or time of day.
- Modification of expected transfers.
- Unavailability of long lead time facilities.
- Variability and outages of Reactive Resources.
- Generation additions, retirements, or other dispatch scenarios.
- Decreased effectiveness of controllable Loads and Demand Side Management.
- Modification of planned Transmission outages

To help focus industry discussion, please respond to the questions below:

Q12. Should the standard provide more specific direction regarding the number of sensitivity cases that need to be developed?

Yes ☒ No ☒
Comment: **At the least, it should provide a measure that indicates that you meet the requirement. Need to modify 2.4.3 to specify what if any performance requirement need to be met.**

Q13. Should the standard specify the required changes, such as changes in expected transfers, load forecasts, generation patterns, etc., from the study case to be considered a "reasonably stressed" case?

Yes ☒ No ☒
Comment: **Again, 'reasonable' is a very subjective term. Refer to comments on question 12**

Q14. The SDT proposes to require the use of sensitivity studies for Near-Term Transmission System Planning Horizon stability analysis. Do you concur with the use of sensitivity analysis in dynamic studies?

Yes ☒ No ☒
Comment: **Yes, however, clear direction is needed. Specific wording that defines if you have done enough, and met the compliance requirements.**

Q15. The draft TPL standard does not require the use of sensitivity studies for the Long-Term Transmission System Planning Horizon (year 6 and beyond) studies. Do you concur with this approach or should there be some level of sensitivity analysis required for the long-term period?

Yes ☒ No ☒
Comment: **PJM agrees that no sensitivity analysis is required for long term period**

C. Corrective Action Plans

Requirement R2.7 of the standard states that when analysis shows that the performance requirements in Table 1 and Table 2 are not fully met, a Corrective Action Plan that utilizes all or some of the Transmission System enhancements, generation additions, DSM, new technologies and Operating Procedures shall be included in the Planning Assessment. This Corrective Action Plan should ensure that upon its implementation the identified system deficiencies will be corrected so that the performance requirements in Table 1 and Table 2 will be met. Furthermore, studies included in the Planning Assessment should demonstrate that this is indeed the case.

Q16. Requirement R2.7.1: Such Corrective Action Plans shall "Identify System deficiencies and the associated actions needed to achieve required System performance including Transmission and generation improvements, DSM, new technologies, or Operating Procedures including the duration of Interim Operating Procedures". System deficiencies may be corrected using an integrated plan, i.e., an optimal mix of Transmission, generation, DSM and Operating Procedures. Should DSM be considered in conjunction with other measures in developing Corrective Action Plans? If Yes, please comment on how the impact of DSM should be included.

Yes ☒ No ☒

Comment: **Yes- DSM should be modeled consistent with how it is expected to be operated based on contractual/operating relationships.**

Q17. Requirement R2.7.2: Such Corrective Action Plans shall "Be added to study cases and the cases re-tested to show that the System with planned additions meets the performance requirements in the tables". Should new studies, including the facilities comprising the Corrective Action Plan, be performed to assess System normal performance and Contingency response for conditions that previously resulted in the System deficiencies (without the planned additions) and also demonstrate that the changes would not result in inadvertent negative impacts on the System. If you "agree", please comment on how a study area should be determined.

Yes ☒ No ☒

Comment: **Yes – At a minimum the system conditions and / or contingency that identified the system deficiency should be evaluated to determine that it has corrected the issue. The extent of the study area needs to be consistent with the size / complexity of the corrective action plan.**

Q18. Requirement R2.7.3: The standard calls for a differentiation between committed and proposed projects. Do you agree that they should be treated separately? If not, please state why not.

Yes ☒ No ☒
Comment: **We agree that there needs to be a differentiation between committed and proposed projects. Proposed projects, particularly generation interconnections and their associated network upgrades need to be identified as a group so that they can be removed from cases if the proposed generation interconnection does not move forward.**

Q19. Requirement R2.7.4: For such Corrective Action Plans "Committed projects shall not be removed without documentation to show that the revised plan meets the performance requirements". Do you agree or disagree with this requirement? If you disagree, please explain why.

Yes ☒ No ☐
Comment:

D. Performance Requirements

The proposed revised planning standard (TPL-001-1) incorporates a number of changes in requirements as compared to the current planning standards (TPL-001-0 through TPL-004-0), which it is expected to replace. Among other things these changes are intended to clarify the standard, address issues described by FERC, and, in particular, to "raise the bar." Strengthening the planning standards in selected areas is necessary to maintain a reliable BES that is up to the challenges of the 21st Century. In proposing the requirements in this draft, the SDT attempted to balance the value of increased reliability against any potential increase in work and costs to meet the new proposed standard.

The SDT is seeking input from the industry to determine whether a proper balance has been achieved. The areas where material changes are proposed in this draft are enumerated below, and questions are posed by the SDT to obtain industry comment. In formulating your responses, please keep in mind that material changes in the final standard will be accompanied by a transition plan to provide for an orderly implementation of the final standard.

The performance requirements relative to Non-Consequential Loss of Load for the following events enumerated in the two tables can be considered more stringent than the existing TPL Standards. Furthermore, the proposed standard is based on an assumption that performance requirements for EHV facilities should be more stringent than for lower voltage facilities.

Do you agree that Non-Consequential Loss of Load should not be permitted for the following events? If you disagree, please provide a reason for your disagreement.

Event	**Agree or Disagree**	**Comment**
Q20. P2-1: Loss of bus section (SLG for stability) above 300 kV	☒Agree. ☐Do not agree.	**Should be a 3 phase fault not a single line to ground fault.**
Q21. P5-1: For facilities	☒Agree.	

above 300 kV, loss of a Transmission circuit followed by System adjustment[1] followed by loss of another Transmission circuit	☐Do not agree.	
Q22. P5-2: For facilities above 300 kV, loss of a Transmission circuit followed by System adjustment followed by loss of a transformer with low side voltage rating above 300 kV	☒Agree. ☐Do not agree.	
Q23. P5-3: For facilities above 300 kV, loss of a transformer with low side voltage rating above 300 kV followed by System adjustment followed by loss of another transformer	☒Agree. ☐Do not agree.	

[1]System adjustment can be manual or automatic.

The proposed standard is based on an assumption that performance requirements for non-bus tie EHV breakers should be distinguished from other breakers. Do you agree that Non-Consequential Loss of Load should not be permitted for this event?

Q24. Loss of non-bus tie breaker (above 300 kV) due to internal fault

Yes ☒ No ☐
Comment: Agree with performance requirement

The proposed standard is based on an assumption that performance requirements for non-bus tie EHV breakers should be distinguished from other breakers and that performance requirements for EHV facilities should be more stringent than for lower voltage facilities. Do you agree that Non-Consequential Loss of Load should not be permitted for this event?

Q25. P3-1: Loss of (SLG for stability) either a generator, a Transmission circuit, a transformer, or a bus and a stuck non-bus tie breaker (above 300 kV)

Yes ☒ No ☐
Comment:

The proposed standard is based on an assumption that the following events are relatively high probability events and, therefore, Non-Consequential Loss of Load should not be permitted. Do you agree? If you disagree, please provide a reason for your disagreement.

Event	Agree or Disagree	Comment
Q26. P4-1: Loss of a Generator followed by System adjustment[1] followed by loss of another Generator	☒Agree. ☐Do not agree.	
Q27. P4-2: Loss of a generator followed by a System adjustment followed by the loss of a monopolar DC line	☒Agree. ☐Do not agree.	
Q28. P4-3: Loss of a generator followed by System adjustment followed by loss of a Transmission circuit	☒Agree. ☐Do not agree.	
Q29. P4-4: Loss of a generator followed by System adjustment followed by loss of a transformer with low side voltage rating above 300 kV	☒Agree. ☐Do not agree.	

The performance requirement for the following event may be considered less stringent than the existing TPL Standards - P2-3: Loss of a single pole of a DC line. Interruption of firm transactions (without Loss of firm Load) if the transaction is dependent on the faulted DC line is now allowed for this initiating event/Contingency.

Q30. Do you agree that interruption of any firm transfers that are dependent on the outaged DC line that is taken out of service should be permitted?

Yes ☒ No ☐
Comment: yes

E. Stability

Q31. The proposed standard is based on an assumption that steady state analysis and stability analysis are different from each other and that therefore, two tables of Contingencies and performance requirements were needed. It is also based on an assumption that stability study requirements should be clearly separated from the steady state study requirements. Do you agree with the action taken in separating stability analysis from steady state analysis? If not, please explain.

[1] System adjustment can be manual or automatic

Yes ☒ No ☐
Comment:

Q32. The SDT has added requirements for plant stability studies and has drawn a distinction in these studies from System stability studies. Do you agree with this approach? If not, please explain.

Yes ☒ No ☐
Comment:

Q33. The existing TPL-004-0 standard has a requirement to consider the Loss of all generating units at a plant, but it was not clear whether this requirement should apply to stability studies. The SDT did not include this requirement in the stability table, because it is hard to envision a condition when all units would trip simultaneously within the timeframe of a stability simulation. Do you think this condition should be required in stability analysis of extreme events? If not, please explain.

Yes ☒ No☐
Comment: **Yes, but should model the true clearing times of each individual unit. Also the standard should clearly state that system reinforcement should not be required for this extreme events.**

Q34. There are an increasing number of events with slow voltage recovery after faults on the Transmission System. The dynamic behavior of induction motor loads is a major factor in this phenomenon. The proposed standard therefore requires that the load model for stability studies of peak Load conditions include the dynamic effects of induction motors. Do you agree with this requirement? If not, please explain?

Yes ☐ No ☒
Comment: **No. This is good in theory but is impractical to implement with the large interconnected systems that span large geographical areas.**

Q35. What type of manual or automatic adjustments of generators should be allowed for single and multiple Contingencies?

Comment: **Adjustments should be allowed consistent the time periods being studied.**

F. Generation Runback and Tripping

The SDT has discussed the automatic and manual readjustments of generators that should be permissible for single contingencies and multiple contingencies. The existing TPL-001-0 through TPL-004-0 standards through footnote (a) of Table I could include emergency ratings applicable for short durations as required to permit operating steps necessary to maintain system control.

The footnote is silent about allowable generation adjustments in response to the Category B events. However, it does indicate that system adjustments are permitted to prepare for the next Contingency. These system adjustments could include manual or automatic adjustments involving generation.

The SDT has learned that many transmission owners use System Protection Systems (SPS) or Remedial Action Schemes (RAS) to trip generation for single and multiple Contingency outage events to prevent overloads, low voltage, and instability in the Interconnected Transmission network for N-1 and N-2 events. In some cases, the RAS are used to prepare for the next Contingency; but in some cases, the RAS are used to simultaneously avoid exceeding emergency ratings.

Q36. The proposed standard allows generation runback after the disturbance that causes a single Contingency (or due to a single Contingency outage) to move the Interconnected Transmission System from an emergency state (within emergency ratings) to a normal state (within normal ratings), assuming that the disturbance does not result in instability? Do you agree? If not, please explain.

Yes ☒ No ☐
Comment: Yes

,
Q37. Since emergency ratings are thermal ratings, should this standard allow an automatic generation runback scheme (that is initiated immediately after the disturbance causing the single Contingency) to prevent thermal overloads (assuming that the disturbance does not result in instability)? If yes, what are the conditions that must be met in order to allow such a runback scheme to meet the System performance criteria for single Contingencies? Please explain the reason for your answer.

Yes ☒ No ☒
Comment. **Yes- At a minimum the emergency rating needs to be coordinated with the SPS timing.**

The SDT has considered that RAS or SPS may be allowable under certain situations for single Contingencies, but proposes that their use should be limited.

Q38. Do you agree that RAS or SPS may be allowed for single Contingencies? If not, please explain.

Yes ☒ No ☐
Comment:
Q39. Please describe the limitations that you believe should be placed on the use of RAS or SPS for single Contingency events.

Comment:

Q40. When RAS or SPS are allowed, what conditions should be met when these systems are used in system adjustments to meet performance requirements?

Comment:

G. General Questions

Q41. If you are aware of any regional variances that would be required as a result of these standards, please identify them here.

Yes ☐ No ☒
Comment:

Q42. If you are aware of any conflicts between the proposed standards and any regulatory function, rule order, tariff, rate schedule, legislative requirement or agreement, please identify them here.

Yes ☐ No ☒
Comment:

Q43. Do you have any other questions or concerns with the proposed standard that have not been addressed? If yes, please explain.

Yes ☒ No ☐
Comment: Yes.

- Delayed clearing due to primary relay system communication failure
- Bus Contingencies should not be included for sensitivity/stressed case
- Sensitivity case should not be included for long term study
- Need to clearly define number of studies required for Load Flow/Stability and what performance criteria must be met.
    - Peak Case
    - Off Peak
    - Sensitivity

- Need to allow SPS operation after a first contingency, system readjustment and a "second " first contingency.
- SPSs can include generation tripping

NERC
NORTH AMERICAN ELECTRIC RELIABILITY CORPORATION

Comment Form for First Draft of TPL-001-1 — Transmission System Planning Performance Requirements

Please use this form to submit comments on the proposed draft of TPL-001-1. Comments must be submitted by **Friday, October 26, 2007**. You may submit the completed form by e-mail to sarcomm@nerc.net with the words "TPL-001 Draft 1" in the subject line. If you have questions please contact Ed Dobrowolski at ed.dobrowolksi@nerc.net or by telephone at 609-947-3673.

Individual Commenter Information **(Complete this page for comments from one organization or individual.)**		
Name:	John Collins	
Organization:	Platte River Power Authority	
Telephone:	970-229-5272	
E-mail:	collinsj@prpa.org	
NERC Region (check all Regions in which your company operates)		**Registered Ballot Body Segment (check all industry segments in which your company is registered)**
☐ **ERCOT**	☒	1 — Transmission Owners
☐ **FRCC**	☐	2 — RTOs and ISOs
☐ **MRO**	☐	3 — Load-serving Entities
☐ **NPCC**	☐	4 — Transmission-dependent Utilities
☐ **RFC**	☐	5 — Electric Generators
☐ **SERC**	☐	6 — Electricity Brokers, Aggregators, and Marketers
☐ **SPP**	☐	7 — Large Electricity End Users
☒ **WECC**	☐	8 — Small Electricity End Users
☐ **NA – Not Applicable**	☐	9 — Federal, State, Provincial Regulatory or other Government Entities
	☐	10 — Regional Reliability Organizations and Regional Entities

Group Comments (Complete this page if comments are from a group.)

Group Name:

Lead Contact:

Contact Organization:

Contact Segment:

Contact Telephone:

Contact E-mail:

Additional Member Name	Additional Member Organization	Region*	Segment*

*If more than one Region or Segment applies, please list all that apply. Regional acronyms and segment numbers are shown on prior page.

Background

The purpose of this standard is to establish Transmission System planning performance requirements within the planning horizon to develop a Bulk Electric System that will operate reliably over a broad spectrum of System conditions and following a wide range of probable Contingencies. This standard will replace TPL-001-0, TPL-002-0, TPL-003-0, and TPL-004-0. The standard drafting team has not yet addressed TPL-005-0 and TPL-006-0, but will address these two standards during the next phase of the drafting process.

The major objectives of the standard drafting team are to:

1) Ensure the standard is complete and the requirements are set at an appropriate level to ensure reliability (Not Least Common Denominator)
2) Ensure that the standard is enforceable by having clearly defined requirements with unambiguous language
3) Address the issues raised by FERC Order 693, 890, and other applicable orders
4) Address the issues raised in the original Standards Authorization Request (SAR) and the Supplemental SAR.

The standard drafting team did not attempt to edit the existing standards but rather chose to write one standard that addresses all aspects of transmission planning in the existing TPL-001-0, TPL-002-0, TPL-003-0, and TPL-004-0. The standard drafting team organized the new standard in the following sections:

R1 – Modeling requirements
R2 – Assessment and Corrective Plan requirements
R3 – Steady State Analysis requirements
R4 – Stability Analysis requirements
R5 – Coordination requirements

The standard drafting team determined that the requirements and analysis for Steady State are different from those for stability. As such, the standard drafting team separated the analysis requirements and created two performance requirement tables.

The standard drafting team recognizes that this draft standard is a starting point for industry input into the standard and that there is still a lot of work required to complete the process. The standard drafting team has made many changes to clarify requirements, add requirements, and make some of the performance requirements stricter. The standard drafting team has not addressed Measures, Risk Factors, Violation Severity Factors, or Time Horizons at this time. These will be addressed when the standard drafting team has better defined the requirements of the standard.

For questions where you agree with the standard drafting team, please state that you agree and if available, please provide supporting documentation. If you disagree with the standard drafting team, please explain why you disagree and provide data to support your position, such as outage data or analysis. If you believe that we have made a performance requirement too strict please provide supporting documentation. If applicable, please include the approximate cost in man-hours for additional studies and/or cost in $Millions for additional transmission investment to meet the new requirements or the stricter requirements. If you believe that the standard should be stricter, please provide the rationale along with any supporting data, including existing practices, cost estimates or additional analysis.

To improve the standard, the standard drafting team would appreciate responses to as many of these questions as you can answer.

A. New Definitions

Many of the concerns about the existing TPL standards come from the fact that a number of generally understood concepts are embedded in undefined terms, tables, and footnotes. To clarify some of these concerns, the standard drafting team is proposing new definitions. Please indicate whether you agree with the following proposed definitions and provide proposed changes to the definitions if you disagree:

Definition	**Agree or Disagree**
Q1. **Base Case**: Computer representation of the projected initial or starting Transmission System conditions for a specific point in time. Each base case reflects the forecasted Load at each bus (or node) on the interconnected Transmission System, the transmission facilities which deliver the generation and reactive resources to the connected Load, and the generation dispatch including firm transaction obligations assumed to supply the connected Load. The models also reflect facility ratings in accordance with FAC-008 & FAC-009.	☐Agree. ☐Do not agree.
Q1. **Comment:**	
Q2. **Consequential Load Loss:** Load that is no longer served because it is directly connected to an element(s) that is removed from service due to fault clearing action or mis-operation.	☐Agree. ☐Do not agree.
Q2. **Comment:**	
Q3. **Extreme Events:** Events which are more severe than Planning Events and have a low probability of occurrence.	☐Agree. ☐Do not agree.
Q3. **Comment:**	
Q4. **Long-Term Transmission Planning Horizon:** Transmission planning period that covers years six through ten or beyond.	☐Agree. ☐Do not agree.
Q4. **Comment:**	
Q5. **Near-Term Transmission Planning Horizon:** Transmission planning period that covers years One through five.	☐Agree. ☐Do not agree.
Q5. **Comment:**	
Q6. **Non-Consequential Load Loss:** Load loss other than Consequential Load Loss. For example, Load loss that occurs through manual (operator initiated) or automatic operations such as under-voltage Load shedding, under-frequency Load shedding, or Special Protection Systems.	☐Agree. ☐Do not agree.
Q6. **Comment:**	
Q7. **Planning Assessment:** Documented evaluation of future Bulk Electric System needs by the use of performance studies that cover a range of assumptions regarding system conditions, time	☐Agree. ☐Do not

frames, future plans including capital reinforcements and operating procedures and other factors, such as asset conditions and age.	agree.
Q7. **Comment:**	
Q8. **Planning Events:** Events which require Transmission system performance requirements to be met.	☐Agree. ☐Do not agree.
Q8. **Comment:**	
Q9. **Plant Stability Study:** Study of an individual plant's Stability for various Contingencies in the vicinity of the plant; concerned with the effect on the System of the generating units' loss of synchronism and the damping of the generating units' power oscillations.	☐Agree. ☐Do not agree.
Q9. **Comment:**	
Q10. **System Stability Study:** Study of the System or portions of the System to ensure that angular Stability is maintained, inter-area power oscillations are damped, and voltages during the dynamic simulation stay within acceptable performance limits.	☐Agree. ☐Do not agree.
Q10. **Comment:**	
Q11. **Year One:** The first year that a Transmission Planner is responsible for studying. This is further defined as the planning window that begins the next calendar year from the time the Transmission Planner submits their annual studies. Analysis conducted for time horizons within the calendar year from the study publication are assumed to be conducted under the auspices of Operations Planning.	☐Agree. ☐Do not agree.
Q11. **Comment:**	

B. Sensitivity Studies

The draft planning standard includes the requirement, as specified in FERC Order 693, that planning decisions be based on a portfolio of analyses. In section 12.a.ii "Sensitivity studies and critical system conditions" FERC provided direction to consider a full range of variables considered to be significant that need to be assessed and documentation provided that explains the rationale for the selection of variables assessed.

In addition to the firm obligation scenario, the portfolio of analyses should be supplemented to include information from sensitivity analysis. The sensitivity analysis should be developed using additional cases that simulate reasonably stressed system conditions. The standard drafting team has included several parameters that can be varied to create the requisite sensitivity case(s). The draft standards specify that the sensitivities reflect one or more of the following conditions and that documentation be provided explaining the rationale for selecting the sensitivity(ies) employed. The parameters that should be varied include:

- Higher or lower Load forecasts from the Base Case with variability of Load/demand and Load power factors due to season, weather, or time of day.
- Modification of expected transfers.
- Unavailability of long lead time facilities.
- Variability and outages of Reactive Resources.
- Generation additions, retirements, or other dispatch scenarios.

- Decreased effectiveness of controllable Loads and Demand Side Management.
- Modification of planned Transmission outages

To help focus industry discussion, please respond to the questions below:

Q12. Should the standard provide more specific direction regarding the number of sensitivity cases that need to be developed?

Yes ☐ No ☐
Comment:

Q13. Should the standard specify the required changes, such as changes in expected transfers, load forecasts, generation patterns, etc., from the study case to be considered a "reasonably stressed" case?

Yes ☐ No ☐
Comment:

Q14. The SDT proposes to require the use of sensitivity studies for Near-Term Transmission System Planning Horizon stability analysis. Do you concur with the use of sensitivity analysis in dynamic studies?

Yes ☐ No ☐
Comment:

Q15. The draft TPL standard does not require the use of sensitivity studies for the Long-Term Transmission System Planning Horizon (year six and beyond) studies. Do you concur with this approach or should there be some level of sensitivity analysis required for the long-term period?

Yes ☐ No ☐
Comment:

C. Corrective Action Plans

Requirement R2.7 of the standard states that when analysis shows that the performance requirements in Table 1 and Table 2 are not fully met, a Corrective Action Plan that utilizes all or some of the Transmission System enhancements, generation additions, DSM, new technologies and Operating Procedures shall be included in the Planning Assessment. This Corrective Action Plan should ensure that upon its implementation the identified system deficiencies will be corrected so that the performance requirements in Table 1 and Table 2 will be met. Furthermore, studies included in the Planning Assessment should demonstrate that this is indeed the case.

Q16. Requirement R2.7.1: Such Corrective Action Plans shall "Identify System deficiencies and the associated actions needed to achieve required System performance including Transmission and generation improvements, DSM, new technologies, or Operating Procedures including the duration of Interim Operating Procedures". System deficiencies may be corrected using an integrated plan, i.e., an optimal mix of Transmission, generation, DSM and Operating Procedures. Should DSM be considered in conjunction with other measures in developing Corrective Action Plans? If yes, please comment on how the impact of DSM should be included.

Yes ☐ No ☐
Comment:

Q17. Requirement R2.7.2: Such Corrective Action Plans shall "Be added to study cases and the cases re-tested to show that the System with planned additions meets the performance requirements in the tables". Should new studies, including the facilities comprising the Corrective Action Plan, be performed to assess System normal performance and Contingency response for conditions that previously resulted in the System deficiencies (without the planned additions) and also demonstrate that the changes would not result in inadvertent negative impacts on the System. If you "agree", please comment on how a study area should be determined.

Yes ☐ No ☐
Comment:

Q18. Requirement R2.7.3: The standard calls for a differentiation between committed and proposed projects. Do you agree that they should be treated separately? If not, please state why not.

Yes ☐ No ☐
Comment:

Q19. Requirement R2.7.4: For such Corrective Action Plans "Committed projects shall not be removed without documentation to show that the revised plan meets the performance requirements". Do you agree or disagree with this requirement? If you disagree, please explain why.

Yes ☐ No ☐
Comment:

D. Performance Requirements

The proposed revised planning standard (TPL-001-1) incorporates a number of changes in requirements as compared to the current planning standards (TPL-001-0 through TPL-004-0), which it is expected to replace. Among other things these changes are intended to clarify the standard, address issues described by FERC, and, in particular, to "raise the bar." Strengthening the planning standards in selected areas is necessary to maintain a reliable Bulk Electric System that is up to the challenges of the 21st Century. In proposing the requirements in this draft, the standard drafting team attempted to balance the value of increased reliability against any potential increase in work and costs to meet the new proposed standard.

The standard drafting team is seeking input from the industry to determine whether a proper balance has been achieved. The areas where material changes are proposed in this draft are enumerated below, and questions are posed by the standard drafting team to obtain industry comment. In formulating your responses, please keep in mind that material changes in the final standard will be accompanied by a transition plan to provide for an orderly implementation of the final standard.

The performance requirements relative to Non-Consequential Loss of Load for the following events enumerated in the two tables can be considered more stringent than the existing TPL standards. Furthermore, the proposed standard is based on an assumption that performance requirements for EHV facilities should be more stringent than for lower voltage facilities.

Do you agree that Non-Consequential Loss of Load should not be permitted for the following events? If you disagree, please provide a reason for your disagreement.

Event	Agree or Disagree	Comment
Q20. P2-1: Loss of bus section (SLG for stability) above 300 kV	☐Agree. ☐Do not agree.	
Q21. P5-1: For facilities above 300 kV, loss of a Transmission circuit followed by System adjustment[1] followed by loss of another Transmission circuit	☐Agree. ☐Do not agree.	
Q22. P5-2: For facilities above 300 kV, loss of a Transmission circuit followed by System adjustment followed by loss of a transformer with low side voltage rating above 300 kV	☐Agree. ☐Do not agree.	
Q23. P5-3: For facilities above 300 kV, loss of a transformer with low side voltage rating above 300 kV followed by System adjustment followed by loss of another transformer	☐Agree. ☐Do not agree.	

[1]System adjustment can be manual or automatic.

The proposed standard is based on an assumption that performance requirements for non-bus tie EHV breakers should be distinguished from other breakers. Do you agree that Non-Consequential Loss of Load should not be permitted for this event?

Q24. Loss of non-bus tie breaker (above 300 kV) due to internal fault

Yes ☐ No ☐
Comment:

The proposed standard is based on an assumption that performance requirements for non-bus tie EHV breakers should be distinguished from other breakers and that performance requirements for EHV facilities should be more stringent than for lower voltage facilities. Do you agree that Non-Consequential Loss of Load should not be permitted for this event?

Q25. P3-1: Loss of (SLG for stability) either a generator, a Transmission circuit, a transformer, or a bus and a stuck non-bus tie breaker (above 300 kV)

Yes ☐ No ☐
Comment:

The proposed standard is based on an assumption that the following events are relatively high probability events and, therefore, Non-Consequential Loss of Load should not be permitted. Do you agree? If you disagree, please provide a reason for your disagreement.

Event	Agree or Disagree	Comment
Q26. P4-1: Loss of a Generator followed by System adjustment[1] followed by loss of another Generator	☐Agree. ☐Do not agree.	
Q27. P4-2: Loss of a generator followed by a System adjustment followed by the loss of a monopolar DC line	☐Agree. ☐Do not agree.	
Q28. P4-3: Loss of a generator followed by System adjustment followed by loss of a Transmission circuit	☐Agree. ☐Do not agree.	
Q29. P4-4: Loss of a generator followed by System adjustment followed by loss of a transformer	☐Agree. ☐Do not agree.	

The performance requirement for the following event may be considered less stringent than the existing TPL Standards — P2-3: Loss of a single pole of a DC line. Interruption of firm transactions (without Loss of firm Load) if the transaction is dependent on the faulted DC line is now allowed for this initiating event/Contingency.

Q30. Do you agree that interruption of any firm transfers that are dependent on the outaged DC line that is taken out of service should be permitted?

Yes ☐ No ☐
Comment:

E. Stability

Q31. The proposed standard is based on an assumption that steady state analysis and stability analysis are different from each other and that therefore, two tables of Contingencies and performance requirements were needed. It is also based on an assumption that stability study requirements should be clearly separated from the steady state study requirements. Do you agree with the action taken in separating stability analysis from steady state analysis? If not, please explain.

Yes ☐ No ☐
Comment:

[1] System adjustment can be manual or automatic

Q32. The SDT has added requirements for plant stability studies and has drawn a distinction in these studies from System stability studies. Do you agree with this approach? If not, please explain.

Yes ☐ No ☐
Comment:

Q33. The existing TPL-004-0 standard has a requirement to consider the Loss of all generating units at a plant, but it was not clear whether this requirement should apply to stability studies. The SDT did not include this requirement in the stability table, because it is hard to envision a condition when all units would trip simultaneously within the timeframe of a stability simulation. Do you think this condition should be required in stability analysis of extreme events? If not, please explain.

Yes ☐ No ☐
Comment:

Q34. There are an increasing number of events with slow voltage recovery after faults on the Transmission System. The dynamic behavior of induction motor loads is a major factor in this phenomenon. The proposed standard therefore requires that the load model for stability studies of peak Load conditions include the dynamic effects of induction motors. Do you agree with this requirement? If not, please explain?

Yes ☐ No ☐
Comment:

Q35. What type of manual or automatic adjustments of generators should be allowed for single and multiple Contingencies?

Comment:

F. Generation Runback and Tripping

The SDT has discussed the automatic and manual readjustments of generators that should be permissible for single contingencies and multiple contingencies. The existing TPL-001-0 through TPL-004-0 standards through footnote (a) of Table I could include emergency ratings applicable for short durations as required to permit operating steps necessary to maintain system control. The footnote is silent about allowable generation adjustments in response to the Category B events. However, it does indicate that system adjustments are permitted to prepare for the next Contingency. These system adjustments could include manual or automatic adjustments involving generation.

The SDT has learned that many transmission owners use System Protection Systems (SPS) or Remedial Action Schemes (RAS) to trip generation for single and multiple Contingency outage events to prevent overloads, low voltage, and instability in the Interconnected Transmission network for N-1 and N-2 events. In some cases, the RAS are used to prepare for the next Contingency; but in some cases, the RAS are used to simultaneously avoid exceeding emergency ratings.

Q36. The proposed standard allows generation runback after the disturbance that causes a single Contingency (or due to a single Contingency outage) to move the Interconnected Transmission System from an emergency state (within emergency ratings) to a normal state (within normal ratings), assuming that the disturbance does not result in instability? Do you agree? If not, please explain.

Yes ☐ No ☐
Comment:

Q37. Since emergency ratings are thermal ratings, should this standard allow an automatic generation runback scheme (that is initiated immediately after the disturbance causing the single Contingency) to prevent thermal overloads (assuming that the disturbance does not result in instability)? If yes, what are the conditions that must be met in order to allow such a runback scheme to meet the System performance criteria for single Contingencies? Please explain the reason for your answer.

Yes ☐ No ☐
Comment:

The standard drafting team has considered that RAS or SPS may be allowable under certain situations for single Contingencies, but proposes that their use should be limited.

Q38. Do you agree that RAS or SPS may be allowed for single Contingencies? If not, please explain.

Yes ☐ No ☐
Comment:

Q39. Please describe the limitations that you believe should be placed on the use of RAS or SPS for single Contingency events.

Comment:

Q40. When RAS or SPS are allowed, what conditions should be met when these systems are used in system adjustments to meet performance requirements?

Comment:

G. General Questions

Q41. If you are aware of any regional variances that would be required as a result of these standards, please identify them here.

Yes ☐ No ☐
Comment:

Q42. If you are aware of any conflicts between the proposed standards and any regulatory function, rule order, tariff, rate schedule, legislative requirement or agreement, please identify them here.

Yes ☐ No ☐
Comment:

Q43. Do you have any other questions or concerns with the proposed standard that have not been addressed? If yes, please explain.

Yes ☒ No ☐

Comment: 1) P5 and P8 in Tables 1 and 2 – If you keep the "300 kV bar" for distinction between P5 and P8, then please make an exception for P5 to be "Yes" on Non-Consequential Load Loss where load pockets (a.k.a. local load-serving areas) are concerned because "system adjustments" might not be possible to avoid the need for Non-Consequential Load Loss after the loss of another line into the load pocket.

Example - A city, which is a type of load pocket, is served by three transmission lines. If one of the lines into the city is removed from service for maintenance, "system adjustments" within the city might not be possible to prevent steady-state voltages from dropping below an acceptable limit after loss of a second line into the city. If during such an "N-1Line-N1Line" Planning Event the city voltages become extremely low, then shedding of some of the city's load should be allowed, i.e. Non-Consequential Load Loss, for all voltages 100 kV and above. In this example, when one line into the city is removed from service, the TOP could either arm an SPS or RAS for automatic load shedding, or alert the operators to possible implementation of an Operating Procedure for manual load shedding. The city, along with its TO and other authorities, may decide by their own wishes to "raise the bar" and add facilities to maintain acceptable voltages for the worst "N-1Line-1Line" affecting only its local area. However, a facility addition type of solution, driven by a "No" for Non-Consequential Load Loss in P5, should not be mandated.

"Controlled interruption of electric supply to customers (load shedding)" should be allowed for all voltages 100 kV and above as Footnote (c) in TPL-003 allows. Consistent with this request to allow load shedding for this type of disturbance for all voltages 100 kV and above, FERC Order No. 693 in Paragraph 1825 regarding TPL-003 for Category C disturbances (including "N-1Line-1Line") does not ask for "controlled load interruption" to be eliminated, but rather FERC directed the ERO to modify footnote (c) to Table 1 to clarify the term "controlled load interruption". And please note FAC-010-1, R2.5 – "Planned or controlled interruption…(load shedding)…" for TPL-003 conflicts with "No" for Non-Consequential Load Loss in P5 of Draft TPL.

2) Proposed revision to R3.5 – "Manual and automatic generation runback and generator tripping are allowed as a response to single and multiple contingencies as long as Facility Ratings are not exceeded and the result of the generator action, such as location and ramp-up speed of the AGC unit(s) responding to the generation trip or runback, loss of reactive resource, impact on reserves, and restart time of tripped unit(s), meets the performance requirements."

Planning and Operations need flexibility to coordinate with the requirements of Engineering who established the Facility Ratings. It should not matter which method of generation redispatch is employed if all impacts of tripping vs. running back a generator are properly considered and performance requirements are met. The time period for a particular Emergency Rating might require faster generation redispatch than a runback or set of runbacks are capable of providing. Therefore, it may be necessary to trip one 100 MW unit rather than runback several units for a total of 100 MW.

No need for R3.6 with above revision to R3.5.

NERC
NORTH AMERICAN ELECTRIC RELIABILITY CORPORATION

Comment Form for First Draft of TPL-001-1 — Transmission System Planning Performance Requirements

Please use this form to submit comments on the proposed draft of TPL-001-1. Comments must be submitted by **Friday, October 26, 2007**. You may submit the completed form by e-mail to sarcomm@nerc.net with the words "TPL-001 Draft 1" in the subject line. If you have questions please contact Ed Dobrowolski at ed.dobrowolksi@nerc.net or by telephone at 609-947-3673.

Individual Commenter Information **(Complete this page for comments from one organization or individual.)**		
Name:	Mark Byrd	
Organization:	Progress Energy Carolinas	
Telephone:	919-546-7937	
E-mail:	mark.byrd@pgnmail.com	
NERC Region (check all Regions in which your company operates)		**Registered Ballot Body Segment (check all industry segments in which your company is registered)**
☐ **ERCOT**	☒	1 — Transmission Owners
☐ **FRCC**	☐	2 — RTOs and ISOs
☐ **MRO**	☒	3 — Load-serving Entities
☐ **NPCC**	☐	4 — Transmission-dependent Utilities
☐ **RFC**	☒	5 — Electric Generators
☒ **SERC**	☒	6 — Electricity Brokers, Aggregators, and Marketers
☐ **SPP**	☐	7 — Large Electricity End Users
☐ **WECC**	☐	8 — Small Electricity End Users
☐ **NA – Not Applicable**	☐	9 — Federal, State, Provincial Regulatory or other Government Entities
	☐	10 — Regional Reliability Organizations and Regional Entities

Group Comments (Complete this page if comments are from a group.)

Group Name:

Lead Contact:

Contact Organization:

Contact Segment:

Contact Telephone:

Contact E-mail:

Additional Member Name	Additional Member Organization	Region*	Segment*

*If more than one Region or Segment applies, please list all that apply. Regional acronyms and segment numbers are shown on prior page.

Background

The purpose of this standard is to establish Transmission System planning performance requirements within the planning horizon to develop a Bulk Electric System that will operate reliably over a broad spectrum of System conditions and following a wide range of probable Contingencies. This standard will replace TPL-001-0, TPL-002-0, TPL-003-0, and TPL-004-0. The standard drafting team has not yet addressed TPL-005-0 and TPL-006-0, but will address these two standards during the next phase of the drafting process.

The major objectives of the standard drafting team are to:

1) Ensure the standard is complete and the requirements are set at an appropriate level to ensure reliability (Not Least Common Denominator)
2) Ensure that the standard is enforceable by having clearly defined requirements with unambiguous language
3) Address the issues raised by FERC Order 693, 890, and other applicable orders
4) Address the issues raised in the original Standards Authorization Request (SAR) and the Supplemental SAR.

The standard drafting team did not attempt to edit the existing standards but rather chose to write one standard that addresses all aspects of transmission planning in the existing TPL-001-0, TPL-002-0, TPL-003-0, and TPL-004-0. The standard drafting team organized the new standard in the following sections:

R1 – Modeling requirements
R2 – Assessment and Corrective Plan requirements
R3 – Steady State Analysis requirements
R4 – Stability Analysis requirements
R5 – Coordination requirements

The standard drafting team determined that the requirements and analysis for Steady State are different from those for stability. As such, the standard drafting team separated the analysis requirements and created two performance requirement tables.

The standard drafting team recognizes that this draft standard is a starting point for industry input into the standard and that there is still a lot of work required to complete the process. The standard drafting team has made many changes to clarify requirements, add requirements, and make some of the performance requirements stricter. The standard drafting team has not addressed Measures, Risk Factors, Violation Severity Factors, or Time Horizons at this time. These will be addressed when the standard drafting team has better defined the requirements of the standard.

For questions where you agree with the standard drafting team, please state that you agree and if available, please provide supporting documentation. If you disagree with the standard drafting team, please explain why you disagree and provide data to support your position, such as outage data or analysis. If you believe that we have made a performance requirement too strict please provide supporting documentation. If applicable, please include the approximate cost in man-hours for additional studies and/or cost in $Millions for additional transmission investment to meet the new requirements or the stricter requirements. If you believe that the standard should be stricter, please provide the rationale along with any supporting data, including existing practices, cost estimates or additional analysis.

To improve the standard, the standard drafting team would appreciate responses to as many of these questions as you can answer.

A. New Definitions

Many of the concerns about the existing TPL standards come from the fact that a number of generally understood concepts are embedded in undefined terms, tables, and footnotes. To clarify some of these concerns, the standard drafting team is proposing new definitions. Please indicate whether you agree with the following proposed definitions and provide proposed changes to the definitions if you disagree:

Definition	**Agree or Disagree**
Q1. **Base Case**: Computer representation of the projected initial or starting Transmission System conditions for a specific point in time. Each base case reflects the forecasted Load at each bus (or node) on the interconnected Transmission System, the transmission facilities which deliver the generation and reactive resources to the connected Load, and the generation dispatch including firm transaction obligations assumed to supply the connected Load. The models also reflect facility ratings in accordance with FAC-008 & FAC-009.	☒Agree. ☐Do not agree.
Q1. **Comment:**	
Q2. **Consequential Load Loss:** Load that is no longer served because it is directly connected to an element(s) that is removed from service due to fault clearing action or mis-operation.	☒Agree. ☐Do not agree.
Q2. **Comment:**	
Q3. **Extreme Events:** Events which are more severe than Planning Events and have a low probability of occurrence.	☒Agree. ☐Do not agree.
Q3. **Comment:**	
Q4. **Long-Term Transmission Planning Horizon:** Transmission planning period that covers years six through ten or beyond.	☒Agree. ☐Do not agree.
Q4. **Comment:**	
Q5. **Near-Term Transmission Planning Horizon:** Transmission planning period that covers years One through five.	☒Agree. ☐Do not agree.
Q5. **Comment:**	
Q6. **Non-Consequential Load Loss:** Load loss other than Consequential Load Loss. For example, Load loss that occurs through manual (operator initiated) or automatic operations such as under-voltage Load shedding, under-frequency Load shedding, or Special Protection Systems.	☒Agree. ☐Do not agree.
Q6. **Comment:**	
Q7. **Planning Assessment:** Documented evaluation of future Bulk Electric System needs by the use of performance studies that cover a range of assumptions regarding system conditions, time	☒Agree. ☒Do not

frames, future plans including capital reinforcements and operating procedures and other factors, such as asset conditions and age.	agree.
Q7. **Comment: Planning assessments should not include asset conditions and age.**	
Q8. **Planning Events:** Events which require Transmission system performance requirements to be met.	☒Agree. ☐Do not agree.
Q8. **Comment:**	
Q9. **Plant Stability Study:** Study of an individual plant's Stability for various Contingencies in the vicinity of the plant; concerned with the effect on the System of the generating units' loss of synchronism and the damping of the generating units' power oscillations.	☐Agree. ☒Do not agree.
Q9. **Comment: Don't need to differentiate between plant and system. These are not usually separated. It would be better to separate angular stability and voltage stability. They are studied independently.**	
Q10. **System Stability Study:** Study of the System or portions of the System to ensure that angular Stability is maintained, inter-area power oscillations are damped, and voltages during the dynamic simulation stay within acceptable performance limits.	☐Agree. ☒Do not agree.
Q10. **Comment: Don't need to differentiate between plant and system. These are not usually separated. It would be better to separate angular stability and voltage stability. They are studied independently.**	
Q11. **Year One:** The first year that a Transmission Planner is responsible for studying. This is further defined as the planning window that begins the next calendar year from the time the Transmission Planner submits their annual studies. Analysis conducted for time horizons within the calendar year from the study publication are assumed to be conducted under the auspices of Operations Planning.	☒Agree. ☐Do not agree.
Q11. **Comment:**	

B. Sensitivity Studies

The draft planning standard includes the requirement, as specified in FERC Order 693, that planning decisions be based on a portfolio of analyses. In section 12.a.ii "Sensitivity studies and critical system conditions" FERC provided direction to consider a full range of variables considered to be significant that need to be assessed and documentation provided that explains the rationale for the selection of variables assessed.

In addition to the firm obligation scenario, the portfolio of analyses should be supplemented to include information from sensitivity analysis. The sensitivity analysis should be developed using additional cases that simulate reasonably stressed system conditions. The standard drafting team has included several parameters that can be varied to create the requisite sensitivity case(s). The draft standards specify that the sensitivities reflect one or more of the following conditions and that documentation be provided explaining the rationale for selecting the sensitivity(ies) employed. The parameters that should be varied include:

- Higher or lower Load forecasts from the Base Case with variability of Load/demand and Load power factors due to season, weather, or time of day.
- Modification of expected transfers.
- Unavailability of long lead time facilities.
- Variability and outages of Reactive Resources.
- Generation additions, retirements, or other dispatch scenarios.
- Decreased effectiveness of controllable Loads and Demand Side Management.
- Modification of planned Transmission outages

To help focus industry discussion, please respond to the questions below:

Q12. Should the standard provide more specific direction regarding the number of sensitivity cases that need to be developed?

Yes ☐ No ☒
Comment: This should be system specific.

Q13. Should the standard specify the required changes, such as changes in expected transfers, load forecasts, generation patterns, etc., from the study case to be considered a "reasonably stressed" case?

Yes ☐ No ☒
Comment: This should be system specific.

Q14. The SDT proposes to require the use of sensitivity studies for Near-Term Transmission System Planning Horizon stability analysis. Do you concur with the use of sensitivity analysis in dynamic studies?

Yes ☒ No ☐
Comment:

Q15. The draft TPL standard does not require the use of sensitivity studies for the Long-Term Transmission System Planning Horizon (year six and beyond) studies. Do you concur with this approach or should there be some level of sensitivity analysis required for the long-term period?

Yes ☒ No ☐
Comment: Sensitivities should not be required for Long-Term.

C. Corrective Action Plans

Requirement R2.7 of the standard states that when analysis shows that the performance requirements in Table 1 and Table 2 are not fully met, a Corrective Action Plan that utilizes all or some of the Transmission System enhancements, generation additions, DSM, new technologies and Operating Procedures shall be included in the Planning Assessment. This Corrective Action Plan should ensure that upon its implementation the identified system deficiencies will be corrected so that the performance requirements in Table 1 and Table 2 will be met. Furthermore, studies included in the Planning Assessment should demonstrate that this is indeed the case.

Q16. Requirement R2.7.1: Such Corrective Action Plans shall "Identify System deficiencies and the associated actions needed to achieve required System performance including Transmission and generation improvements, DSM, new technologies, or Operating Procedures including the duration of Interim Operating Procedures". System

deficiencies may be corrected using an integrated plan, i.e., an optimal mix of Transmission, generation, DSM and Operating Procedures. Should DSM be considered in conjunction with other measures in developing Corrective Action Plans? If yes, please comment on how the impact of DSM should be included.

Yes ☒ No ☐
Comment: State regulatory requirements mandate that we consider DSM alternatives. The DSM contracts would have to adequately support the intended use.

Q17. Requirement R2.7.2: Such Corrective Action Plans shall "Be added to study cases and the cases re-tested to show that the System with planned additions meets the performance requirements in the tables". Should new studies, including the facilities comprising the Corrective Action Plan, be performed to assess System normal performance and Contingency response for conditions that previously resulted in the System deficiencies (without the planned additions) and also demonstrate that the changes would not result in inadvertent negative impacts on the System. If you "agree", please comment on how a study area should be determined.

Yes ☒ No ☐
Comment: There are separate regional processes for coordination with neighboring utilities.

Q18. Requirement R2.7.3: The standard calls for a differentiation between committed and proposed projects. Do you agree that they should be treated separately? If not, please state why not.

Yes ☐ No ☒
Comment: Are projects are proposed until they are completed.

Q19. Requirement R2.7.4: For such Corrective Action Plans "Committed projects shall not be removed without documentation to show that the revised plan meets the performance requirements". Do you agree or disagree with this requirement? If you disagree, please explain why.

Yes ☒ No ☐
Comment: We always should be able to show that we meet performance requirements.

D. Performance Requirements

The proposed revised planning standard (TPL-001-1) incorporates a number of changes in requirements as compared to the current planning standards (TPL-001-0 through TPL-004-0), which it is expected to replace. Among other things these changes are intended to clarify the standard, address issues described by FERC, and, in particular, to "raise the bar." Strengthening the planning standards in selected areas is necessary to maintain a reliable Bulk Electric System that is up to the challenges of the 21st Century. In proposing the requirements in this draft, the standard drafting team attempted to balance the value of increased reliability against any potential increase in work and costs to meet the new proposed standard.

The standard drafting team is seeking input from the industry to determine whether a proper balance has been achieved. The areas where material changes are proposed in this draft are enumerated below, and questions are posed by the standard drafting team to obtain industry comment. In formulating your responses, please keep in mind that material changes in the final standard will be accompanied by a transition plan to provide for an orderly implementation of the final standard.

The performance requirements relative to Non-Consequential Loss of Load for the following events enumerated in the two tables can be considered more stringent than the existing TPL standards. Furthermore, the proposed standard is based on an assumption that performance requirements for EHV facilities should be more stringent than for lower voltage facilities.

Do you agree that Non-Consequential Loss of Load should not be permitted for the following events? If you disagree, please provide a reason for your disagreement.

Event	Agree or Disagree	Comment
Q20. P2-1: Loss of bus section (SLG for stability) above 300 kV	☒Agree. ☐Do not agree.	
Q21. P5-1: For facilities above 300 kV, loss of a Transmission circuit followed by System adjustment[1] followed by loss of another Transmission circuit	☒Agree. ☐Do not agree.	It is absolutely necessary, however, to allow interruption of firm transfers as a System adjustment. To do otherwise would cause extremely large expenditures for very low probability independent events.
Q22. P5-2: For facilities above 300 kV, loss of a Transmission circuit followed by System adjustment followed by loss of a transformer with low side voltage rating above 300 kV	☒Agree. ☐Do not agree.	It is absolutely necessary, however, to allow interruption of firm transfers as a System adjustment. To do otherwise would cause extremely large expenditures for very low probability independent events.
Q23. P5-3: For facilities above 300 kV, loss of a transformer with low side voltage rating above 300 kV followed by System adjustment followed by loss of another transformer	☒Agree. ☐Do not agree.	It is absolutely necessary, however, to allow interruption of firm transfers as a System adjustment. To do otherwise would cause extremely large expenditures for very low probability independent events.

[1]System adjustment can be manual or automatic.

The proposed standard is based on an assumption that performance requirements for non-bus tie EHV breakers should be distinguished from other breakers. Do you agree that Non-Consequential Loss of Load should not be permitted for this event?

Q24. Loss of non-bus tie breaker (above 300 kV) due to internal fault

Yes ☒ No ☐
Comment:

The proposed standard is based on an assumption that performance requirements for non-bus tie EHV breakers should be distinguished from other breakers and that performance

requirements for EHV facilities should be more stringent than for lower voltage facilities. Do you agree that Non-Consequential Loss of Load should not be permitted for this event?

Q25. P3-1: Loss of (SLG for stability) either a generator, a Transmission circuit, a transformer, or a bus and a stuck non-bus tie breaker (above 300 kV)

Yes ☐ No ☒
Comment: This is a very low probability multiple contingency and would cost an extreme sum of money to remedy. Need to clarify whether or not the stuck breaker was connected with loss of element.

The proposed standard is based on an assumption that the following events are relatively high probability events and, therefore, Non-Consequential Loss of Load should not be permitted. Do you agree? If you disagree, please provide a reason for your disagreement.

Event	Agree or Disagree	Comment
Q26. P4-1: Loss of a Generator followed by System adjustment[1] followed by loss of another Generator	☒Agree. ☐Do not agree.	
Q27. P4-2: Loss of a generator followed by a System adjustment followed by the loss of a monopolar DC line	☒Agree. ☐Do not agree.	
Q28. P4-3: Loss of a generator followed by System adjustment followed by loss of a Transmission circuit	☒Agree. ☐Do not agree.	
Q29. P4-4: Loss of a generator followed by System adjustment followed by loss of a transformer	☒Agree. ☐Do not agree.	

The performance requirement for the following event may be considered less stringent than the existing TPL Standards — P2-3: Loss of a single pole of a DC line. Interruption of firm transactions (without Loss of firm Load) if the transaction is dependent on the faulted DC line is now allowed for this initiating event/Contingency.

Q30. Do you agree that interruption of any firm transfers that are dependent on the outaged DC line that is taken out of service should be permitted?

Yes ☐ No ☒
Comment: DC and AC lines should be treated comparably.

E. Stability

Q31. The proposed standard is based on an assumption that steady state analysis and stability analysis are different from each other and that therefore, two tables of

[1] System adjustment can be manual or automatic

Contingencies and performance requirements were needed. It is also based on an assumption that stability study requirements should be clearly separated from the steady state study requirements. Do you agree with the action taken in separating stability analysis from steady state analysis? If not, please explain.

Yes ☒ No ☐
Comment:

Q32. The SDT has added requirements for plant stability studies and has drawn a distinction in these studies from System stability studies. Do you agree with this approach? If not, please explain.

Yes ☐ No ☒
Comment: Don't need to differentiate between plant and system. These are not usually separated. It would be better to separate angular stability and voltage stability. They are studied independently

Q33. The existing TPL-004-0 standard has a requirement to consider the Loss of all generating units at a plant, but it was not clear whether this requirement should apply to stability studies. The SDT did not include this requirement in the stability table, because it is hard to envision a condition when all units would trip simultaneously within the timeframe of a stability simulation. Do you think this condition should be required in stability analysis of extreme events? If not, please explain.

Yes ☐ No ☒
Comment:

Q34. There are an increasing number of events with slow voltage recovery after faults on the Transmission System. The dynamic behavior of induction motor loads is a major factor in this phenomenon. The proposed standard therefore requires that the load model for stability studies of peak Load conditions include the dynamic effects of induction motors. Do you agree with this requirement? If not, please explain?

Yes ☒ No ☐
Comment: This needs to be done but we currently don't have sufficient data and tools to properly perform the analysis. More interconnection-wide testing and data collection needs to be performed. We will need to transition into these studies over time.

Q35. What type of manual or automatic adjustments of generators should be allowed for single and multiple Contingencies?

Comment: Both manual and automatic adjustments should be allowed.

F. Generation Runback and Tripping

The SDT has discussed the automatic and manual readjustments of generators that should be permissible for single contingencies and multiple contingencies. The existing TPL-001-0 through TPL-004-0 standards through footnote (a) of Table I could include emergency ratings applicable for short durations as required to permit operating steps necessary to maintain system control. The footnote is silent about allowable generation adjustments in response to the Category B events. However, it does indicate that system adjustments are permitted to prepare for the next Contingency. These system adjustments could include manual or automatic adjustments involving generation.

The SDT has learned that many transmission owners use System Protection Systems (SPS) or Remedial Action Schemes (RAS) to trip generation for single and multiple Contingency outage events to prevent overloads, low voltage, and instability in the Interconnected Transmission network for N-1 and N-2 events. In some cases, the RAS are used to prepare for the next Contingency; but in some cases, the RAS are used to simultaneously avoid exceeding emergency ratings.

Q36. The proposed standard allows generation runback after the disturbance that causes a single Contingency (or due to a single Contingency outage) to move the Interconnected Transmission System from an emergency state (within emergency ratings) to a normal state (within normal ratings), assuming that the disturbance does not result in instability? Do you agree? If not, please explain.

Yes ☒ No ☐
Comment:

Q37. Since emergency ratings are thermal ratings, should this standard allow an automatic generation runback scheme (that is initiated immediately after the disturbance causing the single Contingency) to prevent thermal overloads (assuming that the disturbance does not result in instability)? If yes, what are the conditions that must be met in order to allow such a runback scheme to meet the System performance criteria for single Contingencies? Please explain the reason for your answer.

Yes ☒ No ☐
Comment: If the rating is a 2 hour rating then the adjustment should be complete within 2 hours.

The standard drafting team has considered that RAS or SPS may be allowable under certain situations for single Contingencies, but proposes that their use should be limited.

Q38. Do you agree that RAS or SPS may be allowed for single Contingencies? If not, please explain.

Yes ☒ No ☐
Comment:

Q39. Please describe the limitations that you believe should be placed on the use of RAS or SPS for single Contingency events.

Comment:

Q40. When RAS or SPS are allowed, what conditions should be met when these systems are used in system adjustments to meet performance requirements?

Comment:

G. General Questions

Q41. If you are aware of any regional variances that would be required as a result of these standards, please identify them here.

Yes ☐ No ☒

Comment:

Q42. If you are aware of any conflicts between the proposed standards and any regulatory function, rule order, tariff, rate schedule, legislative requirement or agreement, please identify them here.

Yes ☐ No ☒
Comment:

Q43. Do you have any other questions or concerns with the proposed standard that have not been addressed? If yes, please explain.

Yes ☒ No ☐
Comment:

1. In R4.6 and other locations, the generator exemption of 20 MW should be increased to 75 MVA.

2. Need to define bus-tie breaker. Is center breaker in a breaker and a half scheme a bus-tie breaker?

3. Need to continue to allow interruptions to firm transfers. This is essentially allowing redispatch and is an economically sensible solution to low probability high impact multiple contingencies.

4. Need to clarify if the "stuck breaker" is associated with the first event in multiple event contingencies or does one have to choose a breaker not involved with the first event. Note that a breaker cannot be "stuck" if there is no demand to trip. Therefore, a stuck breaker that is not adjacent to the first event will not have a demand to trip.

5. Need to distinguish what the difference is between a "stuck breaker" and a "[loss of breaker due to] internal fault". The specific meaning could make the difference in the clearing time selected for stability studies (normal clearing time versus delayed clearing time).

6. In the Table 2 (for stability) the last bullet under Planning events says to "simulate normal clearing times unless otherwise specified". Does this mean that "stuck breaker" events should be simulated with normal clearing times? Note that in the real world, internally faulted breakers may clear in either normal or delayed clearing time, depending on the relaying and CT configuration.

NERC
NORTH AMERICAN ELECTRIC RELIABILITY CORPORATION

Comment Form for First Draft of TPL-001-1 — Transmission System Planning Performance Requirements

Please use this form to submit comments on the proposed draft of TPL-001-1. Comments must be submitted by **Friday, October 26, 2007**. You may submit the completed form by e-mail to sarcomm@nerc.net with the words "TPL-001 Draft 1" in the subject line. If you have questions please contact Ed Dobrowolski at ed.dobrowolksi@nerc.net or by telephone at 609-947-3673.

Individual Commenter Information **(Complete this page for comments from one organization or individual.)**		
Name:	Bart White	
Organization:	Progress Energy Florida, Inc. (PEF)	
Telephone:	727-344-4352	
E-mail:	bart.white@pgnmail.com	
NERC Region (check all Regions in which your company operates)		**Registered Ballot Body Segment (check all industry segments in which your company is registered)**
☐ **ERCOT**	☒	1 — Transmission Owners
☒ **FRCC**	☐	2 — RTOs and ISOs
☐ **MRO**	☒	3 — Load-serving Entities
☐ **NPCC**	☐	4 — Transmission-dependent Utilities
☐ **RFC**	☒	5 — Electric Generators
☐ **SERC**	☒	6 — Electricity Brokers, Aggregators, and Marketers
☐ **SPP**	☐	7 — Large Electricity End Users
☐ **WECC**	☐	8 — Small Electricity End Users
☐ **NA – Not Applicable**	☐	9 — Federal, State, Provincial Regulatory or other Government Entities
	☐	10 — Regional Reliability Organizations and Regional Entities

Group Comments (Complete this page if comments are from a group.)

Group Name:

Lead Contact:

Contact Organization:

Contact Segment:

Contact Telephone:

Contact E-mail:

Additional Member Name	Additional Member Organization	Region*	Segment*

*If more than one Region or Segment applies, please list all that apply. Regional acronyms and segment numbers are shown on prior page.

Background

The purpose of this standard is to establish Transmission System planning performance requirements within the planning horizon to develop a Bulk Electric System that will operate reliably over a broad spectrum of System conditions and following a wide range of probable Contingencies. This standard will replace TPL-001-0, TPL-002-0, TPL-003-0, and TPL-004-0. The standard drafting team has not yet addressed TPL-005-0 and TPL-006-0, but will address these two standards during the next phase of the drafting process.

The major objectives of the standard drafting team are to:

1) Ensure the standard is complete and the requirements are set at an appropriate level to ensure reliability (Not Least Common Denominator)
2) Ensure that the standard is enforceable by having clearly defined requirements with unambiguous language
3) Address the issues raised by FERC Order 693, 890, and other applicable orders
4) Address the issues raised in the original Standards Authorization Request (SAR) and the Supplemental SAR.

The standard drafting team did not attempt to edit the existing standards but rather chose to write one standard that addresses all aspects of transmission planning in the existing TPL-001-0, TPL-002-0, TPL-003-0, and TPL-004-0. The standard drafting team organized the new standard in the following sections:

R1 – Modeling requirements
R2 – Assessment and Corrective Plan requirements
R3 – Steady State Analysis requirements
R4 – Stability Analysis requirements
R5 – Coordination requirements

The standard drafting team determined that the requirements and analysis for Steady State are different from those for stability. As such, the standard drafting team separated the analysis requirements and created two performance requirement tables.

The standard drafting team recognizes that this draft standard is a starting point for industry input into the standard and that there is still a lot of work required to complete the process. The standard drafting team has made many changes to clarify requirements, add requirements, and make some of the performance requirements stricter. The standard drafting team has not addressed Measures, Risk Factors, Violation Severity Factors, or Time Horizons at this time. These will be addressed when the standard drafting team has better defined the requirements of the standard.

For questions where you agree with the standard drafting team, please state that you agree and if available, please provide supporting documentation. If you disagree with the standard drafting team, please explain why you disagree and provide data to support your position, such as outage data or analysis. If you believe that we have made a performance requirement too strict please provide supporting documentation. If applicable, please include the approximate cost in man-hours for additional studies and/or cost in $Millions for additional transmission investment to meet the new requirements or the stricter requirements. If you believe that the standard should be stricter, please provide the rationale along with any supporting data, including existing practices, cost estimates or additional analysis.

To improve the standard, the standard drafting team would appreciate responses to as many of these questions as you can answer.

A. New Definitions

Many of the concerns about the existing TPL standards come from the fact that a number of generally understood concepts are embedded in undefined terms, tables, and footnotes. To clarify some of these concerns, the standard drafting team is proposing new definitions. Please indicate whether you agree with the following proposed definitions and provide proposed changes to the definitions if you disagree:

Definition	**Agree or Disagree**
Q1. **Base Case**: Computer representation of the projected initial or starting Transmission System conditions for a specific point in time. Each base case reflects the forecasted Load at each bus (or node) on the interconnected Transmission System, the transmission facilities which deliver the generation and reactive resources to the connected Load, and the generation dispatch including firm transaction obligations assumed to supply the connected Load. The models also reflect facility ratings in accordance with FAC-008 & FAC-009.	☒Agree. ☐Do not agree.
Q1. **Comment:**	
Q2. **Consequential Load Loss:** Load that is no longer served because it is directly connected to an element(s) that is removed from service due to fault clearing action or mis-operation.	☒Agree. ☐Do not agree.
Q2. **Comment:**	
Q3. **Extreme Events:** Events which are more severe than Planning Events and have a low probability of occurrence.	☒Agree. ☐Do not agree.
Q3. **Comment:**	
Q4. **Long-Term Transmission Planning Horizon:** Transmission planning period that covers years six through ten or beyond.	☒Agree. ☐Do not agree.
Q4. **Comment:**	
Q5. **Near-Term Transmission Planning Horizon:** Transmission planning period that covers years One through five.	☒Agree. ☐Do not agree.
Q5. **Comment:**	
Q6. **Non-Consequential Load Loss:** Load loss other than Consequential Load Loss. For example, Load loss that occurs through manual (operator initiated) or automatic operations such as under-voltage Load shedding, under-frequency Load shedding, or Special Protection Systems.	☒Agree. ☐Do not agree.
Q6. **Comment:**	
Q7. **Planning Assessment:** Documented evaluation of future Bulk Electric System needs by the use of performance studies that cover a range of assumptions regarding system conditions, time	☒Agree. ☐Do not

frames, future plans including capital reinforcements and operating procedures and other factors, such as asset conditions and age.	agree.
Q7. **Comment:**	
Q8. **Planning Events:** Events which require Transmission system performance requirements to be met.	☒Agree. ☐Do not agree.
Q8. **Comment:**	
Q9. **Plant Stability Study:** Study of an individual plant's Stability for various Contingencies in the vicinity of the plant; concerned with the effect on the System of the generating units' loss of synchronism and the damping of the generating units' power oscillations.	☒Agree. ☐Do not agree.
Q9. **Comment:**	
Q10. **System Stability Study:** Study of the System or portions of the System to ensure that angular Stability is maintained, inter-area power oscillations are damped, and voltages during the dynamic simulation stay within acceptable performance limits.	☒Agree. ☐Do not agree.
Q10. **Comment:**	
Q11. **Year One:** The first year that a Transmission Planner is responsible for studying. This is further defined as the planning window that begins the next calendar year from the time the Transmission Planner submits their annual studies. Analysis conducted for time horizons within the calendar year from the study publication are assumed to be conducted under the auspices of Operations Planning.	☒Agree. ☐Do not agree.
Q11. **Comment:**	

B. Sensitivity Studies

The draft planning standard includes the requirement, as specified in FERC Order 693, that planning decisions be based on a portfolio of analyses. In section 12.a.ii "Sensitivity studies and critical system conditions" FERC provided direction to consider a full range of variables considered to be significant that need to be assessed and documentation provided that explains the rationale for the selection of variables assessed.

In addition to the firm obligation scenario, the portfolio of analyses should be supplemented to include information from sensitivity analysis. The sensitivity analysis should be developed using additional cases that simulate reasonably stressed system conditions. The standard drafting team has included several parameters that can be varied to create the requisite sensitivity case(s). The draft standards specify that the sensitivities reflect one or more of the following conditions and that documentation be provided explaining the rationale for selecting the sensitivity(ies) employed. The parameters that should be varied include:

- Higher or lower Load forecasts from the Base Case with variability of Load/demand and Load power factors due to season, weather, or time of day.
- Modification of expected transfers.
- Unavailability of long lead time facilities.
- Variability and outages of Reactive Resources.
- Generation additions, retirements, or other dispatch scenarios.

- Decreased effectiveness of controllable Loads and Demand Side Management.
- Modification of planned Transmission outages

To help focus industry discussion, please respond to the questions below:

Q12. Should the standard provide more specific direction regarding the number of sensitivity cases that need to be developed?

Yes ☐ No ☒
Comment:

Q13. Should the standard specify the required changes, such as changes in expected transfers, load forecasts, generation patterns, etc., from the study case to be considered a "reasonably stressed" case?

Yes ☐ No ☒
Comment:

Q14. The SDT proposes to require the use of sensitivity studies for Near-Term Transmission System Planning Horizon stability analysis. Do you concur with the use of sensitivity analysis in dynamic studies?

Yes ☒ No ☐
Comment:

Q15. The draft TPL standard does not require the use of sensitivity studies for the Long-Term Transmission System Planning Horizon (year six and beyond) studies. Do you concur with this approach or should there be some level of sensitivity analysis required for the long-term period?

Yes ☒ No ☐
Comment: PEF concurs with the draft standard's approach with regard to Q15 that sensitivities should not be required for years six through ten.

C. Corrective Action Plans

Requirement R2.7 of the standard states that when analysis shows that the performance requirements in Table 1 and Table 2 are not fully met, a Corrective Action Plan that utilizes all or some of the Transmission System enhancements, generation additions, DSM, new technologies and Operating Procedures shall be included in the Planning Assessment. This Corrective Action Plan should ensure that upon its implementation the identified system deficiencies will be corrected so that the performance requirements in Table 1 and Table 2 will be met. Furthermore, studies included in the Planning Assessment should demonstrate that this is indeed the case.

Q16. Requirement R2.7.1: Such Corrective Action Plans shall "Identify System deficiencies and the associated actions needed to achieve required System performance including Transmission and generation improvements, DSM, new technologies, or Operating Procedures including the duration of Interim Operating Procedures". System deficiencies may be corrected using an integrated plan, i.e., an optimal mix of Transmission, generation, DSM and Operating Procedures. Should DSM be considered in conjunction with other measures in developing Corrective Action Plans? If yes, please comment on how the impact of DSM should be included.

Yes ☒ No ☐

Comment: The use of DSM, whether exclusively or in conjunction with other measures, is an acceptable operating procedure for use in a Corrective Action Plan, as long as the Transmission Owner demonstrates availability and accuracy of DSM data and its viability as an operating procedure for each applicable scenario.

Q17. Requirement R2.7.2: Such Corrective Action Plans shall "Be added to study cases and the cases re-tested to show that the System with planned additions meets the performance requirements in the tables". Should new studies, including the facilities comprising the Corrective Action Plan, be performed to assess System normal performance and Contingency response for conditions that previously resulted in the System deficiencies (without the planned additions) and also demonstrate that the changes would not result in inadvertent negative impacts on the System. If you "agree", please comment on how a study area should be determined.

Yes ☐ No ☒
Comment: Each Corrective Action Plan as stated in the original assessments should be trusted as effective, provided the Transmission Owner can demonstrate with its own internal assessments the effectiveness of each Corrective Action Plan.

Q18. Requirement R2.7.3: The standard calls for a differentiation between committed and proposed projects. Do you agree that they should be treated separately? If not, please state why not.

Yes ☐ No ☒
Comment: This differentiation is meaningless when modeling projects in cases for planning analysis. The standard should instead set criteria for when models can be relied upon for planning purposes such that changes to the future plan will not have an impact on reliability.

Q19. Requirement R2.7.4: For such Corrective Action Plans "Committed projects shall not be removed without documentation to show that the revised plan meets the performance requirements". Do you agree or disagree with this requirement? If you disagree, please explain why.

Yes ☒ No ☐
Comment:

D. Performance Requirements

The proposed revised planning standard (TPL-001-1) incorporates a number of changes in requirements as compared to the current planning standards (TPL-001-0 through TPL-004-0), which it is expected to replace. Among other things these changes are intended to clarify the standard, address issues described by FERC, and, in particular, to "raise the bar." Strengthening the planning standards in selected areas is necessary to maintain a reliable Bulk Electric System that is up to the challenges of the 21st Century. In proposing the requirements in this draft, the standard drafting team attempted to balance the value of increased reliability against any potential increase in work and costs to meet the new proposed standard.

The standard drafting team is seeking input from the industry to determine whether a proper balance has been achieved. The areas where material changes are proposed in this draft are enumerated below, and questions are posed by the standard drafting team to obtain industry comment. In formulating your responses, please keep in mind that material changes in the final standard will be accompanied by a transition plan to provide for an orderly implementation of the final standard.

The performance requirements relative to Non-Consequential Loss of Load for the following events enumerated in the two tables can be considered more stringent than the existing TPL standards. Furthermore, the proposed standard is based on an assumption that performance requirements for EHV facilities should be more stringent than for lower voltage facilities.

Do you agree that Non-Consequential Loss of Load should not be permitted for the following events? If you disagree, please provide a reason for your disagreement.

Event	Agree or Disagree	Comment
Q20. P2-1: Loss of bus section (SLG for stability) above 300 kV	☐Agree. ☒Do not agree.	This single contingency event has a very low probability of occurrence, and thus a more stringent performance requirement than currently exists is not warranted.
Q21. P5-1: For facilities above 300 kV, loss of a Transmission circuit followed by System adjustment[1] followed by loss of another Transmission circuit	☐Agree. ☒Do not agree.	The severity of this event is such that Non-Consequential Loss of Load might be a necessary operating procedure in a Corrective Action Plan as part of System restoration. Furthermore, the greater-than-300 kV Bulk Electric System has been designed such that Multiple Contingency events (N-2) may result in Planned/Controlled Loss of Demand or Curtailed Firm Transfers. Such Non-Consequential Load Loss should be assessed for severity on a risk vs. consequence basis, placing particular importance on confining the event to a single area (i.e., not resulting in a cascading outage). Past assessments as well as actual events have demonstrated that by not allowing loss of non-consequential load, the Bulk Electric System may actually remain in a less secure state or condition, i.e. in more danger of experiencing cascading outages.
Q22. P5-2: For facilities above 300 kV, loss of a Transmission circuit followed by System adjustment followed by loss of a transformer with low side voltage rating above 300 kV	☐Agree. ☒Do not agree.	The severity of this event is such that Non-Consequential Loss of Load might be a necessary operating procedure in a Corrective Action Plan as part of System restoration. Furthermore, the greater-than-300 kV Bulk Electric System has been designed such that Multiple Contingency events (N-2) may result in Planned/Controlled Loss of Demand or Curtailed Firm Transfers. Such Non-Consequential Load Loss should be assessed for severity on a risk vs. consequence basis, placing particular

		importance on confining the event to a single area (i.e., not resulting in a cascading outage). Past assessments as well as actual events have demonstrated that by not allowing loss of non-consequential load, the Bulk Electric System may actually remain in a less secure state or condition, i.e. in more danger of experiencing cascading outages.
Q23. P5-3: For facilities above 300 kV, loss of a transformer with low side voltage rating above 300 kV followed by System adjustment followed by loss of another transformer	☐Agree. ☒Do not agree.	The severity of this event is such that Non-Consequential Loss of Load might be a necessary operating procedure in a Corrective Action Plan as part of System restoration. Furthermore, the greater-than-300 kV Bulk Electric System has been designed such that Multiple Contingency events (N-2) may result in Planned/Controlled Loss of Demand or Curtailed Firm Transfers. Such Non-Consequential Load Loss should be assessed for severity on a risk vs. consequence basis, placing particular importance on confining the event to a single area (i.e., not resulting in a cascading outage). Past assessments as well as actual events have demonstrated that by not allowing loss of non-consequential load, the Bulk Electric System may actually remain in a less secure state or condition, i.e. in more danger of experiencing cascading outages.

[1]System adjustment can be manual or automatic.

The proposed standard is based on an assumption that performance requirements for non-bus tie EHV breakers should be distinguished from other breakers. Do you agree that Non-Consequential Loss of Load should not be permitted for this event?

Q24. Loss of non-bus tie breaker (above 300 kV) due to internal fault

Yes ☐ No ☒
Comment: This single contingency event has a very low probability of occurrence, and thus a more stringent performance requirement than currently exists is not warranted.

The proposed standard is based on an assumption that performance requirements for non-bus tie EHV breakers should be distinguished from other breakers and that performance requirements for EHV facilities should be more stringent than for lower voltage facilities. Do you agree that Non-Consequential Loss of Load should not be permitted for this event?

Q25. P3-1: Loss of (SLG for stability) either a generator, a Transmission circuit, a transformer, or a bus and a stuck non-bus tie breaker (above 300 kV)

Yes ☐ No ☒

Comment: The severity of this event is such that Non-Consequential Loss of Load might be a necessary operating procedure in a Corrective Action Plan as part of System restoration. Furthermore, the greater-than-300 kV Bulk Electric System has been designed such that Multiple Contingency events (N-2) may result in Planned/Controlled Loss of Demand or Curtailed Firm Transfers. Such Non-Consequential Load Loss should be assessed for severity on a risk vs. consequence basis, placing particular importance on confining the event to a single area (i.e., not resulting in a cascading outage). Past assessments as well as actual events have demonstrated that by not allowing loss of non-consequential load, the Bulk Electric System may actually remain in a less secure state or condition, i.e. in more danger of experiencing cascading outages. In addition, it should be noted that the technical specifications of this category contain a major oversight. This new Category P3-1 is essentially a replacement for the existing Categories C5-9, except that the only protection element failure being considered is the failure of a circuit breaker to open. This definition eliminates the need to examine failure of the relay to operate, which in many cases has a more serious impact on grid reliability.

The proposed standard is based on an assumption that the following events are relatively high probability events and, therefore, Non-Consequential Loss of Load should not be permitted. Do you agree? If you disagree, please provide a reason for your disagreement.

Event	Agree or Disagree	Comment
Q26. P4-1: Loss of a Generator followed by System adjustment[1] followed by loss of another Generator	☐Agree. ☒Do not agree.	The severity of this event is such that Non-Consequential Loss of Load might be a necessary operating procedure in a Corrective Action Plan as part of System restoration. Specifically, the sudden loss of a large generator followed soon thereafter by the loss of a second generator would often result in such a large generation-to-load mismatch that Non-Consequential Loss of Load would be inevitable. It is clear, however, that the Bulk Electric System should be planned such that any generator can be maintained (offline) and the system can be operated to the contingency of another generator. This is accomplished in the Security Constrained unit commitment process. However, if the intent of this requirement is that the system should be planned such that there can be no Non-Consequential Load Loss for the loss of a second generator (after System adjustment), then the requirement is too stringent in that the planner would essentially have to plan for 3 generator contingencies. Finally, the probability of an event should not

[1] System adjustment can be manual or automatic

		be the primary factor determining whether or not Non-Consequential Loss of Load is permitted, but rather the presence or absence of cascading for the event.
Q27. P4-2: Loss of a generator followed by a System adjustment followed by the loss of a monopolar DC line	☐Agree. ☒Do not agree.	The severity of this event is such that Non-Consequential Loss of Load might be a necessary operating procedure in a Corrective Action Plan as part of System restoration, provided that the Non-Consequential Loss of Load is confined to a single control area (i.e., not resulting in a cascading outage). Furthermore, the frequency of an event should not be the primary factor determining whether or not Non-Consequential Loss of Load is permitted, but rather the presence or absence of cascading for the event. Existing Category C requirements are adequate for this type of event.
Q28. P4-3: Loss of a generator followed by System adjustment followed by loss of a Transmission circuit	☐Agree. ☒Do not agree.	The severity of this event is such that Non-Consequential Loss of Load might be a necessary operating procedure in a Corrective Action Plan as part of System restoration, provided that the Non-Consequential Loss of Load is confined to a single control area (i.e., not resulting in a cascading outage). Furthermore, the frequency of an event should not be the primary factor determining whether or not Non-Consequential Loss of Load is permitted, but rather the presence or absence of cascading for the event. Existing Category C requirements are adequate for this type of event.
Q29. P4-4: Loss of a generator followed by System adjustment followed by loss of a transformer with low side voltage rating above 300 kV	☐Agree. ☒Do not agree.	The severity of this event is such that Non-Consequential Loss of Load might be a necessary operating procedure in a Corrective Action Plan as part of System restoration, provided that the Non-Consequential Loss of Load is confined to a single control area (i.e., not resulting in a cascading outage). Furthermore, the frequency of an event should not be the primary factor determining whether or not Non-Consequential Loss of Load is permitted, but rather the presence or absence of cascading for the event. Existing Category C requirements are

		adequate for this type of event.

The performance requirement for the following event may be considered less stringent than the existing TPL Standards — P2-3: Loss of a single pole of a DC line. Interruption of firm transactions (without Loss of firm Load) if the transaction is dependent on the faulted DC line is now allowed for this initiating event/Contingency.

Q30. Do you agree that interruption of any firm transfers that are dependent on the outaged DC line that is taken out of service should be permitted?

Yes ☐ No ☒

Comment: The proposed standard does not distinguish between asynchronous DC ties and the more common parallel connected DC tie. With an asynchronous DC tie, the transfer is lost with the tie. With a parallel DC tie, the transfer will be shifted to the parallel AC system and should have the same performance requirements.

E. Stability

Q31. The proposed standard is based on an assumption that steady state analysis and stability analysis are different from each other and that therefore, two tables of Contingencies and performance requirements were needed. It is also based on an assumption that stability study requirements should be clearly separated from the steady state study requirements. Do you agree with the action taken in separating stability analysis from steady state analysis? If not, please explain.

Yes ☐ No ☒

Comment: The separation of steady state and dynamic response analysis requirements into two tables (with different contingencies) is unnecessary, and is inferior to the analysis requirements outlined in Table 1 of the existing TPL Standard. The structure of the existing Table 1 reinforces the requirement for grid stability and maintaining the grid within applicable limits for Category B and C contingencies. Dynamic simulations of Category B and C contingencies that demonstrate grid stability should be followed up with post transient power flow analysis to assess voltage and thermal limits.

Q32. The SDT has added requirements for plant stability studies and has drawn a distinction in these studies from System stability studies. Do you agree with this approach? If not, please explain.

Yes ☐ No ☒

Comment: There should be no such distinction. All stability studies must meet the Performance Requirements for "Planning Events in Table 2 - Stability Performance". If there were different Performance Requirements then the distinction may be warranted. If the format for "Planning Events in Table 2 - Stability Performance" remains in its existing state, however, system stability studies are sufficient and performing studies under the guise of Plant Stability would constitute additional work with no incremental benefit.

Q33. The existing TPL-004-0 standard has a requirement to consider the Loss of all generating units at a plant, but it was not clear whether this requirement should apply to stability studies. The SDT did not include this requirement in the stability table, because it is hard to envision a condition when all units would trip simultaneously within the timeframe of a stability simulation. Do you think this condition should be required in stability analysis of extreme events? If not, please explain.

Yes ☐ No ☒

Comment: Analysis of this condition should not be required in stability analysis of extreme events due to the fact that no stability simulation (e.g., SLG or 3-phase faults) can be conceived for the Bulk Electric System that would result in simulataneous tripping of all units at a plant.

Q34. There are an increasing number of events with slow voltage recovery after faults on the Transmission System. The dynamic behavior of induction motor loads is a major factor in this phenomenon. The proposed standard therefore requires that the load model for stability studies of peak Load conditions include the dynamic effects of induction motors. Do you agree with this requirement? If not, please explain?

Yes ☐ No ☒

Comment: Requiring detailed modeling of every induction motor on the Bulk Electric System for stability analysis is onerous. Specifically, obtaining a complete set of data for existing induction motors would be infeasible, as would tracking future installations of induction motors. The benefits of such an effort are significantly outweighed by the logistical difficulties. To address the technical merits, the modeling of the delayed voltage recovery response that has been observed in some large urban areas during periods of high air conditioning usage is considerably more complex than can be addressed by simply representing induction motor effects. The scope of the delayed voltage recovery issue is extremely limited and its effect on the grid is generally self correcting due to automatic disconnection of the affected air conditioners. Requirements for specific types of load models are not appropriate in the TPL standard.

Q35. What type of manual or automatic adjustments of generators should be allowed for single and multiple Contingencies?

Comment: Provided events are confined to a single area (i.e., no cascading outages), manual and automatic adjustment (increase or decrease) of Var output and manual and automatic tripping or reduction of overall output of generators should be allowed.

F. Generation Runback and Tripping

The SDT has discussed the automatic and manual readjustments of generators that should be permissible for single contingencies and multiple contingencies. The existing TPL-001-0 through TPL-004-0 standards through footnote (a) of Table I could include emergency ratings applicable for short durations as required to permit operating steps necessary to maintain system control. The footnote is silent about allowable generation adjustments in response to the Category B events. However, it does indicate that system adjustments are permitted to prepare for the next Contingency. These system adjustments could include manual or automatic adjustments involving generation.

The SDT has learned that many transmission owners use System Protection Systems (SPS) or Remedial Action Schemes (RAS) to trip generation for single and multiple Contingency outage events to prevent overloads, low voltage, and instability in the Interconnected Transmission network for N-1 and N-2 events. In some cases, the RAS are used to prepare for the next Contingency; but in some cases, the RAS are used to simultaneously avoid exceeding emergency ratings.

Q36. The proposed standard allows generation runback after the disturbance that causes a single Contingency (or due to a single Contingency outage) to move the Interconnected Transmission System from an emergency state (within emergency ratings) to a normal state (within normal ratings), assuming that the disturbance does not result in instability? Do you agree? If not, please explain.

Yes ☒ No ☐
Comment:

Q37. Since emergency ratings are thermal ratings, should this standard allow an automatic generation runback scheme (that is initiated immediately after the disturbance causing the single Contingency) to prevent thermal overloads (assuming that the disturbance does not result in instability)? If yes, what are the conditions that must be met in order to allow such a runback scheme to meet the System performance criteria for single Contingencies? Please explain the reason for your answer.

Yes ☒ No ☐
Comment: Provided events are confined to a single area (i.e., no cascading outages), automatic runback of generators should be allowed.

The standard drafting team has considered that RAS or SPS may be allowable under certain situations for single Contingencies, but proposes that their use should be limited.

Q38. Do you agree that RAS or SPS may be allowed for single Contingencies? If not, please explain.

Yes ☒ No ☐
Comment: This requirement is addressed in PRC-005 and these requirements should not be addressed again in this Standard. However, the use of RAS or SPS should be allowed as necessary for any single contingency event, provided that such use does not result in cascading outages. It should be noted that the performance requirements for SPS are appropriately stated in standards PRC-012-0 and PRC-015-0. Revision of the existing TPL standards will require updating of the contingency references in PRC-012-0.

Q39. Please describe the limitations that you believe should be placed on the use of RAS or SPS for single Contingency events.

Comment: The use of RAS or SPS should be allowed as necessary for any single contingency event, provided that such use does not result in cascading outages. It should be noted that the performance requirements for SPS are appropriately stated in standards PRC-012-0 and PRC-015-0. Revision of the existing TPL standards will require updating of the contingency references in PRC-012-0.

Q40. When RAS or SPS are allowed, what conditions should be met when these systems are used in system adjustments to meet performance requirements?

Comment: The use of RAS or SPS should be allowed as necessary for any single contingency event, provided that such use does not result in cascading outages. It should be noted that the performance requirements for SPS are appropriately stated in standards PRC-012-0 and PRC-015-0. Revision of the existing TPL standards will require updating of the contingency references in PRC-012-0.

G. General Questions

Q41. If you are aware of any regional variances that would be required as a result of these standards, please identify them here.

Yes ☐ No ☒
Comment: No, but PEF reserves the right to apply for variances based on the completed version of this or any other standard.

Q42. If you are aware of any conflicts between the proposed standards and any regulatory function, rule order, tariff, rate schedule, legislative requirement or agreement, please identify them here.

Yes ☐ No ☒
Comment:

Q43. Do you have any other questions or concerns with the proposed standard that have not been addressed? If yes, please explain.

Yes ☒ No ☐
Comment: General Comments

NERC Standards TPL 001-0 through TPL 004-0 are approved standards that only required modifications pursuant to FERC Order 693. In this proposed draft standard TPL 001-1, the Standard Drafting Team (SDT) has far exceeded the recommendations suggested by FERC in the Order and has created unnecessary confusion. We disagree with the SDT's decision to combine NERC Standards TPL 001-0 through TPL 004-0 into one standard. Some changes to the existing TPL Standards may be warranted. One particular improvement would be clarifying the tables such that the table for TPL-001, for example, would only contain the performance criteria for Category A, with footnotes only applicable to that category, clarified as directed by FERC in Order 693. Similarly, TPL-002 would only contain performance criteria for Category B, and so on.

In addition to combining the standards, the SDT has significantly changed contingency specifications and required performance levels. In many cases the changes represent a very significant increase in required performance standards that will result in the following:

a) major capital expenditures, some of which will be of a magnitude unprecedented for the Bulk Electric System. Many of these projects would be constructed to mitigate one single low-probability event. The ratepayers, upon discovery of this necessity and realization that these significant expenditures will be passed on to them in their rates, will certainly object to these efforts and will question the wisdom of NERC's mandating change on such a massive scale without the knowledge or input of the public. The SDT stated in its continent-wide conference call on October 10, 2007 that the intent of many of the objectives contained in the proposed TPL-001-1 was to "raise the bar" for electric utilities. We would like to know specifically what this means. The phrase "raise the bar" is vague and overused in North American vernacular in general, and it is particularly irresponsible to use such vagaries when proposing standards which will result in unaffordable upgrades to the North American Bulk Electric System.

b) reductions in ATC. To be compliant with the more stringent requirements of TPL-001-1, Transmission Operators would in many cases be forced to reduce ATC in order to decrease transmission flows to a point at which corrective actions may be taken without the result of cascading. This is diametrically in opposition to one of the key objectives of deregulation and comparable treatment for all entities engaged in transactions on the Bulk Electric System.

c) Reduced Reliability. The elimination of footnote (b) will result in many outage scenarios for which loss of Non Consequential Load is presently unavoidable, but subsequently prohibited. For some scenarios, Transmission Owners may seek to avoid the excessive cost of a project by simply removing breakers from substations, thereby

increasing the range of the initial breaker-to-breaker operation and essentially converting the disallowed Non Consequential Load to Consequential Load. This is obviously an undesirable option and in opposition to fundamental principles of reliability, but might be rendered necessary due to the increased requirements of TPL-001-1.

d) Inability to react to issues of non-compliance. The dynamic nature of planning analysis is such that, from one annual planning cycle to the next, the constantly changing load and generation forecasts invariably result in emerging transmission projects unforeseen in previous cycles. With the increased stringency of TPL-001-1, reacting to these emerging needs in time to demonstrate compliance will be impossible, and thus non-compliance is seen as an inevitability. To further clarify, the major transmission projects that TPL-001-1 would necessitate would be of a magnitude such that extensive engineering, land acquisition and involvement with regulatory and governmental agencies would be required, which could result in project lead times of 10 years or more. Not only would a lengthy transition period be needed for TPL-001-1, but upon the Standard's effective date the ability to implement all future projects would need to be given special consideration in light of these challenges.

In other cases, the performance criteria are not clearly defined, such as the timing between multiple contingencies, and the level of readiness of the system before and after Planning Events.

Finally, the SDT has chosen to eliminate the footnotes in the current standards, contrary to the direction of FERC in Order 693 to "clarify" the footnotes. The purpose of the footnotes is to further explain terms in the tables, provide guidance in interpreting the expected performance criteria, and specify any exceptions to the criteria. Footnotes also serve the purpose of keeping the standard concise by eliminating repetitiveness.

Specific comments on the Draft Standard

Performance Criteria
The performance requirements table should clearly define what the initial state of the system is assumed to be before any Planning Events, and what the state of the system is assumed to be after the Planning Event. For example, P1 (single contingency) events: assuming that the system is to be compliant, the state of the system prior to the event must be "secure" such that the event could occur and there is no interruption of firm transfer or loss of load, Equipment Ratings are not exceeded, System steady state voltages and post-transient voltage deviation are within acceptable limits. However, the system is not as it was before the event. The system could be described as "normal" but perhaps not "secure". If the requirement is that the system must also be "secure" after the event, then the standard must clarify what is allowed for "system adjustments" after the first Planning event to prepare for the next. FERC Order 693 directed the ERO to modify the second sentence of footnote (b) to clarify that manual system adjustments other than shedding of firm load or curtailment of firm transfers are permitted to return the system to a normal operating state after the first contingency. However, in order to bring the system to a secure state, as is necessary for the second contingency of a category C3 or C5 event, footnote (c) allows curtailment of firm transfers, and FERC Order 693 only required footnote (c) to be clarify the term "controlled load interruption", leaving the curtailment language intact. The implication of this interpretation is critical to peninsular Florida. The Category B loss of one 500 kV line from Florida to Georgia is sustainable, such that the system is "normal" after the event. However, in order to be

prepared for the next contingency, (the loss of the second 500 kV line), firm transfers must be curtailed (Interruption of Firm Transfer). Without the ability to curtail firm transfers, a "super-firm" priority of transmission service is created for non-native load customers, and thus comparable treatment no longer exists.

Comments on New Performance Tables:
The draft TPL standard represents a major change in the Table 1 contingency definitions and required performance levels.

Table 1 Contingencies C1 and C2 are being moved to the single contingency category. While C1 and C2 represent single element outages, their probability of occurrence is much lower than the other Category B contingencies and they do not belong in the single contingency performance requirements group.

Footnote (b) which permits, as a limited exception in unique circumstances with a sound rational basis, some localized load reduction for single contingencies, has been removed. This is a very significant change for some utilities. Footnote (c) which permits load shedding and curtailment of firm transfers has been removed from C1, C2 and most of C3. This is a very significant increase in required performance level that is not justified.

The "applicable rating" for loading and voltages in Table 1 has been removed so that essentially, the same ratings and voltage restrictions apply to both B and C contingencies. Some utilities plan to a normal rating for single contingencies but will allow a higher short term rating for Category C events. This practice appears to be either disallowed or inadequately described in TPL-001-1. Transmission Owners should allowed to base ratings on manufacturer specifications or other reasonable criteria using sound engineering judgment.

Several new Category D "extreme events" have been added which greatly expand the scope and complexity of Category D studies. These are (1) any two unrelated single element outages and (2) wide area events a. through h. These represent a major increase in the scope of Category D studies and probably a doubling of required SWG studies.
It should be note that the existing Categories D1 through D4 have been substantially changed to eliminate analysis of relay failure contingencies. The philosophy contained in the existing TPL-004 standard is that faults with a protection failure should be evaluated whether that failure is a circuit breaker, relay or CT; the proposed standard restricts the analysis to breaker failure.

300 kV Threshold Performance Level
The TPL-001-1 draft sets a threshold of higher performance to facilities above 300 kV than previously established in the existing standard. We do not agree that such a threshold is necessary or warranted. Requirements which are more stringent for these facilities may wrongly influence decisions on project alternatives in favor of facilities with less stringent requirements. Additionally, facilities above 300 kV naturally tend to transport larger amounts of power. The loss of single or multiple facilities above 300 kV generally results in an immediate generation-to-load mismatch too great to avoid either curtailment of firm transactions or loss of Non Consequential Load, or both. Singling out facilities above 300 kV for more stringent requirements is therefore clearly unreasonable.

DC Line Performance Requirement

The TPL-001-1 draft sets a lower performance requirement for the loss of a single pole of a DC line than in the existing standard by allowing interruption of firm transfer if the transfer is deemed to be dependent on the outaged line. Firm transfers are also dependent upon AC lines. The proposed standard does not distinguish between asynchronous DC ties and the more common parallel connected DC tie. With an asynchronous DC tie, the transfer is lost with the tie. With a parallel DC tie, the transfer will be shifted to the parallel AC system and should have the same performance requirements. We do not agree that such an exception for DC lines is necessary or warranted. The decision in selecting DC vs. AC in transmission lines has traditionally been based on the break-even cost and performance of the two alternatives. The lower performance requirement may wrongly influence decisions on project alternatives in favor of DC facilities with less stringent requirements.

Distinction Between Committed and Proposed Projects:
Models cannot discern the difference between a "committed" project, and a "proposed" project in a performance analysis. The standard should instead set criteria for when models can be relied upon for planning purposes such that changes to the future plan will not have an impact on reliability. The intent of Requirements R2.7.3 and R2.7.4 should be combined and added into R2.7.1.1. Rather than adding the additional requirement to document a criteria, the requirement should be that in the Near-Term Planning Horizon, projects cannot be removed (or modified) without demonstrating that the revised plan meets performance criteria. In addition, the requirement in R2.7.1.1 to supply a "project initiation date" is ambiguous. What will constitute "project initiation" …construction start date? …Engineering complete date? …Land procurement date? Funds allocated date (budgeted)? Suggested wording for R2.7.1.1. "Transmission and generation improvement projects for the Near-Term Transmission Planning Horizon, shall have in-service dates provided, and shall not have in-service dates changed, or be removed from planning models, without documentation to show that the revised plan meets performance requirements."

Load Modeling Requirements:
The proposed TPL Standard contains numerous references to load modeling. The goal of improving and verifying the load model is worthwhile but is not appropriate for the TPL standards. Assessment of load model accuracy is best accomplished through detailed analysis of grid disturbance events. The main difficulties in accomplishing this are (1) grid events that significant reduce transmission voltages throughout a load area are infrequently occurring and (2) the process of recreating the event through simulation studies is extremely complex and time consuming. While these efforts should be encouraged they should remain a RRO prerogative. A few concerns not previously addressed by comments to Questions 1-42 include the following:

R1.1.1 Use of expected Load mix - based on the actual or expected aggregate mix of industrial, commercial, and residential Loads. – This requirement is not justified as the load model may be developed through disturbance analysis rather than load type synthesis by customer class. Some Load Serving Entities may have great difficulty in creating load forecasts based on customer class. Load forecasting requirements are adequately addressed in the existing MOD standards and do not belong in the proposed TPL standard.

R1.2. Load models with supporting rationale - that include power factor data that may be based on historical System performance, validated by measurement during stressed

System conditions, or documented Transmission planning area requirements. This requirement is not appropriate for the TPL standards.

R.3.3.2.1. Consequential Load loss (expected maximum demand and expected duration) following a single Contingency shall be identified in the Planning Assessment. – this Requirement in its present wording could be construed to mean that the precise amount of load between breakers should be specified and reevaluated with every assessment. This would unnecessary and burdensome, and we therefore seek clarification of this Requirement or its removal altogether.

Requirements for studies using Sensitivity cases: R2.4.3 appears to place equal importance on base cases and sensitivity cases with regard to the need to implement projects or Corrective Action Plans. Terms in TPL-001-1 using forms of the word "sensitivity" need to be clearly defined by the SDT. Additionally, the SDT needs to clarify its intent regarding required action based on results from sensitivity studies. We do not agree that results from sensitivity studies should be given equal standing with results from base scenarios, and we would particularly object to any insinuation that projects would need to be implemented to mitigate violations seen in a sensitivity involving speculative non-firm transfers.

Short Circuit Requirements: The new TPL standard also contains numerous references to short circuit analysis, which are new requirements that expand the TPL standards, but without specific testing or performance criteria. Evidence that short circuit studies have been performed is currently required in the existing FAC-002-0 Standard. Since the primary concern is the appropriate sizing of equipment and the prevention of equipment damage as opposed to overall grid reliability, we do not see the need for a set of requirements within the proposed TPL standard for short circuit studies.

FRCC Specifics: One final specific issue concerns the topography and performance history of the Bulk Electric System in our particular region (FRCC). The FRCC system is a peninsular system having only one interface with the rest of the interconnected NERC system, and has historically demonstrated exceptionally high reliability with no events in recent history cascading beyond the FRCC system. While other areas of the NERC system may require some increased stringency in the TPL standards, PE feels that the adequacy of the existing TPL standards as they apply to the FRCC System has been extensively documented.

Conclusion

In conclusion, we believe that TPL-001-1 is unnecessary and burdensome. In particular, the elimination of footnote (b) will deny Transmission Owners and Transmission Operators the right to curtail Non Consequential Load in order to restore the Bulk Electric System. This elimination has absolutely nothing to do with the reliability of the Bulk Electric System; rather, it places the reduction of Customer Minutes of Interruption (CMI) ahead of reliability. Essentially, the emphasis of TPL-001-1 is inappropriately placed on the reliability of distribution feeders rather than the reliability of the Bulk Electric System. The fundamental objective of the existing TPL Standards has been to protect the reliability of the Bulk Electric System, and we believe all future TPL Standards should do the same.

Given the aforementioned issues, we believe the proposed TPL standard is inferior to the existing Board approved TPL Standards, creates unnecessary confusion, and will require many iterations of industry comment and revision. As an intermediate approach, we would strongly urge the Standard Drafting Team that the existing TPL standards be modified to respond to FERC Order 693 directives, clarify any ambiguities, and that the proposed new standard not be pursued any further.

NERC
NORTH AMERICAN ELECTRIC RELIABILITY CORPORATION

Comment Form for First Draft of TPL-001-1 — Transmission System Planning Performance Requirements

Please use this form to submit comments on the proposed draft of TPL-001-1. Comments must be submitted by **Friday, October 26, 2007**. You may submit the completed form by e-mail to sarcomm@nerc.net with the words "TPL-001 Draft 1" in the subject line. If you have questions please contact Ed Dobrowolski at ed.dobrowolksi@nerc.net or by telephone at 609-947-3673.

Individual Commenter Information **(Complete this page for comments from one organization or individual.)**		
Name:	Jeffrey Mitchell	
Organization:	ReliabilityFirst Corp.	
Telephone:	(330) 247-3043	
E-mail:	jeff.mitchell@rfirst.org	
NERC Region (check all Regions in which your company operates)		**Registered Ballot Body Segment (check all industry segments in which your company is registered)**
☐ **ERCOT**	☐	1 — Transmission Owners
☐ **FRCC**	☐	2 — RTOs and ISOs
☐ **MRO**	☐	3 — Load-serving Entities
☐ **NPCC**	☐	4 — Transmission-dependent Utilities
☒ **RFC**	☐	5 — Electric Generators
☐ **SERC**	☐	6 — Electricity Brokers, Aggregators, and Marketers
☐ **SPP**	☐	7 — Large Electricity End Users
☐ **WECC**	☐	8 — Small Electricity End Users
☐ **NA – Not Applicable**	☐	9 — Federal, State, Provincial Regulatory or other Government Entities
	☒	10 — Regional Reliability Organizations and Regional Entities

Group Comments (Complete this page if comments are from a group.)

Group Name:

Lead Contact:

Contact Organization:

Contact Segment:

Contact Telephone:

Contact E-mail:

Additional Member Name	Additional Member Organization	Region*	Segment*

*If more than one Region or Segment applies, please list all that apply. Regional acronyms and segment numbers are shown on prior page.

Background

The purpose of this standard is to establish Transmission System planning performance requirements within the planning horizon to develop a Bulk Electric System that will operate reliably over a broad spectrum of System conditions and following a wide range of probable Contingencies. This standard will replace TPL-001-0, TPL-002-0, TPL-003-0, and TPL-004-0. The standard drafting team has not yet addressed TPL-005-0 and TPL-006-0, but will address these two standards during the next phase of the drafting process.

The major objectives of the standard drafting team are to:

1) Ensure the standard is complete and the requirements are set at an appropriate level to ensure reliability (Not Least Common Denominator)
2) Ensure that the standard is enforceable by having clearly defined requirements with unambiguous language
3) Address the issues raised by FERC Order 693, 890, and other applicable orders
4) Address the issues raised in the original Standards Authorization Request (SAR) and the Supplemental SAR.

The standard drafting team did not attempt to edit the existing standards but rather chose to write one standard that addresses all aspects of transmission planning in the existing TPL-001-0, TPL-002-0, TPL-003-0, and TPL-004-0. The standard drafting team organized the new standard in the following sections:

R1 – Modeling requirements
R2 – Assessment and Corrective Plan requirements
R3 – Steady State Analysis requirements
R4 – Stability Analysis requirements
R5 – Coordination requirements

The standard drafting team determined that the requirements and analysis for Steady State are different from those for stability. As such, the standard drafting team separated the analysis requirements and created two performance requirement tables.

The standard drafting team recognizes that this draft standard is a starting point for industry input into the standard and that there is still a lot of work required to complete the process. The standard drafting team has made many changes to clarify requirements, add requirements, and make some of the performance requirements stricter. The standard drafting team has not addressed Measures, Risk Factors, Violation Severity Factors, or Time Horizons at this time. These will be addressed when the standard drafting team has better defined the requirements of the standard.

For questions where you agree with the standard drafting team, please state that you agree and if available, please provide supporting documentation. If you disagree with the standard drafting team, please explain why you disagree and provide data to support your position, such as outage data or analysis. If you believe that we have made a performance requirement too strict please provide supporting documentation. If applicable, please include the approximate cost in man-hours for additional studies and/or cost in $Millions for additional transmission investment to meet the new requirements or the stricter requirements. If you believe that the standard should be stricter, please provide the rationale along with any supporting data, including existing practices, cost estimates or additional analysis.

To improve the standard, the standard drafting team would appreciate responses to as many of these questions as you can answer.

A. New Definitions

Many of the concerns about the existing TPL standards come from the fact that a number of generally understood concepts are embedded in undefined terms, tables, and footnotes. To clarify some of these concerns, the standard drafting team is proposing new definitions. Please indicate whether you agree with the following proposed definitions and provide proposed changes to the definitions if you disagree:

Definition	**Agree or Disagree**
Q1. **Base Case**: Computer representation of the projected initial or starting Transmission System conditions for a specific point in time. Each base case reflects the forecasted Load at each bus (or node) on the interconnected Transmission System, the transmission facilities which deliver the generation and reactive resources to the connected Load, and the generation dispatch including firm transaction obligations assumed to supply the connected Load. The models also reflect facility ratings in accordance with FAC-008 & FAC-009.	☐Agree. ☒Do not agree.
Q1. **Comment: To add clarity, the terms "power flow" and "dyanamic" should be included in the definition above. It seems that the defintion may be more detailed than needed without these two terms.**	
Q2. **Consequential Load Loss:** Load that is no longer served because it is directly connected to an element(s) that is removed from service due to fault clearing action or mis-operation.	☐Agree. ☒Do not agree.
Q2. **Comment: Should the above definition contain a statement that the load is not intentionally lost, since non-consequential load loss is intentional?**	
Q3. **Extreme Events:** Events which are more severe than Planning Events and have a low probability of occurrence.	☒Agree. ☐Do not agree.
Q3. **Comment:**	
Q4. **Long-Term Transmission Planning Horizon:** Transmission planning period that covers years six through ten or beyond.	☒Agree. ☐Do not agree.
Q4. **Comment:**	
Q5. **Near-Term Transmission Planning Horizon:** Transmission planning period that covers years One through five.	☒Agree. ☐Do not agree.
Q5. **Comment:**	
Q6. **Non-Consequential Load Loss:** Load loss other than Consequential Load Loss. For example, Load loss that occurs through manual (operator initiated) or automatic operations such as under-voltage Load shedding, under-frequency Load shedding, or Special Protection Systems.	☒Agree. ☐Do not agree.

Q6. **Comment: Recommend adding that this load loss is "intentional".**	
Q7. **Planning Assessment:** Documented evaluation of future Bulk Electric System needs by the use of performance studies that cover a range of assumptions regarding system conditions, time frames, future plans including capital reinforcements and operating procedures and other factors, such as asset conditions and age.	☐Agree. ☒Do not agree.
Q7. **Comment: Recommend adding power flow and dynamic analyses to this definition. Short circuit analyses should not be included.**	
Q8. **Planning Events:** Events which require Transmission system performance requirements to be met.	☐Agree. ☒Do not agree.
Q8. **Comment: I don't believe that this is really the definition of "planning events". This defintion should describe generally what the planning events are, not that they must meet performance requirements.**	
Q9. **Plant Stability Study:** Study of an individual plant's Stability for various Contingencies in the vicinity of the plant; concerned with the effect on the System of the generating units' loss of synchronism and the damping of the generating units' power oscillations.	☐Agree. ☐Do not agree.
Q9. **Comment:**	
Q10. **System Stability Study:** Study of the System or portions of the System to ensure that angular Stability is maintained, inter-area power oscillations are damped, and voltages during the dynamic simulation stay within acceptable performance limits.	☐Agree. ☐Do not agree.
Q10. **Comment:**	
Q11. **Year One:** The first year that a Transmission Planner is responsible for studying. This is further defined as the planning window that begins the next calendar year from the time the Transmission Planner submits their annual studies. Analysis conducted for time horizons within the calendar year from the study publication are assumed to be conducted under the auspices of Operations Planning.	☒Agree. ☐Do not agree.
Q11. **Comment:**	

B. Sensitivity Studies

The draft planning standard includes the requirement, as specified in FERC Order 693, that planning decisions be based on a portfolio of analyses. In section 12.a.ii "Sensitivity studies and critical system conditions" FERC provided direction to consider a full range of variables considered to be significant that need to be assessed and documentation provided that explains the rationale for the selection of variables assessed.

In addition to the firm obligation scenario, the portfolio of analyses should be supplemented to include information from sensitivity analysis. The sensitivity analysis should be developed using additional cases that simulate reasonably stressed system conditions. The standard drafting team has included several parameters that can be varied to create the requisite sensitivity case(s). The draft standards specify that the sensitivities reflect one or more of the following conditions and that documentation be provided explaining the rationale for selecting the sensitivity(ies) employed. The parameters that should be varied include:

- Higher or lower Load forecasts from the Base Case with variability of Load/demand and Load power factors due to season, weather, or time of day.
- Modification of expected transfers.
- Unavailability of long lead time facilities.
- Variability and outages of Reactive Resources.
- Generation additions, retirements, or other dispatch scenarios.
- Decreased effectiveness of controllable Loads and Demand Side Management.
- Modification of planned Transmission outages

To help focus industry discussion, please respond to the questions below:

Q12. Should the standard provide more specific direction regarding the number of sensitivity cases that need to be developed?

Yes ☒ No ☐
Comment: A minimum of at least one or two that contain certain scenarios chosen from the list should be required.

Q13. Should the standard specify the required changes, such as changes in expected transfers, load forecasts, generation patterns, etc., from the study case to be considered a "reasonably stressed" case?

Yes ☐ No ☒
Comment: A list of suggestions is sufficient. The flexibility to use different stresses on different systems is needed.

Q14. The SDT proposes to require the use of sensitivity studies for Near-Term Transmission System Planning Horizon stability analysis. Do you concur with the use of sensitivity analysis in dynamic studies?

Yes ☐ No ☐
Comment:

Q15. The draft TPL standard does not require the use of sensitivity studies for the Long-Term Transmission System Planning Horizon (year six and beyond) studies. Do you concur with this approach or should there be some level of sensitivity analysis required for the long-term period?

Yes ☒ No ☐
Comment:

C. Corrective Action Plans

Requirement R2.7 of the standard states that when analysis shows that the performance requirements in Table 1 and Table 2 are not fully met, a Corrective Action Plan that utilizes all or some of the Transmission System enhancements, generation additions, DSM, new technologies and Operating Procedures shall be included in the Planning Assessment. This Corrective Action Plan should ensure that upon its implementation the identified system deficiencies will be corrected so that the performance requirements in Table 1 and Table 2 will be met. Furthermore, studies included in the Planning Assessment should demonstrate that this is indeed the case.

Q16. Requirement R2.7.1: Such Corrective Action Plans shall "Identify System deficiencies and the associated actions needed to achieve required System performance including Transmission and generation improvements, DSM, new technologies, or Operating Procedures including the duration of Interim Operating Procedures". System deficiencies may be corrected using an integrated plan, i.e., an optimal mix of Transmission, generation, DSM and Operating Procedures. Should DSM be considered in conjunction with other measures in developing Corrective Action Plans? If yes, please comment on how the impact of DSM should be included.

Yes ☐ No ☐
Comment:

Q17. Requirement R2.7.2: Such Corrective Action Plans shall "Be added to study cases and the cases re-tested to show that the System with planned additions meets the performance requirements in the tables". Should new studies, including the facilities comprising the Corrective Action Plan, be performed to assess System normal performance and Contingency response for conditions that previously resulted in the System deficiencies (without the planned additions) and also demonstrate that the changes would not result in inadvertent negative impacts on the System. If you "agree", please comment on how a study area should be determined.

Yes ☒ No ☐
Comment: The study area should be determined by the Transmission Planner and Planning Coordinator.

Q18. Requirement R2.7.3: The standard calls for a differentiation between committed and proposed projects. Do you agree that they should be treated separately? If not, please state why not.

Yes ☒ No ☐
Comment:

Q19. Requirement R2.7.4: For such Corrective Action Plans "Committed projects shall not be removed without documentation to show that the revised plan meets the performance requirements". Do you agree or disagree with this requirement? If you disagree, please explain why.

Yes ☒ No ☐
Comment:

D. Performance Requirements

The proposed revised planning standard (TPL-001-1) incorporates a number of changes in requirements as compared to the current planning standards (TPL-001-0 through TPL-004-0), which it is expected to replace. Among other things these changes are intended to clarify the standard, address issues described by FERC, and, in particular, to "raise the bar." Strengthening the planning standards in selected areas is necessary to maintain a reliable Bulk Electric System that is up to the challenges of the 21st Century. In proposing the requirements in this draft, the standard drafting team attempted to balance the value of increased reliability against any potential increase in work and costs to meet the new proposed standard.

The standard drafting team is seeking input from the industry to determine whether a proper balance has been achieved. The areas where material changes are proposed in this draft are enumerated below, and questions are posed by the standard drafting team to

obtain industry comment. In formulating your responses, please keep in mind that material changes in the final standard will be accompanied by a transition plan to provide for an orderly implementation of the final standard.

The performance requirements relative to Non-Consequential Loss of Load for the following events enumerated in the two tables can be considered more stringent than the existing TPL standards. Furthermore, the proposed standard is based on an assumption that performance requirements for EHV facilities should be more stringent than for lower voltage facilities.

Do you agree that Non-Consequential Loss of Load should not be permitted for the following events? If you disagree, please provide a reason for your disagreement.

Event	Agree or Disagree	Comment
Q20. P2-1: Loss of bus section (SLG for stability) above 300 kV	☐Agree. ☐Do not agree.	
Q21. P5-1: For facilities above 300 kV, loss of a Transmission circuit followed by System adjustment[1] followed by loss of another Transmission circuit	☐Agree. ☐Do not agree.	
Q22. P5-2: For facilities above 300 kV, loss of a Transmission circuit followed by System adjustment followed by loss of a transformer with low side voltage rating above 300 kV	☐Agree. ☐Do not agree.	
Q23. P5-3: For facilities above 300 kV, loss of a transformer with low side voltage rating above 300 kV followed by System adjustment followed by loss of another transformer	☐Agree. ☐Do not agree.	

[1]System adjustment can be manual or automatic.

The proposed standard is based on an assumption that performance requirements for non-bus tie EHV breakers should be distinguished from other breakers. Do you agree that Non-Consequential Loss of Load should not be permitted for this event?

Q24. Loss of non-bus tie breaker (above 300 kV) due to internal fault

Yes ☐ No ☐

Comment:

The proposed standard is based on an assumption that performance requirements for non-bus tie EHV breakers should be distinguished from other breakers and that performance requirements for EHV facilities should be more stringent than for lower voltage facilities. Do you agree that Non-Consequential Loss of Load should not be permitted for this event?

Q25. P3-1: Loss of (SLG for stability) either a generator, a Transmission circuit, a transformer, or a bus and a stuck non-bus tie breaker (above 300 kV)

Yes ☐ No ☐
Comment:

The proposed standard is based on an assumption that the following events are relatively high probability events and, therefore, Non-Consequential Loss of Load should not be permitted. Do you agree? If you disagree, please provide a reason for your disagreement.

Event	Agree or Disagree	Comment
Q26. P4-1: Loss of a Generator followed by System adjustment[1] followed by loss of another Generator	☐Agree. ☐Do not agree.	
Q27. P4-2: Loss of a generator followed by a System adjustment followed by the loss of a monopolar DC line	☐Agree. ☐Do not agree.	
Q28. P4-3: Loss of a generator followed by System adjustment followed by loss of a Transmission circuit	☐Agree. ☐Do not agree.	
Q29. P4-4: Loss of a generator followed by System adjustment followed by loss of a transformer with low side voltage rating above 300 kV	☐Agree. ☐Do not agree.	

The performance requirement for the following event may be considered less stringent than the existing TPL Standards — P2-3: Loss of a single pole of a DC line. Interruption of firm transactions (without Loss of firm Load) if the transaction is dependent on the faulted DC line is now allowed for this initiating event/Contingency.

Q30. Do you agree that interruption of any firm transfers that are dependent on the outaged DC line that is taken out of service should be permitted?

Yes ☐ No ☐
Comment:

[1] System adjustment can be manual or automatic

E. Stability

Q31. The proposed standard is based on an assumption that steady state analysis and stability analysis are different from each other and that therefore, two tables of Contingencies and performance requirements were needed. It is also based on an assumption that stability study requirements should be clearly separated from the steady state study requirements. Do you agree with the action taken in separating stability analysis from steady state analysis? If not, please explain.

Yes ☒ No ☐
Comment:

Q32. The SDT has added requirements for plant stability studies and has drawn a distinction in these studies from System stability studies. Do you agree with this approach? If not, please explain.

Yes ☒ No ☐
Comment:

Q33. The existing TPL-004-0 standard has a requirement to consider the Loss of all generating units at a plant, but it was not clear whether this requirement should apply to stability studies. The SDT did not include this requirement in the stability table, because it is hard to envision a condition when all units would trip simultaneously within the timeframe of a stability simulation. Do you think this condition should be required in stability analysis of extreme events? If not, please explain.

Yes ☐ No ☐
Comment:

Q34. There are an increasing number of events with slow voltage recovery after faults on the Transmission System. The dynamic behavior of induction motor loads is a major factor in this phenomenon. The proposed standard therefore requires that the load model for stability studies of peak Load conditions include the dynamic effects of induction motors. Do you agree with this requirement? If not, please explain?

Yes ☐ No ☐
Comment:

Q35. What type of manual or automatic adjustments of generators should be allowed for single and multiple Contingencies?

Comment:

F. Generation Runback and Tripping

The SDT has discussed the automatic and manual readjustments of generators that should be permissible for single contingencies and multiple contingencies. The existing TPL-001-0 through TPL-004-0 standards through footnote (a) of Table I could include emergency ratings applicable for short durations as required to permit operating steps necessary to maintain system control. The footnote is silent about allowable generation adjustments in

response to the Category B events. However, it does indicate that system adjustments are permitted to prepare for the next Contingency. These system adjustments could include manual or automatic adjustments involving generation.

The SDT has learned that many transmission owners use System Protection Systems (SPS) or Remedial Action Schemes (RAS) to trip generation for single and multiple Contingency outage events to prevent overloads, low voltage, and instability in the Interconnected Transmission network for N-1 and N-2 events. In some cases, the RAS are used to prepare for the next Contingency; but in some cases, the RAS are used to simultaneously avoid exceeding emergency ratings.

Q36. The proposed standard allows generation runback after the disturbance that causes a single Contingency (or due to a single Contingency outage) to move the Interconnected Transmission System from an emergency state (within emergency ratings) to a normal state (within normal ratings), assuming that the disturbance does not result in instability? Do you agree? If not, please explain.

Yes ☐ No ☐
Comment:

Q37. Since emergency ratings are thermal ratings, should this standard allow an automatic generation runback scheme (that is initiated immediately after the disturbance causing the single Contingency) to prevent thermal overloads (assuming that the disturbance does not result in instability)? If yes, what are the conditions that must be met in order to allow such a runback scheme to meet the System performance criteria for single Contingencies? Please explain the reason for your answer.

Yes ☐ No ☐
Comment:

The standard drafting team has considered that RAS or SPS may be allowable under certain situations for single Contingencies, but proposes that their use should be limited.

Q38. Do you agree that RAS or SPS may be allowed for single Contingencies? If not, please explain.

Yes ☐ No ☐
Comment:

Q39. Please describe the limitations that you believe should be placed on the use of RAS or SPS for single Contingency events.

Comment: The requirements for the use of SPS and RAS should be contained in a separate standard. That standard should dictate when the RAS and SPS can be used. The planning studies would then simulate those conditions.

Q40. When RAS or SPS are allowed, what conditions should be met when these systems are used in system adjustments to meet performance requirements?

Comment:

G. General Questions

Q41. If you are aware of any regional variances that would be required as a result of these standards, please identify them here.

Yes ☐ No ☐
Comment:

Q42. If you are aware of any conflicts between the proposed standards and any regulatory function, rule order, tariff, rate schedule, legislative requirement or agreement, please identify them here.

Yes ☐ No ☐
Comment:

Q43. Do you have any other questions or concerns with the proposed standard that have not been addressed? If yes, please explain.

Yes ☐ No ☐
Comment: The requirement for short circuit studies (mentioned in R2 and included in all of R2.3) should be removed from this standard. Relay and protection engineers use a different type of software (Aspen and CAPE) for different reasons (to calculate phase and ground faults and perform relay coordination studies). Those types of studies should not be included in this standard and are totally separate from performing power flow and dynamics studies.

NERC
NORTH AMERICAN ELECTRIC RELIABILITY CORPORATION

Comment Form for First Draft of TPL-001-1 — Transmission System Planning Performance Requirements

Please use this form to submit comments on the proposed draft of TPL-001-1. Comments must be submitted by **Friday, October 26, 2007**. You may submit the completed form by e-mail to sarcomm@nerc.net with the words "TPL-001 Draft 1" in the subject line. If you have questions please contact Ed Dobrowolski at ed.dobrowolksi@nerc.net or by telephone at 609-947-3673.

Individual Commenter Information **(Complete this page for comments from one organization or individual.)**		
Name:	Jonathan Sykes	
Organization:	SRP	
Telephone:	602-236-6442	
E-mail:	jonathan.sykes@srpnet.com	
NERC Region (check all Regions in which your company operates)		**Registered Ballot Body Segment (check all industry segments in which your company is registered)**
☐ **ERCOT**	☒	1 — Transmission Owners
☐ **FRCC**	☐	2 — RTOs and ISOs
☐ **MRO**	☐	3 — Load-serving Entities
☐ **NPCC**	☐	4 — Transmission-dependent Utilities
☐ **RFC**	☐	5 — Electric Generators
☐ **SERC**	☐	6 — Electricity Brokers, Aggregators, and Marketers
☐ **SPP**	☐	7 — Large Electricity End Users
☒ **WECC**	☐	8 — Small Electricity End Users
☐ **NA – Not Applicable**	☐	9 — Federal, State, Provincial Regulatory or other Government Entities
	☐	10 — Regional Reliability Organizations and Regional Entities

Group Comments (Complete this page if comments are from a group.)

Group Name:

Lead Contact:

Contact Organization:

Contact Segment:

Contact Telephone:

Contact E-mail:

Additional Member Name	Additional Member Organization	Region*	Segment*

*If more than one Region or Segment applies, please list all that apply. Regional acronyms and segment numbers are shown on prior page.

Background

The purpose of this standard is to establish Transmission System planning performance requirements within the planning horizon to develop a Bulk Electric System that will operate reliably over a broad spectrum of System conditions and following a wide range of probable Contingencies. This standard will replace TPL-001-0, TPL-002-0, TPL-003-0, and TPL-004-0. The standard drafting team has not yet addressed TPL-005-0 and TPL-006-0, but will address these two standards during the next phase of the drafting process.

The major objectives of the standard drafting team are to:

1) Ensure the standard is complete and the requirements are set at an appropriate level to ensure reliability (Not Least Common Denominator)
2) Ensure that the standard is enforceable by having clearly defined requirements with unambiguous language
3) Address the issues raised by FERC Order 693, 890, and other applicable orders
4) Address the issues raised in the original Standards Authorization Request (SAR) and the Supplemental SAR.

The standard drafting team did not attempt to edit the existing standards but rather chose to write one standard that addresses all aspects of transmission planning in the existing TPL-001-0, TPL-002-0, TPL-003-0, and TPL-004-0. The standard drafting team organized the new standard in the following sections:

R1 – Modeling requirements
R2 – Assessment and Corrective Plan requirements
R3 – Steady State Analysis requirements
R4 – Stability Analysis requirements
R5 – Coordination requirements

The standard drafting team determined that the requirements and analysis for Steady State are different from those for stability. As such, the standard drafting team separated the analysis requirements and created two performance requirement tables.

The standard drafting team recognizes that this draft standard is a starting point for industry input into the standard and that there is still a lot of work required to complete the process. The standard drafting team has made many changes to clarify requirements, add requirements, and make some of the performance requirements stricter. The standard drafting team has not addressed Measures, Risk Factors, Violation Severity Factors, or Time Horizons at this time. These will be addressed when the standard drafting team has better defined the requirements of the standard.

For questions where you agree with the standard drafting team, please state that you agree and if available, please provide supporting documentation. If you disagree with the standard drafting team, please explain why you disagree and provide data to support your position, such as outage data or analysis. If you believe that we have made a performance requirement too strict please provide supporting documentation. If applicable, please include the approximate cost in man-hours for additional studies and/or cost in $Millions for additional transmission investment to meet the new requirements or the stricter requirements. If you believe that the standard should be stricter, please provide the rationale along with any supporting data, including existing practices, cost estimates or additional analysis.

To improve the standard, the standard drafting team would appreciate responses to as many of these questions as you can answer.

A. New Definitions

Many of the concerns about the existing TPL standards come from the fact that a number of generally understood concepts are embedded in undefined terms, tables, and footnotes. To clarify some of these concerns, the standard drafting team is proposing new definitions. Please indicate whether you agree with the following proposed definitions and provide proposed changes to the definitions if you disagree:

Definition	**Agree or Disagree**
Q1. **Base Case**: Computer representation of the projected initial or starting Transmission System conditions for a specific point in time. Each base case reflects the forecasted Load at each bus (or node) on the interconnected Transmission System, the transmission facilities which deliver the generation and reactive resources to the connected Load, and the generation dispatch including firm transaction obligations assumed to supply the connected Load. The models also reflect facility ratings in accordance with FAC-008 & FAC-009.	☐Agree. ☐Do not agree.
Q1. **Comment:**	
Q2. **Consequential Load Loss:** Load that is no longer served because it is directly connected to an element(s) that is removed from service due to fault clearing action or mis-operation.	☐Agree. ☐Do not agree.
Q2. **Comment:**	
Q3. **Extreme Events:** Events which are more severe than Planning Events and have a low probability of occurrence.	☐Agree. ☐Do not agree.
Q3. **Comment:**	
Q4. **Long-Term Transmission Planning Horizon:** Transmission planning period that covers years six through ten or beyond.	☒Agree. ☐Do not agree.
Q4. **Comment: Reword to: Transmission planning period that covers years six or beyond.**	
Q5. **Near-Term Transmission Planning Horizon:** Transmission planning period that covers years One through five.	☐Agree. ☐Do not agree.
Q5. **Comment:**	
Q6. **Non-Consequential Load Loss:** Load loss other than Consequential Load Loss. For example, Load loss that occurs through manual (operator initiated) or automatic operations such as under-voltage Load shedding, under-frequency Load shedding, or Special Protection Systems.	☐Agree. ☐Do not agree.
Q6. **Comment:**	
Q7. **Planning Assessment:** Documented evaluation of future Bulk Electric System needs by the use of performance studies that	☐Agree.

cover a range of assumptions regarding system conditions, time frames, future plans including capital reinforcements and operating procedures and other factors, such as asset conditions and age.	☐Do not agree.
Q7. **Comment:**	
Q8. **Planning Events:** Events which require Transmission system performance requirements to be met.	☐Agree. ☐Do not agree.
Q8. **Comment:**	
Q9. **Plant Stability Study:** Study of an individual plant's Stability for various Contingencies in the vicinity of the plant; concerned with the effect on the System of the generating units' loss of synchronism and the damping of the generating units' power oscillations.	☐Agree. ☐Do not agree.
Q9. **Comment:**	
Q10. **System Stability Study:** Study of the System or portions of the System to ensure that angular Stability is maintained, inter-area power oscillations are damped, and voltages during the dynamic simulation stay within acceptable performance limits.	☐Agree. ☐Do not agree.
Q10. **Comment:**	
Q11. **Year One:** The first year that a Transmission Planner is responsible for studying. This is further defined as the planning window that begins the next calendar year from the time the Transmission Planner submits their annual studies. Analysis conducted for time horizons within the calendar year from the study publication are assumed to be conducted under the auspices of Operations Planning.	☐Agree. ☐Do not agree.
Q11. **Comment:**	

B. Sensitivity Studies

The draft planning standard includes the requirement, as specified in FERC Order 693, that planning decisions be based on a portfolio of analyses. In section 12.a.ii "Sensitivity studies and critical system conditions" FERC provided direction to consider a full range of variables considered to be significant that need to be assessed and documentation provided that explains the rationale for the selection of variables assessed.

In addition to the firm obligation scenario, the portfolio of analyses should be supplemented to include information from sensitivity analysis. The sensitivity analysis should be developed using additional cases that simulate reasonably stressed system conditions. The standard drafting team has included several parameters that can be varied to create the requisite sensitivity case(s). The draft standards specify that the sensitivities reflect one or more of the following conditions and that documentation be provided explaining the rationale for selecting the sensitivity(ies) employed. The parameters that should be varied include:

- Higher or lower Load forecasts from the Base Case with variability of Load/demand and Load power factors due to season, weather, or time of day.
- Modification of expected transfers.
- Unavailability of long lead time facilities.
- Variability and outages of Reactive Resources.

- Generation additions, retirements, or other dispatch scenarios.
- Decreased effectiveness of controllable Loads and Demand Side Management.
- Modification of planned Transmission outages

To help focus industry discussion, please respond to the questions below:

Q12. Should the standard provide more specific direction regarding the number of sensitivity cases that need to be developed?

Yes ☐ No ☐
Comment:

Q13. Should the standard specify the required changes, such as changes in expected transfers, load forecasts, generation patterns, etc., from the study case to be considered a "reasonably stressed" case?

Yes ☐ No ☐
Comment:

Q14. The SDT proposes to require the use of sensitivity studies for Near-Term Transmission System Planning Horizon stability analysis. Do you concur with the use of sensitivity analysis in dynamic studies?

Yes ☐ No ☐
Comment:

Q15. The draft TPL standard does not require the use of sensitivity studies for the Long-Term Transmission System Planning Horizon (year six and beyond) studies. Do you concur with this approach or should there be some level of sensitivity analysis required for the long-term period?

Yes ☐ No ☐
Comment:

C. Corrective Action Plans

Requirement R2.7 of the standard states that when analysis shows that the performance requirements in Table 1 and Table 2 are not fully met, a Corrective Action Plan that utilizes all or some of the Transmission System enhancements, generation additions, DSM, new technologies and Operating Procedures shall be included in the Planning Assessment. This Corrective Action Plan should ensure that upon its implementation the identified system deficiencies will be corrected so that the performance requirements in Table 1 and Table 2 will be met. Furthermore, studies included in the Planning Assessment should demonstrate that this is indeed the case.

Q16. Requirement R2.7.1: Such Corrective Action Plans shall "Identify System deficiencies and the associated actions needed to achieve required System performance including Transmission and generation improvements, DSM, new technologies, or Operating Procedures including the duration of Interim Operating Procedures". System deficiencies may be corrected using an integrated plan, i.e., an optimal mix of Transmission, generation, DSM and Operating Procedures. Should DSM be considered in conjunction with other measures in developing Corrective Action Plans? If yes, please comment on how the impact of DSM should be included.

Yes ☐ No ☐

Comment:

Q17. Requirement R2.7.2: Such Corrective Action Plans shall "Be added to study cases and the cases re-tested to show that the System with planned additions meets the performance requirements in the tables". Should new studies, including the facilities comprising the Corrective Action Plan, be performed to assess System normal performance and Contingency response for conditions that previously resulted in the System deficiencies (without the planned additions) and also demonstrate that the changes would not result in inadvertent negative impacts on the System. If you "agree", please comment on how a study area should be determined.

Yes ☐ No ☐
Comment:

Q18. Requirement R2.7.3: The standard calls for a differentiation between committed and proposed projects. Do you agree that they should be treated separately? If not, please state why not.

Yes ☐ No ☐
Comment:

Q19. Requirement R2.7.4: For such Corrective Action Plans "Committed projects shall not be removed without documentation to show that the revised plan meets the performance requirements". Do you agree or disagree with this requirement? If you disagree, please explain why.

Yes ☐ No ☐
Comment:

D. Performance Requirements

The proposed revised planning standard (TPL-001-1) incorporates a number of changes in requirements as compared to the current planning standards (TPL-001-0 through TPL-004-0), which it is expected to replace. Among other things these changes are intended to clarify the standard, address issues described by FERC, and, in particular, to "raise the bar." Strengthening the planning standards in selected areas is necessary to maintain a reliable Bulk Electric System that is up to the challenges of the 21st Century. In proposing the requirements in this draft, the standard drafting team attempted to balance the value of increased reliability against any potential increase in work and costs to meet the new proposed standard.

The standard drafting team is seeking input from the industry to determine whether a proper balance has been achieved. The areas where material changes are proposed in this draft are enumerated below, and questions are posed by the standard drafting team to obtain industry comment. In formulating your responses, please keep in mind that material changes in the final standard will be accompanied by a transition plan to provide for an orderly implementation of the final standard.

The performance requirements relative to Non-Consequential Loss of Load for the following events enumerated in the two tables can be considered more stringent than the existing TPL standards. Furthermore, the proposed standard is based on an assumption that performance requirements for EHV facilities should be more stringent than for lower voltage facilities.

Do you agree that Non-Consequential Loss of Load should not be permitted for the following events? If you disagree, please provide a reason for your disagreement.

Event	Agree or Disagree	Comment
Q20. P2-1: Loss of bus section (SLG for stability) above 300 kV	☒Agree. ☐Do not agree.	
Q21. P5-1: For facilities above 300 kV, loss of a Transmission circuit followed by System adjustment[1] followed by loss of another Transmission circuit	☐Agree. ☒Do not agree.	The time to adjust the system needs to be provided (when does a N-1-1 become a N-2?). If the cause of the outage is transient (temporary) the operator needs some time to test and restore the element (could be minutes up to several hours). If the element is lost indefinitly, the operator will need some minimum time to adjust the system. If this time is not available prior to the next N-1 then the standard should allow Non-Consequetial Loss of Load.
Q22. P5-2: For facilities above 300 kV, loss of a Transmission circuit followed by System adjustment followed by loss of a transformer with low side voltage rating above 300 kV	☐Agree. ☒Do not agree.	same as Q21
Q23. P5-3: For facilities above 300 kV, loss of a transformer with low side voltage rating above 300 kV followed by System adjustment followed by loss of another transformer	☐Agree. ☒Do not agree.	same as Q21

[1]System adjustment can be manual or automatic.

The proposed standard is based on an assumption that performance requirements for non-bus tie EHV breakers should be distinguished from other breakers. Do you agree that Non-Consequential Loss of Load should not be permitted for this event?

Q24. Loss of non-bus tie breaker (above 300 kV) due to internal fault

Yes ☐ No ☐
Comment:

The proposed standard is based on an assumption that performance requirements for non-bus tie EHV breakers should be distinguished from other breakers and that performance

requirements for EHV facilities should be more stringent than for lower voltage facilities. Do you agree that Non-Consequential Loss of Load should not be permitted for this event?

Q25. P3-1: Loss of (SLG for stability) either a generator, a Transmission circuit, a transformer, or a bus and a stuck non-bus tie breaker (above 300 kV)

Yes ☐ No ☐
Comment:

The proposed standard is based on an assumption that the following events are relatively high probability events and, therefore, Non-Consequential Loss of Load should not be permitted. Do you agree? If you disagree, please provide a reason for your disagreement.

Event	Agree or Disagree	Comment
Q26. P4-1: Loss of a Generator followed by System adjustment[1] followed by loss of another Generator	☐Agree. ☒Do not agree.	The time to adjust the system needs to be provided (when does a N-1-1 become a N-2?). If the cause of the outage is transient (temporary) the operator needs some time to test and restore the element (could be minutes up to several hours). If the element is lost indefinitly, the operator will need some minimum time to adjust the system. If this time is not available prior to the next N-1 then the standard should allow Non-Consequetial Loss of Load. Some distinction needs to be made the amount of generation connected at a single point on the BES. a wind farm might have many small generators connected to the BES with an aggregate total of 300Mw or more. This requirement will should only apply to generating sources that might be connected to the BES through a single transformer (i.e. wind farm) with minimum agregate total of 300MW (for N-1).
Q27. P4-2: Loss of a generator followed by a System adjustment followed by the loss of a monopolar DC line	☐Agree. ☒Do not agree.	same as Q26.
Q28. P4-3: Loss of a generator followed by System adjustment followed by loss of a Transmission	☐Agree. ☒Do not agree.	same as Q26.

[1] System adjustment can be manual or automatic

circuit		
Q29. P4-4: Loss of a generator followed by System adjustment followed by loss of a transformer with low side voltage rating above 300 kV	☐Agree. ☒Do not agree.	same as Q26.

The performance requirement for the following event may be considered less stringent than the existing TPL Standards — P2-3: Loss of a single pole of a DC line. Interruption of firm transactions (without Loss of firm Load) if the transaction is dependent on the faulted DC line is now allowed for this initiating event/Contingency.

Q30. Do you agree that interruption of any firm transfers that are dependent on the outaged DC line that is taken out of service should be permitted?

Yes ☐ No ☐
Comment:

E. Stability

Q31. The proposed standard is based on an assumption that steady state analysis and stability analysis are different from each other and that therefore, two tables of Contingencies and performance requirements were needed. It is also based on an assumption that stability study requirements should be clearly separated from the steady state study requirements. Do you agree with the action taken in separating stability analysis from steady state analysis? If not, please explain.

Yes ☐ No ☐
Comment:

Q32. The SDT has added requirements for plant stability studies and has drawn a distinction in these studies from System stability studies. Do you agree with this approach? If not, please explain.

Yes ☐ No ☐
Comment:

Q33. The existing TPL-004-0 standard has a requirement to consider the Loss of all generating units at a plant, but it was not clear whether this requirement should apply to stability studies. The SDT did not include this requirement in the stability table, because it is hard to envision a condition when all units would trip simultaneously within the timeframe of a stability simulation. Do you think this condition should be required in stability analysis of extreme events? If not, please explain.

Yes ☐ No ☐
Comment:

Q34. There are an increasing number of events with slow voltage recovery after faults on the Transmission System. The dynamic behavior of induction motor loads is a major factor in this phenomenon. The proposed standard therefore requires that the load

model for stability studies of peak Load conditions include the dynamic effects of induction motors. Do you agree with this requirement? If not, please explain?

Yes ☐ No ☐
Comment:

Q35. What type of manual or automatic adjustments of generators should be allowed for single and multiple Contingencies?

Comment:

F. Generation Runback and Tripping

The SDT has discussed the automatic and manual readjustments of generators that should be permissible for single contingencies and multiple contingencies. The existing TPL-001-0 through TPL-004-0 standards through footnote (a) of Table I could include emergency ratings applicable for short durations as required to permit operating steps necessary to maintain system control. The footnote is silent about allowable generation adjustments in response to the Category B events. However, it does indicate that system adjustments are permitted to prepare for the next Contingency. These system adjustments could include manual or automatic adjustments involving generation.

The SDT has learned that many transmission owners use System Protection Systems (SPS) or Remedial Action Schemes (RAS) to trip generation for single and multiple Contingency outage events to prevent overloads, low voltage, and instability in the Interconnected Transmission network for N-1 and N-2 events. In some cases, the RAS are used to prepare for the next Contingency; but in some cases, the RAS are used to simultaneously avoid exceeding emergency ratings.

Q36. The proposed standard allows generation runback after the disturbance that causes a single Contingency (or due to a single Contingency outage) to move the Interconnected Transmission System from an emergency state (within emergency ratings) to a normal state (within normal ratings), assuming that the disturbance does not result in instability? Do you agree? If not, please explain.

Yes ☒ No ☐
Comment:

Q37. Since emergency ratings are thermal ratings, should this standard allow an automatic generation runback scheme (that is initiated immediately after the disturbance causing the single Contingency) to prevent thermal overloads (assuming that the disturbance does not result in instability)? If yes, what are the conditions that must be met in order to allow such a runback scheme to meet the System performance criteria for single Contingencies? Please explain the reason for your answer.

Yes ☒ No ☐
Comment: The loss of transmission line (N-1) may require Gen drop to prevent instability or violation. Studies will need to be performed that study the congestion of generation and transmission cooridors and loss of various elements.

The standard drafting team has considered that RAS or SPS may be allowable under certain situations for single Contingencies, but proposes that their use should be limited.

Q38. Do you agree that RAS or SPS may be allowed for single Contingencies? If not, please explain.

Yes ☒ No ☐
Comment: As long as Non-Consequential Loss of Load is not a solution for single contingencies (N-1).

Q39. Please describe the limitations that you believe should be placed on the use of RAS or SPS for single Contingency events.

Comment: Non-Consequential Loss of Load should not be allowed for single contingencies (N-1) and the system must remain stable with no violations.

Q40. When RAS or SPS are allowed, what conditions should be met when these systems are used in system adjustments to meet performance requirements?

Comment: Non-Consequential Loss of Load should not be allowed for single contingencies (N-1) and the system must remain stable with no violations.

G. General Questions

Q41. If you are aware of any regional variances that would be required as a result of these standards, please identify them here.

Yes ☐ No ☐
Comment:

Q42. If you are aware of any conflicts between the proposed standards and any regulatory function, rule order, tariff, rate schedule, legislative requirement or agreement, please identify them here.

Yes ☐ No ☐
Comment:

Q43. Do you have any other questions or concerns with the proposed standard that have not been addressed? If yes, please explain.

Yes ☒ No ☐
Comment: The SDT should be commended for very good work at identifying many different issues of the TPL standards. However, TPL-001-1 should take into account the consequences of a Security-Based or Dependability-Based Misoperation (and failure) of the Protection System.

1) A Security-Based Misoperation of the Protection System may remove additional elements of the BES and could be listed in the table under "multiple contingency".

2) A Dependability-Based Misoperation (or Failure) of a non-redundant Protection System could cause long time delays in clearing faults and clear a large area of BES around the faulted Element. This type of failure may not provide local tripping or breaker failure initiation and remote Protection Systems would need to operate to isolate

the fault or disturbance. Often the operation of the remote Protection Systems would cause long time delays in isolating faults and disturbances.

a) The BES should be studied and those elements need to be identified where Dependability-Based Misoperations (or failures) would prevent meeting the performance requirements of Table 1 (Steady State) or Table 2 (Stability). This type of Misoperation (or Failure) will have to be included in the Tables.

For example, some parts of the BES may be able to survive long time delayed clearing of faults caused by Dependability-Based Protection System Misoperations (or failures) and still meet the performance requirements of the tables. But other parts of the BES may experience cascading outages for this same scenario. One solution to minimize the consequences of Dependability-Based Misoperations (or failures) is to install redundant Protection Systems. The redundant Protection Systems would reduce the possibility of a single Dependability-Based Misoperation (or failure) from affecting the isolation of faults and disturbances.

In addition, the TPL-001 standard will need definitions of Security-Based Misoperation and Dependability-Based Misoperation. The following definitions are used for PRC-004-WECC-1:

Security-Based Misoperation: The incorrect operation of a Protection System or RAS for faults or disturbances outside the intended zone of protection. Security is a component of reliability and is the measure of a device's certainty not to operate falsely.

Dependability-Based Misoperation: Any of the following:

☐ The absence of a Protection System or RAS operation when intended

☐ A Protection System or RAS equipment failure is alarmed or indicated to operating personnel.

☐ A Protection System or RAS equipment failure is discovered.

Dependability is a component of reliability and is the measure of a device's certainty to operate when required.

PROTECTION SYSTEM MISOPERATIONS

Operational Scenario

Security-Based Misoperation
Dependability-Based Misoperation
Breaker Fail

Jonathan Sykes

SALT RIVER PROJECT

10/04/07

CASE 1 – Security-Based Misoperation of the Protection System

1. Fault Occurs on Line #1
2. Relays on Line #1 Operate

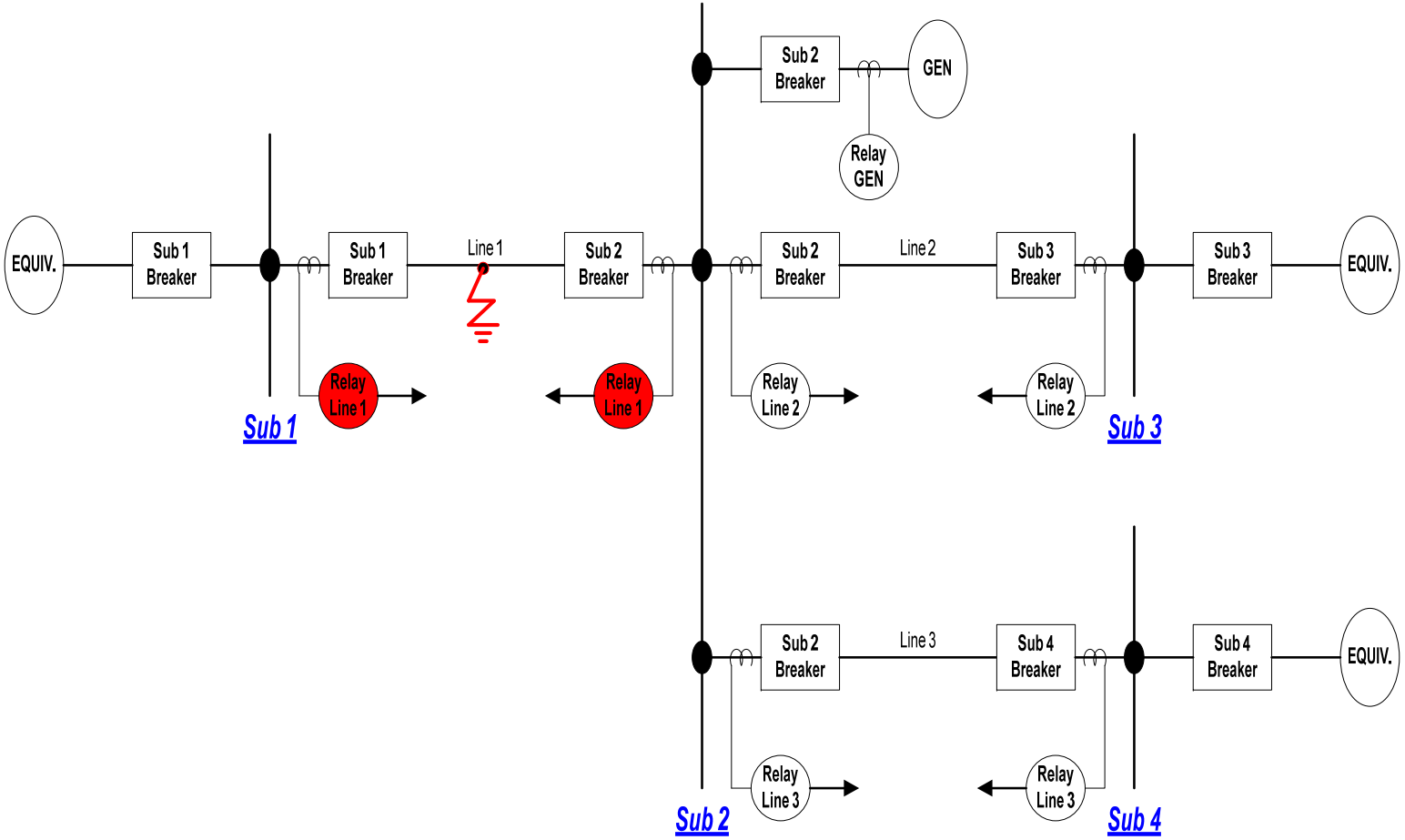

Simplified System One Line

CASE 1 – Security-Based Misoperation of the Protection System

1. Fault Occurs on Line #1
2. Relays on Line #1 Operate
3. Relay at Sub #3 on Line #2 Misoperates
4. Breakers operate and isolate Line #1
5. Breakers operate and isolate Line #2

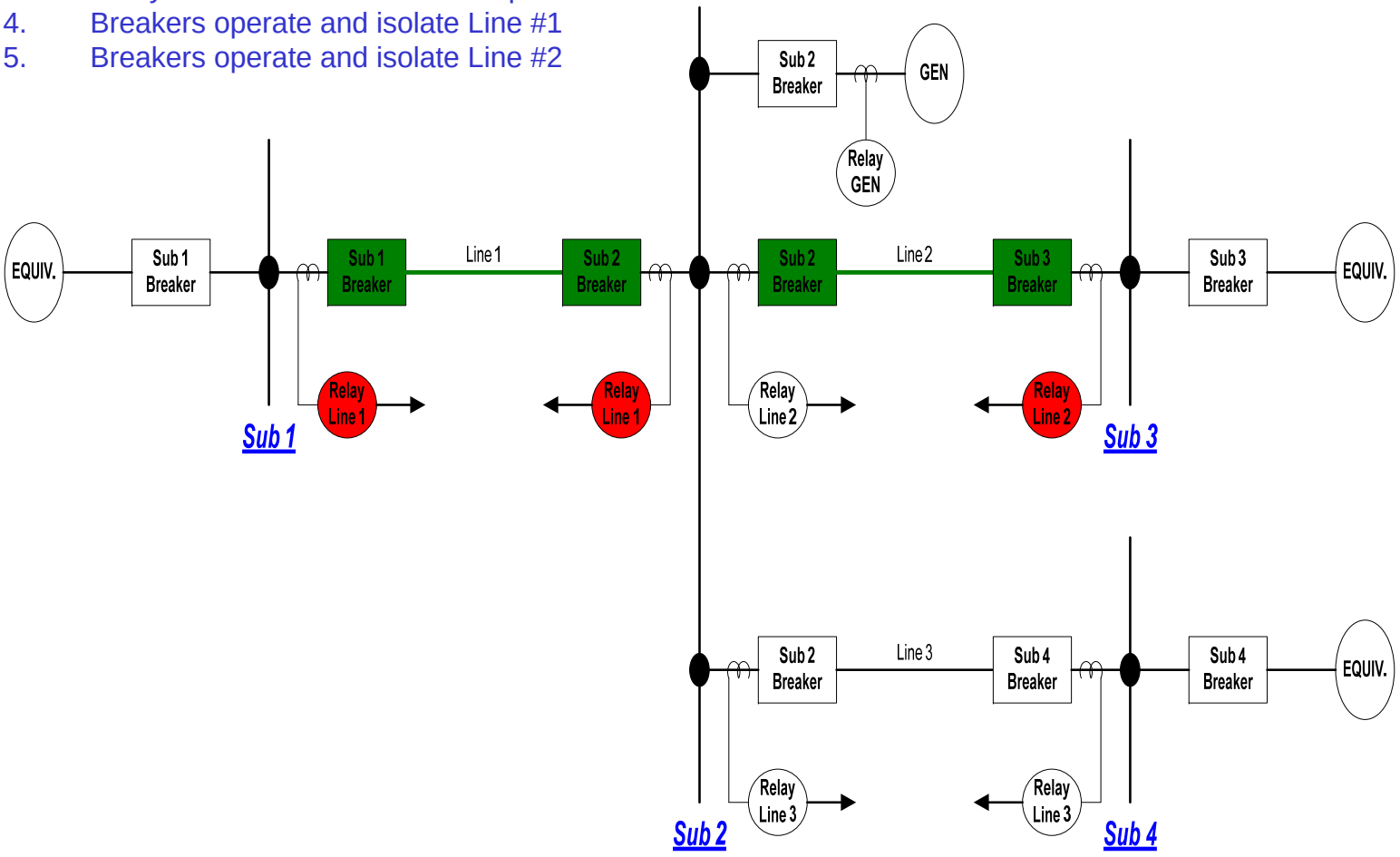

Simplified System One Line

CASE 2 – Dependability-Based Misoperation of the Protection System

1. Fault Occurs on Line #1
2. Relays at Sub #1 Operate and Open Breaker at Sub #1
3. Relays at Sub #2 **DO NOT** Operate and **DO NOT** initiate Breaker Fail

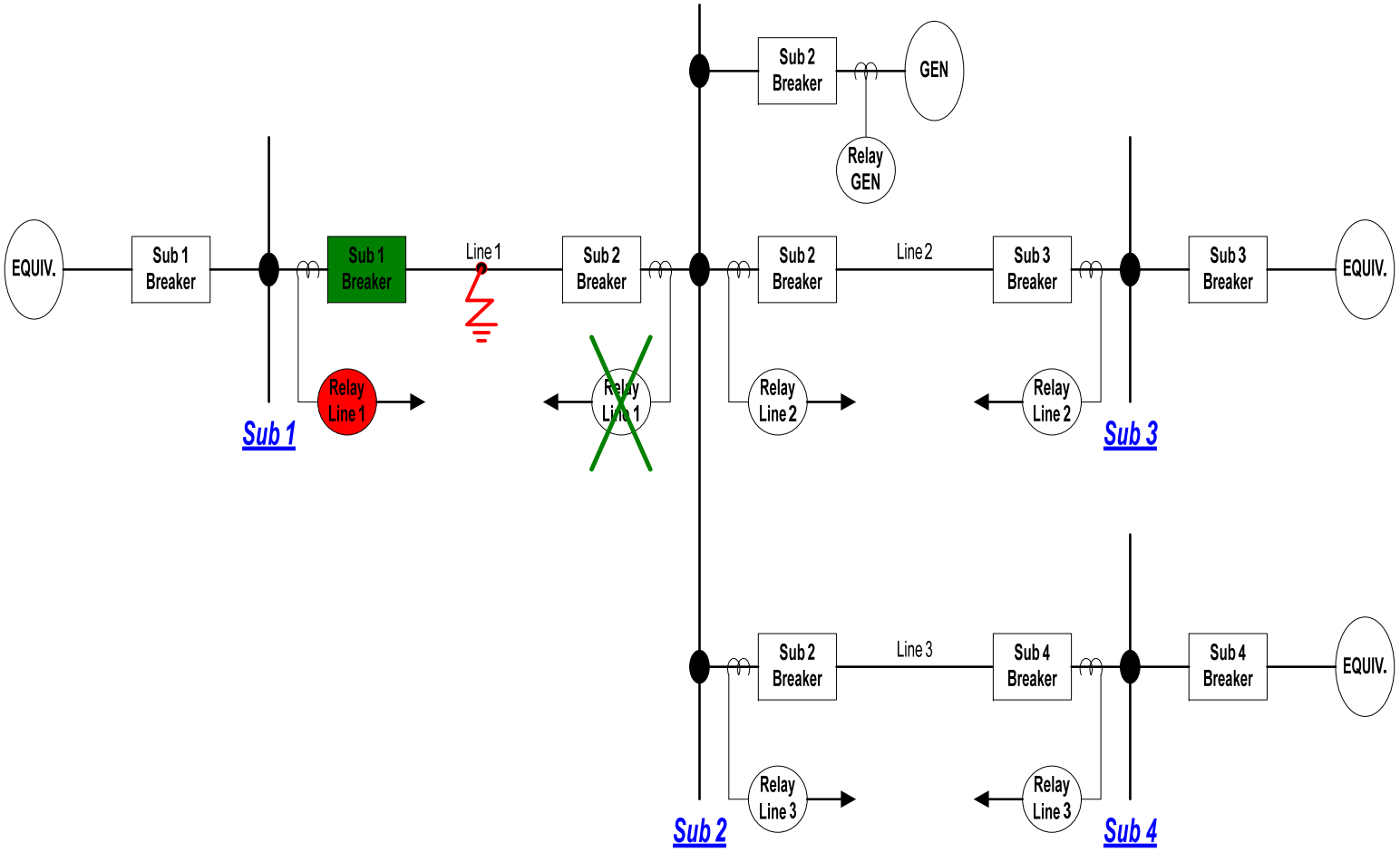

Simplified System One Line

CASE 2 – Dependability-Based Misoperation of the Protection System

1. Fault Occurs on Line #1
2. Relays at Sub #1 Operate and Open Breaker at Sub #1
3. Relays at Sub #2 **DO NOT** Operate and **DO NOT** initiate Breaker Fail
4. Remote relaying operates with long time delays
5. Breakers on various lines Operate and de-energize Sub #2, Line #1, Line #2, Line #3, and GEN

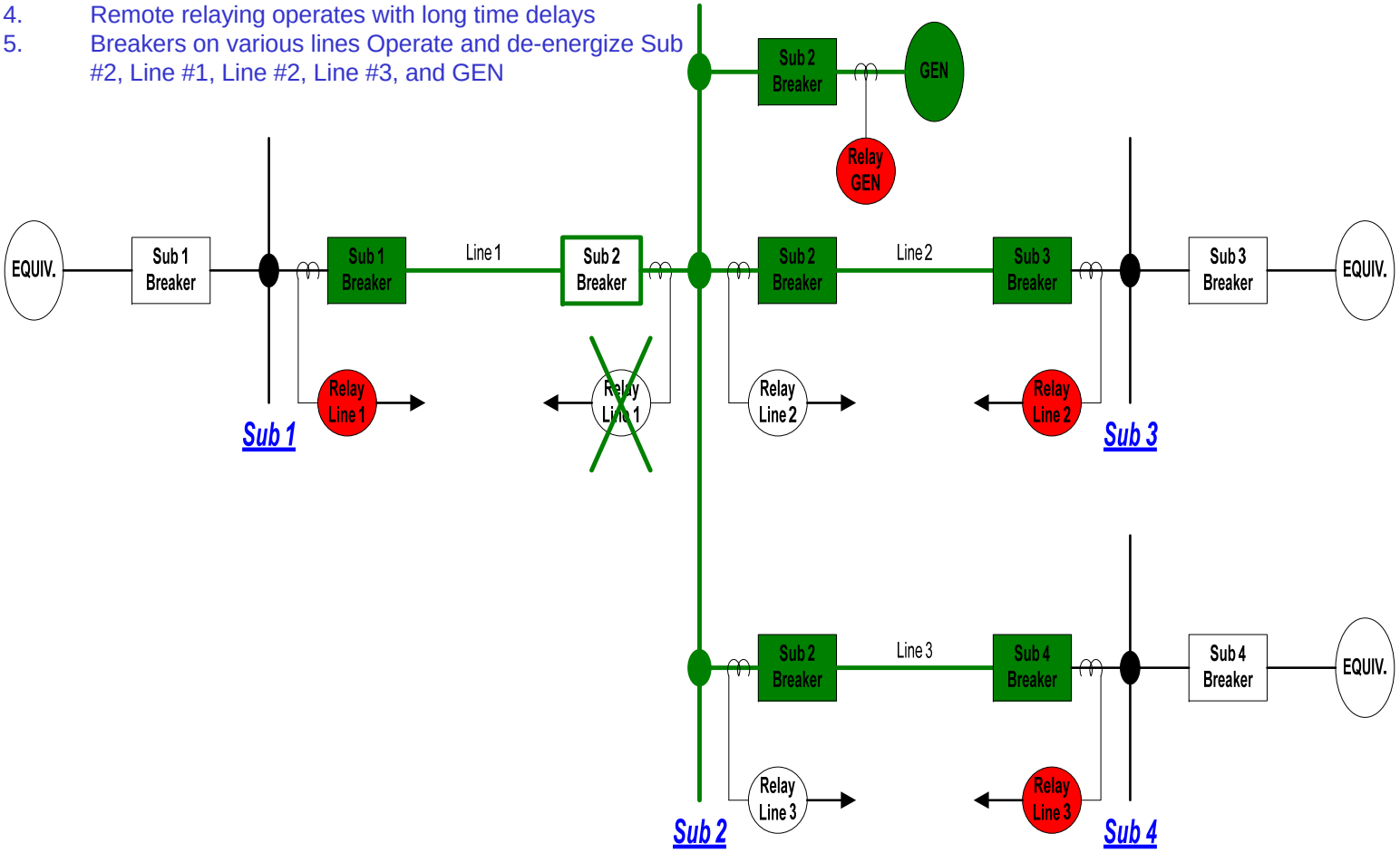

Simplified System One Line

CASE 3 – Breaker Fail

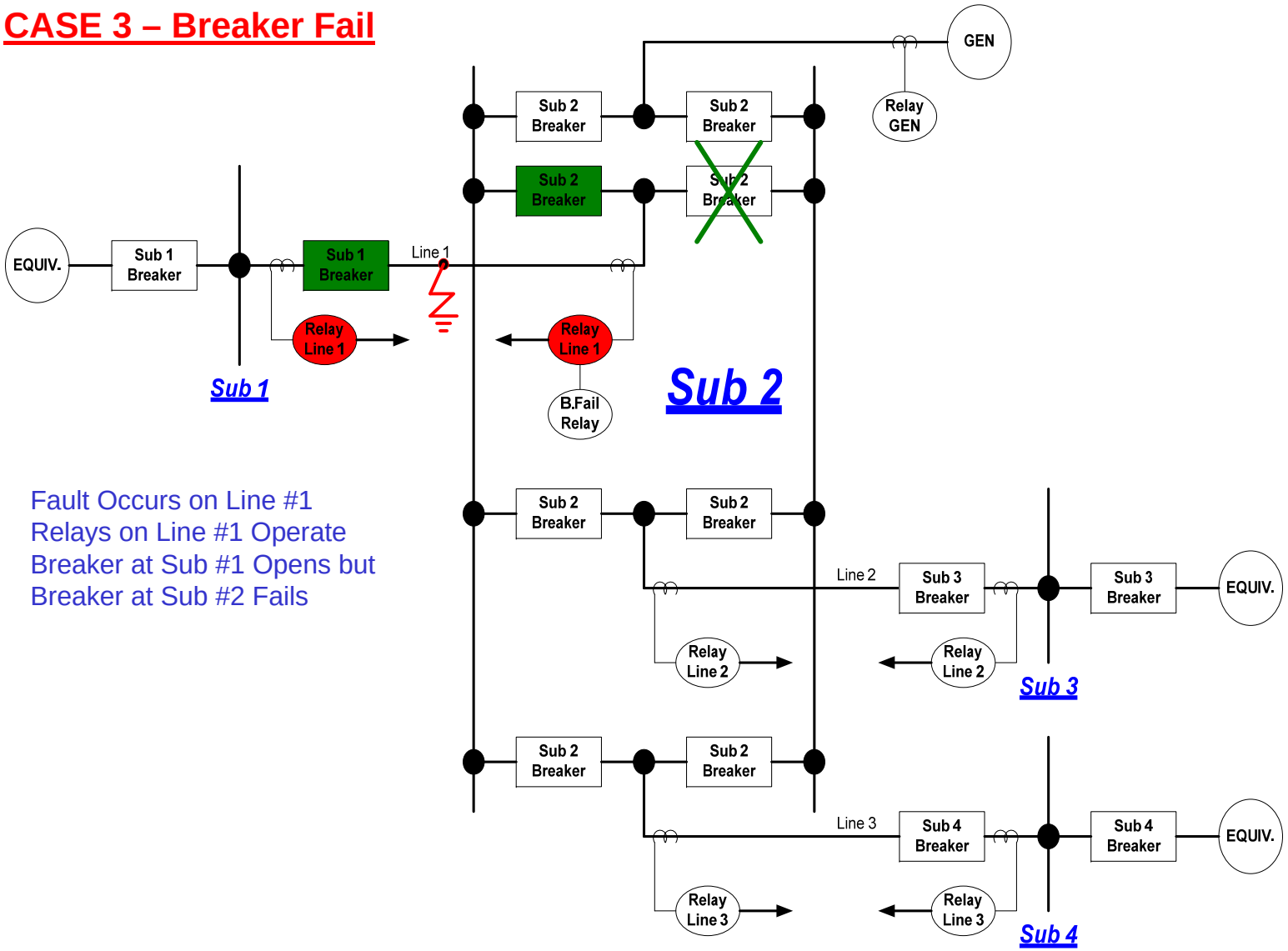

1. Fault Occurs on Line #1
2. Relays on Line #1 Operate
3. Breaker at Sub #1 Opens but Breaker at Sub #2 Fails

Simplified System One Line

(Note: Sub #2 has more detail)

CASE 3 – Breaker Fail

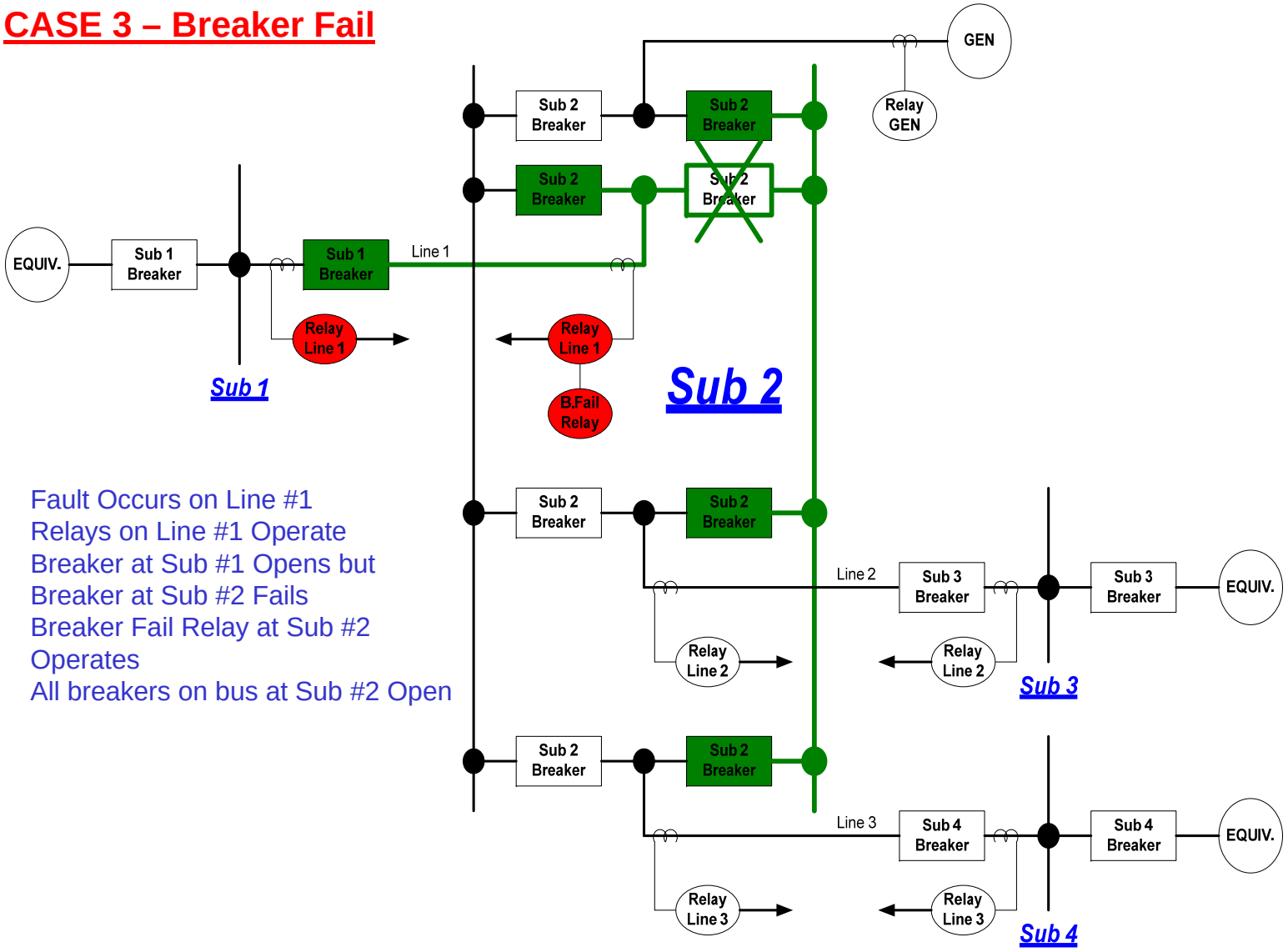

1. Fault Occurs on Line #1
2. Relays on Line #1 Operate
3. Breaker at Sub #1 Opens but Breaker at Sub #2 Fails
4. Breaker Fail Relay at Sub #2 Operates
5. All breakers on bus at Sub #2 Open

Simplified System One Line

(Note: Sub #2 has more detail)

NERC
NORTH AMERICAN ELECTRIC RELIABILITY CORPORATION

Comment Form for First Draft of TPL-001-1 — Transmission System Planning Performance Requirements

Please use this form to submit comments on the proposed draft of TPL-001-1. Comments must be submitted by **Friday, October 26, 2007**. You may submit the completed form by e-mail to sarcomm@nerc.net with the words "TPL-001 Draft 1" in the subject line. If you have questions please contact Ed Dobrowolski at ed.dobrowolksi@nerc.net or by telephone at 609-947-3673.

Individual Commenter Information **(Complete this page for comments from one organization or individual.)**		
Name:	Jonathan Sykes	
Organization:	SRP	
Telephone:	602-236-6442	
E-mail:	jonathan.sykes@srpnet.com	
NERC Region (check all Regions in which your company operates)		**Registered Ballot Body Segment (check all industry segments in which your company is registered)**
☐ **ERCOT**	☒	1 — Transmission Owners
☐ **FRCC**	☐	2 — RTOs and ISOs
☐ **MRO**	☐	3 — Load-serving Entities
☐ **NPCC**	☐	4 — Transmission-dependent Utilities
☐ **RFC**	☐	5 — Electric Generators
☐ **SERC**	☐	6 — Electricity Brokers, Aggregators, and Marketers
☐ **SPP**	☐	7 — Large Electricity End Users
☒ **WECC**	☐	8 — Small Electricity End Users
☐ **NA – Not Applicable**	☐	9 — Federal, State, Provincial Regulatory or other Government Entities
	☐	10 — Regional Reliability Organizations and Regional Entities

Group Comments (Complete this page if comments are from a group.)

Group Name:

Lead Contact:

Contact Organization:

Contact Segment:

Contact Telephone:

Contact E-mail:

Additional Member Name	Additional Member Organization	Region*	Segment*

*If more than one Region or Segment applies, please list all that apply. Regional acronyms and segment numbers are shown on prior page.

Background

The purpose of this standard is to establish Transmission System planning performance requirements within the planning horizon to develop a Bulk Electric System that will operate reliably over a broad spectrum of System conditions and following a wide range of probable Contingencies. This standard will replace TPL-001-0, TPL-002-0, TPL-003-0, and TPL-004-0. The standard drafting team has not yet addressed TPL-005-0 and TPL-006-0, but will address these two standards during the next phase of the drafting process.

The major objectives of the standard drafting team are to:

1) Ensure the standard is complete and the requirements are set at an appropriate level to ensure reliability (Not Least Common Denominator)
2) Ensure that the standard is enforceable by having clearly defined requirements with unambiguous language
3) Address the issues raised by FERC Order 693, 890, and other applicable orders
4) Address the issues raised in the original Standards Authorization Request (SAR) and the Supplemental SAR.

The standard drafting team did not attempt to edit the existing standards but rather chose to write one standard that addresses all aspects of transmission planning in the existing TPL-001-0, TPL-002-0, TPL-003-0, and TPL-004-0. The standard drafting team organized the new standard in the following sections:

R1 – Modeling requirements
R2 – Assessment and Corrective Plan requirements
R3 – Steady State Analysis requirements
R4 – Stability Analysis requirements
R5 – Coordination requirements

The standard drafting team determined that the requirements and analysis for Steady State are different from those for stability. As such, the standard drafting team separated the analysis requirements and created two performance requirement tables.

The standard drafting team recognizes that this draft standard is a starting point for industry input into the standard and that there is still a lot of work required to complete the process. The standard drafting team has made many changes to clarify requirements, add requirements, and make some of the performance requirements stricter. The standard drafting team has not addressed Measures, Risk Factors, Violation Severity Factors, or Time Horizons at this time. These will be addressed when the standard drafting team has better defined the requirements of the standard.

For questions where you agree with the standard drafting team, please state that you agree and if available, please provide supporting documentation. If you disagree with the standard drafting team, please explain why you disagree and provide data to support your position, such as outage data or analysis. If you believe that we have made a performance requirement too strict please provide supporting documentation. If applicable, please include the approximate cost in man-hours for additional studies and/or cost in $Millions for additional transmission investment to meet the new requirements or the stricter requirements. If you believe that the standard should be stricter, please provide the rationale along with any supporting data, including existing practices, cost estimates or additional analysis.

To improve the standard, the standard drafting team would appreciate responses to as many of these questions as you can answer.

A. New Definitions

Many of the concerns about the existing TPL standards come from the fact that a number of generally understood concepts are embedded in undefined terms, tables, and footnotes. To clarify some of these concerns, the standard drafting team is proposing new definitions. Please indicate whether you agree with the following proposed definitions and provide proposed changes to the definitions if you disagree:

Definition	**Agree or Disagree**
Q1. **Base Case**: Computer representation of the projected initial or starting Transmission System conditions for a specific point in time. Each base case reflects the forecasted Load at each bus (or node) on the interconnected Transmission System, the transmission facilities which deliver the generation and reactive resources to the connected Load, and the generation dispatch including firm transaction obligations assumed to supply the connected Load. The models also reflect facility ratings in accordance with FAC-008 & FAC-009.	☐Agree. ☐Do not agree.
Q1. **Comment:**	
Q2. **Consequential Load Loss:** Load that is no longer served because it is directly connected to an element(s) that is removed from service due to fault clearing action or mis-operation.	☐Agree. ☐Do not agree.
Q2. **Comment:**	
Q3. **Extreme Events:** Events which are more severe than Planning Events and have a low probability of occurrence.	☐Agree. ☐Do not agree.
Q3. **Comment:**	
Q4. **Long-Term Transmission Planning Horizon:** Transmission planning period that covers years six through ten or beyond.	☒Agree. ☐Do not agree.
Q4. **Comment: Reword to: Transmission planning period that covers years six or beyond.**	
Q5. **Near-Term Transmission Planning Horizon:** Transmission planning period that covers years One through five.	☐Agree. ☐Do not agree.
Q5. **Comment:**	
Q6. **Non-Consequential Load Loss:** Load loss other than Consequential Load Loss. For example, Load loss that occurs through manual (operator initiated) or automatic operations such as under-voltage Load shedding, under-frequency Load shedding, or Special Protection Systems.	☐Agree. ☐Do not agree.
Q6. **Comment:**	
Q7. **Planning Assessment:** Documented evaluation of future Bulk Electric System needs by the use of performance studies that	☐Agree.

cover a range of assumptions regarding system conditions, time frames, future plans including capital reinforcements and operating procedures and other factors, such as asset conditions and age.	☐Do not agree.
Q7. **Comment:**	
Q8. **Planning Events:** Events which require Transmission system performance requirements to be met.	☐Agree. ☐Do not agree.
Q8. **Comment:**	
Q9. **Plant Stability Study:** Study of an individual plant's Stability for various Contingencies in the vicinity of the plant; concerned with the effect on the System of the generating units' loss of synchronism and the damping of the generating units' power oscillations.	☐Agree. ☐Do not agree.
Q9. **Comment:**	
Q10. **System Stability Study:** Study of the System or portions of the System to ensure that angular Stability is maintained, inter-area power oscillations are damped, and voltages during the dynamic simulation stay within acceptable performance limits.	☐Agree. ☐Do not agree.
Q10. **Comment:**	
Q11. **Year One:** The first year that a Transmission Planner is responsible for studying. This is further defined as the planning window that begins the next calendar year from the time the Transmission Planner submits their annual studies. Analysis conducted for time horizons within the calendar year from the study publication are assumed to be conducted under the auspices of Operations Planning.	☐Agree. ☐Do not agree.
Q11. **Comment:**	

B. Sensitivity Studies

The draft planning standard includes the requirement, as specified in FERC Order 693, that planning decisions be based on a portfolio of analyses. In section 12.a.ii "Sensitivity studies and critical system conditions" FERC provided direction to consider a full range of variables considered to be significant that need to be assessed and documentation provided that explains the rationale for the selection of variables assessed.

In addition to the firm obligation scenario, the portfolio of analyses should be supplemented to include information from sensitivity analysis. The sensitivity analysis should be developed using additional cases that simulate reasonably stressed system conditions. The standard drafting team has included several parameters that can be varied to create the requisite sensitivity case(s). The draft standards specify that the sensitivities reflect one or more of the following conditions and that documentation be provided explaining the rationale for selecting the sensitivity(ies) employed. The parameters that should be varied include:

- Higher or lower Load forecasts from the Base Case with variability of Load/demand and Load power factors due to season, weather, or time of day.
- Modification of expected transfers.
- Unavailability of long lead time facilities.
- Variability and outages of Reactive Resources.

- Generation additions, retirements, or other dispatch scenarios.
- Decreased effectiveness of controllable Loads and Demand Side Management.
- Modification of planned Transmission outages

To help focus industry discussion, please respond to the questions below:

Q12. Should the standard provide more specific direction regarding the number of sensitivity cases that need to be developed?

Yes ☐ No ☐
Comment:

Q13. Should the standard specify the required changes, such as changes in expected transfers, load forecasts, generation patterns, etc., from the study case to be considered a "reasonably stressed" case?

Yes ☐ No ☐
Comment:

Q14. The SDT proposes to require the use of sensitivity studies for Near-Term Transmission System Planning Horizon stability analysis. Do you concur with the use of sensitivity analysis in dynamic studies?

Yes ☐ No ☐
Comment:

Q15. The draft TPL standard does not require the use of sensitivity studies for the Long-Term Transmission System Planning Horizon (year six and beyond) studies. Do you concur with this approach or should there be some level of sensitivity analysis required for the long-term period?

Yes ☐ No ☐
Comment:

C. Corrective Action Plans

Requirement R2.7 of the standard states that when analysis shows that the performance requirements in Table 1 and Table 2 are not fully met, a Corrective Action Plan that utilizes all or some of the Transmission System enhancements, generation additions, DSM, new technologies and Operating Procedures shall be included in the Planning Assessment. This Corrective Action Plan should ensure that upon its implementation the identified system deficiencies will be corrected so that the performance requirements in Table 1 and Table 2 will be met. Furthermore, studies included in the Planning Assessment should demonstrate that this is indeed the case.

Q16. Requirement R2.7.1: Such Corrective Action Plans shall "Identify System deficiencies and the associated actions needed to achieve required System performance including Transmission and generation improvements, DSM, new technologies, or Operating Procedures including the duration of Interim Operating Procedures". System deficiencies may be corrected using an integrated plan, i.e., an optimal mix of Transmission, generation, DSM and Operating Procedures. Should DSM be considered in conjunction with other measures in developing Corrective Action Plans? If yes, please comment on how the impact of DSM should be included.

Yes ☐ No ☐

Comment:

Q17. Requirement R2.7.2: Such Corrective Action Plans shall "Be added to study cases and the cases re-tested to show that the System with planned additions meets the performance requirements in the tables". Should new studies, including the facilities comprising the Corrective Action Plan, be performed to assess System normal performance and Contingency response for conditions that previously resulted in the System deficiencies (without the planned additions) and also demonstrate that the changes would not result in inadvertent negative impacts on the System. If you "agree", please comment on how a study area should be determined.

Yes ☐ No ☐
Comment:

Q18. Requirement R2.7.3: The standard calls for a differentiation between committed and proposed projects. Do you agree that they should be treated separately? If not, please state why not.

Yes ☐ No ☐
Comment:

Q19. Requirement R2.7.4: For such Corrective Action Plans "Committed projects shall not be removed without documentation to show that the revised plan meets the performance requirements". Do you agree or disagree with this requirement? If you disagree, please explain why.

Yes ☐ No ☐
Comment:

D. Performance Requirements

The proposed revised planning standard (TPL-001-1) incorporates a number of changes in requirements as compared to the current planning standards (TPL-001-0 through TPL-004-0), which it is expected to replace. Among other things these changes are intended to clarify the standard, address issues described by FERC, and, in particular, to "raise the bar." Strengthening the planning standards in selected areas is necessary to maintain a reliable Bulk Electric System that is up to the challenges of the 21st Century. In proposing the requirements in this draft, the standard drafting team attempted to balance the value of increased reliability against any potential increase in work and costs to meet the new proposed standard.

The standard drafting team is seeking input from the industry to determine whether a proper balance has been achieved. The areas where material changes are proposed in this draft are enumerated below, and questions are posed by the standard drafting team to obtain industry comment. In formulating your responses, please keep in mind that material changes in the final standard will be accompanied by a transition plan to provide for an orderly implementation of the final standard.

The performance requirements relative to Non-Consequential Loss of Load for the following events enumerated in the two tables can be considered more stringent than the existing TPL standards. Furthermore, the proposed standard is based on an assumption that performance requirements for EHV facilities should be more stringent than for lower voltage facilities.

Do you agree that Non-Consequential Loss of Load should not be permitted for the following events? If you disagree, please provide a reason for your disagreement.

Event	Agree or Disagree	Comment
Q20. P2-1: Loss of bus section (SLG for stability) above 300 kV	☒Agree. ☐Do not agree.	
Q21. P5-1: For facilities above 300 kV, loss of a Transmission circuit followed by System adjustment[1] followed by loss of another Transmission circuit	☐Agree. ☒Do not agree.	The time to adjust the system needs to be provided (when does a N-1-1 become a N-2?). If the cause of the outage is transient (temporary) the operator needs some time to test and restore the element (could be minutes up to several hours). If the element is lost indefinitly, the operator will need some minimum time to adjust the system. If this time is not available prior to the next N-1 then the standard should allow Non-Consequetial Loss of Load.
Q22. P5-2: For facilities above 300 kV, loss of a Transmission circuit followed by System adjustment followed by loss of a transformer with low side voltage rating above 300 kV	☐Agree. ☒Do not agree.	same as Q21
Q23. P5-3: For facilities above 300 kV, loss of a transformer with low side voltage rating above 300 kV followed by System adjustment followed by loss of another transformer	☐Agree. ☒Do not agree.	same as Q21

[1]System adjustment can be manual or automatic.

The proposed standard is based on an assumption that performance requirements for non-bus tie EHV breakers should be distinguished from other breakers. Do you agree that Non-Consequential Loss of Load should not be permitted for this event?

Q24. Loss of non-bus tie breaker (above 300 kV) due to internal fault

Yes ☐ No ☐
Comment:

The proposed standard is based on an assumption that performance requirements for non-bus tie EHV breakers should be distinguished from other breakers and that performance

requirements for EHV facilities should be more stringent than for lower voltage facilities. Do you agree that Non-Consequential Loss of Load should not be permitted for this event?

Q25. P3-1: Loss of (SLG for stability) either a generator, a Transmission circuit, a transformer, or a bus and a stuck non-bus tie breaker (above 300 kV)

Yes ☐ No ☐
Comment:

The proposed standard is based on an assumption that the following events are relatively high probability events and, therefore, Non-Consequential Loss of Load should not be permitted. Do you agree? If you disagree, please provide a reason for your disagreement.

Event	Agree or Disagree	Comment
Q26. P4-1: Loss of a Generator followed by System adjustment[1] followed by loss of another Generator	☐Agree. ☒Do not agree.	The time to adjust the system needs to be provided (when does a N-1-1 become a N-2?). If the cause of the outage is transient (temporary) the operator needs some time to test and restore the element (could be minutes up to several hours). If the element is lost indefinitly, the operator will need some minimum time to adjust the system. If this time is not available prior to the next N-1 then the standard should allow Non-Consequetial Loss of Load. Some distinction needs to be made the amount of generation connected at a single point on the BES. a wind farm might have many small generators connected to the BES with an aggregate total of 300Mw or more. This requirement will should only apply to generating sources that might be connected to the BES through a single transformer (i.e. wind farm) with minimum agregate total of 300MW (for N-1).
Q27. P4-2: Loss of a generator followed by a System adjustment followed by the loss of a monopolar DC line	☐Agree. ☒Do not agree.	same as Q26.
Q28. P4-3: Loss of a generator followed by System adjustment followed by loss of a Transmission	☐Agree. ☒Do not agree.	same as Q26.

[1] System adjustment can be manual or automatic

circuit		
Q29. P4-4: Loss of a generator followed by System adjustment followed by loss of a transformer with low side voltage rating above 300 kV	☐Agree. ☒Do not agree.	same as Q26.

The performance requirement for the following event may be considered less stringent than the existing TPL Standards — P2-3: Loss of a single pole of a DC line. Interruption of firm transactions (without Loss of firm Load) if the transaction is dependent on the faulted DC line is now allowed for this initiating event/Contingency.

Q30. Do you agree that interruption of any firm transfers that are dependent on the outaged DC line that is taken out of service should be permitted?

Yes ☐ No ☐
Comment:

E. Stability

Q31. The proposed standard is based on an assumption that steady state analysis and stability analysis are different from each other and that therefore, two tables of Contingencies and performance requirements were needed. It is also based on an assumption that stability study requirements should be clearly separated from the steady state study requirements. Do you agree with the action taken in separating stability analysis from steady state analysis? If not, please explain.

Yes ☐ No ☐
Comment:

Q32. The SDT has added requirements for plant stability studies and has drawn a distinction in these studies from System stability studies. Do you agree with this approach? If not, please explain.

Yes ☐ No ☐
Comment:

Q33. The existing TPL-004-0 standard has a requirement to consider the Loss of all generating units at a plant, but it was not clear whether this requirement should apply to stability studies. The SDT did not include this requirement in the stability table, because it is hard to envision a condition when all units would trip simultaneously within the timeframe of a stability simulation. Do you think this condition should be required in stability analysis of extreme events? If not, please explain.

Yes ☐ No ☐
Comment:

Q34. There are an increasing number of events with slow voltage recovery after faults on the Transmission System. The dynamic behavior of induction motor loads is a major factor in this phenomenon. The proposed standard therefore requires that the load

model for stability studies of peak Load conditions include the dynamic effects of induction motors. Do you agree with this requirement? If not, please explain?

Yes ☐ No ☐
Comment:

Q35. What type of manual or automatic adjustments of generators should be allowed for single and multiple Contingencies?

Comment:

F. Generation Runback and Tripping

The SDT has discussed the automatic and manual readjustments of generators that should be permissible for single contingencies and multiple contingencies. The existing TPL-001-0 through TPL-004-0 standards through footnote (a) of Table I could include emergency ratings applicable for short durations as required to permit operating steps necessary to maintain system control. The footnote is silent about allowable generation adjustments in response to the Category B events. However, it does indicate that system adjustments are permitted to prepare for the next Contingency. These system adjustments could include manual or automatic adjustments involving generation.

The SDT has learned that many transmission owners use System Protection Systems (SPS) or Remedial Action Schemes (RAS) to trip generation for single and multiple Contingency outage events to prevent overloads, low voltage, and instability in the Interconnected Transmission network for N-1 and N-2 events. In some cases, the RAS are used to prepare for the next Contingency; but in some cases, the RAS are used to simultaneously avoid exceeding emergency ratings.

Q36. The proposed standard allows generation runback after the disturbance that causes a single Contingency (or due to a single Contingency outage) to move the Interconnected Transmission System from an emergency state (within emergency ratings) to a normal state (within normal ratings), assuming that the disturbance does not result in instability? Do you agree? If not, please explain.

Yes ☒ No ☐
Comment:

Q37. Since emergency ratings are thermal ratings, should this standard allow an automatic generation runback scheme (that is initiated immediately after the disturbance causing the single Contingency) to prevent thermal overloads (assuming that the disturbance does not result in instability)? If yes, what are the conditions that must be met in order to allow such a runback scheme to meet the System performance criteria for single Contingencies? Please explain the reason for your answer.

Yes ☒ No ☐
Comment: The loss of transmission line (N-1) may require Gen drop to prevent instability or violation. Studies will need to be performed that study the congestion of generation and transmission cooridors and loss of various elements.

The standard drafting team has considered that RAS or SPS may be allowable under certain situations for single Contingencies, but proposes that their use should be limited.

Q38. Do you agree that RAS or SPS may be allowed for single Contingencies? If not, please explain.

Yes ☒ No ☐
Comment: As long as Non-Consequential Loss of Load is not a solution for single contingencies (N-1).

Q39. Please describe the limitations that you believe should be placed on the use of RAS or SPS for single Contingency events.

Comment: Non-Consequential Loss of Load should not be allowed for single contingencies (N-1) and the system must remain stable with no violations.

Q40. When RAS or SPS are allowed, what conditions should be met when these systems are used in system adjustments to meet performance requirements?

Comment: Non-Consequential Loss of Load should not be allowed for single contingencies (N-1) and the system must remain stable with no violations.

G. General Questions

Q41. If you are aware of any regional variances that would be required as a result of these standards, please identify them here.

Yes ☐ No ☐
Comment:

Q42. If you are aware of any conflicts between the proposed standards and any regulatory function, rule order, tariff, rate schedule, legislative requirement or agreement, please identify them here.

Yes ☐ No ☐
Comment:

Q43. Do you have any other questions or concerns with the proposed standard that have not been addressed? If yes, please explain.

Yes ☒ No ☐
Comment: The SDT should be commended for very good work at identifying many different issues of the TPL standards. However, TPL-001-1 should take into account the consequences of a Security-Based or Dependability-Based Misoperation (and failure) of the Protection System.

1) A Security-Based Misoperation of the Protection System may remove additional elements of the BES and could be listed in the table under "multiple contingency".

2) A Dependability-Based Misoperation (or Failure) of a non-redundant Protection System could cause long time delays in clearing faults and clear a large area of BES around the faulted Element. This type of failure may not provide local tripping or breaker failure initiation and remote Protection Systems would need to operate to isolate

the fault or disturbance. Often the operation of the remote Protection Systems would cause long time delays in isolating faults and disturbances.

a) The BES should be studied and those elements need to be identified where Dependability-Based Misoperations (or failures) would prevent meeting the performance requirements of Table 1 (Steady State) or Table 2 (Stability). This type of Misoperation (or Failure) will have to be included in the Tables.

For example, some parts of the BES may be able to survive long time delayed clearing of faults caused by Dependability-Based Protection System Misoperations (or failures) and still meet the performance requirements of the tables. But other parts of the BES may experience cascading outages for this same scenario. One solution to minimize the consequences of Dependability-Based Misoperations (or failures) is to install redundant Protection Systems. The redundant Protection Systems would reduce the possibility of a single Dependability-Based Misoperation (or failure) from affecting the isolation of faults and disturbances.

In addition, the TPL-001 standard will need definitions of Security-Based Misoperation and Dependability-Based Misoperation. The following definitions are used for PRC-004-WECC-1:

Security-Based Misoperation: The incorrect operation of a Protection System or RAS for faults or disturbances outside the intended zone of protection. Security is a component of reliability and is the measure of a device's certainty not to operate falsely.

Dependability-Based Misoperation: Any of the following:

☐ The absence of a Protection System or RAS operation when intended

☐ A Protection System or RAS equipment failure is alarmed or indicated to operating personnel.

☐ A Protection System or RAS equipment failure is discovered.

Dependability is a component of reliability and is the measure of a device's certainty to operate when required.

NERC
NORTH AMERICAN ELECTRIC RELIABILITY CORPORATION

Comment Form for First Draft of TPL-001-1 — Transmission System Planning Performance Requirements

Please use this form to submit comments on the proposed draft of TPL-001-1. Comments must be submitted by **Friday, October 26, 2007**. You may submit the completed form by e-mail to sarcomm@nerc.net with the words "TPL-001 Draft 1" in the subject line. If you have questions please contact Ed Dobrowolski at ed.dobrowolksi@nerc.net or by telephone at 609-947-3673.

Individual Commenter Information **(Complete this page for comments from one organization or individual.)**		
Name:		
Organization: Santee Cooper		
Telephone: 843-761-8000		
E-mail:		
NERC Region (check all Regions in which your company operates)		**Registered Ballot Body Segment (check all industry segments in which your company is registered)**
☐ **ERCOT**	☒	1 — Transmission Owners
☐ **FRCC**	☐	2 — RTOs and ISOs
☐ **MRO**	☒	3 — Load-serving Entities
☐ **NPCC**	☐	4 — Transmission-dependent Utilities
☐ **RFC**	☒	5 — Electric Generators
☒ **SERC**	☒	6 — Electricity Brokers, Aggregators, and Marketers
☐ **SPP**	☐	7 — Large Electricity End Users
☐ **WECC**	☐	8 — Small Electricity End Users
☐ **NA – Not Applicable**	☐	9 — Federal, State, Provincial Regulatory or other Government Entities
	☐	10 — Regional Reliability Organizations and Regional Entities

Group Comments (Complete this page if comments are from a group.)

Group Name: **Santee Cooper**

Lead Contact: **Terry L. Blackwell**

Contact Organization: **Santee Cooper**

Contact Segment: **01**

Contact Telephone: **843-761-8000 ext 5196**

Contact E-mail: **tlblackw@santeecooper.com**

Additional Member Name	Additional Member Organization	Region*	Segment*
James Peterson	Santee Cooper	**SERC**	01
Shawn T. Abrams	Santee Cooper	SERC	01
Vicky Budreau	Santee Cooper	SERC	01
Art Brown	Santee Cooper	SERC	01
William Gaither	Santee Cooper	SERC	01
Glenn Stephens	Santee Cooper	SERC	01
Rene' Free	Santee Cooper	SERC	01
Frank Caston	Santee Cooper	SERC	01
Rick Thornton	Santee Cooper	SERC	01
James M. Jackson	Santee Cooper	SERC	01

*If more than one Region or Segment applies, please list all that apply. Regional acronyms and segment numbers are shown on prior page.

Background

The purpose of this standard is to establish Transmission System planning performance requirements within the planning horizon to develop a Bulk Electric System that will operate reliably over a broad spectrum of System conditions and following a wide range of probable Contingencies. This standard will replace TPL-001-0, TPL-002-0, TPL-003-0, and TPL-004-0. The standard drafting team has not yet addressed TPL-005-0 and TPL-006-0, but will address these two standards during the next phase of the drafting process.

The major objectives of the standard drafting team are to:

1) Ensure the standard is complete and the requirements are set at an appropriate level to ensure reliability (Not Least Common Denominator)
2) Ensure that the standard is enforceable by having clearly defined requirements with unambiguous language
3) Address the issues raised by FERC Order 693, 890, and other applicable orders
4) Address the issues raised in the original Standards Authorization Request (SAR) and the Supplemental SAR.

The standard drafting team did not attempt to edit the existing standards but rather chose to write one standard that addresses all aspects of transmission planning in the existing TPL-001-0, TPL-002-0, TPL-003-0, and TPL-004-0. The standard drafting team organized the new standard in the following sections:

R1 – Modeling requirements
R2 – Assessment and Corrective Plan requirements
R3 – Steady State Analysis requirements
R4 – Stability Analysis requirements
R5 – Coordination requirements

The standard drafting team determined that the requirements and analysis for Steady State are different from those for stability. As such, the standard drafting team separated the analysis requirements and created two performance requirement tables.

The standard drafting team recognizes that this draft standard is a starting point for industry input into the standard and that there is still a lot of work required to complete the process. The standard drafting team has made many changes to clarify requirements, add requirements, and make some of the performance requirements stricter. The standard drafting team has not addressed Measures, Risk Factors, Violation Severity Factors, or Time Horizons at this time. These will be addressed when the standard drafting team has better defined the requirements of the standard.

For questions where you agree with the standard drafting team, please state that you agree and if available, please provide supporting documentation. If you disagree with the standard drafting team, please explain why you disagree and provide data to support your position, such as outage data or analysis. If you believe that we have made a performance requirement too strict please provide supporting documentation. If applicable, please include the approximate cost in man-hours for additional studies and/or cost in $Millions for additional transmission investment to meet the new requirements or the stricter requirements. If you believe that the standard should be stricter, please provide the rationale along with any supporting data, including existing practices, cost estimates or additional analysis.

To improve the standard, the standard drafting team would appreciate responses to as many of these questions as you can answer.

A. New Definitions

Many of the concerns about the existing TPL standards come from the fact that a number of generally understood concepts are embedded in undefined terms, tables, and footnotes. To clarify some of these concerns, the standard drafting team is proposing new definitions. Please indicate whether you agree with the following proposed definitions and provide proposed changes to the definitions if you disagree:

Definition	**Agree or Disagree**
Q1. **Base Case**: Computer representation of the projected initial or starting Transmission System conditions for a specific point in time. Each base case reflects the forecasted Load at each bus (or node) on the interconnected Transmission System, the transmission facilities which deliver the generation and reactive resources to the connected Load, and the generation dispatch including firm transaction obligations assumed to supply the connected Load. The models also reflect facility ratings in accordance with FAC-008 & FAC-009.	☒Agree. ☐Do not agree.
Q1. **Comment: Delete the phrase "and reactive resources." It is redundant.**	
Q2. **Consequential Load Loss:** Load that is no longer served because it is directly connected to an element(s) that is removed from service due to fault clearing action or mis-operation.	☐Agree. ☒Do not agree.
Q2. **Comment: The term "mis-operation" introduces ambiguity into the definition, and should be deleted. The definition needs further clarification for consequential and non-consequential loads. For example, loads served downstream from the faulted element but not directly connected should also be considered to be consequential loads. A better name for this would be "direct load loss".**	
Q3. **Extreme Events:** Events which are more severe than Planning Events and have a low probability of occurrence.	☐Agree. ☒Do not agree.
Q3. **Comment: A number of the non-extreme events also have a low probability. Recommend change the word to "lower."**	
Q4. **Long-Term Transmission Planning Horizon:** Transmission planning period that covers years six through ten or beyond.	☒Agree. ☐Do not agree.
Q4. **Comment:**	
Q5. **Near-Term Transmission Planning Horizon:** Transmission planning period that covers years One through five.	☒Agree. ☐Do not agree.
Q5. **Comment: It is suggested that another definition be added for "operations planning horizon".**	
Q6. **Non-Consequential Load Loss:** Load loss other than Consequential Load Loss. For example, Load loss that occurs	☐Agree.

through manual (operator initiated) or automatic operations such as under-voltage Load shedding, under-frequency Load shedding, or Special Protection Systems.	☒Do not agree.
Q6. **Comment: A better name for this would be indirect load loss.**	
Q7. **Planning Assessment:** Documented evaluation of future Bulk Electric System needs by the use of performance studies that cover a range of assumptions regarding system conditions, time frames, future plans including capital reinforcements and operating procedures and other factors, such as asset conditions and age.	☐Agree. ☒Do not agree.
Q7. **Comment: Bulk Electric System deficiencies rather than needs should be evaluated. We do not agree that the planning assessment should include asset conditions and age. The age of equipment, if it is well maintained, has little impact on reliability. The term "and other factors" should be better defined or deleted.**	
Q8. **Planning Events:** Events which require Transmission system performance requirements to be met.	☐Agree. ☒Do not agree.
Q8. **Comment: Change to: "Events that are simulated or assessed to test the transmission system to ensure that performance requirements are met."**	
Q9. **Plant Stability Study:** Study of an individual plant's Stability for various Contingencies in the vicinity of the plant; concerned with the effect on the System of the generating units' loss of synchronism and the damping of the generating units' power oscillations.	☐Agree. ☒Do not agree.
Q9. **Comment: The definition should end at the semi-colon. The remaining part of the definition should be moved to the definition of "System Stability Study."**	
Q10. **System Stability Study:** Study of the System or portions of the System to ensure that angular Stability is maintained, inter-area power oscillations are damped, and voltages during the dynamic simulation stay within acceptable performance limits.	☐Agree. ☒Do not agree.
Q10. **Comment: see Q9 above.**	
Q11. **Year One:** The first year that a Transmission Planner is responsible for studying. This is further defined as the planning window that begins the next calendar year from the time the Transmission Planner submits their annual studies. Analysis conducted for time horizons within the calendar year from the study publication are assumed to be conducted under the auspices of Operations Planning.	☒Agree. ☐Do not agree.
Q11. **Comment: The last sentence in the above definition was not included in the definition listed in the draft standard, nor should it be.**	

B. Sensitivity Studies

The draft planning standard includes the requirement, as specified in FERC Order 693, that planning decisions be based on a portfolio of analyses. In section 12.a.ii "Sensitivity studies and critical system conditions" FERC provided direction to consider a full range of variables considered to be significant that need to be assessed and documentation provided that explains the rationale for the selection of variables assessed.

In addition to the firm obligation scenario, the portfolio of analyses should be supplemented to include information from sensitivity analysis. The sensitivity analysis should be developed using additional cases that simulate reasonably stressed system conditions. The standard drafting team has included several parameters that can be varied to create the requisite sensitivity case(s). The draft standards specify that the sensitivities reflect one or more of the following conditions and that documentation be provided explaining the rationale for selecting the sensitivity(ies) employed. The parameters that should be varied include:

- Higher or lower Load forecasts from the Base Case with variability of Load/demand and Load power factors due to season, weather, or time of day.
- Modification of expected transfers.
- Unavailability of long lead time facilities.
- Variability and outages of Reactive Resources.
- Generation additions, retirements, or other dispatch scenarios.
- Decreased effectiveness of controllable Loads and Demand Side Management.
- Modification of planned Transmission outages

To help focus industry discussion, please respond to the questions below:

Q12. Should the standard provide more specific direction regarding the number of sensitivity cases that need to be developed?

Yes ☐ No ☒

Comment: These factors vary between areas and regions. In addition the TP should be allowed to assess an alternate sensitivity if they can document that it is more appropriate,

Q13. Should the standard specify the required changes, such as changes in expected transfers, load forecasts, generation patterns, etc., from the study case to be considered a "reasonably stressed" case?

Yes ☐ No ☒

Comment: The standard may offer guidance but what constitutes a "reasonably stressed" case should be left to the discretion of the entity performing the study, since they are the best judge of what stresses the system.

Q14. The SDT proposes to require the use of sensitivity studies for Near-Term Transmission System Planning Horizon stability analysis. Do you concur with the use of sensitivity analysis in dynamic studies?

Yes ☒ No ☐

Comment: The entity performing the studies should be allowed to determine the appropriate sensitivity studies that need to be evaluated. An alternate approach is to include pre-existing system conditions that additionally stress the system during the contingencies under study so as to verify that stability is preserved under conditions that go beyond those envisioned for the contingency. Stability studies are more time consuming than conventional power flow studies. A single 20 second stability simulation is computationally equivalent to running 80 steady-state powerflow cases and has significantly larger pre-analysis preparation effort.

Q15. The draft TPL standard does not require the use of sensitivity studies for the Long-Term Transmission System Planning Horizon (year six and beyond) studies. Do you concur with this approach or should there be some level of sensitivity analysis required for the long-term period?

Yes ☒ No ☐
Comment: We concur with the current approach.

C. Corrective Action Plans

Requirement R2.7 of the standard states that when analysis shows that the performance requirements in Table 1 and Table 2 are not fully met, a Corrective Action Plan that utilizes all or some of the Transmission System enhancements, generation additions, DSM, new technologies and Operating Procedures shall be included in the Planning Assessment. This Corrective Action Plan should ensure that upon its implementation the identified system deficiencies will be corrected so that the performance requirements in Table 1 and Table 2 will be met. Furthermore, studies included in the Planning Assessment should demonstrate that this is indeed the case.

Q16. Requirement R2.7.1: Such Corrective Action Plans shall "Identify System deficiencies and the associated actions needed to achieve required System performance including Transmission and generation improvements, DSM, new technologies, or Operating Procedures including the duration of Interim Operating Procedures". System deficiencies may be corrected using an integrated plan, i.e., an optimal mix of Transmission, generation, DSM and Operating Procedures. Should DSM be considered in conjunction with other measures in developing Corrective Action Plans? If yes, please comment on how the impact of DSM should be included.

Yes ☒ No ☐
Comment: It should be included if it is a tool made available to the TP for this purpose, but only to the extent that it is considered controllable and quantifiable resource.

Q17. Requirement R2.7.2: Such Corrective Action Plans shall "Be added to study cases and the cases re-tested to show that the System with planned additions meets the performance requirements in the tables". Should new studies, including the facilities comprising the Corrective Action Plan, be performed to assess System normal performance and Contingency response for conditions that previously resulted in the System deficiencies (without the planned additions) and also demonstrate that the changes would not result in inadvertent negative impacts on the System. If you "agree", please comment on how a study area should be determined.

Yes ☐ No ☒
Comment: Re-testing should be required only where the correction may impact network flows. The study area should be determined by the TP. The TP has the most knowledge of how the system responds to changes. The majority of transmission projects consist of the upgrading of terminal equipement or conductor on one or more branches. The only significant change that such upgrade work would change in a powerflow model would be that of the branch (facility) ratings would change. It is not necessary to rerun powerflow simulations for such cases, as it can be determined by inspections whether the upgrade work would be sufficient to move the facility rating above the expected normal or contingency flow.

We agree that the Planning process should ensure that corrective actions for a particular defeciency do not lead to other deficiencies. However, the process for ensuring this is not necessarly The development of new study cases which include facilities comprising the corrective action plan and the suscetesting is not needed.

Q18. Requirement R2.7.3: The standard calls for a differentiation between committed and proposed projects. Do you agree that they should be treated separately? If not, please state why not.

Yes ☐ No ☒

Comment: The goal is to meet the system performance requirements outlined in the standard. Whether a project is proposed or committed is irrelevant. R2.7.3 should be deleted.

Q19. Requirement R2.7.4: For such Corrective Action Plans "Committed projects shall not be removed without documentation to show that the revised plan meets the performance requirements". Do you agree or disagree with this requirement? If you disagree, please explain why.

Yes ☐ No ☒

Comment: The goal is to meet the system performance requirements outlined in the standard. Whether a project is proposed or committed is irrelevant. R2.7.4 should be deleted.

D. Performance Requirements

The proposed revised planning standard (TPL-001-1) incorporates a number of changes in requirements as compared to the current planning standards (TPL-001-0 through TPL-004-0), which it is expected to replace. Among other things these changes are intended to clarify the standard, address issues described by FERC, and, in particular, to "raise the bar." Strengthening the planning standards in selected areas is necessary to maintain a reliable Bulk Electric System that is up to the challenges of the 21st Century. In proposing the requirements in this draft, the standard drafting team attempted to balance the value of increased reliability against any potential increase in work and costs to meet the new proposed standard.

The standard drafting team is seeking input from the industry to determine whether a proper balance has been achieved. The areas where material changes are proposed in this draft are enumerated below, and questions are posed by the standard drafting team to obtain industry comment. In formulating your responses, please keep in mind that material changes in the final standard will be accompanied by a transition plan to provide for an orderly implementation of the final standard.

The performance requirements relative to Non-Consequential Loss of Load for the following events enumerated in the two tables can be considered more stringent than the existing TPL standards. Furthermore, the proposed standard is based on an assumption that performance requirements for EHV facilities should be more stringent than for lower voltage facilities.

Do you agree that Non-Consequential Loss of Load should not be permitted for the following events? If you disagree, please provide a reason for your disagreement.

Event	Agree or Disagree	Comment
Q20. P2-1: Loss of bus section (SLG for stability) above 300 kV	☐Agree. ☒Do not agree.	We do not agree with the concept of non-consequential load loss. To maintain system reliability, the disconnect of any load should be allowed.
Q21. P5-1: For facilities above 300 kV, loss of a Transmission circuit followed by System adjustment[1] followed by loss of another	☐Agree. ☒Do not agree.	We do not agree with the concept of non-consequential load loss. To maintain system reliability, the disconnect of any load should be allowed.By not allowing non-consequential load loss, utilities will incur significant expenditures to solve a

Transmission circuit		problem with an extremely low probability of occurrence. The benefit will not justify the cost.
Q22. P5-2: For facilities above 300 kV, loss of a Transmission circuit followed by System adjustment followed by loss of a transformer with low side voltage rating above 300 kV	☐Agree. ☒Do not agree.	By not allowing non-consequential load loss, utilities will incur significant expenditures to solve a problem with an extremely low probability of occurrence. The benefit will not justify the cost.
Q23. P5-3: For facilities above 300 kV, loss of a transformer with low side voltage rating above 300 kV followed by System adjustment followed by loss of another transformer	☐Agree. ☒Do not agree.	By not allowing non-consequential load loss, utilities will incur significant expenditures to solve a problem with an extremely low probability of occurrence. The benefit will not justify the cost.

[1]System adjustment can be manual or automatic.

The proposed standard is based on an assumption that performance requirements for non-bus tie EHV breakers should be distinguished from other breakers. Do you agree that Non-Consequential Loss of Load should not be permitted for this event?

Q24. Loss of non-bus tie breaker (above 300 kV) due to internal fault

Yes ☐ No ☒
Comment: By not allowing non-consequential load loss, utilities will incur significant expenditures to solve a problem with an extremely low probability of occurrence. The benefit will not justify the cost.

The proposed standard is based on an assumption that performance requirements for non-bus tie EHV breakers should be distinguished from other breakers and that performance requirements for EHV facilities should be more stringent than for lower voltage facilities. Do you agree that Non-Consequential Loss of Load should not be permitted for this event?

Q25. P3-1: Loss of (SLG for stability) either a generator, a Transmission circuit, a transformer, or a bus and a stuck non-bus tie breaker (above 300 kV)

Yes ☐ No ☒
Comment: By not allowing non-consequential load loss, utilities will incur significant expenditures to solve a problem with an extremely low probability of occurrence. The benefit will not justify the cost.

The proposed standard is based on an assumption that the following events are relatively high probability events and, therefore, Non-Consequential Loss of Load should not be permitted. Do you agree? If you disagree, please provide a reason for your disagreement.

Event	Agree or Disagree	Comment

Q26. P4-1: Loss of a Generator followed by System adjustment[1] followed by loss of another Generator	☐Agree. ☒Do not agree.	The event should be tested for ensuring or maintaining reliability of the BES, however direct load loss should be allowed.
Q27. P4-2: Loss of a generator followed by a System adjustment followed by the loss of a monopolar DC line	☐Agree. ☒Do not agree.	Same comment as question #26.
Q28. P4-3: Loss of a generator followed by System adjustment followed by loss of a Transmission circuit	☐Agree. ☒Do not agree.	Same comment as question #26.
Q29. P4-4: Loss of a generator followed by System adjustment followed by loss of a transformer	☐Agree. ☒Do not agree.	Same comment as question #26.

The performance requirement for the following event may be considered less stringent than the existing TPL Standards — P2-3: Loss of a single pole of a DC line. Interruption of firm transactions (without Loss of firm Load) if the transaction is dependent on the faulted DC line is now allowed for this initiating event/Contingency.

Q30. Do you agree that interruption of any firm transfers that are dependent on the outaged DC line that is taken out of service should be permitted?

Yes ☐ No ☒
Comment: AC and DC contingency events should be treated the same.

E. Stability

Q31. The proposed standard is based on an assumption that steady state analysis and stability analysis are different from each other and that therefore, two tables of Contingencies and performance requirements were needed. It is also based on an assumption that stability study requirements should be clearly separated from the steady state study requirements. Do you agree with the action taken in separating stability analysis from steady state analysis? If not, please explain.

Yes ☒ No ☐
Comment:

Q32. The SDT has added requirements for plant stability studies and has drawn a distinction in these studies from System stability studies. Do you agree with this approach? If not, please explain.

Yes ☒ No ☐
Comment:

[1] System adjustment can be manual or automatic

Q33. The existing TPL-004-0 standard has a requirement to consider the Loss of all generating units at a plant, but it was not clear whether this requirement should apply to stability studies. The SDT did not include this requirement in the stability table, because it is hard to envision a condition when all units would trip simultaneously within the timeframe of a stability simulation. Do you think this condition should be required in stability analysis of extreme events? If not, please explain.

Yes ☐ No ☒
Comment: The transmission planner should have discretion to consider the appropriate number of units to be tripped based on the station design, and/or relay design.

Q34. There are an increasing number of events with slow voltage recovery after faults on the Transmission System. The dynamic behavior of induction motor loads is a major factor in this phenomenon. The proposed standard therefore requires that the load model for stability studies of peak Load conditions include the dynamic effects of induction motors. Do you agree with this requirement? If not, please explain?

Yes ☐ No ☒
Comment: The characterisitics of detailed induction load are generally lacking to properly model induction loads. Load modeling should be left to the judgement of the TP.

Q35. What type of manual or automatic adjustments of generators should be allowed for single and multiple Contingencies?

Comment: Any adjustments should be allowed that protects the reliability of the BES.

F. Generation Runback and Tripping

The SDT has discussed the automatic and manual readjustments of generators that should be permissible for single contingencies and multiple contingencies. The existing TPL-001-0 through TPL-004-0 standards through footnote (a) of Table I could include emergency ratings applicable for short durations as required to permit operating steps necessary to maintain system control. The footnote is silent about allowable generation adjustments in response to the Category B events. However, it does indicate that system adjustments are permitted to prepare for the next Contingency. These system adjustments could include manual or automatic adjustments involving generation.

The SDT has learned that many transmission owners use System Protection Systems (SPS) or Remedial Action Schemes (RAS) to trip generation for single and multiple Contingency outage events to prevent overloads, low voltage, and instability in the Interconnected Transmission network for N-1 and N-2 events. In some cases, the RAS are used to prepare for the next Contingency; but in some cases, the RAS are used to simultaneously avoid exceeding emergency ratings.

Q36. The proposed standard allows generation runback after the disturbance that causes a single Contingency (or due to a single Contingency outage) to move the Interconnected Transmission System from an emergency state (within emergency ratings) to a normal state (within normal ratings), assuming that the disturbance does not result in instability? Do you agree? If not, please explain.

Yes ☒ No ☐

Comment:

Q37. Since emergency ratings are thermal ratings, should this standard allow an automatic generation runback scheme (that is initiated immediately after the disturbance causing the single Contingency) to prevent thermal overloads (assuming that the disturbance does not result in instability)? If yes, what are the conditions that must be met in order to allow such a runback scheme to meet the System performance criteria for single Contingencies? Please explain the reason for your answer.

Yes ☒ No ☐
Comment: Generator runback schemes should be able to be implemented before emergency thermal rating time limits are exceeded.

The standard drafting team has considered that RAS or SPS may be allowable under certain situations for single Contingencies, but proposes that their use should be limited.

Q38. Do you agree that RAS or SPS may be allowed for single Contingencies? If not, please explain.

Yes ☒ No ☐
Comment:

Q39. Please describe the limitations that you believe should be placed on the use of RAS or SPS for single Contingency events.

Comment: There should be no stability impacts, and system security must be maintained. RAS or SPS should meet the same criteria as any protection system.

Q40. When RAS or SPS are allowed, what conditions should be met when these systems are used in system adjustments to meet performance requirements?

Comment: There should be no stability impacts, and system security must be maintained. The requirements are outlined in PRC-015,016, and 017.

G. General Questions

Q41. If you are aware of any regional variances that would be required as a result of these standards, please identify them here.

Yes ☐ No ☒
Comment:

Q42. If you are aware of any conflicts between the proposed standards and any regulatory function, rule order, tariff, rate schedule, legislative requirement or agreement, please identify them here.

Yes ☐ No ☒
Comment: The proposed standard as well as the existing standards, makes no distinction between firm (network resource) and non-firm (energy only) generation. The standards should clearly state that the standard does not apply to non-firm generation.

Q43. Do you have any other questions or concerns with the proposed standard that have not been addressed? If yes, please explain.

Yes ☒ No ☐
Comment: Transmission Planners are currently able to maintain adequate levels of reliability using the existing TPL-001 thru TPL-004 standards. While incremental improvements can be made, it is not evident that prescribing more stringent planning requirements will result in significant reliability improvements.

Table 1 in the column titled "Interruption of Firm Transfer Allowed," does it pertain to point-to-point only, or does it also apply to network loads? Please explain how this provision is consistent with the requirement to re-dispatch to address system constraints.

There are no explicit performance requirements for normal system performance.

Requirement R1.1.2 refers to "normal weather patterns as agreed to by the Planning Coordinator(s) and the Transmission Planner(s)…" The standard and the ERAG MMWG need to be made consistent.

Requirement R2.3 There are no performance requirements for Short Circuit Studies.

Requirement R2.7.1.1 specifies a "project initiation date". This information is not needed for system reliability purposes.

Requirement R3.2. There should be some flexibility for simulation of planning events. For certain areas of the BES, the resulting configuration after operator intervention could be more severe than the removal of all elements. For example, the operation of a transmission line with one end open may be more severe than opening both ends of the line. This respresents actual operation in order to restore service to stations on the line.

Requirement R3.3.2.1 requires an evaluation for "Consequential Load loss (expected maximum demand and expected duration). Load loss is not an ERO responsibility.

Requirement R3.3.2.2 does not permit the "shedding of firm Load or curtailment of firm transfers". This is not an ERO responsibility.

Requirement R3.6 states "Manual and automatic generation tripping is allowed for multiple Contingencies and for single Contingencies only in situations that meet all of the following conditions: TBD. Generators should be allowed to trip for single and multiple contingencies as long as Facility Ratings are not exceeded. In addition, generators should be allowed to trip for any condition that imperils the generator. System performance should be the criteria, not generator operating state.

Requirement R4.2 states "Contingency analyses shall simulate the removal of all elements including those that the System protection is expected to disconnect for each Contingency without operator intervention." Delete "including those".

Requirement R4.6.1 states that Plant Stability studies "Shall be performed for individual generating units 20 MW or greater…" Does this mean that studies must be performed for all units? Many plants have "sister units" that are essentially the same. This requirement seems to be excessive.

The R1 requirements should be deleted from this standard and should remain on the MOD standards. (MOD-010, MOD-012, and MOD-018)

Requirement R4.6.2 states that Plant Stability studies "Shall be performed for changes in the real power output of a generating unit by more than 10% of the existing capability or more than 20 MW whichever is greater." The meaning of this wording is unclear.

Requirement R4.6.3 states that Plant Stability studies "Shall be performed and evaluated for those Planning Events that would produce more severe System impacts and the rationale for the Contingencies selected for evaluation shall be available as supporting information and shall include an explanation of why the remaining Contingencies would produce less severe System results. The identified Contingencies, at a minimum, shall be evaluated." The use of "evaluation/evaluated is unclear. Is an evaluation the same as performing a study? If not, what does it mean to select a contingency for evaluation?

The standard needs to define or describe the difference between a "bus" and a "bus section".

Table I, P3, P7.2, P9.6 and Table 2, P7 need some punctuation for clarification.
Table I, P9.6 and Table 2, P9, why study replacing an outaged transformer with a spare?

The use of the terms "bus", "non-tie bus", and "bus section" are not clear. In P7-2 what is meant by the phrase or a bus and a stuck non-bus tie breaker ? Does this imply a bus or a bus section? How would you model this?

NERC
NORTH AMERICAN ELECTRIC RELIABILITY CORPORATION

Comment Form for First Draft of TPL-001-1 — Transmission System Planning Performance Requirements

Please use this form to submit comments on the proposed draft of TPL-001-1. Comments must be submitted by **Friday, October 26, 2007**. You may submit the completed form by e-mail to sarcomm@nerc.net with the words "TPL-001 Draft 1" in the subject line. If you have questions please contact Ed Dobrowolski at ed.dobrowolksi@nerc.net or by telephone at 609-947-3673.

Individual Commenter Information **(Complete this page for comments from one organization or individual.)**		
Name:	Wayne Guttormson	
Organization:	Submitted for Saskatchewan Power Corp. & the Sask. Regulatory Jurisdiction	
Telephone:	306-566-2166	
E-mail:	wguttormson@saskpower.com	
NERC Region (check all Regions in which your company operates)		**Registered Ballot Body Segment (check all industry segments in which your company is registered)**
☐ **ERCOT**	☒	1 — Transmission Owners
☐ **FRCC**	☐	2 — RTOs and ISOs
☒ **MRO**	☒	3 — Load-serving Entities
☐ **NPCC**	☐	4 — Transmission-dependent Utilities
☐ **RFC**	☒	5 — Electric Generators
☐ **SERC**	☒	6 — Electricity Brokers, Aggregators, and Marketers
☐ **SPP**	☐	7 — Large Electricity End Users
☐ **WECC**	☐	8 — Small Electricity End Users
☐ **NA – Not Applicable**	☐	9 — Federal, State, Provincial Regulatory or other Government Entities
	☐	10 — Regional Reliability Organizations and Regional Entities

Group Comments (Complete this page if comments are from a group.)

Group Name:

Lead Contact:

Contact Organization:

Contact Segment:

Contact Telephone:

Contact E-mail:

Additional Member Name	Additional Member Organization	Region*	Segment*

*If more than one Region or Segment applies, please list all that apply. Regional acronyms and segment numbers are shown on prior page.

Background

The purpose of this standard is to establish Transmission System planning performance requirements within the planning horizon to develop a Bulk Electric System that will operate reliably over a broad spectrum of System conditions and following a wide range of probable Contingencies. This standard will replace TPL-001-0, TPL-002-0, TPL-003-0, and TPL-004-0. The standard drafting team has not yet addressed TPL-005-0 and TPL-006-0, but will address these two standards during the next phase of the drafting process.

The major objectives of the standard drafting team are to:

1) Ensure the standard is complete and the requirements are set at an appropriate level to ensure reliability (Not Least Common Denominator)
2) Ensure that the standard is enforceable by having clearly defined requirements with unambiguous language
3) Address the issues raised by FERC Order 693, 890, and other applicable orders
4) Address the issues raised in the original Standards Authorization Request (SAR) and the Supplemental SAR.

The standard drafting team did not attempt to edit the existing standards but rather chose to write one standard that addresses all aspects of transmission planning in the existing TPL-001-0, TPL-002-0, TPL-003-0, and TPL-004-0. The standard drafting team organized the new standard in the following sections:

R1 – Modeling requirements
R2 – Assessment and Corrective Plan requirements
R3 – Steady State Analysis requirements
R4 – Stability Analysis requirements
R5 – Coordination requirements

The standard drafting team determined that the requirements and analysis for Steady State are different from those for stability. As such, the standard drafting team separated the analysis requirements and created two performance requirement tables.

The standard drafting team recognizes that this draft standard is a starting point for industry input into the standard and that there is still a lot of work required to complete the process. The standard drafting team has made many changes to clarify requirements, add requirements, and make some of the performance requirements stricter. The standard drafting team has not addressed Measures, Risk Factors, Violation Severity Factors, or Time Horizons at this time. These will be addressed when the standard drafting team has better defined the requirements of the standard.

For questions where you agree with the standard drafting team, please state that you agree and if available, please provide supporting documentation. If you disagree with the standard drafting team, please explain why you disagree and provide data to support your position, such as outage data or analysis. If you believe that we have made a performance requirement too strict please provide supporting documentation. If applicable, please include the approximate cost in man-hours for additional studies and/or cost in $Millions for additional transmission investment to meet the new requirements or the stricter requirements. If you believe that the standard should be stricter, please provide the rationale along with any supporting data, including existing practices, cost estimates or additional analysis.

To improve the standard, the standard drafting team would appreciate responses to as many of these questions as you can answer.

A. New Definitions

Many of the concerns about the existing TPL standards come from the fact that a number of generally understood concepts are embedded in undefined terms, tables, and footnotes. To clarify some of these concerns, the standard drafting team is proposing new definitions. Please indicate whether you agree with the following proposed definitions and provide proposed changes to the definitions if you disagree:

Definition	**Agree or Disagree**
Q1. **Base Case**: Computer representation of the projected initial or starting Transmission System conditions for a specific point in time. Each base case reflects the forecasted Load at each bus (or node) on the interconnected Transmission System, the transmission facilities which deliver the generation and reactive resources to the connected Load, and the generation dispatch including firm transaction obligations assumed to supply the connected Load. The models also reflect facility ratings in accordance with FAC-008 & FAC-009.	☒Agree. ☐Do not agree.
Q1. **Comment:**	
Q2. **Consequential Load Loss:** Load that is no longer served because it is directly connected to an element(s) that is removed from service due to fault clearing action or mis-operation.	☐Agree. ☒Do not agree.
Q2. **Comment: What is meant by directly connected? Local area network load is allowed to be shed in Saskatchewan. The Saskatchewan Regulatory Jurisdiction has no plans to change this unless there is technical evidence to justify the increase in reliability.**	
Q3. **Extreme Events:** Events which are more severe than Planning Events and have a low probability of occurrence.	☐Agree. ☒Do not agree.
Q3. **Comment: Suggest that the definition be changed to state "lower probability of occurrence than Planning Events."**	
Q4. **Long-Term Transmission Planning Horizon:** Transmission planning period that covers years six through ten or beyond.	☒Agree. ☐Do not agree.
Q4. **Comment:**	
Q5. **Near-Term Transmission Planning Horizon:** Transmission planning period that covers years One through five.	☒Agree. ☐Do not agree.
Q5. **Comment:**	
Q6. **Non-Consequential Load Loss:** Load loss other than Consequential Load Loss. For example, Load loss that occurs through manual (operator initiated) or automatic operations such as under-voltage Load shedding, under-frequency Load shedding,	☐Agree. ☒Do not agree.

or Special Protection Systems.	
Q6. **Comment:**	
Q7. **Planning Assessment:** Documented evaluation of future Bulk Electric System needs by the use of performance studies that cover a range of assumptions regarding system conditions, time frames, future plans including capital reinforcements and operating procedures and other factors, such as asset conditions and age.	☐Agree. ☒Do not agree.
Q7. **Comment: What is the intent "and other factors, such as asset condition and age"? Seems to broad and outside the scope of NERC. Remove it.**	
Q8. **Planning Events:** Events which require Transmission system performance requirements to be met.	☒Agree. ☐Do not agree.
Q8. **Comment:**	
Q9. **Plant Stability Study:** Study of an individual plant's Stability for various Contingencies in the vicinity of the plant; concerned with the effect on the System of the generating units' loss of synchronism and the damping of the generating units' power oscillations.	☐Agree. ☐Do not agree.
Q9. **Comment:**	
Q10. **System Stability Study:** Study of the System or portions of the System to ensure that angular Stability is maintained, inter-area power oscillations are damped, and voltages during the dynamic simulation stay within acceptable performance limits.	☐Agree. ☐Do not agree.
Q10. **Comment:**	
Q11. **Year One:** The first year that a Transmission Planner is responsible for studying. This is further defined as the planning window that begins the next calendar year from the time the Transmission Planner submits their annual studies. Analysis conducted for time horizons within the calendar year from the study publication are assumed to be conducted under the auspices of Operations Planning.	☒Agree. ☐Do not agree.
Q11. **Comment:**	

B. Sensitivity Studies

The draft planning standard includes the requirement, as specified in FERC Order 693, that planning decisions be based on a portfolio of analyses. In section 12.a.ii "Sensitivity studies and critical system conditions" FERC provided direction to consider a full range of variables considered to be significant that need to be assessed and documentation provided that explains the rationale for the selection of variables assessed.

In addition to the firm obligation scenario, the portfolio of analyses should be supplemented to include information from sensitivity analysis. The sensitivity analysis should be developed using additional cases that simulate reasonably stressed system conditions. The standard drafting team has included several parameters that can be varied to create the requisite sensitivity case(s). The draft standards specify that the sensitivities reflect one or more of the following conditions and that documentation be provided explaining the rationale for selecting the sensitivity(ies) employed. The parameters that should be varied include:

- Higher or lower Load forecasts from the Base Case with variability of Load/demand and Load power factors due to season, weather, or time of day.
- Modification of expected transfers.
- Unavailability of long lead time facilities.
- Variability and outages of Reactive Resources.
- Generation additions, retirements, or other dispatch scenarios.
- Decreased effectiveness of controllable Loads and Demand Side Management.
- Modification of planned Transmission outages

To help focus industry discussion, please respond to the questions below:

Q12. Should the standard provide more specific direction regarding the number of sensitivity cases that need to be developed?

Yes ☐ No ☒
Comment:

Q13. Should the standard specify the required changes, such as changes in expected transfers, load forecasts, generation patterns, etc., from the study case to be considered a "reasonably stressed" case?

Yes ☐ No ☒
Comment: Unnecessary micro-management of the planning process in the Saskatchewan Regulatory Jurisdiction.

Q14. The SDT proposes to require the use of sensitivity studies for Near-Term Transmission System Planning Horizon stability analysis. Do you concur with the use of sensitivity analysis in dynamic studies?

Yes ☐ No ☐
Comment:

Q15. The draft TPL standard does not require the use of sensitivity studies for the Long-Term Transmission System Planning Horizon (year six and beyond) studies. Do you concur with this approach or should there be some level of sensitivity analysis required for the long-term period?

Yes ☒ No ☐
Comment:

C. Corrective Action Plans

Requirement R2.7 of the standard states that when analysis shows that the performance requirements in Table 1 and Table 2 are not fully met, a Corrective Action Plan that utilizes all or some of the Transmission System enhancements, generation additions, DSM, new technologies and Operating Procedures shall be included in the Planning Assessment. This Corrective Action Plan should ensure that upon its implementation the identified system deficiencies will be corrected so that the performance requirements in Table 1 and Table 2 will be met. Furthermore, studies included in the Planning Assessment should demonstrate that this is indeed the case.

Q16. Requirement R2.7.1: Such Corrective Action Plans shall "Identify System deficiencies and the associated actions needed to achieve required System performance

including Transmission and generation improvements, DSM, new technologies, or Operating Procedures including the duration of Interim Operating Procedures". System deficiencies may be corrected using an integrated plan, i.e., an optimal mix of Transmission, generation, DSM and Operating Procedures. Should DSM be considered in conjunction with other measures in developing Corrective Action Plans? If yes, please comment on how the impact of DSM should be included.

Yes ☐ No ☒
Comment:

Q17. Requirement R2.7.2: Such Corrective Action Plans shall "Be added to study cases and the cases re-tested to show that the System with planned additions meets the performance requirements in the tables". Should new studies, including the facilities comprising the Corrective Action Plan, be performed to assess System normal performance and Contingency response for conditions that previously resulted in the System deficiencies (without the planned additions) and also demonstrate that the changes would not result in inadvertent negative impacts on the System. If you "agree", please comment on how a study area should be determined.

Yes ☐ No ☒
Comment:

Q18. Requirement R2.7.3: The standard calls for a differentiation between committed and proposed projects. Do you agree that they should be treated separately? If not, please state why not.

Yes ☒ No ☐
Comment:

Q19. Requirement R2.7.4: For such Corrective Action Plans "Committed projects shall not be removed without documentation to show that the revised plan meets the performance requirements". Do you agree or disagree with this requirement? If you disagree, please explain why.

Yes ☐ No ☒
Comment:

D. Performance Requirements

The proposed revised planning standard (TPL-001-1) incorporates a number of changes in requirements as compared to the current planning standards (TPL-001-0 through TPL-004-0), which it is expected to replace. Among other things these changes are intended to clarify the standard, address issues described by FERC, and, in particular, to "raise the bar." Strengthening the planning standards in selected areas is necessary to maintain a reliable Bulk Electric System that is up to the challenges of the 21st Century. In proposing the requirements in this draft, the standard drafting team attempted to balance the value of increased reliability against any potential increase in work and costs to meet the new proposed standard.

The standard drafting team is seeking input from the industry to determine whether a proper balance has been achieved. The areas where material changes are proposed in this draft are enumerated below, and questions are posed by the standard drafting team to obtain industry comment. In formulating your responses, please keep in mind that material

changes in the final standard will be accompanied by a transition plan to provide for an orderly implementation of the final standard.

The performance requirements relative to Non-Consequential Loss of Load for the following events enumerated in the two tables can be considered more stringent than the existing TPL standards. Furthermore, the proposed standard is based on an assumption that performance requirements for EHV facilities should be more stringent than for lower voltage facilities.

Do you agree that Non-Consequential Loss of Load should not be permitted for the following events? If you disagree, please provide a reason for your disagreement.

Event	Agree or Disagree	Comment
Q20. P2-1: Loss of bus section (SLG for stability) above 300 kV	☐Agree. ☒Do not agree.	The SDT should justify that the benefit to customers of this increased reliability justifies the cost.
Q21. P5-1: For facilities above 300 kV, loss of a Transmission circuit followed by System adjustment[1] followed by loss of another Transmission circuit	☐Agree. ☒Do not agree.	The SDT should justify that the benefit to customers of this increased reliability justifies the cost.
Q22. P5-2: For facilities above 300 kV, loss of a Transmission circuit followed by System adjustment followed by loss of a transformer with low side voltage rating above 300 kV	☐Agree. ☒Do not agree.	The SDT should justify that the benefit to customers of this increased reliability justifies the cost.
Q23. P5-3: For facilities above 300 kV, loss of a transformer with low side voltage rating above 300 kV followed by System adjustment followed by loss of another transformer	☐Agree. ☒Do not agree.	The SDT should justify that the benefit to customers of this increased reliability justifies the cost.

[1]System adjustment can be manual or automatic.

The proposed standard is based on an assumption that performance requirements for non-bus tie EHV breakers should be distinguished from other breakers. Do you agree that Non-Consequential Loss of Load should not be permitted for this event?

Q24. Loss of non-bus tie breaker (above 300 kV) due to internal fault

Yes ☐ No ☒
Comment: The SDT should justify that the benefit to customers of this increased reliability justifies the cost.

The proposed standard is based on an assumption that performance requirements for non-bus tie EHV breakers should be distinguished from other breakers and that performance requirements for EHV facilities should be more stringent than for lower voltage facilities. Do you agree that Non-Consequential Loss of Load should not be permitted for this event?

Q25. P3-1: Loss of (SLG for stability) either a generator, a Transmission circuit, a transformer, or a bus and a stuck non-bus tie breaker (above 300 kV)

Yes ☐ No ☒
Comment: The SDT should justify that the benefit to customers of this increased reliability justifies the cost.

The proposed standard is based on an assumption that the following events are relatively high probability events and, therefore, Non-Consequential Loss of Load should not be permitted. Do you agree? If you disagree, please provide a reason for your disagreement.

Event	Agree or Disagree	Comment
Q26. P4-1: Loss of a Generator followed by System adjustment[1] followed by loss of another Generator	☐Agree. ☒Do not agree.	Local area network load is allowed to be shed in Saskatchewan. The Saskatchewan Regulatory Jurisdiction has no plans to change this unless there is technical evidence to justify the increase in reliability. The SDT should justify that the benefit to customers of this increased reliability justifies the cost.
Q27. P4-2: Loss of a generator followed by a System adjustment followed by the loss of a monopolar DC line	☐Agree. ☒Do not agree.	Local area network load is allowed to be shed in Saskatchewan. The Saskatchewan Regulatory Jurisdiction has no plans to change this unless there is technical evidence to justify the increase in reliability. The SDT should justify that the benefit to customers of this increased reliability justifies the cost.
Q28. P4-3: Loss of a generator followed by System adjustment followed by loss of a Transmission circuit	☐Agree. ☒Do not agree.	Local area network load is allowed to be shed in Saskatchewan. The Saskatchewan Regulatory Jurisdiction has no plans to change this unless there is technical evidence to justify the increase in reliability. The SDT should justify that the benefit to customers of this increased reliability justifies the cost.
Q29. P4-4: Loss of a generator followed by System adjustment followed by loss of a transformer with low side voltage rating above	☐Agree. ☐Do not agree.	

[1] System adjustment can be manual or automatic

300 kV		

The performance requirement for the following event may be considered less stringent than the existing TPL Standards — P2-3: Loss of a single pole of a DC line. Interruption of firm transactions (without Loss of firm Load) if the transaction is dependent on the faulted DC line is now allowed for this initiating event/Contingency.

Q30. Do you agree that interruption of any firm transfers that are dependent on the outaged DC line that is taken out of service should be permitted?

Yes ☒ No ☐
Comment: Why is this concept not applied to AC tie-lines between systems, whether single or multiple? In Saskatchewan's case there is very little difference.

E. Stability

Q31. The proposed standard is based on an assumption that steady state analysis and stability analysis are different from each other and that therefore, two tables of Contingencies and performance requirements were needed. It is also based on an assumption that stability study requirements should be clearly separated from the steady state study requirements. Do you agree with the action taken in separating stability analysis from steady state analysis? If not, please explain.

Yes ☒ No ☐
Comment:

Q32. The SDT has added requirements for plant stability studies and has drawn a distinction in these studies from System stability studies. Do you agree with this approach? If not, please explain.

Yes ☐ No ☐
Comment:

Q33. The existing TPL-004-0 standard has a requirement to consider the Loss of all generating units at a plant, but it was not clear whether this requirement should apply to stability studies. The SDT did not include this requirement in the stability table, because it is hard to envision a condition when all units would trip simultaneously within the timeframe of a stability simulation. Do you think this condition should be required in stability analysis of extreme events? If not, please explain.

Yes ☐ No ☒
Comment: What is the purpose of requiring this event or any other extreme event to be studied? We see little benefit in this. In the Saskatchewan context we accept the risk and consequences for extreme events as there is usually very little justification for the increase in reliability versus the economic cost. Saskatchewan plans and designs its system to fail safe in those events and restores the system thereafter.

Q34. There are an increasing number of events with slow voltage recovery after faults on the Transmission System. The dynamic behavior of induction motor loads is a major factor in this phenomenon. The proposed standard therefore requires that the load model for stability studies of peak Load conditions include the dynamic effects of induction motors. Do you agree with this requirement? If not, please explain?

Yes ☒ No ☐
Comment:

Q35. What type of manual or automatic adjustments of generators should be allowed for single and multiple Contingencies?

Comment: The amount of generation change should be limited to the amount that can be accomplished within the allowed readjustment period. Due consideration should be given to start up time and ramp rates of the units. Generation rejection should not exceed the normal operating reserve.

F. Generation Runback and Tripping

The SDT has discussed the automatic and manual readjustments of generators that should be permissible for single contingencies and multiple contingencies. The existing TPL-001-0 through TPL-004-0 standards through footnote (a) of Table I could include emergency ratings applicable for short durations as required to permit operating steps necessary to maintain system control. The footnote is silent about allowable generation adjustments in response to the Category B events. However, it does indicate that system adjustments are permitted to prepare for the next Contingency. These system adjustments could include manual or automatic adjustments involving generation.

The SDT has learned that many transmission owners use System Protection Systems (SPS) or Remedial Action Schemes (RAS) to trip generation for single and multiple Contingency outage events to prevent overloads, low voltage, and instability in the Interconnected Transmission network for N-1 and N-2 events. In some cases, the RAS are used to prepare for the next Contingency; but in some cases, the RAS are used to simultaneously avoid exceeding emergency ratings.

Q36. The proposed standard allows generation runback after the disturbance that causes a single Contingency (or due to a single Contingency outage) to move the Interconnected Transmission System from an emergency state (within emergency ratings) to a normal state (within normal ratings), assuming that the disturbance does not result in instability? Do you agree? If not, please explain.

Yes ☒ No ☐
Comment:

Q37. Since emergency ratings are thermal ratings, should this standard allow an automatic generation runback scheme (that is initiated immediately after the disturbance causing the single Contingency) to prevent thermal overloads (assuming that the disturbance does not result in instability)? If yes, what are the conditions that must be met in order to allow such a runback scheme to meet the System performance criteria for single Contingencies? Please explain the reason for your answer.

Yes ☒ No ☐
Comment:
Several generation run back or generation rejection schemes are used in Saskatchewan to restore facility loading to with normal ratings. The costs of not using these schemes would involve substantial increased investments and environmental impacts unacceptable in the Saskatchewan Regulatory Jurisdiction. Conditions are

determined on a case by case basis. However, the generation runback or generation rejection scheme should not exceed the normal operating reserve.

The standard drafting team has considered that RAS or SPS may be allowable under certain situations for single Contingencies, but proposes that their use should be limited.

Q38. Do you agree that RAS or SPS may be allowed for single Contingencies? If not, please explain.

Yes ☒ No ☐
Comment:

Q39. Please describe the limitations that you believe should be placed on the use of RAS or SPS for single Contingency events.

Comment: Delegate this issue to the Planning Coordinators.

Q40. When RAS or SPS are allowed, what conditions should be met when these systems are used in system adjustments to meet performance requirements?

Comment: Delegate this issue to the Planning Coordinators.

G. General Questions

Q41. If you are aware of any regional variances that would be required as a result of these standards, please identify them here.

Yes ☐ No ☐
Comment:

Q42. If you are aware of any conflicts between the proposed standards and any regulatory function, rule order, tariff, rate schedule, legislative requirement or agreement, please identify them here.

Yes ☐ No ☐
Comment:

Q43. Do you have any other questions or concerns with the proposed standard that have not been addressed? If yes, please explain.

Yes ☐ No ☐
Comment: Saskatchewan commends the SDT for taking on this difficult and important task. We wish you good fortune.

Local area network load is allowed to be shed in Saskatchewan for single contingencies, and the interruption of firm transfers are allowed over our DC tie and AC tie-lines. The Saskatchewan Regulatory Jurisdiction has no plans to change this unless there is technical evidence to justify the increase in reliability versus the cost.

Also for P9-1, is there any justification for the selection of one mile? If there is none the development of exemption criterion should be delegated to the Planning Coordinator. It is not what Saskatchewan has used in designing its system, and it is going to involve a significant capital outlay for Saskatchewan with questionable reliability benefits.

Saskatchewan will not support the default value of 1 mile unless there is a technical study (including reliability benefit versus cost) to support it as opposed to any other distance.

NERC
NORTH AMERICAN ELECTRIC RELIABILITY CORPORATION

Comment Form for First Draft of TPL-001-1 — Transmission System Planning Performance Requirements

Please use this form to submit comments on the proposed draft of TPL-001-1. Comments must be submitted by **Friday, October 26, 2007**. You may submit the completed form by e-mail to sarcomm@nerc.net with the words "TPL-001 Draft 1" in the subject line. If you have questions please contact Ed Dobrowolski at ed.dobrowolksi@nerc.net or by telephone at 609-947-3673.

Individual Commenter Information **(Complete this page for comments from one organization or individual.)**		
Name:	Scott Inglebritson	
Organization:	Seattle City Light	
Telephone:	206-684-3491	
E-mail:	scott.inglebritson@seattle.gov	
NERC Region (check all Regions in which your company operates)		**Registered Ballot Body Segment (check all industry segments in which your company is registered)**
☐ **ERCOT**	☒	1 — Transmission Owners
☐ **FRCC**	☐	2 — RTOs and ISOs
☐ **MRO**	☒	3 — Load-serving Entities
☐ **NPCC**	☒	4 — Transmission-dependent Utilities
☐ **RFC**	☒	5 — Electric Generators
☐ **SERC**	☐	6 — Electricity Brokers, Aggregators, and Marketers
☐ **SPP**	☐	7 — Large Electricity End Users
☒ **WECC**	☐	8 — Small Electricity End Users
☐ **NA – Not Applicable**	☐	9 — Federal, State, Provincial Regulatory or other Government Entities
	☐	10 — Regional Reliability Organizations and Regional Entities

Group Comments (Complete this page if comments are from a group.)

Group Name:

Lead Contact:

Contact Organization:

Contact Segment:

Contact Telephone:

Contact E-mail:

Additional Member Name	Additional Member Organization	Region*	Segment*

*If more than one Region or Segment applies, please list all that apply. Regional acronyms and segment numbers are shown on prior page.

Background

The purpose of this standard is to establish Transmission System planning performance requirements within the planning horizon to develop a Bulk Electric System that will operate reliably over a broad spectrum of System conditions and following a wide range of probable Contingencies. This standard will replace TPL-001-0, TPL-002-0, TPL-003-0, and TPL-004-0. The standard drafting team has not yet addressed TPL-005-0 and TPL-006-0, but will address these two standards during the next phase of the drafting process.

The major objectives of the standard drafting team are to:

1) Ensure the standard is complete and the requirements are set at an appropriate level to ensure reliability (Not Least Common Denominator)
2) Ensure that the standard is enforceable by having clearly defined requirements with unambiguous language
3) Address the issues raised by FERC Order 693, 890, and other applicable orders
4) Address the issues raised in the original Standards Authorization Request (SAR) and the Supplemental SAR.

The standard drafting team did not attempt to edit the existing standards but rather chose to write one standard that addresses all aspects of transmission planning in the existing TPL-001-0, TPL-002-0, TPL-003-0, and TPL-004-0. The standard drafting team organized the new standard in the following sections:

R1 – Modeling requirements
R2 – Assessment and Corrective Plan requirements
R3 – Steady State Analysis requirements
R4 – Stability Analysis requirements
R5 – Coordination requirements

The standard drafting team determined that the requirements and analysis for Steady State are different from those for stability. As such, the standard drafting team separated the analysis requirements and created two performance requirement tables.

The standard drafting team recognizes that this draft standard is a starting point for industry input into the standard and that there is still a lot of work required to complete the process. The standard drafting team has made many changes to clarify requirements, add requirements, and make some of the performance requirements stricter. The standard drafting team has not addressed Measures, Risk Factors, Violation Severity Factors, or Time Horizons at this time. These will be addressed when the standard drafting team has better defined the requirements of the standard.

For questions where you agree with the standard drafting team, please state that you agree and if available, please provide supporting documentation. If you disagree with the standard drafting team, please explain why you disagree and provide data to support your position, such as outage data or analysis. If you believe that we have made a performance requirement too strict please provide supporting documentation. If applicable, please include the approximate cost in man-hours for additional studies and/or cost in $Millions for additional transmission investment to meet the new requirements or the stricter requirements. If you believe that the standard should be stricter, please provide the rationale along with any supporting data, including existing practices, cost estimates or additional analysis.

To improve the standard, the standard drafting team would appreciate responses to as many of these questions as you can answer.

A. New Definitions

Many of the concerns about the existing TPL standards come from the fact that a number of generally understood concepts are embedded in undefined terms, tables, and footnotes. To clarify some of these concerns, the standard drafting team is proposing new definitions. Please indicate whether you agree with the following proposed definitions and provide proposed changes to the definitions if you disagree:

Definition	**Agree or Disagree**
Q1. **Base Case**: Computer representation of the projected initial or starting Transmission System conditions for a specific point in time. Each base case reflects the forecasted Load at each bus (or node) on the interconnected Transmission System, the transmission facilities which deliver the generation and reactive resources to the connected Load, and the generation dispatch including firm transaction obligations assumed to supply the connected Load. The models also reflect facility ratings in accordance with FAC-008 & FAC-009.	☒Agree. ☐Do not agree.
Q1. **Comment:**	
Q2. **Consequential Load Loss:** Load that is no longer served because it is directly connected to an element(s) that is removed from service due to fault clearing action or mis-operation.	☒Agree. ☐Do not agree.
Q2. **Comment:**	
Q3. **Extreme Events:** Events which are more severe than Planning Events and have a low probability of occurrence.	☒Agree. ☐Do not agree.
Q3. **Comment:**	
Q4. **Long-Term Transmission Planning Horizon:** Transmission planning period that covers years six through ten or beyond.	☒Agree. ☐Do not agree.
Q4. **Comment:**	
Q5. **Near-Term Transmission Planning Horizon:** Transmission planning period that covers years One through five.	☒Agree. ☐Do not agree.
Q5. **Comment:**	
Q6. **Non-Consequential Load Loss:** Load loss other than Consequential Load Loss. For example, Load loss that occurs through manual (operator initiated) or automatic operations such as under-voltage Load shedding, under-frequency Load shedding, or Special Protection Systems.	☒Agree. ☐Do not agree.
Q6. **Comment:**	
Q7. **Planning Assessment:** Documented evaluation of future Bulk Electric System needs by the use of performance studies that cover a range of assumptions regarding system conditions, time	☒Agree. ☐Do not

frames, future plans including capital reinforcements and operating procedures and other factors, such as asset conditions and age.	agree.
Q7. **Comment:**	
Q8. **Planning Events:** Events which require Transmission system performance requirements to be met.	☐Agree. ☒Do not agree.
Q8. **Comment: List specific types of failures or direct us to a specific table which describes planning events.**	
Q9. **Plant Stability Study:** Study of an individual plant's Stability for various Contingencies in the vicinity of the plant; concerned with the effect on the System of the generating units' loss of synchronism and the damping of the generating units' power oscillations.	☒Agree. ☒Do not agree.
Q9. **Comment: "…in the vicinity of the plant…" needs to be more specific. How far away must we study?**	
Q10. **System Stability Study:** Study of the System or portions of the System to ensure that angular Stability is maintained, inter-area power oscillations are damped, and voltages during the dynamic simulation stay within acceptable performance limits.	☒Agree. ☐Do not agree.
Q10. **Comment:**	
Q11. **Year One:** The first year that a Transmission Planner is responsible for studying. This is further defined as the planning window that begins the next calendar year from the time the Transmission Planner submits their annual studies. Analysis conducted for time horizons within the calendar year from the study publication are assumed to be conducted under the auspices of Operations Planning.	☒Agree. ☒Do not agree.
Q11. **Comment: Base cases are developed and studied for seasons, not calendar years. Can the the Year One reference be changed to "the year beginning at the next Winter season" instead of the specific "…next calendar year"?**	

B. Sensitivity Studies

The draft planning standard includes the requirement, as specified in FERC Order 693, that planning decisions be based on a portfolio of analyses. In section 12.a.ii "Sensitivity studies and critical system conditions" FERC provided direction to consider a full range of variables considered to be significant that need to be assessed and documentation provided that explains the rationale for the selection of variables assessed.

In addition to the firm obligation scenario, the portfolio of analyses should be supplemented to include information from sensitivity analysis. The sensitivity analysis should be developed using additional cases that simulate reasonably stressed system conditions. The standard drafting team has included several parameters that can be varied to create the requisite sensitivity case(s). The draft standards specify that the sensitivities reflect one or more of the following conditions and that documentation be provided explaining the rationale for selecting the sensitivity(ies) employed. The parameters that should be varied include:

- Higher or lower Load forecasts from the Base Case with variability of Load/demand and Load power factors due to season, weather, or time of day.
- Modification of expected transfers.
- Unavailability of long lead time facilities.
- Variability and outages of Reactive Resources.
- Generation additions, retirements, or other dispatch scenarios.
- Decreased effectiveness of controllable Loads and Demand Side Management.
- Modification of planned Transmission outages

To help focus industry discussion, please respond to the questions below:

Q12. Should the standard provide more specific direction regarding the number of sensitivity cases that need to be developed?

Yes ☐ No ☒
Comment: Sensitivity studies should be performed at a level higher than LSE or BA. It seems more appropriate for a RC or RRO to determine regional contingencies.

Q13. Should the standard specify the required changes, such as changes in expected transfers, load forecasts, generation patterns, etc., from the study case to be considered a "reasonably stressed" case?

Yes ☒ No ☐
Comment:

Q14. The SDT proposes to require the use of sensitivity studies for Near-Term Transmission System Planning Horizon stability analysis. Do you concur with the use of sensitivity analysis in dynamic studies?

Yes ☒ No ☐
Comment:

Q15. The draft TPL standard does not require the use of sensitivity studies for the Long-Term Transmission System Planning Horizon (year six and beyond) studies. Do you concur with this approach or should there be some level of sensitivity analysis required for the long-term period?

Yes ☒ No ☐
Comment: Conditions six years or more in the future are unpredictable and sensitivity studies would provide results of limited usefulness.

C. Corrective Action Plans

Requirement R2.7 of the standard states that when analysis shows that the performance requirements in Table 1 and Table 2 are not fully met, a Corrective Action Plan that utilizes all or some of the Transmission System enhancements, generation additions, DSM, new technologies and Operating Procedures shall be included in the Planning Assessment. This Corrective Action Plan should ensure that upon its implementation the identified system deficiencies will be corrected so that the performance requirements in Table 1 and Table 2 will be met. Furthermore, studies included in the Planning Assessment should demonstrate that this is indeed the case.

Q16. Requirement R2.7.1: Such Corrective Action Plans shall "Identify System deficiencies and the associated actions needed to achieve required System performance

including Transmission and generation improvements, DSM, new technologies, or Operating Procedures including the duration of Interim Operating Procedures". System deficiencies may be corrected using an integrated plan, i.e., an optimal mix of Transmission, generation, DSM and Operating Procedures. Should DSM be considered in conjunction with other measures in developing Corrective Action Plans? If yes, please comment on how the impact of DSM should be included.

Yes ☐ No ☒
Comment:

Q17. Requirement R2.7.2: Such Corrective Action Plans shall "Be added to study cases and the cases re-tested to show that the System with planned additions meets the performance requirements in the tables". Should new studies, including the facilities comprising the Corrective Action Plan, be performed to assess System normal performance and Contingency response for conditions that previously resulted in the System deficiencies (without the planned additions) and also demonstrate that the changes would not result in inadvertent negative impacts on the System. If you "agree", please comment on how a study area should be determined.

Yes ☒ No ☐
Comment: Sensitivity studies should be adequate to determine the study area. Starting at the corrective facility, work out bus by bus, determining sensitivity to the facility's loss. Boundaries of the study area would be defined at buses where loss sesitivity is (for example) 1% or less.

Q18. Requirement R2.7.3: The standard calls for a differentiation between committed and proposed projects. Do you agree that they should be treated separately? If not, please state why not.

Yes ☐ No ☒
Comment: Since compliance with performance guidelines is mandated, aren't all projects defined in the corrective action plans "committed" projects? Proposed projects in the context of Requirement 2.7 should only exist in the studies to determine which remedial solution(s) comprise the Corrective Action Plan.

Q19. Requirement R2.7.4: For such Corrective Action Plans "Committed projects shall not be removed without documentation to show that the revised plan meets the performance requirements". Do you agree or disagree with this requirement? If you disagree, please explain why.

Yes ☒ No ☐
Comment: To agree with the comment in Q18, the requirement should read "Corrective Action Plans shall not be modified without documentation to show that the revised plan meets the performance requirements."

D. Performance Requirements

The proposed revised planning standard (TPL-001-1) incorporates a number of changes in requirements as compared to the current planning standards (TPL-001-0 through TPL-004-0), which it is expected to replace. Among other things these changes are intended to clarify the standard, address issues described by FERC, and, in particular, to "raise the bar." Strengthening the planning standards in selected areas is necessary to maintain a reliable Bulk Electric System that is up to the challenges of the 21st Century. In proposing the requirements in this draft, the standard drafting team attempted to balance the value of increased reliability against any potential increase in work and costs to meet the new proposed standard.

The standard drafting team is seeking input from the industry to determine whether a proper balance has been achieved. The areas where material changes are proposed in this draft are enumerated below, and questions are posed by the standard drafting team to obtain industry comment. In formulating your responses, please keep in mind that material changes in the final standard will be accompanied by a transition plan to provide for an orderly implementation of the final standard.

The performance requirements relative to Non-Consequential Loss of Load for the following events enumerated in the two tables can be considered more stringent than the existing TPL standards. Furthermore, the proposed standard is based on an assumption that performance requirements for EHV facilities should be more stringent than for lower voltage facilities.

Do you agree that Non-Consequential Loss of Load should not be permitted for the following events? If you disagree, please provide a reason for your disagreement.

Event	Agree or Disagree	Comment
Q20. P2-1: Loss of bus section (SLG for stability) above 300 kV	☒Agree. ☐Do not agree.	
Q21. P5-1: For facilities above 300 kV, loss of a Transmission circuit followed by System adjustment[1] followed by loss of another Transmission circuit	☐Agree. ☒Do not agree.	Loss of two major HV elements can drive our region into undervoltage conditions, forcing us to shed non-consequential load per UVLS standard requirements.
Q22. P5-2: For facilities above 300 kV, loss of a Transmission circuit followed by System adjustment followed by loss of a transformer with low side voltage rating above 300 kV	☐Agree. ☒Do not agree.	Same as Q21, loss of elements of this size may initiate UVLS.
Q23. P5-3: For facilities above 300 kV, loss of a transformer with low side voltage rating above 300 kV followed by System adjustment followed by loss of another transformer	☐Agree. ☒Do not agree.	Same as Q21.

[1]System adjustment can be manual or automatic.

The proposed standard is based on an assumption that performance requirements for non-bus tie EHV breakers should be distinguished from other breakers. Do you agree that Non-Consequential Loss of Load should not be permitted for this event?

Q24. Loss of non-bus tie breaker (above 300 kV) due to internal fault

Yes ☐ No ☒
Comment: Adequacy of HV supply is outside of our control but may have a detrimental effect on our system. We should not be required to supplement the existing high-voltage infrastructure when it is the responsibility of the transmission owner. If the intent of this requirement is to prevent downstream load loss caused by a fault in the 300kV beloning to the transmission owner, then we agree. We must be able to shed load when our supply is cut.

The proposed standard is based on an assumption that performance requirements for non-bus tie EHV breakers should be distinguished from other breakers and that performance requirements for EHV facilities should be more stringent than for lower voltage facilities. Do you agree that Non-Consequential Loss of Load should not be permitted for this event?

Q25. P3-1: Loss of (SLG for stability) either a generator, a Transmission circuit, a transformer, or a bus and a stuck non-bus tie breaker (above 300 kV)

Yes ☐ No ☒
Comment: As in Q24. Certain combinations in the HV supply system will force us to shed load.

The proposed standard is based on an assumption that the following events are relatively high probability events and, therefore, Non-Consequential Loss of Load should not be permitted. Do you agree? If you disagree, please provide a reason for your disagreement.

Event	Agree or Disagree	Comment
Q26. P4-1: Loss of a Generator followed by System adjustment[1] followed by loss of another Generator	☒Agree. ☐Do not agree.	
Q27. P4-2: Loss of a generator followed by a System adjustment followed by the loss of a monopolar DC line	☒Agree. ☐Do not agree.	
Q28. P4-3: Loss of a generator followed by System adjustment followed by loss of a Transmission circuit	☒Agree. ☐Do not agree.	
Q29. P4-4: Loss of a generator followed by System adjustment followed by loss of a transformer with low side voltage rating above 300 kV	☒Agree. ☐Do not agree.	

[1] System adjustment can be manual or automatic

The performance requirement for the following event may be considered less stringent than the existing TPL Standards — P2-3: Loss of a single pole of a DC line. Interruption of firm transactions (without Loss of firm Load) if the transaction is dependent on the faulted DC line is now allowed for this initiating event/Contingency.

Q30. Do you agree that interruption of any firm transfers that are dependent on the outaged DC line that is taken out of service should be permitted?

Yes ☒ No ☐
Comment: Otherwise, we need reserve transfer capacity equal to the total of the firm transfers, which is not very cost effective!

E. Stability

Q31. The proposed standard is based on an assumption that steady state analysis and stability analysis are different from each other and that therefore, two tables of Contingencies and performance requirements were needed. It is also based on an assumption that stability study requirements should be clearly separated from the steady state study requirements. Do you agree with the action taken in separating stability analysis from steady state analysis? If not, please explain.

Yes ☒ No ☐
Comment:

Q32. The SDT has added requirements for plant stability studies and has drawn a distinction in these studies from System stability studies. Do you agree with this approach? If not, please explain.

Yes ☒ No ☐
Comment:

Q33. The existing TPL-004-0 standard has a requirement to consider the Loss of all generating units at a plant, but it was not clear whether this requirement should apply to stability studies. The SDT did not include this requirement in the stability table, because it is hard to envision a condition when all units would trip simultaneously within the timeframe of a stability simulation. Do you think this condition should be required in stability analysis of extreme events? If not, please explain.

Yes ☒ No ☐
Comment:

Q34. There are an increasing number of events with slow voltage recovery after faults on the Transmission System. The dynamic behavior of induction motor loads is a major factor in this phenomenon. The proposed standard therefore requires that the load model for stability studies of peak Load conditions include the dynamic effects of induction motors. Do you agree with this requirement? If not, please explain?

Yes ☒ No ☐
Comment:

Q35. What type of manual or automatic adjustments of generators should be allowed for single and multiple Contingencies?

Comment: Any adjustment required to respond to a contingency should be allowed, unless it adversely impacts the regional system.

F. Generation Runback and Tripping

The SDT has discussed the automatic and manual readjustments of generators that should be permissible for single contingencies and multiple contingencies. The existing TPL-001-0 through TPL-004-0 standards through footnote (a) of Table I could include emergency ratings applicable for short durations as required to permit operating steps necessary to maintain system control. The footnote is silent about allowable generation adjustments in response to the Category B events. However, it does indicate that system adjustments are permitted to prepare for the next Contingency. These system adjustments could include manual or automatic adjustments involving generation.

The SDT has learned that many transmission owners use System Protection Systems (SPS) or Remedial Action Schemes (RAS) to trip generation for single and multiple Contingency outage events to prevent overloads, low voltage, and instability in the Interconnected Transmission network for N-1 and N-2 events. In some cases, the RAS are used to prepare for the next Contingency; but in some cases, the RAS are used to simultaneously avoid exceeding emergency ratings.

Q36. The proposed standard allows generation runback after the disturbance that causes a single Contingency (or due to a single Contingency outage) to move the Interconnected Transmission System from an emergency state (within emergency ratings) to a normal state (within normal ratings), assuming that the disturbance does not result in instability? Do you agree? If not, please explain.

Yes ☒ No ☐
Comment:

Q37. Since emergency ratings are thermal ratings, should this standard allow an automatic generation runback scheme (that is initiated immediately after the disturbance causing the single Contingency) to prevent thermal overloads (assuming that the disturbance does not result in instability)? If yes, what are the conditions that must be met in order to allow such a runback scheme to meet the System performance criteria for single Contingencies? Please explain the reason for your answer.

Yes ☒ No ☐
Comment: Runback should be allowed to prevent a possible cascading outage which might result from the thermal overload, but only to that level needed to protect the equipment, to address the contingency, or to prepare for the next contingency. If the runback level is lower than the normal rating, it should be shown that this runback will not harm the stability of the system.

The standard drafting team has considered that RAS or SPS may be allowable under certain situations for single Contingencies, but proposes that their use should be limited.

Q38. Do you agree that RAS or SPS may be allowed for single Contingencies? If not, please explain.

Yes ☒ No ☐

Comment:

Q39. Please describe the limitations that you believe should be placed on the use of RAS or SPS for single Contingency events.

Comment: All RAS or SPS schemes should be evaluated to determine the impact on the interconnected system. Actions that derate transfer paths should not be allowed unless essential to protecting equipment or anticipating the next contingency.

Q40. When RAS or SPS are allowed, what conditions should be met when these systems are used in system adjustments to meet performance requirements?

Comment: Actions should be intended to address contingency, prevent damage, or prepare for next contingency.

G. General Questions

Q41. If you are aware of any regional variances that would be required as a result of these standards, please identify them here.

Yes ☐ No ☐
Comment:

Q42. If you are aware of any conflicts between the proposed standards and any regulatory function, rule order, tariff, rate schedule, legislative requirement or agreement, please identify them here.

Yes ☐ No ☐
Comment:

Q43. Do you have any other questions or concerns with the proposed standard that have not been addressed? If yes, please explain.

Yes ☒ No ☐
Comment: The additional studies required by this proposed standards are going to put a burden on our utility. We do not have the additional human resources available to perform so much additional work. Also, the stipulation that no "non-consequential load" loss may occur will put a financial burden on our utility. We have always planned assuming that we would able to be shed residential load in case of an emergency caused by a N-2 event or regional outage beyond our control.

NERC
NORTH AMERICAN ELECTRIC RELIABILITY CORPORATION

Comment Form for First Draft of TPL-001-1 — Transmission System Planning Performance Requirements

Please use this form to submit comments on the proposed draft of TPL-001-1. Comments must be submitted by **Friday, October 26, 2007**. You may submit the completed form by e-mail to sarcomm@nerc.net with the words "TPL-001 Draft 1" in the subject line. If you have questions please contact Ed Dobrowolski at ed.dobrowolksi@nerc.net or by telephone at 609-947-3673.

Individual Commenter Information **(Complete this page for comments from one organization or individual.)**		
Name:		
Organization:		
Telephone:		
E-mail:		
NERC Region (check all Regions in which your company operates)		**Registered Ballot Body Segment (check all industry segments in which your company is registered)**
☐ **ERCOT**	☐	1 — Transmission Owners
☐ **FRCC**	☐	2 — RTOs and ISOs
☐ **MRO**	☐	3 — Load-serving Entities
☐ **NPCC**	☐	4 — Transmission-dependent Utilities
☐ **RFC**	☐	5 — Electric Generators
☐ **SERC**	☐	6 — Electricity Brokers, Aggregators, and Marketers
☐ **SPP**	☐	7 — Large Electricity End Users
☐ **WECC**	☐	8 — Small Electricity End Users
☐ **NA – Not Applicable**	☐	9 — Federal, State, Provincial Regulatory or other Government Entities
	☐	10 — Regional Reliability Organizations and Regional Entities

Group Comments (Complete this page if comments are from a group.)

Group Name: **SERC EC Dynamics Review Subcommittee (DRS)**

Lead Contact: **Sharma Kolluri**

Contact Organization: **Entergy**

Contact Segment: **1**

Contact Telephone: **504-576-4045**

Contact E-mail: **vkollur@entergy.com**

Additional Member Name	Additional Member Organization	Region*	Segment*
Rick Foster	Ameren	**SERC**	1
Anthony Williams	Duke Energy Carolinas	SERC	1
Sujit Mandal	Entergy	SERC	1
John O'Connor	Progress Energy Carolinas	SERC	1
Bob Jones	Southern Company Services, Inc. - Trans	SERC	1
Lee Taylor	Southern Company Services, Inc. - Trans	SERC	1
Tom Cain	Tennessee Valley Authority	SERC	1

*If more than one Region or Segment applies, please list all that apply. Regional acronyms and segment numbers are shown on prior page.

Background

The purpose of this standard is to establish Transmission System planning performance requirements within the planning horizon to develop a Bulk Electric System that will operate reliably over a broad spectrum of System conditions and following a wide range of probable Contingencies. This standard will replace TPL-001-0, TPL-002-0, TPL-003-0, and TPL-004-0. The standard drafting team has not yet addressed TPL-005-0 and TPL-006-0, but will address these two standards during the next phase of the drafting process.

The major objectives of the standard drafting team are to:

1) Ensure the standard is complete and the requirements are set at an appropriate level to ensure reliability (Not Least Common Denominator)
2) Ensure that the standard is enforceable by having clearly defined requirements with unambiguous language
3) Address the issues raised by FERC Order 693, 890, and other applicable orders
4) Address the issues raised in the original Standards Authorization Request (SAR) and the Supplemental SAR.

The standard drafting team did not attempt to edit the existing standards but rather chose to write one standard that addresses all aspects of transmission planning in the existing TPL-001-0, TPL-002-0, TPL-003-0, and TPL-004-0. The standard drafting team organized the new standard in the following sections:

R1 – Modeling requirements
R2 – Assessment and Corrective Plan requirements
R3 – Steady State Analysis requirements
R4 – Stability Analysis requirements
R5 – Coordination requirements

The standard drafting team determined that the requirements and analysis for Steady State are different from those for stability. As such, the standard drafting team separated the analysis requirements and created two performance requirement tables.

The standard drafting team recognizes that this draft standard is a starting point for industry input into the standard and that there is still a lot of work required to complete the process. The standard drafting team has made many changes to clarify requirements, add requirements, and make some of the performance requirements stricter. The standard drafting team has not addressed Measures, Risk Factors, Violation Severity Factors, or Time Horizons at this time. These will be addressed when the standard drafting team has better defined the requirements of the standard.

For questions where you agree with the standard drafting team, please state that you agree and if available, please provide supporting documentation. If you disagree with the standard drafting team, please explain why you disagree and provide data to support your position, such as outage data or analysis. If you believe that we have made a performance requirement too strict please provide supporting documentation. If applicable, please include the approximate cost in man-hours for additional studies and/or cost in $Millions for additional transmission investment to meet the new requirements or the stricter requirements. If you believe that the standard should be stricter, please provide the

rationale along with any supporting data, including existing practices, cost estimates or additional analysis.

To improve the standard, the standard drafting team would appreciate responses to as many of these questions as you can answer.

A. New Definitions

Many of the concerns about the existing TPL standards come from the fact that a number of generally understood concepts are embedded in undefined terms, tables, and footnotes. To clarify some of these concerns, the standard drafting team is proposing new definitions. Please indicate whether you agree with the following proposed definitions and provide proposed changes to the definitions if you disagree:

Definition	**Agree or Disagree**
Q1. **Base Case**: Computer representation of the projected initial or starting Transmission System conditions for a specific point in time. Each base case reflects the forecasted Load at each bus (or node) on the interconnected Transmission System, the transmission facilities which deliver the generation and reactive resources to the connected Load, and the generation dispatch including firm transaction obligations assumed to supply the connected Load. The models also reflect facility ratings in accordance with FAC-008 & FAC-009.	☒Agree. ☐Do not agree.
Q1. **Comment:**	
Q2. **Consequential Load Loss:** Load that is no longer served because it is directly connected to an element(s) that is removed from service due to fault clearing action or mis-operation.	☐Agree. ☒Do not agree.
Q2. **Comment: Add the following to the end of the definition: "or unintentional load lost as a direct result of the event (e.g. load dropout due to low voltages as a result of a fault)."**	
Q3. **Extreme Events:** Events which are more severe than Planning Events and have a low probability of occurrence.	☐Agree. ☒Do not agree.
Q3. **Comment: A number of the non-extreme events also have a low probability. Recommend change the word to "lower." The definition for "Extreme Events" should reference Table 1.**	
Q4. **Long-Term Transmission Planning Horizon:** Transmission planning period that covers years six through ten or beyond.	☒Agree. ☐Do not agree.
Q4. **Comment:**	
Q5. **Near-Term Transmission Planning Horizon:** Transmission planning period that covers years One through five.	☒Agree. ☐Do not agree.
Q5. **Comment:**	
Q6. **Non-Consequential Load Loss:** Load loss other than Consequential Load Loss. For example, Load loss that occurs	☒Agree.

through manual (operator initiated) or automatic operations such as under-voltage Load shedding, under-frequency Load shedding, or Special Protection Systems.	☐Do not agree.
Q6. **Comment:**	
Q7. **Planning Assessment:** Documented evaluation of future Bulk Electric System needs by the use of performance studies that cover a range of assumptions regarding system conditions, time frames, future plans including capital reinforcements and operating procedures and other factors, such as asset conditions and age.	☐Agree. ☒Do not agree.
Q7. **Comment: Delete the word "needs" and the phrase "such as asset conditions and age." We do not agree that the planning assessment should include asset conditions and age. The age of equipment, if it is well maintained, has little impact on reliability.**	
Q8. **Planning Events:** Events which require Transmission system performance requirements to be met.	☒Agree. ☐Do not agree.
Q8. **Comment:**	
Q9. **Plant Stability Study:** Study of an individual plant's Stability for various Contingencies in the vicinity of the plant; concerned with the effect on the System of the generating units' loss of synchronism and the damping of the generating units' power oscillations.	☐Agree. ☒Do not agree.
Q9. **Comment: Delete the term "the effect on the System of." The reference to "System" causes confusion with the term "System Stability Study."**	
Q10. **System Stability Study:** Study of the System or portions of the System to ensure that angular Stability is maintained, inter-area power oscillations are damped, and voltages during the dynamic simulation stay within acceptable performance limits.	☒Agree. ☐Do not agree.
Q10. **Comment:**	
Q11. **Year One:** The first year that a Transmission Planner is responsible for studying. This is further defined as the planning window that begins the next calendar year from the time the Transmission Planner submits their annual studies. Analysis conducted for time horizons within the calendar year from the study publication are assumed to be conducted under the auspices of Operations Planning.	☒Agree. ☐Do not agree.
Q11. **Comment:**	

B. Sensitivity Studies

The draft planning standard includes the requirement, as specified in FERC Order 693, that planning decisions be based on a portfolio of analyses. In section 12.a.ii "Sensitivity studies and critical system conditions" FERC provided direction to consider a full range of variables considered to be significant that need to be assessed and documentation provided that explains the rationale for the selection of variables assessed.

In addition to the firm obligation scenario, the portfolio of analyses should be supplemented to include information from sensitivity analysis. The sensitivity analysis should be developed using additional cases that simulate reasonably stressed system conditions. The standard drafting team has included several parameters that can be varied to create the

requisite sensitivity case(s). The draft standards specify that the sensitivities reflect one or more of the following conditions and that documentation be provided explaining the rationale for selecting the sensitivity(ies) employed. The parameters that should be varied include:

- Higher or lower Load forecasts from the Base Case with variability of Load/demand and Load power factors due to season, weather, or time of day.
- Modification of expected transfers.
- Unavailability of long lead time facilities.
- Variability and outages of Reactive Resources.
- Generation additions, retirements, or other dispatch scenarios.
- Decreased effectiveness of controllable Loads and Demand Side Management.
- Modification of planned Transmission outages

To help focus industry discussion, please respond to the questions below:

Q12. Should the standard provide more specific direction regarding the number of sensitivity cases that need to be developed?

Yes ☐ No ☒
Comment: The entity performing the studies has the best system specific knowledge to select the appropriate sensitivities that needs to be evaluated.

Q13. Should the standard specify the required changes, such as changes in expected transfers, load forecasts, generation patterns, etc., from the study case to be considered a "reasonably stressed" case?

Yes ☐ No ☒
Comment: The entity performing the studies has the best system specific knowledge to determine what constitutes a reasonable stressed case.

Q14. The SDT proposes to require the use of sensitivity studies for Near-Term Transmission System Planning Horizon stability analysis. Do you concur with the use of sensitivity analysis in dynamic studies?

Yes ☒ No ☐
Comment: Use of sensitivity studies is appropriate only for System Stability Studies.

Q15. The draft TPL standard does not require the use of sensitivity studies for the Long-Term Transmission System Planning Horizon (year six and beyond) studies. Do you concur with this approach or should there be some level of sensitivity analysis required for the long-term period?

Yes ☒ No ☐
Comment: We agree that sensitivity studies should not be required for the Long-Term..

C. Corrective Action Plans

Requirement R2.7 of the standard states that when analysis shows that the performance requirements in Table 1 and Table 2 are not fully met, a Corrective Action Plan that utilizes all or some of the Transmission System enhancements, generation additions, DSM, new technologies and Operating Procedures shall be included in the Planning Assessment. This Corrective Action Plan should ensure that upon its implementation the identified system deficiencies will be corrected so that the performance requirements in Table 1 and Table 2

will be met. Furthermore, studies included in the Planning Assessment should demonstrate that this is indeed the case.

Q16. Requirement R2.7.1: Such Corrective Action Plans shall "Identify System deficiencies and the associated actions needed to achieve required System performance including Transmission and generation improvements, DSM, new technologies, or Operating Procedures including the duration of Interim Operating Procedures". System deficiencies may be corrected using an integrated plan, i.e., an optimal mix of Transmission, generation, DSM and Operating Procedures. Should DSM be considered in conjunction with other measures in developing Corrective Action Plans? If yes, please comment on how the impact of DSM should be included.

Yes ☐ No ☐
Comment:

Q17. Requirement R2.7.2: Such Corrective Action Plans shall "Be added to study cases and the cases re-tested to show that the System with planned additions meets the performance requirements in the tables". Should new studies, including the facilities comprising the Corrective Action Plan, be performed to assess System normal performance and Contingency response for conditions that previously resulted in the System deficiencies (without the planned additions) and also demonstrate that the changes would not result in inadvertent negative impacts on the System. If you "agree", please comment on how a study area should be determined.

Yes ☐ No ☐
Comment:

Q18. Requirement R2.7.3: The standard calls for a differentiation between committed and proposed projects. Do you agree that they should be treated separately? If not, please state why not.

Yes ☐ No ☐
Comment:

Q19. Requirement R2.7.4: For such Corrective Action Plans "Committed projects shall not be removed without documentation to show that the revised plan meets the performance requirements". Do you agree or disagree with this requirement? If you disagree, please explain why.

Yes ☐ No ☐
Comment:

D. Performance Requirements

The proposed revised planning standard (TPL-001-1) incorporates a number of changes in requirements as compared to the current planning standards (TPL-001-0 through TPL-004-0), which it is expected to replace. Among other things these changes are intended to clarify the standard, address issues described by FERC, and, in particular, to "raise the bar." Strengthening the planning standards in selected areas is necessary to maintain a reliable Bulk Electric System that is up to the challenges of the 21st Century. In proposing the requirements in this draft, the standard drafting team attempted to balance the value of increased reliability against any potential increase in work and costs to meet the new proposed standard.

The standard drafting team is seeking input from the industry to determine whether a proper balance has been achieved. The areas where material changes are proposed in this draft are enumerated below, and questions are posed by the standard drafting team to obtain industry comment. In formulating your responses, please keep in mind that material changes in the final standard will be accompanied by a transition plan to provide for an orderly implementation of the final standard.

The performance requirements relative to Non-Consequential Loss of Load for the following events enumerated in the two tables can be considered more stringent than the existing TPL standards. Furthermore, the proposed standard is based on an assumption that performance requirements for EHV facilities should be more stringent than for lower voltage facilities.

Do you agree that Non-Consequential Loss of Load should not be permitted for the following events? If you disagree, please provide a reason for your disagreement.

Event	Agree or Disagree	Comment
Q20. P2-1: Loss of bus section (SLG for stability) above 300 kV	☐Agree. ☒Do not agree.	By not allowing non-consequential load loss, utilities will incur significant expenditures to solve a problem with an extremely low probability of occurrence. The benefit will not justify the cost.
Q21. P5-1: For facilities above 300 kV, loss of a Transmission circuit followed by System adjustment[1] followed by loss of another Transmission circuit	☐Agree. ☒Do not agree.	By not allowing non-consequential load loss, utilities will incur significant expenditures to solve a problem with an extremely low probability of occurrence. The benefit will not justify the cost.
Q22. P5-2: For facilities above 300 kV, loss of a Transmission circuit followed by System adjustment followed by loss of a transformer with low side voltage rating above 300 kV	☐Agree. ☒Do not agree.	By not allowing non-consequential load loss, utilities will incur significant expenditures to solve a problem with an extremely low probability of occurrence. The benefit will not justify the cost.
Q23. P5-3: For facilities above 300 kV, loss of a transformer with low side voltage rating above 300 kV followed by System adjustment followed by loss of another transformer	☐Agree. ☒Do not agree.	By not allowing non-consequential load loss, utilities will incur significant expenditures to solve a problem with an extremely low probability of occurrence. The benefit will not justify the cost.

[1]System adjustment can be manual or automatic.

The proposed standard is based on an assumption that performance requirements for non-bus tie EHV breakers should be distinguished from other breakers. Do you agree that Non-Consequential Loss of Load should not be permitted for this event?

Q24. Loss of non-bus tie breaker (above 300 kV) due to internal fault

Yes ☐ No ☒
Comment: By not allowing non-consequential load loss, utilities will incur significant expenditures to solve a problem with an extremely low probability of occurrence. The benefit will not justify the cost. It would be helpful if "bus tie breaker" was defined (e.g. is the middle breaker in a breaker and a half scheme considered a bus tie breaker?).

The proposed standard is based on an assumption that performance requirements for non-bus tie EHV breakers should be distinguished from other breakers and that performance requirements for EHV facilities should be more stringent than for lower voltage facilities. Do you agree that Non-Consequential Loss of Load should not be permitted for this event?

Q25. P3-1: Loss of (SLG for stability) either a generator, a Transmission circuit, a transformer, or a bus and a stuck non-bus tie breaker (above 300 kV)

Yes ☐ No ☒
Comment: By not allowing non-consequential load loss, utilities will incur significant expenditures to solve a problem with an extremely low probability of occurrence. The benefit will not justify the cost.

The proposed standard is based on an assumption that the following events are relatively high probability events and, therefore, Non-Consequential Loss of Load should not be permitted. Do you agree? If you disagree, please provide a reason for your disagreement.

Event	Agree or Disagree	Comment
Q26. P4-1: Loss of a Generator followed by System adjustment[1] followed by loss of another Generator	☒Agree. ☐Do not agree.	
Q27. P4-2: Loss of a generator followed by a System adjustment followed by the loss of a monopolar DC line	☒Agree. ☐Do not agree.	
Q28. P4-3: Loss of a generator followed by System adjustment followed by loss of a Transmission circuit	☒Agree. ☐Do not agree.	
Q29. P4-4: Loss of a generator followed by System adjustment followed by loss of a transformer	☒Agree. ☐Do not agree.	

The performance requirement for the following event may be considered less stringent than the existing TPL Standards — P2-3: Loss of a single pole of a DC line. Interruption of firm transactions (without Loss of firm Load) if the transaction is dependent on the faulted DC line is now allowed for this initiating event/Contingency.

[1] System adjustment can be manual or automatic

Q30. Do you agree that interruption of any firm transfers that are dependent on the outaged DC line that is taken out of service should be permitted?

Yes ☐ No ☒
Comment: DC and AC contingency events should be treated the same.

E. Stability

Q31. The proposed standard is based on an assumption that steady state analysis and stability analysis are different from each other and that therefore, two tables of Contingencies and performance requirements were needed. It is also based on an assumption that stability study requirements should be clearly separated from the steady state study requirements. Do you agree with the action taken in separating stability analysis from steady state analysis? If not, please explain.

Yes ☒ No ☐
Comment:

Q32. The SDT has added requirements for plant stability studies and has drawn a distinction in these studies from System stability studies. Do you agree with this approach? If not, please explain.

Yes ☒ No ☐
Comment:

Q33. The existing TPL-004-0 standard has a requirement to consider the Loss of all generating units at a plant, but it was not clear whether this requirement should apply to stability studies. The SDT did not include this requirement in the stability table, because it is hard to envision a condition when all units would trip simultaneously within the timeframe of a stability simulation. Do you think this condition should be required in stability analysis of extreme events? If not, please explain.

Yes ☐ No ☒
Comment: This question conflicts with Table 2 Extreme Event 9. However, we feel it is not necessary to simulate loss of all units at a station because simultaneous loss of all units is unlikely.

Q34. There are an increasing number of events with slow voltage recovery after faults on the Transmission System. The dynamic behavior of induction motor loads is a major factor in this phenomenon. The proposed standard therefore requires that the load model for stability studies of peak Load conditions include the dynamic effects of induction motors. Do you agree with this requirement? If not, please explain?

Yes ☒ No ☒
Comment: In general this is a good practice. Dynamic studies of seasonal load conditions should include the effects of induction motors, and particularly in areas where traditional load models have indicated a problem. Unfortunately, there is a lack of data to support the amount and characteristics of the detailed induction load models in many areas. In addition to the consideration of the dynamic effects of induction motor loads, the effects of static capacitor banks installed at distribution voltage levels would need to be considered as well. Prior to making this a requirement in the reliability standards, the industry needs guidance as to how this data should be developed and maintained for models in future years. A long term transition period is required to incorporate motor models into dynamics studies.

Note that meeting such a requirement would necessitate a significant increase in the dynamic data needed to represent the system. Maintenance of such load model data would require significant resources. Load characteristics valid for a near term model might not be valid for future years.

Q35. What type of manual or automatic adjustments of generators should be allowed for single and multiple Contingencies?

Comment: Manual and automatic adjustments should be allowed for single and multiple contingencies as long as performance requirements are met.

F. Generation Runback and Tripping

The SDT has discussed the automatic and manual readjustments of generators that should be permissible for single contingencies and multiple contingencies. The existing TPL-001-0 through TPL-004-0 standards through footnote (a) of Table I could include emergency ratings applicable for short durations as required to permit operating steps necessary to maintain system control. The footnote is silent about allowable generation adjustments in response to the Category B events. However, it does indicate that system adjustments are permitted to prepare for the next Contingency. These system adjustments could include manual or automatic adjustments involving generation.

The SDT has learned that many transmission owners use System Protection Systems (SPS) or Remedial Action Schemes (RAS) to trip generation for single and multiple Contingency outage events to prevent overloads, low voltage, and instability in the Interconnected Transmission network for N-1 and N-2 events. In some cases, the RAS are used to prepare for the next Contingency; but in some cases, the RAS are used to simultaneously avoid exceeding emergency ratings.

Q36. The proposed standard allows generation runback after the disturbance that causes a single Contingency (or due to a single Contingency outage) to move the Interconnected Transmission System from an emergency state (within emergency ratings) to a normal state (within normal ratings), assuming that the disturbance does not result in instability? Do you agree? If not, please explain.

Yes ☒ No ☐
Comment:

Q37. Since emergency ratings are thermal ratings, should this standard allow an automatic generation runback scheme (that is initiated immediately after the disturbance causing the single Contingency) to prevent thermal overloads (assuming that the disturbance does not result in instability)? If yes, what are the conditions that must be met in order to allow such a runback scheme to meet the System performance criteria for single Contingencies? Please explain the reason for your answer.

Yes ☒ No ☒
Comment: The question is not clear. Generation runback schemes are acceptable as long as emergency ratings are not violated. Runback schemes should not be used to restore an element to within emergency ratings.

The standard drafting team has considered that RAS or SPS may be allowable under certain situations for single Contingencies, but proposes that their use should be limited.

Q38. Do you agree that RAS or SPS may be allowed for single Contingencies? If not, please explain.

Yes ☒ No ☐
Comment:

Q39. Please describe the limitations that you believe should be placed on the use of RAS or SPS for single Contingency events.

Comment: no limitations

Q40. When RAS or SPS are allowed, what conditions should be met when these systems are used in system adjustments to meet performance requirements?

Comment: no additional conditions except meeting performance requirements.

G. General Questions

Q41. If you are aware of any regional variances that would be required as a result of these standards, please identify them here.

Yes ☐ No ☒
Comment:

Q42. If you are aware of any conflicts between the proposed standards and any regulatory function, rule order, tariff, rate schedule, legislative requirement or agreement, please identify them here.

Yes ☐ No ☒
Comment:

Q43. Do you have any other questions or concerns with the proposed standard that have not been addressed? If yes, please explain.

Yes ☒ No ☐
Comment: In the Stability Performance Table, under contingency P8 with a line out add a generator contingency. and with a transformer out add a generator and a line contingency.

In the Stability table change the Extreme events numbering to E1, E2, etc.

In R4.6 and other locations, the generator exemption of 20 MW should be increased to 75 MVA.

NERC
NORTH AMERICAN ELECTRIC RELIABILITY CORPORATION

Comment Form for First Draft of TPL-001-1 — Transmission System Planning Performance Requirements

Please use this form to submit comments on the proposed draft of TPL-001-1. Comments must be submitted by **Friday, October 26, 2007**. You may submit the completed form by e-mail to sarcomm@nerc.net with the words "TPL-001 Draft 1" in the subject line. If you have questions please contact Ed Dobrowolski at ed.dobrowolksi@nerc.net or by telephone at 609-947-3673.

Individual Commenter Information **(Complete this page for comments from one organization or individual.)**		
Name:		
Organization:		
Telephone:		
E-mail:		
NERC Region (check all Regions in which your company operates)		**Registered Ballot Body Segment (check all industry segments in which your company is registered)**
☐ **ERCOT**	☐	1 — Transmission Owners
☐ **FRCC**	☐	2 — RTOs and ISOs
☐ **MRO**	☐	3 — Load-serving Entities
☐ **NPCC**	☐	4 — Transmission-dependent Utilities
☐ **RFC**	☐	5 — Electric Generators
☐ **SERC**	☐	6 — Electricity Brokers, Aggregators, and Marketers
☐ **SPP**	☐	7 — Large Electricity End Users
☐ **WECC**	☐	8 — Small Electricity End Users
☐ **NA – Not Applicable**	☐	9 — Federal, State, Provincial Regulatory or other Government Entities
	☐	10 — Regional Reliability Organizations and Regional Entities

Group Comments (Complete this page if comments are from a group.)

Group Name: **SERC EC Planning Standards Subcommittee**

Lead Contact: **Travis Sykes**

Contact Organization: **Tennessee Valley Authority**

Contact Segment: **1**

Contact Telephone: **423-751-4162**

Contact E-mail: **tssykes@tva.gov**

Additional Member Name	Additional Member Organization	Region*	Segment*
Darrell Pace	Alabama Electric Coooperative	**SERC**	1
John Sullivan	Ameren	SERC	1
Charles Long	Entergy	SERC	1
David Weekley	MEAG Power	SERC	1
Allen McKee	Midwest ISO (MISO)	SERC, MRO, RFC	2
Pat Huntley	SERC Reliability Corp	SERC	10
Phil Kleckley	SC Electric and Gas	SERC	3
Bob Jones	Southern Company Services	SERC	1

*If more than one Region or Segment applies, please list all that apply. Regional acronyms and segment numbers are shown on prior page.

Background

The purpose of this standard is to establish Transmission System planning performance requirements within the planning horizon to develop a Bulk Electric System that will operate reliably over a broad spectrum of System conditions and following a wide range of probable Contingencies. This standard will replace TPL-001-0, TPL-002-0, TPL-003-0, and TPL-004-0. The standard drafting team has not yet addressed TPL-005-0 and TPL-006-0, but will address these two standards during the next phase of the drafting process.

The major objectives of the standard drafting team are to:

1) Ensure the standard is complete and the requirements are set at an appropriate level to ensure reliability (Not Least Common Denominator)
2) Ensure that the standard is enforceable by having clearly defined requirements with unambiguous language
3) Address the issues raised by FERC Order 693, 890, and other applicable orders
4) Address the issues raised in the original Standards Authorization Request (SAR) and the Supplemental SAR.

The standard drafting team did not attempt to edit the existing standards but rather chose to write one standard that addresses all aspects of transmission planning in the existing TPL-001-0, TPL-002-0, TPL-003-0, and TPL-004-0. The standard drafting team organized the new standard in the following sections:

R1 – Modeling requirements
R2 – Assessment and Corrective Plan requirements
R3 – Steady State Analysis requirements
R4 – Stability Analysis requirements
R5 – Coordination requirements

The standard drafting team determined that the requirements and analysis for Steady State are different from those for stability. As such, the standard drafting team separated the analysis requirements and created two performance requirement tables.

The standard drafting team recognizes that this draft standard is a starting point for industry input into the standard and that there is still a lot of work required to complete the process. The standard drafting team has made many changes to clarify requirements, add requirements, and make some of the performance requirements stricter. The standard drafting team has not addressed Measures, Risk Factors, Violation Severity Factors, or Time Horizons at this time. These will be addressed when the standard drafting team has better defined the requirements of the standard.

For questions where you agree with the standard drafting team, please state that you agree and if available, please provide supporting documentation. If you disagree with the standard drafting team, please explain why you disagree and provide data to support your position, such as outage data or analysis. If you believe that we have made a performance requirement too strict please provide supporting documentation. If applicable, please include the approximate cost in man-hours for additional studies and/or cost in $Millions for additional transmission investment to meet the new requirements or the stricter requirements. If you believe that the standard should be stricter, please provide the

rationale along with any supporting data, including existing practices, cost estimates or additional analysis.

To improve the standard, the standard drafting team would appreciate responses to as many of these questions as you can answer.

A. New Definitions

Many of the concerns about the existing TPL standards come from the fact that a number of generally understood concepts are embedded in undefined terms, tables, and footnotes. To clarify some of these concerns, the standard drafting team is proposing new definitions. Please indicate whether you agree with the following proposed definitions and provide proposed changes to the definitions if you disagree:

Definition	**Agree or Disagree**
Q1. **Base Case**: Computer representation of the projected initial or starting Transmission System conditions for a specific point in time. Each base case reflects the forecasted Load at each bus (or node) on the interconnected Transmission System, the transmission facilities which deliver the generation and reactive resources to the connected Load, and the generation dispatch including firm transaction obligations assumed to supply the connected Load. The models also reflect facility ratings in accordance with FAC-008 & FAC-009.	☒Agree. ☐Do not agree.
Q1. **Comment:**	
Q2. **Consequential Load Loss:** Load that is no longer served because it is directly connected to an element(s) that is removed from service due to fault clearing action or mis-operation.	☐Agree. ☒Do not agree.
Q2. **Comment: The term "mis-operation" introduces ambiguity into the definition, and should be deleted. The definition needs further clarification for consequential and non-consequential loads. For example, loads served downstream from the faulted element but not directly connected should also be considered to be consequential loads.**	
Q3. **Extreme Events:** Events which are more severe than Planning Events and have a low probability of occurrence.	☐Agree. ☒Do not agree.
Q3. **Comment: A number of the non-extreme events also have a low probability. Recommend change the word to "lower." The definition for "Extreme Events" should reference Table 1.**	
Q4. **Long-Term Transmission Planning Horizon:** Transmission planning period that covers years six through ten or beyond.	☒Agree. ☐Do not agree.
Q4. **Comment:**	
Q5. **Near-Term Transmission Planning Horizon:** Transmission planning period that covers years One through five.	☒Agree. ☐Do not agree.
Q5. **Comment:**	

Q6. **Non-Consequential Load Loss:** Load loss other than Consequential Load Loss. For example, Load loss that occurs through manual (operator initiated) or automatic operations such as under-voltage Load shedding, under-frequency Load shedding, or Special Protection Systems.	☒Agree. ☐Do not agree.
Q6. **Comment:**	
Q7. **Planning Assessment:** Documented evaluation of future Bulk Electric System needs by the use of performance studies that cover a range of assumptions regarding system conditions, time frames, future plans including capital reinforcements and operating procedures and other factors, such as asset conditions and age.	☐Agree. ☒Do not agree.
Q7. **Comment: Bulk Electric System deficiencies rather than needs should be evaluated. We do not agree that the planning assessment should include asset conditions and age. The age of equipment, if it is well maintained, has little impact on reliability.**	
Q8. **Planning Events:** Events which require Transmission system performance requirements to be met.	☐Agree. ☒Do not agree.
Q8. **Comment: Change to: "Events that are simulated or assessed to test the transmission system to ensure that performance requirements are met."**	
Q9. **Plant Stability Study:** Study of an individual plant's Stability for various Contingencies in the vicinity of the plant; concerned with the effect on the System of the generating units' loss of synchronism and the damping of the generating units' power oscillations.	☒Agree. ☐Do not agree.
Q9. **Comment: Change "System" to "Bulk Electric System." Need a definition for "plant."**	
Q10. **System Stability Study:** Study of the System or portions of the System to ensure that angular Stability is maintained, inter-area power oscillations are damped, and voltages during the dynamic simulation stay within acceptable performance limits.	☒Agree. ☐Do not agree.
Q10. **Comment: Change "System" to "Bulk Electric System."**	
Q11. **Year One:** The first year that a Transmission Planner is responsible for studying. This is further defined as the planning window that begins the next calendar year from the time the Transmission Planner submits their annual studies. Analysis conducted for time horizons within the calendar year from the study publication are assumed to be conducted under the auspices of Operations Planning.	☒Agree. ☐Do not agree.
Q11. **Comment: The last sentence in the above definition was not included in the definition listed in the draft standard, nor should it be.**	

B. Sensitivity Studies

The draft planning standard includes the requirement, as specified in FERC Order 693, that planning decisions be based on a portfolio of analyses. In section 12.a.ii "Sensitivity studies and critical system conditions" FERC provided direction to consider a full range of variables considered to be significant that need to be assessed and documentation provided that explains the rationale for the selection of variables assessed.

In addition to the firm obligation scenario, the portfolio of analyses should be supplemented to include information from sensitivity analysis. The sensitivity analysis should be developed using additional cases that simulate reasonably stressed system conditions. The standard drafting team has included several parameters that can be varied to create the requisite sensitivity case(s). The draft standards specify that the sensitivities reflect one or more of the following conditions and that documentation be provided explaining the rationale for selecting the sensitivity(ies) employed. The parameters that should be varied include:

- Higher or lower Load forecasts from the Base Case with variability of Load/demand and Load power factors due to season, weather, or time of day.
- Modification of expected transfers.
- Unavailability of long lead time facilities.
- Variability and outages of Reactive Resources.
- Generation additions, retirements, or other dispatch scenarios.
- Decreased effectiveness of controllable Loads and Demand Side Management.
- Modification of planned Transmission outages

To help focus industry discussion, please respond to the questions below:

Q12. Should the standard provide more specific direction regarding the number of sensitivity cases that need to be developed?

Yes ☐ No ☒
Comment: The entity performing the studies should be allowed to determine the appropriate number of cases that need to be evaluated.

Q13. Should the standard specify the required changes, such as changes in expected transfers, load forecasts, generation patterns, etc., from the study case to be considered a "reasonably stressed" case?

Yes ☐ No ☒
Comment: The standard may offer guidance but what constitutes a "reasonably stressed" case should be left to the discretion of the entity performing the study.

Q14. The SDT proposes to require the use of sensitivity studies for Near-Term Transmission System Planning Horizon stability analysis. Do you concur with the use of sensitivity analysis in dynamic studies?

Yes ☒ No ☐
Comment: The entity performing the studies should be allowed to determine the appropriate sensitivity studies that need to be evaluated. An alternate approach is to include pre-existing system conditions that additionally stress the system during the contingencies under study so as to verify that stability is preserved under conditions that go beyond those envisioned for the contingency. Stability studies are more time consuming than conventional power flow studies. A single 20 second stability simulation is computationally equivalent to running 80 steady-state powerflow cases and has significantly larger pre-analysis preparation effort.

Q15. The draft TPL standard does not require the use of sensitivity studies for the Long-Term Transmission System Planning Horizon (year six and beyond) studies. Do you concur with this approach or should there be some level of sensitivity analysis required for the long-term period?

Yes ☒ No ☐
Comment: We concur with the current approach.

C. Corrective Action Plans

Requirement R2.7 of the standard states that when analysis shows that the performance requirements in Table 1 and Table 2 are not fully met, a Corrective Action Plan that utilizes all or some of the Transmission System enhancements, generation additions, DSM, new technologies and Operating Procedures shall be included in the Planning Assessment. This Corrective Action Plan should ensure that upon its implementation the identified system deficiencies will be corrected so that the performance requirements in Table 1 and Table 2 will be met. Furthermore, studies included in the Planning Assessment should demonstrate that this is indeed the case.

Q16. Requirement R2.7.1: Such Corrective Action Plans shall "Identify System deficiencies and the associated actions needed to achieve required System performance including Transmission and generation improvements, DSM, new technologies, or Operating Procedures including the duration of Interim Operating Procedures". System deficiencies may be corrected using an integrated plan, i.e., an optimal mix of Transmission, generation, DSM and Operating Procedures. Should DSM be considered in conjunction with other measures in developing Corrective Action Plans? If yes, please comment on how the impact of DSM should be included.

Yes ☒ No ☐
Comment: It should be included if it is a tool made available to the TP for this purpose, but only to the extent that it is considered firm.

Q17. Requirement R2.7.2: Such Corrective Action Plans shall "Be added to study cases and the cases re-tested to show that the System with planned additions meets the performance requirements in the tables". Should new studies, including the facilities comprising the Corrective Action Plan, be performed to assess System normal performance and Contingency response for conditions that previously resulted in the System deficiencies (without the planned additions) and also demonstrate that the changes would not result in inadvertent negative impacts on the System. If you "agree", please comment on how a study area should be determined.

Yes ☒ No ☐
Comment: Re-testing should be required only where the correction may impact network flows. The study area should be determined by the TP. The TP has the most knowledge of how the system responds to changes.

Q18. Requirement R2.7.3: The standard calls for a differentiation between committed and proposed projects. Do you agree that they should be treated separately? If not, please state why not.

Yes ☐ No ☒
Comment: The goal is to meet the system performance requirements outlined in the standard. Whether a project is proposed or committed is irrelevant.

Q19. Requirement R2.7.4: For such Corrective Action Plans "Committed projects shall not be removed without documentation to show that the revised plan meets the performance requirements". Do you agree or disagree with this requirement? If you disagree, please explain why.

Yes ☐ No ☒
Comment: see answer to Q18.

D. Performance Requirements

The proposed revised planning standard (TPL-001-1) incorporates a number of changes in requirements as compared to the current planning standards (TPL-001-0 through TPL-004-0), which it is expected to replace. Among other things these changes are intended to clarify the standard, address issues described by FERC, and, in particular, to "raise the bar." Strengthening the planning standards in selected areas is necessary to maintain a reliable Bulk Electric System that is up to the challenges of the 21st Century. In proposing the requirements in this draft, the standard drafting team attempted to balance the value of increased reliability against any potential increase in work and costs to meet the new proposed standard.

The standard drafting team is seeking input from the industry to determine whether a proper balance has been achieved. The areas where material changes are proposed in this draft are enumerated below, and questions are posed by the standard drafting team to obtain industry comment. In formulating your responses, please keep in mind that material changes in the final standard will be accompanied by a transition plan to provide for an orderly implementation of the final standard.

The performance requirements relative to Non-Consequential Loss of Load for the following events enumerated in the two tables can be considered more stringent than the existing TPL standards. Furthermore, the proposed standard is based on an assumption that performance requirements for EHV facilities should be more stringent than for lower voltage facilities.

Do you agree that Non-Consequential Loss of Load should not be permitted for the following events? If you disagree, please provide a reason for your disagreement.

Event	Agree or Disagree	Comment
Q20. P2-1: Loss of bus section (SLG for stability) above 300 kV	☐Agree. ☒Do not agree.	By not allowing non-consequential load loss, utilities will incur significant expenditures to solve a problem with an extremely low probability of occurrence. The benefit will not justify the cost.
Q21. P5-1: For facilities above 300 kV, loss of a Transmission circuit followed by System adjustment[1] followed by loss of another Transmission circuit	☐Agree. ☒Do not agree.	see Q20 above.
Q22. P5-2: For facilities above 300 kV, loss of a Transmission circuit followed by System adjustment followed by loss of a transformer with low side voltage rating above 300 kV	☐Agree. ☒Do not agree.	see Q20 above.
Q23. P5-3: For facilities	☐Agree.	see Q20 above.

above 300 kV, loss of a transformer with low side voltage rating above 300 kV followed by System adjustment followed by loss of another transformer	☒Do not agree.	

[1]System adjustment can be manual or automatic.

The proposed standard is based on an assumption that performance requirements for non-bus tie EHV breakers should be distinguished from other breakers. Do you agree that Non-Consequential Loss of Load should not be permitted for this event?

Q24. Loss of non-bus tie breaker (above 300 kV) due to internal fault

Yes ☐ No ☒
Comment: see Q20 above.

The proposed standard is based on an assumption that performance requirements for non-bus tie EHV breakers should be distinguished from other breakers and that performance requirements for EHV facilities should be more stringent than for lower voltage facilities. Do you agree that Non-Consequential Loss of Load should not be permitted for this event?

Q25. P3-1: Loss of (SLG for stability) either a generator, a Transmission circuit, a transformer, or a bus and a stuck non-bus tie breaker (above 300 kV)

Yes ☐ No ☒
Comment: see Q20 above.

The proposed standard is based on an assumption that the following events are relatively high probability events and, therefore, Non-Consequential Loss of Load should not be permitted. Do you agree? If you disagree, please provide a reason for your disagreement.

Event	Agree or Disagree	Comment
Q26. P4-1: Loss of a Generator followed by System adjustment[1] followed by loss of another Generator	☒Agree. ☐Do not agree.	
Q27. P4-2: Loss of a generator followed by a System adjustment followed by the loss of a monopolar DC line	☐Agree. ☐Do not agree.	
Q28. P4-3: Loss of a generator followed by System adjustment followed by loss of a Transmission circuit	☒Agree. ☐Do not agree.	

[1] System adjustment can be manual or automatic

Q29. P4-4: Loss of a generator followed by System adjustment followed by loss of a transformer	☒Agree. ☐Do not agree.	

The performance requirement for the following event may be considered less stringent than the existing TPL Standards — P2-3: Loss of a single pole of a DC line. Interruption of firm transactions (without Loss of firm Load) if the transaction is dependent on the faulted DC line is now allowed for this initiating event/Contingency.

Q30. Do you agree that interruption of any firm transfers that are dependent on the outaged DC line that is taken out of service should be permitted?

Yes ☐ No ☐
Comment:

E. Stability

Q31. The proposed standard is based on an assumption that steady state analysis and stability analysis are different from each other and that therefore, two tables of Contingencies and performance requirements were needed. It is also based on an assumption that stability study requirements should be clearly separated from the steady state study requirements. Do you agree with the action taken in separating stability analysis from steady state analysis? If not, please explain.

Yes ☒ No ☐
Comment:

Q32. The SDT has added requirements for plant stability studies and has drawn a distinction in these studies from System stability studies. Do you agree with this approach? If not, please explain.

Yes ☒ No ☐
Comment:

Q33. The existing TPL-004-0 standard has a requirement to consider the Loss of all generating units at a plant, but it was not clear whether this requirement should apply to stability studies. The SDT did not include this requirement in the stability table, because it is hard to envision a condition when all units would trip simultaneously within the timeframe of a stability simulation. Do you think this condition should be required in stability analysis of extreme events? If not, please explain.

Yes ☐ No ☒
Comment: Generator protection is designed to trip only those units required. In addition, it is the magnitude of generation tripped rather than the number of units tripped that is of the greatest significance to the stability of the grid.

Q34. There are an increasing number of events with slow voltage recovery after faults on the Transmission System. The dynamic behavior of induction motor loads is a major factor in this phenomenon. The proposed standard therefore requires that the load model for stability studies of peak Load conditions include the dynamic effects of induction motors. Do you agree with this requirement? If not, please explain?

Yes ☐ No ☒

Comment: Dynamic studies of seasonal load conditions should include the effects of induction motors, and particularly in areas where traditional load models have indicated a problem. Unfortunately, there is a lack of data to support the amount and characteristics of the detailed induction load models in many areas. In addition to the consideration of the dynamic effects of induction motor loads, the effects of static capacitor banks installed at distribution voltage levels would need to be considered as well. Prior to making this a requirement in the reliability standards, the industry needs guidance as to how this data should be developed and maintained for models in future years.

Note that meeting such a requirement would necessitate a significant increase in the dynamic data needed to represent the system. Maintenance of such load model data would require significant resources. Load characteristics valid for a near term model might not be valid for future years. Also, summer peak load, winter peak load, and off-peak load characteristics would differ.

Q35. What type of manual or automatic adjustments of generators should be allowed for single and multiple Contingencies?

Comment: Adjustments that should be allowed are those that can be performed in time to prevent the system from failing to meet performance requirements. These adjustments may include automatic voltage regulator action, governor action, generator runback, and generator tripping.

F. Generation Runback and Tripping

The SDT has discussed the automatic and manual readjustments of generators that should be permissible for single contingencies and multiple contingencies. The existing TPL-001-0 through TPL-004-0 standards through footnote (a) of Table I could include emergency ratings applicable for short durations as required to permit operating steps necessary to maintain system control. The footnote is silent about allowable generation adjustments in response to the Category B events. However, it does indicate that system adjustments are permitted to prepare for the next Contingency. These system adjustments could include manual or automatic adjustments involving generation.

The SDT has learned that many transmission owners use System Protection Systems (SPS) or Remedial Action Schemes (RAS) to trip generation for single and multiple Contingency outage events to prevent overloads, low voltage, and instability in the Interconnected Transmission network for N-1 and N-2 events. In some cases, the RAS are used to prepare for the next Contingency; but in some cases, the RAS are used to simultaneously avoid exceeding emergency ratings.

Q36. The proposed standard allows generation runback after the disturbance that causes a single Contingency (or due to a single Contingency outage) to move the Interconnected Transmission System from an emergency state (within emergency ratings) to a normal state (within normal ratings), assuming that the disturbance does not result in instability? Do you agree? If not, please explain.

Yes ☒ No ☐

Comment:

Q37. Since emergency ratings are thermal ratings, should this standard allow an automatic generation runback scheme (that is initiated immediately after the disturbance causing the single Contingency) to prevent thermal overloads (assuming that the disturbance does not result in instability)? If yes, what are the conditions that

must be met in order to allow such a runback scheme to meet the System performance criteria for single Contingencies? Please explain the reason for your answer.

Yes ☒ No ☐
Comment: The generator runback scheme should complete its action within the time allowed by the emergency ratings of elements that exceed their normal thermal ratings.

The standard drafting team has considered that RAS or SPS may be allowable under certain situations for single Contingencies, but proposes that their use should be limited.

Q38. Do you agree that RAS or SPS may be allowed for single Contingencies? If not, please explain.

Yes ☒ No ☐
Comment:

Q39. Please describe the limitations that you believe should be placed on the use of RAS or SPS for single Contingency events.

Comment: RAS or SPS should meet the same criteria as any protection system.

Q40. When RAS or SPS are allowed, what conditions should be met when these systems are used in system adjustments to meet performance requirements?

Comment: The conditions required by SPS standards (PRC).

G. General Questions

Q41. If you are aware of any regional variances that would be required as a result of these standards, please identify them here.

Yes ☐ No ☐
Comment:

Q42. If you are aware of any conflicts between the proposed standards and any regulatory function, rule order, tariff, rate schedule, legislative requirement or agreement, please identify them here.

Yes ☐ No ☐
Comment:

Q43. Do you have any other questions or concerns with the proposed standard that have not been addressed? If yes, please explain.

Yes ☒ No ☐
Comment: Significant Increase in Study Activity Workload on Transmission Planners: The increase in both steady state and dynamic studies required to ensure compliance with the proposed standards will result in increased costs and staff additions. The addition of the "Corrective Action Plan" requires the TP to provide a significant amount of documentation for each deficiency identified by the studies. Also, R3.2 requires that the studies simulate the protection scheme for all events. The current software tools cannot automate these studies for bus faults and breaker failure events, requiring each scenario to be studied manually. Additionally, experienced staff capable of performing analyses

as described in the proposed standard have become increasingly difficult to find and retain and the talent pool of people with these skills has recently become depleted to alarming levels.

Implementation Plan:
Given the intent of the proposed standard to encourage large scale investment in the EHV system, full implementation will take years, perhaps decades. Acquirement of right-of-way for new EHV lines has become increasingly difficult in recent years and inreasingly expensive. Legal, regulatory, and other difficult issues often take several years to navigate, even for 115kV lines. The Implementation Plan timeframe, if set too short, would be unduly burdensome on Transmission Owners forcing them to be less dicretionary with funds than would be prudent. The proposed implementation plan should include provisions for those cases where viable solutions simply can not be implemented in time due to circumstances beyond the control of Transmission owners. We recommend a minimum of 15 years for the transition.

Design and Construction Constraints:
Even if right-of-way and other legal and regulatory hurdles are cleared, and the capital funding for such a tremendous level of investment was not an issue, the other resources required to actually construct the projects are equally difficult and costly to secure. Raw material prices on comodities like copper and steel have skyrocketed in recent years. Additionally, the skilled labor and Engineering resources are constrained with labor rates almost keeping up with other resource costs. Overall project costs have more than doubled over the last 7-10 years. Recent press releases concerning new generation being planned and then scrapped due to the rapid escalation of project costs are public evidence of this. The inflationary mark-up is impossible to estimate but much less will be built with the same capital investment than is currently envisioned.

Cost-Benefit Analysis:
The proposed standard will be exceedingly expensive to become compliant with unprecedented levels of capital investment in Transmission facilities. Before the standard comes to official vote, it would be prudent for a cost-benefit analysis to be performed to determine if the reliability improvements truly justify the huge expenditures certain under the proposed standard. Additionally, as many jurisdictional rate structures share the cost of such investments between retail and wholesale customers, cost-benefit analyses should be completed for both retail and wholesale customers.

System Adjustment Clarification:
The term "System Adjustment" as outlined in the tables should be better defined. The use of generation for redispatch may have nuances which preclude or otherwise limit their use for studies. Perhaps some clearer guidelines on what is allowed would facilitate transparency and coordination between Transmission Planners.

Transmission Service Evaluation:
A major concern is that the proposed standard appears to be disjointed from the requirements for selling firm Transmission Service. The increase in reliability gained from the proposed standard would, in some regions, quickly be eroded by new firm sales if those sales are based on the historical N-1 ATC requirements. The proposed standard must be applied to long-term firm transmission service requests if Transmission reliability is to be truly enhanced. If the standard is not applied to Transmission Service evaluation, reliability levels for the different classes of firm customers will diverge.

NERC
NORTH AMERICAN ELECTRIC RELIABILITY CORPORATION

Comment Form for First Draft of TPL-001-1 — Transmission System Planning Performance Requirements

Please use this form to submit comments on the proposed draft of TPL-001-1. Comments must be submitted by **Friday, October 26, 2007**. You may submit the completed form by e-mail to sarcomm@nerc.net with the words "TPL-001 Draft 1" in the subject line. If you have questions please contact Ed Dobrowolski at ed.dobrowolksi@nerc.net or by telephone at 609-947-3673.

Individual Commenter Information **(Complete this page for comments from one organization or individual.)**		
Name:		
Organization:		
Telephone:		
E-mail:		
NERC Region (check all Regions in which your company operates)		**Registered Ballot Body Segment (check all industry segments in which your company is registered)**
☐ **ERCOT**	☐	1 — Transmission Owners
☐ **FRCC**	☐	2 — RTOs and ISOs
☐ **MRO**	☐	3 — Load-serving Entities
☐ **NPCC**	☐	4 — Transmission-dependent Utilities
☐ **RFC**	☐	5 — Electric Generators
☐ **SERC**	☐	6 — Electricity Brokers, Aggregators, and Marketers
☐ **SPP**	☐	7 — Large Electricity End Users
☐ **WECC**	☐	8 — Small Electricity End Users
☐ **NA – Not Applicable**	☐	9 — Federal, State, Provincial Regulatory or other Government Entities
	☐	10 — Regional Reliability Organizations and Regional Entities

Group Comments (Complete this page if comments are from a group.)

Group Name: **SERC EC Reliability Review Subcommittee (RRS) and SERC OC Operations Planning Subcommittee (OPS)**

Lead Contact: **James E. (Jim) Peterson, RRS Chair**

Contact Organization: **South Carolina Public Service Authority**

Contact Segment: **1**

Contact Telephone: **(843) 761-8000 x5201**

Contact E-mail: **jepeters@santeecooper.com**

Additional Member Name	Additional Member Organization	Region*	Segment*
Curtis Stepanek	Ameren	**SERC**	1
Brian D. Moss	Duke Energy Carolinas	SERC	1
Kham Vongkhamchanh	Entergy	SERC	1
Ken Wofford	Georgia Transmission Corp.	SERC	1
Denise Roeder	NC Municipal Power Agency #1	SERC	3
Al McMeekin	SC Electric & Gas Company	SERC	1
Clay Young	SC Electric & Gas Company	SERC	3
Rod Hardiman	Southern Company Services, Inc. - Trans	SERC	1
Ian Grant	Tennessee Valley Authority	SERC	1
Marjorie Parsons	Tennessee Valley Authority	SERC	1
Carter Edge	SERC Reliability Corporation	SERC	10
Maria Haney	SERC Reliability Corporation	SERC	10
Eugene Warnecke	Ameren	SERC	1
Chris Bradley	Big Rivers Electric Corporation	SERC	1
Jerry Tang	Municipal Electric Authority of Georgia	SERC	1
Phil Creech	Progress Energy Carolinas	SERC	1
Doug McLaughlin	Southern Company Services, Inc. - Trans	SERC	1
Michael Clements	Tennessee Valley Authority	SERC	1

*If more than one Region or Segment applies, please list all that apply. Regional acronyms and segment numbers are shown on prior page.

Background

The purpose of this standard is to establish Transmission System planning performance requirements within the planning horizon to develop a Bulk Electric System that will operate reliably over a broad spectrum of System conditions and following a wide range of probable Contingencies. This standard will replace TPL-001-0, TPL-002-0, TPL-003-0, and TPL-004-0. The standard drafting team has not yet addressed TPL-005-0 and TPL-006-0, but will address these two standards during the next phase of the drafting process.

The major objectives of the standard drafting team are to:

1) Ensure the standard is complete and the requirements are set at an appropriate level to ensure reliability (Not Least Common Denominator)
2) Ensure that the standard is enforceable by having clearly defined requirements with unambiguous language
3) Address the issues raised by FERC Order 693, 890, and other applicable orders
4) Address the issues raised in the original Standards Authorization Request (SAR) and the Supplemental SAR.

The standard drafting team did not attempt to edit the existing standards but rather chose to write one standard that addresses all aspects of transmission planning in the existing TPL-001-0, TPL-002-0, TPL-003-0, and TPL-004-0. The standard drafting team organized the new standard in the following sections:

R1 – Modeling requirements
R2 – Assessment and Corrective Plan requirements
R3 – Steady State Analysis requirements
R4 – Stability Analysis requirements
R5 – Coordination requirements

The standard drafting team determined that the requirements and analysis for Steady State are different from those for stability. As such, the standard drafting team separated the analysis requirements and created two performance requirement tables.

The standard drafting team recognizes that this draft standard is a starting point for industry input into the standard and that there is still a lot of work required to complete the process. The standard drafting team has made many changes to clarify requirements, add requirements, and make some of the performance requirements stricter. The standard drafting team has not addressed Measures, Risk Factors, Violation Severity Factors, or Time Horizons at this time. These will be addressed when the standard drafting team has better defined the requirements of the standard.

For questions where you agree with the standard drafting team, please state that you agree and if available, please provide supporting documentation. If you disagree with the standard drafting team, please explain why you disagree and provide data to support your position, such as outage data or analysis. If you believe that we have made a performance requirement too strict please provide supporting documentation. If applicable, please include the approximate cost in man-hours for additional studies and/or cost in $Millions for additional transmission investment to meet the new requirements or the stricter requirements. If you believe that the standard should be stricter, please provide the

rationale along with any supporting data, including existing practices, cost estimates or additional analysis.

To improve the standard, the standard drafting team would appreciate responses to as many of these questions as you can answer.

A. New Definitions

Many of the concerns about the existing TPL standards come from the fact that a number of generally understood concepts are embedded in undefined terms, tables, and footnotes. To clarify some of these concerns, the standard drafting team is proposing new definitions. Please indicate whether you agree with the following proposed definitions and provide proposed changes to the definitions if you disagree:

Definition	**Agree or Disagree**
Q1. **Base Case**: Computer representation of the projected initial or starting Transmission System conditions for a specific point in time. Each base case reflects the forecasted Load at each bus (or node) on the interconnected Transmission System, the transmission facilities which deliver the generation and reactive resources to the connected Load, and the generation dispatch including firm transaction obligations assumed to supply the connected Load. The models also reflect facility ratings in accordance with FAC-008 & FAC-009.	☒Agree. ☐Do not agree.
Q1. **Comment: Delete the phrase "and reactive resources."**	
Q2. **Consequential Load Loss:** Load that is no longer served because it is directly connected to an element(s) that is removed from service due to fault clearing action or mis-operation.	☐Agree. ☒Do not agree.
Q2. **Comment: The term "mis-operation" introduces ambiguity into the definition, and should be deleted. The definition needs further clarification for consequential and non-consequential loads. For example, loads served downstream from the faulted element but not directly connected should also be considered to be consequential loads. A better name for this would be "Planned Load Loss."**	
Q3. **Extreme Events:** Events which are more severe than Planning Events and have a low probability of occurrence.	☐Agree. ☒Do not agree.
Q3. **Comment: A number of the non-extreme events also have a low probability. Recommend change the word to "lower."**	
Q4. **Long-Term Transmission Planning Horizon:** Transmission planning period that covers years six through ten or beyond.	☒Agree. ☐Do not agree.
Q4. **Comment:**	
Q5. **Near-Term Transmission Planning Horizon:** Transmission planning period that covers years One through five.	☒Agree. ☐Do not agree.
Q5. **Comment: It is suggested that another definition be added for**	

"operations planning horizon".	
Q6. **Non-Consequential Load Loss:** Load loss other than Consequential Load Loss. For example, Load loss that occurs through manual (operator initiated) or automatic operations such as under-voltage Load shedding, under-frequency Load shedding, or Special Protection Systems.	☐Agree. ☒Do not agree.
Q6. **Comment: A better name for this would be "Unplanned Load Loss". Load loss that occurs from UFLS, UVLS, load shedding or SPS should be moved to Planned Load Loss. Unplanned load loss would be all other load loss other than planned.**	
Q7. **Planning Assessment:** Documented evaluation of future Bulk Electric System needs by the use of performance studies that cover a range of assumptions regarding system conditions, time frames, future plans including capital reinforcements and operating procedures and other factors, such as asset conditions and age.	☐Agree. ☒Do not agree.
Q7. **Comment: Bulk Electric System deficiencies rather than needs should be evaluated. We do not agree that the planning assessment should include asset conditions and age. The age of equipment, if it is well maintained, has little impact on reliability. The term "and other factors" should be better defined or deleted.**	
Q8. **Planning Events:** Events which require Transmission system performance requirements to be met.	☐Agree. ☒Do not agree.
Q8. **Comment: Change to: "Events that are simulated or assessed to test the transmission system to ensure that performance requirements are met."**	
Q9. **Plant Stability Study:** Study of an individual plant's Stability for various Contingencies in the vicinity of the plant; concerned with the effect on the System of the generating units' loss of synchronism and the damping of the generating units' power oscillations.	☐Agree. ☒Do not agree.
Q9. **Comment: The definition should end at the semi-colon. The remaining part of the definition should be moved to the definition of "System Stability Study."**	
Q10. **System Stability Study:** Study of the System or portions of the System to ensure that angular Stability is maintained, inter-area power oscillations are damped, and voltages during the dynamic simulation stay within acceptable performance limits.	☐Agree. ☒Do not agree.
Q10. **Comment: see Q9 above.**	
Q11. **Year One:** The first year that a Transmission Planner is responsible for studying. This is further defined as the planning window that begins the next calendar year from the time the Transmission Planner submits their annual studies. Analysis conducted for time horizons within the calendar year from the study publication are assumed to be conducted under the auspices of Operations Planning.	☒Agree. ☐Do not agree.
Q11. **Comment: The last sentence in the above definition was not included in the definition listed in the draft standard, nor should it be.**	

B. Sensitivity Studies

The draft planning standard includes the requirement, as specified in FERC Order 693, that planning decisions be based on a portfolio of analyses. In section 12.a.ii "Sensitivity studies and critical system conditions" FERC provided direction to consider a full range of variables considered to be significant that need to be assessed and documentation provided that explains the rationale for the selection of variables assessed.

In addition to the firm obligation scenario, the portfolio of analyses should be supplemented to include information from sensitivity analysis. The sensitivity analysis should be developed using additional cases that simulate reasonably stressed system conditions. The standard drafting team has included several parameters that can be varied to create the requisite sensitivity case(s). The draft standards specify that the sensitivities reflect one or more of the following conditions and that documentation be provided explaining the rationale for selecting the sensitivity(ies) employed. The parameters that should be varied include:

- Higher or lower Load forecasts from the Base Case with variability of Load/demand and Load power factors due to season, weather, or time of day.
- Modification of expected transfers.
- Unavailability of long lead time facilities.
- Variability and outages of Reactive Resources.
- Generation additions, retirements, or other dispatch scenarios.
- Decreased effectiveness of controllable Loads and Demand Side Management.
- Modification of planned Transmission outages

To help focus industry discussion, please respond to the questions below:

Q12. Should the standard provide more specific direction regarding the number of sensitivity cases that need to be developed?

Yes ☐ No ☒

Comment: These factors vary between areas and regions. In addition the TP should be allowed to assess an alternate sensitivity if they can document that it is more appropriate,

Q13. Should the standard specify the required changes, such as changes in expected transfers, load forecasts, generation patterns, etc., from the study case to be considered a "reasonably stressed" case?

Yes ☐ No ☒

Comment: The standard may offer guidance but what constitutes a "reasonably stressed" case should be left to the discretion of the entity performing the study, since they are the best judge of what stresses the system.

Q14. The SDT proposes to require the use of sensitivity studies for Near-Term Transmission System Planning Horizon stability analysis. Do you concur with the use of sensitivity analysis in dynamic studies?

Yes ☒ No ☐

Comment: The entity performing the studies should be allowed to determine the appropriate sensitivity studies that need to be evaluated. An alternate approach is to include pre-existing system conditions that additionally stress the system during the contingencies under study so as to verify that stability is preserved under conditions that go beyond those envisioned for the contingency. Stability studies are more time consuming than conventional power flow studies. A single 20 second stability simulation is computationally equivalent to running 80 steady-state powerflow cases and has significantly larger pre-analysis preparation effort.

Q15. The draft TPL standard does not require the use of sensitivity studies for the Long-Term Transmission System Planning Horizon (year six and beyond) studies. Do you concur with this approach or should there be some level of sensitivity analysis required for the long-term period?

Yes ☒ No ☐
Comment: We concur with the current approach.

C. Corrective Action Plans

Requirement R2.7 of the standard states that when analysis shows that the performance requirements in Table 1 and Table 2 are not fully met, a Corrective Action Plan that utilizes all or some of the Transmission System enhancements, generation additions, DSM, new technologies and Operating Procedures shall be included in the Planning Assessment. This Corrective Action Plan should ensure that upon its implementation the identified system deficiencies will be corrected so that the performance requirements in Table 1 and Table 2 will be met. Furthermore, studies included in the Planning Assessment should demonstrate that this is indeed the case.

Q16. Requirement R2.7.1: Such Corrective Action Plans shall "Identify System deficiencies and the associated actions needed to achieve required System performance including Transmission and generation improvements, DSM, new technologies, or Operating Procedures including the duration of Interim Operating Procedures". System deficiencies may be corrected using an integrated plan, i.e., an optimal mix of Transmission, generation, DSM and Operating Procedures. Should DSM be considered in conjunction with other measures in developing Corrective Action Plans? If yes, please comment on how the impact of DSM should be included.

Yes ☒ No ☐
Comment: It should be included if it is a tool made available to the TP for this purpose, but only to the extent that it is considered firm.

Q17. Requirement R2.7.2: Such Corrective Action Plans shall "Be added to study cases and the cases re-tested to show that the System with planned additions meets the performance requirements in the tables". Should new studies, including the facilities comprising the Corrective Action Plan, be performed to assess System normal performance and Contingency response for conditions that previously resulted in the System deficiencies (without the planned additions) and also demonstrate that the changes would not result in inadvertent negative impacts on the System. If you "agree", please comment on how a study area should be determined.

Yes ☐ No ☒
Comment: Re-testing should be required only where the correction may impact network flows. The study area should be determined by the TP. The TP has the most knowledge of how the system responds to changes.

Q18. Requirement R2.7.3: The standard calls for a differentiation between committed and proposed projects. Do you agree that they should be treated separately? If not, please state why not.

Yes ☐ No ☒
Comment: The goal is to meet the system performance requirements outlined in the standard. Whether a project is proposed or committed is irrelevant. R2.7.3 should be deleted.

Q19. Requirement R2.7.4: For such Corrective Action Plans "Committed projects shall not be removed without documentation to show that the revised plan meets the performance requirements". Do you agree or disagree with this requirement? If you disagree, please explain why.

Yes ☐ No ☒

Comment: The goal is to meet the system performance requirements outlined in the standard. Whether a project is proposed or committed is irrelevant. R2.7.4 should be deleted.

D. Performance Requirements

The proposed revised planning standard (TPL-001-1) incorporates a number of changes in requirements as compared to the current planning standards (TPL-001-0 through TPL-004-0), which it is expected to replace. Among other things these changes are intended to clarify the standard, address issues described by FERC, and, in particular, to "raise the bar." Strengthening the planning standards in selected areas is necessary to maintain a reliable Bulk Electric System that is up to the challenges of the 21st Century. In proposing the requirements in this draft, the standard drafting team attempted to balance the value of increased reliability against any potential increase in work and costs to meet the new proposed standard.

The standard drafting team is seeking input from the industry to determine whether a proper balance has been achieved. The areas where material changes are proposed in this draft are enumerated below, and questions are posed by the standard drafting team to obtain industry comment. In formulating your responses, please keep in mind that material changes in the final standard will be accompanied by a transition plan to provide for an orderly implementation of the final standard.

The performance requirements relative to Non-Consequential Loss of Load for the following events enumerated in the two tables can be considered more stringent than the existing TPL standards. Furthermore, the proposed standard is based on an assumption that performance requirements for EHV facilities should be more stringent than for lower voltage facilities.

Do you agree that Non-Consequential Loss of Load should not be permitted for the following events? If you disagree, please provide a reason for your disagreement.

Event	Agree or Disagree	Comment
Q20. P2-1: Loss of bus section (SLG for stability) above 300 kV	☐Agree. ☒Do not agree.	By not allowing non-consequential load loss, utilities will incur significant expenditures to solve a problem with an extremely low probability of occurrence. The benefit will not justify the cost.
Q21. P5-1: For facilities above 300 kV, loss of a Transmission circuit followed by System adjustment[1] followed by loss of another Transmission circuit	☐Agree. ☒Do not agree.	By not allowing non-consequential load loss, utilities will incur significant expenditures to solve a problem with an extremely low probability of occurrence. The benefit will not justify the cost.
Q22. P5-2: For facilities above 300 kV, loss of a	☐Agree.	By not allowing non-consequential load loss, utilities will incur significant

Transmission circuit followed by System adjustment followed by loss of a transformer with low side voltage rating above 300 kV	☒Do not agree.	expenditures to solve a problem with an extremely low probability of occurrence. The benefit will not justify the cost.
Q23. P5-3: For facilities above 300 kV, loss of a transformer with low side voltage rating above 300 kV followed by System adjustment followed by loss of another transformer	☐Agree. ☒Do not agree.	By not allowing non-consequential load loss, utilities will incur significant expenditures to solve a problem with an extremely low probability of occurrence. The benefit will not justify the cost.

[1]System adjustment can be manual or automatic.

The proposed standard is based on an assumption that performance requirements for non-bus tie EHV breakers should be distinguished from other breakers. Do you agree that Non-Consequential Loss of Load should not be permitted for this event?

Q24. Loss of non-bus tie breaker (above 300 kV) due to internal fault

Yes ☐ No ☒
Comment: By not allowing non-consequential load loss, utilities will incur significant expenditures to solve a problem with an extremely low probability of occurrence. The benefit will not justify the cost.

The proposed standard is based on an assumption that performance requirements for non-bus tie EHV breakers should be distinguished from other breakers and that performance requirements for EHV facilities should be more stringent than for lower voltage facilities. Do you agree that Non-Consequential Loss of Load should not be permitted for this event?

Q25. P3-1: Loss of (SLG for stability) either a generator, a Transmission circuit, a transformer, or a bus and a stuck non-bus tie breaker (above 300 kV)

Yes ☐ No ☒
Comment: By not allowing non-consequential load loss, utilities will incur significant expenditures to solve a problem with an extremely low probability of occurrence. The benefit will not justify the cost.

The proposed standard is based on an assumption that the following events are relatively high probability events and, therefore, Non-Consequential Loss of Load should not be permitted. Do you agree? If you disagree, please provide a reason for your disagreement.

Event	Agree or Disagree	Comment
Q26. P4-1: Loss of a Generator followed by System adjustment[1] followed by loss of another Generator	☐Agree. ☒Do not agree.	It is agreed that this event should be tested for maintaining reliability of the BES, however planned load loss should be allowed.
Q27. P4-2: Loss of a	☐Agree.	same comment as for Q26.

[1] System adjustment can be manual or automatic

generator followed by a System adjustment followed by the loss of a monopolar DC line	☒Do not agree.	
Q28. P4-3: Loss of a generator followed by System adjustment followed by loss of a Transmission circuit	☐Agree. ☒Do not agree.	same comment as for Q26.
Q29. P4-4: Loss of a generator followed by System adjustment followed by loss of a transformer	☐Agree. ☒Do not agree.	same comment as for Q26.

The performance requirement for the following event may be considered less stringent than the existing TPL Standards — P2-3: Loss of a single pole of a DC line. Interruption of firm transactions (without Loss of firm Load) if the transaction is dependent on the faulted DC line is now allowed for this initiating event/Contingency.

Q30. Do you agree that interruption of any firm transfers that are dependent on the outaged DC line that is taken out of service should be permitted?

Yes ☐ No ☒
Comment: DC and AC contingency events should be treated the same. The question is somewhat obscure.

E. Stability

Q31. The proposed standard is based on an assumption that steady state analysis and stability analysis are different from each other and that therefore, two tables of Contingencies and performance requirements were needed. It is also based on an assumption that stability study requirements should be clearly separated from the steady state study requirements. Do you agree with the action taken in separating stability analysis from steady state analysis? If not, please explain.

Yes ☒ No ☐
Comment:

Q32. The SDT has added requirements for plant stability studies and has drawn a distinction in these studies from System stability studies. Do you agree with this approach? If not, please explain.

Yes ☒ No ☐
Comment:

Q33. The existing TPL-004-0 standard has a requirement to consider the Loss of all generating units at a plant, but it was not clear whether this requirement should apply to stability studies. The SDT did not include this requirement in the stability table, because it is hard to envision a condition when all units would trip simultaneously within the timeframe of a stability simulation. Do you think this condition should be required in stability analysis of extreme events? If not, please explain.

Yes ☐ No ☒

Comment: It is not necessary to simulate loss of all units at a station. The Transmission Planner or Planning Authority should have the discretion to consider the appropriate number of units to be tripped based on station design, relay design, etc.

Q34. There are an increasing number of events with slow voltage recovery after faults on the Transmission System. The dynamic behavior of induction motor loads is a major factor in this phenomenon. The proposed standard therefore requires that the load model for stability studies of peak Load conditions include the dynamic effects of induction motors. Do you agree with this requirement? If not, please explain?

Yes ☐ No ☒
Comment: There is a lack of data to support the amount and characteristics of the detailed induction load models in many areas. Transmission planners should be able to use the latest information and techniques.

Q35. What type of manual or automatic adjustments of generators should be allowed for single and multiple Contingencies?

Comment: Any adjustments should be allowed that protects the reliability of the BES.

F. Generation Runback and Tripping

The SDT has discussed the automatic and manual readjustments of generators that should be permissible for single contingencies and multiple contingencies. The existing TPL-001-0 through TPL-004-0 standards through footnote (a) of Table I could include emergency ratings applicable for short durations as required to permit operating steps necessary to maintain system control. The footnote is silent about allowable generation adjustments in response to the Category B events. However, it does indicate that system adjustments are permitted to prepare for the next Contingency. These system adjustments could include manual or automatic adjustments involving generation.

The SDT has learned that many transmission owners use System Protection Systems (SPS) or Remedial Action Schemes (RAS) to trip generation for single and multiple Contingency outage events to prevent overloads, low voltage, and instability in the Interconnected Transmission network for N-1 and N-2 events. In some cases, the RAS are used to prepare for the next Contingency; but in some cases, the RAS are used to simultaneously avoid exceeding emergency ratings.

Q36. The proposed standard allows generation runback after the disturbance that causes a single Contingency (or due to a single Contingency outage) to move the Interconnected Transmission System from an emergency state (within emergency ratings) to a normal state (within normal ratings), assuming that the disturbance does not result in instability? Do you agree? If not, please explain.

Yes ☒ No ☐
Comment:

Q37. Since emergency ratings are thermal ratings, should this standard allow an automatic generation runback scheme (that is initiated immediately after the disturbance causing the single Contingency) to prevent thermal overloads (assuming that the disturbance does not result in instability)? If yes, what are the conditions that

must be met in order to allow such a runback scheme to meet the System performance criteria for single Contingencies? Please explain the reason for your answer.

Yes ☒ No ☐
Comment:

The standard drafting team has considered that RAS or SPS may be allowable under certain situations for single Contingencies, but proposes that their use should be limited.

Q38. Do you agree that RAS or SPS may be allowed for single Contingencies? If not, please explain.

Yes ☒ No ☐
Comment:

Q39. Please describe the limitations that you believe should be placed on the use of RAS or SPS for single Contingency events.

Comment: RAS or SPS should meet the same criteria as any protection system.

Q40. When RAS or SPS are allowed, what conditions should be met when these systems are used in system adjustments to meet performance requirements?

Comment: The requirements are outlined in PRC-015, 016, and 017.

G. General Questions

Q41. If you are aware of any regional variances that would be required as a result of these standards, please identify them here.

Yes ☐ No ☒
Comment:

Q42. If you are aware of any conflicts between the proposed standards and any regulatory function, rule order, tariff, rate schedule, legislative requirement or agreement, please identify them here.

Yes ☐ No ☐
Comment: Not currently aware of any.

Q43. Do you have any other questions or concerns with the proposed standard that have not been addressed? If yes, please explain.

Yes ☒ No ☐
Comment:
Cost-Benefit Analysis:

Transmission Providers are currently able to maintain adequate levels of reliability using existing standards. While incremental improvements can be made, it is not evident that prescribing more stringent planning requirements will necessarily result in signifcant reliability improvements.

The proposed standard will be exceedingly expensive to become compliant with unprecedented levels of capital investment in Transmission facilities. Before the standard comes to official vote, it would be prudent for a cost-benefit analysis to be performed to determine if the reliability improvements truly justify the huge expenditures under the proposed standard.

In Table 1 in the column titled "Interruption of Firm Transfer Allowed," does it pertain to point-to-point only, or does it also apply to network loads? Please explain how this provision is consistient with the requirement to re-dispatch to address system constraints.

The terms "Consequential Load Loss" and "Non-consequential Load Loss" should be deleted and Table 1 should be modified to discuss "Planned Load Loss" and "Unplanned Load Loss". It should not matter if the load is directly connected to the failed facility or downstream and served by the failed facility. If the plan to protect the interconnected grid is to disconnect those loads using a manual process or an automatic scheme, then it should be allowed.

The R1 requirements should be deleted from this standard and should remain in the MOD standards.

NERC
NORTH AMERICAN ELECTRIC RELIABILITY CORPORATION

Comment Form for First Draft of TPL-001-1 — Transmission System Planning Performance Requirements

Please use this form to submit comments on the proposed draft of TPL-001-1. Comments must be submitted by **Friday, October 26, 2007**. You may submit the completed form by e-mail to sarcomm@nerc.net with the words "TPL-001 Draft 1" in the subject line. If you have questions please contact Ed Dobrowolski at ed.dobrowolksi@nerc.net or by telephone at 609-947-3673.

Individual Commenter Information **(Complete this page for comments from one organization or individual.)**		
Name:	Philip R. Kleckley	
Organization:	South Carolina Electric & Gas	
Telephone:	803-217-2045	
E-mail:	pkleckley@scana.com	
NERC Region (check all Regions in which your company operates)		**Registered Ballot Body Segment (check all industry segments in which your company is registered)**
☐ **ERCOT**	☒	1 — Transmission Owners
☐ **FRCC**	☐	2 — RTOs and ISOs
☐ **MRO**	☒	3 — Load-serving Entities
☐ **NPCC**	☐	4 — Transmission-dependent Utilities
☐ **RFC**	☒	5 — Electric Generators
☒ **SERC**	☐	6 — Electricity Brokers, Aggregators, and Marketers
☐ **SPP**	☐	7 — Large Electricity End Users
☐ **WECC**	☐	8 — Small Electricity End Users
☐ **NA – Not Applicable**	☐	9 — Federal, State, Provincial Regulatory or other Government Entities
	☐	10 — Regional Reliability Organizations and Regional Entities

Group Comments (Complete this page if comments are from a group.)

Group Name: **Transmission Planning**

Lead Contact: **Philip Kleckley**

Contact Organization: **South Carolina Electric & Gas**

Contact Segment: **3**

Contact Telephone: **803-217-2045**

Contact E-mail: **pkleckley@scana.com**

Additional Member Name	Additional Member Organization	Region*	Segment*

*If more than one Region or Segment applies, please list all that apply. Regional acronyms and segment numbers are shown on prior page.

Background

The purpose of this standard is to establish Transmission System planning performance requirements within the planning horizon to develop a Bulk Electric System that will operate reliably over a broad spectrum of System conditions and following a wide range of probable Contingencies. This standard will replace TPL-001-0, TPL-002-0, TPL-003-0, and TPL-004-0. The standard drafting team has not yet addressed TPL-005-0 and TPL-006-0, but will address these two standards during the next phase of the drafting process.

The major objectives of the standard drafting team are to:

1) Ensure the standard is complete and the requirements are set at an appropriate level to ensure reliability (Not Least Common Denominator)
2) Ensure that the standard is enforceable by having clearly defined requirements with unambiguous language
3) Address the issues raised by FERC Order 693, 890, and other applicable orders
4) Address the issues raised in the original Standards Authorization Request (SAR) and the Supplemental SAR.

The standard drafting team did not attempt to edit the existing standards but rather chose to write one standard that addresses all aspects of transmission planning in the existing TPL-001-0, TPL-002-0, TPL-003-0, and TPL-004-0. The standard drafting team organized the new standard in the following sections:

R1 – Modeling requirements
R2 – Assessment and Corrective Plan requirements
R3 – Steady State Analysis requirements
R4 – Stability Analysis requirements
R5 – Coordination requirements

The standard drafting team determined that the requirements and analysis for Steady State are different from those for stability. As such, the standard drafting team separated the analysis requirements and created two performance requirement tables.

The standard drafting team recognizes that this draft standard is a starting point for industry input into the standard and that there is still a lot of work required to complete the process. The standard drafting team has made many changes to clarify requirements, add requirements, and make some of the performance requirements stricter. The standard drafting team has not addressed Measures, Risk Factors, Violation Severity Factors, or Time Horizons at this time. These will be addressed when the standard drafting team has better defined the requirements of the standard.

For questions where you agree with the standard drafting team, please state that you agree and if available, please provide supporting documentation. If you disagree with the standard drafting team, please explain why you disagree and provide data to support your position, such as outage data or analysis. If you believe that we have made a performance requirement too strict please provide supporting documentation. If applicable, please include the approximate cost in man-hours for additional studies and/or cost in $Millions for additional transmission investment to meet the new requirements or the stricter requirements. If you believe that the standard should be stricter, please provide the rationale along with any supporting data, including existing practices, cost estimates or additional analysis.

To improve the standard, the standard drafting team would appreciate responses to as many of these questions as you can answer.

A. New Definitions

Many of the concerns about the existing TPL standards come from the fact that a number of generally understood concepts are embedded in undefined terms, tables, and footnotes. To clarify some of these concerns, the standard drafting team is proposing new definitions. Please indicate whether you agree with the following proposed definitions and provide proposed changes to the definitions if you disagree:

Definition	**Agree or Disagree**
Q1. **Base Case**: Computer representation of the projected initial or starting Transmission System conditions for a specific point in time. Each base case reflects the forecasted Load at each bus (or node) on the interconnected Transmission System, the transmission facilities which deliver the generation and reactive resources to the connected Load, and the generation dispatch including firm transaction obligations assumed to supply the connected Load. The models also reflect facility ratings in accordance with FAC-008 & FAC-009.	☒Agree. ☐Do not agree.
Q1. **Comment:**	
Q2. **Consequential Load Loss:** Load that is no longer served because it is directly connected to an element(s) that is removed from service due to fault clearing action or mis-operation.	☐Agree. ☒Do not agree.
Q2. **Comment: "Consequential Load Loss" should be termed "Intentional or Planned Load Loss". Not only should direct connected load loss be included, but loads served by or downstream from the faulted element, that is not directly connected to the faulted element, should also be included.**	
Q3. **Extreme Events:** Events which are more severe than Planning Events and have a low probability of occurrence.	☒Agree. ☐Do not agree.
Q3. **Comment:**	
Q4. **Long-Term Transmission Planning Horizon:** Transmission planning period that covers years six through ten or beyond.	☒Agree. ☐Do not agree.
Q4. **Comment:**	
Q5. **Near-Term Transmission Planning Horizon:** Transmission planning period that covers years One through five.	☒Agree. ☐Do not agree.
Q5. **Comment:**	
Q6. **Non-Consequential Load Loss:** Load loss other than Consequential Load Loss. For example, Load loss that occurs through manual (operator initiated) or automatic operations such as under-voltage Load shedding, under-frequency Load shedding, or Special Protection Systems.	☐Agree. ☒Do not agree.

Q6. **Comment: This term is not needed. See comments on "Consequential Load Loss/Intentional Load Loss".**	
Q7. **Planning Assessment:** Documented evaluation of future Bulk Electric System needs by the use of performance studies that cover a range of assumptions regarding system conditions, time frames, future plans including capital reinforcements and operating procedures and other factors, such as asset conditions and age.	☐Agree. ☒Do not agree.
Q7. **Comment: Bulk Electric System deficiencies rather than needs should be evaluated.**	
Q8. **Planning Events:** Events which require Transmission system performance requirements to be met.	☐Agree. ☒Do not agree.
Q8. **Comment: Prefer alternate language, "Events for which Transmission system performance requirements must be met."**	
Q9. **Plant Stability Study:** Study of an individual plant's Stability for various Contingencies in the vicinity of the plant; concerned with the effect on the System of the generating units' loss of synchronism and the damping of the generating units' power oscillations.	☒Agree. ☐Do not agree.
Q9. **Comment:**	
Q10. **System Stability Study:** Study of the System or portions of the System to ensure that angular Stability is maintained, inter-area power oscillations are damped, and voltages during the dynamic simulation stay within acceptable performance limits.	☒Agree. ☐Do not agree.
Q10. **Comment:**	
Q11. **Year One:** The first year that a Transmission Planner is responsible for studying. This is further defined as the planning window that begins the next calendar year from the time the Transmission Planner submits their annual studies. Analysis conducted for time horizons within the calendar year from the study publication are assumed to be conducted under the auspices of Operations Planning.	☒Agree. ☐Do not agree.
Q11. **Comment:**	

B. Sensitivity Studies

The draft planning standard includes the requirement, as specified in FERC Order 693, that planning decisions be based on a portfolio of analyses. In section 12.a.ii "Sensitivity studies and critical system conditions" FERC provided direction to consider a full range of variables considered to be significant that need to be assessed and documentation provided that explains the rationale for the selection of variables assessed.

In addition to the firm obligation scenario, the portfolio of analyses should be supplemented to include information from sensitivity analysis. The sensitivity analysis should be developed using additional cases that simulate reasonably stressed system conditions. The standard drafting team has included several parameters that can be varied to create the requisite sensitivity case(s). The draft standards specify that the sensitivities reflect one or more of the following conditions and that documentation be provided explaining the rationale for selecting the sensitivity(ies) employed. The parameters that should be varied include:

- Higher or lower Load forecasts from the Base Case with variability of Load/demand and Load power factors due to season, weather, or time of day.
- Modification of expected transfers.
- Unavailability of long lead time facilities.
- Variability and outages of Reactive Resources.
- Generation additions, retirements, or other dispatch scenarios.
- Decreased effectiveness of controllable Loads and Demand Side Management.
- Modification of planned Transmission outages

To help focus industry discussion, please respond to the questions below:

Q12. Should the standard provide more specific direction regarding the number of sensitivity cases that need to be developed?

Yes ☐ No ☒
Comment: The standard may offer guidance but the entity performing the sensitivity studies should be able to determine the number of cases required.

Q13. Should the standard specify the required changes, such as changes in expected transfers, load forecasts, generation patterns, etc., from the study case to be considered a "reasonably stressed" case?

Yes ☐ No ☒
Comment: The standard may offer guidance but what constitutes a "reasonably stressed" case should be left to the discretion of the entity performing the study.

Q14. The SDT proposes to require the use of sensitivity studies for Near-Term Transmission System Planning Horizon stability analysis. Do you concur with the use of sensitivity analysis in dynamic studies?

Yes ☐ No ☒
Comment: Stability studies examine generator and system responses to specific conditions. Because the exact system conditions can not be determined in advance, the sensitivity analysis may not be very useful. In addition, stability studies are more time consuming than conventional power flow studies. A preferred approach is to include pre-existing system conditions that additionally stress the system during the contingencies under study so as to verify that stability is preserved under conditions that go beyond those envisioned for the contingency.

Q15. The draft TPL standard does not require the use of sensitivity studies for the Long-Term Transmission System Planning Horizon (year six and beyond) studies. Do you concur with this approach or should there be some level of sensitivity analysis required for the long-term period?

Yes ☒ No ☐
Comment:

C. Corrective Action Plans

Requirement R2.7 of the standard states that when analysis shows that the performance requirements in Table 1 and Table 2 are not fully met, a Corrective Action Plan that utilizes all or some of the Transmission System enhancements, generation additions, DSM, new technologies and Operating Procedures shall be included in the Planning Assessment. This

Corrective Action Plan should ensure that upon its implementation the identified system deficiencies will be corrected so that the performance requirements in Table 1 and Table 2 will be met. Furthermore, studies included in the Planning Assessment should demonstrate that this is indeed the case.

Q16. Requirement R2.7.1: Such Corrective Action Plans shall "Identify System deficiencies and the associated actions needed to achieve required System performance including Transmission and generation improvements, DSM, new technologies, or Operating Procedures including the duration of Interim Operating Procedures". System deficiencies may be corrected using an integrated plan, i.e., an optimal mix of Transmission, generation, DSM and Operating Procedures. Should DSM be considered in conjunction with other measures in developing Corrective Action Plans? If yes, please comment on how the impact of DSM should be included.

Yes ☒ No ☐
Comment: It should be included if it is a tool made available to the TP for this purpose, but only to the extent it is considered firm.

Q17. Requirement R2.7.2: Such Corrective Action Plans shall "Be added to study cases and the cases re-tested to show that the System with planned additions meets the performance requirements in the tables". Should new studies, including the facilities comprising the Corrective Action Plan, be performed to assess System normal performance and Contingency response for conditions that previously resulted in the System deficiencies (without the planned additions) and also demonstrate that the changes would not result in inadvertent negative impacts on the System. If you "agree", please comment on how a study area should be determined.

Yes ☒ No ☐
Comment: Re-testing should be required only where the correction may impact network flows. The study area should be determined by the TP.

Q18. Requirement R2.7.3: The standard calls for a differentiation between committed and proposed projects. Do you agree that they should be treated separately? If not, please state why not.

Yes ☐ No ☒
Comment: The goal is to meet the system performace requirements outlined in the standard. Whethter a project is proposed or committed is irrelevant.

Q19. Requirement R2.7.4: For such Corrective Action Plans "Committed projects shall not be removed without documentation to show that the revised plan meets the performance requirements". Do you agree or disagree with this requirement? If you disagree, please explain why.

Yes ☐ No ☒
Comment: See answer to question #18.

D. Performance Requirements

The proposed revised planning standard (TPL-001-1) incorporates a number of changes in requirements as compared to the current planning standards (TPL-001-0 through TPL-004-0), which it is expected to replace. Among other things these changes are intended to clarify the standard, address issues described by FERC, and, in particular, to "raise the bar." Strengthening the planning standards in selected areas is necessary to maintain a reliable Bulk Electric System that is up to the challenges of the 21st Century. In proposing the

requirements in this draft, the standard drafting team attempted to balance the value of increased reliability against any potential increase in work and costs to meet the new proposed standard.

The standard drafting team is seeking input from the industry to determine whether a proper balance has been achieved. The areas where material changes are proposed in this draft are enumerated below, and questions are posed by the standard drafting team to obtain industry comment. In formulating your responses, please keep in mind that material changes in the final standard will be accompanied by a transition plan to provide for an orderly implementation of the final standard.

The performance requirements relative to Non-Consequential Loss of Load for the following events enumerated in the two tables can be considered more stringent than the existing TPL standards. Furthermore, the proposed standard is based on an assumption that performance requirements for EHV facilities should be more stringent than for lower voltage facilities.

Do you agree that Non-Consequential Loss of Load should not be permitted for the following events? If you disagree, please provide a reason for your disagreement.

Event	Agree or Disagree	Comment
Q20. P2-1: Loss of bus section (SLG for stability) above 300 kV	☐Agree. ☒Do not agree.	SCE&G does not agree with the concept of non-consequential load loss. To maintain system reliability, the disconnect of any load should be allowed. If not allowed, unprecedented new transmission costs will be required. These costs will be for local area improvements and will NOT result in increased transfer capabilities for markets.
Q21. P5-1: For facilities above 300 kV, loss of a Transmission circuit followed by System adjustment[1] followed by loss of another Transmission circuit	☐Agree. ☒Do not agree.	See answer to #20.
Q22. P5-2: For facilities above 300 kV, loss of a Transmission circuit followed by System adjustment followed by loss of a transformer with low side voltage rating above 300 kV	☐Agree. ☒Do not agree.	See answer to #20.
Q23. P5-3: For facilities above 300 kV, loss of a transformer with low side voltage rating above 300 kV followed by System adjustment	☐Agree. ☒Do not agree.	See answer to #20.

followed by loss of another transformer		

[1]System adjustment can be manual or automatic.

The proposed standard is based on an assumption that performance requirements for non-bus tie EHV breakers should be distinguished from other breakers. Do you agree that Non-Consequential Loss of Load should not be permitted for this event?

Q24. Loss of non-bus tie breaker (above 300 kV) due to internal fault

Yes ☐ No ☒
Comment: See answer to #20.

The proposed standard is based on an assumption that performance requirements for non-bus tie EHV breakers should be distinguished from other breakers and that performance requirements for EHV facilities should be more stringent than for lower voltage facilities. Do you agree that Non-Consequential Loss of Load should not be permitted for this event?

Q25. P3-1: Loss of (SLG for stability) either a generator, a Transmission circuit, a transformer, or a bus and a stuck non-bus tie breaker (above 300 kV)

Yes ☐ No ☒
Comment: See answer to #20.

The proposed standard is based on an assumption that the following events are relatively high probability events and, therefore, Non-Consequential Loss of Load should not be permitted. Do you agree? If you disagree, please provide a reason for your disagreement.

Event	Agree or Disagree	Comment
Q26. P4-1: Loss of a Generator followed by System adjustment[1] followed by loss of another Generator	☐Agree. ☒Do not agree.	Planned load loss should be allowed.
Q27. P4-2: Loss of a generator followed by a System adjustment followed by the loss of a monopolar DC line	☐Agree. ☒Do not agree.	Planned load loss should be allowed.
Q28. P4-3: Loss of a generator followed by System adjustment followed by loss of a Transmission circuit	☐Agree. ☒Do not agree.	Planned load loss should be allowed.
Q29. P4-4: Loss of a generator followed by System adjustment followed by loss of a transformer with low side voltage rating above	☐Agree. ☒Do not agree.	Planned load loss should be allowed.

[1] System adjustment can be manual or automatic

300 kV		

The performance requirement for the following event may be considered less stringent than the existing TPL Standards — P2-3: Loss of a single pole of a DC line. Interruption of firm transactions (without Loss of firm Load) if the transaction is dependent on the faulted DC line is now allowed for this initiating event/Contingency.

Q30. Do you agree that interruption of any firm transfers that are dependent on the outaged DC line that is taken out of service should be permitted?

Yes ☐ No ☒
Comment: General there should be no difference between AC and DC; however, the answer to this question depends on the contractual arrangements associated with the transfer.

E. Stability

Q31. The proposed standard is based on an assumption that steady state analysis and stability analysis are different from each other and that therefore, two tables of Contingencies and performance requirements were needed. It is also based on an assumption that stability study requirements should be clearly separated from the steady state study requirements. Do you agree with the action taken in separating stability analysis from steady state analysis? If not, please explain.

Yes ☒ No ☐
Comment:

Q32. The SDT has added requirements for plant stability studies and has drawn a distinction in these studies from System stability studies. Do you agree with this approach? If not, please explain.

Yes ☒ No ☐
Comment:

Q33. The existing TPL-004-0 standard has a requirement to consider the Loss of all generating units at a plant, but it was not clear whether this requirement should apply to stability studies. The SDT did not include this requirement in the stability table, because it is hard to envision a condition when all units would trip simultaneously within the timeframe of a stability simulation. Do you think this condition should be required in stability analysis of extreme events? If not, please explain.

Yes ☐ No ☒
Comment: Generator protection is designed to trip only those units required. In addition, it is the magnitude of generation tripped rather than the number of units tripped that is of the greatest significance to the stability of the grid.

Q34. There are an increasing number of events with slow voltage recovery after faults on the Transmission System. The dynamic behavior of induction motor loads is a major factor in this phenomenon. The proposed standard therefore requires that the load model for stability studies of peak Load conditions include the dynamic effects of induction motors. Do you agree with this requirement? If not, please explain?

Yes ☐ No ☒

Comment: There should be an attempt to represent the dynamic behavior of induction motor loads in the generic system load representations. However, the state of induction motor load modeling is not adequate to permit discrete induction motor load models.

Q35. What type of manual or automatic adjustments of generators should be allowed for single and multiple Contingencies?

Comment: Adjustments that should be allowed are those that can be performed in time to prevent the system from failing to meet performance requirements. These adjustments may include automatic voltage regulator action, governor action, and generator runback.

F. Generation Runback and Tripping

The SDT has discussed the automatic and manual readjustments of generators that should be permissible for single contingencies and multiple contingencies. The existing TPL-001-0 through TPL-004-0 standards through footnote (a) of Table I could include emergency ratings applicable for short durations as required to permit operating steps necessary to maintain system control. The footnote is silent about allowable generation adjustments in response to the Category B events. However, it does indicate that system adjustments are permitted to prepare for the next Contingency. These system adjustments could include manual or automatic adjustments involving generation.

The SDT has learned that many transmission owners use System Protection Systems (SPS) or Remedial Action Schemes (RAS) to trip generation for single and multiple Contingency outage events to prevent overloads, low voltage, and instability in the Interconnected Transmission network for N-1 and N-2 events. In some cases, the RAS are used to prepare for the next Contingency; but in some cases, the RAS are used to simultaneously avoid exceeding emergency ratings.

Q36. The proposed standard allows generation runback after the disturbance that causes a single Contingency (or due to a single Contingency outage) to move the Interconnected Transmission System from an emergency state (within emergency ratings) to a normal state (within normal ratings), assuming that the disturbance does not result in instability? Do you agree? If not, please explain.

Yes ☒ No ☐
Comment:

Q37. Since emergency ratings are thermal ratings, should this standard allow an automatic generation runback scheme (that is initiated immediately after the disturbance causing the single Contingency) to prevent thermal overloads (assuming that the disturbance does not result in instability)? If yes, what are the conditions that must be met in order to allow such a runback scheme to meet the System performance criteria for single Contingencies? Please explain the reason for your answer.

Yes ☒ No ☐
Comment: The generator runback scheme should complete its action within the time allowed by the emergency ratings of elements that exceed their normal thermal ratings.

The standard drafting team has considered that RAS or SPS may be allowable under certain situations for single Contingencies, but proposes that their use should be limited.

Q38. Do you agree that RAS or SPS may be allowed for single Contingencies? If not, please explain.

Yes ☒ No ☐
Comment: A RAS or SPS should be allowed for single contingencies if its failure or misoperation can be compensated for during the time allowed by the emergency ratings of the elements that exceed their normal thermal ratings.

Q39. Please describe the limitations that you believe should be placed on the use of RAS or SPS for single Contingency events.

Comment: RAS or SPS should meet the same criteria as any protection system.

Q40. When RAS or SPS are allowed, what conditions should be met when these systems are used in system adjustments to meet performance requirements?

Comment: The conditions required by SPS Reliability Standards.

G. General Questions

Q41. If you are aware of any regional variances that would be required as a result of these standards, please identify them here.

Yes ☐ No ☒
Comment:

Q42. If you are aware of any conflicts between the proposed standards and any regulatory function, rule order, tariff, rate schedule, legislative requirement or agreement, please identify them here.

Yes ☐ No ☒
Comment:

Q43. Do you have any other questions or concerns with the proposed standard that have not been addressed? If yes, please explain.

Yes ☒ No ☐
Comment: General Comment. Cost/Benefit analyses should be conducted on each change in a standard or new standard.

Requirement 7.2 will require a 2 bus outage test on the SCE&G transmission system. Most of our busses are straight busses and a stuck line-terminal breaker will result in a clearing of the connected bus (and all facilities connected to that bus). Our read of this requirement is that we must design the system to accommodate a stuck breaker event (outaging all connected facilities) while a different bus (and all of its connected facilities) is already outaged. This is a significant leap in the required performance of our system and will result in tremendous unwarranted costs and years of new local area transmission construction.

Requirement R1.1.2 refers to "normal weather patterns as agreed to by the Planning Coordinator(s) and the Transmission Planner(s)…" The ERAG MMWG considers normal weather to be such that the weather affected load to be that which has a 50%

probability of, plus or minus. The standard and the ERAG MMWG need to be made consistent.

Requirement R2.7.1.1 specifies a "project initiation date". This information is not needed for system reliability purposes.

Requirement R3.3.2.1 requires an evaluation for "Consequential Load loss (expected maximum demand and expected duration). Load loss is not an ERO responsibility.

Requirement R3.3.2.2 does not permit the "shedding of firm Load or curtailment of firm transfers". This is not an ERO responsibility.

Requirement R3.6 states "Manual and automatic generation tripping is allowed for multiple Contingencies and for single Contingencies only in situations that meet all of the following conditions: TBD. Generators should be allowed to trip for single and multiple contingencies as long as Facility Ratings are not exceeded. In addition, generators should be allowed to trip for any condition that imperils the generator. System performance should be the criteria, not generator operating state.

Requirement R4.2 states "Contingency analyses shall simulate the removal of all elements including those that the System protection is expected to disconnect for each Contingency without operator intervention." Delete "including those".

Requirement 4.6.1 states that Plant Stability studies "Shall be performed for individual generating units 20 MW or greater…" Does this mean that studies must be performed for all units? Many plants have "sister units" that are essentially the same. This requirement seems to be excessive.

Requirement 4.6.2 states that Plant Stability studies "Shall be performed for changes in the real power output of a generating unit by more than 10% of the existing capability or more than 20 MW whichever is greater." The meaning of this wording is unclear.

Requirement 4.6.3 states that Plant Stability studies "Shall be performed and evaluated for those Planning Events that would produce more severe System impacts and the rationale for the Contingencies selected for evaluation shall be available as supporting information and shall include an explanation of why the remaining Contingencies would produce less severe System results. The identified Contingencies, at a minimum, shall be evaluated." The use of "evaluation/evaluated is unclear. Is an evaluation the same as performing a study? If not, what does it mean to select a contingency for evaluation?

The standard needs to define or describe the difference between a "bus" and a "bus section" and ensure that the use of these terms in the standard are as intended.

Table I, P3, P7.2, P9.6 and Table 2, P7 need some punctuation for clarification.
Table I, P9.6 and Table 2, P9, why study replacing an outaged transformer with a spare?

NERC
NORTH AMERICAN ELECTRIC RELIABILITY CORPORATION

Comment Form for First Draft of TPL-001-1 — Transmission System Planning Performance Requirements

Please use this form to submit comments on the proposed draft of TPL-001-1. Comments must be submitted by **Friday, October 26, 2007**. You may submit the completed form by e-mail to sarcomm@nerc.net with the words "TPL-001 Draft 1" in the subject line. If you have questions please contact Ed Dobrowolski at ed.dobrowolksi@nerc.net or by telephone at 609-947-3673.

Individual Commenter Information **(Complete this page for comments from one organization or individual.)**		
Name:		
Organization:		
Telephone:		
E-mail:		
NERC Region (check all Regions in which your company operates)		**Registered Ballot Body Segment (check all industry segments in which your company is registered)**
☐ **ERCOT**	☒	1 — Transmission Owners
☐ **FRCC**	☐	2 — RTOs and ISOs
☐ **MRO**	☐	3 — Load-serving Entities
☐ **NPCC**	☐	4 — Transmission-dependent Utilities
☐ **RFC**	☒	5 — Electric Generators
☒ **SERC**	☐	6 — Electricity Brokers, Aggregators, and Marketers
☐ **SPP**	☐	7 — Large Electricity End Users
☐ **WECC**	☐	8 — Small Electricity End Users
☐ **NA – Not Applicable**	☐	9 — Federal, State, Provincial Regulatory or other Government Entities
	☐	10 — Regional Reliability Organizations and Regional Entities

Group Comments (Complete this page if comments are from a group.)

Group Name:

Lead Contact: **Jim Busbin**

Contact Organization: **Southern Company Services, Inc.**

Contact Segment: **1**

Contact Telephone: **205-257-6357**

Contact E-mail: **jybusbin@southernco.com**

Additional Member Name	Additional Member Organization	Region*	Segment*
Marc Butts	Southern Company - Transmission	**SERC**	1
J. T. Wood	Southern Company - Transmission	SERC	1
Jim Viikinsalo	Southern Company - Transmission	SERC	1
Keith Calhoun	Southern Company - Transmission	SERC	1
Shih-Min Hsu	Southern Company - Transmission	SERC	1
Tom Sims	Southern Company - Transmission	SERC	1
Gary Gorham	Southern Company - Transmission	SERC	1
Dave Slovensky	Southern Company - Transmission	SERC	1
Jeremy Bennett	Southern Company - Transmission	SERC	1
Bob Jones	Southern Company - Transmission	SERC	1
Bill Botters	Southern Company - Transmission	SERC	1
Mike Bartlett	Southern Company - Transmission	SERC	1
Maryanne Mujica	Southern Company - Transmission	SERC	1
Lee Taylor	Southern Company -	SERC	1

	Transmission		
Perry Stowe	Southern Company - Transmission	SERC	1
Rod Hardiman	Southern Company - Transmission	SERC	1
Doug McLaughlin	Southern Company - Transmission	SERC	1
Randy Castello	Southern Company - Transmission	SERC	1
John Ciza	Southern Company - Generation	SERC	1
Chuck Chakravarthi	Southern Company - Transmission	SERC	1
Tom Higgins	Southern Company - Generation	SERC	5
Terry Crawley	Southern Company - Generation	SERC	5
Roger Green	Southern Company - Generation	SERC	5
Roman Carter	Southern Company - Transmission	SERC	1

*If more than one Region or Segment applies, please list all that apply. Regional acronyms and segment numbers are shown on prior page.

Background

The purpose of this standard is to establish Transmission System planning performance requirements within the planning horizon to develop a Bulk Electric System that will operate reliably over a broad spectrum of System conditions and following a wide range of probable Contingencies. This standard will replace TPL-001-0, TPL-002-0, TPL-003-0, and TPL-004-0. The standard drafting team has not yet addressed TPL-005-0 and TPL-006-0, but will address these two standards during the next phase of the drafting process.

The major objectives of the standard drafting team are to:

1) Ensure the standard is complete and the requirements are set at an appropriate level to ensure reliability (Not Least Common Denominator)
2) Ensure that the standard is enforceable by having clearly defined requirements with unambiguous language
3) Address the issues raised by FERC Order 693, 890, and other applicable orders
4) Address the issues raised in the original Standards Authorization Request (SAR) and the Supplemental SAR.

The standard drafting team did not attempt to edit the existing standards but rather chose to write one standard that addresses all aspects of transmission planning in the existing

TPL-001-0, TPL-002-0, TPL-003-0, and TPL-004-0. The standard drafting team organized the new standard in the following sections:

R1 – Modeling requirements
R2 – Assessment and Corrective Plan requirements
R3 – Steady State Analysis requirements
R4 – Stability Analysis requirements
R5 – Coordination requirements

The standard drafting team determined that the requirements and analysis for Steady State are different from those for stability. As such, the standard drafting team separated the analysis requirements and created two performance requirement tables.

The standard drafting team recognizes that this draft standard is a starting point for industry input into the standard and that there is still a lot of work required to complete the process. The standard drafting team has made many changes to clarify requirements, add requirements, and make some of the performance requirements stricter. The standard drafting team has not addressed Measures, Risk Factors, Violation Severity Factors, or Time Horizons at this time. These will be addressed when the standard drafting team has better defined the requirements of the standard.

For questions where you agree with the standard drafting team, please state that you agree and if available, please provide supporting documentation. If you disagree with the standard drafting team, please explain why you disagree and provide data to support your position, such as outage data or analysis. If you believe that we have made a performance requirement too strict please provide supporting documentation. If applicable, please include the approximate cost in man-hours for additional studies and/or cost in $Millions for additional transmission investment to meet the new requirements or the stricter requirements. If you believe that the standard should be stricter, please provide the rationale along with any supporting data, including existing practices, cost estimates or additional analysis.

To improve the standard, the standard drafting team would appreciate responses to as many of these questions as you can answer.

A. New Definitions

Many of the concerns about the existing TPL standards come from the fact that a number of generally understood concepts are embedded in undefined terms, tables, and footnotes. To clarify some of these concerns, the standard drafting team is proposing new definitions. Please indicate whether you agree with the following proposed definitions and provide proposed changes to the definitions if you disagree:

Definition	Agree or Disagree
Q1. **Base Case**: Computer representation of the projected initial or starting Transmission System conditions for a specific point in time. Each base case reflects the forecasted Load at each bus (or node) on the interconnected Transmission System, the transmission facilities which deliver the generation and reactive resources to the connected Load, and the generation dispatch including firm transaction obligations assumed to supply the	☐Agree. ☒Do not agree.

connected Load. The models also reflect facility ratings in accordance with FAC-008 & FAC-009.	
Q1. **Comment: As stated the definition does not appear to allow for equivalenced system representation since it refers to "each bus on the interconnected Transmission System". The words "as represented in the model" should be added after "interconnected Transmission System" or another sentence should be added stating that equivalenced system representation is acceptable. A definition of a dynamics base case should also be considered.**	
Q2. **Consequential Load Loss:** Load that is no longer served because it is directly connected to an element(s) that is removed from service due to fault clearing action or mis-operation.	☐Agree. ☒Do not agree.
Q2. **Comment: This definition only relates to load that is "directly connected" to the specific element being removed. It does not allow for any load that may be or becomes radially connected through another branch that is not part of the facility removed. It does not make sense to not allow the loss of load that is actually electrically radial to the facility being outaged. The definition may work better as "Load that is no longer served because it is directly connected to or radially served through an element(s) that is removed from service due to fault clearing action." The word "mis-operation" is not needed in this definition because none of the contingency events use this term.**	
Q3. **Extreme Events:** Events which are more severe than Planning Events and have a low probability of occurrence.	☐Agree. ☒Do not agree.
Q3. **Comment: Recommend modifying the definition to read: "Events which are more severe than Planning events that are evaluated as required by TPL-001-1 Tables 1 and 2, in part, to identify potential Cascading Outages.**	
Q4. **Long-Term Transmission Planning Horizon:** Transmission planning period that covers years six through ten or beyond.	☒Agree. ☐Do not agree.
Q4. **Comment: No Additional Comments.**	
Q5. **Near-Term Transmission Planning Horizon:** Transmission planning period that covers years One through five.	☒Agree. ☐Do not agree.
Q5. **Comment: No Additional Comments.**	
Q6. **Non-Consequential Load Loss:** Load loss other than Consequential Load Loss. For example, Load loss that occurs through manual (operator initiated) or automatic operations such as under-voltage Load shedding, under-frequency Load shedding, or Special Protection Systems.	☒Agree. ☐Do not agree.
Q6. **Comment: Agree assuming the change in Q2 is made.**	
Q7. **Planning Assessment:** Documented evaluation of future	☐Agree.

Bulk Electric System needs by the use of performance studies that cover a range of assumptions regarding system conditions, time frames, future plans including capital reinforcements and operating procedures and other factors, such as asset conditions and age.	☒Do not agree.
Q7. **Comment: The term "needs" should be replaced by a term that more aptly describes what is being evaluated. The definition should be ended after the word "assumptions." We do not agree that the planning assessment should include asset conditions and age. The age of equipment, if it is well maintained, has little impact on reliability.**	
Q8. **Planning Events:** Events which require Transmission system performance requirements to be met.	☐Agree. ☒Do not agree.
Q8. **Comment: Change to, "Events that are simulated or assessed to test the transmission system to ensure that performance requirements are met as defined in TPL-001-1 Tables 1 and 2."**	
Q9. **Plant Stability Study:** Study of an individual plant's Stability for various Contingencies in the vicinity of the plant; concerned with the effect on the System of the generating units' loss of synchronism and the damping of the generating units' power oscillations.	☒Agree. ☐Do not agree.
Q9. **Comment: No Additional Comments.**	
Q10. **System Stability Study:** Study of the System or portions of the System to ensure that angular Stability is maintained, inter-area power oscillations are damped, and voltages during the dynamic simulation stay within acceptable performance limits.	☒Agree. ☐Do not agree.
Q10. **Comment: No Additional Comments.**	
Q11. **Year One:** The first year that a Transmission Planner is responsible for studying. This is further defined as the planning window that begins the next calendar year from the time the Transmission Planner submits their annual studies. Analysis conducted for time horizons within the calendar year from the study publication are assumed to be conducted under the auspices of Operations Planning.	☐Agree. ☒Do not agree.
Q11. **Comment: The last sentence in the above definition was not included in the definition listed in the draft standard, nor should it be.**	

B. Sensitivity Studies

The draft planning standard includes the requirement, as specified in FERC Order 693, that planning decisions be based on a portfolio of analyses. In section 12.a.ii "Sensitivity studies and critical system conditions" FERC provided direction to consider a full range of variables considered to be significant that need to be assessed and documentation provided that explains the rationale for the selection of variables assessed.

In addition to the firm obligation scenario, the portfolio of analyses should be supplemented to include information from sensitivity analysis. The sensitivity analysis should be developed using additional cases that simulate reasonably stressed system conditions. The standard drafting team has included several parameters that can be varied to create the requisite sensitivity case(s). The draft standards specify that the sensitivities reflect one or more of the following conditions and that documentation be provided explaining the rationale for selecting the sensitivity(ies) employed. The parameters that should be varied include:

- Higher or lower Load forecasts from the Base Case with variability of Load/demand and Load power factors due to season, weather, or time of day.
- Modification of expected transfers.
- Unavailability of long lead time facilities.
- Variability and outages of Reactive Resources.
- Generation additions, retirements, or other dispatch scenarios.
- Decreased effectiveness of controllable Loads and Demand Side Management.
- Modification of planned Transmission outages

To help focus industry discussion, please respond to the questions below:

Q12. Should the standard provide more specific direction regarding the number of sensitivity cases that need to be developed?

Yes ☐ No ☒

Comment: This should not be a "one shoe fits all" exercise. It appears that at least one of these items listed is required even though they may not be the most appropriate ones for all entities. There should be the ability to perform other sensitivity analysis instead of these as long as the "rationale" is provided for the choice. The entity should be allowed to determine the appropriate sensitivity cases.

Q13. Should the standard specify the required changes, such as changes in expected transfers, load forecasts, generation patterns, etc., from the study case to be considered a "reasonably stressed" case?

Yes ☐ No ☒

Comment:

See comment above. [This should not be a "one shoe fits all" exercise. It appears that at least one of these items listed is required even though they may not be the most appropriate ones for all entities. There should be the ability to perform other sensitivity analysis instead of these as long as the "rationale" is provided for the choice. The entity should be allowed to determine the appropriate sensitivity cases.]

Q14. The SDT proposes to require the use of sensitivity studies for Near-Term Transmission System Planning Horizon stability analysis. Do you concur with the use of sensitivity analysis in dynamic studies?

Yes ☒ No ☐

Comment: Some sensitivity analysis is reasonable.

Other comments:

1. The wording regarding transfer sensitivity for stability analysis should be the same as the wording used in steady state analysis "modification of expected transfers".

2. The list of sensitivities may not be the most appropriate for all entities. There should be the ability to perform other sensitivity analsysis instead of these as long as the "rationale" is provided for the choice.

Q15. The draft TPL standard does not require the use of sensitivity studies for the Long-Term Transmission System Planning Horizon (year six and beyond) studies. Do you concur with this approach or should there be some level of sensitivity analysis required for the long-term period?

Yes ☒ No ☐

Comment:

Yes, we concur with this approach.

C. Corrective Action Plans

Requirement R2.7 of the standard states that when analysis shows that the performance requirements in Table 1 and Table 2 are not fully met, a Corrective Action Plan that utilizes all or some of the Transmission System enhancements, generation additions, DSM, new technologies and Operating Procedures shall be included in the Planning Assessment. This Corrective Action Plan should ensure that upon its implementation the identified system deficiencies will be corrected so that the performance requirements in Table 1 and Table 2 will be met. Furthermore, studies included in the Planning Assessment should demonstrate that this is indeed the case.

Q16. Requirement R2.7.1: Such Corrective Action Plans shall "Identify System deficiencies and the associated actions needed to achieve required System performance including Transmission and generation improvements, DSM, new technologies, or Operating Procedures including the duration of Interim Operating Procedures". System deficiencies may be corrected using an integrated plan, i.e., an optimal mix of Transmission, generation, DSM and Operating Procedures. Should DSM be considered in conjunction with other measures in developing Corrective Action Plans? If yes, please comment on how the impact of DSM should be included.

Yes ☐ No ☒

Comment: It should not be a requirement that DSM be considered but DSM should be one of the allowable alternatives. The way the present standard is written, it is unclear whether "all" of the named items (except operating procedures with the "or" statement) are required to be considered or whether only one or more of the items need to be included. It is suggested that the following statement replace the word "including" in line two of R2.7.1: "that may include one or more of the following:". This should clarify that all of the items are not required to be in the action plan for compliance.

It also is not clear what the phrase "including the duration of interim Operating Procedure" means. Does this mean how many years you would anticipate using the Operating Procedure or does it mean how long it takes to "repair" the cause of the outage that necessitated the use of the Operating Procedure? Assuming that the meaning is the second one, the requirement to document the "mean time to repair" is new and there does not seem to be a very useful purpose for this requirement. As long as the system performance standards are met and the system is prepared for the next outage, what is the purpose of recording and documenting the length of time that you anticpate it to take to fix the problem? This is variable at best and does not provide useful information.

Q17. Requirement R2.7.2: Such Corrective Action Plans shall "Be added to study cases and the cases re-tested to show that the System with planned additions meets the performance requirements in the tables". Should new studies, including the facilities comprising the Corrective Action Plan, be performed to assess System normal performance and Contingency response for conditions that previously resulted in the System deficiencies (without the planned additions) and also demonstrate that the

changes would not result in inadvertent negative impacts on the System. If you "agree", please comment on how a study area should be determined.

Yes ☒ No ☒
Comment:
A properly conducted study should determine that the recommended Corrective Action Plan actually solves the problem and does not cause other problems. If not, it is not a Corrective Action Plan. What appears to be intended here is whether the combination of Corrective Action Plans interact with each other and create additional problems. In the conference call Mr. Odom stated that it was not the intent for "all" the corrective plans be put back into the cases and all of the simulations be redone but only look at local area analysis. If that is the case, what is necessary to be in compliance with R2.7.2 and what type of documentation is required? This is very unclear.

The study area should be determined by the TP. The TP has the most knowledge of how the system responds to changes.

Q18. Requirement R2.7.3: The standard calls for a differentiation between committed and proposed projects. Do you agree that they should be treated separately? If not, please state why not.

Yes ☐ No ☒
Comment:
This requirement does not appear to have any major benefit, particularly coupled with R2.7.4 discussed in Q19. The standards require that an assessment be done every year and that the system must meet performance requirements or a Corrective Action Plan be developed. Therefore, if a project has been previously specified as a "committed" project, removing it and or replacing it with something else must also meet performance requirements under this standard or a violation occurs. Also, this performance of the system with the "committed" Corrective Action Plan" removed or modified must be documented. Therefore, requirement R2.7.4 is automatically met and is superfluous in the standard and should be removed. There is no benefit from the distinction between a project definition of "committed" and "proposed".

Q19. Requirement R2.7.4: For such Corrective Action Plans "Committed projects shall not be removed without documentation to show that the revised plan meets the performance requirements". Do you agree or disagree with this requirement? If you disagree, please explain why.

Yes ☐ No ☒
Comment:
See comments for Q18. [This requirement does not appear to have any major benefit, particularly coupled with R2.7.4 discussed in Q19. The standards require that an assessment be done every year and that the system must meet performance requirements or a Corrective Action Plan be developed. Therefore, if a project has been previously specified as a "committed" project, removing it and or replacing it with something else must also meet performance requirements under this standard or a violation occurs. Also, this performance of the system with the "committed" Corrective Action Plan" removed or modified must be documented. Therefore, requirement R2.7.4 is automatically met and is superfluous in the standard and should be removed. There is no benefit from the distinction between a project definition of "committed" and "proposed".]

D. Performance Requirements

The proposed revised planning standard (TPL-001-1) incorporates a number of changes in requirements as compared to the current planning standards (TPL-001-0 through TPL-004-0), which it is expected to replace. Among other things these changes are intended to clarify the standard, address issues described by FERC, and, in particular, to "raise the bar."

Strengthening the planning standards in selected areas is necessary to maintain a reliable Bulk Electric System that is up to the challenges of the 21st Century. In proposing the requirements in this draft, the standard drafting team attempted to balance the value of increased reliability against any potential increase in work and costs to meet the new proposed standard.

The standard drafting team is seeking input from the industry to determine whether a proper balance has been achieved. The areas where material changes are proposed in this draft are enumerated below, and questions are posed by the standard drafting team to obtain industry comment. In formulating your responses, please keep in mind that material changes in the final standard will be accompanied by a transition plan to provide for an orderly implementation of the final standard.

The performance requirements relative to Non-Consequential Loss of Load for the following events enumerated in the two tables can be considered more stringent than the existing TPL standards. Furthermore, the proposed standard is based on an assumption that performance requirements for EHV facilities should be more stringent than for lower voltage facilities.

Do you agree that Non-Consequential Loss of Load should not be permitted for the following events? If you disagree, please provide a reason for your disagreement.

Event	Agree or Disagree	Comment
Q20. P2-1: Loss of bus section (SLG for stability) above 300 kV	☐Agree. ☒Do not agree.	By not allowing non-consequential load loss, utilities will incur significant expenditures. The marginal increase in reliability for this low probability event does not justify the huge costs involved.
Q21. P5-1: For facilities above 300 kV, loss of a Transmission circuit followed by System adjustment[1] followed by loss of another Transmission circuit	☐Agree. ☒Do not agree.	This is a very significant change in the performance requirements in this reliability standard. It involves facilities from 345 kV through 764kV which carry significant amounts of power. These also are facilities that require significant lead time to construct in the Southern Balancing Authority with estimates up to 7-10 years in the state of Georgia. If a performance problem is detected under these new requirements, it could take that long to come into compliance and at a very significant cost if a new major 500kV line is required. These facilities can run as much as $4.0 million a mile or more in urban areas. We understand that a few areas of the country presently have this requirement but most do not. In the areas where the requirement has not been in place, the reliability of the system has been acceptable to the local Public Service Commissions that have governed

		the service to Retail customers. There has been no evidence presented that there is a need for an increase in reliability, particulary at the extensive time delay and expense possible from this particular requirement. An adoption of this standard without such evidence can only be considered arbitrary and capricious at best. Increased reliability is, in general, a worthy goal where it is cost effective. It may be appropriate to adopt this type of reliability requirement for areas that deem the resulting reliability increase to be cost effective for their customers. But it is inappropriate to "require" everyone else to be forced to live under this arbitrarily developed expansion of reliability requirements.
Q22. P5-2: For facilities above 300 kV, loss of a Transmission circuit followed by System adjustment followed by loss of a transformer with low side voltage rating above 300 kV	☐Agree. ☒Do not agree.	See comments for Q21. [This is a very significant change in the performance requirements in this reliability standard. It involves facilities from 345 kV through 764kV which carry significant amounts of power. These also are facilities that require significant lead time to construct in the Southern Balancing Authority with estimates up to 7-10 years in the state of Georgia. If a performance problem is detected under these new requirements, it could take that long to come into compliance and at a very significant cost if a new major 500kV line is required. These facilities can run as much as $4.0 million a mile or more in urban areas. We understand that a few areas of the country presently have this requirement but most do not. In the areas where the requirement has not been in place, the reliability of the system has been acceptable to the local Public Service Commissions that have governed the service to Retail customers. There has been no evidence presented that there is a need for an increase in reliability, particulary at the extensive time delay and expense possible from this particular requirement. An adoption of this standard without such evidence can only be considered arbitrary and capricious at best. Increased reliability is, in general, a worthy goal where it is cost effective. It

		may be appropriate to adopt this type of reliability requirement for areas that deem the resulting reliability increase to be cost effective for their customers. But it is inappropriate to "require" everyone else to be forced to live under this arbitrarily developed expansion of reliability requirements.]
Q23. P5-3: For facilities above 300 kV, loss of a transformer with low side voltage rating above 300 kV followed by System adjustment followed by loss of another transformer	☐Agree. ☒Do not agree.	See comments for Q21. [This is a very significant change in the performance requirements in this reliability standard. It involves facilities from 345 kV through 764kV which carry significant amounts of power. These also are facilities that require significant lead time to construct in the Southern Balancing Authority with estimates up to 7-10 years in the state of Georgia. If a performance problem is detected under these new requirements, it could take that long to come into compliance and at a very significant cost if a new major 500kV line is required. These facilities can run as much as $4.0 million a mile or more in urban areas. We understand that a few areas of the country presently have this requirement but most do not. In the areas where the requirement has not been in place, the reliability of the system has been acceptable to the local Public Service Commissions that have governed the service to Retail customers. There has been no evidence presented that there is a need for an increase in reliability, particulary at the extensive time delay and expense possible from this particular requirement. An adoption of this standard without such evidence can only be considered arbitrary and capricious at best. Increased reliability is, in general, a worthy goal where it is cost effective. It may be appropriate to adopt this type of reliability requirement for areas that deem the resulting reliability increase to be cost effective for their customers. But it is inappropriate to "require" everyone else to be forced to live under this arbitrarily developed expansion of reliability requirements.]

[1]System adjustment can be manual or automatic.

The proposed standard is based on an assumption that performance requirements for non-bus tie EHV breakers should be distinguished from other breakers. Do you agree that Non-Consequential Loss of Load should not be permitted for this event?

Q24. Loss of non-bus tie breaker (above 300 kV) due to internal fault

Yes ☐ No ☒

Comment: By not allowing non-consequential load loss, utilities will incur significant expenditures. The marginal increase in reliability for this low probability event does not justify the huge costs involved.

The proposed standard is based on an assumption that performance requirements for non-bus tie EHV breakers should be distinguished from other breakers and that performance requirements for EHV facilities should be more stringent than for lower voltage facilities. Do you agree that Non-Consequential Loss of Load should not be permitted for this event?

Q25. P3-1: Loss of (SLG for stability) either a generator, a Transmission circuit, a transformer, or a bus and a stuck non-bus tie breaker (above 300 kV)

Yes ☐ No ☒

Comment: By not allowing non-consequential load loss, utilities will incur significant expenditures. The marginal increase in reliability for this low probability event does not justify the huge costs involved.

The proposed standard is based on an assumption that the following events are relatively high probability events and, therefore, Non-Consequential Loss of Load should not be permitted. Do you agree? If you disagree, please provide a reason for your disagreement.

Event	Agree or Disagree	Comment
Q26. P4-1: Loss of a Generator followed by System adjustment[1] followed by loss of another Generator	☒Agree. ☐Do not agree.	These are relatively higher probability events and the increase in performance requirements is justified.
Q27. P4-2: Loss of a generator followed by a System adjustment followed by the loss of a monopolar DC line	☒Agree. ☐Do not agree.	See comment for Q26 [These are relatively higher probability events and the increase in performance requirements is justified.
Q28. P4-3: Loss of a generator followed by System adjustment followed by loss of a Transmission circuit	☒Agree. ☐Do not agree.	See comment for Q26 [These are relatively higher probability events and the increase in performance requirements is justified.
Q29. P4-4: Loss of a generator followed by System adjustment followed by loss of a transformer with low side voltage rating above 300 kV	☒Agree. ☐Do not agree.	See comment for Q26 [These are relatively higher probability events and the increase in performance requirements is justified.

[1] System adjustment can be manual or automatic

The performance requirement for the following event may be considered less stringent than the existing TPL Standards — P2-3: Loss of a single pole of a DC line. Interruption of firm transactions (without Loss of firm Load) if the transaction is dependent on the faulted DC line is now allowed for this initiating event/Contingency.

Q30. Do you agree that interruption of any firm transfers that are dependent on the outaged DC line that is taken out of service should be permitted?

Yes ☐ No ☒
Comment: Why should the reliability level for a transaction on a DC line be different from a transaction over AC? Also, when the transfer over DC is removed, the load it was serving still has to be picked up in the AC network because load cannot be dropped. Therefore, this places a burden on the AC network to serve additional load. If you allow transfers over DC to be interrupted, you should also allow the interruption of transfers over AC for the same events.

E. Stability

Q31. The proposed standard is based on an assumption that steady state analysis and stability analysis are different from each other and that therefore, two tables of Contingencies and performance requirements were needed. It is also based on an assumption that stability study requirements should be clearly separated from the steady state study requirements. Do you agree with the action taken in separating stability analysis from steady state analysis? If not, please explain.

Yes ☒ No ☐
Comment:
No Additional Comments.

Q32. The SDT has added requirements for plant stability studies and has drawn a distinction in these studies from System stability studies. Do you agree with this approach? If not, please explain.

Yes ☒ No ☐
Comment:
No Additional Comments.

Q33. The existing TPL-004-0 standard has a requirement to consider the Loss of all generating units at a plant, but it was not clear whether this requirement should apply to stability studies. The SDT did not include this requirement in the stability table, because it is hard to envision a condition when all units would trip simultaneously within the timeframe of a stability simulation. Do you think this condition should be required in stability analysis of extreme events? If not, please explain.

Yes ☐ No ☒
Comment:
No Additional Comments.

Q34. There are an increasing number of events with slow voltage recovery after faults on the Transmission System. The dynamic behavior of induction motor loads is a major factor in this phenomenon. The proposed standard therefore requires that the load

model for stability studies of peak Load conditions include the dynamic effects of induction motors. Do you agree with this requirement? If not, please explain?

Yes ☒ No ☐
Comment: No Additional Comments.

Q35. What type of manual or automatic adjustments of generators should be allowed for single and multiple Contingencies?

Comment: Automatic generator tripping should be allowed for single contingency events and for multiple contingency events.

F. Generation Runback and Tripping

The SDT has discussed the automatic and manual readjustments of generators that should be permissible for single contingencies and multiple contingencies. The existing TPL-001-0 through TPL-004-0 standards through footnote (a) of Table I could include emergency ratings applicable for short durations as required to permit operating steps necessary to maintain system control. The footnote is silent about allowable generation adjustments in response to the Category B events. However, it does indicate that system adjustments are permitted to prepare for the next Contingency. These system adjustments could include manual or automatic adjustments involving generation.

The SDT has learned that many transmission owners use System Protection Systems (SPS) or Remedial Action Schemes (RAS) to trip generation for single and multiple Contingency outage events to prevent overloads, low voltage, and instability in the Interconnected Transmission network for N-1 and N-2 events. In some cases, the RAS are used to prepare for the next Contingency; but in some cases, the RAS are used to simultaneously avoid exceeding emergency ratings.

Q36. The proposed standard allows generation runback after the disturbance that causes a single Contingency (or due to a single Contingency outage) to move the Interconnected Transmission System from an emergency state (within emergency ratings) to a normal state (within normal ratings), assuming that the disturbance does not result in instability? Do you agree? If not, please explain.

Yes ☒ No ☐
Comment: No Additional Comments.

Q37. Since emergency ratings are thermal ratings, should this standard allow an automatic generation runback scheme (that is initiated immediately after the disturbance causing the single Contingency) to prevent thermal overloads (assuming that the disturbance does not result in instability)? If yes, what are the conditions that must be met in order to allow such a runback scheme to meet the System performance criteria for single Contingencies? Please explain the reason for your answer.

Yes ☒ No ☐
Comment: Yes, as long as no emergency ratings are violated.

The standard drafting team has considered that RAS or SPS may be allowable under certain situations for single Contingencies, but proposes that their use should be limited.

Q38. Do you agree that RAS or SPS may be allowed for single Contingencies? If not, please explain.

Yes ☒ No ☐
Comment: RAS and SPS should be defined such that they may only be used for low probability events.

Q39. Please describe the limitations that you believe should be placed on the use of RAS or SPS for single Contingency events.

Comment: Generator tripping or runback and reconfiguration should be allowed for lower probability single contingency events such as bus faults; we suggest that SPS not be used for events that are more likely to occur.

Q40. When RAS or SPS are allowed, what conditions should be met when these systems are used in system adjustments to meet performance requirements?

Comment: If an SPS is used to solve a single contingency problem, then full redundancy should be required. Generator tripping or runback and reconfiguration should be allowed for lower probability single contingency events such as bus faults; we suggest that SPS not be used for events that are more likely to occur.

G. General Questions

Q41. If you are aware of any regional variances that would be required as a result of these standards, please identify them here.

Yes ☐ No ☒
Comment: Not at this time.

Q42. If you are aware of any conflicts between the proposed standards and any regulatory function, rule order, tariff, rate schedule, legislative requirement or agreement, please identify them here.

Yes ☐ No ☒
Comment: No Additional Comments.

Q43. Do you have any other questions or concerns with the proposed standard that have not been addressed? If yes, please explain.

Yes ☒ No ☐
Comment: See Below:

REQUIREMENTS:

1. The standard is not clear on whether corrective action plans are required for performance failures during the sensitivity analysis required for both steady-state and stability studies. In the phone conference John Odom stated that it was not the intent of the Drafting team to require that facililities be constructed for these conditions. The standard should be made clear on this point.

2. The Load Forecast section (R1.1) is new and is a duplicate of the requirements in the MOD standards and is unclear as written. Having similar requirements in multiple

standards creates the possiblility of conflicting requirements for the industry. If there are different requirements necessary, the MOD standards should be modified and not introduce a new section to the TPL standards.

3. R1.1.1 is unclear in what is intended by the "actual or expected aggregate mix of industrial, commercial, and residential load". Does the word "aggregrate" mean that the split between customer classes should be at the Balancing Authority level or at each load bus represented in the model. In many cases this could place a requirement for substantial load research on the the industry which may take a substantial amount of time and expense to accomplish. The use of the phrase "actual or expected" indicates an expectation that it be based on research and not general industry averages as may be more practical in some cases.

4. The wording in section R1.2 is very unclear. Is the intent to allow for three different methods for obtaining power factor models, i.e. historical system performance, validated by measurements during stressed System conditions, or documented Transmission planning area requirements? The other understanding is that the historical System performance is only measured during stressed System conditions. If this is the intent, what is the definition of stressed system conditions that is intended? Is this just heavy loadings, such as peak times, or is it during sytem disturbances? This is not clear. We suggest that the following words be used instead: "Load models validated by measurement during load levels typically studied or documented Transmission planning area requirements."

5. Requirement R1.4 should be qualified as only the outages within the Planning Horizon. There is no need to include protective relays because outages of relays in the Planning Horizon would not be known. We suggest the following words: "Known planned outages within the Planning Horizon and long-term outages greater than one year within the Planning Horizon for Transmission and generation equipment with consideration given to spare equipment strategy."

6. R1.5: If this places a requirement on the PC to define what constitutes "planned facilities", then this should be explicitly stated as a requirement.

7. R2.1 allows Assessments to be supplemented with "qualified" past studies which are defined in R2.6. R2.6.1 specifies these to be less than three years old for steady-state analysis and certain changes could not have occurred in the "System". There should be some qualification to the definition of "System" to include "the vicinity" of the area under evaluation. We would surmise that there always be some change in topology in the Eastern Interconnect which would preclude the use of past studies. Note that the "in the vicinity of" wording is used with the plant stability studies already. Also, is the intent with the "less than" to eliminate the use of studies three years old? Similar comments can be made for R2.6.2 and R 2.6.3.

8. R2.1 The wording/structure is confusing. The "Planning Assessment shall address all five years", but this does not require all five years be studied. It appears that the minimum study requirements would be two peak studies (years 1 or 2 & 5), one off peak study (any year), and one senstitivity case for each. Is this a correct reading?

9. In R.2.1.3.1 it is unclear what is intended. The study can be for higher or lower load "forecasts" with a different load power factor due to season, weather, or time of day. If you are looking at different seasons, weather, or time of day you will have a different load forecast. Is the intent to require the studies to model different seasons or times of

day that will generate different power factors or is it to focus on higher or lower loads, i.e. is it a load forecast exercise or a power factor exercise? Can we look at Spring conditions and have it qualify for this requirement even though the loads are consistent with my Base Case load forecast?

10. Requirement R2.1.3.3 lists "unavailability of long lead time facilities" as one of the sensitivity(ies) that should be evaluated. It is unclear whether this refers to the construction of projects with long lead times or for replacement of failed equipment that have long lead times for obtaining replacements. One of the drafting team members suggested it was the latter understanding that was intended. We suggest that the language be changed to "Delayed restoration to service of failed facilities with long lead times for repair". This may clarify the intent of the requirement.

11. R2.1.3.7 should be modified to read "Modification of planned long term Transmission outages."

12. R2.3.1 Does "current study" refer to an updated study or is this referring to some type of short-circuit analysis? It appears that analysis is required only every five years unless changes in the BES occur. Is this a correct reading?

13. R2.4: Need to clarify that "address all five years of the assessment period" does not necessarily require that each year must be studied individually. A study of one year could cover all 5 years if it is the worst case.

14. R2.4.3.2 Is the purpose of including non-firm transfers to identify generation limits? Please clarify that the intent is not to require constraints associated with non-firm transfers to be addressed.

15. R2.5.2: The addition of a transmission line always helps plant stability. Therefore, this should not be included as a change requiring a new study.

16. R2.7.1.1 requires that the action plan include a project initiation date as well as the in-service date. The project "initiation date" is not defined and can be interpreted as being when you thought up the project, when you started spending money on design, or when you actually started construction. As long as you have the in-service date when the project is needed, we do not see any major benefit from recording and documenting an "initiation" date. The length of time that it requires to complete a project is extremely variable based on many conditions so we're not sure what benefit, if any, will be gained by recording and documenting the initiation date. It may be impossible for someone not familiar with the legal, regulatory, etc. requirements in a given area to judge whether the timing is appropriate or not. This requirement should be eliminated.

17. R2.7.5 calls for the review of the implementation status of facilities. This imposes a large documentation requirement which has no benefit in reliability. We suggest making this requirement on an "as requested" basis.

18. Requirements 3.2 and 4.2: Delete the words "including those" so that it reads "the removal of all elements that System protection is expected...". As currently written, it sounds like you are going to remove more elements than the protection will remove.

19. R3.2 requires that the contingency analysis shall simulate the removal of all elements including those that System protection is expected to disconnect for each contingency without operator intervention. At present most steady state analysis uses

single "element" contingency with element defined as transmission lines or transformers as defined in the Power Flow cases. In a significant number of cases these individual "lines" are part of a larger "protection control group" (PCG). that would remove multiple elements encompased by the breakers in the PCG The present load flow tools (PSS/E) do not have features that will allow this type of analysis in an automated manner. To facilitate this change in required analysis, program modification will be needed or additional programs written. For an example with a line from bus A to B and then B to C with breakers at A and C and load at B, the outage of either A to B or B to C with load service remaining at Bus B may produce a more stringent condition than removing A to B to C. It appears that the new requirement is requiring the A to B to C analysis instead of the more stringent A to B or B to C.

20. Requirement R3.2.1 is unclear. Generators generally have both a high and a low voltage limitation on the terminal voltage related to station service reqirements. Most load flow representations for generators tend to hold the voltage on the high side of the GSU instead of the low side. Is this requirement attempting to say that the voltage limitations on the generator terminals must be considered or is it something else? This should be made clear in the requirement.

21. R3.3.2.1 requires that the amount of "consequential Load loss following a single Contingency shall be identified and the anticipated duration be recorded". This is an arbitrary requirement that will require significant time and effort to document and will provide no useful information from a planning perspective. Also the inclusion of an "expected" duration is more arbitrary than the actual amount of load. The time required to restore the facilities is a pure guess at best since it will vary substantially based on circumstances and conditions. Since we are also required to remove all elements that the protection control group (PCG) will open instead of just a single "power flow model" line, some of the load may be restored during switching action for tapped loads and some may not. This creates an additonal confusion of what is required to be recorded in terms of duration and load reduction. We see no benefit from identifying and documenting either the amount of consequential load lost or the estimated duration that would justify the time and effort required.

22. R3.3.2.2 This states that curtailments of firm transfers are not permissible following single contingency events to meet the performance criteria. Please clarify whether "firm transfers" refers to firm point to point service only, or if firm network service is also included. Said another way, is the curtailment of a network resource permissible following single contingency events to meet the performance criteria? If not, please clarify how redispatch service as required by Order 890 should be considered. If curtailment of a network resource is permited, please clarify why curtailment of PTP would be held to a higher standard. Also, please clarify whether R3.3.2.2 applies to P6. Lastly, please clarify how Conditional Firm Service (CFS) as required by Order 890 should be considered in meeting R3.3.2.2. CFS allows the curtailment of "firm" PTP transfers. This appears to be in conflict with the performance criteria.

23. Requirement R3.6 is not clear. It could be interpreted as generator tripping allowed for multiple contingencies only for the situations that meet the "to be determined" conditions. Generator tripping should always be allowed for multiple contingencies.

24. R4.5 and R4.6: We suggest dropping the words "For the" in each of these.

25. R4.6.1: Plant stability studies should not be required for generating units as small as 20 MW. The threshhold should be 100 MW or greater.

26. R4.6.3: The last sentence "The identified Contingencies, at a minimum, shall be evaluated" is redundant because the requirement already says "shall be performed and evaluated" The last sentence should therefore be deleted.

TABLE 1 - STEADY STATE PERFORMANCE:

27. In Table 1 in the column titled "Interruption of Firm Transfer Allowed," does it pertain to point-to-point only, or does it also apply to network loads? Please explain how this provision is consistient with the requirement to re-dispatch to address system constraints.

28. Steady state table, extreme event description, section 3: Items d and f are operating issues and therefore should not be included in the table. Also, items c and d are identical. Items d and f are identical.

29. Steady state table: Add the requirement to study n-0 to the table so it will be complete. Call it P0.

30. Steady state table and stability table: Change the heading which now says "For all Planning Events" to say "The following performance requirements must be met for the Planning events evaluated in addition to the requirements given in the columns"

31. Steady state table: For the event in P3, it is not clear what the "above 300 kV" applies to. Is it only the transformer? Or it it also the transmission circuit and generator? Also, the third column mentions DC when there is no DC in the event.

32. The event description in P3 is confusing. Please consider rewording in the 1,2,3 format of the other event descriptions. The term "non-bus tie breaker" is confusing. Please consider using "breaker (excluding bus ties)". Also, above 300 kV, most construction is either ring bus or breaker and a half. Please considered deleting the bus outage contingency. Lastly, please clarify how redispatch and CFS should be considered in the context of P3 and P4, in which the curtailment of firm transfers is not permissible to meet the performance criteria.

33. Steady state table: For transformers below 300 kV, P9.6 is no different from P8.3. We suggest adding the clarification of "above 300 kV" for P9.6.

34. Steady state table Extreme Event:
3.b "A successful cyber attack" needs to be clarified. What should the contingency be?
3.g Add the words "As applicable" to the beginning.
3.h This should be changed to "Other events as deemed appropriate by the PC based upon operating experience". Otherwise there will be no end to the contingencies that must be studied.

35. Several events in the tables use the term "internal fault" for a breaker. The SDT needs to explain what is intended by this term.

36. Steady State Performance Requirement, Table 1, Performance Levels P1-P4, should allow for the interruption of firm transfers if the transfer is dependent upon on the outaged equipment (whether AC or DC) to provide an electrical path specified in the transfer. Therefore, the current verbiage used for the outage of a DC Line should be applied to all levels and state, "Yes, if transfer is dependent on the outaged equipment to provide an electrical path for service"

37. Steady state and stability tables: in the Extreme Events section heading, the word "all" implies that all events must be evaluated when this is not the intent. Either make the heading "For Extreme events" or make it "For all Extreme Events evaluated".

TABLE 2 - STABILITY PERFORMANCE TABLE:

38. Stability table, note 1.a.i: P3.2 should be P2.3.

39. Several events in the tables use the term "internal fault" for a breaker. The SDT needs to explain what is intended by this term.

40. In event P7.2, does the "below 300 kV" apply to the generator, transmission circuit, transformer, and bus as well as to the stuck breaker? Or does it apply only to the stuck breaker?

41. The event description in P3 is confusing. Please consider rewording in the 1,2,3 format of the other event descriptions. The term "non-bus tie breaker" is confusing. Please consider using "breaker (excluding bus ties)". Also, above 300 kV, most construction is either ring bus or breaker and a half. Please considered deleting the bus outage contingency. Lastly, please clarify how redispatch and CFS should be considered in the context of P3 and P4, in which the curtailment of firm transfers is not permissible to meet the performance criteria.

42. Steady state table and stability table: Change the heading which now says "For all Planning Events" to say "The following performance requirements must be met for the Planning events evaluated in addition to the requirements given in the columns"

43. Steady state and stability tables: in the Extreme Events section heading, the word "all" implies that all events must be evaluated when this is not the intent. Either make the heading "For Extreme events" or make it "For all Extreme Events evaluated".

44. Stability table, footnote 1.a.ii. After "out-of-step protection", add the words "or some other means to trip the generator for this condition".

GENERAL:

45. The overall level of documentation required by this standard is excessive.

NERC
NORTH AMERICAN ELECTRIC RELIABILITY CORPORATION

Comment Form for First Draft of TPL-001-1 — Transmission System Planning Performance Requirements

Please use this form to submit comments on the proposed draft of TPL-001-1. Comments must be submitted by **Friday, October 26, 2007**. You may submit the completed form by e-mail to sarcomm@nerc.net with the words "TPL-001 Draft 1" in the subject line. If you have questions please contact Ed Dobrowolski at ed.dobrowolksi@nerc.net or by telephone at 609-947-3673.

Individual Commenter Information **(Complete this page for comments from one organization or individual.)**		
Name:	Scott Helyer	
Organization:	Tenaska, Inc.	
Telephone:	817-462-1512	
E-mail:	shelyer@tnsk.com	
NERC Region (check all Regions in which your company operates)		**Registered Ballot Body Segment (check all industry segments in which your company is registered)**
☒ **ERCOT**	☐	1 — Transmission Owners
☐ **FRCC**	☐	2 — RTOs and ISOs
☒ **MRO**	☐	3 — Load-serving Entities
☐ **NPCC**	☐	4 — Transmission-dependent Utilities
☒ **RFC**	☒	5 — Electric Generators
☒ **SERC**	☐	6 — Electricity Brokers, Aggregators, and Marketers
☒ **SPP**	☐	7 — Large Electricity End Users
☒ **WECC**	☐	8 — Small Electricity End Users
☐ **NA – Not Applicable**	☐	9 — Federal, State, Provincial Regulatory or other Government Entities
	☐	10 — Regional Reliability Organizations and Regional Entities

Group Comments (Complete this page if comments are from a group.)

Group Name:

Lead Contact:

Contact Organization:

Contact Segment:

Contact Telephone:

Contact E-mail:

Additional Member Name	Additional Member Organization	Region*	Segment*

*If more than one Region or Segment applies, please list all that apply. Regional acronyms and segment numbers are shown on prior page.

Background

The purpose of this standard is to establish Transmission System planning performance requirements within the planning horizon to develop a Bulk Electric System that will operate reliably over a broad spectrum of System conditions and following a wide range of probable Contingencies. This standard will replace TPL-001-0, TPL-002-0, TPL-003-0, and TPL-004-0. The standard drafting team has not yet addressed TPL-005-0 and TPL-006-0, but will address these two standards during the next phase of the drafting process.

The major objectives of the standard drafting team are to:

1) Ensure the standard is complete and the requirements are set at an appropriate level to ensure reliability (Not Least Common Denominator)
2) Ensure that the standard is enforceable by having clearly defined requirements with unambiguous language
3) Address the issues raised by FERC Order 693, 890, and other applicable orders
4) Address the issues raised in the original Standards Authorization Request (SAR) and the Supplemental SAR.

The standard drafting team did not attempt to edit the existing standards but rather chose to write one standard that addresses all aspects of transmission planning in the existing TPL-001-0, TPL-002-0, TPL-003-0, and TPL-004-0. The standard drafting team organized the new standard in the following sections:

R1 – Modeling requirements
R2 – Assessment and Corrective Plan requirements
R3 – Steady State Analysis requirements
R4 – Stability Analysis requirements
R5 – Coordination requirements

The standard drafting team determined that the requirements and analysis for Steady State are different from those for stability. As such, the standard drafting team separated the analysis requirements and created two performance requirement tables.

The standard drafting team recognizes that this draft standard is a starting point for industry input into the standard and that there is still a lot of work required to complete the process. The standard drafting team has made many changes to clarify requirements, add requirements, and make some of the performance requirements stricter. The standard drafting team has not addressed Measures, Risk Factors, Violation Severity Factors, or Time Horizons at this time. These will be addressed when the standard drafting team has better defined the requirements of the standard.

For questions where you agree with the standard drafting team, please state that you agree and if available, please provide supporting documentation. If you disagree with the standard drafting team, please explain why you disagree and provide data to support your position, such as outage data or analysis. If you believe that we have made a performance requirement too strict please provide supporting documentation. If applicable, please include the approximate cost in man-hours for additional studies and/or cost in $Millions for additional transmission investment to meet the new requirements or the stricter requirements. If you believe that the standard should be stricter, please provide the rationale along with any supporting data, including existing practices, cost estimates or additional analysis.

To improve the standard, the standard drafting team would appreciate responses to as many of these questions as you can answer.

A. New Definitions

Many of the concerns about the existing TPL standards come from the fact that a number of generally understood concepts are embedded in undefined terms, tables, and footnotes. To clarify some of these concerns, the standard drafting team is proposing new definitions. Please indicate whether you agree with the following proposed definitions and provide proposed changes to the definitions if you disagree:

Definition	**Agree or Disagree**
Q1. **Base Case**: Computer representation of the projected initial or starting Transmission System conditions for a specific point in time. Each base case reflects the forecasted Load at each bus (or node) on the interconnected Transmission System, the transmission facilities which deliver the generation and reactive resources to the connected Load, and the generation dispatch including firm transaction obligations assumed to supply the connected Load. The models also reflect facility ratings in accordance with FAC-008 & FAC-009.	☒Agree. ☐Do not agree.
Q1. **Comment:**	
Q2. **Consequential Load Loss:** Load that is no longer served because it is directly connected to an element(s) that is removed from service due to fault clearing action or mis-operation.	☐Agree. ☒Do not agree.
Q2. **Comment: Using consequential and non-consequential seem to be misleading. Perhaps using "direct" and "indirect". Also, mis-operation needs some more explanation and to why it should be included here.**	
Q3. **Extreme Events:** Events which are more severe than Planning Events and have a low probability of occurrence.	☐Agree. ☒Do not agree.
Q3. **Comment: I think most people understand, but in this new world we need to put some more specificity around the words "low probability".**	
Q4. **Long-Term Transmission Planning Horizon:** Transmission planning period that covers years six through ten or beyond.	☒Agree. ☐Do not agree.
Q4. **Comment:**	
Q5. **Near-Term Transmission Planning Horizon:** Transmission planning period that covers years One through five.	☒Agree. ☐Do not agree.
Q5. **Comment:**	
Q6. **Non-Consequential Load Loss:** Load loss other than Consequential Load Loss. For example, Load loss that occurs through manual (operator initiated) or automatic operations such as under-voltage Load shedding, under-frequency Load shedding, or Special Protection Systems.	☐Agree. ☒Do not agree.
Q6. **Comment: See Q2 answer.**	

Q7. **Planning Assessment:** Documented evaluation of future Bulk Electric System needs by the use of performance studies that cover a range of assumptions regarding system conditions, time frames, future plans including capital reinforcements and operating procedures and other factors, such as asset conditions and age.	☐Agree. ☒Do not agree.
Q7. **Comment: May be best to stop the definition after the word assumptions and cover the details as part of the requirements in the standard itself.**	
Q8. **Planning Events:** Events which require Transmission system performance requirements to be met.	☒Agree. ☐Do not agree.
Q8. **Comment:**	
Q9. **Plant Stability Study:** Study of an individual plant's Stability for various Contingencies in the vicinity of the plant; concerned with the effect on the System of the generating units' loss of synchronism and the damping of the generating units' power oscillations.	☐Agree. ☒Do not agree.
Q9. **Comment: Not convinced that this study needs to be differentiated from a System Stability Study.**	
Q10. **System Stability Study:** Study of the System or portions of the System to ensure that angular Stability is maintained, inter-area power oscillations are damped, and voltages during the dynamic simulation stay within acceptable performance limits.	☒Agree. ☐Do not agree.
Q10. **Comment: A generator's loss of synchronism and oscillation issues will be seen in this study.**	
Q11. **Year One:** The first year that a Transmission Planner is responsible for studying. This is further defined as the planning window that begins the next calendar year from the time the Transmission Planner submits their annual studies. Analysis conducted for time horizons within the calendar year from the study publication are assumed to be conducted under the auspices of Operations Planning.	☒Agree. ☐Do not agree.
Q11. **Comment:**	

B. Sensitivity Studies

The draft planning standard includes the requirement, as specified in FERC Order 693, that planning decisions be based on a portfolio of analyses. In section 12.a.ii "Sensitivity studies and critical system conditions" FERC provided direction to consider a full range of variables considered to be significant that need to be assessed and documentation provided that explains the rationale for the selection of variables assessed.

In addition to the firm obligation scenario, the portfolio of analyses should be supplemented to include information from sensitivity analysis. The sensitivity analysis should be developed using additional cases that simulate reasonably stressed system conditions. The standard drafting team has included several parameters that can be varied to create the requisite sensitivity case(s). The draft standards specify that the sensitivities reflect one or more of the following conditions and that documentation be provided explaining the rationale for selecting the sensitivity(ies) employed. The parameters that should be varied include:

- Higher or lower Load forecasts from the Base Case with variability of Load/demand and Load power factors due to season, weather, or time of day.
- Modification of expected transfers.
- Unavailability of long lead time facilities.
- Variability and outages of Reactive Resources.
- Generation additions, retirements, or other dispatch scenarios.
- Decreased effectiveness of controllable Loads and Demand Side Management.
- Modification of planned Transmission outages

To help focus industry discussion, please respond to the questions below:

Q12. Should the standard provide more specific direction regarding the number of sensitivity cases that need to be developed?

Yes ☒ No ☐
Comment: The question may be misleading as number of sensitivity cases is not the issue. Enough studies should be conducted to appropriately define the boundaries of how the system will perform. The standard identifies various issues that may be used as sensitivity cases, but the list may or may not be all inclusive. The team should ask the industry whether any other sensitivities should be included in the standard.

Q13. Should the standard specify the required changes, such as changes in expected transfers, load forecasts, generation patterns, etc., from the study case to be considered a "reasonably stressed" case?

Yes ☒ No ☐
Comment: However, what is meant by "reasonably stressed".

Q14. The SDT proposes to require the use of sensitivity studies for Near-Term Transmission System Planning Horizon stability analysis. Do you concur with the use of sensitivity analysis in dynamic studies?

Yes ☒ No ☐
Comment:

Q15. The draft TPL standard does not require the use of sensitivity studies for the Long-Term Transmission System Planning Horizon (year six and beyond) studies. Do you concur with this approach or should there be some level of sensitivity analysis required for the long-term period?

Yes ☐ No ☒
Comment: Any analysis that is performed needs to include some sort of sensitivity analysis. In fact, the sensitivity analysis may yield more information that is helpful in making decisions today than sensitivities performed on a near term study. A way of conducting a sensitivity analysis for long term studies may be to require long term studies to be performed for several years instead of only the one year that is required in the 6-10 year horizon.

C. Corrective Action Plans

Requirement R2.7 of the standard states that when analysis shows that the performance requirements in Table 1 and Table 2 are not fully met, a Corrective Action Plan that utilizes all or some of the Transmission System enhancements, generation additions, DSM, new technologies and Operating Procedures shall be included in the Planning Assessment. This Corrective Action Plan should ensure that upon its implementation the identified system

deficiencies will be corrected so that the performance requirements in Table 1 and Table 2 will be met. Furthermore, studies included in the Planning Assessment should demonstrate that this is indeed the case.

Q16. Requirement R2.7.1: Such Corrective Action Plans shall "Identify System deficiencies and the associated actions needed to achieve required System performance including Transmission and generation improvements, DSM, new technologies, or Operating Procedures including the duration of Interim Operating Procedures". System deficiencies may be corrected using an integrated plan, i.e., an optimal mix of Transmission, generation, DSM and Operating Procedures. Should DSM be considered in conjunction with other measures in developing Corrective Action Plans? If yes, please comment on how the impact of DSM should be included.

Yes ☒ No ☐
Comment: While DSM may, or may not, be manually operated, it is critical to understand the impacts of DSM and whether different ways of implementing DSM are of value.

Q17. Requirement R2.7.2: Such Corrective Action Plans shall "Be added to study cases and the cases re-tested to show that the System with planned additions meets the performance requirements in the tables". Should new studies, including the facilities comprising the Corrective Action Plan, be performed to assess System normal performance and Contingency response for conditions that previously resulted in the System deficiencies (without the planned additions) and also demonstrate that the changes would not result in inadvertent negative impacts on the System. If you "agree", please comment on how a study area should be determined.

Yes ☒ No ☐
Comment: The study area should be the same as in the original study unless the Corrective Action Plans require changes/additions outside of the original study area. If chagnes/additions are made outisde the original area, then the study area must be expanded to include, at a minimum, the area that includes the new changes/additions.

Q18. Requirement R2.7.3: The standard calls for a differentiation between committed and proposed projects. Do you agree that they should be treated separately? If not, please state why not.

Yes ☒ No ☐
Comment:

Q19. Requirement R2.7.4: For such Corrective Action Plans "Committed projects shall not be removed without documentation to show that the revised plan meets the performance requirements". Do you agree or disagree with this requirement? If you disagree, please explain why.

Yes ☐ No ☒
Comment: Add after the word "requirements" the following: "without the committed projects."

D. Performance Requirements

The proposed revised planning standard (TPL-001-1) incorporates a number of changes in requirements as compared to the current planning standards (TPL-001-0 through TPL-004-0), which it is expected to replace. Among other things these changes are intended to clarify the standard, address issues described by FERC, and, in particular, to "raise the bar." Strengthening the planning standards in selected areas is necessary to maintain a reliable Bulk Electric System that is up to the challenges of the 21st Century. In proposing the

requirements in this draft, the standard drafting team attempted to balance the value of increased reliability against any potential increase in work and costs to meet the new proposed standard.

The standard drafting team is seeking input from the industry to determine whether a proper balance has been achieved. The areas where material changes are proposed in this draft are enumerated below, and questions are posed by the standard drafting team to obtain industry comment. In formulating your responses, please keep in mind that material changes in the final standard will be accompanied by a transition plan to provide for an orderly implementation of the final standard.

The performance requirements relative to Non-Consequential Loss of Load for the following events enumerated in the two tables can be considered more stringent than the existing TPL standards. Furthermore, the proposed standard is based on an assumption that performance requirements for EHV facilities should be more stringent than for lower voltage facilities.

Do you agree that Non-Consequential Loss of Load should not be permitted for the following events? If you disagree, please provide a reason for your disagreement.

Event	Agree or Disagree	Comment
Q20. P2-1: Loss of bus section (SLG for stability) above 300 kV	☐Agree. ☒Do not agree.	May need to consider using 500 kV as some transmission providers serve load off of the 345 kV system which could be triggered by this event.
Q21. P5-1: For facilities above 300 kV, loss of a Transmission circuit followed by System adjustment[1] followed by loss of another Transmission circuit	☐Agree. ☒Do not agree.	See comment in Q20.
Q22. P5-2: For facilities above 300 kV, loss of a Transmission circuit followed by System adjustment followed by loss of a transformer with low side voltage rating above 300 kV	☐Agree. ☒Do not agree.	See comment in Q20.
Q23. P5-3: For facilities above 300 kV, loss of a transformer with low side voltage rating above 300 kV followed by System adjustment followed by loss of another transformer	☐Agree. ☒Do not agree.	See comment in Q20.

[1]System adjustment can be manual or automatic.

The proposed standard is based on an assumption that performance requirements for non-bus tie EHV breakers should be distinguished from other breakers. Do you agree that Non-Consequential Loss of Load should not be permitted for this event?

Q24. Loss of non-bus tie breaker (above 300 kV) due to internal fault

Yes ☐ No ☒
Comment: Why should we distinquish between a bustie breaker and a non-bus tie breaker? Also, 300 kV may be too low. This is really an issue that should be driven by the customers.

The proposed standard is based on an assumption that performance requirements for non-bus tie EHV breakers should be distinguished from other breakers and that performance requirements for EHV facilities should be more stringent than for lower voltage facilities. Do you agree that Non-Consequential Loss of Load should not be permitted for this event?

Q25. P3-1: Loss of (SLG for stability) either a generator, a Transmission circuit, a transformer, or a bus and a stuck non-bus tie breaker (above 300 kV)

Yes ☐ No ☒
Comment: This is really an issue that should be driven by the customers.

The proposed standard is based on an assumption that the following events are relatively high probability events and, therefore, Non-Consequential Loss of Load should not be permitted. Do you agree? If you disagree, please provide a reason for your disagreement.

Event	Agree or Disagree	Comment
Q26. P4-1: Loss of a Generator followed by System adjustment[1] followed by loss of another Generator	☒Agree. ☐Do not agree.	This is really an issue that should be driven by the customers
Q27. P4-2: Loss of a generator followed by a System adjustment followed by the loss of a monopolar DC line	☒Agree. ☐Do not agree.	This is really an issue that should be driven by the customers
Q28. P4-3: Loss of a generator followed by System adjustment followed by loss of a Transmission circuit	☒Agree. ☐Do not agree.	This is really an issue that should be driven by the customers
Q29. P4-4: Loss of a generator followed by System adjustment followed by loss of a transformer	☒Agree. ☐Do not agree.	This is really an issue that should be driven by the customers

The performance requirement for the following event may be considered less stringent than the existing TPL Standards — P2-3: Loss of a single pole of a DC line. Interruption of firm transactions (without Loss of firm Load) if the transaction is dependent on the faulted DC line is now allowed for this initiating event/Contingency.

[1] System adjustment can be manual or automatic

Q30. Do you agree that interruption of any firm transfers that are dependent on the outaged DC line that is taken out of service should be permitted?

Yes ☒ No ☐
Comment:

E. Stability

Q31. The proposed standard is based on an assumption that steady state analysis and stability analysis are different from each other and that therefore, two tables of Contingencies and performance requirements were needed. It is also based on an assumption that stability study requirements should be clearly separated from the steady state study requirements. Do you agree with the action taken in separating stability analysis from steady state analysis? If not, please explain.

Yes ☐ No ☒
Comment: The same set of contingency tests need to be applied to in both steady state and stability studies. The performance levels may need to be characterized a little differently, but at the end of the day we are trying maintain a reliable system for the same initiating event both in a stability timeframe and a steady state timeframe.

Q32. The SDT has added requirements for plant stability studies and has drawn a distinction in these studies from System stability studies. Do you agree with this approach? If not, please explain.

Yes ☐ No ☒
Comment: It is not clear that there is any difference between the two studies.

Q33. The existing TPL-004-0 standard has a requirement to consider the Loss of all generating units at a plant, but it was not clear whether this requirement should apply to stability studies. The SDT did not include this requirement in the stability table, because it is hard to envision a condition when all units would trip simultaneously within the timeframe of a stability simulation. Do you think this condition should be required in stability analysis of extreme events? If not, please explain.

Yes ☐ No ☒
Comment: Only on a case by case basis where a common mode/single point of failure can be identified that results in the loss of an entire plant.

Q34. There are an increasing number of events with slow voltage recovery after faults on the Transmission System. The dynamic behavior of induction motor loads is a major factor in this phenomenon. The proposed standard therefore requires that the load model for stability studies of peak Load conditions include the dynamic effects of induction motors. Do you agree with this requirement? If not, please explain?

Yes ☐ No ☐
Comment:

Q35. What type of manual or automatic adjustments of generators should be allowed for single and multiple Contingencies?

Comment: Any adjustment(manual, automatic, runback, tripping) should be allowed as long as the performance requirements are achieved as described in standard after the adjustments have been made.

F. Generation Runback and Tripping

The SDT has discussed the automatic and manual readjustments of generators that should be permissible for single contingencies and multiple contingencies. The existing TPL-001-0 through TPL-004-0 standards through footnote (a) of Table I could include emergency ratings applicable for short durations as required to permit operating steps necessary to maintain system control. The footnote is silent about allowable generation adjustments in response to the Category B events. However, it does indicate that system adjustments are permitted to prepare for the next Contingency. These system adjustments could include manual or automatic adjustments involving generation.

The SDT has learned that many transmission owners use System Protection Systems (SPS) or Remedial Action Schemes (RAS) to trip generation for single and multiple Contingency outage events to prevent overloads, low voltage, and instability in the Interconnected Transmission network for N-1 and N-2 events. In some cases, the RAS are used to prepare for the next Contingency; but in some cases, the RAS are used to simultaneously avoid exceeding emergency ratings.

Q36. The proposed standard allows generation runback after the disturbance that causes a single Contingency (or due to a single Contingency outage) to move the Interconnected Transmission System from an emergency state (within emergency ratings) to a normal state (within normal ratings), assuming that the disturbance does not result in instability? Do you agree? If not, please explain.

Yes ☒ No ☐
Comment:

Q37. Since emergency ratings are thermal ratings, should this standard allow an automatic generation runback scheme (that is initiated immediately after the disturbance causing the single Contingency) to prevent thermal overloads (assuming that the disturbance does not result in instability)? If yes, what are the conditions that must be met in order to allow such a runback scheme to meet the System performance criteria for single Contingencies? Please explain the reason for your answer.

Yes ☒ No ☐
Comment: So long as the performance requirements are met then this is not an issue.

The standard drafting team has considered that RAS or SPS may be allowable under certain situations for single Contingencies, but proposes that their use should be limited.

Q38. Do you agree that RAS or SPS may be allowed for single Contingencies? If not, please explain.

Yes ☒ No ☐
Comment:

Q39. Please describe the limitations that you believe should be placed on the use of RAS or SPS for single Contingency events.

Comment: The system, following the use of an RAS or SPS in response to a single contingency, shall meet the performance requirements.

Q40. When RAS or SPS are allowed, what conditions should be met when these systems are used in system adjustments to meet performance requirements?

Comment: The system, following the use of an RAS or SPS in response to a single contingency, shall meet the performance requirements.

G. General Questions

Q41. If you are aware of any regional variances that would be required as a result of these standards, please identify them here.

Yes ☐ No ☒
Comment:

Q42. If you are aware of any conflicts between the proposed standards and any regulatory function, rule order, tariff, rate schedule, legislative requirement or agreement, please identify them here.

Yes ☐ No ☒
Comment:

Q43. Do you have any other questions or concerns with the proposed standard that have not been addressed? If yes, please explain.

Yes ☒ No ☐
Comment: The proposed standard contains a number of areas that need further definition, more explanation, or more specificity.

For example, requirement R1 should be rewritten as follows to make it clear who has responsibility for each requirement AND sub-requirement as the standard as written could be read to imply that Transimssion Owners and Generation Owners have to supply a load forecast to the Planning Coordinator:

R1. Each Resource Planner, Transmission Planner, Transmission Owner, Generator Owner, and Load-Serving Entity shall each provide, as specified below, its respective Planning Coordinator with the following modeling information required for System performance studies upon request (within 30 calendar days) : [Violation Risk Factor: TBD] [Time Horizon: TBD]

R1.1. Each Load Serving Entity shall provide the Planning Coordinator load forecasts adhering, at a minimum, to the following criteria:
R1.1.1. Use of expected Load mix based on the actual or expected aggregate mix of industrial, commercial, and residential Loads.
R1.1.2. Based on normal weather patterns as agreed to by the Planning Coordinator(s) and the Transmission Planner(s) for the area(s) of their responsibility.
R1.1.3. Identification of Demand Side Management (DSM) Load reductions consistent with operational requirements.

R1.2. Each Load Serving Entity shall provide the Planning Coordinator load models with supporting rationale that include power factor data based on historical System performance, validated by measurement during stressed System conditions, or documented Transmission planning area requirements.
R1.3. Each Load-Serving Entity shall provide the Planning Coordinator the Firm transfers/Interchange Schedules and resources required to supply Load for each Balancing Authority.
R1.4. Each Transmission Owner and Generation Owner shall provide the Planning Coordinator with known planned outages and long-term outages for Transmission and Generation equipment including protective relays with consideration given to spare equipment strategy.
R1.5. Each Transmission Owner, Generation Owner, Resource Planner, and Transimssion Planner shall provide known planned Facilities defined in accordance with the documented criteria of the Planning Coordinator, including but not limited to: Transmission Lines, generators, circuit breakers, Reactive Power devices, Protection System equipment and control devices, and new technologies.

The above is an example and I apologize for the poor pagination. However, the drafting team should look at each requirement/sub-requirement and specifiy precisely to which entity the requirement/sub-requirement applies.

Other comments/concerns/questions with the proposed standard:

Does requirement R2 mean that you you could have two assessments: one performed by the Transmission Planner and one performed by the Planning Coordinator? This could result in two assessments of the same facilities which may or may not be desired.

In Requirement 2.5.1, what is meant by increasing generation? Is there a minimum amount of increased generation or is it any increase?

In Requirements 2.5.2, 2.6.1, 2.6.2, and 2.6.3, what is meant by "material"? This needs more definition wherever the word "material" is used throughout the standard.

In Requirements 2.6.1, 2.6.2, and 2.6.3, the word System and system are both used. Whose System or system needs to be defined. Does that include neighboring system(s)?

In Requirement 2.7.3, "committed" and "proposed" need to be defined.

In Requirement 2.7.5, what needs to happen as a result of such review? Is something supposed to happen in the Corrective Action Plans depending on the implemenation status of identified System Facilities and Operating Procedures?

In R3, what is "normal" performance (n-0)? Should this be a defined term?

In R3.2.1 and 3.2.2, why are these issues covered in a TPL standard as it seems to be more applicable to the Facility Ratings standards or the MOD10, 11, 12, and 13 standards? The TPL standard should probably reference these other standards for issues associated with ratings.

In R3.3.2, the reference to "single contingency" should reference the category (P1, P@, P#, etc.) in Table 1.

In R3.3.2.2, the term "firm transfers" needs to be defined.

In R3.3.3 and R3.4, reference is made to "expected to produce more servere System impacts." How does somebody determine what extreme events that are "expected to produce more servere System impacts?"

NERC
NORTH AMERICAN ELECTRIC RELIABILITY CORPORATION

Comment Form for First Draft of TPL-001-1 — Transmission System Planning Performance Requirements

Please use this form to submit comments on the proposed draft of TPL-001-1. Comments must be submitted by **Friday, October 26, 2007**. You may submit the completed form by e-mail to sarcomm@nerc.net with the words "TPL-001 Draft 1" in the subject line. If you have questions please contact Ed Dobrowolski at ed.dobrowolksi@nerc.net or by telephone at 609-947-3673.

Individual Commenter Information **(Complete this page for comments from one organization or individual.)**		
Name:	David Till	
Organization:	Tennessee Valley Authority	
Telephone:	423-751-7147	
E-mail:	bdtill@tva.gov	
NERC Region (check all Regions in which your company operates)		**Registered Ballot Body Segment (check all industry segments in which your company is registered)**
☐ **ERCOT**	☒	1 — Transmission Owners
☐ **FRCC**	☐	2 — RTOs and ISOs
☐ **MRO**	☐	3 — Load-serving Entities
☐ **NPCC**	☐	4 — Transmission-dependent Utilities
☐ **RFC**	☐	5 — Electric Generators
☒ **SERC**	☐	6 — Electricity Brokers, Aggregators, and Marketers
☐ **SPP**	☐	7 — Large Electricity End Users
☐ **WECC**	☐	8 — Small Electricity End Users
☐ **NA – Not Applicable**	☐	9 — Federal, State, Provincial Regulatory or other Government Entities
	☐	10 — Regional Reliability Organizations and Regional Entities

Group Comments (Complete this page if comments are from a group.)

Group Name:

Lead Contact:

Contact Organization:

Contact Segment:

Contact Telephone:

Contact E-mail:

Additional Member Name	Additional Member Organization	Region*	Segment*

*If more than one Region or Segment applies, please list all that apply. Regional acronyms and segment numbers are shown on prior page.

Background

The purpose of this standard is to establish Transmission System planning performance requirements within the planning horizon to develop a Bulk Electric System that will operate reliably over a broad spectrum of System conditions and following a wide range of probable Contingencies. This standard will replace TPL-001-0, TPL-002-0, TPL-003-0, and TPL-004-0. The standard drafting team has not yet addressed TPL-005-0 and TPL-006-0, but will address these two standards during the next phase of the drafting process.

The major objectives of the standard drafting team are to:

1) Ensure the standard is complete and the requirements are set at an appropriate level to ensure reliability (Not Least Common Denominator)
2) Ensure that the standard is enforceable by having clearly defined requirements with unambiguous language
3) Address the issues raised by FERC Order 693, 890, and other applicable orders
4) Address the issues raised in the original Standards Authorization Request (SAR) and the Supplemental SAR.

The standard drafting team did not attempt to edit the existing standards but rather chose to write one standard that addresses all aspects of transmission planning in the existing TPL-001-0, TPL-002-0, TPL-003-0, and TPL-004-0. The standard drafting team organized the new standard in the following sections:

R1 – Modeling requirements
R2 – Assessment and Corrective Plan requirements
R3 – Steady State Analysis requirements
R4 – Stability Analysis requirements
R5 – Coordination requirements

The standard drafting team determined that the requirements and analysis for Steady State are different from those for stability. As such, the standard drafting team separated the analysis requirements and created two performance requirement tables.

The standard drafting team recognizes that this draft standard is a starting point for industry input into the standard and that there is still a lot of work required to complete the process. The standard drafting team has made many changes to clarify requirements, add requirements, and make some of the performance requirements stricter. The standard drafting team has not addressed Measures, Risk Factors, Violation Severity Factors, or Time Horizons at this time. These will be addressed when the standard drafting team has better defined the requirements of the standard.

For questions where you agree with the standard drafting team, please state that you agree and if available, please provide supporting documentation. If you disagree with the standard drafting team, please explain why you disagree and provide data to support your position, such as outage data or analysis. If you believe that we have made a performance requirement too strict please provide supporting documentation. If applicable, please include the approximate cost in man-hours for additional studies and/or cost in $Millions for additional transmission investment to meet the new requirements or the stricter requirements. If you believe that the standard should be stricter, please provide the rationale along with any supporting data, including existing practices, cost estimates or additional analysis.

To improve the standard, the standard drafting team would appreciate responses to as many of these questions as you can answer.

A. New Definitions

Many of the concerns about the existing TPL standards come from the fact that a number of generally understood concepts are embedded in undefined terms, tables, and footnotes. To clarify some of these concerns, the standard drafting team is proposing new definitions. Please indicate whether you agree with the following proposed definitions and provide proposed changes to the definitions if you disagree:

Definition	**Agree or Disagree**
Q1. **Base Case**: Computer representation of the projected initial or starting Transmission System conditions for a specific point in time. Each base case reflects the forecasted Load at each bus (or node) on the interconnected Transmission System, the transmission facilities which deliver the generation and reactive resources to the connected Load, and the generation dispatch including firm transaction obligations assumed to supply the connected Load. The models also reflect facility ratings in accordance with FAC-008 & FAC-009.	☒Agree. ☐Do not agree.
Q1. **Comment:**	
Q2. **Consequential Load Loss:** Load that is no longer served because it is directly connected to an element(s) that is removed from service due to fault clearing action or mis-operation.	☐Agree. ☒Do not agree.
Q2. **Comment: We recommend that the terms consequential and non-consequential be changed to direct and indirect. Also, the term should be better defined. We recommend that the definition be "loads that have been de-energized by fault-clearing action or loads that are lost even though the system performance remains within acceptable limits."**	
Q3. **Extreme Events:** Events which are more severe than Planning Events and have a low probability of occurrence.	☐Agree. ☒Do not agree.
Q3. **Comment: A number of the planning events also have a low probability. The definition for "Extreme Events" should reference Table 1.**	
Q4. **Long-Term Transmission Planning Horizon:** Transmission planning period that covers years six through ten or beyond.	☒Agree. ☐Do not agree.
Q4. **Comment:**	
Q5. **Near-Term Transmission Planning Horizon:** Transmission planning period that covers years One through five.	☒Agree. ☐Do not agree.
Q5. **Comment:**	
Q6. **Non-Consequential Load Loss:** Load loss other than Consequential Load Loss. For example, Load loss that occurs through manual (operator initiated) or automatic operations such as under-voltage Load shedding, under-frequency Load shedding,	☐Agree. ☒Do not agree.

or Special Protection Systems.	
Q6. **Comment: See comment for Q2. We recommend that this term is defined as "load loss other than consequential load loss".**	
Q7. **Planning Assessment:** Documented evaluation of future Bulk Electric System needs by the use of performance studies that cover a range of assumptions regarding system conditions, time frames, future plans including capital reinforcements and operating procedures and other factors, such as asset conditions and age.	☐Agree. ☒Do not agree.
Q7. **Comment: Use of the word "deficiencies" instead of "needs" provides better consistency throughout the standard. We do not agree that the planning assessment should directly include asset conditions and age. Asset condition should be part of the ratings process. The age of equipment, if it is well maintained, has little impact on reliability.**	
Q8. **Planning Events:** Events which require Transmission system performance requirements to be met.	☒Agree. ☐Do not agree.
Q8. **Comment:**	
Q9. **Plant Stability Study:** Study of an individual plant's Stability for various Contingencies in the vicinity of the plant; concerned with the effect on the System of the generating units' loss of synchronism and the damping of the generating units' power oscillations.	☒Agree. ☐Do not agree.
Q9. **Comment:**	
Q10. **System Stability Study:** Study of the System or portions of the System to ensure that angular Stability is maintained, inter-area power oscillations are damped, and voltages during the dynamic simulation stay within acceptable performance limits.	☒Agree. ☐Do not agree.
Q10. **Comment:**	
Q11. **Year One:** The first year that a Transmission Planner is responsible for studying. This is further defined as the planning window that begins the next calendar year from the time the Transmission Planner submits their annual studies. Analysis conducted for time horizons within the calendar year from the study publication are assumed to be conducted under the auspices of Operations Planning.	☐Agree. ☒Do not agree.
Q11. **Comment: The last sentence in the above definition was not included in the definition listed in the draft standard, nor should it be.**	

B. Sensitivity Studies

The draft planning standard includes the requirement, as specified in FERC Order 693, that planning decisions be based on a portfolio of analyses. In section 12.a.ii "Sensitivity studies and critical system conditions" FERC provided direction to consider a full range of variables considered to be significant that need to be assessed and documentation provided that explains the rationale for the selection of variables assessed.

In addition to the firm obligation scenario, the portfolio of analyses should be supplemented to include information from sensitivity analysis. The sensitivity analysis should be developed using additional cases that simulate reasonably stressed system conditions. The standard drafting team has included several parameters that can be varied to create the

requisite sensitivity case(s). The draft standards specify that the sensitivities reflect one or more of the following conditions and that documentation be provided explaining the rationale for selecting the sensitivity(ies) employed. The parameters that should be varied include:

- Higher or lower Load forecasts from the Base Case with variability of Load/demand and Load power factors due to season, weather, or time of day.
- Modification of expected transfers.
- Unavailability of long lead time facilities.
- Variability and outages of Reactive Resources.
- Generation additions, retirements, or other dispatch scenarios.
- Decreased effectiveness of controllable Loads and Demand Side Management.
- Modification of planned Transmission outages

To help focus industry discussion, please respond to the questions below:

Q12. Should the standard provide more specific direction regarding the number of sensitivity cases that need to be developed?

Yes ☐ No ☒
Comment: The entity performing the studies should be allowed to determine the appropriate number of cases that need to be evaluated.

Q13. Should the standard specify the required changes, such as changes in expected transfers, load forecasts, generation patterns, etc., from the study case to be considered a "reasonably stressed" case?

Yes ☐ No ☒
Comment: The standard may offer guidance but what constitutes a "reasonably stressed" case should be left to the discretion of the entity performing the study.

Q14. The SDT proposes to require the use of sensitivity studies for Near-Term Transmission System Planning Horizon stability analysis. Do you concur with the use of sensitivity analysis in dynamic studies?

Yes ☒ No ☐
Comment: Consideration should be given to the fact that stability studies are more time consuming than conventional power flow studies. A single 20 second stability simulation is computationally equivalent to running 80 steady-state powerflow cases and has significantly larger pre-analysis preparation effort.

Q15. The draft TPL standard does not require the use of sensitivity studies for the Long-Term Transmission System Planning Horizon (year six and beyond) studies. Do you concur with this approach or should there be some level of sensitivity analysis required for the long-term period?

Yes ☒ No ☐
Comment:

C. Corrective Action Plans

Requirement R2.7 of the standard states that when analysis shows that the performance requirements in Table 1 and Table 2 are not fully met, a Corrective Action Plan that utilizes all or some of the Transmission System enhancements, generation additions, DSM, new technologies and Operating Procedures shall be included in the Planning Assessment. This

Corrective Action Plan should ensure that upon its implementation the identified system deficiencies will be corrected so that the performance requirements in Table 1 and Table 2 will be met. Furthermore, studies included in the Planning Assessment should demonstrate that this is indeed the case.

Q16. Requirement R2.7.1: Such Corrective Action Plans shall "Identify System deficiencies and the associated actions needed to achieve required System performance including Transmission and generation improvements, DSM, new technologies, or Operating Procedures including the duration of Interim Operating Procedures". System deficiencies may be corrected using an integrated plan, i.e., an optimal mix of Transmission, generation, DSM and Operating Procedures. Should DSM be considered in conjunction with other measures in developing Corrective Action Plans? If yes, please comment on how the impact of DSM should be included.

Yes ☒ No ☐
Comment: It should be included if it is a tool made available to the TP for this purpose, but only to the extent that it is considered firm. However, the standards should not determine which type of fix a utility should use to meet system requirements.

Q17. Requirement R2.7.2: Such Corrective Action Plans shall "Be added to study cases and the cases re-tested to show that the System with planned additions meets the performance requirements in the tables". Should new studies, including the facilities comprising the Corrective Action Plan, be performed to assess System normal performance and Contingency response for conditions that previously resulted in the System deficiencies (without the planned additions) and also demonstrate that the changes would not result in inadvertent negative impacts on the System. If you "agree", please comment on how a study area should be determined.

Yes ☒ No ☐
Comment: Re-testing should be required only where the correction may impact network flows. For example, a transmission line re-sag or CT ratio change to increase a facility rating should not require re-testing. The study area should be determined by the TP or PC as appropriate. The TP or PC has the most knowledge of how the system responds to changes.

Q18. Requirement R2.7.3: The standard calls for a differentiation between committed and proposed projects. Do you agree that they should be treated separately? If not, please state why not.

Yes ☒ No ☐
Comment:

Q19. Requirement R2.7.4: For such Corrective Action Plans "Committed projects shall not be removed without documentation to show that the revised plan meets the performance requirements". Do you agree or disagree with this requirement? If you disagree, please explain why.

Yes ☒ No ☐
Comment:

D. Performance Requirements

The proposed revised planning standard (TPL-001-1) incorporates a number of changes in requirements as compared to the current planning standards (TPL-001-0 through TPL-004-0), which it is expected to replace. Among other things these changes are intended to

clarify the standard, address issues described by FERC, and, in particular, to "raise the bar." Strengthening the planning standards in selected areas is necessary to maintain a reliable Bulk Electric System that is up to the challenges of the 21st Century. In proposing the requirements in this draft, the standard drafting team attempted to balance the value of increased reliability against any potential increase in work and costs to meet the new proposed standard.

The standard drafting team is seeking input from the industry to determine whether a proper balance has been achieved. The areas where material changes are proposed in this draft are enumerated below, and questions are posed by the standard drafting team to obtain industry comment. In formulating your responses, please keep in mind that material changes in the final standard will be accompanied by a transition plan to provide for an orderly implementation of the final standard.

The performance requirements relative to Non-Consequential Loss of Load for the following events enumerated in the two tables can be considered more stringent than the existing TPL standards. Furthermore, the proposed standard is based on an assumption that performance requirements for EHV facilities should be more stringent than for lower voltage facilities.

Do you agree that Non-Consequential Loss of Load should not be permitted for the following events? If you disagree, please provide a reason for your disagreement.

Event	Agree or Disagree	Comment
Q20. P2-1: Loss of bus section (SLG for stability) above 300 kV	☐Agree. ☒Do not agree.	By not allowing non-consequential load loss, utilities will incur significant expenditures to construct a transmission solution for some extremely low probability events with low consequence. Each utility should have the flexibility to base action on probability and consequence. Load shed by UVLS or other means should remain an option to maintain reliability if probability is extremely low, but the high consequence of an event determines that a solution is necessary.
Q21. P5-1: For facilities above 300 kV, loss of a Transmission circuit followed by System adjustment[1] followed by loss of another Transmission circuit	☐Agree. ☒Do not agree.	See Q20.
Q22. P5-2: For facilities above 300 kV, loss of a Transmission circuit followed by System adjustment followed by loss of a transformer with low side voltage	☐Agree. ☒Do not agree.	See Q20.

rating above 300 kV		
Q23. P5-3: For facilities above 300 kV, loss of a transformer with low side voltage rating above 300 kV followed by System adjustment followed by loss of another transformer	☐Agree. ☒Do not agree.	See Q20.

[1]System adjustment can be manual or automatic.

The proposed standard is based on an assumption that performance requirements for non-bus tie EHV breakers should be distinguished from other breakers. Do you agree that Non-Consequential Loss of Load should not be permitted for this event?

Q24. Loss of non-bus tie breaker (above 300 kV) due to internal fault

Yes ☐ No ☒
Comment: See Q20.

The proposed standard is based on an assumption that performance requirements for non-bus tie EHV breakers should be distinguished from other breakers and that performance requirements for EHV facilities should be more stringent than for lower voltage facilities. Do you agree that Non-Consequential Loss of Load should not be permitted for this event?

Q25. P3-1: Loss of (SLG for stability) either a generator, a Transmission circuit, a transformer, or a bus and a stuck non-bus tie breaker (above 300 kV)

Yes ☐ No ☒
Comment: See Q20.

The proposed standard is based on an assumption that the following events are relatively high probability events and, therefore, Non-Consequential Loss of Load should not be permitted. Do you agree? If you disagree, please provide a reason for your disagreement.

Event	Agree or Disagree	Comment
Q26. P4-1: Loss of a Generator followed by System adjustment[1] followed by loss of another Generator	☐Agree. ☒Do not agree.	It is agreed that this event should be tested for maintaining reliability of the BES, however planned load loss should be allowed.
Q27. P4-2: Loss of a generator followed by a System adjustment followed by the loss of a monopolar DC line	☐Agree. ☒Do not agree.	It is agreed that this event should be tested for maintaining reliability of the BES, however planned load loss should be allowed.
Q28. P4-3: Loss of a generator followed by System adjustment followed	☐Agree. ☒Do not agree.	It is agreed that this event should be tested for maintaining reliability of the BES, however planned load loss should

[1] System adjustment can be manual or automatic

by loss of a Transmission circuit		be allowed.
Q29. P4-4: Loss of a generator followed by System adjustment followed by loss of a transformer with low side voltage rating above 300 kV	☐Agree. ☒Do not agree.	It is agreed that this event should be tested for maintaining reliability of the BES, however planned load loss should be allowed.

The performance requirement for the following event may be considered less stringent than the existing TPL Standards — P2-3: Loss of a single pole of a DC line. Interruption of firm transactions (without Loss of firm Load) if the transaction is dependent on the faulted DC line is now allowed for this initiating event/Contingency.

Q30. Do you agree that interruption of any firm transfers that are dependent on the outaged DC line that is taken out of service should be permitted?

Yes ☒ No ☐
Comment: There are also conditions where this interruption should be allowed for a single AC tie line.

E. Stability

Q31. The proposed standard is based on an assumption that steady state analysis and stability analysis are different from each other and that therefore, two tables of Contingencies and performance requirements were needed. It is also based on an assumption that stability study requirements should be clearly separated from the steady state study requirements. Do you agree with the action taken in separating stability analysis from steady state analysis? If not, please explain.

Yes ☒ No ☐
Comment:

Q32. The SDT has added requirements for plant stability studies and has drawn a distinction in these studies from System stability studies. Do you agree with this approach? If not, please explain.

Yes ☒ No ☐
Comment:

Q33. The existing TPL-004-0 standard has a requirement to consider the Loss of all generating units at a plant, but it was not clear whether this requirement should apply to stability studies. The SDT did not include this requirement in the stability table, because it is hard to envision a condition when all units would trip simultaneously within the timeframe of a stability simulation. Do you think this condition should be required in stability analysis of extreme events? If not, please explain.

Yes ☐ No ☒
Comment: This question conflicts with Table 2 Extreme Event #9.

Q34. There are an increasing number of events with slow voltage recovery after faults on the Transmission System. The dynamic behavior of induction motor loads is a major factor in this phenomenon. The proposed standard therefore requires that the load

model for stability studies of peak Load conditions include the dynamic effects of induction motors. Do you agree with this requirement? If not, please explain?

Yes ☒ No ☐

Comment: Dynamic studies of seasonal load conditions should include the effects of induction motors, and particularly in areas where traditional load models have indicated a problem. Unfortunately, there is a lack of data to support the amount and characteristics of the detailed induction load models in many areas. In addition to the consideration of the dynamic effects of induction motor loads, the effects of static capacitor banks installed at distribution voltage levels would need to be considered as well. Prior to making this a requirement in the reliability standards, the industry needs guidance as to how this data should be developed and maintained for models in future years. Also, the existing software capability is extremely limited in the ability to study the effects of motor loads.

Note that meeting such a requirement would necessitate a significant increase in the dynamic data needed to represent the system. Maintenance of such load model data would require significant resources. Load characteristics valid for a near term model might not be valid for future years. Also, summer peak load, winter peak load, and off-peak load characteristics would differ.

Q35. What type of manual or automatic adjustments of generators should be allowed for single and multiple Contingencies?

Comment: Any adjustments should be allowed that protects the reliability of the BES.

F. Generation Runback and Tripping

The SDT has discussed the automatic and manual readjustments of generators that should be permissible for single contingencies and multiple contingencies. The existing TPL-001-0 through TPL-004-0 standards through footnote (a) of Table I could include emergency ratings applicable for short durations as required to permit operating steps necessary to maintain system control. The footnote is silent about allowable generation adjustments in response to the Category B events. However, it does indicate that system adjustments are permitted to prepare for the next Contingency. These system adjustments could include manual or automatic adjustments involving generation.

The SDT has learned that many transmission owners use System Protection Systems (SPS) or Remedial Action Schemes (RAS) to trip generation for single and multiple Contingency outage events to prevent overloads, low voltage, and instability in the Interconnected Transmission network for N-1 and N-2 events. In some cases, the RAS are used to prepare for the next Contingency; but in some cases, the RAS are used to simultaneously avoid exceeding emergency ratings.

Q36. The proposed standard allows generation runback after the disturbance that causes a single Contingency (or due to a single Contingency outage) to move the Interconnected Transmission System from an emergency state (within emergency ratings) to a normal state (within normal ratings), assuming that the disturbance does not result in instability? Do you agree? If not, please explain.

Yes ☒ No ☐

Comment:

Q37. Since emergency ratings are thermal ratings, should this standard allow an automatic generation runback scheme (that is initiated immediately after the

disturbance causing the single Contingency) to prevent thermal overloads (assuming that the disturbance does not result in instability)? If yes, what are the conditions that must be met in order to allow such a runback scheme to meet the System performance criteria for single Contingencies? Please explain the reason for your answer.

Yes ☒ No ☐
Comment: The generator runback scheme should complete its action within the time allowed by the emergency ratings of elements that exceed their normal thermal ratings.

The standard drafting team has considered that RAS or SPS may be allowable under certain situations for single Contingencies, but proposes that their use should be limited.

Q38. Do you agree that RAS or SPS may be allowed for single Contingencies? If not, please explain.

Yes ☒ No ☒
Comment: TVA does not allow generator tripping for a single contingency. However, we recognize that there are certain instances for which this makes practical and economic sense.

Q39. Please describe the limitations that you believe should be placed on the use of RAS or SPS for single Contingency events.

Comment: RAS or SPS should meet the same criteria as any protection system.

Q40. When RAS or SPS are allowed, what conditions should be met when these systems are used in system adjustments to meet performance requirements?

Comment: The conditions required by SPS standards (PRC).

G. General Questions

Q41. If you are aware of any regional variances that would be required as a result of these standards, please identify them here.

Yes ☐ No ☒
Comment:

Q42. If you are aware of any conflicts between the proposed standards and any regulatory function, rule order, tariff, rate schedule, legislative requirement or agreement, please identify them here.

Yes ☐ No ☐
Comment:

Q43. Do you have any other questions or concerns with the proposed standard that have not been addressed? If yes, please explain.

Yes ☒ No ☐
Comment: Requirement R1 does not belong in this standard. These requirements are covered by MOD standards.

Spare equipment strategy should be covered as a sensitivity study, but not included in the base case.

R2.1.1 should not be so prescriptive as to which years of 1-5 are studied.

The wording for R2.1.3 and R2.4.3 should be consistent.

Consideration should be given to the specific phases which are faulted in the simultaneous faults for P9 of the stability table. The results can be much different if the simultaneous faults occur on the same phase or different phases.

More guidance should be given for the term "Interruption of Firm Transfer Allowed" in Table 1. Firm transfer is not defined in the NERC glossary. The type of transmission service should be outlined here.

R2.7.1.1 - The project initiation date is not relevant in a reliability standard.

Extreme Event Descriptions
2. a. and b. should include mileage threshholds.
3. e. The term "large load" is vague and should be clarified.
   d. and f. are duplicates.
   c. and e. are duplicates.

Minimum generator voltage data required for R3.2.1 will be require extensive and costly generator testing and analysis to provide data necessary for transmission system studies.

R3.3.2.1 is an operational issue rather than a planning issue.

The addition of the "Corrective Action Plan" requires the TP to provide a significant amount of documentation for each deficiency identified by the studies.

Also, R3.2 requires that the studies simulate the protection scheme for all events. The current software tools cannot automate these studies for bus faults and breaker failure events, requiring each scenario to be studied manually.

The planning event designations are confusing because both the steady-state and stability tables have events P1-P9. A different designation should be used for one of the tables.

In R4.6 and other locations, the individual generator exemption of 20 MW should be increased to 75 MVA.

NERC
NORTH AMERICAN ELECTRIC RELIABILITY CORPORATION

Comment Form for First Draft of TPL-001-1 — Transmission System Planning Performance Requirements

Please use this form to submit comments on the proposed draft of TPL-001-1. Comments must be submitted by **Friday, October 26, 2007**. You may submit the completed form by e-mail to sarcomm@nerc.net with the words "TPL-001 Draft 1" in the subject line. If you have questions please contact Ed Dobrowolski at ed.dobrowolksi@nerc.net or by telephone at 609-947-3673.

Individual Commenter Information **(Complete this page for comments from one organization or individual.)**		
Name:	Alex Boutsioulis	
Organization:	The United Illuminating Company	
Telephone:	203-926-4630	
E-mail:	alex.boutsioulis@uinet.com	
NERC Region (check all Regions in which your company operates)		**Registered Ballot Body Segment (check all industry segments in which your company is registered)**
☐ **ERCOT**	☒	1 — Transmission Owners
☐ **FRCC**	☐	2 — RTOs and ISOs
☐ **MRO**	☐	3 — Load-serving Entities
☒ **NPCC**	☐	4 — Transmission-dependent Utilities
☐ **RFC**	☐	5 — Electric Generators
☐ **SERC**	☐	6 — Electricity Brokers, Aggregators, and Marketers
☐ **SPP**	☐	7 — Large Electricity End Users
☐ **WECC**	☐	8 — Small Electricity End Users
☐ **NA – Not Applicable**	☐	9 — Federal, State, Provincial Regulatory or other Government Entities
	☐	10 — Regional Reliability Organizations and Regional Entities

Group Comments (Complete this page if comments are from a group.)

Group Name:

Lead Contact:

Contact Organization:

Contact Segment:

Contact Telephone:

Contact E-mail:

Additional Member Name	Additional Member Organization	Region*	Segment*

*If more than one Region or Segment applies, please list all that apply. Regional acronyms and segment numbers are shown on prior page.

Background

The purpose of this standard is to establish Transmission System planning performance requirements within the planning horizon to develop a Bulk Electric System that will operate reliably over a broad spectrum of System conditions and following a wide range of probable Contingencies. This standard will replace TPL-001-0, TPL-002-0, TPL-003-0, and TPL-004-0. The standard drafting team has not yet addressed TPL-005-0 and TPL-006-0, but will address these two standards during the next phase of the drafting process.

The major objectives of the standard drafting team are to:

1) Ensure the standard is complete and the requirements are set at an appropriate level to ensure reliability (Not Least Common Denominator)
2) Ensure that the standard is enforceable by having clearly defined requirements with unambiguous language
3) Address the issues raised by FERC Order 693, 890, and other applicable orders
4) Address the issues raised in the original Standards Authorization Request (SAR) and the Supplemental SAR.

The standard drafting team did not attempt to edit the existing standards but rather chose to write one standard that addresses all aspects of transmission planning in the existing TPL-001-0, TPL-002-0, TPL-003-0, and TPL-004-0. The standard drafting team organized the new standard in the following sections:

R1 – Modeling requirements
R2 – Assessment and Corrective Plan requirements
R3 – Steady State Analysis requirements
R4 – Stability Analysis requirements
R5 – Coordination requirements

The standard drafting team determined that the requirements and analysis for Steady State are different from those for stability. As such, the standard drafting team separated the analysis requirements and created two performance requirement tables.

The standard drafting team recognizes that this draft standard is a starting point for industry input into the standard and that there is still a lot of work required to complete the process. The standard drafting team has made many changes to clarify requirements, add requirements, and make some of the performance requirements stricter. The standard drafting team has not addressed Measures, Risk Factors, Violation Severity Factors, or Time Horizons at this time. These will be addressed when the standard drafting team has better defined the requirements of the standard.

For questions where you agree with the standard drafting team, please state that you agree and if available, please provide supporting documentation. If you disagree with the standard drafting team, please explain why you disagree and provide data to support your position, such as outage data or analysis. If you believe that we have made a performance requirement too strict please provide supporting documentation. If applicable, please include the approximate cost in man-hours for additional studies and/or cost in $Millions for additional transmission investment to meet the new requirements or the stricter requirements. If you believe that the standard should be stricter, please provide the rationale along with any supporting data, including existing practices, cost estimates or additional analysis.

To improve the standard, the standard drafting team would appreciate responses to as many of these questions as you can answer.

A. New Definitions

Many of the concerns about the existing TPL standards come from the fact that a number of generally understood concepts are embedded in undefined terms, tables, and footnotes. To clarify some of these concerns, the standard drafting team is proposing new definitions. Please indicate whether you agree with the following proposed definitions and provide proposed changes to the definitions if you disagree:

Definition	**Agree or Disagree**
Q1. **Base Case**: Computer representation of the projected initial or starting Transmission System conditions for a specific point in time. Each base case reflects the forecasted Load at each bus (or node) on the interconnected Transmission System, the transmission facilities which deliver the generation and reactive resources to the connected Load, and the generation dispatch including firm transaction obligations assumed to supply the connected Load. The models also reflect facility ratings in accordance with FAC-008 & FAC-009.	☐Agree. ☒Do not agree.
Q1. **Comment: There are a few undefined terms in this definition: "Transmission System" and "interconnected Transmission System". The definition needs to specifically identify what should be modeled and in a manner consistent with other NERC definitions. The definition refers to Facility ratings rather than the general reference to FAC-008 & FAC-009**	
Q2. **Consequential Load Loss:** Load that is no longer served because it is directly connected to an element(s) that is removed from service due to fault clearing action or mis-operation.	☒Agree. ☐Do not agree.
Q2. **Comment:**	
Q3. **Extreme Events:** Events which are more severe than Planning Events and have a low probability of occurrence.	☐Agree. ☒Do not agree.
Q3. **Comment: Modify to "Events which are more severe,but have a lower probability of occurrence, than Planning Events".**	
Q4. **Long-Term Transmission Planning Horizon:** Transmission planning period that covers years six through ten or beyond.	☐Agree. ☒Do not agree.
Q4. **Comment: "Transmission planning period that covers years six through ten", is sufficient for the standard." Suggest changing the name to Long-Term Planning Assessment.**	
Q5. **Near-Term Transmission Planning Horizon:** Transmission planning period that covers years One through five.	☒Agree. ☐Do not agree.
Q5. **Comment: Suggest changing the name to Near-Term Planning Assessment.**	
Q6. **Non-Consequential Load Loss:** Load loss other than	☒Agree.

Consequential Load Loss. For example, Load loss that occurs through manual (operator initiated) or automatic operations such as under-voltage Load shedding, under-frequency Load shedding, or Special Protection Systems.	☐Do not agree.
Q6. **Comment:**	
Q7. **Planning Assessment:** Documented evaluation of future Bulk Electric System needs by the use of performance studies that cover a range of assumptions regarding system conditions, time frames, future plans including capital reinforcements and operating procedures and other factors, such as asset conditions and age.	☐Agree. ☒Do not agree.
Q7. **Comment: Eliminate "capital" from the definition. It is not defined or consistently applicable to the standard. Reference to vague "other factors, such as asset conditions and age" should be removed from this standard; there are no consistent definitions or industry standards on which to base this requirement, nor does it appear to be a necessary addition to the standard.**	
Q8. **Planning Events:** Events which require Transmission system performance requirements to be met.	☐Agree. ☒Do not agree.
Q8. **Comment: Propose, "Events for which Transmission performance requirements must be met".**	
Q9. **Plant Stability Study:** Study of an individual plant's Stability for various Contingencies in the vicinity of the plant; concerned with the effect on the System of the generating units' loss of synchronism and the damping of the generating units' power oscillations.	☐Agree. ☒Do not agree.
Q9. **Comment: A Plant Stability Study should be a part of a System Stability Study. How should and why would they be differentiated? The analysis and performance constraints are the same in both cases; it's just a matter of whether one or more generating units are involved.**	
Q10. **System Stability Study:** Study of the System or portions of the System to ensure that angular Stability is maintained, inter-area power oscillations are damped, and voltages during the dynamic simulation stay within acceptable performance limits.	☐Agree. ☒Do not agree.
Q10. **Comment: See comment on Q9; proposed modification, "Study of the System or portions of the System to determine whether unit and system angular Stability is maintained, power oscillations are damped, and voltages during the dynamic simulation stay within acceptable perfomance limits.**	
Q11. **Year One:** The first year that a Transmission Planner is responsible for studying. This is further defined as the planning window that begins the next calendar year from the time the Transmission Planner submits their annual studies. Analysis conducted for time horizons within the calendar year from the study publication are assumed to be conducted under the auspices of Operations Planning.	☐Agree. ☒Do not agree.
Q11. **Comment: Modify to, "The first year that a Tranmission Planner is responsible for studying. This is further defined as the planning window that begins the next calendar year from the time the Transmission Planner completes its annual studies."**	

B. Sensitivity Studies

The draft planning standard includes the requirement, as specified in FERC Order 693, that planning decisions be based on a portfolio of analyses. In section 12.a.ii "Sensitivity studies and critical system conditions" FERC provided direction to consider a full range of variables considered to be significant that need to be assessed and documentation provided that explains the rationale for the selection of variables assessed.

In addition to the firm obligation scenario, the portfolio of analyses should be supplemented to include information from sensitivity analysis. The sensitivity analysis should be developed using additional cases that simulate reasonably stressed system conditions. The standard drafting team has included several parameters that can be varied to create the requisite sensitivity case(s). The draft standards specify that the sensitivities reflect one or more of the following conditions and that documentation be provided explaining the rationale for selecting the sensitivity(ies) employed. The parameters that should be varied include:

- Higher or lower Load forecasts from the Base Case with variability of Load/demand and Load power factors due to season, weather, or time of day.
- Modification of expected transfers.
- Unavailability of long lead time facilities.
- Variability and outages of Reactive Resources.
- Generation additions, retirements, or other dispatch scenarios.
- Decreased effectiveness of controllable Loads and Demand Side Management.
- Modification of planned Transmission outages

To help focus industry discussion, please respond to the questions below:

Q12. Should the standard provide more specific direction regarding the number of sensitivity cases that need to be developed?

Yes ☐ No ☒

Comment: The standard is unclear whether or not it mandates the requirement to develop action plans for problems highlighted as a result of one of the sensitivities.

Suggest modification to, "…sensitivity testing that stresses the System shall be considered, and documentation with the rationale for the sensitivity testing shall be supplied. The sensitivity case(s) may include one or more of the following conditions:"

2.1.3.3 should refer only to planned facilities that may be delayed. 2.1.3.4 - "variability" is too vague for a standard; the standard needs to be more specific as to the intent. 2.1.3.7 should be consistent with 1.4. These comments also apply to 2.4.3.

Q13. Should the standard specify the required changes, such as changes in expected transfers, load forecasts, generation patterns, etc., from the study case to be considered a "reasonably stressed" case?

Yes ☐ No ☒

Comment: The standard is unclear whether or not it mandates the requirement develop action plans for problems highlighted as a result of one of the sensitivities.

Reasonably stressed conditions are dependent upon the study area under review and the standard is not likely to be able to be crafted to provide sufficent and consistent direction. However, it might be helpful if the standard clarified whether the base case should include any unplanned generator outages or whether, aside from potential sensitivities, unplanned generator outages are considered only through P1, P3 or P4 Contingencies. If the standard addresses unplanned generator outages only through P1, P3 and P4, then it is recommended that a mandatory sensitivity analysis, with required mitigation, include various potential combinations of a reasonable amount of unplanned outages. The combinations should be based on the part of the system that is under study.

Q14. The SDT proposes to require the use of sensitivity studies for Near-Term Transmission System Planning Horizon stability analysis. Do you concur with the use of sensitivity analysis in dynamic studies?

Yes ☒ No ☐
Comment: The standard is unclear whether or not it mandates the requirement to devleop action plans for problems highlighted as a result of one of the sensitivities.

Suggest modification to, "…sensitivity testing that stresses the System should be considered. Sensitivity case(s) might include among the following conditions:" 2.4.3 shold mimic 2.1.3 except in regard to load models.

Q15. The draft TPL standard does not require the use of sensitivity studies for the Long-Term Transmission System Planning Horizon (year six and beyond) studies. Do you concur with this approach or should there be some level of sensitivity analysis required for the long-term period?

Yes ☒ No ☐
Comment: There is no need for sensitivity analysis.

C. Corrective Action Plans

Requirement R2.7 of the standard states that when analysis shows that the performance requirements in Table 1 and Table 2 are not fully met, a Corrective Action Plan that utilizes all or some of the Transmission System enhancements, generation additions, DSM, new technologies and Operating Procedures shall be included in the Planning Assessment. This Corrective Action Plan should ensure that upon its implementation the identified system deficiencies will be corrected so that the performance requirements in Table 1 and Table 2 will be met. Furthermore, studies included in the Planning Assessment should demonstrate that this is indeed the case.

Q16. Requirement R2.7.1: Such Corrective Action Plans shall "Identify System deficiencies and the associated actions needed to achieve required System performance including Transmission and generation improvements, DSM, new technologies, or Operating Procedures including the duration of Interim Operating Procedures". System deficiencies may be corrected using an integrated plan, i.e., an optimal mix of Transmission, generation, DSM and Operating Procedures. Should DSM be considered in conjunction with other measures in developing Corrective Action Plans? If yes, please comment on how the impact of DSM should be included.

Yes ☒ No ☐
Comment: DSM should be included to the extent that its performance is sufficiently and consistently understood. The standard does not use the term "optimal" Therefore, the Drafting Team appears to be interpreting the Standard to require a vertically-integrated Planner to produce a so-called optimal-mix of resources plan. This would be an incorrect assumption and is not required. In areas with independent planners and competitive wholesale markets, it is sufficent to identify system needs and produce a plan that identifies regulated transmission solutions in the event that market-based resources (such as DSM) do not address those identified needs. Therefore, while DSM can be as effective a resource as generation, per Commission Orders,

in areas with ISOs/RTOs and a competitive wholesale market, the NERC Standard cannot prescribe the development so-called optimized (as is suggesgted by the Drafting Team) resource-mix plans, as identified by a central planner.

Q17. Requirement R2.7.2: Such Corrective Action Plans shall "Be added to study cases and the cases re-tested to show that the System with planned additions meets the performance requirements in the tables". Should new studies, including the facilities comprising the Corrective Action Plan, be performed to assess System normal performance and Contingency response for conditions that previously resulted in the System deficiencies (without the planned additions) and also demonstrate that the changes would not result in inadvertent negative impacts on the System. If you "agree", please comment on how a study area should be determined.

Yes ☒ No ☐
Comment: The study area should be based upon planning expertise and knowledge of the system, giving due consideration to external impacts.

Q18. Requirement R2.7.3: The standard calls for a differentiation between committed and proposed projects. Do you agree that they should be treated separately? If not, please state why not.

Yes ☒ No ☐
Comment: They should be viewed differently in the Near-Term. However, these should be defined terms.

Q19. Requirement R2.7.4: For such Corrective Action Plans "Committed projects shall not be removed without documentation to show that the revised plan meets the performance requirements". Do you agree or disagree with this requirement? If you disagree, please explain why.

Yes ☒ No ☐
Comment: It is unclear as to what the commited project is being removed from. Suggested language "…removed from the plan…".

D. Performance Requirements

The proposed revised planning standard (TPL-001-1) incorporates a number of changes in requirements as compared to the current planning standards (TPL-001-0 through TPL-004-0), which it is expected to replace. Among other things these changes are intended to clarify the standard, address issues described by FERC, and, in particular, to "raise the bar." Strengthening the planning standards in selected areas is necessary to maintain a reliable Bulk Electric System that is up to the challenges of the 21st Century. In proposing the requirements in this draft, the standard drafting team attempted to balance the value of increased reliability against any potential increase in work and costs to meet the new proposed standard.

The standard drafting team is seeking input from the industry to determine whether a proper balance has been achieved. The areas where material changes are proposed in this draft are enumerated below, and questions are posed by the standard drafting team to obtain industry comment. In formulating your responses, please keep in mind that material changes in the final standard will be accompanied by a transition plan to provide for an orderly implementation of the final standard.

The performance requirements relative to Non-Consequential Loss of Load for the following events enumerated in the two tables can be considered more stringent than the existing TPL standards. Furthermore, the proposed standard is based on an assumption that performance requirements for EHV facilities should be more stringent than for lower voltage facilities.

Do you agree that Non-Consequential Loss of Load should not be permitted for the following events? If you disagree, please provide a reason for your disagreement.

Event	Agree or Disagree	Comment
Q20. P2-1: Loss of bus section (SLG for stability) above 300 kV	☒Agree. ☐Do not agree.	
Q21. P5-1: For facilities above 300 kV, loss of a Transmission circuit followed by System adjustment[1] followed by loss of another Transmission circuit	☐Agree. ☒Do not agree.	Given the low probability of extended overlapping outages of overhead facilities, systems have been designed assuming that load shedding following the loss of a second transmission line is permissible. Eliminating any allowance for load shedding for this condition may require significant system expansion and cost to to customers. However, it would be reasonable to consider establishing an upper bound to the amount of load that could be shed for these purposes.
Q22. P5-2: For facilities above 300 kV, loss of a Transmission circuit followed by System adjustment followed by loss of a transformer with low side voltage rating above 300 kV	☐Agree. ☒Do not agree.	Should also consider the initial loss of a transformer, followed by the loss of a Transmission circuit. This should state a transformer with a "high-side" rating above 300 kV.
Q23. P5-3: For facilities above 300 kV, loss of a transformer with low side voltage rating above 300 kV followed by System adjustment followed by loss of another transformer	☐Agree. ☒Do not agree.	This should state a transformer with a "high-side" rating above 300 kV.

[1]System adjustment can be manual or automatic.

The proposed standard is based on an assumption that performance requirements for non-bus tie EHV breakers should be distinguished from other breakers. Do you agree that Non-Consequential Loss of Load should not be permitted for this event?

Q24. Loss of non-bus tie breaker (above 300 kV) due to internal fault

Yes ☒ No ☐
Comment: It is unclear why bus tie breakers are being treated differently than other breakers. They should be treated the same.

The proposed standard is based on an assumption that performance requirements for non-bus tie EHV breakers should be distinguished from other breakers and that performance requirements for EHV facilities should be more stringent than for lower voltage facilities. Do you agree that Non-Consequential Loss of Load should not be permitted for this event?

Q25. P3-1: Loss of (SLG for stability) either a generator, a Transmission circuit, a transformer, or a bus and a stuck non-bus tie breaker (above 300 kV)

Yes ☐ No ☒
Comment: It is unclear why bus tie breakers are being treated differently than other breakers. They should be treated the same.

The proposed standard is based on an assumption that the following events are relatively high probability events and, therefore, Non-Consequential Loss of Load should not be permitted. Do you agree? If you disagree, please provide a reason for your disagreement.

Event	Agree or Disagree	Comment
Q26. P4-1: Loss of a Generator followed by System adjustment[1] followed by loss of another Generator	☐Agree. ☒Do not agree.	If the base case or a mandatory sensitivity case already includes unplanned generator outages, some load loss may be reasonable following the subsequent loss of 2 additional generators.
Q27. P4-2: Loss of a generator followed by a System adjustment followed by the loss of a monopolar DC line	☐Agree. ☒Do not agree.	If the base case or a mandatory sensitivity case already includes unplanned generator outages, some load loss may be reasonable following the subsequent loss of an additional generators and a monopolar DC line
Q28. P4-3: Loss of a generator followed by System adjustment followed by loss of a Transmission circuit	☐Agree. ☒Do not agree.	If the base case or a mandatory sensitivity case already includes unplanned generator outages, some load loss may be reasonable following the subsequent loss of an additional generators and a Transmission circuit
Q29. P4-4: Loss of a generator followed by System adjustment followed by loss of a transformer	☐Agree. ☒Do not agree.	If the base case or a mandatory sensitivity case already includes unplanned generator outages, some load loss may be reasonable following the subsequent loss of an additional generators and a transformer

The performance requirement for the following event may be considered less stringent than the existing TPL Standards — P2-3: Loss of a single pole of a DC line. Interruption of firm

[1] System adjustment can be manual or automatic

transactions (without Loss of firm Load) if the transaction is dependent on the faulted DC line is now allowed for this initiating event/Contingency.

Q30. Do you agree that interruption of any firm transfers that are dependent on the outaged DC line that is taken out of service should be permitted?

Yes ☒ No ☐
Comment: This should also apply to firm transfers via single or double ac facilities as well. In either case, the transfer could be linked to dedicated facilities.

E. Stability

Q31. The proposed standard is based on an assumption that steady state analysis and stability analysis are different from each other and that therefore, two tables of Contingencies and performance requirements were needed. It is also based on an assumption that stability study requirements should be clearly separated from the steady state study requirements. Do you agree with the action taken in separating stability analysis from steady state analysis? If not, please explain.

Yes ☒ No ☐
Comment:

Q32. The SDT has added requirements for plant stability studies and has drawn a distinction in these studies from System stability studies. Do you agree with this approach? If not, please explain.

Yes ☐ No ☒
Comment: A Plant Stability Study should be a part of a System Stability Study. How should and why would they be differentiated? The analysis and performance constraints are the same in both cases; it's just a matter of whether one or more generating units are involved.

Q33. The existing TPL-004-0 standard has a requirement to consider the Loss of all generating units at a plant, but it was not clear whether this requirement should apply to stability studies. The SDT did not include this requirement in the stability table, because it is hard to envision a condition when all units would trip simultaneously within the timeframe of a stability simulation. Do you think this condition should be required in stability analysis of extreme events? If not, please explain.

Yes ☐ No ☒
Comment: Difficult to envision how such an event would occur.

Q34. There are an increasing number of events with slow voltage recovery after faults on the Transmission System. The dynamic behavior of induction motor loads is a major factor in this phenomenon. The proposed standard therefore requires that the load model for stability studies of peak Load conditions include the dynamic effects of induction motors. Do you agree with this requirement? If not, please explain?

Yes ☐ No ☒
Comment: This requirement is too specific and limited. Induction motors are only one component of a complex load model. Complex load models are not always necessary, nor are they always the most conservative, depending on the analysis that is being conducted. Where complex load models are required, they should be considered; this may involve use of complex motor and lighting loads or polynomial load representations

with or without frequency dependence. This question also suggests the need for an industry standard regarding transient voltage recovery.

Q35. What type of manual or automatic adjustments of generators should be allowed for single and multiple Contingencies?

Comment: Manual or automatic adjustments should be permissible to allow redispatch to return the system to below normal/load cycle based ratings; however, the system should not exceed applicable emergency ratings prior to the adjustment. Manual system adjustment should be allowed in between the multiple Contingencies described in P5, provided that the adjustment can be made between contingencies using short-term reserves (10-30 minute).

F. Generation Runback and Tripping

The SDT has discussed the automatic and manual readjustments of generators that should be permissible for single contingencies and multiple contingencies. The existing TPL-001-0 through TPL-004-0 standards through footnote (a) of Table I could include emergency ratings applicable for short durations as required to permit operating steps necessary to maintain system control. The footnote is silent about allowable generation adjustments in response to the Category B events. However, it does indicate that system adjustments are permitted to prepare for the next Contingency. These system adjustments could include manual or automatic adjustments involving generation.

The SDT has learned that many transmission owners use System Protection Systems (SPS) or Remedial Action Schemes (RAS) to trip generation for single and multiple Contingency outage events to prevent overloads, low voltage, and instability in the Interconnected Transmission network for N-1 and N-2 events. In some cases, the RAS are used to prepare for the next Contingency; but in some cases, the RAS are used to simultaneously avoid exceeding emergency ratings.

Q36. The proposed standard allows generation runback after the disturbance that causes a single Contingency (or due to a single Contingency outage) to move the Interconnected Transmission System from an emergency state (within emergency ratings) to a normal state (within normal ratings), assuming that the disturbance does not result in instability? Do you agree? If not, please explain.

Yes ☒ No ☐

Comment: Generation runback should be permissible to allow redispatch to return the system to below normal/load cycle based ratings; however, the system should not exceed applicable emergency ratings prior to the adjustment

Q37. Since emergency ratings are thermal ratings, should this standard allow an automatic generation runback scheme (that is initiated immediately after the disturbance causing the single Contingency) to prevent thermal overloads (assuming that the disturbance does not result in instability)? If yes, what are the conditions that must be met in order to allow such a runback scheme to meet the System performance criteria for single Contingencies? Please explain the reason for your answer.

Yes ☒ No ☐

Comment: However, this should only be allowed where failure of an automatic runback that is not functionally redundant would not have significant adverse impact on the Bulk Electric System.

The standard drafting team has considered that RAS or SPS may be allowable under certain situations for single Contingencies, but proposes that their use should be limited.

Q38. Do you agree that RAS or SPS may be allowed for single Contingencies? If not, please explain.

Yes ☒ No ☐
Comment: Only allowed where the failure of an SPS that is not functionally redundant would not have significant adverse impact on the Bulk Electric System.

Q39. Please describe the limitations that you believe should be placed on the use of RAS or SPS for single Contingency events.

Comment: Only allowed where SPS failure would not have significant adverse impact on the Bulk Electric System; non-Consequential loss of load should be allowed up to an amount potentially specified in the standard.

Q40. When RAS or SPS are allowed, what conditions should be met when these systems are used in system adjustments to meet performance requirements?

Comment: System must remain stable with acceptable voltages and all equipment within applicable emergency limits.

G. General Questions

Q41. If you are aware of any regional variances that would be required as a result of these standards, please identify them here.

Yes ☒ No ☒
Comment: Unsure due to ambiguities in the standard. Depending upon the final standard, New England may need exceptions for existing facilities or allowance for a transition period to develop a compliance plan.

Q42. If you are aware of any conflicts between the proposed standards and any regulatory function, rule order, tariff, rate schedule, legislative requirement or agreement, please identify them here.

Yes ☐ No ☒
Comment:

Q43. Do you have any other questions or concerns with the proposed standard that have not been addressed? If yes, please explain.

Yes ☒ No ☐
Comment: There should be a "P0" standard that applies to system performance without any contingencies.

Standard should be clear that stabiltiy analysis is not required for Long-Term Planning Assessment.

R.1.1 Load forecasts should be addressed in MOD standards, not TPL.

R 1.4 This should only refer to known long-term outages, not planned outages. Delete "including protective relays"; this is addressed through other provisions.

R.2.1 Shorten "Near-Term Transmission Planning Horizon Planning Assessment" to "Near-Term Planning Assessment".

R 2.2 Shorten "Long-Term Transmission Planning Horizon Planning Assessment" to "Long-Term Planning Assessment".

R2.1, 2.2, 2.3 & 2.4 – The initial paragraph should have identical language regarding 'annual', and 'current or past' aspects.

R2.1.1 There should not be a requirement to look at years one and two; a 5 year study should be sufficient. If there has been an ongoing 5 year study, there should be no major unexpected problems occurring in years 1 and 2. Studies of earlier years should only be required if an unanticipated event occurred that had not been considered in prior studies. The TPL should not address shorter term "Operating Studies" or operating issues.

R 2.2.1 Modify to "If any known projects have a lead time that is longer than ten years, the Planning Assessment shall be extended accordingly."

R 2.6 Steady-state, short circuit, and stability analysis should be required no more than every 5 years unless there is a significant change the system.

R 2.6.1 Remove reference to "market structure changes". The purpose of it's inclusion is unclear.

R 2.7.1.1 Project initiation date should be deleted. If it is retainted, it needs to be defined.

R 2.7.3 Committed and Proposed projects should be defined.

R 3.2.1/R 4.3 - What is the intent of this requirement? There should probably be an MOD associated with Generator Owner requirement to provide related generator protection/ limiter data or other plant information.

R 3.4/R 4.5.2 Remove the requirement to implement changes to reduce or mitigate the likelihood of such consequences of Extreme Events. This may not be reasonable or achieveable.

R 3.2 Sectionalizing schemes shall be considered when reflecting the post-contingent system.

R 3.2.2 - Propose deleting this. Line ratings should already take relay loadability into account.

R 3.3.2.1 - Proposed deleting "expected duration". This would be dependent upon the damage to the element due to the iniating event and other factors.

R 3.3.2.2 - The requirements of this section do not match P6.

R 3.3.3 - Change introductory language to read "Those multiple Contingencies that are…"

R 3.5 - Generation tripping should be allowed as well as generation run-back. In addition, all performance requirements shall be met, rather than just meeting facility rating requirements. Suggested lanague "Manual and automatic generation run-back and/or generation tripping is allowed as a response to single and multiple Contingencies as long as the performance requirements of this standard are met." If these changes are accepted, R 3.6 can be deleted.

R 4 and R 4.1 - The language should be made similar to R 3 and R 3.1.

Suggest bringing language similar R4.4 into the R 3, the steady state section.

R 4.2 - High speed automatic reclosing schemes shall be considered.

R 6.3 - Change to read "Planning Coordinators of neighboring impacted areas".

Table 1 3 b and c Extreme Event descriptions are vague concepts that cannot be practically simulated. 3 d and e are not reasonable or practically useful to simulate.

Table 1, P8 - Language needs to be clarifed as to how the 300 kV threshold is to be treated for transformers. Is this for the high side, low side, or both sides? P5 is much clearer.

Table 2 - Clarification needs to be made that the faults being simulated are permanent faults. This can be addressed under the "Performance Requirements" portion at the beginning of the table, or modify each fault description.

Table 2 P9. Recommend that this be changed to require that faults should be on different phases of each of two adjacent transmission circuits on a multiple circuit transmission tower

Table 1, P9(6) and Table 2 P9 - It is unclear as to what is meant by "A spare transformer inserted to replace an outaged transformer followed by System adjustments". Unclear as to what is to be tested.

General comment - Transmission System is used throughout the document and is an undefined term

NERC
NORTH AMERICAN ELECTRIC RELIABILITY CORPORATION

Comment Form for First Draft of TPL-001-1 — Transmission System Planning Performance Requirements

Please use this form to submit comments on the proposed draft of TPL-001-1. Comments must be submitted by **Friday, October 26, 2007**. You may submit the completed form by e-mail to sarcomm@nerc.net with the words "TPL-001 Draft 1" in the subject line. If you have questions please contact Ed Dobrowolski at ed.dobrowolksi@nerc.net or by telephone at 609-947-3673.

Individual Commenter Information **(Complete this page for comments from one organization or individual.)**		
Name:	Mark Graham	
Organization:	Tri-State Generation and Transmission Association	
Telephone:	303-452-6111	
E-mail:	mgraham@tristategt.org	
NERC Region (check all Regions in which your company operates)		**Registered Ballot Body Segment (check all industry segments in which your company is registered)**
☐ **ERCOT**	☐	1 — Transmission Owners
☐ **FRCC**	☐	2 — RTOs and ISOs
☐ **MRO**	☐	3 — Load-serving Entities
☐ **NPCC**	☐	4 — Transmission-dependent Utilities
☐ **RFC**	☐	5 — Electric Generators
☐ **SERC**	☐	6 — Electricity Brokers, Aggregators, and Marketers
☐ **SPP**	☐	7 — Large Electricity End Users
☒ **WECC**	☐	8 — Small Electricity End Users
☐ **NA – Not Applicable**	☐	9 — Federal, State, Provincial Regulatory or other Government Entities
	☐	10 — Regional Reliability Organizations and Regional Entities

Group Comments (Complete this page if comments are from a group.)

Group Name:

Lead Contact:

Contact Organization:

Contact Segment:

Contact Telephone:

Contact E-mail:

Additional Member Name	Additional Member Organization	Region*	Segment*

*If more than one Region or Segment applies, please list all that apply. Regional acronyms and segment numbers are shown on prior page.

Background

The purpose of this standard is to establish Transmission System planning performance requirements within the planning horizon to develop a Bulk Electric System that will operate reliably over a broad spectrum of System conditions and following a wide range of probable Contingencies. This standard will replace TPL-001-0, TPL-002-0, TPL-003-0, and TPL-004-0. The standard drafting team has not yet addressed TPL-005-0 and TPL-006-0, but will address these two standards during the next phase of the drafting process.

The major objectives of the standard drafting team are to:

1) Ensure the standard is complete and the requirements are set at an appropriate level to ensure reliability (Not Least Common Denominator)
2) Ensure that the standard is enforceable by having clearly defined requirements with unambiguous language
3) Address the issues raised by FERC Order 693, 890, and other applicable orders
4) Address the issues raised in the original Standards Authorization Request (SAR) and the Supplemental SAR.

The standard drafting team did not attempt to edit the existing standards but rather chose to write one standard that addresses all aspects of transmission planning in the existing TPL-001-0, TPL-002-0, TPL-003-0, and TPL-004-0. The standard drafting team organized the new standard in the following sections:

R1 – Modeling requirements
R2 – Assessment and Corrective Plan requirements
R3 – Steady State Analysis requirements
R4 – Stability Analysis requirements
R5 – Coordination requirements

The standard drafting team determined that the requirements and analysis for Steady State are different from those for stability. As such, the standard drafting team separated the analysis requirements and created two performance requirement tables.

The standard drafting team recognizes that this draft standard is a starting point for industry input into the standard and that there is still a lot of work required to complete the process. The standard drafting team has made many changes to clarify requirements, add requirements, and make some of the performance requirements stricter. The standard drafting team has not addressed Measures, Risk Factors, Violation Severity Factors, or Time Horizons at this time. These will be addressed when the standard drafting team has better defined the requirements of the standard.

For questions where you agree with the standard drafting team, please state that you agree and if available, please provide supporting documentation. If you disagree with the standard drafting team, please explain why you disagree and provide data to support your position, such as outage data or analysis. If you believe that we have made a performance requirement too strict please provide supporting documentation. If applicable, please include the approximate cost in man-hours for additional studies and/or cost in $Millions for additional transmission investment to meet the new requirements or the stricter requirements. If you believe that the standard should be stricter, please provide the rationale along with any supporting data, including existing practices, cost estimates or additional analysis.

To improve the standard, the standard drafting team would appreciate responses to as many of these questions as you can answer.

A. New Definitions

Many of the concerns about the existing TPL standards come from the fact that a number of generally understood concepts are embedded in undefined terms, tables, and footnotes. To clarify some of these concerns, the standard drafting team is proposing new definitions. Please indicate whether you agree with the following proposed definitions and provide proposed changes to the definitions if you disagree:

Definition	**Agree or Disagree**
Q1. **Base Case**: Computer representation of the projected initial or starting Transmission System conditions for a specific point in time. Each base case reflects the forecasted Load at each bus (or node) on the interconnected Transmission System, the transmission facilities which deliver the generation and reactive resources to the connected Load, and the generation dispatch including firm transaction obligations assumed to supply the connected Load. The models also reflect facility ratings in accordance with FAC-008 & FAC-009.	☒Agree. ☒Do not agree.
Q1. **Comment: same as WECC group comments**	
Q2. **Consequential Load Loss:** Load that is no longer served because it is directly connected to an element(s) that is removed from service due to fault clearing action or mis-operation.	☒Agree. ☒Do not agree.
Q2. **Comment: same as WECC group comments**	
Q3. **Extreme Events:** Events which are more severe than Planning Events and have a low probability of occurrence.	☒Agree. ☒Do not agree.
Q3. **Comment: same as WECC group comments.**	
Q4. **Long-Term Transmission Planning Horizon:** Transmission planning period that covers years six through ten or beyond.	☒Agree. ☐Do not agree.
Q4. **Comment:**	
Q5. **Near-Term Transmission Planning Horizon:** Transmission planning period that covers years One through five.	☒Agree. ☐Do not agree.
Q5. **Comment:**	
Q6. **Non-Consequential Load Loss:** Load loss other than Consequential Load Loss. For example, Load loss that occurs through manual (operator initiated) or automatic operations such as under-voltage Load shedding, under-frequency Load shedding, or Special Protection Systems.	☐Agree. ☒Do not agree.
Q6. **Comment: same as WECC group comments**	
Q7. **Planning Assessment:** Documented evaluation of future Bulk Electric System needs by the use of performance studies that cover a range of assumptions regarding system conditions, time	☒Agree. ☒Do not

frames, future plans including capital reinforcements and operating procedures and other factors, such as asset conditions and age.	agree.
Q7. **Comment: same as WECC group comments**	
Q8. **Planning Events:** Events which require Transmission system performance requirements to be met.	☒Agree. ☐Do not agree.
Q8. **Comment:**	
Q9. **Plant Stability Study:** Study of an individual plant's Stability for various Contingencies in the vicinity of the plant; concerned with the effect on the System of the generating units' loss of synchronism and the damping of the generating units' power oscillations.	☐Agree. ☒Do not agree.
Q9. **Comment: Plant stability should be called Station stability. The term "plant" is reserved for aggregates such as total coal plant or total peaking plant, meaning all generating units in that category.**	
Q10. **System Stability Study:** Study of the System or portions of the System to ensure that angular Stability is maintained, inter-area power oscillations are damped, and voltages during the dynamic simulation stay within acceptable performance limits.	☒Agree. ☐Do not agree.
Q10. **Comment:**	
Q11. **Year One:** The first year that a Transmission Planner is responsible for studying. This is further defined as the planning window that begins the next calendar year from the time the Transmission Planner submits their annual studies. Analysis conducted for time horizons within the calendar year from the study publication are assumed to be conducted under the auspices of Operations Planning.	☒Agree. ☐Do not agree.
Q11. **Comment:**	

B. Sensitivity Studies

The draft planning standard includes the requirement, as specified in FERC Order 693, that planning decisions be based on a portfolio of analyses. In section 12.a.ii "Sensitivity studies and critical system conditions" FERC provided direction to consider a full range of variables considered to be significant that need to be assessed and documentation provided that explains the rationale for the selection of variables assessed.

In addition to the firm obligation scenario, the portfolio of analyses should be supplemented to include information from sensitivity analysis. The sensitivity analysis should be developed using additional cases that simulate reasonably stressed system conditions. The standard drafting team has included several parameters that can be varied to create the requisite sensitivity case(s). The draft standards specify that the sensitivities reflect one or more of the following conditions and that documentation be provided explaining the rationale for selecting the sensitivity(ies) employed. The parameters that should be varied include:

- Higher or lower Load forecasts from the Base Case with variability of Load/demand and Load power factors due to season, weather, or time of day.
- Modification of expected transfers.
- Unavailability of long lead time facilities.

- Variability and outages of Reactive Resources.
- Generation additions, retirements, or other dispatch scenarios.
- Decreased effectiveness of controllable Loads and Demand Side Management.
- Modification of planned Transmission outages

To help focus industry discussion, please respond to the questions below:

Q12. Should the standard provide more specific direction regarding the number of sensitivity cases that need to be developed?

Yes ☐ No ☒
Comment: same as WECC group comments

Q13. Should the standard specify the required changes, such as changes in expected transfers, load forecasts, generation patterns, etc., from the study case to be considered a "reasonably stressed" case?

Yes ☐ No ☒
Comment: same as WECC group comments

Q14. The SDT proposes to require the use of sensitivity studies for Near-Term Transmission System Planning Horizon stability analysis. Do you concur with the use of sensitivity analysis in dynamic studies?

Yes ☐ No ☒
Comment: Sensitivity studies are most often used to determine operating relationships of a system - sensitivity to generation patterns is deliverability analysis; sensitivity to load growth is margin analysis. Sensitivity analysis should not be required explicitly. The criteria should be stated in terms of load margins, deliverability, and capability to withstand generator or transaction forced outages. The TP can use sensitivity studies or other reasonable methods to assess reliability

Q15. The draft TPL standard does not require the use of sensitivity studies for the Long-Term Transmission System Planning Horizon (year six and beyond) studies. Do you concur with this approach or should there be some level of sensitivity analysis required for the long-term period?

Yes ☐ No ☒
Comment: It is just as important for long range plans of service to provide acceptable operation as it is for near-term facility plans. To specify different criteria for different time periods seems unreasonable.

C. Corrective Action Plans

Requirement R2.7 of the standard states that when analysis shows that the performance requirements in Table 1 and Table 2 are not fully met, a Corrective Action Plan that utilizes all or some of the Transmission System enhancements, generation additions, DSM, new technologies and Operating Procedures shall be included in the Planning Assessment. This Corrective Action Plan should ensure that upon its implementation the identified system deficiencies will be corrected so that the performance requirements in Table 1 and Table 2 will be met. Furthermore, studies included in the Planning Assessment should demonstrate that this is indeed the case.

Q16. Requirement R2.7.1: Such Corrective Action Plans shall "Identify System deficiencies and the associated actions needed to achieve required System performance including Transmission and generation improvements, DSM, new technologies, or

Operating Procedures including the duration of Interim Operating Procedures". System deficiencies may be corrected using an integrated plan, i.e., an optimal mix of Transmission, generation, DSM and Operating Procedures. Should DSM be considered in conjunction with other measures in developing Corrective Action Plans? If yes, please comment on how the impact of DSM should be included.

Yes ☐ No ☒
Comment: DSM should not be considered except as a load forecast variable. Rather, the load forecast probability index should be prescribed (specific probability of exceedance)

Q17. Requirement R2.7.2: Such Corrective Action Plans shall "Be added to study cases and the cases re-tested to show that the System with planned additions meets the performance requirements in the tables". Should new studies, including the facilities comprising the Corrective Action Plan, be performed to assess System normal performance and Contingency response for conditions that previously resulted in the System deficiencies (without the planned additions) and also demonstrate that the changes would not result in inadvertent negative impacts on the System. If you "agree", please comment on how a study area should be determined.

Yes ☐ No ☒
Comment: same as WECC group comments

Q18. Requirement R2.7.3: The standard calls for a differentiation between committed and proposed projects. Do you agree that they should be treated separately? If not, please state why not.

Yes ☐ No ☒
Comment: same as WECC group comments

Q19. Requirement R2.7.4: For such Corrective Action Plans "Committed projects shall not be removed without documentation to show that the revised plan meets the performance requirements". Do you agree or disagree with this requirement? If you disagree, please explain why.

Yes ☐ No ☒
Comment: R2.7.4 calls for change monitoring. If documentation of changes is required, just say so. Do not restrict changes.

D. Performance Requirements

The proposed revised planning standard (TPL-001-1) incorporates a number of changes in requirements as compared to the current planning standards (TPL-001-0 through TPL-004-0), which it is expected to replace. Among other things these changes are intended to clarify the standard, address issues described by FERC, and, in particular, to "raise the bar." Strengthening the planning standards in selected areas is necessary to maintain a reliable Bulk Electric System that is up to the challenges of the 21st Century. In proposing the requirements in this draft, the standard drafting team attempted to balance the value of increased reliability against any potential increase in work and costs to meet the new proposed standard.

The standard drafting team is seeking input from the industry to determine whether a proper balance has been achieved. The areas where material changes are proposed in this draft are enumerated below, and questions are posed by the standard drafting team to obtain industry comment. In formulating your responses, please keep in mind that material

changes in the final standard will be accompanied by a transition plan to provide for an orderly implementation of the final standard.

The performance requirements relative to Non-Consequential Loss of Load for the following events enumerated in the two tables can be considered more stringent than the existing TPL standards. Furthermore, the proposed standard is based on an assumption that performance requirements for EHV facilities should be more stringent than for lower voltage facilities.

Do you agree that Non-Consequential Loss of Load should not be permitted for the following events? If you disagree, please provide a reason for your disagreement.

Event	Agree or Disagree	Comment
Q20. P2-1: Loss of bus section (SLG for stability) above 300 kV	☐Agree. ☒Do not agree.	same as WECC group comments
Q21. P5-1: For facilities above 300 kV, loss of a Transmission circuit followed by System adjustment[1] followed by loss of another Transmission circuit	☐Agree. ☒Do not agree.	same as WECC group comments
Q22. P5-2: For facilities above 300 kV, loss of a Transmission circuit followed by System adjustment followed by loss of a transformer with low side voltage rating above 300 kV	☐Agree. ☒Do not agree.	same as WECC group comments
Q23. P5-3: For facilities above 300 kV, loss of a transformer with low side voltage rating above 300 kV followed by System adjustment followed by loss of another transformer	☐Agree. ☒Do not agree.	same as WECC group comments

[1]System adjustment can be manual or automatic.

The proposed standard is based on an assumption that performance requirements for non-bus tie EHV breakers should be distinguished from other breakers. Do you agree that Non-Consequential Loss of Load should not be permitted for this event?

Q24. Loss of non-bus tie breaker (above 300 kV) due to internal fault

Yes ☐ No ☒
Comment: same as WECC group comments

The proposed standard is based on an assumption that performance requirements for non-bus tie EHV breakers should be distinguished from other breakers and that performance requirements for EHV facilities should be more stringent than for lower voltage facilities. Do you agree that Non-Consequential Loss of Load should not be permitted for this event?

Q25. P3-1: Loss of (SLG for stability) either a generator, a Transmission circuit, a transformer, or a bus and a stuck non-bus tie breaker (above 300 kV)

Yes ☐ No ☒
Comment: same as WECC group comments

The proposed standard is based on an assumption that the following events are relatively high probability events and, therefore, Non-Consequential Loss of Load should not be permitted. Do you agree? If you disagree, please provide a reason for your disagreement.

Event	Agree or Disagree	Comment
Q26. P4-1: Loss of a Generator followed by System adjustment[1] followed by loss of another Generator	☒Agree. ☐Do not agree.	same as WECC group comments
Q27. P4-2: Loss of a generator followed by a System adjustment followed by the loss of a monopolar DC line	☒Agree. ☐Do not agree.	same as WECC group comments
Q28. P4-3: Loss of a generator followed by System adjustment followed by loss of a Transmission circuit	☒Agree. ☐Do not agree.	same as WECC group comments
Q29. P4-4: Loss of a generator followed by System adjustment followed by loss of a transformer	☒Agree. ☐Do not agree.	same as WECC group comments

The performance requirement for the following event may be considered less stringent than the existing TPL Standards — P2-3: Loss of a single pole of a DC line. Interruption of firm transactions (without Loss of firm Load) if the transaction is dependent on the faulted DC line is now allowed for this initiating event/Contingency.

Q30. Do you agree that interruption of any firm transfers that are dependent on the outaged DC line that is taken out of service should be permitted?

Yes ☒ No ☒
Comment: same as WECC group comments

E. Stability

[1] System adjustment can be manual or automatic

Q31. The proposed standard is based on an assumption that steady state analysis and stability analysis are different from each other and that therefore, two tables of Contingencies and performance requirements were needed. It is also based on an assumption that stability study requirements should be clearly separated from the steady state study requirements. Do you agree with the action taken in separating stability analysis from steady state analysis? If not, please explain.

Yes ☒ No ☒
Comment: same as WECC group comments

Q32. The SDT has added requirements for plant stability studies and has drawn a distinction in these studies from System stability studies. Do you agree with this approach? If not, please explain.

Yes ☐ No ☒
Comment: same as WECC group comments

Q33. The existing TPL-004-0 standard has a requirement to consider the Loss of all generating units at a plant, but it was not clear whether this requirement should apply to stability studies. The SDT did not include this requirement in the stability table, because it is hard to envision a condition when all units would trip simultaneously within the timeframe of a stability simulation. Do you think this condition should be required in stability analysis of extreme events? If not, please explain.

Yes ☐ No ☒
Comment: same as WECC group comments

Q34. There are an increasing number of events with slow voltage recovery after faults on the Transmission System. The dynamic behavior of induction motor loads is a major factor in this phenomenon. The proposed standard therefore requires that the load model for stability studies of peak Load conditions include the dynamic effects of induction motors. Do you agree with this requirement? If not, please explain?

Yes ☒ No ☒
Comment: same as WECC group comments

Q35. What type of manual or automatic adjustments of generators should be allowed for single and multiple Contingencies?

Comment: same as WECC group comments

F. Generation Runback and Tripping

The SDT has discussed the automatic and manual readjustments of generators that should be permissible for single contingencies and multiple contingencies. The existing TPL-001-0 through TPL-004-0 standards through footnote (a) of Table I could include emergency ratings applicable for short durations as required to permit operating steps necessary to maintain system control. The footnote is silent about allowable generation adjustments in response to the Category B events. However, it does indicate that system adjustments are permitted to prepare for the next Contingency. These system adjustments could include manual or automatic adjustments involving generation.

The SDT has learned that many transmission owners use System Protection Systems (SPS) or Remedial Action Schemes (RAS) to trip generation for single and multiple Contingency outage events to prevent overloads, low voltage, and instability in the Interconnected Transmission network for N-1 and N-2 events. In some cases, the RAS are used to prepare for the next Contingency; but in some cases, the RAS are used to simultaneously avoid exceeding emergency ratings.

Q36. The proposed standard allows generation runback after the disturbance that causes a single Contingency (or due to a single Contingency outage) to move the Interconnected Transmission System from an emergency state (within emergency ratings) to a normal state (within normal ratings), assuming that the disturbance does not result in instability? Do you agree? If not, please explain.

Yes ☒ No ☐
Comment:

Q37. Since emergency ratings are thermal ratings, should this standard allow an automatic generation runback scheme (that is initiated immediately after the disturbance causing the single Contingency) to prevent thermal overloads (assuming that the disturbance does not result in instability)? If yes, what are the conditions that must be met in order to allow such a runback scheme to meet the System performance criteria for single Contingencies? Please explain the reason for your answer.

Yes ☒ No ☐
Comment: same as WECC group comments

The standard drafting team has considered that RAS or SPS may be allowable under certain situations for single Contingencies, but proposes that their use should be limited.

Q38. Do you agree that RAS or SPS may be allowed for single Contingencies? If not, please explain.

Yes ☒ No ☐
Comment:

Q39. Please describe the limitations that you believe should be placed on the use of RAS or SPS for single Contingency events.

Comment: same as WECC group comments

Q40. When RAS or SPS are allowed, what conditions should be met when these systems are used in system adjustments to meet performance requirements?

Comment: same as WECC group comments

G. General Questions

Q41. If you are aware of any regional variances that would be required as a result of these standards, please identify them here.

Yes ☒ No ☐

Comment: same as WECC group comments

Q42. If you are aware of any conflicts between the proposed standards and any regulatory function, rule order, tariff, rate schedule, legislative requirement or agreement, please identify them here.

Yes ☒ No ☐
Comment: same as WECC group comments

Q43. Do you have any other questions or concerns with the proposed standard that have not been addressed? If yes, please explain.

Yes ☒ No ☐
Comment: R1 and R2 address some Load Forecast issues, but are not exhaustive specifications of what Load Forecast range to use in studies. There needs to be some mention of exceedance probability (ExPr) in Load Forecast criteria. For example, we use a forecast with a low ExPr in our studies because we are concerned that, if the system was planned for 50% ExPr (a lower forecast), actual deviation from that forecast might result in load at certain locations exceeding operating margins built into the interconnected transmission system designed to serve only the 50% ExPr forecast load.

Load Specifications in R2.4 are ambiguous for the reasons stated above.

Maximum study ages in R2.6.1 and R2.6.2 seem arbitrary. The time limit does not seem to add anything to the criteria if no material changes have occurred. If spot checks of the most critical areas indicated no criteria violations, there should be no reason to rerun studies. To correct this problem, we suggest using the term "assessment" rather than "study". For most people, "study" implies detailed modeling and simulation analyses summarized in a report, whereas "assessment" implies a reasonable, systematic evaluation of a system which does not necessarily include detailed analysis for the entire system.

NERC
NORTH AMERICAN ELECTRIC RELIABILITY CORPORATION

Comment Form for First Draft of TPL-001-1 — Transmission System Planning Performance Requirements

Please use this form to submit comments on the proposed draft of TPL-001-1. Comments must be submitted by **Friday, October 26, 2007**. You may submit the completed form by e-mail to sarcomm@nerc.net with the words "TPL-001 Draft 1" in the subject line. If you have questions please contact Ed Dobrowolski at ed.dobrowolksi@nerc.net or by telephone at 609-947-3673.

Individual Commenter Information **(Complete this page for comments from one organization or individual.)**		
Name:	Gary Trent	
Organization:	Tucson Electric Power Company	
Telephone:	(520) 745-3168	
E-mail:	gtrent@tep.com	
NERC Region (check all Regions in which your company operates)		**Registered Ballot Body Segment (check all industry segments in which your company is registered)**
☐ **ERCOT**	☒	1 — Transmission Owners
☐ **FRCC**	☐	2 — RTOs and ISOs
☐ **MRO**	☐	3 — Load-serving Entities
☐ **NPCC**	☐	4 — Transmission-dependent Utilities
☐ **RFC**	☐	5 — Electric Generators
☐ **SERC**	☐	6 — Electricity Brokers, Aggregators, and Marketers
☐ **SPP**	☐	7 — Large Electricity End Users
☒ **WECC**	☐	8 — Small Electricity End Users
☐ **NA – Not Applicable**	☐	9 — Federal, State, Provincial Regulatory or other Government Entities
	☐	10 — Regional Reliability Organizations and Regional Entities

Group Comments (Complete this page if comments are from a group.)

Group Name:

Lead Contact:

Contact Organization:

Contact Segment:

Contact Telephone:

Contact E-mail:

Additional Member Name	Additional Member Organization	Region*	Segment*

*If more than one Region or Segment applies, please list all that apply. Regional acronyms and segment numbers are shown on prior page.

Background

The purpose of this standard is to establish Transmission System planning performance requirements within the planning horizon to develop a Bulk Electric System that will operate reliably over a broad spectrum of System conditions and following a wide range of probable Contingencies. This standard will replace TPL-001-0, TPL-002-0, TPL-003-0, and TPL-004-0. The standard drafting team has not yet addressed TPL-005-0 and TPL-006-0, but will address these two standards during the next phase of the drafting process.

The major objectives of the standard drafting team are to:

1) Ensure the standard is complete and the requirements are set at an appropriate level to ensure reliability (Not Least Common Denominator)
2) Ensure that the standard is enforceable by having clearly defined requirements with unambiguous language
3) Address the issues raised by FERC Order 693, 890, and other applicable orders
4) Address the issues raised in the original Standards Authorization Request (SAR) and the Supplemental SAR.

The standard drafting team did not attempt to edit the existing standards but rather chose to write one standard that addresses all aspects of transmission planning in the existing TPL-001-0, TPL-002-0, TPL-003-0, and TPL-004-0. The standard drafting team organized the new standard in the following sections:

R1 – Modeling requirements
R2 – Assessment and Corrective Plan requirements
R3 – Steady State Analysis requirements
R4 – Stability Analysis requirements
R5 – Coordination requirements

The standard drafting team determined that the requirements and analysis for Steady State are different from those for stability. As such, the standard drafting team separated the analysis requirements and created two performance requirement tables.

The standard drafting team recognizes that this draft standard is a starting point for industry input into the standard and that there is still a lot of work required to complete the process. The standard drafting team has made many changes to clarify requirements, add requirements, and make some of the performance requirements stricter. The standard drafting team has not addressed Measures, Risk Factors, Violation Severity Factors, or Time Horizons at this time. These will be addressed when the standard drafting team has better defined the requirements of the standard.

For questions where you agree with the standard drafting team, please state that you agree and if available, please provide supporting documentation. If you disagree with the standard drafting team, please explain why you disagree and provide data to support your position, such as outage data or analysis. If you believe that we have made a performance requirement too strict please provide supporting documentation. If applicable, please include the approximate cost in man-hours for additional studies and/or cost in $Millions for additional transmission investment to meet the new requirements or the stricter requirements. If you believe that the standard should be stricter, please provide the rationale along with any supporting data, including existing practices, cost estimates or additional analysis.

To improve the standard, the standard drafting team would appreciate responses to as many of these questions as you can answer.

A. New Definitions

Many of the concerns about the existing TPL standards come from the fact that a number of generally understood concepts are embedded in undefined terms, tables, and footnotes. To clarify some of these concerns, the standard drafting team is proposing new definitions. Please indicate whether you agree with the following proposed definitions and provide proposed changes to the definitions if you disagree:

Definition	**Agree or Disagree**
Q1. **Base Case**: Computer representation of the projected initial or starting Transmission System conditions for a specific point in time. Each base case reflects the forecasted Load at each bus (or node) on the interconnected Transmission System, the transmission facilities which deliver the generation and reactive resources to the connected Load, and the generation dispatch including firm transaction obligations assumed to supply the connected Load. The models also reflect facility ratings in accordance with FAC-008 & FAC-009.	☒Agree. ☒Do not agree.
Q1. **Comment: A Base Case can only represent the amount of transactions required to serve connected load modeled in the case (local load?). A Path Rating case (developed to represent maximum transfers on a path) would not be considered a base case under this definition. WECC develops base cases to study high power transfers under stressed conditions. Such high power transfers necessarily include both firm and non-firm transaction obligations. Therefore, a base case that represents firm transactions to support "connected load" only, cannot be used to support studies of maximum possible power transfer and is of limited value in WECC. We agree that the above definition is one definition of a base case, but we feel that it can not be the only definition or the limiting definition. We suggest that wording be included that reflects the concept of modeling forecasted or above forecasted load levels if desired, and both firm and non-firm transactions if necessary to model anticipated maximum transfers and represent stressed system conditions as well.** **The definition should refer to the base case as a Computer Simulation Model of the power system, not a Computer Representation of the transmission system, since it is used within a computer program and represents load and generation in addition to transmission. References to "the generation dispatch and firm transaction obligations to supply the connected load" should be removed.** **A base case is a starting case for any condition that needs to be studied, not just a firm transactions case. Firm obligations across the transmission system are many times independent of a specific load service obligation.**	
Q2. **Consequential Load Loss:** Load that is no longer served because it is directly connected to an element(s) that is removed from service due to fault clearing action or mis-operation.	☒Agree. ☒Do not agree.

Q2. **Comment: Agree with the definition in concept. However, the wording makes the definition seem unrealistic. There are many examples where a certain amount of voltage sensitive load or motor drives sensitive to angle changes are dropped due to normally cleared electrical faults on the transmission system. These loads are not directly connected to the element being removed from service. This type of sympathetic loss of load is unique to the individual customer load. The design of these loads is not under the control of the utilities when it comes to ability to ride through normally cleared faults. We suggest that this definition be modified to include the loss of sensitive load that is not directly connected to the element being removed.** **We propose the following the definition : Load that is no longer served because it is directly connected to an element(s) that is removed from service due to fault clearing action or mis-operation, and because of sympathetic tripping associated with normal clearing or mis-operation. Load that is lost because it trips due to low voltages experienced during and immediately following the fault (4-6 cycles?) is also considered consequential load loss. We believe this additional recognition is needed because load lost due to low fault voltages is unavoidable and should not result in a standard violation.**	
Q3. **Extreme Events:** Events which are more severe than Planning Events and have a low probability of occurrence.	☒Agree. ☒Do not agree.
Q3. **Comment: Please add the phrase "two or more elements out of service" to the definition from the previous definition in Table I.**	
Q4. **Long-Term Transmission Planning Horizon:** Transmission planning period that covers years six through ten or beyond.	☒Agree. ☐Do not agree.
Q4. **Comment:**	
Q5. **Near-Term Transmission Planning Horizon:** Transmission planning period that covers years One through five.	☒Agree. ☐Do not agree.
Q5. **Comment:**	
Q6. **Non-Consequential Load Loss:** Load loss other than Consequential Load Loss. For example, Load loss that occurs through manual (operator initiated) or automatic operations such as under-voltage Load shedding, under-frequency Load shedding, or Special Protection Systems.	☐Agree. ☒Do not agree.
Q6. **Comment: Please add "or Remedial Action schemes" to the end of the definition. FERC Order 693, paragraph 1773 states (6)"clarifies footnote (b) to Table 1 to allow no firm load or firm transactions to be interrupted except for consequential load loss." There needs to be a distinction made between Interruptible Load and Firm Demand.**	
Q7. **Planning Assessment:** Documented evaluation of future Bulk Electric System needs by the use of performance studies that cover a range of assumptions regarding system conditions, time frames, future plans including capital reinforcements and operating procedures and other factors, such as asset conditions	☒Agree. ☒Do not agree.

and age.	
Q7. **Comment: As identified by the modifications above, we believe the definition should be changed to read, "Documented evaluation of future Bulk Electric System needs by the use of performance studies (steady state and dynamic) that cover a range of reasonable or expected assumptions regarding system conditions, applicable time frames, and future plans; including capital reinforcements and operating procedures, SPS/RAS, and other factors (such as asset conditions and age)."**	
Q8. **Planning Events:** Events which require Transmission system performance requirements to be met.	☒Agree. ☐Do not agree.
Q8. **Comment:**	
Q9. **Plant Stability Study:** Study of an individual plant's Stability for various Contingencies in the vicinity of the plant; concerned with the effect on the System of the generating units' loss of synchronism and the damping of the generating units' power oscillations.	☐Agree. ☒Do not agree.
Q9. **Comment: Plant Stability seems to be a subset of System Stability. Introducing a new term can cause confusion.**	
Q10. **System Stability Study:** Study of the System or portions of the System to ensure that angular Stability is maintained, inter-area power oscillations are damped, and voltages during the dynamic simulation stay within acceptable performance limits.	☒Agree. ☐Do not agree.
Q10. **Comment:**	
Q11. **Year One:** The first year that a Transmission Planner is responsible for studying. This is further defined as the planning window that begins the next calendar year from the time the Transmission Planner submits their annual studies. Analysis conducted for time horizons within the calendar year from the study publication are assumed to be conducted under the auspices of Operations Planning.	☒Agree. ☐Do not agree.
Q11. **Comment:**	

B. Sensitivity Studies

The draft planning standard includes the requirement, as specified in FERC Order 693, that planning decisions be based on a portfolio of analyses. In section 12.a.ii "Sensitivity studies and critical system conditions" FERC provided direction to consider a full range of variables considered to be significant that need to be assessed and documentation provided that explains the rationale for the selection of variables assessed.

In addition to the firm obligation scenario, the portfolio of analyses should be supplemented to include information from sensitivity analysis. The sensitivity analysis should be developed using additional cases that simulate reasonably stressed system conditions. The standard drafting team has included several parameters that can be varied to create the requisite sensitivity case(s). The draft standards specify that the sensitivities reflect one or more of the following conditions and that documentation be provided explaining the rationale for selecting the sensitivity(ies) employed. The parameters that should be varied include:

- Higher or lower Load forecasts from the Base Case with variability of Load/demand and Load power factors due to season, weather, or time of day.
- Modification of expected transfers.
- Unavailability of long lead time facilities.
- Variability and outages of Reactive Resources.
- Generation additions, retirements, or other dispatch scenarios.
- Decreased effectiveness of controllable Loads and Demand Side Management.
- Modification of planned Transmission outages

To help focus industry discussion, please respond to the questions below:

Q12. Should the standard provide more specific direction regarding the number of sensitivity cases that need to be developed?

Yes ☐ No ☒
Comment: The TP or PA is the most familiar with the system and so would be the best to determine the sensitivities that are more applicable to their particular system. The Standard should not be overly prescriptive. The Standard can make suggestions or list potential sensitivities but let the TP or PA determine those variables to study and the reasonable range of the sensitivities.

Q13. Should the standard specify the required changes, such as changes in expected transfers, load forecasts, generation patterns, etc., from the study case to be considered a "reasonably stressed" case?

Yes ☐ No ☒
Comment: No, as in the response for Question #12. The TP is the best to determine the type of stressing needed for a particular case. This is very evident in the type of cases used for studies in the different parts of the NERC regions.

Q14. The SDT proposes to require the use of sensitivity studies for Near-Term Transmission System Planning Horizon stability analysis. Do you concur with the use of sensitivity analysis in dynamic studies?

Yes ☒ No ☒
Comment: We concur with the use of sensitivities as long as the TPs are allowed to determine the sensitivities that are the more appropriate for their systems and not have the sensitivities scripted in the Standard.

Q15. The draft TPL standard does not require the use of sensitivity studies for the Long-Term Transmission System Planning Horizon (year six and beyond) studies. Do you concur with this approach or should there be some level of sensitivity analysis required for the long-term period?

Yes ☒ No ☐
Comment: We agree with this conclusion. The Standard language should state that sensitivities are not required in Long-Term Transmission System Planning Horizon but the TP could use sensitivities if desired.

C. Corrective Action Plans

Requirement R2.7 of the standard states that when analysis shows that the performance requirements in Table 1 and Table 2 are not fully met, a Corrective Action Plan that utilizes all or some of the Transmission System enhancements, generation additions, DSM, new technologies and Operating Procedures shall be included in the Planning Assessment. This Corrective Action Plan should ensure that upon its implementation the identified system

deficiencies will be corrected so that the performance requirements in Table 1 and Table 2 will be met. Furthermore, studies included in the Planning Assessment should demonstrate that this is indeed the case.

Q16. Requirement R2.7.1: Such Corrective Action Plans shall "Identify System deficiencies and the associated actions needed to achieve required System performance including Transmission and generation improvements, DSM, new technologies, or Operating Procedures including the duration of Interim Operating Procedures". System deficiencies may be corrected using an integrated plan, i.e., an optimal mix of Transmission, generation, DSM and Operating Procedures. Should DSM be considered in conjunction with other measures in developing Corrective Action Plans? If yes, please comment on how the impact of DSM should be included.

Yes ☒ No ☒

Comment: It is unclear whether "DSM" in this question refers to reduction in load or increases in distributed resources, or if the resources are directly controllable by the transmission operator. DSM could be used in the mix of solutions that are used to determine the optimal solution for a transmission issue. However, we have concerns about the use of DSM, that is not under the direct control of the Transmission Operator as a stand alone transmission system solution. Please remember the overstated returns from DSM in the last decade that did not materialize. If these overstated values had been used as a transmission system enhancement, then the system would have been compromised with emergency operating solution until the effective transmission enhancements could be realized.

Q17. Requirement R2.7.2: Such Corrective Action Plans shall "Be added to study cases and the cases re-tested to show that the System with planned additions meets the performance requirements in the tables". Should new studies, including the facilities comprising the Corrective Action Plan, be performed to assess System normal performance and Contingency response for conditions that previously resulted in the System deficiencies (without the planned additions) and also demonstrate that the changes would not result in inadvertent negative impacts on the System. If you "agree", please comment on how a study area should be determined.

Yes ☐ No ☒

Comment: No, this is too onerous. We recognize that, when planning the system and developing a Corrective Action Plan, the transmission planner would have added the potential projects individually (or in small groups) into a case to re-test the system performance. Hoever, R2.7.2 seems to require that all potential projects be added back into the case simultaneously for retesting. There could be many different alternative solutions for each potential problem identified in the different study years without having the base solution first determined for a nearer term case. There can be many combinations of potential solutions for cases further into the future that satisfy the condition being studied. For example, a voltage problem can be solved by the addition of capacitors, completing a bus tie, adding a short line, operating procedure, changing generation dispatch, etc. Even assuming that one set of solutions are picked so the verification study can be performed, logistically this demonstration may be too close to the assessment in the following year. Instead of retesting the potential projects in the Corrective Action Plan on the original base case, it may be better to test them in the base cases prepared for following year's study. Any potential problem that is unresolved will show up again in the following year's assessment. Therefore, a separate demonstration using an "older" case may not be an efficient use of the TPs' and PAs' time and resources.

Q18. Requirement R2.7.3: The standard calls for a differentiation between committed and proposed projects. Do you agree that they should be treated separately? If not, please state why not.

Yes ☐ No ☒

Comment: The definition of these terms can be vastly different across all TPs. How would this be effectively monitored for compliance with such different definitions? Also,

each TO's criteria to go from a proposed project to a committed project can change over time due to other needs and requirements.

Q19. Requirement R2.7.4: For such Corrective Action Plans "Committed projects shall not be removed without documentation to show that the revised plan meets the performance requirements". Do you agree or disagree with this requirement? If you disagree, please explain why.

Yes ☐ No ☒

Comment: The requirement is similar to the question posed in Question 17. What is the documentation that proves this is needed?

D. Performance Requirements

The proposed revised planning standard (TPL-001-1) incorporates a number of changes in requirements as compared to the current planning standards (TPL-001-0 through TPL-004-0), which it is expected to replace. Among other things these changes are intended to clarify the standard, address issues described by FERC, and, in particular, to "raise the bar." Strengthening the planning standards in selected areas is necessary to maintain a reliable Bulk Electric System that is up to the challenges of the 21st Century. In proposing the requirements in this draft, the standard drafting team attempted to balance the value of increased reliability against any potential increase in work and costs to meet the new proposed standard.

The standard drafting team is seeking input from the industry to determine whether a proper balance has been achieved. The areas where material changes are proposed in this draft are enumerated below, and questions are posed by the standard drafting team to obtain industry comment. In formulating your responses, please keep in mind that material changes in the final standard will be accompanied by a transition plan to provide for an orderly implementation of the final standard.

The performance requirements relative to Non-Consequential Loss of Load for the following events enumerated in the two tables can be considered more stringent than the existing TPL standards. Furthermore, the proposed standard is based on an assumption that performance requirements for EHV facilities should be more stringent than for lower voltage facilities.

Do you agree that Non-Consequential Loss of Load should not be permitted for the following events? If you disagree, please provide a reason for your disagreement.

Event	Agree or Disagree	Comment
Q20. P2-1: Loss of bus section (SLG for stability) above 300 kV	☐Agree. ☒Do not agree.	The Bulk Electric System has been developed without this requirement. Before making the entire NERC system adopt this more stringent Standard, the SDT needs to show or address the benefits of this more stringent requirement with the cost of adaptation. Compliance with this standard as proposed could require some utilities to add hundreds of miles of new transmission lines or build out hundreds

		of MW of new load-side generation. Cost of these new facilities would eventually be borne by the end-use customer. A cost benefit balance has been arrived at over many years time between the customers and the regulators. Also, how will existing systems be handled for compliance? Is there a logical reason for the use of the 300kV cut-off level? We believe that this type of load shedding should be allowed for these conditions at any voltage level. In any case, consideration should also be taken on whether the non-consequential load loss is Interruptible load or firm demand.
Q21. P5-1: For facilities above 300 kV, loss of a Transmission circuit followed by System adjustment[1] followed by loss of another Transmission circuit	☐Agree. ☒Do not agree.	The Bulk Electric System has been developed without this requirement. Before making the entire NERC system adopt this more stringent Standard, the SDT needs to show or address the benefits of this more stringent requirement with the cost of adaptation. Compliance with this standard as proposed could require some utilities to add hundreds of miles of new transmission lines or build out hundreds of MW of new load-side generation. Cost of these new facilities would eventually be borne by the end-use customer. A cost benefit balance has been arrived at over many years time between the customers and the regulators. Also, how will existing systems be handled for compliance? Is there a logical reason for the use of the 300kV cut-off level? We believe that this type of load shedding should be allowed for these conditions at any voltage level. In any case, consideration should also be taken on whether the non-consequential load loss is Interruptible load or firm demand.
Q22. P5-2: For facilities above 300 kV, loss of a Transmission circuit followed by System adjustment followed by loss of a transformer with low side voltage rating above 300 kV	☐Agree. ☒Do not agree.	The Bulk Electric System has been developed without this requirement. Before making the entire NERC system adopt this more stringent Standard, the SDT needs to show or address the benefits of this more stringent requirement with the cost of adaptation. Compliance with this standard as proposed could require some utilities to add hundreds of miles of new transmission lines or build out hundreds

		of MW of new load-side generation. Cost of these new facilities would eventually be borne by the end-use customer. A cost benefit balance has been arrived at over many years time between the customers and the regulators. Also, how will existing systems be handled for compliance? Is there a logical reason for the use of the 300kV cut-off level? We believe that this type of load shedding should be allowed for these conditions at any voltage level. In any case, consideration should also be taken on whether the non-consequential load loss is Interruptible load or firm demand.
Q23. P5-3: For facilities above 300 kV, loss of a transformer with low side voltage rating above 300 kV followed by System adjustment followed by loss of another transformer	☐Agree. ☒Do not agree.	The Bulk Electric System has been developed without this requirement. Before making the entire NERC system adopt this more stringent Standard, the SDT needs to show or address the benefits of this more stringent requirement with the cost of adaptation. Compliance with this standard as proposed could require some utilities to add hundreds of miles of new transmission lines or build out hundreds of MW of new load-side generation. Cost of these new facilities would eventually be borne by the end-use customer. A cost benefit balance has been arrived at over many years time between the customers and the regulators. Also, how will existing systems be handled for compliance? Is there a logical reason for the use of the 300kV cut-off level? We believe that this type of load shedding should be allowed for these conditions at any voltage level. In any case, consideration should also be taken on whether the non-consequential load loss is Interruptible load or firm demand.

[1]System adjustment can be manual or automatic.

The proposed standard is based on an assumption that performance requirements for non-bus tie EHV breakers should be distinguished from other breakers. Do you agree that Non-Consequential Loss of Load should not be permitted for this event?

Q24. Loss of non-bus tie breaker (above 300 kV) due to internal fault

Yes ☐ No ☒

Comment: We disagree that non-consequential loss of load should not be permitted for this contingency event. We believe that planned and controlled interruption of non-consequential load should be permitted for loss of a non-bus tie breaker (above 300 kV). Losing a non-bus tie breaker could result in simultaneous loss of two or more elements, depending on the bus configuration. Allowing planned and controlled disconnection of some load in the areas would not only prevent cascading and instability (which could result in uncontrolled loss of a larger amount of load), but also enables faster load restoration. Losing a breaker due to an internal fault is a low probability event. To meet this requirement as proposed would require severe pre-contingency curtailment of power transfers, that could impact commerce and/or construction of large number of transmission facilities with the attendant environmental impacts and increased cost to customers.

The proposed standard is based on an assumption that performance requirements for non-bus tie EHV breakers should be distinguished from other breakers and that performance requirements for EHV facilities should be more stringent than for lower voltage facilities. Do you agree that Non-Consequential Loss of Load should not be permitted for this event?

Q25. P3-1: Loss of (SLG for stability) either a generator, a Transmission circuit, a transformer, or a bus and a stuck non-bus tie breaker (above 300 kV)

Yes ☐ No ☒

Comment: We disagree that non-consequential loss of load should not be permitted for this contingency event. We believe that planned and controlled interruption of non-consequential load should be permitted for loss of either a generator, a transmission circuit, a transformer, or a bus and a stuck non-bus tie breaker (above 300 kV). This contingency event could result in simultaneous loss of two or more elements, depending on the bus configuration. Allowing planned and controlled disconnection of some load in the areas would not only prevent cascading and instability (which could result in uncontrolled loss of a larger amount of load), but also enables faster load restoration. These contingencies are low-probability events. To meet this requirement as proposed would require severe pre-contingency curtailment of power transfers, that could impact commerce and/or construction of a large number of transmission facilities with the attendant environmental impacts and increased cost to customers.

The proposed standard is based on an assumption that the following events are relatively high probability events and, therefore, Non-Consequential Loss of Load should not be permitted. Do you agree? If you disagree, please provide a reason for your disagreement.

Event	Agree or Disagree	Comment
Q26. P4-1: Loss of a Generator followed by System adjustment[1] followed by loss of another Generator	☒Agree. ☐Do not agree.	We agree that Non-Consequential Loss of Load should not be permitted. Loss of a generator has higher probability and longer duration than other contingency events. Overlapping outage of a second element while one generator is already out of service and system adjusted would likewise have higher probability than other multiple contingency events.
Q27. P4-2: Loss of a generator followed by a System adjustment followed by the loss of a monopolar DC line	☒Agree. ☐Do not agree.	We agree that Non-Consequential Loss of Load should not be permitted. Loss of a generator has higher probability and longer duration than other contingency events. Overlapping

[1] System adjustment can be manual or automatic

		outage of a second element while one generator is already out of service and system adjusted would likewise have higher probability than other multiple contingency events.
Q28. P4-3: Loss of a generator followed by System adjustment followed by loss of a Transmission circuit	☒Agree. ☐Do not agree.	We agree that Non-Consequential Loss of Load should not be permitted. Loss of a generator has higher probability and longer duration than other contingency events. Overlapping outage of a second element while one generator is already out of service and system adjusted would likewise have higher probability than other multiple contingency events.
Q29. P4-4: Loss of a generator followed by System adjustment followed by loss of a transformer	☒Agree. ☐Do not agree.	We agree that Non-Consequential Loss of Load should not be permitted. Loss of a generator has higher probability and longer duration than other contingency events. Overlapping outage of a second element while one generator is already out of service and system adjusted would likewise have higher probability than other multiple contingency events.

The performance requirement for the following event may be considered less stringent than the existing TPL Standards — P2-3: Loss of a single pole of a DC line. Interruption of firm transactions (without Loss of firm Load) if the transaction is dependent on the faulted DC line is now allowed for this initiating event/Contingency.

Q30. Do you agree that interruption of any firm transfers that are dependent on the outaged DC line that is taken out of service should be permitted?

Yes ☒ No ☒

Comment: We agree with the question asked. In addition, transactions that can be interrupted due to the loss of a DC line should not be limited to the firm transactions, that are dependent on the DC line. It should also include interruptible transactions and other transactions made available through negotiated agreements on both AC and DC lines.

E. Stability

Q31. The proposed standard is based on an assumption that steady state analysis and stability analysis are different from each other and that therefore, two tables of Contingencies and performance requirements were needed. It is also based on an assumption that stability study requirements should be clearly separated from the steady state study requirements. Do you agree with the action taken in separating stability analysis from steady state analysis? If not, please explain.

Yes ☒ No ☒

Comment: We agree with the question asked. In addition, because of the time sequence from the start of the fault, through fault clearing and transient dynamic period, the post-transient period to the steady state post-contingency period, there needs to be clear links between the performance requirements in the transient

dynamic time period and the steady state time period. For example, if generator dropping or controlled load interruption is allowed in the transient dynamic period, it should also be allowed in the steady state time period that follows. Otherwise, it would put the Transmission Planners and the Planning Authorities in an untenable situation because, once a generator or load is dropped in the first few cycles after the disturbance; it cannot be required to be on line in the minutes that immediately follow.

Q32. The SDT has added requirements for plant stability studies and has drawn a distinction in these studies from System stability studies. Do you agree with this approach? If not, please explain.

Yes ☐ No ☒

Comment: It appears that Plant Stability Study is a subset of System Stability Study. R4.6.2 states these shall be performed for changes in real power output of a generating unit by more than 10%. Then it states they shall be performed for planning events. R4.5 already covers any contingencies that are an issue and the system already needs to meet some level of performance for loss of the generator. It seems that a change in generation would already be analyzed from a system standpoint as stated in R2.4.3. It appears that material changes to existing generators should be reflected in modeling requirements elsewhere.

Q33. The existing TPL-004-0 standard has a requirement to consider the Loss of all generating units at a plant, but it was not clear whether this requirement should apply to stability studies. The SDT did not include this requirement in the stability table, because it is hard to envision a condition when all units would trip simultaneously within the timeframe of a stability simulation. Do you think this condition should be required in stability analysis of extreme events? If not, please explain.

Yes ☐ No ☒

Comment: We agree with the SDT that simultaneous 3-phase fault on all generating units in a plant is improbable and effort should be better spent studying more probable events. In any case, this Extreme Event is to be considered in the Steady State Table, and stability cases can be run if it is shown to be needed in the power flow study results. We are, however, confused by this question. This question states that the SDT did not include the requirement to consider loss of all generators at a plant in the stability, yet the Extreme Event in the stability table shows in No. 9, "3Ø fault with loss of all generating units at a station".

Q34. There are an increasing number of events with slow voltage recovery after faults on the Transmission System. The dynamic behavior of induction motor loads is a major factor in this phenomenon. The proposed standard therefore requires that the load model for stability studies of peak Load conditions include the dynamic effects of induction motors. Do you agree with this requirement? If not, please explain?

Yes ☒ No ☒

Comment: The requirement to include motor load should be extended to other load level periods and not be limited to peak load period only. However, to capture slow voltage recover phenomena, especially in areas of high penetration of refrigerated air conditioning load (e.g. 50% to 60%), would require modeling down to the distribution system voltage level and explicitly representing shunt capacitors and various induction motor types (e.g. equivalents for single phase motors). If the requirement is not extended, dynamic simulations will likely differ significantly from observed system events. We recommend a phase-in period so that the requirement for use of load models should only include regionally accepted load models for which data are available. This requirement can be extended or modified as the Region in which the entities reside adopts new load modeling guidelines.

Q35. What type of manual or automatic adjustments of generators should be allowed for single and multiple Contingencies?

Comment: All adjustments should be allowed as long as they are realistic and achievable in the time frame required and consistent with other study parameters. For example, automatic adjustments would be required for correction of a stability problem, but manual adjustment should be allowed for correction of a thermal problem if there is no instability problem.

F. Generation Runback and Tripping

The SDT has discussed the automatic and manual readjustments of generators that should be permissible for single contingencies and multiple contingencies. The existing TPL-001-0 through TPL-004-0 standards through footnote (a) of Table I could include emergency ratings applicable for short durations as required to permit operating steps necessary to maintain system control. The footnote is silent about allowable generation adjustments in response to the Category B events. However, it does indicate that system adjustments are permitted to prepare for the next Contingency. These system adjustments could include manual or automatic adjustments involving generation.

The SDT has learned that many transmission owners use System Protection Systems (SPS) or Remedial Action Schemes (RAS) to trip generation for single and multiple Contingency outage events to prevent overloads, low voltage, and instability in the Interconnected Transmission network for N-1 and N-2 events. In some cases, the RAS are used to prepare for the next Contingency; but in some cases, the RAS are used to simultaneously avoid exceeding emergency ratings.

Q36. The proposed standard allows generation runback after the disturbance that causes a single Contingency (or due to a single Contingency outage) to move the Interconnected Transmission System from an emergency state (within emergency ratings) to a normal state (within normal ratings), assuming that the disturbance does not result in instability? Do you agree? If not, please explain.

Yes ☒ No ☐
Comment:

Q37. Since emergency ratings are thermal ratings, should this standard allow an automatic generation runback scheme (that is initiated immediately after the disturbance causing the single Contingency) to prevent thermal overloads (assuming that the disturbance does not result in instability)? If yes, what are the conditions that must be met in order to allow such a runback scheme to meet the System performance criteria for single Contingencies? Please explain the reason for your answer.

Yes ☒ No ☐
Comment: Yes. Agree. Conditions for generation run back for N-1: 1) Run back of generation cannot result in tripping of firm load, 2) power flow should be within the time-limited equipment ratings, 3) frequency should be within allowable limits.

The standard drafting team has considered that RAS or SPS may be allowable under certain situations for single Contingencies, but proposes that their use should be limited.

Q38. Do you agree that RAS or SPS may be allowed for single Contingencies? If not, please explain.

Yes ☒ No ☐

Comment:

Q39. Please describe the limitations that you believe should be placed on the use of RAS or SPS for single Contingency events.

Comment: Based on the interpretation of the above question, we are providing two responses to this question. The first responds to the limitations placed on RAS, regardless of what action the RAS initiates. The second response specifically addresses RAS that trips generation.

Response 1: RAS should be allowed for single contingency events. Any sort of RAS should be permitted, but there should be a review of the RAS. If the local entities agree to the RAS, it should be allowed. This addresses cost vs. benefit balance. Entities affected should be the ones that determine the best solution for their situation.

Response 2: Generation tripping can be used for single contingency if such application can be demonstrated through transmission planning studies that:

- The generation tripping is planned and controlled ("planned and controlled" means a pre-planned action(s) based on predetermined system conditions that take corrective measure(s) to maintain acceptable system performance).
- The generation tripping does not result in non-consequential load loss.
- System frequency should be within allowable limits.
- System voltage dip and deviation should be within allowable limits.
- The generator owner(s) agrees to the tripping as planned.

Q40. When RAS or SPS are allowed, what conditions should be met when these systems are used in system adjustments to meet performance requirements?

Comment: System adjustment involves operator intervention that would be beyond the time frame of RAS operation. Therefore, if a unit is already dropped during RAS or SPS action, it should be assumed to be off-line during system adjustment period.

G. General Questions

Q41. If you are aware of any regional variances that would be required as a result of these standards, please identify them here.

Yes ☒ No ☐

Comment: Yes. WECC allows tripping of generators to meet single contingency performance requirements. WECC also allows planned and controlled load shedding for the proposed Planning Events P2-1, P2-2, P3, P4 and P5, although we agree with the proposed requirements for P4 due to the higher probability of occurrence. If the standard does not allow for non-consequential load shedding of 300 kV and above for P5 scenarios, WECC will develop a regional variance".

Q42. If you are aware of any conflicts between the proposed standards and any regulatory function, rule order, tariff, rate schedule, legislative requirement or agreement, please identify them here.

Yes ☒ No ☐

Comment: 1) FERC Order 693, Paragraph 1825 regarding TPL-003, Category C – The Commission directed the ERO to modify footnote (c) to Table 1 to clarify the term “controlled load interruption” rather than eliminate its applicability to this performance requirement. 2) FAC-010-1, R2.3 – “…planned or controlled interruption…” This conflicts with “No” for non-consequential load loss allowed in draft TPL.

Q43. Do you have any other questions or concerns with the proposed standard that have not been addressed? If yes, please explain.

Yes ☒ No ☐

Comment: 1. R1.3 requires the provision of firm transfer/Interchange Schedules and resources required to supply load for each Balancing Authority. It may not be possible to have reasonably accurate information on firm transfers and Interchange Schedules for years into the future. Within WECC, we develop base cases that represent reasonably stressed conditions that model power flows stressing various paths. Therefore, within WECC, we design the system to operate at levels that can support all sorts of commerce, including the effects of loop flow, and firm and non-firm contracts, in addition to other possibilities. It would be difficult to develop information from this mixture that includes only firm transactions for such future base cases. In addition, WECC does not allow operations at levels not previously studied. Therefore, an exercise to determine firm transaction/schedules would produce information that will be of little value to support reliability in WECC.

2. R2.7.1.2 requires identification of system deficiencies and accociated corrective action for the Long Term Transmission Planning Horizon. This requirement needs to tie to the lead times to implement the corrective action(s). For example, if a 500 kV transmission line is needed to correct a deficiency that surfaces in the tenth year, then this requirement is reasonable. However, if the deficiency is on a low voltage system, that can be resolved with short lead-time projects (such as installing a small capacitor bank) then this requirement would seem to be too prescriptive.

3. R1.5 requires providing modeling information as part of R1 on a number of transmission planned facilities, including circuit breakers. Since circuit breakers are part of a transmission line, we are not sure how a circuit breaker would be modeled separately, as required.

4. R3.2.1 requires that "studies shall consider the minimum steady state voltage limitations of all generators". Since generators (as well as other facilities) have both high and low voltage limits, the standard should require consideration of both high and low voltage limits.

5. In R.3.2.2, please provide a reference for relay loadability.

6. R.3.3.2.1. requires that Consequential Load loss (expected maximum demand and expected duration) following a single contingency shall be identified in the Planning Assessment. We suggest deleting this requirement. By definition, consequential load loss following a contingency can not be avoided and should not be considered an impact on the operation of the BES. It should be part of local service reliability between an entity and its local regulatory agency or contractual relationship between individual parties and not in a NERC Standard governing the operation of a BES.

7. Proposed revision to R3.5 – "Manual and automatic generation runback and generator tripping are allowed as a response to single and multiple contingencies as long as Facility Ratings are not exceeded and the result of the generator action, such as loss of reactive resource, impact on reserves, and restart time of tripped unit(s), meets the performance requirements in the tables."

Example for the need for flexibility in the selection of generation runback and/or tripping to meet the requirements of R3.5 – The time period for a particular Emergency Rating

might require faster generation redispatch than a runback or set of runbacks are capable of providing. Therefore, it may be necessary to trip one 100 MW unit rather than runback several units for a total of 100 MW. Planning and Operations need flexibility to coordinate with the requirements of Engineering who established the Facility Ratings.

No need for R3.6 with above revision to R3.5.

8. Performance standard "P5" (Q.21- 23) does not allow for the use of load shedding (safety nets) required by some utilities to protect against cascading outages if a transmission line is already out of service and a forced outage of another major element occurs. "System adjustments" might not be possible in a load pocket or local load-serving area to prevent "non-consequential load loss" after loss of a second transmission line to the load-serving area. The use of load shedding for such rare events is an established practice and least cost alternative that does not unreasonably compromise reliability of the WECC system. It is also an acceptable and necessary tradeoff from over burdening customers with additional expensive transmission lines and permitting risk in the West where remote generation resources have historically required power to be carried over long distances.

The tradeoffs between economics (building hundreds of miles of new transmission lines or build out hundreds of MW of new load-side generation versus load shedding schemes) and the impact of these rare events should be under the purview of local and state jurisdictions, as long as impacts do not result in cascading events outside of the affected jurisdiction. As long as interconnected reliability or neighboring system operation is not negatively impacted, customer interruption size and frequency should be left to the Transmission Providers discretion and to the jurisdiction of state regulators. The amount of load to be shed and its frequency is primarily an issue for state jurisdiction because it is a matter of the cost/benefit associated with customer service regardless of the voltage level problem. In general, incidences of non-consequential loss of customer load events related to contingencies on the back-bone transmission system are rare when compared to other causes of customer outages. Assuming interruptions to customer service are significant, the state regulators and other related constituents will ultimately be responsible for approving any transmission line facilities or generation additions needed to assure reliability.

Implementing an immediate change to this current established practice is not rational or technically feasible due to the long and arduous regulatory and permitting processes that are required to construct new transmission facilities or new load-side generation. Implementation of the standard as written would take many years. At a minimum, even if it is determined that Congress's intent was to create stricter standards, a phase-in period must be included to allow utilities time to obtain necessary permits, regulatory approval and cost recovery to meet the stricter standards.

NERC
NORTH AMERICAN ELECTRIC RELIABILITY CORPORATION

Comment Form for First Draft of TPL-001-1 — Transmission System Planning Performance Requirements

Please use this form to submit comments on the proposed draft of TPL-001-1. Comments must be submitted by **Friday, October 26, 2007**. You may submit the completed form by e-mail to sarcomm@nerc.net with the words "TPL-001 Draft 1" in the subject line. If you have questions please contact Ed Dobrowolski at ed.dobrowolksi@nerc.net or by telephone at 609-947-3673.

Individual Commenter Information **(Complete this page for comments from one organization or individual.)**		
Name:		
Organization:		
Telephone:		
E-mail:		
NERC Region (check all Regions in which your company operates)		**Registered Ballot Body Segment (check all industry segments in which your company is registered)**
☐ **ERCOT**	☐	1 — Transmission Owners
☐ **FRCC**	☐	2 — RTOs and ISOs
☐ **MRO**	☐	3 — Load-serving Entities
☐ **NPCC**	☐	4 — Transmission-dependent Utilities
☐ **RFC**	☐	5 — Electric Generators
☐ **SERC**	☐	6 — Electricity Brokers, Aggregators, and Marketers
☐ **SPP**	☐	7 — Large Electricity End Users
☐ **WECC**	☐	8 — Small Electricity End Users
☐ **NA – Not Applicable**	☐	9 — Federal, State, Provincial Regulatory or other Government Entities
	☐	10 — Regional Reliability Organizations and Regional Entities

Group Comments (Complete this page if comments are from a group.)

Group Name: **WECC Committees and Subgroups**

Lead Contact: **Steve Rueckert**

Contact Organization: **WECC**

Contact Segment: **10**

Contact Telephone: **801 883-6878**

Contact E-mail: **steve@wecc.biz**

Additional Member Name	Additional Member Organization	Region*	Segment*
Mike Sidiropoulos	PacifiCorp	**WECC**	1
Scott Inglebritson	Seattle City Light	WECC	1,3,4,5
Chad Bowman, PE	Public Utility District #1 of Chelan	WECC	4
Casey Hashimoto	Turlock Irrigation District	WECC	3
Fred Young	Northern California Power Agency	WECC	4
Scott A. Waples	Avista Corporation	WECC	1
Matthew Stoltz	Basin Electric Power Cooperative	WECC	1
Juan C. Sandoval, P.E.	Imperial Irrigation District	WECC	1
Baj Agrawal	Arizona Public Service Co.	WECC	1
Rich Salgo	Sierra Pacific Resources	WECC	1
Brian Whalen	Sierra Pacific Resources	WECC	1
Javier Esparza	Imperial Irrigation District	WECC	1
Milorad Papic	Idaho Power Co.	WECC	1
David Larsen	Transmission Agency of Northern California	WECC	1
Xavier Baldwin	City of Burbank Water & Power	WECC	9
Dana Cabbell	Southern California Edison Co.	WECC	1
Henryk A. Olstowski	Imperial Irrigation District	WECC	5
David Angell	Idaho Power	WECC	1
Charles E. Matthews	Bonneville Power	WECC	1

	Administration		
Mark Graham	Tri-State Generation and Transmission Association	WECC	1

*If more than one Region or Segment applies, please list all that apply. Regional acronyms and segment numbers are shown on prior page.

Background

The purpose of this standard is to establish Transmission System planning performance requirements within the planning horizon to develop a Bulk Electric System that will operate reliably over a broad spectrum of System conditions and following a wide range of probable Contingencies. This standard will replace TPL-001-0, TPL-002-0, TPL-003-0, and TPL-004-0. The standard drafting team has not yet addressed TPL-005-0 and TPL-006-0, but will address these two standards during the next phase of the drafting process.

The major objectives of the standard drafting team are to:

1) Ensure the standard is complete and the requirements are set at an appropriate level to ensure reliability (Not Least Common Denominator)
2) Ensure that the standard is enforceable by having clearly defined requirements with unambiguous language
3) Address the issues raised by FERC Order 693, 890, and other applicable orders
4) Address the issues raised in the original Standards Authorization Request (SAR) and the Supplemental SAR.

The standard drafting team did not attempt to edit the existing standards but rather chose to write one standard that addresses all aspects of transmission planning in the existing TPL-001-0, TPL-002-0, TPL-003-0, and TPL-004-0. The standard drafting team organized the new standard in the following sections:

R1 – Modeling requirements
R2 – Assessment and Corrective Plan requirements
R3 – Steady State Analysis requirements
R4 – Stability Analysis requirements
R5 – Coordination requirements

The standard drafting team determined that the requirements and analysis for Steady State are different from those for stability. As such, the standard drafting team separated the analysis requirements and created two performance requirement tables.

The standard drafting team recognizes that this draft standard is a starting point for industry input into the standard and that there is still a lot of work required to complete the process. The standard drafting team has made many changes to clarify requirements, add requirements, and make some of the performance requirements stricter. The standard drafting team has not addressed Measures, Risk Factors, Violation Severity Factors, or Time Horizons at this time. These will be addressed when the standard drafting team has better defined the requirements of the standard.

For questions where you agree with the standard drafting team, please state that you agree and if available, please provide supporting documentation. If you disagree with the standard drafting team, please explain why you disagree and provide data to support your position, such as outage data or analysis. If you believe that we have made a performance requirement too strict please provide supporting documentation. If applicable, please

include the approximate cost in man-hours for additional studies and/or cost in $Millions for additional transmission investment to meet the new requirements or the stricter requirements. If you believe that the standard should be stricter, please provide the rationale along with any supporting data, including existing practices, cost estimates or additional analysis.

To improve the standard, the standard drafting team would appreciate responses to as many of these questions as you can answer.

A. New Definitions

Many of the concerns about the existing TPL standards come from the fact that a number of generally understood concepts are embedded in undefined terms, tables, and footnotes. To clarify some of these concerns, the standard drafting team is proposing new definitions. Please indicate whether you agree with the following proposed definitions and provide proposed changes to the definitions if you disagree:

Definition	**Agree or Disagree**
Q1. **Base Case**: Computer representation of the projected initial or starting Transmission System conditions for a specific point in time. Each base case reflects the forecasted Load at each bus (or node) on the interconnected Transmission System, the transmission facilities which deliver the generation and reactive resources to the connected Load, and the generation dispatch including firm transaction obligations assumed to supply the connected Load. The models also reflect facility ratings in accordance with FAC-008 & FAC-009.	☒Agree. ☒Do not agree.
Q1. **Comment: A Base Case can only represent the amount of transactions required to serve connected load modeled in the case (local load?). A Path Rating case (developed to represent maximum transfers on a path) would not be considered a base case under this definition. WECC develops base cases to study high power transfers under stressed conditions. Such high power transfers necessarily include both firm and non-firm transaction obligations. Therefore, a base case that represents firm transactions to support "connected load" only, cannot be used to support studies of maximum possible power transfer and is of limited value in WECC. We agree that the above definition is one definition of a base case, but we feel that it can not be the only definition or the limiting definition. We suggest that wording be included that reflects the concept of modeling forecasted or above forecasted load levels if desired, and both firm and non-firm transactions if necessary to model anticipated maximum transfers and represent stressed system conditions as well.** **The definition should refer to the base case as a Computer Simulation Model of the power system, not a Computer Representation of the transmission system, since it is used within a computer program and represents load and generation in addition to transmission. References to "the generation dispatch and firm transaction obligations to supply the connected load" should be removed.** **A base case is a starting case for any condition that needs to be studied,**	

not just a firm transactions case. Firm obligations across the transmission system are many times independent of a specific load service obligation.	
Q2. **Consequential Load Loss:** Load that is no longer served because it is directly connected to an element(s) that is removed from service due to fault clearing action or mis-operation.	☒Agree. ☒Do not agree.
Q2. **Comment: Agree with the definition in concept. However, the wording makes the definition seem unrealistic. There are many examples where a certain amount of voltage sensitive load or motor drives sensitive to angle changes are dropped due to normally cleared electrical faults on the transmission system. These loads are not directly connected to the element being removed from service. This type of sympathetic loss of load is unique to the individual customer load. The design of these loads is not under the control of the utilities when it comes to ability to ride through normally cleared faults. We suggest that this definition be modified to include the loss of sensitive load that is not directly connected to the element being removed.** **We propose the following the definition : Load that is no longer served because it is directly connected to an element(s) that is removed from service due to fault clearing action or mis-operation, and because of sympathetic tripping associated with normal clearing or mis-operation. Load that is lost because it trips due to low voltages experienced during and immediately following the fault (4-6 cycles?) is also considered consequential load loss. We believe this additional recognition is needed because load lost due to low fault voltages is unavoidable and should not result in a standard violation.**	
Q3. **Extreme Events:** Events which are more severe than Planning Events and have a low probability of occurrence.	☒Agree. ☒Do not agree.
Q3. **Comment: Please add the phrase "two or more elements out of service" to the definition from the previous definition in Table I.**	
Q4. **Long-Term Transmission Planning Horizon:** Transmission planning period that covers years six through ten or beyond.	☒Agree. ☐Do not agree.
Q4. **Comment:**	
Q5. **Near-Term Transmission Planning Horizon:** Transmission planning period that covers years One through five.	☒Agree. ☐Do not agree.
Q5. **Comment:**	
Q6. **Non-Consequential Load Loss:** Load loss other than Consequential Load Loss. For example, Load loss that occurs through manual (operator initiated) or automatic operations such as under-voltage Load shedding, under-frequency Load shedding, or Special Protection Systems.	☐Agree. ☒Do not agree.
Q6. **Comment: Please add "or Remedial Action schemes" to the end of the definition. FERC Order 693, paragraph 1773 states (6)"clarifies footnote (b) to Table 1 to allow no firm load or firm transactions to be interrupted except for consequential load loss." There needs to be a distinction made**	

between Interruptible Load and Firm Demand.	
Q7. **Planning Assessment:** Documented evaluation of future Bulk Electric System needs by the use of performance studies that cover a range of assumptions regarding system conditions, time frames, future plans including capital reinforcements and operating procedures and other factors, such as asset conditions and age.	☒Agree. ☒Do not agree.
Q7. **Comment: As identified by the modifications above, we believe the definition should be changed to read, "Documented evaluation of future Bulk Electric System needs by the use of performance studies (steady state and dynamic) that cover a range of reasonable or expected assumptions regarding system conditions, applicable time frames, and future plans; including capital reinforcements and operating procedures, SPS/RAS, and other factors (such as asset conditions and age)."**	
Q8. **Planning Events:** Events which require Transmission system performance requirements to be met.	☒Agree. ☐Do not agree.
Q8. **Comment:**	
Q9. **Plant Stability Study:** Study of an individual plant's Stability for various Contingencies in the vicinity of the plant; concerned with the effect on the System of the generating units' loss of synchronism and the damping of the generating units' power oscillations.	☐Agree. ☒Do not agree.
Q9. **Comment: Plant Stability seems to be a subset of System Stability. Introducing a new term can cause confusion.**	
Q10. **System Stability Study:** Study of the System or portions of the System to ensure that angular Stability is maintained, inter-area power oscillations are damped, and voltages during the dynamic simulation stay within acceptable performance limits.	☒Agree. ☐Do not agree.
Q10. **Comment:**	
Q11. **Year One:** The first year that a Transmission Planner is responsible for studying. This is further defined as the planning window that begins the next calendar year from the time the Transmission Planner submits their annual studies. Analysis conducted for time horizons within the calendar year from the study publication are assumed to be conducted under the auspices of Operations Planning.	☒Agree. ☐Do not agree.
Q11. **Comment:**	

B. Sensitivity Studies

The draft planning standard includes the requirement, as specified in FERC Order 693, that planning decisions be based on a portfolio of analyses. In section 12.a.ii "Sensitivity studies and critical system conditions" FERC provided direction to consider a full range of variables considered to be significant that need to be assessed and documentation provided that explains the rationale for the selection of variables assessed.

In addition to the firm obligation scenario, the portfolio of analyses should be supplemented to include information from sensitivity analysis. The sensitivity analysis should be developed using additional cases that simulate reasonably stressed system conditions. The standard drafting team has included several parameters that can be varied to create the

requisite sensitivity case(s). The draft standards specify that the sensitivities reflect one or more of the following conditions and that documentation be provided explaining the rationale for selecting the sensitivity(ies) employed. The parameters that should be varied include:

- Higher or lower Load forecasts from the Base Case with variability of Load/demand and Load power factors due to season, weather, or time of day.
- Modification of expected transfers.
- Unavailability of long lead time facilities.
- Variability and outages of Reactive Resources.
- Generation additions, retirements, or other dispatch scenarios.
- Decreased effectiveness of controllable Loads and Demand Side Management.
- Modification of planned Transmission outages

To help focus industry discussion, please respond to the questions below:

Q12. Should the standard provide more specific direction regarding the number of sensitivity cases that need to be developed?

Yes ☐ No ☒

Comment: The TP or PA is the most familiar with the system and so would be the best to determine the sensitivities that are more applicable to their particular system. The Standard should not be overly prescriptive. The Standard can make suggestions or list potential sensitivities but let the TP or PA determine those variables to study and the reasonable range of the sensitivities.

Q13. Should the standard specify the required changes, such as changes in expected transfers, load forecasts, generation patterns, etc., from the study case to be considered a "reasonably stressed" case?

Yes ☐ No ☒

Comment: No, as in the response for Question #12. The TP is the best to determine the type of stressing needed for a particular case. This is very evident in the type of cases used for studies in the different parts of the NERC regions.

Q14. The SDT proposes to require the use of sensitivity studies for Near-Term Transmission System Planning Horizon stability analysis. Do you concur with the use of sensitivity analysis in dynamic studies?

Yes ☒ No ☒

Comment: We concur with the use of sensitivities as long as the TPs are allowed to determine the sensitivities that are the more appropriate for their systems and not have the sensitivities scripted in the Standard.

Q15. The draft TPL standard does not require the use of sensitivity studies for the Long-Term Transmission System Planning Horizon (year six and beyond) studies. Do you concur with this approach or should there be some level of sensitivity analysis required for the long-term period?

Yes ☒ No ☐

Comment: We agree with this conclusion. The Standard language should state that sensitivities are not required in Long-Term Transmission System Planning Horizon but the TP could use sensitivities if desired.

C. Corrective Action Plans

Requirement R2.7 of the standard states that when analysis shows that the performance requirements in Table 1 and Table 2 are not fully met, a Corrective Action Plan that utilizes all or some of the Transmission System enhancements, generation additions, DSM, new technologies and Operating Procedures shall be included in the Planning Assessment. This Corrective Action Plan should ensure that upon its implementation the identified system deficiencies will be corrected so that the performance requirements in Table 1 and Table 2 will be met. Furthermore, studies included in the Planning Assessment should demonstrate that this is indeed the case.

Q16. Requirement R2.7.1: Such Corrective Action Plans shall "Identify System deficiencies and the associated actions needed to achieve required System performance including Transmission and generation improvements, DSM, new technologies, or Operating Procedures including the duration of Interim Operating Procedures". System deficiencies may be corrected using an integrated plan, i.e., an optimal mix of Transmission, generation, DSM and Operating Procedures. Should DSM be considered in conjunction with other measures in developing Corrective Action Plans? If yes, please comment on how the impact of DSM should be included.

Yes ☒ No ☒

Comment: It is unclear whether "DSM" in this question refers to reduction in load or increases in distributed resources, or if the resources are directly controllable by the transmission operator. DSM could be used in the mix of solutions that are used to determine the optimal solution for a transmission issue. However, we have concerns about the use of DSM, that is not under the direct control of the Transmission Operator as a stand alone transmission system solution. Please remember the overstated returns from DSM in the last decade that did not materialize. If these overstated values had been used as a transmission system enhancement, then the system would have been compromised with emergency operating solution until the effective transmission enhancements could be realized.

Q17. Requirement R2.7.2: Such Corrective Action Plans shall "Be added to study cases and the cases re-tested to show that the System with planned additions meets the performance requirements in the tables". Should new studies, including the facilities comprising the Corrective Action Plan, be performed to assess System normal performance and Contingency response for conditions that previously resulted in the System deficiencies (without the planned additions) and also demonstrate that the changes would not result in inadvertent negative impacts on the System. If you "agree", please comment on how a study area should be determined.

Yes ☐ No ☒

Comment: No, this is too onerous. We recognize that, when planning the system and developing a Corrective Action Plan, the transmission planner would have added the potential projects individually (or in small groups) into a case to re-test the system performance. Hoever, R2.7.2 seems to require that all potential projects be added back into the case simultaneously for retesting. There could be many different alternative solutions for each potential problem identified in the different study years without having the base solution first determined for a nearer term case. There can be many combinations of potential solutions for cases further into the future that satisfy the condition being studied. For example, a voltage problem can be solved by the addition of capacitors, completing a bus tie, adding a short line, operating procedure, changing generation dispatch, etc. Even assuming that one set of solutions are picked so the verification study can be performed, logistically this demonstration may be too close to the assessment in the following year. Instead of retesting the potential projects in the Corrective Action Plan on the original base case, it may be better to test them in the base cases prepared for following year's study. Any potential problem that is unresolved will show up again in the following year's assessment. Therefore, a separate demonstration using an "older" case may not be an efficient use of the TPs' and PAs' time and resources.

Q18. Requirement R2.7.3: The standard calls for a differentiation between committed and proposed projects. Do you agree that they should be treated separately? If not, please state why not.

Yes ☐ No ☒
Comment: The definition of these terms can be vastly different across all TPs. How would this be effectively monitored for compliance with such different definitions? Also, each TO's criteria to go from a proposed project to a committed project can change over time due to other needs and requirements.

Q19. Requirement R2.7.4: For such Corrective Action Plans "Committed projects shall not be removed without documentation to show that the revised plan meets the performance requirements". Do you agree or disagree with this requirement? If you disagree, please explain why.

Yes ☐ No ☒
Comment: The requirement is similar to the question posed in Question 17. What is the documentation that proves this is needed?

D. Performance Requirements

The proposed revised planning standard (TPL-001-1) incorporates a number of changes in requirements as compared to the current planning standards (TPL-001-0 through TPL-004-0), which it is expected to replace. Among other things these changes are intended to clarify the standard, address issues described by FERC, and, in particular, to "raise the bar." Strengthening the planning standards in selected areas is necessary to maintain a reliable Bulk Electric System that is up to the challenges of the 21st Century. In proposing the requirements in this draft, the standard drafting team attempted to balance the value of increased reliability against any potential increase in work and costs to meet the new proposed standard.

The standard drafting team is seeking input from the industry to determine whether a proper balance has been achieved. The areas where material changes are proposed in this draft are enumerated below, and questions are posed by the standard drafting team to obtain industry comment. In formulating your responses, please keep in mind that material changes in the final standard will be accompanied by a transition plan to provide for an orderly implementation of the final standard.

The performance requirements relative to Non-Consequential Loss of Load for the following events enumerated in the two tables can be considered more stringent than the existing TPL standards. Furthermore, the proposed standard is based on an assumption that performance requirements for EHV facilities should be more stringent than for lower voltage facilities.

Do you agree that Non-Consequential Loss of Load should not be permitted for the following events? If you disagree, please provide a reason for your disagreement.

Event	Agree or Disagree	Comment
Q20. P2-1: Loss of bus section (SLG for stability) above 300 kV	☐Agree. ☒Do not agree.	The Bulk Electric System has been developed without this requirement. Before making the entire NERC system adopt this more stringent Standard, the

		SDT needs to show or address the benefits of this more stringent requirement with the cost of adaptation. Compliance with this standard as proposed could require some utilities to add hundreds of miles of new transmission lines or build out hundreds of MW of new load-side generation. Cost of these new facilities would eventually be borne by the end-use customer. A cost benefit balance has been arrived at over many years time between the customers and the regulators. Also, how will existing systems be handled for compliance? Is there a logical reason for the use of the 300kV cut-off level? We believe that this type of load shedding should be allowed for these conditions at any voltage level. In any case, consideration should also be taken on whether the non-consequential load loss is Interruptible load or firm demand.
Q21. P5-1: For facilities above 300 kV, loss of a Transmission circuit followed by System adjustment[1] followed by loss of another Transmission circuit	☐Agree. ☒Do not agree.	The Bulk Electric System has been developed without this requirement. Before making the entire NERC system adopt this more stringent Standard, the SDT needs to show or address the benefits of this more stringent requirement with the cost of adaptation. Compliance with this standard as proposed could require some utilities to add hundreds of miles of new transmission lines or build out hundreds of MW of new load-side generation. Cost of these new facilities would eventually be borne by the end-use customer. A cost benefit balance has been arrived at over many years time between the customers and the regulators. Also, how will existing systems be handled for compliance? Is there a logical reason for the use of the 300kV cut-off level? We believe that this type of load shedding should be allowed for these conditions at any voltage level. In any case, consideration should also be taken on whether the non-consequential load loss is Interruptible load or firm demand.
Q22. P5-2: For facilities above 300 kV, loss of a Transmission circuit followed by System	☐Agree. ☒Do not agree.	The Bulk Electric System has been developed without this requirement. Before making the entire NERC system adopt this more stringent Standard, the

adjustment followed by loss of a transformer with low side voltage rating above 300 kV		SDT needs to show or address the benefits of this more stringent requirement with the cost of adaptation. Compliance with this standard as proposed could require some utilities to add hundreds of miles of new transmission lines or build out hundreds of MW of new load-side generation. Cost of these new facilities would eventually be borne by the end-use customer. A cost benefit balance has been arrived at over many years time between the customers and the regulators. Also, how will existing systems be handled for compliance? Is there a logical reason for the use of the 300kV cut-off level? We believe that this type of load shedding should be allowed for these conditions at any voltage level. In any case, consideration should also be taken on whether the non-consequential load loss is Interruptible load or firm demand.
Q23. P5-3: For facilities above 300 kV, loss of a transformer with low side voltage rating above 300 kV followed by System adjustment followed by loss of another transformer	☐Agree. ☒Do not agree.	The Bulk Electric System has been developed without this requirement. Before making the entire NERC system adopt this more stringent Standard, the SDT needs to show or address the benefits of this more stringent requirement with the cost of adaptation. Compliance with this standard as proposed could require some utilities to add hundreds of miles of new transmission lines or build out hundreds of MW of new load-side generation. Cost of these new facilities would eventually be borne by the end-use customer. A cost benefit balance has been arrived at over many years time between the customers and the regulators. Also, how will existing systems be handled for compliance? Is there a logical reason for the use of the 300kV cut-off level? We believe that this type of load shedding should be allowed for these conditions at any voltage level. In any case, consideration should also be taken on whether the non-consequential load loss is Interruptible load or firm demand.

[1]System adjustment can be manual or automatic.

The proposed standard is based on an assumption that performance requirements for non-bus tie EHV breakers should be distinguished from other breakers. Do you agree that Non-Consequential Loss of Load should not be permitted for this event?

Q24. Loss of non-bus tie breaker (above 300 kV) due to internal fault

Yes ☐ No ☒

Comment: We disagree that non-consequential loss of load should not be permitted for this contingency event. We believe that planned and controlled interruption of non-consequential load should be permitted for loss of a non-bus tie breaker (above 300 kV). Losing a non-bus tie breaker could result in simultaneous loss of two or more elements, depending on the bus configuration. Allowing planned and controlled disconnection of some load in the areas would not only prevent cascading and instability (which could result in uncontrolled loss of a larger amount of load), but also enables faster load restoration. Losing a breaker due to an internal fault is a low probability event. To meet this requirement as proposed would require severe pre-contingency curtailment of power transfers, that could impact commerce and/or construction of large number of transmission facilities with the attendant environmental impacts and increased cost to customers.

The proposed standard is based on an assumption that performance requirements for non-bus tie EHV breakers should be distinguished from other breakers and that performance requirements for EHV facilities should be more stringent than for lower voltage facilities. Do you agree that Non-Consequential Loss of Load should not be permitted for this event?

Q25. P3-1: Loss of (SLG for stability) either a generator, a Transmission circuit, a transformer, or a bus and a stuck non-bus tie breaker (above 300 kV)

Yes ☐ No ☒

Comment: We disagree that non-consequential loss of load should not be permitted for this contingency event. We believe that planned and controlled interruption of non-consequential load should be permitted for loss of either a generator, a transmission circuit, a transformer, or a bus and a stuck non-bus tie breaker (above 300 kV). This contingency event could result in simultaneous loss of two or more elements, depending on the bus configuration. Allowing planned and controlled disconnection of some load in the areas would not only prevent cascading and instability (which could result in uncontrolled loss of a larger amount of load), but also enables faster load restoration. These contingencies are low-probability events. To meet this requirement as proposed would require severe pre-contingency curtailment of power transfers, that could impact commerce and/or construction of a large number of transmission facilities with the attendant environmental impacts and increased cost to customers.

The proposed standard is based on an assumption that the following events are relatively high probability events and, therefore, Non-Consequential Loss of Load should not be permitted. Do you agree? If you disagree, please provide a reason for your disagreement.

Event	Agree or Disagree	Comment
Q26. P4-1: Loss of a Generator followed by System adjustment[1] followed by loss of another Generator	☒Agree. ☐Do not agree.	We agree that Non-Consequential Loss of Load should not be permitted. Loss of a generator has higher probability and longer duration than other contingency events. Overlapping outage of a second element while one generator is already out of service and system adjusted would likewise have

[1] System adjustment can be manual or automatic

		higher probability than other multiple contingency events.
Q27. P4-2: Loss of a generator followed by a System adjustment followed by the loss of a monopolar DC line	☒Agree. ☐Do not agree.	We agree that Non-Consequential Loss of Load should not be permitted. Loss of a generator has higher probability and longer duration than other contingency events. Overlapping outage of a second element while one generator is already out of service and system adjusted would likewise have higher probability than other multiple contingency events.
Q28. P4-3: Loss of a generator followed by System adjustment followed by loss of a Transmission circuit	☒Agree. ☐Do not agree.	We agree that Non-Consequential Loss of Load should not be permitted. Loss of a generator has higher probability and longer duration than other contingency events. Overlapping outage of a second element while one generator is already out of service and system adjusted would likewise have higher probability than other multiple contingency events.
Q29. P4-4: Loss of a generator followed by System adjustment followed by loss of a transformer	☒Agree. ☐Do not agree.	We agree that Non-Consequential Loss of Load should not be permitted. Loss of a generator has higher probability and longer duration than other contingency events. Overlapping outage of a second element while one generator is already out of service and system adjusted would likewise have higher probability than other multiple contingency events.

The performance requirement for the following event may be considered less stringent than the existing TPL Standards — P2-3: Loss of a single pole of a DC line. Interruption of firm transactions (without Loss of firm Load) if the transaction is dependent on the faulted DC line is now allowed for this initiating event/Contingency.

Q30. Do you agree that interruption of any firm transfers that are dependent on the outaged DC line that is taken out of service should be permitted?

Yes ☒ No ☒

Comment: We agree with the question asked. In addition, transactions that can be interrupted due to the loss of a DC line should not be limited to the firm transactions, that are dependent on the DC line. It should also include interruptible transactions and other transactions made available through negotiated agreements on both AC and DC lines.

E. Stability

Q31. The proposed standard is based on an assumption that steady state analysis and stability analysis are different from each other and that therefore, two tables of Contingencies and performance requirements were needed. It is also based on an

assumption that stability study requirements should be clearly separated from the steady state study requirements. Do you agree with the action taken in separating stability analysis from steady state analysis? If not, please explain.

Yes ☒ No ☒

Comment: We agree with the question asked. In addition, because of the time sequence from the start of the fault, through fault clearing and transient dynamic period, the post-transient period to the steady state post-contingency period, there needs to be clear links between the performance requirements in the transient dynamic time period and the steady state time period. For example, if generator dropping or controlled load interruption is allowed in the transient dynamic period, it should also be allowed in the steady state time period that follows. Otherwise, it would put the Transmission Planners and the Planning Authorities in an untenable situation because, once a generator or load is dropped in the first few cycles after the disturbance; it cannot be required to be on line in the minutes that immediately follow.

Q32. The SDT has added requirements for plant stability studies and has drawn a distinction in these studies from System stability studies. Do you agree with this approach? If not, please explain.

Yes ☐ No ☒

Comment: It appears that Plant Stability Study is a subset of System Stability Study. R4.6.2 states these shall be performed for changes in real power output of a generating unit by more than 10%. Then it states they shall be performed for planning events. R4.5 already covers any contingencies that are an issue and the system already needs to meet some level of performance for loss of the generator. It seems that a change in generation would already be analyzed from a system standpoint as stated in R2.4.3. It appears that material changes to existing generators should be reflected in modeling requirements elsewhere.

Q33. The existing TPL-004-0 standard has a requirement to consider the Loss of all generating units at a plant, but it was not clear whether this requirement should apply to stability studies. The SDT did not include this requirement in the stability table, because it is hard to envision a condition when all units would trip simultaneously within the timeframe of a stability simulation. Do you think this condition should be required in stability analysis of extreme events? If not, please explain.

Yes ☐ No ☒

Comment: We agree with the SDT that simultaneous 3-phase fault on all generating units in a plant is improbable and effort should be better spent studying more probable events. In any case, this Extreme Event is to be considered in the Steady State Table, and stability cases can be run if it is shown to be needed in the power flow study results. We are, however, confused by this question. This question states that the SDT did not include the requirement to consider loss of all generators at a plant in the stability, yet the Extreme Event in the stability table shows in No. 9, "3Ø fault with loss of all generating units at a station".

Q34. There are an increasing number of events with slow voltage recovery after faults on the Transmission System. The dynamic behavior of induction motor loads is a major factor in this phenomenon. The proposed standard therefore requires that the load model for stability studies of peak Load conditions include the dynamic effects of induction motors. Do you agree with this requirement? If not, please explain?

Yes ☒ No ☒

Comment: The requirement to include motor load should be extended to other load level periods and not be limited to peak load period only. However, to capture slow voltage recover phenomena, especially in areas of high penetration of refrigerated air conditioning load (e.g. 50% to 60%), would require modeling down to the distribution system voltage level and explicitly representing shunt capacitors and various induction motor types (e.g. equivalents for single phase motors). If the requirement is not extended, dynamic simulations will likely differ significantly from observed system events. We recommend a phase-in period so that the requirement for

use of load models should only include regionally accepted load models for which data are available. This requirement can be extended or modified as the Region in which the entities reside adopts new load modeling guidelines.

Q35. What type of manual or automatic adjustments of generators should be allowed for single and multiple Contingencies?

Comment: All adjustments should be allowed as long as they are realistic and achievable in the time frame required and consistent with other study parameters. For example, automatic adjustments would be required for correction of a stability problem, but manual adjustment should be allowed for correction of a thermal problem if there is no instability problem.

F. Generation Runback and Tripping

The SDT has discussed the automatic and manual readjustments of generators that should be permissible for single contingencies and multiple contingencies. The existing TPL-001-0 through TPL-004-0 standards through footnote (a) of Table I could include emergency ratings applicable for short durations as required to permit operating steps necessary to maintain system control. The footnote is silent about allowable generation adjustments in response to the Category B events. However, it does indicate that system adjustments are permitted to prepare for the next Contingency. These system adjustments could include manual or automatic adjustments involving generation.

The SDT has learned that many transmission owners use System Protection Systems (SPS) or Remedial Action Schemes (RAS) to trip generation for single and multiple Contingency outage events to prevent overloads, low voltage, and instability in the Interconnected Transmission network for N-1 and N-2 events. In some cases, the RAS are used to prepare for the next Contingency; but in some cases, the RAS are used to simultaneously avoid exceeding emergency ratings.

Q36. The proposed standard allows generation runback after the disturbance that causes a single Contingency (or due to a single Contingency outage) to move the Interconnected Transmission System from an emergency state (within emergency ratings) to a normal state (within normal ratings), assuming that the disturbance does not result in instability? Do you agree? If not, please explain.

Yes ☒ No ☐
Comment:

Q37. Since emergency ratings are thermal ratings, should this standard allow an automatic generation runback scheme (that is initiated immediately after the disturbance causing the single Contingency) to prevent thermal overloads (assuming that the disturbance does not result in instability)? If yes, what are the conditions that must be met in order to allow such a runback scheme to meet the System performance criteria for single Contingencies? Please explain the reason for your answer.

Yes ☒ No ☐
Comment: Yes. Agree. Conditions for generation run back for N-1: 1) Run back of generation cannot result in tripping of firm load, 2) power flow should be within the time-limited equipment ratings, 3) frequency should be within allowable limits.

The standard drafting team has considered that RAS or SPS may be allowable under certain situations for single Contingencies, but proposes that their use should be limited.

Q38. Do you agree that RAS or SPS may be allowed for single Contingencies? If not, please explain.

Yes ☒ No ☐
Comment:

Q39. Please describe the limitations that you believe should be placed on the use of RAS or SPS for single Contingency events.

Comment: Based on the interpretation of the above question, we are providing two responses to this question. The first responds to the limitations placed on RAS, regardless of what action the RAS initiates. The second response specifically addresses RAS that trips generation.

Response 1: RAS should be allowed for single contingency events. Any sort of RAS should be permitted, but there should be a review of the RAS. If the local entities agree to the RAS, it should be allowed. This addresses cost vs. benefit balance. Entities affected should be the ones that determine the best solution for their situation.

Response 2: Generation tripping can be used for single contingency if such application can be demonstrated through transmission planning studies that:

- The generation tripping is planned and controlled ("planned and controlled" means a pre-planned action(s) based on predetermined system conditions that take corrective measure(s) to maintain acceptable system performance).
- The generation tripping does not result in non-consequential load loss.
- System frequency should be within allowable limits.
- System voltage dip and deviation should be within allowable limits.
- The generator owner(s) agrees to the tripping as planned.

Q40. When RAS or SPS are allowed, what conditions should be met when these systems are used in system adjustments to meet performance requirements?

Comment: System adjustment involves operator intervention that would be beyond the time frame of RAS operation. Therefore, if a unit is already dropped during RAS or SPS action, it should be assumed to be off-line during system adjustment period.

G. General Questions

Q41. If you are aware of any regional variances that would be required as a result of these standards, please identify them here.

Yes ☒ No ☐
Comment: Yes. WECC allows tripping of generators to meet single contingency performance requirements. WECC also allows planned and controlled load shedding for the proposed Planning Events P2-1, P2-2, P3, P4 and P5, although we agree with the proposed requirements for P4 due to the higher probability of occurrence. If the standard does not allow for non-consequential load shedding of 300 kV and above for P5 scenarios, WECC will develop a regional variance".

Q42. If you are aware of any conflicts between the proposed standards and any regulatory function, rule order, tariff, rate schedule, legislative requirement or agreement, please identify them here.

Yes ☒ No ☐
Comment: 1) FERC Order 693, Paragraph 1825 regarding TPL-003, Category C – The Commission directed the ERO to modify footnote (c) to Table 1 to clarify the term "controlled load interruption" rather than eliminate its applicability to this performance requirement. 2) FAC-010-1, R2.3 – "…planned or controlled interruption…" This conflicts with "No" for non-consequential load loss allowed in draft TPL.

Q43. Do you have any other questions or concerns with the proposed standard that have not been addressed? If yes, please explain.

Yes ☒ No ☐
Comment: 1. R1.3 requires the provision of firm transfer/Interchange Schedules and resources required to supply load for each Balancing Authority. It may not be possible to have reasonably accurate information on firm transfers and Interchange Schedules for years into the future. Within WECC, we develop base cases that represent reasonably stressed conditions that model power flows stressing various paths. Therefore, within WECC, we design the system to operate at levels that can support all sorts of commerce, including the effects of loop flow, and firm and non-firm contracts, in addition to other possibilities. It would be difficult to develop information from this mixture that includes only firm transactions for such future base cases. In addition, WECC does not allow operations at levels not previously studied. Therefore, an exercise to determine firm transaction/schedules would produce information that will be of little value to support reliability in WECC.

2. R2.7.1.2 requires identification of system deficiencies and accociated corrective action for the Long Term Transmission Planning Horizon. This requirement needs to tie to the lead times to implement the corrective action(s). For example, if a 500 kV transmission line is needed to correct a deficiency that surfaces in the tenth year, then this requirement is reasonable. However, if the deficiency is on a low voltage system, that can be resolved with short lead-time projects (such as installing a small capacitor bank) then this requirement would seem to be too prescriptive.

3. R1.5 requires providing modeling information as part of R1 on a number of transmission planned facilities, including circuit breakers. Since circuit breakers are part of a transmission line, we are not sure how a circuit breaker would be modeled separately, as required.

4. R3.2.1 requires that "studies shall consider the minimum steady state voltage limitations of all generators". Since generators (as well as other facilities) have both high and low voltage limits, the standard should require consideration of both high and low voltage limits.

5. In R.3.2.2, please provide a reference for relay loadability.

6. R.3.3.2.1. requires that Consequential Load loss (expected maximum demand and expected duration) following a single contingency shall be identified in the Planning Assessment. We suggest deleting this requirement. By definition, consequential load loss following a contingency can not be avoided and should not be considered an impact on the operation of the BES. It should be part of local service reliability between an entity and its local regulatory agency or contractual relationship between individual parties and not in a NERC Standard governing the operation of a BES.

7. Proposed revision to R3.5 – "Manual and automatic generation runback and generator tripping are allowed as a response to single and multiple contingencies as long

as Facility Ratings are not exceeded and the result of the generator action, such as loss of reactive resource, impact on reserves, and restart time of tripped unit(s), meets the performance requirements in the tables."

Example for the need for flexibility in the selection of generation runback and/or tripping to meet the requirements of R3.5 – The time period for a particular Emergency Rating might require faster generation redispatch than a runback or set of runbacks are capable of providing. Therefore, it may be necessary to trip one 100 MW unit rather than runback several units for a total of 100 MW. Planning and Operations need flexibility to coordinate with the requirements of Engineering who established the Facility Ratings.

No need for R3.6 with above revision to R3.5.

8. Performance standard "P5" (Q.21- 23) does not allow for the use of load shedding (safety nets) required by some utilities to protect against cascading outages if a transmission line is already out of service and a forced outage of another major element occurs. "System adjustments" might not be possible in a load pocket or local load-serving area to prevent "non-consequential load loss" after loss of a second transmission line to the load-serving area. The use of load shedding for such rare events is an established practice and least cost alternative that does not unreasonably compromise reliability of the WECC system. It is also an acceptable and necessary tradeoff from over burdening customers with additional expensive transmission lines and permitting risk in the West where remote generation resources have historically required power to be carried over long distances.

The tradeoffs between economics (building hundreds of miles of new transmission lines or build out hundreds of MW of new load-side generation versus load shedding schemes) and the impact of these rare events should be under the purview of local and state jurisdictions, as long as impacts do not result in cascading events outside of the affected jurisdiction. As long as interconnected reliability or neighboring system operation is not negatively impacted, customer interruption size and frequency should be left to the Transmission Providers discretion and to the jurisdiction of state regulators. The amount of load to be shed and its frequency is primarily an issue for state jurisdiction because it is a matter of the cost/benefit associated with customer service regardless of the voltage level problem. In general, incidences of non-consequential loss of customer load events related to contingencies on the back-bone transmission system are rare when compared to other causes of customer outages. Assuming interruptions to customer service are significant, the state regulators and other related constituents will ultimately be responsible for approving any transmission line facilities or generation additions needed to assure reliability.

Implementing an immediate change to this current established practice is not rational or technically feasible due to the long and arduous regulatory and permitting processes that are required to construct new transmission facilities or new load-side generation. Implementation of the standard as written would take many years. At a minimum, even if it is determined that Congress's intent was to create stricter standards, a phase-in period must be included to allow utilities time to obtain necessary permits, regulatory approval and cost recovery to meet the stricter standards.

NERC
NORTH AMERICAN ELECTRIC RELIABILITY CORPORATION

Comment Form for First Draft of TPL-001-1 — Transmission System Planning Performance Requirements

Please use this form to submit comments on the proposed draft of TPL-001-1. Comments must be submitted by **Friday, October 26, 2007**. You may submit the completed form by e-mail to sarcomm@nerc.net with the words "TPL-001 Draft 1" in the subject line. If you have questions please contact Ed Dobrowolski at ed.dobrowolksi@nerc.net or by telephone at 609-947-3673.

Individual Commenter Information **(Complete this page for comments from one organization or individual.)**		
Name:		
Organization:		
Telephone:		
E-mail:		
NERC Region (check all Regions in which your company operates)		**Registered Ballot Body Segment (check all industry segments in which your company is registered)**
☐ **ERCOT**	☐	1 — Transmission Owners
☐ **FRCC**	☐	2 — RTOs and ISOs
☐ **MRO**	☐	3 — Load-serving Entities
☐ **NPCC**	☐	4 — Transmission-dependent Utilities
☐ **RFC**	☐	5 — Electric Generators
☐ **SERC**	☐	6 — Electricity Brokers, Aggregators, and Marketers
☐ **SPP**	☐	7 — Large Electricity End Users
☐ **WECC**	☐	8 — Small Electricity End Users
☐ **NA – Not Applicable**	☐	9 — Federal, State, Provincial Regulatory or other Government Entities
	☐	10 — Regional Reliability Organizations and Regional Entities

Group Comments (Complete this page if comments are from a group.)

Group Name: **WECC Committees and Subcommittees**

Lead Contact: **Steve Rueckert**

Contact Organization: **WECC**

Contact Segment: **10**

Contact Telephone: **801 883-6878**

Contact E-mail: **steve@wecc.biz**

Additional Member Name	Additional Member Organization	Region*	Segment*
Spencer Tacke	Modesto Irrigation District	**WECC**	1
Robert Temple	Western Area Power Administration	WECC	9
Greg Lange	Grant County PUD	WECC	3
Dennis Malone	El Paso Electric Company	WECC	1
Garry Chinn	Metropolitan Water District of Southern California	WECC	1,7
Dilip Mahendra	Sacramento Municipal Utility District	WECC	1
Kevin Dasso	Pacific Gas and Electric	WECC	3
Jim Filippi	Pacific Gas and Electric	WECC	1
Laurence Chaset	CPUC	WECC	9
Robert Jenkins	PG&E	WECC	3
Mark Ziering	California Public Utility Commission	WECC	9
Ben Morris	Pacific Gas and Electric	WECC	1
Chifong Thomas	PG&E	WECC	1
Chuck Stigers	Northwestern Energy	WECC	1
James Tucker	Deseret Power	WECC	1
Kristine Buchholz	Pacific Gas and Electric	WECC	1
Robert Mathews	Pacific Gas and Electric	WECC	1
Gary DeShazo	California ISO	WECC	2
Bob Smith	Arizona Public Service	WECC	1

Les Pereira	NCPA	WECC	4

*If more than one Region or Segment applies, please list all that apply. Regional acronyms and segment numbers are shown on prior page.

Background

The purpose of this standard is to establish Transmission System planning performance requirements within the planning horizon to develop a Bulk Electric System that will operate reliably over a broad spectrum of System conditions and following a wide range of probable Contingencies. This standard will replace TPL-001-0, TPL-002-0, TPL-003-0, and TPL-004-0. The standard drafting team has not yet addressed TPL-005-0 and TPL-006-0, but will address these two standards during the next phase of the drafting process.

The major objectives of the standard drafting team are to:

1) Ensure the standard is complete and the requirements are set at an appropriate level to ensure reliability (Not Least Common Denominator)
2) Ensure that the standard is enforceable by having clearly defined requirements with unambiguous language
3) Address the issues raised by FERC Order 693, 890, and other applicable orders
4) Address the issues raised in the original Standards Authorization Request (SAR) and the Supplemental SAR.

The standard drafting team did not attempt to edit the existing standards but rather chose to write one standard that addresses all aspects of transmission planning in the existing TPL-001-0, TPL-002-0, TPL-003-0, and TPL-004-0. The standard drafting team organized the new standard in the following sections:

R1 – Modeling requirements
R2 – Assessment and Corrective Plan requirements
R3 – Steady State Analysis requirements
R4 – Stability Analysis requirements
R5 – Coordination requirements

The standard drafting team determined that the requirements and analysis for Steady State are different from those for stability. As such, the standard drafting team separated the analysis requirements and created two performance requirement tables.

The standard drafting team recognizes that this draft standard is a starting point for industry input into the standard and that there is still a lot of work required to complete the process. The standard drafting team has made many changes to clarify requirements, add requirements, and make some of the performance requirements stricter. The standard drafting team has not addressed Measures, Risk Factors, Violation Severity Factors, or Time Horizons at this time. These will be addressed when the standard drafting team has better defined the requirements of the standard.

For questions where you agree with the standard drafting team, please state that you agree and if available, please provide supporting documentation. If you disagree with the standard drafting team, please explain why you disagree and provide data to support your position, such as outage data or analysis. If you believe that we have made a performance requirement too strict please provide supporting documentation. If applicable, please include the approximate cost in man-hours for additional studies and/or cost in $Millions for additional transmission investment to meet the new requirements or the stricter requirements. If you believe that the standard should be stricter, please provide the

rationale along with any supporting data, including existing practices, cost estimates or additional analysis.

To improve the standard, the standard drafting team would appreciate responses to as many of these questions as you can answer.

A. New Definitions

Many of the concerns about the existing TPL standards come from the fact that a number of generally understood concepts are embedded in undefined terms, tables, and footnotes. To clarify some of these concerns, the standard drafting team is proposing new definitions. Please indicate whether you agree with the following proposed definitions and provide proposed changes to the definitions if you disagree:

Definition	**Agree or Disagree**
Q1. **Base Case**: Computer representation of the projected initial or starting Transmission System conditions for a specific point in time. Each base case reflects the forecasted Load at each bus (or node) on the interconnected Transmission System, the transmission facilities which deliver the generation and reactive resources to the connected Load, and the generation dispatch including firm transaction obligations assumed to supply the connected Load. The models also reflect facility ratings in accordance with FAC-008 & FAC-009.	☒Agree. ☒Do not agree.
Q1. **Comment: A Base Case can only represent the amount of transactions required to serve connected load modeled in the case (local load?). A Path Rating case (developed to represent maximum transfers on a path) would not be considered a base case under this definition. WECC develops base cases to study high power transfers under stressed conditions. Such high power transfers necessarily include both firm and non-firm transaction obligations. Therefore, a base case that represents firm transactions to support "connected load" only, cannot be used to support studies of maximum possible power transfer and is of limited value in WECC. We agree that the above definition is one definition of a base case, but we feel that it can not be the only definition or the limiting definition. We suggest that wording be included that reflects the concept of modeling forecasted or above forecasted load levels if desired, and both firm and non-firm transactions if necessary to model anticipated maximum transfers and represent stressed system conditions as well.** **The definition should refer to the base case as a Computer Simulation Model of the power system, not a Computer Representation of the transmission system, since it is used within a computer program and represents load and generation in addition to transmission. References to "the generation dispatch and firm transaction obligations to supply the connected load" should be removed.** **A base case is a starting case for any condition that needs to be studied, not just a firm transactions case. Firm obligations across the transmission system are many times independent of a specific load service obligation.**	
Q2. **Consequential Load Loss:** Load that is no longer served	☒Agree.

because it is directly connected to an element(s) that is removed from service due to fault clearing action or mis-operation.	☒Do not agree.
Q2. **Comment: Agree with the definition in concept. However, the wording makes the definition seem unrealistic. There are many examples where a certain amount of voltage sensitive load or motor drives sensitive to angle changes are dropped due to normally cleared electrical faults on the transmission system. These loads are not directly connected to the element being removed from service. This type of sympathetic loss of load is unique to the individual customer load. The design of these loads is not under the control of the utilities when it comes to ability to ride through normally cleared faults. We suggest that this definition be modified to include the loss of sensitive load that is not directly connected to the element being removed.** **We propose the following the definition : Load that is no longer served because it is directly connected to an element(s) that is removed from service due to fault clearing action or mis-operation, and because of sympathetic tripping associated with normal clearing or mis-operation. Load that is lost because it trips due to low voltages experienced during and immediately following the fault (4-6 cycles?) is also considered consequential load loss. We believe this additional recognition is needed because load lost due to low fault voltages is unavoidable and should not result in a standard violation.**	
Q3. **Extreme Events:** Events which are more severe than Planning Events and have a low probability of occurrence.	☒Agree. ☒Do not agree.
Q3. **Comment: Please add the phrase "two or more elements out of service" to the definition from the previous definition in Table I.**	
Q4. **Long-Term Transmission Planning Horizon:** Transmission planning period that covers years six through ten or beyond.	☒Agree. ☐Do not agree.
Q4. **Comment:**	
Q5. **Near-Term Transmission Planning Horizon:** Transmission planning period that covers years One through five.	☒Agree. ☐Do not agree.
Q5. **Comment:**	
Q6. **Non-Consequential Load Loss:** Load loss other than Consequential Load Loss. For example, Load loss that occurs through manual (operator initiated) or automatic operations such as under-voltage Load shedding, under-frequency Load shedding, or Special Protection Systems.	☐Agree. ☒Do not agree.
Q6. **Comment: Please add "or Remedial Action schemes" to the end of the definition. FERC Order 693, paragraph 1773 states (6)"clarifies footnote (b) to Table 1 to allow no firm load or firm transactions to be interrupted except for consequential load loss." There needs to be a distinction made between Interruptible Load and Firm Demand.**	
Q7. **Planning Assessment:** Documented evaluation of future Bulk Electric System needs by the use of performance studies that	☒Agree.

cover a range of assumptions regarding system conditions, time frames, future plans including capital reinforcements and operating procedures and other factors, such as asset conditions and age.	☒Do not agree.
Q7. **Comment: As identified by the modifications above, we believe the definition should be changed to read, "Documented evaluation of future Bulk Electric System needs by the use of performance studies (steady state and dynamic) that cover a range of reasonable or expected assumptions regarding system conditions, applicable time frames, and future plans; including capital reinforcements and operating procedures, SPS/RAS, and other factors (such as asset conditions and age)."**	
Q8. **Planning Events:** Events which require Transmission system performance requirements to be met.	☒Agree. ☐Do not agree.
Q8. **Comment:**	
Q9. **Plant Stability Study:** Study of an individual plant's Stability for various Contingencies in the vicinity of the plant; concerned with the effect on the System of the generating units' loss of synchronism and the damping of the generating units' power oscillations.	☐Agree. ☒Do not agree.
Q9. **Comment: Plant Stability seems to be a subset of System Stability. Introducing a new term can cause confusion.**	
Q10. **System Stability Study:** Study of the System or portions of the System to ensure that angular Stability is maintained, inter-area power oscillations are damped, and voltages during the dynamic simulation stay within acceptable performance limits.	☒Agree. ☐Do not agree.
Q10. **Comment:**	
Q11. **Year One:** The first year that a Transmission Planner is responsible for studying. This is further defined as the planning window that begins the next calendar year from the time the Transmission Planner submits their annual studies. Analysis conducted for time horizons within the calendar year from the study publication are assumed to be conducted under the auspices of Operations Planning.	☒Agree. ☐Do not agree.
Q11. **Comment:**	

B. Sensitivity Studies

The draft planning standard includes the requirement, as specified in FERC Order 693, that planning decisions be based on a portfolio of analyses. In section 12.a.ii "Sensitivity studies and critical system conditions" FERC provided direction to consider a full range of variables considered to be significant that need to be assessed and documentation provided that explains the rationale for the selection of variables assessed.

In addition to the firm obligation scenario, the portfolio of analyses should be supplemented to include information from sensitivity analysis. The sensitivity analysis should be developed using additional cases that simulate reasonably stressed system conditions. The standard drafting team has included several parameters that can be varied to create the requisite sensitivity case(s). The draft standards specify that the sensitivities reflect one or more of the following conditions and that documentation be provided explaining the

rationale for selecting the sensitivity(ies) employed. The parameters that should be varied include:

- Higher or lower Load forecasts from the Base Case with variability of Load/demand and Load power factors due to season, weather, or time of day.
- Modification of expected transfers.
- Unavailability of long lead time facilities.
- Variability and outages of Reactive Resources.
- Generation additions, retirements, or other dispatch scenarios.
- Decreased effectiveness of controllable Loads and Demand Side Management.
- Modification of planned Transmission outages

To help focus industry discussion, please respond to the questions below:

Q12. Should the standard provide more specific direction regarding the number of sensitivity cases that need to be developed?

Yes ☐ No ☒

Comment: The TP or PA is the most familiar with the system and so would be the best to determine the sensitivities that are more applicable to their particular system. The Standard should not be overly prescriptive. The Standard can make suggestions or list potential sensitivities but let the TP or PA determine those variables to study and the reasonable range of the sensitivities.

Q13. Should the standard specify the required changes, such as changes in expected transfers, load forecasts, generation patterns, etc., from the study case to be considered a "reasonably stressed" case?

Yes ☐ No ☒

Comment: No, as in the response for Question #12. The TP is the best to determine the type of stressing needed for a particular case. This is very evident in the type of cases used for studies in the different parts of the NERC regions.

Q14. The SDT proposes to require the use of sensitivity studies for Near-Term Transmission System Planning Horizon stability analysis. Do you concur with the use of sensitivity analysis in dynamic studies?

Yes ☒ No ☒

Comment: We concur with the use of sensitivities as long as the TPs are allowed to determine the sensitivities that are the more appropriate for their systems and not have the sensitivities scripted in the Standard.

Q15. The draft TPL standard does not require the use of sensitivity studies for the Long-Term Transmission System Planning Horizon (year six and beyond) studies. Do you concur with this approach or should there be some level of sensitivity analysis required for the long-term period?

Yes ☒ No ☐

Comment: We agree with this conclusion. The Standard language should state that sensitivities are not required in Long-Term Transmission System Planning Horizon but the TP could use sensitivities if desired.

C. Corrective Action Plans

Requirement R2.7 of the standard states that when analysis shows that the performance requirements in Table 1 and Table 2 are not fully met, a Corrective Action Plan that utilizes

all or some of the Transmission System enhancements, generation additions, DSM, new technologies and Operating Procedures shall be included in the Planning Assessment. This Corrective Action Plan should ensure that upon its implementation the identified system deficiencies will be corrected so that the performance requirements in Table 1 and Table 2 will be met. Furthermore, studies included in the Planning Assessment should demonstrate that this is indeed the case.

Q16. Requirement R2.7.1: Such Corrective Action Plans shall "Identify System deficiencies and the associated actions needed to achieve required System performance including Transmission and generation improvements, DSM, new technologies, or Operating Procedures including the duration of Interim Operating Procedures". System deficiencies may be corrected using an integrated plan, i.e., an optimal mix of Transmission, generation, DSM and Operating Procedures. Should DSM be considered in conjunction with other measures in developing Corrective Action Plans? If yes, please comment on how the impact of DSM should be included.

Yes ☒ No ☒

Comment: It is unclear whether "DSM" in this question refers to reduction in load or increases in distributed resources, or if the resources are directly controllable by the transmission operator. DSM could be used in the mix of solutions that are used to determine the optimal solution for a transmission issue. However, we have concerns about the use of DSM, that is not under the direct control of the Transmission Operator as a stand alone transmission system solution. Please remember the overstated returns from DSM in the last decade that did not materialize. If these overstated values had been used as a transmission system enhancement, then the system would have been compromised with emergency operating solution until the effective transmission enhancements could be realized.

Q17. Requirement R2.7.2: Such Corrective Action Plans shall "Be added to study cases and the cases re-tested to show that the System with planned additions meets the performance requirements in the tables". Should new studies, including the facilities comprising the Corrective Action Plan, be performed to assess System normal performance and Contingency response for conditions that previously resulted in the System deficiencies (without the planned additions) and also demonstrate that the changes would not result in inadvertent negative impacts on the System. If you "agree", please comment on how a study area should be determined.

Yes ☐ No ☒

Comment: No, this is too onerous. We recognize that, when planning the system and developing a Corrective Action Plan, the transmission planner would have added the potential projects individually (or in small groups) into a case to re-test the system performance. Hoever, R2.7.2 seems to require that all potential projects be added back into the case simultaneously for retesting. There could be many different alternative solutions for each potential problem identified in the different study years without having the base solution first determined for a nearer term case. There can be many combinations of potential solutions for cases further into the future that satisfy the condition being studied. For example, a voltage problem can be solved by the addition of capacitors, completing a bus tie, adding a short line, operating procedure, changing generation dispatch, etc. Even assuming that one set of solutions are picked so the verification study can be performed, logistically this demonstration may be too close to the assessment in the following year. Instead of retesting the potential projects in the Corrective Action Plan on the original base case, it may be better to test them in the base cases prepared for following year's study. Any potential problem that is unresolved will show up again in the following year's assessment. Therefore, a separate demonstration using an "older" case may not be an efficient use of the TPs' and PAs' time and resources.

Q18. Requirement R2.7.3: The standard calls for a differentiation between committed and proposed projects. Do you agree that they should be treated separately? If not, please state why not.

Yes ☐ No ☒
Comment: The definition of these terms can be vastly different across all TPs. How would this be effectively monitored for compliance with such different definitions? Also, each TO's criteria to go from a proposed project to a committed project can change over time due to other needs and requirements.

Q19. Requirement R2.7.4: For such Corrective Action Plans "Committed projects shall not be removed without documentation to show that the revised plan meets the performance requirements". Do you agree or disagree with this requirement? If you disagree, please explain why.

Yes ☐ No ☒
Comment: The requirement is similar to the question posed in Question 17. What is the documentation that proves this is needed?

D. Performance Requirements

The proposed revised planning standard (TPL-001-1) incorporates a number of changes in requirements as compared to the current planning standards (TPL-001-0 through TPL-004-0), which it is expected to replace. Among other things these changes are intended to clarify the standard, address issues described by FERC, and, in particular, to "raise the bar." Strengthening the planning standards in selected areas is necessary to maintain a reliable Bulk Electric System that is up to the challenges of the 21st Century. In proposing the requirements in this draft, the standard drafting team attempted to balance the value of increased reliability against any potential increase in work and costs to meet the new proposed standard.

The standard drafting team is seeking input from the industry to determine whether a proper balance has been achieved. The areas where material changes are proposed in this draft are enumerated below, and questions are posed by the standard drafting team to obtain industry comment. In formulating your responses, please keep in mind that material changes in the final standard will be accompanied by a transition plan to provide for an orderly implementation of the final standard.

The performance requirements relative to Non-Consequential Loss of Load for the following events enumerated in the two tables can be considered more stringent than the existing TPL standards. Furthermore, the proposed standard is based on an assumption that performance requirements for EHV facilities should be more stringent than for lower voltage facilities.

Do you agree that Non-Consequential Loss of Load should not be permitted for the following events? If you disagree, please provide a reason for your disagreement.

Event	Agree or Disagree	Comment
Q20. P2-1: Loss of bus section (SLG for stability) above 300 kV	☐Agree. ☒Do not agree.	The Bulk Electric System has been developed without this requirement. Before making the entire NERC system adopt this more stringent Standard, the SDT needs to show or address the benefits of this more stringent requirement with the cost of adaptation. Compliance with this standard as

		proposed could require some utilities to add hundreds of miles of new transmission lines or build out hundreds of MW of new load-side generation. Cost of these new facilities would eventually be borne by the end-use customer. A cost benefit balance has been arrived at over many years time between the customers and the regulators. Also, how will existing systems be handled for compliance? Is there a logical reason for the use of the 300kV cut-off level? We believe that this type of load shedding should be allowed for these conditions at any voltage level. In any case, consideration should also be taken on whether the non-consequential load loss is Interruptible load or firm demand.
Q21. P5-1: For facilities above 300 kV, loss of a Transmission circuit followed by System adjustment[1] followed by loss of another Transmission circuit	☐Agree. ☒Do not agree.	The Bulk Electric System has been developed without this requirement. Before making the entire NERC system adopt this more stringent Standard, the SDT needs to show or address the benefits of this more stringent requirement with the cost of adaptation. Compliance with this standard as proposed could require some utilities to add hundreds of miles of new transmission lines or build out hundreds of MW of new load-side generation. Cost of these new facilities would eventually be borne by the end-use customer. A cost benefit balance has been arrived at over many years time between the customers and the regulators. Also, how will existing systems be handled for compliance? Is there a logical reason for the use of the 300kV cut-off level? We believe that this type of load shedding should be allowed for these conditions at any voltage level. In any case, consideration should also be taken on whether the non-consequential load loss is Interruptible load or firm demand.
Q22. P5-2: For facilities above 300 kV, loss of a Transmission circuit followed by System adjustment followed by loss of a transformer with low side voltage rating above 300 kV	☐Agree. ☒Do not agree.	The Bulk Electric System has been developed without this requirement. Before making the entire NERC system adopt this more stringent Standard, the SDT needs to show or address the benefits of this more stringent requirement with the cost of adaptation. Compliance with this standard as

		proposed could require some utilities to add hundreds of miles of new transmission lines or build out hundreds of MW of new load-side generation. Cost of these new facilities would eventually be borne by the end-use customer. A cost benefit balance has been arrived at over many years time between the customers and the regulators. Also, how will existing systems be handled for compliance? Is there a logical reason for the use of the 300kV cut-off level? We believe that this type of load shedding should be allowed for these conditions at any voltage level. In any case, consideration should also be taken on whether the non-consequential load loss is Interruptible load or firm demand.
Q23. P5-3: For facilities above 300 kV, loss of a transformer with low side voltage rating above 300 kV followed by System adjustment followed by loss of another transformer	☐Agree. ☒Do not agree.	The Bulk Electric System has been developed without this requirement. Before making the entire NERC system adopt this more stringent Standard, the SDT needs to show or address the benefits of this more stringent requirement with the cost of adaptation. Compliance with this standard as proposed could require some utilities to add hundreds of miles of new transmission lines or build out hundreds of MW of new load-side generation. Cost of these new facilities would eventually be borne by the end-use customer. A cost benefit balance has been arrived at over many years time between the customers and the regulators. Also, how will existing systems be handled for compliance? Is there a logical reason for the use of the 300kV cut-off level? We believe that this type of load shedding should be allowed for these conditions at any voltage level. In any case, consideration should also be taken on whether the non-consequential load loss is Interruptible load or firm demand.

[1]System adjustment can be manual or automatic.

The proposed standard is based on an assumption that performance requirements for non-bus tie EHV breakers should be distinguished from other breakers. Do you agree that Non-Consequential Loss of Load should not be permitted for this event?

Q24. Loss of non-bus tie breaker (above 300 kV) due to internal fault

Yes ☐ No ☒
Comment: We disagree that non-consequential loss of load should not be permitted for this contingency event. We believe that planned and controlled interruption of non-consequential load should be permitted for loss of a non-bus tie breaker (above 300 kV). Losing a non-bus tie breaker could result in simultaneous loss of two or more elements, depending on the bus configuration. Allowing planned and controlled disconnection of some load in the areas would not only prevent cascading and instability (which could result in uncontrolled loss of a larger amount of load), but also enables faster load restoration. Losing a breaker due to an internal fault is a low probability event. To meet this requirement as proposed would require severe pre-contingency curtailment of power transfers, that could impact commerce and/or construction of large number of transmission facilities with the attendant environmental impacts and increased cost to customers.

The proposed standard is based on an assumption that performance requirements for non-bus tie EHV breakers should be distinguished from other breakers and that performance requirements for EHV facilities should be more stringent than for lower voltage facilities. Do you agree that Non-Consequential Loss of Load should not be permitted for this event?

Q25. P3-1: Loss of (SLG for stability) either a generator, a Transmission circuit, a transformer, or a bus and a stuck non-bus tie breaker (above 300 kV)

Yes ☐ No ☒
Comment: We disagree that non-consequential loss of load should not be permitted for this contingency event. We believe that planned and controlled interruption of non-consequential load should be permitted for loss of either a generator, a transmission circuit, a transformer, or a bus and a stuck non-bus tie breaker (above 300 kV). This contingency event could result in simultaneous loss of two or more elements, depending on the bus configuration. Allowing planned and controlled disconnection of some load in the areas would not only prevent cascading and instability (which could result in uncontrolled loss of a larger amount of load), but also enables faster load restoration. These contingencies are low-probability events. To meet this requirement as proposed would require severe pre-contingency curtailment of power transfers, that could impact commerce and/or construction of a large number of transmission facilities with the attendant environmental impacts and increased cost to customers.

The proposed standard is based on an assumption that the following events are relatively high probability events and, therefore, Non-Consequential Loss of Load should not be permitted. Do you agree? If you disagree, please provide a reason for your disagreement.

Event	Agree or Disagree	Comment
Q26. P4-1: Loss of a Generator followed by System adjustment[1] followed by loss of another Generator	☒Agree. ☐Do not agree.	We agree that Non-Consequential Loss of Load should not be permitted. Loss of a generator has higher probability and longer duration than other contingency events. Overlapping outage of a second element while one generator is already out of service and system adjusted would likewise have higher probability than other multiple contingency events.
Q27. P4-2: Loss of a generator followed by a System adjustment followed	☒Agree. ☐Do not agree.	We agree that Non-Consequential Loss of Load should not be permitted. Loss of a generator has higher probability

[1] System adjustment can be manual or automatic

by the loss of a monopolar DC line		and longer duration than other contingency events. Overlapping outage of a second element while one generator is already out of service and system adjusted would likewise have higher probability than other multiple contingency events.
Q28. P4-3: Loss of a generator followed by System adjustment followed by loss of a Transmission circuit	☒Agree. ☐Do not agree.	We agree that Non-Consequential Loss of Load should not be permitted. Loss of a generator has higher probability and longer duration than other contingency events. Overlapping outage of a second element while one generator is already out of service and system adjusted would likewise have higher probability than other multiple contingency events.
Q29. P4-4: Loss of a generator followed by System adjustment followed by loss of a transformer	☒Agree. ☐Do not agree.	We agree that Non-Consequential Loss of Load should not be permitted. Loss of a generator has higher probability and longer duration than other contingency events. Overlapping outage of a second element while one generator is already out of service and system adjusted would likewise have higher probability than other multiple contingency events.

The performance requirement for the following event may be considered less stringent than the existing TPL Standards — P2-3: Loss of a single pole of a DC line. Interruption of firm transactions (without Loss of firm Load) if the transaction is dependent on the faulted DC line is now allowed for this initiating event/Contingency.

Q30. Do you agree that interruption of any firm transfers that are dependent on the outaged DC line that is taken out of service should be permitted?

Yes ☒ No ☒

Comment: We agree with the question asked. In addition, transactions that can be interrupted due to the loss of a DC line should not be limited to the firm transactions, that are dependent on the DC line. It should also include interruptible transactions and other transactions made available through negotiated agreements on both AC and DC lines.

E. Stability

Q31. The proposed standard is based on an assumption that steady state analysis and stability analysis are different from each other and that therefore, two tables of Contingencies and performance requirements were needed. It is also based on an assumption that stability study requirements should be clearly separated from the steady state study requirements. Do you agree with the action taken in separating stability analysis from steady state analysis? If not, please explain.

Yes ☒ No ☒

Comment: We agree with the question asked. In addition, because of the time sequence from the start of the fault, through fault clearing and transient dynamic period, the post-transient period to the steady state post-contingency period, there needs to be clear links between the performance requirements in the transient dynamic time period and the steady state time period. For example, if generator dropping or controlled load interruption is allowed in the transient dynamic period, it should also be allowed in the steady state time period that follows. Otherwise, it would put the Transmission Planners and the Planning Authorities in an untenable situation because, once a generator or load is dropped in the first few cycles after the disturbance; it cannot be required to be on line in the minutes that immediately follow.

Q32. The SDT has added requirements for plant stability studies and has drawn a distinction in these studies from System stability studies. Do you agree with this approach? If not, please explain.

Yes ☐ No ☒

Comment: It appears that Plant Stability Study is a subset of System Stability Study. R4.6.2 states these shall be performed for changes in real power output of a generating unit by more than 10%. Then it states they shall be performed for planning events. R4.5 already covers any contingencies that are an issue and the system already needs to meet some level of performance for loss of the generator. It seems that a change in generation would already be analyzed from a system standpoint as stated in R2.4.3. It appears that material changes to existing generators should be reflected in modeling requirements elsewhere.

Q33. The existing TPL-004-0 standard has a requirement to consider the Loss of all generating units at a plant, but it was not clear whether this requirement should apply to stability studies. The SDT did not include this requirement in the stability table, because it is hard to envision a condition when all units would trip simultaneously within the timeframe of a stability simulation. Do you think this condition should be required in stability analysis of extreme events? If not, please explain.

Yes ☐ No ☒

Comment: We agree with the SDT that simultaneous 3-phase fault on all generating units in a plant is improbable and effort should be better spent studying more probable events. In any case, this Extreme Event is to be considered in the Steady State Table, and stability cases can be run if it is shown to be needed in the power flow study results. We are, however, confused by this question. This question states that the SDT did not include the requirement to consider loss of all generators at a plant in the stability, yet the Extreme Event in the stability table shows in No. 9, "3Ø fault with loss of all generating units at a station".

Q34. There are an increasing number of events with slow voltage recovery after faults on the Transmission System. The dynamic behavior of induction motor loads is a major factor in this phenomenon. The proposed standard therefore requires that the load model for stability studies of peak Load conditions include the dynamic effects of induction motors. Do you agree with this requirement? If not, please explain?

Yes ☒ No ☒

Comment: The requirement to include motor load should be extended to other load level periods and not be limited to peak load period only. However, to capture slow voltage recover phenomena, especially in areas of high penetration of refrigerated air conditioning load (e.g. 50% to 60%), would require modeling down to the distribution system voltage level and explicitly representing shunt capacitors and various induction motor types (e.g. equivalents for single phase motors). If the requirement is not extended, dynamic simulations will likely differ significantly from observed system events. We recommend a phase-in period so that the requirement for use of load models should only include regionally accepted load models for which data are available. This requirement can be extended or modified as the Region in which the entities reside adopts new load modeling guidelines.

Q35. What type of manual or automatic adjustments of generators should be allowed for single and multiple Contingencies?

Comment: All adjustments should be allowed as long as they are realistic and achievable in the time frame required and consistent with other study parameters. For example, automatic adjustments would be required for correction of a stability problem, but manual adjustment should be allowed for correction of a thermal problem if there is no instability problem.

F. Generation Runback and Tripping

The SDT has discussed the automatic and manual readjustments of generators that should be permissible for single contingencies and multiple contingencies. The existing TPL-001-0 through TPL-004-0 standards through footnote (a) of Table I could include emergency ratings applicable for short durations as required to permit operating steps necessary to maintain system control. The footnote is silent about allowable generation adjustments in response to the Category B events. However, it does indicate that system adjustments are permitted to prepare for the next Contingency. These system adjustments could include manual or automatic adjustments involving generation.

The SDT has learned that many transmission owners use System Protection Systems (SPS) or Remedial Action Schemes (RAS) to trip generation for single and multiple Contingency outage events to prevent overloads, low voltage, and instability in the Interconnected Transmission network for N-1 and N-2 events. In some cases, the RAS are used to prepare for the next Contingency; but in some cases, the RAS are used to simultaneously avoid exceeding emergency ratings.

Q36. The proposed standard allows generation runback after the disturbance that causes a single Contingency (or due to a single Contingency outage) to move the Interconnected Transmission System from an emergency state (within emergency ratings) to a normal state (within normal ratings), assuming that the disturbance does not result in instability? Do you agree? If not, please explain.

Yes ☒ No ☐
Comment:

Q37. Since emergency ratings are thermal ratings, should this standard allow an automatic generation runback scheme (that is initiated immediately after the disturbance causing the single Contingency) to prevent thermal overloads (assuming that the disturbance does not result in instability)? If yes, what are the conditions that must be met in order to allow such a runback scheme to meet the System performance criteria for single Contingencies? Please explain the reason for your answer.

Yes ☒ No ☐
Comment: Yes. Agree. Conditions for generation run back for N-1: 1) Run back of generation cannot result in tripping of firm load, 2) power flow should be within the time-limited equipment ratings, 3) frequency should be within allowable limits.

The standard drafting team has considered that RAS or SPS may be allowable under certain situations for single Contingencies, but proposes that their use should be limited.

Q38. Do you agree that RAS or SPS may be allowed for single Contingencies? If not, please explain.

Yes ☒ No ☐
Comment:

Q39. Please describe the limitations that you believe should be placed on the use of RAS or SPS for single Contingency events.

Comment: Based on the interpretation of the above question, we are providing two responses to this question. The first responds to the limitations placed on RAS, regardless of what action the RAS initiates. The second response specifically addresses RAS that trips generation.

Response 1: RAS should be allowed for single contingency events. Any sort of RAS should be permitted, but there should be a review of the RAS. If the local entities agree to the RAS, it should be allowed. This addresses cost vs. benefit balance. Entities affected should be the ones that determine the best solution for their situation.

Response 2: Generation tripping can be used for single contingency if such application can be demonstrated through transmission planning studies that:

- The generation tripping is planned and controlled ("planned and controlled" means a pre-planned action(s) based on predetermined system conditions that take corrective measure(s) to maintain acceptable system performance).
- The generation tripping does not result in non-consequential load loss.
- System frequency should be within allowable limits.
- System voltage dip and deviation should be within allowable limits.
- The generator owner(s) agrees to the tripping as planned.

Q40. When RAS or SPS are allowed, what conditions should be met when these systems are used in system adjustments to meet performance requirements?

Comment: System adjustment involves operator intervention that would be beyond the time frame of RAS operation. Therefore, if a unit is already dropped during RAS or SPS action, it should be assumed to be off-line during system adjustment period.

G. General Questions

Q41. If you are aware of any regional variances that would be required as a result of these standards, please identify them here.

Yes ☒ No ☐
Comment: Yes. WECC allows tripping of generators to meet single contingency performance requirements. WECC also allows planned and controlled load shedding for the proposed Planning Events P2-1, P2-2, P3, P4 and P5, although we agree with the proposed requirements for P4 due to the higher probability of occurrence. If the standard does not allow for non-consequential load shedding of 300 kV and above for P5 scenarios, WECC will develop a regional variance".

Q42. If you are aware of any conflicts between the proposed standards and any regulatory function, rule order, tariff, rate schedule, legislative requirement or agreement, please identify them here.

Yes ☒ No ☐
Comment: 1) FERC Order 693, Paragraph 1825 regarding TPL-003, Category C – The Commission directed the ERO to modify footnote (c) to Table 1 to clarify the term “controlled load interruption” rather than

eliminate its applicability to this performance requirement. 2) FAC-010-1, R2.3 – "…planned or controlled interruption…" This conflicts with "No" for non-consequential load loss allowed in draft TPL.

Q43. Do you have any other questions or concerns with the proposed standard that have not been addressed? If yes, please explain.

Yes ☒ No ☐

Comment: 1. R1.3 requires the provision of firm transfer/Interchange Schedules and resources required to supply load for each Balancing Authority. It may not be possible to have reasonably accurate information on firm transfers and Interchange Schedules for years into the future. Within WECC, we develop base cases that represent reasonably stressed conditions that model power flows stressing various paths. Therefore, within WECC, we design the system to operate at levels that can support all sorts of commerce, including the effects of loop flow, and firm and non-firm contracts, in addition to other possibilities. It would be difficult to develop information from this mixture that includes only firm transactions for such future base cases. In addition, WECC does not allow operations at levels not previously studied. Therefore, an exercise to determine firm transaction/schedules would produce information that will be of little value to support reliability in WECC.

2. R2.7.1.2 requires identification of system deficiencies and accociated corrective action for the Long Term Transmission Planning Horizon. This requirement needs to tie to the lead times to implement the corrective action(s). For example, if a 500 kV transmission line is needed to correct a deficiency that surfaces in the tenth year, then this requirement is reasonable. However, if the deficiency is on a low voltage system, that can be resolved with short lead-time projects (such as installing a small capacitor bank) then this requirement would seem to be too prescriptive.

3. R1.5 requires providing modeling information as part of R1 on a number of transmission planned facilities, including circuit breakers. Since circuit breakers are part of a transmission line, we are not sure how a circuit breaker would be modeled separately, as required.

4. R3.2.1 requires that "studies shall consider the minimum steady state voltage limitations of all generators". Since generators (as well as other facilities) have both high and low voltage limits, the standard should require consideration of both high and low voltage limits.

5. In R.3.2.2, please provide a reference for relay loadability.

6. R.3.3.2.1. requires that Consequential Load loss (expected maximum demand and expected duration) following a single contingency shall be identified in the Planning Assessment. We suggest deleting this requirement. By definition, consequential load loss following a contingency can not be avoided and should not be considered an impact on the operation of the BES. It should be part of local service reliability between an entity and its local regulatory agency or contractual relationship between individual parties and not in a NERC Standard governing the operation of a BES.

7. Proposed revision to R3.5 – "Manual and automatic generation runback and generator tripping are allowed as a response to single and multiple contingencies as long as Facility Ratings are not exceeded and the result of the generator action, such as loss of reactive resource, impact on reserves, and restart time of tripped unit(s), meets the performance requirements in the tables."

Example for the need for flexibility in the selection of generation runback and/or tripping to meet the requirements of R3.5 – The time period for a particular Emergency Rating might require faster generation redispatch than a runback or set of runbacks are capable of providing. Therefore, it may be necessary to trip one 100 MW unit rather than runback several units for a total of 100 MW. Planning and Operations need flexibility to coordinate with the requirements of Engineering who established the Facility Ratings.

No need for R3.6 with above revision to R3.5.

8. Performance standard "P5" (Q.21- 23) does not allow for the use of load shedding (safety nets) required by some utilities to protect against cascading outages if a transmission line is already out of service and a forced outage of another major element occurs. "System adjustments" might not be possible in a load pocket or local load-serving area to prevent "non-consequential load loss" after loss of a second transmission line to the load-serving area. The use of load shedding for such rare events is an established practice and least cost alternative that does not unreasonably compromise reliability of the WECC system. It is also an acceptable and necessary tradeoff from over burdening customers with additional expensive transmission lines and permitting risk in the West where remote generation resources have historically required power to be carried over long distances.

The tradeoffs between economics (building hundreds of miles of new transmission lines or build out hundreds of MW of new load-side generation versus load shedding schemes) and the impact of these rare events should be under the purview of local and state jurisdictions, as long as impacts do not result in cascading events outside of the affected jurisdiction. As long as interconnected reliability or neighboring system operation is not negatively impacted, customer interruption size and frequency should be left to the Transmission Providers discretion and to the jurisdiction of state regulators. The amount of load to be shed and its frequency is primarily an issue for state jurisdiction because it is a matter of the cost/benefit associated with customer service regardless of the voltage level problem. In general, incidences of non-consequential loss of customer load events related to contingencies on the back-bone transmission system are rare when compared to other causes of customer outages. Assuming interruptions to customer service are significant, the state regulators and other related constituents will ultimately be responsible for approving any transmission line facilities or generation additions needed to assure reliability.

Implementing an immediate change to this current established practice is not rational or technically feasible due to the long and arduous regulatory and permitting processes that are required to construct new transmission facilities or new load-side generation. Implementation of the standard as written would take many years. At a minimum, even if it is determined that Congress's intent was to create stricter standards, a phase-in period must be included to allow utilities time to obtain necessary permits, regulatory approval and cost recovery to meet the stricter standards.

NERC
NORTH AMERICAN ELECTRIC RELIABILITY CORPORATION

Comment Form for First Draft of TPL-001-1 — Transmission System Planning Performance Requirements

Please use this form to submit comments on the proposed draft of TPL-001-1. Comments must be submitted by **Friday, October 26, 2007**. You may submit the completed form by e-mail to sarcomm@nerc.net with the words "TPL-001 Draft 1" in the subject line. If you have questions please contact Ed Dobrowolski at ed.dobrowolksi@nerc.net or by telephone at 609-947-3673.

Individual Commenter Information **(Complete this page for comments from one organization or individual.)**		
Name:		
Organization:		
Telephone:		
E-mail:		
NERC Region (check all Regions in which your company operates)		**Registered Ballot Body Segment (check all industry segments in which your company is registered)**
☐ **ERCOT**	☐	1 — Transmission Owners
☐ **FRCC**	☐	2 — RTOs and ISOs
☐ **MRO**	☐	3 — Load-serving Entities
☐ **NPCC**	☐	4 — Transmission-dependent Utilities
☐ **RFC**	☐	5 — Electric Generators
☐ **SERC**	☐	6 — Electricity Brokers, Aggregators, and Marketers
☐ **SPP**	☐	7 — Large Electricity End Users
☐ **WECC**	☐	8 — Small Electricity End Users
☐ **NA – Not Applicable**	☐	9 — Federal, State, Provincial Regulatory or other Government Entities
	☐	10 — Regional Reliability Organizations and Regional Entities

Group Comments (Complete this page if comments are from a group.)

Group Name: **WECC Committees and Subgroups**

Lead Contact: **Steve Rueckert**

Contact Organization: **WECC**

Contact Segment: **10**

Contact Telephone: **801 883-6878**

Contact E-mail: **steve@wecc.biz**

Additional Member Name	Additional Member Organization	Region*	Segment*
Jay Seitz	USBR	**WECC**	4
Kevin Conway	GCPD	WECC	4
Alan Roth	Calpine	WECC	5
Thomas Green	Public Service Co. of Colorado (XCEL)	WECC	1
Brian Keel	Salt River Project	WECC	1
Bill Hosie	TransCanada Energy	WECC	4
Robert Kondziolka	SRP	WECC	1
Tom Duane	Public Service Company of New Mexico	WECC	1,3
Dan Lyons	Aquila	WECC	1
John Collins	Platte River Power	WECC	1

*If more than one Region or Segment applies, please list all that apply. Regional acronyms and segment numbers are shown on prior page.

Background

The purpose of this standard is to establish Transmission System planning performance requirements within the planning horizon to develop a Bulk Electric System that will operate reliably over a broad spectrum of System conditions and following a wide range of probable Contingencies. This standard will replace TPL-001-0, TPL-002-0, TPL-003-0, and TPL-004-0. The standard drafting team has not yet addressed TPL-005-0 and TPL-006-0, but will address these two standards during the next phase of the drafting process.

The major objectives of the standard drafting team are to:

1) Ensure the standard is complete and the requirements are set at an appropriate level to ensure reliability (Not Least Common Denominator)
2) Ensure that the standard is enforceable by having clearly defined requirements with unambiguous language
3) Address the issues raised by FERC Order 693, 890, and other applicable orders
4) Address the issues raised in the original Standards Authorization Request (SAR) and the Supplemental SAR.

The standard drafting team did not attempt to edit the existing standards but rather chose to write one standard that addresses all aspects of transmission planning in the existing TPL-001-0, TPL-002-0, TPL-003-0, and TPL-004-0. The standard drafting team organized the new standard in the following sections:

R1 – Modeling requirements
R2 – Assessment and Corrective Plan requirements
R3 – Steady State Analysis requirements
R4 – Stability Analysis requirements
R5 – Coordination requirements

The standard drafting team determined that the requirements and analysis for Steady State are different from those for stability. As such, the standard drafting team separated the analysis requirements and created two performance requirement tables.

The standard drafting team recognizes that this draft standard is a starting point for industry input into the standard and that there is still a lot of work required to complete the process. The standard drafting team has made many changes to clarify requirements, add requirements, and make some of the performance requirements stricter. The standard drafting team has not addressed Measures, Risk Factors, Violation Severity Factors, or Time Horizons at this time. These will be addressed when the standard drafting team has better defined the requirements of the standard.

For questions where you agree with the standard drafting team, please state that you agree and if available, please provide supporting documentation. If you disagree with the standard drafting team, please explain why you disagree and provide data to support your position, such as outage data or analysis. If you believe that we have made a performance requirement too strict please provide supporting documentation. If applicable, please include the approximate cost in man-hours for additional studies and/or cost in $Millions for additional transmission investment to meet the new requirements or the stricter requirements. If you believe that the standard should be stricter, please provide the

rationale along with any supporting data, including existing practices, cost estimates or additional analysis.

To improve the standard, the standard drafting team would appreciate responses to as many of these questions as you can answer.

A. New Definitions

Many of the concerns about the existing TPL standards come from the fact that a number of generally understood concepts are embedded in undefined terms, tables, and footnotes. To clarify some of these concerns, the standard drafting team is proposing new definitions. Please indicate whether you agree with the following proposed definitions and provide proposed changes to the definitions if you disagree:

Definition	**Agree or Disagree**
Q1. **Base Case**: Computer representation of the projected initial or starting Transmission System conditions for a specific point in time. Each base case reflects the forecasted Load at each bus (or node) on the interconnected Transmission System, the transmission facilities which deliver the generation and reactive resources to the connected Load, and the generation dispatch including firm transaction obligations assumed to supply the connected Load. The models also reflect facility ratings in accordance with FAC-008 & FAC-009.	☒Agree. ☒Do not agree.
Q1. **Comment: A Base Case can only represent the amount of transactions required to serve connected load modeled in the case (local load?). A Path Rating case (developed to represent maximum transfers on a path) would not be considered a base case under this definition. WECC develops base cases to study high power transfers under stressed conditions. Such high power transfers necessarily include both firm and non-firm transaction obligations. Therefore, a base case that represents firm transactions to support "connected load" only, cannot be used to support studies of maximum possible power transfer and is of limited value in WECC. We agree that the above definition is one definition of a base case, but we feel that it can not be the only definition or the limiting definition. We suggest that wording be included that reflects the concept of modeling forecasted or above forecasted load levels if desired, and both firm and non-firm transactions if necessary to model anticipated maximum transfers and represent stressed system conditions as well.** **The definition should refer to the base case as a Computer Simulation Model of the power system, not a Computer Representation of the transmission system, since it is used within a computer program and represents load and generation in addition to transmission. References to "the generation dispatch and firm transaction obligations to supply the connected load" should be removed.** **A base case is a starting case for any condition that needs to be studied, not just a firm transactions case. Firm obligations across the transmission system are many times independent of a specific load service obligation.**	
Q2. **Consequential Load Loss:** Load that is no longer served	☒Agree.

because it is directly connected to an element(s) that is removed from service due to fault clearing action or mis-operation.	☒Do not agree.
Q2. **Comment: Agree with the definition in concept. However, the wording makes the definition seem unrealistic. There are many examples where a certain amount of voltage sensitive load or motor drives sensitive to angle changes are dropped due to normally cleared electrical faults on the transmission system. These loads are not directly connected to the element being removed from service. This type of sympathetic loss of load is unique to the individual customer load. The design of these loads is not under the control of the utilities when it comes to ability to ride through normally cleared faults. We suggest that this definition be modified to include the loss of sensitive load that is not directly connected to the element being removed.** **We propose the following the definition : Load that is no longer served because it is directly connected to an element(s) that is removed from service due to fault clearing action or mis-operation, and because of sympathetic tripping associated with normal clearing or mis-operation. Load that is lost because it trips due to low voltages experienced during and immediately following the fault (4-6 cycles?) is also considered consequential load loss. We believe this additional recognition is needed because load lost due to low fault voltages is unavoidable and should not result in a standard violation.**	
Q3. **Extreme Events:** Events which are more severe than Planning Events and have a low probability of occurrence.	☒Agree. ☒Do not agree.
Q3. **Comment: Please add the phrase "two or more elements out of service" to the definition from the previous definition in Table I.**	
Q4. **Long-Term Transmission Planning Horizon:** Transmission planning period that covers years six through ten or beyond.	☒Agree. ☐Do not agree.
Q4. **Comment:**	
Q5. **Near-Term Transmission Planning Horizon:** Transmission planning period that covers years One through five.	☒Agree. ☐Do not agree.
Q5. **Comment:**	
Q6. **Non-Consequential Load Loss:** Load loss other than Consequential Load Loss. For example, Load loss that occurs through manual (operator initiated) or automatic operations such as under-voltage Load shedding, under-frequency Load shedding, or Special Protection Systems.	☐Agree. ☒Do not agree.
Q6. **Comment: Please add "or Remedial Action schemes" to the end of the definition. FERC Order 693, paragraph 1773 states (6)"clarifies footnote (b) to Table 1 to allow no firm load or firm transactions to be interrupted except for consequential load loss." There needs to be a distinction made between Interruptible Load and Firm Demand.**	
Q7. **Planning Assessment:** Documented evaluation of future Bulk Electric System needs by the use of performance studies that	☒Agree.

cover a range of assumptions regarding system conditions, time frames, future plans including capital reinforcements and operating procedures and other factors, such as asset conditions and age.	☒Do not agree.
Q7. **Comment: As identified by the modifications above, we believe the definition should be changed to read, "Documented evaluation of future Bulk Electric System needs by the use of performance studies (steady state and dynamic) that cover a range of reasonable or expected assumptions regarding system conditions, applicable time frames, and future plans; including capital reinforcements and operating procedures, SPS/RAS, and other factors (such as asset conditions and age)."**	
Q8. **Planning Events:** Events which require Transmission system performance requirements to be met.	☒Agree. ☐Do not agree.
Q8. **Comment:**	
Q9. **Plant Stability Study:** Study of an individual plant's Stability for various Contingencies in the vicinity of the plant; concerned with the effect on the System of the generating units' loss of synchronism and the damping of the generating units' power oscillations.	☐Agree. ☒Do not agree.
Q9. **Comment: Plant Stability seems to be a subset of System Stability. Introducing a new term can cause confusion.**	
Q10. **System Stability Study:** Study of the System or portions of the System to ensure that angular Stability is maintained, inter-area power oscillations are damped, and voltages during the dynamic simulation stay within acceptable performance limits.	☒Agree. ☐Do not agree.
Q10. **Comment:**	
Q11. **Year One:** The first year that a Transmission Planner is responsible for studying. This is further defined as the planning window that begins the next calendar year from the time the Transmission Planner submits their annual studies. Analysis conducted for time horizons within the calendar year from the study publication are assumed to be conducted under the auspices of Operations Planning.	☒Agree. ☐Do not agree.
Q11. **Comment:**	

B. Sensitivity Studies

The draft planning standard includes the requirement, as specified in FERC Order 693, that planning decisions be based on a portfolio of analyses. In section 12.a.ii "Sensitivity studies and critical system conditions" FERC provided direction to consider a full range of variables considered to be significant that need to be assessed and documentation provided that explains the rationale for the selection of variables assessed.

In addition to the firm obligation scenario, the portfolio of analyses should be supplemented to include information from sensitivity analysis. The sensitivity analysis should be developed using additional cases that simulate reasonably stressed system conditions. The standard drafting team has included several parameters that can be varied to create the requisite sensitivity case(s). The draft standards specify that the sensitivities reflect one or more of the following conditions and that documentation be provided explaining the

rationale for selecting the sensitivity(ies) employed. The parameters that should be varied include:

- Higher or lower Load forecasts from the Base Case with variability of Load/demand and Load power factors due to season, weather, or time of day.
- Modification of expected transfers.
- Unavailability of long lead time facilities.
- Variability and outages of Reactive Resources.
- Generation additions, retirements, or other dispatch scenarios.
- Decreased effectiveness of controllable Loads and Demand Side Management.
- Modification of planned Transmission outages

To help focus industry discussion, please respond to the questions below:

Q12. Should the standard provide more specific direction regarding the number of sensitivity cases that need to be developed?

Yes ☐ No ☒

Comment: The TP or PA is the most familiar with the system and so would be the best to determine the sensitivities that are more applicable to their particular system. The Standard should not be overly prescriptive. The Standard can make suggestions or list potential sensitivities but let the TP or PA determine those variables to study and the reasonable range of the sensitivities.

Q13. Should the standard specify the required changes, such as changes in expected transfers, load forecasts, generation patterns, etc., from the study case to be considered a "reasonably stressed" case?

Yes ☐ No ☒

Comment: No, as in the response for Question #12. The TP is the best to determine the type of stressing needed for a particular case. This is very evident in the type of cases used for studies in the different parts of the NERC regions.

Q14. The SDT proposes to require the use of sensitivity studies for Near-Term Transmission System Planning Horizon stability analysis. Do you concur with the use of sensitivity analysis in dynamic studies?

Yes ☒ No ☒

Comment: We concur with the use of sensitivities as long as the TPs are allowed to determine the sensitivities that are the more appropriate for their systems and not have the sensitivities scripted in the Standard.

Q15. The draft TPL standard does not require the use of sensitivity studies for the Long-Term Transmission System Planning Horizon (year six and beyond) studies. Do you concur with this approach or should there be some level of sensitivity analysis required for the long-term period?

Yes ☒ No ☐

Comment: We agree with this conclusion. The Standard language should state that sensitivities are not required in Long-Term Transmission System Planning Horizon but the TP could use sensitivities if desired.

C. Corrective Action Plans

Requirement R2.7 of the standard states that when analysis shows that the performance requirements in Table 1 and Table 2 are not fully met, a Corrective Action Plan that utilizes

all or some of the Transmission System enhancements, generation additions, DSM, new technologies and Operating Procedures shall be included in the Planning Assessment. This Corrective Action Plan should ensure that upon its implementation the identified system deficiencies will be corrected so that the performance requirements in Table 1 and Table 2 will be met. Furthermore, studies included in the Planning Assessment should demonstrate that this is indeed the case.

Q16. Requirement R2.7.1: Such Corrective Action Plans shall "Identify System deficiencies and the associated actions needed to achieve required System performance including Transmission and generation improvements, DSM, new technologies, or Operating Procedures including the duration of Interim Operating Procedures". System deficiencies may be corrected using an integrated plan, i.e., an optimal mix of Transmission, generation, DSM and Operating Procedures. Should DSM be considered in conjunction with other measures in developing Corrective Action Plans? If yes, please comment on how the impact of DSM should be included.

Yes ☒ No ☒

Comment: It is unclear whether "DSM" in this question refers to reduction in load or increases in distributed resources, or if the resources are directly controllable by the transmission operator. DSM could be used in the mix of solutions that are used to determine the optimal solution for a transmission issue. However, we have concerns about the use of DSM, that is not under the direct control of the Transmission Operator as a stand alone transmission system solution. Please remember the overstated returns from DSM in the last decade that did not materialize. If these overstated values had been used as a transmission system enhancement, then the system would have been compromised with emergency operating solution until the effective transmission enhancements could be realized.

Q17. Requirement R2.7.2: Such Corrective Action Plans shall "Be added to study cases and the cases re-tested to show that the System with planned additions meets the performance requirements in the tables". Should new studies, including the facilities comprising the Corrective Action Plan, be performed to assess System normal performance and Contingency response for conditions that previously resulted in the System deficiencies (without the planned additions) and also demonstrate that the changes would not result in inadvertent negative impacts on the System. If you "agree", please comment on how a study area should be determined.

Yes ☐ No ☒

Comment: No, this is too onerous. We recognize that, when planning the system and developing a Corrective Action Plan, the transmission planner would have added the potential projects individually (or in small groups) into a case to re-test the system performance. Hoever, R2.7.2 seems to require that all potential projects be added back into the case simultaneously for retesting. There could be many different alternative solutions for each potential problem identified in the different study years without having the base solution first determined for a nearer term case. There can be many combinations of potential solutions for cases further into the future that satisfy the condition being studied. For example, a voltage problem can be solved by the addition of capacitors, completing a bus tie, adding a short line, operating procedure, changing generation dispatch, etc. Even assuming that one set of solutions are picked so the verification study can be performed, logistically this demonstration may be too close to the assessment in the following year. Instead of retesting the potential projects in the Corrective Action Plan on the original base case, it may be better to test them in the base cases prepared for following year's study. Any potential problem that is unresolved will show up again in the following year's assessment. Therefore, a separate demonstration using an "older" case may not be an efficient use of the TPs' and PAs' time and resources.

Q18. Requirement R2.7.3: The standard calls for a differentiation between committed and proposed projects. Do you agree that they should be treated separately? If not, please state why not.

Yes ☐ No ☒
Comment: The definition of these terms can be vastly different across all TPs. How would this be effectively monitored for compliance with such different definitions? Also, each TO's criteria to go from a proposed project to a committed project can change over time due to other needs and requirements.

Q19. Requirement R2.7.4: For such Corrective Action Plans "Committed projects shall not be removed without documentation to show that the revised plan meets the performance requirements". Do you agree or disagree with this requirement? If you disagree, please explain why.

Yes ☐ No ☒
Comment: The requirement is similar to the question posed in Question 17. What is the documentation that proves this is needed?

D. Performance Requirements

The proposed revised planning standard (TPL-001-1) incorporates a number of changes in requirements as compared to the current planning standards (TPL-001-0 through TPL-004-0), which it is expected to replace. Among other things these changes are intended to clarify the standard, address issues described by FERC, and, in particular, to "raise the bar." Strengthening the planning standards in selected areas is necessary to maintain a reliable Bulk Electric System that is up to the challenges of the 21st Century. In proposing the requirements in this draft, the standard drafting team attempted to balance the value of increased reliability against any potential increase in work and costs to meet the new proposed standard.

The standard drafting team is seeking input from the industry to determine whether a proper balance has been achieved. The areas where material changes are proposed in this draft are enumerated below, and questions are posed by the standard drafting team to obtain industry comment. In formulating your responses, please keep in mind that material changes in the final standard will be accompanied by a transition plan to provide for an orderly implementation of the final standard.

The performance requirements relative to Non-Consequential Loss of Load for the following events enumerated in the two tables can be considered more stringent than the existing TPL standards. Furthermore, the proposed standard is based on an assumption that performance requirements for EHV facilities should be more stringent than for lower voltage facilities.

Do you agree that Non-Consequential Loss of Load should not be permitted for the following events? If you disagree, please provide a reason for your disagreement.

Event	Agree or Disagree	Comment
Q20. P2-1: Loss of bus section (SLG for stability) above 300 kV	☐Agree. ☒Do not agree.	The Bulk Electric System has been developed without this requirement. Before making the entire NERC system adopt this more stringent Standard, the SDT needs to show or address the benefits of this more stringent requirement with the cost of adaptation. Compliance with this standard as

		proposed could require some utilities to add hundreds of miles of new transmission lines or build out hundreds of MW of new load-side generation. Cost of these new facilities would eventually be borne by the end-use customer. A cost benefit balance has been arrived at over many years time between the customers and the regulators. Also, how will existing systems be handled for compliance? Is there a logical reason for the use of the 300kV cut-off level? We believe that this type of load shedding should be allowed for these conditions at any voltage level. In any case, consideration should also be taken on whether the non-consequential load loss is Interruptible load or firm demand.
Q21. P5-1: For facilities above 300 kV, loss of a Transmission circuit followed by System adjustment[1] followed by loss of another Transmission circuit	☐Agree. ☒Do not agree.	The Bulk Electric System has been developed without this requirement. Before making the entire NERC system adopt this more stringent Standard, the SDT needs to show or address the benefits of this more stringent requirement with the cost of adaptation. Compliance with this standard as proposed could require some utilities to add hundreds of miles of new transmission lines or build out hundreds of MW of new load-side generation. Cost of these new facilities would eventually be borne by the end-use customer. A cost benefit balance has been arrived at over many years time between the customers and the regulators. Also, how will existing systems be handled for compliance? Is there a logical reason for the use of the 300kV cut-off level? We believe that this type of load shedding should be allowed for these conditions at any voltage level. In any case, consideration should also be taken on whether the non-consequential load loss is Interruptible load or firm demand.
Q22. P5-2: For facilities above 300 kV, loss of a Transmission circuit followed by System adjustment followed by loss of a transformer with low side voltage rating above 300 kV	☐Agree. ☒Do not agree.	The Bulk Electric System has been developed without this requirement. Before making the entire NERC system adopt this more stringent Standard, the SDT needs to show or address the benefits of this more stringent requirement with the cost of adaptation. Compliance with this standard as

		proposed could require some utilities to add hundreds of miles of new transmission lines or build out hundreds of MW of new load-side generation. Cost of these new facilities would eventually be borne by the end-use customer. A cost benefit balance has been arrived at over many years time between the customers and the regulators. Also, how will existing systems be handled for compliance? Is there a logical reason for the use of the 300kV cut-off level? We believe that this type of load shedding should be allowed for these conditions at any voltage level. In any case, consideration should also be taken on whether the non-consequential load loss is Interruptible load or firm demand.
Q23. P5-3: For facilities above 300 kV, loss of a transformer with low side voltage rating above 300 kV followed by System adjustment followed by loss of another transformer	☐Agree. ☒Do not agree.	The Bulk Electric System has been developed without this requirement. Before making the entire NERC system adopt this more stringent Standard, the SDT needs to show or address the benefits of this more stringent requirement with the cost of adaptation. Compliance with this standard as proposed could require some utilities to add hundreds of miles of new transmission lines or build out hundreds of MW of new load-side generation. Cost of these new facilities would eventually be borne by the end-use customer. A cost benefit balance has been arrived at over many years time between the customers and the regulators. Also, how will existing systems be handled for compliance? Is there a logical reason for the use of the 300kV cut-off level? We believe that this type of load shedding should be allowed for these conditions at any voltage level. In any case, consideration should also be taken on whether the non-consequential load loss is Interruptible load or firm demand.

[1]System adjustment can be manual or automatic.

The proposed standard is based on an assumption that performance requirements for non-bus tie EHV breakers should be distinguished from other breakers. Do you agree that Non-Consequential Loss of Load should not be permitted for this event?

Q24. Loss of non-bus tie breaker (above 300 kV) due to internal fault

Yes ☐ No ☒
Comment: We disagree that non-consequential loss of load should not be permitted for this contingency event. We believe that planned and controlled interruption of non-consequential load should be permitted for loss of a non-bus tie breaker (above 300 kV). Losing a non-bus tie breaker could result in simultaneous loss of two or more elements, depending on the bus configuration. Allowing planned and controlled disconnection of some load in the areas would not only prevent cascading and instability (which could result in uncontrolled loss of a larger amount of load), but also enables faster load restoration. Losing a breaker due to an internal fault is a low probability event. To meet this requirement as proposed would require severe pre-contingency curtailment of power transfers, that could impact commerce and/or construction of large number of transmission facilities with the attendant environmental impacts and increased cost to customers.

The proposed standard is based on an assumption that performance requirements for non-bus tie EHV breakers should be distinguished from other breakers and that performance requirements for EHV facilities should be more stringent than for lower voltage facilities. Do you agree that Non-Consequential Loss of Load should not be permitted for this event?

Q25. P3-1: Loss of (SLG for stability) either a generator, a Transmission circuit, a transformer, or a bus and a stuck non-bus tie breaker (above 300 kV)

Yes ☐ No ☒
Comment: We disagree that non-consequential loss of load should not be permitted for this contingency event. We believe that planned and controlled interruption of non-consequential load should be permitted for loss of either a generator, a transmission circuit, a transformer, or a bus and a stuck non-bus tie breaker (above 300 kV). This contingency event could result in simultaneous loss of two or more elements, depending on the bus configuration. Allowing planned and controlled disconnection of some load in the areas would not only prevent cascading and instability (which could result in uncontrolled loss of a larger amount of load), but also enables faster load restoration. These contingencies are low-probability events. To meet this requirement as proposed would require severe pre-contingency curtailment of power transfers, that could impact commerce and/or construction of a large number of transmission facilities with the attendant environmental impacts and increased cost to customers.

The proposed standard is based on an assumption that the following events are relatively high probability events and, therefore, Non-Consequential Loss of Load should not be permitted. Do you agree? If you disagree, please provide a reason for your disagreement.

Event	Agree or Disagree	Comment
Q26. P4-1: Loss of a Generator followed by System adjustment[1] followed by loss of another Generator	☒Agree. ☐Do not agree.	We agree that Non-Consequential Loss of Load should not be permitted. Loss of a generator has higher probability and longer duration than other contingency events. Overlapping outage of a second element while one generator is already out of service and system adjusted would likewise have higher probability than other multiple contingency events.
Q27. P4-2: Loss of a generator followed by a System adjustment followed	☒Agree. ☐Do not agree.	We agree that Non-Consequential Loss of Load should not be permitted. Loss of a generator has higher probability

[1] System adjustment can be manual or automatic

by the loss of a monopolar DC line		and longer duration than other contingency events. Overlapping outage of a second element while one generator is already out of service and system adjusted would likewise have higher probability than other multiple contingency events.
Q28. P4-3: Loss of a generator followed by System adjustment followed by loss of a Transmission circuit	☒Agree. ☐Do not agree.	We agree that Non-Consequential Loss of Load should not be permitted. Loss of a generator has higher probability and longer duration than other contingency events. Overlapping outage of a second element while one generator is already out of service and system adjusted would likewise have higher probability than other multiple contingency events.
Q29. P4-4: Loss of a generator followed by System adjustment followed by loss of a transformer	☒Agree. ☐Do not agree.	We agree that Non-Consequential Loss of Load should not be permitted. Loss of a generator has higher probability and longer duration than other contingency events. Overlapping outage of a second element while one generator is already out of service and system adjusted would likewise have higher probability than other multiple contingency events.

The performance requirement for the following event may be considered less stringent than the existing TPL Standards — P2-3: Loss of a single pole of a DC line. Interruption of firm transactions (without Loss of firm Load) if the transaction is dependent on the faulted DC line is now allowed for this initiating event/Contingency.

Q30. Do you agree that interruption of any firm transfers that are dependent on the outaged DC line that is taken out of service should be permitted?

Yes ☒ No ☒

Comment: We agree with the question asked. In addition, transactions that can be interrupted due to the loss of a DC line should not be limited to the firm transactions, that are dependent on the DC line. It should also include interruptible transactions and other transactions made available through negotiated agreements on both AC and DC lines.

E. Stability

Q31. The proposed standard is based on an assumption that steady state analysis and stability analysis are different from each other and that therefore, two tables of Contingencies and performance requirements were needed. It is also based on an assumption that stability study requirements should be clearly separated from the steady state study requirements. Do you agree with the action taken in separating stability analysis from steady state analysis? If not, please explain.

Yes ☒ No ☒

Comment: We agree with the question asked. In addition, because of the time sequence from the start of the fault, through fault clearing and transient dynamic period, the post-transient period to the steady state post-contingency period, there needs to be clear links between the performance requirements in the transient dynamic time period and the steady state time period. For example, if generator dropping or controlled load interruption is allowed in the transient dynamic period, it should also be allowed in the steady state time period that follows. Otherwise, it would put the Transmission Planners and the Planning Authorities in an untenable situation because, once a generator or load is dropped in the first few cycles after the disturbance; it cannot be required to be on line in the minutes that immediately follow.

Q32. The SDT has added requirements for plant stability studies and has drawn a distinction in these studies from System stability studies. Do you agree with this approach? If not, please explain.

Yes ☐ No ☒

Comment: It appears that Plant Stability Study is a subset of System Stability Study. R4.6.2 states these shall be performed for changes in real power output of a generating unit by more than 10%. Then it states they shall be performed for planning events. R4.5 already covers any contingencies that are an issue and the system already needs to meet some level of performance for loss of the generator. It seems that a change in generation would already be analyzed from a system standpoint as stated in R2.4.3. It appears that material changes to existing generators should be reflected in modeling requirements elsewhere.

Q33. The existing TPL-004-0 standard has a requirement to consider the Loss of all generating units at a plant, but it was not clear whether this requirement should apply to stability studies. The SDT did not include this requirement in the stability table, because it is hard to envision a condition when all units would trip simultaneously within the timeframe of a stability simulation. Do you think this condition should be required in stability analysis of extreme events? If not, please explain.

Yes ☐ No ☒

Comment: We agree with the SDT that simultaneous 3-phase fault on all generating units in a plant is improbable and effort should be better spent studying more probable events. In any case, this Extreme Event is to be considered in the Steady State Table, and stability cases can be run if it is shown to be needed in the power flow study results. We are, however, confused by this question. This question states that the SDT did not include the requirement to consider loss of all generators at a plant in the stability, yet the Extreme Event in the stability table shows in No. 9, "3Ø fault with loss of all generating units at a station".

Q34. There are an increasing number of events with slow voltage recovery after faults on the Transmission System. The dynamic behavior of induction motor loads is a major factor in this phenomenon. The proposed standard therefore requires that the load model for stability studies of peak Load conditions include the dynamic effects of induction motors. Do you agree with this requirement? If not, please explain?

Yes ☒ No ☒

Comment: The requirement to include motor load should be extended to other load level periods and not be limited to peak load period only. However, to capture slow voltage recover phenomena, especially in areas of high penetration of refrigerated air conditioning load (e.g. 50% to 60%), would require modeling down to the distribution system voltage level and explicitly representing shunt capacitors and various induction motor types (e.g. equivalents for single phase motors). If the requirement is not extended, dynamic simulations will likely differ significantly from observed system events. We recommend a phase-in period so that the requirement for use of load models should only include regionally accepted load models for which data are available. This requirement can be extended or modified as the Region in which the entities reside adopts new load modeling guidelines.

Q35. What type of manual or automatic adjustments of generators should be allowed for single and multiple Contingencies?

Comment: All adjustments should be allowed as long as they are realistic and achievable in the time frame required and consistent with other study parameters. For example, automatic adjustments would be required for correction of a stability problem, but manual adjustment should be allowed for correction of a thermal problem if there is no instability problem.

F. Generation Runback and Tripping

The SDT has discussed the automatic and manual readjustments of generators that should be permissible for single contingencies and multiple contingencies. The existing TPL-001-0 through TPL-004-0 standards through footnote (a) of Table I could include emergency ratings applicable for short durations as required to permit operating steps necessary to maintain system control. The footnote is silent about allowable generation adjustments in response to the Category B events. However, it does indicate that system adjustments are permitted to prepare for the next Contingency. These system adjustments could include manual or automatic adjustments involving generation.

The SDT has learned that many transmission owners use System Protection Systems (SPS) or Remedial Action Schemes (RAS) to trip generation for single and multiple Contingency outage events to prevent overloads, low voltage, and instability in the Interconnected Transmission network for N-1 and N-2 events. In some cases, the RAS are used to prepare for the next Contingency; but in some cases, the RAS are used to simultaneously avoid exceeding emergency ratings.

Q36. The proposed standard allows generation runback after the disturbance that causes a single Contingency (or due to a single Contingency outage) to move the Interconnected Transmission System from an emergency state (within emergency ratings) to a normal state (within normal ratings), assuming that the disturbance does not result in instability? Do you agree? If not, please explain.

Yes ☒ No ☐
Comment:

Q37. Since emergency ratings are thermal ratings, should this standard allow an automatic generation runback scheme (that is initiated immediately after the disturbance causing the single Contingency) to prevent thermal overloads (assuming that the disturbance does not result in instability)? If yes, what are the conditions that must be met in order to allow such a runback scheme to meet the System performance criteria for single Contingencies? Please explain the reason for your answer.

Yes ☒ No ☐
Comment: Yes. Agree. Conditions for generation run back for N-1: 1) Run back of generation cannot result in tripping of firm load, 2) power flow should be within the time-limited equipment ratings, 3) frequency should be within allowable limits.

The standard drafting team has considered that RAS or SPS may be allowable under certain situations for single Contingencies, but proposes that their use should be limited.

Q38. Do you agree that RAS or SPS may be allowed for single Contingencies? If not, please explain.

Yes ☒ No ☐
Comment:

Q39. Please describe the limitations that you believe should be placed on the use of RAS or SPS for single Contingency events.

Comment: Based on the interpretation of the above question, we are providing two responses to this question. The first responds to the limitations placed on RAS, regardless of what action the RAS initiates. The second response specifically addresses RAS that trips generation.

Response 1: RAS should be allowed for single contingency events. Any sort of RAS should be permitted, but there should be a review of the RAS. If the local entities agree to the RAS, it should be allowed. This addresses cost vs. benefit balance. Entities affected should be the ones that determine the best solution for their situation.

Response 2: Generation tripping can be used for single contingency if such application can be demonstrated through transmission planning studies that:

- The generation tripping is planned and controlled ("planned and controlled" means a pre-planned action(s) based on predetermined system conditions that take corrective measure(s) to maintain acceptable system performance).
- The generation tripping does not result in non-consequential load loss.
- System frequency should be within allowable limits.
- System voltage dip and deviation should be within allowable limits.
- The generator owner(s) agrees to the tripping as planned.

Q40. When RAS or SPS are allowed, what conditions should be met when these systems are used in system adjustments to meet performance requirements?

Comment: System adjustment involves operator intervention that would be beyond the time frame of RAS operation. Therefore, if a unit is already dropped during RAS or SPS action, it should be assumed to be off-line during system adjustment period.

G. General Questions

Q41. If you are aware of any regional variances that would be required as a result of these standards, please identify them here.

Yes ☒ No ☐
Comment: Yes. WECC allows tripping of generators to meet single contingency performance requirements. WECC also allows planned and controlled load shedding for the proposed Planning Events P2-1, P2-2, P3, P4 and P5, although we agree with the proposed requirements for P4 due to the higher probability of occurrence. If the standard does not allow for non-consequential load shedding of 300 kV and above for P5 scenarios, WECC will develop a regional variance".

Q42. If you are aware of any conflicts between the proposed standards and any regulatory function, rule order, tariff, rate schedule, legislative requirement or agreement, please identify them here.

Yes ☒ No ☐
Comment: 1) FERC Order 693, Paragraph 1825 regarding TPL-003, Category C – The Commission directed the ERO to modify footnote (c) to Table 1 to clarify the term “controlled load interruption” rather than

eliminate its applicability to this performance requirement. 2) FAC-010-1, R2.3 – "…planned or controlled interruption…" This conflicts with "No" for non-consequential load loss allowed in draft TPL.

Q43. Do you have any other questions or concerns with the proposed standard that have not been addressed? If yes, please explain.

Yes ☒ No ☐

Comment: 1. R1.3 requires the provision of firm transfer/Interchange Schedules and resources required to supply load for each Balancing Authority. It may not be possible to have reasonably accurate information on firm transfers and Interchange Schedules for years into the future. Within WECC, we develop base cases that represent reasonably stressed conditions that model power flows stressing various paths. Therefore, within WECC, we design the system to operate at levels that can support all sorts of commerce, including the effects of loop flow, and firm and non-firm contracts, in addition to other possibilities. It would be difficult to develop information from this mixture that includes only firm transactions for such future base cases. In addition, WECC does not allow operations at levels not previously studied. Therefore, an exercise to determine firm transaction/schedules would produce information that will be of little value to support reliability in WECC.

2. R2.7.1.2 requires identification of system deficiencies and accociated corrective action for the Long Term Transmission Planning Horizon. This requirement needs to tie to the lead times to implement the corrective action(s). For example, if a 500 kV transmission line is needed to correct a deficiency that surfaces in the tenth year, then this requirement is reasonable. However, if the deficiency is on a low voltage system, that can be resolved with short lead-time projects (such as installing a small capacitor bank) then this requirement would seem to be too prescriptive.

3. R1.5 requires providing modeling information as part of R1 on a number of transmission planned facilities, including circuit breakers. Since circuit breakers are part of a transmission line, we are not sure how a circuit breaker would be modeled separately, as required.

4. R3.2.1 requires that "studies shall consider the minimum steady state voltage limitations of all generators". Since generators (as well as other facilities) have both high and low voltage limits, the standard should require consideration of both high and low voltage limits.

5. In R.3.2.2, please provide a reference for relay loadability.

6. R.3.3.2.1. requires that Consequential Load loss (expected maximum demand and expected duration) following a single contingency shall be identified in the Planning Assessment. We suggest deleting this requirement. By definition, consequential load loss following a contingency can not be avoided and should not be considered an impact on the operation of the BES. It should be part of local service reliability between an entity and its local regulatory agency or contractual relationship between individual parties and not in a NERC Standard governing the operation of a BES.

7. Proposed revision to R3.5 – "Manual and automatic generation runback and generator tripping are allowed as a response to single and multiple contingencies as long as Facility Ratings are not exceeded and the result of the generator action, such as loss of reactive resource, impact on reserves, and restart time of tripped unit(s), meets the performance requirements in the tables."

Example for the need for flexibility in the selection of generation runback and/or tripping to meet the requirements of R3.5 – The time period for a particular Emergency Rating might require faster generation redispatch than a runback or set of runbacks are capable of providing. Therefore, it may be necessary to trip one 100 MW unit rather than runback several units for a total of 100 MW. Planning and Operations need flexibility to coordinate with the requirements of Engineering who established the Facility Ratings.

No need for R3.6 with above revision to R3.5.

8. Performance standard "P5" (Q.21- 23) does not allow for the use of load shedding (safety nets) required by some utilities to protect against cascading outages if a transmission line is already out of service and a forced outage of another major element occurs. "System adjustments" might not be possible in a load pocket or local load-serving area to prevent "non-consequential load loss" after loss of a second transmission line to the load-serving area. The use of load shedding for such rare events is an established practice and least cost alternative that does not unreasonably compromise reliability of the WECC system. It is also an acceptable and necessary tradeoff from over burdening customers with additional expensive transmission lines and permitting risk in the West where remote generation resources have historically required power to be carried over long distances.

The tradeoffs between economics (building hundreds of miles of new transmission lines or build out hundreds of MW of new load-side generation versus load shedding schemes) and the impact of these rare events should be under the purview of local and state jurisdictions, as long as impacts do not result in cascading events outside of the affected jurisdiction. As long as interconnected reliability or neighboring system operation is not negatively impacted, customer interruption size and frequency should be left to the Transmission Providers discretion and to the jurisdiction of state regulators. The amount of load to be shed and its frequency is primarily an issue for state jurisdiction because it is a matter of the cost/benefit associated with customer service regardless of the voltage level problem. In general, incidences of non-consequential loss of customer load events related to contingencies on the back-bone transmission system are rare when compared to other causes of customer outages. Assuming interruptions to customer service are significant, the state regulators and other related constituents will ultimately be responsible for approving any transmission line facilities or generation additions needed to assure reliability.

Implementing an immediate change to this current established practice is not rational or technically feasible due to the long and arduous regulatory and permitting processes that are required to construct new transmission facilities or new load-side generation. Implementation of the standard as written would take many years. At a minimum, even if it is determined that Congress's intent was to create stricter standards, a phase-in period must be included to allow utilities time to obtain necessary permits, regulatory approval and cost recovery to meet the stricter standards.

NERC
NORTH AMERICAN ELECTRIC RELIABILITY CORPORATION

Comment Form for First Draft of TPL-001-1 — Transmission System Planning Performance Requirements

Please use this form to submit comments on the proposed draft of TPL-001-1. Comments must be submitted by **Friday, October 26, 2007**. You may submit the completed form by e-mail to sarcomm@nerc.net with the words "TPL-001 Draft 1" in the subject line. If you have questions please contact Ed Dobrowolski at ed.dobrowolksi@nerc.net or by telephone at 609-947-3673.

Individual Commenter Information **(Complete this page for comments from one organization or individual.)**		
Name:	Christopher Plante	
Organization:	Wisconsin Public Service Corp	
Telephone:	920-433-1290	
E-mail:	ctplante@wisconsinpublicservice.com	
NERC Region (check all Regions in which your company operates)		**Registered Ballot Body Segment (check all industry segments in which your company is registered)**
☐ **ERCOT**	☐	1 — Transmission Owners
☐ **FRCC**	☐	2 — RTOs and ISOs
☒ **MRO**	☒	3 — Load-serving Entities
☐ **NPCC**	☒	4 — Transmission-dependent Utilities
☐ **RFC**	☒	5 — Electric Generators
☐ **SERC**	☐	6 — Electricity Brokers, Aggregators, and Marketers
☐ **SPP**	☐	7 — Large Electricity End Users
☐ **WECC**	☐	8 — Small Electricity End Users
☐ **NA – Not Applicable**	☐	9 — Federal, State, Provincial Regulatory or other Government Entities
	☐	10 — Regional Reliability Organizations and Regional Entities

Group Comments (Complete this page if comments are from a group.)

Group Name:

Lead Contact:

Contact Organization:

Contact Segment:

Contact Telephone:

Contact E-mail:

Additional Member Name	Additional Member Organization	Region*	Segment*

*If more than one Region or Segment applies, please list all that apply. Regional acronyms and segment numbers are shown on prior page.

Background

The purpose of this standard is to establish Transmission System planning performance requirements within the planning horizon to develop a Bulk Electric System that will operate reliably over a broad spectrum of System conditions and following a wide range of probable Contingencies. This standard will replace TPL-001-0, TPL-002-0, TPL-003-0, and TPL-004-0. The standard drafting team has not yet addressed TPL-005-0 and TPL-006-0, but will address these two standards during the next phase of the drafting process.

The major objectives of the standard drafting team are to:

1) Ensure the standard is complete and the requirements are set at an appropriate level to ensure reliability (Not Least Common Denominator)
2) Ensure that the standard is enforceable by having clearly defined requirements with unambiguous language
3) Address the issues raised by FERC Order 693, 890, and other applicable orders
4) Address the issues raised in the original Standards Authorization Request (SAR) and the Supplemental SAR.

The standard drafting team did not attempt to edit the existing standards but rather chose to write one standard that addresses all aspects of transmission planning in the existing TPL-001-0, TPL-002-0, TPL-003-0, and TPL-004-0. The standard drafting team organized the new standard in the following sections:

R1 – Modeling requirements
R2 – Assessment and Corrective Plan requirements
R3 – Steady State Analysis requirements
R4 – Stability Analysis requirements
R5 – Coordination requirements

The standard drafting team determined that the requirements and analysis for Steady State are different from those for stability. As such, the standard drafting team separated the analysis requirements and created two performance requirement tables.

The standard drafting team recognizes that this draft standard is a starting point for industry input into the standard and that there is still a lot of work required to complete the process. The standard drafting team has made many changes to clarify requirements, add requirements, and make some of the performance requirements stricter. The standard drafting team has not addressed Measures, Risk Factors, Violation Severity Factors, or Time Horizons at this time. These will be addressed when the standard drafting team has better defined the requirements of the standard.

For questions where you agree with the standard drafting team, please state that you agree and if available, please provide supporting documentation. If you disagree with the standard drafting team, please explain why you disagree and provide data to support your position, such as outage data or analysis. If you believe that we have made a performance requirement too strict please provide supporting documentation. If applicable, please include the approximate cost in man-hours for additional studies and/or cost in $Millions for additional transmission investment to meet the new requirements or the stricter requirements. If you believe that the standard should be stricter, please provide the rationale along with any supporting data, including existing practices, cost estimates or additional analysis.

To improve the standard, the standard drafting team would appreciate responses to as many of these questions as you can answer.

A. New Definitions

Many of the concerns about the existing TPL standards come from the fact that a number of generally understood concepts are embedded in undefined terms, tables, and footnotes. To clarify some of these concerns, the standard drafting team is proposing new definitions. Please indicate whether you agree with the following proposed definitions and provide proposed changes to the definitions if you disagree:

Definition	**Agree or Disagree**
Q1. **Base Case**: Computer representation of the projected initial or starting Transmission System conditions for a specific point in time. Each base case reflects the forecasted Load at each bus (or node) on the interconnected Transmission System, the transmission facilities which deliver the generation and reactive resources to the connected Load, and the generation dispatch including firm transaction obligations assumed to supply the connected Load. The models also reflect facility ratings in accordance with FAC-008 & FAC-009.	☒Agree. ☐Do not agree.
Q1. **Comment:**	
Q2. **Consequential Load Loss:** Load that is no longer served because it is directly connected to an element(s) that is removed from service due to fault clearing action or mis-operation.	☒Agree. ☐Do not agree.
Q2. **Comment:**	
Q3. **Extreme Events:** Events which are more severe than Planning Events and have a low probability of occurrence.	☐Agree. ☒Do not agree.
Q3. **Comment: By definition, Extreme Events are not Planning Events. However, only the definition Planning Events has a requirement to meeting performance requirements. I believe Extreme Events also have performance requirements under R3.4 and its definition should reflect this.**	
Q4. **Long-Term Transmission Planning Horizon:** Transmission planning period that covers years six through ten or beyond.	☐Agree. ☐Do not agree.
Q4. **Comment:**	
Q5. **Near-Term Transmission Planning Horizon:** Transmission planning period that covers years One through five.	☐Agree. ☐Do not agree.
Q5. **Comment:**	
Q6. **Non-Consequential Load Loss:** Load loss other than Consequential Load Loss. For example, Load loss that occurs through manual (operator initiated) or automatic operations such as under-voltage Load shedding, under-frequency Load shedding, or Special Protection Systems.	☒Agree. ☐Do not agree.
Q6. **Comment:**	

Q7. **Planning Assessment:** Documented evaluation of future Bulk Electric System needs by the use of performance studies that cover a range of assumptions regarding system conditions, time frames, future plans including capital reinforcements and operating procedures and other factors, such as asset conditions and age.	☐Agree. ☐Do not agree.
Q7. **Comment:**	
Q8. **Planning Events:** Events which require Transmission system performance requirements to be met.	☐Agree. ☐Do not agree.
Q8. **Comment:**	
Q9. **Plant Stability Study:** Study of an individual plant's Stability for various Contingencies in the vicinity of the plant; concerned with the effect on the System of the generating units' loss of synchronism and the damping of the generating units' power oscillations.	☐Agree. ☒Do not agree.
Q9. **Comment: This definition mixes the use of the word "plant" and "generator" which have two different meanings. Suggest re-naming as Generator Stability Study and allow the study of multiple generators at a single site as a plant. The use of "generator" vs. "plant" should also be consistent throughout the standard.**	
Q10. **System Stability Study:** Study of the System or portions of the System to ensure that angular Stability is maintained, inter-area power oscillations are damped, and voltages during the dynamic simulation stay within acceptable performance limits.	☐Agree. ☐Do not agree.
Q10. **Comment:**	
Q11. **Year One:** The first year that a Transmission Planner is responsible for studying. This is further defined as the planning window that begins the next calendar year from the time the Transmission Planner submits their annual studies. Analysis conducted for time horizons within the calendar year from the study publication are assumed to be conducted under the auspices of Operations Planning.	☐Agree. ☒Do not agree.
Q11. **Comment: Suggest replacing the words "annual studies" with "Planning Assessment".**	

B. Sensitivity Studies

The draft planning standard includes the requirement, as specified in FERC Order 693, that planning decisions be based on a portfolio of analyses. In section 12.a.ii "Sensitivity studies and critical system conditions" FERC provided direction to consider a full range of variables considered to be significant that need to be assessed and documentation provided that explains the rationale for the selection of variables assessed.

In addition to the firm obligation scenario, the portfolio of analyses should be supplemented to include information from sensitivity analysis. The sensitivity analysis should be developed using additional cases that simulate reasonably stressed system conditions. The standard drafting team has included several parameters that can be varied to create the requisite sensitivity case(s). The draft standards specify that the sensitivities reflect one or more of the following conditions and that documentation be provided explaining the

rationale for selecting the sensitivity(ies) employed. The parameters that should be varied include:

- Higher or lower Load forecasts from the Base Case with variability of Load/demand and Load power factors due to season, weather, or time of day.
- Modification of expected transfers.
- Unavailability of long lead time facilities.
- Variability and outages of Reactive Resources.
- Generation additions, retirements, or other dispatch scenarios.
- Decreased effectiveness of controllable Loads and Demand Side Management.
- Modification of planned Transmission outages

To help focus industry discussion, please respond to the questions below:

Q12. Should the standard provide more specific direction regarding the number of sensitivity cases that need to be developed?

Yes ☐ No ☐
Comment: Sensitivity cases do not consider/mention new transmission facilities additions. Although the Transmission Planner should have the ability to determine appropriate sensitivities, system performance based on the delay of new transmission facilities should be considered (may be covered under R2.1.3.3 but could be more explicit).

Q13. Should the standard specify the required changes, such as changes in expected transfers, load forecasts, generation patterns, etc., from the study case to be considered a "reasonably stressed" case?

Yes ☐ No ☒
Comment: The Transmission Planner should have the ability to determine appropriate sensitivities based on changes to the assumptions within the study. However, those sensitivities should be developed in an open transmission planning process consistent with the transmission planning principles within FERC Order 890.

Q14. The SDT proposes to require the use of sensitivity studies for Near-Term Transmission System Planning Horizon stability analysis. Do you concur with the use of sensitivity analysis in dynamic studies?

Yes ☒ No ☐
Comment:

Q15. The draft TPL standard does not require the use of sensitivity studies for the Long-Term Transmission System Planning Horizon (year six and beyond) studies. Do you concur with this approach or should there be some level of sensitivity analysis required for the long-term period?

Yes ☒ No ☐
Comment: The standard should require long-term sensitivity studies to the extent that the open transmission planning process within FERC Order 890 identifies the need for the sensitivities.

C. Corrective Action Plans

Requirement R2.7 of the standard states that when analysis shows that the performance requirements in Table 1 and Table 2 are not fully met, a Corrective Action Plan that utilizes all or some of the Transmission System enhancements, generation additions, DSM, new technologies and Operating Procedures shall be included in the Planning Assessment. This Corrective Action Plan should ensure that upon its implementation the identified system deficiencies will be corrected so that the performance requirements in Table 1 and Table 2 will be met. Furthermore, studies included in the Planning Assessment should demonstrate that this is indeed the case.

Q16. Requirement R2.7.1: Such Corrective Action Plans shall "Identify System deficiencies and the associated actions needed to achieve required System performance including Transmission and generation improvements, DSM, new technologies, or Operating Procedures including the duration of Interim Operating Procedures". System deficiencies may be corrected using an integrated plan, i.e., an optimal mix of Transmission, generation, DSM and Operating Procedures. Should DSM be considered in conjunction with other measures in developing Corrective Action Plans? If yes, please comment on how the impact of DSM should be included.

Yes ☒ No ☐
Comment: The effect of DSM should be considered in corrective action plans to the extent that DSM can reduce overall load growth and change the timing of new transmission facilities.

Q17. Requirement R2.7.2: Such Corrective Action Plans shall "Be added to study cases and the cases re-tested to show that the System with planned additions meets the performance requirements in the tables". Should new studies, including the facilities comprising the Corrective Action Plan, be performed to assess System normal performance and Contingency response for conditions that previously resulted in the System deficiencies (without the planned additions) and also demonstrate that the changes would not result in inadvertent negative impacts on the System. If you "agree", please comment on how a study area should be determined.

Yes ☒ No ☐
Comment: It is difficult to fully prescribe a methodology to define a "study area". It is most appropriate for the Transmission Planning to develop study areas based on and consistent with the transmission planning principles within Order 890.

Q18. Requirement R2.7.3: The standard calls for a differentiation between committed and proposed projects. Do you agree that they should be treated separately? If not, please state why not.

Yes ☒ No ☒
Comment: If the standard makes a differentiation between "committed" and "proposed" projects, definitions for each, within the standard itself, are necessary. Within the context of R2.7, it is not clear what impact the differentiation between "committed" and "proposed" has on the requirement itself. R2.7 requires Corrective Action Plans to address deficiencies within the performance analysis of the events in Table 1 and Table 2. A fundamental underpinning of R2.7 should be that Corrective Action Plans are developed consistent with the transmission planning principles of Order 890.

Q19. Requirement R2.7.4: For such Corrective Action Plans "Committed projects shall not be removed without documentation to show that the revised plan meets the performance requirements". Do you agree or disagree with this requirement? If you disagree, please explain why.

Yes ☒ No ☐
Comment: As stated in response to Q18, it is unclear why the differentiation between "committed" and "proposed" is actually necessary. The standard must allow flexibility, so that the evolution of a Corrective Action Plan can occur within the context of the transmission planning principles of FERC Order 890.

D. Performance Requirements

The proposed revised planning standard (TPL-001-1) incorporates a number of changes in requirements as compared to the current planning standards (TPL-001-0 through TPL-004-0), which it is expected to replace. Among other things these changes are intended to clarify the standard, address issues described by FERC, and, in particular, to "raise the bar." Strengthening the planning standards in selected areas is necessary to maintain a reliable Bulk Electric System that is up to the challenges of the 21st Century. In proposing the requirements in this draft, the standard drafting team attempted to balance the value of increased reliability against any potential increase in work and costs to meet the new proposed standard.

The standard drafting team is seeking input from the industry to determine whether a proper balance has been achieved. The areas where material changes are proposed in this draft are enumerated below, and questions are posed by the standard drafting team to obtain industry comment. In formulating your responses, please keep in mind that material changes in the final standard will be accompanied by a transition plan to provide for an orderly implementation of the final standard.

The performance requirements relative to Non-Consequential Loss of Load for the following events enumerated in the two tables can be considered more stringent than the existing TPL standards. Furthermore, the proposed standard is based on an assumption that performance requirements for EHV facilities should be more stringent than for lower voltage facilities.

Do you agree that Non-Consequential Loss of Load should not be permitted for the following events? If you disagree, please provide a reason for your disagreement.

Event	Agree or Disagree	Comment
Q20. P2-1: Loss of bus section (SLG for stability) above 300 kV	☐Agree. ☒Do not agree.	It is not clear why the standard has established 300 kV as the differentiation point between allowing non-consequential load loss and not allowing it. The standard has established different planning requirements for different voltage levels without establishing why the differentiation is necessary. While transmission facilities over 300 kV in some areas of the country may be considered the "backbone", it is not universally applicable; in some areas, 230 kV and even 138 kV represent the "backbone" of the transmission system. The standard should not bisect the transmission system and apply two

		different planning requirements without clearly establishing why the differentiation is necessary. Additionally, Table 1 needs to clarify the use of the term "Firm Transfers" and the interruption of "Firm Transfers" as an acceptable response to an event. "Firm transfers" is not a standard transmission service offering under the ProForma OATT. The standard must be consistent with service types defined under the ProForma OATT. Suggest that the phrasse "Firm Transfers" be replaced with "Firm Transmission Service consisting of Point-to-Point and Network Integration Transmission Service"
Q21. P5-1: For facilities above 300 kV, loss of a Transmission circuit followed by System adjustment[1] followed by loss of another Transmission circuit	☐Agree. ☒Do not agree.	See response to Q20.
Q22. P5-2: For facilities above 300 kV, loss of a Transmission circuit followed by System adjustment followed by loss of a transformer with low side voltage rating above 300 kV	☐Agree. ☒Do not agree.	See response to Q20
Q23. P5-3: For facilities above 300 kV, loss of a transformer with low side voltage rating above 300 kV followed by System adjustment followed by loss of another transformer	☐Agree. ☒Do not agree.	See response to Q20

[1]System adjustment can be manual or automatic.

The proposed standard is based on an assumption that performance requirements for non-bus tie EHV breakers should be distinguished from other breakers. Do you agree that Non-Consequential Loss of Load should not be permitted for this event?

Q24. Loss of non-bus tie breaker (above 300 kV) due to internal fault

Yes ☐ No ☐
Comment: See response to Q20

The proposed standard is based on an assumption that performance requirements for non-bus tie EHV breakers should be distinguished from other breakers and that performance requirements for EHV facilities should be more stringent than for lower voltage facilities. Do you agree that Non-Consequential Loss of Load should not be permitted for this event?

Q25. P3-1: Loss of (SLG for stability) either a generator, a Transmission circuit, a transformer, or a bus and a stuck non-bus tie breaker (above 300 kV)

Yes ☐ No ☐
Comment: See response to Q20

The proposed standard is based on an assumption that the following events are relatively high probability events and, therefore, Non-Consequential Loss of Load should not be permitted. Do you agree? If you disagree, please provide a reason for your disagreement.

Event	Agree or Disagree	Comment
Q26. P4-1: Loss of a Generator followed by System adjustment[1] followed by loss of another Generator	☒Agree. ☐Do not agree.	It is inappropriate to rely on Non-consequential loss of load as an ultimate Corrective Action Plan for this event. However, non-consequential load loss can provide interim relief until such time as the Corrective Action Plan is actually constructed and in-service.
Q27. P4-2: Loss of a generator followed by a System adjustment followed by the loss of a monopolar DC line	☒Agree. ☐Do not agree.	See response to Q26.
Q28. P4-3: Loss of a generator followed by System adjustment followed by loss of a Transmission circuit	☒Agree. ☐Do not agree.	See response to Q26.
Q29. P4-4: Loss of a generator followed by System adjustment followed by loss of a transformer	☒Agree. ☐Do not agree.	See response to Q26.

The performance requirement for the following event may be considered less stringent than the existing TPL Standards — P2-3: Loss of a single pole of a DC line. Interruption of firm transactions (without Loss of firm Load) if the transaction is dependent on the faulted DC line is now allowed for this initiating event/Contingency.

Q30. Do you agree that interruption of any firm transfers that are dependent on the outaged DC line that is taken out of service should be permitted?

Yes ☒ No ☐
Comment:

[1] System adjustment can be manual or automatic

E. Stability

Q31. The proposed standard is based on an assumption that steady state analysis and stability analysis are different from each other and that therefore, two tables of Contingencies and performance requirements were needed. It is also based on an assumption that stability study requirements should be clearly separated from the steady state study requirements. Do you agree with the action taken in separating stability analysis from steady state analysis? If not, please explain.

Yes ☒ No ☐
Comment:

Q32. The SDT has added requirements for plant stability studies and has drawn a distinction in these studies from System stability studies. Do you agree with this approach? If not, please explain.

Yes ☒ No ☐
Comment:

Q33. The existing TPL-004-0 standard has a requirement to consider the Loss of all generating units at a plant, but it was not clear whether this requirement should apply to stability studies. The SDT did not include this requirement in the stability table, because it is hard to envision a condition when all units would trip simultaneously within the timeframe of a stability simulation. Do you think this condition should be required in stability analysis of extreme events? If not, please explain.

Yes ☒ No ☐
Comment:

Q34. There are an increasing number of events with slow voltage recovery after faults on the Transmission System. The dynamic behavior of induction motor loads is a major factor in this phenomenon. The proposed standard therefore requires that the load model for stability studies of peak Load conditions include the dynamic effects of induction motors. Do you agree with this requirement? If not, please explain?

Yes ☒ No ☐
Comment:

Q35. What type of manual or automatic adjustments of generators should be allowed for single and multiple Contingencies?

Comment:

F. Generation Runback and Tripping

The SDT has discussed the automatic and manual readjustments of generators that should be permissible for single contingencies and multiple contingencies. The existing TPL-001-0 through TPL-004-0 standards through footnote (a) of Table I could include emergency ratings applicable for short durations as required to permit operating steps necessary to maintain system control. The footnote is silent about allowable generation adjustments in response to the Category B events. However, it does indicate that system adjustments are

permitted to prepare for the next Contingency. These system adjustments could include manual or automatic adjustments involving generation.

The SDT has learned that many transmission owners use System Protection Systems (SPS) or Remedial Action Schemes (RAS) to trip generation for single and multiple Contingency outage events to prevent overloads, low voltage, and instability in the Interconnected Transmission network for N-1 and N-2 events. In some cases, the RAS are used to prepare for the next Contingency; but in some cases, the RAS are used to simultaneously avoid exceeding emergency ratings.

Q36. The proposed standard allows generation runback after the disturbance that causes a single Contingency (or due to a single Contingency outage) to move the Interconnected Transmission System from an emergency state (within emergency ratings) to a normal state (within normal ratings), assuming that the disturbance does not result in instability? Do you agree? If not, please explain.

Yes ☒ No ☐
Comment:

Q37. Since emergency ratings are thermal ratings, should this standard allow an automatic generation runback scheme (that is initiated immediately after the disturbance causing the single Contingency) to prevent thermal overloads (assuming that the disturbance does not result in instability)? If yes, what are the conditions that must be met in order to allow such a runback scheme to meet the System performance criteria for single Contingencies? Please explain the reason for your answer.

Yes ☒ No ☐
Comment: The use of RAS or SPS should not constitute a long-term Corrective Action Plan to address deficiencies. The use of RAS and SPS should be limited to that period of time necessary to place facilities in-service to address the deficiency.

The standard drafting team has considered that RAS or SPS may be allowable under certain situations for single Contingencies, but proposes that their use should be limited.

Q38. Do you agree that RAS or SPS may be allowed for single Contingencies? If not, please explain.

Yes ☒ No ☐
Comment: The use of RAS or SPS should not constitute a long-term Corrective Action Plan to address deficiencies. The use of RAS and SPS should be limited to that period of time necessary to implement expansion of facilities to address the deficiency.

Q39. Please describe the limitations that you believe should be placed on the use of RAS or SPS for single Contingency events.

Comment: The use of RAS or SPS should not constitute a long-term Corrective Action Plan to address deficiencies. The use of RAS and SPS should be limited to that period of time necessary to implement expansion of facilities to address the deficiency.

Q40. When RAS or SPS are allowed, what conditions should be met when these systems are used in system adjustments to meet performance requirements?

Comment: The use of RAS or SPS should not constitute a long-term Corrective Action Plan to address deficiencies. The use of RAS and SPS should be limited to that period of time necessary to implement expansion of facilities to address the deficiency.

G. General Questions

Q41. If you are aware of any regional variances that would be required as a result of these standards, please identify them here.

Yes ☐ No ☒
Comment:

Q42. If you are aware of any conflicts between the proposed standards and any regulatory function, rule order, tariff, rate schedule, legislative requirement or agreement, please identify them here.

Yes ☐ No ☒
Comment:

Q43. Do you have any other questions or concerns with the proposed standard that have not been addressed? If yes, please explain.

Yes ☒ No ☐
Comment: Within R1.1.2, the Planning Coordinator and the Transmission Planner is required to define what constitutes "normal weather patterns" for the purpose of establishing load forecasts. However, the PC and/or TP are not the appropriate entities to establish "normal weather patterns"; the LSEs, who actually develop load forecasts and have the expertise, are the appropriate entities to establish normal weather patterns. Additionally, this requirement should consider requiring the 50/50 probability load forecast from the LSEs.

Consideration of Comments — 1st Draft of TPL-001-1 — Transmission System Planning Performance Requirements

The Assess Transmission Future Needs Standards Drafting Team thanks all commenters who submitted comments on the first draft of the standard. This standard was posted for a 30-day public comment period from September 12, 2007 through October 26, 2007. The drafting team asked stakeholders to provide feedback on the standard through a special Standard Comment Form. There were more than 80 sets of comments, including comments from 236 different people from more than 80 companies representing 9 of the 10 Industry Segments as shown in the table on the following pages.

Based on the comments received, the drafting team is recommending a second posting of the revised standard.

Definitions and the following requirements have been changed due to industry comment as specifically cited in the responses:

Definitions

- Base Case - the SDT removed "Base Case" as a defined term.
- Bus-tie Breaker – the SDT added a definition.
- Consequential Load Loss – the SDT reworded the definition to better clarify that this is Load loss that occurs when the source to that Load is lost or Load that is lost due to the Load's transient response to the event being studied and to eliminate confusion regarding references to concepts such as fault clearing action, mis-operation, or radial Load.
- Extreme Events – the SDT revised the definition to clarify that Extreme Events have a "lower probability of occurrence than Planning Events."
- Long-Term Transmission Planning Horizon - the SDT revised the definition to clarify when the horizon may extend beyond ten years
- Non-Consequential Load Loss - the SDT revised the definition to improve its clarity and to specify that this is non-interruptible load
- Planning Assessment - the SDT revised the definition to be more succinct, to eliminate the description of the possible range of assumptions, and to clarify that the assessment is an evaluation of Transmission System performance (not needs) and Corrective Action Plans associated with identified deficiencies.
- Planning Coordinator – the SDT added the definition from the Functional Model.
- Plant Stability Study - the SDT replaced the word, "plant" with the term, "generating unit," and modified the wording to improve its clarity.
- System Stability Study - the SDT revised the definition to add further clarity
- Year One - the SDT modified the definition to clarify that Year One is the first year that requires assessment, not study, and to clarify that the planning window begins 12 to 18 months from the completion of the previous assessment.

Sensitivity Studies

The need to conduct sensitivity studies was a directive in FERC Order 693 paragraphs 1694,1704, and 1706. The revised standard provides guidance on what needs to be included in sensitivity studies while not being totally prescriptive.

- Requirement R2.1.3 and Requirement R2.4.3 have been modified to require documentation of why the listed sensitivities were or were not selected for specific studies.
- Requirement R2.1.4 and Requirement R2.4.4 have been added to specifically state that the entity may consider additional sensitivities that are appropriate for its own system.
- Requirement R2.4.3 was modified to stipulate that the entity shall provide rational for why sensitivity on the list were or were not included in the sensitivity studies and that the entity may consider additional sensitivities that are appropriate for its own System.
- Requirement R.2.4.3.2 (related to stability analysis) was changed to use the same phrase as used in R.2.1.3.2 (related to steady state analysis) "Modification of expected transfers"
- Requirement R.2.4.3.4 (related to stability analysis) was changed to use the same phrase as used in R.2.1.3.4 (related to steady state analysis) "Variability and outages of reactive resources."
- A new requirement, now numbered as Requirement R2.7.2, has been added to clarify that the sensitivity studies do not in themselves establish the need for a corrective action but the entity must explain how the sensitivities affected the Corrective Action Plan.

Corrective Action Plans

Requirements for corrective action plans have been modified to clarify that these do not need to be developed solely to meet performance requirements for sensitivities and to eliminate subrequirements that distinguished between “committed” and “proposed” projects. The standard now refers to “actions” needed to achieve required System performance without trying to distinguish between “committed” and “proposed” projects. The following adjustments were made to the list of elements that must be included in Corrective Action Plans:

- Sub-requirement R2.7.1 was modified to clarify that there are many options that can be used to achieve required system performance when studies show system deficiencies, including DSM.
- Sub-requirement R2.7.2 to perform re-test has been removed. The purpose of the Corrective Action Plan is to list the actions that are needed to meet performance requirements. The studies, current, and/or past as appropriate, as well as the extent of the size of the study area, are performed to support compliance and demonstrate that the requirements are met. The standard assumes that the actions were developed and verified using the current and past studies that were used to uncover deficiencies and confirm adherence to the performance requirements.
- Sub-requirement R2.7.3 to document the criteria for determining committed and proposed projects and to identify each project as either committed or proposed has been deleted.
- Sub-requirement R2.7.4 that included language restricting the removal of committed projects has been deleted.

- A new Sub-requirement R2.7.2 has been added that requires a description of the consideration of sensitivity studies was applied to the actions needed to achieve system performance

Performance Requirements

- The SDT modified the performance requirements relative to Non-Consequential Loss of Load and revised Tables 1 & 2 to add greater detail and provide for more situations where it is acceptable to lose Non-Consequential Load.
- The second draft proposes that no Non-Consequential Load may be tripped for the loss of a 300 kV (or higher) bus section for a first contingency event.
- The second draft proposes permitting the loss of Non-Consequential Load to meet the Transmission performance requirements for events where there are two independent overlapping single Contingencies involving two non-generation Transmission Facilities operated at a voltage level above 300 kV. (See Performance Table Planning Event P6.)
- The second draft proposes allowing load shedding as an acceptable system adjustment action for the entire BES following the loss of the second Transmission outage.
- Moved P2-3 into the P1 category as loss of a single pole of a dc line is similar to loss of a generator or transmission circuit.
- Clarified the distinction between Generating Unit Stability Study and System Stability Study by adding a definition of Generating Unit Stability Study and modifying the definition of System Stability Study – and making modifications to R2.5.
- Removed Extreme Event #9 from Stability Analyses for Extreme Events (3-phase fault and loss of all generating units at a station). The events which remove all of a generating unit from the System occur over a longer period of time which is more applicable in the steady state analyses. These are Extreme Events which are relevant for steady state but not for Stability analyses.
- Modified R2.4.1 to recognize the difficulty of obtaining accurate dynamic Load models including induction motors.
- Modified Requirement R 3.6 (now R3.5) of the steady state portion of the Planning Assessment to specify the conditions under which manual and automatic generation runback and tripping can be used to meet single and multiple Contingency performance requirements and to make it clear that all Facilities must always remain within applicable thermal and voltage ratings.

Generation Run Back and Tripping

- Added R3.5.2 and R3.5.3 to clarify that manual or automatic generation run-back is allowed as a response to single and multiple Contingencies as long as all Facilities shall be operating within their Facility Ratings and as long as a sustainable, stable, operating condition is maintained.
- Modified Requirement R 3.5 to specify the conditions under which automatic (or manual) generation runback can be used to meet single (or multiple) contingency performance requirements and to make it clear that all facilities must always remain within applicable thermal and voltage ratings.
- Modified R3.5 to allow the use of SPS/RAS for single or multiple Contingencies with limitations described in Requirements R3.5.1 through R3.5.3.

Modeling

- A new requirement was added (to replace R1.4) to perform the tests outlined in the performance requirements table and demonstrate that thermal and voltage limits are met, however, all manual and/or automatic actions are allowed (within time constrained ratings) including curtailing firm transfers and controlled shedding of Non-Consequential firm Load.

- In addition, both performance tables have been changed.

Some other major changes included:

- Created a new requirement concerning short circuit analysis.
- Created a requirement to document proxies for instability, cascading outages and uncontrolled islanding.
- Changed requirements to clarify the actions allowed to prepare for the next Contingency.
- Changed requirements to clarify that Facility Ratings may be different for, and a function of, different durations

In this "Consideration of Comments" document stakeholder comments have been organized so that it is easier to see the responses associated with each question. All comments received on the standards can be viewed in their original format at:

http://www.nerc.com/~filez/standards/Assess-Transmission-Future-Needs.html

If you feel that your comment has been overlooked, please let us know immediately. Our goal is to give every comment serious consideration in this process! If you feel there has been an error or omission, you can contact the Director of Standards, Gerry Adamski, at 609-452-8060 or at gerry.adamski@nerc.net. In addition, there is a NERC Reliability Standards Appeals Process.[1]

[1] The appeals process is in the Reliability Standards Development Procedures: http://www.nerc.com/standards/newstandardsprocess.html.

The Industry Segments are:

1 — Transmission Owners
2 — RTOs, ISOs
3 — Load-serving Entities
4 — Transmission-dependent Utilities
5 — Electric Generators
6 — Electricity Brokers, Aggregators, and Marketers
7 — Large Electricity End Users
8 — Small Electricity End Users
9 — Federal, State, Provincial Regulatory or other Government Entities
10 – Regional Reliability Organizations, Regional Entities

Commenter		Organization	Industry Segment									
			1	2	3	4	5	6	7	8	9	10
1.	William Quaintance	ABB Grid Systems Consulting										
2.	John Bussman	AECI	✓									
3.	Anita Lee	AESO		✓								
4.	Darrell Pace (G11)	Alabama Electric Coooperative	✓									
5.	Wesley O. Davis	Alcoa Power Generating, Inc.	✓		✓		✓		✓			
6.	William J. Smith	Allegheny Power	✓									
7.	Ken Goldsmith (G9)	ALTW										
8.	Rick Foster (G12)	Ameren										
9.	John Sullivan (G11)	Ameren	✓									
10.	Curtis Stepanek (G14)	Ameren	✓									
11.	Eugene Warnecke (G14)	Ameren	✓									
12.	John E. Sullivan	Ameren Services	✓									
13.	Thad K. Ness (G2)	American Electric Power	✓		✓		✓	✓				
14.	Takis Laios (G2)	American Electric Power	✓									
15.	Jon Riley (G2)	American Electric Power	✓									
16.	Rob O'Keefe (G2)	American Electric Power	✓									
17.	Navin Bhatt (G2)	American Electric Power	✓									
18.	Scott Rainbolt (G2)	American Electric Power	✓									
19.	Omar Hellalat (G2)	American Electric Power	✓									
20.	Roger Bentz (G2)	American Electric Power	✓									
21.	Vance Beauregard (G2)	American Electric Power	✓									
22.	Phil Cox (G2)	American Electric Power					✓	✓				
23.	E. Nick Henery (G4)	APPA			✓	✓						
24.	Allen Mosher (G4)	APPA			✓	✓						
25.	Baj Agrawal	Arizona Public Service Co.	✓		✓		✓					

Commenter		Organization	Industry Segment									
			1	2	3	4	5	6	7	8	9	10
26.	Jason Shaver	ATC	✓									
27.	Phil Park	BCTC		✓								
28.	Dave Rudolph (G9)	BEPC										
29.	Chris Bradley (G14)	Big Rivers Electric Corporation	✓									
30.	Chuck Matthews (G3)	BPA Transmission	✓									
31.	Berhanu Tesema (G3)	BPA Transmission	✓									
32.	Kendall Rydell (G3)	BPA Transmission	✓									
33.	Kyle Kohne (G3)	BPA Transmission	✓									
34.	Melvin Rodrigues (G3)	BPA Transmission	✓									
35.	David Albers	Brazos Electric Cooperative	✓									
36.	Charles Cumpton	California ISO		✓								
37.	Paul Rocha (see attachment)	CenterPoint Energy	✓									
38.	David M Conroy (see attachment)	Central Maine Power Company	✓									
39.	Gary Brinkworth (G7)	City of Tallahassee	✓									
40.	Jeff Knottek	City Utilities/Springfield	✓		✓							
41.	Karl Kohlrus (G8)	City Water, Light & Power (IL)					✓					
42.	Karl E. Kohlrus	City Water, Light and Power			✓	✓	✓					
43.	Edwin Thompson (G10)	ConEd										
44.	Michael Gildea (G10)	Constellation Energy										
45.	Blake Williams	CPS Energy	✓									
46.	John K. Loftis, Jr. (G1)	Dominion VA Power	✓									
47.	Kirit Doshi (G1)	Dominion VA Power	✓									
48.	Graig Crider (G1)	Dominion VA Power	✓									
49.	Solomon Yirga (G1)	Dominion VA Power	✓									
50.	Nelson Burks (G1)	Dominion VA Power	✓									
51.	Ashwani Vaswani (G1)	Dominion VA Power	✓									
52.	Mehdi Shakibafar (G1)	Dominion VA Power	✓									
53.	Abdur Masood (G1)	Dominion VA Power	✓									
54.	Thanh Nguyen (G1)	Dominion VA Power	✓									
55.	Ed Broasdale (G1)	Dominion VA Power	✓									

Commenter		Organization	Industry Segment									
			1	2	3	4	5	6	7	8	9	10
56.	Al MacDonald (G1)	Dominion VA Power	✓									
57.	William Bigdely (G1)	Dominion VA Power	✓									
58.	Ronnie Bailey (G1)	Dominion VA Power	✓									
59.	Greg Rowland	Duke Energy	✓		✓							
60.	Anthony Williams (G12)	Duke Energy Carolinas										
61.	Brian D. Moss (G14)	Duke Energy Carolinas	✓									
62.	Keith Yocum	E ON US										
63.	Larry Rodriguez	Entegra Power					✓	✓				
64.	Sujit Mandal (G12)	Entergy										
65.	Charles Long (G11)	Entergy	✓									
66.	Kham Vongkhamchanh (G14)	Entergy	✓									
67.	Charles W. Long	Entergy Services, Inc.	✓		✓		✓					
68.	Doug Powell	Entergy Services, Inc.	✓		✓		✓					
69.	H. Steven Myers	ERCOT ISO		✓								
70.	Eric Mortenson	Exelon	✓		✓							
71.	Doug Hohlbaugh (G5)	FirstEnergy Corporation	✓		✓		✓	✓				
72.	John Stephens (G5)	FirstEnergy Corporation	✓		✓		✓	✓				
73.	Dave Folk (G5)	FirstEnergy Corporation	✓		✓		✓	✓				
74.	Sam Ciccone (G5)	FirstEnergy Corporation	✓		✓		✓	✓				
75.	W. R. Schoneck (G7)	Florida Power & Light Company			✓							
76.	C. Martin Mennes (G7)	Florida Power & Light Company	✓									
77.	Robert A. Birch (G7)	Florida Power & Light Company					✓					
78.	John W. Shaffer (G7)	Florida Power & Light Company			✓							
79.	A. L. Barredo (G7)	Florida Power & Light Company			✓							
80.	Hector Sanchez (G6)	Florida Power and Light	✓		✓		✓					
81.	Marty Mennes (G6)	Florida Power and Light	✓		✓		✓					
82.	W. R. Schoneck (G6)	Florida Power and Light	✓		✓		✓					
83.	R. A. Birch (G6)	Florida Power and Light	✓		✓		✓					
84.	A. L. Barredo (G6)	Florida Power and Light	✓		✓		✓					
85.	C. Candelaria (G6)	Florida Power and Light	✓		✓		✓					
86.	J. W. Shaffer (G6)	Florida Power and Light	✓		✓		✓					

Commenter		Organization	Industry Segment									
			1	2	3	4	5	6	7	8	9	10
87.	Fred McNeill (G7)	Florida Reliability Coordinating Council										✓
88.	Vicente Ordax (G7)	FRCC										✓
89.	Earl Fair (G7)	Gainesville Regional Utilities	✓									
90.	Angela Battle	Georgia Transmission Corp	✓									
91.	Ken Wofford (G14)	Georgia Transmission Corp.	✓									
92.	David Kiguel (G10)	Hydro One Networks										
93.	Roger Champagne (G10)	HydroQuebec TransEnergie										
94.	Sylvain Clermont (G10)	HydroQuebec TransEnergie										
95.	Roger Champagne	Hydro-Québec TransÉnergie	✓									
96.	Ron Falsetti	IESO		✓								
97.	Kathleen Goodman (G10)	ISO New England										
98.	Brian F. Thumm	ITC Holdings										
99.	Jim Cyrulewski (G8)	JDRJC Associates								✓		
100.	Donald Gilbert (G7)	JEA					✓					
101.	Ted E. Hobson (G7)	JEA	✓									
102.	Gary Baker (G7)	JEA			✓							
103.	Don Gilbert	JEA	✓		✓		✓					
104.	Harold G. Wyble	Kansas City Power and Light	✓									
105.	Tim Wu	LADWP	✓		✓		✓					
106.	Scotty Touchette	Lafayette Utilities System	✓		✓		✓					
107.	Paul Elwing (G7)	Lakeland Electric					✓					
108.	Richard Gilbert (G7)	Lakeland Electric			✓							
109.	Larry E. Watt (G7)	Lakeland Electric	✓									
110.	Paul Shipps (G7)	Lakeland Electric						✓				
111.	Sergio Garza	LCRA TSC	✓									
112.	Eric Ruskamp (G9)	LES										
113.	Donald Nelson (G10)	MA Dept of Public Utilities										
114.	Joseph DePoorter (G8)	Madison Gas & Electric				✓						
115.	Ron Mazur	Manitoba Hydro	✓		✓		✓	✓				
116.	Jerry Tang (G14)	MEAG	✓									
117.	David Weekley (G11)	MEAG Power	✓									

Commenter		Organization	Industry Segment									
			1	2	3	4	5	6	7	8	9	10
118.	Robert Coish (G9)	MHEB										
119.	David Jacobson (G9)	MHEB										
120.	Ron Mazur (G9)	MHEB										
121.	Allen McKee (G11)	Midwest ISO (MISO)		✓								
122.	Allen McKee (G8)	Midwest ISO, Inc.		✓								
123.	Carol Gerou (G9)	Minnesota Power										
124.	Terry Bilke (G9)	MISO										
125.	Tom Mielnik (G9)	MRO		✓								
126.	Michael Brytowski (G9)	MRO										
127.	Jerry Tang	Municipal Electric Authority of Georgia	✓									
128.	Lewis Ross	Muscatine Power and Water	✓		✓		✓			✓		
129.	Carol Sedewitz	National Grid	✓									
130.	Denise Roeder (G14)	NC Municipal Power Agency #1			✓							
131.	James R. Manning	NCEMC			✓	✓	✓					
132.	Robert S. Beadle	NCEMC			✓	✓	✓					
133.	Denise Roeder	NCMPA			✓							
134.	Bob Cummings	NERC Transmission Issues Subc.										
135.	Randy MacDonald (G10)	New Brunswick System Operator										
136.	Kathleen Goodman	New England ISO		✓								
137.	Walter A. Pfuntner	New York ISO		✓								
138.	Greg Campoli (G10)	New York ISO										
139.	Ralph Rufrano (G10)	New York Power Authority										
140.	Al Adamson (G10)	New York State Reliability Council										
141.	Michael Ranalli (G10)	Ngrid US										
142.	Reza Rizvi (G10)	Northeast Power Coordinating Council										
143.	Rick White	Northeast Utilities	✓									
144.	Murale Gopinathan (G10)	Northeast Utilities										
145.	John Leland	Northwestern Energy	✓									
146.	Guy V. Zito (G10)	NPCC										✓
147.	Gregory Sullivan	Nstar Electric and Gas Corp.	✓		✓							
148.	John P. Mayhan	OPPD	✓		✓			✓				
149.	Keith Mutters (G7)	Orlando Utilities Commission			✓							

Commenter		Organization	Industry Segment									
			1	2	3	4	5	6	7	8	9	10
150.	Ganesh Velummylum (G17)	PJM (ISO/RTO)		✓								
151.	John Collins	Platte River Power Authority	✓									
152.	Mark Byrd	Progress Energy Carolinas	✓		✓		✓	✓				
153.	John O'Connor (G12)	Progress Energy Carolinas										
154.	Phil Creech (G14)	Progress Energy Carolinas	✓									
155.	Lee Schuster (G7)	Progress Energy Florida			✓							
156.	Bart White (G7)	Progress Energy Florida			✓							
157.	Bart White	Progress Energy Florida, Inc.	✓		✓		✓	✓				
158.	Jeffrey Mitchell	ReliabilityFirst Corp.										✓
159.	Mark Kuras (G17)	RFC		✓								
160.	Mahendra Patel (G17)	RFC		✓								
161.	Paul McGlynn (G17)	RFC		✓								
162.	Mohamed Osman (G17)	RFC		✓								
163.	Chuck Liebold (G17)	RFC		✓								
164.	Leanne Harrison (G17)	RFC		✓								
165.	Susan McGill (G17)	RFC		✓								
166.	Terry Blackwell (G13)	Santee Cooper	✓		✓		✓	✓				
167.	James Peterson (G13)	Santee Cooper	✓									
168.	Shawn T. Abrams (G13)	Santee Cooper	✓									
169.	Vicky Budreau (G13)	Santee Cooper	✓									
170.	Art Brown (G13)	Santee Cooper	✓									
171.	William Gaither (G13)	Santee Cooper	✓									
172.	Glenn Stephens (G13)	Santee Cooper	✓									
173.	Rene' Free (G13)	Santee Cooper	✓									
174.	Frank Caston (G13)	Santee Cooper	✓									
175.	Rick Thornton (G13)	Santee Cooper	✓									
176.	James M. Jackson (G13)	Santee Cooper	✓									
177.	Wayne Guttormson	SASK Power	✓		✓		✓	✓				

Commenter		Organization	Industry Segment									
			1	2	3	4	5	6	7	8	9	10
178.	Al McMeekin (G14)	SC Electric & Gas Company	✓									
179.	Clay Young (G14)	SC Electric & Gas Company			✓							
180.	Phil Kleckley (G11)	SC Electric and Gas			✓							
181.	Scott Inglebritson	Seattle City Light	✓		✓	✓	✓					
182.	Sharma Kolluri (G12)	SERC EC DRS	✓									
183.	Travis Sykes (G11)	SERC EC PSS	✓									
184.	Pat Huntley (G11)	SERC Reliability Corp										✓
185.	Carter Edge (G14)	SERC Reliability Corporation										✓
186.	Maria Haney (G14)	SERC Reliability Corporation										✓
187.	Jim Peterson (G14)	SERC RRS OPS	✓									
188.	Philip R. Kleckley	South Carolina Electric & Gas	✓		✓		✓					
189.	John Ciza (G15)	Southern Company - Generation	✓									
190.	Tom Higgins (G15)	Southern Company - Generation					✓					
191.	Terry Crawley (G15)	Southern Company - Generation					✓					
192.	Roman Carter (G15)	Southern Company - Generation	✓									
193.	Marc Butts (G15)	Southern Company - Transmission	✓									
194.	J. T. Wood (G15)	Southern Company - Transmission	✓									
195.	Jim Viikinsalo (G15)	Southern Company - Transmission	✓									
196.	Keith Calhoun (G15)	Southern Company - Transmission	✓									
197.	Shih-Min Hsu (G15)	Southern Company - Transmission	✓									
198.	Tom Sims (G15)	Southern Company - Transmission	✓									
199.	Gary Gorham (G15)	Southern Company - Transmission	✓									
200.	Dave Slovensky (G15)	Southern Company - Transmission	✓									
201.	Jeremy Bennett (G15)	Southern Company - Transmission	✓									
202.	Bob Jones (G15)	Southern Company - Transmission	✓									
203.	Bill Botters (G15)	Southern Company - Transmission	✓									
204.	Mike Bartlett (G15)	Southern Company - Transmission	✓									
205.	Maryanne Mujica (G15)	Southern Company - Transmission	✓									
206.	Lee Taylor (G15)	Southern Company -	✓									

Commenter		Organization	Industry Segment									
			1	2	3	4	5	6	7	8	9	10
		Transmission										
207.	Perry Stowe (G15)	Southern Company - Transmission	✓									
208.	Rod Hardiman (G15)	Southern Company - Transmission	✓									
209.	Doug McLaughlin (G15)	Southern Company - Transmission	✓									
210.	Randy Castello (G15)	Southern Company - Transmission	✓									
211.	Chuck Chakravarthi (G15)	Southern Company - Transmission	✓									
212.	Roger Green (G15)	Southern Company - Transmission					✓					
213.	Bob Jones (G11)	Southern Company Services	✓									
214.	Jim Busbin (G15)	Southern Company Services, Inc.	✓									
215.	Bob Jones (G12)	Southern Company Services, Inc. - Trans										
216.	Lee Taylor (G12)	Southern Company Services, Inc. - Trans										
217.	Rod Hardiman (G14)	Southern Company Services, Inc. - Trans	✓									
218.	Doug McLaughlin (G14)	Southern Company Services, Inc. - Trans	✓									
219.	Jonathan Sykes	SRP	✓									
220.	Ronald L. Donahey	Tampa Electric Company			✓							
221.	Thomas J. Szelistowski (G7)	Tampa Electric Company	✓									
222.	Scott Helyer	Tenaska, Inc.					✓					
223.	Tom Cain (G12)	Tennessee Valley Authority										
224.	Ian Grant (G14)	Tennessee Valley Authority	✓									
225.	Marjorie Parsons (G14)	Tennessee Valley Authority	✓									
226.	Michael Clements (G14)	Tennessee Valley Authority	✓									
227.	David Till	Tennessee Valley Authority	✓									
228.	Biju Gopi (G10)	The IESO, Ontario										
229.	Alex Boutsioulis	The United Illuminating Company	✓									
230.	Mark Graham	Tri-State G&T										
231.	Gary Trent	Tucson Electric Power Company	✓									
232.	Jim Haigh (G9)	WAPA										
233.	Steve Rueckert (G16)	WECC Committees and Subgroups										✓
234.	Christopher Plante	Wisconsin Public Service Corp			✓	✓	✓					

Commenter		Organization	Industry Segment									
			1	2	3	4	5	6	7	8	9	10
235	Neal Balu (G9)	WPS			✓		✓	✓				
236	Pam Oreschnick (G9)	XCEL										

I – Indicates that individual comments were submitted in addition to comments submitted as part of a group
G1 – Dominion Virginia Power
G2 – American Electric Power
G3 – BPA Transmission
G4 – American Public Power Association
G5 – FirstEnergy Corporation
G6 – Florida Power & Light Company
G7 – FRCC
G8 – Midwest ISO, Inc. (MISO)
G9 – Midwest Reliability Organization (MRO)
G10 – NPCC RCG
G11 – SERC EC PSS
G12 – SERC EC DRS
G13 – Santee Cooper
G14 – SERC RRS OPS
G15 – Southern Company Services, Inc.
G16 – WECC Committees and Subgroups
G17 – PJM (ISO/RTO)

Index to Questions, Comments, and Responses

A) New Definitions 18

1) Q1. Base Case: Computer representation of the projected initial or starting Transmission System conditions for a specific point in time. Each base case reflects the forecasted Load at each bus (or node) on the interconnected Transmission System, the transmission facilities which deliver the generation and reactive resources to the connected Load, and the generation dispatch including firm transaction obligations assumed to supply the connected Load. The models also reflect facility ratings in accordance with FAC-008 & FAC-009. 18
2) Q2. Consequential Load Loss: Load that is no longer served because it is directly connected to an element(s) that is removed from service due to fault clearing action or mis-operation. 23
3) Q3. Extreme Events: Events which are more severe than Planning Events and have a low probability of occurrence. 36
4) Q4. Long-Term Transmission Planning Horizon: Transmission planning period that covers years six through ten or beyond. 41
5) Q5. Near-Term Transmission Planning Horizon: Transmission planning period that covers years one through five. 44
6) Q6. Non-Consequential Load Loss: Load loss other than Consequential Load Loss. For example, Load loss that occurs through manual (operator initiated) or automatic operations such as under-voltage Load shedding, under-frequency Load shedding, or Special Protection Systems. 47
7) Q7. Planning Assessment: Documented evaluation of future Bulk Electric System needs by the use of performance studies that cover a range of assumptions regarding system conditions, time frames, future plans including capital reinforcements and operating procedures and other factors, such as asset conditions and age. 54
8) Q8. Planning Events: Events which require Transmission system performance requirements to be met. 61
9) Q9. Plant Stability Study: Study of an individual plant's Stability for various Contingencies in the vicinity of the plant; concerned with the effect on the System of the generating units' loss of synchronism and the damping of the generating units' power oscillations. 65
10) Q10. System Stability Study: Study of the System or portions of the System to ensure that angular Stability is maintained, inter-area power oscillations are damped, and voltages during the dynamic simulation stay within acceptable performance limits. 73
11) Q11. Year One: The first year that a Transmission Planner is responsible for studying. This is further defined as the planning window that begins the next calendar year from the time the Transmission Planner submits their annual studies. Analysis conducted for time horizons within the calendar year from the study publication are assumed to be conducted under the auspices of Operations Planning. 77

B) Sensitivity Studies 82

12) Q12. Should the standard provide more specific direction regarding the number of sensitivity cases that need to be developed? 83
13) Q13. Should the standard specify the required changes, such as changes in expected transfers, load forecasts, generation patterns, etc., from the study case to be considered a "reasonably stressed" case? 92
14) Q14. The SDT proposes to require the use of sensitivity studies for Near-Term Transmission System Planning Horizon stability analysis. Do you concur with the use of sensitivity analysis in dynamic studies? 104
15) Q15. The draft TPL standard does not require the use of sensitivity studies for the Long-Term Transmission System Planning Horizon (year six and beyond) studies. Do you concur with this approach or should there be some level of sensitivity analysis required for the long-term period? 112

C) Corrective Action Plans 118

16) Q16. Requirement R2.7.1: Such Corrective Action Plans shall "Identify System deficiencies and the associated actions needed to achieve required System performance including Transmission and generation improvements, DSM, new technologies, or Operating Procedures including the duration of Interim Operating Procedures". System deficiencies may be corrected using an integrated plan, i.e., an optimal mix of Transmission, generation, DSM and Operating Procedures. Should DSM be considered in conjunction with other measures in developing Corrective Action Plans? If yes, please comment on how the impact of DSM should be included. 118
17) Q17. Requirement R2.7.2: Such Corrective Action Plans shall "Be added to study cases and the cases re-tested to show that the System with planned additions meets the performance requirements in the tables". Should new studies, including the facilities comprising the Corrective Action Plan, be performed to assess System normal performance and Contingency response for conditions that previously resulted in the System deficiencies (without the planned additions) and also demonstrate that the changes would not result in inadvertent negative impacts on the System. If you "agree", please comment on how a study area should be determined. 127
18) Q18. Requirement R2.7.3: The standard calls for a differentiation between committed and proposed projects. Do you agree that they should be treated separately? If not, please state why not. 137
19) Q19. Requirement R2.7.4: For such Corrective Action Plans "Committed projects shall not be removed without documentation to show that the revised plan meets the performance requirements". Do you agree or disagree with this requirement? If you disagree, please explain why. 144
D) Performance Requirements 151
Do you agree that Non-Consequential Loss of Load should not be permitted for the following events? If you disagree, please provide a reason for your disagreement. 152
20) Q20. P2-1: Loss of bus section (SLG for stability) above 300 kV 152
21) Q21. P5-1: For facilities above 300 kV, loss of a Transmission circuit followed by System adjustment[1] followed by loss of another Transmission circuit 161
22) Q22. P5-2: For facilities above 300 kV, loss of a Transmission circuit followed by System adjustment followed by loss of a transformer with low side voltage rating above 300 kV 167
23) Q23. P5-3: For facilities above 300 kV, loss of a transformer with low side voltage rating above 300 kV followed by System adjustment followed by loss of another transformer 175
The proposed standard is based on an assumption that performance requirements for non-bus tie EHV breakers should be distinguished from other breakers. Do you agree that Non-Consequential Loss of Load should not be permitted for this event? 182
24) Q24. Loss of non-bus tie breaker (above 300 kV) due to internal fault 182
The proposed standard is based on an assumption that performance requirements for non-bus tie EHV breakers should be distinguished from other breakers and that performance requirements for EHV facilities should be more stringent than for lower voltage facilities. Do you agree that Non-Consequential Loss of Load should not be permitted for this event? 190
25) Q25. P3-1: Loss of (SLG for stability) either a generator, a Transmission circuit, a transformer, or a bus and a stuck non-bus tie breaker (above 300 kV) 190
The proposed standard is based on an assumption that the following events are relatively high probability events and, therefore, Non-Consequential Loss of Load should not be permitted. Do you agree? If you disagree, please provide a reason for your disagreement. 197
26) Q26. P4-1: Loss of a Generator followed by System adjustment followed by loss of another Generator 197
27) Q27. P4-2: Loss of a generator followed by a System adjustment followed by the loss of a monopolar DC line 205

28) Q28. P4-3: Loss of a generator followed by System adjustment followed by loss of a Transmission circuit 210
29) Q29. P4-4: Loss of a generator followed by System adjustment followed by loss of a transformer 215
The performance requirement for the following event may be considered less stringent than the existing TPL Standards — P2-3: Loss of a single pole of a DC line. Interruption of firm transactions (without Loss of firm Load) if the transaction is dependent on the faulted DC line is now allowed for this initiating event/Contingency. 219
30) Q30. Do you agree that interruption of any firm transfers that are dependent on the outaged DC line that is taken out of service should be permitted? 219
E) Stability 223
31) Q31. The proposed standard is based on an assumption that steady state analysis and stability analysis are different from each other and that therefore, two tables of Contingencies and performance requirements were needed. It is also based on an assumption that stability study requirements should be clearly separated from the steady state study requirements. Do you agree with the action taken in separating stability analysis from steady state analysis? If not, please explain. 223
32) Q32. The SDT has added requirements for plant stability studies and has drawn a distinction in these studies from System stability studies. Do you agree with this approach? If not, please explain. 228
33) Q33. The existing TPL-004-0 standard has a requirement to consider the Loss of all generating units at a plant, but it was not clear whether this requirement should apply to stability studies. The SDT did not include this requirement in the stability table, because it is hard to envision a condition when all units would trip simultaneously within the timeframe of a stability simulation. Do you think this condition should be required in stability analysis of Extreme Events? If not, please explain. 235
34) Q34. There are an increasing number of events with slow voltage recovery after faults on the Transmission System. The dynamic behavior of induction motor loads is a major factor in this phenomenon. The proposed standard therefore requires that the load model for stability studies of peak Load conditions include the dynamic effects of induction motors. Do you agree with this requirement? If not, please explain? 241
35) Q35. What type of manual or automatic adjustments of generators should be allowed for single and multiple Contingencies? 247
F) Generation Runback and Tripping 252
36) Q36. The proposed standard allows generation runback after the disturbance that causes a single Contingency (or due to a single Contingency outage) to move the Interconnected Transmission System from an emergency state (within emergency ratings) to a normal state (within normal ratings), assuming that the disturbance does not result in instability? Do you agree? If not, please explain. 252
37) Q37. Since emergency ratings are thermal ratings, should this standard allow an automatic generation runback scheme (that is initiated immediately after the disturbance causing the single Contingency) to prevent thermal overloads (assuming that the disturbance does not result in instability)? If yes, what are the conditions that must be met in order to allow such a runback scheme to meet the System performance criteria for single Contingencies? Please explain the reason for your answer. 258
38) Q38. Do you agree that RAS or SPS may be allowed for single Contingencies? If not, please explain. 263
39) Q39. Please describe the limitations that you believe should be placed on the use of RAS or SPS for single Contingency events. 268
40) 40. When RAS or SPS are allowed, what conditions should be met when these systems are used in system adjustments to meet performance requirements? 275
G) General Questions 281
41) Q41. If you are aware of any regional variances that would be required as a result of these standards, please identify them here. 281

42) Q42. If you are aware of any conflicts between the proposed standards and any regulatory function, rule order, tariff, rate schedule, legislative requirement or agreement, please identify them here.
43) Q43. Do you have any other questions or concerns with the proposed standard that have not been addressed? If yes, please explain.

A) New Definitions

Many of the concerns about the existing TPL standards come from the fact that a number of generally understood concepts are embedded in undefined terms, tables, and footnotes. To clarify some of these concerns, the standard drafting team is proposing new definitions. Please indicate whether you agree with the following proposed definitions and provide proposed changes to the definitions if you disagree:

1) **Q1. Base Case: Computer representation of the projected initial or starting Transmission System conditions for a specific point in time. Each base case reflects the forecasted Load at each bus (or node) on the interconnected Transmission System, the transmission facilities which deliver the generation and reactive resources to the connected Load, and the generation dispatch including firm transaction obligations assumed to supply the connected Load. The models also reflect facility ratings in accordance with FAC-008 & FAC-009.**

Summary Response: After reviewing the comments to this proposed definition and the use of the term "base case" in the standard, the SDT determined that "Base Case" does not need to be a defined term.

Organization	Q1. **Comment**	Agree.	Don't agree.
AECC	Neutral. This is a little wordy but I don't have a better answer.		
ABB	Agree but delete "or node". It is unnecessary.	X	
AEP	Consider replacing"computer" with "model".	X	
ATC	We agree with the definition given in the draft standard date Sep-12, 2007. The last sentence is not consistent with the definition given in the draft standard.		X
CenterPoint CPS Energy	Firm transaction obligations are not used throughout all regions in NERC. Change "including firm transaction obligations" to "including firm transaction obligations where applicable."		X
E ON US	Why define a term that is used only once in the document (R.2.1.2.1) and is, by definition, applicable to a[ny] specific point in time.		X
FPL & FRCC	"Computer" is not appropriate. Replace with "Data model" or "Database model". The last sentence is not clear as to what type of ratings (i.e., normal, short-term emergency, long-term emergency, etc.). Suggest removing sentence completely or rewording as follows: "... in accordance with the documented methodologies required by FAC-008 for each Transmission Owner and Generator Owner."		X
Georgia Transm. Corp	The base case is also a representation of firm transactions through a BES, generation resources, and models reactive components.		X
LADWP	A basecase is a representation of the interconnected power system network at a given instant of time which correctly models an expected network topology in sufficient details (transmission lines, shunt and series compensations, transformers, breakers, phase-shifting transformers, etc.) , the forecasted loads, and a dispatch of connected generations that would achieve load-generation balance to allow a numerical solution without violation of any reliability standards. The resultant flows on the transmission lines are dictated by the Kirchhoff's laws, not laws of commerce, and therefore, cannot		X

Organization	Q1. **Comment**	Agree.	Don't agree.
	be interpreted as either firm or non-firm commercial transactions. A basecase is just a starting point from which transmission planners can make use of to further stress the portion of the systems that are of interests, to properly evaluate the robustness and reliability of the system and to determine line (non-thermal) ratings or network expansions, as needed.		
Northwestern Energy	NWE recommends the words "and may include non-firm transactions" after the words "firm transaction obligations".	X	
NERC TIS	The definition should differentiate between powerflow and dynamics base cases.	X	
LCRA	Should read "Computer model representation of…"	X	
PJM	Also FAC-010.	X	X
Santee Cooper	Delete the phrase "and reactive resources." It is redundant.	X	
SERC RRS OPS	Delete the phrase "and reactive resources."	X	
RFC	To add clarity, the terms "power flow" and "dyanamic" should be included in the definition above. It seems that the defintion may be more detailed than needed without these two terms.		X
Southern Transmission	As stated the definition does not appear to allow for equivalenced system representation since it refers to "each bus on the interconnected Transmission System". The words "as represented in the model" should be added after "interconnected Transmission System" or another sentence should be added stating that equivalenced system representation is acceptable. A definition of a dynamics base case should also be considered.		X
Response: Definition of "base case" has been deleted. Therefore concern is no longer applicable.			
City Water Light and Power	This should not be a defined term in the Glossary, instead there should be a Standard that provides the industry with the requirements for completing a Base Case Study.		X
Response: Definition of "base case" has been deleted, as suggested. However, the SDT believes this standard contains requirements for planning reliable transmission systems, including performing appropriate studies.			
APPA	This should not be a defined term in the Glossary, instead there should be a Standard written that provides the industry with the requirements for completing a Base Case Study. This is the first step in completing the Transmission Studies required in TPL-001. There is no guarantee that the rules used by the transmission planners for the base case studies are done in a reliable manner. The Standard needs to be expanded to insure oversight by the compliance monitors to ensure that the base case is sound from a reliability perspective. Also, both reliability and transparency require that the results of the base case study along with the assumptions used to develop the study must be shared with responsible entities within contiguous areas of the BES, not just with contiguous Planning Coordinators and Transmission Planners. To insure consistent results, the Standard should require that a properly conducted Base Case Study be based on agreed rules for conducting such studies within each		X

Organization	Q1. **Comment**	Agree.	Don't agree.
	interconnection and use of consistent data/assumptions by other entities in the region; otherwise, the results of each PC's and TP's planning horizon studies and the operation planning studies will be brought into question.		
Response: Definition of "base case" has been deleted, as suggested. However, the SDT believes this standard contains requirements for planning reliable transmission systems, including performing appropriate studies. The remainder of APPA's comments is not responsive to Q1 and will be addressed in response to Q43.			
Central Maine Power HQTE National Grid New England ISO NU NPCC RCWS NSTAR United Illuminating	There are a few undefined terms in this definition: "Transmission System" and "interconnected Transmission System". The definition needs to specifically identify what should be modeled and in a manner consistent with other NERC definitions. The definition refers to Facility ratings rather than the general reference to FAC-008 & FAC-009		X
Response: Definition of "base case" has been deleted. However, "Transmission System" is not intended as a new term. "Transmission" and "System" are defined in the NERC Glossary of Terms.			
City Utilities/Springfield	The manner in which the forecasted bus load is determined needs to be defined with clear and consistent assumptions and methodologies such that the results of transmission studies are reasonably valid throughout the entire planning horizon.		X
Response: The SDT believes the additional requirements are too prescriptive for this standard but, if appropriate, may be further detailed in MOD standards, which could be further modified through submittal of a SAR if necessary.			
WECC BPA TSGT TEP	A Base Case can only represent the amount of transactions required to serve connected load modeled in the case (local load?). A Path Rating case (developed to represent maximum transfers on a path) would not be considered a base case under this definition. WECC develops base cases to study high power transfers under stressed conditions. Such high power transfers necessarily include both firm and non-firm transaction obligations. Therefore, a base case that represents firm transactions to support "connected load" only, cannot be used to support studies of maximum possible power transfer and is of limited value in WECC. We agree that the above definition is one definition of a base case, but we feel that it can not be the only definition or the limiting definition. We suggest that wording be included that reflects the concept of modeling forecasted or above forecasted load levels if desired, and both firm and non-firm transactions if necessary to model anticipated maximum transfers and represent stressed system conditions as well. The definition should refer to the base case as a Computer Simulation Model of the power system, not a Computer Representation of the transmission system, since it is used within a computer program and represents load and generation in addition to	X	X

Organization	Q1. **Comment**	Agree.	Don't agree.
	transmission. References to "the generation dispatch and firm transaction obligations to supply the connected load" should be removed. A base case is a starting case for any condition that needs to be studied, not just a firm transactions case. Firm obligations across the transmission system are many times independent of a specific load service obligation.		
Response: Definition of "base case" has been deleted. However, the SDT believes some of these issues, particularly relating to the need to study variations from base case conditions, are addressed by Requirement 2.1.3.			
Ameren	Yes, we agree that the "base case" is a power flow model and is the starting point of the analysis. What we are concerned with are the assumptions that go into the development of the "base case". The season, time of day, load level, generation dispatch assumptions, facilities in service, and interchange assumptions (all based on best available data) are just a small subset of the issues that need to be addressed in the development of the base case. We have concerns that so-called "stressed cases" proposed in the standard for compliance testing may in reality be contingency cases, from which additional compliance performance testing would be required.	X	
Response: Definition of "base case" has been deleted. Furthermore, the term "stressed cases" is no longer used in the revised draft.			
ITC	Firm obligations may possibly include obligations beyond "firm transactions" which most likely means grandfathered transactions and TSRs as you have written it. The planning base cases should have sufficient margins to cover uncertainties as well as "firm transactions". The ATCTDT has "drafts" in place which require that TRM and CBM be included in transmission planning studies for both the near-term and long-term planning horizons. While they are drafts at this stage, consideration should be given to including their requirements in your drafts.	X	
Response: Definition of "base case" has been deleted. The SDT appreciates your comments on TRM and CBM; however, these issues will be covered by a separate drafting team.			
Allegheny Power		X	
New York ISO		X	
NCEMC		X	
Manitoba Hydro		X	
MEAG Power		X	
MISO		X	
SaskPower		X	
Seattle City Light		X	
SERC EC DRS		X	
SERC EC PSS		X	
MRO		X	
Muscatine P&W		X	

Organization	Q1. **Comment**	Agree.	Don't agree.
AECI	No comment.	X	
Brazos Electric	No comment.	X	
Dominion	No comment.	X	
ERCOT ISO	It is a fair description for an initial base case.	X	
IESO	The proposed definition fairly reflects the starting point system model used for planning and operations studies.	X	
Duke Energy		X	
KCPL		X	
LUS		X	
Entegra		X	
Entergy		X	
Exelon		X	
FirstEnergy		X	
Progress–Carolinas		X	
Progress–Florida		X	
SCANA		X	
Tenaska		X	
TVA		X	
BCTC		X	
CAISO	It is a fair description for an initial base case.	X	
WPSC		X	
Response:	Thank you. Please see the Summary Response.		

2) Q2. Consequential Load Loss: Load that is no longer served because it is directly connected to an element(s) that is removed from service due to fault clearing action or mis-operation.

Summary Response: The SDT reworded the definition to better clarify that Consequential Load Loss is Load loss that occurs when the source to that Load is lost or Load that is lost due to the Load's transient response to the event being studied. Also the SDT revised this definition as follows to eliminate confusion regarding references to concepts such as fault clearing action, mis-operation, or radial Load:

Consequential Load Loss: Load that is no longer ~~served because it is directly connected to an element(s) that is removed from service due to fault clearing action or mis-operation~~ connected to a source as a result of the event being studied or which is lost as a result of the load's response to the transient conditions of the event (other than through the action of UVLS or UFLS schemes). Although Load which is lost as a result of the Load's response to the transient conditions of the event is considered Consequential Load Loss and is permitted when Consequential Load Loss is allowed, Transmission planning entities are not allowed to rely upon the expectation of such Load loss to meet steady state performance requirements.

Commenter	Q2. **Comment**	Agree.	Don't agree.
ABB	See Q6. Also, from your definition above, a better term would be "directly-connected load loss". This is clear and to the point.		X
Response: The SDT revised this definition to include Load that is no longer connected to a source as a result of the event being studied. **Consequential Load Loss:** Load that is no longer ~~served because it is directly connected to an element(s) that is removed from service due to fault clearing action or mis-operation~~ connected to a source as a result of the event being studied or which is lost as a result of the Load's response to the transient conditions of the event (other than through the action of UVLS or UFLS schemes). Although Load which is lost as a result of the Load's response to the transient conditions of the event is considered Consequential Load Loss and is permitted when Consequential Load Loss is allowed, Transmission planning entities are not allowed to rely upon the expectation of such Load loss to meet steady state performance requirements.			
AECC	My primary concern with TPL-001-1 is that the problems with footnote B of Table 1 in the current TPL standards have merely been given a different dress and makeup and are now being passed off in the definitions of Consequential Load Loss and Non-Consequential Load Loss. I hope this is not the intent and that my concern is a matter of education. None the less, my first impression leads me to the interpretation above. I will attempt to explain. My concern is based in the methodology used to conduct studies and as a result how the consequential and non-consequential definitions will apply. Specifically the use of a breaker to breaker (BtB) contingency methodology verses an element by element (EtE) methodology. By EtE an element is defined as any switchable device either manual or automatic.		X

Commenter	Q2. **Comment**	Agree.	Don't agree.
	BtB may be useful and may have a place in some system analysis but it only gives a very limited view of the impacts and does not take into account the corresponding operational actions that will take place as a result of a fault event. BtB also does not provide for impacts that might occur during system reconfiguration due to maintenance. EtE provides a much more comprehensive evaluation of the impacts that might be seen on a system and in my opinion is a best practice as opposed to BtB. My concern was raised when during the drafting teams webex on October 11, I heard comments made by the drafting team that "the system should be studied as it is operated". If this comment was intended to mean that events should be studied beyond their initial response then fine otherwise the comment should be clarified. Without clarification, statements like this can be interrupted to mean and only reinforce the mentality that BtB or other inadequate study methods are adequate and can continue to be used. What has all this to do with consequential vs. non-consequesntial load loss? I am getting there. If BtB analysis is permissiable then I disagree with the definitions of consequential and non-consequential load loss. Here is why: It is understandable that a load being normally served (prior to an event) by a radial (meaning one source) will be lost if an event occurs that removes the source. This to me is consequential load. On the other hand, if a load is being served from a transmission line with sources and breakers at both ends (networked) and the line experiences a fault, how is the load on the faulted line classified? Before you jump to an answer, let me explain why I asked. If a fault occurs on a section of the line then obviously both breakers should operate to clear the fault and the load would be removed from the system. This is what is mimicked in breaker to breaker analysis. The problem is that breaker to breaker analysis stops there and some may argue that this is adequate and that the load lost is consequential. I beg to differ. In reality the transmission line will be sectionalized to restore service to the load and isolate the faulted portion of the line. A new steady state condition results one or two radials replacing the faulted transmission line. The impacts of which would be captured if EtE analysis occurs. Because the load is served after the event it should not be classified as consequential. The load being served by resulting radials would not be classified as consequential until the next fault event occurred. Because the system can be sectionalized by switchable devices to establish the new steady state is one reason why switchable devices need to be added to the definition of element.		

Commenter	Q2. **Comment**	Agree.	Don't agree.
	It can be expected from the examples above that the resulting radial(s) serving the load may create greater impacts on the system than the original networked line. The load in this case is not consequential. This is what happens in actual operations, this is what needs to be studied, and the standard needs to ensure that the BES maintains the ability to adequately serve the load following such an event. Having the capability to serve load following the isolation of a faulted section of line is one of the reasons why the networked system was developed in the first place. Another example of radial configuration of networked lines occurs during maintenance. A section of line is taken out of service and ALL load is still served. In this case the load is not consequential because no fault has occurred and again the impacts may be greater than the original networked line. Again these impacts can only be determined by studying the system on an EtE basis. Today's world often forgets that serving load is the reason the BES exist. The BES therefore should be capable of adequately serving the load not only under normal operating conditions and the most common contingency conditions but also under the resulting steady state configuration following a contingency. The BES should be planned in a manner that addresses these contingencies and not in a manner that just seeks to do enough to be able to report compliance. In conclusion, I offer the following recommendations: #1: The definition of Element in the NERC Glossary should be modified to: 1. Include switchable devices either manual or automatic. 2. Clearly define what constitutes an element Suggested modification: Element = Any switchable electrical device (either automatic or manual) with terminals that may be connected to other electrical devices such as a generator, transformer, circuit breaker, bus section, or transmission line. An element may be comprised of one or more elements. The last sentence was struck because you can't define something using the term you are trying to define. #2: The definition of consequential load loss needs further clarification. Consider replacing "due to fault clearing action or misopertion" with "as a result of new steady state conditions following a Planning or Extreme Event."		

Commenter	Q2. **Comment**	Agree.	Don't agree.
	#3: The definition of Planning Events should not be limited to the initial event such as breaker opening for a fault but should include any and all actions taken to sectionalize so that at the end of a Planning Event you have a system that is in steady state and serving as much load as possible. Suggestion: Planning Events = Events which remove one or more Elements and require Transmission system performance requirements to be met. This definition includes the initial event and any after event actions that result in the system returning to a steady state condition and preventing as serving as much Consequential load as possible. #4: The standard should include the expectation that the BES will be studied at some level (at least n-1) using EtE methodology.		
Response: One of the drivers for developing the definitions for Consequential Load and the use of some entities of BtB methodology referred to in your comments were concerns expressed in interviews by NERC TIS and FERC.. The interviews revealed that some planners were running simulations of single contingency by removing "elements" modeled in the simulation, e.g. impedance data from one bus number to another. This removed "element" did not even necessarily represent a real life switchable system element and this is reflected in requirements R3.2 and R4.2 of the Standard. The concept of Consequential Load was needed to clarify that under certain circumstances the standard allows for load to be dropped following the first contingency. As you indicated the planner must consider how the system can be switched and reconfigured to the point that loadings can be returned to within acceptable limits. The SDT has revised the definition to provide more clarity.			
PJM	Need to tighten definition example- load that trips in sympathy with fault (motor trips as a direct result but not in protection zone)	X	X
Response: The SDT revised the definition to better clarify what constitutes Consequential Load Loss in response to various comments.			
ATC	Voltage sensitive load loss (not due to operator action or UVLS) in response to a disturbance should constitute consequential load loss. Loss (drop) of voltage sensitive load must be included in this definition --- it is not non-consequential loss of load.		X
Response: The SDT revised this definition to include Load that is lost as a result of the Load's response to the transient conditions of the event. **Consequential Load Loss:** Load that is no longer ~~served because it is directly connected to an element(s) that is removed from service due to fault clearing action or mis-operation~~ connected to a source as a result of the event being studied or which is lost as a result of the load's response to the transient conditions of the event (other than through the action of UVLS or UFLS schemes). Although Load which is lost as a result of the Load's response to the transient conditions of the event is considered Consequential Load Loss and is permitted when			

Commenter	Q2. **Comment**	Agree.	Don't agree.
Consequential Load Loss is allowed, Transmission planning entities are not allowed to rely upon the expectation of such Load loss to meet steady state performance requirements.			
E ON US	I agree with the definiton except for "or mis-operation". The requirements do not, and should not, include mis-operation of protection schemes. We would never finish a study of all potential mis-operations.		X
Response: The SDT revised this definition to exclude any information that could be confusing, including the mention of misoperations. **Consequential Load Loss:** Load that is no longer ~~served because it is directly connected to an element(s) that is removed from service due to fault clearing action or mis-operation~~ connected to a source as a result of the event being studied or which is lost as a result of the load's response to the transient conditions of the event (other than through the action of UVLS or UFLS schemes). Although Load which is lost as a result of the Load's response to the transient conditions of the event is considered Consequential Load Loss and is permitted when Consequential Load Loss is allowed, Transmission planning entities are not allowed to rely upon the expectation of such Load loss to meet steady state performance requirements.			
BCTC	For the reasons discussed below, we do not agree with the proposed definition. To address our concerns and address the FERC staff concern regarding ambiguity, the proposed definition could be made acceptable to us by modifying it as follows: Load that is no longer served because it either (a) was supplied (wholly or partly) by an element(s) of a radial system or local network that was removed from service due to fault clearing action, was disconnected by controlled interruption to avoid overload of remaining elements of a radial system or local network, or protection or SPS/RAS mis-operation or (b) has dropped out or been tripped during a transient stability period, including an automatic reclosing period, due to a fault on the radial system or local network, including on branches not directly supplying the load. We also offer the following alternative: Resultant loss or controlled interruption of customers supplied by a radial system or local network, due to a fault on or loss of a facility in the radial system or local network. The definition proposed by the SDT removes the second sentence of footnote (b), as directed by FERC, and replaces the first sentence of footnote (b) with a new definition. We agree with the removal of the second sentence of footnote (b). However, we have a concern with this definition replacing the first sentence of footnote (b). We believe that the existing first sentence is a more appropriate definition of consequential load loss and that the proposed definition is more stringent and will have unacceptable impacts on reliability and/or add transmission costs that cannot be justified.		X

Commenter	Q2. **Comment**	Agree.	Don't agree.
	The coining of the term "Consequential Load Loss" has been a significant improvement in terminology compared to our reference to footnote (b). However, FERC only used this phase descriptively and did not order NERC to reconsider what would be acceptable consequential load loss (i.e. revise the first sentence of footnote (b)). The definition appears to be based on an interpretation of the new term rather than defining what this term was coined to describe. Order 693 requires that footnote (b) be clarified to not allow loss of firm load or firm transfers - i.e. delete the second sentence. Order 693 then refers to the remaining first sentence as consequential load loss. Order 693 does not address issues regarding whether this should further be restricted to only radial lines, not permitting load loss for outages on local networks. Nothing in the NOPR or the staff paper implies otherwise. The staff paper discusses potential ambiguity regarding which single contingencies load interruption is permitted for. The definition attempts to address this by referring to "directly connected" load. However, this is now ambiguous as "directly connected" might be interpreted to mean only the facility that the load is physically connected to and excluding any upstream facility. BCTC submits that the upstream facilities need to include both radial facilities and local networks. NERC has stated that looped configurations are key for reliable operation. We consider looped configurations and local networks to be the same thing. The proposed definition will make it more difficult to transition from a radial supply to a looped configuration. For radial loads connected by a single radial line, when the load exceeds the line capacity, the transmission owner has alternatives of upgrading the line, adding a second circuit, or converting to a local network by providing a loop from another supply. With the addition of a second circuit or conversion to local network, controlled load interruption may be necessary for loss of one circuit to avoid overload of the second line. Without the option of controlled load interruption, these alternatives will not provide N-1 capability for all loads they supply without addition of a third circuit. This will lead to a economic preference to upgrading of the existing circuit to meet criteria, thereby perpetuating the single radial line configuration. Other alternatives could include splitting the load between the lines or operating with one line out of service so that a single contingency does not overload the facilities remaining in service. However, the addition of a second circuit with controlled load interruption will provide a more reliable load serve than any of these		

Commenter	Q2. **Comment**	Agree.	Don't agree.
	alternatives, because under N-1 more load will remain continuously on line. We expect that the proposed definition will provide greater assurance that existing local networks with N-1 capability will continue to have N-1 capability. However, we have concluded that the definition will introduce an additional unacceptable barrier to transition from N-0 to N-1 supply and that this barrier is not acceptable. We believe that this barrier would be a more significant issue for improving the reliability of supply to all customers than the current situation of permitting some controlled load interruption on local networks. Another issue that arises if local networks are excluded is load response during transient periods. Customers can connect voltage sensitive loads, such as large motors, on long weak systems. During the transient stability period, voltages can dip to below the ride through capability of the load. The fault need not be on the circuit directly supplying the customer, but may be downstream or on another branch facility. Automatic reclosing is often employed to shorten restoration times, but with the consequence of worsening the transient period. Customers have options to install different types of motors, motor controls, local voltage support to mitigate impacts of transient voltage swings, or simply restart motors following the disturbance. If transmission systems are required to ensure no loss of load during transient stability periods for external faults, a first course of action may be to remove automatic reclosing, which will reduce reliability. Alternatively, customer load connections may be denied or additional transmission circuits may be required, which can be costly compared to the customer load options.		
City Water Light and Power	This could be load lost which is on a radial line or load served by facilites which do not have fault-interrupting breakers.	X	
Duke Energy	It is unclear what is meant by "mis-operation". The SDT also needs to address load lost during the transient time frame (e.g. load dropout due to low voltages as a result of a fault) that may not be directly connected to the element removed from service.		X
Entegra	Further examination is needed to determine how to correctly treat loads served downstream from the faulted element, but not directly connected.		X
Georgia Transm. Corp	This definition implies that load that is lost past the directly connected load is allowed. Therefore the definition should be changed to include radially connected load and load that is radialized as a result of a contingency or mis-operation.		X
LADWP	The existing standards do not allow load loss for N-1 contingency unless the load is a radial load of the outage element. This new definition appears an attempt to weaken the requirement by broadening it to anything "directly connected" to an element that is removed from service. While it may be argued that probably only radially connected loads fit this definition, this new definition will lead to more creative		X

Commenter	Q2. **Comment**	Agree.	Don't agree.
	interpretation of the word "consequential" and leads all of us down unintended consequence. A radial load is a very specific and clearly defined technical term and should not be changed to a new term that is less precise.		
MRO	The MRO could not agree on the correct definition.		X
Santee Cooper	The term "mis-operation" introduces ambiguity into the definition, and should be deleted. The definition needs further clarification for consequential and non-consequential loads. For example, loads served downstream from the faulted element but not directly connected should also be considered to be consequential loads. A better name for this would be "direct load loss".		X
FirstEnergy	We suggest that the team remove "or misoperation" from the definition. This could suggest that an overtrip of protection equipment could result in consequential load loss.		X
NCEMC SERC EC PSS	The term "mis-operation" introduces ambiguity into the definition, and should be deleted. The definition needs further clarification for consequential and non-consequential loads. For example, loads served downstream from the faulted element but not directly connected should also be considered to be consequential loads.		X
NERC TIS	MISOPERATION has to be qualified as being a misoperaiton on the system element that trips.	X	
RFC	Should the above definition contain a statement that the load is not intentionally lost, since non-consequential load loss is intentional?		X
SERC EC DRS	Add the following to the end of the definition: "or unintentional load lost as a direct result of the event (e.g. load dropout due to low voltages as a result of a fault)."		X
Southern Transmission	This definition only relates to load that is "directly connected" to the specific element being removed. It does not allow for any load that may be or becomes radially connected through another branch that is not part of the facility removed. It does not make sense to not allow the loss of load that is actually electrically radial to the facility being outaged. The definition may work better as "Load that is no longer served because it is directly connected to or radially served through an element(s) that is removed from service due to fault clearing action." The word "mis-operation" is not needed in this definition because none of the contingency events use this term.		X
BPA	Support comments submitted by WECC. The definition needs to consider loads that are tripped sympathetically that may not be directly connected to the element that is removed from service for fault clearing.	X	X
WECC TSGT TEP	Agree with the definition in concept. However, the wording makes the definition seem unrealistic. There are many examples where a certain amount of voltage sensitive load or motor drives sensitive to angle changes are dropped due to normally cleared electrical faults on the transmission system. These loads are not directly connected to the element being removed from service. This type of sympathetic loss of load is	X	X

Commenter	Q2. **Comment**	Agree.	Don't agree.
	unique to the individual customer load. The design of these loads is not under the control of the utilities when it comes to ability to ride through normally cleared faults. We suggest that this definition be modified to include the loss of sensitive load that is not directly connected to the element being removed. We propose the following the definition : Load that is no longer served because it is directly connected to an element(s) that is removed from service due to fault clearing action or mis-operation, and because of sympathetic tripping associated with normal clearing or mis-operation. Load that is lost because it trips due to low voltages experienced during and immediately following the fault (4-6 cycles?) is also considered consequential load loss. We believe this additional recognition is needed because load lost due to low fault voltages is unavoidable and should not result in a standard violation.		
Response: The SDT reworded the definition to better clarify that Consequential Load Loss is Load loss that occurs when the source to that Load is lost or Load that is lost due to the Load's transient response to event being studied. **Consequential Load Loss:** Load that is no longer ~~served because it is directly connected to an element(s) that is removed from service due to fault clearing action or mis-operation~~ connected to a source as a result of the event being studied or which is lost as a result of the load's response to the transient conditions of the event (other than through the action of UVLS or UFLS schemes). Although Load which is lost as a result of the Load's response to the transient conditions of the event is considered Consequential Load Loss and is permitted when Consequential Load Loss is allowed, Transmission planning entities are not allowed to rely upon the expectation of such Load loss to meet steady state performance requirements.		
AEP	Consider replacing "Consequential" with better wording (no specific suggestion to offer at this time).	X	
Ameren	A better name for this would be "direct load loss". The definition should include load served by the faulted element but not directly connected to the faulted element.	X	
SERC RRS OPS	The term "mis-operation" introduces ambiguity into the definition, and should be deleted. The definition needs further clarification for consequential and non-consequential loads. For example, loads served downstream from the faulted element but not directly connected should also be considered to be consequential loads. A better name for this would be "Planned Load Loss."		X
Entergy	Delete "mis-operation". For purposes of planning, all consequential load loss should reflect intended fault clearing actions and not unintended fault clearing actions (i.e., mis-operations). Include load loss due to UVLS & SPS in consequential load loss category. Consider using the terms in the existing standard; "Planned Load Loss" and "Unplanned Load Loss" in lieu of Consequential and Non-consequential as they may be		X

Commenter	Q2. **Comment**	Agree.	Don't agree.
	easier to define with each Transmission Owner/Planning Authority responsible for defining the terms considering the impact on the Bulk Electric System. If the terms remain as proposed, the definition needs further clarification for consequential and non-consequential loads. For example, loads entirely dependent on the faulted element but not directly connected should also be defined to be consequential loads.		
HQTE	``directly-connected`` load loss would be more clear	X	X
ITC	Suggest a change in terminology to "direct".	X	
MEAG Power	MEAG believes that deleting the term "mis-operation" as some may have suggested, would significantly narrow the definition of Consequential Load Loss, which in turn would unreasonably increase the amount of load that is Non-Consequential. The Non-consequential load loss, which is not allowed in P1-P5. For example, if mis-operation is deleted from the definition and we consider a relay mis-operation where a breaker fails to clear a fault, then any additional load interrupted by the back-up to the failed breaker/relay is Non-Consequential Load (and the standard appears to be violated since only a single transmission circuit was faulted and Non-Consequential Load was lost).	X	
MISO	Midwest ISO suggests this definition be changed to "Direct Load Loss", as "Consequential Load Loss" may include elements that are not directly connected to the faulted element.		X
SCANA	"Consequential Load Loss" should be termed "Intentional or Planned Load Loss". Not only should direct connected load loss be included, but loads served by or downstream from the faulted element, that is not directly connected to the faulted element, should also be included.		X
Tenaska	Using consequential and non-consequential seem to be misleading. Perhaps using "direct" and "indirect". Also, mis-operation needs some more explanation and to why it should be included here.		X
TVA	We recommend that the terms consequential and non-consequential be changed to direct and indirect. Also, the term should be better defined. We recommend that the definition be "loads that have been de-energized by fault-clearing action or loads that are lost even though the system performance remains within acceptable limits."		X

Response: The SDT reworded the definition to better clarify that Consequential Load Loss is Load loss that occurs when the source to that Load is lost or Load that is lost due to the Load's transient response to the event being studied. The SDT is concerned that the use of alternative terms might be confusing. Among other things, the terms used in the proposed standard are consistent with terms used by FERC.

Consequential Load Loss: Load that is no longer ~~served because it is directly connected to an element(s) that is removed from service due to fault clearing action or mis-operation~~ connected to a source as a result of the event being studied or which is lost as a result of the load's

Commenter	Q2. **Comment**	Agree.	Don't agree.
response to the transient conditions of the event (other than through the action of UVLS or UFLS schemes). Although Load which is lost as a result of the Load's response to the transient conditions of the event is considered Consequential Load Loss and is permitted when Consequential Load Loss is allowed, Transmission planning entities are not allowed to rely upon the expectation of such Load loss to meet steady state performance requirements**.**			
FPL FRCC	Need to clarify what constitues an element (e.g., breaker-to-breaker, line segment to line segment, transformer or capacitor bank)		X
Response: "Element" has been removed.			
SaskPower	What is meant by directly connected? Local area network load is allowed to be shed in Saskatchewan. The Saskatchewan Regulatory Jurisdiction has no plans to change this unless there is technical evidence to justify the increase in reliability.		X
Response: The SDT reworded the definition to better clarify that Consequential Load Loss is Load loss that occurs when the source to that Load is lost or Load that is lost due to the Load's transient response to the event being studied.. Without knowing under what conditions network Load can be shed in Saskatchewan, the SDT does not know whether the proposed standard would cause a change in Saskatchewan's practices or reliability. **Consequential Load Loss:** Load that is no longer ~~served because it is directly connected to an element(s) that is removed from service due to fault clearing action or mis-operation~~ connected to a source as a result of the event being studied or which is lost as a result of the load's response to the transient conditions of the event (other than through the action of UVLS or UFLS schemes). Although Load which is lost as a result of the Load's response to the transient conditions of the event is considered Consequential Load Loss and is permitted when Consequential Load Loss is allowed, Transmission planning entities are not allowed to rely upon the expectation of such Load loss to meet steady state performance requirements**.**			
Manitoba Hydro	If load losses due to stuck breaker and back-up breaker operations (which would frequently result in the loss of two or more network transmission elements) are not going to be qualified as "Consequential", where should they be placed? MH cannot visualize them as "Non-Consequential", as defined in Q6. Either another "load" category must be developed for these loads, or they should remain as "Consequential". In addition, Consequential Load Loss should include the concept of local area load loss to cover a scenario of islanding with a UFLS in the island, or a small network served at the end of a radial line.Can the SDT comment on why this Local Area defined in the existing TPL stds has been removed?	X	
Response: The SDT reworded the definition to better clarify that Consequential Load Loss is Load loss that occurs when the source to that Load is lost or Load that is lost due to the Load's transient response to the event being studied. However, Load losses associated with a stuck breaker would be considered consequential if they were the result of the initiating event. UFLS activation should not occur on a single Contingency event and would not be considered consequential. A radial Load is directly connected since it has no other source post event and would be consequential. **Consequential Load Loss:** Load that is no longer ~~served because it is directly connected to an element(s) that is removed from service due~~			

Commenter	Q2. **Comment**	Agree.	Don't agree.
~~to fault clearing action or mis-operation~~ connected to a source as a result of the event being studied or which is lost as a result of the load's response to the transient conditions of the event (other than through the action of UVLS or UFLS schemes). Although Load which is lost as a result of the Load's response to the transient conditions of the event is considered Consequential Load Loss and is permitted when Consequential Load Loss is allowed, Transmission planning entities are not allowed to rely upon the expectation of such Load loss to meet steady state performance requirements**.**			
APPA	This definition will help define what cascading outage is. There is confusion in the industry and FERC as to "what is a cascading outage." The planning process needs to address this confusion and define exactly what a cascading outage consists. Some want a cascading outage to be when loads beyond the primary or secondary protection equipment are dropped.	X	
Response: The SDT agrees that additional clarification is needed regarding cascading outages. FERC is currently working on modifying this definition. However, the definition of cascading outages is a separate issue from the definition of Consequential Load Loss.			
ERCOT ISO	Agree with the definition.	X	
Northwestern Energy		X	
CAISO	Agree with the definition	X	
CenterPoint		X	
Central Maine Power		X	
City Utilities/Springfield		X	
CPS Energy		X	
Allegheny Power		X	
Exelon		X	
Brazos Electric		X	
LCRA		X	
IESO	This is the same understanding of the IESO.	X	
KCPL		X	
LUS		X	
Muscatine P&W		X	
National Grid		X	
New England ISO		X	
New York ISO		X	
NU		X	
NPCC RCWS		X	
Nstar		X	
Progress–Carolinas		X	
Progress–Florida		X	
Seattle City Light		X	
Dominion		X	

Commenter	Q2. **Comment**	Agree.	Don't agree.
United Illuminating		X	
WPSC		X	
Response: Thank you. Please see the Summary Response.			

3) Q3. Extreme Events: Events which are more severe than Planning Events and have a low probability of occurrence.

Summary Response: Industry comments were mixed, with some commenters agreeing with the proposed definition and others disagreeing. Among the disagreeing commenters, several noted that a more accurate characterization of Extreme Events would be that Extreme Events have a "lower probability of occurrence than Planning Events" because even Planning Events have a low probability of occurrence. Based on the comments, the SDT revised this definition as follows:

Extreme Events: Events which are more severe and have a lower probability of occurrence than Planning Events ~~and have a low probability of occurrence~~.

Commenter	Q3. **Comment**	Agree.	Don't agree.
Ameren	Most planning events have a low probability of occurrence. It appears that the SDT is trying to make a distinction that these Extreme Events would have a lower probability of occurrence than planning events. Consideration should be given to adding the performance requirements with the definition.		X
ITC	R3.4 implies that "Extreme Events" will be studied as per the table. The definition seems functionally correct as applied to the standard but somewhat confusing. The existing wording implies that a mitigation plan should be developed if studies show that "Extreme Events" might cause cascading. If the mitigation plan is a true requirement, saying it is not a planning event can be confusing. "Extreme Events are more severe than Planning Events, have a low probability of occurrence and only require___?????_____ in the event of cascade."	X	
WPSC	By definition, Extreme Events are not Planning Events. However, only the definition Planning Events has a requirement to meeting performance requirements. I believe Extreme Events also have performance requirements under R3.4 and its definition should reflect this.		X
Response: The SDT revised this definition in response to various comments. However, the SDT disagrees that performance requirements should be included in the definition as is proposed in the comment. **Extreme Events**: Events which are more severe and have a lower probability of occurrence than Planning Events ~~and have a low probability of occurrence~~.			
ATC Central Maine Power	Suggest "Events which are more severe and have a lower probability of occurrence than the Planning Events"		X
AECC	This is too vague. The old Table 1 did a better job of defining Extreme Events.		X
City Water Light and Power	More needs to be added here, especially to define the phrase "low probability of occurrence". Does this refer to N-1, N-2, N-3 etc.? We have a 300 foot long interconnection line between two substations. In this case even N-1 has a low probability of occurrence. This N-1 event has a much lower probability of occurrence than an N-2 event which involves generator outages. We also have an N-1 SPS event		X

Commenter	Q3. **Comment**	Agree.	Don't agree.
	which hasn't occurred in 25 years.		
E ON US	I disagree with the phrase "and have a low probability of occurance". All the Planning Events, except possibly a generator outage (P1.1), have a low probability of occurance.		X
ERCOT ISO CAISO	Add specificity in this definition. Suggest the following wording: Outage of two or more elements from service with lower probability of occurrence than Planning Events.		X
BCTC	Alternative wording proposed: Events which have a low probability of occurrence and are typically more severe than Planning Events. Explanation: The primary consideration is the probability of occurrence. We do not exclude events simply because they are more severe.		X
Entegra	The statement would be clearer if "low" were changed to "lower".		X
MEAG Power NCEMC Santee Cooper SERC EC DRS SERC EC PSS SERC RRS OPS TVA	A number of the non-Extreme Events also have a low probability. Recommend change the word to "lower." The definition for "Extreme Events" should reference Table 1.		X
MISO	Extreme Events are clearly described on Table 1. Change definition from "low probability of occurrence to "lower probability of occurrence".		X
MRO	Low probability of occurrence should be in reference to something to be more meaningful. The MRO suggests that the definition be changed to state "lower probability of occurrence than Planning Events."		X
Entergy	Revise to, "Events which are beyond the normal scope of Planning Events and have a lower probability of occurrence."		X
KCPL	Suggest changing "low" to "lower".	X	
LCRA	Define "low probability of occurrence"	X	
National Grid New England ISO Sask Power United Illuminating	Modify to "Events which are more severe,but have a lower probability of occurrence, than Planning Events".		X
FPL FRCC HQTE IESO	Suggest reword as follows: "Events which are more severe and have a lower probability of occurrence than planning events."		X

Commenter	Q3. **Comment**	Agree.	Don't agree.
Manitoba Hydro NYISO NU NPCC RCWS NSTAR			
PJM	Agree with concept but need better definition	X	X
Southern Transmission	Recommend modifying the definition to read: "Events which are more severe than Planning events that are evaluated as required by TPL-001-1 Tables 1 and 2, in part, to identify potential Cascading Outages.		X
Tenaska	I think most people understand, but in this new world we need to put some more specificity around the words "low probability".		X
Response: The SDT revised this definition in response to various comments. **Extreme Events**: Events which are more severe and have a lower probability of occurrence than Planning Events ~~and have a low probability of occurrence~~			
APPA	The definition is needed; however, this term is dependent on a clear definition of Planning Events, which does not exist.		X
Response: The SDT revised the definition of Planning Events in response to comments received for Q8 with the intent of adding more clarity to this definition. **Planning Events:** Events ~~which~~ that require Transmission system performance requirements to be met.			
Georgia Transm. Corp	All events on the BES have a low probability of occurrence. Extreme Events are those events that have a high consequence to the BES if they were to occur.		X
Response: The SDT revised this definition in response to various comments. Specifically, in response to the recommendation of several commenters, the SDT revised the definition of Extreme Events to indicate these events have a lower probability of occurrence than Planning Events. However, the consequence is determined by simulating these lower probability events. Therefore, the SDT believes it would be inappropriate to define the consequence. **Extreme Events**: Events which are more severe and have a lower probability of occurrence than Planning Events ~~and have a low probability of occurrence~~			
LADWP	Extreme Events for transmission planning should be defined as anything more than N-2. The proposed definition is subjective and not precise. There are examples in this standard as to how this definition can be mis-construed, e.g., cyber attack, wild-fire, hurricanes, etc. These are Extreme Events that belong in emergency planning, not transmission planning.		X
Response: The SDT revised this definition in response to various comments. Specifically, in response to the recommendation of several commenters, the SDT revised the definition of Extreme Events to indicate these events have a lower probability of occurrence than Planning Events. The SDT also modified the standard to clarify Extreme Events.			

Commenter	Q3. **Comment**	Agree.	Don't agree.
Extreme Events: Events which are more severe and have a lower probability of occurrence than Planning Events ~~and have a low probability of occurrence~~			
NERC TIS	The use of the term Extreme should be limited to those events that are truly extreme. A single line-to-ground fault with delayed clearing (for whatever reason) may require remote clearing of the fault, and trips multiple system elements, without time between elements being outaged. Such events are far too common occurrences to call them extreme.		X
Response: The SDT revised this definition in response to various comments. The SDT also modified the performance tables in response to various comments. **Extreme Events**: Events which are more severe and have a lower probability of occurrence than Planning Events ~~and have a low probability of occurrence~~			
WECC BPA TSGT TEP	Please add the phrase "two or more elements out of service" to the definition from the previous definition in Table I.	X	X
Response: The SDT revised this definition in response to various comments. However, the SDT believes the suggested phrase would be imprecise for the standard as currently drafted because some Extreme Events do not necessarily involve "two or more elements out of service". For example, one type of "extreme event" is loss of a large Load or major Load center, which might possibly occur without two or more elements out of service. **Extreme Events**: Events which are more severe and have a lower probability of occurrence than Planning Events ~~and have a low probability of occurrence~~			
Dominion	To make this "crisp", it is suggested that this definition be extended as "Events which …..occurrence. The Transmission system performance requirements do not apply to Extreme Events".	X	
Response: The SDT revised this definition in response to various comments. However, the SDT is concerned that the language proposed in this comment may cause confusion because requirement R3.4 applies to Extreme Events. **Extreme Events**: Events which are more severe and have a lower probability of occurrence than Planning Events ~~and have a low probability of occurrence~~			
FirstEnergy	The definition is OK, but we question its use in the standard. Many of the items listed as Extreme Events are not considered events. For example, high river temperature is not really an event, it is a condition. The resulting event might be the shut-down of multiple generators.	X	
Response: The SDT revised this definition in response to various comments. The SDT also modified the standard to clarify Extreme Events. **Extreme Events**: Events which are more severe and have a lower probability of occurrence than Planning Events ~~and have a low probability~~			

Commenter	Q3. **Comment**	Agree.	Don't agree.
~~of occurrence~~			
ABB		X	
Allegheny Power		X	
AEP		X	
Brazos Electric		X	
CenterPoint		X	
City Utilities/Springfield		X	
CPS Energy		X	
Exelon		X	
Duke Energy		X	
LUS		X	
Muscatine P&W		X	
Northwestern Energy		X	
Progress–Carolinas		X	
Progress–Florida		X	
RFC		X	
SCANA		X	
Seattle City Light		X	
AECI	However this could be very subjective.	X	
Response: Thank you. Please see the Summary Response.			

4) Q4. Long-Term Transmission Planning Horizon: Transmission planning period that covers years six through ten or beyond.

Summary Response: Most commenters agreed with the proposed definition, but a few commenters raised issues about the use of the term "beyond". Therefore, the SDT revised the definition as follows to clarify when the horizon may extend beyond ten years:

Long-Term Transmission Planning Horizon: Transmission planning period that covers years six through ten or beyond when required to accommodate any known longer lead time projects that may take longer than ten years to complete.

Commenter	Q4. **Comment**	Agree.	Don't agree.
Central Maine Power NU NSTAR United Illuminating	"A Planning Assessment period that covers years six through ten", is sufficient for the standard." Suggest changing the name to Long-Term Planning Assessment.		X
Response: The SDT believes the term "or beyond" after "years Six through Ten" is necessary for the proposed standard as currently drafted to agree with Requirement R2.2.1, which requires a planning horizon beyond ten years if necessary. Moreover, the use of the phrase "planning horizon" in this definition is intended to indicate the period of time applicable to the assessment.			
FRCC	The definition does not have a reference year when the counting starts. Add the following to the end of the sentence: "… from the current study year."		X
Response: The SDT concurs that a reference year when the counting starts is necessary. The SDT proposed Year One as the reference year when the counting starts.			
AECC	With the time it takes to get transmission planned, approved and built the 10 year time frame is too short. Six to ten year studies are fine but longer term studies need to be performed occasionally. If the requirement remains vague and says 6 to 10 years then what will happen is only 6 year studies. Coupled with the 1 to 5 years in the Near Term Horizon then you potentially set up a situation where you could have a 5 and a 6 year study done. This defeats the purpose of what the intent of the defintion should be. I suggest that 1, 2, 5, 10, 15 year studies be required.		X
Response: The SDT believes the definition should clarify the intent that assessments will cover ten years and may extend beyond ten years if necessary (see Requirement R2.2.1). This definition was revised for additional clarity. **Long-Term Transmission Planning Horizon:** Transmission planning period that covers years six through ten or beyond when required to accommodate any known longer lead time projects that may take longer than ten years to complete.			
LADWP	The objection is not so much about the definition as about what comes after the definition. This standard proposed to include operating and market studies (calling them sensitivities) in the "near-term" planning studies. It appears that the SDT believes this would be easier to justify if the sensitivities is limited to near-term and		X

Commenter	Q4. **Comment**	Agree.	Don't agree.
	not long-term, hence the motivation for breaking the planning horizon. But this is misguided; operating studies belongs in operating standards. They should be addressed appropriately in the TOP for operating scenarios and Market related studies should be addressed in MOD, for example. There are no benefits to include these in transmission planning studies and therefore no need to break up the planning horizon.		
Response: The SDT disagrees and believes sensitivity studies should be performed in the planning horizon. Furthermore, the requirement for sensitivity studies is responsive to FERC Order 693.			
National Grid New England ISO	"Transmission planning period that covers years six through ten", is sufficient for the standard."		X
SRP	Reword to: Transmission planning period that covers years six or beyond.	X	
Response: The SDT believes the definition should clarify the intent that assessments will cover ten years and may extend beyond ten years if necessary (see Requirement R2.2.1). This definition has been revised for additional clarity. **Long-Term Transmission Planning Horizon:** Transmission planning period that covers years six through ten or beyond when required to accommodate any known longer lead time projects that may take longer than ten years to complete.			
ABB		X	
ATC		X	
Brazos Electric		X	
City Water Light and Power		X	
Dominion		X	
E ON US		X	
ERCOT ISO		X	
Northwestern Energy		X	
AECI		X	
Allegheny Power		X	
AEP		X	
APPA	This definition is needed to eliminate the confusion that exists in the industry.	X	
BPA		X	
BCTC		X	
CAISO	Agree with the definition	X	
CenterPoint		X	
City Utilities/Springfield		X	
CPS Energy		X	
Duke Energy		X	
Entegra		X	
Entergy		X	
Exelon		X	

Commenter	Q4. **Comment**	Agree.	Don't agree.
FirstEnergy		X	
FPL		X	
Georgia Transm. Corp		X	
HQTE		X	
IESO	Consistent with the IESO's understanding.	X	
ITC		X	
KCPL		X	
LUS		X	
LCRA		X	
Manitoba Hydro		X	
MEAG Power		X	
MISO		X	
MRO		X	
Muscatine P&W		X	
NERC TIS		X	
New York ISO		X	
NCEMC		X	
NPCC RCWS		X	
Progress–Carolinas		X	
Progress–Florida		X	
RFC		X	
Santee Cooper		X	
SaskPower		X	
Seattle City Light		X	
SERC EC DRS		X	
SERC EC PSS		X	
SERC RRS OPS		X	
SCANA		X	
Southern Transmission	No Additional Comments.	X	
Tenaska		X	
TVA		X	
TSGT		X	
TEP		X	
WECC		X	
Response: Thank you. Please see the Summary Response.			

5) Q5. Near-Term Transmission Planning Horizon: Transmission planning period that covers years one through five.

Summary Response: The majority of the commenters agreed with the proposed definition; therefore, the SDT did not modify the definition.

Commenter	Q5. **Comment**	Agree.	Don't agree.
AECC	I agree with the definition but I don't think studies should necessarily be required for all of the years 1 through 5. Years 1 and 2 probably need to be required because of they are sometimes used as the basis for the development of seasonal models and studies used in the opertional horizon in many Open Access Tariffs.	X	
Response: The minimum requirements for the near term are identified under Requirement R2.1. Past studies can also be included as identified in Requirement R2.6.			
Ameren Santee Cooper SERC RRS OPS	It is suggested that another definition be added for "operations planning horizon".		
Response: The reference to Operations Planning in Q11 was erroneous. The term "operations planning horizon" is not defined because it is not used in the standard.			
LADWP	See my comment above; the only part about the definition that I would retain is to require each of the first five years in a typical ten-year plan be studied instead of just picking one or two years out of the first five years.		X
Response: LADWP's comment does not appear to be directed solely at Q5. In addition, the SDT disagrees with the proposed modification of the requirement.			
Central Maine Power	Suggest changing the name to Near-Term Planning Assessment, and introduce the description the same was as above.	X	
New England ISO NU NSTAR United Illuminating	Suggest changing the name to Near-Term Planning Assessment.	X	
Response: The use of the phrase "planning horizon" in this definition is intended to indicate the period of time applicable to the assessment.			
ABB		X	
ATC		X	
Brazos Electric		X	
City Water Light and Power		X	
Dominion		X	
E ON US		X	
ERCOT ISO	Agree with definition.	X	
Northwestern Energy		X	
AECI		X	
AESO		X	

Commenter	Q5. **Comment**	Agree.	Don't agree.
Allegheny Power		X	
AEP		X	
APPA	This definition is needed to eliminate the confusion that exists in the industry.	X	
BPA		X	
BCTC		X	
CAISO	Agree with the definition	X	
CenterPoint		X	
City Utilities/Springfield		X	
CPS Energy		X	
Duke Energy		X	
Entegra		X	
Entergy		X	
Exelon		X	
FirstEnergy		X	
FPL		X	
FRCC		X	
Georgia Transm. Corp		X	
HQTE		X	
IESO	Same as above.	X	
ITC		X	
KCPL		X	
LUS		X	
LCRA		X	
Manitoba Hydro		X	
MEAG Power		X	
MISO		X	
MRO		X	
Muscatine P&W		X	
National Grid		X	
NERC TIS		X	
New York ISO		X	
NCEMC		X	
NPCC RCWS		X	
Progress–Carolinas		X	
Progress–Florida		X	
RFC		X	
SaskPower		X	

Commenter	Q5. **Comment**	Agree.	Don't agree.
Seattle City Light		X	
SERC EC DRS		X	
SERC EC PSS		X	
SCANA		X	
Southern Transmission	No Additional Comments.	X	
Tenaska		X	
TVA		X	
TSGT		X	
TEP		X	
WECC		X	
Response: Thank you.			

6) **Q6. Non-Consequential Load Loss: Load loss other than Consequential Load Loss. For example, Load loss that occurs through manual (operator initiated) or automatic operations such as under-voltage Load shedding, under-frequency Load shedding, or Special Protection Systems.**

Summary Response: Based on comments, the SDT revised this definition to specify that this is non-interruptible load as follows to add further clarity:

Non-Consequential Load Loss: ~~Load loss other than Consequential Load Loss. For example, Load loss that occurs through manual (operator initiated) or automatic operations such as under-voltage Load shedding, under-frequency Load shedding, or Special Protection Systems.~~ Non-Interruptible Load loss other than Consequential Load Loss. For example, non-Interruptible Load loss that occurs through manual (operator initiated) or automatic operations such as under-voltage Load shedding, under-frequency Load shedding, or Special Protection Systems would be considered Non-Consequential Load Loss.

Commenter	Q6. **Comment**	Agree.	Don't agree.
AECC	See my comments on Consequential Load Loss. The definition is too vague to just say "load loss other than Consequential Load Loss". The defintion should be clear and examples should not be used to make the definition. This is a bad habit that NERC has which leads the industry to establish status quo based on the examples and not the definition itself. It sounds like Consequential Load Loss is being tied to short circuit fault events and Non-Consequential Load Loss is being tied to events other than short circuit fault events. Remember that undervoltage, underfrequency and SPS are still triggered by "faults". If that is the intent then say it. Don't put forth a vague definition and then try to justify its meaning by an example.		X
IESO	Suggest to either stop at "automatic operations" or to include other examples since the list is not exhaustive, for example: load that drops out due to unacceptable voltage levels (not tripped intentionally by UVLS.		X
New York ISO	Suggest that examples not be listed or a more exhaustive list be developed.		X
Response: See responses to Q2. The SDT revised the definitions of Consequential Load Loss and Non-Consequential Load Loss in response to various comments. However, the SDT believes that the examples add clarity, even if not exhaustive. **Non-Consequential Load Loss:** ~~Load loss other than Consequential Load Loss. For example, Load loss that occurs through manual (operator initiated) or automatic operations such as under-voltage Load shedding, under-frequency Load shedding, or Special Protection Systems.~~ Non-Interruptible Load loss other than Consequential Load Loss. For example, non-Interruptible Load loss that occurs through manual (operator initiated) or automatic operations such as under-voltage Load shedding, under-frequency Load shedding, or Special Protection Systems would be considered Non-Consequential Load Loss.			
PJM	Non-Consequential Load Loss should not include load loss due to manual, UVLS and UFLS.	X	X
Response: The SDT believes that Load loss that occurs from manual action, UVLS, or UFLS is not a direct consequence of the event being studied and is in fact the type of distinction the SDT intended to make. The SDT believes that Consequential Load Loss is Load loss that			

Commenter	Q6. **Comment**	Agree.	Don't agree.
occurs when the source to that Load is lost or Load that is lost due to the Load's response to a transient condition of the event being studied. All other Load that is lost is non-consequential.			
ABB	Most people will think of inconsequential, which often means irrelevant, unimportant, or insignificant. But what you are trying to define is the opposite: load loss that is significant, important, and needs to be prevented. Also, whatever you call it, your examples (UVLS, UFLS, SPS) should be expanded to include unintentional and uncontrolled load loss due to low voltage, high current, impedance relays, etc.		X
Ameren Santee Cooper	A better name for this would be "indirect load loss".		
Georgia Transm. Corp HQTE	Suggest a change in title to Indirect Load Loss		X
MISO	Midwest ISO suggests this definition be changed to "Indirect Load Loss", as "Non-Consequential Load Loss" may be confusing regarding the cause-and-effect relationship between a faulted element and subsequent loss of load.		X
SERC RRS OPS	A better name for this would be "Unplanned Load Loss". Load loss that occurs from UFLS, UVLS, load shedding or SPS should be moved to Planned Load Loss. Unplanned load loss would be all other load loss other than planned.		X
TVA	See comment for Q2. We recommend that this term is defined as "load loss other than consequential load loss".		X
ITC	May want to change the terminology as some may interpret this to mean load that is not important and can routinely be shed for any contingency. Suggest 'direct load loss' and 'indirect load loss'. Potential Definition: Load that is not intended to be lost for normal fault clearing or during mis-operation but could be lost either by design, such as under frequency relaying, SPS or backup breaker clearing, or thru manual operator action.	X	
Response: See responses to Q2. The SDT revised this definition in response to various comments. However, the SDT is concerned that the use of alternative terms might be confusing. Among other things, the terms used in the proposed standard are consistent with terms used by FERC. Moreover, in response to SERC's comment, the SDT believes that Load loss that occurs from UFLS, UVLS, Load shedding or SPS is not a direct consequence of the event being studied and is in fact the type of distinction the SDT intended to make. **Non-Consequential Load Loss:** ~~Load loss other than Consequential Load Loss. For example, Load loss that occurs through manual (operator initiated) or automatic operations such as under-voltage Load shedding, under-frequency Load shedding, or Special Protection Systems.~~ Non-Interruptible Load loss other than Consequential Load Loss. For example, non-Interruptible Load loss that occurs through manual (operator initiated) or automatic operations such as under-voltage Load shedding, under-frequency Load shedding, or Special Protection Systems would be considered Non-Consequential Load Loss.			
ATC	Reference to SPS must be excluded from this definition. We recommend that the SDT address what System Elements and/or Load may be tripped by an SPS for each Planning Event in the performance table after N-1-1 scenarios for P3-P5 events.		X

Commenter	Q6. **Comment**	Agree.	Don't agree.
FirstEnergy	We suggest eliminating the reference to Special Protection Systems (SPS). Some SPSs could result in tripping of load in association with a fault. By specifically listing SPSs here, it could imply that if that situation occurs, it would not be considered consequential load drop.		X
Response: The SDT believes that Load loss that occurs from an SPS is not a direct consequence of the event being studied and is in fact the type of distinction the SDT intended to make. FERC has determined that any Load loss that is not directly connected to the faulted element is actually Non-Consequential Load Loss.			
City Water Light and Power APPA	This definition should go beyond just saying "Load loss other than Consequential Load Loss." Recommend adding the following: " . . . including Load Loss that occurs through planned manual (Transmission Operator, Distribution Provider, and so-on) operation or planned automatic operation of load shedding equipment such as under-frequency Load shedding devices or Special Protection Systems."		X
Response: See responses to Q2. The SDT revised this definition in response to various comments. **Non-Consequential Load Loss:** ~~Load loss other than Consequential Load Loss. For example, Load loss that occurs through manual (operator initiated) or automatic operations such as under-voltage Load shedding, under-frequency Load shedding, or Special Protection Systems.~~ Non-Interruptible Load loss other than Consequential Load Loss. For example, non-Interruptible Load loss that occurs through manual (operator initiated) or automatic operations such as under-voltage Load shedding, under-frequency Load shedding, or Special Protection Systems would be considered Non-Consequential Load Loss.			
CAISO	Add Remedial Action Schemes (RAS) after "Systems"		X
ERCOT ISO	Add Remedial Action Schemes (RAS) after "Systems" Amend sentence beginning "For example, Load loss that "directly" occurs…		X
Response: The NERC Glossary of Terms clarifies that the terms "Special Protection System" and "Remedial Action Scheme" can be used interchangeably.			
BCTC	See comments on Consequential Load Loss. Propose the following definition to clarify situations for which NCLL is acceptable: Load loss other than Consequential Load Loss to avoid cascading, voltage stability, or blackout of the BES. For example, load loss that occurs through manual (operator initiated) or automatic operations such as under-voltage load shedding, under-frequency load shedding, or SPS/RAS.		X
SCANA	This term is not needed. See comments on "Consequential Load Loss/Intentional Load Loss".		X
Response: See responses to Q2. The SDT revised this definition in response to various comments. However, the SDT is concerned that the use of alternative terms might be confusing. Among other things, the terms used in the proposed standard are consistent with terms used by FERC. **Non-Consequential Load Loss:** ~~Load loss other than Consequential Load Loss. For example, Load loss that occurs through manual~~			

Commenter	Q6. **Comment**	Agree.	Don't agree.
~~(operator initiated) or automatic operations such as under-voltage Load shedding, under-frequency Load shedding, or Special Protection Systems.~~ Non-Interruptible Load loss other than Consequential Load Loss. For example, non-Interruptible Load loss that occurs through manual (operator initiated) or automatic operations such as under-voltage Load shedding, under-frequency Load shedding, or Special Protection Systems would be considered Non-Consequential Load Loss.			
Entergy	We recommend to treat load losses due to UVLS & SPS as examples of consequential load loss (refer to question 2).		X
Response: The SDT believes that Load loss that occurs from an SPS or UVLS is not a direct consequence of the event being studied and is in fact the type of distinction the SDT intended to make. FERC has determined that any Load loss that is not directly connected to the faulted element is actually Non-Consequential Load Loss			
FPL FRCC	Reword as follows: "Firm load loss other than Consequential Load Loss. For example, Load loss that occurs through manual (operator initiated) or automatic operations such as under-voltage Load shedding, under-frequency Load shedding, or Special Protection Systems, excluding curtailments, DSM, and voltage reduction."		X
Response: The SDT revised this definition in response to various comments. However, the SDT ddisagrees with curtailments, DSM, and voltage reduction as these are real-time operating actions that must be taken pre-Contingency and are unrelated to Consequential Load Loss and Non-Consequential Load Loss. **Non-Consequential Load Loss:** ~~Load loss other than Consequential Load Loss. For example, Load loss that occurs through manual (operator initiated) or automatic operations such as under-voltage Load shedding, under-frequency Load shedding, or Special Protection Systems.~~ Non-Interruptible Load loss other than Consequential Load Loss. For example, non-Interruptible Load loss that occurs through manual (operator initiated) or automatic operations such as under-voltage Load shedding, under-frequency Load shedding, or Special Protection Systems would be considered Non-Consequential Load Loss.			
LADWP	See my comment on the Consequential load loss. Why introduce two new and less precise definitions to replace one existing clearly defined definition? Radial load is precise and clearly defined to transmission planners.		X
Response: See responses to Q2. The SDT revised the definitions of Consequential Load Loss and Non-Consequential Load Loss in response to various comments. However, radial Load is not sufficiently precise and is itself confusing if left as the sole explanation. **Non-Consequential Load Loss:** ~~Load loss other than Consequential Load Loss. For example, Load loss that occurs through manual (operator initiated) or automatic operations such as under-voltage Load shedding, under-frequency Load shedding, or Special Protection Systems.~~ Non-Interruptible Load loss other than Consequential Load Loss. For example, non-Interruptible Load loss that occurs through manual (operator initiated) or automatic operations such as under-voltage Load shedding, under-frequency Load shedding, or Special Protection Systems would be considered Non-Consequential Load Loss.			
Tenaska	See Q2 answer.		X
Response: Please refer to the SDT reply to Q2 comments.			
TSGT	same as WECC group comments		X
BPA	Support comments submitted by WECC.		X
WECC	Please add "or Remedial Action schemes" to the end of the definition. FERC Order		X

Commenter	Q6. **Comment**	Agree.	Don't agree.
TEP	693, paragraph 1773 states (6)"clarifies footnote (b) to Table 1 to allow no firm load or firm transactions to be interrupted except for consequential load loss." There needs to be a distinction made between Interruptible Load and Firm Demand.		
Response: The SDT revised this definition in response to various comments. However, the NERC Glossary of Terms clarifies that the terms "Special Protection System" and "Remedial Action Scheme" can be used interchangeably. **Non-Consequential Load Loss:** ~~Load loss other than Consequential Load Loss. For example, Load loss that occurs through manual (operator initiated) or automatic operations such as under-voltage Load shedding, under-frequency Load shedding, or Special Protection Systems.~~ Non-Interruptible Load loss other than Consequential Load Loss. For example, non-Interruptible Load loss that occurs through manual (operator initiated) or automatic operations such as under-voltage Load shedding, under-frequency Load shedding, or Special Protection Systems would be considered Non-Consequential Load Loss.			
SaskPower			X
Response: The SDT revised this definition in response to various comments. **Non-Consequential Load Loss:** ~~Load loss other than Consequential Load Loss. For example, Load loss that occurs through manual (operator initiated) or automatic operations such as under-voltage Load shedding, under-frequency Load shedding, or Special Protection Systems.~~ Non-Interruptible Load loss other than Consequential Load Loss. For example, non-Interruptible Load loss that occurs through manual (operator initiated) or automatic operations such as under-voltage Load shedding, under-frequency Load shedding, or Special Protection Systems would be considered Non-Consequential Load Loss.			
Northwestern Energy	Include the words "not directly connected" before period of first sentence; and what does "load loss" mean?	X	X
Response: See responses to Q2. The SDT revised this definition in response to various comments. However, the SDT is concerned that the use of alternative terms might be confusing. Moreover, the SDT believes the term "Load loss" is largely self-explanatory and is further clarified by the examples provided in the definition. **Non-Consequential Load Loss:** ~~Load loss other than Consequential Load Loss. For example, Load loss that occurs through manual (operator initiated) or automatic operations such as under-voltage Load shedding, under-frequency Load shedding, or Special Protection Systems.~~ Non-Interruptible Load loss other than Consequential Load Loss. For example, non-Interruptible Load loss that occurs through manual (operator initiated) or automatic operations such as under-voltage Load shedding, under-frequency Load shedding, or Special Protection Systems would be considered Non-Consequential Load Loss.			
AEP	Consider replacing "Non-Consequential" with better wording (no specific suggestion to offer at this time).	X	
RFC	Recommend adding that this load loss is "intentional".	X	
Response: See responses to Q2. The SDT revised this definition in response to various comments. However, the SDT is concerned that the use of alternative terms might be confusing. **Non-Consequential Load Loss:** ~~Load loss other than Consequential Load Loss. For example, Load loss that occurs through manual (operator initiated) or automatic operations such as under-voltage Load shedding, under-frequency Load shedding, or Special Protection~~			

Commenter	Q6. **Comment**	Agree.	Don't agree.
~~Systems.~~ Non-Interruptible Load loss other than Consequential Load Loss. For example, non-Interruptible Load loss that occurs through manual (operator initiated) or automatic operations such as under-voltage Load shedding, under-frequency Load shedding, or Special Protection Systems would be considered Non-Consequential Load Loss.			
AECI		X	
Allegheny Power		X	
Brazos Electric		X	
CenterPoint		X	
Central Maine Power		X	
City Utilities/Springfield		X	
CPS Energy		X	
Duke Energy		X	
Entegra		X	
Exelon		X	
Dominion		X	
E ON US		X	
KCPL		X	
LUS		X	
LCRA		X	
Manitoba Hydro		X	
MEAG Power		X	
MRO		X	
Muscatine P&W		X	
National Grid		X	
New England ISO		X	
NCEMC		X	
NCMPA		X	
NU		X	
NPCC RCWS		X	
Nstar		X	
Progress–Carolinas		X	
Progress–Florida		X	
Seattle City Light		X	
SERC EC DRS		X	
SERC EC PSS		X	
Southern Transmission	Agree assuming the change in Q2 is made.	X	
United Illuminating		X	
WPSC		X	

Commenter	Q6. **Comment**	Agree.	Don't agree.
Response: Thank you. Please see the Summary Response.			

7) **Q7. Planning Assessment: Documented evaluation of future Bulk Electric System needs by the use of performance studies that cover a range of assumptions regarding system conditions, time frames, future plans including capital reinforcements and operating procedures and other factors, such as asset conditions and age.**

Summary Response: Based on the comments, the SDT revised this definition to be more succinct and eliminate the description of the possible range of assumptions. The definition was also modified to clarify that the assessment is an evaluation of Transmission System performance (not needs) and Corrective Action Plans associated with identified deficiencies.

Planning Assessment: Documented evaluation of future Transmission System performance and Corrective Action Plans to remedy identified deficiencies. ~~Bulk Electric System needs by the use of performance studies that cover a range of assumptions regarding system conditions, time frames, future plans including capital reinforcements and operating procedures and other factors, such as asset conditions and age.~~

Commenter	Q7. **Comment**	Agree.	Don't agree.
AECC	Planning assessments shouldn't be limited to the future. Sometimes an assessment needs to be made to benchmark and validate models. Strike: future		X
Response: The SDT revised this definition in response to various comments. However, the purpose of the standard is to assess future transmission needs. Other standards are related to benchmarking and validating models. **Planning Assessment:** Documented evaluation of future Transmission System performance and Corrective Action Plans to remedy identified deficiencies. ~~Bulk Electric System needs by the use of performance studies that cover a range of assumptions regarding system conditions, time frames, future plans including capital reinforcements and operating procedures and other factors, such as asset conditions and age.~~			
City Water Light and Power	This definition is too vague. A Planning Assessment should cover the Near-Term or Long-Term Planning Horizon and include Base Case and Contingency Analysis according to NERC Standards.		X
Response: Based on the comments, the SDT revised this definition to be more succinct. Other requirements explain the horizon and conditions required to be studied and should not be included in the definition. **Planning Assessment:** Documented evaluation of future Transmission System performance and Corrective Action Plans to remedy identified deficiencies. ~~Bulk Electric System needs by the use of performance studies that cover a range of assumptions regarding system conditions, time frames, future plans including capital reinforcements and operating procedures and other factors, such as asset conditions and age.~~			
APPA	This is too general. Just about any kind of review will qualify as a Planning Assessment. Suggested definition: "Documented evaluation of future Bulk Electric System needs by the use of performance studies such as NERC Steady State Transmission Studies or Plant Stability Studies conducted in accordance with the NERC Reliability Standards."		X
BCTC	Need to insert the word "supported", as below, and further refine, to clarify that the Planning Assessment is not just studies, but includes evaluation of contingencies to be run, sensitivities to consider, etc.		X

Commenter	Q7. **Comment**	Agree.	Don't agree.
	Documented evaluation of future BES needs, measures to mitigate adverse reliability impacts, and assessments of residual impacts, supported by the use of performance studies ….		
City Utilities/Springfield	Definition should be more clearly defined. Documented evaluation of future Bulk Electric System needs based on the performance requirements as defined for NERC Steady State Transmission Studies or Plant Stability Studies conducted in accordance with the NERC Reliability Standards or more restrictive local area criteria.		
Tenaska	May be best to stop the definition after the word assumptions and cover the details as part of the requirements in the standard itself.		X
Response: Based on the comments, the SDT revised this definition to be more succinct and eliminate the description of the possible range of assumptions. The definition was also modified to clarify that the assessment is an evaluation of Transmission System performance (not needs) and Corrective Action Plans associated with identified deficiencies. **Planning Assessment:** Documented evaluation of future Transmission System performance and Corrective Action Plans to remedy identified deficiencies. ~~Bulk Electric System needs by the use of performance studies that cover a range of assumptions regarding system conditions, time frames, future plans including capital reinforcements and operating procedures and other factors, such as asset conditions and age.~~			
Central Maine Power HQTE National Grid New England ISO NU NPCC RCS NSTAR United Illuminating	Eliminate "capital" from the definition. It is not defined or consistently applicable to the standard. Reference to vague "other factors, such as asset conditions and age" should be removed from this standard; there are no consistent definitions or industry standards on which to base this requirement, nor does it appear to be a necessary addition to the standard.		X
Entergy	Remove "and other factors, such as asset conditions and age" from definition. The terms "age" and "condition" are subjective and the age of equipment, if it is well maintained, has little impact on reliability.		X
Exelon	'Other factors' such as condition and age should not be required, but may be utilized if these factors are an integral component of the study.		X
FPL FRCC	Last part of the last sentence should be removed "… and other factors, such as asset conditions and age" does not make sense for planning studies. Equipment condition and age are maintenance issues not transmission planning issues.		X
Georgia Transm. Corp	Asset conditions and age should not be included in the definition. Equipment replacement, in general, is dependent on performance, not age.		X
LADWP	The assessment of asset conditions and age of equipment belongs in maintenance practices, not a transmission planning issue. Similarly, Operating procedures is an operating matter, not planning studies. They have their own standards that could and		X

Commenter	Q7. **Comment**	Agree.	Don't agree.
	should address any issue the SDT may have in mind. Using transmission planning as a catch-all is a wrong headed approach.		
MEAG Power	Bulk Electric System deficiencies rather than needs should be evaluated. We do not agree that the planning assessment should include asset conditions and age. This is a preventive maintenace issue. The age of equipment, if it is well maintained, has little impact on reliability.		X
NCEMC	Generally, we agree but would request NERC to clarify accounting for asset conditions and age within planning assessments. Wouldn't these already be taken into account in the FAC-008 & FAC-009 ratings?	X	
Progress–Carolinas	Planning assessments should not include asset conditions and age.	X	X
Santee Cooper SERC EC PSS SERC RRS OPS	Bulk Electric System deficiencies rather than needs should be evaluated. We do not agree that the planning assessment should include asset conditions and age. The age of equipment, if it is well maintained, has little impact on reliability. The term "and other factors" should be better defined or deleted.		X
SaskPower	What is the intent "and other factors, such as asset condition and age"? Seems to broad and outside the scope of NERC. Remove it.		X
SERC EC DRS	Delete the word "needs" and the phrase "such as asset conditions and age." We do not agree that the planning assessment should include asset conditions and age. The age of equipment, if it is well maintained, has little impact on reliability.		X
Southern Transmission	The term "needs" should be replaced by a term that more aptly describes what is being evaluated. The definition should be ended after the word "assumptions." We do not agree that the planning assessment should include asset conditions and age. The age of equipment, if it is well maintained, has little impact on reliability.		X
TVA	Use of the word "deficiencies" instead of "needs" provides better consistency throughout the standard. We do not agree that the planning assessment should directly include asset conditions and age. Asset condition should be part of the ratings process. The age of equipment, if it is well maintained, has little impact on reliability.		X
Ameren	We do not agree that the planning assessment should include asset conditions and age. The age of equipment, if it is well maintained, has little impact on reliability. If NERC wants a standard to deal with age and maintenance of equipment, then it should develop a separate standard for asset management and not overburden TPL-001-1 with such issues.		X
ATC	We do not agree that "asset conditions and age" belongs in this definition. Furthermore, these factors are not addressed in any requirement.		X
E ON US	I agree that Asset Managers need to consider asset condition and age in their spare equipment and replacement strategies but the impact of these factors is beyond the scope of a deterministic Planning Assessment.		X
Entegra	Should also include validation of reactive power supplies.		X

Commenter	Q7. **Comment**	Agree.	Don't agree.
Response: Based on the comments, the SDT revised this definition to be more succinct and eliminate the description of the possible range of assumptions. **Planning Assessment:** Documented evaluation of future Transmission System performance and Corrective Action Plans to remedy identified deficiencies. ~~Bulk Electric System needs by the use of performance studies that cover a range of assumptions regarding system conditions, time frames, future plans including capital reinforcements and operating procedures and other factors, such as asset conditions and age.~~			
FirstEnergy	We suggest replacing "performance studies" with "past or present studies or information".		X
Response: The requirements define the studies that qualify for use in assessments and are not part of the definition.			
LCRA	"Documented evaluation of future Bulk Electric System performance conducted through performance studies…"		
Response: Based on the comments, the SDT revised this definition to be more succinct and eliminate the description of the possible range of assumptions. The definition was also modified to clarify that the assessment is an evaluation of Transmission System performance (not needs) and Corrective Action Plans associated with identified deficiencies. The requirements define the studies that qualify for use in assessments and are not part of the definition. **Planning Assessment:** Documented evaluation of future Transmission System performance and Corrective Action Plans to remedy identified deficiencies. ~~Bulk Electric System needs by the use of performance studies that cover a range of assumptions regarding system conditions, time frames, future plans including capital reinforcements and operating procedures and other factors, such as asset conditions and age.~~			
MRO	This definition is too general. It could be interpreted that the performance studies include resource planning rather than transmission system planning, as well as, asset management. Asset management issues should be beyond the scope of this transmission planning standard. Asset management is an engineering discipline that would require a separate standard or standards and is still a developing activity, for example, there is no industry-wide practice for studying aging issues of transmission equipment while there are industry-wide practices for steady-state, stability, and short circuit modeling and planning of transmission systems. The MRO suggests that the word transmission be added to the definition when referring to needs, performance, and reinforcements and that references to asset management be deleted. Here is a proposed definition "Documented evalution of future Bulk Electric System TRANSMISSION needs by the use of TRANSMISSION SYSTEM performance studies that cover a range of assumptions regarding TRANSMISSION system conditions, time frames, future plans including TRANSMISSION IMPROVEMENTS and operating procedures and other factors." The words in all caps were added or inserted to replace the Drafting Team's original words.		X
Dominion	Suggest to change "…by the use of performance studies that cover……" to "…by the use of past or current performance studies that cover……".	X	X
Northwestern Energy	Insert before performance studies the words "current or past that is known to be	X	X

Commenter	Q7. **Comment**	Agree.	Don't agree.
	valid".		
WECC BPA TEP TSGT	As identified by the modifications above, we believe the definition should be changed to read, "Documented evaluation of future Bulk Electric System needs by the use of performance studies (steady state and dynamic) that cover a range of reasonable or expected assumptions regarding system conditions, applicable time frames, and future plans; including capital reinforcements and operating procedures, SPS/RAS, and other factors (such as asset conditions and age)."	X	X
Response: Based on the comments, the SDT revised this definition to be more succinct and eliminate the description of the possible range of assumptions. The definition was also modified to clarify that the assessment is an evaluation of Transmission System performance (not needs) and Corrective Action Plans associated with identified deficiencies. The requirements define the studies that qualify for use in assessments and are not part of the definition. **Planning Assessment:** Documented evaluation of future Transmission System performance and Corrective Action Plans to remedy identified deficiencies. ~~Bulk Electric System needs by the use of performance studies that cover a range of assumptions regarding system conditions, time frames, future plans including capital reinforcements and operating procedures and other factors, such as asset conditions and age.~~			
New York ISO	The word "Documented" is unnecessary. Suggest simplifying the definition to: Evaluation of future BPS needs to meet forecast demand under the assumed system conditions for the time frame studied.		X
Response: Documentation is required as proof that evaluation was performed and guidance is provided as to the content of the documentation.			
RFC	Recommend adding power flow and dynamic analyses to this definition. Short circuit analyses should not be included.		
Response: Based on the comments, the SDT revised this definition to be more succinct and eliminate the description of the possible range of assumptions. Requirements define the studies that must be performed. **Planning Assessment:** Documented evaluation of future Transmission System performance and Corrective Action Plans to remedy identified deficiencies. ~~Bulk Electric System needs by the use of performance studies that cover a range of assumptions regarding system conditions, time frames, future plans including capital reinforcements and operating procedures and other factors, such as asset conditions and age.~~			
SCANA	Bulk Electric System deficiencies rather than needs should be evaluated.		X
Response: The definition was modified to clarify that the assessment is an evaluation of Transmission System performance (not needs) and Corrective Action Plans associated with identified deficiencies.			
IESO	The definition covers too much detail on the "how" part, and the "documented" qualifier doesn't seem to be required. Suggest to change it to: Evaluation of future Bulk Electric System needs to meet forecast demand under the assumed system conditions for the time frame studied.	X	X
Response: Based on the comments, the SDT revised this definition to be more succinct and eliminate the description of the possible range of assumptions. The definition was also modified to clarify that the assessment is an evaluation of Transmission System performance (not needs) and Corrective Action Plans associated with identified deficiencies. The requirements define the studies that qualify for use in			

Commenter	Q7. **Comment**	Agree.	Don't agree.
assessments and are not part of the definition. Documentation is required as proof that evaluation was performed and guidance is provided as to the content of the documentation. **Planning Assessment:** Documented evaluation of future Transmission System performance and Corrective Action Plans to remedy identified deficiencies. ~~Bulk Electric System needs by the use of performance studies that cover a range of assumptions regarding system conditions, time frames, future plans including capital reinforcements and operating procedures and other factors, such as asset conditions and age.~~			
Brazos Electric	Some discussion of what 'documented' means is needed each time it is mentioned. Is this some form of written report at all times or are 'saved' cases with contingency analysis sufficient at certain times or is it just a means to show that an 'assessment' was performed in some fashion.	X	
Response: Documentation is required as proof that evaluation was performed and guidance is provided as to the content of the documentation. Documentation requirements are contained in the standard itself. For example, Requirement R2.7.3 requires documentation of the criteria for determining committed and proposed projects. More clarity may be provided through the subsequent development of compliance measures and auditor worksheets.			
Duke Energy	We have a concern with what will be considered acceptable documentation, particularly as it relates to asset conditions and age. Delete the word "needs" and the phrase "such as asset conditions and age". When measures are developed it should be made clear what will constitute an acceptable Planning Assessment.	X	
Response: The SDT revised this definition in response to various comments. Documentation requirements are contained in the standard itself. For example, Requirement R2.7.3 requires documentation of the criteria for determining committed and proposed projects. More clarity may be provided through the subsequent development of compliance measures and auditor worksheets. **Planning Assessment:** Documented evaluation of future Transmission System performance and Corrective Action Plans to remedy identified deficiencies. ~~Bulk Electric System needs by the use of performance studies that cover a range of assumptions regarding system conditions, time frames, future plans including capital reinforcements and operating procedures and other factors, such as asset conditions and age.~~			
ABB		X	
AECI		X	
Allegheny Power		X	
AEP		X	
CenterPoint		X	
CPS Energy		X	
ERCOT ISO CAISO	Agree with the definition.	X	
ITC		X	
KCPL		X	
LUS		X	
Manitoba Hydro	A planning assessment should include performance studies.	X	

Commenter	Q7. **Comment**	Agree.	Don't agree.
MISO		X	
Muscatine P&W		X	
NERC TIS		X	
Progress–Florida		X	
Seattle City Light		X	
Response: Thank you. Please see the Summary Response.			

8) Q8. Planning Events: Events which require Transmission system performance requirements to be met.

Summary Response: The majority of the commenters agreed with the proposed definition; therefore, the SDT did not modify the definition.

Commenter	Q8. **Comment**	Agree.	Don't agree.
AECC	The definition is too vague and does not go far enough to distinguish it from something like and operational event, which only addresses the intial system response and does carry through to the resulting system following the event and subsequent steps that may be taken. Suggest: Planning Events = Events which remove one or more Elements and require Transmission system performance requirements to be met. This definition includes the initial event and any after event actions that result in the system returning to a steady state condition and preventing as serving as much Consequential load as possible.		
Ameren	Consideration should be given to adding the performance requirements in the definition.		X
ATC			X
APPA	What are "performance requirements?" This is too general a statement to be of value for writing specific standards.		X
City Water Light and Power	This statement is too general. Performance Requirements are not defined.		X
City Utilities/Springfield	Minimum performance requirements need to be clearly defined.		X
Georgia Transm. Corp	Performance requirements should be added to the definition.		X
E ON US	Recommend: Events to be simulated is studies (listed in Tables 1 and 2 of TPL-001) which must be documented with Corrective Action Plans when performance requirements of TPL-001 are not met.		X
ERCOT ISO	Needs clarity. Suggest the following wording: Outage of power system elements such as shown in Tables 1 and 2 that need to be considered and simulated to assess Transmission System Performance.		X
CAISO	Needs clarity. Suggest the following wording: Outage of power system elements such as shown in Tables 1 and 2 that need to be considered and simulated to assess Transmission System Performance		X
Central Maine Power HQTE National Grid New England ISO NU NPCC RCWS NSTAR United Illuminating	Propose, "Events for which Transmission performance requirements must be met".		X

Commenter	Q8. **Comment**	Agree.	Don't agree.
LADWP	The term Event has such a broad connotation that it can be misused by layperson. In fact, it is already misused in this standard as evidenced by including events such as cyber attacks, hurricans, tonados, etc as transmission planning events. These events belongs in "emergency" planning, not transmission planning.		X
Southern Transmission	Change to, "Events that are simulated or assessed to test the transmission system to ensure that performance requirements are met as defined in TPL-001-1 Tables 1 and 2."		X
MEAG Power NCEMC Santee Cooper SERC EC PSS SERC RRS OPS	Change to: "Events that are simulated or assessed to test the transmission system to ensure that performance requirements are met."		X
SCANA	Prefer alternate language, "Events for which Transmission system performance requirements must be met."		X
Response: The majority of the commenters agreed with the proposed definition; therefore, the SDT did not modify the definition.			
FirstEnergy	We ask that the SDT reword the definition to include reference to the planning events in Table 1 and 2 of this standard. This definition should be specific to this standard and not be included in the NERC glossary.		X
Response: The majority of the commenters agreed with the proposed definition; therefore, the SDT did not modify the definition. Moreover, the SDT believes the definition should be included in the NERC Glossary of Terms to provide common industry terminology.			
IESO NYISO	Linking it to Transmission system performance requirements presents "loop around" argument. Suggest to change it to: Events which need to be considered and simulated in planning assessments to evaluate Transmission system performance.		X
Response: The majority of the commenters agreed with the proposed definition; therefore, the SDT did not modify the definition. Moreover, the proposed revision would not suffice because Extreme Events must also be considered and simulated in planning assessments.			
Manitoba Hydro	The definition of a planned event should relate to the probablity of occurance. Table shows single contingency planned events and multiple contingency planned events. Why has the SDT gone away from the existing categories of events which sorted the events into categories with different levels probability.		X
Response: The majority of the commenters agreed with the proposed definition; therefore, the SDT did not modify the definition. In response to this specific comment, Planning events were considered to have sufficiently high probability of occurrence as to require planned corrective actions - hence the term Planning Event. However, Planning Events have still been sorted into categories with different performance requirements corresponding to different levels of probability and consequence.			
RFC	I don't believe that this is really the definition of "planning events". This defintion should describe generally what the planning events are, not that they must meet performance requirements.		X
Response: The majority of the commenters agreed with the proposed definition; therefore, the SDT did not modify the definition. The SDT believes that a general description of what the planning events are includes the fact that these are the types of events for which performance			

Commenter	Q8. **Comment**	Agree.	Don't agree.
requirements must be met.			
Seattle City Light	List specific types of failures or direct us to a specific table which describes planning events.		X
Response: The majority of the commenters agreed with the proposed definition; therefore, the SDT did not modify the definition. The SDT believes a definition should be established that does not reference a particular part of the standard.			
ABB	Agree but adjust language. You are saying "require requirements to be met". Duh. Even if you took out one of them and said "requirements must be met", this is also redundant. The definition of "requirement" is that it is required. How about "Events for which there are strict transmission performance standards that must be met." This may also be slightly redundant, but not as much as the original.	X	
Response: The majority of the commenters agreed with the proposed definition; therefore, the SDT did not modify the definition. We believe the language, with respect to the use of require and requirements, is correct, and the suggested language does not offer substantive improvement.			
Northwestern Energy		X	
AECI		X	
Allegheny Power		X	
AEP		X	
BPA		X	
BCTC		X	
Brazos Electric		X	
CenterPoint		X	
CPS Energy		X	
Duke Energy		X	
Entegra		X	
Entergy		X	
Exelon		X	
CPS Energy		X	
FPL		X	
FRCC		X	
Dominion		X	
ITC		X	
KCPL		X	
LCRA		X	
LUS		X	
MISO		X	
MRO		X	
Muscatine P&W		X	

Commenter	Q8. **Comment**	Agree.	Don't agree.
NERC TIS		X	
Progress–Carolinas		X	
Progress–Florida		X	
SaskPower		X	
SERC EC DRS		X	
Tenaska		X	
TVA		X	
TSGT		X	
TEP		X	
WECC		X	
Response: Thank you.			

9) Q9. Plant Stability Study: Study of an individual plant's Stability for various Contingencies in the vicinity of the plant; concerned with the effect on the System of the generating units' loss of synchronism and the damping of the generating units' power oscillations.

Summary Response: Based on the responses to Q32 the SDT believes the majority of comments have been addressed. Please refer to responses to Q32 and the revised definition for additional clarification. The SDT revised this definition as follows to further clarify intent:

Generating Unit Stability Study: Study that focuses on an individual generating unit's or electrically closely-coupled generating units' Stability for various Contingencies on the Transmission Facilities connected to that generating unit(s) point(s) of interconnection or one bus away from that point. This study is concerned with the loss of synchronism and the lack of damping of the generating units' power oscillations.

~~**Plant Stability Study**: Study of an individual plant's Stability for various Contingencies in the vicinity of the plant; concerned with the effect on the System of the generating units' loss of synchronism and the damping of the generating units' power oscillations.~~

Commenter	Q9. **Comment**	Agree.	Don't agree.
ABB	I don't see any reason to differentiate between "Plant Stability" and "System Stability". These are not commonly separated. A better differentiation would be between generator (or angular) stability and load (or voltage) stability. These are usually independently studied and independently occurring.		X
Ameren	It seems that the SDT is trying to divide the stability issues between plant (local) and system. As the system load representation and its damping characteristics affect both plant and system stability, it is difficult to separate plant versus system stability studies. The focus of the studies may be only slightly different, depending on the location, type, and duration of the fault conditions assumed.		X
Central Maine Power NPCC RCWS	A Plant Stability Study should be a part of a System Stability Study. How should and why would they be differentiated? The analysis and performance constraints are the same in both cases; it's just a matter of whether one or more generating units are involved.		X
FirstEnergy	We believe that this definition is not needed. The Plant Stability Study is similar to the System Stability Study.		X
FPL FRCC	There should be no distinction between Plant Stability and System Stability. All stability studies must meet the Performance Requirements for Planning Events in Table 2 - Stability Performance. If there were different Performance Requirements then the distinction would be warranted.		X
HQTE National Grid New England ISO NU	A Plant Stability Study should be a part of a System Stability Study. How should and why would they be differentiated? The analysis and performance constraints are the same in both cases; it's just a matter of whether one or more generating units are involved.		X

Commenter	Q9. **Comment**	Agree.	Don't agree.
NSTAR United Illuminating			
BPA	Support comments submitted by WECC. Plant Stability is a subset of System Stability.		X
WECC	Plant Stability seems to be a subset of System Stability. Introducing a new term can cause confusion.		X
Progress–Carolinas	Don't need to differentiate between plant and system. These are not usually separated. It would be better to separate angular stability and voltage stability. They are studied independently.		X
Tenaska	Not convinced that this study needs to be differentiated from a System Stability Study.		X
TEP	Plant Stability seems to be a subset of System Stability. Introducing a new term can cause confusion.		X

Response: The SDT revised this definition in response to various comments. The SDT believes that it is important to maintain the distinction between Plant and System Stability studies. Based on the responses to Q32 the SDT believes the majority of comments have been addressed. Please refer to responses to Q32 and the revised definition for additional clarification.

Generating Unit Stability Study: Study that focuses on an individual generating unit's or electrically closely-coupled generating units' Stability for various Contingencies on the Transmission Facilities connected to that generating unit(s) point(s) of interconnection or one bus away from that point. This study is concerned with the loss of synchronism and the lack of damping of the generating units' power oscillations.

~~Plant Stability Study: **Study of an individual plant's Stability for various Contingencies in the vicinity of the plant; concerned with the effect on the System of the generating units' loss of synchronism and the damping of the generating units' power oscillations.**~~

ATC	Suggest eliminating the sentence after the semi-colon -- the defined term Stability implies what is addressed in the second sentence and is also noted as a performance requirement in footnote 1.a.i to the Stability Performance Table. We also suggest that reference to "in the vicinity" be replaced by "that affect the plant Stability".		X
Santee Cooper SERC RRS OPS	The definition should end at the semi-colon. The remaining part of the definition should be moved to the definition of "System Stability Study."		X

Response: The SDT revised this definition in response to various comments, although much of the sentence after the semi-colon has been retained for clarity regarding generating unit performance. Based on the responses to Q32 the SDT believes the majority of comments have been addressed. Please refer to responses to Q32 and the revised definition for additional clarification.

Generating Unit Stability Study: Study that focuses on an individual generating unit's or electrically closely-coupled generating units' Stability for various Contingencies on the Transmission Facilities connected to that generating unit(s) point(s) of interconnection or one bus away from that point. This study is concerned with the loss of synchronism and the lack of damping of the generating units' power oscillations.

Commenter	Q9. **Comment**	Agree.	Don't agree.
~~**Plant Stability Study:** Study of an individual plant's Stability for various Contingencies in the vicinity of the plant; concerned with the effect on the System of the generating units' loss of synchronism and the damping of the generating units' power oscillations.~~			
City Water Light and Power	Insert "Generating" prior to "Plant" for clarity.		X
APPA	Insert "electric generating" prior to "plant" for clarity. It is unclear as to the intent of this statement. The Standard should require the Transmission Planner to consider contingencies in the vicinity of a particular electric generation plant. However, the ultimate goal of the "Stability Study" is to determine the stability of the BES and not just the "electric generation plant." It is recommended that this be rewritten to make clear the intent of this statement.		X
WPSC	This definition mixes the use of the word "plant" and "generator" which have two different meanings. Suggest re-naming as Generator Stability Study and allow the study of multiple generators at a single site as a plant. The use of "generator" vs. "plant" should also be consistent throughout the standard.		X
Response: The term "plant" has been deleted and the term "generating unit" is being used in the description of the type of study required. The new definition is for a "Generating Unit Stability Study". The SDT made these changes in response to various comments. Please refer to responses to Q32 and the revised definition for additional clarification. **Generating Unit Stability Study**: Study that focuses on an individual generating unit's or electrically closely-coupled generating units' Stability for various Contingencies on the Transmission Facilities connected to that generating unit(s) point(s) of interconnection or one bus away from that point. This study is concerned with the loss of synchronism and the lack of damping of the generating units' power oscillations.			
~~**Plant Stability Study:** Study of an individual plant's Stability for various Contingencies in the vicinity of the plant; concerned with the effect on the System of the generating units' loss of synchronism and the damping of the generating units' power oscillations.~~			
ERCOT ISO CAISO	Definition is not clear. Suggest the following wording: Study of an individual generating plant's capability to remain in synchronism and exhibit damping of the generating units' power oscillations for various contingencies in the vicinity of the plant.		X
IESO	Suggest to replace "Contingencies" with "Planning events", and change the definition as follows: Study of an individual generating plant's capability to remain in synchronism and exhibit damping of the generating units' power oscillation for various Planning events. Note that "in the vicinity of the plant" is removed to not restrict simulations of events only in the vicinity of the plants as experience has shown that an event remote from the plant could also subject the plant to lose synchronism and/or oscillate without		X

Commenter	Q9. **Comment**	Agree.	Don't agree.
	acceptable damping.		
New York ISO	"Contingencies" should be replaced with "Planning Events". "in the vicinity of the plant" is too restrictive. Suggest: Study of an individual generating plant's capability to remain in synchronism with damping power oscillation for various Planning Events.		X
Response: The SDT revised this definition in response to various comments. The new definition further clarifies the SDT's intent regarding the "vicinity" that must be considered, although additional buses further away can be studied if desired. Please refer to responses to Q32 and the revised definition for additional clarification. **Generating Unit Stability Study**: Study that focuses on an individual generating unit's or electrically closely-coupled generating units' Stability for various Contingencies on the Transmission Facilities connected to that generating unit(s) point(s) of interconnection or one bus away from that point. This study is concerned with the loss of synchronism and the lack of damping of the generating units' power oscillations. ~~**Plant Stability Study:** Study of an individual plant's Stability for various Contingencies in the vicinity of the plant; concerned with the effect on the System of the generating units' loss of synchronism and the damping of the generating units' power oscillations.~~			
Northwestern Energy	System stability studies covers this definition.		X
Response: The SDT believes that it is important to maintain the distinction between Plant and System Stability studies. The SDT revised this definition in response to various comments. Based on the responses to Q32 the SDT believes the majority of comments have been addressed. Please refer to responses to Q32 and the revised definition for additional clarification. **Generating Unit Stability Study**: Study that focuses on an individual generating unit's or electrically closely-coupled generating units' Stability for various Contingencies on the Transmission Facilities connected to that generating unit(s) point(s) of interconnection or one bus away from that point. This study is concerned with the loss of synchronism and the lack of damping of the generating units' power oscillations. ~~**Plant Stability Study:** Study of an individual plant's Stability for various Contingencies in the vicinity of the plant; concerned with the effect on the System of the generating units' loss of synchronism and the damping of the generating units' power oscillations.~~			
Duke Energy	Delete the term "the effect on the System of." The reference to "System" causes confusion with the term "System Stability Study.		X
Entergy	Delete the term "the effect on the System of." The reference to "System" causes confusion with the term "System Stability Study." Section R4.6 should identify the Generator Owner as the applicable party for doing the Plant Stability Studies.		X
Response: The reference to the "system" has been deleted from the new definition. SDT revised this definition in response to various comments. Based on the responses to Q32 the SDT believes the majority of comments have been addressed. However, the SDT disagrees			

Commenter	Q9. **Comment**	Agree.	Don't agree.
that the Generator Owner is the applicable party responsible for performing Generating Unit Stability Studies for the purpose of assessing and planning the transmission system, as contemplated by this standard. Please refer to responses to Q32 and the revised definition for additional clarification. **Generating Unit Stability Study**: Study that focuses on an individual generating unit's or electrically closely-coupled generating units' Stability for various Contingencies on the Transmission Facilities connected to that generating unit(s) point(s) of interconnection or one bus away from that point. This study is concerned with the loss of synchronism and the lack of damping of the generating units' power oscillations. ~~**Plant Stability Study:** Study of an individual plant's Stability for various Contingencies in the vicinity of the plant; concerned with the effect on the System of the generating units' loss of synchronism and the damping of the generating units' power oscillations.~~			
Exelon	Wording should be changed to allow for engineering judgment to determine which contingencies are applied. There may be instances where contingencies outside of the immediate vicinity of the plant may be significant to its stability. Suggest replacing the word 'System' with 'Transmission System'.		X
NERC TIS	Should not be limited to contingencies in the vicinity of the plant. Remove the terms "in the vicinity of the plant." Engineering judgement can then be used without having to define "vicinity." Plant instability can be caused by system events many (sometimes hundreds of) miles away. Plants were shaken off line in British Columbia due to the tripping of units in Arizona in June 2004.		X
Seattle City Light	"…in the vicinity of the plant…" needs to be more specific. How far away must we study?	X	X
Response: The SDT revised this definition in response to various comments. The new definition further clarifies the SDT's intent regarding the "vicinity" that must be considered, although additional buses further away can be studied if desired. Based on the responses to Q32 the SDT believes the majority of comments have been addressed. Please refer to responses to Q32 and the revised definition for additional clarification. **Generating Unit Stability Study**: Study that focuses on an individual generating unit's or electrically closely-coupled generating units' Stability for various Contingencies on the Transmission Facilities connected to that generating unit(s) point(s) of interconnection or one bus away from that point. This study is concerned with the loss of synchronism and the lack of damping of the generating units' power oscillations. ~~**Plant Stability Study:** Study of an individual plant's Stability for various Contingencies in the vicinity of the plant; concerned with the effect on the System of the generating units' loss of synchronism and the damping of the generating units' power oscillations.~~			
LADWP	When performing transient stablity studies using either PSSE or PSLF, loss of synchronism and oscillation damping are automatically part of the performance evaluation; it is not a separate study and should not be classifed as a separate study. In the context of transmission planning, unless someone on the SDT use programs		X

Commenter	Q9. **Comment**	Agree.	Don't agree.
	that do not have transient stability package similar to PSSE and PSLF, or has a completely different understanding on the meaning of loss of synchronism and/or damping, there is no need to introduce two new terms to explain a very well understood and established single term known as "transient stability" .		

Response: The SDT believes that it is important to retain the terms to maintain clarity. The SDT revised this definition in response to various comments. However, few if any other commenters expressed concerns about verbiage relating to loss of synchronism and damping of power oscillations. Therefore, this verbiage remained relatively unchanged. Based on the responses to Q32 the SDT believes the majority of comments have been addressed. Please refer to responses to Q32 and the revised definition for additional clarification.

Generating Unit Stability Study: Study that focuses on an individual generating unit's or electrically closely-coupled generating units' Stability for various Contingencies on the Transmission Facilities connected to that generating unit(s) point(s) of interconnection or one bus away from that point. This study is concerned with the loss of synchronism and the lack of damping of the generating units' power oscillations.

~~**Plant Stability Study:** Study of an individual plant's Stability for various Contingencies in the vicinity of the plant; concerned with the effect on the System of the generating units' loss of synchronism and the damping of the generating units' power oscillations.~~

SERC EC DRS	Delete the term "the effect on the System of." The reference to "System" causes confusion with the term "System Stability Study."		X

Response: The SDT revised the definition in response to various comments to eliminate the reference to the "system". Based on the responses to Q32 the SDT believes the majority of comments have been addressed. Please refer to responses to Q32 and the revised definition for additional clarification.

Generating Unit Stability Study: Study that focuses on an individual generating unit's or electrically closely-coupled generating units' Stability for various Contingencies on the Transmission Facilities connected to that generating unit(s) point(s) of interconnection or one bus away from that point. This study is concerned with the loss of synchronism and the lack of damping of the generating units' power oscillations.

~~**Plant Stability Study:** Study of an individual plant's Stability for various Contingencies in the vicinity of the plant; concerned with the effect on the System of the generating units' loss of synchronism and the damping of the generating units' power oscillations.~~

TSGT	Plant stability should be called Station stability. The term "plant" is reserved for aggregates such as total coal plant or total peaking plant, meaning all generating units in that category.		X

Response: The SDT revised the definition to be more general with respect to closely-coupled generating units. Please refer to responses to Q32 and the revised definition for additional clarification.

Generating Unit Stability Study: Study that focuses on an individual generating unit's or electrically closely-coupled generating units' Stability for various Contingencies on the Transmission Facilities connected to that generating unit(s) point(s) of interconnection or one bus away from that point. This study is concerned with the loss of synchronism and the lack of damping of the generating units' power

Commenter	Q9. **Comment**	Agree.	Don't agree.
oscillations. ~~**Plant Stability Study:** Study of an individual plant's Stability for various Contingencies in the vicinity of the plant; concerned with the effect on the System of the generating units' loss of synchronism and the damping of the generating units' power oscillations.~~			
KCPL	Suggest adding "Bulk Electric" before "System".	X	
Manitoba Hydro MISO MRO	The words "Bulk Electric" should be added before "System".		X
MEAG Power SERC EC PSS	Change " the System" to "local area of the Bulk Electric System." It also need a definition for "plant."	X	
Response: The SDT revised the definition in response to various comments and clarified that the study focuses on an individual generating unit's or electrically closely-coupled generating units' Stability. Please refer to responses to Q32 and the revised definition for additional clarification. **Generating Unit Stability Study**: Study that focuses on an individual generating unit's or electrically closely-coupled generating units' Stability for various Contingencies on the Transmission Facilities connected to that generating unit(s) point(s) of interconnection or one bus away from that point. This study is concerned with the loss of synchronism and the lack of damping of the generating units' power oscillations. ~~**Plant Stability Study:** Study of an individual plant's Stability for various Contingencies in the vicinity of the plant; concerned with the effect on the System of the generating units' loss of synchronism and the damping of the generating units' power oscillations.~~			
AECI		X	
Allegheny Power		X	
AEP		X	
BCTC		X	
Brazos Electric		X	
CenterPoint		X	
City Utilities/Springfield		X	
CPS Energy		X	
Entegra		X	
Georgia Transm. Corp		X	
ITC		X	
LCRA		X	
LUS		X	
Muscatine P&W		X	
NCEMC		X	
Progress–Florida		X	

Commenter	Q9. **Comment**	Agree.	Don't agree.
SCANA		X	
Southern Transmission	No Additional Comments.	X	
TVA		X	
Response: Thank you. Please see the Summary Response.			

10) Q10. System Stability Study: Study of the System or portions of the System to ensure that angular Stability is maintained, inter-area power oscillations are damped, and voltages during the dynamic simulation stay within acceptable performance limits.

Summary Response: Based on the comments, the SDT revised this definition as follows to add further clarity:

System Stability Study: ~~Study of the System or portions of the System to ensure that angular Stability is maintained, inter-area power oscillations are damped, and voltages during the dynamic simulation stay within acceptable performance limits.~~ Study that focuses on portions of the System, which may include many generating units, to determine whether angular Stability is maintained, inter-area power oscillations are damped, and voltages during the dynamic simulation stay within acceptable performance limits.

Commenter	Q10. **Comment**	Agree.	Don't agree.
Ameren	See comments above in the response to Q9. Specific inclusion of voltage (load) stability seems to be missing from the definition. Also, angular stability is mentioned only as part of the definition for System Stability Study and not Plant Stability Study. It would seem that this item would be part of both types of study.		X
PJM	Does "inter-area oscillations are damped" imply that you also have to do frequency domain analysis? (Because some industry experts would claim that without small signal analysis you cannot ensure that inter-area oscillations are damped.)	X	X
Response: The SDT revised this definition in response to various comments. Based on the responses to Q32 the SDT believes the majority of comments have been addressed. Please refer to responses to Q32 and the revised definition for additional clarification. **System Stability Study:** ~~Study of the System or portions of the System to ensure that angular Stability is maintained, inter-area power oscillations are damped, and voltages during the dynamic simulation stay within acceptable performance limits.~~ Study that focuses on portions of the System, which may include many generating units, to determine whether angular Stability is maintained, inter-area power oscillations are damped, and voltages during the dynamic simulation stay within acceptable performance limits.			
ABB	See Q9.		X
Santee Cooper	see Q9 above.		X
SERC RRS OPS	see Q9 above.		X
Response: See response for Q9.			
ATC	Truncate the definition to "……ensure that Stability is maintained." Note that we suggest that "angular" be deleted so that the definition is comprehensive and it includes both voltage and angular stability. Suggest moving the performance attributes in the definition (after the comma) as footnotes to the Stability Performance Table.		X
Response: The SDT believes that it is important to retain the terms to maintain clarity. Please refer to responses to Q32 and the revised definition for additional clarification.			
ERCOT ISO	This definition is for a stable system. Study is performed to determine whether system		X

Commenter	Q10. **Comment**	Agree.	Don't agree.
CAISO IESO	is stable or not. Suggest the following wording: Study of the system or portions of the system to assess the system's performance in terms of angular stability, power oscillations and voltage limits during dynamic simulation.		
New York ISO	The study is an assessment. Suggest: Study of the System or portions of the System to assess the System's performance in the domain of angular stability, inter-area oscillations and voltage profile during dynamic simulation.		X
Response: The SDT revised this definition to reflect that the study is for portions of the system. The applicable portions of the System still must be studied and the wording was modified to describe that the study determines whether the System remains stable, not that it ensures stability is maintained. Please refer to responses to Q32 and the revised definition for additional clarification. **System Stability Study:** ~~Study of the System or portions of the System to ensure that angular Stability is maintained, inter-area power oscillations are damped, and voltages during the dynamic simulation stay within acceptable performance limits.~~ Study that focuses on portions of the System, which may include many generating units, to determine whether angular Stability is maintained, inter-area power oscillations are damped, and voltages during the dynamic simulation stay within acceptable performance limits.			
Central Maine Power HQTE National Grid New England ISO NU NPCC RCWS NSTAR United Illuminating	See comment on Q9; proposed modification, "Study of the System or portions of the System to determine whether plant and system angular Stability is maintained, power oscillations are damped, and voltages during the dynamic simulation stay within acceptable perfomance limits.		X
Progress–Carolinas	Don't need to differentiate between plant and system. These are not usually separated. It would be better to separate angular stability and voltage stability. They are studied independently.		X
Response: The SDT believes that it is important to maintain the distinction between Generating Unit (formerly Plant) and System Stability studies. Please refer to responses to Q32 and the revised definition for additional clarification.			
FPL FRCC	Dynamic voltage ratings do not add value and are only an approximation for modeling limitations. The definition should not address performance and should only seek to define the term. Reword as follows: "Study of the System or portions of the System to assess angular Stability and inter-area power oscillations."		X
Response: The SDT believes that it is important to retain the information explaining the purpose of the study. Please refer to responses to Q32 and the revised definition for additional clarification.			
LADWP	This comment should be taken together with the comment on Plant stability and I would recommend not to create new terms and go back to use well established engineering terms like Transient Stability Study which covers synchronism, damping,		X

Commenter	Q10. Comment	Agree.	Don't agree.
	voltage limits, angular stability, etc. There are many text books that could be used to support this.		
Response: The SDT believes that it is important to retain the terms to maintain clarity. Please refer to responses to Q32 and the revised definition for additional clarification.			
Exelon	Suggest replacing 'System' with 'Transmission System'.	X	
KCPL	Suggest adding "Bulk Electric" before "System".	X	
Manitoba Hydro MISO MRO	The words "Bulk Electric" should be added before both occurances of "System".		X
SERC EC PSS	Change "System" to "Bulk Electric System."	X	
MEAG Power	Change "System or portions of the system" to "Bulk Electric System's components associated with the Transmission Planer."	X	
Response: The SDT believes the reference to the "System" correctly describes the scope of the study. Please refer to responses to Q32 and the revised definition for additional clarification.			
APPA	This is a very clear definition that can be used in Standards. The author did a good job of using defined terms in this definition.		
Northwestern Energy		X	
AECI		X	
Allegheny Power		X	
AEP		X	
BPA		X	
BCTC		X	
Brazos Electric		X	
CenterPoint		X	
City Utilities/Springfield		X	
CPS Energy		X	
Duke Energy		X	
Entegra		X	
Entergy		X	
Dominion		X	
FirstEnergy		X	
Georgia Transm. Corp		X	
ITC		X	
LCRA		X	
LUS		X	
Muscatine P&W		X	
NCEMC		X	

Commenter	Q10. **Comment**	Agree.	Don't agree.
NERC TIS		X	
Progress–Florida		X	
Seattle City Light		X	
SERC EC DRS		X	
SCANA		X	
Southern Transmission	No Additional Comments.	X	
Tenaska	A generator's loss of synchronism and oscillation issues will be seen in this study.	X	
TVA		X	
TSGT		X	
TEP		X	
WECC		X	
Response: Thank you. Please see the Summary Response.			

11) Q11. Year One: The first year that a Transmission Planner is responsible for studying. This is further defined as the planning window that begins the next calendar year from the time the Transmission Planner submits their annual studies. Analysis conducted for time horizons within the calendar year from the study publication are assumed to be conducted under the auspices of Operations Planning.

Summary Response: Based on the comments, the SDT modified the definition to clarify that Year One is the first year that requires assessment, not study; and that the planning window begins 12 to 18 months from the completion of the previous assessment. The change reflects the variability in the timing of assessments among different Transmission Planners.

Year One: The first year that a Transmission Planner is responsible for ~~studying~~ assessing. This is further defined as the planning window that begins ~~the next calendar year from the time the Transmission Planner submits their annual studies~~ 12-18 months from the completion of the previous annual Planning Assessment.

Commenter	Q11. **Comment**	Agree.	Don't agree.
ABB	Agree but delete "annual". Unnecessarily restrictive. Aren't there non-annual studies for which the definition of "year one" is important?	X	
E ON US	"studies" should be replaced with "Planning Assessment", the Planning Assessment is the documentation (of past and current studies) submitted for review. Note: the definition in Q11 does not match TPL-001.		X
WPSC	Suggest replacing the words "annual studies" with "Planning Assessment".		X
ATC	The definition here is not consistent with what is in the posted standard (the last sentence is extra) -- we agree with the definition in the posted standard.		X
Entergy	The last sentence in the above definition was not included in the definition listed in the draft standard. Consider deleting the last sentence or providing additional examples.		X
FPL	The last sentence of this definition is not included in the Standard. Reword as follows: "The first year that a Transmission Planner is responsible for studying. This is further defined as the planning window that begins the next calendar year from the time the Transmission Planner performs their annual studies and submits the results to the RRO."		X
FRCC	The last sentence of this definition is not included in the Standard and should be deleted.		X
MEAG Power Santee Cooper SERC EC PSS SERC RRS OPS Southern Transmission TVA	The last sentence in the above definition was not included in the definition listed in the draft standard, nor should it be.	X	
Response: In the course of reviewing comments, the SDT realized that the definition of Year One in the draft standard varied from the definition of Year One in Q11 of the comment form. The SDT revised this definition in response to various comments.			

Commenter	Q11. **Comment**	Agree.	Don't agree.
Year One: The first year that a Transmission Planner is responsible for ~~studying~~ assessing. This is further defined as the planning window that begins ~~the next calendar year from the time the Transmission Planner submits their annual studies~~ 12-18 months from the completion of the previous annual Planning Assessment.			
AECC	Year One should be the first year following the current year. The first sentence defines year one just fine. Lose the last two sentences. Completely disagree with the last sentence. Studies are not necessarily conducted on calender year basis and the study publication is irrelevant. This is a planning standard and not an opertions standard. Operational vs planning are driven by the horizon time frame and not a study publication date.		X
ERCOT ISO CAISO	Suggest a shorter definition: Planning window beginning next calendar year.		X
Central Maine Power	Modify to, "The first year that a Tranmission Planner is responsible for studying. This is further defined as the planning window that begins the next calendar year from the time the Transmission Planner completes its annual studies."		X
Duke Energy	Need to provide an example to clarify what this means.		X
FirstEnergy	Although we agree with the concept, the definition is confusing. We suggest simplifying the definition to "The first 12 month period that begins one year and one day from the completion of the study."		X
Georgia Transm. Corp	The first sentence in not necessary. A Planner may use the base case to further assess a problem in the current year. The definition should begin with "The next planning year following current annual studies".		X
HQTE National Grid New England ISO NU NPCC RCWS NSTAR United Illuminating	Modify to, "The first year that a Tranmission Planner is responsible for studying. This is further defined as the planning window that begins the next calendar year from the time the Transmission Planner completes and communicates its annual studies."	X	X
NCEMC	This definition could use further clarification to eliminate inconsistencies in how it may be interpreted. Operations planning horizons may typically be 13 to 18 months from the current date due to the reality that transmission upgrades to address operational performance issues may not be able to be implemented inside this period. Some may assume a 24-36 month operations planning window. Based on this assumption, Year 1 could start anywhere from 13 months from the current date to as much as 37 months from the current date.		X
Brazos Electric	Planners do not 'submit' their studies to ERCOT for evaluation or other. Certain projects are submitted to the group for review and comment but not all studies are	X	

Commenter	Q11. **Comment**	Agree.	Don't agree.
	submitted as normal pratice in all cases. It may be better to use 'create their base cases' or simply 'performs their annual studies' instead of 'submit their annual studies'		
Response: The SDT revised this definition in response to various comments. **Year One:** The first year that a Transmission Planner is responsible for ~~studying~~ assessing. This is further defined as the planning window that begins ~~the next calendar year from the time the Transmission Planner submits their annual studies~~ 12-18 months from the completion of the previous annual Planning Assessment.			
APPA	There is a term in the Glossary that is "Operation Plan;" however, there is not a term defining Operations Planning. It is recommended that the SDT drop the last sentence and define the term Operations Planning for the Glossary. Change "their" to "its."		X
BCTC	One problem with this definition is that it assumes that the Transmission Planner submits annual studies. We need definitions for Operating Horizon and Planning Horizon. Then: Year One: The first year of the Planning Horizon.		X
IESO	Not sure why we need this definition. The standard can simply be worded such that a Transmission Planner is responsible for assessing system needs for time frame beyond the current year. Introducing Operations Planning creates confusion as it is unclear whether this term describes a function or an entity in the context of the proposed definition. Further, the sentence "Analysis conducted for time horizon within the current year from the study publication are assumed to be conducted under the auspices of Operations Planning" is (a) confusing time frame wise, (b) invites debates on the role and responsibility for a term that is not defined in NERC standard or the Functional Model, and (c) is perceived to be prescriptive in organizational setup/responsibility allocation (e.g. why can't a transmission planner conduct operational planning studies?).		X
Response: In the course of reviewing comments, the SDT realized that the definition of Year One in the draft standard varied from the definition of Year One in Question 11 of the comment form. The term "Operations Planning" was used in Q11 but not in the draft standard. Therefore, the SDT revised the definition of Year One in response to various comments but will not introduce a definition for Operations Planning. **Year One:** The first year that a Transmission Planner is responsible for ~~studying~~ assessing. This is further defined as the planning window that begins ~~the next calendar year from the time the Transmission Planner submits their annual studies~~ 12-18 months from the completion of the previous annual Planning Assessment.			
ITC	Adding a statement specifying that this is at least ??? number of months into the future may be prudent.		
Response: The SDT revised this definition in response to various comments. However, in the course of considering this definition and reviewing comments, the SDT believes that the start of Year One will not be a fixed point in time for all Transmission Planners. For example, see NCEMC's comment.			

Commenter	Q11. **Comment**	Agree.	Don't agree.
Year One: The first year that a Transmission Planner is responsible for ~~studying~~ assessing. This is further defined as the planning window that begins ~~the next calendar year from the time the Transmission Planner submits their annual studies~~ 12-18 months from the completion of the previous annual Planning Assessment.			
Seattle City Light	Base cases are developed and studied for seasons, not calendar years. Can the Year One reference be changed to "the year beginning at the next Winter season" instead of the specific "…next calendar year"?	X	X
Response: The SDT revised this definition in response to various comments. However, the SDT has members from a wide variety of NERC regions. In the course of discussing how to define Year One, the team found that practices vary across different regions. For example, many southern regions concentrate on summer peak seasons while others, such as Seattle City Light, may concentrate on winter seasons. The modified definition is intended to accommodate such regional variation. **Year One:** The first year that a Transmission Planner is responsible for ~~studying~~ assessing. This is further defined as the planning window that begins ~~the next calendar year from the time the Transmission Planner submits their annual studies~~ 12-18 months from the completion of the previous annual Planning Assessment.			
Northwestern Energy		X	
AECI		X	
Allegheny Power		X	
AEP		X	
Ameren		X	
BPA		X	
CenterPoint		X	
City Utilities/Springfield		X	
CPS Energy		X	
Dominion		X	
Entegra		X	
Exelon		X	
KCPL		X	
LUS		X	
LADWP	very good clarification!	X	
LCRA		X	
Manitoba Hydro		X	
MISO		X	
MRO		X	
Muscatine P&W		X	
NERC TIS		X	
New York ISO		X	

Commenter	Q11. **Comment**	Agree.	Don't agree.
Progress–Carolinas		X	
Progress–Florida		X	
RFC		X	
SaskPower		X	
SERC EC DRS		X	
SCANA		X	
Tenaska		X	
TSGT		X	
TEP		X	
WECC		X	
Response: Thank you**.** Please see the Summary Response.			

B) Sensitivity Studies

The draft planning standard includes the requirement, as specified in FERC Order 693, that planning decisions be based on a portfolio of analyses. In section 12.a.ii "Sensitivity studies and critical system conditions" FERC provided direction to consider a full range of variables considered to be significant that need to be assessed and documentation provided that explains the rationale for the selection of variables assessed.

In addition to the firm obligation scenario, the portfolio of analyses should be supplemented to include information from sensitivity analysis. The sensitivity analysis should be developed using additional cases that simulate reasonably stressed system conditions. The standard drafting team has included several parameters that can be varied to create the requisite sensitivity case(s). The draft standards specify that the sensitivities reflect one or more of the following conditions and that documentation be provided explaining the rationale for selecting the sensitivity(ies) employed. The parameters that should be varied include:

- Higher or lower Load forecasts from the Base Case with variability of Load/demand and Load power factors due to season, weather, or time of day.
- Modification of expected transfers.
- Unavailability of long lead time facilities.
- Variability and outages of Reactive Resources.
- Generation additions, retirements, or other dispatch scenarios.
- Decreased effectiveness of controllable Loads and Demand Side Management.
- Modification of planned Transmission outages

To help focus industry discussion, please respond to the questions below:

12) Q12. Should the standard provide more specific direction regarding the number of sensitivity cases that need to be developed?

Summary Response: The SDT believes that there is a need to perform sensitivity studies and to set a minimum level of sensitivities to be considered. To achieve that, the SDT is providing some guidance on what could be included in the sensitivity studies without being too prescriptive. Requirement R2.1.3 and Requirement R2.4.3 have been modified to require documentation of why the listed sensitivities were or were not selected for specific studies. Requirement R2.1.4 and Requirement R2.4.4 have been added to specifically state that the entity may consider additional sensitivities that are appropriate for its own system.

The following requirements were changed due to industry comments:

R2.1.3. For each of the studies described in Requirement R2.1.1 and Requirement R2.1.2, sensitivity case(s) that stress the System with sensitivities that reflect one or more of the following conditions shall be run and documentation ~~with~~ of the technical rationale for ~~the selected sensitivity(ies)~~ why each of the conditions was or was not selected shall be supplied:
R2.1.4. In addition to those sensitivities mentioned in Requirement R2.1.3, any other sensitivities, as deemed appropriate by the Transmission Planner or Planning Coordinator for their individual systems, shall be run and documentation of the technical rationale for why each was selected shall be supplied.

R2.4.3. For each of the studies described in Requirement R2.4.1 and Requirement R2.4.2, ~~S~~sensitivity case(s) that stress the System to reflect one or more of the following conditions shall be run ~~with documentation provided explaining the rationale for the selected sensitivity(ies)~~ and documentation of the technical rationale for why each of the conditions was or was not selected shall be supplied:
R2.4.4. In addition to those sensitivities mentioned in Requirement R2.4.3, any other sensitivity, as deemed appropriate by the Transmission Planner or Planning Coordinator for their individual systems, shall be run and documentation of the technical rationale for why each was selected shall be supplied.

R2.7.2. ~~Be added to study cases and the cases re-tested to show that the System with planned additions meets the performance requirements in the tables~~ Contain a description of how and why the consideration of the sensitivities selected in accordance with Requirements R2.1.3, R2.1.4, R2.4.3, and R2.4.4 in the Planning Assessment did or did not result in a modification or expansion of the list of actions developed in accordance with Requirement R2.7.1.

Question 12			
Commenter	**Yes**	**No**	**Comment**
ABB		☑	No. However, as long as we're talking about it, NERC should set a standard for the definition of the "peak load" to be planned for. Some utilities use the 50% probability peak load. Some use 90%. A big difference that will result in a big difference in how they are prepared for the peak load days. The sensitivity section is not sufficient to address this. Also, outages of reactive resources should be (and are) in the list of contingencies, not sensitivities.
Response: The standard does not prescribe what percentage of Load needs to be studied. The peak Load to be planned for is defined by the individual entity. The consideration of a higher or lower probability of peak Load is only one of the sensitivity conditions listed in R2.1.3.			

Question 12			
Commenter	**Yes**	**No**	**Comment**
R2.1.3. For each of the studies described in Requirement R2.1.1 and Requirement R2.1.2, sensitivity case(s) that stress the System with sensitivities that reflect one or more of the following conditions shall be run and documentation ~~with~~ of the technical rationale for ~~the selected sensitivity(ies)~~ why each of the conditions was or was not selected shall be supplied:			
Ameren		☑	For the purposes of compliance, we believe that the existing requirement R1 in Standard TPL-001-0 adequately defines the sensitivities that need to be covered in a valid assessment, and no additional clarification is necessary. Deterministic tests of a limited number of system conditions require the application of engineering judgment to evaluate the complex multi-variable problems involved in planning analyses. We all agree that performing contingency analyses on a single snapshot of expected system conditions is not adequate to plan the transmission system, but planning is not a cookbook exercise, and neither is an engineering assessment of planning activities demonstrating required system performance. Further, we believe that a test of incremental transfer capability determined from some of the sensitivity cases needs to be added to the standard and would go a long way to address how much margin exists in the transmission system to handle the unknown or previously undefined variables.
Response: The SDT believes that there is a need to perform sensitivity studies and to set a minimum level of sensitivities to be considered. To achieve that, the SDT is providing some guidance on what could be included in the sensitivity studies without being too prescriptive. R2.1.3 and R2.4.3 have been modified to require documentation of why the listed sensitivities were or were not selected for specific studies. R2.1.4 and R2.4.4 have been added to specifically state that the entity may consider additional sensitivities that are appropriate for its own system. Further the standard is not intended to address how much margin exists in the Transmission System to handle the unknown or previously undefined variables, but to provide base line performance requirements. The entity can provide as much margin as it feels is appropriate. R2.1.3. For each of the studies described in Requirement R2.1.1 and Requirement R2.1.2, sensitivity case(s) that stress the System with sensitivities that reflect one or more of the following conditions shall be run and documentation ~~with~~ of the technical rationale for ~~the selected sensitivity(ies)~~ why each of the conditions was or was not selected shall be supplied: R2.1.4. In addition to those sensitivities mentioned in Requirement R2.1.3, any other sensitivities, as deemed appropriate by the Transmission Planner or Planning Coordinator for their individual systems, shall be run and documentation of the technical rationale for why each was selected shall be supplied. R2.4.3. For each of the studies described in Requirement R2.4.1 and Requirement R2.4.2, ~~S~~sensitivity case(s) that stress the System to reflect one or more of the following conditions shall be run ~~with documentation provided explaining the rationale for the selected sensitivity(ies)~~ and documentation of the technical rationale for why each of the conditions was or was not selected shall be supplied: R2.4.4. In addition to those sensitivities mentioned in Requirement R2.4.3, any other sensitivity, as deemed appropriate by the Transmission Planner or Planning Coordinator for their individual systems, shall be run and documentation of the technical rationale for why each was selected shall be supplied.			
AEP	☑		Consider requiring a minimum of two sensitivity cases.
Allegheny Power		☑	Scenario analysis should be based on the unique aspect of the particular Transmission zone. Transmission Planners should work to select the best scenarios related to the specific system and adequately describe the selection process.

Question 12			
Commenter	**Yes**	**No**	**Comment**
APPA		☑	The term Base Case should not be used in this manner. The conditions of the Base Case Study should not be in a Standard to insure that all instability cases are covered.
City Water Light and Power	☑		The term Base Case should not be used in this manner. The conditions of the Base Case Study should be in a Standard to insure that all sensitivity cases are covered.
BCTC	☑	☑	The number of sensitivity cases should be tied to the number of resource plans and range of possible load growth forecast.
Brazos Electric		☑	More descretion should be allowed by the TO or planner in deciding the number of cases.
CenterPoint		☑	The number and type of sensitivity studies should be left to the judgement of Transmission Planners. Having too many prescriptive requirements results in concentrating on meeting the requirements rather than on formulating the most effective and efficient improvements.
CPS Energy		☑	The number of sensitivity studies should be at the discretion of Transmission Planners.
Dominion		☑	Transmission Planning engineers have good engineering judgment and need to have some flexibility in selecting the variables that need to be studied.
Duke Energy		☑	The entity performing the studies has the best system specific knowledge to select the appropriate sensitivities that needs to be evaluated. When Measures are developed, they should provide planners with the flexibility to perform appropriate sensitivity studies.
Entergy		☑	The appropriate studies that should be done by each applicable entity is highly dependent on the transmission system being studied. Being too prescriptive may cause irrelevant studies to be completed while diverting resources and attention from sensitivity studes that the entity most familiar with the transmission system believes could result in more meaningful analysis. The Committee should not lose sight of the importance of good engineering judgment exercised by those most familiar with the characteristics of the particular system. While appropriate sensitivity analyses are beneficial in evaluating system performance, it should be clearly stated that projects and/or mitigation plans are left to the discretion of the Transmission Planners.
ERCOT ISO CAISO		☑	The TP or PA is the best to determine the number and type of sensitivities that are more applicable to their system.
FirstEnergy		☑	We suggest that the SDT reword the standard to allow the Transmission Owner additional latitude as to which stress conditions to study. We suggest modifying R2.4.3 to indicate sensitivities "such as those listed below" be studied. That way the standard would be providing examples but would not dictate specific sensitivity studies that should be performed.
FPL		☑	Not all Regions' sensitivity concerns are the same.
FRCC		☑	Not all Regions' concerns are the same and therefore each Region should determine which sensitivities are appropriate.
Georgia Transm.		☑	Sensitivity analyses should not be prescribed. In one system there may be various sensitivites based on region, generation location, number of long range projects, etc. The Planner should provide a summary of the critical sensitivities and documentation supporting their definitionis.

Question 12			
Commenter	**Yes**	**No**	**Comment**
IESO		☑	We do not support introducing sensitivity testing as requirements in the standard, let alone specifying the number of sensitivity cases that need to be developed. In general, there are two interpretations of sensitivity testing - the type to assist in scoping out planning studies and the type to test the stretched capability of the proposed plans. In the first case, sensitivity testing is conducted to assist in identifying restricting parameters/phenomena, critical faults, and scoping out the conditions that need to be assessed, etc. As such, the scenarios to be included in sensitivity testing vary from one Transmission Planner to another depending on local needs and system characteristics, and even from one study to another for the same area to be assessed. The scope of sensitivity testing is therefore difficult to pin down. In the second case, while variations such as percentage of forecast peak demand can be picked as a common parameter for sensitivity testing, the follow-on actions, or inactions, after obtaining the test results would be at the sole discretion of the Transmission Planner unless they are specifically addressed by reliability standards. Requiring a Transmission Planner to conduct sensitivity testing, and even to require it to study a specific number of cases case may put a Transmission Planner in a quandary. For example, if sensitivity testing for a case with 5% higher than forecast peak load shows that the system needs a new 500 kV line in a certain area, should the Transmission Planner propose the new line? If so, what are the reliability and economic justifications when it is clearly demonstrated that the line is needed only if the load for that studied time frame turns out to be 5% higher than forecast? If the answer is yes (to propose adding the line), then why don't we simply require that all planning studies assume a condition that is more conservative than that forecast, and stipulate these conditions in the standard accordingly? If not, will the Transmission Planner be criticized for not taking proactive action to manage the potential risk? Similarly, a Transmission Planner is faced with a much wider study scope if it is required to study the condition assuming one or more major transmission facility is unavailable due to forced outages. These scenarios are more aptly addressed in operations planning or near operations time frame when transmission facility and other system conditions become more predictable. Studies conducted well in advance of real time already rely on many enabling assumptions. Introducing a requirement for sensitivity testing and with specific number of test cases would render the study task difficult to manage, and may put the Transmission Planner in a quandary dealing with the test results. If the standard should require a Transmission Planner to study up to one transmission facility out of service, then this requirement should be clearly stipulated.
ITC	☑		The standard should provide a minimum number of sensitivity cases that should be developed and should include at least a higher load forecast (90/10 vs. 50/50) and a higher generator unavailiablity (LOLE - 1 in 10).
KCPL		☑	N-1 and N-2 analyses should identify any additional sensitivity cases that need to be studied. This

Question 12			
Commenter	**Yes**	**No**	**Comment**
			standard should not specify the number and type of sensitivities to be studied.
LADWP		☑	the FERC orders are market focused, not reliability focused; to the extent that these orders require sensitivity studies as outlined in this proposed standards, they belongs in operating studies and real time market studies, not transmission planning studies which are to meet reliability based criteria.
Manitoba Hydro		☑	Sensitivity analysis that could be considered will vary from region to region or subregion to subregion.
MEAG Power		☑	The entity performing the studies should be allowed to determine the appropriate number of cases that need to be evaluated. Different utilities have different input assumptions, therefore the selection of sensitivities to study are different. For example, some utility needs to study the water availability for its hydro units, while other utility needs to evalauate the sensitivity of gas availability.
MISO		☑	Requirements 2.1.3 and 2.4.3 call for sensitivity cases that stress the system, with documentation as to the rationale for why a particular sensitivity was selected. Midwest ISO believes that the standard must balance clarity and specificity with flexibility and discretion. If the standard is too prescriptive in the system conditions to be evaluated, sensitivity studies that reflect critical system conditions that experience dictates are appropriate for a given system could be construed as being outside of the standards. Such a determination could make the regulatory approvals of facilties needed for reliability purposes difficult or impossible to obtain. Midwest ISO believes hat the language in the existing standard TPL-001-0, R1.3.2, which states that "PA and TP assessments shall cover critical system conditions and study years as deemed appropriate by the responsible entity" provides the proper balance of these issues.
Muscatine P&W			Leave it open so it can be driven by local issues including those not in the standards. i.e. Running near term criteria on the long term horizon, additional contingencies beyond currently required, etc. as appropriate for the area.
New York ISO		☑	NYISO does not support the introduction of sensitivity testing in the Planning Standards as a requirement. Sensitivity testing should be dictated by the local needs and system characteristics. The nature of planning studies incorporates assumptions that would make sensitivity analysis difficult to interpret.
NCEMC		☑	There should be a stakeholder process for all entities (all Load-Serving Entities and Transmission Customers) involved or impacted within the defined area to provide input to determine which sensitivity cases are to be performed and the appropriate number of cases that need to be evaluated. Not every sensitivity case should be required for every system.
Northwestern Energy		☑	The current list is too prescriptive as many may not apply to a specific TP, yet they would be required to study it.
Progress–Carolinas		☑	This should be system specific.
ReliabilityFirst	☑		A minimum of at least one or two that contain certain scenarios chosen from the list should be required.

Question 12			
Commenter	**Yes**	**No**	**Comment**
Santee Cooper		☑	These factors vary between areas and regions. In addition the TP should be allowed to assess an alternate sensitivity if they can document that it is more appropriate,
SERC EC DRS		☑	The entity performing the studies has the best system specific knowledge to select the appropriate sensitivities that needs to be evaluated.
SERC EC PSS		☑	The entity performing the studies should be allowed to determine the appropriate number of cases that need to be evaluated.
SERC RRS OPS		☑	These factors vary between areas and regions. In addition the TP should be allowed to assess an alternate sensitivity if they can document that it is more appropriate,
SCE&G		☑	The standard may offer guidance but the entity performing the sensitivity studies should be able to determine the number of cases required.
Southern Transm.		☑	This should not be a "one shoe fits all" exercise. It appears that at least one of these items listed is required even though they may not be the most appropriate ones for all entities. There should be the ability to perform other sensitivity analysis instead of these as long as the "rationale" is provided for the choice. The entity should be allowed to determine the appropriate sensitivity cases.
Tenaska	☑		The question may be misleading as number of sensitivity cases is not the issue. Enough studies should be conducted to appropriately define the boundaries of how the system will perform. The standard identifies various issues that may be used as sensitivity cases, but the list may or may not be all inclusive. The team should ask the industry whether any other sensitivities should be included in the standard.
TVA		☑	The entity performing the studies should be allowed to determine the appropriate number of cases that need to be evaluated.
TEP		☑	The TP or PA is the most familiar with the system and so would be the best to determine the sensitivities that are more applicable to their particular system. The Standard should not be overly prescriptive. The Standard can make suggestions or list potential sensitivities but let the TP or PA determine those variables to study and the reasonable range of the sensitivities.
WPS			Sensitivity cases do not consider/mention new transmission facilities additions. Although the Transmission Planner should have the ability to determine appropriate sensitivities, system performance based on the delay of new transmission facilities should be considered (may be covered under R2.1.3.3 but could be more explicit).

Response: The SDT believes that there is a need to perform sensitivity studies and to set a minimum level of sensitivities to be considered. To achieve that, the SDT is providing some guidance on what could be included in the sensitivity studies without being too prescriptive. R2.1.3 and R2.4.3 have been modified to require documentation of why the listed sensitivities were or were not selected for specific studies. R2.1.4 and R2.4.4 have been added to specifically state that the entity may consider additional sensitivities that are appropriate for its own system.

R2.1.3. For each of the studies described in Requirement R2.1.1 and Requirement R2.1.2, sensitivity case(s) that stress the System with sensitivities that reflect one or more of the following conditions shall be run and documentation ~~with~~ of the technical rationale for ~~the selected sensitivity(ies)~~ why each of the conditions was or was not selected shall be supplied:

R2.1.4. In addition to those sensitivities mentioned in Requirement R2.1.3, any other sensitivities, as deemed appropriate by the Transmission

Question 12			
Commenter	**Yes**	**No**	**Comment**
Planner or Planning Coordinator for their individual systems, shall be run and documentation of the technical rationale for why each was selected shall be supplied. R2.4.3. For each of the studies described in Requirement R2.4.1 and Requirement R2.4.2, ~~S~~sensitivity case(s) that stress the System to reflect one or more of the following conditions shall be run ~~with documentation provided explaining the rationale for the selected sensitivity(ies)~~ and documentation of the technical rationale for why each of the conditions was or was not selected shall be supplied: R2.4.4. In addition to those sensitivities mentioned in Requirement R2.4.3, any other sensitivity, as deemed appropriate by the Transmission Planner or Planning Coordinator for their individual systems, shall be run and documentation of the technical rationale for why each was selected shall be supplied.			
E ON US	☑		The proposed requirements P2, P3 and P4 significantly increase system performance. I agree with the requirements but I do not think it is appropropriate to layer extreme load, extreme transfers and other sensitivities on top of these. The analsysis of any Senistivities should be under the umbrella of Extreme Events or limited to meeting the P1 requirements.
HQTE NPCC RCS		☑	The standard is unclear whether or not it mandates the requirement to develop action plans in accordance with consequences of problems highlighted as a result of one of the sensitivity case study. Suggest modification to, "…sensitivity testing that stresses the System shall be considered, and documentation with the rationale for the sensitivity testing shall be supplied. The sensitivity case(s) may include one or more of the following conditions:"
JEA		☑	Transmission Planners when developing system improvement options should identify their system specific sensitivity cases that best assesses the robustness of the options under consideration. Project evaluation is not addressed in the NERC standards and performing sensitivity assessments that only lead to operational remedies consistent with the standards, are best performed within the operational horizon where information and assumptions are more certain than within the planning horizon.
PJM	☑	☑	At the least, it should provide a measure that indicates that you meet the requirement. Need to modify 2.4.3 to specify what if any performance requirement needs to be met.
Central Maine Power National Grid New England ISO NU NSTAR United Illuminating		☑	The standard is unclear whether or not it mandates the requirement to develop action plans for problems highlighted as a result of one of the sensitivities. Suggest modification to, "…sensitivity testing that stresses the System shall be considered, and documentation with the rationale for the sensitivity testing shall be supplied. The sensitivity case(s) may include one or more of the following conditions:" 2.1.3.3 should refer only to planned facilities that may be delayed. 2.1.3.4 - "variability" is too vague for a standard; the standard needs to be more specific as to the intent. 2.1.3.7 should be consistent with 1.4. These comments also apply to 2.4.3.
Response: The standard requires that deficiencies identified from the results of the current studies need to be addressed via Corrective			

Question 12			
Commenter	**Yes**	**No**	**Comment**
Actions Plan while leaving it to the entity's discretion to decide which deficiencies, if any, identified through sensitivity studies should be addressed by the Corrective Action Plan. Requirement R2.7.2 has been modified to make it clear that the entity must explain changes, if any, to the Corrective Action Plans as a result of considering the sensitivity studies. In addition, the SDT believes that there is a need to perform sensitivity studies and to set a minimum level of sensitivities to be considered. To achieve that, the SDT is providing some guidance on what could be included in the sensitivity studies without being too prescriptive. R2.1.3 and R2.4.3 have been modified to require documentation of why the listed sensitivities were or were not selected for specific studies. R2.1.4 and R2.4.4 have been added to specifically state that the entity may consider additional sensitivities that are appropriate for its own system. R2.1.3. For each of the studies described in Requirement R2.1.1 and Requirement R2.1.2, sensitivity case(s) that stress the System with sensitivities that reflect one or more of the following conditions shall be run and documentation ~~with~~ of the technical rationale for ~~the selected sensitivity(ies)~~ why each of the conditions was or was not selected shall be supplied: R2.1.4. In addition to those sensitivities mentioned in Requirement R2.1.3, any other sensitivities, as deemed appropriate by the Transmission Planner or Planning Coordinator for their individual systems, shall be run and documentation of the technical rationale for why each was selected shall be supplied. R2.4.3. For each of the studies described in Requirement R2.4.1 and Requirement R2.4.2, ~~S~~sensitivity case(s) that stress the System to reflect one or more of the following conditions shall be run ~~with documentation provided explaining the rationale for the selected sensitivity(ies)~~ and documentation of the technical rationale for why each of the conditions was or was not selected shall be supplied: R2.4.4. In addition to those sensitivities mentioned in Requirement R2.4.3, any other sensitivity, as deemed appropriate by the Transmission Planner or Planning Coordinator for their individual systems, shall be run and documentation of the technical rationale for why each was selected shall be supplied. R2.**7.2.** ~~Be added to study cases and the cases re-tested to show that the System with planned additions meets the performance requirements in the tables~~ Contain a description of how and why the consideration of the sensitivities selected in accordance with Requirements R2.1.3, R2.1.4, R2.4.3, and R2.4.4 in the Planning Assessment did or did not result in a modification or expansion of the list of actions developed in accordance with Requirement R2.7.1.			
MRO		☑	The Drafting Team has provided the appropriate level of detail by indicating that one or more of the following conditions are to be used. However, the MRO notes that R.2.1.3.1 should be changed to match R.2.4.3.1, that is, R.2.1.3. 1 should be changed to state "Variations in Load model assumptions."
Response: The SDT disagrees. The wording in Requirement R.2.4.3.1 is stability related and refers to device characteristics such as motor load as mentioned in Requirement R2.4.1. The wording in Requirement R.2.1.3. 1 refers to "demand" load for steady statae studies.			
Seattle City		☑	Sensitivity studies should be performed at a level higher than LSE or BA. It seems more appropriate for a RC or RRO to determine regional contingencies.
Response: Requirement R2 in the standard states that Planning Assessments, including the sensitivity studies, should be performed by the TP or PC.			
WECC BPA		☑	The TP or PA is the most familiar with the system and so would be the best to determine the sensitivities that are more applicable to their particular system. The Standard should not be overly

Question 12			
Commenter	**Yes**	**No**	**Comment**
TSGT			prescriptive. The Standard can make suggestions or list potential sensitivities but let the TP or PA determine those variables to study and the reasonable range of the sensitivities.
Response: Requirement R2 in the standard states that Planning Assessments, including the sensitivity studies, should be performed by the TP or PC. The SDT believes that there is a need to perform sensitivity studies and to set a minimum level of sensitivities to be considered. To achieve that, the SDT is providing some guidance on what could be included in the sensitivity studies without being too prescriptive. Requirement R2.1.3 and Requirement R2.4.3 have been modified to require documentation of why the listed sensitivities were or were not selected for specific studies. Requirement R2.1.4 and Requirement R2.4.4 have been added to specifically state that the entity may consider additional sensitivities that are appropriate for its own system. R2.1.3. For each of the studies described in Requirement R2.1.1 and Requirement R2.1.2, sensitivity case(s) that stress the System with sensitivities that reflect one or more of the following conditions shall be run and documentation ~~with~~ of the technical rationale for ~~the selected sensitivity(ies)~~ why each of the conditions was or was not selected shall be supplied: R2.1.4. In addition to those sensitivities mentioned in Requirement R2.1.3, any other sensitivities, as deemed appropriate by the Transmission Planner or Planning Coordinator for their individual systems, shall be run and documentation of the technical rationale for why each was selected shall be supplied. R2.4.3. For each of the studies described in Requirement R2.4.1 and Requirement R2.4.2, ~~S~~sensitivity case(s) that stress the System to reflect one or more of the following conditions shall be run ~~with documentation provided explaining the rationale for the selected sensitivity(ies)~~ and documentation of the technical rationale for why each of the conditions was or was not selected shall be supplied: R2.4.4. In addition to those sensitivities mentioned in Requirement R2.4.3, any other sensitivity, as deemed appropriate by the Transmission Planner or Planning Coordinator for their individual systems, shall be run and documentation of the technical rationale for why each was selected shall be supplied.			
AECC		☑	
AECI		☑	
Exelon		☑	
LCRA		☑	
NERC TIS		☑	
Progress–Florida		☑	
SaskPower		☑	
ATC	☑		
City Utilities/Springfield	☑		
Response: Thank you. Please see the Summary Response.			

13) Q13. Should the standard specify the required changes, such as changes in expected transfers, load forecasts, generation patterns, etc., from the study case to be considered a "reasonably stressed" case?

Summary Response: The SDT is providing some guidance on what needs to be included in sensitivity studies while not being totally prescriptive. R2.1.3 and R2.4.3 have been modified to require documentation of why the listed sensitivities were or were not selected for specific studies. R2.1.4 and R2.4.4 have been added to specifically state that the entity may consider additional sensitivities that are appropriate for its own system. In either case the entity must document the technical rationale for why each was selected. The documentation as well as the studies for the sensitivity(ies) selected will be required to demonstrate compliance.

In addition a new requirement, now numbered as Requirement R2.7.2, has been added to clarify that the sensitivity studies do not in themselves establish the need for a corrective action but the entity must explain how the sensitivities affected the Corrective Action Plan.

Note: The words "reasonably stressed" are only used in the question and do not reference any particular requirement in the standard; therefore, no definition is required.

The following requirements were changed due to industry comments:

R2.1.3. For each of the studies described in Requirement R2.1.1 and Requirement R2.1.2, sensitivity case(s) that stress the System with sensitivities that reflect one or more of the following conditions shall be run and documentation ~~with~~ of the technical rationale for ~~the selected sensitivity(ies)~~ why each of the conditions was or was not selected shall be supplied:
R2.1.4. In addition to those sensitivities mentioned in Requirement R2.1.3, any other sensitivities, as deemed appropriate by the Transmission Planner or Planning Coordinator for their individual systems, shall be run and documentation of the technical rationale for why each was selected shall be supplied.
R2.4.3. For each of the studies described in Requirement R2.4.1 and Requirement R2.4.2, ~~S~~sensitivity case(s) that stress the System to reflect one or more of the following conditions shall be run ~~with documentation provided explaining the rationale for the selected sensitivity(ies)~~ and documentation of the technical rationale for why each of the conditions was or was not selected shall be supplied:
R2.4.4. In addition to those sensitivities mentioned in Requirement R2.4.3, any other sensitivity, as deemed appropriate by the Transmission Planner or Planning Coordinator for their individual systems, shall be run and documentation of the technical rationale for why each was selected shall be supplied.
R2.7.2. ~~Be added to study cases and the cases re-tested to show that the System with planned additions meets the performance requirements in the tables~~ Contain a description of how and why the consideration of the sensitivities selected in accordance with Requirements R2.1.3, R2.1.4, R2.4.3, and R2.4.4 in the Planning Assessment did or did not result in a modification or expansion of the list of actions developed in accordance with Requirement R2.7.1.

Question 13			
Commenter	**Yes**	**No**	**Comment**
Ameren		☑	There is no need to build a multitude of sensitivity cases to assess the reliability of the system. The sensitivity issues should be handled on an individual system basis by the local transmission planners as applicable to the study system. Conditions that are considered as "stressed" for one area may require all facilities to be in service in another area. Power flow cases utilizing a number of the

Question 13			
Commenter	Yes	No	Comment
			items listed under R2.1.3 or R2.4.3 could be produced for in-house study work, but such work should not be required as part of standards compliance. The standard should not be dictating what types of sensitivities should be investigated or considered for all parts of the transmission system.
AEP		☑	Consider requiring that the most severe sensitivity cases be included in the studies as determined by the entities conducting the studies.
Brazos Electric		☑	Again, descretion should be allowed by the TO when selecting the criteria.
CenterPoint		☑	See comment to Q12.
Dominion		☑	Transmission Planning engineers have good engineering judgment and need to have some flexibility in selecting the variables that need to be studied.
CPS Energy		☑	The type of sensitivty studies should be at the discretion of Transmission Planners.
Duke Energy		☑	The sensitivities are best selected by those most familiar with the specific system.
Entergy		☑	Should be left to Transmission Planners discretion and good engineering judgement. (see response to Q12)
Exelon		☑	The required changes should not be specified because they may not impact a particular transmission system based upon its geographic location within the interconnection. Required changes should be determined by the entity performing the study.
ERCOT ISO CAISO		☑	Let the TP or PA decide the type of stressing needed for a particular case.
FPL FRCC		☑	The Transmission Planner needs the flexibility to define what are considered "reasonably stressed" cases for their respective systems. This would not a be a proper application of a one size fits all definition.
Georgia Transm.		☑	See comment to Q12.
IESO		☑	See comments above. Also, the term "reasonably stressed" is not measurable.
KCPL		☑	Transmission Planner has best knowledge of conditions that create greatest stress on local transmission system.
LADWP		☑	A "reasnably stressed" case in transmission planning is whether or not the transmission system is stressed. To stress a transmission system, the key parameter to monitor are the line flows. Line flows are dictated by network topology and physics of electricity and very much depends on the objectives of each study, i.e., it is case by case. Standard should focus on what criteria shall be complied, not how to comply. This proposed standard is so prescriptive on how to comply that it reads like a tutorial.
MEAG Power		☑	The standard may offer guidance but what constitutes a "reasonably stressed" case will vary from Transmission Planner to Transmission Planner. Therefore, it should be left to the discretion of the entity performing the study.

Question 13			
Commenter	**Yes**	**No**	**Comment**
MISO		☑	This appears to be a case of expecting that "one size fits all" in requiring that certain scenarios be evaluated. Since the goal here is to improve reliability, it makes more sense to have transmission planners identify appropriate sentivities for area under study. The appropriate sensitivity is likely to vary depending on the portion of system being studied.
Muscatine P&W			Leave it open so it can be driven by local issues including those not in the standards. i.e. Running near term criteria on the long term horizon, additional contingencies beyond currently required, etc. as appropriate for the area.
NCEMC		☑	The standard should offer guidance but what constitutes a "reasonably stressed" case should be left to a stakeholder process as noted in Q12 with some discretion of the entity performing the study.
Northwestern Energy		☑	Each TP's stressed conditions vary, making a list that is applicable to all will not achieve the desired purpose.
Progress–Carolinas		☑	This should be system specific.
Santee Cooper		☑	The standard may offer guidance but what constitutes a "reasonably stressed" case should be left to the discretion of the entity performing the study, since they are the best judge of what stresses the system.
SERC EC DRS		☑	The entity performing the studies has the best system specific knowledge to determine what constitutes a reasonable stressed case.
SERC EC PSS		☑	The standard may offer guidance but what constitutes a "reasonably stressed" case should be left to the discretion of the entity performing the study.
SERC RRS OPS		☑	The standard may offer guidance but what constitutes a "reasonably stressed" case should be left to the discretion of the entity performing the study, since they are the best judge of what stresses the system.
SCE&G		☑	The standard may offer guidance but what constitutes a "reasonably stressed" case should be left to the discretion of the entity performing the study.
Southern Transm.		☑	See comment above. [This should not be a "one shoe fits all" exercise. It appears that at least one of these items listed is required even though they may not be the most appropriate ones for all entities. There should be the ability to perform other sensitivity analysis instead of these as long as the "rationale" is provided for the choice. The entity should be allowed to determine the appropriate sensitivity cases.]
TEP		☑	No, as in the response for Question #12. The TP is the best to determine the type of stressing needed for a particular case. This is very evident in the type of cases used for studies in the different parts of the NERC regions.
TVA		☑	The standard may offer guidance but what constitutes a "reasonably stressed" case should be left to the discretion of the entity performing the study.
Response: The SDT is providing some guidance on what needs to be included in sensitivity studies while not being totally prescriptive. R2.1.3 and R2.4.3 have been modified to require documentation of why the listed sensitivities were or were not selected for specific studies. R2.1.4 and R2.4.4 have been added to specifically state that the entity may consider additional sensitivities that are appropriate for its own			

Question 13			
Commenter	**Yes**	**No**	**Comment**
system. In either case the entity must document the technical rationale for why each was selected. The documentation as well as the studies for the sensitivity(ies) selected will be required to demonstrate compliance. Note: The words "reasonably stressed" are only used in the question and do not reference any particular requirement in the standard; therefore, no definition is required. **R2.1.3.** For each of the studies described in Requirement R2.1.1 and Requirement R2.1.2, sensitivity case(s) that stress the System with sensitivities that reflect one or more of the following conditions shall be run and documentation ~~with~~ of the technical rationale for ~~the selected sensitivity(ies)~~ why each of the conditions was or was not selected shall be supplied: **R2.1.4.** In addition to those sensitivities mentioned in Requirement R2.1.3, any other sensitivities, as deemed appropriate by the Transmission Planner or Planning Coordinator for their individual systems, shall be run and documentation of the technical rationale for why each was selected shall be supplied. **R2.4.3.** For each of the studies described in Requirement R2.4.1 and Requirement R2.4.2, ~~S~~sensitivity case(s) that stress the System to reflect one or more of the following conditions shall be run ~~with documentation provided explaining the rationale for the selected sensitivity(ies)~~ and documentation of the technical rationale for why each of the conditions was or was not selected shall be supplied: **R2.4.4.** In addition to those sensitivities mentioned in Requirement R2.4.3, any other sensitivity, as deemed appropriate by the Transmission Planner or Planning Coordinator for their individual systems, shall be run and documentation of the technical rationale for why each was selected shall be supplied. .			
Allegheny Power		☑	Providing examples would be helpful but specifically stating the required thresholds are transmission system dependent. Providing some methodologies to follow may be prudent such as forecast levels like 90/10; 80/20; or 50/50.
BCTC		☑	Should be tied to the data provided under R1.
Response: The SDT is providing some guidance on what needs to be included in sensitivity studies while not being totally prescriptive. R2.1.3 and R2.4.3 have been modified to require documentation of why the listed sensitivities were or were not selected for specific studies. R2.1.4 and R2.4.4 have been added to specifically state that the entity may consider additional sensitivities that are appropriate for its own system. In either case the entity must document the technical rationale for why each was selected. The documentation as well as the studies for the sensitivity(ies) selected will be required to demonstrate compliance. **R2.1.3.** For each of the studies described in Requirement R2.1.1 and Requirement R2.1.2, sensitivity case(s) that stress the System with sensitivities that reflect one or more of the following conditions shall be run and documentation ~~with~~ of the technical rationale for ~~the selected sensitivity(ies)~~ why each of the conditions was or was not selected shall be supplied: **R2.1.4.** In addition to those sensitivities mentioned in Requirement R2.1.3, any other sensitivities, as deemed appropriate by the Transmission Planner or Planning Coordinator for their individual systems, shall be run and documentation of the technical rationale for why each was selected shall be supplied. **R2.4.3.** For each of the studies described in Requirement R2.4.1 and Requirement R2.4.2, ~~S~~sensitivity case(s) that stress the System to reflect one or more of the following conditions shall be run ~~with documentation provided explaining the rationale for the selected~~			

Question 13			
Commenter	**Yes**	**No**	**Comment**
~~sensitivity(ies)~~ and documentation of the technical rationale for why each of the conditions was or was not selected shall be supplied: **R2.4.4.** In addition to those sensitivities mentioned in Requirement R2.4.3, any other sensitivity, as deemed appropriate by the Transmission Planner or Planning Coordinator for their individual systems, shall be run and documentation of the technical rationale for why each was selected shall be supplied.			
Central Maine Power HQTE National Grid New England ISO NU NPCC RCS NSTAR United Illuminating		☑	The standard is unclear whether or not it mandates the requirement to mitigate consequences of problems highlighted as a result of one of the sensitivities. Reasonably stressed conditions are dependent upon the study area under review and the standard is not likely to be able to be crafted to provide sufficent and consistent direction. However, it might be helpful if the standard clarified whether the base case should include any unplanned generator outages or whether, aside from potential sensitivities, unplanned generator outages are considered only through P1, P3 or P4 Contingencies. If the standard addresses unplanned generator outages only through P1, P3 and P4, then it is recommended that a mandatory sensitivity analysis, with required mitigation, include various potential combinations of a reasonable amount of unplanned outages. The combinations should be based on the part of the system that is under study.
Response: A new requirement, now numbered as Requirement R2.7.2, has been added to clarify that the sensitivity studies do not in themselves establish the need for a corrective action but the entity must explain how the sensitivities affected the Corrective Action Plan. Requirement R1.4 of the standard requires that long term planned outages are part of the base studies. The performance table provides for specific contingency conditions. The entity may elect to run additional sensitivity studies for even more unplanned outages as stated in Requirement R2.1.4 and document its rationale for doing so. Note: The words "reasonably stressed" are only used in the question and do not reference any particular requirement in the standard; therefore, no definition is required. **R2.**7.2. ~~Be added to study cases and the cases re-tested to show that the System with planned additions meets the performance requirements in the tables~~ Contain a description of how and why the consideration of the sensitivities selected in accordance with Requirements R2.1.3, R2.1.4, R2.4.3, and R2.4.4 in the Planning Assessment did or did not result in a modification or expansion of the list of actions developed in accordance with Requirement R2.7.1.			
JEA		☑	Transmission Planners when developing system improvement options should identify their system specific "reasonable stressed" cases including opportunities for additional economic margins that best assesses the economic benefits of the options under consideration. Project evaluation is not addressed in the NERC standards and performing assessments on "reasonable stressed" cases that only lead to operational remedies consistent with the standards, are best performed within the operational horizon where information and assumptions are more certain than within the planning horizon.

Question 13			
Commenter	**Yes**	**No**	**Comment**
Response: Reliability Standards set the minimum performance requirements and any margins can be set /established and implemented by the entity. The standard covers reliability performance issues and not market or economic performance issues. The SDT is providing some guidance on what needs to be included in sensitivity studies while not being totally prescriptive. R2.1.3 and R2.4.3 have been modified to require documentation of why the listed sensitivities were or were not selected for specific studies. R2.1.4 and R2.4.4 have been added to specifically state that the entity may consider additional sensitivities that are appropriate for its own system. In either case the entity must document the technical rationale for why each was selected. The documentation as well as the studies for the sensitivity(ies) selected will be required to demonstrate compliance. Note: The words "reasonably stressed" are only used in the question and do not reference any particular requirement in the standard; therefore, no definition is required. **R2.1.3.** For each of the studies described in Requirement R2.1.1 and Requirement R2.1.2, sensitivity case(s) that stress the System with sensitivities that reflect one or more of the following conditions shall be run and documentation ~~with~~ of the technical rationale for ~~the selected sensitivity(ies)~~ why each of the conditions was or was not selected shall be supplied: **R2.1.4.** In addition to those sensitivities mentioned in Requirement R2.1.3, any other sensitivities, as deemed appropriate by the Transmission Planner or Planning Coordinator for their individual systems, shall be run and documentation of the technical rationale for why each was selected shall be supplied. **R2.4.3.** For each of the studies described in Requirement R2.4.1 and Requirement R2.4.2, ~~S~~sensitivity case(s) that stress the System to reflect one or more of the following conditions shall be run ~~with documentation provided explaining the rationale for the selected sensitivity(ies)~~ and documentation of the technical rationale for why each of the conditions was or was not selected shall be supplied: **R2.4.4.** In addition to those sensitivities mentioned in Requirement R2.4.3, any other sensitivity, as deemed appropriate by the Transmission Planner or Planning Coordinator for their individual systems, shall be run and documentation of the technical rationale for why each was selected shall be supplied.			
ITC	☑		"Modification of expected transfers" should include unexpected loopflow caused by 3rd parties where applicable. In addition to the obvious impacts on system margins, loopflows have been identified as a major reason that FTR feasibility is hard to predict. Also, see answer to Q12 above. Some level of flexibility for some of the stressed cases should be left to the individual Planning areas as they would know typical load/stresses seen by their systems that should be studied and solutions identified for problems.
MRO		☑	This is unnecessary micro-management of the planning process. The MRO recommends that the Drafting Team proceed with the high-level requirement as provided with the minor changes recommended by the MRO in other parts of this comment form.
ReliabilityFirst		☑	A list of suggestions is sufficient. The flexibility to use different stresses on different systems is

Question 13			
Commenter	**Yes**	**No**	**Comment**
			needed.
SaskPower		☑	Unnecessary micro-management of the planning process in the Saskatchewan Regulatory Jurisdiction.
WECC BPA TSGT		☑	No, as in the response for Question #12. The TP is the best to determine the type of stressing needed for a particular case. This is very evident in the type of cases used for studies in the different parts of the NERC regions.

Response: The SDT is providing some guidance on what needs to be included in sensitivity studies while not being totally prescriptive. Requirement R2.1.3 and Requirement R2.4.3 have been modified to require documentation of why the listed sensitivities were or were not selected for specific studies. Requirement R2.1.4 and Requirement R2.4.4 have been added to specifically state that the entity may consider additional sensitivities that are appropriate for its own system. In either case the entity must document the technical rationale for why each was selected.

In addition a new requirement, now numbered as R2.7.2, has been added to clarify that the sensitivity studies do not in themselves establish the need for a corrective action but the entity must explain how the sensitivities affected the Corrective Action Plan.

R2.1.3. For each of the studies described in Requirement R2.1.1 and Requirement R2.1.2, sensitivity case(s) that stress the System with sensitivities that reflect one or more of the following conditions shall be run and documentation ~~with~~ of the technical rationale for ~~the selected sensitivity(ies)~~ why each of the conditions was or was not selected shall be supplied:
R2.1.4. In addition to those sensitivities mentioned in Requirement R2.1.3, any other sensitivities, as deemed appropriate by the Transmission Planner or Planning Coordinator for their individual systems, shall be run and documentation of the technical rationale for why each was selected shall be supplied.
R2.4.3. For each of the studies described in Requirement R2.4.1 and Requirement R2.4.2, ~~S~~sensitivity case(s) that stress the System to reflect one or more of the following conditions shall be run ~~with documentation provided explaining the rationale for the selected sensitivity(ies)~~ and documentation of the technical rationale for why each of the conditions was or was not selected shall be supplied:
R2.4.4. In addition to those sensitivities mentioned in Requirement R2.4.3, any other sensitivity, as deemed appropriate by the Transmission Planner or Planning Coordinator for their individual systems, shall be run and documentation of the technical rationale for why each was selected shall be supplied.

New York ISO		☑	See comment to Q12. Additionally, what is the definition of "reasonably stressed"?

Response: The SDT is providing some guidance on what needs to be included in sensitivity studies while not being totally prescriptive. Requirement R2.1.3 and Requirement R2.4.3 have been modified to require documentation of why the listed sensitivities were or were not selected for specific studies. Requirement R2.1.4 and Requirement R2.4.4 have been added to specifically state that the entity may consider additional sensitivities that are appropriate for its own system. In either case the entity must document the technical rationale for why each was selected. The documentation as well as the studies for the sensitivity(ies) selected will be required to demonstrate compliance.

In addition a new requirement, now numbered as Requirement R2.7.2, has been added to clarify that the sensitivity studies do not in themselves establish the need for a Corrective Action but the entity must explain how the sensitivities affected the Corrective Action Plan.

Question 13			
Commenter	**Yes**	**No**	**Comment**
Note: The words "reasonably stressed" are only used in the question and do not reference any particular requirement in the standard; therefore, no definition is required. **R2.1.3.** For each of the studies described in Requirement R2.1.1 and Requirement R2.1.2, sensitivity case(s) that stress the System with sensitivities that reflect one or more of the following conditions shall be run and documentation ~~with~~ of the technical rationale for ~~the selected sensitivity(ies)~~ why each of the conditions was or was not selected shall be supplied: **R2.1.4.** In addition to those sensitivities mentioned in Requirement R2.1.3, any other sensitivities, as deemed appropriate by the Transmission Planner or Planning Coordinator for their individual systems, shall be run and documentation of the technical rationale for why each was selected shall be supplied. **R2.4.3.** For each of the studies described in Requirement R2.4.1 and Requirement R2.4.2, ~~S~~sensitivity case(s) that stress the System to reflect one or more of the following conditions shall be run ~~with documentation provided explaining the rationale for the selected sensitivity(ies)~~ and documentation of the technical rationale for why each of the conditions was or was not selected shall be supplied: **R2.4.4.** In addition to those sensitivities mentioned in Requirement R2.4.3, any other sensitivity, as deemed appropriate by the Transmission Planner or Planning Coordinator for their individual systems, shall be run and documentation of the technical rationale for why each was selected shall be supplied. **R2.7.2.** ~~Be added to study cases and the cases re-tested to show that the System with planned additions meets the performance requirements in the tables~~ Contain a description of how and why the consideration of the sensitivities selected in accordance with Requirements R2.1.3, R2.1.4, R2.4.3, and R2.4.4 in the Planning Assessment did or did not result in a modification or expansion of the list of actions developed in accordance with Requirement R2.7.1.			
WPS		☑	The Transmission Planner should have the ability to determine appropriate sensitivities based on changes to the assumptions within the study. However, those sensitivities should be developed in an open transmission planning process consistent with the transmission planning principles within FERC Order 890.
Response: The SDT agrees. Nothing in the standard precludes an open process. The SDT is providing some guidance on what needs to be included in sensitivity studies while not being totally prescriptive. Requirement R2.1.3 and Requirement R2.4.3 have been modified to require documentation of why the listed sensitivities were or were not selected for specific studies. Requirement R2.1.4 and Requirement R2.4.4 have been added to specifically state that the entity may consider additional sensitivities that are appropriate for its own system. In either case the entity must document the technical rationale for why each was selected. In addition a new requirement, now numbered as Requirement R2.7.2, has been added to clarify that the sensitivity studies do not in themselves establish the need for a Corrective Action but the entity must explain how the sensitivities affected the Corrective Action Plan. **R2.1.3.** For each of the studies described in Requirement R2.1.1 and Requirement R2.1.2, sensitivity case(s) that stress the System with sensitivities that reflect one or more of the following conditions shall be run and documentation ~~with~~ of the technical rationale for ~~the selected sensitivity(ies)~~ why each of the conditions was or was not selected shall be supplied:			

Question 13			
Commenter	**Yes**	**No**	**Comment**
R2.1.4. In addition to those sensitivities mentioned in Requirement R2.1.3, any other sensitivities, as deemed appropriate by the Transmission Planner or Planning Coordinator for their individual systems, shall be run and documentation of the technical rationale for why each was selected shall be supplied. **R2.4.3.** For each of the studies described in Requirement R2.4.1 and Requirement R2.4.2, ~~S~~sensitivity case(s) that stress the System to reflect one or more of the following conditions shall be run ~~with documentation provided explaining the rationale for the selected sensitivity(ies)~~ and documentation of the technical rationale for why each of the conditions was or was not selected shall be supplied: **R2.4.4.** In addition to those sensitivities mentioned in Requirement R2.4.3, any other sensitivity, as deemed appropriate by the Transmission Planner or Planning Coordinator for their individual systems, shall be run and documentation of the technical rationale for why each was selected shall be supplied. R2.**7.2.** ~~Be added to study cases and the cases re-tested to show that the System with planned additions meets the performance requirements in the tables~~ Contain a description of how and why the consideration of the sensitivities selected in accordance with Requirements R2.1.3, R2.1.4, R2.4.3, and R2.4.4 in the Planning Assessment did or did not result in a modification or expansion of the list of actions developed in accordance with Requirement R2.7.1.			
ABB		☑	
AECC		☑	
AECI		☑	
E ON US		☑	
FirstEnergy		☑	
LCRA		☑	
NERC TIS		☑	
Progress–Florida		☑	
Response: Thank you.			
PJM	☑	☑	Again, 'reasonable' is a very subjective term. Refer to comments on question 12
Tenaska	☑		However, what is meant by "reasonably stressed".
Response: Note: The words "reasonably stressed" are only used in the question and do not reference any particular requirement in the standard; therefore, no definition is required.			
APPA	☑		The Standard should indicate a list that says "the list will include but not be limited to:" and then list the minimum necessary to adequately cover the changes in the study.
City Water Power and Light	☑		The Standard should indicate a list which says "the list will include but not be limited to:" then list the minimum changes necessary to adequately cover the changes in the study.
Response: The SDT is providing some guidance on what needs to be included in sensitivity studies while not being totally prescriptive. Requirement R2.1.3 and Requirement R2.4.3 have been modified to require documentation of why the listed sensitivities were or were not selected for specific studies. Requirement R2.1.4 and Requirement R2.4.4 have been added to specifically state that the entity may consider			

Question 13			
Commenter	**Yes**	**No**	**Comment**
additional sensitivities that are appropriate for its own system. In either case the entity must document the technical rationale for why each was selected. **R2.1.3.** For each of the studies described in Requirement R2.1.1 and Requirement R2.1.2, sensitivity case(s) that stress the System with sensitivities that reflect one or more of the following conditions shall be run and documentation ~~with~~ of the technical rationale for ~~the selected sensitivity(ies)~~ why each of the conditions was or was not selected shall be supplied: **R2.1.4.** In addition to those sensitivities mentioned in Requirement R2.1.3, any other sensitivities, as deemed appropriate by the Transmission Planner or Planning Coordinator for their individual systems, shall be run and documentation of the technical rationale for why each was selected shall be supplied. **R2.4.3.** For each of the studies described in Requirement R2.4.1 and Requirement R2.4.2, ~~S~~sensitivity case(s) that stress the System to reflect one or more of the following conditions shall be run ~~with documentation provided explaining the rationale for the selected sensitivity(ies)~~ and documentation of the technical rationale for why each of the conditions was or was not selected shall be supplied: **R2.4.4.** In addition to those sensitivities mentioned in Requirement R2.4.3, any other sensitivity, as deemed appropriate by the Transmission Planner or Planning Coordinator for their individual systems, shall be run and documentation of the technical rationale for why each was selected shall be supplied.			
Manitoba Hydro	☑		R.2.1.3.2: clarify the intent of modification of expected transfers. Does this apply to firm transfers only, or does it also encompass non-firm transfers? Should this encompass simultaneous non-firm transfers? Planning for non-firm falls into an economic study of cost/benefit and not a relibility requirement. R2.1.3.3: There is little value in identifying the impact of unavailability of planned facilities. From a reliability perspective, these facilities are required to meet performance requirements. Near term SOLs and IROLs will insure reliability if the facility is late. R.2.1.3.4: This requirement should be removed and outages of reactive resources should be included in the Table 1 contingencies (assuming the intent is to investigate robustness to voltage instability). R.2.1.3.5: This requirement should be removed as this is covered, or should be, by the facility connection standard(s). R.2.1.3.6: This requirement should be removed as this is covered by requirement R2.1.3.1. There is no need to list "decreased effectiveness of controllable loads or DSM" as this is already covered by sensitivity to forecast load and power factor - this will cause confusion. R.2.1.3.7: Modification of planned Transmission outages should be deleted. The need to assess outages in the planning horizon is questionable, so assessing sensitivity to timing of these outages is of very little value. Furthermore, this standard already covers prior outages in its other requirements.
Response: The SDT is providing some guidance on what needs to be included in sensitivity studies while not being totally prescriptive. Requirement R2.1.3 and Requirement R2.4.3 have been modified to require documentation of why the listed sensitivities were or were not selected for specific studies. Requirement R2.1.4 and Requirement R2.4.4 have been added to specifically state that the entity may consider			

Question 13			
Commenter	Yes	No	Comment

additional sensitivities that are appropriate for its own system. In either case the entity must document the technical rationale for why each was selected.

In addition a new requirement, now numbered as Requirement R2.7.2, has been added to clarify that the sensitivity studies do not in themselves establish the need for a Corrective Action but the entity must explain how the sensitivities affected the Corrective Action Plan.

It is the planning entity's decision to establish and document which transfers under Requirement R2.1.3.2 are more significant to study system responses.

The intent of Requirement R2.1.3.3 is for the planning entity to determine the need for alternative plans in the event that previously planned facilities are not installed on time.

Requirement R2.1.3.4 (variability and outages of reactive resources) provides for more unusual or unexpected combination of situations. The contingencies listed in Table 1 usually consider more specific conditions in that the reactive resources are typically connected to circuits or bus sections which are included in Table 1.

Requirement R2.1.3.5 (generation additions, retirements, or other dispatch scenarios) covers future conditions that might exist (such as location, size, numger of facilities) after known connections are made. The FAC standards only consider the initial conditions for known facilities when an entity is requesting connection to the system. Requirement R2.1.3.5 covers the on-going conditions that exist after that connection is made. In addition the requirement covers dispatch scenarios which are not part of the FAC standards.

Requirement R2.1.3.1 is intended to cover all load before any adjustments. This can vary on its own. Requirement R2.1.3.6 covers only a portion of that load and can vary independent of the load forecast. The standard is not just addressing the "net" load but its components.

Requirement R2.1.3.7 parallels Requirement R2.1.3.3 in that "planned" outage durations may vary. It is the entity's responsibility to determene the actions necessaruy to handle extended outages.

R2.1.3. For each of the studies described in Requirement R2.1.1 and Requirement R2.1.2, sensitivity case(s) that stress the System with sensitivities that reflect one or more of the following conditions shall be run and documentation ~~with~~ of the technical rationale for ~~the selected sensitivity(ies)~~ why each of the conditions was or was not selected shall be supplied:
R2.1.4. In addition to those sensitivities mentioned in Requirement R2.1.3, any other sensitivities, as deemed appropriate by the Transmission Planner or Planning Coordinator for their individual systems, shall be run and documentation of the technical rationale for why each was selected shall be supplied.
R2.4.3. For each of the studies described in Requirement R2.4.1 and Requirement R2.4.2, ~~S~~sensitivity case(s) that stress the System to reflect one or more of the following conditions shall be run ~~with documentation provided explaining the rationale for the selected sensitivity(ies)~~ and documentation of the technical rationale for why each of the conditions was or was not selected shall be supplied:
R2.4.4. In addition to those sensitivities mentioned in Requirement R2.4.3, any other sensitivity, as deemed appropriate by the Transmission Planner or Planning Coordinator for their individual systems, shall be run and documentation of the technical rationale for

Question 13			
Commenter	**Yes**	**No**	**Comment**
why each was selected shall be supplied. **R2.7.2.** ~~Be added to study cases and the cases re-tested to show that the System with planned additions meets the performance requirements in the tables~~ Contain a description of how and why the consideration of the sensitivities selected in accordance with Requirements R2.1.3, R2.1.4, R2.4.3, and R2.4.4 in the Planning Assessment did or did not result in a modification or expansion of the list of actions developed in accordance with Requirement R2.7.1.			
ATC	☑		
City Utilities/Springfield	☑		
Seattle City	☑		
Response: Thank you. Please see the Summary Response.			

14) Q14. The SDT proposes to require the use of sensitivity studies for Near-Term Transmission System Planning Horizon stability analysis. Do you concur with the use of sensitivity analysis in dynamic studies?

Summary Response: The need to conduct sensitivity analysis was a directive in FERC Order 693 paragraphs 1694,1704, and 1706. The commenters generally agree with the concept of considering sensitivities for near-term Stability analysis. The SDT is providing some guidance on what needs to be included in sensitivity studies while not being totally prescriptive. Requirement R2.1.3.1 provides the flexibility to allow the planning entity to decide how a variation in Load on the entity(ies) System should best be studied. Requirement R2.4.3 has been modified to require documentation of the rationale for why each of the listed sensitivities was or was not selected for running studies. Requirement R2.4.4 has been added to specifically state that the entity may consider additional sensitivities that are deemed appropriate for its own System and document the rationale for selecting each of them.

R2.1.3.1. Higher or lower Load than forecast~~s~~ed ~~from the Base Case~~ with variability of Load/demand and Load power factors due to season, weather, or time of day.
R2.4.3. For each of the studies described in Requirement R2.4.1 and Requirement R2.4.2, ~~S~~sensitivity case(s) that stress the System to reflect one or more of the following conditions shall be run ~~with documentation provided explaining the rationale for the selected sensitivity(ies)~~ and documentation of the technical rationale for why each of the conditions was or was not selected shall be supplied:
R2.4.3.2. ~~Expected simultaneous transfers including non-firm~~ Modification of expected transfers**.**
R2.4.3.4. ~~Reactive dispatch of generators and other reactive power devices~~ Variability and outages of reactive resources.
R2.4.4. In addition to those sensitivities mentioned in Requirement R2.4.3, any other sensitivity, as deemed appropriate by the Transmission Planner or Planning Coordinator for their individual systems, shall be run and documentation of the technical rationale for why each was selected shall be supplied.

Question 14			
Commenter	**Yes**	**No**	**Comment**
Ameren		☑	The biggest problem with performing stability analysis is getting the stability cases to match up with the power flow cases, and only a limited number of stability cases are developed each year. Further, for those systems that are planned in excess of the NERC Standards regarding stability (3-L-G or 2-L-G vs. 1-L-G as in the Standard), there are no benefits to performing additional sensitivity studies to demonstrate compliance with this standard.
City Water Power and Light		☑	The requirement for sensitivity studies multiplies the study efforts. It will be burdensome especially when interregional studies are performed. It is better to have quality than quantity.
Dominion		☑	Not all the items listed under "B. Sensitivity Studies" may be applicable to stability analysis and also depends on type of stability analysis (Plant/System; angular/voltage). For instance, in some locations stability margins are wide. In such cases, practical experience has shown that such sensitivity analysis is unnecessary. Therefore, this should be applied as applicable, at the engineering judgment of the planning engineers rather than be required by the Standards. In summary, R2.4.3 should be eliminated entirely.
E ON US		☑	Stability studies are a labor intensive task. Off-peak studies (with max plant gen) is severe enough.
SCE&G		☑	Stability studies examine generator and system responses to specific conditions. Because the exact system conditions can not be determined in advance, the sensitivity analysis may not be very

Question 14			
Commenter	**Yes**	**No**	**Comment**
			useful. In addition, stability studies are more time consuming than conventional power flow studies. A preferred approach is to include pre-existing system conditions that additionally stress the system during the contingencies under study so as to verify that stability is preserved under conditions that go beyond those envisioned for the contingency.
TSGT		☑	Sensitivity studies are most often used to determine operating relationships of a system - sensitivity to generation patterns is deliverability analysis; sensitivity to load growth is margin analysis. Sensitivity analysis should not be required explicitly. The criteria should be stated in terms of load margins, deliverability, and capability to withstand generator or transaction forced outages. The TP can use sensitivity studies or other reasonable methods to assess reliability
TVA	☑		Consideration should be given to the fact that stability studies are more time consuming than conventional power flow studies. A single 20 second stability simulation is computationally equivalent to running 80 steady-state powerflow cases and has significantly larger pre-analysis preparation effort.
FirstEnergy	☑		Although we concur with the use of sensitivity analysis in dynamic studies, the standard should not dictate the specific sensitivities studies to be performed.
LADWP	☑		This standard is mixing operational studies with planning studies. The suggested sensitivities in this proposed standards are what operating studies would and should address. It adds no value to the transmission planning by requiring sensitivities in transmission planning just for the sake of it. In addition, performing operating studies more than one year ahead, generally, is quite useless as a general requirement.
Manitoba Hydro	☑		R2.4.3.1: This requirement should include variation in load power factor, as this has a significant impact on transient performance. R2.4.3.3: There is little value in identifying the impact of unavailability of planned facilities. From a reliability perspective, these facilities are required to meet performance requirements. Near term SOLs and IROLs will insure reliability if the facility is late. R.2.4.3.4: This requirement should be removed and dispatch of reactive power devices should be included in the Table 2 contingencies (assuming the intent is to investigate robustness to voltage instability). R.2.4.3.5: This requirement should be removed as this is covered, or should be, by the facility connection standard(s).

Response: The need to conduct sensitivity analysis was a directive in FERC Order 693 paragraphs 1694,1704, and 1706. The SDT agrees with you that dynamic analysis is generally more labor intensive than steady state analysis. The SDT is providing some guidance on what needs to be included in sensitivity studies while not being totally prescriptive. The SDT has modified Requirement R2.4.3 to stipulate that the entity shall provide rational for why sensitivity on the list were or were not included in the sensitivity studies and that the entity may consider additional sensitivities that are appropriate for its own System.

R2.4.3. For each of the studies described in Requirement R2.4.1 and Requirement R2.4.2, ~~S~~sensitivity case(s) that stress the System to reflect one or more of the following conditions shall be run ~~with documentation provided explaining the rationale for the selected~~

Question 14			
Commenter	**Yes**	**No**	**Comment**
~~sensitivity(ies)~~ and documentation of the technical rationale for why each of the conditions was or was not selected shall be supplied:			
AEP			We concur with the use of sensitivity studies, but object to the requirement on what sensitivities to include. The flexibility to determine if sensitivity studies are appropriate, and the flexibility to choose what parameters are appropriate to study for sensitivity should be left open. R2.4.3 as written is restrictive to certain sensitivities and should not be.
CenterPoint		☑	The number and type of sensitivity studies should be left to the judgement of Transmission Planners.
CPS Energy		☑	The number and type of sensitivity studies should be at the discretion of Transmission Planners.
Duke Energy	☑	☑	Sensitivity studies can be useful, but they should only be requried for System Stability Studies. Due to the intensive nature of the studies, the planning engineer should have flexibility to determine appropriate sensitivities to analyze.
ERCOT ISO CAISO		☑	Although we concur with the sensitivity analysis,the TP should determine what sensitivities are more appropriate for their system. Sensitivities should not be scripted in the Standard.
ITC	☑		Both peak and off-peak models have been historically used for stability analysis and should continue to be used. The need for additional sensitivity studies should be left to the discreton of the Transmission Planner.
MEAG Power	☑		The entity performing the studies should be allowed to determine the appropriate sensitivity studies that need to be evaluated. An alternate approach is to include pre-existing system conditions that additionally stress the system during the contingencies under study so as to verify that stability is preserved under conditions that go beyond those envisioned for the contingency. Stability studies are more time consuming than conventional power flow studies. A single 20 second stability simulation is computationally equivalent to running 80 steady-state powerflow cases and has significantly larger pre-analysis preparation effort.
MISO		☑	Use of sensitivities should not be required for Stability analysis, but the Standard should rather allow sensitivities at the discretion of the planning engineer. Due to the computationally intensive nature of these studies, a study rotation would be appropriate. For example, one year would be peak base case, next year off-peak case, and following year a sensitivity case. A single 20 second stability simulation is computationally equivalent to running 80 steady-state powerflow cases and has significantly larger pre-analysis preparation effort.
NCEMC	☑		The entity performing the studies should be allowed to determine the appropriate sensitivity studies that need to be evaluated with a stakeholder process for those impacted by these studies as noted above. An alternate approach is to include pre-existing system conditions that additionally stress the system during the contingencies under study so as to verify that stability is preserved under conditions that go beyond those envisioned for the contingency. Stability studies are more time consuming than conventional power flow studies. A single 20 second stability simulation is computationally equivalent to running 80 steady-state powerflow cases and has significantly larger pre-analysis preparation effort.

Question 14			
Commenter	**Yes**	**No**	**Comment**
Northwestern Energy	☑	☑	The TP should have the ability to determine the sensitivity to use.
Santee Cooper	☑		The entity performing the studies should be allowed to determine the appropriate sensitivity studies that need to be evaluated. An alternate approach is to include pre-existing system conditions that additionally stress the system during the contingencies under study so as to verify that stability is preserved under conditions that go beyond those envisioned for the contingency. Stability studies are more time consuming than conventional power flow studies. A single 20 second stability simulation is computationally equivalent to running 80 steady-state powerflow cases and has significantly larger pre-analysis preparation effort.
SERC EC PSS SERC RRS OPS	☑		The entity performing the studies should be allowed to determine the appropriate sensitivity studies that need to be evaluated. An alternate approach is to include pre-existing system conditions that additionally stress the system during the contingencies under study so as to verify that stability is preserved under conditions that go beyond those envisioned for the contingency. Stability studies are more time consuming than conventional power flow studies. A single 20 second stability simulation is computationally equivalent to running 80 steady-state powerflow cases and has significantly larger pre-analysis preparation effort.
AECI		☑	We believe that only the worst case would need to be addressed for stability purposes.
WECC BPA TEP	☑	☑	We concur with the use of sensitivities as long as the TPs are allowed to determine the sensitivities that are the more appropriate for their systems and not have the sensitivities scripted in the Standard.
Muscatine P&W	☑		If reasonable and appropriate and allow for local issues including those not in the standards..
Response: The SDT is providing some guidance on what needs to be included in sensitivity studies while not being totally prescriptive. The SDT has modified Requirement R2.4.3 to stipulate that the entity shall provide rational for why sensitivity on the list were or were not included in the sensitivity studies and that the entity may consider additional sensitivities that are appropriate for its own system. **R2.4.3**. For each of the studies described in Requirement R2.4.1 and Requirement R2.4.2, ~~S~~sensitivity case(s) that stress the System to reflect one or more of the following conditions shall be run ~~with documentation provided explaining the rationale for the selected sensitivity(ies)~~ and documentation of the technical rationale for why each of the conditions was or was not selected shall be supplied**:**			
Entergy		☑	The new requirements for stability studies, including but not limited to the sensitivity studies, will result in a tremendous increase in workload. Because stability studies are so much more time intensive that steady state analysis and because they require personnel with a highly specialized skill set, the number of stability studies required should be increaed only as determined necesssary to evaluate worst-case contingencies. It would seem that the sensitivity analyses as well as many of the multiple contingency analyses could be done for steady state and only worst cases analyzed again by dynamic studies.
FPL FRCC		☑	The standards require near term base case cases to be studied for a broad range of planning and Extreme Events. The sensitivity analysis requirements contained R.2.4.3. will essentially require every dynamic simulation to be run at least twice regardless of whether or not there is any

Question 14			
Commenter	**Yes**	**No**	**Comment**
			engineering insight to be gained. While improved understanding may result from sensitivity analysis of certain key event scenarios, the overall benefits of the sensitivity study requirements contained in section R.2.4.3 do not justify the huge increase in engineering effort to conduct and document these simulations.
Response: The SDT agrees with you that dynamic analysis is generally more labor intensive then steady state analysis. The SDT is providing some guidance on what needs to be included in sensitivity studies while not being totally prescriptive. The SDT has modified Requirement R2.4.3 to stipulate that the entity shall provide rational for why sensitivity on the list were or were not included in the sensitivity studies and that the entity may consider additional sensitivities that are appropriate for its own System. **R2.4.3**. For each of the studies described in Requirement R2.4.1 and Requirement R2.4.2, ~~S~~sensitivity case(s) that stress the System to reflect one or more of the following conditions shall be run ~~with documentation provided explaining the rationale for the selected sensitivity(ies)~~ and documentation of the technical rationale for why each of the conditions was or was not selected shall be supplied**:**			
KCPL		☑	Dynamic studies should be performed when new generation or transformers are added to the system. Should be performed on a periodic basis, not annually.
Response: The SDT is providing some guidance on what needs to be included in sensitivity studies while not being totally prescriptive. The SDT has modified Requirement R2.4.3 to stipulate that the entity shall provide the rational for why sensitivities on the list were or were not included in the sensitivity studies and that the entity may consider additional sensitivities that are appropriate for its own System. The standard allows that the Planning Assessment can be supported by current or past studies. While an assessment is to be done annually, there is no intent to rerun the same studies "annually" unless the standard specifically requires such. Studies you mentioned can be used to support the assessment and be retained as "past" studies as appropriate. **R2.4.3**. For each of the studies described in Requirement R2.4.1 and Requirement R2.4.2, ~~S~~sensitivity case(s) that stress the System to reflect one or more of the following conditions shall be run ~~with documentation provided explaining the rationale for the selected sensitivity(ies)~~ and documentation of the technical rationale for why each of the conditions was or was not selected shall be supplied:			
MRO		☑	The MRO is okay with requiring the sensitivity studies but is concerned with the R.2.4.3.2 requirement as written in that it unnecessarily requires that the sensitivity studies to "simultaneous transfer" to include "non-firm transfers". The MRO recommends that this be changed to match R.2.1.3.2 "Modification of expected TRANSFERS." The MRO also questions the wording of R.2.4.3.4 which provides a more limiting description of the sensitivity to reactive. The MRO recommends that the wording of this requirement be changed to match R.2.1.3.4, "Variability and outages of reactive resources."
Response: Requirements R2.4.3.2 and R2.4.3.4 have both been revised to match with R2.1.3.2 and R2.1.3.4 respectively. **R2.4.3.2**. ~~Expected simultaneous transfers including non-firm~~ Modification of expected transfers. **R2.4.3.4**. ~~Reactive dispatch of generators and other reactive power devices~~ Variability and outages of reactive resources.			
LCRA		☑	

Question 14			
Commenter	**Yes**	**No**	**Comment**
IESO		☑	For similar reasons stated in Q13, above.
New York ISO		☑	See comments to Q12 & Q13.
Response: Thank you.			
PJM	☑	☑	Yes, however, clear direction is needed. Specific wording that defines if you have done enough, and met the compliance requirements.
Response: The need to conduct sensitivity analysis was a directive in FERC order 693 paragraphs 1694,1704, and 1706. The SDT agrees with you that dynamic analysis is generally more labor intensive then steady state analysis. The SDT is providing some guidance on what needs to be included in sensitivity studies while not being totally prescriptive. The SDT have modified Requirement R2.4.3 to stipulate that the entity shall provide rationale for why sensitivities on the list were or were not included in the sensitivity studies and that the entity may consider additional sensitivities that are appropriate for its own System. The standard requires that deficiencies identified from the results of the current studies need to be addressed via Corrective Actions Plan while leaving at the entity 's discretion to decide which deficiencies, if any, identified through sensitivity studies should be addressed by the Corrective Action Plan. **R2.4.3.** For each of the studies described in Requirement R2.4.1 and Requirement R2.4.2, ~~S~~sensitivity case(s) that stress the System to reflect one or more of the following conditions shall be run ~~with documentation provided explaining the rationale for the selected sensitivity(ies)~~ and documentation of the technical rationale for why each of the conditions was or was not selected shall be supplied:			
Central Maine Power HQTE National Grid New England ISO NU NPCC RCS NSTAR United Illuminating	☑		The standard is unclear whether or not it mandates the requirement to mitigate consequences of problems highlighted as a result of one of the sensitivities. Suggest modification to, "…sensitivity testing that stresses the System should be considered. Sensitivity case(s) might include among the following conditions:" 2.4.3 shold mimic 2.1.3 except in regard to load models.
Response: The standard requires that deficiencies identified from the results of the current studies need to be addressed via Corrective Actions Plan while leaving at entity's discretion to decide which deficiencies, if any, identified through sensitivity studies should be addressed by the Corrective Action Plan. The SDT has modified wording of Requirement R2.4.3 to be consistent with Requirement R2.1.3 as you suggested. **R2.4.3**. For each of the studies described in Requirement R2.4.1 and Requirement R2.4.2, ~~S~~sensitivity case(s) that stress the System to reflect one or more of the following conditions shall be run ~~with documentation provided explaining the rationale for the selected sensitivity(ies)~~ and documentation of the technical rationale for why each of the conditions was or was not selected shall be supplied**:**			
SERC EC DRS	☑		Use of sensitivity studies is appropriate only for System Stability Studies.
Response: Thank you**.**			

Question 14			
Commenter	**Yes**	**No**	**Comment**
Southern Transm.	☑		Some sensitivity analysis is reasonable. Other comments: 1. The wording regarding transfer sensitivity for stability analysis should be the same as the wording used in steady state analysis "modification of expected transfers". 2. The list of sensitivities may not be the most appropriate for all entities. There should be the ability to perform other sensitivity analsysis instead of these as long as the "rationale" is provided for the choice.
Response: The SDT has modified the standard so that R2.1.3.2 and R2.4.3.2 are worded consistently. The SDT is providing some guidance on what needs to be included in sensitivity studies while not being totally prescriptive. The SDT has modified requirement R2.4.3 to stipulate that the entity shall provide rational for why sensitivity on the list were or were not included in the sensitivity studies and that the entity may consider additional sensitivities that are appropriate for its own system. **R2.4.3.2**. ~~Expected simultaneous transfers including non-firm~~ Modification of expected transfers.			
ABB	☑		Absolutely.
Allegheny Power	☑		
APPA	☑		This is absolutely necessary; it will help with the operational planning that will be needed next. In addition, it will help to determine the amount of study uncertainty that the Transmission Planner believes will be in the plan. This is very important for the Year One.
ATC	☑		
BCTC	☑		
Brazos Electric	☑		
City Utilities/Springfield	☑		
Entegra	☑		Planners should use appropriate sensitivity cases.
Exelon	☑		
Georgia Transm.	☑		
JEA	☑		
NERC TIS	☑		
Progress–Carolinas	☑		
Progress–Florida	☑		

Question 14			
Commenter	**Yes**	**No**	**Comment**
Seattle City	☑		
Tenaska	☑		
WPS	☑		
Response: Thank you. Please see the Summary Response.			

15) Q15. The draft TPL standard does not require the use of sensitivity studies for the Long-Term Transmission System Planning Horizon (year six and beyond) studies. Do you concur with this approach or should there be some level of sensitivity analysis required for the long-term period?

Summary Response: Commenters generally agreed that sensitivities are not needed in long-term planning horizon studies since the studies are typically based on a number of assumptions regarding future conditions and uncertainties. Sensitivities of uncertain models could result in even more uncertain and probably unrealistic conditions, the use of which may cloud the actual trends. Closer in years tend to be more certain and applying sensitivities is necessary to ensure that unexpected conditions would not significantly affect reliability. The standard does not preclude entities from performing long term sensitivity studies which may even provide some basis for the base models used for analysis.

Question 15			
Commenter	**Yes**	**No**	**Comment**
AECC		☑	In the long range the confidence in some variables such as load growth may become fuzzy. Sensitivity analysis let you gauge the impacts that variences in a particular variable may have. I don't think it should be performed for every study but occasional study to maintain sanity is appropiate.
Response: Because the assumptions for the longer term are fuzzy, the SDT did not feel that it was appropriate to require prescriptive sensitivities since such studies could result in an even more distorted model. The SDT felt that the entity should determine if such sensitivities are appropriate knowing their own unique circumstances			
Northwestern Energy		☑	However, the TP should have the ability to determine the sensitivity to use.
Response: The TP can always perform and use sensitivities in addition to those required in the standard.			
AEP		☑	Consider requiring the same sensitivity analysis that is conducted under the near-term studies.
NERC TIS		☑	Since the long-term planning is completely couched in uncertainty, at least some generalized sensitivities should be required.
NCEMC		☑	Some sensitivity analysis in the long term years should be done (90/10 load with higher than expected transfers and/or delayed baseload generation) so that higher voltage issues are adequately tested to identify long lead time upgrades, in a similar manner as was done to justify the backbone projects that have been identified in the PJM Interconnection. A stakeholder process should be used by the entity performing the study to compile input on impacted LSEs and other Transmission Customers.
Response: Commenters generally agreed that sensitivities are not needed in long-term planning horizon studies since the studies are typically based on a number of assumptions regarding future conditions and uncertainties. The standard does not preclude entities from performing long term sensitivity studies which may even provide some basis for the base models used for analysis.			
BCTC	☑	☑	Long term needs to address sensitivities since it usually takes more than five years to contruct new transmission lines.
ITC	☑		We believe that both near-term and long-term studies should include sensitivity studies. Near-term studies may produce either operating solutions and more limited transmission solutions. It is just as or more important in a standard like this one to also do sensitivity analysis for the 6-10 year and

Question 15			
Commenter	**Yes**	**No**	**Comment**
			beyond period. This is necessary to provide the needed advance notice for long-lead time alternatives to problems which are uncovered. Focusing on the next 5 years limits alternatives that can be implemented. In fact, it makes sense to perform more sensitivity analysis on the longer term as assumptions become less probable the further out into the future you get. If a problem is identified in one snapshot 10 years out it may be less relevant than if it shows up in several varying snapshots 10 years out into the future. The use of sensitivity studies for the 6-10+ year horizon will hopefully have the effect of minimizing the use of band-aid type approaches to identified problems.
Tenaska		☑	Any analysis that is performed needs to include some sort of sensitivity analysis. In fact, the sensitivity analysis may yield more information that is helpful in making decisions today than sensitivities performed on a near term study. A way of conducting a sensitivity analysis for long term studies may be to require long term studies to be performed for several years instead of only the one year that is required in the 6-10 year horizon.
Response: Commenters generally agreed that sensitivities are not needed in long-term planning horizon studies since the studies are typically based on a number of assumptions regarding future conditions and uncertainties. The standard does not preclude entities from performing long term sensitivity studies which may provide some basis for the base models used for analysis nor does it preclude studying multiple years if more critical trends are detected.			
TSGT		☑	It is just as important for long range plans of service to provide acceptable operation as it is for near-term facility plans. To specify different criteria for different time periods seems unreasonable.
Response: Commenters generally agreed that sensitivities are not needed in long-term planning horizon studies since the studies are typically based on a number of assumptions regarding future conditions and uncertainties. This is not the same for the near-term. The SDT feels that the level of uncertainty for the two time period justifies a different approach. In any case, the standard does not preclude entities from performing long term sensitivity studies.			
ERCOT ISO CAISO WECC	☑		Agree. The Standard should state that sensitivity studies are not required but the TP or PA could use sensitivities if desired.
TEP	☑		We agree with this conclusion. The Standard language should state that sensitivities are not required in Long-Term Transmission System Planning Horizon but the TP could use sensitivities if desired.
Response: The SDT feels the standard reflects your comment. The standard does not preclude the entity from using sesitivities if more critical trends are detected.			
Georgia Transm.	☑		The sensitivities should be determined by the Planner. As part of the development of long range projects, sensitivity analyses should be performed.
Response: The SDT feels the standard reflects your comment in that even though the standard does not require sensitivities, it does not preclude the entity from using sesitivities if desired. Commenters generally agreed that sensitivities are not needed in long-term planning horizon studies since the studies are typically based on a number of assumptions regarding future conditions and uncertainties.			
Ameren	☑		There are more unknowns in the longer-term studies than in the near-term studies, which would

Question 15			
Commenter	**Yes**	**No**	**Comment**
			indicate that more sensitivity studies would need to be performed and not less. However, it is more reasonable to suggest that if near-term sensitivity studies show a problem in a particular part of the system, then similar sensitivity studies need to be performed in the longer-term analyses.
IESO	☑		We agree, but this raised a question on why did the SDT introduce a requirement for sensitivity testing for year one to year 5 studies but not the year 6 and beyond studies. Wouldn't the degree of uncertainty be higher in the longer time frame?
Response: Commenters generally agreed that sensitivities are not needed in long-term planning horizon studies since the studies are typically based on a number of assumptions regarding future conditions and uncertainties. Closer in years tend to be more certain and applying sensitivities is necessary to ensure that unexpected conditions would not significantly affect reliability. The standard does not preclude entities from performing long term sensitivity studies which may even provide some basis for the base models used for analysis.			
LADWP	☑		This applies to both long- and near- term, the type of sensitivities proposed here do not belong in transmission planning studies.
Response: The SDT felt that it is necessary for planners to consider certain factors that clearly could impact system responses to contingencies. The standard, sub requirements for R2.1 and R2.4, has been modified to require that the planner document why or why not the listed factors were used in the assessment. In addition the standard does not preclude entities from performing long term sensitivity studies which may provide some basis for the base models used for analysis nor does it preclude studying multiple years if more critical trends are detected.			
Muscatine P&W	☑		Local issues may drive a different approach
Response: The SDT feels the standard reflects your comment in that even though the standard does not require sensitivities, it does not preclude the entity from using sesitivities if desired, such as local issues as you suggest.			
New York ISO	☑		NYISO does not agree with the requirement of sensitivity studies in the near-term or long-term.
Response: Commenters generally agreed that sensitivities are not needed in long-term planning horizon studies since the studies are typically based on a number of assumptions regarding future conditions and uncertainties. Closer in years tend to be more certain and applying sensitivities is necessary to ensure that unexpected conditions would not significantly affect reliability.			
WPS	☑		The standard should require long-term sensitivity studies to the extent that the open transmission planning process within FERC Order 890 identifies the need for the sensitivities.
Response: Commenters generally agreed that sensitivities are not needed in long-term planning horizon studies since the studies are typically based on a number of assumptions regarding future conditions and uncertainties. In addition the SDT feels that such sensitivities were not required by the Order. The standard does not preclude entities from performing long term sensitivity studies which may provide some basis for the base models used for analysis nor does it preclude studying multiple years if more critical trends are detected.			
Brazos Electric	☑		Longer term studies should be performed in the broadest sense, the cases are difficult to create accurately and a greater range of sensitivities do not improve the results.
City Water Power and Light	☑		
Dominion	☑		We concur that no sensitivity studies should be required for the LT planning horizon.
E ON US			I agree with the approach.

Question 15			
Commenter	**Yes**	**No**	**Comment**
AECI	☑		
Allegheny Power	☑		No sensistivity needed for long term assessment.
APPA	☑		The sensitivity study of year 6 and beyond is of little value. The uncertainty (standard deviations) in the input assumptions used to complete the studies for 6 years and longer are so large it would not provide useful answers to make sound decisions regarding the need to build, remove, or improve BES facilities.
ATC	☑		
BPA	☑		
CenterPoint	☑		
Central Maine Power	☑		There is no need for sensitivity analysis.
City Utilities/Springfield	☑		
CPS Energy	☑	☑	We concur with not requiring sensitivity studies for the Long Term Assessment.
Duke Energy	☑		Agreed, sensitivity studies should not be required for the Long-Term.
Entergy	☑		
Exelon	☑		
FirstEnergy	☑		Yes, we concur with this approach and sensitivity analysis should not be required.
FPL	☑		There should be no sensitivity studies/analyses for the Long-Term Transmission System Planning Horizon.
FRCC	☑		
HQTE	☑		There is no need for sensitivity analysis.
JEA	☑		
KCPL	☑		Long term planning horizon has significantly greater uncertainty in future conditions and sensitivity studies are unlikely to contribute to reliability because of this.
LCRA	☑		There are two questions asked and the response is yes to both. In the ERCOT region, load flow cases are not currently availbale for years 6-10 and this limits the long-term study activity that Transmsion Owners and Transmission Planners can acarry out. As currently proposed (R2.2) is appropriate.
Manitoba Hydro	☑		The models for Long-Term Transmission System Planning Horizon typically contain such uncertainty that the base planning is a sensitivity study itself. Sensitivity studies in these years would be a waste of time. The long term analysis should be used to indicate trends such as a reduction in transfer capability, reduction in damping, etc, but not necessarily seek mitigation of such trends.

Question 15			
Commenter	**Yes**	**No**	**Comment**
MEAG Power	☑		We concur with the current approach.
MISO	☑		Long-term planning horizon studies are typically based on a number of assumptions regarding future conditions and uncertainties. While testing various load conditions, generator operation assumptions, and power interchange variables may be useful for modeling expected economic value, such analysis does not contribute to reliability.
MRO	☑		The models for Long-Term Transmission System Planning Horizon typically contain such uncertainy that the base planning is a sensitivity study iteself. The MRO believes that sensitivity studies in these years would be a waste of time.
National Grid	☑		There is no need for sensitivity analysis.
New England ISO	☑		There is no need for sensitivity analysis.
NCMPA			
NU	☑		There is no need for sensitivity analysis.
NPCC RCS	☑		There is no need for sensitivity analysis.
Nstar	☑		There is no need for sensitivity analysis.
PJM	☑	☑	PJM agrees that no sensitivity analysis is required for long term period
Progress–Carolinas	☑		Sensitivities should not be required for Long-Term
Progress–Florida	☑		PEF concurs with the draft standard's approach with regard to Q15 that sensitivities should not be required for years six through ten.
ReliabilityFirst	☑		
Santee Cooper	☑		We concur with the current approach.
SaskPower	☑		
Seattle City	☑		Conditions six years or more in the future are unpredictable and sensitivity studies would provide results of limited usefulness.
SERC EC DRS	☑		We agree that sensitivity studies should not be required for the Long-Term..
SERC EC PSS	☑		We concur with the current approach.
SERC RRS OPS	☑		We concur with the current approach.
SCE&G	☑		
Southern Transm.	☑		Yes, we concur with this approach.
TVA	☑		

Question 15			
Commenter	**Yes**	**No**	**Comment**
United Illuminating	☑		There is no need for sensitivity analysis.
Response: Thank you.			

C) Corrective Action Plans

Requirement R2.7 of the standard states that when analysis shows that the performance requirements in Table 1 and Table 2 are not fully met, a Corrective Action Plan that utilizes all or some of the Transmission System enhancements, generation additions, DSM, new technologies and Operating Procedures shall be included in the Planning Assessment. This Corrective Action Plan should ensure that upon its implementation the identified system deficiencies will be corrected so that the performance requirements in Table 1 and Table 2 will be met. Furthermore, studies included in the Planning Assessment should demonstrate that this is indeed the case.

16) Q16. Requirement R2.7.1: Such Corrective Action Plans shall "Identify System deficiencies and the associated actions needed to achieve required System performance including Transmission and generation improvements, DSM, new technologies, or Operating Procedures including the duration of Interim Operating Procedures". System deficiencies may be corrected using an integrated plan, i.e., an optimal mix of Transmission, generation, DSM and Operating Procedures. Should DSM be considered in conjunction with other measures in developing Corrective Action Plans? If yes, please comment on how the impact of DSM should be included.

Summary Response: DSM refers to reduction in the net Load that could be used to mitigate generation deficiency or Transmission overload. DSM could be invoked pre-Contingency or as a part of automatic or manual System adjustment post-Contingency. The use of DSM is optional and entities do not have to include DSM in the Corrective Action Plan. However, if DSM is included in the Corrective Action Plan, the entity that included it must justify the DSM amount and associated uncertainties. If an entity can show that DSM is effective, the standard does not bar them from using it.

The following requirement was changed due to industry comments:

R2.7.1 - ~~Identify~~ List System deficiencies and the associated actions needed to achieve required System performance. ~~including Transmission and generation improvements, DSM, new technologies, or Operating Procedures including the duration of interim Operating Procedures.~~ Such actions may include installation, modification, retirement, or removal of Transmission and generation Facilities and any associated equipment such as protective or Special Protection Schemes, rate applications, DSM, or other initiatives, new technologies, or Operating Procedures including how long the Operating Procedures will be needed as part of the Corrective Action Plan.

Q16			
Commenter	**Yes**	**No**	**Comment**
AECC		☑	Yes - DSM impact should be included if it is known and can be treated the same a generation as far a dependibility, capability, and its known impacts. No - most DSM on our system is already figured into the load.
Response: The SDT provided DSM as a possible action. The entity may choose to use this option or provide additional actions to improve System response.			
Ameren	☑	☑	If DSM can be implemented in the required operating time, we have no objections to using DSM as the planned mitigation to relieve overloads or low system voltages for multiple contingency conditions, but not as a long-term solution for single contingency conditions. However, from our experience, we believe that developing enough DSM in the required time at specific locations in the

Q16			
Commenter	**Yes**	**No**	**Comment**
			system will be difficult, and that plain load-shedding would be required to supplement the DSM to achieve the desired performance.
BPA	☑	☑	Support comments submitted by WECC. There is a concern with using DSM as a corrective action if it is not directly controlled by the utility and the benefits do not materialize as planned.
Brazos Electric		☑	If DSM is not viable due to market failings, then its inclusion in any CAPs provides an inaccurate soltion to achieve the required system performance.
City Water Power and Light		☑	DSM is not always available and is usually not available without operator action. Therefore, asuming it is alwasys available could give a false sense of security. The system could collapse before DSM is able to be implemented.
Georgia Transm.		☑	DSM should not be a requirement in considering Corrective Action Plans. Because DSM cannot be counted on or controlled, its use as a Corrective Action Plan should not be assumed.
MISO	☑	☑	Yes, DSM should be considered in transmission studies, but should be limited to firmly contracted DSM resources that are demonstrably applicable for transmission capacity mitigation. DSM is better compared to supply-side resources as they are evaluated for reserve margin contribution. No, the challenge in considering DSM, is that Transmission Planners are not aware of DSM potential on the system and it must be communicated to them for consideration.
WECC TEP		☑	It is unclear whether "DSM" in this question refers to reduction in load or increases in distributed resources, or if the resources are directly controllable by the transmission operator. DSM could be used in the mix of solutions that are used to determine the optimal solution for a transmission issue. However, we have concerns about the use of DSM, that is not under the direct control of the Transmission Operator as a stand alone transmission system solution. Please remember the overstated returns from DSM in the last decade that did not materialize. If these overstated values had been used as a transmission system enhancement, then the system would have been compromised with emergency operating solution until the effective transmission enhancements could be realized.
Response: DSM refers to reduction in net Load. The standard does allow for consideration of DSM but other factors may disallow inclusion of DSM in the Corrective Action Plan. The amount and uncertainty of DSM needs to be justified by the entity when it is included in their Correction Action Plan. If an entity can show that DSM is effective, the standard does not bar them from using it.			
E ON US		☑	DSM and generation improvements should be excluded. What is a "generation improvement"? New technologies could apply to anything, does the SDT mean "new Transmission technologies"?
Response: DSM refers to reduction in net Load. The standard does allow for consideration of DSM but other factors may disallow the use of DSM as a corrective action. The amount and uncertainty of DSM needs to be justified by the entity when it is included in their Corrective Action Plan. If an entity can show that DSM is effective, the standard does not bar them from using it. The term "generation improvements" means any change or modification to a generator which results in an increase in generation output and/or reactive support. New technologies include any technology that is not currently in use on the electric power System that helps improve efficiency (i.e., energy storage/production technologies, low sag conductors, solid state interrupters, etc.)			
Northwestern Energy		☑	The word "including" should be "may include", mandating what should be studied is not appropriate.

Q16			
Commenter	**Yes**	**No**	**Comment**
			Also, including DSM in the list presumes the balancing area is deficient in generation, which may not always be the case.
Response: The use of DSM is optional. Requirement R2.7.1 has been modified based on your comments to use "may include" instead of "including". DSM typically has been used to compensate for generation deficiency but it can also be used to reduce transmission loading for special conditions and may provide a justifiable corrective action. The standard does allow for the use of DSM but other factors may disallow the use of DSM as a corrective action. **R2.7.1** - ~~Identify~~ List System deficiencies and the associated actions needed to achieve required System performance. ~~including Transmission and generation improvements, DSM, new technologies, or Operating Procedures including the duration of interim Operating Procedures.~~ Such actions may include installation, modification, retirement, or removal of Transmission and generation Facilities and any associated equipment such as protective or Special Protection Schemes, rate applications, DSM, or other initiatives, new technologies, or Operating Procedures including how long the Operating Procedures will be needed as part of the Corrective Action Plan.			
CenterPoint		☑	CenterPoint Energy is not aware of DSM ever being identified as an effective option to correct a transmission system deficiency. If such an application of DSM was identified and implemented, load growth would quickly negate the DSM impact, and other measures would have to be taken.
Central Maine Power HQTE National Grid New England ISO NU NPCC RCS NSTAR United Illuminating	☑		DSM should be included to the extent that its performance is sufficiently and consistently understood. The standard does not use the term "optimal" Therefore, the Drafting Team appears to be interpreting the Standard to require a vertically-integrated Planner to produce a so-called optimal-mix of resources plan. This would be an incorrect assumption and is not required. In areas with independent planners and competitive wholesale markets, it is sufficent to identify system needs and produce a plan that identifies regulated transmission solutions in the event that market-based resources (such as DSM) do not address those identified needs. Therefore, while DSM can be as effective a resource as generation, per Commission Orders, in areas with ISOs/RTOs and a competitive wholesale market, the NERC Standard cannot prescribe the development so-called optimized (as is suggesgted by the Drafting Team) resource-mix plans, as identified by a central planner.
NERC TIS	☑	☑	Yes, if it can be counted on for relieving transmission constraints. Some DSM contracts do not allow for interruption for anything other than resource adequacy events, or have time-based or economics-based implementation limitations.
New York ISO	☑		NYISO suggests that the impact included in studies should consider past performance of DSM participants.
Response: The standard does allow for consideration of DSM but other factors may disallow the use of DSM as a corrective action. The amount and uncertainty of DSM needs to be justified by the entity when it is included in their Corrective Action Plan.			
CPS Energy		☑	Performance of the DSM is not necessarily controlled by the Transmission Owner and cannot be considered "firm". Therefore, use of DSM should be optional, but not mandated.
Response: The use of DSM is optional. Requirement R2.7.1 has been modified based on your comments to use "may include" instead of "including". If an entity can show that DSM is effective, the standard should not bar them from using it.			

Q16			
Commenter	**Yes**	**No**	**Comment**
R2.7.1 - ~~Identify~~ List System deficiencies and the associated actions needed to achieve required System performance. ~~including Transmission and generation improvements, DSM, new technologies, or Operating Procedures including the duration of interim Operating Procedures.~~ Such actions may include installation, modification, retirement, or removal of Transmission and generation Facilities and any associated equipment such as protective or Special Protection Schemes, rate applications, DSM, or other initiatives, new technologies, or Operating Procedures including how long the Operating Procedures will be needed as part of the Corrective Action Plan.			
FirstEnergy		☑	We do not feel that the standard should specify, limit, or suggest methods for mitigating system performance deficiencies. We suggest rewording R2.7.1 by ending the first sentence after the words "System performance". The items currently described could be moved to a reference document which could include DSM and other mitigation methods.
Response: The use of DSM is optional. Requirement R2.7.1 has been modified based on your comments to use "may include" instead of "including". The SDT feels it is more useful to include examples of what the Corrective Action Plan may include. The list of examples should help minimize questions regarding what is valid as a corrective action. **R2.7.1** - ~~Identify~~ List System deficiencies and the associated actions needed to achieve required System performance. ~~including Transmission and generation improvements, DSM, new technologies, or Operating Procedures including the duration of interim Operating Procedures.~~ Such actions may include installation, modification, retirement, or removal of Transmission and generation Facilities and any associated equipment such as protective or Special Protection Schemes, rate applications, DSM, or other initiatives, new technologies, or Operating Procedures including how long the Operating Procedures will be needed as part of the Corrective Action Plan.			
IESO		☑	No, the amount DSM is, in some established markets, a market-arranged quantity that depends on both the offered price and the discretion of the LSE or load customer at the time such a price signal presents itself. The resultant amount of DSM that can actually be realized when needed is unpredictable. This requirement also brings up a broader issue. Requirement 2 generally applies to Planning Coordinator and Transmission Planner, there is no distinction made as to which sub-requirements apply to which entity. In some markets, the Transmission Planner is responsible for assessing future needs for transmission facility only. It does not have the authority to even suggest a corrective plan that involves generation improvement or DSM. The way R2 and its sub-requirements is written is more suited for an integrated planning process, which may not exist in some places/developed markets.
Response: The use of DSM is optional. Requirement R2.7.1 has been modified based on your comments to use "may include" instead of "including". The standard does allow for consideration of DSM but other factors may disallow inclusion of DSM in the Corrective Action Plan. The amount and uncertainty of DSM needs to be justified by the entity when it is included in their Correction Action Plan. The standard is applicable not only to the Transmission Planner but also to the Planning Coordinator and the Resources Planner. These entities are expected to establish relationships to provide for intergrated analysis and resultant Corrective Action Plan which may include generation, transmission and DSM components. **R2.7.1** - ~~Identify~~ List System deficiencies and the associated actions needed to achieve required System performance. ~~including~~			

Q16			
Commenter	**Yes**	**No**	**Comment**
~~Transmission and generation improvements, DSM, new technologies, or Operating Procedures including the duration of interim Operating Procedures.~~ Such actions may include installation, modification, retirement, or removal of Transmission and generation Facilities and any associated equipment such as protective or Special Protection Schemes, rate applications, DSM, or other initiatives, new technologies, or Operating Procedures including how long the Operating Procedures will be needed as part of the Corrective Action Plan.			
LADWP		☑	We should be very careful about using DSM as Corrective Action for transmission problem. What this would lead to is to have a "built-in" transmission problem which would require DSM as the de facto rolling brown-outs or black-outs. DSM should be part of the resource and load forecasting consideration; transmission planning should design tranmission that can properly serve the forecasted loads with the expected resources; not to "live with" or include transmission contraints that rely on DSM as a solution. If the industry truly wants to use DSM as mitigation for transmission deficiencies, let's do it as a deliberate action, not an unintended consequence. "System deficiencies" may be corrected with an integrated approach as suggested, but "transmission deficiencies" are solved by transmission improvement. The classic example is Path 15 in WSCC/WECC. The transmssion deficiency of PAth15 was well known for many years (like since '80s) and in the "pre-deregulated" dates, the deficiency was indeed managed by an integrated approach when the utility can operate its assets integrally. Then de-regulation happened and the integrated approach became unbundled and impossible resulted in numerous brown-outs and black-outs in California in 2000-01 until a third transmission line is added. Transmission deficiencies, if not mitigated, will significantly affect the accessibility to transmission services, a key concern of ferc 890. As for new technology, just how the SDT proposes to define what constitutes a new technology? And how to measure for compliance against such a requirement? Hopefully, this is just another case of overly prescriptive standard.
Response: DSM refers to reduction in net Load. The standard does allow for consideration of DSM but other factors may disallow the use of DSM as a corrective action. The amount and uncertainty of DSM needs to be justified by the entity when it is included in their correction action plan. New technologies include any technology that is not currently in general use, or is in the development stages, on the electric power system that helps improve efficiency (i.e. energy storage/production technologies, low sag conductors, solid state interrupters, etc.)			
Manitoba Hydro		☑	DSM and generation improvements should be removed from Requirement R2.7.1, as they should not be mandated by a NERC standard are not in the tool box of the transmission planner. DSM may already be in the load forecast and sensitivities to load forecast variations are included in near term planning horizon sensitivity analysis. Additional DSM shouldn't be part of transmission planners mitigation plan. If the corrective plan is too expensive the load serving entity could consider DSM and revise their forecast in the next planning cycle.
MRO		☑	DSM should already be in the load forecast and sensitivities to the load forecast variations are included in the near term planning horizon sensitivity analysis. Additional DSM shouldn't be part of the transmission planner's corrective plan. Additional DSM can be considered in the next planning

Q16			
Commenter	**Yes**	**No**	**Comment**
			cycle.
Response: The use of DSM is optional. Requirement R2.7.1 has been modified based on your comments to use "may include" instead of "including". DSM refers to reduction in net load that could be used to compensate for a generation deficiency or to reduce transmission overloads. If an entity can show that DSM is effective, the standard should not bar them from using it. **R2.7.1** - ~~Identify~~ List System deficiencies and the associated actions needed to achieve required System performance. ~~including Transmission and generation improvements, DSM, new technologies, or Operating Procedures including the duration of interim Operating Procedures.~~ Such actions may include installation, modification, retirement, or removal of Transmission and generation Facilities and any associated equipment such as protective or Special Protection Schemes, rate applications, DSM, or other initiatives, new technologies, or Operating Procedures including how long the Operating Procedures will be needed as part of the Corrective Action Plan.			
Southern Transm.		☑	It should not be a requirement that DSM be considered but DSM should be one of the allowable alternatives. The way the present standard is written, it is unclear whether "all" of the named items (except operating procedures with the "or" statement) are required to be considered or whether only one or more of the items need to be included. It is suggested that the following statement replace the word "including" in line two of R2.7.1: "that may include one or more of the following:". This should clarify that all of the items are not required to be in the action plan for compliance. It also is not clear what the phrase "including the duration of interim Operating Procedure" means. Does this mean how many years you would anticipate using the Operating Procedure or does it mean how long it takes to "repair" the cause of the outage that necessitated the use of the Operating Procedure? Assuming that the meaning is the second one, the requirement to document the "mean time to repair" is new and there does not seem to be a very useful purpose for this requirement. As long as the system performance standards are met and the system is prepared for the next outage, what is the purpose of recording and documenting the length of time that you anticpate it to take to fix the problem? This is variable at best and does not provide useful information.
Response: The use of DSM is optional. Requirement R2.7.1 has been modified based on your comments to use "may include" instead of "including". DSM refers to reduction in net load that could be used to compensate for a generation deficiency or to reduce transmission overloads. If an entity can show that DSM is effective, the standard should not bar them from using it. Your first interpretaion is correct (how many years you expect to use the procedure). **R2.7.1** - ~~Identify~~ List System deficiencies and the associated actions needed to achieve required System performance. ~~including Transmission and generation improvements, DSM, new technologies, or Operating Procedures including the duration of interim Operating Procedures.~~ Such actions may include installation, modification, retirement, or removal of Transmission and generation Facilities and any associated equipment such as protective or Special Protection Schemes, rate applications, DSM, or other initiatives, new technologies, or Operating Procedures including how long the Operating Procedures will be needed as part of the Corrective Action Plan.			
TSGT		☑	DSM should not be considered except as a load forecast variable. Rather, the load forecast probability index should be prescribed (specific probability of exceedance)

Q16			
Commenter	**Yes**	**No**	**Comment**
Response: The use of DSM is optional. If an entity can show that DSM is effective, the standard should not bar them from using it. The use of DSM is optional. Requirement R2.7.1 has been modified based on your comments to use "may include" instead of "including". DSM refers to reduction in net load that could be used to compensate for a generation deficiency or to reduce transmission overloads. **R2.7.1** - ~~Identify~~ List System deficiencies and the associated actions needed to achieve required System performance. ~~including Transmission and generation improvements, DSM, new technologies, or Operating Procedures including the duration of interim Operating Procedures.~~ Such actions may include installation, modification, retirement, or removal of Transmission and generation Facilities and any associated equipment such as protective or Special Protection Schemes, rate applications, DSM, or other initiatives, new technologies, or Operating Procedures including how long the Operating Procedures will be needed as part of the Corrective Action Plan.			
AECI		☑	
LCRA		☑	
SaskPower		☑	
Seattle City		☑	
Response: Thank you for your response.			
AEP	☑		Consider requiring that problem contingencies be simulated on base case that models the lower load level that would result with the DSM implemented.
Response: The standard does allow for consideration of DSM which is effectively the situation you are describing.			
APPA	☑		This is a conditional Yes. The Resource Planner or Transmission Planner must provide assurance that the specific "Demand" reduction that is incorporated into the scenario analyses will actually be reduced through either customer action or direct load shedding by the Balancing Authority. This type of controllable "Demand" does exist, but it is rare that planners and operators actually have such resources in their portfolios to help with System Deficiencies.
Response: The use of DSM is optional. If an entity can show that DSM is effective, the standard should not bar them from using it. The amount and uncertainty of DSM needs to be justified by the entity when it is included in their Corrective Action Plan.			
ITC	☑		DSM alternatives should focus on existing contractual relationships only. DSM is an alternative to "capacity solutions" and you have to give weight to how well you can count on it during capacity emergencies. Will the load be there to cut? How certain are you (contractually) that the load will be shed voluntarily when called upon to do so?
Response: The use of DSM is optional. If an entity can show that DSM is effective, the standard should not bar them from using it. The standard does allow for consideration of DSM but other factors may disallow the use of DSM as a corrective action. The amount and uncertainty of DSM needs to be justified by the entity when it is included in their Corrective Action Plan.			
KCPL	☑		Only for DSM that is contractually "firm" and which can demonstrate mitigation performance (comparable to generation resource) as related to the transmission system.
MEAG Power	☑		DSM should be included if it is a tool made available to the TP for this purpose, but only to the extent that it is available for curtailment by the System Operator and without the option to buy through and remain in service.

Q16			
Commenter	**Yes**	**No**	**Comment**
Response: The use of DSM is optional. The standard does allow for consideration of DSM but other factors may disallow inclusion of DSM in the Corrective Action Plan. If an entity can show that DSM is effective, the standard does not bar them from using it.			
NCEMC	☑		It should be included if it is a tool made available to the TP for this purpose, but only to the extent that it is considered firm.
Santee Cooper	☑		It should be included if it is a tool made available to the TP for this purpose, but only to the extent that it is considered controllable and quantifiable resource.
SERC EC PSS SERC RRS OPS SCE&G	☑		It should be included if it is a tool made available to the TP for this purpose, but only to the extent that it is considered firm.
TVA	☑		It should be included if it is a tool made available to the TP for this purpose, but only to the extent that it is considered firm. However, the standards should not determine which type of fix a utility should use to meet system requirements.
Response: The use of DSM is optional. If an entity can show that DSM is effective, the standard should not bar them from using it.			
ABB	☑		First of all, you are not exactly requiring that DSM be considered or analyzed. You have simply listed it as one of the possible solutions. And you should mention the possibility of "integrated plan" in the standard itself. Since DSM is simply optional, let the planners figure out themselves how to consider DSM.
Allegheny Power	☑		It should be included if there are specific mandated or approved DSM programs in place during the study period.
ATC	☑		
BCTC	☑		DSM should be a load reduction.
CAISO	☑		We agree to include DSM among a mix of solutions to a system problem. However, the difficulty is that DSM is unpredictable when needed. Another issue is how much DSM is actually under the control of the Transmission Operator.
City Utilities/Springfield	☑		Controllable demand that will be available to both the planner and operator must be well defined and readily available when called upon including operating procedures.
Dominion	☑		An appropriate level of DSM should be included in studies.
Duke Energy	☑		DSM should be carefully included based upon consideration of the particular DSM measures available and the uncertainty associated with each.
Entegra	☑		
Entergy	☑		DSM should be considered, but it should be done prudently and in accordance with the contracts that govern the specific DSM program and only in cases where the Transmission Owner has direct load control. Transmission Owners should be allowed to include UVLS and SPS systems as a part of their Corrective Action Plans.
ERCOT ISO	☑		

Q16			
Commenter	**Yes**	**No**	**Comment**
Exelon	☑		DSM should be directly controllable with accurate information as the the magnitude and location. System stability should not be dependent on the operation of DSM.
FPL FRCC	☑		If DSM is included as part of an integrated Corrective Action plan, then the impact of DSM should be included by specifying the location and expected quantity of DSM that will mitigate a system deficiency. The use of DSM, whether exclusively or in conjunction with other measures, is an acceptable operating procedure for use in a Corrective Action Plan, as long as the Transmission Owner demonstrates availability and accuracy of DSM data and its viability as an operating procedure for each applicable scenario.
Muscatine P&W	☑		We do not have DSM but I could see where it could be used to relieve overloads or low voltage.
PJM	☑	☑	Yes- DSM should be modeled consistent with how it is expected to be operated based on contractual/operating relationships.
Progress–Carolinas	☑		State regulatory requirements mandate that we consider DSM alternatives. The DSM contracts would have to adequately support the intended use.
Progress–Florida	☑		The use of DSM, whether exclusively or in conjunction with other measures, is an acceptable operating procedure for use in a Corrective Action Plan, as long as the Transmission Owner demonstrates availability and accuracy of DSM data and its viability as an operating procedure for each applicable scenario.
Tenaska	☑		While DSM may, or may not, be manually operated, it is critical to understand the impacts of DSM and whether different ways of implementing DSM are of value.
WPS	☑		The effect of DSM should be considered in corrective action plans to the extent that DSM can reduce overall load growth and change the timing of new transmission facilities.
Response: Thank you. DSM refers to reduction in net Load. The use of DSM is optional. If an entity can show that DSM is effective, the standard does not bar them from using it. The standard does allow for consideration of DSM but other factors may disallow the use of DSM as a corrective action. The amount and uncertainty of DSM needs to be justified by the entity when it is included in their Corrective Action Plan.			

17) Q17. Requirement R2.7.2: Such Corrective Action Plans shall "Be added to study cases and the cases re-tested to show that the System with planned additions meets the performance requirements in the tables". Should new studies, including the facilities comprising the Corrective Action Plan, be performed to assess System normal performance and Contingency response for conditions that previously resulted in the System deficiencies (without the planned additions) and also demonstrate that the changes would not result in inadvertent negative impacts on the System. If you "agree", please comment on how a study area should be determined.

Summary Response: The specific requirement to perform re-test has been removed. The purpose of the Corrective Action Plan is to list the actions that are needed to meet performance requirements. The studies, current, and/or past as appropriate, as well as the extent of the size of the study area, are performed to support compliance and demonstrate that the requirements are met. The standard assumes that the actions were developed and verified using the current and past studies that were used to uncover deficiencies and confirm adherence to the performance requirements.

The following requirement was deleted due to industry comments:

R2.7.2 ~~Be added to study cases and the cases re-tested to show that the System with planned additions meets the performance requirements in the tables~~

Q17			
Commenter	**Yes**	**No**	**Comment**
AECC		☑	A new study should not be required. The impact of "fix" should be evaluated as part of determining it as a viable solution.
Response: The SDT agrees with your comment and has revised the requirements to agree with your comment. **R2.7.2** ~~Be added to study cases and the cases re-tested to show that the System with planned additions meets the performance requirements in the tables~~			
Ameren		☑	This proposed requirement is unnecessary and a waste of time. Keep in mind this is a planning assessment and not a facilities study. Further, such a requirement implies a distrust of the transmission planners to develop valid corrective action plans to meet the requirements of the TPL standard. For more complex system facility additions, it would be inconceivable that a Transmission Planner or Owner or Planning Coordinator would proceed without performing power flow simulations to determine the efficacy of the system addition. But these studies would be performed over time considering the best available information and latest standards performance requirements. The majority of transmission projects consist of the upgrading of terminal equipment or conductor on one or more branches. The only significant change that such upgrade work would produce in a power flow model would be that the branch ratings would change. It is not necessary to rerun power flow simulations for such cases, as it can be determined by inspection whether the upgrade

Q17			
Commenter	**Yes**	**No**	**Comment**
			work would be sufficient to move the facility rating above the expected normal or contingency flow.
Response: The purpose of the Corrective Action Plan is to list the actions that are needed to meet performance requirements. The studies are performed to support compliance and demonstrate that the requirements are met. The specific requirement to re-test has been removed. **R2.7.2** ~~Be added to study cases and the cases re-tested to show that the System with planned additions meets the performance requirements in the tables~~ The SDT has removed the Requirement R2.7.2 but kept the orignal R2.7.5 requirement, which was re-numbered as Requirement R2.7.3, (subsequent annual assessments report on the status of Corrective Action Plans).			
Dominion		☑	In the normal course of business, a planner out of necessity will need to check to see if the proposed improvements will actually fix the problem. The prospect of making a multi-million dollar mistake is sufficient incentive to insure this study occurs without the additional burden of creating an audit trail to meet a NERC standard. Requirements for what study area should be used and documentation of the process are not necessary. If, per chance, a study is not performed immediately, the next set of studies will show the deficiencies, if any.
Response: The intent is to ensure that for a specific problem the Corrective Action Plan is checked to the extent that the Corrective Action Plan does not cause any additional problems. The SDT has removed the Requirement R2.7.2 but kept the orignal 2.7.5 requirement, which was re-numbered as Requirement R2.7.3, (subsequent annual assessments report on the status of Corrective Action Plans). **R2.7.2** ~~Be added to study cases and the cases re-tested to show that the System with planned additions meets the performance requirements in the tables~~			
E ON US		☑	Re-testing is part of the normal study process of developing the Corrective Action Plan (CAP). Most CAP should be developed in the Long-Term horizon. The next annual study and all subsequent studies provide sufficient review without developing another set of cases and additional testing in the initial assessment.
Response: The intent of the standard is to develop a Corrective Action Plan that will create a system capable of meeting system performance requirements. The intent of the standard is to provide verification at the time the Corrective Action Plan is developed and not wait a year to perform the verification. This is critical to ensure that plans are coordinated between entities. The SDT has removed the Requirement R2.7.2 but kept the orignal 2.7.5 requirement, which was re-numbered as Requirement R2.7.3, (subsequent annual assessments report on the status of Corrective Action Plans). **R2.7.2** ~~Be added to study cases and the cases re-tested to show that the System with planned additions meets the performance requirements in the tables~~			
Brazos Electric	☑		It is difficult to understand what is meant by 'retested'. The evaluation of a CAP includes testing the recommended option to see how it performs and to insure that it does not create other problems. We assume this is what is meant by retested. In our evaluation we insure that it does not negatively impact all other facilities in the BES and if so what extent and if it is managable. We do not always create a separate 'study area' each time for each system improvement.

Q17			
Commenter	**Yes**	**No**	**Comment**
CenterPoint	☑	☑	Many problems identified in future studies and associated transmission improvements are fictitious due to the speculative nature of predicting load and generation growth. Requiring exhaustive studies to determine the full impact of fictitious transmission projects is unnecessarily prescriptive and burdensome, and provides little, if any, value in identifying and solving real transmission problems.
CPS Energy		☑	Should be conducted for Near Term Planning Assessment only with the study area determined at the discretion of the Transmission Planners.
FPL FRCC		☑	Incremental benefits do not justify the magnitude of additional studies. Corrective Action plans should be tested, but not as a new study with all of the Corrective Action Plans included simultaneously. The proposed language is inferior to the existing language (TPL-002-0 R2) and suggest replacing with language from TPL-002-0 R2.
Georgia Transm.		☑	This is the essence of planning. All entities should ensure that Corrective Action Plans address the identified constraints and work within the BES infrastructure. It is not clear what the intent of "new" studies is. Since the evaluation of Corrective Action Plans is part of the planning process, what new studies is this requirement referring to. The determination of the study area should be by the Planner.
LADWP		☑	This is a redundant and unnecessary requirement. How can one come up with a corrective action plan if it has not been demonstrated the plan can mitigate the problem? And if the corrective plan has been able to demonstrate that it can mitigate the problem, why repeat the study again.
Manitoba Hydro	☑		At some point the corrective action plan should be tested to verify the plan meets the performance requirements. The way the standard is written is that the transmission plan should be perfect for the entire planning horizon for all sensitivities tested. Any issues should be immediately addressed. The standard does not allow any time to develop a corrective plan through an open and transparent process. Based on the NERC definition, a Corrective Action Plan is the list of actions and an associated timetable for implementation to remedy a specific problem. A Corrective Action Plan could mean that load forecasts at the station will be verified, facility ratings verified and alternatives to fix the identified problem to be determined before the next Planning Assessment. Standard R2.7 seems to be mixing the idea of a Corrective Action Plan with the original TPL idea of determining corrective plans to achieve required performance. A corrective plan wil be the end goal of a Corrective Action Plan. Furthermore, corrective action plans should not be requierd to address issues raised by sensitivity studies. Corrective action plans are developed to meet base case needs which are based on expected load forecasts, transfers, etc. Sensitivity studies are done to measure the robustness of the base case plan. It should be left up to the Planner to decide if the corrective action plan is adequate based on the likelihood of the scenario studied, even if the sensitivity analysis shows some performance violations.
MISO		☑	Sufficient analysis, including re-testing, must have been performed in creating the Corrective Action Plans. Requiring demonstration by the transmission planner that this is the basis of the Plans is superfluous.

Q17			
Commenter	**Yes**	**No**	**Comment**
MRO		☑	The MRO is concerned with this requirement particularly since the standard indicates that System Assessment shall be conducted each year while studies are not required each year. MRO members typically conduct this exercise at the time that studies are originally conducted with regard to improvements. By requiring a new study with improvements (some of which were justified in past studies) demonstrating that these improvements work essentially results in the Transmission Owner needing to clear a new unfair hurdle for improvements. This results in a requirement which will result in wide-spread non-compliance. The SDT should clarify that this requirement can be met by past studies. The MRO recommends that R2.7.2 be removed because it is redundant since development of the corrective action plan will have included these studies. At some point the corrective action plan should be tested to verify the plan meets the performance requirements. The way the standard is written is that the transmission plan should be perfect for the entire planning horizon for all sensitivities tested. Any issues should be immediately addressed. The standard does not allow any time to develop the corrective plan through an open and transparent process. Based on the Nerc definition, a Corrective Action Plan is the list of actions and an associated timetable for implementation to remedy a specific problem. A Corrective Action Plan could mean that load forecasts at the station will be verified, facility ratings verified and alternatives to fix the identified problem to be determined before the next Planning Assessment. Standard R2.7 seems to be mixing the idea of a Corrective Action Plan with the original TPL idea of determining corrective plans to achieve required performance. A corrective plan wil be the end goal of a Corrective Action Plan.
PJM	☑	☑	Yes – At a minimum the system conditions and / or contingency that identified the system deficiency should be evaluated to determine that it has corrected the issue. The extent of the study area needs to be consistent with the size / complexity of the corrective action plan.
Progress–Florida		☑	Each Corrective Action Plan as stated in the original assessments should be trusted as effective, provided the Transmission Owner can demonstrate with its own internal assessments the effectiveness of each Corrective Action Plan.
Santee Cooper		☑	Re-testing should be required only where the correction may impact network flows. The study area should be determined by the TP. The TP has the most knowledge of how the system responds to changes. The majority of transmission projects consist of the upgrading of terminal equipement or conductor on one or more branches. The only significant change that such upgrade work would change in a powerflow model would be that of the branch (facility) ratings would change. It is not necessary to rerun powerflow simulations for such cases, as it can be determined by inspections whether the upgrade work would be sufficient to move the facility rating above the expected normal or contingency flow. We agree that the Planning process should ensure that corrective actions for a particular defeciency do not lead to other deficiencies. However, the process for ensuring this is not necessarly The

Q17			
Commenter	**Yes**	**No**	**Comment**
			development of new study cases which include facilities comprising the corrective action plan and the suscetesting is not needed.
Southern Transm.	☑	☑	A properly conducted study should determine that the recommended Corrective Action Plan actually solves the problem and does not cause other problems. If not, it is not a Corrective Action Plan. What appears to be intended here is whether the combination of Corrective Action Plans interact with each other and create additional problems. In the conference call Mr. Odom stated that it was not the intent for "all" the corrective plans be put back into the cases and all of the simulations be redone but only look at local area analysis. If that is the case, what is necessary to be in compliance with R2.7.2 and what type of documentation is required? This is very unclear. The study area should be determined by the TP. The TP has the most knowledge of how the system responds to changes
WECC BPA TSGT TEP		☑	No, this is too onerous. We recognize that, when planning the system and developing a Corrective Action Plan, the transmission planner would have added the potential projects individually (or in small groups) into a case to re-test the system performance. Hoever, R2.7.2 seems to require that all potential projects be added back into the case simultaneously for retesting. There could be many different alternative solutions for each potential problem identified in the different study years without having the base solution first determined for a nearer term case. There can be many combinations of potential solutions for cases further into the future that satisfy the condition being studied. For example, a voltage problem can be solved by the addition of capacitors, completing a bus tie, adding a short line, operating procedure, changing generation dispatch, etc. Even assuming that one set of solutions are picked so the verification study can be performed, logistically this demonstration may be too close to the assessment in the following year. Instead of retesting the potential projects in the Corrective Action Plan on the original base case, it may be better to test them in the base cases prepared for following year's study. Any potential problem that is unresolved will show up again in the following year's assessment. Therefore, a separate demonstration using an "older" case may not be an efficient use of the TPs' and PAs' time and resources.
WPS	☑	☑	It is difficult to fully prescribe a methodology to define a "study area". It is most appropriate for the Transmission Planning to develop study areas based on and consistent with the transmission planning principles within Order 890.

Response: The intent of the standard is to develop a corrective action plan that will create a system capable of meeting system performance requirements. The standard assumes that the actions were developed and verified using the current and past studies that were used to uncover deficiencies and confirm adherence to the performance requirements. The SDT has removed Requirement R2.7.2 but kept the orignal 2.7.5 requirement, which was re-numbered as Requirement R2.7.3, (subsequent annual assessments report on the status of Corrective Action Plans).

R2.7.2 ~~Be added to study cases and the cases re-tested to show that the System with planned additions meets the performance~~

Q17			
Commenter	**Yes**	**No**	**Comment**
~~requirements in the tables~~			
ABB	☑	☑	Any area where there might possibly be an impact. I.e., engineering judgement.
Muscatine P&W		☑	Large enough to ensure negative impacts will not occur. This could best be covered in regional studies. (See Q43 Comment #3)
Response: The specific requirement to perform re-test has been removed. The purpose of the Corrective Action Plan is to list the actions that are needed to meet performance requirements. The studies, current and/or past as appropriate as well as the extent of the size of the study area, are performed to support compliance and demonstrate that the requirements are met. **R2.7.2** ~~Be added to study cases and the cases re-tested to show that the System with planned additions meets the performance requirements in the tables~~			
AECI		☑	
SaskPower		☑	
Response: Thank you for your response.			
Alcoa	☑		NERC is revising the Transmission Planning Standards beginning with TPL-001. Alcoa agrees with NERC's approach to revising TPL-001 wherein NERC is consolidating duplicative Standards to promote consistent requirements of the planning process and thus improving reliability. Also, Alcoa agrees that new studies should not result in inadvertent negative impacts on the system especially when such studies have not taken into account the negative impact on an adjacent system. However, Alcoa believes that the current draft of the TPL fails to address FERC Order 890's requirements of an open and transparent Planning Process. Such a process provides Market Participants an equal opportunity for consideration in the Planning Assessments for contingency impact on transmission availability. (See FERC Order 890 ¶¶ 140, 207, 212, 323, 327, 337). Alcoa also believes that the current draft of the TPL fails to address and incorporate FERC Order 890's new requirement that transmission providers coordinate "…ATC calculations with their neighboring systems." For example, while Planning Assessments may indicate no NERC Compliance violations where the Table 1 and Table 2 Requirements are met, Market Participants are harmed and not provided protection from unequal treatment of their circumstance. This problem occurs when an analysis of a contingency event results in no IROL or SOL (all facilities remain within established ratings), but resultant transmission constraints cause reductions of ATC and subsequent market impact. As part of the System Planning Process, this is unacceptable, and, as a minimum, this type of situation must be included as a scenario reviewed in the required sensitivity analysis under the NERC TPL-001-1 Standard. The impact of such practices by large transmission providers on the ATC of smaller transmission

Q17			
Commenter	**Yes**	**No**	**Comment**
			providers can be significant. For instance, small transmission providers similar to Alcoa that operate non base-load resources such as hydropower, peaking units or wind power can easily see their ATC's reduced when sensitivity analyses are not performed under TPL-001-1. Alcoa believes that such sensitivity analyses should be a requirement. Alcoa believes that for consistency with the provisions of Order 890, NERC must re-visit not only the Planning Assessment implications on transmission availability but also couple this review with the revision of the NERC Modeling Data and Assessment Standards (MOD). Alcoa recommends that the MOD and TPL Standards be addressed in similar fashion to: 1) Incorporate the intent of Order 890 requirements of an "Open and transparent Regional Planning Process to provide non-discriminatory planning" for ALL Market Participants 2) Assure that the revised MOD and TPL Standards fully address implications of burdens on the Bulk Electric System (BES) related to transmission availability for contingencies in the Planning Process. FERC Order 890 ¶ 523 - Coordinate planning with interconnected systems. In addition to preparing a system plan for its own control area on an open and nondiscriminatory basis, each Transmission Provider will be required to coordinate with interconnected systems to (1) share system plans to ensure that they are simultaneously feasible and otherwise use consistent assumptions and data and (2) identify system enhancements that could relieve congestion or integrate new resources. (Emphasis added). 3) Sensitivity Analysis should include the potential impact on transmission availability and/or reductions in ATC on adjacent systems. Where ATC on an interface is reduced for a single contingency (N-1 planning, mitigation options must be provided). (This may require a threshold level of ATC reduction where a percentage reduction would be specified as acceptable on the N-1 basis, and a greater reduction than that threshold would be considered a Standard's Violation).
Response: The purpose of this standard is to develop corrective actions that can eliminate system performance deficiencies. The standard does not judge if the action listed is the only or the best action to be taken on an economic or market basis. It is the responsibility of the entity to resolve such issues and conform to FERC Order 890.			
AEP	☑		Consider limiting study area to immediately adjacent systems.
Allegheny Power	☑		Study area should be at least two buses beyond deficiency and plan elements.
BCTC	☑		The Assessment should state how the study area was determined, including input from adjacent Planning Coordinators. WECC has processes for coordination of planning information so that Planning Coordinators are informed of plans in other areas.

Q17			
Commenter	**Yes**	**No**	**Comment**
Entergy	☑		Study area should be determined on a case by case basis by the Transmission Planner. SEAMS agreements and other regional planning coordination activities should provide for adequate cooperation.
Exelon	☑		The study area should be at least the size of the original study area. Some engineering judgment is required to determine the subset of studies. Next year's study would include the full set of screenings for the future additions.
IESO	☑		We feel that having the requirement to retest the conditions which show a performance deficiency, but now with the proposed corrective measures, would suffice. To illustrate or require "how a study area should be determined" would be micro-managing, and the term "a study area" is not defined anywhere in the standard and is subject to different interpretation. For example, does it mean the physical area of study or does it mean the various areas in the study that need to be explored. We are therefore unable to offer any view as to "how a study area should be determined".
ITC	☑		Without further study once a "solution" has been proposed how can one be sure it will work and not create "other" issues? The area of study should be developed using good engineering judgment with input from any neighboring parties that might be impacted.
KCPL	☑		Corrective Action Plans taken by a transmission operator should not burden any of its' directly interconnected transmission operators. Study area should include at least all transmission operators directly interconnected to the transmission operator who took the initial corrective action. It may be appropriate to use the entire RTO/ISO/RRO as study area.
LCRA	☑		The question is not clear regarding "study area"; however, re-testing with corrective action / system improvement(s) in place is a must. The re-test must consider the same simulations that identified the initial deficiency. In addition, in the re-test, the action/ system improvement must be considered as a Planning Event itself (i.e., if the initial test showed a specific contingency causing a deficiency, then a physical connection of the system improvement to the identified contingency should be avoided or minimized - minimize the creation of Extreme Events.). In other words, planning solutions should be long-term and a system "fix" for the present should not result in a system problem in the foreseeable future.
MEAG Power	☑		Re-testing should be required only where the correction may impact network flows. The study area should be determined by the TP. The TP has the most knowledge of how the system responds to changes and should be allowed to choose the study area based on the prudent utility practice.
NCEMC	☑		Re-testing should be required particularly where the correction may impact network flows. The study area should be discussed within a stakeholder process to the TP may compile input from network customers or LSEs that might be affected by the analysis.
Northwestern Energy	☑		R2.7.2 does not refer to "how a study area should be determined". This added statement should be eliminated.
Progress–Carolinas	☑		There are separate regional processes for coordination with neighboring utilities.

Q17			
Commenter	**Yes**	**No**	**Comment**
ReliabilityFirst	☑		The study area should be determined by the Transmission Planner and Planning Coordinator.
Seattle City	☑		Sensitivity studies should be adequate to determine the study area. Starting at the corrective facility, work out bus by bus, determining sensitivity to the facility's loss. Boundaries of the study area would be defined at buses where loss sesitivity is (for example) 1% or less.
SERC EC PSS SERC RRS OPS SCE&G TVA	☑		Re-testing should be required only where the correction may impact network flows. The study area should be determined by the TP. The TP has the most knowledge of how the system responds to changes.
Tenaska	☑		The study area should be the same as in the original study unless the Corrective Action Plans require changes/additions outside of the original study area. If chagnes/additions are made outisde the original area, then the study area must be expanded to include, at a minimum, the area that includes the new changes/additions.
Central Maine Power HQTE National Grid New England ISO NU NPCC RCS NSTAR United Illuminating	☑		The study area should be based upon planning expertise and knowledge of the system, giving due consideration to external impacts.
City Water Power and Light	☑		The system should be retested with new facilities in place to ensure that no new problems arise with the addition of new facilities.
Response: Based on industry comment, the SDT has removed Requirement R2.7.2 but kept the orignal 2.7.5 requirement, which was re-numbered as Requirement R2.7.3, (subsequent annual assessments report on the status of Corrective Action Plans). **R2.7.2** ~~Be added to study cases and the cases re-tested to show that the System with planned additions meets the performance requirements in the tables~~			
FirstEnergy	☑		Although we agree with the concept of retesting, the standard should reference that a re-study is only required in the vicinity or portion of the system affected by new facility additions. Determination of the study area should be left to the Transmission Planner's judgment.
Response: The SDT has removed the specific requirement to perform re-testing with the understanding that the purpose of the Corrective Action Plan is to list the actions that are needed to meet performance requirements. The studies, current and/or past as appropriate as well as the extent of the size of the study area, are performed to support compliance and demonstrate that the requirements are met. The standard assumes that the actions were developed and verified using the current and past studies that were used to uncover deficiencies and confirm adherence to the performance requirements. **R2.7.2** ~~Be added to study cases and the cases re-tested to show that the System with planned additions meets the performance~~			

Q17			
Commenter	**Yes**	**No**	**Comment**
~~requirements in the tables~~			
NERC TIS	☑		All Corrective Action Plans should be tested on an interconnection-wide basis to screen for potential adverse impacts throughout the interconnection, not just the TOs area.
Response: Please see Requirement R8 for the coordination and peer review requirements.			
APPA	☑		This is necessary to insure the planners did not accidentally take the system and the future operation of the system from the frying pan into the fire.
ATC	☑		
City Utilities/Springfield	☑		Corrective action plans must be appropriately modeled in order to verify that implementing the plans results in a BES that will perform based on the applicable NERC Reliability Standards or more restrictive local area criteria.
Duke Energy	☑		New studies should be performed, but the study conditions should be determined based upon the judgment of the planner.
ERCOT ISO CAISO	☑		We agree that the system should be retested with the corrective measures to ensure that the defficiency has been cured and that there are no inadvertant negative impacts. Regarding Study Area, it is not a defined term, and it could vary depending on the size of the project or nature of the disturbance being evaluated.
New York ISO	☑		NYISO Agrees
Response: Thank you but due to the preponderance of industry response to this question, this requirement has been deleted.			

18) Q18. Requirement R2.7.3: The standard calls for a differentiation between committed and proposed projects. Do you agree that they should be treated separately? If not, please state why not.

Summary Response: Based on several comments and consideration by the SDT, the SDT has modified Requirement R2.7.1 and deleted the original Requirement R2.7.2 through Requirement R2.7.4. A new Requirement R2.7.2 has been added. The standard now refers to "actions" needed to achieve required System performance without trying to distinguish between committed and proposed projects. It also lists examples of what is intended by the word "actions".

The following requirements were changed due to industry comments:

R2.7.1. ~~Identify~~ List System deficiencies and the associated actions needed to achieve required System performance. ~~including Transmission and generation improvements, DSM, new technologies, or Operating Procedures including the duration of interim Operating Procedures.~~ Such actions may include installation, modification, retirement, or removal of Transmission and generation Facilities and any associated equipment such as protective or Special Protection Schemes, rate applications, DSM, or other initiatives, new technologies, or Operating Procedures including how long the Operating Procedures will be needed as part of the Corrective Action Plan.
R2.7.2. ~~Be added to study cases and the cases re-tested to show that the System with planned additions meets the performance requirements in the tables~~ Contain a description of how and why the consideration of the sensitivities selected in accordance with Requirements R2.1.3, R2.1.4, R2.4.3, and R2.4.4 in the Planning Assessment did or did not result in a modification or expansion of the list of actions developed in accordance with Requirement R2.7.1.
R2.7.3. ~~Include documentation of the criteria for determining committed and proposed projects, with all projects identified as either, 'committed' or 'proposed.'~~
R2.7.4. ~~Not remove committed projects without documentation to show that the revised plan meets the performance requirements.~~

Q18			
Commenter	**Yes**	**No**	**Comment**
Ameren		☑	We understand that there are differences between committed and proposed projects in an RTO environment where there is cost sharing for facility upgrades. From a NERC Standards compliance perspective, however, we do not see a need to differentiate between proposed and committed projects in the corrective action plan, as long as either properly addresses the required performance issue. We are not sure why there is a need to develop or maintain information on committed projects. This tracking is not needed to meet the existing TPL standards. Compliance requirements should be kept separate from administrative data requests. What is the perceived need to track committed projects that has not been presented here? Is this another example of distrust for transmission owners to build the proper facilities to create a more robust system?
Brazos Electric		☑	What is the difference? We assume committed means you have begun work on the project and can no longer stop. It would seem this would need to be defined more clearly and it is probably different for each project or entity. Why is this differentiation even needed?
Response: The SDT agrees with your comment that from a planning perspective, there is no benefit in trying to distinguish between "committed" and "proposed". Therefore, the SDT has modified Requirement R2.7.1 and deleted the original Requirement R2.7.2 through Requirement R2.7.4 to reflect "actions" needed to achieve required System performance without trying to distinguish between committed and			

Q18			
Commenter	**Yes**	**No**	**Comment**
proposed projects. **R2.7.1.** ~~Identify~~ List System deficiencies and the associated actions needed to achieve required System performance. ~~including Transmission and generation improvements, DSM, new technologies, or Operating Procedures including the duration of interim Operating Procedures.~~ Such actions may include installation, modification, retirement, or removal of Transmission and generation Facilities and any associated equipment such as protective or Special Protection Schemes, rate applications, DSM, or other initiatives, new technologies, or Operating Procedures including how long the Operating Procedures will be needed as part of the Corrective Action Plan. **R2.7.2.** ~~Be added to study cases and the cases re-tested to show that the System with planned additions meets the performance requirements in the tables~~ Contain a description of how and why the consideration of the sensitivities selected in accordance with Requirements R2.1.3, R2.1.4, R2.4.3, and R2.4.4 in the Planning Assessment did or did not result in a modification or expansion of the list of actions developed in accordance with Requirement R2.7.1. **R2.7.3.** ~~Include documentation of the criteria for determining committed and proposed projects, with all projects identified as either, 'committed' or 'proposed.'~~ **R2.7.4.** ~~Not remove committed projects without documentation to show that the revised plan meets the performance requirements.~~			
AECI	☑		However, the question as to what is considered committed versus proposed. There are variuos step in the approval process for our company and we are not sure which approval would be considered committed.
AEP		☑	Consider adding clear definition of "proposed" and "committed" projects (definition may impact response to this question).
Allegheny Power	☑		There needs to be a clear definition developed for committed and proposed projects and those definitions need to be included in the definition section of the standard.
APPA	☑		While it is good to know the difference, it should be made clear in the Standard that if a project is listed as committed, it may be changed the next year to proposed project. Definitions for "committed" and "proposed" are needed to ensure consistent data/assumptions within each region.
BPA		☑	Support comments submitted by WECC. Also, one reason not to differentiate between committed and proposed projects is that regardless of whether a project is committed or not in a future case, the committment to implement a Corrective Action Plan becomes mandatory as time moves closer to the need date due to required system performance.
WECC TSGT TEP		☑	The definition of these terms can be vastly different across all TPs. How would this be effectively monitored for compliance with such different definitions? Also, each TO's criteria to go from a proposed project to a committed project can change over time due to other needs and requirements.
Central Maine Power National Grid New England ISO NU NPCC RCS NSTAR	☑		They should be viewed differently in the Near-Term. However, these should be defined terms.

Q18			
Commenter	**Yes**	**No**	**Comment**
United Illuminating			
City Utilities/Springfield	☑		Definitions of both “committed” and “proposed” are needed.
City Water Power and Light	☑		"Committed" and "proposed" projects need to be defined.
CPS Energy		☑	The treatment of each project should be at the dscretion of the Transmission Planners.
Duke Energy		☑	Even committed projects may not be built due to a variety of circumstances. Either type of project can be deferred or cancelled for a variety of reasons, including circumstances beyond the transmission planner's control.
Entergy	☑		Committed projects should be tested for effectiveness, however, the effectiveness of Proposed projects, as they are subject to change, should not require the same level of documentation as committed projects.
Georgia Transm.	☑		They are inherently treated differently. "Committed" projects are a part of the base assumptions in the base case, while "proposed" projects are evaluated until a point where corporate commitment has been made.
HQTE	☑		They should be viewed differently in the Near-Term.
E ON US		☑	MISO has spent years on trying to make a distinction. If this remains, then "Committed Project" must be defined.
ERCOT ISO CAISO		☑	The definition of "committed" projects varies from TP to TP. Also projects that are proposed today become committed in the planning horizon. Similarly, committed projects drop out due to variety of reasons. In terms of system studies, both committed and proposed projects are modeled and evaluated in the same system. How do we distinguish between the two?
FirstEnergy		☑	Unless there is an industry agreed upon distinction and definition between "committed" and "proposed" projects, we do not agree that they should be introduced in this standard.
FPL FRCC		☑	All projects should be called "Planned" projects. There is no distinction in a model between committed and proposed projects that would treat them differently. They are either in the model or not in the model. This sub-requirement does not follow the major requirement wording in R2.7 ".....Such plans shall:" The intent of Requirements R2.7.3 and R2.7.4 should be combined and added into R2.7.1.1. Rather than adding the addtional requirement to document a criteria, the requirement should be that in the Near-Term Planning Horizon, projects cannot be removed (or modified) without demonstrating that the revised plan meets performance criteria. Suggested wording for R2.7.1.1. “Transmission and generation improvement projects for the Near-Term Transmission Planning Horizon, shall have in-service dates provided (to whom?), and shall not have in-service dates changed, or be removed from planning models, without documentation to show that the revised plan meets performance requirements.”
IESO	☑	☑	Yes, the distinction should be made as committed projects have a higher degree of certainty to be available for the period under study, whereas a proposed project is one that is supported by the

Q18			
Commenter	**Yes**	**No**	**Comment**
			assessment but the commitment to proceed is not yet secured. However, we do not see the need (a) to establish criteria for committed projects and proposed projects, and (b) to distinguish between the criteria between them. If the standard should require a TP to assess both scenarios - with and without proposed projects, then this should be clearly stipulated.
ITC		☑	All projects should naturally become committed projects at some point prior to the need date. The time frame should be dependant on the scale and voltage class of the project.
LADWP		☑	Seems like every company would have its own definition of committed vs propsoed project.
Manitoba Hydro	☑		However, since each planner is allowed to define the criteria, there will be no consistency as to what is included in the base case models.
NCEMC	☑		Projects that are underway (i.e. being built) and are not subject to be potentially delayed and are absolutely needed for reliability should be differentiated between those that are not. Perhaps definitions for each of these terms should be considered for clarification.
NERC TIS	☑	☑	No concensus in TIS after extensive disucussion, but it will be discussed further.
Northwestern Energy		☑	No, there are no clear guidelines on how to make this distinction.
PJM	☑	☑	We agree that there needs to be a differentiation between committed and proposed projects. Proposed projects, particularly generation interconnections and their associated network upgrades need to be identified as a group so that they can be removed from cases if the proposed generation interconnection does not move forward.
Progress–Carolinas		☑	Are projects are proposed until they are completed.
Progress–Florida		☑	This differentiation is meaningless when modeling projects in cases for planning analysis. The standard should instead set criteria for when models can be relied upon for planning purposes such that changes to the future plan will not have an impact on reliability.
Seattle City		☑	Since compliance with performance guidelines is mandated, aren't all projects defined in the corrective action plans "committed" projects? Proposed projects in the context of Requirement 2.7 should only exist in the studies to determine which remedial solution(s) comprise the Corrective Action Plan.
Southern Transm.		☑	This requirement does not appear to have any major benefit, particularly coupled with R2.7.4 discussed in Q19. The standards require that an assessment be done every year and that the system must meet performance requirements or a Corrective Action Plan be developed. Therefore, if a project has been previously specified as a "committed" project, removing it and or replacing it with something else must also meet performance requirements under this standard or a violation occurs. Also, this performance of the system with the "committed" Corrective Action Plan" removed or modified must be documented. Therefore, requirement R2.7.4 is automatically met and is superfluous in the standard and should be removed. There is no benefit from the distinction between a project definition of "committed" and "proposed".
WPS	☑	☑	If the standard makes a differentiation between "committed" and "proposed" projects, definitions for

Q18			
Commenter	**Yes**	**No**	**Comment**
			each, within the standard itself, are necessary. Within the context of R2.7, it is not clear what impact the differentiation between "committed" and "proposed" has on the requirement itself. R2.7 requires Corrective Action Plans to address deficiencies within the performance analysis of the events in Table 1 and Table 2. A fundamental underpinning of R2.7 should be that Corrective Action Plans are developed consistent with the transmission planning principles of Order 890.

Response: The SDT agrees that if the standard is going to include "committed" and "proposed", they will need to be defined. However, the SDT agrees that it will be very difficult to develop definitions of "committed" and "proposed" that are applicable for the entire NERC footprint. Therefore, the SDT has modified Requirement R2.7.1 and deleted the original Requirement R2.7.2 through Requirement R2.7.4 to reflect "actions" needed to achieve required System performance without trying to distinguish between committed and proposed projects.

R2.7.1. ~~Identify~~ List System deficiencies and the associated actions needed to achieve required System performance. ~~including Transmission and generation improvements, DSM, new technologies, or Operating Procedures including the duration of interim Operating Procedures.~~ Such actions may include installation, modification, retirement, or removal of Transmission and generation Facilities and any associated equipment such as protective or Special Protection Schemes, rate applications, DSM, or other initiatives, new technologies, or Operating Procedures including how long the Operating Procedures will be needed as part of the Corrective Action Plan.
R2.7.2. ~~Be added to study cases and the cases re-tested to show that the System with planned additions meets the performance requirements in the tables~~ Contain a description of how and why the consideration of the sensitivities selected in accordance with Requirements R2.1.3, R2.1.4, R2.4.3, and R2.4.4 in the Planning Assessment did or did not result in a modification or expansion of the list of actions developed in accordance with Requirement R2.7.1.
R2.7.3. ~~Include documentation of the criteria for determining committed and proposed projects, with all projects identified as either, 'committed' or 'proposed.'~~
R2.7.4. ~~Not remove committed projects without documentation to show that the revised plan meets the performance requirements.~~

MEAG Power		☑	The goal is to meet the system performance requirements outlined in the standard. Whether a project is proposed or committed is not relevant.
Santee Cooper SERC EC PSS SERC RRS OPS SCE&G		☑	The goal is to meet the system performance requirements outlined in the standard. Whether a project is proposed or committed is irrelevant. R2.7.3 should be deleted.

Response: The SDT agrees with your comment and has modified Requirement R2.7.1 and deleted the original Requirements R2.7.2 through R2.7.4 to reflect "actions" needed to achieve required System performance without trying to distinguish between committed and proposed projects.

R2.7.1. ~~Identify~~ List System deficiencies and the associated actions needed to achieve required System performance. ~~including Transmission and generation improvements, DSM, new technologies, or Operating Procedures including the duration of interim Operating Procedures.~~ Such actions may include installation, modification, retirement, or removal of Transmission and generation Facilities and any associated equipment such as protective or Special Protection Schemes, rate applications, DSM, or other initiatives, new technologies, or Operating Procedures including how long the Operating Procedures will be needed as part of the Corrective Action Plan.

Q18			
Commenter	**Yes**	**No**	**Comment**
R2.7.2. ~~Be added to study cases and the cases re-tested to show that the System with planned additions meets the performance requirements in the tables~~ Contain a description of how and why the consideration of the sensitivities selected in accordance with Requirements R2.1.3, R2.1.4, R2.4.3, and R2.4.4 in the Planning Assessment did or did not result in a modification or expansion of the list of actions developed in accordance with Requirement R2.7.1. **R2.7.3.** ~~Include documentation of the criteria for determining committed and proposed projects, with all projects identified as either, 'committed' or 'proposed.'~~ **R2.7.4**. ~~Not remove committed projects without documentation to show that the revised plan meets the performance requirements.~~			
ABB	☑		Yes, it helps when considering other issues in the same area. You would know whether or not you can count on a project going in.
AECC	☑		not only should a distinction be made but committed projects should be further classified as committed and under construction. There is a difference between a project be committed and actually being built. This difference can be many years. It would also be nice to know projects that are in the conceptual stage. This allow other stakeholders to share their thoughts and collaborate on projects of mutual interest before a project reaches the committed stage. Once a project is committed it is very difficult to make modifications.
ATC	☑		
BCTC	☑		
Dominion	☑		
Entegra	☑		
Exelon	☑		
KCPL	☑		
LCRA	☑		
MISO	☑		
MRO	☑		
Muscatine P&W	☑		
New York ISO	☑		NYISO Agrees
ReliabilityFirst	☑		
SaskPower	☑		
Tenaska	☑		
TVA	☑		

Q18			
Commenter	Yes	No	Comment
Response: Thank you but due to the majority of industry response to this question, the requirements have been changed as indicated in the summary.			

19) Q19. Requirement R2.7.4: For such Corrective Action Plans "Committed projects shall not be removed without documentation to show that the revised plan meets the performance requirements". Do you agree or disagree with this requirement? If you disagree, please explain why.

Summary Response: Commenters generally agreed that "committed" plans are difficult to define and may have a different meaning for many entities. In addition, even considering the generally accepted understanding of what "committed" plans means would still lead to the fact that such plans could change up until the plan is actually implemented. Therefore the SDT has modified Requirement R2.7.1 and deleted the original Requirement R2.7.2 through Requirement R2.7.4 to require only the Corrective Action Plan and goes on to state what is intended by the word "actions".

The following requirements were changed due to industry comments:

R2.7.1. ~~Identify~~ List System deficiencies and the associated actions needed to achieve required System performance. ~~including Transmission and generation improvements, DSM, new technologies, or Operating Procedures including the duration of interim Operating Procedures.~~ Such actions may include installation, modification, retirement, or removal of Transmission and generation Facilities and any associated equipment such as protective or Special Protection Schemes, rate applications, DSM, or other initiatives, new technologies, or Operating Procedures including how long the Operating Procedures will be needed as part of the Corrective Action Plan.
R2.7.2. ~~Be added to study cases and the cases re-tested to show that the System with planned additions meets the performance requirements in the tables~~ Contain a description of how and why the consideration of the sensitivities selected in accordance with Requirements R2.1.3, R2.1.4, R2.4.3, and R2.4.4 in the Planning Assessment did or did not result in a modification or expansion of the list of actions developed in accordance with Requirement R2.7.1.
R2.7.3. ~~Include documentation of the criteria for determining committed and proposed projects, with all projects identified as either, 'committed' or 'proposed.'~~
R2.7.4. ~~Not remove committed projects without documentation to show that the revised plan meets the performance requirements.~~

Q19			
Commenter	**Yes**	**No**	**Comment**
Ameren		☑	As stated above, we are not sure why there is a need to develop or maintain information on committed projects. This tracking is not required in the existing TPL standards. As long as the revised corrective action plan meets the reliability performance requirements, what difference does it make if a committed project is cancelled or changed to a proposed project from a compliance perspective? We need to keep compliance requirements separate from administrative data requests or survey responses.

Response: The SDT agrees with your comment and has modified Requirement R2.7.1 and deleted the original Requirement R2.7.2 through Requirement R2.7.4 to require only the Corrective Action Plan and indicates what is intended by the word "actions". The SDT feels that documenting the assessment and making it available to others will by its very nature provide all the information necessary to understand which plans changed and the basis for the new plans.

R2.7.1. ~~Identify~~ List System deficiencies and the associated actions needed to achieve required System performance. ~~including Transmission and generation improvements, DSM, new technologies, or Operating Procedures including the duration of interim Operating~~

Q19			
Commenter	**Yes**	**No**	**Comment**
~~Procedures.~~ Such actions may include installation, modification, retirement, or removal of Transmission and generation Facilities and any associated equipment such as protective or Special Protection Schemes, rate applications, DSM, or other initiatives, new technologies, or Operating Procedures including how long the Operating Procedures will be needed as part of the Corrective Action Plan. **R2.7.2.** ~~Be added to study cases and the cases re-tested to show that the System with planned additions meets the performance requirements in the tables~~ Contain a description of how and why the consideration of the sensitivities selected in accordance with Requirements R2.1.3, R2.1.4, R2.4.3, and R2.4.4 in the Planning Assessment did or did not result in a modification or expansion of the list of actions developed in accordance with Requirement R2.7.1. **R2.7.3.** ~~Include documentation of the criteria for determining committed and proposed projects, with all projects identified as either, 'committed' or 'proposed.'~~ **R2.7.4.** ~~Not remove committed projects without documentation to show that the revised plan meets the performance requirements.~~			
Brazos Electric		☑	This seems like more documention is needed however if the new CAP analysis will suffice for documentation regarding removal of the 'committed project' then this is acceptable. However, that kind of makes having such a thing as a 'committed project' fairly useless if you can change it. This appears to just be more unnecessary documention.
Dominion		☑	We are of the opinion that committed projects could be removed without documentation. Once a project is removed, the next set of studies will show the deficiencies, if any.
Response: The SDT agrees with your comment that "committed" plans can change. The SDT has modified Requirement R2.7.1 and deleted the original Requirement R2.7.2 through Requirement R2.7.4 to require only the Corrective Action Plan and indicates what is intended by the word "actions". The SDT feels that documenting the assessment and making it available to others will by its very nature provide all the information necessary to understand which plans changed and the basis for the new plans. **R2.7.1.** ~~Identify~~ List System deficiencies and the associated actions needed to achieve required System performance. ~~including Transmission and generation improvements, DSM, new technologies, or Operating Procedures including the duration of interim Operating Procedures.~~ Such actions may include installation, modification, retirement, or removal of Transmission and generation Facilities and any associated equipment such as protective or Special Protection Schemes, rate applications, DSM, or other initiatives, new technologies, or Operating Procedures including how long the Operating Procedures will be needed as part of the Corrective Action Plan. **R2.7.2.** ~~Be added to study cases and the cases re-tested to show that the System with planned additions meets the performance requirements in the tables~~ Contain a description of how and why the consideration of the sensitivities selected in accordance with Requirements R2.1.3, R2.1.4, R2.4.3, and R2.4.4 in the Planning Assessment did or did not result in a modification or expansion of the list of actions developed in accordance with Requirement R2.7.1. **R2.7.3.** ~~Include documentation of the criteria for determining committed and proposed projects, with all projects identified as either, 'committed' or 'proposed.'~~ **R2.7.4.** ~~Not remove committed projects without documentation to show that the revised plan meets the performance requirements.~~			
E ON US		☑	Our planning process includes documentation of the need, acceleration, delay, or elimination of all projects. As worded, I do not need to document the delay of a Committed project.
Northwestern Energy		☑	Same problem as Q18; but it isn't clear what level of documentation is needed.
BPA		☑	See response to Q18.

Q19			
Commenter	**Yes**	**No**	**Comment**
CenterPoint		☑	This is overly prescriptive. Allow each Transmission Planner to determine the best way to handle planned projects.
CPS Energy		☑	The treatment of each project should be at the discretion of the Transmission Planners.
Duke Energy		☑	The annual assessment will show that the revised plan meets performance requirements.
FirstEnergy		☑	Unless there is an industry agreed upon distinction and definition between "committed" and "proposed" projects, we do not agree that they should be introduced in this standard.
Georgia Transm.		☑	See responses to Q17 and Q18.
KCPL		☑	Corrective Action Plans must demonstrate performance based on the expected system configuration. Committed projects can be changed or discontinued before completion.
LADWP		☑	All this does is create more bureaucratic tracking and paper pushing. People probably won't classify anything as committed until concrete has been poured just so not to have to deal with all these paperwork.
Manitoba Hydro		☑	The standard does not allow any time to develop a corrective plan through an open and transparent process. Based on the NERC definition, a Corrective Action Plan is the list of actions and an associated timetable for implementation to remedy a specific problem. A Corrective Action Plan could mean that load forecasts at the station will be verified, facility ratings verified and alternatives to fix the identified problem to be determined before the next Planning Assessment. This standard seems to be mixing the idea of a Corrective Action Plan with the original TPL idea of determining corrective plans to achieve required performance. A corrective plan wil be the end goal of a Corrective Action Plan.
MEAG Power		☑	See response to Q18.
MISO			The current Corrective Action Plan should show the performance of the system with the best information available. These Plans will change year by year as conditions change and new information becomes available. Requiring that Plan projects from previous years may not be modified "without documentation" adds a additional unneeded paperwork.
MRO		☑	The MRO disagrees with this requirement. This is an unnecessary requirement since each year Corrective Action Plans must meet the system performance requirements.
Santee Cooper SERC EC PSS SERC RRC OPS SCE&G		☑	The goal is to meet the system performance requirements outlined in the standard. Whether a project is proposed or committed is irrelevant. R2.7.4 should be deleted.
Southern Transm.		☑	See comments for Q18. [This requirement does not appear to have any major benefit, particularly coupled with R2.7.4 discussed in Q19. The standards require that an assessment be done every year and that the system must meet performance requirements or a Corrective Action Plan be developed. Therefore, if a project has been previously specified as a "committed" project, removing it and or replacing it with something else must also meet performance requirements under this

Q19			
Commenter	**Yes**	**No**	**Comment**
			standard or a violation occurs. Also, this performance of the system with the "committed" Corrective Action Plan" removed or modified must be documented. Therefore, requirement R2.7.4 is automatically met and is superfluous in the standard and should be removed. There is no benefit from the distinction between a project definition of "committed" and "proposed".]
Tenaska		☑	Add after the word "requirements" the following: "without the committed projects."
TSGT		☑	R2.7.4 calls for change monitoring. If documentation of changes is required, just say so. Do not restrict changes.
WECC TEP		☑	The requirement is similar to the question posed in Question 17. What is the documentation that proves this is needed?
SaskPower		☑	
BCTC	☑	☑	We have a larger concern. If a project is Committed and is proceeding with construction, why would a transmission planner not consider this is in planning studies. Showing that a committed project is not needed and removing it from the plans, does not necessarily remove it from the future system. In addition to showing that the revised plan meets the performance requirements, the planner needs to include documentation to show that the Committed project has been cancelled.
IESO	☑	☑	We agree that committed projects should not be removed from the revised plan. But we question the need for this sub-requirement which calls for: "Revisions to the Corrective Action Plans are allowed over time but shall meet the performance requirements.." Committed projects are normally included in the planning studies for which the performance is assessed. Deficiency, if identified, will have a corrective plans developed. We do not understand the need to remove or revise the committed plan in this context.
NERC TIS	☑	☑	Any revision to the Corrective Action Plan should be tested to ensure that the revised plan meets the precribed performance requirements. Documentation of that testing is appropriate.
Central Maine Power HQTE National Grid New England ISO NU NPCC RCS NSTAR United Illuminating	☑		It is unclear as to what the commited project is being removed from. Suggested language "…removed from the plan…".
ERCOT ISO CAISO	☑		We agree that committed projects should not be removed from the revised plan. These are supposed to be included in the planning studies which determine the system performance in the first place. The definition of "committed" projects varies from TP to TP so this would require a standard definition.

Q19			
Commenter	**Yes**	**No**	**Comment**
Seattle City	☑		To agree with the comment in Q18, the requirement should read "Corrective Action Plans shall not be modified without documentation to show that the revised plan meets the performance requirements."

Response: Based on your comment and the comment of others that state that "committed" plans could change up until the plan is exercised, the SDT has modified Requirement R2.7.1 and deleted the original Requirement R2.7.2 through Requirement R2.7.4 to require only the Corrective Action Plan and indicates what is intended by the word "actions". The SDT feels that documenting the assessment and making it available to others will by its very nature provide all the information necessary to understand which plans changed and the basis for the new plans.

R2.7.1. ~~Identify~~ List System deficiencies and the associated actions needed to achieve required System performance. ~~including Transmission and generation improvements, DSM, new technologies, or Operating Procedures including the duration of interim Operating Procedures.~~ Such actions may include installation, modification, retirement, or removal of Transmission and generation Facilities and any associated equipment such as protective or Special Protection Schemes, rate applications, DSM, or other initiatives, new technologies, or Operating Procedures including how long the Operating Procedures will be needed as part of the Corrective Action Plan.
R2.7.2. ~~Be added to study cases and the cases re-tested to show that the System with planned additions meets the performance requirements in the tables~~ Contain a description of how and why the consideration of the sensitivities selected in accordance with Requirements R2.1.3, R2.1.4, R2.4.3, and R2.4.4 in the Planning Assessment did or did not result in a modification or expansion of the list of actions developed in accordance with Requirement R2.7.1.
R2.7.3. ~~Include documentation of the criteria for determining committed and proposed projects, with all projects identified as either, 'committed' or 'proposed.'~~
R2.7.4. ~~Not remove committed projects without documentation to show that the revised plan meets the performance requirements.~~

FPL		☑	All projects should be called "Planned" projects. Additionally, see response to question 18.
FRCC		☑	See response to question 18.

Response: Although the comment suggests referring to all plans as "planned", the comment of others that stated that "committed" plans ("planned" in your case) could change up until the plan is exercised; the SDT has modified Requirement R2.7.1 and deleted the original Requirement R2.7.2 through Requirement R2.7.4 to require only the Corrective Action Plan and indicates what is intended by the word "actions". The SDT feels that documenting the assessment and making it available to others will by its very nature provide all the information necessary to understand which plans changed and the basis for the new plans.

R2.7.1. ~~Identify~~ List System deficiencies and the associated actions needed to achieve required System performance. ~~including Transmission and generation improvements, DSM, new technologies, or Operating Procedures including the duration of interim Operating Procedures.~~ Such actions may include installation, modification, retirement, or removal of Transmission and generation Facilities and any associated equipment such as protective or Special Protection Schemes, rate applications, DSM, or other initiatives, new technologies, or Operating Procedures including how long the Operating Procedures will be needed as part of the Corrective Action Plan.
R2.7.2. ~~Be added to study cases and the cases re-tested to show that the System with planned additions meets the performance requirements in the tables~~ Contain a description of how and why the consideration of the sensitivities selected in accordance with Requirements R2.1.3, R2.1.4, R2.4.3, and R2.4.4 in the Planning Assessment did or did not result in a modification or expansion of the list

Q19			
Commenter	**Yes**	**No**	**Comment**
of actions developed in accordance with Requirement R2.7.1. **R2.7.3.** ~~Include documentation of the criteria for determining committed and proposed projects, with all projects identified as either, 'committed' or 'proposed.'~~ **R2.7.4.** ~~Not remove committed projects without documentation to show that the revised plan meets the performance requirements.~~			
ABB	☑		It's kind of obvious. If you require a solution to begin with, then if that solution is removed, another solution must be planned. However, if the removed project is not directly related to the study or problem at hand, then engineering judgment will be needed as to whether or not to repeat the study.
AECC	☑		It should also show the justification for the revision. This is especially true if transmission service is going to be sold using models that contain committed projects. If a plan is revised I would hope the revision would meet the performance requirements better than the project it replaces.
AECI	☑		
Allegheny Power	☑		
AEP	☑		
APPA	☑		It may be necessary, as a band-aid-type substitute, to replace a committed project with a Remedial Action Scheme (RAS)/Special Protection Systems in lieu of new facilities. Whatever the revised plan, it must be shown to meet the performance requirements.
ATC	☑		
City Water Power and Light	☑		
City Utilities/Springfield	☑		
Entegra	☑		
Entergy	☑		
Exelon	☑		
ITC	☑		We agree.
LCRA	☑		
Muscatine P&W	☑		
New York ISO	☑		NYISO Agrees
NCEMC	☑		
PJM	☑		
Progress–Carolinas	☑		We always should be able to show that we meet performance requirements.

Q19			
Commenter	**Yes**	**No**	**Comment**
Progress–Florida	☑		
TVA	☑		
WPS	☑		As stated in response to Q18, it is unclear why the differentiation between "committed" and "proposed" is actually necessary. The standard must allow flexibility, so that the evolution of a Corrective Action Plan can occur within the context of the transmission planning principles of FERC Order 890.
Response: Thank you but due to the majority of industry response to this question, the requirements have been changed			

D) Performance Requirements

The proposed revised planning standard (TPL-001-1) incorporates a number of changes in requirements as compared to the current planning standards (TPL-001-0 through TPL-004-0), which it is expected to replace. Among other things these changes are intended to clarify the standard, address issues described by FERC, and, in particular, to "raise the bar." Strengthening the planning standards in selected areas is necessary to maintain a reliable Bulk Electric System that is up to the challenges of the 21st Century. In proposing the requirements in this draft, the standard drafting team attempted to balance the value of increased reliability against any potential increase in work and costs to meet the new proposed standard.

The standard drafting team is seeking input from the industry to determine whether a proper balance has been achieved. The areas where material changes are proposed in this draft are enumerated below, and questions are posed by the standard drafting team to obtain industry comment. In formulating your responses, please keep in mind that material changes in the final standard will be accompanied by a transition plan to provide for an orderly implementation of the final standard.

The performance requirements relative to Non-Consequential Loss of Load for the following events enumerated in the two tables can be considered more stringent than the existing TPL standards. Furthermore, the proposed standard is based on an assumption that performance requirements for EHV facilities should be more stringent than for lower voltage facilities.

Do you agree that Non-Consequential Loss of Load should not be permitted for the following events? If you disagree, please provide a reason for your disagreement.

20) Q20. P2-1: Loss of bus section (SLG for stability) above 300 kV

Summary Response: The SDT has considered industry comments and has incorporated changes in the definition of Consequential Load Loss. The SDT has also revised Tables 1 & 2 to add greater detail and provide for more situations where it is acceptable to lose Non-Consequential Load. However, the SDT did not feel that any change needed to be made to this requirement. Note: P2-1 from the original draft is now P2-2 in the revision.

Many of the responders have asked the question why the distinction for bus sections above 300 kV. The SDT has prepared the following response.

The initial draft of the proposed Transmission planning standard held the planning of 300 kV and higher Transmission Systems to a more stringent requirement than the remaining BES. Although not unanimous, the majority of the SDT believed the 300 kV and higher Systems (EHV) generally represent the backbone of many Systems in the various Interconnections and that the more stringent requirements were appropriate when considering N-1-1 Contingencies of two EHV Facilities. Systems operated above 300 kV generally do not directly serve end-use Load customers but rather act as the medium for moving large amounts of power from production to various Load centers where the energy is then delivered by other Transmission or sub-Transmission Systems to end-use customers. It is the desire of NERC and various stakeholders that the backbone of the electric power grid be robust and held to a higher degree of reliability.

When EHV Systems are compromised, the large volumes of power they serve can place a severe amount of stress on parallel EHV or lower voltage paths. For example, if a large EHV transformer experiences a catastrophic failure, not only are other systems Facilities required to carry more Load but the System is also exposed to other N-1 conditions for long periods of time while awaiting a replacement or repair of the failed equipment. Large generation sources are typically connected at EHV levels and maintenance of the EHV transmission lines within the vicinity of large generation plants must often be coordinated during scheduled unit outages, resulting again in multiple Facility outages over extended periods of time.

Therefore, it was the conclusion of the SDT in Draft 1 to propose greater reliability and operational flexibility through more stringent performance requirements when considering certain N-1 and N-1-1 Contingency events of EHV Systems. Throughout the industry, substation arrangements at EHV levels reflect the importance of these systems as the designs often consist of the more flexible and reliable ring-bus, breaker-and–a-half or double bus-double breaker protection schemes as compared to the simpler, lower cost single bus arrangements that are commonly found on lower voltage systems.

The feedback received from the industry was divided related to the SDT's emphasis placed on a higher expectation for the 300 kV and higher systems. Some commenters questioned the importance and the high costs that may be needed to mitigate existing system designs. Others agreed with the SDT's approach and indicated that the impact to their systems would be minimal. Some commenters even questioned why the more stringent approach was not applied to the entire 100 kV and higher systems. The SDT believes the Draft 2 changes are responsive to industry feedback and reflect an appropriate middle ground related to the importance of the EHV Transmission System.

Q20			
Commenter	**Agree**	**Disagree**	**Comment**
ABB			Loss of load is not usually considered by tranmission planners. In power flow studies, they look at flows and voltages versus limits. In stability studies, they are looking for angles, speeds, and voltages that stabilize at good values, possibly with temporary excursions less than some limits. How should all these be converted to a loss of load value? Normally we ensure no loss of load <because> we meet thermal, voltage, and stability requirements. Maybe you are saying that planners should not use load tripping as a solution for these violations?
Response: Tripping of Load can be used as an operating tool to maintain or restore a System to acceptable performance. The standard needs to quantify whether this action is acceptable from a planning perspective and, if so, then it needs to quantify the acceptable situations and limits. This second draft is proposing that no Non-Consequential Load may be tripped for the loss of a 300 kV (or higher) bus section for a first contingency event. (See Table 1)			
LADWP			There is a fundamental fatal flaw in having different reliability requirements using an arbitrary separation of the connected bulk electrical systems into above 300kV and below 300kV. The standard should be re-draft without this separation and comments be solicited at that time. These questions are fundamentally unfair without first settling whether or not it is wise to arbitrary separate the bulk system into two different classes. This is like asking someone "Did you hit your spouse today?"
Response: Draft 2 has been modified for 300 kV and higher systems regarding N-1-1 conditions: Based on industry feedback the SDT has made changes in proposed Draft 2 requirements related to two independent overlapping single Contingencies involving two non-generation Transmission Facilities operated at a voltage level above 300 kV. Draft 2 now permits the loss of Non-Consequential Load to meet the Transmission performance requirements for these types of events. Please refer to performance tables Planning Event P6. It is noted that in Draft 2 the SDT is still requiring more stringent performance requirements of the EHV Transmission for the less probable, but greater risk single Contingency events. Please refer to performance tables Planning Event P2 and note that bus section faults and internal breaker faults (non-bus tie) associated with above 300 kV Facilities are held to a higher performance standard than those operated at 300 kV or below. Please see also summary response.			
Muscatine P&W			See Q43 Comment #5.
Response: See Q43 response.			
Dominion		☑	Usually, this type of outage will not involve non-consequential load loss,

Q20			
Commenter	**Agree**	**Disagree**	**Comment**
			however, there may be specific situations where local non-consequential load loss could be justified. This is consistent with how transmission systems have been designed for many years and approved by State commissions. Transmission Owners need to have some flexibility to balance grid reliability vs. cost to the ratepayer. In some instances, the expense required to eliminate all local non-consequential load loss cannot always be justified if there is no significant improvement in wide area bulk power system reliability. In other words, making the standards more stringent by "raising the bar" is not going to result in a dramatic improvement in system reliability. Even the best designed systems are susceptible to human error. Dominion has at least 5 years of transmission outage data clearly illustrating that any resulting loss of load (both consequential and non-consequential) has had an average duration of only 4-7 customer-minutes per year. Going forward, the emphasis and focus should be on planning and operating the bulk electric system so as to confine any transmission outages to the immediate, local area, and not allow the cascading of outages beyond control area boundaries.
Response: The SDT agrees that typically systems are designed such that Non-Consequential Load won't be lost, which should minimize the exposure to non-compliance for most companies. The SDT agrees that the focus of the standard needs to be on network performance and has added greater detail to Tables 1 & 2 which address the comment. The standard is a planning document; so although the SDT agrees that operating the BES is an important issue, it is not the focus of this standard.			
Northwestern Energy		☑	What is non-consequential load loss? Is losing a motor due to motor contactor action a non-consequential load loss? Also, the transmission system was developed under criteria without this requirement and to correct it would be costly.
Response: Consequential and Non-Consequential Load Loss involves Transmission System actions not customer equipment response to system performance, which in some cases may be within a tolerable system bandwidth, but not within the customer set points. The standard anticipates that the system will be designed to meet the expected Load, which implies that customer tripping of its own Load should not be the focus in planning studies. This has been addressed in the definition of Consequential Load Loss.			
BCTC		☑	Do not agree based on SDT definition for Consequential and Non-Consequential Load Loss. Will agree subject to proposed revisions to definitions of Consequential and Non-Consequential Load loss.
Response: The SDT has considered industry comments and has incorporated changes in the definition of Consequential Load Loss which should address your concerns.			
CAISO		☑	Loss of bus section is Category C for which the current NERC criteria allows controlled loss of load. The NERC system has been designed with this criteria. To create a more stringent standard would require to build hundreds of miles of new transmission lines to bring the existing system to NERC compliance. What are the potential benefits of this stringent criteria? Also, what is the

Q20			
Commenter	**Agree**	**Disagree**	**Comment**
			reasoning behind selecting 300 kV as a cut off level?
Tenaska		☑	May need to consider using 500 kV as some transmission providers serve load off of the 345 kV system which could be triggered by this event.
Response: It is not clear if the comment is referring to Consequential or Non-Consequential Load, but greater detail has been added to Tables 1 & 2, which should address your comment.			
Exelon	☑	☑	We do not agree with disallowing non-consequential load loss for these scenarios for the peak load conditions. These are very low probability contingencies, and some non-consequential load loss should be allowed at peak load. We would agree that it would be reasonable to dis-allow non-consequential load loss for these contingencies at a lower load level, such as 75% of peak load.
MEAG Power		☑	By not allowing non-consequential load loss, utilities will incur significant expenditures to solve a problem with an extremely low probability of occurrence. The benefit will not justify the cost.
FPL FRCC		☑	This loss is currently distinguished from other single contingencies because of its lower probability of occurrence and a more stringent performance requirement than currently exists is not warranted.
MRO		☑	This is a low probability event that could have significant impact on the system which historically have been designed to allow local load dropping including non-consequential load. The SDT should justify that the benefit to customers of this increased reliability justifies the cost of this change to customers. Alternatively, the SDT should define a level (such as 1000 MW) of non-consequential load that is acceptable for such low probability events.
Progress–Florida		☑	This single contingency event has a very low probability of occurrence, and thus a more stringent performance requirement than currently exists is not warranted.
NCEMC	☑		Although this is a relatively low probability event, we do agree that it should be assessed given the widespread effects. It may not justify the need for a network upgrade but at least deserves consideration for an operating or corrective action procedure should the event occur. Also, given this analysis might be new for some TPs, consideration should be given to a transition period after the start of this type of assessment.
Santee Cooper		☑	We do not agree with the concept of non-consequential load loss. To maintain system reliability, the disconnect of any load should be allowed.
SCE&G		☑	SCE&G does not agree with the concept of non-consequential load loss. To maintain system reliability, the disconnect of any load should be allowed. If not allowed, unprecedented new transmission costs will be required. These costs will be for local area improvements and will NOT result in increased

Q20			
Commenter	**Agree**	**Disagree**	**Comment**
			transfer capabilities for markets.
SaskPower		☑	The SDT should justify that the benefit to customers of this increased reliability justifies the cost.
SERC EC DRS SERC EC PSS SERC RRS OPS		☑	By not allowing non-consequential load loss, utilities will incur significant expenditures to solve a problem with an extremely low probability of occurrence. The benefit will not justify the cost.
Southern Transm.		☑	By not allowing non-consequential load loss, utilities will incur significant expenditures. The marginal increase in reliability for this low probability event does not justify the huge costs involved.
Response: To address your concern, the SDT will consider a transition policy as part of the implementation plan to allow for Transmission Owners to respond to requirements that involve raising the bar. The implementation plan will be developed for a subsequent posting. As a first step the SDT has added greater detail to Tables 1 & 2, which provides for more situations where it is acceptable to lose non-consequential load.			
TEP		☑	R1 and R2 address some Load Forecast issues, but are not exhaustive specifications of what Load Forecast range to use in studies. There needs to be some mention of exceedance probability (ExPr) in Load Forecast criteria. For example, we use a forecast with a low ExPr in our studies because we are concerned that, if the system was planned for 50% ExPr (a lower forecast), actual deviation from that forecast might result in load at certain locations exceeding operating margins built into the interconnected transmission system designed to serve only the 50% ExPr forecast load. Load Specifications in R2.4 are ambiguous for the reasons stated above. Maximum study ages in R2.6.1 and R2.6.2 seem arbitrary. The time limit does not seem to add anything to the criteria if no material changes have occurred. If spot checks of the most critical areas indicated no criteria violations, there should be no reason to rerun studies. To correct this problem, we suggest using the term "assessment" rather than "study". For most people, "study" implies detailed modeling and simulation analyses summarized in a report, whereas "assessment" implies a reasonable, systematic evaluation of a system which does not necessarily include detailed analysis for the entire system.
Response: The SDT has made several changes to the referenced sections. The SDT agrees that "assessment" and "study" have different implications and reflected that in this revision.			
WECC BPA TSGT		☑	The Bulk Electric System has been developed without this requirement. Before making the entire NERC system adopt this more stringent Standard, the SDT needs to show or address the benefits of this more stringent requirement with

Q20			
Commenter	**Agree**	**Disagree**	**Comment**
			the cost of adaptation. Compliance with this standard as proposed could require some utilities to add hundreds of miles of new transmission lines or build out hundreds of MW of new load-side generation. Cost of these new facilities would eventually be borne by the end-use customer. A cost benefit balance has been arrived at over many years time between the customers and the regulators. Also, how will existing systems be handled for compliance? Is there a logical reason for the use of the 300kV cut-off level? We believe that this type of load shedding should be allowed for these conditions at any voltage level. In any case, consideration should also be taken on whether the non-consequential load loss is Interruptible load or firm demand.
Response: It is not clear if the comment is referring to consequential or non-consequential load, but greater detail has been added to Tables 1 & 2, which provides for more situations where it is acceptable to lose load and may address part of the comment. The following response is provided to the issue raised relative to the 300 kV cut-off. Draft 2 Changes for 300 kV and higher systems regarding N-1-1 conditions**:** Based on industry feedback the SDT has made changes in proposed Draft 2 requirements related to two independent overlapping single Contingencies involving two non-generation Transmission Facilities operated at a voltage level above 300 kV. Draft 2 now permits the loss of Non-Consequential Load to meet the Transmission performance requirements for these types of events. Please refer to performance tables Planning Event P6. It is noted that in Draft 2 the SDT is still requiring more stringent performance requirements of the EHV Transmission for the less probable, but greater risk single Contingency events. Please refer to performance tables Planning Event P2 and note that bus section faults and internal breaker faults (non-bus tie) associated with above 300 kV facilities are held to a higher performance standard than those operated at 300 kV or below. Please see also summary response.			
WPS		☑	It is not clear why the standard has established 300 kV as the differentiation point between allowing non-consequential load loss and not allowing it. The standard has established different planning requirements for different voltage levels without establishing why the differentiation is necessary. While transmission facilities over 300 kV in some areas of the country may be considered the "backbone", it is not universally applicable; in some areas, 230 kV and even 138 kV represent the "backbone" of the transmission system. The standard should not bisect the transmission system and apply two different planning requirements without clearly establishing why the differentiation is necessary.

Q20			
Commenter	**Agree**	**Disagree**	**Comment**
			Additionally, Table 1 needs to clarify the use of the term "Firm Transfers" and the interruption of "Firm Transfers" as an acceptable response to an event. "Firm transfers" is not a standard transmission service offering under the ProForma OATT. The standard must be consistent with service types defined under the ProForma OATT. Suggest that the phrasse "Firm Transfers" be replaced with "Firm Transmission Service consisting of Point-to-Point and Network Integration Transmission Service"
Response: The following response is provided to the issue raised relative to the 300 kV cut-off. Draft 2 Changes for 300 kV and higher systems regarding N-1-1 conditions**:** Based on industry feedback the SDT has made changes in proposed Draft 2 requirements related to two independent overlapping single Contingencies involving two non-generation Transmission Facilities operated at a voltage level above 300 kV. Draft 2 now permits the loss of Non-Consequential Load to meet the Transmission performance requirements for these types of events. Please refer to performance tables Planning Event P6. It is noted that in Draft 2 the SDT is still requiring more stringent performance requirements of the EHV Transmission for the less probable, but greater risk single Contingency events. Please refer to performance tables Planning Event P2 and note that bus section faults and internal breaker faults (non-bus tie) associated with above 300 kV facilities are held to a higher performance standard than those operated at 300 kV or below. Please see also summary response. With regards to 'Firm Transfers', 'Firm Transmission Service' is now referenced in the Tables.			
Entergy	☑		Table 1 does not specify "SLG"
PJM	☑		Should be a 3 phase fault not a single line to ground fault.
Response: The tables have been revised and Table 2 differentiates between SLG and 3 phase faults.			
HQTE	☑		The term "bus section" needs to be clarified. Some examples should be given showing actual diagram of substation layout.
Response: The SDT discussed the definition of a 'bus section', but elected not to include a definition or examples in the standard.			
ITC	☑		Should also consider no or limited loss of load for facilities 100 kV and above.
Response: ITC may elect to apply the greater than 300 kV requirement to Facilities greater than 100kV for their own use. However, the SDT feels application to the greater than 300 kV is more appropriate for the requirements in this standard.			
Manitoba Hydro	☑		With the caveat that if the loss of load is localized, it is acceptable. Raising the bar will result in a cost increase for owners and users of the transmission system. What evidence does the SDT have to show this is justified.

Q20			
Commenter	**Agree**	**Disagree**	**Comment**
Response: The ATFNSDT has added greater detail to Tables 1 & 2, which provides for more situations where it is acceptable to lose load.			
AECC	☑		neither should consequential load be lost for any n-1 faults on the 300 kv system and higher.
AECI	☑		
Allegheny Power	☑		
AEP	☑		
APPA	☑		Note to APPA members – Please examine closely and give us specific comments on Q20 – Q29. If you disagree we need to know.
ATC	☑		
Ameren	☑		No significant material change identified.
CenterPoint	☑		
Central Maine Power	☑		
City Utilities/Springfield	☑		
CPS Energy	☑		
Duke Energy	☑		
Entegra	☑		
Brazos Electric	☑		
City Water Power and Light	☑		
E ON US	☑		
ERCOT ISO	☑		
FirstEnergy	☑		
Georgia Transm.	☑		No change from current standards.
IESO	☑		We agree, since the loss of a bus is a single contingency. This is a criterion already adopted by the IESO and other members in the NPCC region, for which non-consequential loss of load is not permitted.
ISO/RTO	☑		
KCPL	☑		
LCRA	☑		

Q20			
Commenter	**Agree**	**Disagree**	**Comment**
MISO	☑		No indirect (non-consequential) loss of load for single contingency events, else operator is in SOL pre-contingency without such planning.
National Grid	☑		
NERC TIS	☑		Loss of a bus section is a single contingency. Non-consequential load loss should not be allowed.
New England ISO	☑		
New York ISO	☑		
NU	☑		
NPCC RCS	☑		
Nstar	☑		
PRPA	☑		
Progress–Carolinas	☑		
Seattle City	☑		
SRP	☑		
United Illuminating	☑		
Response: Thank you.			

21) Q21. P5-1: For facilities above 300 kV, loss of a Transmission circuit followed by System adjustment[1] followed by loss of another Transmission circuit

Summary Response: Based on industry feedback, the SDT has made changes in proposed Draft 2 requirements related to two independent overlapping single Contingencies (N-1-1) involving two Transmission Facilities operated at a voltage level above 300 kV. Draft 2 now permits the loss of Non-Consequential Load to meet the Transmission performance requirements for these types of events. Please refer to performance tables Planning Event P6.

It is noted that in Draft 2 the SDT is still requiring more stringent performance requirements of the EHV Transmission for the less probable, but greater risk single Contingency events. Please refer to performance tables Planning Event P2 and note that bus section faults and internal breaker faults (non-bus tie) associated with above 300 kV Facilities are held to a higher performance standard than those operated at 300 kV or below.

Q21			
Commenter	**Agree**	**Disagree**	**Comment**
Muscatine P&W			See Q43 Comment #5.
Response: See responses for Q43.			
Ameren		☑	Load pockets supplied by a single EHV substation with only two supplies would not meet this proposed requirement, whereas the existing TPL-003-0 standard would allow the dropping of load for the multiple outage event. A significant material change to build new facilities would be needed to meet the new requirement.
AEP	☑		Consider adding clear definition of "system adjustments", including the amount of time permited to implement prior to the loss of the second facility.
CenterPoint		☑	The forced outage of two independent lines has a low probability of occurrence and should be considered an improbable event with non-consequential load loss permitted.
Central Maine Power HQTE New England ISO NU NPCC RCS NSTAR United Illuminating		☑	Given the low probability of extended overlapping outages of overhead facilities, systems have been designed assuming that load shedding following the loss of a second transmission line is permissible. Eliminating any allowance for load shedding for this condition may require significant system expansion and cost to to customers. However, it would be reasonable to consider establishing an upper bound to the amount of load that could be shed for these purposes.
E ON US		☑	Outage of two 345 kV circuits can create local area issues that result in loss of load but do not affect the integrity of the BES.
ERCOT ISO CAISO		☑	This event falls under Category C for which controlled loss of load is allowed. Clear net benefits should be demonstrated to justify adapting to a new stringent criteria.
Duke Energy		☑	Allow indirect (Non-Consequential) loss of load for events involving short duration outages, such as typical line outages that do not result in cascading outages.
Entergy		☑	N-1-1 requires an increase in investment that will place an undue cost burden on all customers for low probability events.

Q21			
Commenter	**Agree**	**Disagree**	**Comment**
			See comments to Q43.
Exelon	☑	☑	We do not agree with disallowing non-consequential load loss for these scenarios for the peak load conditions. These are very low probability contingencies, and some non-consequential load loss should be allowed at peak load. We would agree that it would be reasonable to dis-allow non-consequential load loss for these contingencies at a lower load level, such as 75% of peak load.
FirstEnergy		☑	Shedding load could be part of the system adjustment in preparation for the next possible contingency but load drop would not be acceptable for problems caused soley by the first contingency.
FPL FRCC		☑	Systems have been designed such that Multiple Contingency events (N-2) may result in Planned/Controlled Loss of Demand or Curtailed Firm Transfers. Such Non-Consequential Load Loss should be assessed for severity on a risk vs. consequence basis. In addition, by not allowing loss of non-consequential load, the system may remain in a less secure state or condition.
Georgia Transm.		☑	This requirement appears unreasonable for a network system and, particularly, for a series of events. This requirement would be well above current reliability standards. The requirement would also result in higher investment costs for the utilities.
MISO		☑	Allow indirect (Non-Consequential) loss of load for events involving short duration outages, such as typical line outages.
MRO		☑	This is a low probability event that could have significant impact on the system which historically have been designed to allow local load dropping including non-consequential load. The SDT should justify that the benefit to customers of this increased reliability justifies the cost of this change to customers. Alternatively, the SDT should define a level (such as 1000 MW) of non-consequential load that is acceptable for such low probability events.
Progress–Carolinas	☑		It is absolutely necessary, however, to allow interruption of firm transfers as a System adjustment. To do otherwise would cause extremely large expenditures for very low probability independent events.
Progress–Florida		☑	The severity of this event is such that Non-Consequential Loss of Load might be a necessary operating procedure in a Corrective Action Plan as part of System restoration. Furthermore, the greater-than-300 kV Bulk Electric System has been designed such that Multiple Contingency events (N-2) may result in Planned/Controlled Loss of Demand or Curtailed Firm Transfers. Such Non-Consequential Load Loss should be assessed for severity on a risk vs. consequence basis, placing particular importance on confining the event to a single area (i.e., not resulting in a cascading outage). Past assessments as well as actual events have demonstrated that by not allowing loss of non-consequential load, the Bulk Electric System may actually remain in a less secure state or condition, i.e. in more danger of experiencing cascading outages.
Santee Cooper		☑	We do not agree with the concept of non-consequential load loss. To maintain system reliability, the disconnect of any load should be allowed. By not allowing non-consequential load loss,

Q21			
Commenter	**Agree**	**Disagree**	**Comment**
			utilities will incur significant expenditures to solve a problem with an extremely low probability of occurrence. The benefit will not justify the cost.
Seattle City		☑	Loss of two major HV elements can drive our region into undervoltage conditions, forcing us to shed non-consequential load per UVLS standard requirements. Loss of two major HV elements can drive our region into undervoltage conditions, forcing us to shed non-consequential load per UVLS standard requirements.
SERC EC DRS SERC EC PSS SERC RRS OPS SCE&G		☑	By not allowing non-consequential load loss, utilities will incur significant expenditures to solve a problem with an extremely low probability of occurrence. The benefit will not justify the cost.
Southern Transm.		☑	This is a very significant change in the performance requirements in this reliability standard. It involves facilities from 345 kV through 764kV which carry significant amounts of power. These also are facilities that require significant lead time to construct in the Southern Balancing Authority with estimates up to 7-10 years in the state of Georgia. If a performance problem is detected under these new requirements, it could take that long to come into compliance and at a very significant cost if a new major 500kV line is required. These facilities can run as much as $4.0 million a mile or more in urban areas. We understand that a few areas of the country presently have this requirement but most do not. In the areas where the requirement has not been in place, the reliability of the system has been acceptable to the local Public Service Commissions that have governed the service to Retail customers. There has been no evidence presented that there is a need for an increase in reliability, particulary at the extensive time delay and expense possible from this particular requirement. An adoption of this standard without such evidence can only be considered arbitrary and capricious at best. Increased reliability is, in general, a worthy goal where it is cost effective. It may be appropriate to adopt this type of reliability requirement for areas that deem the resulting reliability increase to be cost effective for their customers. But it is inappropriate to "require" everyone else to be forced to live under this arbitrarily developed expansion of reliability requirements.
TVA		☑	By not allowing non-consequential load loss, utilities will incur significant expenditures to construct a transmission solution for some extremely low probability events with low consequence. Each utility should have the flexibility to base action on probability and consequence. Load shed by UVLS or other means should remain an option to maintain reliability if probability is extremely low, but the high consequence of an event determines that a solution is necessary.
Response: The SDT has added greater detail to Tables 1 & 2, which provides for more situations where it is acceptable to lose load.			
Dominion		☑	See comment for Question 20 above.
Response: See response to question 20.			
Northwestern Energy		☑	What is non-consequential load loss? Is losing a motor due to motor contactor action a non-consequential load loss? Also, the transmission system was developed under criteria without this

Q21			
Commenter	**Agree**	**Disagree**	**Comment**
			requirement and to correct it would be costly.
Response: Consequential and Non-Consequential Load Loss involves Transmission System actions not customer equipment response to system performance, which in some cases may be within a tolerable system bandwidth, but not within the customer set points. The standard anticipates that the System will be designed to meet the expected Load, which implies that customer tripping of its own Load should not be a consideration in planning studies. This has been addressed in the definition of Consequential Load Loss.			
BCTC		☑	Do not agree based on SDT definitions. Also do not agree for first outage being a forced outage. Will agree subject to above revisions to definitions of Consequential and Non-Consequential Load loss for the first outage being a planned outage but not a forced outage. To meet this requirement for forced outages, estimate that this change could cost $3 to 5 Billion.
Response: The SDT has considered industry comments and has incorporated changes in the definition of Consequential Load Loss, which should address your concerns.			
CPS Energy		☑	Should be determined at the discretion of the Transmission Planners.
Response: The standard needs to provide some consistency and needs to define the desired level of System reliability, which will provide a level playing field and will provide guidance and support for the Transmission Planners as they deal with external entities.			
MEAG Power		☑	See Q20 above.
Response: See response to question 20.			
SRP		☑	The time to adjust the system needs to be provided (when does a N-1-1 become a N-2?). If the cause of the outage is transient (temporary) the operator needs some time to test and restore the element (could be minutes up to several hours). If the element is lost indefinitly, the operator will need some minimum time to adjust the system. If this time is not available prior to the next N-1 then the standard should allow Non-Consequetial Loss of Load.
Response: The time the operators have will depend on their time dependent ratings that they have to work with. Many users have a 30 minute rating.			
SaskPower		☑	The SDT should justify that the benefit to customers of this increased reliability justifies the cost.
Response: The SDT has added greater detail to Tables 1 & 2, which provides for more situations where it is acceptable to lose load, which should reduce the increased cost exposure.			
Tenaska		☑	See comment in Q20.
Response: See response to question 20.			
WECC BPA TSGT TEP		☑	The Bulk Electric System has been developed without this requirement. Before making the entire NERC system adopt this more stringent Standard, the SDT needs to show or address the benefits of this more stringent requirement with the cost of adaptation. Compliance with this standard as proposed could require some utilities to add hundreds of miles of new transmission lines or build out hundreds of MW of new load-side generation. Cost of these new facilities would eventually be borne by the end-use customer. A cost benefit balance has been arrived at over many years time between the customers and the regulators. Also, how will existing systems be handled for compliance?

Q21			
Commenter	**Agree**	**Disagree**	**Comment**
			Is there a logical reason for the use of the 300kV cut-off level? We believe that this type of load shedding should be allowed for these conditions at any voltage level. In any case, consideration should also be taken on whether the non-consequential load loss is Interruptible load or firm demand.
Response: Draft 2 Changes for 300 kV and higher systems regarding N-1-1 conditions**:** Based on industry feedback the SDT has made changes in proposed Draft 2 requirements related to two independent overlapping single Contingencies involving two non-generation Transmission Facilities operated at a voltage level above 300 kV. Draft 2 now permits the loss of Non-Consequential Load to meet the Transmission performance requirements for these types of events. Please refer to performance tables Planning Event P6. It is noted that in Draft 2 the SDT is still requiring more stringent performance requirements of the EHV Transmission for the less probable, but greater risk single Contingency events. Please refer to performance tables Planning Event P2 and note that bus section faults and internal breaker faults (non-bus tie) associated with above 300 kV facilities are held to a higher performance standard than those operated at 300 kV or below. Please see also summary response. With regards to 'Firm Transfers', 'Firm Transmission Service' is now referenced in the Tables.			
WPS		☑	See response to Q20.
Response: See response to question 20.			
IESO	☑	☑	The sequence of events is too general that under some condition, it contradicts with the loss of 2 circuits on the same tower for which non-consequential loss of load is permitted. If the sequence of events is specified such that the two transmission circuits that can be lost are unrelated, then non-consequential loss of load should generally not be allowed following system adjustments after the loss of the first transmission circuit.
Response: Thank you but due to the majority of industry response to this question, the requirement has been changed.			
ITC	☑		Should also consider no or limited loss of Non-consequential load for facilities 100 kV and above. This should be no loss for load levels where the TO would expect to perform system maintenance.
Response: ITC may elect to apply the greater than 300 kV requirement to facilities greater than 100kV for their own use. However, the ATFNSDT feels application to the greater than 300 kV is more appropriate for the requirements in this standard.			
New York ISO	☑		We are assuming the second circuit is un-related to the first. If that is not the intent then it contracts the loss of multiple related circuits (same tower or protection zone) for which non-consequential load loss is allowed.
NCEMC	☑		We do agree that given the widespread effects of these facilities above 300 kV that these should be subjected to more rigorous assessments.

Q21			
Commenter	**Agree**	**Disagree**	**Comment**
AECC	☑		neither should consequential load be lost for any n-1 faults on the 300 kv system and higher.
AECI	☑		
Allegheny Power	☑		
APPA	☑		
ATC	☑		
Brazos Electric	☑		
City Utilities/Springfield	☑		
City Water Power and Light	☑		
Entegra	☑		
ISO/RTO	☑		
KCPL	☑		
LCRA	☑		
Manitoba Hydro	☑		
National Grid	☑		
NERC TIS	☑		This becomes a differentiation between an event and a contingency - if there is time to adjust the system, it is really two events. Non-consequential load loss based on the first event is hard to fathom. Loss of load following the second event is either consequential to the second event (even if load was isolated by the first event) or non-consequential to the second event.
PJM	☑		
Response: Thank you but due to the majority of industry response to this question, the requirement has been changed			

22) Q22. P5-2: For facilities above 300 kV, loss of a Transmission circuit followed by System adjustment followed by loss of a transformer with low side voltage rating above 300 kV

Summary Response: Draft 2 Changes for 300 kV and higher systems regarding N-1-1 conditions**:**

Based on industry feedback the SDT has made changes in proposed Draft 2 requirements related to two overlapping single Contingencies involving two non-generation Transmission Facilities operated at a voltage level above 300 kV. Draft 2 now permits the loss of Non-Consequential Load to meet the Transmission performance requirements for these types of events. Please refer to performance tables Planning Event P6.

It is noted that in Draft 2 the SDT is still requiring more stringent performance requirements of the EHV Transmission for the less probable, but greater risk single Contingency events. Please refer to performance tables Planning Event P2 and note that bus section faults and internal breaker faults (non-bus tie) associated with above 300 kV facilities are held to a higher performance standard than those operated at 300 kV or below.

Why the distinction for above 300 kV Transmission?

The initial draft of the proposed Transmission planning standard held the planning of 300 kV and higher Transmission Systems to a more stringent requirement than the remaining BES. Although not unanimous, the majority of the SDT felt the 300 kV and higher systems generally represent an extra-high-voltage (EHV) range that is considered the backbone of many systems in the various Interconnections and that the more stringent requirements were appropriate when considering N-1-1 Contingencies of two EHV Facilities. Systems operated at this range generally do not directly serve end-use Load customers but rather act as the medium for moving large amounts of power from production to various Load centers which then deliver the power among other Transmission or sub-Transmission Systems to end use customers. It is the desire of NERC and various stakeholders that the backbone of the electric power grid be robust and held to a higher degree of reliability.

When EHV systems are compromised, the large volumes of power served by them can place a severe amount of stress on parallel EHV or lower voltage paths. For example, if a large EHV transformer experiences a catastrophic failure, not only are other systems Facilities required to carry more load but the system is also exposed to other N-1 conditions for long periods of time while awaiting a replacement or repair of the failed equipment. Large generation sources are typically connected at EHV levels and maintenance of the EHV Transmission lines within the vicinity of larges generation plants must often be coordinated during scheduled unit outages, resulting again in multiple Facility outages over extended periods of time.

Therefore, it was the conclusion of the SDT in Draft 1 to propose greater reliability and operational flexibility through more stringent performance requirements when considering certain N-1 and N-1-1 Contingency events of EHV systems. Throughout the industry substation arrangements at EHV levels reflect the importance of these systems as the designs often consist of the more expensive ring-bus, breaker-and –a-half or double bus-double breaker protection schemes as opposed to the more simplistic and lesser cost single bus arrangements that are commonly found on lower voltage systems.

The feedback received from industry was divided related to SDT's emphasis placed on a higher expectation for the 300 kV and higher systems. Some commenter's questioned the importance and the high costs that may be needed to mitigate existing system designs.

Others agreed with the SDT's approach and indicated that the impact to their systems would be minimal. Some commenter's even questioned why the more stringent approach was not applied to the entire 100kV and higher systems. The SDT believes the Draft 2 changes are responsive to industry feedback and reflect an appropriate middle ground related to the importance of the EHV transmission system.

Q22			
Commenter	**Agree**	**Disagree**	**Comment**
Muscatine P&W			See Q43 Comment #5.
Response: See Q43 response.			
Dominion		☑	See comment for Question 20 above.
MEAG Power		☑	See Q20 above.
Tenaska		☑	See comment in Q20.
TVA		☑	See Q20.
WPS		☑	See response to Q20.
Response: See response to Q20.			
E ON US		☑	Outage of two 345 kV circuit and a transformer can create local area issues that result in loss of load but do not affect the integrity of the BES.
Response: The condition you describe appears to be more stringent then the outage the SDT was asking industry to consider; N-1-1 involving a line and transformers where each are operated at a voltage level above 300 kV. However, based on industry feedback the SDT has made changes in proposed requirements for two overlapping single Contingencies involving two Transmission Facilities operated at a voltage level above 300 kV. We have adjusted our approach to two independent overlapping single Contingencies (N-1-1) involving two non-generator related outages and now permit the loss of Non-Consequential Load to meet the Transmission performance requirements; see Performance Table Planning Event P6. See the above Summary Response area for additional information.			
Northwestern Energy		☑	What is non-consequential load loss? Is losing a motor due to motor contactor action a non-consequential load loss? Also, the transmission system was developed under criteria without this requirement and to correct it would be costly.
Response: Please see the proposed Glossary Definition for Non-Consequential Load. The proposed definition for Consequential Load clarifies that losing a motor due to motor contactor action is considered to be the loss of Consequential Load.			
BCTC		☑	Same comments as for Q21. We do not foresee any cost due to this standard at this time because we do not have any transformers with low side voltage rating above 300 kV.
CAISO		☑	This event also falls under Category C for which the current NERC criteria allows controlled loss of load. Clear net benefits should be demonstrated to justify adapting to a new stringent criteria.
MRO		☑	This is a low probability event that could have significant impact on the system which historically have been designed to allow local load dropping including non-consequential load. The SDT should justify that the benefit to customers of this increased reliability justifies the cost of this

Q22			
Commenter	**Agree**	**Disagree**	**Comment**
			change to customers. Alternatively, the SDT should define a level (such as 1000 MW) of non-consequential load that is acceptable for such low probability events.
Santee Cooper SERC EC DRS SERC EC PSS SERC RRS OPS SCE&G		☑	By not allowing non-consequential load loss, utilities will incur significant expenditures to solve a problem with an extremely low probability of occurrence. The benefit will not justify the cost.
SaskPower		☑	The SDT should justify that the benefit to customers of this increased reliability justifies the cost.
Southern Transm.		☑	See comments for Q21. [This is a very significant change in the performance requirements in this reliability standard. It involves facilities from 345 kV through 764kV which carry significant amounts of power. These also are facilities that require significant lead time to construct in the Southern Balancing Authority with estimates up to 7-10 years in the state of Georgia. If a performance problem is detected under these new requirements, it could take that long to come into compliance and at a very significant cost if a new major 500kV line is required. These facilities can run as much as $4.0 million a mile or more in urban areas. We understand that a few areas of the country presently have this requirement but most do not. In the areas where the requirement has not been in place, the reliability of the system has been acceptable to the local Public Service Commissions that have governed the service to Retail customers. There has been no evidence presented that there is a need for an increase in reliability, particulary at the extensive time delay and expense possible from this particular requirement. An adoption of this standard without such evidence can only be considered arbitrary and capricious at best. Increased reliability is, in general, a worthy goal where it is cost effective. It may be appropriate to adopt this type of reliability requirement for areas that deem the resulting reliability increase to be cost effective for their customers. But it is inappropriate to "require" everyone else to be forced to live under this arbitrarily developed expansion of reliability requirements.]
NCEMC	☑		We do agree that given the widespread effects of these facilities above 300 kV that these should be subjected to more rigorous assessments.
Progress–Carolinas	☑		It is absolutely necessary, however, to allow interruption of firm transfers as a System adjustment. To do otherwise would cause extremely large expenditures for very low probability independent events.
WECC BPA TSGT TEP		☑	The Bulk Electric System has been developed without this requirement. Before making the entire NERC system adopt this more stringent Standard, the SDT needs to show or address the benefits of this more stringent requirement with the cost of adaptation. Compliance with this standard as proposed could require some utilities to add hundreds of miles of new transmission lines or build out hundreds of MW of new load-side generation. Cost of these new facilities would eventually be borne by the end-use customer. A cost benefit balance has been arrived at over many years time between the customers and the regulators. Also, how will existing systems be handled for compliance?

Q22			
Commenter	**Agree**	**Disagree**	**Comment**
			Is there a logical reason for the use of the 300kV cut-off level? We believe that this type of load shedding should be allowed for these conditions at any voltage level. In any case, consideration should also be taken on whether the non-consequential load loss is Interruptible load or firm demand.
Response: Based on industry feedback the SDT has made changes in proposed requirements for two overlapping single Contingencies involving two Transmission Facilities operated at a voltage level above 300 kV. We have adjusted our approach to two independent overlapping single Contingencies (N-1-1) involving two non-generator related outages and now permit the loss of Non-Consequential Load to meet the Transmission performance requirements; see Performance Table Planning Event P6. See the above Summary Response for additional information.			
Central Maine Power United Illuminating		☑	Should also consider the initial loss of a transformer, followed by the loss of a Transmission circuit. This should state a transformer with a "high-side" rating above 300 kV.
Response: The SDT agrees that it previously missed the situation described and have accounted for this sequence of events in our new Planning Event P6. Also, notes have been added to the bottom of the performance table to clarify the EHV transformer versus other BES transformers.			
Duke Energy		☑	Allow indirect (Non-Consequential) loss of load for events involving short duration outages, such as typical line outages that do not result in cascading outages.
Response: The specific outage considered involves a circuit and a transformer. An unplanned EHV transformer outage will likely be a long duration outage that needs to be reviewed with other N-1 events and should require a higher level of expected reliability. However, based on industry feedback the SDT has made changes in proposed requirements for two independent overlapping single Contingencies involving two Transmission Facilities operated at a voltage level above 300 kV. We have adjusted our approach to two independent overlapping single Contingencies (N-1-1) involving two non-generator related outages and now permit the loss of Non-Consequential Load to meet the Transmission performance requirements; see Performance Table Planning Event P6. See the above Summary Response for additional information.			
Entergy		☑	N-1-1 requires an increase in investment that will place an undue cost burden on all customers for low probability events. See comments to Q43.
Response: Your concern related to increased cost is shared with others. Based on industry feedback the SDT has made changes in proposed requirements for two independent overlapping single Contingencies involving two Transmission Facilities operated at a voltage level above 300 kV. We have adjusted our approach to two independent overlapping single Contingencies (N-1-1) involving two non-generator related outages and now permit the loss of Non-Consequential Load to meet the Transmission performance requirements; see Performance Table Planning Event P6. See the above Summary Response for additional information. See response to Q43.			
FirstEnergy		☑	Shedding load could be part of the system adjustment in preparation for the next possible contingency but load drop would not be acceptable for problems caused soley by the first contingency.
Response: The SDT appreciates your support that Non-Consequential Load dropping would not be permissible following the first Contingency event. However, from a planning viewpoint, the SDT also believes that it should not be permissible to drop Load as part of adjusting the System to prepare for the second on the EHV System. The FERC directed this approach in Order 693, see discussion in paragraphs 1782 and			

Q22			
Commenter	**Agree**	**Disagree**	**Comment**
1796. Based on industry feedback the SDT has made changes in proposed requirements for two independent overlapping single Contingencies involving two Transmission Facilities operated at a voltage level above 300 kV. We have adjusted our approach to two independent overlapping single Contingencies (N-1-1) involving two non-generator related outages and now permit the loss of Non-Consequential Load to meet the Transmission performance requirements; see Performance Table Planning Event P6. See the above Summary Response for additional information.			
FPL FRCC		☑	Systems have been designed such that Multiple Contingency events (N-2) may result in Planned/Controlled Loss of Demand or Curtailed Firm Transfers. Such Non-Consequential Load Loss should be assessed for severity on a risk vs. consequence basis. In addition, by not allowing loss of non-consequential load, the system may remain in a less secure state or condition.
Progress–Florida		☑	The severity of this event is such that Non-Consequential Loss of Load might be a necessary operating procedure in a Corrective Action Plan as part of System restoration. Furthermore, the greater-than-300 kV Bulk Electric System has been designed such that Multiple Contingency events (N-2) may result in Planned/Controlled Loss of Demand or Curtailed Firm Transfers. Such Non-Consequential Load Loss should be assessed for severity on a risk vs. consequence basis, placing particular importance on confining the event to a single area (i.e., not resulting in a cascading outage). Past assessments as well as actual events have demonstrated that by not allowing loss of non-consequential load, the Bulk Electric System may actually remain in a less secure state or condition, i.e. in more danger of experiencing cascading outages.
Response: The events considered are not simultaneous N-2, but intended to be N-1-1 with system adjustments allowed in between the outages. Based on industry feedback the SDT has made changes in proposed requirements for two independent overlapping single Contingencies involving two Transmission Facilities operated at a voltage level above 300 kV. We have adjusted our approach to two independent overlapping single Contingencies (N-1-1) involving two non-generator related outages and now permit the loss of Non-Consequential Load to meet the Transmission performance requirements; see Performance Table Planning Event P6. See the above Summary Response for additional information.			
NERC TIS	☑		See Q 21 Comment
New York ISO	☑		Same comment as with Q21.
SRP		☑	Same as Q21.
Seattle City		☑	Same as Q21, loss of elements of this size may initiate UVLS.
Response: See response to Q21.			
Exelon	☑	☑	We do not agree with disallowing non-consequential load loss for these scenarios for the peak load conditions. These are very low probability contingencies, and some non-consequential load

Q22			
Commenter	**Agree**	**Disagree**	**Comment**
			loss should be allowed at peak load. We would agree that it would be reasonable to dis-allow non-consequential load loss for these contingencies at a lower load level, such as 75% of peak load.
Response: Based on industry feedback the SDT has made changes in proposed requirements for two independent overlapping single Contingencies involving two Transmission Facilities operated at a voltage level above 300 kV. We have adjusted our approach to two independent overlapping single Contingencies (N-1-1) involving two non-generator related outages and now permit the loss of Non-Consequential Load to meet the Transmission performance requirements; see Performance Table Planning Event P6. See the above Summary Response for additional information. The lower (non-peak) Load study that you reference is a good suggestion that could be adopted as an internal company criteria for assessing maintenance flexibility.			
IESO	☑	☑	Similar reason as above. In this case, the first transmission may also remove a transformer from service if they are in the same protection zone. The next contingency can be the loss of the companion transformer, without a fault on the transformer itself but not on the transmission circuit. If the transmission circuit and the transformer are unrelated, then we would agree that non-consequential loss of load should not be allowed.
Response: The intent of this event is to cover two unrelated single Contingency Transmission outages that are non-generator outages. They are to be viewed as an N-1, with system adjustments, followed by the second N-1. The standard will require that Contingency events be modeled to reflect actual removal of all elements within the protection zone. Therefore a single (N-1) Contingency could result in multiple Facilities being removed from service. The N-1-1 event should accurately reflect all Facilities that would be removed from service. Based on industry feedback the SDT has made changes in proposed requirements for two independent overlapping single Contingencies involving two Transmission Facilities operated at a voltage level above 300 kV. We have adjusted our approach to two independent overlapping single Contingencies (N-1-1) involving two non-generator related outages and now permit the loss of Non-Consequential Load to meet the Transmission performance requirements; see Performance Table Planning Event P6. See the above Summary Response for additional information.			
ITC	☑		Should also consider no or limited loss of non-consequential load for facilities 100 kV and above. No loss should be allowed for load levels at which the TO would plan to perform maintenance. Also system adjustment should consider time required for adjustment verses the ratings utilized.
Response: Based on industry feedback, the SDT has made adjustments to the expected Transmission System performance to N-1-1 events. The entire BES is treated the same now for these outage scenarios and the loss of Non-Consequential Load is now permitted. Please refer to performance tables, Planning Event P6. See the above Summary Response for additional information.			
AEP	☑		Consider adding clear definition of "system adjustments", including the amount of time permited to implement prior to the loss of the second facility.
Response: Non-Consequential Load Loss is not permitted for the first N-1 event as part of the permissible system adjustments that can be made to return the system to a "new" normal operating state. The time permitted is based on the time dependent emergency Facility Ratings of the affected Transmission equipment. Following the loss of the second Transmission outage, Load shed is considered an allowable system			

Q22			
Commenter	**Agree**	**Disagree**	**Comment**
adjustment action for the entire BES. This is a change in Draft 2 of the TPL-001-1. Please see performance tables, Planning Event P6 for additional information.			
MISO	☑		Do not allow indirect (Non-Consequential) loss of load for events involving long duration outages, such as transformer outages. (Transformer outage could occur first).
Response: While some SDT members agree with your approach, others on the SDT do not as well many of the industry comments to our Draft 1 standard. The standard does require sensitivity studies and unavailability of long lead time Facilities to be included in the sensitivity study area. Additionally, a TO will be required to notify their PC for long-term Transmission outages with consideration to spare equipment strategy. This would result in a new initial study system (N-0) and performance requirements for other Contingencies would be required subsequent to the long-term outage item.			
National Grid New England ISO NU NPCC RCS NSTAR	☑		Should also consider the initial loss of a transformer, followed by the loss of a Transmission circuit. This should state a transformer with a "high-side" rating above 300 kV.
Response: The SDT agrees that it previously missed the situation described and have accounted for this sequence of events in new Planning Event P6. Also, notes have been added to the bottom of the performance table to clarify the EHV transformer versus other BES transformers.			
Progress–Carolinas	☑		It is absolutely necessary, however, to allow interruption of firm transfers as a System adjustment. To do otherwise would cause extremely large expenditures for very low probability independent events.
Response: The SDT has adjusted the tables in the second revision.			
Ameren			No opinion as we do not have any transformers with the low side voltages rated above 300 kV. Transmission owners with transformers meeting this requirement should be consulted to determine if a material change would be required.
ERCOT ISO			We will comment on this at a later date.
Georgia Transm.			Not applicable to our existing system.
AECC	☑		neither should consequential load be lost for any n-1 faults on the 300 kv system and higher.
AECI	☑		
Allegheny Power	☑		
APPA	☑		
ATC	☑		
Brazos Electric	☑		
City Water Power and Light	☑		
City Utilities/Springfield	☑		

Q22			
Commenter	**Agree**	**Disagree**	**Comment**
Entegra	☑		
HQTE	☑		
ISO/RTO	☑		
KCPL	☑		
LCRA	☑		
Manitoba Hydro	☑		
PJM	☑		
Response: Thank you but due to the majority of industry response to this question, the requirement has been changed			

23) Q23. P5-3: For facilities above 300 kV, loss of a transformer with low side voltage rating above 300 kV followed by System adjustment followed by loss of another transformer

Summary Response: Draft 2 Changes for 300 kV and higher systems regarding N-1-1 conditions:

Based on industry feedback the SDT has made changes in proposed Draft 2 requirements related to two independent overlapping single Contingencies involving two non-generation Transmission Facilities operated at a voltage level above 300 kV. Draft 2 now permits the loss of Non-Consequential Load to meet the Transmission performance requirements for these types of events. Please refer to performance tables Planning Event P6.

It is noted that in Draft 2 the SDT is still requiring more stringent performance requirements of the EHV Transmission for the less probable, but greater risk single Contingency events. Please refer to performance tables Planning Event P2 and note that bus section faults and internal breaker faults (non-bus tie) associated with above 300 kV Facilities are held to a higher performance standard than those operated at 300 kV or below.

Why the distinction for above 300 kV Transmission?

The initial draft of the proposed Transmission planning standard held the planning of 300 kV and higher Transmission Systems to a more stringent requirement than the remaining BES. Although not unanimous, the majority of the SDT felt the 300 kV and higher systems generally represent an extra-high-voltage (EHV) range that is considered the backbone of many systems in the various Interconnections and that the more stringent requirements were appropriate when considering N-1-1 Contingencies of two EHV Facilities. Systems operated at this range generally do not directly serve end-use Load customers but rather act as the medium for moving large amounts of power from production to various Load centers which then deliver the power among other Transmission or sub-Transmission systems to end use customers. It is the desire of NERC and various stakeholders that the backbone of the electric power grid be robust and held to a higher degree of reliability.

When EHV systems are compromised, the large volumes of power served by them can place a severe amount of stress on parallel EHV or lower voltage paths. For example, if a large EHV transformer experiences a catastrophic failure, not only are other systems Facilities required to carry more Load but the System is also exposed to other N-1 conditions for long periods of time while awaiting a replacement or repair of the failed equipment. Large generation sources are typically connected at EHV levels and maintenance of the EHV Transmission lines within the vicinity of larges generation plants must often be coordinated during scheduled unit outages, resulting again in multiple Facility outages over extended periods of time.

Therefore, it was the conclusion of the SDT in Draft 1 to propose greater reliability and operational flexibility through more stringent performance requirements when considering certain N-1 and N-1-1 Contingency events of EHV systems. Throughout the industry substation arrangements at EHV levels reflect the importance of these systems as the designs often consist of the more expensive ring-bus, breaker-and–a-half or double bus-double breaker protection schemes as opposed to the more simplistic and lesser cost single bus arrangements that are commonly found on lower voltage systems.

The feedback received from industry was divided related to the SDT's emphasis placed on a higher expectation for the 300 kV and higher systems. Some commenters questioned the importance and the high costs that may be needed to mitigate existing system designs.

Others agreed with the SDT's approach and indicated that the impact to their systems would be minimal. Some commenters even questioned why the more stringent approach was not applied to the entire 100kV and higher systems. The SDT believes the Draft 2 changes are responsive to industry feedback and reflect an appropriate middle ground related to the importance of the EHV Transmission system.

Q23			
Commenter	**Agree**	**Disagree**	**Comment**
Muscatine P&W			See Q43 Comment #5.
Response: See Q43 response.			
NERC TIS			See Q 21 Comment
SRP		☑	Same as Q21.
Seattle City		☑	Same as Q21.
New York ISO	☑		Same comment as with Q21.
Response: See Q21 response.			
Dominion		☑	See comment for Question 20 above.
MEAG Power		☑	See Q20 above.
Tenaska		☑	See comment in Q20.
TVA		☑	See Q20.
WPS		☑	See response to Q20.
Response: See Q20 response.			
E ON US		☑	Outage of two 345 kV transformers can create local area issues that result in loss of load but do not affect the integrity of the BES.
Response: The condition you describe appears to be more stringent then the outage the SDT was asking industry to consider; N-1-1 involving a line and transformers where each are operated at a voltage level above 300 kV. However, based on industry feedback the SDT has made changes in proposed requirements for two independent overlapping single Contingencies involving two Transmission Facilities operated at a voltage level above 300 kV. The SDT has adjusted its approach to two independent overlapping single Contingencies (N-1-1) involving two non-generator related outages and now permit the loss of Non-Consequential Load to meet the Transmission performance requirements; see Performance Table Planning Event P6. See the above Summary Response for additional information.			
Northwestern Energy		☑	What is non-consequential load loss? Is losing a motor due to motor contactor action a non-consequential load loss? Also, the transmission system was developed under criteria without this requirement and to correct it would be costly.
Response: Please see the proposed Glossary Definition for Non-Consequential Load. The proposed definition for Consequential Load clarifies that losing a motor due to motor contactor action is considered to be the loss of Consequential Load.			
BCTC		☑	Same comments as for Q21/22. Furthermore, a double transformer loss forced outage has a very low probability as transformers are very reliable. A more practical approach would be to

Q23			
Commenter	**Agree**	**Disagree**	**Comment**
			use single phase transfomers and provide a spare phase.
CAISO		☑	This event also falls under Category C for which the current NERC criteria allows controlled loss of load. Clear net benefits should be demonstrated to justify adapting to a new stringent criteria.
MRO		☑	This is a low probability event that could have significant impact on the system which historically have been designed to allow local load dropping including non-consequential load. The SDT should justify that the benefit to customers of this increased reliability justifies the cost of this change to customers. Alternatively, the SDT should define a level (such as 1000 MW) of non-consequential load that is acceptable for such low probability events.
Santee Cooper SERC EC DRS SERC EC PSS SERC RRS OPS SCE&G		☑	By not allowing non-consequential load loss, utilities will incur significant expenditures to solve a problem with an extremely low probability of occurrence. The benefit will not justify the cost.
SaskPower		☑	The SDT should justify that the benefit to customers of this increased reliability justifies the cost.
Southern Transm.		☑	See comments for Q21. [This is a very significant change in the performance requirements in this reliability standard. It involves facilities from 345 kV through 764kV which carry significant amounts of power. These also are facilities that require significant lead time to construct in the Southern Balancing Authority with estimates up to 7-10 years in the state of Georgia. If a performance problem is detected under these new requirements, it could take that long to come into compliance and at a very significant cost if a new major 500kV line is required. These facilities can run as much as $4.0 million a mile or more in urban areas. We understand that a few areas of the country presently have this requirement but most do not. In the areas where the requirement has not been in place, the reliability of the system has been acceptable to the local Public Service Commissions that have governed the service to Retail customers. There has been no evidence presented that there is a need for an increase in reliability, particulary at the extensive time delay and expense possible from this particular requirement. An adoption of this standard without such evidence can only be considered arbitrary and capricious at best. Increased reliability is, in general, a worthy goal where it is cost effective. It may be appropriate to adopt this type of reliability requirement for areas that deem the resulting reliability increase to be cost effective for their customers. But it is inappropriate to "require" everyone else to be forced to live under this arbitrarily developed expansion of reliability requirements.]
WECC BPA TSGT TEP		☑	The Bulk Electric System has been developed without this requirement. Before making the entire NERC system adopt this more stringent Standard, the SDT needs to show or address the benefits of this more stringent requirement with the cost of adaptation. Compliance with this standard as proposed could require some utilities to add hundreds of miles of new transmission lines or build out hundreds of MW of new load-side generation. Cost of these new facilities would eventually be borne by the end-use customer. A cost benefit balance has been arrived at over many years time between the customers and the regulators. Also, how will existing systems be handled for

Q23			
Commenter	**Agree**	**Disagree**	**Comment**
			compliance? Is there a logical reason for the use of the 300kV cut-off level? We believe that this type of load shedding should be allowed for these conditions at any voltage level. In any case, consideration should also be taken on whether the non-consequential load loss is Interruptible load or firm demand.
ITC	☑		Should also consider no or limited loss of non-consequential load for facilities 100 kV and above. No loss should be allowed for load levels at which the TO would plan to perform maintenance. Also system adjustment should consider time required for adjust.ment verses the facility ratings utilized.
NCEMC	☑		We do agree that given the widespread effects of these facilities above 300 kV that these should be subjected to more rigorous assessments.
Progress–Carolinas	☑		It is absolutely necessary, however, to allow interruption of firm transfers as a System adjustment. To do otherwise would cause extremely large expenditures for very low probability independent events.
Response: Based on industry feedback the SDT has made changes in proposed requirements for two independent overlapping single Contingencies involving two Transmission Facilities operated at a voltage level above 300 kV. The SDT has adjusted its approach to two independent overlapping single Contingencies (N-1-1) involving two non-generator related outages and now permit the loss of Non-Consequential Load to meet the Transmission performance requirements; see Performance Table Planning Event P6. See the above Summary Response for additional information.			
Duke Energy		☑	Allow indirect (Non-Consequential) loss of load for events involving short duration outages that do not result in cascading outages.
Response: The specific outage considered involves a circuit and a transformer. An unplanned EHV transformer outage will likely be a long duration outage that needs to be reviewed with other N-1 events and should require a higher level of expected reliability. However, based on industry feedback the SDT has made changes in proposed requirements for two independent overlapping single Contingencies involving two Transmission Facilities operated at a voltage level above 300 kV. The SDT has adjusted its approach to two independent overlapping single Contingencies (N-1-1) involving two non-generator related outages and now permit the loss of Non-Consequential Load to meet the Transmission performance requirements; see Performance Table Planning Event P6. See the above Summary Response for additional information.			
Entergy		☑	N-1-1 requires an increase in investment that will place an undue cost burden on all customers for low probability events. See comments to Q43.
Response: Your concern related to increased cost is shared with others. Based on industry feedback the SDT has made changes in proposed requirements for two independent overlapping single Contingencies involving two Transmission Facilities operated at a voltage level above 300 kV. The SDT has adjusted its approach to two independent overlapping single Contingencies (N-1-1) involving two non-generator related outages and now permit the loss of Non-Consequential Load to meet the Transmission performance requirements; see Performance Table Planning Event P6. See the above Summary Response for additional information. See response to Q43.			
FirstEnergy		☑	Shedding load could be part of the system adjustment in preparation for the next possible

Q23			
Commenter	**Agree**	**Disagree**	**Comment**
			contingency but load drop would not be acceptable for problems caused soley by the first contingency.
Response: We appreciate your support that Non-Consequential Load dropping would not be permissible following the first Contingency event. However, from a planning viewpoint, the SDT also believes that it should not be permissible to drop Load as part of adjusting the system to prepare for the second on the EHV system. The FERC directed this approach in Order 693, see discussion in paragraphs 1782 and 1796. Based on industry feedback the SDT has made changes in proposed requirements for two independent overlapping single Contingencies involving two Transmission Facilities operated at a voltage level above 300 kV. The SDT has adjusted its approach to two independent overlapping single Contingencies (N-1-1) involving two non-generator related outages and now permit the loss of Non-Consequential Load to meet the Transmission performance requirements; see Performance Table Planning Event P6. See the above Summary Response for additional information.			
FPL FRCC		☑	Systems have been designed such that Multiple Contingency events (N-2) may result in Planned/Controlled Loss of Demand or Curtailed Firm Transfers. Such Non-Consequential Load Loss should be assessed for severity on a risk vs. consequence basis. In addition, by not allowing loss of non-consequential load, the system may remain in a less secure state or condition.
Progress–Florida		☑	The severity of this event is such that Non-Consequential Loss of Load might be a necessary operating procedure in a Corrective Action Plan as part of System restoration. Furthermore, the greater-than-300 kV Bulk Electric System has been designed such that Multiple Contingency events (N-2) may result in Planned/Controlled Loss of Demand or Curtailed Firm Transfers. Such Non-Consequential Load Loss should be assessed for severity on a risk vs. consequence basis, placing particular importance on confining the event to a single area (i.e., not resulting in a cascading outage). Past assessments as well as actual events have demonstrated that by not allowing loss of non-consequential load, the Bulk Electric System may actually remain in a less secure state or condition, i.e. in more danger of experiencing cascading outages.
Response: The events considered are not simultaneous N-2, but intended to be N-1-1 with system adjustments allowed in between the outages. Based on industry feedback the SDT has made changes in proposed requirements for two independent overlapping single Contingencies involving two Transmission Facilities operated at a voltage level above 300 kV. The SDT has adjusted its approach to two independent overlapping single Contingencies (N-1-1) involving two non-generator related outages and now permit the loss of Non-Consequential Load to meet the Transmission performance requirements; see Performance Table Planning Event P6. See the above Summary Response for additional information.			
Central Maine Power National Grid New England ISO NU NSTAR		☑	This should state a transformer with a "high-side" rating above 300 kV.

Q23			
Commenter	**Agree**	**Disagree**	**Comment**
United Illuminating			
Response: The SDT agrees that it previously missed the situation described and have accounted for this sequence of events in new Planning Event P6. Also, notes have been added to the bottom of the Performance table to clarify the EHV transformer versus other BES transformers.			
Exelon	☑	☑	We do not agree with disallowing non-consequential load loss for these scenarios for the peak load conditions. These are very low probability contingencies, and some non-consequential load loss should be allowed at peak load. We would agree that it would be reasonable to dis-allow non-consequential load loss for these contingencies at a lower load level, such as 75% of peak load.
Response: Based on industry feedback the SDT has made changes in proposed requirements for two independent overlapping single Contingencies involving two Transmission Facilities operated at a voltage level above 300 kV. The SDT has adjusted its approach to two independent overlapping single Contingencies (N-1-1) involving two non-generator related outages and now permit the loss of Non-Consequential Load to meet the Transmission performance requirements; see Performance Table Planning Event P6. See the above Summary Response for additional information. The lower (non-peak) Load study that you reference is a good suggestion that could be adopted as an internal company criterion for assessing maintenance flexibility.			
IESO	☑	☑	Similar reason as above.
Response: The intent of this event is to cover two unrelated single Contingency Transmission outages that are non-generator outages. They are to be viewed as an N-1, with system adjustments, followed by the second N-1. The standard will require that Contingency events be modeled to reflect actual removal of all elements within the protection zone. Therefore a single (N-1) Contingency could result in multiple Facilities being removed from service. The N-1-1 event should accurately reflect all Facilities that would be removed from service. Based on industry feedback the SDT has made changes in proposed requirements for two independent overlapping single Contingencies involving two Transmission Facilities operated at a voltage level above 300 kV. The SDT has adjusted its approach to two independent overlapping single Contingencies (N-1-1) involving two non-generator related outages and now permit the loss of Non-Consequential Load to meet the Transmission performance requirements; see Performance Table Planning Event P6. See the above Summary Response for additional information.			
AEP	☑		Consider adding clear definition of "system adjustments", including the amount of time permited to implement prior to the loss of the second facility.
Response: The time permitted is based on the time dependent emergency Facility Ratings of the affected Transmission equipment. Planned System adjustments are allowed, unless precluded in the Requirements, to keep Facilities within the Facility Ratings, if such adjustments are executable within the time duration applicable to the Facility Ratings.			
MISO	☑		Do not allow indirect (Non-Consequential) loss of load for events involving long duration outages, such as transformer outages.
Response: While some SDT members agree with your approach, others on the SDT do not as well many of the industry comments to our Draft 1 standard. The standard does require sensitivity studies and unavailability of long lead time Facilities to be included in the sensitivity study area. Additionally, a TO will be required to notify their PC for long-term Transmission outages with consideration to spare equipment strategy. This would result in a new initial study system (N-0) and performance requirements for other Contingencies would be required subsequent to the long-term outage item.			

Q23			
Commenter	**Agree**	**Disagree**	**Comment**
Ameren			No opinion as we do not have any transformers with the low side voltages rated above 300 kV. Transmission owners with transformers meeting this requirement should be consulted to determine if a material change would be required.
ERCOT ISO			We will comment on this at a later date.
AECC	☑		neither should consequential load be lost for any n-1 faults on the 300 kv system and higher.
AECI	☑		
Allegheny Power	☑		
APPA	☑		
ATC	☑		
Brazos Electric	☑		
City Water Power and Light	☑		
City Utilities/Springfield	☑		
Entegra	☑		
Georgia Transm.	☑		Not applicable to our existing system.
HQTE	☑		
ISO/RTO	☑		
KCPL	☑		
LCRA	☑		
Manitoba Hydro	☑		
NPCC RCS	☑		
PJM	☑		
Response: Thank you but due to the majority of industry response to this question, the requirement has been changed			

The proposed standard is based on an assumption that performance requirements for non-bus tie EHV breakers should be distinguished from other breakers. Do you agree that Non-Consequential Loss of Load should not be permitted for this event?

24) Q24. Loss of non-bus tie breaker (above 300 kV) due to internal fault

Summary Response: A majority of the commenters indicated that a definition for "bus-tie breaker" as well as clarification of the Tables is needed. Based on the comments from the industry, the drafting team has proposed a definition for bus–tie breakers, incorporated changes to the definition of Consequential Load and added greater detail to Tables 1 & 2, which provides for more situations where it is acceptable to lose Non-Consequential Load. However, the SDT felt that this was one situation where the bar should be raised and no change was made to this event.

Bus-tie Breaker: A circuit breaker that is positioned to connect two individual straight bus substation configurations. (Substation configurations such as ring-bus, breaker-and-a-half, or double bus-double breaker protection schemes do not use bus-tie breakers.)

Consequential Load Loss: Load that is no longer ~~served because it is directly connected to an element(s) that is removed from service due to fault clearing action or mis-operation~~ connected to a source as a result of the event being studied or which is lost as a result of the load's response to the transient conditions of the event (other than through the action of UVLS or UFLS schemes). Although Load which is lost as a result of the Load's response to the transient conditions of the event is considered Consequential Load Loss and is permitted when Consequential Load Loss is allowed, Transmission planning entities are not allowed to rely upon the expectation of such Load loss to meet steady state performance requirements.

Q24			
Commenter	**Agree**	**Disagree**	**Comment**
Manitoba Hydro			Until the SDT should defines a non-bus tie breaker this is impossible to answer.
ERCOT ISO CAISO		☑	Same response as for Q21, and What is the definition of non-bus tie breaker? Doesn't it just refer to line, transformer, and generation breakers?
Response: The SDT has accordingly proposed a definition for bus-tie breaker.			
Muscatine P&W			See Q43 Comment #5.
Response: Please see response to Q43.			
Dominion		☑	See comment for Question 20 above.
MEAG Power		☑	See Q20 above.
TVA		☑	See Q20.
WPS		☑	See response to Q20.
Response: Please see response to Q20.			
E ON US		☑	EHV station configurations are either ring-bus or breaker and one-half. Breaker failure protection isolates two EHV Facilites which may cause local area issues without affecting the BES.

Q24			
Commenter	**Agree**	**Disagree**	**Comment**
Northwestern Energy		☑	Non-consequential load loss should be permitted for this contingency.
Duke Energy		☑	Depends upon the definition of non-bus tie breaker. By not allowing non-consequential load loss, utilities will incur significant expenditures to solve a problem with an extremely low probability of occurrence.
Entergy		☑	N-1-1 requires an increase in investment that will place an undue cost burden on all customers for low probability events. See comments to Q43.
FPL FRCC		☑	This loss is currently distinguished from other single contingencies because of its lower probability of occurrence and a more stringent performance requirement than currently exists is not warranted.
Progress–Florida		☑	This single contingency event has a very low probability of occurrence, and thus a more stringent performance requirement than currently exists is not warranted.
SaskPower		☑	The SDT should justify that the benefit to customers of this increased reliability justifies the cost.
Response: Based on industry feedback the SDT has made changes in Draft 2 on requirements related to two independent overlapping single Contingencies involving two non-generation Transmission Facilities operated at a voltage level above 300 kV. However, it is noted that in Draft 2 the SDT is still requiring more stringent performance requirements of the EHV Transmission for the less probable, but greater risk single Contingency events. Please refer to performance tables Planning Event P2 and note that bus section faults and internal breaker faults (non-bus tie) associated with above 300 kV Facilities are held to a higher performance standard than those operated at 300 kV or below. Although not unanimous, the majority of the SDT felt the 300 kV and higher systems generally represent an extra-high-voltage (EHV) range that is considered the backbone of many systems in the various Interconnections and that the more stringent requirements were appropriate when considering contingencies of two EHV Facilities due to one Event. Systems operated at this range generally do not directly serve end-use Load customers but rather act as the medium for moving large amounts of power from production to various Load centers which then deliver the power among other Transmission or sub-Transmission Systems to end use customers. It is the desire of NERC and various stakeholders that the backbone of the electric power grid be robust and held to a higher degree of reliability. Please see also summary response to Q22.			
BCTC		☑	Do not agree due to definitions of Consequential and Non-Consequential Load Loss. Can agree subject to the proposed revised definitions to address loss of load during the transient stability period. System is already planned to meet this requirement based on the first sentence of footnote (b).
Response: The drafting team has considered industry comments and has incorporated changes in the definition of Consequential Load Loss. **Consequential Load Loss:** Load that is no longer ~~served because it is directly connected to an element(s) that is removed from service due to fault clearing action or mis-operation~~ connected to a source as a result of the event being studied or which is lost as a result of the load's response to the transient conditions of the event (other than through the action of UVLS or UFLS schemes). Although Load which is lost as a result of the Load's response to the transient conditions of the event is considered Consequential Load Loss and is permitted when Consequential Load Loss is allowed, Transmission planning entities are not allowed to rely upon the expectation of such Load loss to meet			

Q24			
Commenter	**Agree**	**Disagree**	**Comment**
steady state performance requirements.			
CenterPoint		☑	The loss of a non-bus tie breaker due to an internal fault has a low probability of occurrence and should be considered an improbable event with non-consequential load loss permitted. However, the loss of any breaker, whether by internal fault, external flashover, or stuck breaker, should not result in a cascading failure.
CPS Energy		☑	Should be determined at the discretion of the Transmission Planners.
PJM	☑		Agree with performance requirement. The proposed standard is based on an assumption that performance requirements for non-bus tie EHV breakers should be distinguished from other breakers and that performance requirements for EHV facilities should be more stringent than for lower voltage facilities. Do you agree that Non-Consequential Loss of Load should not be permitted for this event?
Response: The SDT has added greater detail to Tables 1 & 2, which provides for more situations where it is acceptable to lose Non-Consequential Load.			
Exelon		☑	P6 allows for non-consequential load loss for a bus tie breaker, which has the same probability of failure as a non-bus tie breaker.
Response: In Draft 1, P6 is for loss of Bus-tie Breaker below 300 kV. This initial draft of the proposed Transmission planning standard held the planning of 300 kV and higher Transmission systems to a more stringent requirement than the remaining BES. Although not unanimous, the majority of the SDT felt the 300 kV and higher systems generally represent an extra-high-voltage (EHV) range that is considered the backbone of many systems in the various Interconnections and that the more stringent requirements were appropriate when considering contingencies of two EHV Facilities due to one Event. Systems operated at this range generally do not directly serve end-use Load customers but rather act as the medium for moving large amounts of power from production to various Load centers which then deliver the power among other Transmission or sub-Transmission Systems to end use customers. It is the desire of NERC and various stakeholders that the backbone of the electric power grid be robust and held to a higher degree of reliability. Please see also summary response to Q22.			
Georgia Transm.		☑	The standard needs to clearly define a non-bus tie breaker. It is also not clear whether the focus of the standard is the kV level or the equipment type. A material change to build new facilities would be needed to meet this new requirement.
Response: The drafting team has considered industry comments and has incorporated changes in the definition of Consequential Load Loss. **Consequential Load Loss:** Load that is no longer ~~served because it is directly connected to an element(s) that is removed from service due to fault clearing action or mis-operation~~ connected to a source as a result of the event being studied or which is lost as a result of the load's response to the transient conditions of the event (other than through the action of UVLS or UFLS schemes). Although Load which is lost as a result of the Load's response to the transient conditions of the event is considered Consequential Load Loss and is permitted when Consequential Load Loss is allowed, Transmission planning entities are not allowed to rely upon the expectation of such Load loss to meet steady state performance requirements.			

Q24			
Commenter	**Agree**	**Disagree**	**Comment**
This initial draft of the proposed Transmission planning standard held the planning of 300 kV and higher Transmission systems to a more stringent requirement than the remaining BES. Although not unanimous, the majority of the SDT felt the 300 kV and higher systems generally represent an extra-high-voltage (EHV) range that is considered the backbone of many systems in the various Interconnections and that the more stringent requirements were appropriate when considering contingencies of two EHV Facilities due to one Event. Systems operated at this range generally do not directly serve end-use Load customers but rather act as the medium for moving large amounts of power from production to various Load centers which then deliver the power among other Transmission or sub-Transmission Systems to end use customers. It is the desire of NERC and various stakeholders that the backbone of the electric power grid be robust and held to a higher degree of reliability. Please see also summary response to Q22.			
LADWP		☑	Don't understand why there is such an obsession with bus tie breakers? Is this a common practice in the East? I am not aware of any issue in WECC, let alone at above 300 kV systems.
Response: For straight buses, loss of a Bus-tie Breaker could remove from service multiple bus sections simultaneously resulting in loss of all elements connecting to the impacted bus sections. However, Bus-tie Breakers also have lower probability of outage. The reason for providing performance requirements for Bus-tie Breakers that are different from the performance requirements for non-Bus-tie Breakers is to encourage the installation of Bus-tie Breakers in straight busses.			
MRO		☑	This is a low probability event that could have significant impact on the system which historically have been designed to allow local load dropping including non-consequential load. The SDT should justify that the benefit to customers of this increased reliability justifies the cost of this change to customers. Alternatively, the SDT should define a level of non-consequential load that is acceptable for such low probability events such as 1000 MW.
Response: The SDT will consider interim Operating Procedures to allow for Transmission Owners to respond and guidelines that may allow quantifiable and limited exposure to loss of Non-Consequential Load. This may include, for example, providing for defined exclusions during construction of new Facilties. This initial draft of the proposed Transmission planning standard held the planning of 300 kV and higher Transmission systems to a more stringent requirement than the remaining BES. Although not unanimous, the majority of the SDT felt the 300 kV and higher systems generally represent an extra-high-voltage (EHV) range that is considered the backbone of many systems in the various Interconnections and that the more stringent requirements were appropriate when considering contingencies of two EHV Facilities due to one Event. Systems operated at this range generally do not directly serve end-use Load customers but rather act as the medium for moving large amounts of power from production to various Load centers which then deliver the power among other Transmission or sub-Transmission Systems to end use customers. It is the desire of NERC and various stakeholders that the backbone of the electric power grid be robust and held to a higher degree of reliability. Please see also summary response to Q22.			
Seattle City		☑	Adequacy of HV supply is outside of our control but may have a detrimental effect on our system. We should not be required to supplement the existing high-voltage infrastructure when it is the

Q24			
Commenter	**Agree**	**Disagree**	**Comment**
			responsibility of the transmission owner. If the intent of this requirement is to prevent downstream load loss caused by a fault in the 300kV beloning to the transmission owner, then we agree. We must be able to shed load when our supply is cut.
Response: The treatment of Transmission infrastructure costs is outside the scope of the NERC reliability standards. The SDT will consider interim Operating Procedures to allow for Transmission Owners to respond and guidelines that may allow quantifiable and limited exposure to loss of Non-Consequential Load. This may include, for example, providing for defined exclusions during construction of new facilties.			
Santee Cooper SERC EC DRS SERC EC PSS SERC RRS OPS SCE&G Southern Transm.		☑	By not allowing non-consequential load loss, utilities will incur significant expenditures to solve a problem with an extremely low probability of occurrence. The benefit will not justify the cost. It would be helpful if "bus tie breaker" was defined (e.g. is the middle breaker in a breaker and a half scheme considered a bus tie breaker?).
Response: The SDT will consider interim Operating Procedures to allow for Transmission Owners to respond and guidelines that may allow quantifiable and limited exposure to loss of Non-Consequential Load. This may include, for example, providing for defined exclusions during construction of new facilties. The drafting team has considered industry comments and has incorporated changes in the definition of Consequential Load Loss. **Consequential Load Loss:** Load that is no longer ~~served because it is directly connected to an element(s) that is removed from service due to fault clearing action or mis-operation~~ connected to a source as a result of the event being studied or which is lost as a result of the load's response to the transient conditions of the event (other than through the action of UVLS or UFLS schemes). Although Load which is lost as a result of the Load's response to the transient conditions of the event is considered Consequential Load Loss and is permitted when Consequential Load Loss is allowed, Transmission planning entities are not allowed to rely upon the expectation of such Load loss to meet steady state performance requirements.			
Tenaska		☑	Why should we distinquish between a bustie breaker and a non-bus tie breaker? Also, 300 kV may be too low. This is really an issue that should be driven by the customers.
ABB	☑	☑	When talking about breaker outages, I see no reason to differentiate between "non-bus tie" and "bus tie" breakers. Are bus tie breakers inherently more reliable? If the effect on the system due to a tie breaker outage is very bad, then this should be fixed. All other contingencies seem to be slotted based on probability. Shouldn't breakers? Maybe bus tie breakers are weak points in the transmission system that need to be improved.
Central Maine Power HQTE National Grid New England ISO NU NPCC RCS NSTAR	☑		It is unclear why bus tie breakers are being treated differently than other breakers. They should be treated the same.

Q24			
Commenter	**Agree**	**Disagree**	**Comment**
United Illuminating			
ITC	☑		Loss of non-consequential load should not be permitted, however this should also apply to other breakers across the system including bus tie breakers.
Response: Depending on the bus configuration loss of a Bus-tie Breaker could remove from service multiple bus sections simultaneously resulting in loss of all elements connecting to the impacted bus sections. However, Bus-tie Breakers also have lower probability of outage. The reason for providing performance requirements for Bus-tie Breakers that are different from the performance requirements for non-Bus-tie Breakers is to encourage the installation of Bus-tie Breakers in straight busses.			
WECC BPA TSGT TEP		☑	We disagree that non-consequential loss of load should not be permitted for this contingency event. We believe that planned and controlled interruption of non-consequential load should be permitted for loss of a non-bus tie breaker (above 300 kV). Losing a non-bus tie breaker could result in simultaneous loss of two or more elements, depending on the bus configuration. Allowing planned and controlled disconnection of some load in the areas would not only prevent cascading and instability (which could result in uncontrolled loss of a larger amount of load), but also enables faster load restoration. Losing a breaker due to an internal fault is a low probability event. To meet this requirement as proposed would require severe pre-contingency curtailment of power transfers, that could impact commerce and/or construction of large number of transmission facilities with the attendant environmental impacts and increased cost to customers
Response: The SDT will consider interim Operating Procedures to allow for Transmission Owners to respond and guidelines that may allow quantifiable and limited exposure to loss of Non-Consequential Load. This may include, for example, providing for defined exclusions during construction of new facilties.			
Ameren	☑	☑	This part of the proposed standard language is confusing. From our perspective, the failure of any 300 kV or above non-bus-tie circuit breaker should not result in the non-consequential loss of load. Further, EHV circuit breakers failing as a result of internal faults are extremely rare, bus-ties or not. Also, it is not clear what would be considered a non-bus tie breaker for ring bus and breaker-and-a-half bus configurations. It would seem that performance requirements for EHV bus-tie breakers (and not non-bus-tie breakers) should be distinguished from other breakers.
Response: Depending on the bus configuration loss of a Bus-tie Breaker could remove from service multiple bus sections simultaneously resulting in loss of all elements connecting to the impacted bus sections. However, Bus-tie Breakers also have lower probability of outage. The reason for providing performance requirements for Bus-tie Breakers that are different from the performance requirements for non-Bus-tie Breakers is to encourage the installation of Bus-tie Breakers in straight busses. In response to industry comments, the SDT has accordingly proposed a definition for Bus-tie Breaker. **Bus-tie Breaker:** A circuit breaker that is positioned to connect two individual straight bus substation configurations. (Substation configurations such as ring-bus, breaker-and-a-half, or double bus-double breaker protection schemes do not use bus-tie breakers.)			
AEP	☑		Consider adding clear definition of "bus tie breaker" and "non-bus tie breaker".
Response: In response to industry comments, the SDT has accordingly proposed a definition for Bus-tie Breaker.			

Q24			
Commenter	**Agree**	**Disagree**	**Comment**
Bus-tie Breaker: A circuit breaker that is positioned to connect two individual straight bus substation configurations. (Substation configurations such as ring-bus, breaker-and-a-half, or double bus-double breaker protection schemes do not use bus-tie breakers.)			
FirstEnergy	☑		The tables' use of internal faults and stuck breaker faults is confusing since they have the same result.
Response: The probability of loss of a breaker due to the breaker internal fault would be higher than loss of a Transmission element coupled with a stuck breaker associated with the faulted element. Tables 1 and 2 have been modified to provide greater clarity.			
NERC TIS	☑		By its very nature, the event described is a breaker failure and the fault will typically need to be cleared by the next set of breakers, often remotely. Tripping out to the backup protection breakers typically can cause significant Consequential load loss. That should not be misconstrued as non-consequential load loss. Non-consequential load loss beyond that is unacceptable.
Response: Whether tripping of additional Facilities by backup protection will lead to more Consequential Load Loss will depend on whether any Load is connected directly to such Facilities. In the second draft the SDT has modified the definition of Consequential Load Loss. **Consequential Load Loss:** Load that is no longer ~~served because it is directly connected to an element(s) that is removed from service due to fault clearing action or mis-operation~~ connected to a source as a result of the event being studied or which is lost as a result of the load's response to the transient conditions of the event (other than through the action of UVLS or UFLS schemes). Although Load which is lost as a result of the Load's response to the transient conditions of the event is considered Consequential Load Loss and is permitted when Consequential Load Loss is allowed, Transmission planning entities are not allowed to rely upon the expectation of such Load loss to meet steady state performance requirements.			
AECC	☑		neither should consequential load be lost for any n-1 faults on the 300 kv system and higher.
AECI	☑		
Allegheny Power	☑		
APPA	☑		
ATC	☑		
Brazos Electric	☑		
City Water Power and Light	☑		
City Utilities/Springfield	☑		
IESO	☑		Agree. In general, non-consequential loss of load should not be permitted for any single contingencies.
Entegra	☑		
ISO/RTO	☑		
KCPL	☑		No Non-Consequential loss of load for N-1 event.

Q24			
Commenter	**Agree**	**Disagree**	**Comment**
LCRA	☑		
MISO	☑		No indirect (Non-Consequential) loss of load for outage of single EHV element.
New York ISO	☑		
NCEMC	☑		See response for Q20.
Progress–Carolinas	☑		
Response: Thank you.			

The proposed standard is based on an assumption that performance requirements for non-bus tie EHV breakers should be distinguished from other breakers and that performance requirements for EHV facilities should be more stringent than for lower voltage facilities. Do you agree that Non-Consequential Loss of Load should not be permitted for this event?

25) Q25. P3-1: Loss of (SLG for stability) either a generator, a Transmission circuit, a transformer, or a bus and a stuck non-bus tie breaker (above 300 kV)

Summary Response: A majority of the commenters indicated that a definition for "Bus-tie Breaker" as well as clarification of the Tables is needed. Based on the comments from the industry, the drafting team has proposed a definition for Bus–tie Breakers, incorporated changes to the definition of Consequential Load and added greater detail to Tables 1 & 2, which provides for more situations where it is acceptable to lose Non-Consequential Load. The SDT has re-categorized the table to try to clarify what was meant but no changes have been made to this requirement as a result of industry comments.

Bus-tie Breaker: A circuit breaker that is positioned to connect two individual straight bus substation configurations. (Substation configurations such as ring-bus, breaker-and-a-half, or double bus-double breaker protection schemes do not use bus-tie breakers.)

Consequential Load Loss: Load that is no longer ~~served because it is directly connected to an element(s) that is removed from service due to fault clearing action or mis-operation~~ connected to a source as a result of the event being studied or which is lost as a result of the load's response to the transient conditions of the event (other than through the action of UVLS or UFLS schemes). Although Load which is lost as a result of the Load's response to the transient conditions of the event is considered Consequential Load Loss and is permitted when Consequential Load Loss is allowed, Transmission planning entities are not allowed to rely upon the expectation of such Load loss to meet steady state performance requirements.

Q25			
Commenter	**Agree**	**Disagree**	**Comment**
Muscatine P&W			See Q43 Comment #5.
Response: Please see response to Question 43 #5.			
Ameren		☑	The loss of two or more elements at any EHV substation at time of peak would likely result in loss of non-consequential load. If the intent of the proposed standard is to encourage the development of ring bus or breaker-and-a-half bus arrangements at the EHV level, we would concur where it is physically possible and makes for good engineering practice. However, we must remind the SDT that there are some existing facilities that cannot be converted practically or economically from their present straight bus configuration because of physical limitations. A significant material change, potentially several million dollars per substation, would be required to retrofit facilities, where possible. It would appear that performance requirements for EHV bus-tie breakers (and not non-bus-tie breakers) should be distinguished from other breakers.
Duke Energy		☑	By not allowing non-consequential load loss, utilities will incur significant expenditures to solve a problem with an extremely low probability of occurrence.
Entergy		☑	N-1-1 requires an increase in investment that will place an undue cost burden on all customers

Q25			
Commenter	**Agree**	**Disagree**	**Comment**
			for low probability events. See comments to Q43..
SaskPower		☑	The SDT should justify that the benefit to customers of this increased reliability justifies the cost.
Santee Cooper SERC EC DRS SERC EC PSS SERC RRS OPS SCE&G Southern Transm.		☑	By not allowing non-consequential load loss, utilities will incur significant expenditures to solve a problem with an extremely low probability of occurrence. The benefit will not justify the cost.
Northwestern Energy		☑	Non-consequential load loss should be permitted for this contingency.
Response: Based on industry feedback the SDT has made changes in Draft 2 on requirements related to two independent overlapping single Contingencies involving two non-generation Transmission Facilities operated at a voltage level above 300 kV. However, it is noted that in Draft 2 the SDT is still requiring more stringent performance requirements of the EHV Transmission. Although not unanimous, the majority of the SDT felt the 300 kV and higher systems generally represent an extra-high-voltage (EHV) range that is considered the backbone of many systems in the various Interconnections and that the more stringent requirements were appropriate when considering Contingencies of two EHV facilities due to one Event. Systems operated at this range generally do not directly serve end-use Load customers but rather act as the medium for moving large amounts of power from production to various Load centers which then deliver the power among other Transmission or sub-Transmission Systems to end use customers. It is the desire of NERC and various stakeholders that the backbone of the electric power grid be robust and held to a higher degree of reliability. Please see also summary response to Q22.			
Dominion		☑	See comment for Question 20 above.
MEAG Power		☑	See Q20 above.
TVA		☑	See Q20.
WPS			See response to Q20.
NCEMC	☑		See response for Q20.
Response: Please see response to Q20.			
E ON US		☑	This event needs to be reworded. Does the stuck non-bus tie breaker condition only apply to the bus fault or to all faults? Does (above 300 kV) only apply to the stuck non-bus tie breaker or is this limited to faults on facilities above 300 kV?
Response: The stuck non-Bus tie Breaker condition applies to all faults listed in P3 in Tables 1 and 2. The ATFNSDT has added greater detail to Tables 1 & 2, which provides for more situations where it is acceptable to lose non-consequential firm load.			
ERCOT ISO CAISO		☑	Do not agree for loss of a bus, or loss of a stuck non-bus tie breaker for the reasons as in the response to Q21.
Response: Please see response to Q21.			
BCTC		☑	Do not agree due to definitions of Consequential and Non-Consequential Load Loss. Can agree subject to the proposed revised definitions to address loss of load during the transient stability

Q25			
Commenter	**Agree**	**Disagree**	**Comment**
			period. System is already planned to meet this requirement based on the first sentence of footnote (b).
MISO	☑		With the clarification that direct (Consequential) loss of load is associated with all outage elements: both SLG element and stuck breaker element.
Response: The drafting team has considered industry comments and has incorporated changes in the definition of Consequential Load Loss. **Consequential Load Loss:** Load that is no longer ~~served because it is directly connected to an element(s) that is removed from service due to fault clearing action or mis-operation~~ connected to a source as a result of the event being studied or which is lost as a result of the load's response to the transient conditions of the event (other than through the action of UVLS or UFLS schemes). Although Load which is lost as a result of the Load's response to the transient conditions of the event is considered Consequential Load Loss and is permitted when Consequential Load Loss is allowed, Transmission planning entities are not allowed to rely upon the expectation of such Load loss to meet steady state performance requirements.			
CenterPoint		☑	The loss of either a generator, a Transmission cirucit, a transformer, or a bus and a stuck non-bus tie breaker (above 300 kV) has a low probability of occurrence and should be considered an extreme event with non-consequential load loss permitted.
CPS Energy		☑	Should be determined at the discretion of the Transmission Planners.
FirstEnergy		☑	The wording of P3-1 is unclear. We suggest rewording to say "Fault on a generator, line, transformer, or bus and a stuck breaker when the fault is being cleared". We agree with the concept of not dropping load for an EHV stuck breaker with the exception of the bus fault item. We do not believe that it is very realistic to postulate a bus fault along with a stuck breaker and believe that it is a very low probability event.
Response: The SDT has added greater detail to Tables 1 & 2, which provides for more situations where it is acceptable to lose Non-Consequential Load.			
Central Maine Power HQTE National Grid New England ISO NU NPCC RCS NSTAR United Illuminating		☑	It is unclear why bus tie breakers are being treated differently than other breakers. They should be treated the same.
Response: For straight buses, loss of a Bus-tie Breaker could remove from service multiple bus sections simultaneously resulting in loss of all elements connecting to the impacted bus sections. However, Bus-tie Breakers also have lower probability of outage. The reason for providing performance requirements for Bus-tie Breakers that are different from the performance requirements for non-Bus-tie Breakers so as to encourage the installation of Bus-tie Breakers in straight busses.			
FPL		☑	Systems have been designed such that Multiple Contingency events (N-2) above 300 kV may result in Planned/Controlled Loss of Demand or Curtailed Firm Transfers. Such Non-Consequential Load Loss should be assessed for severity on a risk vs. consequence basis. In

Q25			
Commenter	**Agree**	**Disagree**	**Comment**
			addition, by not allowing loss of non-consequential load, the system may remain in a less secure state or condition. This new category P3-1 is essentially a replacement for Category C5-9 except the only protection element failure to be considered is the failure of a circuit breaker to open. This definition eliminates the need to examine failure of the relay to operate which in many cases has a more serious impact on grid reliability.
FRCC		☑	This new category P3-1 is essentially a replacement for Category C5-9 except the only protection element failure to be considered is the failure of a circuit breaker to open. This definition eliminates the need to examine failure of the relay to operate which in many cases has a more serious impact on grid reliability.
Response: The SDT has added greater detail to Tables 1 & 2, which provides separately for events that involve stuck breakers and protection system failure.			
Georgia Transm.		☑	A material change to build new facilities would be needed to meet this new requirement.
MRO		☑	This is a low probability event that could have significant impact on the system which historically have been designed to allow local load dropping including non-consequential load. The SDT should justify that the benefit to customers of this increased reliability justifies the cost of this change to customers. Alternatively, the SDT should define a level of non-consequential load that is acceptable for such low probability events such as 1000 MW.
WECC BPA TSGT TEP		☑	We disagree that non-consequential loss of load should not be permitted for this contingency event. We believe that planned and controlled interruption of non-consequential load should be permitted for loss of either a generator, a transmission circuit, a transformer, or a bus and a stuck non-bus tie breaker (above 300 kV). This contingency event could result in simultaneous loss of two or more elements, depending on the bus configuration. Allowing planned and controlled disconnection of some load in the areas would not only prevent cascading and instability (which could result in uncontrolled loss of a larger amount of load), but also enables faster load restoration. These contingencies are low-probability events. To meet this requirement as proposed would require severe pre-contingency curtailment of power transfers, that could impact commerce and/or construction of a large number of transmission facilities with the attendant environmental impacts and increased cost to customers.
Response: The SDT has re-categorized the table to try to clarify what was meant but no changes have been made to this requirement as a result of industry comments.			
LADWP		☑	Ditto (24)
Seattle City		☑	As in Q24. Certain combinations in the HV supply system will force us to shed load.
NERC TIS	☑		See comment to Q24.
Response: Please see response to Q24.			
Manitoba Hydro		☑	The SDT seems fixated on loss of load. The existing std for this type of event allowed for loss of load and firm transfer could be adjusted. While MH could rationalize that load should not be

Q25			
Commenter	**Agree**	**Disagree**	**Comment**
			interrupted, we could not agree that firm transfer can not be reduced. This would amount to n-2 planning to maintain a firm transfer that is backed up by reserves. The requirement to maintain firm transfer will cost MH and the industry millions of dollars with no reliability benefit - a show stopper.
Tenaska		☑	This is really an issue that should be driven by the customers.
Exelon	☑	☑	We do not agree with disallowing non-consequential load loss for these scenarios for the peak load conditions. These are very low probability contingencies, and some non-consequential load loss should be allowed at peak load. We would agree that it would be reasonable to dis-allow non-consequential load loss for these contingencies at a lower load level, such as 75% of peak load.
Response: The SDT must address FERC Order 693. FERC has jurisdiction over firm Transmission service. FERC allows the use of "equally or more efficient or effective approach" and Non-Consequential Load is being used as a proxy for firm Transmission service.			
Progress–Carolinas		☑	This is a very low probability multiple contingency and would cost an extreme sum of money to remedy. Need to clarify whether or not the stuck breaker was connected with loss of element.
Response: The SDT has re-categorized the table to try to clarify what was meant but no changes have been made to this requirement as a result of industry comments. The SDT has added greater detail to Tables 1 & 2 to provide more clarity.			
Progress–Florida		☑	The severity of this event is such that Non-Consequential Loss of Load might be a necessary operating procedure in a Corrective Action Plan as part of System restoration. Furthermore, the greater-than-300 kV Bulk Electric System has been designed such that Multiple Contingency events (N-2) may result in Planned/Controlled Loss of Demand or Curtailed Firm Transfers. Such Non-Consequential Load Loss should be assessed for severity on a risk vs. consequence basis, placing particular importance on confining the event to a single area (i.e., not resulting in a cascading outage). Past assessments as well as actual events have demonstrated that by not allowing loss of non-consequential load, the Bulk Electric System may actually remain in a less secure state or condition, i.e. in more danger of experiencing cascading outages. In addition, it should be noted that the technical specifications of this category contain a major oversight. This new Category P3-1 is essentially a replacement for the existing Categories C5-9, except that the only protection element failure being considered is the failure of a circuit breaker to open. This definition eliminates the need to examine failure of the relay to operate, which in many cases has a more serious impact on grid reliability.
Response: The SDT must address FERC Order 693. FERC has jurisdiction over firm Transmission service. FERC allows the use of "equally or more efficient or effective approach" and Non-Consequential Load is being used as a proxy for firm Transmission service. The SDT has added greater detail to Tables 1 & 2, which provides for events that involve stuck breakers and protection system failure.			
ABB	☑	☑	Table 1 P3 is a little hard to read/understand. The second column should start out something like "A stuck breaker following the outage of any 1 of the following:" However, P3 will be completely redundant with P2 because, in power flow analysis, there is no difference between a breaker internal fault and a stuck breaker following an external fault. The final outaged equipment is the

Q25			
Commenter	**Agree**	**Disagree**	**Comment**
			same. This will cause extra unnecessary work.
Response: The SDT has added greater detail to Tables 1 & 2.			
AEP	☑		Consider adding clear definition of "bus tie breaker" and "non-bus tie breaker".
Response: The SDT has accordingly proposed a definition for Bus-tie Breaker. **Bus-tie Breaker:** A circuit breaker that is positioned to connect two individual straight bus substation configurations. (Substation configurations such as ring-bus, breaker-and-a-half, or double bus-double breaker protection schemes do not use bus-tie breakers.)			
ITC	☑		Should also consider no loss of non-consequential load for facilities 100 kV and above and this should also apply to other breakers across the system including bus tie breakers.
Response: The initial draft of the proposed Transmission planning standard held the planning of 300 kV and higher Transmission Systems to a more stringent requirement than the remaining BES. Although not unanimous, the majority of the SDT felt the 300 kV and higher systems generally represent an extra-high-voltage (EHV) range that is considered the backbone of many systems in the various Interconnections and that the more stringent requirements were appropriate when considering single events that can result in Contingencies of two EHV Facilities. Systems operated at this range generally do not directly serve end-use Load customers but rather act as the medium for moving large amounts of power from production to various Load centers which then deliver the power among other Transmission or sub-Transmission systems to end use customers. It is the desire of NERC and various stakeholders that the backbone of the electric power grid be robust and held to a higher degree of reliability. Loss of Facilities below 300 kV is not expected to have the same impact. Please see also summary response to Q22.			
AECC	☑		neither should consequential load be lost for any n-1 faults on the 300 kv system and higher.
AECI	☑		
Allegheny Power	☑		
APPA	☑		
ATC	☑		
Brazos Electric	☑		
City Water Power and Light	☑		
City Utilities/Springfield	☑		
Entegra	☑		
IESO	☑		See reason stated for Q24, above.
ISO/RTO	☑		
KCPL	☑		Must recognize that there may be Consequential loss of load.

Q25			
Commenter	**Agree**	**Disagree**	**Comment**
LCRA	☑		
New York ISO	☑		
PJM	☑		
Response: Thank you.			

The proposed standard is based on an assumption that the following events are relatively high probability events and, therefore, Non-Consequential Loss of Load should not be permitted. Do you agree? If you disagree, please provide a reason for your disagreement.

26) Q26. P4-1: Loss of a Generator followed by System adjustment[2] followed by loss of another Generator

Summary Response: The SDT notes that FERC's direction with regard to Non-Consequential firm Load and the TPL standards is stated in paragraph 1795 of FERC Order No. 693 as follows: "Based on the record before us, we believe that the transmission planning Reliability Standard should not allow an entity to plan for the loss of non-consequential load in the event of a single contingency." Paragraph 1795 also states, "Therefore, the ERO should modify the sentence to indicate that manual system adjustments, except for shedding firm load or curtailment of firm transfers, are permitted after the first contingency to bring the system back to a normal operating state." These statements which indicate that loss of Non-Consequential firm Load and interruption of firm Transmission service should not be permitted for a single Contingency are meant to apply to Facilities covered by reliability standards regardless of voltage, economics, or rate recovery issues.

These events are on higher voltage facilities on the BES. Therefore, the SDT has drafted the standard to not permit loss of Non-Consequential Load or interruption of firm Transmission service for the loss of a generator followed by System adjustment followed by the loss of another generator. The majority of the commenters in response to the first posting of the standard agreed with the SDT's approach in this regard.

Issues of cost recovery are beyond the scope of the standard.

Q26			
Commenter	**Agree**	**Disagree**	**Comment**
Muscatine P&W			See Q43 Comment #5.
Response: Please see Q43 #5 response.			
City Utilities/Springfield			Would like to see more explanation for the these scenarios.
ABB	☑		For Table 1 P4, rewrite it to read "Loss of a generator followed by a System adjustment followed by the loss of any one of the following: 1. Generator 2. Transmission Circuit 3. Transformer 4. A shunt device

[2] System adjustment can be manual or automatic

Q26			
Commenter	**Agree**	**Disagree**	**Comment**
			5. Single pole of DC line." This structure is easier to read and understand. The order should be like this to match P1. Shunt devices should be included. P3 should be structured similarly.
Response: The SDT has changed the performance table and language to clarify the specific scenarios. The SDT will be seeking comments on the new performance table.			
Brazos Electric		☑	Need a definition of generator. The entire train, largest unit at a site or other.
Response: The SDT has made changes to the performance table and language to define what is included in an individual generator outage.			
Northwestern Energy		☑	What is non-consequential load loss? Is losing a motor due to motor contactor action a non-consequential load loss? Also, the transmission system was developed under criteria without this requirement and to correct it would be costly.
Response: The SDT has revised the proposed definition of Consequential Load Loss in the second draft. Per the SDT proposed definition, losing a motor due to motor contactor action is not considered Non-Consequential or Consequential Loss of Load. The SDT has made changes to the definition of Consequential Load Loss to clarify how this incident is to be treated with regard to system performance. **Consequential Load Loss:** Load that is no longer ~~served because it is directly connected to an element(s) that is removed from service due to fault clearing action or mis-operation~~ connected to a source as a result of the event being studied or which is lost as a result of the load's response to the transient conditions of the event (other than through the action of UVLS or UFLS schemes). Although Load which is lost as a result of the Load's response to the transient conditions of the event is considered Consequential Load Loss and is permitted when Consequential Load Loss is allowed, Transmission planning entities are not allowed to rely upon the expectation of such Load loss to meet steady state performance requirements. With regard to the comment on cost, this requirement is consistent with FERC Order No. 693 and the SDT believes this is a more probable event than other events and therefore, the System should be designed per this requirement.			
BCTC		☑	Do not agree due to the definition for Consequential Load Loss. Definition needs to include local networks for this contingency to be acceptable.
Response: See responses to Question 2 and 6.			
CenterPoint		☑	CenterPoint Energy believes the assumption that this is a high probability event is incorrect. Furthermore, an absolute requirement prohibiting non-consequential loss of load has economic and landowner impacts that cannot be ignored.
Response: The majority of commenters in response to the first posting of the draft standard agreed with this approach. With regard to the commenter's second comment, the SDT notes that in Order 693 FERC directs NERC to prohibit loss of Non-Consequential firm Load for a single Contingency and therefore the SDT believes that this is an appropriate requirement for the standard. FERC's direction is meant to apply to BES Facilities covered by reliability standards regardless of land-use, voltage, economics, or rate recovery issues. Issues of land-use, economics, and cost recovery are beyond the scope of the SDT. The majority of commenters in response to the first posting of			

Q26			
Commenter	**Agree**	**Disagree**	**Comment**
the draft standard agreed with this approach. See also the SDT's summary response.			
Central Maine Power New England ISO NU NPCC RCS NSTAR United Illuminating		☑	If the base case or a mandatory sensitivity case already includes unplanned generator outages, some load loss may be reasonable following the subsequent loss of 2 additional generators.
National Grid		☑	If mitigation plans are required that are based on studies that already include unplanned generator outages, then some load loss may be reasonable following the subsequent loss of 2 additional generators.
FPL FRCC		☑	Systems should be planned such that the loss of a generator, followed by System adjustment, followed by the loss of another generator would not result in Non-consequential Load Loss, and equipment ratings would not be exceeded etc. However, the initial state of the system must be clarified in all performance table scenarios (including P4-1).If the Base Case contained known planned outages of generating units, as implied by the requirement R1.4, then the standard performance requirements could be interpreted to require planning for all G-1-1-1 events.
Response: The SDT agrees that the draft standard could reasonably be interpreted that if a major generating outage lasts more than 1 year that the System still needs to be able to meet G-1, System adjustment and then, a 2nd G-1 without the loss of any Non-Consequential Load. This interpretation would require new construction to meet any G-1 + G-1 + G-1, because there would be a violation of the standard if any plant outage occurred and was not available over the peak period during the planning horizon. The SDT believes this is beyond most present planning across NERC. Therefore, the SDT has made a change to the proposed standard to develop a new requirement to replace R1.4 in the modeling section. The new requirement will be to perform the tests outlined in the performance requirements table and demonstrate that thermal and voltage limits are met, however, all manual and/or automatic actions are allowed (within time constrained ratings) including curtailing firm transfers and controlled shedding of Non-Consequential firm Load.			
CPS Energy		☑	Should be determined at the discretion of the Transmission Planners.
Entergy		☑	This would require an increase in investment that will place an undue cost burden on all customers for low probability events. It does not appear that there has been any meaningful balancing of the potential benefits against the significant increase in cost that will be required. See comments to Q43.
LADWP		☑	This is N-2 and load loss should be permitted. As for whether or not this is a high probability event, there should be an objective measure (such as 1 in 5, 1 in 50, or 1 in 100, etc.) as to what constitute high probability, i.e., are there any outage history that would support any of the contention here that these are high probablity events? It is a mistake to arbitrary injecting "subjective" probability into a deterministic based reliability standard unless the industry is ready to move into 100% probabilistic based reliability standards.
Response: The SDT has outage data for representative Facilities which show that the probability of an event involving one generator outage followed by another generator outage is higher than an event involving a single transmission line. The SDT notes that in Order 693 FERC directs NERC to prohibit loss of Non-Consequential firm Load for a single Contingency and therefore the SDT believes that this is an			

Q26			
Commenter	**Agree**	**Disagree**	**Comment**
appropriate requirement for the standard. The majority of commenters in response to the first posting of the draft standard agreed with this approach. See also the SDT's summary response.			
FirstEnergy		☑	Shedding load could be part of the system adjustment in preparation for the next possible contingency but load drop would not be acceptable for problems caused soley by the first contingency.
Response: The SDT notes that in Order 693 FERC directs NERC to prohibit Non-Consequential loss of Load for a single Contingency in the planning horizon whether it is to meet the System performance after the outage or to prepare for the next Contingency and therefore the SDT believes that this is an appropriate requirement for the standard. The majority of commenters in response to the first posting of the draft standard agreed with this approach. See also the SDT's summary response. The SDT notes that when operating the System, the System Operator may have to drop Non-Consequential loss of Load as a last resort to maintain the reliability of the interconnected network. This would typically be for operating situations with more than a single prior outage for the Contingency event.			
Progress–Florida		☑	The severity of this event is such that Non-Consequential Loss of Load might be a necessary operating procedure in a Corrective Action Plan as part of System restoration. Specifically, the sudden loss of a large generator followed soon thereafter by the loss of a second generator would often result in such a large generation-to-load mismatch that Non-Consequential Loss of Load would be inevitable. It is clear, however, that the Bulk Electric System should be planned such that any generator can be maintained (offline) and the system can be operated to the contingency of another generator. This is accomplished in the Security Constrained unit commitment process. However, if the intent of this requirement is that the system should be planned such that there can be no Non-Consequential Load Loss for the loss of a second generator (after System adjustment), then the requirement is too stringent in that the planner would essentially have to plan for 3 generator contingencies. Finally, the probability of an event should not be the primary factor determining whether or not Non-Consequential Loss of Load is permitted, but rather the presence or absence of cascading for the event.
Response: The SDT agrees that the draft standard could reasonably be interpreted that if a major generating outage lasts more than 1 year that the System still needs to be able to meet G-1, System adjustment and then, a 2nd G-1 without the loss of any Non-Consequential Load. This interpretation would require new construction to meet any G-1 + G-1 + G-1, because there would be a violation of the standard if any plant outage occurred and was not available over the peak period during the planning horizon. The SDT believes this is beyond most present planning across NERC. Therefore, the SDT has made a change to the proposed standard to develop a new requirement to replace R1.4 in the modeling section. The new requirement will be to perform the tests outlined in the performance requirements table and demonstrate that thermal and voltage limits are met, however, all manual and/or automatic actions are allowed (within time constrained ratings) including curtailing firm transfers and controlled shedding of Non-Consequential firm Load. The SDT has outage data for representative Facilities which show that the probability of an event involving one generator outage followed by another generator outage is higher than an event involving a single transmission line. The SDT notes that in Order 693 FERC directs NERC to prohibit loss of Non-Consequential firm Load for a single Contingency and therefore the SDT believes that this is an appropriate requirement for the standard. The majority of commenters in response to the first posting of the draft standard agreed with this approach. See also the SDT's summary response.			

Q26			
Commenter	**Agree**	**Disagree**	**Comment**
SRP		☑	The time to adjust the system needs to be provided (when does a N-1-1 become a N-2?). If the cause of the outage is transient (temporary) the operator needs some time to test and restore the element (could be minutes up to several hours). If the element is lost indefinitly, the operator will need some minimum time to adjust the system. If this time is not available prior to the next N-1 then the standard should allow Non-Consequetial Loss of Load. Some distinction needs to be made the amount of generation connected at a single point on the BES. a wind farm might have many small generators connected to the BES with an aggregate total of 300Mw or more. This requirement will should only apply to generating sources that might be connected to the BES through a single transformer (i.e. wind farm) with minimum agregate total of 300 MW (for N-1).
Response: The SDT believes that the time to adjust that is used in planning needs to be consistent with the time periods for which the Facility Ratings are designed. This time to adjust is different for different types of Facilities, as well as, for individual Facilities. The SDT has clarified this point in the standard but does not provide a specific time to be used for planning across NERC. The SDT has made changes to the performance table and language to define what is included in an individual generator outage. Treatment of wind farm in modeling and analysis needs to be addressed in MOD-010 through MOD-013.			
Santee Cooper		☑	The event should be tested for ensuring or maintaining reliability of the BES, however direct load loss should be allowed.
SERC RRS OPS TVA		☑	It is agreed that this event should be tested for maintaining reliability of the BES, however planned load loss should be allowed.
SCE&G		☑	Planned load loss should be allowed.
Response: The SDT agrees that Consequential (direct) Load Loss should be allowed but disagrees that planned loss of Non-Consequential firm Load should be allowed. The standard has been drafted to allow Consequential direct Load Loss for this event but not Non-Consequential Load Loss for this Contingency event. The SDT has outage data for representative facilities which shows that the probability of an event involving one generator outage followed by another generator outage is higher than an event involving a single Transmission line. The SDT notes that in Order 693 FERC directs NERC to prohibit loss of Non-Consequential firm Load for a single Contingency and therefore the SDT believes that this is an appropriate requirement for the standard. The majority of commenters in response to the first posting of the draft standard agreed with this approach. See also the SDT's summary response.			
SaskPower		☑	Local area network load is allowed to be shed in Saskatchewan. The Saskatchewan Regulatory Jurisdiction has no plans to change this unless there is technical evidence to justify the increase in reliability. The SDT should justify that the benefit to customers of this increased reliability justifies the cost.
Response: The SDT is required to address FERC Order 693 and cannot default to lowest common denominator. This issue is beyond the scope of the Standard Drafting Team and needs to be addressed at the NERC level. However, an Entity can request an "Entity Variance" in accordance with the NERC Reliability Standards Development Procedure (Page 27).			
Tenaska	☑		This is really an issue that should be driven by the customers
Response: FERC Order No. 693 and the Energy Policy Act of 2005 has driven changes embodied by this question.			

Q26			
Commenter	**Agree**	**Disagree**	**Comment**
HQTE	☑		Load curtailment may need to be implemented during system adjustment to ensure reliability for the next contingency and may be reasonable following the subsequent loss of 2 additional generators.
Response: FERC Order 693 indicates that only Consequential Load Loss should be allowed while Non-Consequential Load loss should not. See also the SDT's summary response.			
IESO	☑		The loss of a generator is different from the loss of a transmission facility. The former usually does not result in changes to the system topology nor system operating limits. While loss of 2 generators may result in resource deficiency, the decision to shed load would only be made when operating reserve cannot be replenished after the first contingency, and when the second contingency would result in violation of any SOLs or IROLs or BAL standards for which adjustment cannot be made within the required time line.
Response: The SDT agrees with the comment, although that is not the reason for the proposed changes. FERC Order 693 indicates that only consequential load loss should be allowed while non-consequential load loss should not. See also the SDT's summary response.			
ITC	☑		Also use of system adjustment should consider time required to complete adjustment.
Response: The SDT agrees and has proposed changes to the tables to clarify.			
Manitoba Hydro	☑		With the caveat that firm transfer is included in the adjustment, otherwise there is a huge cost with minimal reliability benefit. A further comment is what rationale was applied by the SDT to come up with these combinations of events? is there a statistical basis? the viable combinations of multiple contingency events should be left to the experience of the transmission planner.
Response: FERC Order 693 indicates that firm transfers are not to be curtailed either to meet the System performance for a single Contingency or to prepare for the next Contingency. This is the basis for not allowing firm transfer. See also the SDT's summary response and Order 693, Paragraph 1796 for additional FERC clarification with regard to prohibiting curtailment of firm transfers after a single Contingency. The combinations of events were chosen drawing on the experience of members of the SDT. If there are any additional events that should be added to the tables, please provide specific suggestions during the next comment period.			
NCEMC	☑		In the case of generating capacity replacement, some guidance as to allowable system adjustments might be needed for clarification. Is calling on contingency reserves from a Reserve Sharing Group immediately prior to internal redispatch of available resources OK? What about Network Customer generation not at maximum output but available for redispatch ? What about transmission reconfiguration, cutting firm purchases (pro-rata or in entirety) acceptable?
Response: The SDT agrees with the comment and the SDT has proposed changes to clarify what System adjustments are allowed.			
WPS	☑		It is inappropriate to rely on Non-consequential loss of load as an ultimate Corrective Action Plan for this event. However, non-consequential load loss can provide interim relief until such time as the Corrective Action Plan is actually constructed and in-service.
Response: The SDT agrees with this comment and has proposed an interim relief provision for the standard.			
Ameren	☑		The outage of any two generators should not result in any non-consequential loss of load.

Q26			
Commenter	**Agree**	**Disagree**	**Comment**
AECC	☑		neither should consequential load be lost. The system should operate to all performance criteria for loss of any one generator station (all units).
AECI	☑		
Allegheny Power	☑		
AEP	☑		
APPA	☑		
ATC	☑		
APS			
BPA	☑		
City Water Power and Light	☑		
Dominion	☑		Dominion agrees with these proposed standards as they are relatively higher probability events and reflect very closely to the Company's internal planning criteria.
Duke Energy	☑		
Entegra	☑		
E ON US	☑		
ERCOT ISO CAISO	☑		Non consequential loss of load should not be permitted for this type of event. Loss of a generator has higher probability and longer duration than many other contingencies. Overlapping outage of a second element while one generator is already out of service and system adjusted would likewise have higher probability than other multiple contingency events.
Exelon	☑		
Georgia Transm.	☑		
ISO/RTO	☑		
KCPL	☑		
LCRA	☑		
MEAG Power	☑		
MISO	☑		
MRO	☑		
NERC TIS	☑		

Q26			
Commenter	**Agree**	**Disagree**	**Comment**
New York ISO	☑		
PJM	☑		
Progress–Carolinas	☑		
Seattle City	☑		
SERC EC DRS	☑		
SERC EC PSS	☑		
Southern Transm.	☑		These are relatively higher probability events and the increase in performance requirements is justified.
WECC TSGT TEP	☑		We agree that Non-Consequential Loss of Load should not be permitted. Loss of a generator has higher probability and longer duration than other contingency events. Overlapping outage of a second element while one generator is already out of service and system adjusted would likewise have higher probability than other multiple contingency events.
Response: Thank you.			

27) Q27. P4-2: Loss of a generator followed by a System adjustment followed by the loss of a monopolar DC line

Summary Response: The SDT notes that FERC's direction with regard to Non-Consequential firm Load and the TPL standards is stated in paragraph 1795 of FERC Order No. 693 as follows: "Based on the record before us, we believe that the transmission planning Reliability Standard should not allow an entity to plan for the loss of non-consequential load in the event of a single contingency." Paragraph 1795 also states, "Therefore, the ERO should modify the sentence to indicate that manual system adjustments, except for shedding firm load or curtailment of firm transfers, are permitted after the first contingency to bring the system back to a normal operating state." These statements which indicate that loss of Non-Consequential firm Load and interruption of firm Transmission service should not be permitted for a single Contingency are meant to apply to Facilities covered by reliability standards regardless of voltage, economics, or rate recovery issues.

These events are on higher voltage facilities on the BES. The probability of the outage of one generator followed by the outage of another generator is higher than the probability of a single Transmission line outage. Therefore, the SDT has drafted the standard to not permit loss of Non-Consequential Load or interruption of firm Transmission service for the loss of a generator followed by System adjustment followed by the loss of another generator. The majority of the commenters in response to the first posting of the standard agreed with the SDT's approach in this regard.

Issues of cost recovery are beyond the scope of the standard.

Q27			
Commenter	**Agree**	**Disagree**	**Comment**
Muscatine P&W			See Q43 Comment #5.
Response: Please see response to Q43 #5.			
Northwestern Energy		☑	What is non-consequential load loss? Is losing a motor due to motor contactor action a non-consequential load loss? Also, the transmission system was developed under criteria without this requirement and to correct it would be costly.
BCTC		☑	Similar to Q26.
Central Maine Power New England ISO NU NSTAR United Illuminating		☑	If the base case or a mandatory sensitivity case already includes unplanned generator outages, some load loss may be reasonable following the subsequent loss of an additional generators and a monopolar DC line
National Grid		☑	If mitigation plans are required that are based on studies that already include unplanned generator outages, then some load loss may be reasonable following the subsequent loss of an additional generator and a monopolar DC line
FirstEnergy		☑	Shedding load could be part of the system adjustment in preparation for the next possible contingency but load drop would not be acceptable for problems caused soley by the first contingency.
FPL FRCC		☑	Systems should be planned such that the loss of a generator, followed by System adjustment, followed by the loss of another generator would not result in Non-consequential Load Loss, and

Q27			
Commenter	**Agree**	**Disagree**	**Comment**
			equipment ratings would not be exceeded etc. However, the initial state of the system must be clarified in all performance table scenarios (including P4-1).If the Base Case contained known planned outages of generating units, as implied by the requirement R1.4, then the standard performance requirements could be interpreted to require planning for all G-1-1-1 events.
LADWP		☑	Ditto (26)
SRP		☑	Same as Q26.
Santee Cooper SERC RRS OPS		☑	Same comment as question #26.
SaskPower		☑	Local area network load is allowed to be shed in Saskatchewan. The Saskatchewan Regulatory Jurisdiction has no plans to change this unless there is technical evidence to justify the increase in reliability. The SDT should justify that the benefit to customers of this increased reliability justifies the cost.
HQTE	☑		Load curtailment may need to be implemented during system adjustment to ensure reliability for the next contingency and may be reasonable following the subsequent loss of an additional generator and a monopolar DC line
IESO	☑		Same reason as above except in this case, the loss of a monopolar dc line could interrupt import. Again, it is a resource issue, not a transmission reliability issue.
ITC	☑		Also use of system adjustment should consider time required to complete adjustment.
Manitoba Hydro	☑		With the caveat that firm transfer is included in the adjustment, otherwise there is a hugh cost with minimal reliability benefit.
Tenaska	☑		This is really an issue that should be driven by the customers
Response: Please see response to #26.			
CenterPoint		☑	CenterPoint Energy believes the assumption that this is a high probability event is incorrect. Furthermore, an absolute requirement prohibiting non-consequential loss of load has economic and landowner impacts that cannot be ignored.
Response: The SDT disagrees with the commenter's first statement. The SDT has outage data for representative Facilities which show that the probability of an event involving one generator outage followed by a DC line is within an order of magnitude of an event involving a single Transmission line. With regard to the commenter's second comment, the SDT notes that in Order 693 FERC directs NERC to prohibit loss of Non-Consequential firm Load for a single Contingency and therefore the SDT believes that this is an appropriate requirement for the standard. FERC's direction is meant to apply to BES Facilities covered by reliability standards regardless of land-use, voltage, economics, or rate recovery issues. Issues of land-use, economics, and cost recovery are not to be addressed by the SDT as being beyond the scope of the SDT. The majority of commenters in response to the first posting of the draft standard agreed with this approach. See also the SDT's summary response.			
Entergy		☑	This would require an increase in investment that will place an undue cost burden on all customers for low probability events. It does not appear that there has been any meaningful balancing of the potential benefits agains the significant increase in cost that will be required.

Q27			
Commenter	**Agree**	**Disagree**	**Comment**
			See comments to Q43.
Response: The SDT has outage data for representative Facilities which show that the probability of an event involving one generator outage followed by a DC line is within an order of magnitude of an event involving a single Transmission line. With regard to the commenter's second comment, the SDT notes that in Order 693 FERC directs NERC to prohibit loss of Non-Consequential firm Load for a single Contingency and therefore the SDT believes that this is an appropriate requirement for the standard. FERC's direction is meant to apply to BES Facilities covered by reliability standards regardless of land-use, voltage, economics, or rate recovery issues. Issues of land-use, economics, and cost recovery are not to be addressed by the SDT as being beyond the scope of the SDT. The majority of commenters in response to the first posting of the draft standard agreed with this approach. See also the SDT's summary response.			
Progress–Florida		☑	The severity of this event is such that Non-Consequential Loss of Load might be a necessary operating procedure in a Corrective Action Plan as part of System restoration, provided that the Non-Consequential Loss of Load is confined to a single control area (i.e., not resulting in a cascading outage). Furthermore, the frequency of an event should not be the primary factor determining whether or not Non-Consequential Loss of Load is permitted, but rather the presence or absence of cascading for the event. Existing Category C requirements are adequate for this type of event.
Response: The SDT agrees that the draft standard could reasonably be interpreted that if a major generating outage lasts more than 1 year that the System still needs to be able to meet G-1, System adjustment and then, a 2nd G-1 without the loss of any Non-Consequential Load. This interpretation would require new construction to meet any G-1 + G-1 + G-1, because there would be a violation of the standard if any plant outage occurred and was not available over the peak period during the planning horizon. The SDT believes this is beyond most present planning across NERC. Therefore, the SDT has made a change to the proposed standard to develop a new requirement to replace R1.4 in the modeling section. The new requirement will be to perform the tests outlined in the performance requirements table and demonstrate that thermal and voltage limits are met, however, all manual and/or automatic actions are allowed (within time constrained ratings) including curtailing firm transfers and controlled shedding of Non-Consequential firm Load. The SDT has outage data for representative Facilities which show that the probability of an event involving one generator outage followed by a DC line is within an order of magnitude of an event involving a single Transmission line. With regard to the commenter's second comment, the SDT notes that in Order 693 FERC directs NERC to prohibit loss of Non-Consequential firm Load for a single Contingency and therefore the SDT believes that this is an appropriate requirement for the standard. FERC's direction is meant to apply to BES Facilities covered by reliability standards regardless of land-use, voltage, economics, or rate recovery issues. Issues of land-use, economics, and cost recovery are not to be addressed by the SDT as being beyond the scope of the SDT. The majority of commenters in response to the first posting of the draft standard agreed with this approach. See also the SDT's summary response.			
SCE&G		☑	Planned load loss should be allowed.
TVA		☑	It is agreed that this event should be tested for maintaining reliability of the BES, however planned load loss should be allowed.
Response: The SDT agrees that Consequential (direct) Load Loss should be allowed but disagrees that planned loss of Non-Consequential firm Load should be allowed. The standard has been drafted to allow Consequential direct Load Loss for this event but not Non-Consequential Load Loss for this Contingency event. The SDT has outage data for representative Facilities which show that the probability of an event involving one generator outage followed by a DC line outage is within an order of magnitude than an event involving a single Transmission line. The SDT notes that in Order 693 FERC directs NERC to prohibit loss of Non-Consequential firm Load for a single Contingency and			

Q27			
Commenter	**Agree**	**Disagree**	**Comment**
therefore the SDT believes that this is an appropriate requirement for the standard. The majority of commenters in response to the first posting of the draft standard agreed with this approach. See also the SDT's summary response.			
MRO	☑		The monopolar DC line words should be revised to "a single pole of a DC line".
Response: The SDT agrees and has made appropriate changes to the tables.			
NPCC RCS	☑		Load curtailment may need to be implemented during system adjustment to ensure reliability for the next contingency and may be reasonable following the subsequent loss of an additional generator and a monopolar DC line
Response: See summary response.			
ABB	☑		
Ameren	☑		The outage of a generator and any other element should not result in any non-consequential loss of load.
AECC	☑		neither should consequential load be lost. The system should operate to all performance criteria for loss of any one generator station (all units).
AECI	☑		AECI
Allegheny Power	☑		Allegheny Power
AEP	☑		AEP
APPA	☑		APPA
ATC	☑		ATC
BPA	☑		BPA
Brazos Electric	☑		
City Water Power and Light	☑		
Dominion	☑		Although we do not have any DC lines, Dominion agrees with these proposed standards as they are relatively higher probability events and reflect very closely to the Company's internal planning criteria.
Duke Energy	☑		
Entegra	☑		
ERCOT ISO CAISO	☑		Agree that non consequential loss of load should not be permitted due to higher probability of generator outage.
Exelon	☑		
Georgia Transm.	☑		

Q27			
Commenter	**Agree**	**Disagree**	**Comment**
ISO/RTO	☑		
KCPL	☑		
LCRA	☑		
MEAG Power	☑		
MISO	☑		
NERC TIS	☑		
New York ISO	☑		
PJM	☑		
Progress–Carolinas	☑		
Seattle City	☑		
SERC EC DRS	☑		
SERC EC PSS	☑		
Southern Transm.	☑		See comment for Q26 [These are relatively higher probability events and the increase in performance requirements is justified.
WECC TSGT TEP	☑		We agree that Non-Consequential Loss of Load should not be permitted. Loss of a generator has higher probability and longer duration than other contingency events. Overlapping outage of a second element while one generator is already out of service and system adjusted would likewise have higher probability than other multiple contingency events.
WPS	☑		See response to Q26.
Response: Thank you.			

28) Q28. P4-3: Loss of a generator followed by System adjustment followed by loss of a Transmission circuit

Summary Response: The SDT notes that FERC's direction with regard to Non-Consequential firm Load and the TPL standards is provided in paragraph 1795 of FERC Order No. 693 which indicates that loss of Non-Consequential firm Load and interruption of firm Transmission service should not be permitted for a single Contingency regardless of voltage, economics, or rate recovery issues. Also see summary response to question 26.

These events are on higher voltage facilities on the BES. The probability of the outage of one generator followed by the loss of a Transmission line is within an order of magnitude of a single Transmission line outage. Therefore, the SDT has drafted the standard to not permit loss of Non-Consequential firm Load or interruption of firm Transmission service for the loss of a generator followed by System adjustment followed by the loss of a Transmission line. Issues of land-use, economics, and cost recovery are beyond the scope of the standard.

The majority of the commenters in response to the first posting of the standard agreed with the SDT's approach in this regard.

Q28			
Commenter	**Agree**	**Disagree**	**Comment**
Muscatine P&W			See Q43 Comment #5.
Response: Please see response to Q43 #5.			
Brazos Electric		☑	Need definition of system adjustment.
Response: The SDT agrees that system adjustment needed to be clarified. The SDT has made clarifying changes to the tables.			
Northwestern Energy		☑	What is non-consequential load loss? Is losing a motor due to motor contactor action a non-consequential load loss? Also, the transmission system was developed under criteria without this requirement and to correct it would be costly.
BCTC		☑	Similar to Q26.
Central Maine Power New England ISO NU NSTAR United Illuminating		☑	If the base case or a mandatory sensitivity case already includes unplanned generator outages, some load loss may be reasonable following the subsequent loss of an additional generators and a Transmission circuit
National Grid		☑	If mitigation plans are required that are based on studies that already include unplanned generator outages, then some load loss may be reasonable following the subsequent loss of an additional generator and a Transmission circuit
FirstEnergy		☑	Shedding load could be part of the system adjustment in preparation for the next possible contingency but load drop would not be acceptable for problems caused soley by the first contingency.
FPL FRCC		☑	Systems should be planned such that the loss of a generator, followed by System adjustment, followed by the loss of another generator would not result in Non-consequential Load Loss, and equipment ratings would not be exceeded etc. However, the initial state of the system must be

Q28			
Commenter	**Agree**	**Disagree**	**Comment**
			clarified in all performance table scenarios (including P4-1).If the Base Case contained known planned outages of generating units, as implied by the requirement R1.4, then the standard performance requirements could be interpreted to require planning for all G-1-1-1 events.
LADWP		☑	Ditto (26)
SRP		☑	Same as Q26.
SaskPower		☑	Local area network load is allowed to be shed in Saskatchewan. The Saskatchewan Regulatory Jurisdiction has no plans to change this unless there is technical evidence to justify the increase in reliability. The SDT should justify that the benefit to customers of this increased reliability justifies the cost.
HQTE	☑		Load curtailment may need to be implemented during system adjustment to ensure reliability for the next contingency and may be reasonable following the subsequent loss of an additional generator and a Transmission circuit.
IESO	☑		Similar reason as above. In this case, while the second contingency is the loss of a transmission circuit, the first contingency (loss of a generator) has not changed the system topology. Hence, the system condition after having been adjusted following the first contingency should in essence be similar to the all transmission facilities in service condition for which the non-consequential loss of load performance for single contingencies is expected.
ITC	☑		Also use of system adjustment should consider time required to complete adjustment. Ability for generation adjustment should include the time required for unit startup if applicable.
Manitoba Hydro	☑		With the caveat that firm transfer is included in the adjustment, otherwise there is a hugh cost with minimal reliability benefit.
Tenaska	☑		This is really an issue that should be driven by the customers
Response: See response to #26.			
CenterPoint		☑	CenterPoint Energy believes the assumption that this is a high probability event is incorrect. Furthermore, an absolute requirement prohibiting non-consequential loss of load has economic and landowner impacts that cannot be ignored.
Response: The SDT disagrees with the commenter's first statement. The SDT has outage data for representative Facilities which show that the probability of an event involving one generator outage followed by a Transmission line is within an order of magnitude of an event involving a single Transmission line. With regard to the commenter's second comment, see the summary response with regard to FERC Order No. 693.			
CPS Energy		☑	Should be determined at the discretion of the Transmission Planners.
Entergy		☑	This would require an increase in investment that will place an undue cost burden on all customers for low probability events. It does not appear that there has been any meaningful balancing of the potential benefits against the significant increase in cost that will be required. See comments to Q43.
Response: The SDT has outage data for representative Facilities which show that the probability of an event involving one generator outage			

Q28			
Commenter	**Agree**	**Disagree**	**Comment**
followed by a Transmission line is within an order of magnitude of an event involving a single Transmission line. With regard to the commenter's second comment, see the summary response with regard to FERC Order No. 693.			
JEA		☑	I do agree that long term plans should be implemented with the goal to eliminate non-consequential load shedding as a response to this failure mode. However, it may be more beneficial for investing in system improvements to reach this state of robustness where there may be a few years or seasons of potential exposure for utilizing non-consequential load shedding. This should be prudent utility practice as long as post-contingency response is executed within the time frame allowed by the facility emergency ratings and load shedding is limited to TP's contracted or tariff loads.
Response: SDT agrees that sufficient time must be provided for transition and will provide for that in the implementation plan for the standard. With regard to other comments, see summary response.			
Progress–Florida		☑	The severity of this event is such that Non-Consequential Loss of Load might be a necessary operating procedure in a Corrective Action Plan as part of System restoration, provided that the Non-Consequential Loss of Load is confined to a single control area (i.e., not resulting in a cascading outage). Furthermore, the frequency of an event should not be the primary factor determining whether or not Non-Consequential Loss of Load is permitted, but rather the presence or absence of cascading for the event. Existing Category C requirements are adequate for this type of event.
Response: The SDT agrees that the draft standard could reasonably be interpreted that if a major generating outage lasts more than 1 year that the System still needs to be able to meet G-1, System adjustment and then, a 2nd G-1 without the loss of any Non-Consequential Load. This interpretation would require new construction to meet any G-1 + G-1 + G-1, because there would be a violation of the standard if any plant outage occurred and was not available over the peak period during the planning horizon. The SDT believes this is beyond most present planning across NERC. Therefore, the SDT has made a change to the proposed standard to develop a new requirement to replace R1.4 in the modeling section. The new requirement will be to perform the tests outlined in the performance requirements table and demonstrate that thermal and voltage limits are met, however, all manual and/or automatic actions are allowed (within time constrained ratings) including curtailing firm transfers and controlled shedding of Non-Consequential firm Load. The SDT has outage data for representative Facilities which show that the probability of an event involving one generator outage followed by a Transmission line is within an order of magnitude of an event involving a single Transmission line. With regard to the commenter's second comment, see the summary response with regard to FERC Order No. 693.			
Santee Cooper SERC RRS OPS		☑	Same comment as question #26.
SCE&G		☑	Planned load loss should be allowed.
TVA		☑	It is agreed that this event should be tested for maintaining reliability of the BES, however planned load loss should be allowed.
Response: The SDT agrees that Consequential (direct) Load Loss should be allowed but disagrees that planned loss of Non-Consequential firm Load should be allowed. The standard has been drafted to allow Consequential direct Load Loss for this event but not Non-Consequential Load Loss for this Contingency event. The SDT has outage data for representative Facilities which show that the probability of an event			

Q28			
Commenter	**Agree**	**Disagree**	**Comment**
involving one generator outage followed by a DC line outage is within an order of magnitude than an event involving a single Transmission line. Also, see the summary response with regard to FERC Order No. 693.			
IESO	☑		Similar reason as above. In this case, while the second contingency is the loss of a transmission circuit, the first contingency (loss of a generator) has not changed the system topology. Hence, the system condition after having been adjusted following the first contingency should in essence be similar to the all transmission facilities in service condition for which the non-consequential loss of load performance for single contingencies is expected.
ITC	☑		Also use of system adjustment should consider time required to complete adjustment. Ability for generation adjustment should include the time required for unit startup if applicable.
Manitoba Hydro	☑		With the caveat that firm transfer is included in the adjustment, otherwise there is a hugh cost with minimal reliability benefit.
NPCC RCS	☑		Load curtailment may need to be implemented during system adjustment to ensure reliability for the next contingency and may be reasonable following the subsequent loss of an additional generator and a Transmission circuit
Response: Please see response to Q27.			
ABB	☑		
Ameren	☑		The outage of a generator and any other element should not result in any non-consequential loss of load.
AECC	☑		neither should consequential load be lost. The system should operate to all performance criteria for loss of any one generator station (all units).
AECI	☑		
Allegheny Power	☑		
AEP	☑		
APPA	☑		
ATC	☑		
BPA	☑		
CAISO	☑		Same reason as in Q26.
City Water Power and Light	☑		
Dominion	☑		Dominion agrees with these proposed standards as they are relatively higher probability events and reflect very closely to the Company's internal planning criteria.
Duke Energy	☑		
Entegra	☑		

Q28			
Commenter	**Agree**	**Disagree**	**Comment**
E ON US	☑		
ERCOT ISO	☑		Same reason as in Q26.
Exelon	☑		
Georgia Transm.	☑		
ISO/RTO	☑		
KCPL	☑		
LCRA	☑		
MEAG Power	☑		
MISO	☑		
MRO	☑		
NERC TIS	☑		
New York ISO	☑		
NCEMC	☑		See reply to Q26.
PJM	☑		
Progress–Carolinas	☑		
Seattle City	☑		
SERC EC DRS	☑		
SERC EC PSS	☑		
Southern Transm.	☑		See comment for Q26 [These are relatively higher probability events and the increase in performance requirements is justified.
WECC TSGT TEP	☑		We agree that Non-Consequential Loss of Load should not be permitted. Loss of a generator has higher probability and longer duration than other contingency events. Overlapping outage of a second element while one generator is already out of service and system adjusted would likewise have higher probability than other multiple contingency events.
WPS	☑		See response to Q26.
Response: Thank you.			

29) Q29. P4-4: Loss of a generator followed by System adjustment followed by loss of a transformer

Summary Response: The SDT notes that FERC's direction with regard to Non-Consequential firm Load and the TPL standards is provided in paragraph 1795 of FERC Order No. 693 which indicates that loss of Non-Consequential firm Load and interruption of firm Transmission service should not be permitted for a single Contingency regardless of voltage, economics, or rate recovery issues. See summary response to Q26.

These events are on higher voltage facilities on the BES. The probability of the outage of one generator followed by the loss of a transformer is within an order of magnitude of a single Transmission line outage. Therefore, the SDT has drafted the standard to not permit loss of Non-Consequential firm Load or interruption of firm Transmission service for the loss of a generator followed by System adjustment followed by the loss of a transformer. The majority of the commenters in response to the first posting of the standard agreed with the SDT's approach in this regard.

Q29			
Commenter	**Agree**	**Disagree**	**Comment**
Muscatine P&W			See Q43 Comment #5.
Response: Please see response to Q43 #5.			
Brazos Electric		☑	See above.
Northwestern Energy		☑	What is non-consequential load loss? Is losing a motor due to motor contactor action a non-consequential load loss? Also, the transmission system was developed under criteria without this requirement and to correct it would be costly.
BCTC		☑	Similar to Q26.
Central Maine Power New England ISO NU NSTAR United Illuminating		☑	If the base case or a mandatory sensitivity case already includes unplanned generator outages, some load loss may be reasonable following the subsequent loss of an additional generators and a transformer
National Grid		☑	If mitigation plans are required that are based on studies that already include unplanned generator outages, then some load loss may be reasonable following the subsequent loss of an additional generator and a transformer
FirstEnergy		☑	Shedding load could be part of the system adjustment in preparation for the next possible contingency but load drop would not be acceptable for problems caused soley by the first contingency.
FPL FRCC		☑	Systems should be planned such that the loss of a generator, followed by System adjustment, followed by the loss of another generator would not result in Non-consequential Load Loss, and equipment ratings would not be exceeded etc. However, the initial state of the system must be clarified in all performance table scenarios (including P4-1).If the Base Case contained known planned outages of generating units, as implied by the requirement R1.4, then the standard performance requirements could be interpreted to require planning for all G-1-1-1 events.

Q29			
Commenter	**Agree**	**Disagree**	**Comment**
JEA		☑	See comment on P4-3.
LADWP		☑	Ditto (26)
SRP		☑	Same as Q26.
Santee Cooper SERC RRS OPS		☑	Same comment as question #26.
HQTE	☑		Load curtailment may need to be implemented during system adjustment to ensure reliability for the next contingency and may be reasonable following the subsequent loss of an additional generator and a transformer.
IESO	☑		Similar reason as above.
ITC	☑		Also use of system adjustment should consider time required to complete adjustment. Ability for generation adjustment should include the time required for unit startup if applicable.
Manitoba Hydro	☑		With the caveat that firm transfer is included in the adjustment, otherwise there is a hugh cost with minimal reliability benefit.
Tenaska	☑		This is really an issue that should be driven by the customers
Response: Please see response to Q26.			
CenterPoint		☑	CenterPoint Energy believes the assumption that this is a high probability event is incorrect. Furthermore, an absolute requirement prohibiting non-consequential loss of load has economic and landowner impacts that cannot be ignored.
Response: The SDT disagrees with the commenter's first statement. The SDT has outage data for representative Facilities which show that the probability of an event involving one generator outage followed by a transformer is within an order of magnitude of an event involving a single Transmission line. With regard to the commenter's second comment, see summary response.			
CPS Energy		☑	Should be determined at the discretion of the Transmission Planners.
Entergy		☑	This would require an increase in investment that will place an undue cost burden on all customers for low probability events. It does not appear that there has been any meaningful blancing of the potential benefits against the significant increase in cost that will be required See comments to Q43.
Response: The SDT has outage data for representative Facilities which show that the probability of an event involving one generator outage followed by a transformer is within an order of magnitude of an event involving a single Transmission line. With regard to the commenter's second comment, see summary response			
Progress–Florida		☑	The severity of this event is such that Non-Consequential Loss of Load might be a necessary operating procedure in a Corrective Action Plan as part of System restoration, provided that the Non-Consequential Loss of Load is confined to a single control area (i.e., not resulting in a cascading outage). Furthermore, the frequency of an event should not be the primary factor determining whether or not Non-Consequential Loss of Load is permitted, but rather the presence or absence of cascading for the event. Existing Category C requirements are adequate for this

Q29			
Commenter	**Agree**	**Disagree**	**Comment**
			type of event.
NPCC RCS	☑		Load curtailment may need to be implemented during system adjustment to ensure reliability for the next contingency and may be reasonable following the subsequent loss of an additional generator and a transformer
Response: Please see response to Q27.			
SCE&G		☑	Planned load loss should be allowed.
TVA		☑	It is agreed that this event should be tested for maintaining reliability of the BES, however planned load loss should be allowed.
Response: The SDT agrees that Consequential (direct) Load Loss should be allowed but disagrees that planned loss of Non-Consequential firm Load should be allowed. The standard has been drafted to allow Consequential direct Load Loss for this event but not Non-Consequential Load Loss for this Contingency event. The SDT has outage data for representative Facilities which show that the probability of an event involving one generator outage followed by a DC line outage is within an order of magnitude than an event involving a single Transmission line. Also, see the summary response with regard to FERC Order No. 693.			
Duke Energy	☑		Table in TPL-001-1 doesn't include the last part of P4-4 (low side voltage rating above 300 kV). We assume the inclusion of 300kV here in the comment form is in error.
Response: The SDT notes that the original comment form was in error as described in your comment. The SDT noticed the error and revised the comment form and reposted it to correct the error.			
MISO	☑		Note - No voltage limit for generator and transformer per Table 1, P4-4
KCPL	☑		Need voltage limit in Table 1.
Response: The SDT disagrees because voltage limits differ from system to system.			
ABB	☑		
Ameren	☑		The outage of a generator and any other element should not result in any non-consequential loss of load.
AECC	☑		neither should consequential load be lost. The system should operate to all performance criteria for loss of any one generator station (all units).
AECI	☑		
Allegheny Power	☑		
AEP	☑		
APPA	☑		
ATC	☑		
BPA	☑		
City Water Power and Light	☑		

Q29			
Commenter	**Agree**	**Disagree**	**Comment**
Dominion	☑		Dominion agrees with these proposed standards as they are relatively higher probability events and reflect very closely to the Company's internal planning criteria.
E ON US	☑		
Entegra	☑		
ERCOT ISO CAISO	☑		Same reason as in Q26.
Exelon	☑		
Georgia Transm.	☑		
ISO/RTO	☑		
LCRA	☑		
MEAG Power	☑		
MRO	☑		
NERC TIS	☑		
New York ISO	☑		
NCEMC	☑		See reply to Q26.
PJM	☑		
Progress–Carolinas	☑		
Seattle City	☑		
SERC EC DRS	☑		
SERC EC PSS	☑		
Southern Transm.	☑		See comment for Q26 [These are relatively higher probability events and the increase in performance requirements is justified.
WECC TSGT TEP	☑		We agree that Non-Consequential Loss of Load should not be permitted. Loss of a generator has higher probability and longer duration than other contingency events. Overlapping outage of a second element while one generator is already out of service and system adjusted would likewise have higher probability than other multiple contingency events.
WPS	☑		See response to Q26.
Response: Thank you.			

The performance requirement for the following event may be considered less stringent than the existing TPL Standards — P2-3: Loss of a single pole of a DC line. Interruption of firm transactions (without Loss of firm Load) if the transaction is dependent on the faulted DC line is now allowed for this initiating event/Contingency.

30) Q30. Do you agree that interruption of any firm transfers that are dependent on the outaged DC line that is taken out of service should be permitted?

Summary Response: Some commenters that agreed with curtailing firm transfers that are dependent on a DC line when the DC line is outaged indicated that such curtailment should apply to AC lines as well. Also, some of these parties indicated concern that other transfers such as interruptible transfers should be also allowed. The SDT did not make a change in response to these comments because many of the transfers over DC lines are automatically curtailed when the DC line is outaged and because the ability to interrupt other transfers such as non-firm transfers are already provided for in the standard.

Q30			
Commenter	**Agree**	**Disagree**	**Comment**
Muscatine P&W			See Q43 Comment #5.
Response: The SDT does not see how Muscatine Power and Water's Comment #5 to Q43 relates to this question. The SDT does not make any change to the standard with regard to Q30 as a result of this comment.			
Ameren		☑	If the system cannot withstand the outage of the single element (AC or DC) without curtailment of the transfer, then the transaction should not be considered as firm.
AECC		☑	
BCTC		☑	Disagree with this unless AC lines are treated the same. There should be no distinction between AC and DC lines.
Duke Energy		☑	DC and AC line contingencies should have the same requirements.
Entergy	☑	☑	Why are only DC lines exempt for this requirement? Consider exemptions for AC transmission elements as well.
FPL		☑	The proposed standard does not distinguish between asynchronous DC ties and the more common parallel connected DC tie. With an asynchronous DC tie, the transfer is lost with the tie. With a parallel DC tie, the transfer will be shifted to the parallel AC system, therefore, AC lines should have the same performance criteria as DC lines.
FRCC		☑	DC and AC lines should not be treated differently. System response is similar for the loss of an AC line versus the loss of a parallel connected DC tie. For the loss of a parallel DC tie the transfer is shifted to the parallel AC system in the same manner as a loss of an AC line. The decision in selecting DC vs. AC in transmission lines has traditionally been based on the break-even cost and performance of the two alternatives. The lower performance requirement may wrongly influence decisions on project alternatives in favor of DC facilities with less stringent requirements. Therefore, AC lines should have the same performance criteria as DC lines.
Progress–Carolinas		☑	DC and AC lines should be treated comparably.

Q30			
Commenter	**Agree**	**Disagree**	**Comment**
Santee Cooper		☑	AC and DC contingency events should be treated the same.
SaskPower	☑		Why is this concept not applied to AC tie-lines between systems, whether single or multiple? In Saskatchewan's case there is very little difference.
SERC EC DRS		☑	DC and AC contingency events should be treated the same.
SERC RRS OPS		☑	DC and AC contingency events should be treated the same. The question is somewhat obscure.
SCE&G		☑	General there should be no difference between AC and DC; however, the answer to this question depends on the contractual arrangements associated with the transfer.
Southern Transm.		☑	Why should the reliability level for a transaction on a DC line be different from a transaction over AC? Also, when the transfer over DC is removed, the load it was serving still has to be picked up in the AC network because load cannot be dropped. Therefore, this places a burden on the AC network to serve additional load. If you allow transfers over DC to be interrupted, you should also allow the interruption of transfers over AC for the same events.
LADWP		☑	If the transfer is on a line experiencing outage, then the transfer is interrupted. Whether or not the transfer is firm is immaterial. Whether or not it is on the dc or ac line is also immaterial.
Central Maine Power HQTE National Grid New England ISO NU NPCC RCS NSTAR United Illuminating	☑		This should also apply to firm transfers via single or double ac facilities as well. In either case, the transfer could be linked to dedicated facilities.
ITC	☑		However, the owners of the firm transfers may not agree. If they don't, a system impact study needs to be part of the assessment IF THE OWNERS OF THE FIRM TRANSFERS DO NOT AGREE. It must be clear to the original TSR requester that this was truly conditional on the DC line being in service. If it was granted without telling them this, then the interruption of firm transfers should NOT be permitted.
TVA	☑		There are also conditions where this interruption should be allowed for a single AC tie line.
Response: The SDT did not make a change in response to your comment because many of the transfers over DC lines are automatically curtailed when the DC line is outaged.			
IESO		☑	Whether or not interruption of firm transfers should be allowed is more a business arrangement issue than a transmission reliability issue. Usually, delivery over a DC line, either as an import or access to internal or external resources, is factored into the resource integration plan to support meeting demand and energy transfers. The commitment for firm transfers may be made on the reliance of this delivery. However, the contingent loss of any resources including import is assessed in determining the amount and terms of firm transfers to a third part. This is a business

Q30			
Commenter	**Agree**	**Disagree**	**Comment**
			and resource allocation issue, not a transmission reliability issue.
Response: While it is true that there are business issues associated with the subject of this question, the SDT disagrees with the commenter with regard to the relevance for reliability. How firm transfers will be treated in the standard will have significant impact on Transmission System reliability across NERC. The SDT has not directly made any changes to the standard as a result of this comment but has considered this comment in deciding how to proceed with firm transfers in the standard.			
Progress–Florida		☑	The proposed standard does not distinguish between asynchronous DC ties and the more common parallel connected DC tie. With an asynchronous DC tie, the transfer is lost with the tie. With a parallel DC tie, the transfer will be shifted to the parallel AC system and should have the same performance requirements.
Response: The SDT deleted the reference to asynchronous DC ties in the tables.			
WECC BPA TSGT TEP	☑	☑	We agree with the question asked. In addition, transactions that can be interrupted due to the loss of a DC line should not be limited to the firm transactions, that are dependent on the DC line. It should also include interruptible transactions and other transactions made available through negotiated agreements on both AC and DC lines.
Response: The SDT did not make a change in response to your comment because many of the transfers over DC lines are automatically curtailed when the DC line is outaged and because the ability to interrupt other transfers such as non-firm transfers are already provided for in the standard**.**			
Manitoba Hydro	☑		MH agrees that reduction of firm transfer to readjust the system after a contingency should be allowed for all events. The requirement to maintain firm transfer is a more stringent requirement that in the existing standard. The need to maintain firm transfer amounts to N-2 planning with no reliability benefit. Reduction in firm transfer is not equivalent to loss of load as the transfer is backed up by reserves. MH could not accept a standard mandating that firm transfer can not be interrupted. MH also recommends P2-3 be moved into the P1 bucket as loss of a single pole of a dc line is similar to loss of a generator or transmission circuit.
Response: The SDT does not agree with your first comment on the need to allow reduction of firm transfer for all events since changes have been made to the standard to comply with FERC Order No. 693 which does not allow curtailment of firm transfer or dropping Non-Consequential Load for single Contingencies. The SDT agrees with your second comment and has made the change in the tables.			
MRO	☑		The MRO questions why interruptions of firm transfers are not allowed in other cases since load dropping is allowed for these cases.
Response: The SDT did not make a change in response to your comment because the ability to interrupt other transactions, such as interruptibles, is already provided for in the standard.			
ABB	☑		Yes, this is the purpose of HVDC. It carries the power your want, no more, no less. Both the good and bad of parallel flows are avoided.
Brazos Electric	☑		

Q30			
Commenter	**Agree**	**Disagree**	**Comment**
City Water Power and Light	☑		
Dominion			Not applicable since Dominion has no DC lines.
E ON US			No opinion, we do not operate DC.
ERCOT ISO CAISO	☑		In addition, the interruptible and other negotiated transactions should also be allowed.
Northwestern Energy	☑		
AECI	☑		
Allegheny Power	☑		
AEP	☑		
APPA	☑		
Exelon	☑		
FirstEnergy	☑		
ISO/RTO	☑		
KCPL	☑		"Firm" capacity dependent on DC line is similar reliability as a generator.
MISO	☑		The key word in this question is "dependent". Transfer is "firm" if DC line is in service.
NERC TIS			TIS will discuss this in further review of the standards development.
New York ISO	☑		NYISO agrees from a reliability aspect.
NCEMC	☑		Not applicable.
PJM	☑		
Seattle City	☑		Otherwise, we need reserve transfer capacity equal to the total of the firm transfers, which is not very cost effective!
Tenaska	☑		
WPS	☑		
Response: Thank you.			

E) Stability

31) Q31. The proposed standard is based on an assumption that steady state analysis and stability analysis are different from each other and that therefore, two tables of Contingencies and performance requirements were needed. It is also based on an assumption that stability study requirements should be clearly separated from the steady state study requirements. Do you agree with the action taken in separating stability analysis from steady state analysis? If not, please explain.

Summary Response: Some respondents thought that the Contingencies are the same for steady state and Stability or should be made the same with only one table. Some respondents thought that having two tables was confusing while others thought it improved clarity. The large majority agreed that separating Stability from steady state was the appropriate approach. The SDT will continue to have Stability and steady state analysis separate with two tables.

Q31			
Commenter	**Yes**	**No**	**Comment**
Ameren		☑	We understand the need to clarify the different requirements in the steady- state vs. the stability analyses. However, for each contingency category we expect to see both the steady-state requirements and the corresponding stability requirements in the same table. We believe that it would be better to recombine the steady-state and stability tables and present the information in a landscape format.
Response: The Contingencies are different in the extreme category. Therefore, it will be less clear to have only one table which includes both. The SDT decided to keep two tables.			
BCTC		☑	Disagree with the assumption that steady state and stability analysis are different and should be separated. There are only minor differences between the tables and the reasons are not apparent. The separate tables appear to be unnecessary and is confusing, especially the same contingency numbering for both tables. Any contingency that must be studied in the stability period should also be considered in the post transient steady state period. Request that the SDT provide an explanation of their assumption.
FPL		☑	The separation of steady state and dynamic response analysis requirements into two tables (with different contingencies) is inferior to the analysis requirements outlined in Table 1 of the existing TPL Standard. The structure of Table 1 reinforces the requirement for grid stability and maintaining the grid within applicable limits for Category B and C contingencies. Dynamic simulations of Category B and C contingencies that demonstrate grid stability should be followed up with post transient power flow analysis to assess voltage and thermal limits.
FRCC		☑	There are two points of view for this question. One view is that having the performance requirement for steady state and dynamics on two separate tables is a good idea. It makes it easier to identify the performance requirements for steady state and dynamics. The other view is that separation of these requirements into two tables is not necessary because the existing tables are clear and FERC Order 693 only required the footnotes to be clarified not to redevelop the tables. The structure of existing Table 1 reinforces the requirement for grid stability and maintaining the grid within

Q31			
Commenter	**Yes**	**No**	**Comment**
			applicable limits.
HQTE		☑	The contingency studied are the same and as a result should be combined into one table. Only the performance might be different. We understand the need to clarify the different requirements in the steady state vs. the stability analyses. However, for each contingency category we expect to see both the steady-state requirements and the corresponding stability requirements in the same table. We believe that it would be better to recombine the steady-state and stability tables and present the information in a landscape format.
LADWP			There is no vote needed here because even under the current standards, the performance requirements for steady state and stability are clearly separated. So what is being added?
IESO	☑	☑	We agree that the performance requirements for steady state analysis differ from those for stability analysis, but not the contingency requirements. While the specification of, for example, a line to ground fault on a single facility does not mean much to a steady state analysis, and in fact the loss of a single facility is all that it matters, the system is subject to the same type of contingency regardless of the type of analysis to be performed and hence the same contingency needs to be tested in both steady-state and dynamic simulations.
Response: The SDT decided to separate steady state from Stability because the models used in the two analyses are different and the Contingencies required are different. Therefore, the SDT decided to keep two tables.			
FirstEnergy		☑	While we agree that steady-state and stability are different situations, in general we believe that the tables are confusing, overly worded, and should be combined. The initiating events are the same regardless of steady-state or stability so there should be no reason not to combine the tables as was done in the previous standards.
Response: The initiating events are different in the extreme category. Therefore, it will be less clear to have only one table. The SDT decided to keep two tables.			
New England ISO		☑	Only the difference between steady-state and stability analysis should be the performance requirements. The list of contingencies should be identical regardless of the type of analysis.
NPCC RCS		☑	The contingency studied are the same and as a result should be combined into one table.
Manitoba Hydro	☑		Yes but the definition of contingencies in table 1 and table 2 should be identical.
Progress–Florida		☑	The separation of steady state and dynamic response analysis requirements into two tables (with different contingencies) is unnecessary, and is inferior to the analysis requirements outlined in Table 1 of the existing TPL Standard. The structure of the existing Table 1 reinforces the requirement for grid stability and maintaining the grid within applicable limits for Category B and C contingencies. Dynamic simulations of Category B and C contingencies that demonstrate grid stability should be followed up with post transient power flow analysis to assess voltage and thermal limits.
Tenaska		☑	The same set of contingency tests need to be applied to in both steady state and stability studies. The performance levels may need to be characterized a little differently, but at the end of the day we

Q31			
Commenter	**Yes**	**No**	**Comment**
			are trying maintain a reliable system for the same initiating event both in a stability timeframe and a steady state timeframe.
Response: The SDT believes that some contingencies are only appropriate for steady state analysis and not for stability. The SDT believes that two tables are clearer than having only one.			
BPA	☑	☑	Support comments sent by WECC. There is a link between transient stability and steady state performance for a given event since they model serial time frames for the event.
WECC TSGT TEP	☑	☑	We agree with the question asked. In addition, because of the time sequence from the start of the fault, through fault clearing and transient dynamic period, the post-transient period to the steady state post-contingency period, there needs to be clear links between the performance requirements in the transient dynamic time period and the steady state time period. For example, if generator dropping or controlled load interruption is allowed in the transient dynamic period, it should also be allowed in the steady state time period that follows. Otherwise, it would put the Transmission Planners and the Planning Authorities in an untenable situation because, once a generator or load is dropped in the first few cycles after the disturbance; it cannot be required to be on line in the minutes that immediately follow.
Response: The SDT agrees that there should be a clear link between performance requirements in the transient period and the steady state period. We believe the standard as written provides this.			
ERCOT ISO	☑		Agree that the two analyses should be treated separately. It is not clearly defined what is steady state and what is stability. For example, are Voltage Stability (PV analysis) studies steady state or stability? Also what are the differences between System Stability and Plant Stability? Are stability studies only required for the near term planning horizon?
Response: Generally, most parties did not express confusion over the issues that are raised by this question. The SDT believes the general industry understanding is as follows: • Voltage Stability (PV analysis) is considered to be a steady state study. • Generating Unit Stability focuses on an individual generating unit or electrically closely-coupled generating units at maximum power and is concerned with Contingencies on the Transmission Facilities connected to that generating unit(s) point(s) of Interconnection or one bus away from that point. System Stability studies focus on portions of the System, which may include many generating units possibly at maximum power with Contingencies in that area of the System. System studies would also include Contingencies in large Load areas (using Load models with induction motors properly represented) which could result in fast voltage collapse. • System Stability studies are only required in the Near-Term Planning Horizon. Generating Unit Stability studies could be required for the Long-Term Planning Horizon if the commercial operation date of the plant is in the long term.			
ITC	☑		We agree but consideration should be given to the amount of work needed by entities to meet these requirements. Full scale annual stability studies may not be needed. If possible, criteria should be developed as to when stability studies need to be repeated (if at all) and to what level (i.e. every bus on the system or just the generator busses or somewhere in between).
Response: Full scale annual Stability studies are not necessarily required by the standard. Allowance is made for the use of past studies in the current year assessment.			

Q31			
Commenter	**Yes**	**No**	**Comment**
ABB	☑		Yes, I like this. You can maintain them to be as similar as possible, while still containing the requisite differences.
AECC	☑		
AECI	☑		
Allegheny Power	☑		
AEP	☑		
APPA	☑		
ATC	☑		
Brazos Electric	☑		
City Water Power and Light	☑		
CAISO	☑		Agree that the two analysis should be treated separately.
CenterPoint	☑		Separating the stability requirements into a second table improved the clarity.
Central Maine Power	☑		
CPS Energy	☑		
Duke Energy	☑		
Entergy	☑		This approach clarifies the types of stability studies/simulations to be performed. The performance criteria/guidelines are more explicit under the proposed Standard.
Exelon	☑		
Dominion	☑		
E ON US	☑		
Georgia Transm.	☑		
ISO/RTO	☑		
KCPL	☑		
LCRA	☑		
MEAG Power	☑		
MISO	☑		

Q31			
Commenter	**Yes**	**No**	**Comment**
MRO	☑		The MRO commends the SDT in separating the two tables. The single table for both types of studies has generated confusion in the industry.
Muscatine P&W	☑		
National Grid	☑		
NERC TIS	☑		Although there are many similarities, separation of the testing requirements makes the standard far more understandable.
New York ISO	☑		
NCEMC	☑		
NU	☑		
Nstar	☑		
PJM	☑		
Progress–Carolinas	☑		
ReliabilityFirst	☑		
Santee Cooper	☑		
SaskPower	☑		
Seattle City	☑		
SERC EC DRS	☑		
SERC EC PSS	☑		
SERC RRS OPS	☑		
SCE&G	☑		
Southern Transm.	☑		
TVA	☑		
United Illuminating	☑		
WPS	☑		
Northwestern Energy	☑		
Response: Thank you.			

32) Q32. The SDT has added requirements for plant stability studies and has drawn a distinction in these studies from System stability studies. Do you agree with this approach? If not, please explain.

Summary Response: The respondents were divided on this question. Most of the negative opinions expressed a view that there is no material distinction between plant and System Stability, with some indicating that the analysis and requirements are the same for both types of studies. Others also suggested that plant Stability is simply a subset of System Stability. In response to these comments, the SDT modified the standard to clarify the distinction between Generating Unit and System Stability.

The following items were changed due to industry comments:

Generating Unit Stability Study: Study that focuses on an individual generating unit's or electrically closely-coupled generating units' Stability for various Contingencies on the Transmission Facilities connected to that generating unit(s) point(s) of interconnection or one bus away from that point. This study is concerned with the loss of synchronism and the lack of damping of the generating units' power oscillations.

~~**Plant Stability Study**: Study of an individual plant's Stability for various Contingencies in the vicinity of the plant; concerned with the effect on the System of the generating units' loss of synchronism and the damping of the generating units' power oscillations.~~

System Stability Study: ~~Study of the System or portions of the System to ensure that angular Stability is maintained, inter-area power oscillations are damped, and voltages during the dynamic simulation stay within acceptable performance limits.~~ Study that focuses on portions of the System, which may include many generating units, to determine whether angular Stability is maintained, inter-area power oscillations are damped, and voltages during the dynamic simulation stay within acceptable performance limits.

R2.5. The ~~plant~~ Generating Unit Stability analysis portion of the Planning Assessment shall be analyzed consistent with Requirement ~~R4.6~~ R5.6 with studies for the year when the following changes that could affect Stability margins occur:

Q32			
Commenter	**Yes**	**No**	**Comment**
ABB		☑	I don't see any reason to differentiate between "Plant Stability" and "System Stability". These are not commonly separated, and this distinction is not standard in the industry. You should not be inventing a distinction that doesn't exist. A better differentiation would be between generator (or angular) stability and load (or voltage) stability. These are usually independently studied and independently occurring.
CenterPoint		☑	CenterPoint Energy does not see the distinction between system stability and plant stability studies as defined in the draft standard. Meeting the performance requirements set in R4.5 should suffice for all stability studies. The requirements in R4.6 seem overly prescriptive and could potentially result in numerous studies being required that would have very little positive effect on transmission systems throughout the country.
FirstEnergy		☑	We do not see the difference between plant stability and system stability. Both are based on anuglar stability of machines connected to the system and therefore, they should be treated the same.

Q32			
Commenter	**Yes**	**No**	**Comment**
Progress–Carolinas		☑	Don't need to differentiate between plant and system. These are not usually separated. It would be better to separate angular stability and voltage stability. They are studied independently.
Tenaska		☑	It is not clear that there is any difference between the two studies.

Response: See summary response. To make the distinction clearer, the SDT has modified the definitions as well as R 2.5. The SDT also believes that specificity in R 2.5 will reduce the burden of performing the Stability studies necessary to ensure a reliable BES.

Generating Unit Stability Study: Study that focuses on an individual generating unit's or electrically closely-coupled generating units' Stability for various Contingencies on the Transmission Facilities connected to that generating unit(s) point(s) of interconnection or one bus away from that point. This study is concerned with the loss of synchronism and the lack of damping of the generating units' power oscillations.

~~**Plant Stability Study**: Study of an individual plant's Stability for various Contingencies in the vicinity of the plant; concerned with the effect on the System of the generating units' loss of synchronism and the damping of the generating units' power oscillations.~~

System Stability Study: ~~Study of the System or portions of the System to ensure that angular Stability is maintained, inter-area power oscillations are damped, and voltages during the dynamic simulation stay within acceptable performance limits.~~ Study that focuses on portions of the System, which may include many generating units, to determine whether angular Stability is maintained, inter-area power oscillations are damped, and voltages during the dynamic simulation stay within acceptable performance limits.

R2.5. The ~~plant~~ Generating Unit Stability analysis portion of the Planning Assessment shall be analyzed consistent with Requirement ~~R4.6~~ R5.6 with studies for the year when the following changes that could affect Stability margins occur:

CAISO		☑	Plant stability studies are a subset of system stability studies in which loss of a generator is already evaluated to meet performance requirements. In specific situations, sensitivity analysis can be done as deemed appropriate by the TP to address a particular system problem.
Central Maine Power HQTE New England ISO NU NPCC RCS NSTAR United Illuminating		☑	A Plant Stability Study should be a part of a System Stability Study. How should and why would they be differentiated? The analysis and performance constraints are the same in both cases; it's just a matter of whether one or more generating units are involved.
National Grid		☑	As defined in R2.5, a Plant Stability Study should be a part of a System Stability Study. The analysis and performance constraints are the same in both cases; it's just a matter of whether one or more generating units are involved.
Northwestern Energy		☑	Plant stability is an artificial distinction and is a subset of transient stability.
LADWP		☑	See my comment on the definition of Plant Stability. Unless the standard drafting team has something completely different from the common understanding of loss of synchronism and so on,

Q32			
Commenter	**Yes**	**No**	**Comment**
			transient stability covers both the so called Plant Stability and System Stability Studies.
Response: The SDT agrees that Generating Unit Stability studies can be viewed as a subset of System Stability studies. The requirements specific to Generating Unit Stability (Requirements R 2.5 and R 4.6 (now R 5.6)) reflect that view. The SDT believes that the specific focus on Generating Unit Stability in Requirement R 2.5 will reduce the burden of performing the Stability studies necessary to ensure a reliable BES.			
FPL FRCC		☑	There should be no such distinction. All stability studies must meet the Performance Requirements for Planning Events in Table 2 - Stability Performance. If there were different Performance Requirements then the distinction may be warranted. However system stability studies should be sufficient and not warrant additional work.
Progress–Florida		☑	There should be no such distinction. All stability studies must meet the Performance Requirements for "Planning Events in Table 2 - Stability Performance". If there were different Performance Requirements then the distinction may be warranted. If the format for "Planning Events in Table 2 - Stability Performance" remains in its existing state, however, system stability studies are sufficient and performing studies under the guise of Plant Stability would constitute additional work with no incremental benefit.
Response: See summary response concerning the distinction between Generating Unit and System Stability as described in Requirements R 2.4 and R 2.5 as well as Requirements R 4.5 and R 4.6 (now Requirements R 5.5 and R 5.6). To make the distinction clearer, the SDT has modified the definitions as well as Requirements R 2.5. The SDT also believes that specificity in Requirements R 2.5 will reduce the burden of performing the stability studies necessary to ensure a reliable BES. In addition, the required Contingencies for Generating Unit Stability studies are different than the Contingencies for System Stability studies. **Generating Unit Stability Study**: Study that focuses on an individual generating unit's or electrically closely-coupled generating units' Stability for various Contingencies on the Transmission Facilities connected to that generating unit(s) point(s) of interconnection or one bus away from that point. This study is concerned with the loss of synchronism and the lack of damping of the generating units' power oscillations. ~~**Plant Stability Study**: Study of an individual plant's Stability for various Contingencies in the vicinity of the plant; concerned with the effect on the System of the generating units' loss of synchronism and the damping of the generating units' power oscillations.~~ **System Stability Study**: ~~Study of the System or portions of the System to ensure that angular Stability is maintained, inter-area power oscillations are damped, and voltages during the dynamic simulation stay within acceptable performance limits.~~ Study that focuses on portions of the System, which may include many generating units, to determine whether angular Stability is maintained, inter-area power oscillations are damped, and voltages during the dynamic simulation stay within acceptable performance limits. **R2.5**. The ~~plant~~ Generating Unit Stability analysis portion of the Planning Assessment shall be analyzed consistent with Requirement ~~R4.6~~ R5.6 with studies for the year when the following changes that could affect Stability margins occur:			
Dominion		☑	More clarification is needed to distinguish the difference in studies performed for plant stability vs. system stability. For example, is a system study mainly a study of inter-area (i.e. - small signal) oscillations?

Q32			
Commenter	**Yes**	**No**	**Comment**
Response: To make the distinction clearer, the SDT has modified the definitions as well as Requirement R 2.5. **Generating Unit Stability Study**: Study that focuses on an individual generating unit's or electrically closely-coupled generating units' Stability for various Contingencies on the Transmission Facilities connected to that generating unit(s) point(s) of interconnection or one bus away from that point. This study is concerned with the loss of synchronism and the lack of damping of the generating units' power oscillations. ~~**Plant Stability Study**: Study of an individual plant's Stability for various Contingencies in the vicinity of the plant; concerned with the effect on the System of the generating units' loss of synchronism and the damping of the generating units' power oscillations.~~ **System Stability Study**: ~~Study of the System or portions of the System to ensure that angular Stability is maintained, inter-area power oscillations are damped, and voltages during the dynamic simulation stay within acceptable performance limits.~~ Study that focuses on portions of the System, which may include many generating units, to determine whether angular Stability is maintained, inter-area power oscillations are damped, and voltages during the dynamic simulation stay within acceptable performance limits. **R2.5**. The ~~plant~~ Generating Unit Stability analysis portion of the Planning Assessment shall be analyzed consistent with Requirement ~~R4.6~~ R5.6 with studies for the year when the following changes that could affect Stability margins occur:			
BCTC		☑	Plant stability is a Generator Interconnection study, addressed by FAC-001. By including this requirement in TPL, costs may be transferred. TPL-001 need not distinguish between system stability and plant stability. For Planning Assessments, these are the same thing. Plant stability arises when doing generator interconnection.
Response: The SDT has considered your comments and believes that FAC-001, as currently written does not ensure that Generating Unit Stability studies are performed or that specific performance requirements are met. The SDT also believes that the distinction between Generating Unit and System Stability as described in Requirements R 2.4 and R 2.5 as well as Requirements R 4.5 and R 4.6 (now R 5.5 and R 5.6) is warranted. The SDT believes that specificity in Requirement R 2.5 will reduce the burden of performing the Stability studies necessary to ensure a reliable BES.			
Manitoba Hydro		☑	The need to assess Plant Stability should be removed from this standard. The generator connection standard and the proforma tariff interconnection process ensure the plant stability meets performance requirements. Furthermore, the System Assessment provides an overall assessment of the integrated system performance, which includes the impact of the plant. The requirement for plant stability studies appears to be redundant and would be a waste of assessment resources.
Response: The SDT has considered your comments and believes that neither FAC-001, as currently written, nor the pro forma tariff, ensures that Generating Unit Stability studies are performed or that specific performance requirements are met. Furthermore, not all entities within North America are subject to FERC's OATT.			
MRO		☑	The MRO sees the need for plant stability study requirements somewhere in NERC standards although adding this requirement into this study requires a rehash of the plant stability studies that are conducted throughout ten years or more in an annual assessment. This seems to be an unnecessary duplication. The MRO recommends that this requirement be deleted from this standard and that the

Q32			
Commenter	**Yes**	**No**	**Comment**
			SDT recommend to the NERC SAC that this requirement be covered by the appropriate future SAR.
Response: The SDT believes that the draft requirements do not lead to duplicative studies. If the studies that you reference meet the requirements of TPL-001-1, those studies would in fact satisfy the requirements and additional studies would not be necessary. Furthermore, we believe Requirement R2.5 will reduce the number of studies required because it only requires restudy for generator additions or material changes to the System near the generator.			
WECC BPA TSGT TEP		☑	It appears that Plant Stability Study is a subset of System Stability Study. R4.6.2 states these shall be performed for changes in real power output of a generating unit by more than 10%. Then it states they shall be performed for planning events. R4.5 already covers any contingencies that are an issue and the system already needs to meet some level of performance for loss of the generator. It seems that a change in generation would already be analyzed from a system standpoint as stated in R2.4.3. It appears that material changes to existing generators should be reflected in modeling requirements elsewhere.
Response: The SDT agrees that Generating Unit Stability studies can be viewed as a subset of System Stability studies. The requirements specific to Generating Unit Stability (Requirements R 2.5 and R 4.6 (now R 5.6)) reflect that view. The SDT believes that the specific focus on Generating Unit stability in Requirement R 2.5 will reduce the burden of performing the Stability studies necessary to ensure a reliable BES. To be clear, the 10 % change in generation capability (captured in Requirement R 5.6.2) is what drives the need for a revised study.			
CPS Energy		☑	
Response: Thank you.			
IESO	☑	☑	We agree that both plant stability and system stability have to be studied and that both must exhibit acceptable performance to deem a testing acceptable. The performance requirements for the two could be different, but not the contingency set that must be tested.
Response: The SDT believes that extreme event Contingencies are not required for Generating Unit stability studies.			
Ameren	☑		We appreciate the SDT concern for performing repeated plant stability studies without any change in plant/machine characteristics. However, as the system load representation and its damping characteristics affect both plant and system stability, it is difficult to separate plant versus system stability studies. On some systems in which load and generation are tightly coupled, the focus of plant or system stability studies may differ only slightly with the location and duration of applied fault events. As such, the scope and manner of conducting System Stability study work under Requirement R2.4. for such portions of the interconnected system is not clear. Differences between Plant Stability Studies and System Stability Studies need to be made more clear.
Response: The SDT recognizes that the specific studies required to satisfy the Generating Unit and System Stability requirements will be System specific. In that regard, for some Systems there may be little or no distinction and a single set of studies could satisfy all Stability requirements.			
City Water Power and Light	☑		Yes but the distinction is not clear in the definitions. A Plant Stability Study would typically be done as part of the Generator Interconnection Request and have all units in the area at maximum output. Is the System Stability Study done on the Base Case or is generation maximized within some area(s)?

Q32			
Commenter	**Yes**	**No**	**Comment**
Response: To make the distinction clearer, the SDT has modified the definitions as well as Requirement R 2.5 Also, as indicated in Requirement R 2.4, the System Stability studies should be run using base cases (peak and off-peak) as well as various sensitivity cases (Requirement R2.4.3). **Generating Unit Stability Study**: Study that focuses on an individual generating unit's or electrically closely-coupled generating units' Stability for various Contingencies on the Transmission Facilities connected to that generating unit(s) point(s) of interconnection or one bus away from that point. This study is concerned with the loss of synchronism and the lack of damping of the generating units' power oscillations. ~~**Plant Stability Study**: Study of an individual plant's Stability for various Contingencies in the vicinity of the plant; concerned with the effect on the System of the generating units' loss of synchronism and the damping of the generating units' power oscillations.~~ **System Stability Study**: ~~Study of the System or portions of the System to ensure that angular Stability is maintained, inter-area power oscillations are damped, and voltages during the dynamic simulation stay within acceptable performance limits.~~ Study that focuses on portions of the System, which may include many generating units, to determine whether angular Stability is maintained, inter-area power oscillations are damped, and voltages during the dynamic simulation stay within acceptable performance limits. **R2.5**. The ~~plant~~ Generating Unit Stability analysis portion of the Planning Assessment shall be analyzed consistent with Requirement ~~R4.6~~ R5.6 with studies for the year when the following changes that could affect Stability margins occur:			
New York ISO	☑		NYISO agrees with the concept of splitting plant and system stability studies, but only in the area of performance requirements. The studied contingencies should be identical.
Response: The SDT believes that the selection of study Contingencies is System specific. Although it is not required, for some Systems it may be appropriate to use the same Contingency set for Generating Unit and System Stability studies.			
AECI	☑		
Allegheny Power	☑		
AEP	☑		
APPA	☑		This has been needed for some time.
ATC	☑		
Brazos Electric	☑		
E ON US	☑		
ERCOT ISO	☑		Agree with this additional analysis.
Duke Energy	☑		
Entergy	☑		See response to Q9

Q32			
Commenter	**Yes**	**No**	**Comment**
Exelon	☑		
Georgia Transm.	☑		
ISO/RTO	☑		
ITC	☑		See response to Q31.
KCPL	☑		
LCRA	☑		
MEAG Power	☑		
MISO	☑		
Muscatine P&W	☑		
NERC TIS	☑		Planning Coordinators should study plant stability at the time of interconnection, and it should be reviewed for significant system or plant modifications that may impact the plant's stability.
NCEMC	☑		
PJM	☑		
ReliabilityFirst	☑		
Santee Cooper	☑		
Seattle City	☑		
SERC EC DRS	☑		
SERC EC PSS	☑		
SERC RRS OPS	☑		
SCE&G	☑		
Southern Transm.	☑		
TVA	☑		
WPS	☑		
Response: Thank you. Please see the Summary Response.			

33) Q33. The existing TPL-004-0 standard has a requirement to consider the Loss of all generating units at a plant, but it was not clear whether this requirement should apply to stability studies. The SDT did not include this requirement in the stability table, because it is hard to envision a condition when all units would trip simultaneously within the timeframe of a stability simulation. Do you think this condition should be required in stability analysis of Extreme Events? If not, please explain.

Summary Response: The majority of commenter's agree with excluding the loss of all generating units at a plant in the Stability analysis of Extreme Events. The SDT agrees with not including this condition in Table 2. Nevertheless any TP or PC could study this Contingency if they believe such a study is warranted.

Q33			
Commenter	**Yes**	**No**	**Comment**
ABB		☑	No. Good idea. A whole plant may be out because of a shortage of cooling water, but this is an orderly shutdown, not a sudden event. It is only appropriate for steady-state.
Brazos Electric		☑	
Dominion		☑	It is unlikely that all units at a plant would trip simultaneously within a short time frame (20 second or so) for which stability simulations are performed.
E ON US		☑	I agree with the SDT's conclusion.
AECI		☑	Agree with the statement above as to the time frame regarding stability.
CenterPoint		☑	CenterPoint Energy agrees with the SDT's assessment.
Central Maine Power HQTE National Grid New England ISO NU NPCC RCS NSTAR United Illuminating		☑	Difficult to envision how such an event would occur.
CPS Energy		☑	
Duke Energy		☑	We agree with the basis laid out (in the question) by the SDT.
FirstEnergy		☑	We do not believe that this condition should be required to be tested using stability analysis of Extreme Events. This is due to the fact that these events should be required to be studied using steady state analysis, and stability analysis results would not add value.
Georgia Transm.		☑	
ITC		☑	If it is not probable, then why study it. Realistic probabilities need to be established and defined for study.

Q33			
Commenter	**Yes**	**No**	**Comment**
KCPL		☑	Agree it is difficult to develop scenario where all units trip simultaneously in stability timeframe.
Muscatine P&W		☑	Unless there is a reasonable reason to expect all the units to trip.
Progress–Carolinas		☑	
Progress–Florida		☑	Analysis of this condition should not be required in stability analysis of Extreme Events due to the fact that no stability simulation (e.g., SLG or 3-phase faults) can be conceived for the Bulk Electric System that would result in simultaneous tripping of all units at a plant.
SERC EC DRS		☑	This question conflicts with Table 2 Extreme Event 9. However, we feel it is not necessary to simulate loss of all units at a station because simultaneous loss of all units is unlikely.
SERC RRS OPS		☑	It is not necessary to simulate loss of all units at a station. The Transmission Planner or Planning Authority should have the discretion to consider the appropriate number of units to be tripped based on station design, relay design, etc.
Southern Transm.		☑	
Response: Thank you.			
BCTC		☑	Stability should be treated the same as steady state. If there is a common mode event that could cause the loss of all generating units at a plant, all relevant simulations should be done. If a common mode contingency of all units at a generating plant is not relevant for stability, then it is not relevant as an extreme event for steady state either. However, operation with all units at a plant off line may be relevant as a sensitivity case for Planning Events. The Transmission Planner needs some lattitude to determine what needs to be considered under Extreme Events and the standards should not be overly prescriptive.
Response: The SDT disagrees with this point of view. There are Extreme Events which are relevant for steady state but not for Stability analyses.			
Entergy		☑	This question conflicts with Table 2 item 9. However, we feel it is not necessary to simulate loss of all units at a station. The Transmission Planner or Planning Authority should have the discretion to consider the appropriate number of units to be tripped based on station design, relay design, etc. Since there is no specific question related to R3.4 that requires an evaluation be conducted of implementing a change designed to reduce or mitigate the likelihood of such consequences. More specific direction should be provided in this regard.
LADWP		☑	Loss of a plant as an extreme contingency has been on the book forever and it has never been interpreted as exempted from stability simulation (at least not in WECC) if this scenario is chosen as an extreme event. However, there is no mandatory requirement that loss of all generating units at a plant must be studies for every generating plant. If the design of a generating plant, such as use of redundancy, separate control console/rooms, etc., are such that all unit tripping simultaneously is unlikely, then it should not be required to be studied just because all the units are inside the fence.
Response: The SDT agrees that the removal of the Requirement to consider the loss of all generating units at a plant in Stability analysis,			

Q33			
Commenter	**Yes**	**No**	**Comment**
from the Extreme Events of Table 2 does not preclude the Planner from performing this study. The language in R3.4. allows the TP or PC to evaluate the risks versus the costs of implementing mitigation or a reduction of the possibility of that Contingency.			
FPL FRCC		☑	The question does not match what is included the Extreme Events section of Table 2. Loss of all generating units at a plant should be considered in the Steady State Performance - Extreme Events but not in the Stability Performance - Extreme Events because of the very low probability of the event occurring within the timeframe of the Stability simulation. Therefore, the performance requirement number 9 for Extreme Events in Table 2 - Stability Performance should be deleted.
Response: The SDT agrees and has removed the Contingency from Table 2.			
MEAG Power NCEMC SERC EC PSS SCE&G		☑	Generator protection is designed to trip only those units required. In addition, it is the magnitude of generation tripped rather than the number of units tripped that is of the greatest significance to the stability of the grid.
Response: The SDT agrees that the magnitude of the generation being tripped is significant and should be studied when applicable. The SDT agrees that the removal of the Requirement to consider the loss of all generating units at a plant in Stability analysis from the Extreme Events of Table 2 does not preclude the Transmission Planner or Planning Coordinator from performing this study.			
New York ISO		☑	Examples of loss of entire generation station: Complete loss of right-of-way exiting facility, simultaneous relay operations due to common cause or mode.
Response: Your examples may be applicable to a site in your area and if you desire, you can continue to study steady state and Stability but the removal of this note from the Table does not stop the TP or PC from performing the stability studies if desired.			
Santee Cooper		☑	The transmission planner should have discretion to consider the appropriate number of units to be tripped based on the station design, and/or relay design.
Response: The SDT agrees that the removal of the Requirement, to consider the loss of all generating units at a plant in Stability analysis, from the Extreme Events of Table 2 does not preclude the Transmission Planner or Planning Coordinator from performing this study.			
SaskPower		☑	What is the purpose of requiring this event or any other extreme event to be studied? We see little benefit in this. In the Saskatchewan context we accept the risk and consequences for Extreme Events as there is usually very little justification for the increase in reliability versus the economic cost. Saskatchewan plans and designs its system to fail safe in those events and restores the system thereafter.
Response: The SDT agrees with your comment and that is the reason Question 33 was asked of the industry.			
Tenaska		☑	Only on a case by case basis where a common mode/single point of failure can be identified that results in the loss of an entire plant.
Response: The SDT agrees with your statement.			
TVA		☑	This question conflicts with Table 2 Extreme Event #9.
Response: The SDT agrees that this is in conflict with Table #2 Extreme Event #9 and that is why the SDT has now removed it from the Table.			
WECC		☑	We agree with the SDT that simultaneous 3-phase fault on all generating units in a plant is

Q33			
Commenter	**Yes**	**No**	**Comment**
BPA TSGT TEP			improbable and effort should be better spent studying more probable events. In any case, this Extreme Event is to be considered in the Steady State Table, and stability cases can be run if it is shown to be needed in the power flow study results. We are, however, confused by this question. This question states that the SDT did not include the requirement to consider loss of all generators at a plant in the stability, yet the Extreme Event in the stability table shows in No. 9, "3Ø fault with loss of all generating units at a station".
Response: The SDT agrees with your comment and apologizes for the confusion from the wording of the Question. The Contingency has been removed from the Table.			
Northwestern Energy	☑	☑	If such a standard is constructed, it should be based on a common mode of failure mechanism.
Response: The SDT agrees in removing this from the Table #2. However, the Standard language does not preclude a Transmission Planner or Planning Coordinator from studying this, if applicable. The Standard will allow the TP or PC to perform the study without it being a Requirement.			
AEP	☑		Extreme Event #9 in Table 2 has 3-phase fault and loss of all generating units at a station. Was this left in by mistake? This type of scenario could conceivably lead to low interconnection frequency or cascading due to consequent transmission overloading or low voltage, and could be studied by dynamic simulation. There have been a number of just such generation loss events as this in the past.
Response: The SDT did not leave the 3-phase fault in by mistake; it was intentional and follows with the other Requirements in the Table. Rather, Question 33 was phrased incorrectly in stating that this requirement had been removed from the Table. However, by not having this listed in the Requirements does not preclude the Transmission Planner or Planning Coordinator from studying this condition if applicable to their system.			
APPA	☑		This is a conditional Yes. If the plant design was such that a fault at the plant could remove all units, then all units should be considered. However, if the plant design is such that the likelihood of all plants going down at one time is improbable, then the SDT's approach is very reliable.
Response: The proposed removal of note #9 in the Table will not preclude Transmission Planners or Planning Coordinators from studying this condition if applicable.			
IESO	☑		Consistent with our comments provided under Q31, while the performance requirements may be different, there should be no distinction made to the type of contingencies that need to be applied to steady state testing and stability testing. An entire generating station may be lost due to various possible reasons: lost of right of way of transmission lines emanating from the generating station; generic protective relaying problems which cause all relays to operate due to a common cause or common mode event.
Manitoba Hydro	☑		Isn't 2.d such an event? In a breaker-and-1/3 or 1/2 generating station, if one station bus is off-line for maintenance, faulting the other bus will kill the station, or at least cause a major disruption with individual generators connected to other stations by separated lines. That is certainly worthy of consideration as a feasible "extreme" event Further, the same low likeihood argument could be applied for the majority of Extreme Events in Table 2.The emphasis should be on what the response is for Extreme Events rather than the likelihood of the event.

Q33			
Commenter	**Yes**	**No**	**Comment**
Response: The SDT and the majority of the industry do not think that this should be required in Stability analysis for Extreme Events. The events which remove all of a generating unit from the System occur over a longer period of time which is more applicable in the steady state analyses. These are Extreme Events which are relevant for steady state but not for Stability analyses.			
MRO	☑		In a breaker-and-1/3 or breaker-and-1/2 generating station, if one station bus is off-line for maintenance, faulting the other bus will kill the station, or at least cause major disruption with individual generators connected to other stations by separated lines or AC separated DC converter transformers via isolated station bays. That is certainly worthy of consideration as a feasible "extreme" event.
Response: The SDT and the majority of the industry do not think that this should be required in Stability analysis for Extreme Events. The events which occur to remove all of a plant from the system occur over a longer preiod of time which is more applicable in the steady state analyses.			
NERC TIS	☑		Simultaneous loss of the entire generating stations have occurred on 4 occasions in the last 3 years, with simultaneous losses ranging from 1,100 MW to over 3,700 MW. It is important to understand the stability implications to the system and other plants.
Response: The SDT and the majority of the Industry do not think that this should be required in Stability analysis for Extreme Events. The SDT does not believe these events would result in the loss of all generation in a Stability timeframe.			
PJM	☑		Yes, but should model the true clearing times of each individual unit. Also the standard should clearly state that system reinforcement should not be required for this Extreme Events.
Response: The SDT and the majority of the industry do not think that this should be required in Stability analysis. However, by not having it listed in the Requirements does not preclude a Transmission Planner or Planning Coordinator from studying this particular condition. Also, refer to the language of current standard Requirement R5.5.4 which addresses the reinforcement logic.			
Allegheny Power	☑		
Ameren	☑		A good test of the robustness of the interconnected system is its ability to handle import plus heavy inrush conditions, such as might occur with loss of a large plant. While the probability of such random events would be very low, the possibility still exists that intentional sabotage could result in such an event.
ATC	☑		
Response: The loss of a large gas pipeline into a region is not the same as a 3 phase fault at the generator bus location. If the gas line were ruptured, the units would be shut down over a period of minutes, not in a stability time frame. The E3.a in Table 1 is for steady state analysis.			
City Water Power and Light	☑		If there is any single contingency event that could take out an entire plant, it should be studied.
ERCOT ISO CAISO	☑		It will be consistent with the performance requirements under Steady State conditions. Also, loss of entire generating station is possible for a variety of reasons such as, loss of all lines emanating from the station, loss of the gas pipeline feeding the plant, etc.
Response: The loss of a large pipeline would not result in the sudden shutdown of all units within a stability timeframe. The shutdown occurs over tens of minutes.			

Q33			
Commenter	**Yes**	**No**	**Comment**
AECC	☑		It should also be considered in steady state analysis.
Exelon	☑		
ISO/RTO	☑		
LCRA	☑		
MISO	☑		
Seattle City	☑		
WPS	☑		
Response: Thank you.			

34) Q34. There are an increasing number of events with slow voltage recovery after faults on the Transmission System. The dynamic behavior of induction motor loads is a major factor in this phenomenon. The proposed standard therefore requires that the load model for stability studies of peak Load conditions include the dynamic effects of induction motors. Do you agree with this requirement? If not, please explain?

Summary Response: There is consensus that slow voltage recovery is an observed phenomenon that requires study and potential corrective action. However, nearly all responders noted the difficulty of obtaining accurate dynamic Load models. Based on the responses, the study of this phenomenon is in its relative infancy. Most responders are looking for guidelines for these studies whether they answered 'yes' or 'no'. The Transmission Issues Subcommittee (TIS) is forming a working group (TIS WG) to write a technical white paper on this issue. The SDT has recommended that this group include guidelines for load models in their white paper.

Based on industry comments, the SDT believes that this is such an important issue that a Requirement should be in place. As such Requirement R2.4.1 was changed. It will be up to those performing the studies to document their dynamic Load models.

R2.4.1. System peak Load for one of the five years. For peak System Load levels, ~~the~~ a Load model shall ~~include the dynamic effects~~ be used which appropriately represents the dynamic behavior of Loads, including consideration of the behavior of induction motor Loads.

Q34			
Commenter	**Yes**	**No**	**Comment**
E ON US		☑	I agree that this is an issue but I do not have sufficient data to accurately simulate the condition. This is also complicated by dynamic behavior of distribution capacitors which are not modeled.
SERC RRS OPS		☑	There is a lack of data to support the amount and characteristics of the detailed induction load models in many areas. Transmission planners should be able to use the latest information and techniques.
SCE&G		☑	There should be an attempt to represent the dynamic behavior of induction motor loads in the generic system load representations. However, the state of induction motor load modeling is not adequate to permit discrete induction motor load models.
AEP		☑	The statements of fact in the question may be true for some study areas, but not necessarily for all. Requiring this type of load representation when it might not be appropriate to the study is excessively burdensome. This is a judgment better left to those conducting the studies. The percentage of load to be so represented, the extent of the study area over which to apply induction machine representations, and the specific modeling parameters are all judgments just as important as whether or not to include this type of representation. There is a limit as to how far a standard can replace engineering judgment and that limit is reached here.
CenterPoint		☑	CenterPoint Energy includes the dynamic effects of induction motor loads in stability studies. However, this requirement is overly prescriptive since some utilities may not need to include the dynamic effects of induction motors and should not be required to do so.
Central Maine Power National Grid New England ISO		☑	This requirement is too specific and limited. Induction motors are only one component of a complex load model. Complex load models are not always necessary, nor are they always the most conservative, depending on the analysis that is being conducted. Where complex load models are

Q34			
Commenter	**Yes**	**No**	**Comment**
NU NPCC RCS NSTAR United Illuminating			required, they should be considered; this may involve use of complex motor and lighting loads or polynomial load representations with or without frequency dependence. This question also suggests the need for an industry standard regarding transient voltage recovery.
Duke Energy		☑	In general, it is a good practice for System Stability studies of seasonal load conditions to include the effects of induction motors. However, there is currently a lack of data to support the amount and characteristics of detailed induction load models in many areas. Prior to making this a requirement, the industry needs guidance as to how this data should be developed, shared and maintained for near-term and long-term models. A long term transition period is required to incorporate motor models into dynamics studies.
Entergy		☑	In general this is a good practice. Dynamic studies of seasonal load conditions should include the effects of induction motors, and particularly in areas where traditional load models have indicated a problem. Unfortunately, there is a lack of data to support the amount and characteristics of the detailed induction load models in many areas. In addition to the consideration of the dynamic effects of induction motor loads, the effects of static capacitor banks installed at distribution voltage levels would need to be considered as well. Prior to making this a requirement in the reliability standards, the industry needs guidance as to how this data should be developed and maintained for models in future years. This should be a business practice and thus removed from the standard. While we agree that each entity should appropriately model their loads, it would seem appropriate for the MMWG to address the issues of induction motor load modeling. Note that meeting such a requirement would necessitate a significant increase in the dynamic data needed to represent the system. Maintenance of such load model data would require significant resources. Load characteristics valid for a near term model might not be valid for future years.
FPL FRCC		☑	The issue of delayed voltage recovery is a special phenomenon that can occur in some large urban areas under peak conditions. The modeling of the delayed voltage recovery response is considerably more complex than simply representing induction motor effects. The scope of the delayed voltage recovery issue is extremely limited and its effect on the grid is generally self correcting due to automatic disconnection of the affected air conditioners. While improvements in the accuracy of load models used for the study of grid dynamic response are desirable, this area is not suitable for compliance enforcement. Requirements for specific types of load models are not appropriate in the TPL standard.
KCPL		☑	Transmission operators are required to maintain reactive reserve requirements.
MEAG Power NCEMC SERC EC DRS SERC EC PSS TVA		☑	Dynamic studies of seasonal load conditions should include the effects of induction motors, and particularly in areas where traditional load models have indicated a problem. Unfortunately, there is a lack of data to support the amount and characteristics of the detailed induction load models in many areas. In addition to the consideration of the dynamic effects of induction motor loads, the effects of static capacitor banks installed at distribution voltage levels would need to be considered as

Q34			
Commenter	**Yes**	**No**	**Comment**
			well. Prior to making this a requirement in the reliability standards, the industry needs guidance as to how this data should be developed and maintained for models in future years. Note that meeting such a requirement would necessitate a significant increase in the dynamic data needed to represent the system. Maintenance of such load model data would require significant resources. Load characteristics valid for a near term model might not be valid for future years. Also, summer peak load, winter peak load, and off-peak load characteristics would differ.
Muscatine P&W			We have not seen this on our system based on the review of digital fault recorders (DFR). The difficulty with including induction motors is getting reasonable data from customers about their motors so they can be adequately modeled. (We did ask our consultant to include motor effect in our coordination study since the motors could act as a weak source.)
PJM		☑	No. This is good in theory but is impractical to implement with the large interconnected systems that span large geographical areas.
Progress–Florida		☑	Requiring detailed modeling of every induction motor on the Bulk Electric System for stability analysis is onerous. Specifically, obtaining a complete set of data for existing induction motors would be infeasible, as would tracking future installations of induction motors. The benefits of such an effort are significantly outweighed by the logistical difficulties. To address the technical merits, the modeling of the delayed voltage recovery response that has been observed in some large urban areas during periods of high air conditioning usage is considerably more complex than can be addressed by simply representing induction motor effects. The scope of the delayed voltage recovery issue is extremely limited and its effect on the grid is generally self correcting due to automatic disconnection of the affected air conditioners. Requirements for specific types of load models are not appropriate in the TPL standard.
Santee Cooper		☑	The characteristics of detailed induction load are generally lacking to properly model induction loads. Load modeling should be left to the judgment of the TP.
Response: See the summary response, The SDT has recommended that the TIS WG writing the white paper on this phenomenon review your suggestions and comments.			
CPS Energy		☑	
Response: See summary response.			
AECC		☑	if someone want to study the effect of large motor load then fine but it should not be a requirement of a standard
Response: The SDT has received comments regarding the technical merits to include such behavior when appropriate. The SDT feels that proposing this requirement could potentially result in System studies that indicate System response that would meet the performance requirements when in fact the response may fall short.			
Ameren	☑	☑	Dynamic studies of peak load conditions should include the effects of induction motors, and particularly in areas where traditional load models have indicated a problem. Unfortunately, there is a lack of data to support the amount and characteristics of the detailed induction load models in

Q34			
Commenter	**Yes**	**No**	**Comment**
			many areas. In addition to the consideration of the dynamic effects of induction motor loads, the effects of static capacitor banks installed at both distribution and transmission voltage levels would need to be considered as well. The industry would be looking to NERC for some guidance as to how this data should be developed and maintained for models in future years. Note that meeting such a requirement would necessitate a significant increase in the dynamic data needed to represent the system. Also, maintenance of such load model data would need to be considered. Load characteristics valid for a near term model might not be valid for future years. Also, summer peak load, winter peak load, and off-peak load characteristics would differ.
Dominion	☑	☑	The dynamic effects of induction motor load at peak load conditions should be studied only on a limited/selected basis and should not be required for the entire system as a routine study practice. The following are examples where such an effort might be warranted: (a) where slow voltage recovery has been actually observed in the field following a fault clearance (b) where steady state analysis (P-V & Q-V curves) indicates a possible voltage collapse scenario for stressed system conditions (c) for a non-convergent (or very difficult to solve) power-flow case for stressed system conditions while solving for a contingency scenario.
Exelon	☑	☑	This is more pertinent to longer term voltage stability, so the load model should be developed and available for these types of studies.
WECC TSGT TEP BPA	☑	☑	The requirement to include motor load should be extended to other load level periods and not be limited to peak load period only. However, to capture slow voltage recover phenomena, especially in areas of high penetration of refrigerated air conditioning load (e.g. 50% to 60%), would require modeling down to the distribution system voltage level and explicitly representing shunt capacitors and various induction motor types (e.g. equivalents for single phase motors). If the requirement is not extended, dynamic simulations will likely differ significantly from observed system events. We recommend a phase-in period so that the requirement for use of load models should only include regionally accepted load models for which data are available. This requirement can be extended or modified as the Region in which the entities reside adopts new load modeling guidelines.
Brazos Electric	☑		However, acquiring load data may be difficult if not impossible and would require increased manpower. A more reasonable approach is to vary the load data to see the effects instead of wasting effort on load surveys.
City Water Power and Light	☑		However, low voltage often causes motors and air conditioner compressors to trip, significantly reducing peak loads.
ERCOT ISO CAISO	☑		The requirement to include motor load should be extended to other load levels as appropriate.
FirstEnergy	☑		We agree with this concept but believe that enforcing it would be very difficult. There are no standards on modeling induction motor load, be it type of models, percentage of load that is motor

Q34			
Commenter	**Yes**	**No**	**Comment**
			load, or percentage of large vs small motors.
HQTE	☑		This requirement is too specific and limited. Induction motors are only one component of a complex load model. Complex load models are not always necessary, nor are they always the most conservative, depending on the analysis that is being conducted. Where complex load models are required, they should be considered; this may involve use of complex motor and lighting loads or polynomial load representations with or without frequency dependence. This question also suggests the need for an industry standard regarding transient voltage recovery.
IESO	☑		Dynamic testing should assess response of moving equipment including induction motor loads.
ITC	☑		However this will require the Load Serving Entities provide specific data for each bus on the system which may not be in the direct control of the entity performing the studies. The standard should be written with this understanding in mind. Failure of a LSE to provide such data should not cause a penalty to be imposed on a Transmission Provider.
LADWP	☑		This is a qualified yes to the extent that accurate induction motor models are available and the overall load modeling (non-induction motor loads) allow such analysis. Otherwise, focusing only on induction motors would not provide added information than what is being performed today. The current WECC requirement concerning induction motor modeling should be deemed adequate to meet this requirement.
Manitoba Hydro	☑		R2.4.1 should be clarified to limit a requirement for detailed modeling (for example, dynamic effects of induction motors loads) to local areas where the planner expects a local emerging voltage recovery issue.
MISO	☑		Yes, we agree that appropriate induction motor loads should be modeled. No, it is not be practical to model all induction motor loads. There needs to be size and location considerations. Data is not readily available today.
MRO	☑		The MRO agrees that R2.4.1 should provide for the inclusion of dynamic behavior of induction motor loads, however, recommends that there should be a limitation on only requiring such behavior where significant such as large motor loads over a certain MW amount. As written, it could be interpreted that the Transmission Planner is non-compliant if all induction motors are not represented.
Progress–Carolinas	☑		This needs to be done but we currently don't have sufficient data and tools to properly perform the analysis. More interconnection-wide testing and data collection needs to be performed. We will need to transition into these studies over time.
ABB	☑		Yes, but the impact on the models and studies is unknown. Some testing needs to be done with full Eastern and Western Interconnection models to see how they handle motor models at every load. I've performed numerous studies where loads in an entire utility or state have been converted to a large % of motors, and the effect can be shocking. The programs (PSS/E and PSLF) may completely bog down if this is done for a whole interconnection. Many stability problems will be found. We definitely need to transition to this, but with care.
Northwestern Energy	☑		

Q34			
Commenter	**Yes**	**No**	**Comment**
AECI	☑		However, getting all the modeling data is not easy and may take some time.
Allegheny Power	☑		
APPA	☑		The SDT is correct to include the effects of induction motors in simulating the loads. Voltage issues are and will continue to become more critical in the operation of the BES as time goes by. It will be a big help to planners and operators to know the impacts of such loads.
ATC	☑		
BCTC	☑		
Georgia Transm.	☑		
ISO/RTO	☑		
LCRA	☑		
NERC TIS	☑		If such known phenomena are not properly modeled, how can the resultant study results be expected to be correct and a proper prediction of future system behavior. The modeling shortcomings of the Western Interconnection prior to the August 1996 western blackout showed no potential stability problems for the events that occurred; the system proved otherwise.
New York ISO	☑		
SaskPower	☑		
Seattle City	☑		
Southern Transm.	☑		
WPS	☑		
Response: See the summary response, The SDT has recommended that the TIS WG writing the white paper on this phenomenon review your suggestions and comments.			

35) Q35. What type of manual or automatic adjustments of generators should be allowed for single and multiple Contingencies?

Summary Response: Most responders said or implied that all adjustments should be allowed for both single and multiple Contingencies. Some respondents further clarify their response by adding the adjustments must be achieved within a specific timeframe such as meeting performance requirements or the ability to keep the generator on-line. A small number of responders replied that no adjustments should be allowed for single Contingencies but then agreed that adjustments may be allowed for multiple Contingencies.

The SDT has modified Requirement R 3.6 (now R3.5) of the steady state portion of the Planning Assessment to specify the conditions under which manual and automatic generation runback and tripping can be used to meet single and multiple Contingency performance requirements and to make it clear that all Facilities must always remain within applicable thermal and voltage ratings.

R3.5. Manual and automatic generation run-back/tripping is allowed as a response to a single ~~and~~ or multiple Contingenc~~ies~~y ~~as long as Facility Ratings are not exceeded.~~if the following conditions are met:

Q35	
Commenter	**Comment**
ABB	For multiple, only automatic schemes. For single, only automatic schemes if the loss of MW is shown to be acceptable.
Ameren	No adjustment of firm (network resource) generation should be allowed for the long-term mitigation of a single contingency. Allowing post-contingency shifts of firm generation as a long-term mitigation of a single contingency event is short-sighted and would not produce a robust system that is required to handle more than single contingency events. Redispatch of firm generation may be required in the near-term as an interim operating guide or procedure until the limiting transmission element can be uprated or other system reinforcement is in place. Generation redispatch should also be allowed to prepare for the next single contingency. For responding to multiple contingencies, redispatch of firm generation should be allowed in the mitigation plan provided that the redispatch can be accomplished in the required operating time and the contingency overloads are not overly severe (indicating possible cascading). Firm generation should also be tripped to quickly mitigate contingencies involving multiple generation outlet transmission circuits. Non-firm (energy only) generation can be tripped or redispatched for any contingency event as needed to keep facility loadings within ratings.
City Water Power and Light	Dispatching quick start units such as combustion turbines or diesels, Contingency Reserve Sharing Group response, redispatch, adjust reactive resources as necessary.
Dominion	For a single contingency, no generation adjustment should be allowed. For multiple transmission element contingencies, generation reduction (automatic or manual runback) may be allowed. Unit trip should only be allowed if a unit becomes unstable.
E ON US	single – none
ERCOT ISO CAISO	Manual such as tripping the generators, automatic such as AVR, excitation systems, stabilizer, and governor adjustments. From a Planning perspective, you would not want to allow for manual tripping in the time frame of a stability study.

Q35	
Commenter	**Comment**
BCTC	No restrictions on adjustments that are practical and can be achieved within the timeframe required.
Northwestern Energy	All adjustments should be allowed as long as they are realistic and achievable in the time frame required and consistent with other study parameters. Also, if a RAS (or special protection system) is the adjustment and if cascading could result from the event, then redundancy should be required.
MEAG Power NCEMC SERC EC PSS SCE&G	Adjustments that should be allowed are those that can be performed in time to prevent the system from failing to meet performance requirements. These adjustments may include automatic voltage regulator action, governor action, generator runback, and generator tripping.
AECI	Whatever the generator is capable of.
Allegheny Power	Should not be limited.
AEP	The existing TPL standards imply that generator tripping is not permissible in connection with Category B events in that footnote b does not mention it, whereas it is mentioned in connection with Category C events in footnote c. Generation is a system resource and should be protected against the more common single contingency transmission events. We agree with the status quo on this issue being maintained in the new standard, with the provision for regional variance in R3.6. The provision for manual and automatic runback in R3.5 is okay. We also agree with manual adjustments remaining acceptable in response to any contingencies in the new standard consistent with C3 in existing TPL-003.
Central Maine Power HQTE National Grid New England ISO NU NPCC PCS NSTAR United Illuminating	Manual or automatic adjustments should be permissible to allow redispatch to return the system to below normal/load cycle based ratings; however, the system should not exceed applicable emergency ratings prior to the adjustment. Manual system adjustment should be allowed in between the multiple Contingencies described in P5, provided that the adjustment can be made between contingencies using short-term reserves (10-30 minute).
Duke Energy	This question is not clear. Manual and automatic adjustments should be allowed for single and multiple contingencies as long as Performance Requirements are met.
Exelon	Generator MW and Mvar output adjustments should be allowed, both manual and automatic.
FirstEnergy	As long as thermal, voltage, and stability requirements are met, either automatic or manual runback of the unit should be allowed. Tripping of the unit should be allowed also if the particular unit(s) can be restarted within some relatively short time - say one hour. With this requirement, it appears that only CTs and hydro units would be allowed to be tripped.
FPL FRCC	Manual and automatic adjustment (increase or decrease) of Var output and manual and automatic tripping or reduction of overall MW output of generators should be allowed.
Georgia Transm.	Special Protection Schemes should be allowed for single and multiple contingencies.
IESO	Automatic adjustments should include AVR, excitation system, stabilizer and governor, all of which have pre-determined settings. These adjustments should be allowed for any type of contingencies. Manual adjustments that should or can be made other than removal of the generating units from service could include manual switching of

Q35	
Commenter	**Comment**
	transmission and adjustment to Phase Angle Regulators for so long that these actions are documented as applicable operating procedures.
ITC	There should be no change in generation for single contingencies. An approved SPS in those areas that use them might be an exception however system damage for failure to operate should not be allowed beyond the station with the SPS. Also, loss of load should not be allowed for failure to operate. An automated adjustment for multiple contingencies is not unrealistic.
KCPL	Generation redispatch should not be allowed for N-1 events. Generation redispatch is appropriate for multiple contingencies. Appropriate SPS and generation runback schemes should be allowed, where the system is designed with those schemes.
LADWP	Whatever is needed to bring the system into balance.
Manitoba Hydro	1) Reducing or increasing generation while keeping the units on-line or by bringing additional units on line. The amount of generation change should be limited to that amount that can be accomplished within the allowed readjustment period. Due consideration should be given to start up time and ramp rates of the units. 2) Generator tripping should be added to requirement R3.5 in addition to runback. Generator tripping is used extensively in regions where remote generation is delivered via long transmission. 3) Adjustment of firm transfer must be allowed for single and multiple contingency events. MH could not accept the revised standard that removed this existing requirement.
MISO	Generation redispatch should not be performed for single contingencies. Generation redispatch is appropriate for multiple contingencies. Appropriate SPS and generation runback schemes should be allowed, where the system is designed with those schemes.
MRO	Here are the adjustments that the MRO believes the MRO systems are presently designed to meet and what an MRO Augmentation Drafting Team is proposing to require its members to follow for Category B and C events: 1. Generation adjustments - Reducing or increasing generation while keeping the units on-line or by bringing additional units on line. The amount of generation change is limited to that amount that can be accomplished within the allowed readjustment period. Due consideration shall be given to start up time and ramp rates of the units. 2. Generation rejection to the extent possible within the allowed readjustment period. Generation rejection shall not exceed the normal operating reserve of the generation reserve sharing pool to which the MRO Member belongs or of the MRO Member itself if the MRO Member self-provides generation reserves.
Muscatine P&W	Whatever the local entity sees as appropriate and is reasonable versus the cost of fixing the problem. (See Q43 Comment #3)
NERC TIS	If system adjustments are allowed between events in steady state analysis, manual and automatic adjustments should both be allowed. However, in stability analysis, only automatic adjustments capabilities that are actually in place should be used.
New York ISO	Automatic: Pre-determined ranges of AVR, excitation system, stabilizer and governor. Manual: switching and PAR adjustments covered by applicable operating procedures.
PJM	Adjustments should be allowed consistent the time periods being studied.
Progress–Carolinas	Both manual and automatic adjustments should be allowed.

Q35	
Commenter	**Comment**
Progress–Florida	Provided events are confined to a single area (i.e., no cascading outages), manual and automatic adjustment (increase or decrease) of Var output and manual and automatic tripping or reduction of overall output of generators should be allowed
Santee Cooper SERC RRS OPS TVA	Any adjustments should be allowed that protects the reliability of the BES.
SaskPower	The amount of generation change should be limited to the amount that can be accomplished within the allowed readjustment period. Due consideration should be given to start up time and ramp rates of the units. Generation rejection should not exceed the normal operating reserve.
Seattle City	Any adjustment required to respond to a contingency should be allowed, unless it adversely impacts the regional system.
SERC EC DRS	Manual and automatic adjustments should be allowed for single and multiple contingencies as long as performance requirements are met.
SERC EC PSS SCE&G	Adjustments that should be allowed are those that can be performed in time to prevent the system from failing to meet performance requirements. These adjustments may include automatic voltage regulator action, governor action, generator runback, and generator tripping.
Southern Transm.	Automatic generator tripping should be allowed for single contingency events and for multiple contingency events.
Tenaska	Any adjustment(manual, automatic, runback, tripping) should be allowed as long as the performance requirements are achieved as described in standard after the adjustments have been made.
WECC BPA TSGT TEP	All adjustments should be allowed as long as they are realistic and achievable in the time frame required and consistent with other study parameters. For example, automatic adjustments would be required for correction of a stability problem, but manual adjustment should be allowed for correction of a thermal problem if there is no instability problem.
AECC	any that are realistic, can be accomplished in the appropriate timeframe and are within the capability of the units
Response: Based on the majority of industry responses, the SDT has modified Requirement R 3.6 (now R 3.5) to specify conditions under which manual and automatic generation runback and tripping can be used to meet single and multiple Contingency performance requirements for the steady state portion of the Planning Assessment. **R3.5**. Manual and automatic generation run-back/tripping is allowed as a response to a single ~~and~~ or multiple Contingenc~~ies~~y ~~as long as Facility Ratings are not exceeded.~~if the following conditions are met:	
APPA	I do not understand the question. Is this dealing with voltage adjustment or power adjustment?
Response: Generation runback deals with a machine's power adjustment.	
Entergy	This question is not clear and more explanation should be provided, such as, whether the adjustments are pre or post contingency, whether the contingency involves faults etc. Does this question pertain to plant or system stability?
Response: Adjustments are post-Contingency. Based on the majority of industry responses, the SDT has modified Requirement R 3.6 (now R 3.5) to specify conditions under which manual and automatic generation runback and tripping can be used to meet single and multiple Contingency performance requirements for the steady state portion of the Planning Assessment.	

Q35	
Commenter	**Comment**
R3.5. Manual and automatic generation run-back/tripping is allowed as a response to a single ~~and~~ or multiple Contingenc~~ies~~y ~~as long as Facility Ratings are not exceeded.~~if the following conditions are met:	

F) Generation Runback and Tripping

The SDT has discussed the automatic and manual readjustments of generators that should be permissible for single contingencies and multiple contingencies. The existing TPL-001-0 through TPL-004-0 standards through footnote (a) of Table I could include emergency ratings applicable for short durations as required to permit operating steps necessary to maintain system control. The footnote is silent about allowable generation adjustments in response to the Category B events. However, it does indicate that system adjustments are permitted to prepare for the next Contingency. These system adjustments could include manual or automatic adjustments involving generation.

The SDT has learned that many transmission owners use System Protection Systems (SPS) or Remedial Action Schemes (RAS) to trip generation for single and multiple Contingency outage events to prevent overloads, low voltage, and instability in the Interconnected Transmission network for N-1 and N-2 events. In some cases, the RAS are used to prepare for the next Contingency; but in some cases, the RAS are used to simultaneously avoid exceeding emergency ratings.

36) Q36. The proposed standard allows generation runback after the disturbance that causes a single Contingency (or due to a single Contingency outage) to move the Interconnected Transmission System from an emergency state (within emergency ratings) to a normal state (within normal ratings), assuming that the disturbance does not result in instability? Do you agree? If not, please explain.

Summary Response: The overwhelming majority of respondents believe that generator runback should be allowed for single Contingencies. One respondent thought that runback of firm generation should only be allowed as an interim Operating Procedure until System reinforcements are installed. Another thought that a generator that must reduce output for N-1 is not "firm" generation capacity. Another cautioned that runback may not be fast enough to avoid voltage instability. The draft standard will continue to allow manual or automatic generation run-back as a response to single and multiple Contingencies as long as all Facilities shall be operating within their Facility Ratings and as long as a sustainable, stable, operating condition is maintained.

The following requirements have been added due to industry comments:

R3.5.2. Such action would not violate safety, equipment, regulatory or statutory requirements.
R3.5.3. A sustainable, stable, operating condition is maintained.

Q36			
Commenter	**Yes**	**No**	**Comment**
Ameren		☑	The runback of firm generation should only be allowed as a valid interim operating procedure until a system reinforcement would be installed to uprate or unload the limiting facility. The use of the runback scheme should not be allowed as the long-term solution to a single contingency event. As mentioned above in the response to Q35, non-firm (energy only) generation should be tripped or redispatched for any contingency event as needed to keep facility loadings within ratings.
Response: The SDT and the majority of the industry do not agree that generation runback should be used only as a temporary solution.			
Dominion		☑	For a single contingency, no generation adjustment should be allowed. For multiple transmission element contingencies, generation reduction (automatic or manual runback) may be allowed. Unit

Q36			
Commenter	**Yes**	**No**	**Comment**
			trip should only be allowed if a unit becomes unstable.
Response: The SDT and the majority of the industry agree that the use of generation runback should be allowed for single Contingencies.			
AECC		☑	Generation runback should only be permitted if there are no impacts to area interchange and firm transactions are not altered.
Response: The allowable impact to firm transactions is specified in the performance tables. The use of generation runback is only allowed if the performance requirements are met.			
E ON US		☑	I do not agree that the system has to be returned to a "normal state" after a single contingency. The system can continue to be operated in the "emergency state" as long as the next contingency does not cause flows above emergency ratings.
Response: The SDT agrees that the System can be operated in an emergency state as long as the next Contingency does not cause flows above emergency ratings. However, this does not preclude the use of runback to get flows back within normal ratings.			
BCTC		☑	We do not accept R3.5, which does not limit runback to contingencies based on thermal limits, only that Facility Ratings are not exceeded. If an SOL is based on voltage stability (which is often studied in the post disturbance steady state), Facility Ratings may not be exceeded but runback may not be fast enough to avoid voltage instability. Furthermore, runback for single contingencies should be subject to any conditions that might apply to generator tripping for single contingencies. See response to Question 39.
Response: Requirement R3.5 now has two additional qualifiers on the use of generator runback other than Facilities must be within Facility Ratings: **R3.5.2**. Such action would not violate safety, equipment, regulatory or statutory requirements. **R3.5.3**. A sustainable, stable, operating condition is maintained.			
KCPL		☑	All generators must have "firm" transmission outlet capacity for their nameplate rating. This means delivery of full output under N-1 conditions. A generator that must reduce output for N-1 is not "firm" generation capacity.
Response: The SDT believes that if an n-1 Contingency results in flows within emergency ratings, then the generator has firm Transmission outlet capacity even if it must be backed down to get the System back within normal ratings.			
MISO	☑	☑	Yes, where the transmission system is designed with these schemes. No, in general when there is no designed SPS or runback for the generator.
Response: The SDT believes that runback should be allowed both for existing schemes and for new schemes.			
ABB	☑		Every single event will eventually require preparing for the next event. But we cannot plan for every next event. Only specific single and multiple contingencies should be planned for, all flows must be within an established rating of some kind (continuous, 12-hour, 4-hour, 15-min, whatever), and the idea of the "next event" should not be included in a planning standard. Now maybe there should be a limit as to how short the time of a rating can be in Planning. For example, planning to a 15-min rating is a bad idea. That rating can be used by operators in emergencies, but planners need to do something better. A minimum should be set (e.g. 1 hour

Q36			
Commenter	**Yes**	**No**	**Comment**
			rating). I guess if a company wants to use a 15-min rating and then AUTOMATICALLY transition to a 1-hour or 12-hour rating with runback or something else, that is reasonable.
Response: The SDT considered minimum time duration for the emergency ratings used in planning. However, the SDT decided this would be too restrictive.			
AEP	☑		Question: Why would a runback scheme be needed to move from an emergency state to a normal state when that could be accomplished by regular redispatch?
Response: If regular redispatch can adjust the System following a single Contingency in preparation for the next Contingency in the time frame required by emergency ratings, then no automatic runback is needed.			
APPA	☑		However, it should be pointed out that RAS are band-aid solutions to building needed BES infrastructure. Experience has shown that an interconnection can have so many RAS that one RAS will counter another RAS designed for another problem in the interconnection. This problem requires additional study by a NERC task force.
Response: The SDT and the majority of the industry do not agree that automatic generation runback (by use of an RAS) should be used only as a temporary (or band-aid) solution.			
Central Maine Power HQTE National Grid New England ISO NU NPCC RCS NSTAR United Illuminating	☑		Generation runback should be permissible to allow redispatch to return the system to below normal/load cycle based ratings; however, the system should not exceed applicable emergency ratings prior to the adjustment
Response: The SDT agrees.			
Exelon	☑		An automated run-back scheme should be allowed but not required for these scenarios - an operator should be able to manually adjust unit output.
Response: If an operator can adjust the system following a single contingency in preparation for the next contingency in the time frame required by emergency ratings, then no automatic runback is needed.			
FirstEnergy	☑		As long as thermal, voltage, and stability requirements are met, either automatic or manual runback of the unit should be allowed. Tripping of the unit should be allowed also if the particular unit(s) can be restarted within some relatively short time - say one hour. With this requirement, it appears that only CTs and hydro units would be allowed to be tripped.
Response: The SDT agrees that automatic or manual runback should be allowed. We do not agree that only CTs and hydro units could be tripped by SPS.			
Manitoba Hydro	☑		Generator tripping should be added in addition to runback. Generator tripping is used extensively in regions where remote generation is delivered via long transmission There will be a large cost penalty to construct transmisison to remote generation if generator tripping is not allowed. Since the amount of tripping is covered by operating eserves, there is no impact on reliability. Generator tripping should be an option for the planner in the standard as opposed to a regional difference or the need to

Q36			
Commenter	**Yes**	**No**	**Comment**
			install an SPS.
Response: The SDT agrees that generator tripping should be allowed for single and multiple Contingencies (See R 3.5)			
New York ISO	☑		What is the difference between a SPS and RAS? Would not one term be sufficient? SPSs should not be considered a permanent solution. They should only be used as a stop gap before a permanent solution can be implemented.
Response: SPS and RAS are synonymous terms. The SDT and the majority of the industry do not agree that SPS should be used only as a temporary solution.			
ERCOT ISO	☑		Agree
Northwestern Energy	☑		
AECI	☑		
Allegheny Power	☑		
ATC	☑		
BPA	☑		
Brazos Electric	☑		
CAISO	☑		Agree
CenterPoint	☑		
City Water Power and Light	☑		
City Utilities/Springfield	☑		
CPS Energy	☑		
Duke Energy	☑		We see this as an acceptable form of manual or automatic redispatch, which should be allowed as a cost beneficial way of operating the system in a reliable manner, as long as it can be accomplished within the time frame before emergency ratings are exceeded.
Entegra	☑		As long as the system would be within normal ratings after runback.
Entergy	☑		
FPL	☑		
FRCC	☑		
Georgia Transm.	☑		
IESO	☑		Generation rejection and runback are not uncommon to be employed as special protection systems (SPS) to achieve a stable state and/or reduce transmission loading to within pre-determined levels.

Q36			
Commenter	**Yes**	**No**	**Comment**
			SPSs, when employed, are designed to operate in order to meet performance requirements following specific contingencies or when specific system conditions are present. As such, when a contingency occurs or when the conditions should arise for which the SPS (in this case, generation runback) is designed to operate, such actions should be simulated.
ISO/RTO	☑		
ITC	☑		
LADWP	☑		Generator runback is allowed under the current standards, why single this out? Hopefully this is not a sign of equating generator runback with generator tripping as the title of this section might suggested. Generator runback is not and should not be classified as an SPS! It is critical to keep as many units on line as possible post contingency. In many instances, use of generator runback would avoid the need to trip a unit if that was the only way to reduce the generations to return to load-generation balances.
MEAG Power	☑		
MRO	☑		
Muscatine P&W	☑		
NERC TIS	☑		This is simply a recognition that the system operators will take action to return the system to a stable and secure operating posture following an event.
NCEMC	☑		
PJM	☑		
Progress–Carolinas	☑		
Progress–Florida	☑		
SRP	☑		
Santee Cooper	☑		
SaskPower	☑		
Seattle City	☑		
SERC EC DRS	☑		
SERC EC PSS	☑		
SERC RRS OPS	☑		
SCE&G	☑		

Q36			
Commenter	**Yes**	**No**	**Comment**
Southern Transm.	☑		
Tenaska	☑		
TVA	☑		
TSGT	☑		
TEP	☑		
WECC	☑		
WPS	☑		
Response: Thank you. Please see the Summary Response.			

37) Q37. Since emergency ratings are thermal ratings, should this standard allow an automatic generation runback scheme (that is initiated immediately after the disturbance causing the single Contingency) to prevent thermal overloads (assuming that the disturbance does not result in instability)? If yes, what are the conditions that must be met in order to allow such a runback scheme to meet the System performance criteria for single Contingencies? Please explain the reason for your answer.

Summary Response: Respondents appeared to overwhelmingly favor allowance of automatic generation runback to prevent thermal overloads. However, as some respondents indicated the question was not clear and a number indicated that Requirement R 3.5 could be made clearer. Many respondents suggested various conditions be added to the requirements. The SDT has modified Requirement R 3.5 to specify the conditions under which automatic (or manual) generation runback can be used to meet single (or multiple) contingency performance requirements and to make it clear that all facilities must always remain within applicable thermal and voltage ratings.

The following requirement was changed due to industry comments:

R3.5. Manual and automatic generation run-back/tripping is allowed as a response to a single ~~and~~ or multiple Contingenc~~ies~~y ~~as long as Facility Ratings are not exceeded.~~if the following conditions are met:

Q37			
Commenter	**Yes**	**No**	**Comment**
Dominion		☑	For a single contingency, no generation adjustment should be allowed. For multiple transmission element contingencies, generation reduction (automatic or manual runback) may be allowed. Unit trip should only be allowed if a unit becomes unstable.
Duke Energy		☑	Runback should not be used if the disturbance caused you to exceed emergency ratings (i.e. thermal overload).
Ameren		☑	No generation runbacks should be allowed as long-term solutions for single contingency conditions.
Entergy	☑	☑	The question is not clear. Generation runback schemes are acceptable as long as emergency ratings are not violated. Runbacks should not be used to restore an element to within emergency ratings.
MISO	☑	☑	No, this should be the exception, not the rule. Yes, there are mine mouth plants with DC outlet lines, which must be runback if the DC line trips. There are also generators which used to serve large on site loads. The large loads are gone (plants retired) and generator outlet is limited. There are also some generators which have known contingent outlet limits and the generators are OK with runback, if the contingency occurs.
AECI	☑		We do not have the capability to have automatic runback at this time. However if an entity does have the capability to perform automatic runback than it should be allowed to prevent overloads. That would be the purpose.
Progress–Florida	☑		Provided events are confined to a single area (i.e., no cascading outages), automatic runback of generators should be allowed.
SERC EC DRS		☑	The question is not clear. Generation runback schemes are acceptable as long as emergency ratings are not violated. Runback schemes should not be used to restore an element to within emergency ratings.

Q37			
Commenter	**Yes**	**No**	**Comment**
Response: Industry comments strongly support allowing for the use of generator runback for single Contingencies. Generation runback will be permitted for all Contingencies, and the SDT has modified the standard language accordingly (See Requirement R 3.5). **R3.5**. Manual and automatic generation run-back/tripping is allowed as a response to a single ~~and~~ or multiple Contingenc~~ies~~y ~~as long as Facility Ratings are not exceeded.~~if the following conditions are met:			
ITC		☑	We believe that the BES should be able to operate for N-1 events without reliance on operating schemes. Assuming that some areas allow this, there should be criteria to evaluate the consequences of 2nd contingencies occurring during the runback. In addition, short-time ratings need to be confirmed which limit the time for runback. The system is at risk until the runback is completed and this risk must be evaluated and REQUIRED in the planning assessment.
Response: Industry comments strongly support allowing for the use of generator runback to prevent thermal overloads. The SDT has modified the standard language to clarify this view, including the requirement to remain within Facility Ratings during the course of the runback.			
KCPL		☑	All generators must have "firm" transmission outlet capacity.
Response: Industry comments strongly support allowing for the use of generator runback to prevent thermal overloads. The SDT has modified the standard language to clarify this view.			
ABB	☑	☑	No. Following a single contingency, all flows must be within some kind of established rating. After that, runback can be used to get under a longer-term rating. For multiple contingencies, some type of cross-tripping is OK, but runback is too slow and unreliable.
AECC		☑	Implementing an automatic runback scheme will only mask the impacts of the event. You want to know what happens when an event occurs not set up some psuedo fix that takes place before you know what the problem is.
Response: Industry comments strongly support allowing for the use of generator runback for single contingencies. The SDT has modified the standard language accordingly.			
BCTC	☑	☑	See our response to Question 36. In addition, since this runback is effectively a RAS/SPS with respect to protecting the transmission system from cascading, it must meet all the reliability requirements of a RAS.
Response: The SDT agrees that an automatic generation runback scheme is an SPS, and it must meet the applicable reliability requirements.			
PJM	☑	☑	Yes. At a minimum the emergency rating needs to be coordinated with the SPS timing.
Brazos Electric	☑		Can be including in a RAP or SPS with a long term CAP.
City Water Power and Light	☑		Coordination with neighboring systems is essential when considering generation redispatch.
ERCOT ISO CAISO	☑		1. Run back of generation should not result in tripping of firm load, 2. Power flow should be within the applicable ratings, 3. Frequency should be within the allowable limits
WECC	☑		Yes. Agree. Conditions for generation run back for N-1: 1) Run back of generation cannot result in

Q37			
Commenter	**Yes**	**No**	**Comment**
BPA TSGT TEP			tripping of firm load, 2) power flow should be within the time-limited equipment ratings, 3) frequency should be within allowable limits.
Northwestern Energy	☑		Yes, (1) if the failure of the runback scheme results in cascading, then it should not be allowed; (2) the power flow should be within the time-limited equipment ratings; and (3) the frequency should be within allowable limits.
Allegheny Power	☑		This could be permitted provided the run back will allow for the ability to prepare for the next operational contingency and not affect load.
AEP	☑		Ensure that the scheme is enabled to automatically runback for the problem conditions.
APPA	☑		Care must be taken to insure runbacks of one event will not cancel the effects of other runback plans in the same interconnections.
Central Maine Power HQTE National Grid NU NPCC RCS New England ISO NSTAR United Illuminating	☑		However, this should only be allowed where failure of an automatic runback that is not functionally redundant would not have significant adverse impact on the Bulk Electric System.
Exelon	☑		Run-back schemes should be allowed for certain single contingencies that can result in unit outlet constraints. Not all emergency ratings are thermal - some are relay or stability limits. In these instances, generator run-back should not be allowed.
FirstEnergy	☑		Yes, only if the Transmission Owner has documented short term ratings that would not be exceeded during the runback.
FPL FRCC	☑		At a minimum the emergency ratings should allow sufficient time for the runback scheme to operate reliably
Georgia Transm.	☑		Generation curtailment should allow the system to operate within the facility capabilities and should not put the generator at risk of violating its NERC requirements during curtailment.
IESO	☑		Please see our response to Q36 for the rationale for allowing the runback scheme to operate. The conditions that need to be met in order to allow the scheme to operate depends specifically on what that SPS (runback scheme) is designed for. Some schemes are designed to operate upon detecting the opening of specific transmission lines, others are designed to operate upon detection of circuit loading reaching a particular threshold. There is no universal rule as to the conditions that must be met for a runback scheme to operate. The use of runback scheme is similar to using special operating procedure, such as cross tripping, operator instructions to open a circuit, etc. There might be design requirements to ensure the scheme meet certain performance criteria. However, these should be covered in the standards for special protection system. In TPL-001, the requirement would be to include simulation of the runback scheme operation only as the conditions that would prompt the

Q37			
Commenter	**Yes**	**No**	**Comment**
			scheme to operate occur, and a requirement to include SPS misoperation, i.e., failure to operate and operate when not initiated, as a contingency.
Manitoba Hydro	☑		I see no problem in using a runback scheme to prevent thermal overloads. Most emergency ratings are based on 30 minute values to allow for operator action. An automatic runback could be accomplished in 5-15 minutes depending on the ramp rate of the generator. The runback scheme may allow higher emergency ratings depending on the rating methodology. At no point would emergency ratings be exceeded and at the end, loading would be within normal values.
MEAG Power NCEMC SERC EC PSS SCE&G TVA	☑		The generator runback scheme should complete its action within the time allowed by the emergency ratings of elements that exceed their normal thermal ratings.
NERC TIS	☑		This is simply a recognition that the system operators will take action to return the system to a stable and secure operating posture following an event. This is also common practice in generator protection/controls for generators with multiple GSUs for loss of one of the GSUs.
New York ISO	☑		Testing scenarios will have to be developed on a case by case basis depending on the design of the SPS. There is not universal rule that can be made for these unique cases.
Progress–Carolinas	☑		If the rating is a 2 hour rating then the adjustment should be complete within 2 hours.
SRP	☑		The loss of transmission line (N-1) may require Gen drop to prevent instability or violation. Studies will need to be performed that study the congestion of generation and transmission corridors and loss of various elements.
Santee Cooper	☑		Generator runback schemes should be able to be implemented before emergency thermal rating time limits are exceeded.
SaskPower	☑		Several generation run back or generation rejection schemes are used in Saskatchewan to restore facility loading to with normal ratings. The costs of not using these schemes would involve substantial increased investments and environmental impacts unacceptable in the Saskatchewan Regulatory Jurisdiction. Conditions are determined on a case by case basis. However, the generation runback or generation rejection scheme should not exceed the normal operating reserve.
Seattle City	☑		Runback should be allowed to prevent a possible cascading outage which might result from the thermal overload, but only to that level needed to protect the equipment, to address the contingency, or to prepare for the next contingency. If the runback level is lower than the normal rating, it should be shown that this runback will not harm the stability of the system.
Southern Transm.	☑		Yes, as long as no emergency ratings are violated.
Tenaska	☑		So long as the performance requirements are met then this is not an issue.
Response: The SDT agrees with your comments.			
MRO	☑		Generally, the historical MRO practices and requirements have been to require that following a single

Q37			
Commenter	**Yes**	**No**	**Comment**
			contingency the loading of facilities are to be maintained within emergency ratings. Adjustments are allowed to move the system from conditions within emergency ratings to conditions within normal ratings. However, in a limited number of cases, the use of Special Protection Systems are used to initiate fast generation run back, generation rejection, or automatic tripping of a remote transmission facility to get below a longer term emergency rating (30 minutes or longer.) In some cases, these involve parts of the network where remote generation is connected to load where the costs of not using the SPS would involve substantial increased investments and environmental impacts. Requirement 3.5 needs more clarification. What rating should not be exceeded?
Response: The SDT agrees with your comment and has modified the language of R 3.5 for clarity. **R3.5**. Manual and automatic generation run-back/tripping is allowed as a response to a single ~~and~~ or multiple Contingenc~~ies~~y ~~as long as Facility Ratings are not exceeded.~~if the following conditions are met:			
LADWP	☑		It was never disallowed under the current standards.
Response: The SDT believes that the current standards are silent on the use of SPS such as automatic generation runback. The standard language has been modified to explicitly identify the conditions under which an SPS may be used (See Requirement R 3.5). **R3.5**. Manual and automatic generation run-back/tripping is allowed as a response to a single ~~and~~ or multiple Contingenc~~ies~~y ~~as long as Facility Ratings are not exceeded.~~if the following conditions are met:			
WPS	☑		The use of RAS or SPS should not constitute a long-term Corrective Action Plan to address deficiencies. The use of RAS and SPS should be limited to that period of time necessary to place facilities in-service to address the deficiency.
Response: Industry comments do not support the use of runback only as an interim measure. Accordingly, the current draft standard language does not impose such a limitation on the use of SPS.			
ATC	☑		
CenterPoint	☑		
CPS Energy	☑		
ISO/RTO	☑		
Muscatine P&W	☑		Reasonable and workable.
SERC RRS OPS	☑		
Response: Thank you. Please see the Summary Response.			

The standard drafting team has considered that RAS or SPS may be allowable under certain situations for single Contingencies, but proposes that their use should be limited.

38) Q38. Do you agree that RAS or SPS may be allowed for single Contingencies? If not, please explain.

Summary Response: From the survey of industry responses regarding automatic readjustment of generation using SPS/RAS, the industry agrees that SPS/RAS may be allowed for single Contingencies. As a result, the SDT has modified the language in the standard such that it will allow the use of SPS/RAS for single or multiple Contingencies.

The following requirements have been changed due to industry comments:

R3.5. Manual and automatic generation run-back/tripping is allowed as a response to a single ~~and~~ or multiple Contingenc~~ies~~y ~~as long as Facility Ratings are not exceeded.~~if the following conditions are met:
R3.5.1. All Facilities shall be operating within their Facility Ratings.
R3.5.2. Such action would not violate safety, equipment, regulatory or statutory requirements.
R3.5.3. A sustainable, stable, operating condition is maintained

Q38			
Commenter	**Yes**	**No**	**Comment**
ABB		☑	It makes the system too complex and less reliable. Single contingencies need to be handled without any fancy controls.
KCPL		☑	Tripping generation for single contingency other than GSU failure or fault is unacceptable.
LCRA		☑	Only until plans are implemented to address a single contingency-identified deficiency. In general, plans should always be developed to exit SPS or RAS when economically feasible
Central Maine Power National Grid New England ISO NSTAR United Illuminating	☑		Only allowed where the failure of an SPS that is not functionally redundant would not have significant adverse impact on the Bulk Electric System.
NU	☑		It is not recommended that an SPS be used in this situation, that over time, the proliferation of SPSs may degrade system reliability and unduly complicate system operations. If allowed an SPS should only be used where the failure of the SPS that is not functionally redundant would not have significant adverse impact on the Bulk Electric System.
NPCC RCS	☑		A SPS may be used to provide protection for infrequent contingencies, or for temporary conditions that may exist such as project delays, unusual combinations of system demand and equipment outages or availability, or specific equipment maintenance outages. An SPS may also be applied to preserve system integrity in the event of severe facility outages and extreme contingencies. The decision to employ an SPS shall take into account the complexity of the scheme and the consequences of correct or incorrect operation as well as its benefits.

Q38			
Commenter	**Yes**	**No**	**Comment**
SCE&G	☑		A RAS or SPS should be allowed for single contingencies if its failure or misoperation can be compensated for during the time allowed by the emergency ratings of the elements that exceed their normal thermal ratings.
Response: The Industry response to this question has prompted the SDT to change the language to allow SPS/RAS for single or multiple Contingencies. The standard language now lists qualifiers of the use of SPS/RAS, listed in Requirements R3.5.1, R3.5.2 and R3.5.3. **R3.5**. Manual and automatic generation run-back/tripping is allowed as a response to a single ~~and~~ or multiple Contingenc~~ies~~y ~~as long as Facility Ratings are not exceeded.~~if the following conditions are met: **R3.5.1**. All Facilities shall be operating within their Facility Ratings. **R3.5.2**. Such action would not violate safety, equipment, regulatory or statutory requirements. **R3.5.3**. A sustainable, stable, operating condition is maintained			
City Water Power and Light		☑	SPS use should be limited and SPSs should be of a temporary nature. A mitigation plan with a timeframe for implementation should accompany all SPSs and RASs.
ITC		☑	We wouldn't agree to this without knowing what you mean by limited use. RAS or SPS as a common practice does not "raise the bar" in planning standard. An RAS or SPS should be allowable as a temporary measure to allow one to meet the standard and two to protect the components of the BES. When used in this capacity, a plan should be being either developed or implemented such that the RAS or SPS can be removed from service.
Response: The overall Industry response prompted the SDT to not include the qualifier about temporary use of SPS/RAS.			
CPS Energy		☑	
Response: See summary response.			
AECC		☑	this question is not clear. are you asking if the SPS/RAS be studied as a contingency or if the SPS/RAS is a viable solution for impacts caused by a contintgency. In either case SPS/RAS impacts and effectiveness needs to be evaluated. Especially if they are used as a mitigation for contingency impacts. It should be knownif the SPS/RAS is effective for the model being studied and if not another mitigation should be determined
Response: The SDT is attempting to explicitly state under what conditions a SPS/RAS can be used to mitigate undesirable System response to single Contingency events. The current standards are silent on this issue.			
Ameren	☑		Yes, but only as interim operating procedures until the limiting facilities can be uprated or unloaded. SPS or RAS should be allowed to trip non-firm (energy only) generation to keep facility loadings within ratings.
Response: The overall response from the Industry prompted the SDT to change the language in the Standard to allow SPS/RAS for all single and multiple contingencies with the qualifiers of Requirements R3.5.1, R3.5.2 and R3.5.3. The Standard does not differentiate performance for different generation types. **R3.5.** Manual and automatic generation run-back/tripping is allowed as a response to a single ~~and~~ or multiple Contingenc~~ies~~y ~~as long as Facility Ratings are not exceeded.~~if the following conditions are met:			

Q38			
Commenter	**Yes**	**No**	**Comment**
R3.5.1. All Facilities shall be operating within their Facility Ratings. **R3.5.2**. Such action would not violate safety, equipment, regulatory or statutory requirements. **R3.5.3.** A sustainable, stable, operating condition is maintained			
Progress–Florida	☑		This requirement is addressed in PRC-005 and these requirements should not be addressed again in this Standard. However, the use of RAS or SPS should be allowed as necessary for any single contingency event, provided that such use does not result in cascading outages. It should be noted that the performance requirements for SPS are appropriately stated in standards PRC-012-0 and PRC-015-0. Revision of the existing TPL standards will require updating of the contingency references in PRC-012-0.
Response: The conditions for the use and application of SPS/RAS are addressed in the TPL Standards. The SDT does not agree that the PRC Standards addresses the use of SPS/RAS.			
Southern Transm.	☑		RAS and SPS should be defined such that they may only be used for low probability events.
Response: The overall response from the Industry prompted the SDT to change the language in the Standard to allow SPS/RAS for all single and multiple contingencies with the qualifiers of Requirements R3.5.1, R3.5.2, and R3.5.3. There are no qualifications of the use of SPS/RAS based on the probability of the contingency. **R3.5**. Manual and automatic generation run-back/tripping is allowed as a response to a single ~~and~~ or multiple Contingenci~~es~~y ~~as long as Facility Ratings are not exceeded.~~if the following conditions are met: **R3.5.1**. All Facilities shall be operating within their Facility Ratings. **R3.5.2**. Such action would not violate safety, equipment, regulatory or statutory requirements. **R3.5.3**. A sustainable, stable, operating condition is maintained			
IESO	☑		SPS and RAS should be allowed for single contingencies. However, a more fundamental requirement is that the SPS (and RAS) should generally be regarded as a stop gap measure before planned transmission expansion or reinforcement becomes available. SPS should in general not be used as a substitute for transmission facilities.
New York ISO	☑		As stated previously SPSs should only be a temporary solution used to protect elements prior to a permanent solution implementation.
WPS	☑		The use of RAS or SPS should not constitute a long-term Corrective Action Plan to address deficiencies. The use of RAS and SPS should be limited to that period of time necessary to implement expansion of facilities to address the deficiency.
Response: The overall Industry response prompted the SDT to allow the use of SPS/RAS as a permanent Corrective Action measure and not just as a temporary measure.			
Brazos Electric	☑		
Dominion	☑		
ERCOT ISO	☑		Agree

Q38			
Commenter	**Yes**	**No**	**Comment**
Northwestern Energy	☑		
AECI	☑		
Allegheny Power	☑		
AEP	☑		As long as they are automatic.
APPA	☑		As the SDT has said under certain situations.
ATC	☑		
APS			
BPA	☑		
BCTC	☑		
CAISO	☑		Agree
CenterPoint	☑		
Duke Energy	☑		RAS and SPS are economical solutions that planners ought to be able to use.
Entergy	☑		RAS or SPS may be allowed for single contingencies when they aid in meeting System Performance requirements. RAS and SPS should not be used to restore an element to within emergency ratings.
Exelon	☑		
FirstEnergy	☑		As long as thermal, voltage, and stability requirements are met, RAS or SPS should be allowed provided it does not shed load for a single contingency event.
FPL FRCC	☑		The performance requirements for SPS are appropriately stated in standards PRC-012-0 and PRC-015-0. If the proposed TPL standard is adopted the contingency references in PRC-012-0 would need to be updated.
Georgia Transm.	☑		
HQTE	☑		A SPS may be used to provide protection for infrequent contingencies, or for temporary conditions that may exist such as project delays, unusual combinations of system demand and equipment outages or availability, or specific equipment maintenance outages. An SPS may also be applied to preserve system integrity in the event of severe facility outages and extreme contingencies. The decision to employ an SPS shall take into account the complexity of the scheme and the consequences of correct or incorrect operation as well as its benefits.
ISO/RTO	☑		
Manitoba Hydro	☑		MH sees no reason to limit the application of SPSs. The SPS is a viable planning option that allows large savings in cost in stability limited system where there is no need to increase thermal capability.
MEAG Power	☑		

Q38			
Commenter	**Yes**	**No**	**Comment**
MISO	☑		
MRO	☑		
Muscatine P&W	☑		
NERC TIS	☑		
NCEMC	☑		
PJM	☑		
Progress–Carolinas	☑		
SRP	☑		As long as Non-Consequential Loss of Load is not a solution for single contingencies (N-1).
Santee Cooper	☑		
SaskPower	☑		
Seattle City	☑		
SERC EC DRS	☑		
SERC EC PSS	☑		
SERC RRS OPS	☑		
Tenaska	☑		
TVA	☑		TVA does not allow generator tripping for a single contingency. However, we recognize that there are certain instances for which this makes practical and economic sense.
TSGT	☑		
TEP	☑		
WECC	☑		
Response: Thank you. Please see the Summary Response.			

39) Q39. Please describe the limitations that you believe should be placed on the use of RAS or SPS for single Contingency events.

Summary Response: Requirement R3.5 has been written such that it allows RAS or SPS for single or multiply Contingencies with limitations described in Requirements R3.5.1 through R3.5.3. Requirement R3.5.2 allows for "regulatory or statutory requirements" that may prohibit or limit the use of RAS or SPS.

In addition, most responders said, or implied, that the failure of SPS/RAS schemes should be studied. Most said that the failure of the schemes should not cause cascade, with some suggesting that there shouldn't be any Non-Consequential Load Loss. The SDT believes that failure of SPS should not be used to establish requirements in the TPL-001-1 standard. Instead, this standard sets requirements when SPS can be used, and relies on the relevant PRC standards to set the requirements for studies and designs to implement the SPS. In response to those that commented regarding existing RRO standards becoming more stringent than the resulting North American standards, there are provisions to allow for regions to have and implement more restrictive standards.

Q39	
Commenter	**Comment**
ABB	They could be used in the short term until a permanent fix is available. Limit to <5 years.
Ameren	SPS and RAS should be used only as interim operating procedures to mitigate single contingency events until the limiting facilities can be uprated or unloaded. SPS and RAS should be allowed to trip non-firm (energy only) generation as needed to keep facility loadings within ratings.
Northwestern Energy	RAS or SPS should not be allowed for non three phase single line faults. If cascading could result from the failure of the RAS to operate properly, then redundancy should be required.
HQTE	See response to Q38.
ITC	Temporary in nature.
KCPL	RAS/SPS should not limit generation output for N-1 conditions.
LCRA	Short-term with exit plans; Loss of significant generation or load resulting from SPS /RAS action.
Manitoba Hydro	An automatic runback should be accomplished in 5-15 minutes depending on the ramp rate of the generator. The runback scheme may allow higher emergency ratings depending on the rating methodology. At no point would emergency ratings be exceeded and at the end, loading would be within normal values. Generator tripping should be allowed. Generator tripping is used extensively in regions where remote generation is delivered via long transmission. MH sees no reason to limit the application of SPSs. The SPS is a viable planning option that allows large savings in cost in stability limited system where there is no need to increase thermal capability.
MRO	The MRO believes the MRO systems are presently designed to meet system performance, in some cases, with the use of SPS to initiate fast generation runback, generation rejection, and automatic tripping of a remote transmission facility for a single contingency event. The fast generation runback or generation rejection should not exceed the normal operating reserve of the generation reserve sharing pool to which the planner belongs or of the planner itself if the planner self-provides generation reserves.

Q39	
Commenter	**Comment**
New York ISO	Must be temporary, approved by the NYSRC, tested annually with evidence of preventive maintenance submitted annually.
NPCC RCS	See response to Q38.
Southern Transm.	Generator tripping or runback and reconfiguration should be allowed for lower probability single contingency events such as bus faults; we suggest that SPS not be used for events that are more likely to occur.
WPS	The use of RAS or SPS should not constitute a long-term Corrective Action Plan to address deficiencies. The use of RAS and SPS should be limited to that period of time necessary to implement expansion of facilities to address the deficiency.
Response: Your suggestion was seriously considered but restrictions were limited to those sub-requirements of Requirement R3.5.	
Brazos Electric City Water Power and Light	Taken directly from the ERCOT operating Guides for RAPs and SPSs: Any RAP must meet the following requirements: a. Coordinated and approved with the owners and operators of facilities included in the RAP. b. Use is limited to the time required to construct replacement Transmission Facilities. However, the RAP will remain in effect, if replacement Transmission Facilities have been determined by the Control Area Authority to be impractical. c. Complies with all applicable ERCOT and NERC requirements. d. ERCOT develops and posts a methodology to include the RAP in the Total Transfer Capability (TTC) calculations, if appropriate. e. Clearly defines and documents operator actions. f. Includes the option for the transmission operator to override the procedures if the RAP will not improve system reliability. g. Operators must be trained in RAP implementation. For SPSs 13. Special Protection Systems (SPS) are protective relay systems designed to detect abnormal ERCOT System conditions and take pre-planned corrective action (other than the isolation of faulted elements) to provide acceptable ERCOT System performance. SPS actions include among others, changes in demand, generation, or system configuration to maintain system stability, acceptable voltages, or acceptable Facility loadings. An SPS does not include underfrequency or undervoltage load shedding. A Type 1 SPS is any SPS that has wide-area impact and specifically includes any SPS that a) is designed to alter generation output or otherwise constrain generation or imports over DC Ties, or b) is designed to open 345 kV transmission lines or other lines that interconnect TDSPs and impact transfer limits. Any SPS that has only local-area impact and involves only the Facilities of the owner-TDSP is a Type 2 SPS. The determination of whether an SPS is Type 1 or Type 2 will be made by ERCOT upon receipt of a description of the SPS from the SPS owner. Any SPS, whether Type 1 or Type 2, shall meet all requirements of NERC Standards relating to SPSs, and shall additionally meet the following ERCOT requirements: • The SPS owner shall coordinate design and implementation of the SPS with the owners and operators of Facilities included in the SPS, including but not limited to Generation Resources and HVDC ties. • The SPS shall be automatically armed when appropriate. • The SPS shall not operate unnecessarily. To avoid unnecessary SPS operation, the SPS owner may provide a

Q39	
Commenter	**Comment**
	real-time status indication to the owner of any Generation Resource controlled by the SPS to show when the flow on one or more of the SPS's monitored facilities exceeds 90% of the flow necessary to arm the SPS. The cost necessary to provide such status indication shall be allocated as agreed by the SPS owner and the Generation Resource owner. • The status indication of any automatic or manual arming of the SPS shall be provided as SCADA alarm inputs to the owners of any facility(ies) controlled by the SPS.. • When a Transmission Operator (TO) removes a SPS from service, the TO shall immediately notify ERCOT operations. ERCOT shall modify its reliability constraints to recognize the unavailability of the SPS and notify the Market. When a SPS is returned to service, the TO shall immediately notify ERCOT operations. ERCOT shall modify its reliability constraints to recognize the availability of the SPS. 14. The owner(s) of an existing, modified, or proposed SPS shall submit documentation of the SPS to ERCOT for review and compilation into an ERCOT SPS database. The documentation shall detail the design, operation, functional testing, and coordination of the SPS with other protection and control systems. • ERCOT shall conduct a review of each proposed SPS and each proposed modification to an existing SPS. Additionally, it shall conduct a review of each existing SPS every five years, or sooner as required by changes in system conditions. Each review shall proceed according to a process and timetable documented in ERCOT Procedures and posted on the ERCOT website. • For a proposed Type 1 SPS, the review must be completed before the SPS is placed in service, unless ERCOT specifically determines that exemption of the proposed SPS from the review completion requirement is warranted. The timing of placing the SPS into service must be coordinated with and approved by ERCOT. The implementation schedule must be confirmed through submission of a Service Request to ERCOT. • For a proposed Type 2 SPS, the SPS may be placed into service before completion of the ERCOT review, with advanced prior notice to ERCOT in the form of a Service Request. The timing of placing the SPS into service must be coordinated with and approved by ERCOT. Existing SPSs that have already undergone at least one review shall remain in service during any subsequent review, and proposed modifications to existing SPSs may be implemented, upon notice to ERCOT, and approval of ERCOT before completion of the required ERCOT review. • The process and schedule for placing an SPS into service must be consistent with documented ERCOT Procedures. The schedule must be coordinated among ERCOT and the owners of any facility(ies) controlled by the SPS, and shall provide sufficient time to perform any necessary testing prior to its being placed in service. • An ERCOT SPS review shall verify that the SPS complies with ERCOT and NERC criteria and guides. The review shall evaluate and document the consequences of failure of a single component of the SPS, which would result in failure of the SPS to operate when required. The review shall also evaluate and document the consequences of misoperation, incorrect operation, or unintended operation of an SPS, when considered by itself, and without any other system contingency. If deficiencies are identified, a plan to correct the deficiencies shall be developed and implemented. The current review results shall be kept on file and supplied to NERC on request within thirty (30) days. • As part of the ERCOT review and unless judged to be unnecessary by ERCOT, the appropriate ROS working groups such as the Steady State Working Group, the Dynamics Working Group, and/or the System Protection Working Group shall review the SPS and report any comments, questions, or issues to ERCOT for resolution. ERCOT may work

Q39	
Commenter	**Comment**
	with the owner(s) of facilities controlled by the SPS as necessary to address all issues. • ERCOT shall develop a methodology to include the SPS in the Commercially Significant Constraint (CSC) limit calculations, if appropriate. • ERCOT's review shall provide an opportunity for and include consideration of comments submitted by Market Participants affected by the SPS. 15. SPS owners shall notify ERCOT of all SPS operations. Documentation of SPS failures or misoperations shall be provided to ERCOT using the Relay Misoperation Report located in Section 6 of these Operating Guides. ERCOT shall conduct an analysis of all SPS operations, misoperations, and failures. If deficiencies are identified, a plan to correct the deficiencies shall be developed and implemented. 16. For each SPS, the owner shall either identify a preferred exit strategy or explain why no exit strategy is needed to ERCOT. This shall take place according to a timetable documented in ERCOT Procedures and posted on the ERCOT website. Once an exit strategy is complete and a SPS is no longer needed, the owner of an existing SPS shall notify ERCOT, using a Service Request, whenever the SPS is to be permanently disabled, and shall do so according to a timetable coordinated with and approved by ERCOT and the owners of all facilities controlled by the SPS
Response: The SDT anticipates that ERCOT will be able to maintain the existing requirements that you suggest. Requirement R3.5.2 allows for "regulatory or statutory requirements" which may limit RAS or SPS.	
Dominion	For single contingency events, a SPS scheme should not result in loss of load.
Response: Non-Consequential Load Loss is not allowed for single Contingency events.	
ERCOT ISO CAISO	RAS or SPS should generally be regarded as a stop gap measure before transmission expansion or reinforcement becomes available. It should not be used as a substitute for transmission facilities.
Response: Your suggestion was seriously considered but restrictions were limited to those sub-requirements of Requirement R3.5. The SDT anticipates that ERCOT will be able to maintain the existing requirements that you suggest. Requirement R3.5.2 allows for "regulatory or statutory requirements" which may limit RAS or SPS.	
Allegheny Power	The use of these system should be limited and not used as a preferred solution and also be approved by a stringent review process through the RTO & RE.
AEP	Should be allowed as long as they have been approved by the applicable Regional Reliability Organization.
APPA	See Question 36.
BCTC	RAS should be permitted when the system performance conforms with the performance requirements laid out in the tables. Generator tripping should be permitted for single contingency events. R3.6 proposes to limit generator tripping for single contingencies except for certain conditions which are not listed. Without knowing what these conditions might be, we find ourselves speculating on what might be proposed. On the 10 October 2007 conference call, it was suggested that there are concerns regarding generator reserves and loss of reactive capability. We have some observations regarding these concerns. With respect to reserves, some concerns would also apply to runback, since units on runback could not also be on AGC and could not be reallocated to AGC until the transmission contingency is returned to service. There was also a concern regarding tripping of steam units and the delay in bringing them back on line. This is a resource adequacy issue that should be addressed with the customer, not a transmission reliability issue. Regarding the loss of reactive capability, this would be addressed by

Q39	
Commenter	**Comment**
	the post mitigation plan studies to demonstrate that the reactive reserves meet the requirements, whatever they are determined to be. We would generally expect that the reduction in MW transfers would reduce the need for reactive support, so the new condition might not require the reactive support. Nevertheless, the post mitigation studies will address this. Therefore, we conclude that these concerns are not applicable to transmission planning standards. BCTC plans and operates a transmission system that interconnects generation comprised of about 90% hydroelectric. Often the extreme generation patterns for which we consider generator tripping occur for a limited time period during the year at off peak. These would be during high runoff and/or light local load periods. For these conditions, there is typically plenty of other generation that can be used as reserves for generator tripping. BCTC currently strives to avoid use of RAS for N-1, especially on the 500 kV transmission system. However, for example, if avoiding generator tripping were to trigger the need for hundreds of km of 500 kV transmission line for an off peak operating condition or a low capacity factor or intermittent resource, we would likely consider RAS, especially for transmission radial to the generator. In the lower voltage systems we often have consequential loss of small generators and consider generator tripping for radial lines and local networks. In most cases, this generator loss is addressed through sensitivity studies and discussions with generator owners and transmission customers with respect to the costs they are willing to incur and what is required by Resource Planners to meet their planning criteria. Operating reserves requirements are also a consideration. Any loss of generation due to tripping or ramping that is less than the amount lost due to consequential loss should be acceptable without question. In summary, we would be prepared to review and comment on a proposal from the SDT on limitations on generator tripping. BCTC suggests that the SDT list the limitations rather than the permitted conditions and that these limitations should also apply to generator ramping.
Georgia Transm. SERC EC DRS	None.
Muscatine P&W	As long as they work and are reasonable - none. (See Q43 Comment #3)
MISO	The use of SPS/RAS may be the appropriate transmission system design. If it is economic to mitigate the SPS, then upgrades should be made.
Response: See the summary response.	
Central Maine Power National Grid New England ISO NU NSTAR United Illuminating	Only allowed where SPS failure would not have significant adverse impact on the Bulk Electric System; non-Consequential loss of load should be allowed up to an amount potentially specified in the standard.
Response: See the summary response. As to your suggestion on Non-Consequential Loss of Load, it is prohibited for single Contingencies and is not prohibited for multiple Contingencies.	
Duke Energy	You should not have any wide area cascading if the RAS or SPS fails to operate as expected, or operates when it shouldn't.

Q39	
Commenter	**Comment**
Response: See the summary response: PRC standards address SPS failure.	
Entergy	RAS or SPS may be allowed for single contingencies when they aid in meeting System Performance requirements. RAS and SPS should not be used to restore an element to within emergency ratings.
Response: See the summary response. Requirement R3.5.1 restricts RAS/SPS such that facility ratings must be honored at all times.	
FirstEnergy	As long as thermal, voltage, and stability requirements are met, RAS or SPS should be allowed provided it does not shed load for a single contingency event.
Response: See the summary response. Non-Consequential Load Loss is not permitted for single Contingency events.	
FPL FRCC	The performance requirements for SPS are appropriately stated in standards PRC-012-0 and PRC-015-0. If the proposed TPL standard is adopted the contingency references in PRC-012-0 would need to be updated.
Response: See Requirement R3.5. There are no longer any limitations on the use of SPS as long as they meet this criteria.	
IESO	Please see comments provided under Q38, above, regarding the use of SPS not as a substitute for transmission facilities. In addition, there should be requirements to simulate failure of SPS operation as a contingency in addition to the initiating single contingency. In cases where an SPS is intended to achieve acceptable stability performance which can affect interconnection reliability, the SPS should be classified as BES impactive and as such, redundancy may be required. When redundancy is provided, simulation of SPS failing to operate may be waived.
Response: Your suggestions were considered but the only limitations to RAS/SPS are those listed as sub-requirements of Requirement R3.5. PRC standards address SPS failure.	
MEAG Power NCEMC SERC EC PSS SERC RRS OPS SCE&G TVA	RAS or SPS should meet the same criteria as any protection system.
Response: See summary response as regards to planning standards. The PRC standards for SPS will be maintained as you have suggested.	
Progress–Florida	The use of RAS or SPS should be allowed as necessary for any single contingency event, provided that such use does not result in cascading outages. It should be noted that the performance requirements for SPS are appropriately stated in standards PRC-012-0 and PRC-015-0. Revision of the existing TPL standards will require updating of the contingency references in PRC-012-0.
Response: The SDT agrees that the PRC standards address performance and may need to be updated.	
ReliabilityFirst	The requirements for the use of SPS and RAS should be contained in a separate standard. That standard should dictate when the RAS and SPS can be used. The planning studies would then simulate those conditions.
Response: This was considered but the consensus was to keep requirements in TPL-001-1. RAS/SPS is allowed as per Requirement R3.5 and its sub-requirements.	
SRP	Non-Consequential Loss of Load should not be allowed for single contingencies (N-1) and the system must remain stable with no violations.
Response: The SDT agrees and Non-Consequential Load Loss is not permitted.	
Santee Cooper	There should be no stability impacts, and system security must be maintained. RAS or SPS should meet the same criteria as any protection system.

Q39	
Commenter	**Comment**
Response: See the summary response. The PRC standards address protection system criteria.	
SaskPower	Delegate this issue to the Planning Coordinators.
Response: See the summary response. The PC is just one of many applicable functional entities.	
Seattle City	All RAS or SPS schemes should be evaluated to determine the impact on the interconnected system. Actions that derate transfer paths should not be allowed unless essential to protecting equipment or anticipating the next contingency.
Response: See the summary response. The SDT expects that all SPS/RAS will still be subject to the regional scrutiny that you have suggested.	
AECC	See comment to Q38.
Response: See response to Q38.	
Tenaska	The system, following the use of an RAS or SPS in response to a single contingency, shall meet the performance requirements.
Response: The standard allows for RAS/SPS as per Requirement R3.5 but these types of corrective actions are expected to meet the performance requirements as per the tables.	
WECC BPA TSGT TEP	Based on the interpretation of the above question, we are providing two responses to this question. The first responds to the limitations placed on RAS, regardless of what action the RAS initiates. The second response specifically addresses RAS that trips generation. Response 1: RAS should be allowed for single contingency events. Any sort of RAS should be permitted, but there should be a review of the RAS. If the local entities agree to the RAS, it should be allowed. This addresses cost vs. benefit balance. Entities affected should be the ones that determine the best solution for their situation. Response 2: Generation tripping can be used for single contingency if such application can be demonstrated through transmission planning studies that: • The generation tripping is planned and controlled ("planned and controlled" means a pre-planned action(s) based on predetermined system conditions that take corrective measure(s) to maintain acceptable system performance). • The generation tripping does not result in non-consequential load loss. • System frequency should be within allowable limits. • System voltage dip and deviation should be within allowable limits. • The generator owner(s) agrees to the tripping as planned.
Response: Requirement R3.5 allows for the use of SPS and RAS and Requirement R3.5.2 would allow for the kinds of review that you're suggesting.	

40) 40. When RAS or SPS are allowed, what conditions should be met when these systems are used in system adjustments to meet performance requirements?

Summary Response: There was a wide variety of responses that described the conditions that should be met when an RAS or SPS is applied but the majority of the responses can be characterized as follows:

- Requirements for SPS are outlined in the PRC standards
- Maintain System Stability
- Prevent cascading
- Prevent loss of load
- Should be used as a short-term mitigation solution

Other suggestions include:

- Non-Consequential Loss of Load should not be allowed for single Contingencies (N-1)
- Allow to prepare for next Contingency
- If an SPS is used to solve a single Contingency problem, then full redundancy should be required.
- Generator tripping or runback and reconfiguration should be allowed for lower probability single Contingency events such as bus faults.
- SPS not be used for events that are more likely to occur.
- Should not constitute a long-term Corrective Action Plan to address deficiencies.

The SDT has modified Requirement R3.6 (now Requirement R3.5) to specify the conditions under which manual and automatic generation runback and tripping can be used to meet single and multiple Contingency performance requirements and to make it clear that all Facilities must always remain within applicable thermal and voltage ratings.

The following requirements have been changed due to industry comments:

R3.5. Manual and automatic generation run-back/tripping is allowed as a response to a single ~~and~~ or multiple Contingenc~~ies~~y ~~as long as Facility Ratings are not exceeded.~~if the following conditions are met:

R3.5.1. All Facilities shall be operating within their Facility Ratings.

R3.5.2. Such action would not violate safety, equipment, regulatory or statutory requirements.

R3.5.3. A sustainable, stable, operating condition is maintained.

Q40	
Commenter	**Comment**
Ameren	RAS and SPS should be allowed only as an interim operating procedure to mitigate single contingency conditions or to mitigate multiple contingency events on a long-term basis. The RAS or SPS must be effective in mitigating the contingencies and can be implemented within the required operating time.
Response: Industry comments do not support the use of runback only as an interim measure. The current draft standard language does not	

Q40	
Commenter	**Comment**
impose such a limitation on the use of SPS.	
Brazos Electric	See above.
BCTC	See Q39. Also, WECC RAS Reliability requirements must be met for new systems.
Central Maine Power HQTE National Grid New England ISO NU NPCC RCS NSTAR United Illuminating	System must remain stable with acceptable voltages and all equipment within applicable emergency limits.
Duke Energy	See response to Q36 and Q37 above. No additional conditions beyond meeting the performance requirements.
Entergy	Following a contingency, power flows on lines should be within their emergency ratings, voltages should be at adequate levels and system should be stable.
FirstEnergy	As long as thermal, voltage, and stability requirements are met, RAS or SPS should be allowed provided it does not shed load for a single contingency event, and only if the Transmission Owner has documented short term ratings that would not be exceeded during the runback.
JEA	RAS/SPS should not limit generation output for N-1 conditions.
Manitoba Hydro	1) Reducing or increasing generation while keeping the units on-line or by bringing additional units on line. The amount of generation change should be limited to that amount that can be accomplished within the allowed readjustment period. Due consideration should be given to start up time and ramp rates of the units. 2) Generator tripping should be added to requirement R3.5 in addition to runback. Generator tripping is used extensively in regions where remote generation is delivered via long transmission. 3) Capacitor and reactor switching - The number of capacitors and reactors, which may be switched, should be limited to those which could be switched during the allowed readjustment period. 4) Adjustment of load tap changers (LTCs) to the extent possible within the allowed readjustment period. 5) Adjustment of phase shifters to the extent possible within the allowed readjustment period. 6) An increase or decrease to the flow on HVDC facilities to the extent possible within the allowed readjustment period. 7) Transmission reconfiguration - Automatic tripping of transmission lines or transformers to the extent possible within the allowed readjustment period. 8) Automatic tripping of interruptible load or curtailment of or redispatching of Firm Transmission Service to the extent possible within the allowed readjustment period.
MISO	SPS may be used if it maintains similar level of system reliability and security as transmission upgrades.
MRO	SPS are often used in the MRO area to avoid unnecessary expenditures and environmental impacts. SPS are sometimes used to prevent instability. The SPS may initiate fast generation run back, automatic generation rejection, or automatic tripping of a facility for a remote event. The MRO notes that the scheme must be automatic, fast acting, consistent with short term equipment ratings. The MRO notes the following general conditions for adjustments, that

Q40	
Commenter	**Comment**
	perhaps would be useful in designing performance requirements for allowable system adjustments in addition to the description in Question 39: 1. Generation adjustments - Reducing or increasing generation while keeping the units on-line or by bringing additional units on line. The amount of generation change is limited to that amount that can be accomplished within the allowed readjustment period. Due consideration shall be given to start up time and ramp rates of the units. 2. Capacitor and reactor switching - The number of capacitors and reactors, which may be switched, is limited to those which could be switched during the allowed readjustment period. This includes those capacitors and reactors that would be switched by automatic controls within the same period. 3. Adjustment of load tap changers (LTCs) to the extent possible within the allowed readjustment period. This includes both LTCs which would automatically adjust and those under operator control which could be adjusted within the readjustment period. 4. Adjustment of phase shifters to the extent possible within the allowed readjustment period. 5. An increase or decrease to the flow on HVDC facilities to the extent possible within the allowed readjustment period. 6. Transmission reconfiguration - Automatic tripping of transmission lines or transformers to the extent possible within the allowed readjustment period. 7. Automatic tripping of interruptible load or curtailment of or pre-determined redispatching of Firm Transmission Service to the extent possible within the allowed readjustment period.
Muscatine P&W	Reasonable and workable. (See Q43 Comment #3)
NERC TIS	No special conditions required as long as the RAS or SPS are tested to meet the performance requirements.
Seattle City	Actions should be intended to address contingency, prevent damage, or prepare for next contingency.
SERC EC DRS	No additional conditions except meeting performance requirements.
Southern Transm.	If an SPS is used to solve a single contingency problem, then full redundancy should be required. Generator tripping or runback and reconfiguration should be allowed for lower probability single contingency events such as bus faults; we suggest that SPS not be used for events that are more likely to occur.
Tenaska	The system, following the use of an RAS or SPS in response to a single contingency, shall meet the performance requirements.
WECC BPA TSGT TEP	System adjustment involves operator intervention that would be beyond the time frame of RAS operation. Therefore, if a unit is already dropped during RAS or SPS action, it should be assumed to be off-line during system adjustment period.

Response: Based on the majority of industry responses, the SDT has modified Requirement R3.6 (now Requirement R3.5) to specify conditions under which manual and automatic generation runback and tripping can be used to meet single and multiple Contingency performance requirements for the steady state portion of the Planning Assessment.

R3.5. Manual and automatic generation run-back/tripping is allowed as a response to a single ~~and~~ or multiple Contingenc~~ies~~y ~~as long as Facility Ratings are not exceeded.~~if the following conditions are met:

Q40	
Commenter	**Comment**
R3.5.1. All Facilities shall be operating within their Facility Ratings. **R3.5.2.** Such action would not violate safety, equipment, regulatory or statutory requirements. **R3.5.3**. A sustainable, stable, operating condition is maintained.	
City Water Power and Light	Maintain system stability, prevent loss of load and prevent cascading outages.
Response: The SDT agrees with your comment and has modified Requirement R3.6 (now Requirement R3.5) to specify conditions under which manual and automatic generation runback and tripping can be used to meet single and multiple contingency performance requirements. **R3.5.** Manual and automatic generation run-back/tripping is allowed as a response to a single ~~and~~ or multiple Contingenc~~ies~~y ~~as long as Facility Ratings are not exceeded.~~if the following conditions are met: **R3.5.1.** All Facilities shall be operating within their Facility Ratings. **R3.5.2.** Such action would not violate safety, equipment, regulatory or statutory requirements. **R3.5.3**. A sustainable, stable, operating condition is maintained.	
ERCOT ISO CAISO	1. RAS or SPS must be simple and manageable. 2. Number of contingencies triggering a RAS or SPS should be very limited (4 allowed by CAISO). 3. RAS or SPS should generally monitor only local facilities that are either directly connected to the plant or one bus away.
Response: The SDT agrees with your comment in (1) and believes this is covered in the requirements of the PRC standards. Based on the majority of industry responses, the SDT has modified Requirement R3.6 (now Requirement R3.5) to specify conditions under which manual and automatic generation runback and tripping can be used to meet single and multiple Contingency performance requirements for the steady state portion of the Planning Assessment. Applying additional requirements needs to be done as a regional difference. **R3.5.** Manual and automatic generation run-back/tripping is allowed as a response to a single ~~and~~ or multiple Contingenc~~ies~~y ~~as long as Facility Ratings are not exceeded.~~if the following conditions are met: **R3.5.1.** All Facilities shall be operating within their Facility Ratings. **R3.5.2.** Such action would not violate safety, equipment, regulatory or statutory requirements. **R3.5.3**. A sustainable, stable, operating condition is maintained.	
Northwestern Energy	RAS or SPS should meet performance requirements including reserve requirements.
Allegheny Power	The system should remain stable, reliable, allow for operational preparation for the next contingency and failure of the RAS/SPS should not lead to a cascading event.
AEP	They include redundancy and their failure does not result in cascading.
APPA	Maintain system stability and prevent the loss of load.
SRP	Non-Consequential Loss of Load should not be allowed for single contingencies (N-1) and the system must remain

Q40	
Commenter	**Comment**
	stable with no violations.
Response: The SDT agrees.	
FPL FRCC	The performance requirements for SPS are appropriately stated in standards PRC-012-0 and PRC-015-0. If the proposed TPL standard is adopted the contingency references in PRC-012-0 would need to be updated.
Progress–Florida	The use of RAS or SPS should be allowed as necessary for any single contingency event, provided that such use does not result in cascading outages. It should be noted that the performance requirements for SPS are appropriately stated in standards PRC-012-0 and PRC-015-0. Revision of the existing TPL standards will require updating of the contingency references in PRC-012-0.
Georgia Transm.	PRC Standards
MEAG Power NCEMC SERC EC PSS TVA	The conditions required by SPS standards (PRC).
Santee Cooper	There should be no stability impacts, and system security must be maintained. The requirements are outlined in PRC-015,016, and 017.
SERC RRS OPS	The requirements are outlined in PRC-015, 016, and 017.
SCE&G	The conditions required by SPS Reliability Standards.
Response: The SDT has considered your comments and concludes that the PRC standards describe the performance requirements for SPS but do not specify how the SPS requirements are applied to the Planning Assessment	
IESO	As indicated in the comments provided under Q38 and Q39, the conditions to simulate operation of the RAS and SPS would depend on the conditions they are designed to protect. We do not believe such conditions can be generalized.
ITC	This should be limited to the time until a physical solution is possible (i.e., a temporary solution).
WPS	The use of RAS or SPS should not constitute a long-term Corrective Action Plan to address deficiencies. The use of RAS and SPS should be limited to that period of time necessary to implement expansion of facilities to address the deficiency.
Response: Industry comments do not support the use of runback only as an interim measure. The current draft standard language does not impose such a limitation on the use of SPS.	
LCRA	Systems must have a balance between security and dependability. System must be reviewed annually or as system conditions change.
New York ISO	This would be dependent on the characteristics of each unique protection scheme.
Response: The SDT agrees with your comment and believes this is covered in the requirements of the PRC standards.	
Progress–Florida	The use of RAS or SPS should be allowed as necessary for any single contingency event, provided that such use does not result in cascading outages. It should be noted that the performance requirements for SPS are appropriately stated in standards PRC-012-0 and PRC-015-0. Revision of the existing TPL standards will require updating of the contingency references in PRC-012-0.
Response: Please see Requirement R3.5. The use of SPS is allowed for generation tripping or runback as long as the criteria is met	
AECC	See response to Q38.
Response: See response to Q38.	

Q40	
Commenter	**Comment**
SaskPower	Delegate this issue to the Planning Coordinators.
Response: The SDT believes that it should be a coordinated effort between the Planning Coordinator and the Transmission Planner.	

G) General Questions

41) Q41. If you are aware of any regional variances that would be required as a result of these standards, please identify them here.

Summary Response: Few comments were received indicating that regional variances would be required although some pointed out that variances may be required depending on the final version of the standard. The standard has been modified with respect to the issue of generation tripping and that should reduce or eliminate the stated level of concern and may make a regional variance unnecessary.

The following requirement was changed due to industry comments:

R3.5. Manual and automatic generation run-back/tripping is allowed as a response to a single ~~and~~ or multiple Contingenc~~iesy~~ ~~as long as Facility Ratings are not exceeded.~~if the following conditions are met:

Q41			
Commenter	**Yes**	**No**	**Comment**
ABB		☑	
Brazos Electric		☑	
Dominion		☑	
E ON US		☑	
AECI		☑	
Allegheny Power		☑	
AEP		☑	
CenterPoint		☑	
CPS Energy		☑	
Duke Energy		☑	
Entegra			
Entergy		☑	
FirstEnergy		☑	
FPL FRCC		☑	No, if the comments to the above questions are incorporated. The FRCC system is a peninsular system having only one interface with the rest of the interconnected NERC system, and has historically demonstrated exceptionally high reliability with no events in recent history cascading beyond the FRCC system. The adequacy of the existing TPL standards as they apply to the FRCC System have been extensively documented.

Q41			
Commenter	**Yes**	**No**	**Comment**
Georgia Transm.		☑	
IESO		☑	
ITC		☑	Variances should not be a reason to change the standard (lower the bar).
KCPL		☑	
MISO		☑	
National Grid		☑	We're not aware of any at this time. However, future modifications of the standard may highlight a need for regional variances.
New York ISO		☑	
PJM		☑	
Progress–Florida		☑	No, but PEF reserves the right to apply for variances based on the completed version of this or any other standard.
Santee Cooper		☑	
SERC EC DRS		☑	
SERC RRS OPS		☑	
SCE&G		☑	
Southern Transm.		☑	
Tenaska		☑	
TVA		☑	
WPS		☑	
Central Maine Power New England ISO NU NSTAR United Illuminating	☑	☑	Unsure due to ambiguities in the standard. Depending upon the final standard, New England may need exceptions for existing facilities or allowance for a transition period to develop a compliance plan.
HQTE NPCC RCS	☑	☑	Until section R3.6.1 is finalized, we will be unable to determine whether a regional variance is required.
Response: Few comments were received indicating that regional variances would be required although some pointed out that variances may be required depending on the final version of the standard.			
Manitoba Hydro	☑	☑	MH does not like the idea of a long transition period. Either NERC adopts the concept of generation rejection or the MRO will need to submit a regional variation. I much prefer the planned loss of generation via an SPS rather than via out-of-step tripping as proposed in the Table 2. In certain

Q41			
Commenter	**Yes**	**No**	**Comment**
			areas of the MRO that are stability limited because of long lines to bring generation at the energy source (such as mine mouth plants, hydro plants, etc.) to the load, generation rejection is used to return from an emergency state to a normal state. If generation rejection is not allowed in these cases, extraordinary cost and extraordinary negative environmental impacts will result. As an example, removing one SPS will require new 500 kV transmission between Winnipeg and Minneapolis at a cost of $1 billion to MRO utilities.
BCTC	☑		WECC may require a regional difference for generator tripping depending on the conditions imposed in R3.6.1. Other regional variances would not necessarily be in the context of regional difference as defined in the Standards Manual, but rather exceptions for long weak systems for which it is not economic to meet criteria applicable to tightly interconnected systems.
ERCOT ISO CAISO	☑		ISO relies upon tripping of generators to meet single contingency performance requirements. ISO also relies upon planned and controlled load shedding for the proposed Planning Events P4 and P5.
LADWP	☑		Too many to be listed with the separation above and below 300kV being the worst one that will undermine the overall reliability of the electric system in North America. Another major omission in this proposed standard is the complete lack of recognition of the importance of post-transient requirements. Mixing commercial (firm or non-firm transactions, etc.) and reliability in transmission planning criteria would be in conflicts with WECC rules and practices.
MRO	☑		If the SDT proceeds with an approach that does not allow generation rejection for contingencies, the MRO will need to submit a regional difference. In certain areas of the MRO that are stability limited because of long lines to bring generation at the energy source (such as mine mouth plants, hydro plants, etc.) to the load, generation rejection is used to return from an emergency state to a normal state. If generation rejection is not allowed in these cases, extraordinary cost and extraordinary negative environmental impacts will result. As an example, if one particular SPS is removed, new 500 kV transmission will be required between Winnipeg and Minneapolis at a cost of $1billion to the customers of MRO utilities.
NERC TIS	☑		There may be some in the application of RAS or SPS for N-1 contingencies.
Northwestern Energy	☑		WECC allows N-1 generator tripping, and the transmission systems have been designed around this criteria. Moving away from this criteria is not necessary, and for critical N-1 events, redundancy is in place.
WECC BPA TSGT TEP	☑		Yes. WECC allows tripping of generators to meet single contingency performance requirements. WECC also allows planned and controlled load shedding for the proposed Planning Events P2-1, P2-2, P3, P4 and P5, although we agree with the proposed requirements for P4 due to the higher probability of occurrence. If the standard does not allow for non-consequential load shedding of 300 kV and above for P5 scenarios, WECC will develop a regional variance".
Response: The standard has been modified with respect to the issue of generation tripping that should reduce the stated level of concern and may make a regional variance unnecessary.			

Q41			
Commenter	**Yes**	**No**	**Comment**
R3.5. Manual and automatic generation run-back/tripping is allowed as a response to a single ~~and~~ or multiple Contingenc~~iesy~~ ~~as long as Facility Ratings are not exceeded.~~if the following conditions are met**:**			
LCRA	☑		See ERCOT Planning Criteria. Also, through the regional coordinators, NERC recently conducted a survey of transmission planners/owners regarding use of more stringent criteria used in their own systems. The std. drafting team should include a review of the survey results and incorporate into this NERC std as necessary.
Response: The SDT will review the survey.			
MEAG Power	☑		Facilities rating methodology are different from region to region and company to company.
Response: Ratings methodologies are not covered in this standard.			
AECC	☑		I am more concerned about the regions performing studies consistently than identifying regional variences. My company sits stradle the Southwest Power Pool and SERC. There are considerable difference between the two when it comes to study criteria, assumptions, and how studies are performed. These differences have led to situations where it is near impossible to get models and perform studies near the seams that produce results in which you can have confidence and are comparable. The Southwest Power Pool and its members do a very good job of analyzing and evaluating their region. SPP has criteria that specifically requires EtE analysis and the process used to develop their Transmission Expansion Plan contains treatment of SPS/RAS schemes as mitigations.
Response: The SDT recognizes the regional differences that can exist. However, resolution of all regional variances is outside the scope of the SDT.			
APPA	☑		The WECC will probably have a couple.
ATC	☑		
City Water Power and Light	☑		
ISO/RTO	☑		
PRPA	☑		
Progress–Carolinas	☑		
Response: Thank you.			

42) Q42. If you are aware of any conflicts between the proposed standards and any regulatory function, rule order, tariff, rate schedule, legislative requirement or agreement, please identify them here.

Summary Response: Few comments were received indicating conflicts between the proposed standard and any regulatory function, rule order, tariff, rate schedule, legislative requirement or agreement. A few potential issues were identified in areas of the standard that have been modified in the second posting. These areas will need to be re-assessed based on the specific revisions made.

The following requirements were changed due to industry comment:

R3.5. Manual and automatic generation run-back/tripping is allowed as a response to a single ~~and~~ or multiple Contingenc~~iesy~~ ~~as long as Facility Ratings are not exceeded.~~if the following conditions are met:

R9. Each Distribution Provider shall provide its respective Planning Coordinator with modeling information for real and reactive load forecast data for each year of the Transmission planning horizon at Transmission nodes based on expected or historical System performance including the expected mix of industrial, commercial, and residential Loads, within ninety days of a request for such information.

R10. Each Transmission Planner shall provide its respective Planning Coordinator with modeling information for Firm Transmission Service data, Interchange Schedules and resources required to supply Load for each of its Balancing Authorities for each year of the Transmission planning horizon, within ninety days of a request for such information.

R11. Each Transmission Owner shall provide its respective Planning Coordinator with modeling information for known planned outages and long-term outages for Transmission equipment for each year of the Transmission planning horizon with consideration given to spare equipment strategy, within ninety days of a request for such information.

R12. Each Generator Owner shall provide its respective Planning Coordinator with modeling information for known planned outages and long-term outages for generation equipment for each year of the Transmission planning horizon, within ninety days of a request for such information.

R13. Each Resource Planner shall provide its respective Planning Coordinator with the modeling information for new planned facilities for each year of the Transmission planning horizon including but not limited to generators, Reactive Power devices, and new technologies, within ninety days of a request for such information.

R14. Each Transmission Planner shall provide its respective Planning Coordinator with modeling information for new planned facilities for each year of the Transmission planning horizon including but not limited to Transmission Lines, circuit breakers, Reactive Power devices, Protection System equipment and control devices, and new technologies, within ninety days of a request for such information.

Q42			
Commenter	**Yes**	**No**	**Comment**
ABB		☑	

Q42			
Commenter	**Yes**	**No**	**Comment**
AECC		☑	
Ameren		☑	The proposed standard, as well as the existing standards, makes no distinction between firm (network resource) and non-firm (energy only) generation. The standard should clearly state that the standard does not apply to non-firm generation.
City Water Power and Light		☑	
E ON US		☑	
ERCOT ISO		☑	Not aware of any.
AECI		☑	
Allegheny Power		☑	
AEP		☑	
APPA		☑	
BCTC		☑	
CAISO		☑	Not aware of any
Central Maine Power		☑	
CPS Energy		☑	
Duke Energy		☑	
FirstEnergy		☑	
FPL		☑	
FRCC		☑	
Georgia Transm.		☑	
HQTE		☑	
IESO		☑	
ITC		☑	
Manitoba Hydro		☑	
MISO		☑	
MRO		☑	

Q42			
Commenter	**Yes**	**No**	**Comment**
National Grid		☑	
New England ISO		☑	
New York ISO		☑	
NU		☑	
NPCC RCS		☑	
Nstar		☑	
PJM		☑	
Progress–Carolinas		☑	
Progress–Florida		☑	
SERC EC DRS		☑	
SERC RRS OPS		☑	Not currently aware of any.
SCE&G		☑	
Southern Transm.		☑	
Tenaska		☑	
United Illuminating		☑	
Santee Cooper		☑	The proposed standard as well as the existing standards, makes no distinction between firm (network resource) and non-firm (energy only) generation. The standards should clearly state that the standard does not apply to non-firm generation.
WPS		☑	
Response: Thank You. The SDT is not aware that the proposed requirements conflict with the tariff provisions of firm versus non-firm Transmission and no specific conflict was provided in the comments.			
WECC BPA TSGT TEP	☑		1) FERC Order 693, Paragraph 1825 regarding TPL-003, Category C – The Commission directed the ERO to modify footnote (c) to Table 1 to clarify the term "controlled load interruption" rather than eliminate its applicability to this performance requirement. 2) FAC-010-1, R2.3 – "…planned or controlled interruption…" This conflicts with "No" for non-consequential load loss allowed in draft TPL.
Response: The SDT believes the draft standard does not conflict with FERC Order 693. Paragraph 1794 specifically prohibits loss of Non-Consequential Load for a single Contingency. The SDT has modified the standard for consistency with FAC-010-1, R2.3. Alternatively, to the extent a conflict still exists, FAC-010-1 would need to be revised to comply with the FERC Order.			
CenterPoint	☑		FPA section 215(i)(2) "does not authorize the ERO or the Commission to order the construction of additional generation or transmission capacity or to set and enforce compliance with standards for

Q42			
Commenter	**Yes**	**No**	**Comment**
			adequacy or safety of electric facilities or services." However, adherence to TPL-001-1 as currently drafted, will require, de facto, the construction of additional transmission facilities. CenterPoint Energy believes this standard goes far beyond the legislative intent of mandatory reliability standards and will result in construction of transmission capacity in order to remain compliant.
Dominion	☑		Current planning criteria are approved by State commissions. It is unlikely that the commissions would agree that rate payers should incur the significant cost increases required to meet more stringent planning criteria (i.e. - "raising the bar") when the corresponding improvements in transmission system reliability cannot be quantified.
Response: The SDT's understanding is that the ERO believes it has the authority to set performance requirements for reliability.			
KCPL	☑		In the past, Missouri Public Service Commission Staff have required KCPL to demonstrate that generators have "firm" transmission outlet capacity.
Response: The SDT does not believe that the proposed requirements conflict with the stated MO PSC requirement.			
NCEMC	☑		Modeling data requirements in R1 applicable to many entities may be either redundant with the MOD submittals or may be conflict for entities that are required to submit this data to Transmission Providers to comply with deadlines in their Tarffs. In addition, data submitted by entities named may be confidential so this issue will have to be addressed among those submitting and receiving needed data.
Response: The SDT believes some additional modeling requirements not presently contained in the MOD standards are necessary for Transmission planning purposes. The SDT has revised these requirements based on industry comments to eliminate redundancy with existing MOD standards with the intent that these requirements will be removed from the TPL standard when they are incorporated into the MOD standards at a later date. The SDT agrees that there may be situations where confidentiality issues will have to be addressed. **R9.** Each Distribution Provider shall provide its respective Planning Coordinator with modeling information for real and reactive load forecast data for each year of the Transmission planning horizon at Transmission nodes based on expected or historical System performance including the expected mix of industrial, commercial, and residential Loads, within ninety days of a request for such information. **R10.** Each Transmission Planner shall provide its respective Planning Coordinator with modeling information for Firm Transmission Service data, Interchange Schedules and resources required to supply Load for each of its Balancing Authorities for each year of the Transmission planning horizon, within ninety days of a request for such information. **R11.** Each Transmission Owner shall provide its respective Planning Coordinator with modeling information for known planned outages and long-term outages for Transmission equipment for each year of the Transmission planning horizon with consideration given to spare equipment strategy, within ninety days of a request for such information. **R12.** Each Generator Owner shall provide its respective Planning Coordinator with modeling information for known planned outages and long-term outages for generation equipment for each year of the Transmission planning horizon, within ninety days of a request for such information.			

Q42			
Commenter	**Yes**	**No**	**Comment**
R13. Each Resource Planner shall provide its respective Planning Coordinator with the modeling information for new planned facilities for each year of the Transmission planning horizon including but not limited to generators, Reactive Power devices, and new technologies, within ninety days of a request for such information. **R14.** Each Transmission Planner shall provide its respective Planning Coordinator with modeling information for new planned facilities for each year of the Transmission planning horizon including but not limited to Transmission Lines, circuit breakers, Reactive Power devices, Protection System equipment and control devices, and new technologies, within ninety days of a request for such information.			
Northwestern Energy	☑		Eliminating the N-1 RAS in the West could cause problems for utilities in the West with local jurisdictional cost recovery.
Response: The standard has been modified with respect to the issue of application of RAS/SPS that should reduce the stated level of concern and remove any conflict. **R3.5.** Manual and automatic generation run-back/tripping is allowed as a response to a single ~~and~~ or multiple Contingenc~~iesy~~ ~~as long as Facility Ratings are not exceeded.~~if the following conditions are met**:**			
ATC	☑		
ISO/RTO	☑		
Response: The SDT believes the referenced requirement is necessary to ensure an appropriate balance between reliability requirements and right-of-way considerations.			

43) Q43. Do you have any other questions or concerns with the proposed standard that have not been addressed? If yes, please explain.

Summary Response: Several of the commenters reinforced or embellished the comments they submitted in prior questions. Although the SDT has provided responses to all comments submitted as part of this question, more detailed responses and summaries are provided in the prior questions.

However, several comments were received that were different from other prior comments. The SDT has made many changes to requirements based on comments submitted just for Question #43. Some of the major changes are:

1. Created a new requirement concerning short circuit analysis
2. Created a requirement to document proxies for instability, cascading outages and uncontrolled islanding
3. Changed requirements to clarify the actions allowed to prepare for the next Contingency
4. Changed requirements to clarify that Facility Ratings may be different for, and a function of, different durations
5. Added a definition for Bus-tie Breaker.

Other less significant changes were made by the SDT based on the remaining few comments. These are detailed in the responses to the individual comments below.

The following requirements were changed as a result of industry comments:

Bus-tie Breaker: A circuit breaker that is positioned to connect two individual straight bus substation configurations. (Substation configurations such as ring-bus, breaker-and-a-half, or double bus-double breaker protection schemes do not use bus-tie breakers.)

Consequential Load Loss: Load that is no longer ~~served because it is directly connected to an element(s) that is removed from service due to fault clearing action or mis-operation~~ connected to a source as a result of the event being studied or which is lost as a result of the load's response to the transient conditions of the event (other than through the action of UVLS or UFLS schemes). Although Load which is lost as a result of the Load's response to the transient conditions of the event is considered Consequential Load Loss and is permitted when Consequential Load Loss is allowed, Transmission planning entities are not allowed to rely upon the expectation of such Load loss to meet steady state performance requirements.

Non-Consequential Load Loss: ~~Load loss other than Consequential Load Loss. For example, Load loss that occurs through manual (operator initiated) or automatic operations such as under-voltage Load shedding, under-frequency Load shedding, or Special Protection Systems.~~ Non-Interruptible Load loss other than Consequential Load Loss. For example, non-Interruptible Load loss that occurs through manual (operator initiated) or automatic operations such as under-voltage Load shedding, under-frequency Load shedding, or Special Protection Systems would be considered Non-Consequential Load Loss.

R1. ~~Each Resource Planner, Transmission Planner, Transmission Owner, Generator Owner, and Load-Serving Entity shall each provide its respective Planning Coordinator with the following modeling information required for System performance studies upon request (within 30 calendar days) :~~ Each Transmission Planner and Planning Coordinator shall maintain System models for performing the studies needed to

complete their Planning Assessment. The models shall use data provided in Requirements R9 through R14, the MOD-010 and MOD-012 standards, and other data sources.

R2.1. ~~The steady state portion of~~ The Near-Term Transmission Planning Horizon ~~Planning Assessment~~ portion of the steady state analysis shall ~~address all five years of the assessment period~~ be assessed annually and be supported at a minimum by the following annual current studies, supplemented with qualified past studies as ~~shown~~ indicated in Requirement R2.6:

R2.1.3. For each of the studies described in Requirement R2.1.1 and Requirement R2.1.2, sensitivity case(s) that stress the System with sensitivities that reflect one or more of the following conditions shall be run and documentation ~~with~~ of the technical rationale for ~~the selected sensitivity(ies)~~ why each of the conditions was or was not selected shall be supplied:

R2.1.4. In addition to those sensitivities mentioned in Requirement R2.1.3, any other sensitivities, as deemed appropriate by the Transmission Planner or Planning Coordinator for their individual systems, shall be run and documentation of the technical rationale for why each was selected shall be supplied.

R2.3. The short circuit analysis portion of the Planning Assessment shall be conducted annually and supported by current or past studies.

R2.4 The ~~System Stability portion of the~~ Near-Term Transmission Planning Horizon portion of the Stability analysis ~~Planning Assessment~~ shall be assessed annually ~~address all five years of the assessment period,~~ and be supported by current or past studies. The following studies are required ~~annually~~:

R2.4.1. System peak Load for one of the five years. For peak System Load levels, ~~the~~a Load model shall ~~include the dynamic effects~~ be used which appropriately represents the dynamic behavior of Loads, including consideration of the behavior of induction motor Loads.

R2.4.3. For each of the studies described in Requirement R2.4.1 and Requirement R2.4.2, ~~S~~sensitivity case(s) that stress the System to reflect one or more of the following conditions shall be run ~~with documentation provided explaining the rationale for the selected sensitivity(ies)~~ and documentation of the technical rationale for why each of the conditions was or was not selected shall be supplied:

R2.4.4. In addition to those sensitivities mentioned in Requirement R2.4.3, any other sensitivity, as deemed appropriate by the Transmission Planner or Planning Coordinator for their individual systems, shall be run and documentation of the technical rationale for why each was selected shall be supplied.

R2.5. The ~~plant~~Generating Unit Stability analysis portion of the Planning Assessment shall be analyzed consistent with Requirement ~~R4.6~~ R5.6 with studies for the year when the following changes that could affect stability margins occur:

R2.5.1. New generator(s) are added or generation modifications are made such as ~~increasing~~changes in generation capability or replacing the exciter ~~or addition of a power System stabilizer~~

R2.5.2. Material Transmission System changes ~~in the electrical vicinity of existing generation are made~~ are made at or near the point of Interconnection of existing Generation such as the ~~addition or~~ removal of a Transmission Line ~~at or near the point of Interconnection~~ or the addition of a new substation in one of the Transmission Lines connected to the plant.

R2.6. Past studies may be used to support the Planning Assessment if they meet the following requirements:

R2.6.1. For steady state, short circuit, or System Stability analysis: ~~if the study is less than three years old and no material changes have occurred to the System in the intervening period. Material changes include topology changes, generation additions/removals, and market structure changes~~ the study shall be five calendar years old or less.

R2.6.2. For steady state, short circuit ~~analysis~~, Generating Plant Stability, or System Stability analysis: ~~if the study is less than five years old and no material changes have occurred to the System in the intervening period.~~ the study shall not include any material changes, such as, generation or Transmission additions/removals, or topology changes that have occurred in the intervening period and would impact the study area.

R2.6.3. ~~For plant and System Stability analysis: until material changes in the System make the study no longer valid. Material changes in the system include the addition of a Transmission Line or a generator.~~

R2.7 - For Planning Events shown in Table 1 – Steady State Performance and Table 2 – Stability Performance, when the analysis indicates an inability of the System to meet the performance requirements in the tables, the Planning Assessment shall include Corrective Action Plans addressing how the performance requirements will be met. Revisions to the Corrective Action Plans are allowed ~~over time~~ in subsequent assessments but the System shall continue to meet the performance requirements in the tables. ~~Such plans shall:~~ Corrective Action Plans do not need to be developed solely to meet the performance requirements for sensitivities.

R2.7.1. ~~Identify~~ List System deficiencies and the associated actions needed to achieve required System performance. ~~including Transmission and generation improvements, DSM, new technologies, or Operating Procedures including the duration of interim Operating Procedures.~~ Such actions may include installation, modification, retirement, or removal of Transmission and generation Facilities and any associated equipment such as protective or Special Protection Schemes, rate applications, DSM, or other initiatives, new technologies, or Operating Procedures including how long the Operating Procedures will be needed as part of the Corrective Action Plan.

R2.7.2. ~~Be added to study cases and the cases re-tested to show that the System with planned additions meets the performance requirements in the tables~~ Contain a description of how and why the consideration of the sensitivities selected in accordance with Requirements R2.1.3, R2.1.4, R2.4.3, and R2.4.4 in the Planning Assessment did or did not result in a modification or expansion of the list of actions developed in accordance with Requirement R2.7.1.

R3.3.2.2. Following single Contingency events, ~~System adjustments other than shedding of firm Load or curtailment of firm transfers are permitted to meet performance requirements provided these adjustments can be accomplished within the time period allowed by the applicable time limited ratings.~~ Transmission configuration changes and redispatch of generation are allowed provided that all Facilities shall be operating within their Facility Ratings and within their thermal and voltage limits.

R3.5. Manual and automatic generation run-back/tripping is allowed as a response to a single ~~and~~ or multiple Contingenc~~ies~~y ~~as long as Facility Ratings are not exceeded.~~if the following conditions are met:

R3.5.1. All Facilities shall be operating within their Facility Ratings.

R3.5.2. Such action would not violate safety, equipment, regulatory or statutory requirements.

R3.5.3. A sustainable, stable, operating condition is maintained.

R5.2. Contingency analyses shall simulate the removal of all elements including those that System protection and other automatic controls are ~~is~~ expected to disconnect for each Contingency without operator intervention.

R5.5.2 Performance shall meet the requirements for Planning Events in Table 2 – Stability Performance.

R5.5.3. Automatic generation tripping is allowed to mitigate Stability violations if the following conditions are met:

R6. For the short circuit portion of the Planning Assessment, as described in Requirement R2.3, each Transmission Planner and Planning Coordinator shall assess the short-circuit capability of its equipment under normal conditions and following any single Contingency condition that would result in greater circuit breaker interrupting duties.

R8. Each Planning Coordinator shall coordinate the distribution of Planning Assessment results among ~~affected entities~~ neighboring systems, coordinating analysis of these results through an open and transparent peer review process such as described in FERC Order 890.

R9. Each Distribution Provider shall provide its respective Planning Coordinator with modeling information for real and reactive load forecast data for each year of the Transmission planning horizon at Transmission nodes based on expected or historical System performance including the expected mix of industrial, commercial, and residential Loads, within ninety days of a request for such information.

R10. Each Transmission Planner shall provide its respective Planning Coordinator with modeling information for Firm Transmission Service data, Interchange Schedules and resources required to supply Load for each of its Balancing Authorities for each year of the Transmission planning horizon, within ninety days of a request for such information.

R11. Each Transmission Owner shall provide its respective Planning Coordinator with modeling information for known planned outages and long-term outages for Transmission equipment for each year of the Transmission planning horizon with consideration given to spare equipment strategy, within ninety days of a request for such information.

R12. Each Generator Owner shall provide its respective Planning Coordinator with modeling information for known planned outages and long-term outages for generation equipment for each year of the Transmission planning horizon, within ninety days of a request for such information.

R13. Each Resource Planner shall provide its respective Planning Coordinator with the modeling information for new planned facilities for each year of the Transmission planning horizon including but not limited to generators, Reactive Power devices, and new technologies, within ninety days of a request for such information.

R14. Each Transmission Planner shall provide its respective Planning Coordinator with modeling information for new planned facilities for each year of the Transmission planning horizon including but not limited to Transmission Lines, circuit breakers, Reactive Power devices, Protection System equipment and control devices, and new technologies, within ninety days of a request for such information.

Q43			
Commenter	**Yes**	**No**	**Comment**
ABB	☑		1. In Table 2 P3, more clarification is needed for "above 300 kV". For generators, does that mean those whose POI is >300kV? For transformers, is it the secondary voltage? Also, is the footnote referencing correct? "A transformer with low side rating above 300 kV" is confusing for transformers with 3 windings. What's the low-side rating of a 500/345/13.8 kV transformer? You should say "a secondary voltage rating above 300 kV" and define "secondary voltage rating" as the second highest voltage rating. This is standard nomenclature. Also, I assume you know that there aren't very many of these. The possibilities are 765/500, 500/345, and 765/345. The first two are uncommon, and the 3rd is only common in AEP and HQ. 2. In P3, does the 300 kV limit apply to the transmission circuits as well? It is hard to tell. 3. In R1, you say "Each … shall each …" Delete the second "each", which is redundant. Also delete "required for system performance studies". These words are not part of the requirement. They are part of the justification for the requirement. 4. Table 1, Extreme Event Descriptions, 3d and 3f are almost identical. 5. Table 1, P9-1, rewrite as "… (excluding circuits that share common structures for one mile or less)". P9-1 uses "structure" whereas Extreme 2a uses "tower". Make consistent. 6. P9-2 monopolar is already covered under P4-2. 7. For all of the multiple contingencies with System Adjustment in the middle, group them together something like this (for those with the same requirements): "Outage of any one of the following: 1.

Q43			
Commenter	**Yes**	**No**	**Comment**
			2. 3. 4. followed by System Adjustments followed by outage of any one of the following: a. b. c. d." This is easier to understand than separately writing each possible combination of 2. 8. Overall, the structures of the Tables needs to be made clearer and more consistent. But the ideas are good. 9. The transition is going to be critical for some of the standards that may require significantly more study work and significant capital investments in transmission infrastructure.

Response: 1. The SDT has added a footnote reference to the BES Elements Out of Service column to provide clarity on this issue. The note excludes tertiary windings.
2. The 300 kV threshold also applies to transmission circuits. The SDT has added greater detail to Tables 1 & 2.
3. The SDT has modified Requirement R1 (first draft) as Requirements R9 – R14 and the comment is addressed in the re-write.

R9. Each Distribution Provider shall provide its respective Planning Coordinator with modeling information for real and reactive load forecast data for each year of the Transmission planning horizon at Transmission nodes based on expected or historical System performance including the expected mix of industrial, commercial, and residential Loads, within ninety days of a request for such information.

R10. Each Transmission Planner shall provide its respective Planning Coordinator with modeling information for Firm Transmission Service data, Interchange Schedules and resources required to supply Load for each of its Balancing Authorities for each year of the Transmission planning horizon, within ninety days of a request for such information.

R11. Each Transmission Owner shall provide its respective Planning Coordinator with modeling information for known planned outages and long-term outages for Transmission equipment for each year of the Transmission planning horizon with consideration given to spare equipment strategy, within ninety days of a request for such information.

R12. Each Generator Owner shall provide its respective Planning Coordinator with modeling information for known planned outages and long-term outages for generation equipment for each year of the Transmission planning horizon, within ninety days of a request for such information.

Q43			
Commenter	**Yes**	**No**	**Comment**
R13. Each Resource Planner shall provide its respective Planning Coordinator with the modeling information for new planned facilities for each year of the Transmission planning horizon including but not limited to generators, Reactive Power devices, and new technologies, within ninety days of a request for such information. **R14.** Each Transmission Planner shall provide its respective Planning Coordinator with modeling information for new planned facilities for each year of the Transmission planning horizon including but not limited to Transmission Lines, circuit breakers, Reactive Power devices, Protection System equipment and control devices, and new technologies, within ninety days of a request for such information. 4. The Extreme Event descriptions have been revised in Tables 1 and 2 to clear up this wording. 5. P9-1 (P7-1 in second draft) is intended to include all structures in a tower line. Extreme Event 2a refers to a tower line. So they are consistent. 6. The SDT has revised Tables 1 and 2 so that this only shows up in one place now, P7. 7. The SDT has revised the tables as requested. 8. The SDT has revised Tables 1 and 2 as requested. 9 - This will be addressed later in the Implementation Plan.			
AECC	☑		I am not sure what is meant by "not the least common denominator" in the background section. One long time goal of NERC has been to raise the bar and not settle for the status quo which I support. If by this phrase the drafting team is looking to minimize loopholes, remove waffle factor, and eliminate some of the innovative interpretations of requirements then I am in agreement. However, if the drafting team is thinking that the least common denominator is a level of system study that should be performed and that studies should only be performed at some higher level then I disagree and consider this attitude as contradictory to the long term goal of raising the bar. If NERC is serious about reliability then we must get this standard right. Planning is where reliability starts. If reliability is not planned for adequately and built into the system it can not be expected that the future holds much promise for a reliable system. Reliability will not happen on its own. Industry best practices should take precedence over attempts to water down the standards in order to maintain status quo. Do any of the requirements under R1 conflict or repeat any of the requirements set for in any of the other NERC standards, especially some of the MOD and FAC standards? if so R1 should be modified, sections deleted, or reference the appropriate standard. I would like to thank the drafting team for taking on such a formitable task.
Response: The SDT felt that none of the current requirements should be weakened. The SDT felt that it is necessary to develop more stringent requirements where appropriate but not be limited by the fact that companies may need to reinforce their Systems to meet the new requirements.			

Q43			
Commenter	**Yes**	**No**	**Comment**
The SDT believes some additional modeling requirements not presently contained in the MOD standards are necessary for Transmission planning purposes. The SDT has revised these requirements based on industry comments to eliminate redundancy with existing MOD standards with the intent that these requirements will be removed from the TPL standard when they are incorporated into the MOD standards at a later date.			
Ameren	☑		1. Much of the language under R1 appears to be redundant with model data requirements as listed in Reliability Standard MOD-010 and MOD-011. Such information would typically be used to produce an annual series of powerflow cases. Instead of supplying such information in a piecemeal manner to the Planning Coordinator as a separate annual effort, the Planning Coordinator should make use of the most recent set of powerflow models. This requirement, as written, could cause a needless duplication of work effort. 2. It is not clear what is meant by 'stressed System conditions' in Requirement R1.2. Does this mean higher than predicted load, lower than expected reactive resources, or other meaning? It is also not clear what is covered by 'load models' in the same requirement. 3. It is not clear how expected transfers are to be modified in Requirement R2.1.3.2. Possibilities include higher or lower in the same transfer direction, turn transfer directions around so that importers become exporters, the inclusion of non-firm transfers that can be cut, or change import/export directions. There should be some basis for the sensitivity change. 4. It is not clear how planned transmission outages are to be modified in Requirement R2.1.3.7. Possibilities include modification of the outage duration, or modifications involving more or less facilities. Since outages are scheduled in the operations planning horizon, based on the best information available at the time of the outage request, it is questionable whether they should not be included in standards that apply to planning in years 1-5 or year 6-10 and beyond. 5. Requirement R2.2.1. should be deleted. Uncertainties involved with studies looking at system conditions out to ten years in the future would preclude the need to extend a Planning Assessment beyond the ten year period. Any corrective actions needed to resolve problems found during study of long-term system conditions could be noted in the Planning Assessment without the need to extend beyond ten years. 6. In Requirement R2.3, the scope of the study work involving the short circuit portion of the Planning Assessment is not clear. It is not clear whether the study work should be based on three-phase faults only, three-phase and single-phase faults, or whether classical representation or more a more detailed representation should be utilized. 7. We assume that Requirement R2.4.3.5 would require only known generation additions,

Q43			
Commenter	**Yes**	**No**	**Comment**
			retirements, or other dispatch scenarios, and that those performing the planning scenarios would not speculate on unkown generation additions and retirements. 8. A market structure change in Requirement R2.6.1 would not constitute a material change in an area with an abundance of low cost base load generation that was always on before the market change and would still be on after the market change. 9. Under Requirement R2.6.3., Plant and System Stability analyses are considered valid until material changes in the System invalidate previous study work. Here, material changes in the system include addition of a transmission line or generator. Addition of a transmission line or generator would only have an impact on stability of generators near the new facility installation. This is not clear from the wording of the standard, which would appear to require restudy of all generators if a transmission line or generator is added anywhere on the system. 10. What would be the duration of interim operating procedures in Requirement R2.7? 11. Requirement R.2.7.1.1. states that a project initiation date should be included in the Corrective Action Plan for each project, as well as an in-service date. A project initiation date may be of use to the particular project design engineering staff, but is of little use in planning the system. Keep in mind that this is a Planning Assessment and not a data request. 12. The wording of Requirements R3.2 and R4.2 appear to require taking all transmission elements as contingencies, plus modeling contingencies which would remove all elements automatically via System protection equipment. Based on comments from the SDT, the inclusion of all single elements in the set of contingencies to be considered is not intended as part of these requirements. Please verify this in writing. 13. The wording of Requirement R3.2.1., dealing with generator minimum voltage limitations, is vague with respect to what is required. It is not clear who would determine the minimum steady-state voltage limitations for all generators, and for what conditions. Note that it may be difficult to obtain some information from IPP generating facilities. 14. Requirement R3.2.2. appears redundant with requirement R1.2.1 of FAC-008-1, which deals with Facility Ratings. Relay load limits are one component already considered in establishing facility ratings. 15. Requirement R3.3.2.1., which deals with the amount and duration of Consequential Load loss, cannot be addressed adequately. Because an outage might be caused by a transitory event with

Q43			
Commenter	**Yes**	**No**	**Comment**
			quick restoration of the outaged facility, or be caused by extensive damage requiring lengthy repairs, there would be no single value for expected duration for any given outage event in the planning horizon. Therefore, this requirement should be removed from TPL-001-1. 16. Requirement R3.3.2.2, describing permissible actions following single contingency events to meet performance requrirements, should be removed from TPL-001-1. System adjustments following single contingencies should not be permitted to meet system performance requirements. For similar reasons, Requirement R3.5, describing generator adjustments permissible as responses to single and multiple contingencies, should be modified to remove the reference to single contingencies. 17. What additional single contingencies would there be that should be considered in Requirement R3.3.3? 18. Consequential generation loss needs to be considered in Requirement R3.6 for those generators directly connected (through transformation) to transmission lines. 19. Interconnection requirements establish that generators must have low-voltage ride through capability. It is not clear how is the transmission planner performing the studies would be able to consider this capability in Requirement R4.3. 20. In Requirement R6, there is no longer a requirement to send the Planning Assessment and Corrective Plan to the regional entities, but to the Reliability Coordinators instead. Why has this change been made? RTOs should not be involved in assessing compliance. 21. In reference to Table 1, bullet point #3, it is not clear how voltage instability, cascading outages, or uncontrolled islanding would be determined under steady state conditions. 22. Under Table 1, P1, cutting of firm transfers is not permitted as a response to a single contingency. However, it is not clear whether, in preparation for a subsequent contingency, reduction in firm transfers would be permitted. Reduction in firm transfers should be permissible in this instance. 23. In Table 1, for contingency categories P5 and P8, how would loss of a transmission circuit above 300 kV followed by loss of a transmission circuit below 300 kV be handled? 24. Under the Extreme Event Description section of Table 1, note that item 3e. is a duplicate of item 3c. One of these can be deleted. Also, for items 3d. and 3f. the notation regarding early shutdown of nuclear facilities for tornadoes is not realistic. The current state of the art of weather prediction

Q43			
Commenter	**Yes**	**No**	**Comment**
			does not permit adequate forecasting of tornadoes a day or more ahead of time which might be a cause for concern for a particular nuclear facility. 25. With respect to Table 2, contingency types P5 and P8, it would seem that events should include the same items as shown for contingency type P4. 26. In Table 2, for contingency types P1, P3, P4, P5, P8, and P9, clarification is needed as to whether distribution transformers (138-69 kV or 138-34.5 kV, for example) would be included in the events, or whether the transformers mentioned would be restricted to transmission transformers. 27. For the various stability scenarios, note that Consequential Load Loss would be a function of how System protection equipment is set up for particular scenarios. Delayed clearing time/Zone 2 clearing times could result in load dropped that would not have been dropped for events cleared in primary clearing time. 28. In Table 2, Note 1 ii., is it the intent of the drafting team to require dynamic model representation of relaying equipment? General comments: 29. We are not sure that a wholesale replacement of the existing standards TPL-001-0 through TPL-004-0 is required. We agree that additional clarification is needed for some items, and particularly for the study assumptions that go into the development of models to be used for the performance testing, but we do not agree that the proposed replacement standard provides that necessary clarification. Further, we believe that the replacement standard relies too much on the accompanying tables. More text needs to be included in the standard regarding the system performance requirements. 30. There is a lot of subjectivity involved in developing the study assumptions that need to be considered in the sensitivity models for study. How can we be sure that one or more of the sensitivity requirements in R2.1.3 stated for consideration are of the same level of importance by both auditors and those performing the studies? We are interested to see what the measures for all the requirements of the standard will be when they are developed. 31. Additional planning standard requirements for the EHV system to meet all N-2 conditions without dropping some load will require significant material changes, where feasible. We do not believe that the significant additional costs required for compliance would produce tangible benefits and a corresponding significant improvement in system reliability. What is the justification for the separate

Q43			
Commenter	**Yes**	**No**	**Comment**
			treatment for the EHV (>300 kV) facilities? One obvious effect of such requirements is to create a bias against any straight bus configuration for facilities above 300 kV. As stated in response to Question 25, there are existing facilities which cannot be converted from their present configuration. For those facilities which could be upgraded, an implementation period of several years would be needed to meet such requirements. 32. Meeting the requirements of this standard should not be a full time job. There are many more planning activities that need to be performed other than simulation testing to demonstrate compliance. The existing TPL standards require a significant manpower effort to perform the required studies and develop the planning assessment and corrective action plan. We are concerned that the replacement standard, as proposed, will create an even greater burden on the transmission owners without a commensurate benefit to the system reliability. 33. It is not within NERC's or ERO's scope of responsibility to address load loss. The focus of the standard should be on the system capabilities and not how much local load is dropped for a substation outage in a defined service area. A few reports showing the resultant bus voltages and facility loadings on a percentage basis for all single and a the more severe multiple contingency events, including operator or automatic mitigation procedures, should be adequate to demonstrate compliance.

Response: 1. The SDT believes some additional modeling requirements not presently contained in the MOD standards are necessary for Transmission planning purposes. The SDT has revised these requirements based on industry comments to eliminate redundancy with existing MOD standards with the intent that these requirements will be removed from the TPL standard when they are incorporated into the MOD standards at a later date.
2. The SDT agrees with your concerns and has revised this requirement (now Requirement R9). The terms "stressed System conditions" and "load models" have been removed.

R9. Each Distribution Provider shall provide its respective Planning Coordinator with modeling information for real and reactive load forecast data for each year of the Transmission planning horizon at Transmission nodes based on expected or historical System performance including the expected mix of industrial, commercial, and residential Loads, within ninety days of a request for such information.

3. The SDT is providing some guidance under Requirement R2.1.3 on what needs to be included in sensitivity studies while not being totally prescriptive. Requirement R2.1.3 has been modified to require documentation of why the listed sensitivities were or were not selected for specific studies. It is the entity's decision to establish and document which transfers are more significant to study System responses. The sensitivity studies do not in themselves establish the need for a plan, only the areas of the System for which the analysis is needed.

R2.1.3. For each of the studies described in Requirement R2.1.1 and Requirement R2.1.2, sensitivity case(s) that stress the System with sensitivities that reflect one or more of the following conditions shall be run and documentation ~~with~~ of the technical rationale for ~~the selected sensitivity(ies)~~ why each of the conditions was or was not selected shall be supplied:

Q43			
Commenter	**Yes**	**No**	**Comment**
			4. The SDT is providing some guidance under Requirement R2.1.3 on what needs to be included in sensitivity studies while not being totally prescriptive. Requirement R2.1.3 has been modified to require documentation of why the listed sensitivities were or were not selected for specific studies. It is the entity's decision to establish and document if there are any "planned" outages such as a multi-year Transmission right-of-way rebuilds where outage durations may vary. It is the entity's responsibility to determene the actions necessary to handle extended outages and which are more significant to study System responses. 5. The SDT felt that this wording was appropriate based on comments by FERC in their orders concerning long lead time projects. 6. R2.3 - The studies should be based on the individual TO's practices which are assumed to be in agreement with good utility practice. An annual assessment of the results of these studies is required. 7. The SDT is providing some guidance on what needs to be included in sensitivity studies while not being totally prescriptive. Requirement R2.4.3 has been modified to require documentation of why the listed sensitivities were or were not selected for specific studies. Requirement R2.4.4 has been added to specifically state that the entity may consider additional sensitivities that are appropriate for its own system. In either case the entity must document the reason for running or not running cases for the items listed. The documentation as well as the studies for the sensitivity(ies) selected will be required to demonstrate compliance. It is the entity's decision to establish and document if it needs to consider future additions and retirements. It is the entity's responsibility to determene the actions necessary to handle such items and which are more significant to study System responses. **R2.4.3**. For each of the studies described in Requirement R2.4.1 and Requirement R2.4.2, ~~S~~sensitivity case(s) that stress the System to reflect one or more of the following conditions shall be run ~~with documentation provided explaining the rationale for the selected sensitivity(ies)~~ and documentation of the technical rationale for why each of the conditions was or was not selected shall be supplied: **R2.4.4**. In addition to those sensitivities mentioned in Requirement R2.4.3, any other sensitivity, as deemed appropriate by the Transmission Planner or Planning Coordinator for their individual systems, shall be run and documentation of the technical rationale for why each was selected shall be supplied. 8. The SDT removed market changes from the requirement (see Requirement R2.6.2) **R2.6.2**. For steady state, short circuit, Generating Plant Stability, or System Stability analysis: the study shall not include any material changes, such as, generation or Transmission additions/removals, or topology changes that have occurred in the intervening period and would impact the study area. 9. The SDT added wording to Requirement R2.6.2 to clarify this concern. 10. The "interim Operating Procedure" was deleted in response to Industry requests for more clarification as being an unnecessary modification of the more general term "Operating Procedure" that is already a defined term in the NERC Glossary.

Q43			
Commenter	Yes	No	Comment
			11. Requirement R8 (old Requirement R6)which focuses on the distribution of the Planning Assessment results to affected entities was specifically added to allow some level of peer review and provide some level of confidence that the proposed plan could in fact be completed to meet the reliability objective. Requirement R2.7.1.1 is complementary to Requirement R8 (old Requirement R6). Initiation dates are only required in the near term since longer term plans tend to move in time and only have general scheduling associated with them. The SDT believes that initiation dates are required for near-term Corrective Action Plans to give an indication that the Corrective Action Plans can be implemented in time. 12. In Requirement R3.2 and Requirement R4.2, the SDT revised the event descriptions to provide clarity on simulations in response to FERC Order 693. For example, Requirement R3.2 would require modeling breaker-to-breaker outages rather than modeling bus-to-bus outages in a study. 13. Generator high and low voltage limits are part of the constraints and are considered part of Facility Ratings in FAC-008. FAC-009 provides that the information be provided by the Generator Owner. 14. R3.2.2 - While FAC-008-1 generally addresses this issue, the SDT felt that the relay loadability issue needed to be specifically addressed to ensure its impact was not inadvertently ommitted from Contingency analysis. 15. R3.3.2.1 - FERC required documentation of Consequential Load loss in Order 693, paragraph 1795, (not Non-Consequential) and duration should be based on best judgment for the common cause of the event. 16. R3.3.2.2 has been changed to clarify the concern. **R3.3.2.2** – Following single Contingency events, ~~System adjustments other than shedding of firm Load or curtailment of firm transfers are permitted to meet performance requirements provided these adjustments can be accomplished within the time period allowed by the applicable time limited ratings.~~ Transmission configuration changes and redispatch of generation are allowed provided that all Facilities shall be operating within their Facility Ratings and within their thermal and voltage limits. 17. The requirement refers to everything over and above single Contingencies. 18. Requirement R3.6 was completely re-written in Requirement R3.5. **R3.5** Manual and automatic generation run-back/tripping is allowed as a response to a single ~~and~~ or multiple Contingenc~~ies~~y ~~as long as Facility Ratings are not exceeded.~~if the following conditions are met: 19. The SDT feels that planning studies should be of sufficient scope to cover this situation. 20. R6 (first draft) - does not specify any action by the Reliability Coordinator - the Planning Coordinator coordinates distribution. This action

Q43			
Commenter	Yes	No	Comment
does not involve assessing compliance but involves peer review and coordination of analysis. 21. In the steady state time frame, voltage instability can occur typically during high power transfer and/or peak demand periods. Voltage instability can be assessed using a long-term Stability program. However, it can also be assessed using a power flow program that simulates governor action. There are a number of IEEE papers (e.g., G. Morison, B. Gao, and P. Kundur, "Voltage stability analysis using static and dynamic approaches," IEEE Transactions on Power Systems, vol. 8, no. 3, pp. 1159 – 1171, August 1993) that can provide suggestions on the methodology. Cascading outages and uncontrolled islanding can also occur, for example, when the Transmission Facilities Load beyond the corresponding relay trip settings. This could cause uncontrolled tripping of Transmission Facilities beyond those required to clear the fault. Even though these events are rare, the Transmission Planner should be aware of their possibility when performing studies. 22. The SDT has replaced the term "firm transfer" with "firm transmission service" in Tables 1 and 2. 23. Loss of a Transmission circuit above 300 kV followed by loss of a Transmission circuit below 300 kV would be treated the same as loss of Facilities below 300 kV. 24. The SDT has revised Tables 1 and 2. Items 3d and 3f are meant to capture shutting down of a nuclear power plant as a result, not in anticipation, of events such as tornadoes. 25. Table 2 has been revised so that the elements are now the same. 26. See footnote 2 and 3 in Table 2 for clarification. 27. The SDT agrees. The Load lost as a result of the event specified can be different for different Contingency scenarios (i.e., normal versus delayed clearing). 28. This should already be in your models. 29. TPL-001-1 is based on the existing TPL standards and is not a wholesale replacement but an aggregate of TPL-001 through -004, but does contain new elements and clarifying language. FERC Order 693 asked the SDT to consider combining the 4 standards. Please provide any comments on specific elements needing additional clarification in future responses in the standard development process. 30. Measures will be added later in the process. 31. The SDT felt that it was appropriate to raise the bar on situations that would impact the reliability and performance of the System and considered above 300 kV as the backbone of the System and thus needs to be extremely reliable and was an appropriate place for raising of the bar. Implementation Plan will be supplied with a later draft.			

Q43			
Commenter	**Yes**	**No**	**Comment**
32. Resources and expenditures versus adequate level of reliability are being given due consideration throughout the process and will ultimately be determined by the industry through the ballot process. 33. FERC has jurisdiction over firm Transmission service. FERC allows the use of "equally or more efficient or effective approach" and firm Load is being used as a proxy for firm Transmission service.			
Brazos Electric	☑		1. In R1.1.1. it appears the data that is being requested requires some amount of survey to determine the mix. This data would require a great deal of manpower and provide little more benefit than simply varying the data for comparison. However it does say in R1 upon request so does this allow the Planning Coordinator the descretion as needed on this type data? 2. R1.2, What is 'supporting rationale' and 'validated' mean? What are "stressed" System conditions? It appears (from 2.1.3) that stressed means various sensitivities. 3. R1.4, define 'long-term', generation outages are considered confidential information in ERCOT and thus are not available to all TOs, see next comment 4. R1.5 somewhere (perhaps in R1) the language should include "its respective portions of the data" or something to that effect meaning that a TO should not be held accountable for a GOs data. R1 appears to read that each entity shall provide the requested data. This seems to be intuitive BUT there are GOs that feel the data responsibility for the entire system belongs to the TOs and this leads to delays in getting accurate information if its uncertain as to who provides what data. 5. In R2 the language indicates the TP and PC shall each perform studies. There should be some clarity here. Also, it indicates that each shall assess "its portion of the BES". This needs to be clarified as well, obviously contingencies on other portions of the BES may cause issues within different portions. again, what constitutes documentation? 6. R2.1 it appears from the wording (shall "address" all five years) that the planning assessment must be done on all five years but 2.1.1 appears to state only 2 years are required. Please clarify. 7. R2.1.3 this seems to indicate that the studies mentioned in 2.1.1 and 2.1.2 should be "stressed" by the conditions listed below or just by one of them. We assume this means using only one is acceptable with proper documentation. Is that correct? Further, the sensitivities are ambiguous. How does one justify higher load levels or even know what they are without input from other TOs or the PC? How does one even guess at the other variables? what is meant by 'long lead time facility'? IF this only means for a TOs "portion of the BES" then it makes more sense but are these even valuable considering the wide range of data. The only variable that can be adjusted with any accuracy is the generation and ERCOT maintains the confidential data in this area. We assume R2.1 to mean you

Q43			
Commenter	**Yes**	**No**	**Comment**
			need to assess two peak summer cases, one off peak and then look at varying generation patterns on those cases. This appears to be the latitude given. Is this correct? 8. R2.2.1 are generation additions considered a "project"? If this means that a case must be created and assessed by all TOs for a known generation addition that is 12 years out, then this will lead to unnecessary studies. We assume this to mean, in the case of a generation addition, that the connecting TO should make an assessment once the PC considers this new addition to be valid for study. Is that correct? 9. R2.3 what is meant by "past studies" and how long must these be kept? Or is this at the TOs discretion? 10. R2.3.1 how does one know if the changes will result in increased fault currents until studies are done? This implies that studies SHALL be done for just about ANY change to the BES. There must be discretion allowed here. The word "shall" does not afford any discretion. 11. R2.4 the same comments for R2.1. apply here concerning years of study and defining 'stressed'. Additionally this type study seems to provide better results when done for the BES which would require input from all TOs thus a study based only on "its portion of the BES" would not have as much value unless you are referring to generation additions and localized studies. 12. R2.5.1 does not allow any discretion, for any and all all modifications, additions, etc…a study shall be performed. This is not needed in all cases. 13. R2.5.2 Wording such as "material changes" and "vicinity" are ambiguous terms without discretion being allowed the planner. Voltage level Line changes, amount of generation, something needs to be added to clarify. 14. R2.6.1 again, what are material changes? Topology changes and generation changes happen monthly, weekly. Are studies to be invalidated for each 'material change'? 15. R2.6.3 who determines if the study is no longer valid? The TO, PC or the agreement of both? 16. R2.7.1 what is a 'project initiation date' and why is this needed? 17. R2.7.2 Projects are added to cases after an analysis has been performed to see if the project is an acceptable alternative. In that analysis the project is 'retested' to see if it is effective. This is assume to be acceptable for the definition of 'retesting'.

Q43			
Commenter	**Yes**	**No**	**Comment**
			18. R2.7.3 unsure what 'committed' means regarding projects nor understand the need to have this documented anywhere. 19. R3.2.2 what is 'relay loadability' and where would you note how it is supposed to be treated? 20. R3.3.1 how is this different than R3.1? 21. R3.3.2.1 why is there a need to know how much non-consequential load loss exists for each contingency and how can one predict the length of time this will last? 22. R3.3.2.2 Do we need to document the 'system adjustment' for each contingency? 23. R3.3.3 what is a severe impact and what is one that is less severe? 24. R3.4 what is the difference to 3.3.3? The definition given in the NERC Glossary from May of 2007 of Cascading Outage is still vague, it appears to allow the TP or PC the discretion to determine it based on studies. Is this the intent? 25. R3.5 what is the time limit for run-back? 26. R4.4 how can TPs identify what generation upgrades are needed (protection and control modifications)? 27. R4.5.2 whats the difference between this and 4.5.1? 28. R4.6 the generation levels could be too low for the studies to be useful, perhaps voltage levels should also be added or allow for TP/PC discretion. 29. R4.6.3 seems to allow some TP discretion in deciding which planning events are more severe but how does one know that without studies? 30. R5 this seems to have no direction for either party. 31. R6 is ambiguous Table 1 32. terms such as voltage instability, cascading outage and uncontrolled islanding should be defined

Q43			
Commenter	**Yes**	**No**	**Comment**
			or allowed to be defined by the PC. If consequential load loss is allowed for all cases then why even mention it? Isn't this like saying if the line trips, it will be out of service? why would one want to document this amount, perhaps for some sort of ranking? Planning events 33. what is a 'system adjustment'? if this means to manually redispatch the BES for each condition then these studies shown under P4 will take so long to complete that they will be invalid by the time they are done. In ERCOT, the economics of redispatch are not known to the TP thus this is done by the PC. an automatic computer simulated redispatch will possibly not have the same results. Define 'generator' for is this a single unit, the whole train, the largest unit or other? 34. For P6 events and above, if consequential load loss and non consequential are allowed, they why study these events? Do TPs plan and build transmission to eliminate the overloads for these events or just study them so that the results are known? Studying every possible event or combination does not make the studies better or provide a higher insight to areas of concern. A number of the combinations have a low probability of occuring and performing the studies and analizing the results will be a manpower burden and provide no better clarity on needs of the system. Table 2 35. The number of events to consider seems excessive although this is not our area of expertise. If each of these is to be run for each 'material change' in the BES then this list is excessive without more leeway or guidance provided.

Response: 1. The SDT believes that models must reflect the expected Load mix of industrial, commercial and residential Loads to appropriately reflect the behavior of the System.

2. The SDT agrees with your concerns and has revised this requirement (now Requirement R9). The terms "stressed System conditions", "validated", and "supporting rationale" have been removed.

3. The SDT has revised this requirement based on industry comments to clarify intent and to be responsive to FERC Order 693, paragraph 1725. Further, it is not the intent of the standard to require consideration of confidential information that is not available.

4. The standard has been revised to identify specific entities responsible for providing the required information.
5. The extent of coordination between the TP and PC can vary depending on many factors such as whether you are part of an ISO/RTO, vertically integrated Investor Owned Utility, or Transmission only company. The Functional Model envisions that planning entities will not only need to use overlapping models to simulate how the System will respond to Contingencies, but they will also be layered to provide for more locally focused studies as well as more global studies. Planning Coordinators need input from the planners doing the local studies to complete their overall studies. Planners need to coordinate their activities and sort out which entity will be detailing its studies to what extent. Documentation of entity studies needs to demonstrate that the System response to Contingencies and any Corrective Action Plan has been screened so as to meet the performance requirements stated in the standard, such as not exceeding applicable voltages and ratings.

Q43			
Commenter	**Yes**	**No**	**Comment**
6. Requirement R2 states that the "Planning Assessment shall use current or past studies …." The Planning Assessment is to cover the five year period but the entity is only required to run a limited number of studies. It is the responsibility of the entity to determine if past studies can demonstrate that the performance requirements are met. If past studies in conjunction with the required studies do not demonstrate that the system can meet the performance needed, the entity will need to run additional current studies that demonstrate it can meet the requirements. Requirement R2.1.1 is in reference to Requirement R2.1 which states that the Planning Assessment "be supported at a minimum by the following annual current studies, supplemented with qualified past studies as indicated in Requirement R2.6:" To further clarify, the SDT has deleted the "all five years" language. 7. The SDT is providing some guidance on what needs to be included in sensitivity studies while not being totally prescriptive. Requirement R2.1.3 has been modified to require documentation of why the listed sensitivities were or were not selected for specific studies. Requirement R2.1.4 has been added to specifically state that the entity may consider additional sensitivities that are appropriate for its own System. In either case the entity must document the reason for running or not running cases for the items listed. The documentation as well as the studies for the sensitivity(ies) selected will be required to demonstrate compliance. It is the entity's decision to establish and document which senstiviyies are more significant to study System responses. The sensitivity studies do not in themselves establish the need for a plan, only the areas of the system for which the analysis is needed. **R2.1.3.** For each of the studies described in Requirement R2.1.1 and Requirement R2.1.2, sensitivity case(s) that stress the System with sensitivities that reflect one or more of the following conditions shall be run and documentation ~~with~~ of the technical rationale for ~~the selected sensitivity(ies)~~ why each of the conditions was or was not selected shall be supplied: **R2.1.4**. In addition to those sensitivities mentioned in Requirement R2.1.3, any other sensitivities, as deemed appropriate by the Transmission Planner or Planning Coordinator for their individual systems, shall be run and documentation of the technical rationale for why each was selected shall be supplied. 8. Known generation additions are considered a project and must be studied if the lead times are longer than 10 years. 9. R2.3 - See Requirement R.2.6.2 where this is defined. 10. The SDT has revised the wording of R2.3 to try to clarify that short circuit analysis must be conducted annually but that past studies as defined in Requirement R2.6.2 may be used as appropriate. R2.3 The short circuit analysis portion of the Planning Assessment shall be conducted annually and supported by current or past s 11. Requirement R2.4 has been re-worded to clarify this situation. **R2.4** The ~~System Stability portion of the~~ Near-Term Transmission Planning Horizon portion of the Stability analysis ~~Planning Assessment~~ shall be assessed annually ~~address all five years of the assessment period,~~ and be supported by current or past studies. The following studies are required ~~annually~~:			

Q43			
Commenter	Yes	No	Comment
			12. See Requirement R5.6.2 which provides the bounds you are looking for. 13. and 14. This wording is intentional to allow the planner some discretion. 15. The SDT has revised Requirement R2.6.3 as the new requirement R2.6.2 to clarify this concern. **R2.6.2** For steady state, short circuit ~~analysis~~, Generating Plant Stability, or System Stability analysis: ~~if the study is less than five years old and no material changes have occurred to the System in the intervening period.~~ the study shall not include any material changes, such as, generation or Transmission additions/removals, or topology changes that have occurred in the intervening period and would impact the study area. 16. Requirement R8 (old requirement R6) which focuses on the distribution of the Planning Assessment results among affected entities was specifically added to allow some level of peer review and provide some level of confidence that the proposed plan could in fact be completed to meet the reliability objective. Requirement R2.7.1.1 is complementary to Requirement R8 (old requirement R6). Initiation dates are only required in the near term since longer term plans tend to move in time and only have general scheduling associated with them. Typically the date would indicate when significant resources will begin to be employed This covers any project proposed for the near term. The SDT believes that initiation dates are required for near-term Corrective Action Plans to give an indication that the Corrective Action Plans can be implemented in time. 17. The specific requirement to perform re-test has been removed. The purpose of the Corrective Action Plan is to list the actions that are needed to meet performance requirements. The studies, current and/or past as appropriate as well as the extent of the size of the study area, are performed to support compliance and demonstrate that the requirements are met. 18. Based on several comments and consideration by the SDT, the SDT has modified Requirement R2.7.1 and deleted Requirements R2.7.2 through R2.7.4. The standard now refers to "actions" needed to achieve required System performance without trying to distinguish between committed and proposed projects. It also lists examples of what is intended by the word "actions". **R2.7.1**. ~~Identify~~ List System deficiencies and the associated actions needed to achieve required System performance. ~~including Transmission and generation improvements, DSM, new technologies, or Operating Procedures including the duration of interim Operating Procedures.~~ Such actions may include installation, modification, retirement, or removal of Transmission and generation Facilities and any associated equipment such as protective or Special Protection Schemes, rate applications, DSM, or other initiatives, new technologies, or Operating Procedures including how long the Operating Procedures will be needed as part of the Corrective Action Plan. 19. R3.2.2 - The SDT used the term "relay loadability" to describe the maximum Transmission line loading on a specific circuit that is permitted before line relays might see the Load current as a fault and trip the circuit. In those cases where the relay loadability limit is lower than the circuits thermal or Stability rating, the relay loadability limit should be applied as the benchmark for meeting the performance requirements.

Q43			
Commenter	Yes	No	Comment
			20. Requirement R3.1 requires studies to be performed. Requirement R3.3.1 requires that the results meet the requirements of the standard. 21. R3.3.2.1 - FERC required documentation of Consequential Load loss in Order 693, paragraph 1795, (not Non-Consequential) and duration should be based on best judgment for the common cause of the event. 22. Yes. 23. The intent is to allow the Transmission Planner flexibility for deciding which multiple Contingency Planning Events are run during its annual studies. The standard leaves the classification of "severity" to the engineering judgement of the Transmission Planner based on experience of the System, past study results, input from operations staff, etc. The Transmission Planner will need to explain why others would be known to be less severe. For example a N-1-1 involving two non-related and distant Facilities could be excluded by the TP if desired. 24. Requirement R3.4 covers Extreme Events, Requirement R3.3.3 covers Planning Events. The SDT did not propose a new definition for cascading outage or cascading. 25. The use of the defined term 'Facility Ratings' dictates the time limit. 26. The outcome of the assessment should identify the actions required. 27. In new Requirement R5.5.2, clarification has been provided to differentiate the events. **R5.5.2**. Performance shall meet the requirements for Planning Events in Table 2 – Stability Performance. 28. Those values are based on Large Generator Interconnection Procedures as approved by FERC. 29. It does allow some discretion but good engineering judgement is assumed and you must document your rationale. 30. This requirement assumes that the two parties will react in a professional manner to resolve any differences. 31. The new Requirement R8 clarifies this. **R8**. Each Planning Coordinator shall coordinate the distribution of Planning Assessment results among ~~affected entities~~ neighboring systems, coordinating analysis of these results through an open and transparent peer review process such as described in FERC Order 890. 32. In general, new definitions are proposed along with the proposed standard, and will be included in the Glossary of Terms upon approval of

Q43			
Commenter	**Yes**	**No**	**Comment**
the standard. Definitions for Cascading and Stability are included in the NERC Glossary. Further uncontrolled islanding, while not defined, is a common term that is well understood. The SDT does not propose to improve the definitions for Cascading and Stability or propose a new definition for cascading outages and uncontrolled islanding. There are a number of IEEE papers (e.g., P. Kundur, J. Paserba, V. Ajjarapu, G. Anderson, A. Bose, C. Canizares, N. Hatziargyriou, D. Hill, A. Stankovic, C. Taylor, T. V. Custem, V. Vittal, "Definition and Classification of Power System Stability", IEEE Transactions on Power Systems, vol. 19, no. 2, pp. 1387 – 1401, May 2004) that provide descriptions for voltage instability. The requirement concerning Consequential Load is to address FERC Order 693, which directs that the ERO, among other things, to clarify footnote (b) in regard to Load loss following a single Contingency, specifying the amount and duration of Consequential Load Loss and System adjustments that are permitted after the first Contingency to return the System to a normal operating state. 33. The term "System adjustment" is used in the existing TPL Standards, and is intended to have the same meaning in the proposed TPL standard, and includes both manual and automatic actions. 34. For P6 and more severe Events, loss of Consequential and Non-Consequential Load is allowed. The events will still need to be studied to ensure that System reliability and security is maintained and that any outage would not result in unacceptable System performance, such as, cascading, instability and uncontrolled separation. 35. The SDT understands the potential work load increases. Requirement R3.3.3 requires evaluation of only those Planning Events (involving multiple Contingencies) that are expected to produce more severe System impacts.			
City Water Power and Light	☑		The Standards are a great start in getting a set of requirements in place that will provide a planning methodology that will be transparent to the Functional entities in the interconnections and will produce results that will permit reliable planning and operations of the BES. The SDY should remove all Requirements that are subjective and can't be measured. The assumptions the Transmission Planners and Planning Coordinators use to conduct the studies should be posted.
Response: The SDT has endeavored to draft Requirements that are objective and measurable. Since this comment did not include specific Requirements that the commenter proposes should be deleted, the comment relating to removal of subjective, unmeasurable Requirements is unactionable. The SDT believes the comment relating to posting assumptions implies that the standard should not have study assumption Requirements but should only require that assumptions be posted. The SDT is unclear where assumptions would be "posted" but in any event if study assumption Requirements were removed, then the SDT believes there would be little or no value in having study assumptions "posted".			
Dominion	☑		GENERAL COMMENTS: (1) Making the standards more stringent by "raising the bar" is not going to result in a dramatic improvement in system reliability. Even the best designed systems are susceptible to human error. Dominion has at least 5 years of transmission outage data clearly illustrating that any resulting loss of load (both consequential and non-consequential) has had an average duration of only 4-7 customer-minutes per year. Going forward, the emphasis and focus should be on planning and

Q43			
Commenter	**Yes**	**No**	**Comment**
			operating the bulk electric system so as to confine any transmission outages to the immediate, local area, and not allow the cascading of outages beyond control area boundaries. (2) Although we are unable to put specific numbers on the impact of "raising the bar "with respect to non-consequential load loss, it will be enormous. Increased staffing levels may be required, and we would likely incur significant increased transmission maintenance and construction costs. It is likely that State commissions everywhere (not just Virginia) would agree that rate payers should not incur the significant cost increases required to meet more stringent planning criteria (i.e. - "raising the bar") when the corresponding improvements in transmission system reliability cannot be quantified. SPECIFIC COMMENTS PERTAINING TO REFERENCED SECTIONS OF THE STANDARD: (1) The last block in Category C of Table 1 of the existing standards deals with protection system failure. We interpreted this as, among other things, having a fault beyond the first-zone coverage of the primary protection scheme with the carrier equipment failure resulting in a second-zone trip of the faulted line (even though only one element will be lost). The second-zone trip time is generally in the range of 30-35 cycles. This may be critical from the stability aspect. The proposed Table 2 of TPL-001-1 is silent about this. Is there a reason why this requirement was left out? (2) The requirement R4.6.2 may cause some confusion due to the last part "….whichever is greater". It is suggested that the entire wording for this requirement be replaced as listed below to avoid any misunderstanding. "Shall be performed for changes in the real power output of a generating unit if either of the following applies: (a) the increase is more than 10 % of the existing capacity (regardless of the amount of MW increase) (b) the increase is more than 20 MW (regardless of the % increase). Something to think about regarding a cut-off limit of 10% or 20 MW: We had a unit with 800 MW existing capacity and the request was to increase it by 15 MW making the total new capacity of 815 MW. The requested increase was less than 10% of the existing capacity and also less than 20 MW, meaning the plant stability study is not required. However, we found that the increase of 15 MW made the plant unstable and we had to come up with a solution (and we did). This example warrants to include something like…. "However, in cases where a stability margin is known (or estimated) to be slim, stability study should be performed regardless of the % or MW

Q43			
Commenter	**Yes**	**No**	**Comment**
			amount of increase (this leads to defining "Stability Margin"). (3) Table I, bullet 3 states that "Voltage Instability, cascading outages and uncontrolled islanding shall not occur." There is no definition for "voltage instability" anywhere in the proposed standard. (4) R.3.3.2.1. states "Consequential Load loss (expected maximum demand and expected duration) following a single Contingency shall be identified in the Planning Assessment." This requirement creates significant unnecessary work without adding any value to system reliability. (5) Extreme Event Description 3.d. states: "Shutdown of a nuclear power plant(s) and other facilities a day or more prior to a hurricane, tornado or wildfire, or for other common causes." It would appear that day ahead planning for a tornado is not possible, or applicable, for inclusion in this listing.
Response: Specific 1. The SDT agrees with your concern and is working on a solution for a future draft. 2. The wording was lifted from FERC and has not been changed. 3. There are a number of IEEE papers (e.g., P. Kundur, J. Paserba, V. Ajjarapu, G. Anderson, A. Bose, C. Canizares, N. Hatziargyriou, D. Hill, A. Stankovic, C. Taylor, T. V. Custem, V. Vittal, "Definition and Classification of Power System Stability", IEEE Transactions on Power Systems, vol. 19, no. 2, pp. 1387 – 1401, May 2004) that provide descriptions of voltage instability. 4. FERC required documentation of Consequential Load loss in Order 693, paragraph 1795, (not Non-consequential) and duration should be based on best judgment for the common cause of the event. 5. Extreme Events notes have been changed to address this concern.			
E ON US	☑		1. R1.4 "including protective relays with consideration given to spare equipment strategy" I do not understand the intent of this phrase or what it adds to the requirement. 2. R2.6.1 "and market structure changes" What is this, does it require a definition? 3. R2.7.1.1 What is the project initiation date; the date approval is sought, received, materials are ordered, construction begins? Many projects are upgrades or replacements that this will be meaningless. Don't you really only want multiyear projects? 4. R2.7.2 The initial study process will incorporate testing. This will require the creation of additional cases and additonal testing prior to the Planning Assessment submittal. Most projects should be identified during the Long Range time frame. Inclusion of the project in the next years base cases and subsequent testing should be adequate. 5. R2.7.3 Define a "Committed Project". MISO has spent years on this. 6. R2.7.4 Changes in timing of all projects should be documented in the Planning Assessment. Why would you document Committed Projects that are removed but not any delays or accelerations?

Q43			
Commenter	**Yes**	**No**	**Comment**
			7. R3 Sensitivity studies (if retained) should have less stringent performance requirements than the other cases required by R2.1. 8. R3.3.2.1 Unless this is limited to above 300 kV, many hours will be spent for naught. The lower voltage systems often have tapped loads that will trip with the line. The time required to restore will vary on the fault location, and time for switching, sometimes remote and sometimes manual. I do not see the need for or the benefit of this requirement. Please explain. 9. P3 Event is poorly worded, see response to Q25. 10. P6.1 above 300 kV, below 300 kV or all? The tables need to be reviewed to make sure that the voltage applicability is clearly stated. 11. P9.6 Why is this a requirement? It should be much less severe than any of the prior requirements. 12. Extreme Event 9 (3ph fault with loss of all generating units at a station) is in conflict with Q33 which says it was not included). Am I missing something? 13. Other, it appears that we are not required to study the outage of a transmission line or transformer followed by the outage of a generator. Was this overlooked, or did I miss it? Would system adjustment be allowed?

Response: 1. The SDT has revised this requirement based on industry comments to clarify intent and to be responsive to FERC Order 693, paragraph 1725.
2. R2.6.1 - The change must be "material" as stated in the standard meaning it must have an impact on the study results or may only make some results invalid and not relevant.
3. Requirement R8 (old requirement R6) which focuses on the distribution of the Planning Assessment results among affected entities was specifically added to allow some level of peer review and provide some level of confidence that the proposed plan could in fact be completed to meet the reliability objective. Requirement R2.7.1.1 is complementary to Requirement R8 (old requirement R6). Initiation dates are only required in the near term since longer term plans tend to move in time and only have general scheduling associated with them. Typically the date would indicate when significant resources will begin to be employed. This covers any project proposed for the near term. The SDT believes that initiation dates are required for near-term Corrective Action Plans to give an indication that the Corrective Action Plans can be implemented in time
4. Based on several comments and consideration by the SDT, the SDT has modified Requirement R2.7.1 and deleted Requirements R2.7.2 through R2.7.4. The standard now refers to "actions" needed to achieve required System performance without trying to distinguish between committed and proposed projects. It also lists examples of what is intended by the word "actions".

Q43			
Commenter	**Yes**	**No**	**Comment**
R2.7.1. ~~Identify~~ List System deficiencies and the associated actions needed to achieve required System performance. ~~including Transmission and generation improvements, DSM, new technologies, or Operating Procedures including the duration of interim Operating Procedures.~~ Such actions may include installation, modification, retirement, or removal of Transmission and generation Facilities and any associated equipment such as protective or Special Protection Schemes, rate applications, DSM, or other initiatives, new technologies, or Operating Procedures including how long the Operating Procedures will be needed as part of the Corrective Action Plan. 5. Based on several comments and consideration by the SDT, the SDT has modified Requirement R2.7.1 and deleted Requirements R2.7.2 through R2.7.4. The standard now refers to "actions" needed to achieve required System performance without trying to distinguish between committed and proposed projects. It also lists examples of what is intended by the word "actions". 6. Based on several comments and consideration by the SDT, the SDT has modified Requirement R2.7.1 and deleted Requirements R2.7.2 through R2.7.4. The standard now refers to "actions" needed to achieve required System performance without trying to distinguish between committed and proposed projects. It also lists examples of what is intended by the word "actions". 7. The SDT is providing some guidance under Requirement R2.1.3 on what needs to be included in sensitivity studies while not being totally prescriptive. Requirement R2.1.3 has been modified to require documentation of why the listed sensitivities were or were not selected for specific studies. It is the entity's decision to establish and document which transfers are more significant to study system responses. The sensitivity studies do not in themselves establish the need for a plan, only the areas of the system for which the analysis is needed. **R2.1.3**. For each of the studies described in Requirement R2.1.1 and Requirement R2.1.2, sensitivity case(s) that stress the System with sensitivities that reflect one or more of the following conditions shall be run and documentation ~~with~~ of the technical rationale for ~~the selected sensitivity(ies)~~ why each of the conditions was or was not selected shall be supplied: 8. R3.3.2.1 - FERC required documentation of Consequential Load loss in Order 693, paragraph 1795, (not Non-Consequential) and duration should be based on best judgment for the common cause of the event. 9. Please see response to comments on Q25. 10. The SDT has revised Tables 1 and 2 to provide more clarity. 11. P9.6 was to address FERC directive in Order 693 to consider spare equipment strategy. The SDT has revised Tables 1 and 2 to remove P9.6 and included this consideration in R11 of the second draft of the standard to address this issue. 12. In Q33 the SDT posted a question to the industry to request guidance on whether simultaneous tripping of all generating units in a power plant should be included in the Extreme Events in Table 2 (on Stability Studies). 13. Tables 1 and 2 have been revised to address your comments. P3 is meant to cover the combination of overlapping outages regardless of the sequence in which the outages occur.			
ERCOT ISO	☑		1. R1.1.1 - Are percentage of load that is industrial, commercial, and residential needed? 2. R1.2 - The wording is confusing. If the power factor is based on historical measured values, does it have to be during contingency (stressed)? 3. R1.5 - "Planned Facilities defined in accordance with the documented criteria of the Planning Coordinator" - what is meant by this?

Q43			
Commenter	**Yes**	**No**	**Comment**
			4. R2.1.1, R2.1.2, R2.1.3.1 - are all studies to be run using all the contingencies defined in Table 1 - Steady State Performance? 5. R2.6.1, R2.6.2, R2.6.3 - past studies will never be able to be used if the addition of a transmission line makes them invalid! 6. R3.2.1 - What is meant by "minimum steady state voltage limitations of all generators"? 7. R3.2.2 - Relay "loadability"?? What is meant by this? Sounds unreasonable for steady state studies as facility rating should reflect limitations of relay equipments such as CT"s. 8. General comment: If this proposed standard is approved, since it contains requirements that are more restrictive than current standards, there will need to be a transition period to allow transmission to be built to allow systems to meet the new requirements.

Response: 1. The SDT believes that models must reflect the expected Load mix of industrial, commercial and residential Loads to correctly reflect the behavior of the System.
2. The SDT has revised this requirement based on industry comments to clarify intent.
3. The referenced verbiage has been deleted from the revised standard
4. Regarding Requirements R2.1.1 and R2.1.2, Requirement R2 states that the "Planning Assessment shall use current or past studies …." The Planning Assessment is to cover the five year period but the entity is only required to run a limited number of studies. It is the responsibility of the entity to determine if past studies can demonstrate that the performance requirements are met. If past studies in conjunction with the required studies do not demonstrate that the System can meet the performance needed, the entity will need to run additional current studies that demonstrate it can meet the requirements.
Regarding Requirement R2.1.3.1, the SDT is providing some guidance under Requirement R2.1.3 on what needs to be included in sensitivity studies while not being totally prescriptive. Requirement R2.1.3 has been modified to require documentation of why the listed sensitivities were or were not selected for specific studies. It is the entity's decision to establish and document which transfers are more significant to study System responses. The sensitivity studies do not in themselves establish the need for a plan, only the areas of the system the analysis is needed.

R2.1.3. For each of the studies described in Requirement R2.1.1 and Requirement R2.1.2, sensitivity case(s) that stress the System with sensitivities that reflect one or more of the following conditions shall be run and documentation ~~with~~ of the technical rationale for ~~the selected sensitivity(ies)~~ why each of the conditions was or was not selected shall be supplied:

5. R2.6.1, R2.6.2, R2.6.3 - The change must be "material" as stated in the standard meaning it must have an impact on the study results or may only make some results invalid and not relevant.
6. R3.2.1 - Generator high and low voltage limits are part of the constraints and are considered part of Facility Ratings in FAC-008. FAC-009 provides that the information be provided by the Generator Owner.

Q43			
Commenter	**Yes**	**No**	**Comment**
7. R3.2.2 - The SDT used the term "relay loadability" to describe the maximum Transmission line loading on a specific circuit that is permitted before line relays might see the Load current as a fault and trip the circuit. In those cases where the relay loadability limit is lower than the circuit's thermal or stability rating, the relay loadability limit should be applied as the benchmark for meeting the performance requirements. The SDT believes that equipment ratings, such as CT ratings, should also be reflected, but not necessarily as part of the "relay loadability" limit. 8. The SDT agrees and that will be addressed in the future			
AECI	☑		1. Based on the p1 to P9 events one would have to model a breaker to breaker instead of bus to bus. This would be a large undertaking and it seems that it would be more conservative to have a bus to bus model. 2. Question on P4 - does this apply to all generators on a system or is there a MW limit to the size of the generator. 3. P5 Does this mean running N-2 for the 300 KV for all seven cases that would be required. This could take a large amount of computer run time. 4. We are stating that this change to the standard is not warranted. However, if all these changes are implemented what used to take approximately 1 month to assess will now take approximately 4 months and we are not that big of a system. I assume that the time and manpower to perform all the contingencies has been considered.
Response: 1. The SDT revised the event descriptions to provide clarity on simulations in response to FERC Order 693. Depending on the configuration, modeling bus-to-bus outages in a study is not necessarily more conservative than modeling breaker-to-breaker outages. The SDT understands the potential increases in work load. The draft standard allows the use of past studies to meet the current year assessment and study requirements. 2. The intent is that the standard would apply to all Facilities (including generators) that are represented in the transmission planning simulation. 3. Requirement R3.3.3 requires evaluation of only those Planning Events (involving multiple Contingencies) that are expected to produce more severe System impacts. 4. The SDT understands the potential increases in work load. The draft standard allows the use of past studies to meet the current year assessment and study requirements.			
Allegheny Power	☑		General Comments: 1). We believe the 300 kV cutoff should not be used. It should be based on the definition of a Backbone Facility. The 300 kV and above standards should only apply to backbone facilities that are used to provide overall energy transfer and ties to other systems and not facilities that provide load serving purposes. Backbone facilites should be specifically defined and accepted as Backbone facilities through RTO and RE review and acceptance.

Q43			
Commenter	**Yes**	**No**	**Comment**
			2). Planning Scenarios should be forced to include a market based scenario under the Planning Authority obligation which should include long range market projections for generation dispatch, significant energy price changes due to environmental issues or fuels, and market impact of large transmission reinforcements. 3). It should be noted in the process that additional planning resource additions (maybe as much as 30%) will be required to met these new study requirements since they are much more expansive than the existing requirements. 4). These standards could require substantial (millions) upgrades to the system to meet the proposed changes. These are primarily due to the 300 kV and above standard revisions and the non-consequential load drop criteria adjustments.
Response: 1. The initial draft of the proposed Transmission planning standard held the planning of 300 kV and higher Transmission Systems to a more stringent requirement than the remaining BES. Although not unanimous, the majority of the SDT believed that the 300 kV and higher Systems generally represent an extra-high-voltage (EHV) range that is considered the backbone of many Systems in the various Interconnections and that the more stringent requirements were appropriate when considering Contingencies of two EHV Facilities due to one Event. Systems operated at these voltage levels generally do not directly serve end-use Load customers but rather act as the medium for moving large amounts of power from production to various Load centers the energy is delivered by the other Transmission or sub-Transmission Systems to end use customers. It is the desire of NERC and various stakeholders that the backbone of the electric power grid be robust and held to a higher degree of reliability. **2.** Marketing and economics are beyond the scope of the SDT. This is a reliability based standard. 3. Resources and expenditures versus adequate level of reliability are being given due consideration throughout the process and will ultimately be determined by the industry through the ballot process. 4. Resources and expenditures versus adequate level of reliability are being given due consideration throughout the process and will ultimately be determined by the industry through the ballot process.			
AEP	☑		(1) Consider clarifying system performance requirements that would be applicable during (a) the first two minutes after the system disturbance when slow-acting automatic system adjustments (such as the operation of motor-operated-air-break switches that are relayed to sectionalize the faulted segment of a multi-terminal circuit; the changing of taps on tap-changing-under-load transformers; the switching of capacitor banks; etc.) would not allowed to be considered, (b) the next three minutes (two to five minutes after the system disturbance) when these slow-acting automatic system adjustments would be allowed to be considered, (c) the next twenty-five minutes (five to thirty minutes after the system disturbance) when manual system adjustments would be allowed to be considered, and (d) the time period beyond thirty minutes after the system disturbance when no system adjustments of any kind would be allowed to be considered. (2) Consider clarifying which functional entity is expected to provide what information specified in this standard, especially in requirement 1.

Q43			
Commenter	**Yes**	**No**	**Comment**
			(3) Consider clarifying the need for functional entities to provide competitive sensitive information such as planned outages. (4)The system stability study documentation requirements R2.4 and R4.5 do not specify a level on the scope of studies or indicate the extent of coverage across a system required for acceptability. A reasonable scope of such studies might include studies of a system nature in association with dynamic devices, or voltage collapse or cascading scenarios, but what else would be required? Or, how much more stability study documentation beyond what is necessary to comply with TPL-001 through 004 would be required? Specific comments regarding R2.4 are as follows: what does "address" all five years mean? How much of the system do you need to study (for example, do you need to apply faults at every bus)? Again, you wouldn't know how much studying needs to be done before this requirement is satisfied. In R2.4.1 and R2.4.2, depending upon the study at hand, some other load condition such as shoulder peak may be more appropriate. Why should you be required to do peak and off-peak cases in such an instance? In R2.4.3 you are forced into doing at least one of the sensitivity studies listed (i.e., "to reflect one or more of the following conditions..."). Is this intentional? Depending upon the study at hand, none of these may be worthwhile doing, and there may be some other parameter that would be better looked at for sensitivity purposes. Existing TPL-001 through 004, Table 1, Category C3 requires any combination of generator, transmission line, transformer, or HVDC pole block in succession. The new standard excludes several of these combinations from being required in P4, P5, P8 and P9. Is this an intentional exclusion? If so, why? The standard should state explicitly that existing generation does not need to be studied unless R2.5.1 or R2.5.2 apply.
Response: 1. NERC Standards are to specify the requirements, which must be met and not "how" they are met. The System adjustments that can take place during various time periods are different in different systems, and should be based on agreements and coordinated among the entities performing the studies. 2. The SDT does not believe it is necessary to be so prescriptive but only requires that accurate data be provided in order to build accurate models. 3. Commercially sensitive and confidential information is covered by existing rules and regulations and can't be altered by the SDT. 4. Address means that you must cover all 5 years in the assessment. Good engineering judgement must be applied. The requirements are minimal and one can always do additional studies. Yes, this is intentional but good engineering judgement may imply that you need to do more than one sensitivity. The SDT has interpreted C3 as described in the tables. The SDT feels that the conditions are properly identified.			
APPA	☑		The Standards are a great start in getting a set of requirements in place that will provide a planning methodology that will be transparent to the Functional entities in the interconnections and will produce results that will permit reliable planning and operations of the BES. 1. Requirement 5 is a start at attempting to share the results of the planning studies with the correct entities. However, because this is such an important part of reliable planning, this requirement

Q43			
Commenter	**Yes**	**No**	**Comment**
			should be rewritten to be much more definitive and comprehensive. It is recommended the SDT review the FAC-014 Standard where this Standard deals with who is to receive the methodology for calculating SOLs. The SDT needs to insure that the Transmission Planners and Planning Coordinators share their Near-Term Planning Horizon Studies with the Transmission Operators (Operation Planners) and the appropriate Regional Entity Planning Committees and Operating Committees. 2. It is also recommended that the SDT remove all Requirements that are subjective and cannot be measured. For example, who must the Transmission Planner share information with? Requirement R5.2 states that information must be shared with Transmission Planners of neighboring impacted areas. A Compliance Monitor cannot determine if a neighbor is being impacted. In fact, from an enforcement perspective, if the involved parties must go before a Judge, who will determine if someone is impacted or not? 3. In addition, the assumptions the Transmission Planners and Planning Coordinators use to conduct the Studies are not required to be shared or posted. As an example, in some parts of the BES Transmission Planners and Planning Coordinators use Flowgate Methodology to study the BES, while others use Rated System Paths, and still others use Area Interchange (Network Methodology). 4. This standard needs to be modified to respond to several requests from Order 890 and Order 693. These Orders request that through the Standards, information be made available, posted, and shared with the appropriate reliability functions. This information includes the results of Planning Horizon Studies, Operating Horizon Studies, and eventually the determination of Available Transfer Capabilities. This information also includes, but is not necessarily limited to: how do the planners treat the "counter flows" in their studies, what are the generation and transmission planned outage schedules used in the planning studies, how are Network Loads and Network Facilities treated in planning studies; and how do the planners treat Grandfathered Transmission and Grandfathered Power and Energy Contracts in the planning studies?
Response: 1. The SDT assumes that this is actually referring to Requirement R6. This requirement has been re-written as Requirement R8 and ties back to FERC Order 890 for distribution. **R8**. Each Planning Coordinator shall coordinate the distribution of Planning Assessment results among ~~affected entities~~ neighboring systems, coordinating analysis of these results through an open and transparent peer review process such as described in FERC Order 890. 2. The SDT has attempted to not add subjective requirements. However, as measures are developed in a subsequent release, the SDT will review all requirements for subjectivity. 3. Documentation is required in your assement to decribe that you have met the requirements. 4. Information will be shared as required in various orders and regulations as shown in the new Requirement R8 for example.			
ATC	☑		Following are additional comments on the proposed standard.

Q43			
Commenter	**Yes**	**No**	**Comment**
			1. R1 Each sub-requirement (R1.1 to R1.5) should specify which Functional Entity (of those listed in R1) is responsible for providing the modeling data. For example, while logically it appears that R1.1 is applicable to the LSE only, it may be argued that parts of it may be applicable to the Transmission Planner also. 2. R1.1.3 We do not agree with identifying the DSM load reduction "consistent with operational requirements" for the purpose of modeling Load in planning studies. This is because DSM is typically employed either for Capacity deficiencies, but not for operations needs. 3. R1.3 "Firm transfers/Interchange Schedules and….." Should say either firm transfers or interchange schedules but not both since they are not equivalent. If the intent here is to model each Balancing Authority's Firm resources and Firm "commitments" needed to supply the Firm Load, then we suggest using the term Firm Commitments defined as the Native Load plus Firm Transmission Service plus LTTRs. 4. Firm Transfer -- Either define this term or use the existing NERC Glossary term Firm Transmission Service instead. Alternatively, use the term Firm Commitments defined as the Native Load plus Firm Transmission Service and LTTRs. Further, in Table 1, the "Interruption of Firm Transfer Allowed" performance requirement should be clarified/reworded to indicate if firm transfer was intended to comprise both firm point-to-point and network transmission service. If so, then curtailment of firm point-to-point transmission service should be permitted for all events P1-P4. Alternatively, the performance requirement could be changed to "Generation Redispatch Allowed". Given the future Day 3 MISO market structure, standards that refer to Generation Redispatch must include Demand Response. 5. R1.4 We believe that each Reliability Coordinator (RC) already receives the planned outage information from all TOs and GOs and maintains it in the Outage Scheduler. Can the Planning Coordinator obtain this information from the RC's operating in its footprint? 6. R1.5 The Transmission Planner is also very likely to have a documented criteria for planned (committed? see R2.7.3) facilities, so this requirement should say TP/PC instead of only PC. What standard will require the TP to have criteria? There should be a separate requirement that applies to the Generator Owner and includes specifics, such as reporting contemplated additions, modifications, and retirements. 7. R2.1.3.1 It is not clear what additional "variability of Load/demand and Load power factors due

Q43			
Commenter	**Yes**	**No**	**Comment**
			to season, weather, or time of day" over and above what is modeled in the seasonal base case is expected here. For example, what additional load variability can be studied in a summer peak base case which already represents the system snapshot of a hot (weather) summer (season) mid-afternoon (time of day) loading condition? 8. R2.5.2 Please provide more examples of what would comprise "material changes" that trigger a plant stability study (besides the addition/removal of transmission line). Would it be better to say electrical proxmity (to capture the concept of electrically "close" instead of electrical vicinity? 9. R2.6.1 to R2.6.3 Should all "material changes" trigger a new study? Shouldn't a new study be done only for those changes that are expected to have an adverse impact on system performance? For example, adding a transmission line outlet at a generating station will rarely have an adverse impact on plant stability. Suggest that these requirements specify the need for a new study to support the planning assessment only when changes "that have an adverse material impact on system performance" have occured. 10. R2.7.1.1 It is unclear what is the need/benefit of including a the project initiation date; the project in-service date should be enough in a corrective action plan. Suggest deletion of project initiation date from the requirement. 11. R2.7.3 What is the difference between "committed projects" referred here versus the "planned facilities" referred to in R1.5? Please explain distinction between committed, planned and proposed projects/facilties. 12. R2.7.4 "Not remove committed projects……" Note that a committed project may not get cancelled but can very likely be deferred --- how should deferred projects be handled? 13. R.3 Per this requirement, the BES should be analyzed for normal (N-0) performance. However, Table 1 does not include the corresponding performance requirements. Further, R3.1 refers to studies for evaluating performance requirements in Table 1. Shouldn't Table 1 include normal system performance requirements? 14. System Adjustment -- What automatic/manual actions comprise this term? It will be helpful if the standard explicitly states which post-event system adjustments are acceptable/permitted to meet performance requirements for single contingency events (P1, P2 or P6) versus which pre-event system adjustments (specifically load shedding) are allowed/permitted to prepare for the next contingency (after the N-1 contingency has occurred) in multiple contingency events (P3-P5, P7-P9). This distinction does not appear to be addressed by requirement R3.3.2.2 in the draft

Q43			
Commenter	Yes	No	Comment
			standard. 15. R3.3.2.2 is inconsistent with the Planning Events in Table 1. While the requirement states that shedding firm load and curtailing firm transfers are not permitted for single contingencies, these are allowed for event P6 in Table 1. Further, although the requirement implies that these two types of system adjustments are permitted for multiple contingencies, at least one of them is not allowed for the multiple contingency events P3, P4 and P5 in Table 1. 16. System Adjustment Duration -- What is the allowable time for completion of system adjustment? Requirement R3.3.2.2 states that it is the time period allowed by the Transmission Owner's applicable time-limited (emergency) equipment rating. However, R3.3.2.2 is only applicable to single contingency events -- that is, events P1, P2, P6 in Table 1. Shouldn't this concept of allowable system adjustment duration apply uniformly to all Planning Events P1-P9 in Table 1? 17. R3.5 allows generation runback for single and multiple contingencies -- that is, for ALL planning events P1-P9. It appears that this requirement lends itself to be included as another bullet item in the Performance Requirements at the top of Table 1. In fact, why not define what comprises System Adjustment (see comment above) and then tabulate the system adjustments that are (not) permitted for each planning event within Table 1? 18. System Stability studies: The standard must clearly define what types of stability analyses fall under this umbrella term. While it is generally understood that this includes angular stability analysis, which is the only one that is explicitly mentioned in the Table 2 footnotes, the standard does not indicate whether dynamic voltage stability analysis or small-signal stability analysis are also expected to be done as part of system stability studies. 19. Requirement R2 and its sub-requirements are intended to address all aspects of Planning Assessment. However, it is unclear which requirement(s) in the draft standard cover the scope of R1.3.12 in the existing TPL-002 and TPL-003 standards, which requires "Include the planned (including maintenance) outages of any bulk electric equipment at those demand levels for which planned (including maintenance) outages are performed. Further, we are unsure if the direction provided in FERC Order 693 paragraphs 1724 and 1786 with respect to planned (maintenance) outages have been adequately and clearly addressed in the draft standard. Can the SDT point us to the specific requirements that address the above issues? 20. We recommend that the SDT give consideration to acknowledging or addressing the directives in FERC Order 890 for performing transmission system loss analysis and economic assessments --

Q43			
Commenter	**Yes**	**No**	**Comment**
			can they be considered within the scope of reliability assessments? EDITORIAL COMMENTS 21. R4.5.1 and R4.5.2 -- It appears that the intent of these sub-requirements within R4.5 for System Stability study is very similar to the intent of R3.3.3 and R3.4 for Steady State studies. If so, then why have different heirarchical numbering for the latter case? Suggest changing R3.3.3 and R3.4 to sub-requirements R3.4.1 and R3.4.2 respectively within R3.4 for Steady State study. Table 1 22. Event P3 -- The performance requirement in column 3 "Interruption of firm transfer allowed" should be simply "NO" (outaged dc line performance is not applicable). 23. Event P5.3 -- Clarify if the "loss of another transformer" is intended to be the loss of a transformer with low-side voltage >300kV or *any* transformer in the BES. 24. Event P9.1 -- Is the one mile intended to be one *contiguous* mile? If so, recommend inserting the qualifier "contiguous" to claridy the intent. 25. Event P9.6 -- The contingency description is very confusing regarding the role of spare transfomer. Is spare transformer part of the system adjustment? Please reword to clarify the intent. 26. Extreme Event Descriptions -- Items 3e and 3f are repetitions of items 3c and 3d. Delete any one pair. Item 3h is too vague --- either provide more specificity or delete it. Table 2 27. Extreme Events - Evaluation Requirements -- Inclusion of item 9 (3-ph fault with loss of all generating units at a station) in the table is inconsistent with Q.33. 28. Having both bullets at the beginning of the table and footnotes at the end of the table, which deal with similar subject matter, tends to be confusing and should be addressed. 29. The different types of Stability analysis (steady state voltage stability, dynamic voltage stability, dynamic generator unit angular stability, and dynamic inter-area power oscillation stability) be clearly and concisely stated in one location and the perfomance requirements for each type of stability should be more clearly stated in appropriate locations.

Response: 1. The standard has been revised (see Requirements R9 through R13) to identify specific entities responsible for providing the required information.

R9. Each Distribution Provider shall provide its respective Planning Coordinator with modeling information for real and reactive load forecast data for each year of the Transmission planning horizon at Transmission nodes based on expected or historical System performance including

Q43			
Commenter	Yes	No	Comment
the expected mix of industrial, commercial, and residential Loads, within ninety days of a request for such information. **R10**. Each Transmission Planner shall provide its respective Planning Coordinator with modeling information for Firm Transmission Service data, Interchange Schedules and resources required to supply Load for each of its Balancing Authorities for each year of the Transmission planning horizon, within ninety days of a request for such information. **R11**. Each Transmission Owner shall provide its respective Planning Coordinator with modeling information for known planned outages and long-term outages for Transmission equipment for each year of the Transmission planning horizon with consideration given to spare equipment strategy, within ninety days of a request for such information. **R12**. Each Generator Owner shall provide its respective Planning Coordinator with modeling information for known planned outages and long-term outages for generation equipment for each year of the Transmission planning horizon, within ninety days of a request for such information. **R13**. Each Resource Planner shall provide its respective Planning Coordinator with the modeling information for new planned facilities for each year of the Transmission planning horizon including but not limited to generators, Reactive Power devices, and new technologies, within ninety days of a request for such information 2. The SDT has determined that DSM is included in MOD and is no longer explicitly included here. 3. The SDT understands your concern and has modified the requirement (now Requirement R10) to clarify intent. The intent is to include modeling information for firm Transmission service data, Interchange Schedules, and resources required to serve Load. 4. The SDT agrees with your comment concerning the ambiguity of the term "Firm Transfer". The revised requirement (now Requirement R10) and revised Table 1 use the existing NERC Glossary Term Firm Transmission Service, as you suggested. However, the SDT does not agree that curtailment of Firm Transmission Service should be permitted for events P1-P4. 5. Few commenters raised this concern, so the SDT is uncertain whether the necessary information could be obtained from the RC in all regions. The ultimate source of the information is the TO and the GO. In the revised standard, this requirement has been separated into two requirements to clarify the intent for transmission equipment planned outages and long-term outages (Requirement R11) and generation equipment planned outages and long-term outages (Requirement R12). If the TO and GO provide the necessary information to the RC in a given region, it is possible that the TO and GO could arrange for the RC to provide the information to the PC to demonstrate compliance with the requirements or, alternatively, send the information to both the PC and RC. 6. The SDT has modified the standard based on various comments. The phrase "in accordance with the documented criteria of the Planning Coordinator" has been deleted. This requirement has been further revised and separated into two requirements applicable to the Resource Planner and Transmission Planner, respectively. 7. The SDT is providing some guidance on what needs to be included in sensitivity studies while not being totally prescriptive. Requirement R2.1.3 has been modified to require documentation of why the listed sensitivities were or were not selected for specific studies. Requirement R2.1.4 has been added to specifically state that the entity may consider additional sensitivities that are appropriate for its own system. In either case the entity must document the reason for running or not running cases for the items listed. The documentation as well as the studies for the sensitivity(ies) selected will be required to demonstrate compliance. It is the entity's decision to establish and document which senstivities are more significant to study System responses. The sensitivity studies do not in themselves establish the need for a plan, only the areas of the System for which the analysis is needed. For example an entity's base case Load level may be modeled as a 50/50 Load level which represents what the entity considers normal peak weather conditions. A sensitivity to that may be a 90/10 Load level case which represents extreme weather conditions.			

Q43			
Commenter	Yes	No	Comment
			R2.1.3. For each of the studies described in Requirement R2.1.1 and Requirement R2.1.2, sensitivity case(s) that stress the System with sensitivities that reflect one or more of the following conditions shall be run and documentation ~~with~~ of the technical rationale for ~~the selected sensitivity(ies)~~ why each of the conditions was or was not selected shall be supplied: **R2.1.4**. In addition to those sensitivities mentioned in Requirement R2.1.3, any other sensitivities, as deemed appropriate by the Transmission Planner or Planning Coordinator for their individual systems, shall be run and documentation of the technical rationale for why each was selected shall be supplied. 8. Requirement R2.5.2 was changed for clarification. **R2.5.2** Material Transmission System changes ~~in the electrical vicinity of existing generation are made~~ are made at or near the point of Interconnection of existing Generation such as the ~~addition or~~ removal of a Transmission Line ~~at or near the point of Interconnection~~ or the addition of a new substation in one of the Transmission Lines connected to the plant. 9. R2.6.1 – R2.6.3 – Requirement R2.6.2 was changed for clarification. **R2.6.2** For steady state, short circuit ~~analysis~~, Generating Plant Stability, or System Stability analysis: ~~if the study is less than five years old and no material changes have occurred to the System in the intervening period.~~ the study shall not include any material changes, such as, generation or Transmission additions/removals, or topology changes that have occurred in the intervening period and would impact the study area. 10. Requirement R8 (old requirement R6) which focuses on the distribution of the Planning Assessment results among affected entities was specifically added to allow some level of peer review and provide some level of confidence that the proposed plan could in fact be completed to meet the reliability objective. Requirement R2.7.1.1 is complementary to Requirement R8 (old requirement R6). Initiation dates are only required in the near term since longer term plans tend to move in time and only have general scheduling associated with them. Typically the date would indicate when significant resources will begin to be employed. This covers any project proposed for the near term. The SDT believes that initiation dates are required for near-term Corrective Action Plans to give an indication that the Corrective Action Plans can be implemented in time. 11. Based on several comments and consideration by the SDT, the SDT has modified Requirement R2.7.1 and deleted Requirements R2.7.2 through R2.7.4. The standard now refers to "actions" needed to achieve required System performance without trying to distinguish between committed and proposed projects. It also lists examples of what is intended by the word "actions". **R2.7.1.** ~~Identify~~ List System deficiencies and the associated actions needed to achieve required System performance. ~~including Transmission and generation improvements, DSM, new technologies, or Operating Procedures including the duration of interim Operating Procedures.~~ Such actions may include installation, modification, retirement, or removal of Transmission and generation Facilities and any associated equipment such as protective or Special Protection Schemes, rate applications, DSM, or other initiatives, new technologies, or Operating Procedures including how long the Operating Procedures will be needed as part of the Corrective Action Plan.

Q43			
Commenter	**Yes**	**No**	**Comment**
12. Based on several comments and consideration by the SDT, the SDT has modified Requirement R2.7.1 and Requirements deleted R2.7.2 through R2.7.4. The standard now refers to "actions" needed to achieve required System performance without trying to distinguish between committed and proposed projects. It also lists examples of what is intended by the word "actions". 13. The SDT has revised Table 1 to include N-0. 14. The term "System adjustment" is used in the existing TPL Standards, and is intended to have the same meaning in the proposed TPL standard, and includes both manual and automatic actions. 15. The SDT has made extensive changes to the tables to address these concerns. 16. and 17. The use of the defined term 'Facility Ratings' includes time elements which accommodate your concern. 18. You must perform any Stability analysis that is required to meet the performance requirements. 19. Requirement R11 contains this language. 20. The scope of the SAR and standard being prepared is only related to reliability assessments. 21. The SDT attempted to make Steady State and Stability identical but this was not always possible. 22. The SDT believes that the reference to the outaged DC line is appropriate. 23, 24, 26, and 27. P5.3 is intended to be the loss of a second transformer with low-side voltage >300 kV. P9.6 was to address the FERC directive in Order 693 to consider spare equipment strategy. In Q33 the SDT posted a question to the industry to request guidance on whether simultaneous tripping of all generating units in a power plant should be included the Extreme Events in Table 2 (on Stability Studies). The SDT has revised Tables 1 and 2 and included this consideration in Requirement R11 of the second draft of the standard to address this issue. Tables 1 and 2 have also been revised to address your comments on P3 and P9.1, the repeated Extreme Event Items 3c – 3f and Item 3h. For P9.1 (P7.1 in the second draft), the SDT did not change the table to include "contiguous" for the 1 mile (or less) exclusion because the standard does not limit the number of instances where two circuits can share a common tower only that each exclusion applies to a length of one mile or less. 25. The SDT agrees and has eliminated that requirement. 28. Editorial change made to alleviate confusion. 29. You must perform any Stability analysis that is required to meet the performance requirements.			
APS	☑		R 2.5.1 and R 4.6 require plant stability studies for all generators greater than 20 MVA for changes in excitation system or PSS addition. Generally plant stability is a problem only for large plants with large generators. Changes in the excitation system of a small generator or PSS addition does not significantly impact the plant stability. In fact, in most cases it improves the plant stability. When an excitation system or a PSS is commissioned in the field, part of the commissioning tests ensure that turbine-generator is stable and that the performance of the excitation system and PSS are acceptable. If an excitation system change or PSS addition is causing a plant stability problem in simulation, it is generally a data issue and can be best handled in MOD standards. Requiring stability studies to be redone does not in any way contribute to the system reliability. There are hundreds of old generators in the US which are going through excitation system retrofits in a given year. Requiring a stability study for each change would add additional study burden without any value to the system. This is unnecessary work with little consequence on the system performance or reliability.

Q43			
Commenter	**Yes**	**No**	**Comment**
			Note: We have additional comments on these standards but they have been covered by comments from WECC. We fully support all of those comments.
Response: Those values are based on Large Generator Interconnection Procedures as approved by FERC. Unit controls are an integral part of the power system and must be analyzed when changes are made.			
BPA	☑		Support comments sent by WECC. In addition,BPA has the following comments: 1. R2.3.1 - The way the requirement is written sounds like the short circuit study should be run after changes are made to the BES. The study needs to be done sufficiently in advance to allow for needed equipment replacements as a result of the study. Also, "current" in the first senetence should be changed because it is confusing whether it refers to "present" or "amps". 2. There needs to be better definition what is meant by "bus tie breaker". It is assumed this includes both bus tie breakers between a main and auxiliary bus, as well as bus sectionalizing breakers between two main bus sections. 3. In general the table seems unnecessarily complex. It would appear to make more sense to group events by performance as done in the previous Table 1. Also, in general the resulting events for the element contingencies in the table should be compared and like events grouped together since they would be are modeled the same and show the same performance in powerflow studies. 5. P9.1 - It is recommended to exclude multiple circuits sharing a common structure for no more than three miles, rather than one mile. Our analysis shows river crossing systems can be up to three miles and it is impractical to plan for common corridor outages of up to this distance. 6. Planning event P9.6 is the same as P8.3 with the only difference being the restoration time. 7. Regarding extreme event descriptions: - Item 3.a is not a Transmission Planning, but is relevent for Resource Adequacy. - Item 3.b is an operational issue not relevent to Transmission Planning. Successful cyber attack would need to be defined. Also, how would the consequences of a successful cyber attack be predicted? - Regarding item 3.c, generation capabilities should already be modeled in base cases within the planning horizon. - Items 3.d through 3.f are not relevent to Transmission Planning. These are Resource Adequacy issues within a short term operational horizon. - Items 3.e and 3.f appear redundant to items 3.c and 3.d. - Item 3.g is not really a planning issue. The system should be designed to meet required

Q43			
Commenter	**Yes**	**No**	**Comment**
			performance for selected contingencies regardless of age or maintenance pratices. - In general, the Extreme Events layed out in the previous Table 1 is a much more practical approach to planning the transmission system.
Response: 1. Requirement R2.3.1 has been deleted. In Requirement R2.3, the wording has been revised to be clear that an annual assessment is required and what studies may be used. Requirement R2.6 provides further detail about which past short circuit studies may be used. Requirement R4 explains the conditions that the studies should analyze. 2. The SDT has included a proposed definition of a Bus-tie Breaker in the second draft. **Bus-tie Breaker:** A circuit breaker that is positioned to connect two individual straight bus substation configurations. (Substation configurations such as ring-bus, breaker-and-a-half, or double bus-double breaker protection schemes do not use bus-tie breakers.) 3. Tables 1 and 2 have been revised to provide greater clarity. 5. The SDT notes that distances greater than a mile present comparability issues with regard to other situations such as bay crossings, harbor crossings, and other longer spans. The SDT has not revised the requirement as a result in the interest of maintaining comparability without opening the waiver up to other situations. 6. The SDT has deleted P9.6. 7. With regard the Items 3.e and 3.f appearing to be redundant to items 3.c and 3.d., the SDT agrees and has made the appropriate changes to the standard. With regard to the other comments about the Extreme Events, the SDT notes that in Order No. 693, paragraph 1834, the FERC gave examples of Extreme Events that the FERC would expect to see in the revised standard. These examples are consistent with the items that the SDT included in the standard as examples of Extreme Events to be considered. For example paragraph 1834 include "(1) loss of a large gas pipeline into a region or multiple regions that have significant gas-fired Generation; (2) a successful cyber attack; (3) regulation that restricts or eliminates the use of a river or lake or other body of water as the cooling source for generation; (4) tornado or wildfire, or other event and (5) the loss of older transmission lines, which may not be constructed to meet an entity's present radial ice loading requirements…" In paragraph 1834, the FERC directs NERC to expand the list of events with examples such as those described in the paragraph. The SDT believes that the Extreme Event items that the commenter has raised concerns about are consistent with the list of examples provided in paragraph 1834. Further, the SDT notes that while the commenter is correct that some of these events have traditionally been treated as deliverability issues, nonetheless they will dramatically impact the reliability of the interconnected network and are logical Extreme Events for which the probability and consequences should be evaluated when considering ways to make the Transmission System more robust with Operating Procedures and/or System improvements that are reasonable in cost in comparison to the probability and consequences of the Extreme Event. The SDT did not change the standard with regard to these comments.			
BCTC	☑		1. We have some questions of clarification for the Standards Drafting Team, that may resolve some of our concerns. (i) Is it the intention of NERC that the more stringent performance requirements in this standard would be applicable for determining System Operating Limits before Transmission Owners are able to implement Corrective Action Plans? The BCTC system is part of the western interconnection and BCTC is a member of WECC. WECC members apply a principle that Planning Standards are also applicable for determining System Operating Limits. If the answer to this

Q43			
Commenter	**Yes**	**No**	**Comment**
			question is "no", then BCTC may be able to support some aspects of raising the bar, with the understanding that SOLs would be determined based on the performance standards that the system is planned to. (ii) Has the Standards Drafting Team considered how Transmission Planners will address discrepancies between Corrective Action Plans for this standard and the reality of what can be constructed due to regulatory approvals, siting problems, financing issues, etc.? For example, is it the intention that Transmission Planners should continue to study Corrective Action Plans to meet an N-1-1 Planning Event (e.g. P5-1) without generator tripping when the practical situation is that we may be fortunate to be able to build to meet N-1 with some generator tripping? We are concerned that if we cannot meet the performance requirement for P5-1 due to delay or denial, continuing to assess Corrective Action Plans to meet P5-1 does not provide much useful information compared to planning to meet a doable target. Item 2 below provides a proposal to address this. 2. There is always the possibility that a regulator may deny funding for a Corrective Action Plan or approve funding for a Corrective Action Plan that does not fully meet the performance standards, a siting process may delay or block a Corrective Action Plan, or some other process may frustrate the ability follow through with a Corrective Action Plan to meet NERC performance standards. To avoid the need for a Transmission Planner to continue to study Corrective Action Plans that cannot be implemented, we suggest adding the following Requirement R2.7.6: The Planning Assessment is not required to include a Corrective Action Plan and address the subsequent requirements (of R2.7) in cases that (a) an applicable regulatory agency has ordered that a Corrective Action Plan is not to proceed or that an alternative Corrective Action Plan that does not meet the performance standards is to be implement or (b) the Transmission Planner has documented evidence indicating that such an outcome is likely to occur. Other Requirements for Five and Ten year Assessments may also be exempted depending on the regulatory order. The Planning Assessment will include evidence of the order. 3. R3.3.3, R3.4, R4.5.1, R4.5.2 - A rationale for the selected contingencies should be sufficient. It should not be necessary to explain why the remaining contingencies would produce a less severe result. 4. Table 2, P1 should include shunt devices. 5. A definition or reference to a definition for Firm Load and Firm Transfers is required. The present situation is that these terms are "defined" as those loads and transfers that can be supplied while meeting Category B requirements. In other words, the standards define the terms. The commercial uses of firm and non-firm may not be applicable and they actually mean non-recallable and recallable service, not directly related to system performance, but incorporating aspects of

Q43			
Commenter	**Yes**	**No**	**Comment**
			reservation times. 6. Extreme Events of Tables 1 and 2 should not be subject to the same study requirements as Planning Events. Table 1 Extreme Events need not be studied for both the Near Term and Long Term Horizon (ref. R3.4, R3, R2.1 and R2.2) and for all five years of the Near-Term Horizon (ref R3.4, R3, R2.1). Table 2 Extreme Events should not be required for all five years of the Near-Term Transmission Planning Horizon (ref. R4 and R2.4). When conditions warrant, only a single assessment representing a selected reasonable planning horizon should be required, and an update required only when past studies are no longer representative. We are concerned that many of the proposed Table 1 Extreme Events (Item 3. a, c, d, e, f) are resource adequacy issues (we also observe that c and e appear to be identical). Transmission Planning Assessments of these events should be initiated at the request of Resource Planners. It should not be necessary for Transmission Planners to initiate and maintain current studies of these Extreme Events. We suggest that Extreme Events be removed from R3 and R4 and addressed in a separate Requirement. 7. The Purpose of this standard should be restated as: Establish requirements for Planning Assessments, including Corrective Action Plans, to be conducted over range of forecast conditions based on system planning performance requirements. Explanation: This revised wording more accurately describes the content of the standard. The Requirements of this standard are to perform Studies and Assessments. The performance tables are referenced by the Requirements and are supporting to the Requirements, but are not a "capital R" Requirement.

Response: 1. NERC, in its response to FERC's NOPR on the FAC-010, FAC-011, and FAC-014 standards, committed to revising the FAC and ATC standards when there is consensus on the TPL standards.
The intent of the Corrective Action Plan is to establish a doable set of actions that are to meet the performance requirements. Senstivitiy studies have been specifially added to the standard to allow the planner to assess the impact of corrective actions being delayed. It is the entity's responsibility to assess these impacts and adjust the next set of actions planned to meet performance. The standard also requires that the assessment cover more than the ten year period if the entity deems it necessary to accommodate any long range projects that may take years to complete due to ROW acquisition, hearings, etc. In addition, generation tripping for single Contingencies has been added back into the standard and the N-1-1 performance requirement has been revised to allow generator tripping and Non-Consequential Load dropping.
2. The SDT does not believe that it is necessary to add the words concerning regulatory delays or denials. The intent of the Corrective Action Plan is to establish a plausible set of actions that, when implemented, achieve the performance requirements. Senstivitiy studies have been specifially added to the standard to allow the planner to assess the impact of modification to or delay of a corrective action plan.
It is the entity's responsibility to assess the impacts of a modification or implemetation delay and adjust the next set of corrective actions or modify the proposed plan to meet the performance requirement as prescribed in the standard.
The standard also requires that the assessment cover more than the ten year period if the entity deems it necessary to accommodate any long range projects that may take years to complete due to ROW acquisition, hearings, etc.
3. The SDT believes that it is necessary as part of a complete documentation set explaining why and what was done.

Q43			
Commenter	**Yes**	**No**	**Comment**
4. This was added as requested. 5. In reviewing this comment, the SDT noted that Firm Demand and Interruptible Load are defined in the NERC Glossary. The SDT believes Load that is not Interruptible Load as defined in the NERC Glossary best fits the intention of the requirements pertaining to Firm Load in the TPL standard. Therefore, the SDT modified the references to Firm Load to refer instead to non-Interruptible Load in the TPL standard. With this change, Firm Load does not need to be defined in this standard. 6. The SDT agrees with the comment that Extreme Events should not be subject to the same study requirements as Planning Events; however, the SDT proposes to resolve the issue by clarifying the study requirements in the table and the text without removing the Extreme Events from Requirements R3 and R4 and addressing Extreme Events in a separate Requirement. With regard to the comments about resource adequacy issues, as noted in the BPA 7 answer, these events that have been traditionally considered resource adequacy issues are included as Extreme Events to be consistent with FERC Order No. 693 and because such events could dramatically impact the reliability of the interconnected network. As a result, the Transmission Planner/Planning Coordinator should investigate these Extreme Events regardless of whether the Resource Planner considers them to be an issue or not. In this way, the Transmission Planner/Planning Coordinater considers ways to make the Transmission System more robust with Operating Procedures and/or System improvements that are reasonable in cost in comparison to the probability and consequences of the Extreme Event. The SDT did not change the standard with regard to these comments. 7. Since most commenters did not express concern with the Purpose language, the SDT felt that no change was necessary.			
CAISO	☑		1. First, and as a general matter, the TPL-001 standard needs to accurately reflect the roles of PA'S and TP'S in areas with organized competitive markets and where the PA'S and TP'S are not vertically integrated utilities. In those areas, the TPL standard should recognize that compliance with the standard is achieved through the publication of a Plan that identifies system needs – and leaves open to the marketplace the specific mix of resources that investors construct to meet those needs. As a result, the Plan need not be, and should not be, prescriptive as to the resource mix that must be achieved. It is important for plans to be equally open to generation, demand response and transmission and not be presecriptive to the actual resource mix. Further, not all organized competitive markets have a mechanism in place to develop an integrated resource and transmission plan to meet future needs. Some markets conduct forecast assessment, thereby providing signals to market participants to make investment decisions. 2. Similarly, reflecting the divested nature of the industry in areas operated by ISOs and RTOs, the modeling standards should be reviewed to make sure that asset owners (e.g., generator owners and transmission owners) are required to give information in the level of detail and granularity that will allow PA's and TP's to develop plans and models consistent with these standards. 3. As highlighted in question 16, DSM should be considered an acceptable solution to system needs. However, DSM is generally considered in meeting resource requirements rather than as one of means to relieve transmission constraints. In planning studies, loads that are identified as DSM type (contracted or potential) are modeled as firm loads for reliability assessment. We would therefore seek the SDT's suggestion on how specifically DSM should be explicitly modeled or used to aid in

Q43			
Commenter	**Yes**	**No**	**Comment**
			achieving transmission reliability in the planning horizon. Further, the drafting team must consider whether DSM providers are covered in the Compliance Registry and how the NERC Standards should obligate them to provide the requisite information to PA'ss and TP's so that they are fully taken into account. 4. Finally, the standards need to be improved to better distinguish the responsibility of Planning Authorities versus Transmission Planners. Currently, the Standard refers to both entities as carrying out the requirements. This appears to be reundant.
Response: 1. The SDT believe that the standard is not prescriptive in the way described in the comments. 2. Comment is beyond the scope of the standard under development and should be addressed through proposed changes to the appropriate MOD standards. 3. The use of DSM is optional. Requirement R2.7.1 has been modified based on comments received to use "may include" instead of "including". The standard does allow for consideration of DSM but other factors may disallow inclusion of DSM in the Corrective Action Plan. The amount and uncertainty of DSM needs to be justified by the entity which includes it in its Correction Action Plan. **R2.7.1**. ~~Identify~~ List System deficiencies and the associated actions needed to achieve required System performance. ~~including Transmission and generation improvements, DSM, new technologies, or Operating Procedures including the duration of interim Operating Procedures.~~ Such actions may include installation, modification, retirement, or removal of Transmission and generation Facilities and any associated equipment such as protective or Special Protection Schemes, rate applications, DSM, or other initiatives, new technologies, or Operating Procedures including how long the Operating Procedures will be needed as part of the Corrective Action Plan. The standard is applicable not only to the Transmission Planner but also to the Planning Coordinator and the Resources Planner. These entities are expected to establish relationships to provide for intergrated analysis and resultant Corrective Action Plan which may include generation, transmission and DSM components. 4. Requirement R2 specifies that each entity is responsible for "its" portion of the BES. Even so there will likely be overlap and joint responsibility in some instances as identified in Requirement R5.			
CenterPoint	☑		1. TPL-001-1 focuses solely on reliability to the exclusion of economic cost/benefits, prudent avoidance, and landowner impacts, which have been the hallmarks of good utility practice that have governed transmission planning and construction for decades. FPA section 215(i)(2) "does not authorize the ERO or the Commission to order the construction of additional generation or transmission capacity or to set and enforce compliance with standards for adequacy or safety of electric facilities or services." However, adherence to TPL-001-1 as currently drafted, will require, de facto, the construction of additional transmission facilities. CenterPoint Energy believes this standard excludes proven, historical good utility practice to reach far beyond what is intended by the FPA. TPL-001-1 contains an excessive number of requirements (over 50). The SDT should consider the removal or modification of the following unnecessary, redundant or overly prescriptive

Q43			
Commenter	**Yes**	**No**	**Comment**
			requirements: 2. R1.1. This is a modeling requirement and should be incorporated into the modeling (MOD) standards. Remove or modify this requirement to eliminate any redundancy with existing modeling standards. If certain subrequirements of R1.1 of TPL-001 are not currently requirements in a MOD standard, it should be questioned, then, whether or not these specific subrequirements are actually needed in ANY standard. 3. R2.1.3 and R2.4.3 should be removed because they introduce new, vague requirements. 4. R2.2. Analysis beyond five years has little value due to the speculative nature of predicting load and generation growth. Furthermore, ERCOT does not annually create Long-Term Planning Horizon cases because ERCOT does not believe it is necessary. This requirement should be removed. 5. R2.5 and R4.6. These requirements are overly prescriptive and unnecessary for the reasons stated in the response to Q32. They should be removed. 6. R2.7.1 through 2.7.5. Requiring Corrective Action Plans that address how performance requirements will be met is reasonable; however, these standard requirements are overly prescriptive and unnecessary. R2.7.1 through R2.7.5 would result in the development, documentation and explanation of fictitious solutions to fictitious problems. They should be removed. 7. R3.3.2.1. The requirement to identify consequential load loss for single contingencies in the Planning Assessment is unnecessary and burdensome and should be removed. 8. R5. The roles of the Transmission Planner and Planning Coordinator are already addressed in the approved NERC definitions and further described in the approved NERC Reliability Functional Model. This requirement is unnecessary and should be removed. 9. Table 1 and Table 2 - P4, P5, P8, and P9. Including all combinations of two components (generator, Transmission circuit, transformer, monopolar DC line) with generation adjustments is impractical and overly burdensome. For multiple contingencies, CenterPoint Energy recommends including only two-circuit tower lines and the two components (generator, Transmission circuit, transformer, monopolar DC line) that would be cleared by a breaker failure (i.e., stuck breaker).
Response: 1. The SDT's understanding is that the ERO has the authority to set performance requirements for reliability. 2. The SDT believes some additional modeling requirements not presently contained in the MOD standards are necessary for Transmission planning purposes. The SDT has revised these requirements based on industry comments to eliminate redundancy with existing MOD			

Q43			
Commenter	Yes	No	Comment
			standards with the intent that these requirements will be removed from the TPL standard when they are incorporated into the MOD standards at a later date. 3. The SDT feels it is appropriate to set a minimum level of sensitivity cases to be looked at. The SDT is providing some guidance on what needs to be included in sensitivity studies while not being totally prescriptive. The SDT has modified Requirements R2.1.3 and R2.4.3 to clearly stipulate that the entity shall provide rational for why sensitivities on the list were or were not included in the sensitivity studies and that the entity may consider additional sensitivities that are appropriate for its own system. The Standard requires that deficiencies identified from the results of the current studies need to be addressed via Corrective Actions Plans while leaving it at the entity's discretion to decide which deficiencies, if any, identified through sensitivity studies should be addressed by the Corrective Action Plan. **R2.1.3**. For each of the studies described in Requirement R2.1.1 and Requirement R2.1.2, sensitivity case(s) that stress the System with sensitivities that reflect one or more of the following conditions shall be run and documentation ~~with~~ of the technical rationale for ~~the selected sensitivity(ies)~~ why each of the conditions was or was not selected shall be supplied: **R2.4.3**. For each of the studies described in Requirement R2.4.1 and Requirement R2.4.2, ~~S~~sensitivity case(s) that stress the System to reflect one or more of the following conditions shall be run ~~with documentation provided explaining the rationale for the selected sensitivity(ies)~~ and documentation of the technical rationale for why each of the conditions was or was not selected shall be supplied: 4. The SDT feels that this requirement is appropriate based on its understanding of planning practices throughout North America. This is also mentioned in FERC Order 693. 5. See response to Q32. 6. After careful consideration, the SDT agrees that if the Corrective Action Plan is going to include "committed" and "proposed" projects, they will need to be defined. However, the SDT agrees that it will be very difficult to develop definitions of "committed" and "proposed" that are applicable for the entire NERC footprint. Therefore, the SDT has modified Requirement R2.7.1 and deleted the original Requirements R2.7.2 through R2.7.4 to reflect "actions" needed to achieve required System performance without trying to distinguish between committed and proposed projects. **R2.7.1**. ~~Identify~~ List System deficiencies and the associated actions needed to achieve required System performance. ~~including Transmission and generation improvements, DSM, new technologies, or Operating Procedures including the duration of interim Operating Procedures.~~ Such actions may include installation, modification, retirement, or removal of Transmission and generation Facilities and any associated equipment such as protective or Special Protection Schemes, rate applications, DSM, or other initiatives, new technologies, or Operating Procedures including how long the Operating Procedures will be needed as part of the Corrective Action Plan. 7. FERC required documentation of Consequential Load loss in Order 693, paragraph 1795, (not Non-Consequential) and duration should be based on best judgment for the common cause of the event. 8. The Functional Model is intended as a guide and aid in drafting reliability standards. Nothing stated in the Functional Model is enforceable in and of itself. Only requirements in approved reliability standards, which may mirror the Functional Model assuming that industry consensus is received on the subject matter, are enforceable.

Q43			
Commenter	**Yes**	**No**	**Comment**
9. The analyses of the combinations of two components are required by the existing TPL standards. The SDT understands the concerns in the potential increase in work load. Requirement R3.3.3 requires evaluation of only those Planning Events (involving multiple Contingencies) that are expected to produce more severe System impacts.			
HQTE	☑		1. We think that the proposed fusion of previous TPL-001 to TPL-004 and the addition of more specific contingencies involves too much change at once. It would have been better to make specific change to each individual standards. That way, it would have been more practical to evaluate the impact of the proposed changes. 2. A major concept before evaluating the impact of a standard is to know on what system it will be applied to. In the tables, the notion of a voltage treshold (>300 kV) is introduced. It is our interpretation that the standard as drafted applies only to BPS elements part of that treshold (>300 kV) and not every ">300 kV" element. The SDT should indicate if they have the same interpretation as ours. 3. We reiterate our comment that it would be preferable to have only one table that would include both steady state and stability contingencies with their respective expected performance. 4. There might be some protection standards that would need to be developped/clarified before some proposed changes in this standard. 5. The SDT has made an effort to define Base Case, yet has not used the term in the standard. At a minimum, Base Case should be referred to in sections 2.1.1, 2.1.2 In addition to the comments from Central Maine Power.
Response: 1. Much of the wording and underlying concepts are the same for the four standards today – the major difference being that each refers to normal, single, multiple or extreme Contingencies. All four use the same table. Merging them into one standard has simply eliminated much of the duplication and brought together the smaller portions of each standard that were different. Past experience has shown that since the four are so closely related that a change in one has a tendency to reflect a change in another – merging the four together helps keep all the changes and relationships in a single point of view. Commenters in general have supported the concept of merging the four standards together. In addition, Paragraph 1692 of Order 693 "directs the ERO to consider integrating Reliability Standards TPL-001-0 through TPL-004-0 into a single Reliability Standard through the Reliability Standards development process". In addition this Order, in conjuction with Order 890, enurmerate attributes of planning standards that the FERC feels should be incorporated into the consolidated standard. SDT believes that the first draft of the standard is consistent with Orders 693 and 890 without being unduley burdensome. 2. As proposed, the standard is intended to apply to all BES (not BPS) Facilities, but for some events the performance requirements are different for Facilities above and below 300 kV. When EHV Systems are compromised, the large volumes of power served by them can place a severe amount of stress on parallel EHV or lower voltage paths. For example, if a large EHV transformer experiences a catastrophic failure			

Q43			
Commenter	**Yes**	**No**	**Comment**
not only are other System Facilities required to carry more Load but the System is also exposed to other N-1 conditions for long periods of time while awaiting a replacement or repair of the failed equipment. Large generation sources are typically connected at EHV levels and maintenance of the EHV transmission lines within the vicinity of large generation plants must often be coordinated during scheduled unit outages, resulting again in multiple Facility outages over extended periods of time. 3. The majority of commenters support the development of the two tables as opposed to the single table in the existing TPL standards. Further, the SDT believes that the two tables provide the ability to clarify issues associated with Stability performance and evaluation requirements versus steady-state performance and evaluation requirements. Based on industry feedback, the SDT has completely reformatted the performance tables in Draft 2 of the TPL-001-1 standard. The new format more closely mimics the existing approved TPL standard Table 1, with enhancements we feel the industry will find valuable. 4. Since the SDT is considering specific references to items such as SPS, the SDT will need to address any direct effect on other standards. The SDT encourages the commenter to provide comments on any specific instances where such a clarification or change may be needed. In addition there is a standard under development that will be addressing integration of all Protective Systems. That team will be coordinating with the TPL team. 5. Base Case has been deleted as suggested.			
NPCC RCS	☑		The SDT has made an effort to define Base Case, yet has not used the term in the standard. At a minimum, Base Case should be referred to in sections 2.1.1, 2.1.2 In addition to the comments by Central Maine Power.
Response: After reviewing the comments to this proposed definition and the use of the term "base case" in the standard, the SDT determined that "Base Case" does not need to be a defined term.			
Central Maine Power National Grid New England ISO NU NSTAR United Illuminating	☑		1. There should be a "P0" standard that applies to system performance without any contingencies. 2. Standard should be clear that stabiltiy analysis is not required for Long-Term Planning Assessment. 3. R.1.1 Load forecasts should be addressed in MOD standards, not TPL. 4. R 1.4 This should only refer to known long-term outages, not planned outages. Delete "including protective relays"; this is addressed through other provisions. 5. R.2.1 Shorten "Near-Term Transmission Planning Horizon Planning Assessment" to "Near-Term Planning Assessment". 6. R 2.2 Shorten "Long-Term Transmission Planning Horizon Planning Assessment" to "Long-Term Planning Assessment". 7. R2.1, 2.2, 2.3 & 2.4 – The initial paragraph should have identical language regarding 'annual', and 'current or past' aspects.

Q43			
Commenter	Yes	No	Comment
			8. R2.1.1 There should not be a requirement to look at years one and two; a 5 year study should be sufficient. If there has been an ongoing 5 year study, there should be no major unexpected problems occurring in years 1 and 2. Studies of earlier years should only be required if an unanticipated event occurred that had not been considered in prior studies. The TPL should not address shorter term "Operating Studies" or operating issues. 9. R 2.2.1 Modify to "If any known projects have a lead time that is longer than ten years, the Planning Assessment shall be extended accordingly." 10. R 2.6 Steady-state, short circuit, and stability analysis should be required no more than every 5 years unless there is a significant change the system. 11. R 2.6.1 Remove reference to "market structure changes". The purpose of it's inclusion is unclear. 12. R 2.7.1.1 Project initiation date should be deleted. If it is retainted, it needs to be defined. 13. R 2.7.3 Committed and Proposed projects should be defined. 14. R 3.2.1/R 4.3 - What is the intent of this requirement? There should probably be an MOD associated with Generator Owner requirement to provide related generator protection/ limiter data or other plant information. 15. R 3.4/R 4.5.2 Remove the requirement to implement changes to reduce or mitigate the likelihood of such consequences of Extreme Events. This may not be reasonable or achieveable. 16. R 3.2 Sectionalizing schemes shall be considered when reflecting the post-contingent system. 17. R 3.2.2 - Propose deleting this. Line ratings should already take relay loadability into account. 18. R 3.3.2.1 - Proposed deleting "expected duration". This would be dependent upon the damage to the element due to the iniating event and other factors. 19. R 3.3.2.2 - The requirements of this section do not match P6. 20. R 3.3.3 - Change introductory language to read "Those multiple Contingencies that are…"

Q43			
Commenter	**Yes**	**No**	**Comment**
			21. R 3.5 - Generation tripping should be allowed as well as generation run-back. In addition, all performance requirements shall be met, rather than just meeting facility rating requirements. Suggested lanague "Manual and automatic generation run-back and/or generation tripping is allowed as a response to single and multiple Contingencies as long as the performance requirements of this standard are met." If these changes are accepted, R 3.6 can be deleted. 22. R 4 and R 4.1 - The language should be made similar to R 3 and R 3.1. 23. Suggest bringing language similar R4.4 into the R 3, the steady state section. 24. R 4.2 - High speed automatic reclosing schemes shall be considered. 25. R 6.3 - Change to read "Planning Coordinators of neighboring impacted areas". 26. Table 1 3 b and c Extreme Event descriptions are vague concepts that cannot be practically simulated. 3 d and e are not reasonable or practically useful to simulate. 27. Table 1, P8 - Language needs to be clarifed as to how the 300 kV threshold is to be treated for transformers. Is this for the high side, low side, or both sides? P5 is much clearer. 28. Table 2 - Clarification needs to be made that the faults being simulated are permanent faults. This can be addressed under the "Performance Requirements" portion at the beginning of the table, or modify each fault description. 29. Table 2 P9. Recommend that this be changed to require that faults should be on different phases of each of two adjacent transmission circuits on a multiple circuit transmission tower 30. Table 1, P9(6) and Table 2 P9 - It is unclear as to what is meant by "A spare transformer inserted to replace an outaged transformer followed by System adjustments". Unclear as to what is to be tested. 31. General comment - Transmission System is used throughout the document and is an undefined term The New England Transmission Owners and ISO New England transmission planners met several times to discuss the proposed standard and develop consensus comments based on our experience. The preceding comments are what was developed.

Q43			
Commenter	**Yes**	**No**	**Comment**
			Attached to the e-mail sending these comments is the September 12 Draft 1 TPL-001-1 Reliability Standard in Word format, red-lined with changes to the posted standard which are intended to reflect all of the comments above. This document was maintained by Central Maine Power Company during the course of the New England transmission planner discussions, and any variance (though none are expected) in not intended. It is expected that this red-lined TPL document will be helpful to the ATFN SDT in reviewing our comments.

Response: 1. The SDT concurs for the steady state performance requirements and has added a P0 Planning Event at the top of Table 1 to address the N-0 (existing Category A) condition. However, "normal System" is already included as part of the description of the initial System conditions associated with the fault for the stability study. Therefore, it is not necessary to include P0 in Table 2.
2. The SDT agrees. The requirement only specifies Near-Term.
3. The SDT believes some additional modeling requirements not presently contained in the MOD standards are necessary for Transmission planning purposes. The SDT has revised these requirements based on industry comments to eliminate redundancy with existing MOD standards with the intent that these requirements will be removed from the TPL standard when they are incorporated into the MOD standards at a later date.
4. The SDT has revised this requirement based on industry comments to clarify intent and to be responsive to FERC Order 693, paragraph 1725.
5. The intent of the suggestion was adopted.
6. The intent of the suggestion was adopted.
7. Identical language was not used; the same words were used in a different order and context. Requirement R2 and the following four sub-requirements each address a slightly different aspect of what studies are to be run. Requirement R2 only mentions current and past in general terms since more specifics are provided in the sub-requirements. Requirement R2.1 makes reference to "annual current" studies to emphasize the fact that the Requirements R2.1.1 and R2.1.2 require specific studies be run each and every calendar year. Requirements R2.2 is consistent with Requirement R2.1.1 in that it requires a specific run each and every calendar year. Requirement R2.3 does not require specific run every year but allows for current or past to support the Assessment; this is also true for Requirement R2.4.
8. Requirement R2.1.1 requires you to study years one "or" two and five. The SDT feels that requirement to run a peak load study for two of the years in the Near-Term Horizon is a minimum required for an adequate Planning Assessment. The SDT felt that the Year One or two study should provide operations with the best information to transition to the Operating Horizon. The year five planning study is the first near term study from the long term set. Five years is a short time if unexpected new facilities are required. Areas with faster growth should appreciate the extra studies.
Requirement R2 includes a statement which states that "Planning Assessment shall use current or past studies." Requirement R2.1 allows for the Planning Assessment to be "…supplemented with qualified past studies…" If you have past studies which are applicable, the standard allows for such.
9. The SDT believes that the present draft language captures the same concept.
10. The SDT agrees with your recommendation and has revised Requirement R.2.6.1 to show a five year shelf-life.

R2.6.1. For steady state, short circuit, or System Stability analysis: ~~if the study is less than three years old and no material changes have occurred to the System in the intervening period. Material changes include topology changes, generation additions/removals, and market~~

Q43			
Commenter	Yes	No	Comment
~~structure changes~~ the study shall be five calendar years old or less. 11. The SDT concern was that such structure changes could potentially affect dispatch scenarios, or even transfers being modeled – both of which are sensitivities. 12. Requirement R8 (old Requirement R6) which focuses on the distribution of the Planning Assessment results among affected entities was specifically added to allow some level of peer review and provide some level of confidence that the proposed plan could in fact be completed to meet the reliability objective. Requirement R2.7.1.1 is complementary to Requirement R8 (old Requirement R6) Initiation dates are only required in the near term since longer term plans tend to move in time and only have general scheduling associated with them. Typically the date would indicate when significant resources will begin to be employed. This covers any project proposed for the near term. The SDT continues to believe that providing the expected project intiation date of System improvements provides useful information to neighboring entities. The SDT believes that initiation dates are required for near-term corrective action plans to give an indication that the corrective action plans can be implemented in time. 13. After careful consideration, the SDT agrees that if the standard is going to include "committed" and "proposed", they will need to be defined. However, the SDT agrees that it will be very difficult to develop definitions of "committed" and "proposed" that are applicable for the entire continent. Therefore, based on several comments and consideration by the SDT, the SDT has modified Requirement R2.7.1 and deleted Requirements R2.7.2 through R2.7.4. The standard now refers to "actions" needed to achieve required System performance without trying to distinguish between "committed" and "proposed" projects. It also lists examples of what is intended by the word "actions". **R2.7.1**. ~~Identify~~ List System deficiencies and the associated actions needed to achieve required System performance. ~~including Transmission and generation improvements, DSM, new technologies, or Operating Procedures including the duration of interim Operating Procedures.~~ Such actions may include installation, modification, retirement, or removal of Transmission and generation Facilities and any associated equipment such as protective or Special Protection Schemes, rate applications, DSM, or other initiatives, new technologies, or Operating Procedures including how long the Operating Procedures will be needed as part of the Corrective Action Plan. R6.2.2 - Whereas the SDT agrees that the suggested re-phrasing has merit, the proposed rephrasing is potentially problematic because "Long-Term Planning Assessment" is not a defined term. 14. The intent is that what is modelled is true to real-life expectations. Changes to MOD are not within scope. 15. The SDT feels that this is an appropriate requirement based on understanding of existing practice within North America. 16. That was the intent of this requirement. 17. The SDT has received numerous comments in support of these requirements. Requirement R3.2.2 is included to provide clarity on simulations in response to FERC Order 693. Relay Loadability is included to be clear that this factor must be taken into account in the planning studies. The SDT has not made changes in response to this comment. 18. The requirement concerning Consequential Load is to address FERC Order 693, which directs the ERO, among other things, to clarify footnote (b) in regard to Load loss following a single Contingency, specifying the amount and duration of Consequential Load Loss and System adjustments that are permitted after the first Contingency to return the System to a normal operating state. 19. Requirement R3.3.2.2 was changed to correct this discrepancy.			

Q43			
Commenter	**Yes**	**No**	**Comment**
R3.3.2.2 Following single Contingency events, ~~System adjustments other than shedding of firm Load or curtailment of firm transfers are permitted to meet performance requirements provided these adjustments can be accomplished within the time period allowed by the applicable time limited ratings.~~ Transmission configuration changes and redispatch of generation are allowed provided that all Facilities shall be operating within their Facility Ratings and within their thermal and voltage limits. 20. The reference to Table 1 will need to be included because Requirement R3.3.3 applies only to Steady State performance to distinguish this requirement from those in Requirements R4.5.1 and R4.5.2, which apply to Stability Performance. 21. The SDT agrees and has changed Requirement R3.5 **R3.5** Manual and automatic generation run-back/tripping is allowed as a response to a single ~~and~~ or multiple Contingenc~~ies~~y ~~as long as Facility Ratings are not exceeded.~~if the following conditions are met: **R3.5.1**. All Facilities shall be operating within their Facility Ratings. **R3.5.2**. Such action would not violate safety, equipment, regulatory or statutory requirements. **R3.5.3**. A sustainable, stable, operating condition is maintained 22. The SDT attempted to make this language similar to the extent possible. 23. The SDT believes that Requirement R2.7 covers this matter for Steady State but will discuss this matter further for subsequent drafts. 24. The intent of this requirement is to model the system as it would be operated and high speed reclosing would therefore be included. 25. The SDT believes that your comment has already been addressed by the words "affected entities" (now directly adjacent Transmission Planner) in Requirement R8 (old Requirement R6). Impacted is difficult to measure. In addition, the purpose of the "peer review" is to help ensure that a Corrective Action Plan is inclusive and some potentially impacted areas are not overlooked. 26. As noted in the BPA 7 answer, these events are included as Extreme Events to be consistent with FERC Order No. 693 and because such events could dramatically impact the reliability of the interconnected network. 27. The SDT agrees that the language for P8 needs to be clarified with regard to the 300 kV threshold. As a result, the SDT has made changes to the standard to clarify the 300 kV threshold. 28. The SDT agrees and has changed the standard to clarify that the faults being simulated are permanent faults. 29. The SDT has made the recommended change in P7. 30. This item was deleted. 31. Transmission is a defined term in the NERC Glossary as is System.			
City Utilities/Springfield	☑		Requirement R3.2: Contingency analyses representing only the removal of elements that System protection is expected to automatically disconnect which includes Consequential Load Loss is a reduction in reliability. Excluding the contingency analyses between all elements including those with manually operated switches will result in lowering existing reliability standards and ultimately limit the load restoration capabilities of the BES. Minimum performance standards should be adhered to for all applicable contingencies including outages of elements that may be switched both automatically and manually taking into account controlled load curtailment that is allowed. Requirement R3.3.2.1: The expected duration of Consequential Load Loss was noted to be required in a Planning Assessment following a single Contingency without any indication as to the assumed

Q43			
Commenter	**Yes**	**No**	**Comment**
			cause of the outage. The basis for such estimations of time needs to be defined such that these assessments are developed on a consistent basis.
Response: 1. One of the drivers for assessing the System performance based on removing all elements that System Protection is expected to disconnect (breaker-to-breaker) upon clearing the fault is to address concerns expressed in interviews by NERC TIS and FERC. The premise is that the assessment must examine all phases after a fault occurs. This includes the initial response of the System immediately after the fault clears, as well as after any existing or planned switching actions, such as the ones to which the commenter refers. 2. The proposed TPL-001-1 standard does not place limits on the amount of Consequential Load Loss or the outage duration. In Requirement R.3.3.2.1 the Consequential Load loss (expected maximum demand and expected duration) following a single Contingency shall be identified in the Planning Assessment. The SDT believes it is necessary to obtain this data to evaluate the future need for and establish a basis to define maximum amounts of Consequential Load Loss that would be allowed.			
CPS Energy	☑		1. R1.1. This is a modeling requirement and should be incorporated into the modeling (MOD) standards. Remove or modify this requirement to eliminate any redundancy with existing modeling standards. If certain subrequirements of R1.1 of TPL-001 are not currently requirements in a MOD standard, it should be questioned, then, whether or not these specific subrequirements are actually needed in ANY standard. 2. R2.2. ERCOT does not study the Long-Term Planning Horizon because ERCOT does not believe it is necessary. Remove or modify to state "as applicable by region." 3. R2.7.1.1 Duration of projects vary between Transmission Owners and statement of the project initiation date has no value to reliability. 4. R3.3.2 Relay loadability is considered as an MLSE component to the circuit rating as identified in MOD-008 and MOD-009. 5. R3.3.2.1. The requirement to identify consequential load loss for single contingencies in the Planning Assessment is unnecessary and burdensome and should be removed. 6. R3.6 Automatic generation tripping should be allowed for radial-connected wind resources. 7. Table 1 - P6.1, P6.3, and P6.4 These events are triggered by a single credible event and should not allow for loss of Non-Consequential Load. 8. Table 1 - P9.1 Loss of double-circuit tower lines are triggered by a single credible event and should not allow for loss of Non-Consequential Load. 9. Table 1 and Table 2 - P4, P5, P8, and P9. Including all combinations of two components (generator, Transmission circuit, transformer) with generation adjustments is impractical and overly

Q43			
Commenter	**Yes**	**No**	**Comment**
			burdensome. For multiple contingencies, include only double-circuit tower lines and the two components (generator, Transmission circuit, transformer) that would be cleared by breaker failure.

Response: 1. The SDT believes some additional modeling requirements not presently contained in the MOD standards are necessary for Transmission planning purposes. The SDT has revised these requirements based on industry comments to eliminate redundancy with existing MOD standards with the intent that these requirements will be removed from the TPL standard when they are incorporated into the MOD standards at a later date.
2. The SDT believes that the purpose of the long term horizon is to uncover any unexpected trends that might appear after the first five years. Although planning may not be performed as stated in the draft standard, the standard does provide a level of confidence that unusual or unexpected trends or events could always affect the current planning process and allows for planners to propose potentially long term economic solutions that could not be envisioned in the shorter term.
3. Requirement R8 (old Requirement R6) which focuses on the distribution of the Planning Assessment results among affected entities was specifically added to allow some level of peer review and provide some level of confidence that the proposed plan could in fact be completed to meet the reliability objective. Requirement R2.7.1.1 is complementary to Requirement R8 (old Requirement R6) Initiation dates are only required in the near term since longer term plans tend to move in time and only have general scheduling associated with them. Typically the date would indicate when significant resources will begin to be employed. This covers any project proposed for the near term. The SDT continues to believe that providing the expected project intiation date of System improvements provides useful information to neighboring entities. The SDT believes that initiation dates are required for near-term corrective action plans to give an indication that the corrective action plans can be implemented in time.
4. The SDT has received numerous comments in support of these requirements. Requirement R3.2.2 is included to provide clarity on simulations in response to FERC Order 693. Relay Loadability is included to be clear that this factor must be taken into account in the planning studies. The SDT has not made changes in response to this comment.
5. The requirement concerning Consequential Load is to address FERC Order 693, which directs the ERO, among other things, to clarify footnote (b) in regard to Load loss following a single Contingency, specifying the amount and duration of Consequential Load Loss and System adjustments that are permitted after the first Contingency to return the System to a normal operating state.
6. The SDT has made a change to allow for tripping under certain conditions.

R3.5. Manual and automatic generation run-back/tripping is allowed as a response to a single ~~and~~ or multiple Contingenc~~ies~~y ~~as long as Facility Ratings are not exceeded.~~if the following conditions are met:
R3.5.1. All Facilities shall be operating within their Facility Ratings.
R3.5.2. Such action would not violate safety, equipment, regulatory or statutory requirements.
R3.5.3. A sustainable, stable, operating condition is maintained.

7. These events are on lower voltage facilities on the BES. The probability of the outage of one breaker or a bus section is much lower than the probability of a single Transmission line outage. Therefore, the SDT has drafted the standard to permit loss of Non-consequential firm Load or interruption of firm Transmission service for the loss of a lower voltage breaker or lower voltage bus section. The majority of the commenters in response to the first posting of the standard agreed with the SDT's approach in this regard.
8. This event is a lower probability event, for example the probability of the outage of one common tower event is much lower than the probability of a single Transmission line outage. Therefore, the SDT has drafted the standard to permit loss of Non-Consequential firm Load

Q43			
Commenter	**Yes**	**No**	**Comment**
or interruption of firm Transmission service for the loss of a common tower event. The majority of the commenters in response to the first posting of the standard agreed with the SDT's approach in this regard. 9. The analyses of the combinations of two components are required by the existing TPL standards. The SDT understands the concerns in the potential increase in work load. Requirement R3.3.3 requires evaluation of only those Planning Events (involving multiple Contingencies) that are expected to produce more severe System impacts.			
Entergy	☑		1. Significant Increase in Study Activity Workload on Transmission Planners The increase in both steady state and dynamic studies required to ensure compliance with the proposed standards will result in increased costs and staff additions. The more specific format and additional requirements of the "Corrective Action Plan" require the TP to provide a significant amount of documentation for each deficiency identified by the studies. Also, R3.2 requires that the studies simulate the protection scheme for all events. The current software tools cannot automate these studies for bus faults and breaker failure events, requiring each scenario to be studied manually. Additionally, experienced staff capable of performing analyses as described in the proposed standard have become increasingly difficult to find and retain and the talent pool of people with these skills has recently become depleted to alarming levels. 2. Implementation Plan Given the intent of the proposed standard to encourage large scale investment in the EHV system, full implementation will take years, perhaps decades. Acquirement of right-of-way for new EHV lines has become increasingly difficult in recent years and increasingly expensive due to the environmental and social issues associated with new Transmission. Legal, regulatory, and other difficult issues often take several years to navigate, even for 115kV lines. The Implementation Plan timeframe, if set too short, would be unduly burdensome on Transmission Owners, extraordinarily expensive, and possibly unachievable. The proposed implementation plan should include provisions for those cases where viable solutions simply can not be implemented in time due to circumstances beyond the control of Transmission owners. We recommend a minimum of 15 years for the transition. 3. Design and Construction Constraints Even if right-of-way and other legal and regulatory hurdles are cleared, and the capital funding for such a tremendous level of investment was not an issue, the other resources required to actually construct the projects are equally difficult and costly to secure. Raw material prices on commodities like copper and steel have skyrocketed in recent years. Additionally, the skilled labor and Engineering resources are constrained with labor rates almost keeping up with other resource costs. Overall project costs have more than doubled over the last 7-10 years. Recent press releases concerning new generation being planned and then scrapped due to the rapid escalation of project costs are public evidence of this. The inflationary mark-up is impossible to estimate but much less will be built with the same capital investment than is currently envisioned due to the competition for both human and material resources.

Q43			
Commenter	**Yes**	**No**	**Comment**
			4. Cost-Benefit Analysis It will be extremely expensive, requiring unprecedented levels of capital investment in Transmission facilities, to become compliant with a proposed standard without any evidence that such increased requirements are justified. Before the standard comes to official vote, it would be prudent for a cost-benefit analysis to be performed to determine if the reliability improvements justify the huge expenditures certain under the proposed standard. A clear understanding of the reliability benefits and economic costs to customers is critical prior to final action on the proposed standard. While tightening standards will result in a more secure system, overbuilding the system at a significant cost to withstand more severe but less likely contingencies may not be in the public interest. Additionally, it is unclear whether the propose standard is in conflict with section 215 of the Energy Policy Act of 2005. 5. System Adjustment Clarification The term "System Adjustment" as outlined in the tables should be better defined. The use of generation for redispatch may have nuances which preclude or otherwise limit their use for studies. Perhaps some clearer guidelines on what is allowed such as committing units, de-committing units, firm and non-firm use, etc. would facilitate transparency and coordination between Transmission Planners. 6. Transmission Service Evaluation Another concern is that the proposed standard appears to be inconsistent with the current requirements for evaluating firm transmission service, generally based on an N-1 standard. To the extent this standard is adopted as proposed, the new standard would also need to be incorporated into the standards against which new transmission service is granted.

Response: 1. Much of the work that the commenter sites as additional is something that is required by the current approved standards. For example, Requirement R3.2 requires that the planner not just "outage" each power flow model element but reflect outage conditions that truly exists in the real world, e.g., a fault on a three terminal circuit should be modeled as three power flow elements being removed from the case to reflect actual operation. The concepts of "re-testing" and "committed" projects have been removed from the Corrective Action Plan so that only the value added concept of listing the actions necessary to achieve the desired level of system performance remains. Although sensitivity cases are now specifically required, they were considered by many utilities to determine the level of risk that remained after the addition of the proposed reinforcement projects.
2. The SDT understands that there are extended transitionary issues associated with responsible entities becoming compliant with the new standard. The SDT plans to draft an extended implementation plan to accommodate such issues. The plan will be provided for the third posting of the standard.
3. The SDT is unsure of the intent of the comment. While it is becoming increasingly difficult to build new Facilities, the fact is not in itself a valid reason for not complying with the performance requirements of this standard. The responsible entity is required to annually assess the compliance with the performance requirements and to have a Corrective Action Plan when the assessment indicates an inability to meet the

Q43			
Commenter	**Yes**	**No**	**Comment**
performance requirements. A Corrective Action Plan does not necessarily result in building new Facilities. If it is impossible to correct the failure then a mitigation plan should be submitted for approval. 4. The SDT shares your concern on the benefits and cost to meet the proposed increase in some requirements. The SDT and a large number of commenters felt that the proposed changes in requirements were reasonable and will help improve reliability. The SDT is including in the next draft, a schedule for compliance in the Implementation Plan which should give some time for entities to become compliant with the new requirements. The TPL standard is not a standard "to build"; it is a standard to plan for System reliability. The individual entities have the option of deciding how best to meet the growing load and associated reliability needs. 5. The Transmission performance tables have been modified to bring clarity to the Contingencies required for performance studies and when Non-Consequential Load Loss is permitted to meet requirements. The use of manual or automatic System adjustments to revise System topology as well as generation redispatch is always permitted so long as the actions can be performed while adhering to Facility Ratings. 6. The provisions for an entity to grant Transmission service in the US is part of the entity's OATT and is beyond the scope of this standard.			
Exelon	☑		1. There should be more specific requirements for the long-range studies. The P requirements should be run on the long range case but corrective action plans need only be proposed and not committed. 2. R3.3.2.1 appears to require consequential load loss identification including peak demand and duration. however there is no requirement addressing the use of this information. Why is this required? 3. R3.3.3 should be clarified. It is our interpretation that not each of the P contingencies be studied if sufficient rationale is provided to determine the most critical. It would seem that each of the planning category events would need to be addressed. 4. What is the expectation regarding sensitivity analysis in R2.1.3 and R.2.4.3 if there are no performance requirements defined? 5. It should be clear in the performance tables that the 'event column' contingencies are logically 'or' events.
Response: 1. The performance requirements apply to both the "near-term" and the "long-term"assessments. Compliance with the performance requirements should be documented through assessments and a Corrective Action Plan. The SDT has modified the requirements in the new draft to remove the phrase "committed projects." 2. The requirement concerning Consequential Load is to address FERC Order 693, which directs the ERO, among other things, to clarify footnote (b) in regard to Load loss following a single Contingency, specifying the amount and duration of Consequential Load Loss and System adjustments that are permitted after the first Contingency to return the System to a normal operating state. 3. Requirement R3.3.3 requires evaluation of only those Planning Events (involving multiple Contingencies) that are expected to produce more severe System impacts. Requirement R3.3.3 also requires that the rationale for the Contingencies selected for evaluation shall be available as supporting information and shall include an explanation of why the remaining Contingencies would produce less severe System results. 4. The SDT is providing some guidance on what needs to be included in sensitivity studies while not being totally prescriptive. Requirements			

Q43			
Commenter	**Yes**	**No**	**Comment**
R2.1.3 and R2.4.3 have been modified to require documentation of why the listed sensitivities were or were not selected for specific studies. Requirements R2.1.4 and R2.4.4 have been added to specifically state that the entity may consider additional sensitivities that are appropriate for its own System. The sensitivity studies do not in themselves establish the need for a plan, only the areas of the System for which the analysis is needed. **R2.1.3.** For each of the studies described in Requirement R2.1.1 and Requirement R2.1.2, sensitivity case(s) that stress the System with sensitivities that reflect one or more of the following conditions shall be run and documentation ~~with~~ of the technical rationale for ~~the selected sensitivity(ies)~~ why each of the conditions was or was not selected shall be supplied: **R2.1.4**. In addition to those sensitivities mentioned in Requirement R2.1.3, any other sensitivities, as deemed appropriate by the Transmission Planner or Planning Coordinator for their individual systems, shall be run and documentation of the technical rationale for why each was selected shall be supplied. **R2.4.3**. For each of the studies described in Requirement R2.4.1 and Requirement R2.4.2, ~~S~~sensitivity case(s) that stress the System to reflect one or more of the following conditions shall be run ~~with documentation provided explaining the rationale for the selected sensitivity(ies)~~ and documentation of the technical rationale for why each of the conditions was or was not selected shall be supplied: **R2.4.4.** In addition to those sensitivities mentioned in Requirement R2.4.3, any other sensitivity, as deemed appropriate by the Transmission Planner or Planning Coordinator for their individual systems, shall be run and documentation of the technical rationale for why each was selected shall be supplied. 5. The SDT has made changes to clarify the table.			
FirstEnergy	☑		1. - R1. Load flow model submittal is redundant with various MOD standards and should not be required by this standard. To the extent any new requirements are introduced, we suggest that existing MOD standards be revised or new MOD standards be created as needed. 2. - R2 Organization of this requirement could be improved by grouping by Near Term and Long Term and then by steady state, short circuit, and stability requirements. 3. - R2.1 Too many annual studies are being required by this standard for the Near Term. We suggest limiting the current study year requirement be limited to one Near Term study. As written, it appears that this requirement forces a study for each of the 5 years, however the requirement should to be able to assess the entire 5 year period but not study each year. 4. - R2.1.1: As written, 2 studies are needed to meet this Near Term assessment requirement. It should be left up to the TO to determine the appropriate year in the short and long term periods. It's particularly odd given the fact that the TO could select year six for the Long Term study which would end up giving him back to back year 5 and 6 studies. The requirement should be to study one year in

Q43			
Commenter	**Yes**	**No**	**Comment**
			the 1 to 5 and one year in the 6 to 10 year periods. 5. - R2.2: This wording is very confusing. We are assuming that it means that you must continuously have to have a study that is less than one year old for the year 6 to 10 period. If so, wording needs to be clarified. 6. - R2.4.1: The idea of modeling induction motor loads is good in concept, be we question the practicality for an auditor to enforce. To date, a definitive way to model induction motor load does not exist. For example, what is the right mix for percent of load to be motor load or percent of large vs small induction motors. 7. - R2.6.1: Unless "material change" is specifically defined, the requirement is ambiquous and difficult to enforce consistently. What constitutes a "topology" change? 8. - R2.6.2: Same comment as R2.6.1 above, material change needs to be defined. 9. - R2.6.3. Same comment as R2.6.1 above, material change needs to be defined. 10. - R.2.7.1.1: We don't think it is reasonable nor necessary for the TO to provide an initiation date. No one should care when it was initiated as long as it is in service by the time it is needed. 11. - R2.7.1.2. Requiring an in-service year for the long-term may not be feasible for the initial study assessment. Based on the number of issues that could occur in the long-term horizon it may take a TP another 6 months to a year of more detailed area studies study to find the optimal solution(s) to resolve multiple system deficiences. In the long-term, only a list of SOLs problems along with year problem is initially anticipated should be required. 12. - R3.2.1: We suggest the following rewording "R3.2.1. Studies shall include the minimum steady state voltage limitations for all generators, and generators shall be simulated to trip for voltage below the minimum steady state limitation." 13. - R3.2.2: This is unnecessary in this standard. This is already addressed in the FAC standards dealing with equipment rating. Additionally, the proposed PRC-023 relay loadability standard addresses this concern. Alternatively, reword the requirement to say "if a relay is expected to trip because of an overload then the resulting facility shall be simulated in addition to the initiating event". 14. - R3.3.3. How do you know which events beyond single contingencies result in producing "more

Q43			
Commenter	**Yes**	**No**	**Comment**
			severe" impacts without running all? Either you test or you don't. We suggest some type of cyclical expectation for testing each of the less probable Planning Events, i.e. every three years each must be covered etc.the most critical 15. - R3.4 Same comment as R3.3.3, you need to test each to understand which produces the most severe impact. We suggest some type of cyclical expectation for testing each of the Extreme Events. The frequency of testing should be less often that the items covered in R3.3.3. It appears the only expectation is to consider some type of change to reduce or mitigate potential Cascade for Extreme Events. It should be clearly written that there in no mandatory expectation to remove the Cascade risk that may be associated with an Extreme Event. 16. - R4.5.1. Same comment as R3.3.3 (Steady-State) applies for this Stability requirement. 17. - R4.5.2. Same comment as R3.4 (Steady-State) applies for this Stability requirement. 18. - R4.6.1. We agree with the requirement but the SDT should assure consistency with data submittal requirements in the MOD standards. PERFORMANCE TABLES - General 19. In general, we feel the tables are overly complicated and difficult to follow. We suggest the SDT give consideration to merging the proposed tables back together to a single performance table. We also question why the team chose to leave the NERC A, B, C, D concept. The concept of Planning Events could reflect that NERC A, B & C categories must be met for Planning Events and that Category D are Extreme Events. Drastic deviation from the historical NERC performance classifications will require significant re-write of existing TP planning criteria documentation. 20. 300kV Level - It is confusing how the 300kV level requirements are placed within the tables. We suggest separate columns for performance requirements for 300kV and higher and below 300kV. This way, the same Planning Event could easily be reference on the same line and the expectations for each system level could be more readily determined. TABLE 1 - Steady-State Performance Table 21. We suggest that the "Initial Condition" column that is included in Table 2 - Stability Performance Table - also be added to Table 1. This would allow each to have the same look and feel, and would cut down on the lengthy wording such as: "Loss of a generator followed by System adjustment followed by loss of a generator" 22. Bullet 1 - "Equipment Ratings should not be exceeded." It is not clear which equipment rating

Q43			
Commenter	**Yes**	**No**	**Comment**
			would be the applicable rating. 23. Bullet 3 - "Voltage instability, cascading outages and uncontrolled islanding shall not occur". These terms require a definition to ensure consistent interpretation and application from an auditor. 24. It is not clear why stuck breaker items are distinguished from an internal breaker fault. Each will create the same resulting system condition. 25. Why are non-bus tie breakers treated separate from other breakers? 26: P2: Why is a stuck breaker listed as a single contingency? 27. P8: What about a transformer followed by a line outage? Why not just simply list the components and say any combination of the two. 28. P9: "Loss of a transformer followed by a System adjustment with a spare transformer available followed by the loss of another transformer." It is not clear why this is needed? Wouldn't the spare be a possible mitigation of the initial contingency? Extreme Event Descriptions: 29) For item 1, it's understood that for the N-2 items listed, the "extreme" aspect is that the second event occurs without system adjustment. However, we question whether a two generators simultaneously out should be considered an extreme condition. 30) We agree with the items listed in item 2 as they line-up well with the prior category D events from the existing TPL standards performance table. 31) Many of the classifications listed in item 3 are subjective and can not be tested. We propose that these items should not be requirements. TABLE 2 - Stability Performance Table 32. With regard to Table 2, much of the proposed testing required for stability are not necessary from a reliability standpoint. Some test items are included that are not, at least in the eastern interconnection, going to impact stability any worse than the relatively simpler requirements of the present standards. By testing single phase local faults in conjunction with a stuck breaker and remote faults with back up clearing for each line emanating from a power plant, you'll cover 99% of your stability issues. Also, this table does not adress relay scheme failures (back up clearing) that were

Q43			
Commenter	**Yes**	**No**	**Comment**
			covered in the present standard and which can have a significant impact on the stability of a unit/system. 33. Under the "Event Column", it is inconvenient to need to look back and forth on the table to reference other events, the items should be written in full text. For example, under P4 it is indicated that the "Initial Condition" is a single generator out and the "Event Column" indicates apply "P1.2 Contingency, P1.3 Contingency, etc." These items should be written out so that the user of the Table does not need to flip back and forth to see what the referenced contingencies entail. 34. Regarding P1, why require dynamic analysis for an unexpected loss of the listed equipment without a fault? The fault iniated outage will always be worse. 35. As stated above for Table 1, It is not clear why stuck breaker items are distinguished from an internal breaker fault. Each will create the same resulting system condition. 36. P5, P8, P9: The analysis suggested to run these multiple contingencies in dynamics would be extremely time consuming and produce little value. We suggest that the steady-state anlysis be used to screen those contingencies which show the potential to cause system cascade and then run dynamic analysis on those items. 37. As stated for Table 1 above, "Loss of a transformer followed by a System adjustment with a spare transformer available followed by the loss of another transformer." It is not clear why this is needed? Wouldn't the spare be a possible mitigation of the initial contingency? 38. In the Notes section shown under Table 2, for item "ii", we are not sure this could be accomplished as our relay models are not reflected in our data set used for dynamics simulation analysis. Two separate and unique software tools house the data and we believe this to be common among most companies.

Response: 1. The SDT believes some additional modeling requirements not presently contained in the MOD standards are necessary for Transmission planning purposes. The SDT has revised these requirements based on industry comments to eliminate redundancy with existing MOD standards with the intent that these requirements will be removed from the TPL standard when they are incorporated into the MOD standards at a later date.
2. Changing the order or sequence of the specific requirements has been discussed by the SDT but the decision was to retain the current sequence to avoid more confusion among the commenters. The benefit of changing the sequence did not outweigh the benefit of continuity at this point. The commenter is welcome to make a specific proposal for change in the next round of comments.
3. Requirement R2.1 does not require a study for each of the five years. The Planning Assessment shall cover the five year period. Requirements R2.1.1, R2.1.2, and R2.1.3 cover peak loading, off-peak loading, and sensitivities. The SDT feels that the requirement to run a peak load study for two of the years in the Near-Term Horizon is a minimum required for an adequate Planning Assessment. The SDT felt that

Q43			
Commenter	Yes	No	Comment
in Requirement R2.1.1 the Year One or two study should provide operations with the best information to transition to the operating horizon. The year five planning study is the first near term study from the long term set. Five years is a short time if unexpected new facilities are required. Requirement R2 includes a statement which states that "Planning Assessment shall use current or past studies." R2.1 allows for the Planning Assessment to be "…supplemented with qualified past studies…" If you have past studies which are applicable, the standard allows for such. 4. The SDT feels that the requirement to run a peak load study for two of the years in the Near-Term Horizon is a minimum required for an adequate Planning Assessment. The SDT felt that in Requirement R2.1.1 the Year One or two study should provide operations with the best information to transition to the operating horizon. The year five planning study is the first near term study from the long term set. Five years is a short time if unexpected new facilities are required. Requirement R2 includes a statement which states that "Planning Assessment shall use current or past studies." R2.1 allows for the Planning Assessment to be "…supplemented with qualified past studies…" If you have past studies which are applicable, the standard allows for such. 5. The intent of Requirement R2.2 is to study one year in the five year period each year. The timing of annual planning studies may mean that the most recent study is slightly over one year old in some years. Over time, the entity should have a portfolio of studies for the long term period as the basis to confirm the assessment of the period. 6. The SDT has softened the wording of Requirement R2.4.1 to address this issue. **R2.4.1**. System peak Load for one of the five years. For peak System Load levels, ~~the~~a Load model shall ~~include the dynamic effects~~ be used which appropriately represents the dynamic behavior of Loads, including consideration of the behavior of induction motor Loads. 7, 8, and 9. The SDT agrees this is difficult and has modified the requirement to add some clarity. Most of the studies now have a backstop age of five years where they are no longer useable. **R2.6.** Past studies may be used to support the Planning Assessment if they meet the following requirements: **R2.6.1**. For steady state, short circuit, or System Stability analysis: ~~if the study is less than three years old and no material changes have occurred to the System in the intervening period. Material changes include topology changes, generation additions/removals, and market structure changes~~ the study shall be five calendar years old or less. **R2.6.2**. For steady state, short circuit ~~analysis~~, Generating Plant Stability, or System Stability analysis: ~~if the study is less than five years old and no material changes have occurred to the System in the intervening period.~~ the study shall not include any material changes, such as, generation or Transmission additions/removals, or topology changes that have occurred in the intervening period and would impact the study area. **R2.6.3**. ~~For plant and System Stability analysis: until material changes in the System make the study no longer valid. Material changes in the system include the addition of a Transmission Line or a generator.~~ 10. Requirement R8 (old Requirement R6) which focuses on the distribution of the Planning Assessment results among affected entities was specifically added to allow some level of peer review and provide some level of confidence that the proposed plan could in fact be completed to meet the reliability objective. Requirement R2.7.1.1 is complementary to Requirement R8 (old Requirement R6) Initiation dates are only required in the near term since longer term plans tend to move in time and only have general scheduling associated with them. Typically the date would indicate when significant resources will begin to be employed. This covers any project proposed for the near term. The SDT			

Q43			
Commenter	Yes	No	Comment
			continues to believe that providing the expected project intiation date of System improvements provides useful information to neighboring entities. The SDT believes that initiation dates are required for near-term corrective action plans to give an indication that the corrective action plans can be implemented in time. 11. Requirement R8 (old Requirement R6) which focuses on the distribution of the Planning Assessment results among affected entities was specifically added to allow some level of peer review and provide some level of confidence that the proposed plan could in fact be completed to meet the reliability objective. Requirement R2.7.1.1 is complementary to Requirement R8 (old Requirement R6) Initiation dates are only required in the near term since longer term plans tend to move in time and only have general scheduling associated with them. Typically the date would indicate when significant resources will begin to be employed. This covers any project proposed for the near term. The SDT continues to believe that by providing the expected project intiation date of System improvements provides useful information to neighboring entities. The SDT believes that initiation dates are required for near-term corrective action plans to give an indication that the corrective action plans can be implemented in time. 12. Requirement R3.2.1 was meant to allow the Planning Coordinator and the Transmission Planner the discretion on the treatment of the generators that may exceed their maximum or minimum voltage limits. 13. The SDT has received numerous comments in support of these requirements. Requirement R3.2.2 is included to provide clarity on simulations in response to FERC Order 693. Relay Loadability is included to be clear that this factor must be taken into account in the planning studies. In addition, Requirement R.3.2.2 only requires the studies to consider relay loadability and identify how loadability is treated in the steady state simulation, not to study relay loadibility. The SDT has not made changes in response to this comment. 14, 15, 16, and 17. The SDT believes it is appropriate for the Transmission Provider/Planning Coordinator to decide how to determine the events that result in the "more severe" impacts. The SDT believes that the standard as written is clear and does not indicate a "mandatory expectation to remove the Cascade risk" for Extreme Events. For example, Requirement R3.3.1 indicates that performance criteria shall be met only for System normal conditions and for Planning Events in Table 1. Requirement R3.3.1 does not include the requirement that the performance criteria be met for Extreme Events. 18. The SDT has added requirements R9 through R13. **R9.** Each Distribution Provider shall provide its respective Planning Coordinator with modeling information for real and reactive load forecast data for each year of the Transmission planning horizon at Transmission nodes based on expected or historical System performance including the expected mix of industrial, commercial, and residential Loads, within ninety days of a request for such information. **R10**. Each Transmission Planner shall provide its respective Planning Coordinator with modeling information for Firm Transmission Service data, Interchange Schedules and resources required to supply Load for each of its Balancing Authorities for each year of the Transmission planning horizon, within ninety days of a request for such information. **R11**. Each Transmission Owner shall provide its respective Planning Coordinator with modeling information for known planned outages and long-term outages for Transmission equipment for each year of the Transmission planning horizon with consideration given to spare equipment strategy, within ninety days of a request for such information. **R12**. Each Generator Owner shall provide its respective Planning Coordinator with modeling information for known planned outages and long-term outages for generation equipment for each year of the Transmission planning horizon, within ninety days of a request for such information. **R13**. Each Resource Planner shall provide its respective Planning Coordinator with the modeling information for new planned facilities for each

Q43			
Commenter	Yes	No	Comment
year of the Transmission planning horizon including but not limited to generators, Reactive Power devices, and new technologies, within ninety days of a request for such information 19 and 20. The majority of commenters support the development of the two tables as opposed to the single table in the existing TPL standards. Further, the SDT believes that the two tables provide the ability to clarify issues associated with Stability performance and evaluation requirements versus steady-state performance and evaluation requirements. These issues were expressed by commenters during the development of the SAR that initiated the re-write of the TPL standards. By the same token, comments were expressed during the development of the SAR about the need to consider significantly changing the classification of outages to these categories and even to consider eliminating the categories. The SDT took the approach of eliminating the categories in order to concentrate on defining the performance requirements individually for each event as appropriate. The SDT does not see a need at this time to revert to the previous classifications. The SDT has made changes to the tables to clarify the performance and evaluation requirements as the SDT agrees with the commenter that further clarification from the standard issued in the first comment period was required. The SDT agrees with the commenter concerning the need for clarification of the 300 kV performance requirements and, as a result, made changes to the standard intended to accomplish this purpose. 21. The SDT has implemented the suggestion to add an initial condition column to Table 1. 22. The SDT notes that Equipment Ratings are covered in the FAC standards and are set by the Transmission Owner. The SDT does not see the need to add any further requirements with regard to Equipment Ratings. 23. Definitions for cascading and stability are included in the NERC Glossary. Further uncontrolled islanding, while not defined, is a common term that is well understood. The SDT does not propose to improve the definitions for Cascading and Stability or propose a new definition for cascading outages and uncontrolled islanding. The SDT believes that while it may be helpful to either develop a voltage instability definition or else specify performance requirements for voltage instability, there are not generally accepted performance requirements for voltage instability across NERC making it difficult for the SDT to write a voltage instability performance requirement at this time. For example, it has been found that an acceptable margin for voltage Stability varies bus to bus and therefore, is not suitable for a general instability requirement on a PV curve or alternative. There are a number of IEEE papers (e.g., P. Kundur, J. Paserba, V. Ajjarapu, G. Anderson, A. Bose, C. Canizares, N. Hatziargyriou, D. Hill, A. Stankovic, C. Taylor, T. V. Custem, V. Vittal, "Definition and Classification of Power System Stability", IEEE Transactions on Power Systems, vol. 19, no. 2, pp. 1387 – 1401, May 2004) that provide descriptions of voltage instability. It is important to understand what events are being modeled even when conducting steady state studies so as to ensure that studies are being conducted recognizing the FERC indicated in paragraph 1707 of Order No. 693 that planning assessment "faithfully duplicate what will happen in the actual power system and not a generic listing of outages." As a result, the SDT is not proposing to make changes to the standard in response to this comment. 24. The SDT feels that the resulting conditions are not the same. Stuck breaker is described in the notes in the tables. An internal fault is a single Contingency but a stuck breaker is not. 25. The reason for separate treatment of Non-Bus-tie Breaker and Bus-tie Breaker is that there are different System consequences for the 2. 26. The SDT agrees that a stuck breaker is not a single Contingency. It requires a fault-initiated Contingency followed by the failure of the breaker or the System Protection to operate properly. As a result, the stuck breaker is a lower probability Contingency. The SDT has changed the identification of the outage in the table. 27. The SDT agrees with this suggestion and has made the change to the table. 28. P9.6 was an attempt to include outages involving long lead time equipment considering spare equipment strategies in the table as			

Q43			
Commenter	**Yes**	**No**	**Comment**
directed by the FERC in Order No. 693. The SDT has deleted P9.6 and included this consideration in Requirement R11 of the second draft of the standard to address this issue. 29. Whether two generators out without System adjustment in between is an event which severely stresses the System would depend on the individual System under study; the SDT believes it is appropriate to not include this as a Planning Event and therefore has not revised the table as suggested. 30. Thanks for the support. 31. With regard to the comments about the Extreme Events in Item 3, the SDT notes that in Order No. 693, paragraph 1834, the FERC gave examples of Extreme Events and Item 3 is consistent with paragraph 1834 in the FERC order. See the response to BPA 7 for more details. Further, the SDT notes that these events dramatically impact the reliability of the interconnected network and are logical extreme events for which the probability and consequences should be evaluated when considering ways to make the transmission system more robust with operating procedures and/or system improvements that are reasonable in cost in comparison to the probability and consequences of the extreme event. The SDT did not change the standard with regard to these comments about Extreme Events in Item 3. 32. The SDT believes that all Stability requirements are necessary for reliability based on an understanding of current practices within North America. Protection systems will be addressed in subsequent versions. 33. The SDT has completely re-formatted the tables due to industry comments. 34. The SDT agrees and has made the change to the table. 35. The SDT feels that the resulting conditions are not the same. Stuck breaker is described in the notes in the tables. An internal fault is a single Contingency but a stuck breaker is not. 36. The SDT believes that Requirement R5.5.1 provides the distinction you are looking for. 37. Spare terminology has been deleted. 38. The intent of the note is the system must meet performance and that the loss of any generator is not greater than your Contingency reserve. You can simulate relay models using other techniques.			
FPL	☑		1. General Comment: NERC Standards TPL 001-0 through TPL 004-0 are approved standards that only required modifications pursuant to FERC Order 693. In this proposed draft standard TPL 001-1 the Standard Drafting Team (SDT) has far exceeded the recommendations suggested by FERC in that Order as well as created unnecessary confusion. FPL believes that the SDT's decision to combine NERC Standards TPL 001-0 through TPL 004-0 into one standard was not a specific requirement by FERC Order 693 and may not have been a good decision by the STD, therefore it should be reconsidered after reviewing all of the comments. At a minimun, the team should somehow clearly demonstrate changes in the standard's wording and required performance levels as compared to the existing standards. The new proposed draft of TPL-001 creates unnecessary confusion and interpretation of new ambiguous language, which is inconsistant with the stated objectives, instead of providing clarity to the standards. As an example of how to provide additional clarity, the existing standards have unnecessary redundancy in the tables, for example, it would have been nice to clean up (clarify) the tables such that the table for TPL-001 would only contain the performance criteria for Category A, with footnotes only applicable to that category, clarified as directed by FERC in Order 693. Similarly, TPL-002 would only contain performance criteria for Category B, and so on.

Q43			
Commenter	**Yes**	**No**	**Comment**
			2. In addition to combining the standards, the SDT has significantly changed contingency specifications and required performance levels. In many cases the changes represent a very significant increase in required performance standards that will require unjustified major capital expenditures and/or reductions in ATC. This also could have an adverse impact on commercial transactions. In other cases, the performance criteria are not clearly defined, such as the timing between multiple contingencies, and the level of readiness of the system after Planning Events. The benefits from the additional performance requirements have not been identified in the proposed standard. Is there a planned phased in approachto move from the existing standard to the new proposed standards. If so, what is it? 3. Finally, the SDT has chosen to eliminate the footnotes in the current standards, contrary to the direction of FERC in Order 693 to "clarify" the footnotes. The purpose of the footnotes is to further explain terms in the tables, provide guidance in interpreting the expected performance criteria, and specify any exceptions to the criteria. Footnotes also serve the purpose of keeping the standard concise by eliminating repetitiveness. Specific comments on the Draft Standard Performance Criteria 4. The performance requirements table should clearly define what the initial state of the system is assumed to be before any Planning Events, and what the state of the system is assumed to be after the Planning Event. For example, P1 (single contingency) events: assuming that the system is to be compliant, the state of the system prior to the event must be "secure" such that the event could occur and there is no interruption of firm transfer or loss of load, Equipment Ratings are not exceeded, System steady state voltages and post-transient voltage deviation are within acceptable limits. However, the system is not as it was before the event. The system could be described as "normal" but perhaps not "secure". If the requirement is that the system must also be "secure" after the event, then the standard must clarify what is allowed for "system adjustments" after the first Planning event to prepare for the next. FERC Order 693 directed the ERO to modify the second sentence of footnote (b) to clarify that manual system adjustments other than shedding of firm load or curtailment of firm transfers are permitted to return the system to a normal operating state after the first contingency. However, in order to bring the system to a secure state, as is necessary for the second contingency of a category C3 or C5 event, footnote (c) allows curtailment of firm transfers, and FERC Order 693 only required footnote (c) to be clarify the term "controlled load interruption", leaving the curtailment language intact. The implication of this interpretation is critical to peninsular Florida. The Category B loss of one 500 kV line from Florida to Georgia is sustainable, such that the system is "normal" after the event. However, in order to be prepared for the next contingency, (the loss of the second 500 kV line), firm transfers must be curtailed. (Interruption of Firm Transfer) Without the ability to curtail firm transfers, a "super-firm" priority of service is created,

Q43			
Commenter	**Yes**	**No**	**Comment**
			which is unjustified. Comments on New Performance Tables: 5. The draft TPL standard represents a major change in the Table 1 contingency definitions and required performance levels. 6. Table 1 Contingencies C1 and C2 are being moved to the single contingency category. While C1 and C2 represent single element outages, their probability of occurrence is much lower than the other Category B contingencies and they do not belong in the single contingency performance requirements group. 7. Footnote (b) which permits, as a limited exception in unique circumstances with a sound rational basis, some localized load reduction for single contingencies, has been removed. This is a very significant change for some utilities. Footnote (c) which permits load shedding and curtailment of firm transfers has been removed from C1, C2 and most of C3. This is a very significant increase in required performance level that is not justified. 8. The "applicable rating" for loading and voltages in Table 1 has been removed so that essentially, the same ratings and voltage restrictions apply to both B and C contingencies. Some utilities plan to a normal rating for single contingencies but will allow a higher short term rating for Category C events. This practice will apparently be disallowed. 9. Several new Category D "Extreme Events" have been added which greatly expand the scope and complexity of Category D studies. These are (1) any two unrelated single element outages and (3) wide area events a. through h. These represent a major increase in the scope of Category D studies and probably a doubling of required SWG studies. The fault with protection element failure categories D1 through D4 have been substantially changed to eliminate analysis of relay failure contingencies. The philosophy contained in the existing TPL-004 standard is that faults with a protection failure should be evaluated whether that failure is a circuit breaker, relay or CT; the proposed standard restricts the analysis to breaker failure. 300 kV Threshold Performance Level 10. The TPL-001-1 draft sets a threshold of higher performance to facilities above 300 kV than previously established in the existing standard. We do not agree that such a threshold is necessary or warranted nor have they been justified. Requirements which are more stringent for these facilities may wrongly influence decisions on project alternatives in favor of facilities with less stringent requirements.

Q43			
Commenter	**Yes**	**No**	**Comment**
			DC Line Performance Requirement 11. The TPL-001-1 draft sets a lower performance requirement for the loss of a single pole of a DC line than in the existing standard by allowing interruption of firm transfer if the transfer is deemed to be dependent on the outaged line. Firm transfers are also dependent upon AC lines. The proposed standard does not distinguish between asynchronous DC ties and the more common parallel connected DC tie. With an asynchronous DC tie, the transfer is lost with the tie. With a parallel DC tie, the transfer will be shifted to the parallel AC system and should have the same performance requirements. We do not agree that such an exception for DC lines is necessary or warranted. The decision in selecting DC vs. AC in transmission lines has traditionally been based on the break-even cost and performance of the two alternatives. The lower performance requirement may wrongly influence decisions on project alternatives in favor of DC facilities with less stringent requirements. Distinction Between Committed and Proposed Projects: 12. Models cannot discern the difference between a "committed" project, and a "proposed" project in a performance analysis. The standard should instead set criteria for when models can be relied upon for planning purposes such that changes to the future plan will not have an impact on reliability. The intent of Requirements R2.7.3 and R2.7.4 should be combined and added into R2.7.1.1. Rather than adding the additional requirement to document a criteria, the requirement should be that in the Near-Term Planning Horizon, projects cannot be removed (or modified) without demonstrating that the revised plan meets performance criteria. In addition, the requirement in R2.7.1.1 to supply a "project initiation date" is ambiguous. What will constitute "project initiation" …construction start date? …Engineering complete date? …Land procurement date? Funds allocated date (budgeted)? Suggested wording for R2.7.1.1. "Transmission and generation improvement projects for the Near-Term Transmission Planning Horizon, shall have in-service dates provided, and shall not have in-service dates changed, or be removed from planning models, without documentation to show that the revised plan meets performance requirements." In addition to the concerns mentioned above, how are delays in meeting project in-service dates, which are not in the direct control of the Transmission Owner, caused by siting and Right of Way difficulties (public outcry, exercising eminent domain, court process, etc) addressed? The standard needs to have provisions to recognize these types of issues allowing a Transmission Owner to be compliant as long as he is using due diligence to overcome these types of delays. Analysis of Relay Protection Failures: 13. This draft of the TPL standard ignores studies required for analysis of relay protection failures. There is a widespread misconception that studying breaker failure scenarios covers for relay protection failures. This is a false assumption. Typical delayed clearing for a stuck breaker is in the order of 8 to 20 cycles. This is accomplished by the local relay system sensing the stuck breaker and tripping the adjacent elements. However in the case of a protective relay failure the fault must

Q43			
Commenter	**Yes**	**No**	**Comment**
			usually be cleared remotely by tripping all lines connected to the station. Typical delays for a relay failure can easily be greater than 30 cycles. Where as breaker failure action just trips a couple of adjoining elements and leaves the rest of the station intact. A typical example of this difference is to assume a bus fault. For breaker failure, all bus breakers except the stuck one would trip. The breaker failure relay scheme then would time out and trip the adjoining breaker and the remote end of the adjoining line would trip. This could all happen in less than 20 cycles. Now consider a bus fault with the differential relay failed. The local relays don't sense the fault because they have failed, nor does the local breaker failure scheme activate because no local detection has occurred. The only way to clear this fault is to trip all lines from the remote terminals. This may take 30 cycles or more. With breaker failure, the bus and one line trips in about 20 cycles. With relay failure, all lines trip remotely isolating the substation in about 30 cycles. Both scenarios must be studied with relay failure being the worse case. Generally, different solutions are required to address relay failure verses breaker failure. Load Modeling Requirements: 14. The proposed TPL Standard contains numerous references to load modeling. The goal of improving and verifying the load model is worthwhile but is not appropriate for the TPL standards. Assessment of load model accuracy is best accomplished through detailed analysis of grid disturbance events. The main difficulties in accomplishing this are (1) grid events that significant reduce transmission voltages throughout a load area are infrequently occurring and (2) the process of Recreating the event through simulation studies is extremely complex and time consuming. While these efforts should be encouraged they should remain a RRO prerogative. 15. R1.1.1 Use of expected Load mix based on the actual or expected aggregate mix of industrial, commercial, and residential Loads. – This requirement is not justified as the load model may be developed through disturbance analysis rather than load type synthesis by customer class. Some LSE's may have great difficulties in creating load forecasts based on customer class. Load forecasting requirements are adequately addressed in the existing MOD standards and do not belong in the proposed TPL standard. 16. R1.2. Load models with supporting rationale that include power factor data that may be based on historical System performance, validated by measurement during stressed System conditions, or documented Transmission planning area requirements. This requirement is not appropriate fot the TPL standarsds. 17. R2.4.1. System peak Load for one of the five years. For peak System Load levels, the Load model shall include the dynamic effects of induction motor Loads.

Q43			
Commenter	**Yes**	**No**	**Comment**
			18. Specific types of load models should not be required in this standard. 19. Short Circuit Requirements: The new TPL standard also contains numerous references to short circuit analysis, which are new requirements that expand the TPL standards, but without specific testing or performance criteria. Evidence that short circuit studies have been performed is currently required in the existing FAC-002-0 Standard. Since the primary concern is the appropriate sizing of equipment and the prevention of equipment damage as opposed to overall grid reliability, we do not see the need for a set of requirements within the proposed TPL standard for short circuit studies. 20. Given the aforementioned issues, we believe the proposed TPL standard is inferior to the existing Board approved TPL Standards, creates unnecessary confusion, and will require many iterations of industry comment and revision. As an intermediate approach, we would strongly urge the Standard Drafting Team that the existing TPL standards be modified to respond to FERC Order 693 directives, clarify any ambiguities, and not pursue the proposed new standard any further. This would bring a much needed part of the Reliability Standards into the framework of mandatory enforcement and provide guidance on this longer term effort to improve the TPL standards.

Response: 1. The SDT must not only consider directives made in the FERC Orders, but it must also consider the direction given in the two associated SARs. Much of the wording and format in the current standards is repetitive. They all share the same performance table. Historically many have commented that because of the duplication in wording and format that the four should be merged together so that consistency would follow. It would also be easier to find and see the differences for each level of contingency. The SDT will continue to minimize repetitive language, simplify tables, minimize the number of notes, etc.
Commenters in general have supported the concept of merging the four standards together. In addition, Paragraph 1692 of order 693 "directs the ERO to consider integrating Reliability Standards TPL-001-0 through TPL-004-0 into a single Reliability Standard through the Reliability Standards development process". In addition, this order, in conjuction with 890, enurmerates attributes of planning standards that the FERC feels should be incorporated into the consolidated standard. SDT believes that the first draft of the standard is consistent with orders 693 and 890 without being unduly burdensome.
2. The SDT understands that there are extended transition issues associated with responsible entities becoming compliant with the new standard. The SDT plans to draft an implementation plan to accommodate such issues. The plan will be included in the third posting of the standard.
3. The requirement concerning Consequential Load Loss is to address FERC Order 693, which directs the ERO, among other things, to clarify footnote (b) in regard to Load loss following a single Contingency, specifying the amount and duration of Consequential Load Loss and System adjustments that are permitted after the first Contingency to return the System to a normal operating state. In regard to your comment regarding the general use of footnotes, the SDT agrees that notes can add clarity and we have included footnotes where useful in the newly formatted tables.
4. The SDT agrees with the comment that the initial conditions must be clarified in Table 1. Therefore, the SDT has made changes to add an initial condition column to Table 1. The SDT agrees that the System must remain secure after an event and therefore has clarified the standard by adding words to cover this requirement.
Further, the SDT agrees that the overlapping single Contingencies in C3 or the multiple circuit tower Contingency of C5 in the existing TPL

Q43			
Commenter	Yes	No	Comment
			standards are much lower probability but given that the performance requirements are only raised on these events for facilities above 300 kV, the SDT does not believe that the proposed changes are unreasonable especially since the changes are consistent with FERC Order No. 693. Please see the SDT responses to Question 22 for more details. 5. The SDT agrees with the comment and believes that this is consistent with FERC Order No. 693. 6. The SDT agrees that C1 and C2 in the existing TPL standards are much lower probability but given that the performance requirements are only raised on C1 and C2 events for facilities above 300 kV, the SDT does not believe that the proposed changes are unreasonable especially since the changes are consistent with FERC Order No. 693. Please see the SDT responses to Question 22 for more details. 7. The SDT has added greater detail to Tables 1 & 2, which provides for more situations where it is acceptable to lose Load. 8. The SDT has referenced Facility Ratings in general terms in Requirements R3.3.2.3 and R3.6.1 to provide flexibility with time based ratings. 9. The SDT has reviewed and revised Extreme Events in Tables 1 & 2. 10. The initial draft of the proposed Transmission planning standard held the planning of 300 kV and higher Transmission Systems to a more stringent requirement than the remaining BES. Although not unanimous, the majority of the SDT felt the 300 kV and higher Systems generally represent an extra-high-voltage (EHV) range that is considered the backbone of many systems in the various Interconnections and that the more stringent requirements were appropriate when considering N-1-1 Contingencies of two EHV Facilities. Systems operated at this range generally do not directly serve end-use Load customers but rather act as the medium for moving large amounts of power from production to various Load centers which then deliver the power among other Transmission or sub-Transmission Systems to end use customers. It is the desire of NERC and various stakeholders that the backbone of the electric power grid be robust and held to a higher degree of reliability. When EHV Systems are compromised, the large volumes of power served by them can place a severe amount of stress on parallel EHV or lower voltage paths. For example, if a large EHV transformer experiences a catastrophic failure not only are other System Facilities required to carry more Load but the System is also exposed to other N-1 conditions for long periods of time while awaiting a replacement or repair of the failed equipment. Large generation sources are typically connected at EHV levels and maintenance of the EHV Transmission lines within the vicinity of larges generation plants must often be coordinated during scheduled unit outages, resulting again in multiple Facility outages over extended periods of time. Therefore, it was the conclusion of the SDT in Draft 1 to propose greater reliability and operational flexibility through more stringent performance requirements when considering certain N-1 and N-1-1 Contingency events of EHV Systems. Throughout the industry substation arrangements at EHV levels reflect the importance of these Systems as the designs often consist of the more expensive ring-bus, breaker-and –a-half or double bus-double breaker protection schemes as opposed to the more simplistic and lesser cost single bus arrangements that are commonly found on lower voltage systems. The feedback received from industry was divided related to the SDT's emphasis placed on a higher expectation for the 300 kV and higher Systems. Some commenter's questioned the importance and the high costs that may be needed to mitigate existing System designs. Others agreed with the SDT's approach and indicated that the impact to their Systems would be minimal. Some commenters even questioned why the more stringent approach was not applied to the entire 100 kV and higher Systems. The SDT believes the Draft 2 changes are responsive to industry feedback and reflect an appropriate middle ground related to the importance of the EHV Transmission System. 11. As a controllable element, a DC terminal can carry more load than it might otherwise based on an impedance split in an all AC System. With most DC providing asynchronous DC ties, the SDT has elected to allow interruption of service. 12. Based on several comments and consideration by the SDT, the SDT has modified Requirement R2.7.1 and deleted Requirements R2.7.2

Q43			
Commenter	**Yes**	**No**	**Comment**
through R2.7.4. The standard now refers to "actions" needed to achieve required System performance without trying to distinguish between committed and proposed projects. It also lists examples of what is intended by the word "actions". The SDT continues to believe that by providing the expected project intiation date of System improvements provides useful information to neighboring entities however the region defines "initiation". **R2.7.1**. ~~Identify~~ List System deficiencies and the associated actions needed to achieve required System performance. ~~including Transmission and generation improvements, DSM, new technologies, or Operating Procedures including the duration of interim Operating Procedures.~~ Such actions may include installation, modification, retirement, or removal of Transmission and generation Facilities and any associated equipment such as protective or Special Protection Schemes, rate applications, DSM, or other initiatives, new technologies, or Operating Procedures including how long the Operating Procedures will be needed as part of the Corrective Action Plan. 13. Protection system failures are being studied and will be covered in a future version. 14. The SDT believes some additional modeling requirements not presently contained in the MOD standards are necessary for transmission planning purposes. The SDT has revised these requirements based on industry comments to eliminate redundancy with existing MOD standards with the intent that these requirements will be removed from the TPL standard when they are incorporated into the MOD standards at a later date. 15. The SDT believes that models must reflect the expected Load mix of industrial, commercial and residential Loads to correctly reflect the behavior of the System. 16. The SDT has revised this requirement based on industry comments to clarify the intent that Load data be based on expected or historical System performance. The SDT believes some additional modeling requirements not presently contained in the MOD standards are necessary for Transmission planning purposes. The SDT has revised these requirements based on industry comments to eliminate redundancy with existing MOD standards with the intent that these requirements will be removed from the TPL standard when they are incorporated into the MOD standards at a later date. 17 & 18. The SDT believes that the dynamic effects of induction motors must be considered. The standard does not specify the details of how to model induction motors. Therefore, the SDT believes the standard includes the necessary requirement without being overly prescriptive. 19. Your reference to FAC-002 only addresses the study of a specific request for Interconnection. The TPL draft addresses on-going System changes and increases in available fault current due to the additions of circuits and resources, as listed in the Corrective Action Plan. Short circuit studies help determine appropriate equipment sizing and setting of protective relays. Such studies will help provide for a complete Corrective Action Plan, i.e., the installation of a transformer to resolve a System performance deficiency may require the installation of additional circuit breakers. FERC also noted the need to include this analysis to cover such conditions. 20. The SDT believes that the present course of drafting the four standards as one standard with a revised table of "Contingencies" is the best solution to addressing all FERC directives, following the SARs, considering past comments and providing a single standard outlining the fundamental planning analysis.			
FRCC	☑		General Comment: 1. The SDT has significantly changed contingency specifications and required performance levels. In many cases the changes represent a very significant increase in required performance standards that will require unnecessary major capital expenditures and/or reductions in ATC which will have an

Q43			
Commenter	**Yes**	**No**	**Comment**
			adverse impact on commerce. Neither of these outcomes is desirable. Specific comments on the Draft Standard Performance Criteria 2. The performance requirements table should clearly define what the initial state of the system is assumed to be before any Planning Events, and what the state of the system is assumed to be after the Planning Event. For example, P1 (single contingency) events: assuming that the system is to be compliant, the state of the system prior to the event must be "secure" such that the event could occur and there is no interruption of firm transfer or loss of load, Equipment Ratings are not exceeded, System steady state voltages and post-transient voltage deviation are within acceptable limits. However, the system is not as it was before the event. The system could be described as "normal" but perhaps not "secure". If the requirement is that the system must also be "secure" after the event, then the standard must clarify what is allowed for "system adjustments" after the first Planning event to prepare for the next. FERC Order 693 directed the ERO to modify the second sentence of footnote (b) to clarify that manual system adjustments other than shedding of firm load or curtailment of firm transfers are permitted to return the system to a normal operating state after the first contingency. However, in order to bring the system to a secure state, as is necessary for the second contingency of a category C3 or C5 event, footnote (c) allows curtailment of firm transfers, and FERC Order 693 only required footnote (c) to be clarify the term "controlled load interruption", leaving the curtailment language intact. The implication of this interpretation is critical to peninsular Florida. The Category B loss of one 500 kV line from Florida to Georgia is sustainable, such that the system is "normal" after the event. However, in order to be prepared for the next contingency, (the loss of the second 500 kV line), firm transfers must be curtailed. (Interruption of Firm Transfer) Without the ability to curtail firm transfers, a "super-firm" priority of transmission service is created for non-native load customers. Comments on New Performance Tables: The draft TPL standard represents a major change in the Table 1 contingency definitions and required performance levels. 3. Table 1 Contingencies C1 and C2 are being moved to the single contingency category. While C1 and C2 represent single element outages, their probability of occurrence is much lower than the other Category B contingencies and they do not belong in the single contingency performance requirements group. 4. Footnote (b) which permits, as a limited exception in unique circumstances with a sound rational basis, some localized load reduction for single contingencies, has been removed. This is a

Q43			
Commenter	**Yes**	**No**	**Comment**
			very significant change for some utilities and this limited exception should be maintained. Footnote (b) was worked on extensive and achieved industry consensus at one time defining the maximum amount of load that could be shed at 100 MW. Footnote (c) which permits load shedding and curtailment of firm transfers has been removed from C1, C2 and most of C3. This is a very significant increase in required performance level that is not justified. 5. It is not clear what is meant by the phrase "Equipment Ratings" found in the performance requirements of Table 1. Utilities have different equipment ratings such as normal, long term, short term and emergency ratings. It is not clear that these type of ratings will be permitted in the proposed standard. 6. Several new Category D "extreme events" have been added which greatly expand the scope and complexity of Category D studies. These are (1) any two unrelated single element outages and (3) wide area events a. through h. These represent a major increase in the scope of Category D studies and probably a doubling of required stability studies. Analysis of Relay Protection Failures: 7. The fault with protection element failures have been substantially changed to eliminate analysis of relay failure contingencies. The philosophy contained in the existing standards is that faults with a protection failure should be evaluated whether that failure is a circuit breaker, relay or CT; the proposed standard does not require the analysis of any protection failure. This draft of the TPL standard ignores studies required for analysis of relay protection failures. There is a widespread misconception that studying breaker failure scenarios covers for relay protection failures. This is a false assumption. Typical delayed clearing for a stuck breaker is in the order of 8 to 20 cycles. This is accomplished by the local relay system sensing the stuck breaker and tripping the adjacent elements. However in the case of a protective relay failure the fault must usually be cleared remotely by tripping all lines connected to the station. Typical delays for a relay failure can easily be greater than 30 cycles. Where as breaker failure action just trips a couple of adjoining elements and leaves the rest of the station intact. A typical example of this difference is to assume a bus fault. For breaker failure, all bus breakers except the stuck one would trip. The breaker failure relay scheme then would time out and trip the adjoining breaker and the remote end of the adjoining line would trip. This could all happen in less than 20 cycles. Now consider a bus fault with the differential relay failed. The local relays don't sense the fault because they have failed, nor does the local breaker failure scheme activate because no local detection has occurred. The only way to clear this fault is to trip all lines from the remote terminals. This may take 30 cycles or more. With breaker failure, the bus and one line trips in about 20 cycles. With relay failure, all lines trip remotely isolating the substation in about 30 cycles. Both scenarios must be studied with relay failure being the worse case. Generally, different solutions are required to

Q43			
Commenter	**Yes**	**No**	**Comment**
			address relay failure verses breaker failure. 300 kV Threshold Performance Level 8. The TPL-001-1 draft sets a threshold of higher performance to facilities above 300 kV than previously established in the existing standard. We do not agree that such a threshold is necessary or warranted. Requirements which are more stringent for these facilities may wrongly influence decisions on project alternatives in favor of facilities with less stringent requirements. Load Modeling Requirements: 9. The proposed TPL Standard contains numerous references to load modeling. These modeling requirements should be addressed in the MOD Standards. The goal of improving and verifying the load model is worthwhile but is not appropriate for the TPL standards. Assessment of load model accuracy is best accomplished through detailed analysis of grid disturbance events. The main difficulties in accomplishing this are (1) grid events that significant reduce transmission voltages throughout a load area are infrequently occurring and (2) the process of Recreating the event through simulation studies is extremely complex and time consuming. While these efforts should be encouraged they should remain a RRO prerogative. * R1.1.1 Use of expected Load mix based on the actual or expected aggregate mix of industrial, commercial, and residential Loads. – This requirement is not justified as the load model may be developed through disturbance analysis rather than load type synthesis by customer class. Some LSE's may have great difficulties in creating load forecasts based on customer class. Load forecasting requirements are adequately addressed in the existing MOD standards and do not belong in the proposed TPL standard. * R1.2. Load models with supporting rationale that include power factor data that may be based on historical System performance, validated by measurement during stressed System conditions, or documented Transmission planning area requirements. This requirement is not appropriate for the TPL standards. 10. * R2.4.1. System peak Load for one of the five years. For peak System Load levels, the Load model shall include the dynamic effects of induction motor Loads. Prescribing specific types of load models in this standard is not appropriate because system topology and load make up may be unique from area to area. 11. Short Circuit Requirements: The new TPL standard also contains numerous references to short circuit analysis, which are new requirements that expand the TPL standards, but without specific testing or performance criteria. These performance criteria are better suited in the FAC

Q43			
Commenter	**Yes**	**No**	**Comment**
			Standards since evidence that short circuit studies have been performed is currently required in the existing FAC-002-0 Standard. Since the primary concern is the appropriate sizing of equipment and the prevention of equipment damage as opposed to overall grid reliability, we do not see the need for a set of requirements within the proposed TPL standard for short circuit studies. 12. Table 2 Angular Stability Notes: The requirement of generation loss not exceeding BA spinning reserve requirement (1.a.ii.) is an unjustified increase in required performance level from the existing TPL Standard which require the grid response to be stable and within applicable ratings. The portion of the notes requiring generator out-of-step protection are inappropriate and unwarranted. First, the simulation result may show the generator being tripped by backup distance or loss of field protection which may be acceptable to the generator owner. Second, the requirement for impedance swings not causing other transmission elements to trip is inappropriate and in conflict with manufacturer recommendations and prevailing practice for generator out of step protection. Most generator out of step relays are set to trip on the "way out" so as to limit phase angle difference across the opening contacts. With this practice, one can not prevent transmission line tripping due to zone 1 pickup without installing out of step blocking should the swing impedance passes through zone 1 relay. Out of step blocking of zone 1 relays is a bad idea as it opens the door to prolonged asynchronous connection of generators. 13. Circuit Breaker Contingencies: The proposed TPL standard separates circuit breaker related contingencies based on the intended use of the circuit breaker. If the circuit breaker is used to connect busses together (i.e. bus tie breaker) a lower level of performance is required than for other uses and configurations. The existing TPL standards have the contingency events and required level of performance appropriately ordered based on the probability of occurrence. We are not aware of different failure rates for bus ties breakers as opposed to the general circuit breaker population. The proposed standard requires an unjustified higher level of performance for non bus tie breakers and would encourage the use of low cost switching station arrangements such as single breaker/single bus which are less reliable. 14. Need to clarify the performance requirements that apply to sensitivity studies. These requirements should not be the same. 15. A.3. - Suggest replacing the word "probable" with "credible" for consistency with the white paper from the Operating Limit Definitions Task Force. 16. R2.1 - It is not clear how the requirement to address all 5 years can be accomplished when the annual studies do not require all 5 years to be studied. Is the planner expected to study the

Q43			
Commenter	**Yes**	**No**	**Comment**
			other years also, but that the required set of cases does not link to each of the 5 years? 17. R2.2.1 - This requirement creates compliance concerns. Therefore, it is suggested that the SDT clarify that the Long Term Assessment is not required beyond 10 years. 18. R2.7.3 - The term "proposed" may not be a good choice here ... especially since that's not a term used in other reliability assessments .... should another term be chosen or perhaps this definition could be matched up with work being done now on classification of resources for RAS. Steady State Performance Table: 19. P1 - If the transmission line outaged is the facility defined by contract as being the only contract path for the firm transfer, then the firm transfer will be interrupted. P1 should be clarified that this is acceptable. 20. P3 - Are these elements meant to be combined into a multiple contingency or considered separately (since they are listed with commas)? Or is this meant to be one of the 3 elements listed first AND the stuck breaker? Not clear the way this is worded. Or maybe the structure needs to be different in the sentence (like bullets for the first 3 that would make the "and" stick out more). 21. NERC Standards TPL 001-0 through TPL 004-0 are approved standards that only required modifications pursuant to FERC Order 693. In this proposed draft standard TPL 001-1 the Standard Drafting Team (SDT) has far exceeded the recommendations suggested by FERC in that Order. The proposed draft standard is a large change in the magnitude of the performance requirements from the exiting TPL Standards. The SDT needs to consider how this proposed standard will be implemented in this new mandatory compliance environment and ensure that reasonable compliance measures can be developed from the proposed standard.

Response: 1. The SDT recognizes that it has it has raised the bar on performance in some areas. The SDT realizes that this will have an impact and is working on an Implementation Plan that will address some of the concerns. This is a performance based reliability standard and does not and should not consider economics. FERC Order 693 clearly states the FERC position on Non-Consequential Load loss. The SDT has made numerous changes to the tables in an attempt to provide further clarity as to what needs to be done to achieve performance.
2. An Initial Conditions column has been added to the tables.
3. The SDT studied available data and practices and determined that these Contingencies do belong in the single Contingency performance group.
4. Local Load pockets are recognized as a problem and the SDT will address them in a future revision.
5. Equipment Ratings is a defined term in the NERC Glossary.
6. The SDT was responding to FERC Order 693 in the details for Extreme Events.

Q43			
Commenter	**Yes**	**No**	**Comment**
7. The SDT is still working on the Protection System elements of the standard and will provide more detail in a future revision. 8. The SDT feels that 300 kV and above represents the backbone of the BES and as such warrants more stringent criteria. 9. The SDT feels that the current MOD standards do not cover all of the modeling requirements for a planner. Therefore, the specific areas found lacking are described in the TPL standard. Once the MOD standards are revised appropriately, these requirements can be deleted from TPL. The SDT has re-written these requirements and they are now numbered Requirement R9 through R13. 10. The SDT feels that the Load model used in the study should represent actual conditions as accurately as possible. It has been shown during the reconstruction of the events of the August 14, 2003 blackout in the Northeast that the Load model was critical. One of the recommendations involved developing better Load models. 11. Short circuit studies are required as part of the Interconnection process. The TPL draft addresses on-going System changes and increases in available fault current due to the additions of circuits and resources, as listed in the Corrective Action Plan. Short circuit studies help determine appropriate equipment sizing and setting of protective relays. Such studies will help provide for a complete Corrective Action Plan, i.e., the installation of a transformer to resolve a System performance deficiency may require the installation of additional circuit breakers. FERC also noted the need to include this analysis to cover such conditions. 12. The note on spinning reserve has been corrected. The existing standard does not define what it means for the grid response to be stable. The SDT has attempted to do that with the footnote you referenced. The SDT believes that an excessive amount of generation pulling out of synchronism and tripping is not a stable grid response. Therefore, we have limited the amount which can trip to the amount of the Contingency reserve of the Balancing Authority. If a generator pulls out of synchronism, the SDT believes there should be some means to trip the generator from the grid. Otherwise, the generator could be damaged and the quality of power on the grid suffers. The footnote has been modified to require that the generator must have "out-of-step protection or some other means to trip the generator". The requirement for impedance swings to not cause the tripping of other Transmission elements is most appropriate. A stable response of the grid would not include losing additional Transmission elements. Out of step blocking on lines is not allowed as a solution. The requirement is for the impedance swing not to pass through relay characteristics which would result in tripping Transmission elements. This requires the system to be improved so that the impedance swings do not go out on the Transmission System. 13. Based on the available outage data, the SDT has decided that bus tie breakers are less likely to be exposed to stuck breaker opportunities 14. The SDT is providing some guidance on what needs to be included in sensitivity studies while not being totally prescriptive. Requirements R2.1.3 and R2.4.3 have been modified to require documentation of why the listed sensitivities were or were not selected for specific studies. Requirements R2.1.4 and R2.4.4 have been added to specifically state that the entity may consider additional sensitivities that are appropriate for its own System. The sensitivity studies do not in themselves establish the need for a plan, only the areas of the System the analysis is needed. **R2.1.3.** For each of the studies described in Requirement R2.1.1 and Requirement R2.1.2, sensitivity case(s) that stress the System with sensitivities that reflect one or more of the following conditions shall be run and documentation ~~with~~ of the technical rationale for ~~the selected sensitivity(ies)~~ why each of the conditions was or was not selected shall be supplied: **R2.1.4**. In addition to those sensitivities mentioned in Requirement R2.1.3, any other sensitivities, as deemed appropriate by the Transmission Planner or Planning Coordinator for their individual systems, shall be run and documentation of the technical rationale for why each was selected shall be supplied.			

Q43			
Commenter	**Yes**	**No**	**Comment**
R2.4.3. For each of the studies described in Requirement R2.4.1 and Requirement R2.4.2, ~~S~~sensitivity case(s) that stress the System to reflect one or more of the following conditions shall be run ~~with documentation provided explaining the rationale for the selected sensitivity(ies)~~ and documentation of the technical rationale for why each of the conditions was or was not selected shall be supplied: R2.4.4**.** In addition to those sensitivities mentioned in Requirement R2.4.3, any other sensitivity, as deemed appropriate by the Transmission Planner or Planning Coordinator for their individual systems, shall be run and documentation of the technical rationale for why each was selected shall be supplied. 15. The SDT feels that 'probable' is a better choice of words here and the majority of commenters have supported the SDT decision on how the purpose is stated 16. The SDT believes that a planner will be able to aggregate current and past studies in a portfolio or archive that will fulfill the requirement. 17. The SDT believes that the requirement as written is clear that studies longer than 10 years are only required if the known lead time of critical projects is longer than 10 years. The standard as written does not mandate a study longer than 10 years out but recognizes that a 15 year out study conducted to adress anticipated long lead time projects can be used to fufill the requirement of "Long-Term Planning Horizon". Paragraph 1692 of order 693 "directs the ERO to consider integrating Reliability Standards TPL-001-0 through TPL-004-0 into a single Reliability Standard through the Reliability Standards development process". In addition this order, in conjuction with 890, enumerates attributes of planning standards that the FERC feels should be incorporated into the consolidated standard. SDT believes that the first draft of the standard is consistent with orders 693 and 890 without being unduly burdensome. The SDT is cognizant that reasonal compliance measures and an achievable implemetation plan need to be developed as part of the standard development process. 18. The indicated language has been deleted from the second revision. 19. P1 - If service to Load by contract can be interrupted for defined conditions, then the SDT does not view this as firm. 20. The SDT has re-formatted the tables to clear up any confusion on this item. 21. The SDT followed the suggestion of FERC in Order 693 to consolidate the 4 standards into 1 if possible.			
Georgia Transm.	☑		R1.4: The planning assessment is to identify the needs of the BES. A spare equipment strategy should support the needs of the BES, not vice versa. Long-term outages need to be defined. R2.2.1 Not clear on the purpose of this requirement. Is the concern that the Planner perform a ten year analysis even when the in - service years are outside of the current ten-year planning horizon? The extension period should be defined. R3.2 Current models do not have the capability of performing the assessments necessary to meet this requirement.
Response: 1. The SDT has revised this requirement based on industry comments to clarify intent and to be responsive to FERC Order 693, paragraph 1725. 2. The SDT believes that the requirement as written is clear that studies longer than 10 years are only required if the known lead time of critical projects is longer than 10 years. The standard as written does not mandate a study longer than 10 years out but recognizes that a 15 year out study conducted to adress anticipated long lead time projects can be used to fufill the requirement of "Long-Term Planning Horizon".			

Q43			
Commenter	**Yes**	**No**	**Comment**
3. The SDT feels strongly that the assessment should be based on study of the System as it is expected to perform. The requirement that "Contingency analyses shall simulate the removal of all elements including those that System protection is expected to disconnect for each Contingency without operator intervention" is consistent with that philosophy. A Contingency modeling methodology that reflects how real Systems would operate will need to be constructed if it doesn't already exist.			
IESO	☑		(1) Pertaining to Q1 to Q11: we do not see the need to define this many terms for this standard. Many of the terms are easily understood and have been used in transmission planning for years that the majority of planners in the industry know what they mean. For example: base case, extreme contingencies (these are in fact listed in the table), planning assessment, planning event, etc. Furthermore, the terms plant stability and system stability are also well understood to mean "machine synchronism" and "system oscillation/damping". Among the proposed definitions, only the following terms need to be defined to add clarity: a. Consequential (and non-consequential) loss of load b. Long-term vs near-term (suggest to change it to short-term) planning horizons (2) We do not see the need to use the term RAS (Remedial Action Scheme). The term SPS (Special Protection System) is common used in the industry to generally mean any protection scheme that is designed to initiate actions to control flows, voltage, generation runback or high speed rejection, switching of shunt devices, cross-tripping in response to some pre-determined parameters such as loss of a circuit or some threshold voltage or line flow level. Introducing the term RAS would be confusing to suggest that they do not equate to or are not a part of the SPS. (3) We interpret the requirement stipulated in R1.1.1 is intended to enable more accurate simulations of load response - both in steady state and dynamic analyses. However, we do not support having this level of granularity (eg: industrial, commercial, residential etc.) stipulated in a planning assessment standard as similar requirements already exist in several MOD standards that deal with forecasted load and modeling. We suggest the mix of load detailed requirements be addressed in the latter set of standards. Similarly, R1.2 is best addressed in the MOD standards. Specific to R1.2, we do not agree with the requirement to provide supporting rationale that include power factor data based on historical System performance, validated by measurement during stressed System conditions, or documented Transmission planning area requirements. Load forecast data already provides projected mix of real and reactive demands and type of load. (4) R1.4 and R2.1.3 require outages be considered in the planning process. We suggest the SDT clearly stipulate that only known planned long term outages (with a minimum duration to be defined) need to be considered. This suggests is made on the basis that:

Q43			
Commenter	**Yes**	**No**	**Comment**
			- Only known outages should be modeled. The need to model unknown outages would render study scope to be too wide to manage - Only planned outages should be modeled for the same reason. - Only known planned outages > a certain period should be modeled since it would be unrealistic and unmanageable to model and propose planning solutions to system constraints that appear to last less than, say, 2 weeks. As a general practice, many planners apply a 4 week period as the minimum for inclusion in planning assessment. Without narrowing the scope, planning assessment will be an enormous task and difficult to manage.
Response: 1. The SDT deleted the Base Case definition in response to various comments. However, few if any other commenters suggested deleting the other terms proposed in this comment and several suggestions were received from various commenters to include additional definitions. Furthermore, various comments indicated lack of a consensus understanding of the Stability terms, prompting the SDT to retain and clarify the initially proposed definitions. 2. RAS and SPS are interchangeable terms as per the NERC Glossary. 3. The SDT believes that models must reflect the expected Load mix of industrial, commercial and residential Loads to correctly reflect the behavior of the System. The SDT believes some additional modeling requirements not presently contained in the MOD standards are necessary for Transmission planning purposes. The SDT has revised these requirements based on industry comments to eliminate redundancy with existing MOD standards with the intent that these requirements will be removed from the TPL standard when they are incorporated into the MOD standards at a later date. 4. The SDT intent was for the planner to model known planned outages. Sensitivities may be needed to confirm how much affect the duration of the known outage may have on the assessment. Requirement R1.4 which applies to the whole standard calls for "Known planned outages…"			
ISO/RTO	☑		
Response: Thank you.			
ITC	☑		1. A modeling issue that we would like to see standardized is the modeling of generation resources when the load exceeds or is very near the installed reserve level (low generation reserve margin). This would occur in future years when new resources are unknown or not announced yet. It is a concern of ours because we are an independent transmission company and are not always apprised of new resources. We also have a concern with some models which "assume" where new generation would be located or fake generation has been added to meet the load requirements. This can produce distorted transmission assessments because the generation location assumption is not firm. We would prefer to see generation scaling, or an assumption that the power will be imported or a combination of scaling and imports. Assuming 100% generator availability is also not a good assumption just to balance load and generation. Other modeling issues:

Q43			
Commenter	**Yes**	**No**	**Comment**
			2. Should not rely on a single generator being dispatched (redispatched) to solve a problem. 2. Using a single generator for redispatch should not be an acceptable corrective action (i.e. rely on a generator that might not be there or may take an extended period to start up). 3. Sensitivities for both the planning horizons should consider load forecast error and variability. You shouldn't just stick with one assumption, such as a 50/50 probability of occurrence. The system needs to be able to operate to loads exceeding 50/50 probability of occurance. 4. We would also like to see additional requirements be put on "corrective action" solutions to reliability violations resulting from planning assessments. Any corrective action should be restudied to insure that it does not cause other reliability problems for system conditions other than those for which the corrective action is intended to resolve. For example, if redispatch under a transmission outage condition is acceptable, it should not cause any additional reliability violations for the next contingency.
Response: 1. NERC Standards are to specify the requirements, which must be met and not "how" they are met. Whether a single generator can be used in a Corrective Action Plan would depend on whether the resultant Transmission System can meet the other requirements of NERC Reliability Standards. Therefore, when a single generator is used in a Corrective Action Plan, the System must also demonstrate that it can meet System performance requirements for loss of that generator. 2. NERC Standards are to specify the requirements, which must be met and not "how" they are met. Whether a single generator can be used in a Corrective Action Plan would depend on whether the resultant Transmission System can meet the other requirements of NERC Reliability Standards. Therefore, when a single generator is used in a Corrective Action Plan, the System must also demonstrate that it can meet System performance requirements for loss of that generator. If the generator is not yet on line, then additional sensitivity studies should be performed to cover the assumption that it may not be available. 3. The SDT is providing some guidance on what needs to be included in sensitivity studies while not being totally prescriptive. Due to the nature of future analysis, the SDT did not draft specific language to mandate Load growth be a sensitivity analysis for future assessments. Industry feedback is that future assessments already include a variation in projected Load growth. The standard does not preclude any entity from performing studies for any planning horizon that envolve a wide range of sensitivities. The specific requirement to perform re-test has been removed. 4. The SDT believes that as part of obtaining the appropriate corrective action, the solution is tested as part of the study to make sure it meets the performance requirements.			
JEA	☑		In reference to the use of Non-consequential load shedding under single contingency events: I do agree that long term plans should be implemented with the goal to eliminate non-consequential load shedding as a response to this failure mode. However, it may be more beneficial for investing in system improvements to reach this state of robustness where there may be a few years (or seasons) of potential exposure for utilizing non-consequential load shedding. This should be prudent utility practice as long as post-contingency response is executed within the time frame allowed by the

Q43			
Commenter	**Yes**	**No**	**Comment**
			facility emergency ratings and load shedding is limited to Transmission Provider's contracted or tarrif loads. For example, adding or upgrading transmission facilities into a load area where future generation additions are planned to be in-service within the short term horizon (mitigating thermal or voltage violations assessed under P1 and P4-1 through P4-4) would not be the best investment for the overall economic benefit of the bulk electric system.
Response: Draft 2 Changes for 300 kV and higher systems regarding N-1-1 conditions: Based on industry feedback the SDT has made changes in proposed Draft 2 requirements related to independent overlapping single Contingencies involving two non-generation Transmission Facilities operated at a voltage level above 300 kV. Draft 2 now permits the loss of Non-Consequential Load to meet the Transmission performance requirements for these types of events. Please refer to performance tables Planning Event P6. It is noted that in Draft 2 the SDT is still requiring more stringent performance requirements of the EHV Transmission for the less probable, but greater risk single Contingency events. Please refer to performance tables Planning Event P2 and note that bus section faults and internal breaker faults (non-Bus Tie) associated with above 300 kV Facilities are held to a higher performance standard than those operated at 300 kV or below.			
KCPL	☑		It is redundant to require provision of modeling data in this Standard. This is covered in Standards MOD 10, 12, 16-25.
Response: The SDT believes some additional modeling requirements not presently contained in the MOD standards are necessary for Transmission planning purposes. The SDT has revised these requirements based on industry comments to eliminate redundancy with existing MOD standards with the intent that these requirements will be removed from the TPL standard when they are incorporated into the MOD standards at a later date.			
LUS	☑		The Planning Authority/Transmission Planner should use valid acceptable assessments to plan their systems to operate and supply customer demand and Firm Transmission Service. If the Planning Authority/Transmission Planner determines other methods (such as operational guides) to resolve system overloads for "N-1 Contingency", the operational guides should be limited to only native network facilities that are in direct control and ownership of the Planning Authority/Transmission Planner. Operational guides should be considered only as short term solution to resolve the overloads and shall be used in all studies and approval for transmission service requests. If the operational guide do not completely resolve the overload or restricts access to transmission service, then the Planning Authority/Transmission Planner shall determine facilities to be constructed to resolve the overloaded or restricted facility.
Response: NERC Standards are to specify the requirements, which must be met and not "how" they are met. The draft standard does not preclude the use of operating solutions.			
LADWP	☑		This proposed standard is very tutorial in nature and far too prescriptive for a standard. A standard should be about what are the criteria and measurables, not about how to meet the criteria. This propsoed standard should also recognized that it is just a part of many standards being formulated by NERC, know its boundary as transmission planning standard, and not try to be an all

Q43			
Commenter	**Yes**	**No**	**Comment**
			encompassing standard for every facit of the power system. Do what we do best as transmission planner and not try to take over others like marketer, operator, generators, etc.
Response: The goal of the SDT is to provide more information but not be too prescriptive.			
LCRA	☑		1. The NERC PC and OC are currently working on a definiton that defines "adequate levels of reliability". The SDT should take this definition into consideration and ensure it is applied in the proposed NERC Std. revision. Along the same lines, if this has not been done yet, the SDT needs to consider the NERC "Reliability Criteria and Operating Limits Concepts" white paper and incorporate applicable elemetns of that white paper to the propsoed NERC Std. revision accordingly. It would not make sense for these (the propsoed NERC std. and the noted white paper to be inconsistent or at opposite ends in terms of what is expected of a reliability-based planned transmission system). other editorial comments: 2. R1. Delete one of the "each" 3. R1. Should state that data submittals should be "in accordance with regional procedures or process". This will eliminate the region getting data in all sorts of formats. 4. Table 1 - the allowance of loosing "consequential load" should be evaluated based on options to provide temporary emergency back-up support as well as size of load, for example. Structure failures can take an extended period of time to restore and can have significant impacts on a raial load that does not have remote or distribution back-up support. This performance requirment of transmisssion radial-supplied loads should be left to regions or to transmission owners/planners for their own areas based on specific area needs (type and size of load, back-up availbailiyt, etc.). 5. Table 1 - How does NERC define a "transmission circuit"? Does it include a sinlge transmission line as well as a double circuit transmission line? 6. Other than the probability of occurrence, what is the difference between a structure failure of a single circuit and a structure failure on a double circuit configuration? Why is a double circuit not considered a single contingency?
Response: 1. The SDT has reviewed the definition of adequate level of reliability and has included it in its deliberations. The SDT has reviewed the "Reliability Concepts" white paper and find that the document is largely consistent with the current standard as written by the SDT. One notable difference is that the white paper seems to indicate that the Transmission System is designed and operated so that cusomers should only be interrupted that are directly connected to the outaged element for events including Transmission line or transformer faults, breaker or switch failures, or generator trips. (See page 11 of the white paper.) If the SDT were to use this approach then SDT should not allow Non-Consequential Load Loss for P6.1 and P6.3, even though these breakers are below 300 kV.			

Q43			
Commenter	**Yes**	**No**	**Comment**
As indicated in the responses to other comments, the SDT has taken the position that the probability of the outage of one breaker is much lower than the probability of a single Transmission line outage. Therefore, the SDT has drafted the standard to permit loss of Non-Consequential firm Load or interruption of firm Transmission service for the loss of a lower voltage breaker. (The SDT does not permit the loss of Non-Consequential firm Load or interruption of firm Transmisssion service for the loss of a breaker above 300 kV.) The majority of the commenters in response to the first posting of the standard agreed with the SDT's approach in this regard. 2. Editorial change was made. 3. The SDT has revised this requirement based on industry comments to specify only that modeling data must be exchanged and allows entities to develop their own formats. It is beyond the scope of the standard to specify the process for data exchange. 4. The standard allows for loss of Consequential Load and does not address restoration requirements. 5. and 6. The Tables treat circuits differently if they share a common tower and they define the maximum length that a double circuit can still be treated as independent circuits as one mile.			
Manitoba Hydro	☑		1. MH would prefer that many of the categories in the existing Table 1 be retained. The SDT has resort the contingency buckets with no explanation as to how this was done. can the SDT provide statistical outage date to justify the changes. MH is not convinced the SDT has addressed the few confusioning issues in Table 1. 2. R1: MH does not believe R1 is required in this standard. The modelling standards should cover the requirement of the data owners to provide data to the PC. Further this data needs to be provided to the TP as well. 3. R1.4: requires planned outage data to be provided to planners. I do not believe this is a requirement for planning. It is not economic to add facilities to accommodate future planned outages. Secondly, the Table 1 multiple contingencies already mandate that planners consider the impacts of an outage with system adjustment followed by testing for the next contingency. 4. R1.5: requires the PC to define "planned facilities" which should be included in the model. This will lead to inconsistency in what is modelled, as experience has shown that there will be a wide range of assumptions in the definition. This standard should offer a definition for stakeholder debate. The SDT should clarify what is intended by including Protection System Equipment and control devices. 5. R2.1: It is not necessary to assess all five years of the near term planning horizon – year one, three and five will be more than sufficient. What is the reliability benefit driving the SDT to mandate each of the first five years be assessed? 6. R2.1.2 and R2.4.2 -- It is important to assess off peak loads with high simultaneous transfers as this is the period where extensive economic interchange occurs, and transient stability issues arise as less uneconomic peak units are off, leaving the load to be supplied by remote generation with reduced local reactive supply, voltage and damping control.

Q43			
Commenter	**Yes**	**No**	**Comment**
			7. R2.2: The long term assessment should also include an off peak case with simultaneous transfers to provide some indication if the system performance is expected to degrade. 8. R2.3: The short circuit study is a design issue that would more appropriately covered by a FAC standard. MH recommends it be removed from the Planning standard. 9. R2.6.1: Why would a past study be invalidated if there is a change in market structure? It would seem that the operation of any market would have to respect reliability criteria. 10. R.3.3.2.2: Curtailment of firm transfers is allowed as a system adjustment in the existing standard. This ability must be retained in the new standard. Curtailment of a firm transaction is not equivalent to curtailment of load, but is more comparable to runback/tripping of generators. Both are events that can be backed up by contingency reserves and do not result in consequential load loss. Disallowing firm transfer curtailment will result in numerous violations of the performance requirements and result in a requirement to build millions of dollars of transmission. MH can not accept a standard which mandates that firm transfers can not be curtialed following a contingency. 11. R3.3.3: If rationale for the contingencies selected for evaluation is available then this rationale will state why the selected contingencies are expected to be the most severe. The requirement does not need to state "and shall include an explanation of why the remaining Contingencies would produce less severe System resuts".This is redundant. 12. R3.4 and R4.5.2: Evaluating a change designed to mitigate the consequences of an exteme event can require significant work. Since there is no requirement to implement corrective plans for Extreme Events, what is the purpose of this evaluation? 13. R3.5: Generator tripping should be added in addition to runback. Generator tripping is used extensively in regions where remote generation is delivered via long transmission. 14. R6: Requires distribution of results and “coordinating analysis of these results through an open and transparent process”. Can the SDT clarify what the intent is? As written, it implies the PC/TP just shares assessment results with neighbours. There should be a requirement to conduct joint assessments on inter-regional transfer capability. The assessments should also be provided to the Regional Entities/NERC. Table 1 -Steady State Performance

Q43			
Commenter	**Yes**	**No**	**Comment**
			15. MH requests the SDT to provide rationale for how the planning events where resorted from the existing Table 1 Categories to the proposed Planned events. 16. Performance Requirements: As this is a steady state table, how does one assess if voltage instability, cascading outages or islanding occurs? "Simulate Normal Clearing unless otherwise specified." should be deleted from this Steady State Performance table. 17. This table should have an Initial Condition column as well as an Event column, as in Table 2. The wording of event descriptions in Table 1 should follow the wording of similar event descriptions in Table 2. 18. Event: What is a non-bus tie breaker? Is this any breaker that is not a bus tie breaker? 19. Interruption of Firm Transfer Allowed: Interruption of firm transfer should be allowed following a single contingency – this is a change from the existing standard where system adjustment after a Cat B event could include reduction of firm transfer. Similar to generation tripping/runback, the loss of a firm transaction does not result in Consequential load loss as it is backed up by contingency reserve. 20. P6-2: What is the justification for classifing a bipolar DC line loss as a single contingency? The existing standard classifies this event as a Cat C multiple contingency event. 21. P6-3: Why is a breaker internal fault classified as a single contingency? One would assume such a fault would be cleared by backup protection resulting in the loss of multiple elements. 22. P9-1: Is there any justification for the selection of one mile? Would the fact that there is line shielding be justification for increasing this length? A more reasonable selection could be 5% of the length of the longer of the two circuits. 23. P9-2: A monopolar DC line loss may be covered in P4-2 (and no non-consequential load loss is allowed). Does loss of a monopolar DC line refer to loss of a single pole of a bipolar line or a bipolar dc line? Can the PC/TP choose between the loss of a monopolar DC line and the loss of a bipolar DC line? 24. P9-3, P9-4 and P9-5: When the DC line loss is bipolar, the event should be moved to the extreme event category. Does loss of a monopolar DC line refer to loss of a single pole of a bipolar line or a bipolar dc line? Can the PC/TP choose between the loss of a monopolar DC line and the loss of a bipolar DC line?

Q43			
Commenter	Yes	No	Comment
			25. Exteme Events Evaluation Requirements 3: This should be removed as this is the Steady State Performance table. 26. Extreme Event Descriptions: How did the SDT determine what events should be classified as Extreme Events? Was statistical data analyzed? 27. Extreme Event 1: In the existing TPL standards, the simultaneous loss of two elements was considered a Cat C multiple element event. What is the SDT rational for the change? 28. Extreme Event 2c: Why is the loss of a single large load an Extreme Event? 29. Extreme Event 3f: This is a repeat of Extreme Event 3d. 30. Extreme Event 3g: What is the rationale for distinguishing between old vs. new design for the loss of multiple lines due to icing? Is the SDT implying that new lines must be desined to prevent multiple line loss due to icing? Table 2 - Stability Performance Table 31. Performance Requirements: The MRO adds 1/2 to 1 cycle to the Normal Clearing time during simluations as an additional safety margin. The SDT should consider enforcing this practice. 32. Event: What is a non-bus tie breaker? Is this any breaker that is not a bus tie breaker? 33. P1: There should be a P1-4 event for a shunt device (ie. "4. A shunt device (including FACTS devices)"). 34. P6-2: What is the justification for classifing a bipolar DC line loss as a single contingency? The existing standard classifies this event as a Cat C multiple contingency event. 35. P6-3: Why is a breaker internal fault classified as a single contingency? One would assume such a fault would be cleared by backup protection resulting in the loss of multiple elements. 36. P9-1: Is there any justification for the selection of one mile? Would the fact that there is line shielding be justification for increasing this length? A more reasonable selection could be 5% of the length of the longer of the two circuits. 37. P9-3: This contingency should be classified as an Extreme Event since statistically, the outage

Q43			
Commenter	**Yes**	**No**	**Comment**
			duration of a dc circuit (assume you mean a bipole) is less than 2 hours for MH bipoles, so the probability of a second outage is very low. . 38. P9-6: Isn't this the same as P1-3? If the outaged tranformer is replaced by a spare transformer, this restores the system to a normal state prior to the event ("Apply a P1.3 Contingency."). What is the point? 39. Note 1.a.i.: Planning Event P3.2 does not exist. 40. Note 1.a.ii: This definition of angular stability should be deleted and the definition in Note 1.a.i. should apply to all Planning Events. The system should not be considered to be angular stable when generators are pulling out of synchronism. 41. Note 1.a.iii.: This standard should define a minimum damping factor and allow the PC/TP to have a more restrictive damping requirement if they choose to.

Response: 1. The SDT looked at available historical, statistical data and used that data for guidance in re-ordering the table.
2. The SDT believes some additional modeling requirements not presently contained in the MOD standards are necessary for Transmission planning purposes. The SDT has revised these requirements based on industry comments to eliminate redundancy with existing MOD standards with the intent that these requirements will be removed from the TPL standard when they are incorporated into the MOD standards at a later date.
3. Planned outages that are long-term need to be provided to the planners in order for them to appropriately represent the topology of the system. This does not imply that one must build in order to accommodate a planned outage and to be responsive to FERC Order 693, paragraph 1725.
4. The referenced verbiage has been deleted from the revised standard.
5. Assessement does not mean that studies have to be run for each of the years, only for Year One or two and five for peak load and for any one of the 5 years for off-peak load. If no changes occurred between the years the assessment will be very simple. However, if the required Corrective Action Plan is delayed, or there is a long planned or forced outage to a major generation or Transmision Facility, or it is believed that some of the sensitivities may have to be addressed, etc., there may be a need to assess each of the years.
6. Agree if that is the case for your System. Each entity is responsible for demonstrating the appropriateness of the assumptions used in the current studies. To some entities this case may be their base case and others it may be a sensitivity case.
7. Requirement R2.2 requires as a minimum a peak load study for one of the 5 years in the Long-term horizon. This does not preclude any entity from running more studies, including for off-peak load conditions.
8. Actions listed in the Corrective Action Plan will more often than not result in higher fault, requiring the installation of even more additional equipment to accommodate the higher fault duty. This requirements ensures that the "entire" effect of the corrective action is captured in the plan. In addition by considering the "entire" effect of a proposed corrective action the entity may find it more economically to propose another action. Therefore, the SDT feels that this should be part of the Planning Assesment.
9. R2.6.1 - The SDT has revised R2.6.1 to delete the reference to market structure.

Q43			
Commenter	**Yes**	**No**	**Comment**
R2.6.1. For steady state, short circuit, or System Stability analysis: ~~if the study is less than three years old and no material changes have occurred to the System in the intervening period. Material changes include topology changes, generation additions/removals, and market structure changes~~ the study shall be five calendar years old or less. 10. Curtailment of firm transfers is allowed for some specific Contingencies in compliance with FERC Order 693. 11. R3.3.3 - The SDT recognizes some may consider these words redundant. However, it should be noted that many commenters have asked for the SDT to add words to make other requirements perfectly clear. Since these words do not hurt the requirement and may help some to better understand the requirement, the SDT has not deleted these words. 12. As noted in Requirements R3.4 and R5.7.6, there is an expectation that facilities are designed to reduce or mitigate the likelihood of Extreme Event situations that expose the System to cascading events. 13. This has been added. **R3.5** Manual and automatic generation run-back/tripping is allowed as a response to a single ~~and~~ or multiple Contingenc~~ies~~y ~~as long as Facility Ratings are not exceeded.~~if the following conditions are met: 14. R6 - By meeting this requirement for "coordinating analysis of these results through an open and transparent process", the SDT meant a stakeholder process that was set up to meet the requirements of FERC Order No. 890 with regard to an Attachment K filing of a Transmission Provider's Transmission Planning Process. The SDT has made a change to clarify this requirement (see R8 in draft 2). **R8**. Each Planning Coordinator shall coordinate the distribution of Planning Assessment results among ~~affected entities~~ neighboring systems, coordinating analysis of these results through an open and transparent peer review process such as described in FERC Order 890. 15. The SDT reviewed each planning event considering the likelihood of the event, the potential outcome of the event and the directives from FERC concerning loss of Non-Consequential Load and determined the expected performance for each event. Then, the SDT re-ordered the events and grouped them by the type of outage and the expected outcomes. Performance requirements: 16. The SDT has reviewed and revised Tables 1 & 2. In the steady state time frame, voltage instability can occur typically during high power transfer and/or peak demand periods. Voltage instability can be assessed using a long-term Stability program. However, it can also be assessed using a power flow program that simulates governor action. There are a number of IEEE papers (e.g., G. Morison, B. Gao, and P. Kundur, "Voltage stability analysis using static and dynamic approaches," IEEE Transactions on Power Systems, vol. 8, no. 3, pp. 1159 – 1171, August 1993) that can provide suggestions on the methodology. Cascading outages and uncontrolled islanding can also occur, for example, when the Transmission Facilities load beyond the corresponding relay trip settings. This could cause uncontrolled tripping of Transmission Facilities beyond those required to clear the fault. Even though these events are rare, the Transmission Planner should be aware of their possibility when performing studies. The SDT did not change Table 1 to remove "Normal Clearing" because depending on the bus configuration, delayed clearing would result in removing more Facilities from service than normal clearing in the steady state post-Contingency period. 17. The SDT has revised Tables 1 & 2 accordingly.			

Q43			
Commenter	Yes	No	Comment
18. The SDT has accordingly proposed a definition for Bus-tie Breaker. **Bus-tie Breaker:** A circuit breaker that is positioned to connect two individual straight bus substation configurations. (Substation configurations such as ring-bus, breaker-and-a-half, or double bus-double breaker protection schemes do not use bus-tie breakers.) 19. The SDT has reviewed and revised Tables 1 & 2. "Firm Transfer" has been replaced with "Firm Transmission Service". 20. P6.2 - The SDT has reviewed and revised Tables 1 & 2. 21. P6.3 - It is true that multiple elements are impacted, but it is still a single Contingency event. 22. P9.1 - The one mile allows for some measurable physical constraints to building separate lines in all locations, but limits the exposure to a fixed length, which is universally applicable. A percentage doesn't provide the same limitation and consistency. 23. It refers to the loss of a monopolar DC line or one pole of a bipolar DC line. 24. P9.3, P9.4, and P9.5 - The SDT feels that the loss of a bipolar DC line is a multiple Contingency Planning Event. The tables have been revised to provide clarity. 25. Extreme Events 3 - The SDT has revised Extreme Events in Tables 1 & 2 and to comply with FERC Order 693. 26. Extreme Event Descriptions - The analysis of Extreme Events is an effort to assess potential impact of plausible but unlikely events. The selection of events is deterministic, not probabilistic. The SDT also notes that in Order No. 693, paragraph 1834, the FERC gave examples of Extreme Events that the FERC would expect to see in the revised standard. These examples are consistent with the items that the SDT included in the standard as examples of Extreme Events to be considered. For example, paragraph 1834 includes "(1) loss of a large gas pipeline into a region or multiple regions that have significant gas-fired Generation; (2) a successful cyber attack; (3) regulation that restricts or eliminates the use of a river or lake or other body of water as the cooling source for generation; (4) tornado or wildfire, or other event and (5) the loss of older transmission lines, which may not be constructed to meet an entity's present radial ice loading requirements…" In paragraph 1834, the FERC directs NERC to expand the list of events with examples such as those described in the paragraph. 27. Extreme Event 1 - In the existing Table 1 the non-simultaneous loss of two unrelated elements with System adjustment in between is in Category C3, the simultaneous loss of two circuits on a common structure is in Category C5. In the proposed standard Table 1, Extreme Event 1 covers loss of two unrelated elements with no System adjustment in between. If the reference is to a single Contingency, then the focus should be on the Contingency rather than the number of elements affected by the Contingency. 28. Extreme Event 2c - Event 2c is the loss of a station. Event 2e is the loss of Load. The loss of a single large Load or major Load center assumes that multiple events need to occur to realize this level of impact. 29. Extreme Event 3f - The SDT has reviewed and revised Tables 1 & 2. 30. Extreme Event 3g - The issue reflects the exposure during a period where an entity is taking older lines out of service to rebuild them to newer design standards. 31. The SDT has reviewed this requirement and has determined that at this time this is not appropriate for a North American standard. 32. The SDT has provided a definition of a Bus-tie Breaker. 33. Shunt devices have been added to the table. 34. This is now listed as a multiple Contingency (P7). 35. The table has been re-done to emphasize that you need to study events and not just single pieces of equipment. 36. One mile was based on the SDT's review and understanding of existing conditions. 37. The SDT has revised the table (P6) to make it clear that this is for a single pole.			

Q43			
Commenter	**Yes**	**No**	**Comment**
38. The language referring to a spare transformer has been deleted form the table. 39. Editorial error has been corrected. 40. The SDT has reviewed the definition of angular Stability and feels that it is appropriate. 41. The SDT has reviewed this requirement and has determined that at this time this is not appropriate for a North American standard.			
MEAG Power	☑		To the extent that the new standard is more stringent, additional time should be allowed to implement the corrective action plan, with fines suspended until reasonable time has passed to allow implementation. I.E., If the solution is 20 miles of new 500 kV T/L, then allowing fines to the short-term horizon is unreasonable – building 20 miles of 500 kV T/L is not possible in 2 or 3 years.
Response: The SDT understands that there are extended transitionary issues associated with responsible entities becoming compliant with the new standard. The SDT plans to draft an extended implementation plan to accommodate such issues. The plan will be provided for the third posting of the standard.			
MISO	☑		The Midwest ISO appreciates the opportunity to offer the following recommendations: 1. Requirements for providing modeling data in R1. are redundant with the exising requirements of MOD-010-0, MOD-012-0, and MOD-016-0 through MOD-025-1. Adding these requirements to the TPL Standard is unnecessary and may create confusion. 2. The Standard does not address the return of direct (consequential) load loss following a contingent event. How long of an outage event acceptable?
Response: 1. The SDT believes some additional modeling requirements not presently contained in the MOD standards are necessary for Transmission planning purposes. The SDT has revised these requirements based on industry comments to eliminate redundancy with existing MOD standards with the intent that these requirements will be removed from the TPL standard when they are incorporated into the MOD standards at a later date. 2. The proposed TPL-001-1 standard does not place a limit on the amount of Consequential Load Loss or the outage duration. In Requirement R3.3.2.1 the Consequential Load loss (expected maximum demand and expected duration) following a single Contingency shall be identified in the Planning Assessment. The SDT believes it is first necessary to obtain data on these items to allow comparison of similar sized Systems and it drives transparancey to expected outcomes.			
MRO	☑		The MRO commends the SDT on the difficult task of rewriting some of the most important NERC standards: the TPL standards. The MRO has a number of comments and suggestions. 1. Load modeling data in R1.1 and R1.2 do not belong in the TPL standards. It should be provided for in the MOD standards which provide the numerous load model data requirements. At a minimum, R1.2 should be revised to only require documentation of stressed system conditions. It is unnecessary and micro management to provide for "measurement during stressed System conditions". Further, it is unusual standards drafting to provide for a measurement of load in an assessment standard. 2. R1.4 should be revised to separate "known planned outages" from the rest of the requirement in

Q43			
Commenter	**Yes**	**No**	**Comment**
			separate sentences. This is because the reference to spare equipment outages does not have any bearing on the "known planned outages" requirement. Further the consideration of spare equipment strategy is not explained enough to understand what is required here. Further it is not clear as to what equipment must have consideration of spare equipment. The MRO recommends that R1.4 be rewritten as follows: "Known planned outages. Long-term forced outages for transformers with low-side voltages of 100 kV and above and generator step-up transformers should be identified where lack of spare transformers could result in outages of the transformers over the annual peak demand hour." 3. It is unreasonable for R1.5 to provide that planned facilities that are included in System Assessments include circuit breakers, and protection system equipment. These two items should be dropped from R1.5 since these are engineering details that are typically not available at the time that the System Assessment is made. 4. R.2.1.1 - The system peak load study requirements for studies for two of the near-term period seems to be excessive. The MRO recommends that only one year in the near-term period be required. 5. R2.6 should be deleted. The MRO believes that R2.1 and R2.4 are sufficient in describing when current studies are required. R2.6 will result in unnecessary restudy of the system. Alternatively, if R2.6 is kept, then the requirement should be a performance requirement, that as long as material changes do not require restudy then restudy is not required. The Transmission Planner and Planning Coordinator could be required to document why restudy is not required. Material changes should be expanded to refer to only those "significant" transmission line additions or generator additions. 6. R2.71 should be revised to delete "including the duration of interim Operating Procedures" or else the SDT should explain what is meant by this with additional information about what interim Operating Procedures are. 7. R2.7.1.1. should be revised to delete the requirement for project initiation date. This information is not typically available at the time of performing a System Assessment since this is detailed engineering information not pertinent to planning. 8. R2.7.5 should be deleted. The MRO believes the such detailed review of the status of the installation of projects to be beyond the scope of the TPL standard. Since NERC has no authority to require the installation of facilities, how does NERC have authority to require a review of the status of such facilities?

Q43			
Commenter	**Yes**	**No**	**Comment**
			9. R3.2.1 and R3.2.2 seem unnecessary details that are micro-management of the planning process. Both requirements could be met by the transmission planner and planning coordinator with general statements of little value. Also, relay loadability is included in facility ratings and does not need to be covered in TPL. 10. In Table 1, "a shunt device (including FACTS devices)" is too general. Arresters and potential devices for metering and relaying are shunt devices. This should be changed to a specific listing such as: transmission capacitors (100 kV and above), transmission reactors (100 kV and above), …" and whatever other devices that the SDT intends to be included here. 11. In Table 1, Single pole of DC line should be moved to P1. 12. In both tables, "monopolar DC line" should be replaced with a "single pole of a DC line". 13. The revised tables are confusing in descriptions of various outages particularly since the interconnected transmission system has been planned for the past decade using the previous Table I. The SDT should limit its changes to Table I to a limited number of changes that have been known to cause issues in the past rather than raising the bar in a number of cases. 14. The Extreme Event descriptions in Table 1 should be revised to provide definitions of local area and wide area. 3 d. (3f.) and 3 c. (3 e.) are duplicates and should be combined. Wide area events as listed are such unusual events, which are difficult to analyze or model. The requirement should provide that the number of these wide area events to be studied is limited to a minimum of one. 15. The MRO does not believe that contingency reserve is necessarily synonymous with spinning reserve. The SDT should clarify note ii to Table 2. 16. The SDT should clarify the wording in the tables to better explain the events which are either above or below 300 kV. For example, in P5 change 1. IS IT "A Transmission circuit followed by a System adjustment above 300 kV followed by the loss of another Transmission circuit above 300 kV." or is it "A Transmission circuit followed by another Transmission circuit resulting in impacts on 300 kV facilities"? P5 3. should be revised to say, "A transformer with a low side voltage rating above 300 kV followed by a System adjustment followed by the loss of another transformer with low side voltage rating above 300 kV." or is it "A transformer followed by the loss of another transformer resulting in impacts on 300 kV facilities."

Q43			
Commenter	**Yes**	**No**	**Comment**
			17. R2.1.3 - R2.1.3 reguires sensitivity studies that involve many potential scenarios that would be difficult to create in a Planning Assessment. Planners can not model the unknown and to assume the unknown may be a difficult task to complete. Instead of "shall be run and", the language should be "shall be considered based on current knowledge of system including" 18. Extreme Events description for common right-of-way should be defined. Does this include line crossing points? Suggest exclusion for corridors one mile or less similar to P9.1. 19. The language description of the even should be substantially the same between Table 1 and Table 2. Table 2 format is a bit cleaner with initial condition and event separated. Table 1 should follow this format. 20. The loss of a shunt device (e.g. SVC) should be added to Table 2 (P1.4). 21. Note 1ai. to Table 2 refers to event P3.2 which doesn't exist in the Table 2. 22. Note 1aii. to Table 2 allows generating units to "cascade trip" for certain events that were this would not be allowed in the existing TPL standards. The MRO recommends that the more of the events be listed in 1ai. so as to at least maintain reliability. 23. Note 1aiii talks about acceptable damping. NERC should have a standard requiring development and documentation of damping criteria by the planning coordinator. 24. P9 should be changed from referring to a monopolar or bipolar dc line to a single pole of a DC line. THE FOLLOWING ARE RON MAZUR'S COMMENTS. 25. The MRO does not believe R1 is required in this standard. The modelling standards should cover the requirement of the data owners to provide data to the PC. Further this data needs to be provided to the TP as well. 26. R1.4: requires planned outage data to be provided to planners. The MRO does not believe this is a requirement for planning. It is not economic to add facilities to accommodate future planned outages. Secondly, the Table 1 multiple contingencies already mandate that planners consider the

Q43			
Commenter	**Yes**	**No**	**Comment**
			impacts of an outage with system adjustment followed by testing for the next contingency. 27. R1.5: requires the PC to define "planned facilities" which should be included in the model. This will lead to inconsistency what is modelled, as experience has shown that there will be a wide range of assumptions in the definition. This standard should offer a definition for stakeholder debate. The SDT should clarify what is intended by including Protection System Equipment and control devices. 28. R2: The SDT should define the elements of an acceptable assessment in more detail. 29. The MRO recommends that the need to assess Plant Stability be removed from this standard. The generator connection standard and the proforma tariff interconnection process ensure the plant stability meets performance requirements. The System Assessment provides an overall assessment of the integrated system performance, which includes the impact of the plant. This requirement appears to be redundant. 30. R2.1: It is important to assess off peak loads with high simultaneous transfers as this is the period where extensive economic interchange occurs, and transient stability issues arise as less uneconomic peak units are off, leaving the load to be supplied by remote generation with reduced local reactive supply, voltage and damping control. 31. R2.1.3: The requirement for sensitivity cases is excellent. The SDT should consider: R.2.1.3.1: separate real MW load variation and Power Factor variation R.2.1.3.2: clarify the intent of modification of expected transfers. Does this apply to firm transfers only, or does it also encompass non-firm transfers. ..R.2.1.3.4: Instead of a sensitivity, the reactive devices should be included in the Table 1 &2 contingencies. If the intent is to investigate robustness to voltage instability, the SDT should clarify. R.2.1.3.5: Generation additions/retirements should be removed as this is covered, or should be, by the interconnection standards. The SDT should clarify.the need for generation additions/retirement. 32. R2.2: The long term assessment should also include an off peak case with simultaneous transfers to provide some indication if the system performance is expected to degrade. 33. R2.3: The short circuit study is not a reliability assessment issue but a design issue that is more appropriately covered by a Facility Rating Standard. The time required to conduct and report on this analysis in an assessment is better spent on more contingency or sensitivity analysis. 34..R2.4: Similar to the comment on R2.1,. It is important to assess off peak loads with high simultaneous transfers as this is the period where extensive economic interchange occurs, and

Q43			
Commenter	**Yes**	**No**	**Comment**
			transient stability issues arise as less uneconomic peak units are off, leaving the load to be supplied by remote generation with reduced local reactive supply, voltage and damping control. 35. R2.4.1: Should be clarified to limit the detailed modeling to local areas where the planner expects an emerging voltage recovery issue due to unusually high concentration of induction motor load. This is a local issue, and a bulk system reliability issue that is imposed system wide. The MRO believes this should be moved to the sensitivity case requirements R2.4.3. 36. R2.4.3: Sensitivity Case requirements should mirror the steady state comments, subject to the suggestion provided above for R2.1.3. That is: ..R.2.4.3.1: should also include power factor variation (actually a separate requirement) as in the stability world, the dynamic modelling of load has a significant influence in meeting transient performance requirements. R.2.4.3.2: I agree it should simultaneous non-firm transfers. This should be applied to the steady state sensitivity as well (see R.2.1.3.2). ..R.2.4.3.3: delete ..R.2.4.3.4: Needs to be clarified. See R.2.1.3.4. . R.2.4.3.5: see R.2.1.3.5 37. R2.5: Plant stability analysis should be deleted. 38. R2.6.1: Nowhere else in the standard is there a requirement to assess reliability impacts of market structure changes, so why would a study become invalidated if there is a change in market structure. It would seem to me that the operation of any market would have to respect the reliability criteria. 39. R2.7: Corrective Action Plans: Is the intent that corrective action plans also address issues raised by the sensitivity studies. The MRO argument would be that it should not be mandated. The plans are developed to meet base case needs which are based on expected load forecasts, transfers, etc. Sensitivity studies are done to measure the robustness of the base case plan. It should be left up to the Planner to decide if the plan is adequate based on the likelihood of the scenario studied, even if the sensitivity analysis shows some performance violations. 40 Also, if rationale is provided for contingencies selected as they are expected to be most severe, then by default those not selected are less severe. Why is there a requirement to explain why you did not select a contingency. 41. R3.4: Requires extra analysis compared to TPL-004-0. Developing mitigation for Extreme Events

Q43			
Commenter	**Yes**	**No**	**Comment**
			can require significant work. Since there is no requirement to implement corrective plans for Extreme Events, what is the purpose? 42. R3.5: Generator tripping should be added in addition to runback. Generator tripping is used extensively in regions where remote generation is delivered via long transmission. Generator tripping should be an available option for the planner to use as opposed to requiring justification as a regional difference. 43. R4: The requirement to assess Plant stability is redundant as this is assessed as part of the generator interconnection. It should be deleted. 44. R4.5.2: The MRO disagrees on the need to define mitigation for Extreme Events. 45. R4.6: Should be deleted. 46. R6: Requires distribution of results and "coordinating analysis of these results through an open and transparent process". Can the SDT clarify what the intent is? As written, it implies the PC/TP just shares assessment results with neighbours. The MRO believes there should be a requirement to conduct joint assessments on inter-regional transfer capability. 47. Table 1 Performance Requirements: • As this is a steady state table, how does one assess if voltage instability, cascading outages or islanding occurs? • Generator tripping for single contingencies should be added to the allowable actions. • How did the SDT classify which event was single contingency vs. multiple contingency vs. extreme? Was statistical data analysed? • What is a non-bus tie breaker? Is this any breaker that is not a bus tie breaker? • Event P2-3 should be relocated to the P1 event category. • What is the SDT rationale for defining bus faults >300 k as single contingency events? Is there any statistical dat to warrant this extra requirement? Now a Cat C? Since little load is served off >300 kV it may be a moot point. • P6 single contingency: What is the justification for classify P6-2, a bipolar dc loss as a single contingency? The existing standard classifies this event as a Cat C multiple contingency event? • P6-3: Why is a breaker fault classified as a single contingency? One would assume such a fault would be cleared by backup protection resulting in the loss of multiple elements? • P9-1; Is there any justification for selection of one mile? Can it be two miles? More? Why not no more than 5% of line length? Would the fact that there is line shielding be justification for

Q43			
Commenter	**Yes**	**No**	**Comment**
			increased length? 48. Extreme Events • Event 3.g: what is the rationale for distinguishing between old vs. new design for the loss of multiple lines due to icing? Is the SDT implying that new lines must be designed to prevent multiple line loss due to icing? 49. Table 2 Stability Performance • MRO Comments on Table one for the same contingencies should also be applied here. 50. P6-2 should be a multiple contingency, as it is in the existing TPL standards. 51. P9-3: should be an extreme event. 52. P9-6: Please clarify the requirement to indicate that it relates to long lead times. 53. The definition for Angular Stability should be modified to allow planned tripping of a generator following a line trip. Why are generators allowed to pull out of synchronism for other planning events? This is cascading. The SDT should clarify if they are refering to local or regional damping modes in 1.a.iii.

Response: 1. The SDT believes some additional modeling requirements not presently contained in the MOD standards are necessary for Transmission planning purposes. The SDT has revised these requirements based on industry comments to eliminate redundancy with existing MOD standards with the intent that these requirements will be removed from the TPL standard when they are incorporated into the MOD standards at a later date.
2. The SDT has revised this requirement based on industry comments to clarify the intent that *known* planned outages and long-term outages for Transmission equipment, including the impact of spare equipment strategy, be considered, and to be responsive to FERC Order 693, paragraph 1725.
3. The SDT does not agree. The SDT believes circuit breakers and protective equipment should be considered when developing criteria since these can affect System performance.
4. The SDT feels that requirement to run a peak load study for two of the years in the Near-Term Horizon is a minimum required for an adequate Planning Assessment. The SDT felt that the Year One or two study should provide operations with the best information to transition to the operating horizon. The year five planning study is the first near term study from the long term set. Five years is a short time if unexpected new facilities are required.
5. R2.6 - The SDT has revised this requirement in response to the numerous comments received.

R2.6.1. For steady state, short circuit, or System Stability analysis: ~~if the study is less than three years old and no material changes have occurred to the System in the intervening period. Material changes include topology changes, generation additions/removals, and market~~

Q43			
Commenter	Yes	No	Comment
~~structure changes~~ the study shall be five calendar years old or less. **R2.6.2**. For steady state, short circuit ~~analysis~~, Generating Plant Stability, or System Stability analysis: ~~if the study is less than five years old and no material changes have occurred to the System in the intervening period.~~ the study shall not include any material changes, such as, generation or Transmission additions/removals, or topology changes that have occurred in the intervening period and would impact the study area. **R2.6.3**. ~~For plant and System Stability analysis: until material changes in the System make the study no longer valid. Material changes in the system include the addition of a Transmission Line or a generator.~~ 6. Interim Operating Procedure is required to ensure that the all the performance requriements in Table 1 and Table 2 are met. It could include SPSs, pre-Contingency interruption of non-firm Loads, uneconomic generation dispatch, etc. The SDT recgnizes that this is a temporary measure until a permanent solution is put in place and that is why its duration is required. 7. Requirement R8 (old Requirement R6) which focuses on the distribution of the Planning Assessment results among affected entities was specifically added to allow some level of peer review and provide some level of confidence that the proposed plan could in fact be completed to meet the reliability objective. Requirement R2.7.1.1 is complementary to Requirement R8 (old Requirement R6) Initiation dates are only required in the near term since longer term plans tend to move in time and only have general scheduling associated with them. Typically the date would indicate when significant resources will begin to be employed. This covers any project proposed for the near term. The SDT continues to believe that by providing the expected project intiation date of System improvements provides useful information to neighboring entities. The SDT believes that initiation dates are required for near-term corrective action plans to give an indication that the corrective action plans can be implemented in time. 8. The standard requires that the identified future deficiencies be addressed by the Corrective Action Plan. The standard does not prescribe what this plan should be but entities have to demonstrate that the Corrective Action Plan or its alternatives will in fact be implemented in time to address the identified deficiencies. If the parts or all of the Corrective Action Plan turns out to be unrealistic due to something like a regulatory order, you still need to meet the performance requirements and a revised or new Corrective Action Plan that meets the performance requirements will need to be developed. The determination of when to update the Corrective Action Plan is based on good engineering judgment. 9. R3.2.1 & R3.2.2 - The SDT has received numerous comments in support of these requirements. Requirements R3.2.1 and R3.2.2 are included to provide clarity on simulations in response to FERC Order 693. Relay Loadability is included to provide the connection between facility ratings and planning studies. The SDT has not made changes in response to this comment. 10. The SDT has revised the table references to shunt Contingency events and removed the paranthetical reference to FACTS devices. The SDT believes it is more appropriate to leave the event more general based on the difficulty of maintaining an up to date reference to emerging technologies. 11. The SDT concurs with your observation. We have made several changes to the performance table organization based on industry input. The single pole DC outage is now reflected as a P1 Planning Event. 12. The SDT concurs with your feedback and the suggested change has been made in Tables 1 and 2. 13. The SDT has completely reformatted the performance tables in Draft 2 of the TPL-001-1 standard. The new format more closely mimics the existing approved TPL standard Table 1, with enhancements the SDT feels the industry will find valuable. The SDT has responded to industry comments regarding higher performance requirements for Facilities above 300 kV and has adjusted requirements for N-1-1 non-generator outages to permit Non-Consequential Load shed post-Contingency following the second event. The SDT has retained a higher			

Q43			
Commenter	Yes	No	Comment
expectation for certain N-1 Contingencies occuring on the EHV System. See the Summary Considerations in Q20 through Q23 for additional information. The SDT believes that this approach is consistent with FERC Order 693. 14. The SDT has revised the Extreme Event references and has removed the duplications you reference. The reference to local and wide area events has been retained as we did not receive a significant amount of comments opposing its use and it seems to be generally understood that local are extreme Contingencies eminating from a single location (substation, plant or ROW), whereas the wide area tend to cover a much larger landscape due to a natural disaster or cyber attack. The TP is given flexibility in which Extreme Events it wishes to cover, see Requirement R3.4. 15. The SDT agrees and has revised the note accordingly. 16. The SDT has completely reformatted the performance tables in Draft 2 of the TPL-001-1 standard based on feedback from the industry and input from SDT members. The new format more closely mimics the existing approved TPL standard Table 1, with enhancements the SDT feels the industry will find valuable. The SDT believes the new format will more closely meet your needs. 17. The SDT is providing some guidance on what needs to be included in sensitivity studies while not being totally prescriptive. Requirements R2.1.3 and R2.4.3 have been modified to require documentation of why the listed sensitivities were or were not selected for specific studies. Requirements R2.1.4 and R2.4.4 have been added to specifically state that the entity may consider additional sensitivities that are appropriate for its own system. The sensitivity studies do not in themselves establish the need for a plan, only the areas of the system for which the analysis is needed. **R2.1.3.** For each of the studies described in Requirement R2.1.1 and Requirement R2.1.2, sensitivity case(s) that stress the System with sensitivities that reflect one or more of the following conditions shall be run and documentation ~~with~~ of the technical rationale for ~~the selected sensitivity(ies)~~ why each of the conditions was or was not selected shall be supplied: **R2.1.4**. In addition to those sensitivities mentioned in Requirement R2.1.3, any other sensitivities, as deemed appropriate by the Transmission Planner or Planning Coordinator for their individual systems, shall be run and documentation of the technical rationale for why each was selected shall be supplied. **R2.4.3**. For each of the studies described in Requirement R2.4.1 and Requirement R2.4.2, ~~S~~sensitivity case(s) that stress the System to reflect one or more of the following conditions shall be run ~~with documentation provided explaining the rationale for the selected sensitivity(ies)~~ and documentation of the technical rationale for why each of the conditions was or was not selected shall be supplied: **R2.4.4**. In addition to those sensitivities mentioned in Requirement R2.4.3, any other sensitivity, as deemed appropriate by the Transmission Planner or Planning Coordinator for their individual systems, shall be run and documentation of the technical rationale for why each was selected shall be supplied. P5.3 - The table format has been revised for clarity. We have added notes at the end of each table to clarify when a transformer is considered EHV (above 300 kV) or a BES transformer below the EHV level. 18. Tables 1 and 2 have been revised to bring greater clarity. 19. The SDT revised the performance Tables 1 and 2 for clarity based on industry feedback. The SDT has included the initial condition column in each and the events correlate one to one in both tables.			

Q43			
Commenter	Yes	No	Comment
20. The single Contingency loss of a shunt device is now included as Planning Event P1.4 in Tables 1 and 2. 21. The SDT has corrected the problem in Table 2. 22. The SDT believes that we are not reducing the reliability of the System as compared to the existing standards. 23. The SDT has reviewed this requirement and has determined that at this time this is not appropriate for a North American standard. 24. Tables 1 and 2 have been revised to include a variety of new improvements. The reference to monopolar is now "single pole of a DC line". The SDT has however retained a bipolar DC line outage; see Planning Event P7.2. 25. The SDT believes some additional modeling requirements not presently contained in the MOD standards are necessary for Transmission planning purposes. The SDT has revised these requirements based on industry comments to eliminate redundancy with existing MOD standards with the intent that these requirements will be removed from the TPL standard when they are incorporated into the MOD standards at a later date. 26. The SDT has revised this requirement based on industry comments to clarify the intent that *known* planned outages and long-term outages for Transmission equipment, including the impact of spare equipment strategy, be considered, and to be responsive to FERC Order 693, paragraph 1725. 27. The requirement for the PC to define planned Facilities has been deleted from the revised standard. The SDT did not receive many requests for additional clarification of Protection System equipment and control devices and therefore did not revise the standard to address this concern. 28. The SDT has modified the assessment language dealing with steady state analysis in Requirement R2.1 to better define those requirements along with adding Requirement R2.1.4 to allow any additional sensitivities to be run that may be deemed necessary. In addition, Requirement R2.2 has been revised to specifically address steady state analysis: Requirements R2.4 and R2.5 have had many changes to better address the Stability portion of the assessment, Requirement R2.6 better details what past studies may be used in the Planning Assessment, and Requirement R2.7 better addresses Corrective Action Plans and System deficiencies. The SDT believes that all these changes result in better defined portions of the Planning Assessment. **R2.1**. ~~The steady state portion of~~ The Near-Term Transmission Planning Horizon ~~Planning Assessment~~ portion of the steady state analysis shall ~~address all five years of the assessment period~~ be assessed annually and be supported at a minimum by the following annual current studies, supplemented with qualified past studies as ~~shown~~ indicated in Requirement R2.6: **R2.1.4**. In addition to those sensitivities mentioned in Requirement R2.1.3, any other sensitivities, as deemed appropriate by the Transmission Planner or Planning Coordinator for their individual systems, shall be run and documentation of the technical rationale for why each was selected shall be supplied. **R2.7**. For Planning Events shown in Table 1 – Steady State Performance and Table 2 – Stability Performance, when the analysis indicates an inability of the System to meet the performance requirements in the tables, the Planning Assessment shall include Corrective Action Plans addressing how the performance requirements will be met. Revisions to the Corrective Action Plans are allowed ~~over time~~ in subsequent assessments but the System shall continue to meet the performance requirements in the tables. ~~Such plans shall:~~ Corrective Action Plans do not need to be developed solely to meet the performance requirements for sensitivities. The Corrective Action Plan shall: 29. The SDT has reviewed the need for Plant Stability and has concluded that it is appropriate to include it in this standard. It also felt that			

Q43			
Commenter	Yes	No	Comment
			this was responsive to FERC Order 693. 30. Requirement R2.2 requires as a minimum a peak load study for one of the 5 years in the Near-Term Horizon. This does not preclude any entity from running more studies, including for off-peak load conditions. 31. The standard is providing some guidance on what needs to be included in sensitivity studies without being totally prescriptive. In response to some comments, the standard was modified to clarify the language to state that at least one of the sensitivities listed in Requirements R2.1.3 and R2.4.3 should be studied and reasons be given for not studying the other ones. Furthermore, the standard also allows for entities to study sensitivity not included on the list that are more appropriate for their respective systems. 32. R2.2 - The Draft 2 version remains unchanged in regard to your comment. There was no overwhelming response from industry that compelled the SDT to make the change proposed. The standard requires off-peak analysis for near-term. In the long-term Requirement R2.2 states "…at a minimum, a current System peak Load study is required annually." This requirement is to capture long lead-time events for peak-Load periods. The peak system is typically the more troublesome period for most planners as Loads are higher and Facility Ratings are lower. Your concern is valid that in the off-peak, transfers across a system can be elevated and it is expected that if a particular System is subject to heavy transfers that a prudent Transmission planner would cover such situations based on their own identified need through sensitivity studies. Howver, such off-peak anlysis is not mandated by the standard for the Long-Term Planning Horizon. 33. R2.3 - The SDT respectfully disagrees and believes that the requirement for short circuit analysis is an improvement and covers a gap in the existing Transmission planning standards. It is essesntial that as System changes are introduced that increase the strength of the System and result in increase short-circuit fault currents, that the Transmission planner not simply look at steady-state Facility Ratings but also consider the short-circuit as well. Having steady-state, short-circuit and Stability in a single cohesive standard ensures that the Transmission planning engineer is evaluating all aspects of proposed changes to the System. 34. R2.4 - The Draft 2 version remains unchanged in regard to your comment. There was no overwhelming response from industry that compelled the SDT to make the change proposed. The standard requires off-peak analysis for near-term. In the long-term Requirement R2.2 states "…at a minimum, a current System peak Load study is required annually." This requirement is to capture long lead-time events for peak-Load periods. The peak system is typically the more troublesome period for most planners as Loads are higher and Facility Ratings are lower. Your concern is valid that in the off-peak, transfers across a system can be elevated and it is expected that if a particular System is subject to heavy transfers that a prudent Transmission planner would cover such situations based on their own identified need through sensitivity studies. Howver, such off-peak anlysis is not mandated by the standard for the Long-Term Planning Horizon. 35. The SDT feels that the Load model used in the study should represent actual conditions as accurately as possible. It has been shown during the reconstruction of the events of the August 14, 2003 blackout in the Northeast that the Load model was critical. One of the recommendations involved developing better Load models. 36. To the degree possible, the SDT has revised the standard to better align steady state and stability sensitivity lists. 37. The SDT has reviewed the need for Plant Stability and has concluded that it is appropriate to include it in this standard. It also felt that this was responsive to FERC Order 693. 38. R2.6.1 - The SDT agrees with your view and references to market structure changes have been removed in Draft 2. 39. Agree. Addressing or not addressing deficiencies discovered as a result of runing sensitivity studies is at the discretion of individual entities. The language of the standard was be modified to clarify this. 40. In developing a rationale why a selected Contingency is the most severe will require some sort of comparison to other Contingencies. In doing so the explanation required in the standard is already addressed. 41. The SDT feels that the current TPL-004 provides limited value to improve System reliability. Performing studies and not even considering

Q43			
Commenter	Yes	No	Comment
possible corrective actions (as is the case with the current standard), may result in over looking relatively inexpensive corrective actions which could significantly help improve reliability. It is appropriate to add another requirement to help improve reliability System development. The purpose of the requirement is to assess the risk of cascading outages or a catastrophic event, develop corrective actions and actually implement such actions if it is reasonable, for example installing a SPS. This is also consistent with Paragraph 1833 in FERC Order 693, which directs NERC to modify TPL-004-0 to identify options for reducing the probability or impacts of extreme events that cause cascading. 42. This has been added. **R3.5** Manual and automatic generation run-back/tripping is allowed as a response to a single ~~and~~ or multiple Contingenc~~ies~~y ~~as long as Facility Ratings are not exceeded.~~if the following conditions are met: 43. The SDT has reviewed the need for Plant Stability and has concluded that it is appropriate to include it in this standard. It also felt that this was responsive to FERC Order 693. 44. The SDT has reviewed this requirement and has determined that at this time this is appropriate for a North American standard. 45. The SDT has reviewed the need for Plant Stability and has concluded that it is appropriate to include it in this standard. It also felt that this was responsive to FERC Order 693. 46. R6 - By meeting the requirement for "coordinating analysis of these results through an open and transparent process", the SDT meant a stakeholder process that was set up to meet the requirements of FERC Order No. 890 with regard to an Attachment K filing of a Transmission Provider's Transmission Planning Process. The SDT has made a change to clarify this requirement. (see R8 in draft 2) **R8**. Each Planning Coordinator shall coordinate the distribution of Planning Assessment results among ~~affected entities~~ neighboring systems, coordinating analysis of these results through an open and transparent peer review process such as described in FERC Order 890. 47. Performance requirements: The Draft 2 version includes a new Requirement (R6) which indicates that each TP must define and document proxies used in simulation studies to identify System instability for conditions such as cascading outages. voltage instability, or uncontrolled islanding. In the steady state time frame, voltage instability can occur typically during high power transfer and/or peak demand periods. Voltage instability can be assessed using a long-term Stability program. However, it can also be assessed using a power flow program that simulates governor action. There are a number of IEEE papers (e.g., G. Morison, B. Gao, and P. Kundur, "Voltage stability analysis using static and dynamic approaches," IEEE Transactions on Power Systems, vol. 8, no. 3, pp. 1159 – 1171, August 1993) that can provide suggestions on the methodology. Cascading outages and uncontrolled islanding can also occur in the steady state time frame, for example, when the Transmission Facilities load beyond the corresponding relay trip settings. This could cause uncontrolled tripping of Transmission Facilities beyond those required to clear the fault. Even though these events are rare, the Transmission Planner should be aware of their possibility when performing studies. **R6**. For the short circuit portion of the Planning Assessment, as described in Requirement R2.3, each Transmission Planner and Planning Coordinator shall assess the short-circuit capability of its equipment under normal conditions and following any single Contingency condition that would result in greater circuit breaker interrupting duties.			

Q43			
Commenter	Yes	No	Comment
The SDT agreed to make this change, Requirement R3.5 of the second draft of the standard now allows genration tripping for single Contingencies. **R3.5**. Manual and automatic generation run-back/tripping is allowed as a response to a single ~~and~~ or multiple Contingenci~~esy~~ ~~as long as Facility Ratings are not exceeded.~~if the following conditions are met: To address the directive from FERC in Order 693, the SDT classifies Contingencies by events instead of by the number of Transmission elements lost. One event, for example loss of a breaker, can remove from service upon fault clearing all elements connecting to the breaker. Statistical data available from regional databases were analyzed in developing the draft standard. A Bus-tie Breaker is often used in straight bus substation layouts to sectionalize an otherwise long continuous bus into smaller sections. The SDT has proposed a definition of a Bus-tie Breaker in the second draft. **Bus-tie Breaker:** A circuit breaker that is positioned to connect two individual straight bus substation configurations. (Substation configurations such as ring-bus, breaker-and-a-half, or double bus-double breaker protection schemes do not use bus-tie breakers.) Tables 1 and 2 have been revised and Event P2-3 has is now shown as Planning Event P1.5, and loss of a bipolar DC line has been reclassified as a multiple Contingency event. The SDT recognizes that bus section faults can and often do trip multiple Transmission Facilities. The Planning Event P2 defines single Contingency events that are somewhat lower probability than those in P1 but often result in higher consequence impacts due to loss of multiple Transmission elements for the single electrical fault. In more reliable station designs (ring, breaker and a half,etc) this type of condition is minimized. The new TPL Draft 2 continues to emphasize a higher expectation of performance for bus section faults and other P2 events on the Transmission System above 300 kV. See Summary Response for questions Q20 through Q23 for more details on the team's rationale for continuing to seek this level of reliability improvement. The SDT concurs with your view and has made the change. A bipolar dc loss is no longer a single Contingency Planning Event. You are correct in describing the outcome – multiple Facility outages. However, the SDT is describing an internal fault of a breaker, not a stuck breaker condition. Therefore the SDT is treating these as a single Contingency event. The SDT agrees that these are lower probability events than the "typical single Contingency" events but they pose greater risks. The SDT has separated the single Contingencies as P1 and P2 based on their probabilities of occurrence. Also, allowable responses to the P2 events differ from those for the P1 events. It is noted that stuck breaker events are treated separately as P4 Planning Events. The choice of one mile was based on a review of various regional practices. 48. The reference to this item has been removed and more general weather conditions resulting in extreme Contingency conditions are assessed in the Extreme Events area. 49. See comments for Table 1.			

Q43			
Commenter	**Yes**	**No**	**Comment**
50. The SDT agrees and has revised the table accordingly. 51. The SDT has reviewed this requirement and has determined that at this time this is appropriate for a North American standard. 52. The SDT has removed the terminology referring to spare transformers. 53. The SDT has reviewed the issue and revised Requirement R5.5.3 to provide clarification. **R5.5.3**. Automatic generation tripping is allowed to mitigate Stability violations if the following conditions are met:			
Muscatine P&W	☑		Muscatine Power & Water (MPW) is a municipal utility with approximately 33 miles of 161 kV lines (2 lines) and 33 miles of 69 kV lines with three – 161/69 kV substations and seven – 69/13.8 kV substations. The service territory is approximately 24 square miles. Our last system peak was 149.9 MW on July 29, 1999 with a more recent peak of 146.9 MW on July 17, 2006 with generating capacity of approximately 253 MW from four units. The main problem we have is keeping up with the standards changes with our limited resources. We would suggest: 1. It was good to see the definitions section. We would also suggest including all acronyms including those in common use. Acronyms have become so common and they are now being reused to mean different things to different groups that for new people, multitasking individuals, or those not dedicated to a specific standard acronyms add confusion. Where possible, we would suggest using existing terms and, if appropriate, preferably already defined or have them defined in IEEE standard #100 dictionary. 2. Can you address adequate documentation? I'm not looking for detail formats or requirements but more minimum requirements and suggested layout etc. One of the problems I have during audits is how much documentation to provide without going over board. More is not good considering time requirements. Our goal is to make it easy for us and the auditors. We met the standard but have we proved it. Being a small utility with little impact on the bulk system how much should we provide? 3. In our region the MAPP Design Review Subcommittee (DRS) and in some cases the Subregional Planning Groups (SPGs) review new and proposed changes to facilities. In many cases they would have to approve any RAS or SPS and thus provide a peer review/reasonable and workable check. 4. R.2.6.1 - Being a small utility we are concerned about the planning study must be less than 3 years old. We budget for studies every three years but adjust that based on whether material changes have occurred to the system. Our last cycle was 6 years only because our load hasn't been growing and we still haven't hit our peak of 1999. Since we are dependent on consultants, we also have a concern for how long it can take for them to complete the study. Since we are small the bigger customer gets the attention. We do use the same criteria for near and long term planning horizons. We also participate in MAPP and ITWG studies for the annual and bulk system review and

Q43			
Commenter	**Yes**	**No**	**Comment**
			since our issues in studies are more local rather than the bulk transmission system. How should/could the sensitivity studies be covered for us at the regional level? 5. 300 kV and above questions: MPW is a small utility that doesn't have any facilities above 161 kV or any DC lines. I can see requiring more stringent performance for EHV and possibly lower voltage facilities in some cases, however, whether to allow the loss of Non-Consequential load should be left to local entities to decide since the cost of the "corrective action" could exceed the cost of the load loss and put undo burden on the customers. Depending on the type of load the customer may not want/be willing to pay for the extra reliability. If ordered, how will the cost be recovered? The cost should be recovered by the users not just the local customers. Thanks for the opportunity to comment!
Response: 1. The proposed definitions in the draft standard will be incorporated into the Glossary of Terms when the standard is approved. We believe it is better to have the terms listed in the NERC Glossary of Terms rather than pointing to the IEEE standard since the NERC Glossary is more readily available for use in the reliability standards environment. We have reduced the number of definitions in Draft 2 to try and have a more pointed impact where a definitional term is most needed. 2. Your concern is a compliance matter and not directly related to the reliability requirements. Although not yet available in Draft 2, the SDT will be adding compliance measures in a future draft. If the measures do not clearly address your concern please raise a more specific question related to the appropriate requirements/measures. 3. Thank you for your comment. 4. R2.6.1 - The SDT has revised R2.6.1 to allow the use of past studies that are 5 calendar years old or less. **R2.6.1**. For steady state, short circuit, or System Stability analysis: ~~if the study is less than three years old and no material changes have occurred to the System in the intervening period. Material changes include topology changes, generation additions/removals, and market structure changes~~ the study shall be five calendar years old or less. 5. The SDT has added greater detail to Tables 1 & 2, which provides for more situations where it is acceptable to lose Load. With regards to the loss of Load, the standards don't address cost recovery.			
NERC TIS	☑		1. In definition of "CONSEQUENTIAL LOAD," misoperations need to be defined better or removed, i.e. inadvertent tripping of elements due to protection system failure, including inadvertent SPS operation, may cause loss of load NOT connected to the element tripped off. In context of the definition, it appears that the misoperation should be on the protection system for the element that is tripped. {PARTLY COVERED} 2. Even when post-contingency voltage remains within prescribed limits, some voltage-sensitive customer load could still be dropped off due to their inherent sensitivity to allowed changes in voltage. Should such cases be considered as dropping non-consequential load or are the performance requirements met as long as post-contingency voltage stays within the prescribed limits? Such load losses can rarely be predicted by steady state analysis unless the

Q43			
Commenter	**Yes**	**No**	**Comment**
			loads and their distinct characteristics are explicitly modeled, but may be detectible in dynamic analysis since it is often the first swing voltage excursion that trips such loads. 3. Assuming the standard is passed, especially if the bar is raised, there should be some reasonable implementation period specified to allow entities that do not meet the standard's requirements presently and time to implement changes to become compliant. 4. Why is there a 300 kV threshold? Is there evidence that increasing the redundancy of the high voltage network will provide the largest reliability benefits? 5. Need to specifically define when it is OK to use "permanent" SPSs to meet performance requirements following the first contingency, i.e. separating a balance island should be OK. It is OK to utilize temporary SPS while the permanent corrective measure is being put in place. 6. Need to define, perhaps in the list of definitions, what is the "bus-tie breaker." Differentiation of center breakers in breaker-and-one-half schemes is a crucial item not to be subject to interpretation and possible confusion. 7. Need to clarify that "stuck breaker", regardless of whether cause by protection system failure, breaker failure to operate, or a slow breaker, is de-facto delayed clearance and causes additional contingency (ies). 8. Firm Transfer Cell for P3 does not make sense. 9. Need to strengthen the notion, in the bullets at the top of Table 1, that the assessment should also cover n-0 or "normal state (seems to be adequately covered in the body of the standard, but does not jump out from the Table 1 bullets at the head of the table.) 10. Include SHUNT DEVICES in P3–P9 planning contingencies. The same comment is applicable for stability table. 11. Need to clearly specify what documentation would be required to fulfill the standard's requirements for assessing extreme contingencies. 12. Replace "all" in the Extreme Events subheading with a more appropriate term. 13. Replace "all" in the table for Extreme Events for both Steady State and Stability tables with a more appropriate term to manage documentation requirements. 14. Use different designations for planned and extreme events in steady state and stability tables, e.g. PS and ES for steady state and PD and ED for stability (D for dynamic). 15. Throughout the tables, do not refer to "internal" breaker faults but use breaker fault instead. Faults can occur internal to the breaker, flashed bushings, or a fault (on or within) a free-

Q43			
Commenter	**Yes**	**No**	**Comment**
			standing CT associated with the breaker. 16. Modify bullet 5 in the Stability Table to include SPS failures to read: "Simulate the removal of all elements that Protection Systems, SPS or RAS systems, and controls are expected to disconnect for each Contingency." If an SPS or RAS is expected to operate for a contingency, it must be modeled as such for that contingency study. 17. In R1.2 need to add "for the period analyzed" and defined what "stressed" conditions means. 18. In R 2.1.3.7 need to insert "long-term" in front of "transmission outages." There is also a need to clarify/describe/define what long-term transmission outage is. 19. There are concerns, particularly for NON-vertically integrated TPs, about need of including Plant Stability requirements. 20. Define what "material" change is in R2.5.2. 21. Presumably the standard will be stamped with a CEII designation 22. Additional granularity should be included showing the correlation between Requirements and their applicability to any of the Functional Model Entities cited in the Standard. 23. Obligations to study and share results of the following should be clear in the TPL Standards: • Analysis of impacts on your system for contingencies outside of your system footprint. • Analysis of impacts on other systems for contingencies within your system. The owners of the other systems should be notified of your findings and joint analysis should be done if warranted. • Powerflow and stability analysis of contingencies that have interconnection-wide impacts. This may best be accomplished through modifications to existing standard TPL-005.

Response: 1. The SDT revised this definition in response to various comments.

Consequential Load Loss: Load that is no longer ~~served because it is directly connected to an element(s) that is removed from service due to fault clearing action or mis-operation~~ connected to a source as a result of the event being studied or which is lost as a result of the load's response to the transient conditions of the event (other than through the action of UVLS or UFLS schemes). Although Load which is lost as a result of the Load's response to the transient conditions of the event is considered Consequential Load Loss and is permitted when Consequential Load Loss is allowed, Transmission planning entities are not allowed to rely upon the expectation of such Load loss to meet

Q43			
Commenter	Yes	No	Comment
steady state performance requirements. 2. The SDT revised this definition in response to various comments. The SDT believes the revised definition addresses the concern expressed in this comment. **Non-Consequential Load Loss:** ~~Load loss other than Consequential Load Loss. For example, Load loss that occurs through manual (operator initiated) or automatic operations such as under-voltage Load shedding, under-frequency Load shedding, or Special Protection Systems.~~ Non-Interruptible Load loss other than Consequential Load Loss. For example, non-Interruptible Load loss that occurs through manual (operator initiated) or automatic operations such as under-voltage Load shedding, under-frequency Load shedding, or Special Protection Systems would be considered Non-Consequential Load Loss. 3. The SDT is sensitive to need for an implementation policy to allow for Transmission Owners to respond to requirements that involve raising the bar, but an implementation plan was not developed for this posting. The SDT anticipates developing an implementation plan in response to the next posting. 4. The initial draft of the proposed Transmission planning standard held the planning of 300 kV and higher Transmission systems to a more stringent requirement than the remaining BES. Although not unanimous, the majority of the SDT felt the 300 kV and higher Systems generally represent an extra-high-voltage (EHV) range that is considered the backbone of many systems in the various Interconnections and that the more stringent requirements were appropriate when considering N-1-1 Contingencies of two EHV Facilities. Systems operated at this range generally do not directly serve end-use Load customers but rather act as the medium for moving large amounts of power from production to various Load centers which then deliver the power among other Transmission or sub-Transmission Systems to end use customers. It is the desire of NERC and various stakeholders that the backbone of the electric power grid be robust and held to a higher degree of reliability. When EHV Systems are compromised, the large volumes of power served by them can place a severe amount of stress on parallel EHV or lower voltage paths. For example, if large EHV transformers experiences a catastrophic failure, not only are other System Facilities required to carry more Load but the System is also exposed to other N-1 conditions for long periods of time while awaiting a replacement or repair of the failed equipment. Large generation sources are typically connected at EHV levels and maintenance of the EHV Transmission lines within the vicinity of larges generation plants must often be coordinated during scheduled unit outages, resulting again in multiple Facility outages over extended periods of time. Therefore, it was the conclusion of the SDT in Draft 1 to propose greater reliability and operational flexibility through more stringent performance requirements when considering certain N-1 and N-1-1 Contingency events of EHV Systems. Throughout the industry substation arrangements at EHV levels reflect the importance of these Systems as the designs often consist of the more expensive ring-bus, breaker-and –a-half or double bus-double breaker protection schemes as opposed to the more simplistic and lesser cost single bus arrangements that are commonly found on lower voltage Systems. The feedback received from industry was divided related to the SDT's emphasis placed on a higher expectation for the 300 kV and higher Systems. Some commenter's questioned the importance and the high costs that may be needed to mitigate existing System designs. Others agreed with the SDT's approach and indicated that the impact to their Systems would be minimal. Some commenter's even questioned why the more stringent approach was not applied to the entire 100kV and higher Systems. The SDT believes the Draft 2 changes are responsive to industry feedback and reflect an appropriate middle ground related to the importance of the EHV Transmission System.			

Q43			
Commenter	Yes	No	Comment
5. The SDT has revised requirements to include changes related to the allowable use of SPSs related to N-1 events. See new Requirement R3.5 of the Draft 2 TPL-001 standard which indicates SPSs are permitted for automatic generation runback or tripping following a single contingency event. **R3.5**. Manual and automatic generation run-back/tripping is allowed as a response to a single ~~and~~ or multiple Contingenc~~iesy~~ ~~as long as Facility Ratings are not exceeded.~~if the following conditions are met: 6. The SDT has proposed a definition for bus-tie breaker in the second draft. **Bus-tie Breaker:** A circuit breaker that is positioned to connect two individual straight bus substation configurations. (Substation configurations such as ring-bus, breaker-and-a-half, or double bus-double breaker protection schemes do not use bus-tie breakers.) 7. Tables 1 and 2 have been revised to provide greater clarity. The SDT has accounted for both stuck breaker and Protection System failures as two unique Planning Events. See performance table requirements for Planning Events P4 and P5. 8. The SDT concurs and changes have been made to the performance Tables 1 and 2. The SDT has completely reformatted the performance tables in Draft 2 of the TPL-001-1 standard. The new format more closely mimics the existing approved TPL standard Table 1, with enhancements we feel the industry will find valuable. 9. The SDT concurs and has added a P0 Planning Event at the top of Table 1 to address the N-0 (existing Category A) condition. 10. The SDT has modified the tables to include shunt devices where appropriate. 11. Changes were made to simplify and clarify Extreme Event expectations. Please refer to both performance tables and Requirements R3.4 (steady-state) and R5.5.4 (Stability). 12. The statement has been revised to say "For all Extreme Events considered". 13. The statement has been revised to say "For all Extreme Events considered". 14. The Planning Events for steady-state and Stability now correlate one-for-one, so the SDT does not feel a need to distinguish each uniquely. The Extreme Events are not presently listed in a tabular format with the formality of the Planning Events. This is somewhat intentional to draw greater emphasis and focus to the Planning Events. If you feel changes are needed in our presentation of the Extreme Events within the performance tables, the SDT would be open to a suggested format from TIS. 15. Tables 1 and 2 have been revised to explain "internal breaker fault" (see Note 5 in Table 1 and Note 4 in Table 2). With this change the term "internal breaker fault" was retained. 16. The SDT believes that SPS/RAS is included in Protection Systems as defined in the NERC Glossary. 17. The SDT has revised the data and modeling requirements based on industry comments to clarify intent. **R9.** Each Distribution Provider shall provide its respective Planning Coordinator with modeling information for real and reactive load forecast data for each year of the Transmission planning horizon at Transmission nodes based on expected or historical System performance including the expected mix of industrial, commercial, and residential Loads, within ninety days of a request for such information. **R10**. Each Transmission Planner shall provide its respective Planning Coordinator with modeling information for Firm Transmission Service data, Interchange Schedules and resources required to supply Load for each of its Balancing Authorities for each year of the Transmission			

Q43			
Commenter	**Yes**	**No**	**Comment**
planning horizon, within ninety days of a request for such information. **R11.** Each Transmission Owner shall provide its respective Planning Coordinator with modeling information for known planned outages and long-term outages for Transmission equipment for each year of the Transmission planning horizon with consideration given to spare equipment strategy, within ninety days of a request for such information. **R12**. Each Generator Owner shall provide its respective Planning Coordinator with modeling information for known planned outages and long-term outages for generation equipment for each year of the Transmission planning horizon, within ninety days of a request for such information. **R13**. Each Resource Planner shall provide its respective Planning Coordinator with the modeling information for new planned facilities for each year of the Transmission planning horizon including but not limited to generators, Reactive Power devices, and new technologies, within ninety days of a request for such information 18. Since this requirement is relating to sensitivity, it is up to the entity to determine if it is appropriate to reduce the length of or increase the length of the "planned outage" that it has considered in its base case studies. 19. The SDT has reviewed the need for Plant Stability and has concluded that it is appropriate to include it in this standard. It also felt that this was responsive to FERC Order 693. 20. The SDT has changed the wording to provide clarity. **R2.5.2**. Material Transmission System changes ~~in the electrical vicinity of existing generation are made~~ are made at or near the point of Interconnection of existing Generation such as the ~~addition or~~ removal of a Transmission Line ~~at or near the point of Interconnection~~ or the addition of a new substation in one of the Transmission Lines connected to the plant. 21. The Standard is public information. Individual reports may need to be reviewed by the individual entity to ensure compliance with CEII. 22. References to entities have been added. 23. R6 requires "coordinating analysis of these results through an open and transparent process". By this requirement the SDT meant a stakeholder process that was set up to meet the requirements of FERC Order No. 890 with regard to an Attachment K filing of a Transmission Provider's Transmission Planning Process. The SDT has made a change to clarify this requirement (see R8 in draft 2). **R8**. Each Planning Coordinator shall coordinate the distribution of Planning Assessment results among ~~affected entities~~ neighboring systems, coordinating analysis of these results through an open and transparent peer review process such as described in FERC Order 890.			
NCEMC	☑		1. Planning Coordinator: The definition of Planning Coordinator should be kept within this document rather than relying on the NERC Functional Model as we believe that this entity has an important role in insuring coordination of transmission and resource plans. Coordination: 2. During the teleconference, one issue brought up was the matter of external contingencies being

Q43			
Commenter	**Yes**	**No**	**Comment**
			tested as a part of a TP's analysis. The reply was that this issue will be addressed outside this draft standard (TPL-005 and TPL-006) or would be accounted for in the coordination efforts among Transmission Planners. NCEMC is of the opinion that Requirements R5 and R6 need further details to insure adequate anlysis between and among Transmission Planners having varying local planning criteria so that Seams Issues are addressed that are not currently being address in regional and inter-regional studies. To the extent possible, timing of studies should be required to insure coordination between regional and inter-regional groups. Significant Increase in Study Activity Workload on Transmission Planners: 3. The increase in both steady state and dynamic studies required to ensure compliance with the proposed standards will result in increased costs and staff additions. The addition of the "Corrective Action Plan" requires the TP to provide a significant amount of documentation for each deficiency identified by the studies. Also, R3.2 requires that the studies simulate the protection scheme for all events. The current software tools cannot automate these studies for bus faults and breaker failure events, requiring each scenario to be studied manually. Additionally, experienced staff capable of performing analyses as described in the proposed standard have become increasingly difficult to find and retain and the talent pool of people with these skills has recently become depleted to alarming levels. Implementation Plan: 4. Given the intent of the proposed standard to encourage large scale investment in the EHV system, full implementation will take years, perhaps decades. Acquirement of right-of-way for new EHV lines has become increasingly difficult in recent years and inreasingly expensive. Legal, regulatory, and other difficult issues often take several years to navigate, even for 115kV lines. The Implementation Plan timeframe, if set too short, would be unduly burdensome on Transmission Owners forcing them to be less dicretionary with funds than would be prudent. The proposed implementation plan should include provisions for those cases where viable solutions simply can not be implemented in time due to circumstances beyond the control of Transmission owners. A reasonable period for transition is order. Design and Construction Constraints: 5. Even if right-of-way and other legal and regulatory hurdles are cleared, and the capital funding for such a tremendous level of investment was not an issue, the other resources required to actually construct the projects are equally difficult and costly to secure. Raw material prices on comodities like copper and steel have skyrocketed in recent years. Additionally, the skilled labor and Engineering resources are constrained with labor rates almost keeping up with other resource costs. Overall project costs have more than doubled over the last 7-10 years. Recent press releases concerning new generation being planned and then scrapped due to the rapid escalation of project

Q43			
Commenter	**Yes**	**No**	**Comment**
			costs are public evidence of this. The inflationary mark-up is impossible to estimate but much less will be built with the same capital investment than is currently envisioned. Cost-Benefit Analysis: 6. The proposed standard will be exceedingly expensive to become compliant with unprecedented levels of capital investment in Transmission facilities. Before the standard comes to official vote, it would be prudent for a cost-benefit analysis to be performed to determine if the reliability improvements truly justify the huge expenditures certain under the proposed standard. Additionally, as many jurisdictional rate structures share the cost of such investments between retail and wholesale customers, cost-benefit analyses should be completed for both retail and wholesale customers. System Adjustment Clarification: 7. It has already been noted earlier but deserves repeating here: The term "System Adjustment" as outlined in the tables should be better defined. The use of generation for redispatch may have nuances which preclude or otherwise limit their use for studies. Perhaps some clearer guidelines on what is allowed would facilitate transparency and coordination between Transmission Planners. Transmission Service Evaluation: 8. A major concern is that the proposed standard appears to be disjointed from the requirements for selling firm Transmission Service. The increase in reliability gained from the proposed standard would, in some regions, quickly be eroded by new firm sales if those sales are based on the historical N-1 ATC requirements. The proposed standard must be applied to long-term firm transmission service requests if Transmission reliability is to be truly enhanced. If the standard is not applied to Transmission Service evaluation, reliability levels for the different classes of firm customers will diverge. Stakeholder Process: 9. As a Transmission-Dependent Utility and Network Customer within 3 different Balancing Autorities with one being a Regional Transmission Organization, NCEMC cannot stress enough the need for a Stakeholder Process for coordination Transmission Planning that may impact Load-Serving Entities and other entities involved. It is critical to address reliability needs of all taking transmission service today and in years to come.
Response: 1. The SDT modified the definition and the definition will be approved with the standard and added to the Glossary of Terms Used in Reliability Standards. 2. R5 (R7 in second draft) requires the determination of the entities responsible for the portion of the studies. R6 (R8 in second draft) requires "coordinating analysis of these results through an open and transparent process". By this requirement the SDT meant a stakeholder process that was set up to meet the requirements of FERC Order No. 890 with regard to an Attachment K filing of a Transmission Provider's			

Q43			
Commenter	**Yes**	**No**	**Comment**
Transmission Planning Process. In addition, NERC Standards are to specify the requirements, which must be met and not "how" they are met. The SDT has made a change to clarify this requirement (see R8 in draft 2). **R8**. Each Planning Coordinator shall coordinate the distribution of Planning Assessment results among ~~affected entities~~ neighboring systems, coordinating analysis of these results through an open and transparent peer review process such as described in FERC Order 890. 3. The SDT understands the potential increases in work load. The draft standard allows the use of past studies to meet the current year assessment and study requirements. Requirement R3.2 does not require study of the protective scheme for all events, only that "Contingency analyses shall simulate the removal of all elements including those that System protection is expected to disconnect for each Contingency without operator intervention". For example, the requirement is that the outage simulation should be from breaker to breaker. In addition, Requirement R.3.2.2 only requires the studies consider relay loadability and identify how loadability is treated in the steady state simulation, not to study relay loadibility. 4. The SDT understands that there are extended transitionary issues associated with responsible entities becoming compliant with the new standard. The SDT plans to draft an extended implementation plan to accommodate such issues. The plan will be provided for the third posting of the standard. 5. The SDT understands that there are extended transitionary issues associated with responsible entities becoming compliant with the new standard. The SDT plans to draft an extended implementation plan to accommodate such issues. The plan will be provided for the third posting of the standard. 6. Cost issues are outside the scope of NERC reliability standards. 7. The Transmission performance tables have been modified to bring clarity to the Contingencies required for performance studies and when Non-Consequential Load Loss is permitted to meet requirements. The use of manual or automatic System adjustments to revise System topology as well as generation redispatch is always permitted so long as the actions can be performed while adhering to Facility Ratings. 8. Any requests for long-term Transmission service need to be studied in accordance with peformance requirements. 9. This draft standard addresses the requirement for coordination of studies in an open and transparent process (see Requirement R8 in draft 2).			
NCMPA	☑		Much of the language in R1 is redundant, because the MOD standards already address what data are required for modeling purposes. Including data requirements here, as well as in the MOD standards, will introduce the possibility of inconsistencies between the two as well as unnecessary duplication of work for entities providing the data. If any changes need to be made to what data are collected or to whom it is provided, those changes should be made in the MOD standards, not by adding data requirements to this standard. As for most every standard written, some consideration should be given to the cost of meeting the more stringent requirements proposed for this standard. While it might be possible to make incremental improvements in reliability, it may not be cost-effective, particularly given the low probability of some of the events addressed in the standard. Before stakeholders are asked to vote on this standard, a cost-benefit analysis should be performed to provide what would be an otherwise missing, but very important piece, of information about whether the costs of complying with the

Q43			
Commenter	**Yes**	**No**	**Comment**
			requirements of this standard are justified based on the reliability improvements that would be achieved.
Response: 1. The SDT believes some additional modeling requirements not presently contained in the MOD standards are necessary for Transmission planning purposes. The SDT has revised these requirements based on industry comments to eliminate redundancy with existing MOD standards with the intent that these requirements will be removed from the TPL standard when they are incorporated into the MOD standards at a later date. 2. The treatment of Transmission infrastructure costs is outside the scope of the NERC reliability standards.			
OPPD	☑		The terms Bus Tie Breaker and Non-Bus Tie Breaker used in Tables 1 and 2 are not well defined. To prevent misinterpretation of the standard, include diagrams that point out examples of bus tie breakers and non-bus tie breakers for each of the following bus schemes: 1) Single bus 2) Ring bus 3) Breaker and a half 4) Double bus double breaker.
Response: The SDT has proposed a definition for Bus-tie Breaker in the second draft. **Bus-tie Breaker:** A circuit breaker that is positioned to connect two individual straight bus substation configurations. (Substation configurations such as ring-bus, breaker-and-a-half, or double bus-double breaker protection schemes do not use bus-tie breakers.)			
PJM	☑		1. Delayed clearing due to primary relay system communication failure 2. Bus Contingencies should not be included for sensitivity/stressed case 3. Sensitivity case should not be included for long term study 4. Need to clearly define number of studies required for Load Flow/Stability and what performance criteria must be met. • Peak Case • Off Peak • Sensitivity 5. Need to allow SPS operation after a first contingency, system readjustment and a "second " first contingency. 6. SPSs can include generation tripping
Response: 1. The SDT does not understand the question and therefore can't respond. 2. Bus Contingencies are just one type of sensitivity that could be included but is not mandated. 3. Sensitivities are not required for long-term. 4. The SDT believes that the number of studies is clearly defined. 5 and 6. The SDT agrees that SPS can include generation tripping. The SDT has modified the requirements to allow SPS for single and multiple Contingencies (See Requirement R 3.5). **R3.5**. Manual and automatic generation run-back/tripping is allowed as a response to a single ~~and~~ or multiple Contingenc~~ies~~y ~~as long as Facility Ratings are not exceeded.~~if the following conditions are met:			

Q43			
Commenter	**Yes**	**No**	**Comment**
PRPA	☑		1) P5 and P8 in Tables 1 and 2 – If you keep the "300 kV bar" for distinction between P5 and P8, then please make an exception for P5 to be "Yes" on Non-Consequential Load Loss where load pockets (a.k.a. local load-serving areas) are concerned because "system adjustments" might not be possible to avoid the need for Non-Consequential Load Loss after the loss of another line into the load pocket. Example - A city, which is a type of load pocket, is served by three transmission lines. If one of the lines into the city is removed from service for maintenance, "system adjustments" within the city might not be possible to prevent steady-state voltages from dropping below an acceptable limit after loss of a second line into the city. If during such an "N-1Line-N1Line" Planning Event the city voltages become extremely low, then shedding of some of the city's load should be allowed, i.e. Non-Consequential Load Loss, for all voltages 100 kV and above. In this example, when one line into the city is removed from service, the TOP could either arm an SPS or RAS for automatic load shedding, or alert the operators to possible implementation of an Operating Procedure for manual load shedding. The city, along with its TO and other authorities, may decide by their own wishes to "raise the bar" and add facilities to maintain acceptable voltages for the worst "N-1Line-1Line" affecting only its local area. However, a facility addition type of solution, driven by a "No" for Non-Consequential Load Loss in P5, should not be mandated. "Controlled interruption of electric supply to customers (load shedding)" should be allowed for all voltages 100 kV and above as Footnote (c) in TPL-003 allows. Consistent with this request to allow load shedding for this type of disturbance for all voltages 100 kV and above, FERC Order No. 693 in Paragraph 1825 regarding TPL-003 for Category C disturbances (including "N-1Line-1Line") does not ask for "controlled load interruption" to be eliminated, but rather FERC directed the ERO to modify footnote (c) to Table 1 to clarify the term "controlled load interruption". And please note FAC-010-1, R2.5 – "Planned or controlled interruption…(load shedding)…" for TPL-003 conflicts with "No" for Non-Consequential Load Loss in P5 of Draft TPL. 2) Proposed revision to R3.5 – "Manual and automatic generation runback and generator tripping are allowed as a response to single and multiple contingencies as long as Facility Ratings are not exceeded and the result of the generator action, such as location and ramp-up speed of the AGC unit(s) responding to the generation trip or runback, loss of reactive resource, impact on reserves, and restart time of tripped unit(s), meets the performance requirements." Planning and Operations need flexibility to coordinate with the requirements of Engineering who established the Facility Ratings. It should not matter which method of generation redispatch is employed if all impacts of tripping vs. running back a generator are properly considered and performance requirements are met. The time period for a particular Emergency Rating might require

Q43			
Commenter	**Yes**	**No**	**Comment**
			faster generation redispatch than a runback or set of runbacks are capable of providing. Therefore, it may be necessary to trip one 100 MW unit rather than runback several units for a total of 100 MW. No need for R3.6 with above revision to R3.5.
Response: 1. The SDT has completely reformatted the performance tables in Draft 2 of the TPL-001-1 standard. The new format more closely mimics the existing approved TPL standard Table 1, with enhancements we feel the industry will find valuable. The SDT has responded to industry comments regarding higher performance requirements for facilities above 300 kV and have adjusted requirements for N-1-1 non-generator outages to permit Non-Consequential Load shed post-Contingency following the second event. We have retained a higher expectation for certain N-1 Contingencies occuring on the EHV System. See the Summary Response in Q20 through Q23 for additional information. 2. The SDT agrees that SPS can include generation tripping. The SDT has modified the requirements to allow SPS for single and multiple Contingencies (See Requirement R 3.5). **R3.5**. Manual and automatic generation run-back/tripping is allowed as a response to a single ~~and~~ or multiple Contingenc~~ies~~y ~~as long as Facility Ratings are not exceeded.~~if the following conditions are met:			
Progress–Carolinas	☑		1. In R4.6 and other locations, the generator exemption of 20 MW should be increased to 75 MVA. 2. Need to define bus-tie breaker. Is center breaker in a breaker and a half scheme a bus-tie breaker? 3. Need to continue to allow interruptions to firm transfers. This is essentially allowing redispatch and is an economically sensible solution to low probability high impact multiple contingencies. 4. Need to clarify if the "stuck breaker" is associated with the first event in multiple event contingencies or does one have to choose a breaker not involved with the first event. Note that a breaker cannot be "stuck" if there is no demand to trip. Therefore, a stuck breaker that is not adjacent to the first event will not have a demand to trip. 5. Need to distinguish what the difference is between a "stuck breaker" and a "[loss of breaker due to] internal fault". The specific meaning could make the difference in the clearing time selected for stability studies (normal clearing time versus delayed clearing time). 6. In the Table 2 (for stability) the last bullet under Planning events says to "simulate normal clearing times unless otherwise specified". Does this mean that "stuck breaker" events should be simulated with normal clearing times? Note that in the real world, internally faulted breakers may clear in either normal or delayed clearing time, depending on the relaying and CT configuration.
Response: 1. The limits cited are consistent with the registry criteria, Large Generator Interconnection Procedures, and FERC Orders. 2. No, a center breaker in a breaker and a half scheme is not considered a Bus-tie Breaker. The SDT has proposed a definition for Bus-tie			

Q43			
Commenter	**Yes**	**No**	**Comment**
Breaker in the second draft. **Bus-tie Breaker:** A circuit breaker that is positioned to connect two individual straight bus substation configurations. (Substation configurations such as ring-bus, breaker-and-a-half, or double bus-double breaker protection schemes do not use bus-tie breakers.) 1. Tables 1 and 2 have been revised to replace "firm transfer" with "firm Transmission service". 2. The SDT agrees and appreciates the feedback. The SDT has re-worked the tables, and believes the wording used for stuck breaker will satisfy your concern. Please see Planning Event P4 in each performance table. 3. Tables 1 and 2 have been revised to provide clarity. Please see Planning Events P2.1 and P2.3. 6. The sentence "simulate normal clearing times unless otherwise specified" refers to the events sepcified in the Tables. A stuck breaker would have clearing time that is "otherwise specified". The intent is to simulate "real world" events using the clearing times appropriate for the specific fault and breaker/Protective System configuration.			
Progress–Florida	☑		General Comments 1. NERC Standards TPL 001-0 through TPL 004-0 are approved standards that only required modifications pursuant to FERC Order 693. In this proposed draft standard TPL 001-1, the Standard Drafting Team (SDT) has far exceeded the recommendations suggested by FERC in the Order and has created unnecessary confusion. We disagree with the SDT's decision to combine NERC Standards TPL 001-0 through TPL 004-0 into one standard. Some changes to the existing TPL Standards may be warranted. One particular improvement would be clarifying the tables such that the table for TPL-001, for example, would only contain the performance criteria for Category A, with footnotes only applicable to that category, clarified as directed by FERC in Order 693. Similarly, TPL-002 would only contain performance criteria for Category B, and so on. In addition to combining the standards, the SDT has significantly changed contingency specifications and required performance levels. In many cases the changes represent a very significant increase in required performance standards that will result in the following: a) major capital expenditures, some of which will be of a magnitude unprecedented for the Bulk Electric System. Many of these projects would be constructed to mitigate one single low-probability event. The ratepayers, upon discovery of this necessity and realization that these significant expenditures will be passed on to them in their rates, will certainly object to these efforts and will question the wisdom of NERC's mandating change on such a massive scale without the knowledge or input of the public. The SDT stated in its continent-wide conference call on October 10, 2007 that the intent of many of the objectives contained in the proposed TPL-001-1 was to "raise the bar" for electric utilities. We would like to know specifically what this means. The phrase "raise the bar" is vague and overused in North American vernacular in general, and it is particularly irresponsible to use such vagaries when proposing standards which will result in unaffordable upgrades to the North

Q43			
Commenter	**Yes**	**No**	**Comment**
			American Bulk Electric System. b) reductions in ATC. To be compliant with the more stringent requirements of TPL-001-1, Transmission Operators would in many cases be forced to reduce ATC in order to decrease transmission flows to a point at which corrective actions may be taken without the result of cascading. This is diametrically in opposition to one of the key objectives of deregulation and comparable treatment for all entities engaged in transactions on the Bulk Electric System. c) Reduced Reliability. The elimination of footnote (b) will result in many outage scenarios for which loss of Non Consequential Load is presently unavoidable, but subsequently prohibited. For some scenarios, Transmission Owners may seek to avoid the excessive cost of a project by simply removing breakers from substations, thereby increasing the range of the initial breaker-to-breaker operation and essentially converting the disallowed Non Consequential Load to Consequential Load. This is obviously an undesirable option and in opposition to fundamental principles of reliability, but might be rendered necessary due to the increased requirements of TPL-001-1. d) Inability to react to issues of non-compliance. The dynamic nature of planning analysis is such that, from one annual planning cycle to the next, the constantly changing load and generation forecasts invariably result in emerging transmission projects unforeseen in previous cycles. With the increased stringency of TPL-001-1, reacting to these emerging needs in time to demonstrate compliance will be impossible, and thus non-compliance is seen as an inevitability. To further clarify, the major transmission projects that TPL-001-1 would necessitate would be of a magnitude such that extensive engineering, land acquisition and involvement with regulatory and governmental agencies would be required, which could result in project lead times of 10 years or more. Not only would a lengthy transition period be needed for TPL-001-1, but upon the Standard's effective date the ability to implement all future projects would need to be given special consideration in light of these challenges. In other cases, the performance criteria are not clearly defined, such as the timing between multiple contingencies, and the level of readiness of the system before and after Planning Events. Finally, the SDT has chosen to eliminate the footnotes in the current standards, contrary to the direction of FERC in Order 693 to "clarify" the footnotes. The purpose of the footnotes is to further explain terms in the tables, provide guidance in interpreting the expected performance criteria, and specify any exceptions to the criteria. Footnotes also serve the purpose of keeping the standard concise by eliminating repetitiveness.

Q43			
Commenter	**Yes**	**No**	**Comment**
			Specific comments on the Draft Standard Performance Criteria 2. The performance requirements table should clearly define what the initial state of the system is assumed to be before any Planning Events, and what the state of the system is assumed to be after the Planning Event. For example, P1 (single contingency) events: assuming that the system is to be compliant, the state of the system prior to the event must be "secure" such that the event could occur and there is no interruption of firm transfer or loss of load, Equipment Ratings are not exceeded, System steady state voltages and post-transient voltage deviation are within acceptable limits. However, the system is not as it was before the event. The system could be described as "normal" but perhaps not "secure". If the requirement is that the system must also be "secure" after the event, then the standard must clarify what is allowed for "system adjustments" after the first Planning event to prepare for the next. FERC Order 693 directed the ERO to modify the second sentence of footnote (b) to clarify that manual system adjustments other than shedding of firm load or curtailment of firm transfers are permitted to return the system to a normal operating state after the first contingency. However, in order to bring the system to a secure state, as is necessary for the second contingency of a category C3 or C5 event, footnote (c) allows curtailment of firm transfers, and FERC Order 693 only required footnote (c) to be clarify the term "controlled load interruption", leaving the curtailment language intact. The implication of this interpretation is critical to peninsular Florida. The Category B loss of one 500 kV line from Florida to Georgia is sustainable, such that the system is "normal" after the event. However, in order to be prepared for the next contingency, (the loss of the second 500 kV line), firm transfers must be curtailed (Interruption of Firm Transfer). Without the ability to curtail firm transfers, a "super-firm" priority of transmission service is created for non-native load customers, and thus comparable treatment no longer exists. Comments on New Performance Tables: The draft TPL standard represents a major change in the Table 1 contingency definitions and required performance levels. 3. Table 1 Contingencies C1 and C2 are being moved to the single contingency category. While C1 and C2 represent single element outages, their probability of occurrence is much lower than the other Category B contingencies and they do not belong in the single contingency performance requirements group. 4. Footnote (b) which permits, as a limited exception in unique circumstances with a sound rational basis, some localized load reduction for single contingencies, has been removed. This is a very significant change for some utilities. Footnote (c) which permits load shedding and curtailment of

Q43			
Commenter	**Yes**	**No**	**Comment**
			firm transfers has been removed from C1, C2 and most of C3. This is a very significant increase in required performance level that is not justified. 5. The "applicable rating" for loading and voltages in Table 1 has been removed so that essentially, the same ratings and voltage restrictions apply to both B and C contingencies. Some utilities plan to a normal rating for single contingencies but will allow a higher short term rating for Category C events. This practice appears to be either disallowed or inadequately described in TPL-001-1. Transmission Owners should allowed to base ratings on manufacturer specifications or other reasonable criteria using sound engineering judgment. 6. Several new Category D "Extreme Events" have been added which greatly expand the scope and complexity of Category D studies. These are (1) any two unrelated single element outages and (2) wide area events a. through h. These represent a major increase in the scope of Category D studies and probably a doubling of required SWG studies. It should be note that the existing Categories D1 through D4 have been substantially changed to eliminate analysis of relay failure contingencies. The philosophy contained in the existing TPL-004 standard is that faults with a protection failure should be evaluated whether that failure is a circuit breaker, relay or CT; the proposed standard restricts the analysis to breaker failure. 300 kV Threshold Performance Level 7. The TPL-001-1 draft sets a threshold of higher performance to facilities above 300 kV than previously established in the existing standard. We do not agree that such a threshold is necessary or warranted. Requirements which are more stringent for these facilities may wrongly influence decisions on project alternatives in favor of facilities with less stringent requirements. Additionally, facilities above 300 kV naturally tend to transport larger amounts of power. The loss of single or multiple facilities above 300 kV generally results in an immediate generation-to-load mismatch too great to avoid either curtailment of firm transactions or loss of Non Consequential Load, or both. Singling out facilities above 300 kV for more stringent requirements is therefore clearly unreasonable. DC Line Performance Requirement 8. The TPL-001-1 draft sets a lower performance requirement for the loss of a single pole of a DC line than in the existing standard by allowing interruption of firm transfer if the transfer is deemed to be dependent on the outaged line. Firm transfers are also dependent upon AC lines. The proposed standard does not distinguish between asynchronous DC ties and the more common parallel connected DC tie. With an asynchronous DC tie, the transfer is lost with the tie. With a parallel DC tie, the transfer will be shifted to the parallel AC system and should have the same performance requirements. We do not agree that such an exception for DC lines is necessary or warranted. The decision in selecting DC vs. AC in transmission lines has traditionally been based on the break-even

Q43			
Commenter	**Yes**	**No**	**Comment**
			cost and performance of the two alternatives. The lower performance requirement may wrongly influence decisions on project alternatives in favor of DC facilities with less stringent requirements. Distinction Between Committed and Proposed Projects: 9. Models cannot discern the difference between a "committed" project, and a "proposed" project in a performance analysis. The standard should instead set criteria for when models can be relied upon for planning purposes such that changes to the future plan will not have an impact on reliability. The intent of Requirements R2.7.3 and R2.7.4 should be combined and added into R2.7.1.1. Rather than adding the additional requirement to document a criteria, the requirement should be that in the Near-Term Planning Horizon, projects cannot be removed (or modified) without demonstrating that the revised plan meets performance criteria. In addition, the requirement in R2.7.1.1 to supply a "project initiation date" is ambiguous. What will constitute "project initiation" …construction start date? …Engineering complete date? …Land procurement date? Funds allocated date (budgeted)? Suggested wording for R2.7.1.1. "Transmission and generation improvement projects for the Near-Term Transmission Planning Horizon, shall have in-service dates provided, and shall not have in-service dates changed, or be removed from planning models, without documentation to show that the revised plan meets performance requirements." Load Modeling Requirements: 10. The proposed TPL Standard contains numerous references to load modeling. The goal of improving and verifying the load model is worthwhile but is not appropriate for the TPL standards. Assessment of load model accuracy is best accomplished through detailed analysis of grid disturbance events. The main difficulties in accomplishing this are (1) grid events that significant reduce transmission voltages throughout a load area are infrequently occurring and (2) the process of recreating the event through simulation studies is extremely complex and time consuming. While these efforts should be encouraged they should remain a RRO prerogative. A few concerns not previously addressed by comments to Questions 1-42 include the following: R1.1.1 Use of expected Load mix - based on the actual or expected aggregate mix of industrial, commercial, and residential Loads. – This requirement is not justified as the load model may be developed through disturbance analysis rather than load type synthesis by customer class. Some Load Serving Entities may have great difficulty in creating load forecasts based on customer class. Load forecasting requirements are adequately addressed in the existing MOD standards and do not belong in the proposed TPL standard. R1.2. Load models with supporting rationale - that include power factor data that may be based on historical System performance, validated by measurement during stressed System conditions, or

Q43			
Commenter	**Yes**	**No**	**Comment**
			documented Transmission planning area requirements. This requirement is not appropriate for the TPL standards. 11. R.3.3.2.1. Consequential Load loss (expected maximum demand and expected duration) following a single Contingency shall be identified in the Planning Assessment. – this Requirement in its present wording could be construed to mean that the precise amount of load between breakers should be specified and reevaluated with every assessment. This would unnecessary and burdensome, and we therefore seek clarification of this Requirement or its removal altogether. 12. Requirements for studies using Sensitivity cases: R2.4.3 appears to place equal importance on base cases and sensitivity cases with regard to the need to implement projects or Corrective Action Plans. Terms in TPL-001-1 using forms of the word "sensitivity" need to be clearly defined by the SDT. Additionally, the SDT needs to clarify its intent regarding required action based on results from sensitivity studies. We do not agree that results from sensitivity studies should be given equal standing with results from base scenarios, and we would particularly object to any insinuation that projects would need to be implemented to mitigate violations seen in a sensitivity involving speculative non-firm transfers. 13. Short Circuit Requirements: The new TPL standard also contains numerous references to short circuit analysis, which are new requirements that expand the TPL standards, but without specific testing or performance criteria. Evidence that short circuit studies have been performed is currently required in the existing FAC-002-0 Standard. Since the primary concern is the appropriate sizing of equipment and the prevention of equipment damage as opposed to overall grid reliability, we do not see the need for a set of requirements within the proposed TPL standard for short circuit studies. FRCC Specifics: One final specific issue concerns the topography and performance history of the Bulk Electric System in our particular region (FRCC). The FRCC system is a peninsular system having only one interface with the rest of the interconnected NERC system, and has historically demonstrated exceptionally high reliability with no events in recent history cascading beyond the FRCC system. While other areas of the NERC system may require some increased stringency in the TPL standards, PE feels that the adequacy of the existing TPL standards as they apply to the FRCC System has been extensively documented. Conclusion In conclusion, we believe that TPL-001-1 is unnecessary and burdensome. In particular, the

Q43			
Commenter	**Yes**	**No**	**Comment**
			elimination of footnote (b) will deny Transmission Owners and Transmission Operators the right to curtail Non Consequential Load in order to restore the Bulk Electric System. This elimination has absolutely nothing to do with the reliability of the Bulk Electric System; rather, it places the reduction of Customer Minutes of Interruption (CMI) ahead of reliability. Essentially, the emphasis of TPL-001-1 is inappropriately placed on the reliability of distribution feeders rather than the reliability of the Bulk Electric System. The fundamental objective of the existing TPL Standards has been to protect the reliability of the Bulk Electric System, and we believe all future TPL Standards should do the same. Given the aforementioned issues, we believe the proposed TPL standard is inferior to the existing Board approved TPL Standards, creates unnecessary confusion, and will require many iterations of industry comment and revision. As an intermediate approach, we would strongly urge the Standard Drafting Team that the existing TPL standards be modified to respond to FERC Order 693 directives, clarify any ambiguities, and that the proposed new standard not be pursued any further.

Response: 1. The SDT followed the suggestion of FERC in Order 693 to consolidate the 4 standards into 1 if possible. The SDT recognizes that it has it has raised the bar on performance in some areas and has done that due to criticisms and suggestions from various parties. The SDT realizes that this will have an impact and is working on an Implementation Plan that will address some of the concerns. This is a performance based reliability standard and does not and should not consider economics. The SDT has made numerous changes to the tables in an attempt to provide further clarity as to what needs to be done to achieve performance.
2. An Initial Conditions column has been added to the tables. The SDT has also changes several requirements in the tables to allow for more instances of where Load can be dropped.
3. The SDT studied available data and practices and determined that these Contingencies do belong in the single Contingency performance group.
4. Local Load pockets are recognized as a problem and the SDT will address them in a future revision.
5. The use of the defined term Facility Ratings was intentional to answer problems such as described here.
6. The SDT was responding to FERC Order 693 in the details for Extreme Events.
7. The SDT feels that 300 kV and above represents the backbone of the BES and as such warrants more stringent criteria.
8. This is the only comment received on this issue so no changes were made to the second revision of the standard. However, the SDT will continue to review the performance table in subsequent revisions.
9. This verbiage has been removed from the standard.
10. The SDT feels that the current MOD standards do not cover all of the modeling requirements for a planner. Therefore, the specific areas found lacking are described in the TPL standard. Once the MOD standards are revised appropriately, these requirements can be deleted from TPL. The SDT has re-written these requirements and they are now numbered Requirement R9 through R13.
11. R3.3.2.1 - FERC required documentation of Consequential Load loss in Order 693, paragraph 1795, (not Non-Consequential) and duration should be based on best judgment for the common cause of the event.
12. Addressing or not addressing deficiencies discovered as a result of runing sensitivity studies is at the discretion of individual entities. The language of the standard has been changed to require that the entity document why or why not the results of the sensitivities have affected the Corrective Action Plan.

Q43			
Commenter	**Yes**	**No**	**Comment**
13. Short circuit studies are required as part of the Interconnection process. The TPL draft addresses on-going System changes and increases in available fault current due to the additions of circuits and resources, as listed in the Corrective Action Plan. Short circuit studies help determine appropriate equipment sizing and setting of protective relays. Such studies will help provide for a complete Corrective Action Plan, i.e., the installation of a transformer to resolve a System performance deficiency may require the installation of additional circuit breakers. FERC also noted the need to include this analysis to cover such conditions. The SDT has thoroughly considered the comments of all reponders. We believe that the revised draft of TPL-001-1 places the proper focus on BES reliability and the BES' mission to serve all firm Load under an appropriate range of Contingency events. Furthermore, the SDT believes that the current draft does in fact respond to the FERC Order 693 directives.			
ReliabilityFirst	☑		The requirement for short circuit studies (mentioned in R2 and included in all of R2.3) should be removed from this standard. Relay and protection engineers use a different type of software (Aspen and CAPE) for different reasons (to calculate phase and ground faults and perform relay coordination studies). Those types of studies should not be included in this standard and are totally separate from performing power flow and dynamics studies.
Response: The SDT believes that it is appropriate to include an assessment of the results of short circuit studies in the assessment of the reliability of the Transmission system. The standard does not specify requirements related to software or specific requirements of the studies.			
SRP	☑		The SDT should be commended for very good work at identifying many different issues of the TPL standards. However, TPL-001-1 should take into account the consequences of a Security-Based or Dependability-Based Misoperation (and failure) of the Protection System. 1) A Security-Based Misoperation of the Protection System may remove additional elements of the BES and could be listed in the table under "multiple contingency". 2) A Dependability-Based Misoperation (or Failure) of a non-redundant Protection System could cause long time delays in clearing faults and clear a large area of BES around the faulted Element. This type of failure may not provide local tripping or breaker failure initiation and remote Protection Systems would need to operate to isolate the fault or disturbance. Often the operation of the remote Protection Systems would cause long time delays in isolating faults and disturbances. a) The BES should be studied and those elements need to be identified where Dependability-Based Misoperations (or failures) would prevent meeting the performance requirements of Table 1 (Steady State) or Table 2 (Stability). This type of Misoperation (or Failure) will have to be included in the Tables. For example, some parts of the BES may be able to survive long time delayed clearing of faults caused by Dependability-Based Protection System Misoperations (or failures) and still meet the performance requirements of the tables. But other parts of the BES may experience cascading outages for this same scenario. One solution to minimize the consequences of Dependability-Based Misoperations (or failures) is to install redundant Protection Systems. The redundant Protection Systems would reduce the possibility of a single Dependability-Based Misoperation (or failure) from

Q43			
Commenter	**Yes**	**No**	**Comment**
			affecting the isolation of faults and disturbances. In addition, the TPL-001 standard will need definitions of Security-Based Misoperation and Dependability-Based Misoperation. The following definitions are used for PRC-004-WECC-1: Security-Based Misoperation: The incorrect operation of a Protection System or RAS for faults or disturbances outside the intended zone of protection. Security is a component of reliability and is the measure of a device's certainty not to operate falsely. Dependability-Based Misoperation: Any of the following ▪ The absence of a Protection System or RAS operation when intended ▪ A Protection System or RAS equipment failure is alarmed or indicated to operating personnel. ▪ A Protection System or RAS equipment failure is discovered. Dependability is a component of reliability and is the measure of a device's certainty to operate when required.
Response: To date, the SDT has done the following: Tables 1 and 2 have been revised. A Contingency involving the failure in the Protection System has been added as P5 in Tables 1 and 2. Also 2a-2d were added in the Table 2 Extreme Events. The SDT is continuing discussion on Protection System issues and will be making additional changes as appropriate in future versions.			
Santee Cooper	☑		1. Transmission Planners are currently able to maintain adequate levels of reliability using the existing TPL-001 thru TPL-004 standards. While incremental improvements can be made, it is not evident that prescribing more stringent planning requirements will result in significant reliability improvements. 2. Table 1 in the column titled "Interruption of Firm Transfer Allowed," does it pertain to point-to-point only, or does it also apply to network loads? Please explain how this provision is consistent with the requirement to re-dispatch to address system constraints. 3. There are no explicit performance requirements for normal system performance. 4. Requirement R1.1.2 refers to "normal weather patterns as agreed to by the Planning Coordinator(s) and the Transmission Planner(s)…" The standard and the ERAG MMWG need to be made consistent. 5. Requirement R2.3 There are no performance requirements for Short Circuit Studies. 6. Requirement R2.7.1.1 specifies a "project initiation date". This information is not needed for system reliability purposes.

Q43			
Commenter	**Yes**	**No**	**Comment**
			7. Requirement R3.2. There should be some flexibility for simulation of planning events. For certain areas of the BES, the resulting configuration after operator intervention could be more severe than the removal of all elements. For example, the operation of a transmission line with one end open may be more severe than opening both ends of the line. This respresents actual operation in order to restore service to stations on the line. 8. Requirement R3.3.2.1 requires an evaluation for "Consequential Load loss (expected maximum demand and expected duration). Load loss is not an ERO responsibility. 9.Requirement R3.3.2.2 does not permit the "shedding of firm Load or curtailment of firm transfers". This is not an ERO responsibility. 10. Requirement R3.6 states "Manual and automatic generation tripping is allowed for multiple Contingencies and for single Contingencies only in situations that meet all of the following conditions: TBD. Generators should be allowed to trip for single and multiple contingencies as long as Facility Ratings are not exceeded. In addition, generators should be allowed to trip for any condition that imperils the generator. System performance should be the criteria, not generator operating state. 11. Requirement R4.2 states "Contingency analyses shall simulate the removal of all elements including those that the System protection is expected to disconnect for each Contingency without operator intervention." Delete "including those". 12. Requirement R4.6.1 states that Plant Stability studies "Shall be performed for individual generating units 20 MW or greater…" Does this mean that studies must be performed for all units? Many plants have "sister units" that are essentially the same. This requirement seems to be excessive. 13. The R1 requirements should be deleted from this standard and should remain on the MOD standards. (MOD-010, MOD-012, and MOD-018) 14. Requirement R4.6.2 states that Plant Stability studies "Shall be performed for changes in the real power output of a generating unit by more than 10% of the existing capability or more than 20 MW whichever is greater." The meaning of this wording is unclear. 15. Requirement R4.6.3 states that Plant Stability studies "Shall be performed and evaluated for those Planning Events that would produce more severe System impacts and the rationale for the Contingencies selected for evaluation shall be available as supporting information and shall include an explanation of why the remaining Contingencies would produce less severe System results. The

Q43			
Commenter	**Yes**	**No**	**Comment**
			identified Contingencies, at a minimum, shall be evaluated." The use of "evaluation/evaluated is unclear. Is an evaluation the same as performing a study? If not, what does it mean to select a contingency for evaluation? 16. The standard needs to define or describe the difference between a "bus" and a "bus section". 17. Table I, P3, P7.2, P9.6 and Table 2, P7 need some punctuation for clarification. Table I, P9.6 and Table 2, P9, why study replacing an outaged transformer with a spare? 18. The use of the terms "bus", "non-tie bus", and "bus section" are not clear. In P7-2 what is meant by the phrase or a bus and a stuck non-bus tie breaker ? Does this imply a bus or a bus section? How would you model this?

Response: 1. The SDT believes that more stringent planning ("raising the bar") is appropriate in some areas of the standard and will improve reliability.
2. The term "firm transfer" in Tables 1 and 2 has been replaced with "firm Transmission service".
3. Table 1 has been revised to include normal System performance requirements.
4. This requirement has been eliminated in response to various industry comments.
5. Short circuit duty is a Facilitiy Rating, and Facility Ratings shall not be exceeded.
6. The SDT agrees that this information is not required to meet reliability standards. It was specifically added as an additional piece of information in the Planning Assessment to allow some level of peer review within the NERC community and provide some level of confidence that the proposed plan could in fact be completed to meet the reliability objective. Initiation dates are only required in the near term since longer term plans tend to move in time and only have general scheduling associated with them.
7. R3.2 - The SDT has added a line end open condition in P2.
8. R3.3.2.1 - FERC has jurisdiction over firm Transmission service. FERC allows the use of "equally or more efficient or effective approach" and firm Load is being used as a proxy for firm Transmission service.
9. This requirement is consistent with FERC Order 693.
10. The SDT agrees that SPS can include generation tripping. The SDT has modified the requirements to allow SPS for single and multiple Contingencies (See Requirement R 3.5).

R3.5. Manual and automatic generation run-back/tripping is allowed as a response to a single ~~and~~ or multiple Contingenc~~ies~~y ~~as long as Facility Ratings are not exceeded.~~if the following conditions are met:

11. The SDT feels that the wording is equivalent.
12. The answer is yes it does.
13. The SDT believes some additional modeling requirements not presently contained in the MOD standards are necessary for Transmission planning purposes. The SDT has revised these requirements based on industry comments to eliminate redundancy with existing MOD standards with the intent that these requirements will be removed from the TPL standard when they are incorporated into the MOD standards at a later date.

Q43			
Commenter	**Yes**	**No**	**Comment**
14. The SDT feels that the wording is clear as stated. 15. Evaluation is based on good professional judgment and knowledge of the System. It is not the same as a study. 16. "Bus section" is in the existing TPL standards; the SDT is not proposing to change its meaning. The SDT considered but has decided not to include a definition for "bus section". 17. Tables 1 and 2 have been revised. P9.6 has been deleted and replaced with a reference in Requirement R11 in the second draft. **R11**. Each Transmission Owner shall provide its respective Planning Coordinator with modeling information for known planned outages and long-term outages for Transmission equipment for each year of the Transmission planning horizon with consideration given to spare equipment strategy, within ninety days of a request for such information. 18. The SDT has included a definition for Bus-tie Breaker. The SDT has clarified the event description for P7-2 (now P-4 in the second draft). **Bus-tie Breaker:** A circuit breaker that is positioned to connect two individual straight bus substation configurations. (Substation configurations such as ring-bus, breaker-and-a-half, or double bus-double breaker protection schemes do not use bus-tie breakers.)			
SaskPower	☑		Saskatchewan commends the SDT for taking on this difficult and important task. We wish you good fortune. 1. Local area network load is allowed to be shed in Saskatchewan for single contingencies, and the interruption of firm transfers are allowed over our DC tie and AC tie-lines. The Saskatchewan Regulatory Jurisdiction has no plans to change this unless there is technical evidence to justify the increase in reliability versus the cost. 2. Also for P9-1, is there any justification for the selection of one mile? If there is none the development of exemption criterion should be delegated to the Planning Coordinator. It is not what Saskatchewan has used in designing its system, and it is going to involve a significant capital outlay for Saskatchewan with questionable reliability benefits. Saskatchewan will not support the default value of 1 mile unless there is a technical study (including reliability benefit versus cost) to support it as opposed to any other distance.
Response: 1. The SDT is required to address FERC Order 693 and cannot default to lowest common denominator. This issue is beyond the scope of the SDT and needs to be addressed at the NERC level. However, an Entity can request an "Entity Variance" in accordance with the NERC Reliability Standards Development Procedure (Page 27). **2.** The one mile allows for some measurable physical constraints to building separate lines in all locations, but limits the exposure to a fixed length, which is universally applicable. SaskPower can request an "Entity Variance" in accordance with the NERC Reliability Standards Development Procedure (Page 27).			
Seattle City	☑		The additional studies required by this proposed standards are going to put a burden on our utility. We do not have the additional human resources available to perform so much additional work. Also, the stipulation that no "non-consequential load" loss may occur will put a financial burden on our utility. We have always planned assuming that we would able to be shed residential load in case of

Q43			
Commenter	**Yes**	**No**	**Comment**
			an emergency caused by a N-2 event or regional outage beyond our control.
Response: The SDT believes that more stringent planning ("raising the bar") is appropriate in some areas of the standard and will improve reliability.			
SERC EC DRS	☑		1.In the Stability Performance Table, under contingency P8 with a line out add a generator contingency. and with a transformer out add a generator and a line contingency. 2. In the Stability table change the Extreme Events numbering to E1, E2, etc. 3. In R4.6 and other locations, the generator exemption of 20 MW should be increased to 75 MVA.
Response: 1. The transformer – line combination has been added. The SDT does not feel that the other cited events are a legitimate combination. If you have specific data to indicate otherwise, please provide it. 2. The SDT made changes to the format of Extreme Events. 3. This is consistent with FERC Order 693, the Large generator Interconnection procedures, and the registry criteria.			
SERC EC PSS	☑		Significant Increase in Study Activity Workload on Transmission Planners: 1. The increase in both steady state and dynamic studies required to ensure compliance with the proposed standards will result in increased costs and staff additions. The addition of the "Corrective Action Plan" requires the TP to provide a significant amount of documentation for each deficiency identified by the studies. Also, R3.2 requires that the studies simulate the protection scheme for all events. The current software tools cannot automate these studies for bus faults and breaker failure events, requiring each scenario to be studied manually. Additionally, experienced staff capable of performing analyses as described in the proposed standard have become increasingly difficult to find and retain and the talent pool of people with these skills has recently become depleted to alarming levels. Implementation Plan: 2. Given the intent of the proposed standard to encourage large scale investment in the EHV system, full implementation will take years, perhaps decades. Acquirement of right-of-way for new EHV lines has become increasingly difficult in recent years and inreasingly expensive. Legal, regulatory, and other difficult issues often take several years to navigate, even for 115kV lines. The Implementation Plan timeframe, if set too short, would be unduly burdensome on Transmission Owners forcing them to be less dicretionary with funds than would be prudent. The proposed implementation plan should include provisions for those cases where viable solutions simply can not be implemented in time due to circumstances beyond the control of Transmission owners. We recommend a minimum of 15 years for the transition. Design and Construction Constraints: 3. Even if right-of-way and other legal and regulatory hurdles are cleared, and the capital funding for such a tremendous level of investment was not an issue, the other resources required to actually

Q43			
Commenter	**Yes**	**No**	**Comment**
			construct the projects are equally difficult and costly to secure. Raw material prices on comodities like copper and steel have skyrocketed in recent years. Additionally, the skilled labor and Engineering resources are constrained with labor rates almost keeping up with other resource costs. Overall project costs have more than doubled over the last 7-10 years. Recent press releases concerning new generation being planned and then scrapped due to the rapid escalation of project costs are public evidence of this. The inflationary mark-up is impossible to estimate but much less will be built with the same capital investment than is currently envisioned. Cost-Benefit Analysis: 4. The proposed standard will be exceedingly expensive to become compliant with unprecedented levels of capital investment in Transmission facilities. Before the standard comes to official vote, it would be prudent for a cost-benefit analysis to be performed to determine if the reliability improvements truly justify the huge expenditures certain under the proposed standard. Additionally, as many jurisdictional rate structures share the cost of such investments between retail and wholesale customers, cost-benefit analyses should be completed for both retail and wholesale customers. System Adjustment Clarification: 5. The term "System Adjustment" as outlined in the tables should be better defined. The use of generation for redispatch may have nuances which preclude or otherwise limit their use for studies. Perhaps some clearer guidelines on what is allowed would facilitate transparency and coordination between Transmission Planners. Transmission Service Evaluation: 6. A major concern is that the proposed standard appears to be disjointed from the requirements for selling firm Transmission Service. The increase in reliability gained from the proposed standard would, in some regions, quickly be eroded by new firm sales if those sales are based on the historical N-1 ATC requirements. The proposed standard must be applied to long-term firm transmission service requests if Transmission reliability is to be truly enhanced. If the standard is not applied to Transmission Service evaluation, reliability levels for the different classes of firm customers will diverge.
Response: 1. The SDT understands the potential increases in work load. The draft standard allows the use of past studies to meet the current year assessment and study requirements. Requirement R3.2 does not require study of the protective scheme for all events, only that "Contingency analyses shall simulate the removal of all elements including those that System protection is expected to disconnect for each Contingency without operator intervention". For example, the requirement is that the outage simulation should be from breaker to breaker. In addition, Requirement R.3.2.2 only requires the studies consider relay loadability and identify how loadability is treated in the steady state simulation, not to study relay loadibility. 2. The SDT understands that there are extended transitionary issues associated with responsible entities becoming compliant with the new			

Q43			
Commenter	**Yes**	**No**	**Comment**
standard. The SDT plans to draft an extended implementation plan to accommodate such issues. The plan will be provided for the third posting of the standard. 3. The SDT understands that there are extended transitionary issues associated with responsible entities becoming compliant with the new standard. The SDT plans to draft an extended implementation plan to accommodate such issues. The plan will be provided for the third posting of the standard. Cost issues are outside the scope of NERC reliability standards. 4. The treatment of Transmission infrastructure costs is outside the scope of the NERC reliability standards. 5. The Transmission performance tables have been modified to bring clarity to the Contingencies required for performance studies and when Non-Consequential Load Loss is permitted to meet requirements. The use of manual or automatic System adjustments to revise System topology as well as generation redispatch is always permitted so long as the actions can be performed while adhering to Facility Ratings. 6. The SDT plans to draft an implementation plan. This implementation plan will address, among other issues, the other standards, which will need to be brought into alignment with this standard. The plan will be provided for the third posting of the standard.			
SERC RRS OPS	☑		Cost-Benefit Analysis: 1. Transmission Providers are currently able to maintain adequate levels of reliability using existing standards. While incremental improvements can be made, it is not evident that prescribing more stringent planning requirements will necessarily result in significant reliability improvements. 2. The proposed standard will be exceedingly expensive to become compliant with unprecedented levels of capital investment in Transmission facilities. Before the standard comes to official vote, it would be prudent for a cost-benefit analysis to be performed to determine if the reliability improvements truly justify the huge expenditures under the proposed standard. 3. In Table 1 in the column titled "Interruption of Firm Transfer Allowed," does it pertain to point-to-point only, or does it also apply to network loads? Please explain how this provision is consistient with the requirement to re-dispatch to address system constraints. 4. The terms "Consequential Load Loss" and "Non-consequential Load Loss" should be deleted and Table 1 should be modified to discuss "Planned Load Loss" and "Unplanned Load Loss". It should not matter if the load is directly connected to the failed facility or downstream and served by the failed facility. If the plan to protect the interconnected grid is to disconnect those loads using a manual process or an automatic scheme, then it should be allowed. 5. The R1 requirements should be deleted from this standard and should remain in the MOD standards.
Response: 1. The SDT believes that more stringent planning ("raising the bar") is appropriate in some areas of the standard and will improve reliability. 2. Any changes in the new draft Standard have been carefully weighed and discussed by the SDT. The SDT does not believe that a formal cost benefit analysis is required. However, if you have cost data which you would be willing to supply to the SDT, we will take it under			

Q43			
Commenter	**Yes**	**No**	**Comment**
consideration. 3. Tables 1 and 2 have been revised to replace the term "firm transfer" with "firm Transmission service". 4. The SDT feels that the terms are being used consistent with FERC Order 693. 5. The SDT believes some additional modeling requirements not presently contained in the MOD standards are necessary for transmission planning purposes. The SDT has revised these requirements based on industry comments to eliminate redundancy with existing MOD standards with the intent that these requirements will be removed from the TPL standard when they are incorporated into the MOD standards at a later date.			
SCE&G	☑		General Comment. 1. Cost/Benefit analyses should be conducted on each change in a standard or new standard. 2. Requirement 7.2 will require a 2 bus outage test on the SCE&G transmission system. Most of our busses are straight busses and a stuck line-terminal breaker will result in a clearing of the connected bus (and all facilities connected to that bus). Our read of this requirement is that we must design the system to accommodate a stuck breaker event (outaging all connected facilities) while a different bus (and all of its connected facilities) is already outaged. This is a significant leap in the required performance of our system and will result in tremendous unwarranted costs and years of new local area transmission construction. 3. Requirement R1.1.2 refers to "normal weather patterns as agreed to by the Planning Coordinator(s) and the Transmission Planner(s)…" The ERAG MMWG considers normal weather to be such that the weather affected load to be that which has a 50% probability of, plus or minus. The standard and the ERAG MMWG need to be made consistent. 4. Requirement R2.7.1.1 specifies a "project initiation date". This information is not needed for system reliability purposes. 5. Requirement R3.3.2.1 requires an evaluation for "Consequential Load loss (expected maximum demand and expected duration). Load loss is not an ERO responsibility. 6. Requirement R3.3.2.2 does not permit the "shedding of firm Load or curtailment of firm transfers". This is not an ERO responsibility. 7. Requirement R3.6 states "Manual and automatic generation tripping is allowed for multiple Contingencies and for single Contingencies only in situations that meet all of the following conditions: TBD. Generators should be allowed to trip for single and multiple contingencies as long as Facility Ratings are not exceeded. In addition, generators should be allowed to trip for any condition that imperils the generator. System performance should be the criteria, not generator operating state.

Q43			
Commenter	**Yes**	**No**	**Comment**
			8. Requirement R4.2 states "Contingency analyses shall simulate the removal of all elements including those that the System protection is expected to disconnect for each Contingency without operator intervention." Delete "including those". 9. Requirement 4.6.1 states that Plant Stability studies "Shall be performed for individual generating units 20 MW or greater…" Does this mean that studies must be performed for all units? Many plants have "sister units" that are essentially the same. This requirement seems to be excessive. 10. Requirement 4.6.2 states that Plant Stability studies "Shall be performed for changes in the real power output of a generating unit by more than 10% of the existing capability or more than 20 MW whichever is greater." The meaning of this wording is unclear. 11. Requirement 4.6.3 states that Plant Stability studies "Shall be performed and evaluated for those Planning Events that would produce more severe System impacts and the rationale for the Contingencies selected for evaluation shall be available as supporting information and shall include an explanation of why the remaining Contingencies would produce less severe System results. The identified Contingencies, at a minimum, shall be evaluated." The use of "evaluation/evaluated is unclear. Is an evaluation the same as performing a study? If not, what does it mean to select a contingency for evaluation? 12. The standard needs to define or describe the difference between a "bus" and a "bus section" and ensure that the use of these terms in the standard are as intended. 13. Table I, P3, P7.2, P9.6 and Table 2, P7 need some punctuation for clarification. 14. Table I, P9.6 and Table 2, P9, why study replacing an outaged transformer with a spare?

Response: 1. Any changes in the new draft Standard have been carefully weighed and discussed by the SDT. The SDT does not believe that a formal cost benefit analysis is required. However, if you have cost data which you would be willing to supply to the SDT, we will take it under consideration.
2. The SDT feels that this requirement is appropriate for a North American standard. The eventual Implementation Plan will address the timeframe for compliance.
3. This requirement has been eliminated in response to various industry comments.
4. The SDT agrees that this information is not required to meet reliability standards. It was specifically added as an additional piece of information in the Planning Assessment to allow some level of peer review within the NERC community and provide some level of confidence that the proposed plan could in fact be completed to meet the reliability objective. Initiation dates are only required in the near term since longer term plans tend to move in time and only have general scheduling associated with them.
5. The SDT disagrees. FERC Order 693, Paragraph 1794 specifically prohibits loss of Non-Consequential Load for a single Contingency. Furthermore, FERC required documentation of Consequential Load loss in Order 693, paragraph 1795.
6. R3.3.2.2 - R3.3.2.2 has been revised and the phrase "shedding of firm Load or curtailment of firm transfers" has been deleted.

Q43			
Commenter	**Yes**	**No**	**Comment**
R3.3.2.2. Following single Contingency events, ~~System adjustments other than shedding of firm Load or curtailment of firm transfers are permitted to meet performance requirements provided these adjustments can be accomplished within the time period allowed by the applicable time limited ratings.~~ Transmission configuration changes and redispatch of generation are allowed provided that all Facilities shall be operating within their Facility Ratings and within their thermal and voltage limits. 7. The SDT agrees that generation tripping can be included. The SDT has modified the requirements (See Requirement R 3.5). **R3.5**. Manual and automatic generation run-back/tripping is allowed as a response to a single ~~and~~ or multiple Contingenc~~ies~~y ~~as long as Facility Ratings are not exceeded.~~if the following conditions are met: 8. The SDT feels that the wording is equivalent and no changes are necessary. 9. and 10. This is consistent with FERC Order 693, the Large generator Interconnection procedures, and the registry criteria. 11. Evaluation is based on good professional judgment and knowledge of the System. It is not the same as a study. 12. The SDT considered but decided against adding a definition because the term "Bus Section" is in the existing TPL Standards and its meaning is generally understood. 13. Tables 1 and 2 have been revised. 14. P9.6 has been deleted and replaced with a reference in Requirement R11 in the second draft. **R11**. Each Transmission Owner shall provide its respective Planning Coordinator with modeling information for known planned outages and long-term outages for Transmission equipment for each year of the Transmission planning horizon with consideration given to spare equipment strategy, within ninety days of a request for such information.			
Southern Transm.	☑		REQUIREMENTS: 1. The standard is not clear on whether corrective action plans are required for performance failures during the sensitivity analysis required for both steady-state and stability studies. In the phone conference John Odom stated that it was not the intent of the Drafting team to require that facililities be constructed for these conditions. The standard should be made clear on this point. 2. The Load Forecast section (R1.1) is new and is a duplicate of the requirements in the MOD standards and is unclear as written. Having similar requirements in multiple standards creates the possiblility of conflicting requirements for the industry. If there are different requirements necessary, the MOD standards should be modified and not introduce a new section to the TPL standards. 3. R1.1.1 is unclear in what is intended by the "actual or expected aggregate mix of industrial, commercial, and residential load". Does the word "aggregrate" mean that the split between customer classes should be at the Balancing Authority level or at each load bus represented in the model. In many cases this could place a requirement for substantial load research on the the industry which may take a substantial amount of time and expense to accomplish. The use of the phrase "actual or

Q43			
Commenter	**Yes**	**No**	**Comment**
			expected" indicates an expectation that it be based on research and not general industry averages as may be more practical in some cases. 4. The wording in section R1.2 is very unclear. Is the intent to allow for three different methods for obtaining power factor models, i.e. historical system performance, validated by measurements during stressed System conditions, or documented Transmission planning area requirements? The other understanding is that the historical System performance is only measured during stressed System conditions. If this is the intent, what is the definition of stressed system conditions that is intended? Is this just heavy loadings, such as peak times, or is it during sytem disturbances? This is not clear. We suggest that the following words be used instead: "Load models validated by measurement during load levels typically studied or documented Transmission planning area requirements." 5. Requirement R1.4 should be qualified as only the outages within the Planning Horizon. There is no need to include protective relays because outages of relays in the Planning Horizon would not be known. We suggest the following words: "Known planned outages within the Planning Horizon and long-term outages greater than one year within the Planning Horizon for Transmission and generation equipment with consideration given to spare equipment strategy." 6. R1.5: If this places a requirement on the PC to define what constitutes "planned facilities", then this should be explicitly stated as a requirement. 7. R2.1 allows Assessments to be supplemented with "qualified" past studies which are defined in R2.6. R2.6.1 specifies these to be less than three years old for steady-state analysis and certain changes could not have occurred in the "System". There should be some qualification to the definition of "System" to include "the vicinity" of the area under evaluation. We would surmise that there always be some change in topology in the Eastern Interconnect which would preclude the use of past studies. Note that the "in the vicinity of" wording is used with the plant stability studies already. Also, is the intent with the "less than" to eliminate the use of studies three years old? Similar comments can be made for R2.6.2 and R 2.6.3. 8. R2.1 The wording/structure is confusing. The "Planning Assessment shall address all five years", but this does not require all five years be studied. It appears that the minimum study requirements would be two peak studies (years 1 or 2 & 5), one off peak study (any year), and one senstitivity case for each. Is this a correct reading? 9. In R.2.1.3.1 it is unclear what is intended. The study can be for higher or lower load "forecasts" with a different load power factor due to season, weather, or time of day. If you are looking at different seasons, weather, or time of day you will have a different load forecast. Is the intent to

Q43			
Commenter	**Yes**	**No**	**Comment**
			require the studies to model different seasons or times of day that will generate different power factors or is it to focus on higher or lower loads, i.e. is it a load forecast exercise or a power factor exercise? Can we look at Spring conditions and have it qualify for this requirement even though the loads are consistent with my Base Case load forecast? 10. Requirement R2.1.3.3 lists "unavailability of long lead time facilities" as one of the sensitivity(ies) that should be evaluated. It is unclear whether this refers to the construction of projects with long lead times or for replacement of failed equipment that have long lead times for obtaining replacements. One of the drafting team members suggested it was the latter understanding that was intended. We suggest that the language be changed to "Delayed restoration to service of failed facilities with long lead times for repair". This may clarify the intent of the requirement. 11. R2.1.3.7 should be modified to read "Modification of planned long term Transmission outages." 12. R2.3.1 Does "current study" refer to an updated study or is this referring to some type of short-circuit analysis? It appears that analysis is required only every five years unless changes in the BES occur. Is this a correct reading? 13. R2.4: Need to clarify that "address all five years of the assessment period" does not necessarily require that each year must be studied individually. A study of one year could cover all 5 years if it is the worst case. 14. R2.4.3.2 Is the purpose of including non-firm transfers to identify generation limits? Please clarify that the intent is not to require constraints associated with non-firm transfers to be addressed. 15. R2.5.2: The addition of a transmission line always helps plant stability. Therefore, this should not be included as a change requiring a new study. 16. R2.7.1.1 requires that the action plan include a project initiation date as well as the in-service date. The project "initiation date" is not defined and can be interpreted as being when you thought up the project, when you started spending money on design, or when you actually started construction. As long as you have the in-service date when the project is needed, we do not see any major benefit from recording and documenting an "initiation" date. The length of time that it requires to complete a project is extremely variable based on many conditions so we're not sure what benefit, if any, will be gained by recording and documenting the initiation date. It may be impossible for someone not familiar with the legal, regulatory, etc. requirements in a given area to judge whether the timing is appropriate or not. This requirement should be eliminated.

Q43			
Commenter	**Yes**	**No**	**Comment**
			17. R2.7.5 calls for the review of the implementation status of facilities. This imposes a large documentation requirement which has no benefit in reliability. We suggest making this requirement on an "as requested" basis. 18. Requirements 3.2 and 4.2: Delete the words "including those" so that it reads "the removal of all elements that System protection is expected...". As currently written, it sounds like you are going to remove more elements than the protection will remove. 19. R3.2 requires that the contingency analysis shall simulate the removal of all elements including those that System protection is expected to disconnect for each contingency without operator intervention. At present most steady state analysis uses single "element" contingency with element defined as transmission lines or transformers as defined in the Power Flow cases. In a significant number of cases these individual "lines" are part of a larger "protection control group" (PCG). that would remove multiple elements encompased by the breakers in the PCG The present load flow tools (PSS/E) do not have features that will allow this type of analysis in an automated manner. To facilitate this change in required analysis, program modification will be needed or additional programs written. For an example with a line from bus A to B and then B to C with breakers at A and C and load at B, the outage of either A to B or B to C with load service remaining at Bus B may produce a more stringent condition than removing A to B to C. It appears that the new requirement is requiring the A to B to C analysis instead of the more stringent A to B or B to C. 20. Requirement R3.2.1 is unclear. Generators generally have both a high and a low voltage limitation on the terminal voltage related to station service reqirements. Most load flow representations for generators tend to hold the voltage on the high side of the GSU instead of the low side. Is this requirement attempting to say that the voltage limitations on the generator terminals must be considered or is it something else? This should be made clear in the requirement. 21. R3.3.2.1 requires that the amount of "consequential Load loss following a single Contingency shall be identified and the anticipated duration be recorded". This is an arbitrary requirement that will require significant time and effort to document and will provide no useful information from a planning perspective. Also the inclusion of an "expected" duration is more arbitrary than the actual amount of load. The time required to restore the facilities is a pure guess at best since it will vary substantially based on circumstances and conditions. Since we are also required to remove all elements that the protection control group (PCG) will open instead of just a single "power flow model" line, some of the load may be restored during switching action for tapped loads and some may not. This creates an additonal confusion of what is required to be recorded in terms of duration and load reduction. We see no benefit from identifying and documenting either the amount of consequential

Q43			
Commenter	**Yes**	**No**	**Comment**
			load lost or the estimated duration that would justify the time and effort required. 22. R3.3.2.2 This states that curtailments of firm transfers are not permissible following single contingency events to meet the performance criteria. Please clarify whether "firm transfers" refers to firm point to point service only, or if firm network service is also included. Said another way, is the curtailment of a network resource permissible following single contingency events to meet the performance criteria? If not, please clarify how redispatch service as required by Order 890 should be considered. If curtailment of a network resource is permited, please clarify why curtailment of PTP would be held to a higher standard. Also, please clarify whether R3.3.2.2 applies to P6. Lastly, please clarify how Conditional Firm Service (CFS) as required by Order 890 should be considered in meeting R3.3.2.2. CFS allows the curtailment of "firm" PTP transfers. This appears to be in conflict with the performance criteria. 23. Requirement R3.6 is not clear. It could be interpreted as generator tripping allowed for multiple contingencies only for the situations that meet the "to be determined" conditions. Generator tripping should always be allowed for multiple contingencies. 24. R4.5 and R4.6: We suggest dropping the words "For the" in each of these. 25. R4.6.1: Plant stability studies should not be required for generating units as small as 20 MW. The threshhold should be 100 MW or greater. 26. R4.6.3: The last sentence "The identified Contingencies, at a minimum, shall be evaluated" is redundant because the requirement already says "shall be performed and evaluated" The last sentence should therefore be deleted. TABLE 1 - STEADY STATE PERFORMANCE: 27. In Table 1 in the column titled "Interruption of Firm Transfer Allowed," does it pertain to point-to-point only, or does it also apply to network loads? Please explain how this provision is consistient with the requirement to re-dispatch to address system constraints. 28. Steady state table, extreme event description, section 3: Items d and f are operating issues and therefore should not be included in the table. Also, items c and d are identical. Items d and f are identical. 29. Steady state table: Add the requirement to study n-0 to the table so it will be complete. Call it P0.

Q43			
Commenter	Yes	No	Comment
			30. Steady state table and stability table: Change the heading which now says "For all Planning Events" to say "The following performance requirements must be met for the Planning events evaluated in addition to the requirements given in the columns" 31. Steady state table: For the event in P3, it is not clear what the "above 300 kV" applies to. Is it only the transformer? Or it it also the transmission circuit and generator? Also, the third column mentions DC when there is no DC in the event. 32. The event description in P3 is confusing. Please consider rewording in the 1,2,3 format of the other event descriptions. The term "non-bus tie breaker" is confusing. Please consider using "breaker (excluding bus ties)". Also, above 300 kV, most construction is either ring bus or breaker and a half. Please considered deleting the bus outage contingency. Lastly, please clarify how redispatch and CFS should be considered in the context of P3 and P4, in which the curtailment of firm transfers is not permissible to meet the performance criteria. 33. Steady state table: For transformers below 300 kV, P9.6 is no different from P8.3. We suggest adding the clarification of "above 300 kV" for P9.6. 34. Steady state table Extreme Event: 3.b "A successful cyber attack" needs to be clarified. What should the contingency be? 3.g Add the words "As applicable" to the beginning. 3.h This should be changed to "Other events as deemed appropriate by the PC based upon operating experience". Otherwise there will be no end to the contingencies that must be studied. 35. Several events in the tables use the term "internal fault" for a breaker. The SDT needs to explain what is intended by this term. 36. Steady State Performance Requirement, Table 1, Performance Levels P1-P4, should allow for the interruption of firm transfers if the transfer is dependent upon on the outaged equipment (whether AC or DC) to provide an electrical path specified in the transfer. Therefore, the current verbiage used for the outage of a DC Line should be applied to all levels and state, “Yes, if transfer is dependent on the outaged equipment to provide an electrical path for service” 37. Steady state and stability tables: in the Extreme Events section heading, the word "all" implies that all events must be evaluated when this is not the intent. Either make the heading "For Extreme Events" or make it "For all Extreme Events evaluated".

Q43			
Commenter	**Yes**	**No**	**Comment**
			TABLE 2 - STABILITY PERFORMANCE TABLE: 38. Stability table, note 1.a.i: P3.2 should be P2.3. 39. Several events in the tables use the term "internal fault" for a breaker. The SDT needs to explain what is intended by this term. 40. In event P7.2, does the "below 300 kV" apply to the generator, transmission circuit, transformer, and bus as well as to the stuck breaker? Or does it apply only to the stuck breaker? 41. The event description in P3 is confusing. Please consider rewording in the 1,2,3 format of the other event descriptions. The term "non-bus tie breaker" is confusing. Please consider using "breaker (excluding bus ties)". Also, above 300 kV, most construction is either ring bus or breaker and a half. Please considered deleting the bus outage contingency. Lastly, please clarify how redispatch and CFS should be considered in the context of P3 and P4, in which the curtailment of firm transfers is not permissible to meet the performance criteria. 42. Steady state table and stability table: Change the heading which now says "For all Planning Events" to say "The following performance requirements must be met for the Planning events evaluated in addition to the requirements given in the columns" 43. Steady state and stability tables: in the Extreme Events section heading, the word "all" implies that all events must be evaluated when this is not the intent. Either make the heading "For Extreme Events" or make it "For all Extreme Events evaluated". 44. Stability table, footnote 1.a.ii. After "out-of-step protection", add the words "or some other means to trip the generator for this condition". GENERAL: 45. The overall level of documentation required by this standard is excessive.
Response: 1. The SDT is providing some guidance under Requirement R2.1.3 on what needs to be included in sensitivity studies while not being totally prescriptive. Requirement R2.1.3 has been modified to require documentation of why the listed sensitivities were or were not selected for specific studies. It is the entity's decision to establish and document which transfers are more significant to study System responses. Requirement R 2.7.2 has been added to require a description of how and why the list of actions was modified and/or expanded as a result of the inclusion of the sensitivities selected. The SDT fells that the standards are clear that the sensitivity studies do not in themselves establish the need for a plan, only the areas of the System for which the analysis is needed.			

Q43			
Commenter	Yes	No	Comment
R2.1.3. For each of the studies described in Requirement R2.1.1 and Requirement R2.1.2, sensitivity case(s) that stress the System with sensitivities that reflect one or more of the following conditions shall be run and documentation ~~with~~ of the technical rationale for ~~the selected sensitivity(ies)~~ why each of the conditions was or was not selected shall be supplied: **R2.7.2**. ~~Be added to study cases and the cases re-tested to show that the System with planned additions meets the performance requirements in the tables~~ Contain a description of how and why the consideration of the sensitivities selected in accordance with Requirements R2.1.3, R2.1.4, R2.4.3, and R2.4.4 in the Planning Assessment did or did not result in a modification or expansion of the list of actions developed in accordance with Requirement R2.7.1. 2. The SDT believes some additional modeling requirements not presently contained in the MOD standards are necessary for Transmission planning purposes. The SDT has revised these requirements based on industry comments to eliminate redundancy with existing MOD standards with the intent that these requirements will be removed from the TPL standard when they are incorporated into the MOD standards at a later date. 3. The terms "actual" and "aggregate" have been deleted. However, the SDT believes the term "expected" allows for flexibility in determining the necessary modeling information. 4. The SDT's initial attempt was to allow any of the three methods listed for obtaining power factor models. The SDT has removed Requirement R1.2 from the draft and replaced it with a new Requirement R9 in the revised draft to have the Distribution Provider provide real and reactive Load forecast data based on expected or historical system performance. **R9.** Each Distribution Provider shall provide its respective Planning Coordinator with modeling information for real and reactive load forecast data for each year of the Transmission planning horizon at Transmission nodes based on expected or historical System performance including the expected mix of industrial, commercial, and residential Loads, within ninety days of a request for such information. 5. The SDT has revised this requirement based on industry comments to delete the reference to "protective relays" and to clarify the intent that *known* planned outages and long-term outages for Transmission equipment, including the impact of spare equipment strategy, be considered, and to be responsive to FERC Order 693, paragraph 1725. 6. The referenced verbiage has been deleted from the revised standard. 7. The intent of the requirements was to put an upper bound on the shelf life of the study and bracket the applicability of the study such that, if changes were made that may effect results of the previous studies, they shouldn't be used. The SDT agrees with your comment and clarified the wording in Requirements R 2.6.1, 2.6.2, and 2.6.3. **R2.6.1**. For steady state, short circuit, or System Stability analysis: ~~if the study is less than three years old and no material changes have occurred to the System in the intervening period. Material changes include topology changes, generation additions/removals, and market structure changes~~ the study shall be five calendar years old or less. **R2.6.2**. For steady state, short circuit ~~analysis~~, Generating Plant Stability, or System Stability analysis: ~~if the study is less than five years old and no material changes have occurred to the System in the intervening period.~~ the study shall not include any material changes, such as, generation or Transmission additions/removals, or topology changes that have occurred in the intervening period and would impact the study			

Q43			
Commenter	Yes	No	Comment
area. **R2.6.3**. ~~For plant and System Stability analysis: until material changes in the System make the study no longer valid. Material changes in the system include the addition of a Transmission Line or a generator~~ 8. You are correct. The standard does not require that all 5 years be studied. The standard only requires that the assessment address the five year period. Section 2 provides guidance as to the minimum number of current studies required to produce a meaningful assessment without being totally prescriptive. It is the responsibility of the entity to determine if past studies, in conjunction current studies, sufficiently demonstrate that the performance requirements are met. If past studies in conjunction with the required current studies are not sufficient to demonstrate that the system can meet the performance needed, the entity will need to run additional current studies that demonstrate it can meet the requirements. 9. The SDT is providing some guidance on what needs to be included in sensitivity studies while not being totally prescriptive. Requirement R2.1.3.1 provides the flexibility to allow the planning entity to decide how a variation in load on the entity(ies) system should best be studied. Requirement R2.4.3 has been modified to require documentation of why the listed sensitivities were or were not selected for specific studies. Requirement R2.4.4 has been added to specifically state that the entity may consider additional sensitivities that are appropriate for its own System. In either case the entity must document the reason for running or not running cases for the items listed. The documentation as well as the studies for the sensitivity(ies) selected will be required to demonstrate compliance. It is the entity's decision to establish and document if it needs to consider future additions and retirements. It is the entity's responsibility to determine the actions necessary to handle such items and which are more significant to study system responses. **R2.4.3**. For each of the studies described in Requirement R2.4.1 and Requirement R2.4.2, ~~S~~sensitivity case(s) that stress the System to reflect one or more of the following conditions shall be run ~~with documentation provided explaining the rationale for the selected sensitivity(ies)~~ and documentation of the technical rationale for why each of the conditions was or was not selected shall be supplied: **R2.4.4**. In addition to those sensitivities mentioned in Requirement R2.4.3, any other sensitivity, as deemed appropriate by the Transmission Planner or Planning Coordinator for their individual systems, shall be run and documentation of the technical rationale for why each was selected shall be supplied. 10. The SDT is providing guidance regarding the sensitivity studies while not being totally prescriptive. Requirement R2.1.3.3 provides the flexibility to allow the planning entity(ies) to elect the type of long lead time project that should be included in the analysis. It can be either a long lead time from replacement for failed equipment or a long lead time associated with constructing a new facility. Requirement R2.4.3 has been modified to require documentation of why the listed sensitivities were or were not selected for specific studies. Requirement R2.4.4 has been added to specifically state that the entity may consider additional sensitivities that are appropriate for its own System. In either case the entity must document the reason for running or not running cases for the items listed. The documentation as well as the studies for the sensitivity(ies) selected will be required to demonstrate compliance. It is the entity's decision to establish and document if it needs to consider future additions and retirements. It is the entity's responsibility to determene the actions necessary to handle such items and which are more significant to study system responses. 11. Since this requirement is relating to sensitivity, it is up to the entity to determine if it is appropriate to reduce the length of or increase			

Q43			
Commenter	Yes	No	Comment
the length of the "planned outage" that it has considered in its base case studies. 12. In the standard, "current study" is intended to refer to an updated study (i.e., as opposed to a "past study"). The SDT received comments that "current" study could be misconstrued in reference to short circuit "current" (amperes) versus the intended meaning. The SDT revised the standard in an attempt to clarify the intent. A current study will need to be performed as part of the annual Assessment if there are changes warranting one. Until such time as a BES change occurs, studies have to be refreshed at least every five years. 13. The use of the terms "shall address" is trying to convey that message, the requirements detail the studies needed. 14. R2.4.3.2 - Non-firm transfers are included in Requirement R2.4.3.2 to be investigated as sensitivity. The second draft of the proposed standard clarifies in Requirement R2.7 that the corrective actions do not need to be developed solely to meet the performance requirements for sensitivities. **R2.7** - For Planning Events shown in Table 1 – Steady State Performance and Table 2 – Stability Performance, when the analysis indicates an inability of the System to meet the performance requirements in the tables, the Planning Assessment shall include Corrective Action Plans addressing how the performance requirements will be met. Revisions to the Corrective Action Plans are allowed ~~over time~~ in subsequent assessments but the System shall continue to meet the performance requirements in the tables. ~~Such plans shall:~~ Corrective Action Plans do not need to be developed solely to meet the performance requirements for sensitivities. 15. The language was changed to reflect this comment. **R2.5.2**. Material Transmission System changes ~~in the electrical vicinity of existing generation are made~~ are made at or near the point of Interconnection of existing Generation such as the ~~addition or~~ removal of a Transmission Line ~~at or near the point of Interconnection~~ or the addition of a new substation in one of the Transmission Lines connected to the plant. 16. Requirement R8 (old Requirement R6) which focuses on the distribution of the Planning Assessment results among affected entities was specifically added to allow some level of peer review and provide some level of confidence that the proposed plan could in fact be completed to meet the reliability objective. Requirement R2.7.1.1 is complementary to Requirement R8 (old Requirement R6). Initiation dates are only required in the near term since longer term plans tend to move in time and only have general scheduling associated with them. Typically the date would indicate when significant resources will begin to be employed. This covers any project proposed for the near term. The SDT continues to believe that by providing the expected project intiation date of System improvements provides useful information to neighboring entities. The SDT believes that initiation dates are required for near-term corrective action plans to give an indication that the corrective action plans can be implemented in time. 17. The SDT does not percieve this as an onerous report requirement. The intent is that a list of proposed upgrades be reviewed and modified on a periodic basis. The intent of making the information available is to notify parties that may be impacted by a particular project of a change in the implementation of the project. 18. Based on industry comments, the language referenced in this comment was retained but modified in revised Requirement R5.2 to clarify intent. **R5.2**. Contingency analyses shall simulate the removal of all elements including those that System protection and other automatic controls are ~~is~~ expected to disconnect for each Contingency without operator intervention.			

Q43			
Commenter	Yes	No	Comment
			19. There may also be the case where the outage of A to C overloads a parallel circuit whereas having the C to B line is service does not overload the parallel circuit. The outage of the A to C line by automatic interruption is the more realistic outage because of the interrupting devices on the ends of the line. Both conditions are now covered in Table 1 and Table 2. 20. Most commenters did not express confusion over this requirement, so it was not modified. Requirement R3.2.1 is intended to address all voltage limitations applicable to generators, which could include nuclear plant operating voltage limits, generator terminal voltage limitations, and station service voltage limitations, for example. 21. R3.3.2.1 - The requirement concerning Consequential Load is to address FERC Order 693, which directs the ERO, among other things, to clarify footnote (b) in regard to Load loss following a single Contingency, specifying the amount and duration of Consequential Load Loss and System adjustments that are permitted after the first Contingency to return the System to a normal operating state. 22. The SDT has revised this requirement accordingly. The SDT does not feel that this standard distinguishes between PTP and network service. P6 has been revised and now shows as P2 in the revised table and shows a separation for performance above and below 300 kV. The SDT is still studying CFS and results will be shown in future revisions. **R3.3.2.2**. Following single Contingency events, ~~System adjustments other than shedding of firm Load or curtailment of firm transfers are permitted to meet performance requirements provided these adjustments can be accomplished within the time period allowed by the applicable time limited ratings.~~ Transmission configuration changes and redispatch of generation are allowed provided that all Facilities shall be operating within their Facility Ratings and within their thermal and voltage limits. 23. The SDT has modified the requirements for single and multiple Contingencies (See Requirement R 3.5). **R3.5**. Manual and automatic generation run-back/tripping is allowed as a response to a single ~~and~~ or multiple Contingenci~~es~~y ~~as long as Facility Ratings are not exceeded.~~if the following conditions are met: 24. The SDT feels the wording is equivalent and no change was made. 25. This is consistent with FERC Order 693, the Large generator Interconnection procedures, and the registry criteria. 26. The SDT has made this correction. 27. Tables 1 and 2 have been revised to replace the term "firm transfer" with "firm Transmission service". 28. The SDT revised the Extreme Events accordingly. 29. Table 1 has been revised to include N-0. 30. The SDT made a change to the heading. 31. A footnote reference has been added for clarity. 32. Tables 1 and 2 have been revised to provide clarity. The term "Firm Transfer" has been replaced with "Firm Transmission Service". In addition, the SDT has proposed a definition for Bus-tie Breaker in the second draft. **Bus-tie Breaker:** A circuit breaker that is positioned to connect two individual straight bus substation configurations. (Substation configurations such as ring-bus, breaker-and-a-half, or double bus-double breaker protection schemes do not use bus-tie breakers.)

Q43			
Commenter	**Yes**	**No**	**Comment**
33. Tables 1 and 2 have been revised. P9.6 has been deleted and replaced with a reference in Requirement R11 in the second draft. **R11**. Each Transmission Owner shall provide its respective Planning Coordinator with modeling information for known planned outages and long-term outages for Transmission equipment for each year of the Transmission planning horizon with consideration given to spare equipment strategy, within ninety days of a request for such information. 34. Tables 1 and 2 have been revised. The SDT cannot add "as applicable" to a standard because this term will make the standard unenforceable. The SDT notes that Requirements R3.4 and R4.5.2 allow for identifying and evaluating only those Extreme Events that are expected to produce more severe System impacts. 35. Breaker internal fault is a term used in the existing TPL standard. The SDT has added clarifying footnote number 5 in Table 1 and footnote number 4 to Table 2. 36. The SDT has revised Tables 1 and 2 to replace the term "Firm Transfer" with "Firm Transmission Service". 37. The SDT has made this change. 38. The SDT corrected the note. 39. This is explained in Table 1 - Note 5. 40. 300 kV applies to the equipment being studied and as defined for transformers and generators in Table 1 – Note 3. 41. The tables have been re-formatted for clarity. The SDT considers the term Non-Bus-tie Breaker as common nomenclature and has provided a definition of Bus-tie Breaker for clarity. The SDT feels that this requirement must remain to cover those situations where ring busses are not employed. CFS is still being studied by the SDT and will be handled in future revisions. 42. The SDT has changed the heading. 43. The SDT has made this change. 44. The SDT has made this change. 45. The SDT expects that increased documentation will improve coordinated Planning Assessments among the Planning Coordinator and the Transmission Planners.			
Tenaska	☑		The proposed standard contains a number of areas that need further definition, more explanation, or more specificity. 1. For example, requirement R1 should be rewritten as follows to make it clear who has responsibility for each requirement AND sub-requirement as the standard as written could be read to imply that Transimssion Owners and Generation Owners have to supply a load forecast to the Planning Coordinator: R1. Each Resource Planner, Transmission Planner, Transmission Owner, Generator Owner, and Load-Serving Entity shall each provide, as specified below, its respective Planning Coordinator with the following modeling information required for System performance studies upon request (within 30 calendar days) : [Violation Risk Factor: TBD] [Time Horizon: TBD] R1.1. Each Load Serving Entity shall provide the Planning Coordinator load forecasts adhering, at a

Q43			
Commenter	**Yes**	**No**	**Comment**
			minimum, to the following criteria: R1.1.1. Use of expected Load mix based on the actual or expected aggregate mix of industrial, commercial, and residential Loads. R1.1.2. Based on normal weather patterns as agreed to by the Planning Coordinator(s) and the Transmission Planner(s) for the area(s) of their responsibility. R1.1.3. Identification of Demand Side Management (DSM) Load reductions consistent with operational requirements. R1.2. Each Load Serving Entity shall provide the Planning Coordinator load models with supporting rationale that include power factor data based on historical System performance, validated by measurement during stressed System conditions, or documented Transmission planning area requirements. R1.3. Each Load-Serving Entity shall provide the Planning Coordinator the Firm transfers/Interchange Schedules and resources required to supply Load for each Balancing Authority. R1.4. Each Transmission Owner and Generation Owner shall provide the Planning Coordinator with known planned outages and long-term outages for Transmission and Generation equipment including protective relays with consideration given to spare equipment strategy. R1.5. Each Transmission Owner, Generation Owner, Resource Planner, and Transmission Planner shall provide known planned Facilities defined in accordance with the documented criteria of the Planning Coordinator, including but not limited to: Transmission Lines, generators, circuit breakers, Reactive Power devices, Protection System equipment and control devices, and new technologies. The above is an example and I apologize for the poor pagination. However, the drafting team should look at each requirement/sub-requirement and specify precisely to which entity the requirement/sub-requirement applies. Other comments/concerns/questions with the proposed standard: 2. Does requirement R2 mean that you could have two assessments: one performed by the Transmission Planner and one performed by the Planning Coordinator? This could result in two assessments of the same facilities which may or may not be desired. 3. In Requirement 2.5.1, what is meant by increasing generation? Is there a minimum amount of increased generation or is it any increase? 4. In Requirements 2.5.2, 2.6.1, 2.6.2, and 2.6.3, what is meant by "material"? This needs more

Q43			
Commenter	**Yes**	**No**	**Comment**
			definition wherever the word "material" is used throughout the standard. 5. In Requirements 2.6.1, 2.6.2, and 2.6.3, the word System and system are both used. Whose System or system needs to be defined. Does that include neighboring system(s)? 6. In Requirement 2.7.3, "committed" and "proposed" need to be defined. 7. In Requirement 2.7.5, what needs to happen as a result of such review? Is something supposed to happen in the Corrective Action Plans depending on the implementation status of identified System Facilities and Operating Procedures? 8. In R3, what is "normal" performance (n-0)? Should this be a defined term? 9. In R3.2.1 and 3.2.2, why are these issues covered in a TPL standard as it seems to be more applicable to the Facility Ratings standards or the MOD10, 11, 12, and 13 standards? The TPL standard should probably reference these other standards for issues associated with ratings. 10. In R3.3.2, the reference to "single contingency" should reference the category (P1, P@, P#, etc.) in Table 1. 11. In R3.3.2.2, the term "firm transfers" needs to be defined. 12. In R3.3.3 and R3.4, reference is made to "expected to produce more servere System impacts." How does somebody determine what Extreme Events that are "expected to produce more servere System impacts?"

Response: 1. The standard has been revised to identify specific entities responsible for providing the required information.
2. The SDT expects that the Transmission Planner is coordinating assessments with the Planning Coordinator
3. The term is 'increasing generation capability', e.g., if your generator is rated at 100 MW today and 110 MW tomorrow, the 10 MW differential is the increased generation capability. The minimum is defined in Requirement R5.6.
4. Requirements R2.5 and R2.6 have been modified to address this concern. The SDT expects that the Transmission Planner and Planning Coordinator would exercise good engineering judgement when determining the need to perform a new study.

R2.5. The ~~plant~~Generating Unit Stability analysis portion of the Planning Assessment shall be analyzed consistent with Requirement ~~R4.6~~ R5.6 with studies for the year when the following changes that could affect stability margins occur:
R2.5.1. New generator(s) are added or generation modifications are made such as ~~increasing~~changes in generation capability or replacing the exciter ~~or addition of a power System stabilizer~~.
R2.5.2. Material Transmission System changes ~~in the electrical vicinity of existing generation are made~~ are made at or near the point of Interconnection of existing Generation such as the ~~addition or~~ removal of a Transmission Line ~~at or near the point of Interconnection~~ or the

Q43			
Commenter	Yes	No	Comment

addition of a new substation in one of the Transmission Lines connected to the plant.

R2.6. Past studies may be used to support the Planning Assessment if they meet the following requirements:
R2.6.1. For steady state, short circuit, or System Stability analysis: ~~if the study is less than three years old and no material changes have occurred to the System in the intervening period. Material changes include topology changes, generation additions/removals, and market structure changes~~ the study shall be five calendar years old or less.
R2.6.2. For steady state, short circuit ~~analysis~~, Generating Plant Stability, or System Stability analysis: ~~if the study is less than five years old and no material changes have occurred to the System in the intervening period.~~ the study shall not include any material changes, such as, generation or Transmission additions/removals, or topology changes that have occurred in the intervening period and would impact the study area.
R2.6.3. ~~For plant and System Stability analysis: until material changes in the System make the study no longer valid. Material changes in the system include the addition of a Transmission Line or a generator.~~

5. R2.6.1, 2.6.2, 2.6.3 – Requirements R2.6.1, R2.6.2, and R2.6.3 have been revised to clarify intent.

R2.6.1. For steady state, short circuit, or System Stability analysis: ~~if the study is less than three years old and no material changes have occurred to the System in the intervening period. Material changes include topology changes, generation additions/removals, and market structure changes~~ the study shall be five calendar years old or less.
R2.6.2. For steady state, short circuit ~~analysis~~, Generating Plant Stability, or System Stability analysis: ~~if the study is less than five years old and no material changes have occurred to the System in the intervening period.~~ the study shall not include any material changes, such as, generation or Transmission additions/removals, or topology changes that have occurred in the intervening period and would impact the study area.
R2.6.3. ~~For plant and System Stability analysis: until material changes in the System make the study no longer valid. Material changes in the system include the addition of a Transmission Line or a generator.~~

6. Based on several comments and consideration by the SDT, the SDT has modified Requirement R2.7.1 and deleted Requirements R2.7.2 through R2.7.4. The standard now refers to "actions" needed to achieve required System performance without trying to distinguish between committed and proposed projects. It also lists examples of what is intended by the word "actions".

R2.7.1. ~~Identify~~ List System deficiencies and the associated actions needed to achieve required System performance. ~~including Transmission and generation improvements, DSM, new technologies, or Operating Procedures including the duration of interim Operating Procedures.~~ Such actions may include installation, modification, retirement, or removal of Transmission and generation Facilities and any associated equipment such as protective or Special Protection Schemes, rate applications, DSM, or other initiatives, new technologies, or Operating Procedures including how long the Operating Procedures will be needed as part of the Corrective Action Plan.

7. The intent is that a list of proposed upgrades be reviewed and modified on a periodic basis. The intent of making the information available is to notify parties that may be impacted by a particular project of a change in the implementation of the project.
8. Normal performance (n-0) describes the performance of the BES with no Contingencies. No other commenter expressed confusion. The

Q43			
Commenter	**Yes**	**No**	**Comment**
SDT does not believe a defined term is necessary. 9. Most commenters did not express concern regarding inclusion of these requirements in the proposed standard, so they were retained. The two requirements referenced relate to evaluation of Contingencies and are not addressed by the MOD or FAC standards. These requirements are intended to simulate the removal of Facilities that System protection is expected to disconnect for each Contingency without operator intervention in the steady state portion of the Planning Assessment. 10. R3.3.2.2 - Tables 1 and 2 have been modified to reflect your suggestion. 11. R3.3.2.2 – Requirement R3.3.2.2 has been revised and the term "firm transfers" has been deleted. **R3.3.2.2**. Following single Contingency events, ~~System adjustments other than shedding of firm Load or curtailment of firm transfers are permitted to meet performance requirements provided these adjustments can be accomplished within the time period allowed by the applicable time limited ratings.~~ Transmission configuration changes and redispatch of generation are allowed provided that all Facilities shall be operating within their Facility Ratings and within their thermal and voltage limits. 12. R3.3.3 & R3.4 - The proposed standard allows the PC and TP to use engineering judgment and experience.			
TVA	☑		1. Requirement R1 does not belong in this standard. These requirements are covered by MOD standards. 2. Spare equipment strategy should be covered as a sensitivity study, but not included in the base case. 3. R2.1.1 should not be so prescriptive as to which years of 1-5 are studied. 4. The wording for R2.1.3 and R2.4.3 should be consistent. 5. Consideration should be given to the specific phases which are faulted in the simultaneous faults for P9 of the stability table. The results can be much different if the simultaneous faults occur on the same phase or different phases. 6. More guidance should be given for the term "Interruption of Firm Transfer Allowed" in Table 1. Firm transfer is not defined in the NERC glossary. The type of transmission service should be outlined here. 7. R2.7.1.1 - The project initiation date is not relevant in a reliability standard. 8. Extreme Event Descriptions 2. a. and b. should include mileage threshholds. 3. e. The term "large load" is vague and should be clarified. d. and f. are duplicates.

Q43			
Commenter	**Yes**	**No**	**Comment**
			c. and e. are duplicates. 9. Minimum generator voltage data required for R3.2.1 will be require extensive and costly generator testing and analysis to provide data necessary for transmission system studies. 10. R3.3.2.1 is an operational issue rather than a planning issue. 11. The addition of the "Corrective Action Plan" requires the TP to provide a significant amount of documentation for each deficiency identified by the studies. 12. Also, R3.2 requires that the studies simulate the protection scheme for all events. The current software tools cannot automate these studies for bus faults and breaker failure events, requiring each scenario to be studied manually. 13. The planning event designations are confusing because both the steady-state and stability tables have events P1-P9. A different designation should be used for one of the tables. 14. In R4.6 and other locations, the individual generator exemption of 20 MW should be increased to 75 MVA.

Response: 1. The SDT feels that some modeling requirements are not currently handled in the current MOD standards and has included them here until the MOD standards are revised.
2. The SDT assumed that all entities have a spare policy today. The studies are to be performed on that basis. Duration of Contingencies considered in the studies will be based on this policy as will be the applicable equipment ratings. If the entity feels that the policy may or can change, the entity may elect to add this change as a sensitivity study.
3. The SDT is providing guidance regarding the studies that could be incorporated in an assessment while not being totally prescriptive. The standard does not require that all 5 years be studied. The standard requires the assessment addresses the five year period. Section 2 provides guidance as to the minimum number of current studies required to produce a meaningful assessment without being totally prescriptive. It is the responsibility of the entity to determine if past studies, in conjunction current studies, sufficiently demonstrate that the performance requirements are met. If past studies in conjunction with the required current studies are not sufficient to demonstrate that the System can meet the performance needed, the entity will need to run additional current studies that demonstrate it can meet the requirements.
4. The SDT is providing some guidance on what needs to be included in sensitivity studies while not being totally prescriptive. The wording in Requirement R2.1.3 describes sensitivities for the steady state horizon while Requirement R2.4.3 describes the sensitivities for dynamic analysis. The wording in these requirements is different but parrallel. To increase the consistency Requirement R2.4.3 has been modified to require documentation of why the listed sensitivities were or were not selected for specific studies.

R2.4.3. For each of the studies described in Requirement R2.4.1 and Requirement R2.4.2, ~~S~~sensitivity case(s) that stress the System to reflect one or more of the following conditions shall be run ~~with documentation provided explaining the rationale for the selected~~

Q43			
Commenter	**Yes**	**No**	**Comment**
~~sensitivity(ies)~~ and documentation of the technical rationale for why each of the conditions was or was not selected shall be supplied: 5. The SDT agrees that the results can be different. However, the SDT feels that in most instances, the person performing the study will select a three phase fault which is the most severe case and easiest to simulate. 6. The SDT has revised Tables 1 and 2 to replace the term "Firm Transfer" with "Firm Transmission Service". 7. The SDT agrees that this information is not required to meet reliability standards. It was specifically added as an additional piece of information in the Planning Assessment to allow some level of peer review and provide some level of confidence that the proposed plan could in fact be completed to meet the reliability objective. Initiation dates are only required in the near term since longer term plans tend to move in time and only have general scheduling associated with them. 8. The SDT believes that there should not be a threshold as you are trying to understand the robustness of the System. Large is left to the discretion and good professional judgment of the evaluator. Note 3 has been re-written for clarity and to delete duplications. 9. The requirement is intended to provide for the simulation of generator tripping in response to low system voltages that would cause auxiliary system motors to trip in the steady state portion of the Planning Assessment. 10. The requirement concerning Consequential Load is to address FERC Order 693, which directs that the ERO, among other things, to clarify footnote (b) in regard to Load loss following a single Contingency, specifying the amount and duration of Consequential Load Loss and System adjustments that are permitted after the first Contingency to return the System to a normal operating state. 11. The SDT does not percieve this as an onerous report requirement. The intent is that a list of proposed upgrades be reviewed and modified on a periodic basis. The intent of making the information available is to notify parties that may be impacted by a particular project of a change in the implementation of the project. 12. The SDT agrees that most automated Contingency analysis tools do not do this unless you actually modeled the bus in detail. However, we expect that "engineering judgment", based on intimate knowledge of the System, will be exercised by the planner to distinguish between what studies are important and those that aren't. The requirement is not intended to cover all possible scenarios. 13. The SDT discussed this suggestion and decided to retain the current designations. 14. This is consistent with FERC Order 693, the Large generator Interconnection procedures, and the registry criteria.			
TSGT	☑		1. R1 and R2 address some Load Forecast issues, but are not exhaustive specifications of what Load Forecast range to use in studies. There needs to be some mention of exceedance probability (ExPr) in Load Forecast criteria. For example, we use a forecast with a low ExPr in our studies because we are concerned that, if the system was planned for 50% ExPr (a lower forecast), actual deviation from that forecast might result in load at certain locations exceeding operating margins built into the interconnected transmission system designed to serve only the 50% ExPr forecast load. 2. Load Specifications in R2.4 are ambiguous for the reasons stated above. 3. Maximum study ages in R2.6.1 and R2.6.2 seem arbitrary. The time limit does not seem to add anything to the criteria if no material changes have occurred. If spot checks of the most critical areas indicated no criteria violations, there should be no reason to rerun studies. To correct this problem, we suggest using the term "assessment" rather than "study". For most people, "study" implies detailed modeling and simulation analyses summarized in a report, whereas "assessment" implies a

Q43			
Commenter	**Yes**	**No**	**Comment**
			reasonable, systematic evaluation of a system which does not necessarily include detailed analysis for the entire system.
Response: 1 & 2. Requirement R1 has been modified to make TPL-001-1 comport with existing modeling standards and to require documentation when modification of data provided in these standards is necessary for the planning studies addressed in TPL-001-1. Requirement R2.1.3.1 addresses your concern about Load forecast issues and allows for sensitivity studies of the variability of forecasts based on a number of factors. **R1**. ~~Each Resource Planner, Transmission Planner, Transmission Owner, Generator Owner, and Load-Serving Entity shall each provide its respective Planning Coordinator with the following modeling information required for System performance studies upon request (within 30 calendar days) :~~ Each Transmission Planner and Planning Coordinator shall maintain System models for performing the studies needed to complete their Planning Assessment. The models shall use data provided in Requirements R9 through R14, the MOD-010 and MOD-012 standards, and other data sources. 3. The SDT set the age limit on studies to 5 years based on the fact that relatively "small" changes can accumulate with time to the extent that study results might be affected. Requirement R2.6.2 sets reasonable criteria on what System changes might materially affect existing study results, and the SDT does not consider the criteria to be arbitrary. The term "study" was deemed more appropriate as used here than "assessment".			
AESO	☑		The Alberta Electric System Operator (AESO) supports the comments from WECC with the exception of Question #19 where the AESO agrees with the proposed requirement R2.7.4 by the SDT.
Response: The SDT has modified the standard to require only the Corrective Action Plan and indicates what is meant by the word plans. The SDT feels that the assessment and making it available to others will by its very nature provide all the information necessary to understand which plans changed and the basis for the new plans.			
WECC TEP	☑		1. R1.3 requires the provision of firm transfer/Interchange Schedules and resources required to supply load for each Balancing Authority. It may not be possible to have reasonably accurate information on firm transfers and Interchange Schedules for years into the future. Within WECC, we develop base cases that represent reasonably stressed conditions that model power flows stressing various paths. Therefore, within WECC, we design the system to operate at levels that can support all sorts of commerce, including the effects of loop flow, and firm and non-firm contracts, in addition to other possibilities. It would be difficult to develop information from this mixture that includes only firm transactions for such future base cases. In addition, WECC does not allow operations at levels not previously studied. Therefore, an exercise to determine firm transaction/schedules would produce information that will be of little value to support reliability in WECC. 2. R2.7.1.2 requires identification of system deficiencies and accociated corrective action for the Long Term Transmission Planning Horizon. This requirement needs to tie to the lead times to implement the corrective action(s). For example, if a 500 kV transmission line is needed to correct a deficiency that surfaces in the tenth year, then this requirement is reasonable. However, if the deficiency is on a low voltage system, that can be resolved with short lead-time projects (such as

Q43			
Commenter	**Yes**	**No**	**Comment**
			installing a small capacitor bank) then this requirement would seem to be too prescriptive. 3. R1.5 requires providing modeling information as part of R1 on a number of transmission planned facilities, including circuit breakers. Since circuit breakers are part of a transmission line, we are not sure how a circuit breaker would be modeled separately, as required. 4. R3.2.1 requires that "studies shall consider the minimum steady state voltage limitations of all generators". Since generators (as well as other facilities) have both high and low voltage limits, the standard should require consideration of both high and low voltage limits. 5. In R.3.2.2, please provide a reference for relay loadability. 6. R.3.3.2.1. requires that Consequential Load loss (expected maximum demand and expected duration) following a single contingency shall be identified in the Planning Assessment. We suggest deleting this requirement. By definition, consequential load loss following a contingency can not be avoided and should not be considered an impact on the operation of the BES. It should be part of local service reliability between an entity and its local regulatory agency or contractual relationship between individual parties and not in a NERC Standard governing the operation of a BES. 7. Proposed revision to R3.5 – "Manual and automatic generation runback and generator tripping are allowed as a response to single and multiple contingencies as long as Facility Ratings are not exceeded and the result of the generator action, such as loss of reactive resource, impact on reserves, and restart time of tripped unit(s), meets the performance requirements in the tables." Example for the need for flexibility in the selection of generation runback and/or tripping to meet the requirements of R3.5 – The time period for a particular Emergency Rating might require faster generation redispatch than a runback or set of runbacks are capable of providing. Therefore, it may be necessary to trip one 100 MW unit rather than runback several units for a total of 100 MW. Planning and Operations need flexibility to coordinate with the requirements of Engineering who established the Facility Ratings. No need for R3.6 with above revision to R3.5. 8. Performance standard "P5" (Q.21- 23) does not allow for the use of load shedding (safety nets) required by some utilities to protect against cascading outages if a transmission line is already out of service and a forced outage of another major element occurs. "System adjustments" might not be possible in a load pocket or local load-serving area to prevent "non-consequential load loss" after loss of a second transmission line to the load-serving area. The use of load shedding for such rare

Q43			
Commenter	**Yes**	**No**	**Comment**
			events is an established practice and least cost alternative that does not unreasonably compromise reliability of the WECC system. It is also an acceptable and necessary tradeoff from over burdening customers with additional expensive transmission lines and permitting risk in the West where remote generation resources have historically required power to be carried over long distances. The tradeoffs between economics (building hundreds of miles of new transmission lines or build out hundreds of MW of new load-side generation versus load shedding schemes) and the impact of these rare events should be under the purview of local and state jurisdictions, as long as impacts do not result in cascading events outside of the affected jurisdiction. As long as interconnected reliability or neighboring system operation is not negatively impacted, customer interruption size and frequency should be left to the Transmission Providers discretion and to the jurisdiction of state regulators. The amount of load to be shed and its frequency is primarily an issue for state jurisdiction because it is a matter of the cost/benefit associated with customer service regardless of the voltage level problem. In general, incidences of non-consequential loss of customer load events related to contingencies on the back-bone transmission system are rare when compared to other causes of customer outages. Assuming interruptions to customer service are significant, the state regulators and other related constituents will ultimately be responsible for approving any transmission line facilities or generation additions needed to assure reliability. Implementing an immediate change to this current established practice is not rational or technically feasible due to the long and arduous regulatory and permitting processes that are required to construct new transmission facilities or new load-side generation. Implementation of the standard as written would take many years. At a minimum, even if it is determined that Congress's intent was to create stricter standards, a phase-in period must be included to allow utilities time to obtain necessary permits, regulatory approval and cost recovery to meet the stricter standards.

Response: 1. The SDT understands your concern. The SDT only anticipates that known firm transfers and schedules be included in the base cases. Non-firm transfers may be included in the sensitivity studies as detailed in Requirement R2.1.3. Requirement R1.3 in the first draft of TPL-001-1 is now shown as Requirement R10 in the revised draft.

R10. Each Transmission Planner shall provide its respective Planning Coordinator with modeling information for Firm Transmission Service data, Interchange Schedules and resources required to supply Load for each of its Balancing Authorities for each year of the Transmission planning horizon, within ninety days of a request for such information.

2. Based on several comments and consideration by the SDT, the SDT has modified Requirement R2.7.1 and deleted Requirements R2.7.2 through R2.7.4. The standard now refers to "actions" needed to achieve required System performance without trying to distinguish between committed and proposed projects. It also lists examples of what is intended by the word "actions".

R2.7.1. ~~Identify~~ List System deficiencies and the associated actions needed to achieve required System performance. ~~including Transmission~~

Q43			
Commenter	Yes	No	Comment
~~and generation improvements, DSM, new technologies, or Operating Procedures including the duration of interim Operating Procedures.~~ Such actions may include installation, modification, retirement, or removal of Transmission and generation Facilities and any associated equipment such as protective or Special Protection Schemes, rate applications, DSM, or other initiatives, new technologies, or Operating Procedures including how long the Operating Procedures will be needed as part of the Corrective Action Plan. 3. The SDT agrees that circuit breakers are generally not modeled separately in planning simulations. However, the addition or removal of a circuit breaker could modify network topology as modeled for planning simulations, which this requirement attempts to capture. 4. Voltage limits are included in the tables to cover both high and low voltage limits. However, the minimum limits in Requirement R3.2.1 are, generally, the more critical concern for system performance scenarios and this requirement was included by team consensus. 5. NERC document "Relay Loadability Exceptions, Determination and Application of Practical Relaying Loadability Ratings ", is contained on this ftp site: ftp://ftp.nerc.com/pub/sys/all_updl/pc/spctf/ExceptionsV1.pdf. Other information may also be obtained from: http://www.nerc.com/~filez/spctf.html 6. R3.3.2.1 - The requirement concerning Consequential Load is to address FERC Order 693, which directs the ERO, among other things, to clarify footnote (b) in regard to Load loss following a single Contingency, specifying the amount and duration of Consequential Load Loss and System adjustments that are permitted after the first Contingency to return the System to a normal operating state. 7. The SDT has modified the requirements to allow for single and multiple Contingencies tripping (See Requirement R 3.5). **R3.5**. Manual and automatic generation run-back/tripping is allowed as a response to a single ~~and~~ or multiple Contingenc~~ies~~y ~~as long as Facility Ratings are not exceeded.~~if the following conditions are met: 8. The initial draft of the proposed Transmission planning standard held the planning of 300 kV and higher Transmission Systems to a more stringent requirement than the remaining BES. Although not unanimous, the majority of the SDT believed the 300 kV and higher Systems generally represent an extra-high-voltage (EHV) range that is considered the backbone of many Systems in the various Interconnections and that the more stringent requirements were appropriate when considering N-1-1 Contingencies of two EHV Facilities. Systems operated at this range generally do not directly serve end-use Load customers but rather act as the medium for moving large amounts of power from production to various Load centers which then deliver the power among other Transmission or sub-Transmission Systems to end use customers. It is the desire of NERC and various stakeholders that the backbone of the electric power grid be robust and held to a higher degree of reliability. When EHV Systems are compromised, the large volumes of power served by them can place a severe amount of stress on parallel EHV or lower voltage paths. For example, if a large EHV transformer experiences a catastrophic failure not only are other System Facilities required to carry more Load but the System is also exposed to other N-1 conditions for long periods of time while awaiting a replacement or repair of the failed equipment. Large generation sources are typically connected at EHV levels and maintenance of the EHV Transmission lines within the vicinity of larges generation plants must often be coordinated during scheduled unit outages, resulting again in multiple Facility outages over extended periods of time. Therefore, it was the conclusion of the SDT in Draft 1 to propose greater reliability and operational flexibility through more stringent performance requirements when considering certain N-1 and N-1-1 Contingency events of EHV Systems. Throughout the industry substation arrangements at EHV levels reflect the importance of these Systems as the designs often consist of the more expensive ring-bus, breaker-and –a-half or double bus-double breaker protection schemes as opposed to the more simplistic and lesser cost single bus arrangements that are			

Q43			
Commenter	**Yes**	**No**	**Comment**
commonly found on lower voltage Systems. The feedback received from industry was divided related to the SDT's emphasis placed on a higher expectation for the 300 kV and higher Systems. Some commenter's questioned the importance and the high costs that may be needed to mitigate existing System designs. Others agreed with the SDT's approach and indicated that the impact to their Systems would be minimal. Some commenter's even questioned why the more stringent approach was not applied to the entire 100kV and higher Systems. The SDT believes the Draft 2 changes are responsive to industry feedback and reflect an appropriate middle ground related to the importance of the EHV Transmission System. The SDT plans to draft an implementation plan. This implementation plan will address, among other issues, the other standards, which will need to be brought into alignment with this standard. The plan will be provided for the third posting of the standard.			
WPS	☑		Within R1.1.2, the Planning Coordinator and the Transmission Planner is required to define what constitutes "normal weather patterns" for the purpose of establishing load forecasts. However, the PC and/or TP are not the appropriate entities to establish "normal weather patterns"; the LSEs, who actually develop load forecasts and have the expertise, are the appropriate entities to establish normal weather patterns. Additionally, this requirement should consider requiring the 50/50 probability load forecast from the LSEs.
Response: This requirement has been eliminated in response to various industry comments.			
Duke Energy		☑	
Northwestern Energy		☑	
New York ISO		☑	
Response: Thank you.			

NERC
NORTH AMERICAN ELECTRIC
RELIABILITY CORPORATION

Maureen E. Long
Standards Process Manager

October 8, 2007

TO: REGISTERED BALLOT BODY

Ladies and Gentlemen:

Announcement: TPL-001 Web Ex and Conference Call and Correction to Comment Form

The Standards Committee (SC) announces the following:

WebEx and Conference Call to Provide Overview of First Draft of TPL-001-1 — Transmission System Planning Performance Requirements on Wednesday, October 10, 2007

The Assess Transmission Future Needs Standard Drafting Team (ATFN SDT) will hold a Web Ex and Conference Call on Wednesday, October 10th from 1 to 4 p.m. EDT to present and discuss the proposed requirements in TPL-001-1. The purpose of the proposed standard is to establish Transmission System planning performance requirements within the planning horizon to develop a Bulk Electric System that will operate reliably over a broad spectrum of System conditions and following a wide range of probable Contingencies. The proposed standard consolidates, clarifies, and expands on the requirements that had been in TPL-001-0, TPL-002-0, TPL-003-0 and TPL-004-0, and includes several new definitions.

The WebEx and conference call provides an overview of the proposed requirements to highlight the areas where the proposed requirements differ from the requirements in the existing TPL-001-0 through TPL-004-0 and to provide the opportunity to ask questions about the proposed requirements.

To join the WebEx, click on the following link **a few minutes before 1 p.m.** and select the meeting for the ATFN SDT:

https://nerc.webex.com/mw0304l/mywebex/default.do?siteurl=nerc
Password: standards

To join the conference call, dial the following number and, when prompted, provide the code:

Phone: 1-866-740-9357
Code: 1612521

Corrected Comment Form for First Draft of TPL-001-1 — Transmission System Planning Performance Requirements

The comment form posted with the TPL-001-1 — Transmission System Planning Performance Requirements contained an error on question 29 and has been replaced.

Standards Development Process

The *Reliability Standards Development Procedure* contains all the procedures governing the standards development process. The success of the NERC standards development process depends on stakeholder participation. We extend our thanks to all those who participate. If you have any questions, please contact me at 813-468-5998 or maureen.long@nerc.net.

Sincerely,

Maureen E. Long

cc: Registered Ballot Body Registered Users
Standards Mailing List

116-390 Village Boulevard, Princeton, New Jersey 08540-5721
Phone: 609.452.8060 ▪ Fax: 609.452.9550 ▪ www.nerc.com

NERC Roster

Comment Form for 2nd Draft of Standard TPL-001-1
Assess Transmission Future Needs (Project 2006-02)

Please **DO NOT** use this form to submit comments on the 2nd draft of the TPL-001-1 standard for Assess Transmission Future Needs (Project 2006-02). This comment form must be completed by **September 29, 2008.**

If you have questions please contact Ed Dobrowolski at ed.dobrowolski@nerc.net or by telephone at 609-947-3673.

Background Information
TPL-001-1 Transmission System Planning Performance Requirements

Comments on the initial draft of the TPL-001-1 Transmission System Planning Performance Requirements standard were received from the industry through October 26, 2007. The Drafting Team sought and received feedback to 43 questions, and the team appreciates the tremendous industry participation that generated over 430 pages of comments, representing over 80 organizations. Below is a brief overview of the 2nd draft of the standard highlighting areas where the SDT made changes based on stakeholder feedback. The SDT is also presenting several new questions to seek the industry's position related to the changes made and to obtain clarifying data that will provide further direction for improvements. The team's objectives remain unchanged - to create a single Transmission planning standard 1) with clear, concise requirements set at an appropriate level to ensure reliability and 2) that fully addresses all issues raised by FERC Orders 693 and 890, and industry inputs, including the SAR scope document.

2nd Draft Overview:

1. At first glance the second draft of the standard seems to have several new requirements; however, this is in large part due to clarifying responsible entity assignments of the former Requirement R1 (Modeling Data) requirements. Also, based on industry feedback, we have moved many of the former R1 requirements to the end of the standard (new Requirements R9 through R14) to facilitate their removal as the SDT believes that they will ultimately reside in MOD standards. See question 4 below for more detail.
2. Aside from the modeling data changes, the flow and organization of the standard remains similar to the 1st draft. Two changes are noteworthy: Requirement R4 (short circuit) was formerly part of Requirement R2, and Requirement R6 is a new requirement related to proxies used by the Transmission Planner (TP) and Planning Coordinator (PC) to identify cascade conditions, voltage instability, or uncontrolled islanding. With the insertion of these items some re-numbering of requirements was required.
3. Several definitions were revised or deleted based on industry feedback. Of note are changes to the Consequential Load Loss, Non-Consequential Load Loss and Year One definitions. A new definition is provided for Bus-tie Breaker to help clarify its use in the Performance Tables. Also, Generating Unit Stability Study replaces the former Plant Stability Study terminology.
4. Performance Tables – The use of two tables (Steady-State and Stability) remains but they have been significantly modified for readability, clarity, and to improve consistency between them. The tables more closely resemble the format used in the existing TPL standards. Highlights of the changes made to the tables are:
    a. Several changes to performance table planning events, extreme events, notes, etc.

b. Many responders questioned the need for higher performance expectations for facilities at or above 300 kV. The SDT has revised expectations for the N-1-1 (overlapping single Contingencies - Planning Event P6); however, the SDT continues to support a higher level of performance for the EHV System for common mode failures such as bus faults (P2.2), breaker faults (P2.3), stuck breaker (P4), and Protection System failures (P5).

c. Protection System failure (P5) is a Planning Event added to the tables to provide greater distinction between a stuck breaker (P4) and a failure of a non-redundant Protection System component, such as a relay, CT, PT, or communication system.

5. Sensitivity Studies – There was confusion in the 1st draft related to how sensitivity studies are expected to impact Corrective Action Plans (CAP). This is now addressed in the 2nd draft and CAPs are not needed when a problem is due solely to a sensitivity review (see Requirement R2.7). Also, the unintentional exclusion of possible sensitivity studies beyond those listed in the standard has now been addressed. See Requirements R2.1.4 and R2.4.4.

6. Qualifications for "past" studies are better defined. See Requirement R2.6.

7. Corrective Action Plans (CAP)s:

   a. CAPs can now include use of SPS/RAS to respond to single or multiple Contingency events. (See Requirements R3.5 (steady-state) and R5.5.3 (Stability). The feedback from the industry was clear that an SPS/RAS should be permitted for generation runback or tripping in response to a single Contingency event.

   b. The SDT has removed the use of "committed" and "planned" in regards to CAPs.

   c. The SDT has removed the 1st draft Requirement R2.7.2 which required that CAPs be added to study cases and the cases re-tested to show that the System with planned additions meets the performance requirements in the tables.

You do not have to answer all questions. Enter All Comments in Simple Text Format.

Insert a "check" mark in the appropriate boxes by double-clicking the gray areas.

1. The SDT has modified the definitions and requirements associated with System Stability and Generating Unit Stability (formerly Plant Stability) in response to industry comments. Do you concur with the modified definitions for stability and, if not, please state why and/or suggest specific changes.

   ☐ Yes
   ☐ No
   Comments:

2. Do you concur with the modified Requirements R2.4, R2.5, R5.4, and R5.5? If not, please state why and/or suggest specific changes.

   ☐ Yes
   ☐ No
   Comments:

3. The SDT has modified the definitions of Consequential and Non-Consequential Load Loss in response to industry comments. Do you concur with the modified definitions of Consequential and Non-Consequential Load Loss? If not, please state why and/or suggest specific changes.

   ☐ Yes
   ☐ No
   Comments:

4. The SDT has modified Requirement R3.5 and eliminated Requirement R3.6 from the first draft to clarify that manual and automatic generation run-back (redispatch) and tripping is allowed as a Corrective Action Plan as long as the conditions in Requirements R3.5.1, R3.5.2 and R3.5.3 are met. Do you agree that generation run-back and tripping (manual and automatic) should be limited by these conditions? If not, please explain why you disagree with the proposed requirements.

   ☐ Yes
   ☐ No
   Comments:

5. The SDT has modified the modeling requirements. Some commenters expressed concern that the modeling requirements contained in Requirement R1 of the first draft of TPL-001-1 were either duplicative of the requirements in the MOD standards, or to

the extent new modeling requirements were proposed, that the appropriate venue for such modeling requirements would be the MOD standards. The SDT believes that additional modeling requirements not presently contained in the MOD standards are necessary for Transmission Planning purposes. The SDT has incorporated these additional requirements with the intent that they will be removed from the TPL standard when they are incorporated into the MOD standards at a later date.

The SDT has also modified proposed modeling requirements contained in Requirement R1 of the first draft of TPL-001-1 based on industry comments and moved these requirements to Requirements R9 through R14 in the second draft for ease of removal later on. Furthermore, in response to industry comments, the SDT has separated the modeling requirements into individual requirements for each responsible entity. Do you concur with the modifications reflected in Requirements R9 – R14? If not, please state why and/or suggest specific changes.

☐ Yes

☐ No

Comments:

6. The SDT has modified the requirements relating to short circuit analysis Do you concur with the modifications reflected in Requirements R2.3 and R4. If not, please state why and/or suggest specific changes.

☐ Yes

☐ No

Comments:

7. The SDT has reformatted the Steady State and Stability Performance Tables. Do you concur with the modified format? If not, please state why and/or suggest specific changes.

☐ Yes

☐ No

Comments:

In questions 8 and 9, the SDT is soliciting the following feedback related to Bus-tie Breakers and non Bus-Tie Breakers (see Table 1, P2 and P4).

8. A new definition for "Bus-Tie Breaker" was added to clarify the type of substation design and breaker position that qualify as a Bus-tie Breaker. Do you agree with the proposed definition? If not, please explain.

☐ Yes

☐ No

Comments:

9. Some commenters questioned why a Bus-tie Breaker would have a different performance requirement than a non-Bus-tie Breaker, stating that all breakers have the same probability for failure. It may be true that generally the probability for failure

of any given breaker would not vary substantially among similar types of breakers, but the Bus-tie Breaker reduces exposure and consequences of bus faults. The different performance expectations in Tables 1 and 2 are based on promoting a higher level of reliability for the Transmission Systems operated above 300 kV.

It is recognized by the SDT that a straight bus design has some undesirable exposure to bus faults, but that Bus-tie Breakers can be utilized to improve reliability for bus faults and problems associated with exit breakers. As a result, the risk of an internal breaker fault was deemed to be significantly less than the benefit that is gained by reducing the exposure to a total bus failure. Therefore, provisions were built into the performance requirements that would not discourage their use.

Do you agree that non-Bus-tie Breakers rated above 300 kV should have more stringent performance requirements than Bus-tie Breakers? If not, please explain why and/or suggest specific changes.

☐ Yes

☐ No

Comments:

10. The SDT made modifications in this second draft to the requirements relating to sensitivity cases. Do you concur with the modifications reflected in Requirements R2.1.3 and 2.1.4? If not, please state why and/or suggest specific changes.

☐ Yes

☐ No

Comments:

11. In response to industry comments, the SDT modified Table 1 requirements for Planning Event P6. Planning Event P6 involves independent overlapping single contingencies (n-1-1) involving two Transmission Facilities excluding generators. This Planning Event generally correlates to P5 of the first draft and now includes shunt devices. The P6 event was also revised to permit loss of Non-Consequential Load to meet performance requirements for Systems above 300kV.

Do you concur with the modifications? If not, please state why and/or suggest specific changes.

☐ Yes

☐ No

Comments:

Comments from some entities received from the posting of the 1st draft standard indicated that significant additional costs will be required to meet the proposed requirements and performance tables. Commenters also indicated that it would take several years to install the additional facilities needed to meet the change in requirements. The SDT has attempted to adjust and clarify the proposed requirements and performance in light of these initial comments; however, the SDT needs more specific information on these concerns so that it can put the proposed requirements in perspective and make more adjustments as appropriate. Questions 12, 13 & 14 address these concerns.

What do you estimate will be your additional approximate costs, if any, to support the proposed requirements and performance tables over and above what you are currently doing for the following:

12. Analysis:

    One time cost to supplement past study portfolio and analyze the supplemental studies (depending on the extent of supplemental work needed, this may be an accumulated cost over more than one year):

    Comments:

    How many years do you estimate that it will take to complete supplemental studies and associated analysis?

    Comments:

    On-going additional cost for expanded studies and analysis:

    Comments:

13. Documentation

    One time cost to prepare reporting documentation associated with studies needed to supplement past study portfolio (depending on the time required to complete the supplemental work, this may be an accumulated cost over more than one year):

    Comments:

    On-going additional cost for documentation of expanded studies and analysis:

    Comments:

14. System Reinforcement

    One time cost, capital investment, to expand your system reinforcement program (due to lead times associated with different types of facilities, this will probably be an accumulated cost over several years):

    Comments:

    How many years do you estimate that it will take to complete this initial expanded system reinforcement program:

    Comments:

15. (A) Do you generally support the revised standard? (B) Are you unsure whether you generally support the revised standard? or (C) Do you definitely not support the revised standard? Please check the appropriate box below. If your response is either (B) or (C), please explain your single biggest concern with the revised standard, including which specific requirement or set of requirements causes you the most concern and why.

    ☐ A – Generally support the revised standard

    ☐ B – Unsure about supporting the revised standard

    ☐ C – Definitely do not support the revised standard

    Comments:

Standard Development Roadmap

This section is maintained by the drafting team during the development of the standard and will be removed when the standard becomes effective.

Development Steps Completed:

1. Version 1 of SAR posted for comment from April 2, 2002 through May 3, 2002.
2. Version 2 of SAR posted for comment from May 5, 2004 through June 5, 2004.
3. Version 3 of SAR posted on November 18, 2005.
4. SAR approved on April 30, 2006.
5. Version 1 of Supplemental SAR posted for comment from February 15, 2007 through March 16, 2007.
6. Version 2 of Supplemental SAR posted on April 9, 2007.
7. Version 1 of revised standard(s) posted for comment on September 17, 2007.

Proposed Action Plan and Description of Current Draft:

The SDT has established a schedule of meetings and conference calls that allows for steady progress through the standards development process in anticipation of completing their assignment in 1Q10. The current draft is the second iteration of the revision of existing standards TPL-001 through TPL-006 and includes one revised standard, TPL-001-1, replacing TPL-001-0, TPL-002-0, TPL-003-0 and TPL-004-0. TPL-005 & -006 will be addressed later in the project. Violation Risk Factors, Time Horizons, Measures, Compliance and Implementation Plans will be included in subsequent postings.

Future Development Plan:

Anticipated Actions	Anticipated Date
1. Respond to comments from first posting of standard(s) and submit revision 1 of the standard(s).	2Q08
2. Respond to comments from second posting of standard(s) and submit revision 2 of the standard(s).	4Q08
3. Submit revision 3 of the standard(s) for balloting.	2Q09
4. Respond to comments from third posting and submit revision 3 of the standard.	3Q09
5. Submit standard(s) for recirculation balloting.	4Q09
6. Submit standard(s) to BOT.	1Q10
7. Submit to regulatory authorities for approval.	1Q10

Definitions of Terms Used in Standard

This section includes all newly defined or revised terms used in the proposed standard. Terms already defined in the Reliability Standards Glossary of Terms are not repeated here. New or revised definitions listed below become approved when the proposed standard is approved. When the standard becomes effective, these defined terms will be removed from the individual standard and added to the Glossary.

Bus-tie Breaker: A circuit breaker that is positioned to connect two individual straight bus substation configurations. (Substation configurations such as ring-bus, breaker-and-a-half, or double bus-double breaker protection schemes do not use bus-tie breakers.)

Consequential Load Loss: Load that is no longer connected to a source as a result of the event being studied or which is lost as a result of the load's response to the transient conditions of the event (other than through the action of UVLS or UFLS schemes). Although Load which is lost as a result of the Load's response to the transient conditions of the event is considered Consequential Load Loss and is permitted when Consequential Load Loss is allowed, Transmission planning entities are not allowed to rely upon the expectation of such Load loss to meet steady state performance requirements.

Extreme Events: Events which are more severe and have a lower probability of occurrence than Planning Events.

Generating Unit Stability Study: Study that focuses on an individual generating unit's or electrically closely-coupled generating units' Stability for various Contingencies on the Transmission Facilities connected to that generating unit(s) point(s) of interconnection or one bus away from that point. This study is concerned with the loss of synchronism and the lack of damping of the generating units' power oscillations.

Long-Term Transmission Planning Horizon: Transmission planning period that covers years six through ten or beyond when required to accommodate any known longer lead time projects that may take longer than ten years to complete.

Near-Term Transmission Planning Horizon: Transmission planning period that covers Years One through five.

Non-Consequential Load Loss: Non-Interruptible Load loss other than Consequential Load Loss. For example, non-Interruptible Load loss that occurs through manual (operator initiated) or automatic operations such as under-voltage Load shedding, under-frequency Load shedding, or Special Protection Systems would be considered Non-Consequential Load Loss.

Planning Assessment: Documented evaluation of future Transmission System performance and Corrective Action Plans to remedy identified deficiencies.

Planning Events: Events that require Transmission system performance requirements to be met.

Planning Coordinator: The responsible entity that coordinates and integrates transmission facility and service plans, resource plans, and protection systems.

System Stability Study: Study that focuses on portions of the System, which may include many generating units, to determine whether angular Stability is maintained, inter-area power oscillations are damped, and voltages during the dynamic simulation stay within acceptable performance limits.

Year One: The first year that a Transmission Planner is responsible for assessing. This is further defined as the planning window that begins 12-18 months from the completion of the previous annual Planning Assessment.

A. Introduction

1. **Title:** **Transmission System Planning Performance Requirements**

2. **Number:** **TPL-001-1**

3. **Purpose:** Establish Transmission System planning performance requirements within the planning horizon to develop a Bulk Electric System that will operate reliably over a broad spectrum of System conditions and following a wide range of probable Contingencies.

4. **Applicability:**

   4.1. Functional Entity

   4.1.1. Planning Coordinator.

   4.1.2. Transmission Planner.

   4.1.3. Resource Planner.

   4.1.4. Distribution Provider.

   4.1.5. Transmission Owner.

   4.1.6. Generator Owner.

5. **Effective Date:** As per Implementation Plan (to be supplied later).

B. Requirements

R1. Each Transmission Planner and Planning Coordinator shall maintain System models for performing the studies needed to complete their Planning Assessment. The models shall use data provided in Requirements R9 through R14, the MOD-010 and MOD-012 standards, and other data sources. *[Violation Risk Factor: TBD] [Time Horizon: TBD]*

R1.1. The Planning Assessment shall include documentation of the technical rationale for modification of any data that was provided in Requirement R9 through R14, MOD-010, and MOD-012.

R2. Each Transmission Planner and Planning Coordinator shall conduct and document the results of its annual Planning Assessment of its portion of the BES. This Planning Assessment shall use current or past studies, and shall cover steady state analyses, short circuit analyses, and Stability analyses including both System and Generating Unit Stability. *[Violation Risk Factor: TBD] [Time Horizon: TBD]*

R2.1. The Near-Term Transmission Planning Horizon portion of the steady state analysis shall be assessed annually and be supported at a minimum by the following annual current studies, supplemented with qualified past studies as indicated in Requirement R2.6:

R2.1.1. System peak Load for either Year One or year two, and year five.

R2.1.2. System Off-Peak Load for one of the five years.

R2.1.3. For each of the studies described in Requirement R2.1.1 and Requirement R2.1.2, sensitivity case(s) that stress the System with sensitivities that reflect one or more of the following conditions shall

be run and documentation of the technical rationale for why each of the conditions was or was not selected shall be supplied:

R.2.1.3.1. Higher or lower Load than forecasted with variability of Load/demand and Load power factors due to season, weather, or time of day.

R.2.1.3.2. Modification of expected transfers.

R.2.1.3.3. Unavailability of long lead time Facilities.

R.2.1.3.4. Variability and outages of reactive resources.

R.2.1.3.5. Generation additions, retirements, or other dispatch scenarios.

R.2.1.3.6. Decreased effectiveness of controllable Loads and Demand Side Management.

R.2.1.3.7. Modification of planned Transmission outages.

R2.1.4. In addition to those sensitivities mentioned in Requirement R2.1.3, any other sensitivities, as deemed appropriate by the Transmission Planner or Planning Coordinator for their individual systems, shall be run and the Planning Assessment shall include documentation of the technical rationale for why each was selected shall be supplied.

R2.2. For the Long-Term Transmission Planning Horizon portion of the steady state analysis, at a minimum, a current System peak Load study is required annually for one of the years in the assessment period to support the annual Planning Assessment.

R2.2.1. To accommodate any known longer lead time projects that may take longer than ten years to complete, the Planning Assessment shall be extended accordingly.

R2.3. The short circuit analysis portion of the Planning Assessment shall be conducted annually and supported by current or past studies.

R2.4. The Near-Term Transmission Planning Horizon portion of the Stability analysis shall be assessed annually and be supported by current or past studies. The following studies are required:

R2.4.1. System peak Load for one of the five years. For peak System Load levels, a Load model shall be used which appropriately represents the dynamic behavior of Loads, including consideration of the behavior of induction motor Loads.

R2.4.2. System Off-Peak Load for one of the five years.

R2.4.3. For each of the studies described in Requirement R2.4.1 and Requirement R2.4.2, ~~s~~ensitivity case(s) that stress the System to reflect one or more of the following conditions shall be run and documentation of the technical rationale for why each of the conditions was or was not selected shall be supplied:

R.2.4.3.1. Variations in Load model assumptions.

R.2.4.3.2. Modification of expected transfers.
R.2.4.3.3. Unavailability of long lead time Facilities.
R.2.4.3.4. Variability and outages of reactive resources.
R.2.4.3.5. Generation additions, retirements, or other dispatch scenarios.

R2.4.4. In addition to those sensitivities mentioned in Requirement R2.4.3, any other sensitivity, as deemed appropriate by the Transmission Planner or Planning Coordinator for their individual systems, shall be run and the Planning Assessment shall include documentation of the technical rationale for why each was selected shall be supplied.

R2.5. The Generating Unit Stability analysis portion of the Planning Assessment shall be analyzed consistent with Requirement R5.5 with studies for the year when the following changes that could affect stability margins occur:

R2.5.1. New generator(s) are added or generation modifications are made such as changes in generation capability or replacing the exciter.

R2.5.2. Material Transmission System changes are made at or near the point of Interconnection of existing Generation such as the removal of a Transmission Line or the addition of a new substation in one of the Transmission Lines connected to the plant.

R2.6. Past studies may be used to support the Planning Assessment if they meet the following requirements:

R2.6.1. For steady state, short circuit, or System Stability analysis: the study shall be five calendar years old or less.

R2.6.2. For steady state, short circuit, Generating Plant Stability, or System Stability analysis: the study shall not include any material changes, such as, generation or Transmission additions/removals, or topology changes that have occurred in the intervening period and would impact the study area.

R2.7. For Planning Events shown in Table 1 – Steady State Performance and Table 2 – Stability Performance, when the analysis indicates an inability of the System to meet the performance requirements in the tables, the Planning Assessment shall include Corrective Action Plans addressing how the performance requirements will be met. Revisions to the Corrective Action Plans are allowed in subsequent assessments but the System shall continue to meet the performance requirements in the tables. Corrective Action Plans do not need to be developed solely to meet the performance requirements for sensitivities. The Corrective Action Plan shall:

R2.7.1. List System deficiencies and the associated actions needed to achieve required System performance. Such actions may include installation, modification, retirement, or removal of Transmission and generation Facilities and any associated equipment such as protective or Special Protection Schemes, rate applications, DSM, or other initiatives, new technologies, or Operating Procedures including how long the Operating Procedures will be needed as part of the Corrective Action Plan.

R.2.7.1.1. For the Near-Term Transmission Planning Horizon, include both a project initiation date as well as an in-service date.

R.2.7.1.2. For the Long-Term Transmission Planning Horizon, provide an in-service year.

R2.7.2. Contain a description of how and why the consideration of the sensitivities selected in accordance with Requirements R2.1.3, R2.1.4, R2.4.3, and R2.4.4 in the Planning Assessment did or did not result in a modification or expansion of the list of actions developed in accordance with Requirement R2.7.1.

R2.7.3. Be reviewed in subsequent annual Planning Assessments as to implementation status of identified System Facilities and Operating Procedures.

R3. For the steady state portion of the Planning Assessment, each Transmission Planner and Planning Coordinator shall perform analysis for the Near-Term and Long-Term Transmission Planning Horizon studies in Requirement R2.1 and Requirement R2.2. The studies shall be based on computer power flow simulations that analyze BES normal performance (n-0) and System response to contingencies in Table 1 – Steady State Performance. *[Violation Risk Factor: TBD] [Time Horizon: TBD]*

R3.1. Studies shall determine whether the BES meets the performance requirements in Table 1 – Steady State Performance.

R3.2. Contingency analyses shall simulate the removal of all elements including those that System protection is expected to disconnect for each Contingency without operator intervention.

R3.2.1. For all generators, studies shall consider the minimum steady state voltage limitations of all generators and identify how the generators are treated in the steady state simulation.

R3.2.2. For all Transmission lines, studies shall consider relay loadability and identify how loadability is treated in the steady state simulation.

R3.3. For Steady State studies:

R3.3.1. Performance criteria for System normal conditions and for Planning Events in Table 1 – Steady State Performance shall be met.

R3.3.2. Evaluations shall be performed for single Contingencies (identified in Table 1 – Steady State Performance).

R.3.3.2.1. Consequential Load loss (expected maximum demand and expected duration) following a single Contingency shall be identified in the Planning Assessment.

R.3.3.2.2. Following single Contingency events, Transmission configuration changes and redispatch of generation are allowed provided that all Facilities shall be operating within their Facility Ratings and within their thermal and voltage limits.

R3.3.3. Those Planning Event Contingencies in Table 1 – Steady State Performance not covered in Requirement R3.3.2 that are expected to produce more severe System impacts shall be identified, evaluated for System performance, and the rationale for the Contingencies selected for evaluation shall be available as supporting information and shall include an explanation of why the remaining Contingencies would produce less severe System results.

R3.4. Those Extreme Events in Table 1 – Steady State Performance that are expected to produce more severe System impacts shall be identified, evaluated for System performance, and the rationale for the Contingencies selected for evaluation shall be available as supporting information and shall include an explanation of why the remaining Contingencies would produce less severe System results. If the Extreme Events analysis concludes there are cascading outages caused by the occurrence of Extreme Events, an evaluation of implementing a change designed to reduce or mitigate the likelihood of such consequences shall be conducted.

R3.5. Manual and automatic generation run-back/tripping is allowed as a response to a single or multiple Contingency if the following conditions are met:

R3.5.1. All Facilities shall be operating within their Facility Ratings.

R3.5.2. Such action would not violate safety, equipment, regulatory or statutory requirements.

R3.5.3. A sustainable, stable, operating condition is maintained.

R4. For the short circuit portion of the Planning Assessment, as described in Requirement R2.3, each Transmission Planner and Planning Coordinator shall assess the short-circuit capability of its equipment under normal conditions and following any single Contingency condition that would result in greater circuit breaker interrupting duties. *[Violation Risk Factor: TBD] [Time Horizon: TBD]*

R5. For the Stability portion of the Planning Assessment, as described in Requirement R2.4 and Requirement R2.5, each Transmission Planner and Planning Coordinator shall perform the Contingency analyses listed in Table 2 – Stability Performance. The studies shall be based on computer simulations using models utilizing data provided in Requirements R9 through R14, the MOD-010 and MOD-012 standards, and other data sources, to include known planned and long term outages of Transmission or generation equipment. The studies shall cover both System Stability and Generating Unit Stability. The following requirements apply to both System Stability and Generating Unit Stability studies unless otherwise noted. *[Violation Risk Factor: TBD] [Time Horizon: TBD]*

R5.1. Studies to meet the performance requirements in Table 2 – Stability Performance shall use computer Stability simulations that analyze the response of the BES.

R5.2. Contingency analyses shall simulate the removal of all elements including those that System protection and other automatic controls are expected to disconnect for each Contingency without operator intervention.

R5.3. Studies shall consider the voltage ride through capability of all generators and identify how the generators are treated in the simulation.

R5.4. For the System Stability study:

R5.4.1. At a minimum, those Planning Event Contingencies in Table 2 – Stability Performance that would produce more severe System impacts shall be identified, evaluated for System performance, and the rationale for the Contingencies selected for evaluation shall be available as supporting information with an explanation of why the remaining Contingencies would produce less severe System results.

R5.4.2. Performance shall meet the requirements for Planning Events in Table 2 – Stability Performance.

R5.4.3. Automatic generation tripping is allowed to mitigate Stability violations if the following conditions are met:

R.5.4.3.1. All Facilities shall be operating within their Facility Ratings.

R.5.4.3.2. Such action would not violate safety, equipment, regulatory or statutory requirements.

R.5.4.3.3. A sustainable, stable, operating condition is maintained.

R5.4.4. At a minimum, those Extreme Events in Table 2 – Stability Performance that would produce more severe System impacts shall be identified, evaluated for System performance, and the rationale for the Contingencies selected for evaluation shall be available as supporting information and shall include an explanation of why the remaining Contingencies would produce less severe System results. If the Extreme Events analysis concludes there are cascading outages, an evaluation of implementing a change designed to reduce or mitigate the likelihood of such consequences shall be conducted.

R5.5. For the Generating Unit Stability studies:

R5.5.1. Shall be performed for individual generating units 20 MW or greater directly connected through a step-up transformer to the BES and for generating units at the same location which total 75 MW or greater, directly connected through their step-up transformer(s) to the BES.

R5.5.2. Shall be performed for changes in the real power output of a generating unit by more than 10% of the existing capability or more than 20 MW whichever is greater.

R5.5.3. Shall be performed and evaluated for those Planning Events that would produce more severe System impacts and the rationale for the Contingencies selected for evaluation shall be available as supporting information and shall include an explanation of why the remaining Contingencies would produce less severe System results.

R5.5.4. Shall meet Performance requirements for Planning Events in Table 2 – Stability Performance.

R6. Each Transmission Planner and Planning Coordinator shall define and document the proxies used in simulation studies to identify System instability for conditions such as cascading outages, voltage instability, or uncontrolled islanding. *[Violation Risk Factor: TBD] [Time Horizon: TBD]*

R7. Each Transmission Planner and Planning Coordinator shall determine and identify individual and joint responsibilities for performing the required studies for the Planning Assessment. *[Violation Risk Factor: TBD] [Time Horizon: TBD]*

R8. Each Planning Coordinator shall coordinate the distribution of Planning Assessment results among neighboring systems, coordinating analysis of these results through an open and transparent peer review process such as described in FERC Order 890. *[Violation Risk Factor: TBD] [Time Horizon: TBD]* This distribution shall include:

R9. Each Distribution Provider shall provide its respective Planning Coordinator with modeling information for real and reactive load forecast data for each year of the Transmission planning horizon at Transmission nodes based on expected or historical System performance including the expected mix of industrial, commercial, and residential Loads, within ninety days of a request for such information. *[Violation Risk Factor: TBD] [Time Horizon: TBD]*

R10. Each Transmission Planner shall provide its respective Planning Coordinator with modeling information for Firm Transmission Service data, Interchange Schedules and resources required to supply Load for each of its Balancing Authorities for each year of the Transmission planning horizon, within ninety days of a request for such information. *[Violation Risk Factor: TBD] [Time Horizon: TBD]*

R11. Each Transmission Owner shall provide its respective Planning Coordinator with modeling information for known planned outages and long-term outages for Transmission equipment for each year of the Transmission planning horizon with consideration given to spare equipment strategy, within ninety days of a request for such information. *[Violation Risk Factor: TBD] [Time Horizon: TBD]*

R12. Each Generator Owner shall provide its respective Planning Coordinator with modeling information for known planned outages and long-term outages for generation equipment for each year of the Transmission planning horizon, within ninety days of a request for such information. *[Violation Risk Factor: TBD] [Time Horizon: TBD]*

R13. Each Resource Planner shall provide its respective Planning Coordinator with the modeling information for new planned facilities for each year of the Transmission planning horizon including but not limited to generators, Reactive Power devices, and new technologies, within ninety days of a request for such information. *[Violation Risk Factor: TBD] [Time Horizon: TBD]*

R14. Each Transmission Planner shall provide its respective Planning Coordinator with modeling information for new planned facilities for each year of the Transmission planning horizon including but not limited to Transmission Lines, circuit breakers, Reactive Power devices, Protection System equipment and control devices, and new technologies, within ninety days of a request for such information. *[Violation Risk Factor: TBD] [Time Horizon: TBD]*

Table 1 – Steady State Performance

1. Facility Ratings shall not be exceeded. Planned System adjustments are allowed, unless precluded in the Requirements, to keep Facilities within the Facility Ratings, if such adjustments are executable within the time duration applicable to the Facility Ratings.
2. System steady state voltages and post-transient voltage deviations shall be within acceptable limits as established by the Planning Coordinator (or Transmission Planner if more restrictive).
3. Voltage instability, cascading outages, and uncontrolled islanding shall not occur.
4. Consequential Load and consequential generation loss is allowed for all events shown.
5. Simulate the removal of all elements that Protection Systems and controls are expected to disconnect for each event.
6. Simulate Normal Clearing unless otherwise specified.

Planning Events						
Category	**Initial System Condition**	**Event[3]**	**BES Elements out of Service[2, 3]**		**Interruption of Firm Transmission Service Allowed**	**Non-Consequential Load Loss Allowed**
			(A) > 300 KV	**(B) <= 300 KV**		
P0 Normal System conditions	Normal System	None	X	X	No	No
P1 Single Contingency	Normal System	Loss of one of the following: 1. Generator 2. Transmission circuit 3. Transformer 4. Shunt device 5. Single pole of a DC line	X	X	No Yes, if transfer is dependent on the outaged DC line.	No

P2 Single Contingency	Normal System	Loss of one of the following: 1. Breaker(s) opening without a Fault resulting in a single ended line	X	X	No	No
		2. Bus section	X		No	No
				X	Yes	Yes
		3. Internal Breaker Fault (non-bus-tie)	X		No	No
				X	Yes	Yes
		4. Internal Breaker Fault (bus tie)	X	X	Yes	Yes
P3 Multiple Contingency (Generator + 1)	Loss of a generator followed by System adjustments	Loss of one of the following: 1. Generator 2. Transmission circuit 3. Transformer 4. Shunt device 5. Single pole of a DC line	X	X	No Yes, if transfer is dependent on the outaged DC line.	No

P4 Multiple Contingency (Fault plus stuck breaker)[1]	Normal System	Stuck breaker (non-bus-tie) attempting to clear a Fault on one of the following: 1. Generator 2. Transmission circuit 3. Transformer 4. Shunt device 5. Bus section	X		No	No
				X	Yes	Yes
		6. Stuck breaker (bus tie) attempting to clear a Fault on the associated bus	X	X	Yes	Yes
P5 Multiple Contingency (Fault plus Protection System failure)	Normal System	Loss of multiple elements due to a single component failure within a Protection System associated with clearing a Fault on one of the following: 1. Generator 2. Transmission circuit 3. Transformer 4. Shunt device 5. Bus section	X		No	No
				X	Yes	Yes

P6 Multiple Contingency (Two overlapping single Contingencies)	Loss of one of the following, followed by System adjustments: 1. Transmission circuit 2. Transformer 3. Single pole of a DC line 4. Shunt device	Loss of one of the following: 1. Transmission circuit 2. Transformer 3. Single pole of a DC line 4. Shunt device	X	X	Yes	Yes
P7 Multiple Contingency (Common Structure)	Normal System	1. Loss of any two Transmission circuits on a common structure. (Excludes circuits that share a common structure for 1 mile or less.) 2. Loss of a bipolar DC line	X	X	Yes	Yes
Extreme Events						
Evaluation Requirements						
For all Extreme Events evaluated: 1. See Requirement R3.4. 2. Simulate the removal of all elements that Protection Systems and controls are expected to disconnect for each Contingency. 3. Simulate Normal Clearing unless otherwise specified.						
Extreme Event Descriptions						
1. Loss of a single generator, Transmission Circuit, DC Line, or transformer forced out of service followed by another single generator, Transmission Circuit,						

DC Line, or transformer forced out of service prior to System adjustments.

2. Local area events affecting the Transmission System such as:
    a. Loss of a tower line with three or more circuits.
    b. Loss of all Transmission lines on a common right-of-way.
    c. Loss of a switching station or substation (loss of one voltage level plus transformers).
    d. Loss of all generating units at a station.
    e. Loss of a large Load or major Load center.
3. Wide area events affecting the Transmission System based on System topology such as:
    a. Loss of two generating plants resulting from conditions such as:
        i. Loss of a large gas pipeline into a region or multiple regions that have significant gas-fired generation.
        ii. Loss of the use of a large body of water as the cooling source for generation.
        iii. Wildfires.
        iv. Severe weather, e.g., hurricanes, tornadoes, etc.
        v. A successful cyber attack.
        vi. Shutdown of a nuclear power plant(s) and related facilities for a day or more for common causes such as problems with similarly designed plants.
    b. Loss of two Transmission lines in different rights-of-way prior to System adjustments for conditions such as:
        i. Wildfires.
        ii. Severe weather, e.g., hurricanes, tornadoes, etc.
    c. Other events based upon operating experience such as:
        i. Consideration of initiating events that experience suggests may result in wide area disturbances.

Notes

1. A stuck breaker means that for a gang-operated breaker, all three phases of the breaker have remained closed. For an independent pole operated (IPO) breaker, only one pole is assumed to remain closed. The stuck breaker event introduces a delayed clearing mode. Normal Clearing is when the Protection System operates as designed and the Fault is cleared in the time normally expected with proper functioning of the installed protection systems. Breaker fail relay operation is a predetermined time that occurs after the Protection System operates and the breaker has failed. Breaker fail relaying will also

isolate a predetermined portion of the electric system to isolate the failed breaker. Delayed clearing of a Fault is due to failure of any Protection System component that prevents the Protection System from operating normally.

2. If the event analyzed involves BES elements at multiple system voltage levels, the lowest system voltage level for stated performance criteria applies regarding allowances for interruptions of firm transmission service and Non-Consequential Load.
3. For transformer outage events, the reference voltage applies to the low-side winding (excluding tertiary windings) and excluding generator step-up transformers. For generator outage events, the reference voltage apply to the BES connected voltage (high-side of GSU transformer). Requirements which are applicable to transformers also apply to variable frequency transformers and phase shifting transformers.
4. Requirements which are applicable to shunt devices also apply to FACTS devices.
5. An internal breaker Fault means a breaker failing internally, thus creating a System Fault which must be cleared by protection on both sides of the breaker.

Table 2 – Stability Performance

1. The System shall remain stable. [5]
2. Dynamic voltages shall be within acceptable limits established by the Planning Coordinator (or Transmission Planner if more restrictive).
3. Cascading outages and uncontrolled islanding shall not occur.
4. Simulate the removal of all elements that Protection Systems and controls are expected to disconnect for each event.
5. Simulate Normal Clearing unless otherwise specified.

Planning Events						
Category	**Initial System Conditions**	**Event [3]**	**BES Elements out of Service [2, 3]**		**Interruption of Firm Transmission Service Allowed**	**Non-Consequential Load Loss Allowed**
			(A) > 300 KV	**(B) <= 300 KV**		
P1 Single Contingency	Normal System	SLG or 3-phase Fault on one of the following: 1. Generator 2. Transmission circuit 3. Transformer 4. Shunt device 5. Single pole of a DC line	X	X	No Yes, if transfer is dependent on the outaged DC line.	No

P2 Single Contingency	Normal System	1. Breaker(s) opening without a Fault resulting in a single ended line	X	X	No	No
		2. SLG Fault on bus section	X		No	No
				X	Yes	Yes
		3. SLG internal breaker Fault (non-bus-tie)	X		No	No
				X	Yes	Yes
		4. SLG internal breaker Fault (bus tie)	X	X	Yes	Yes
P3 Multiple Contingency (Generator + 1)	Loss of a generator followed by System adjustments	SLG or 3-phase Fault on one of the following: 1. Generator 2. Transmission circuit 3. Transformer 4. Shunt device 5. Single pole of a DC line	X	X	No Yes, if transfer is dependent on the outaged DC line.	No

P4 Multiple Contingency (Fault plus stuck breaker) [1]	Normal System	Stuck breaker (non-bus-tie) attempting to clear a SLG Fault on one of the following: 1. Generator 2. Transmission circuit 3. Transformer 4. Shunt device 5. Bus section	X		No	No
				X	Yes	Yes
		6. Stuck breaker (bus tie) attempting to clear an SLG Fault on the associated bus	X	X	Yes	Yes

P5 Multiple Contingency (Fault plus Protection System failure)	Normal System	Loss of multiple elements due to a single component failure within a Protection System associated with clearing an SLG Fault on one of the following: 1. Generator 2. Transmission circuit 3. Transformer 4. Shunt device 5. Bus section	X		No	No
				X	Yes	Yes
P6 Multiple Contingency (Two overlapping single Contingencies)	Loss of one of the following, followed by System adjustments: 1. Transmission circuit 2. Transformer 3. Single pole of a DC line 4. Shunt device	SLG or 3-phase Fault on one of the following: 1. Transmission circuit 2. Transformer 3. Shunt device 4. Loss of single pole of a DC line	X	X	Yes	Yes

P7 Multiple Contingency (Common structure)	Normal System	1. SLG Fault on each circuit of any two Transmission circuits on a common structure (Excludes circuits that share a common structure for one mile or less) 2. Loss of a bipolar DC line	X	X	Yes	Yes
Extreme Events						
Evaluation Requirements						
For all Extreme Events evaluated: 1. See Requirement R5.5.4. 2. Simulate the removal of all elements that Protection Systems and controls are expected to disconnect for each Contingency. 3. Simulate Normal Clearing unless otherwise specified.						
Extreme Event Descriptions						
1. With an initial condition of a single generator, Transmission circuit, DC line, or transformer forced out of service, apply a 3Ø fault on another single generator, Transmission circuit, DC line, or transformer prior to System adjustments. 2. Local or wide area events affecting the Transmission System such as: a. 3Ø fault on generator with stuck breaker or a protection system failure due to a single component failure within the protection system. b. 3Ø fault on transmission circuit with stuck breaker or a protection system failure due to a single component failure within the protection system. c. 3Ø fault on transformer with stuck breaker or a protection system failure due to a single component failure within the protection system.						

d. 3Ø fault on bus section with stuck breaker or a protection system failure due to a single component failure within the protection system.

e. 3Ø internal breaker fault.

f. 3Ø fault on two or more circuits on a common structure.

g. SLG or 3Ø fault on all transmission lines on a common right-of-way.

h. 3Ø fault on switching station or substation (loss of one voltage level plus transformers)

i. Other events based upon operating experience, such as consideration of initiating events that experience suggests may result in wide area disturbances.

Notes

1. A stuck breaker means that for a gang-operated breaker, all three phases of the breaker have remained closed. For an independent pole operated (IPO) breaker, only one pole is assumed to remain closed. The stuck breaker event introduces a delayed clearing mode. Normal Clearing is when the Protection System operates as designed and the Fault is cleared in the time normally expected with proper functioning of the installed Protection Systems and breakers. Breaker failure relay operation is a predetermined time that occurs after the Protection System operates and the breaker has failed. Breaker failure relaying will also isolate a predetermined portion of the electric System to isolate the failed breaker. Delayed clearing of a Fault is due to failure of any Protection System component or breaker that prevents the fault from clearing normally.
2. If the event analyzed involves BES elements at multiple system voltage levels, the lowest system voltage level for stated performance criteria applies regarding allowances for interruptions of firm transmission service and Non-Consequential Load.
3. For transformer outage events, the reference voltage applies to the low-side winding (excluding tertiary windings) and excluding generator step-up transformers. For generator outage events, the reference voltage apply to the BES connected voltage (high-side of GSU transformer). Requirements which are applicable to transformers also apply to variable frequency transformers and phase shifting transformers.
4. An internal breaker fault means a breaker failing internally, thus creating a system fault which must be cleared by protection on both sides of the breaker.
5. System stable means:
   a. Angular Stability:
      i. For Planning Event P1: No generating unit or units shall be allowed to pull out of synchronism. A generator being disconnected from the System by Fault clearing action or by a Special Protection System is not considered pulling out of synchronism.
      ii. For all other Planning Events: No generating unit or units totaling more than the Contingency reserve of the Balancing Authority shall be allowed to pull out of synchronism. Generators that pull out of synchronism must have out-of-step protection or some other means to trip the generator for this condition and the resulting apparent impedance swings must not pass through relay characteristics that would result in the tripping of any Transmission System elements other than the generating unit and its direct connection Facilities.
   b. For all Planning Events evaluated: Power oscillations shall exhibit acceptable damping as established by the Planning Coordinator (or

Transmission Planner if more restrictive).

C. Measures

M1. To be supplied at a later date.

E. Regional Variances

None.

Version History

Version	Date	Action	Change Tracking
1	TBD	Revision of TPL-001-0 as per Project 2006-02; includes merging requirements of TPL-001-0, TPL-002-0, TPL-003-0, and TPL-004-0 into one, single, comprehensive, coordinated standard: TPL-001-1	Not employed due to scope of revision

Standard Development Roadmap

This section is maintained by the drafting team during the development of the standard and will be removed when the standard becomes effective.

Development Steps Completed:

1. Version 1 of SAR posted for comment from April 2, 2002 through May 3, 2002.
2. Version 2 of SAR posted for comment from May 5, 2004 through June 5, 2004.
3. Version 3 of SAR posted on November 18, 2005.
4. SAR approved on April 30, 2006.
5. Version 1 of Supplemental SAR posted for comment from February 15, 2007 through March 16, 2007.
6. Version 2 of Supplemental SAR posted on April 9, 2007.
7. Version 1 of revised standard(s) posted for comment on September 17, 2007.

Proposed Action Plan and Description of Current Draft:

The SDT has established a schedule of meetings and conference calls that allows for steady progress through the standards development process in anticipation of completing their assignment in 1Q10. The current draft is the second iteration of the revision of existing standards TPL-001 through TPL-006 and includes one revised standard, TPL-001-1, replacing TPL-001-0, TPL-002-0, TPL-003-0 and TPL-004-0. TPL-005 & -006 will be addressed later in the project. Violation Risk Factors, Time Horizons, Measures, Compliance and Implementation Plans will be included in subsequent postings.

Future Development Plan:

Anticipated Actions	Anticipated Date
1. Respond to comments from first posting of standard(s) and submit revision 1 of the standard(s).	2Q08
2. Respond to comments from second posting of standard(s) and submit revision 2 of the standard(s).	4Q08
3. Submit revision 3 of the standard(s) for balloting.	2Q09
4. Respond to comments from third posting and submit revision 3 of the standard.	3Q09
5. Submit standard(s) for recirculation balloting.	4Q09
6. Submit standard(s) to BOT.	1Q10
7. Submit to regulatory authorities for approval.	1 Q10

Definitions of Terms Used in Standard

This section includes all newly defined or revised terms used in the proposed standard. Terms already defined in the Reliability Standards Glossary of Terms are not repeated here. New or revised definitions listed below become approved when the proposed standard is approved. When the standard becomes effective, these defined terms will be removed from the individual standard and added to the Glossary.

~~**Base Case**: Computer representation of the projected initial or starting Transmission System conditions for a specific point in time. Each base case reflects the forecasted Load at each bus (or node) on the interconnected Transmission System, the transmission facilities which deliver the generation and reactive resources to the connected Load, and the generation dispatch including firm transaction obligations assumed to supply the connected Load. The models also reflect Facility Ratings.~~

Bus-tie Breaker: A circuit breaker that is positioned to connect two individual straight bus substation configurations. (Substation configurations such as ring-bus, breaker-and-a-half, or double bus-double breaker protection schemes do not use bus-tie breakers.)

Consequential Load Loss: Load that is no longer ~~served because it is directly connected to an element(s) that is removed from service due to fault clearing action or mis-operation~~ connected to a source as a result of the event being studied or which is lost as a result of the load's response to the transient conditions of the event (other than through the action of UVLS or UFLS schemes). Although Load which is lost as a result of the Load's response to the transient conditions of the event is considered Consequential Load Loss and is permitted when Consequential Load Loss is allowed, Transmission planning entities are not allowed to rely upon the expectation of such Load loss to meet steady state performance requirements.

Extreme Events: Events which are more severe and have a lower probability of occurrence than Planning Events ~~and have a low probability of occurrence~~.

Generating Unit Stability Study: Study that focuses on an individual generating unit's or electrically closely-coupled generating units' Stability for various Contingencies on the Transmission Facilities connected to that generating unit(s) point(s) of interconnection or one bus away from that point. This study is concerned with the loss of synchronism and the lack of damping of the generating units' power oscillations.

Long-Term Transmission Planning Horizon: Transmission planning period that covers years six through ten or beyond when required to accommodate any known longer lead time projects that may take longer than ten years to complete.

Near-Term Transmission Planning Horizon: Transmission planning period that covers Years One through five.

Non-Consequential Load Loss: ~~Load loss other than Consequential Load Loss. For example, Load loss that occurs through manual (operator initiated) or automatic operations such as under-voltage Load shedding, under-frequency Load shedding, or Special Protection Systems.~~ Non-Interruptible Load loss other than Consequential Load Loss. For example, non-Interruptible Load loss that occurs through manual (operator initiated) or automatic operations such as under-

voltage Load shedding, under-frequency Load shedding, or Special Protection Systems would be considered Non-Consequential Load Loss.

Planning Assessment: Documented evaluation of future Transmission System performance and Corrective Action Plans to remedy identified deficiencies. ~~Bulk Electric System needs by the use of performance studies that cover a range of assumptions regarding system conditions, time frames, future plans including capital reinforcements and operating procedures and other factors, such as asset conditions and age.~~

Planning Events: Events ~~which~~ that require Transmission system performance requirements to be met.

Planning ~~Authority~~ Coordinator: The responsible entity that coordinates and integrates transmission facility and service plans, resource plans, and protection systems.

~~**Plant Stability Study:** Study of an individual plant's Stability for various Contingencies in the vicinity of the plant; concerned with the effect on the System of the generating units' loss of synchronism and the damping of the generating units' power oscillations.~~

System Stability Study: ~~Study of the System or portions of the System to ensure that angular Stability is maintained, inter-area power oscillations are damped, and voltages during the dynamic simulation stay within acceptable performance limits.~~ Study that focuses on portions of the System, which may include many generating units, to determine whether angular Stability is maintained, inter-area power oscillations are damped, and voltages during the dynamic simulation stay within acceptable performance limits.

Year One: The first year that a Transmission Planner is responsible for ~~studying~~assessing. This is further defined as the planning window that begins ~~the next calendar year from the time the Transmission Planner submits their annual studies~~ 12-18 months from the completion of the previous annual Planning Assessment.

A. Introduction

1. **Title:** **Transmission System Planning Performance Requirements**

2. **Number:** **TPL-001-1**

3. **Purpose:** Establish Transmission System planning performance requirements within the planning horizon to develop a Bulk Electric System that will operate reliably over a broad spectrum of System conditions and following a wide range of probable Contingencies.

4. **Applicability:**

   4.1. Functional Entity

   4.1.1. Planning Coordinator.

   4.1.2. Transmission Planner.

   4.1.3. Resource Planner.

   4.1.4. ~~Load-Serving Entity~~ Distribution Provider.

   4.1.5. Transmission Owner.

   4.1.6. Generator Owner.

5. **Effective Date:** ~~TBD~~ As per Implementation Plan (to be supplied later).

B. Requirements

R1. ~~Each Resource Planner, Transmission Planner, Transmission Owner, Generator Owner, and Load-Serving Entity shall each provide its respective Planning Coordinator with the following modeling information required for System performance studies upon request (within 30 calendar days) :~~ Each Transmission Planner and Planning Coordinator shall maintain System models for performing the studies needed to complete their Planning Assessment. The models shall use data provided in Requirements R9 through R14, the MOD-010 and MOD-012 standards, and other data sources. *[Violation Risk Factor: TBD] [Time Horizon: TBD]*

R1.1. The Planning Assessment shall include documentation of the technical rationale for modification of any data that was provided in Requirement R9 through R14, MOD-010, and MOD-012.~~Load forecasts adhering, at a minimum, to the following criteria:~~

~~**R1.1.1.** Use of expected Load mix based on the actual or expected aggregate mix of industrial, commercial, and residential Loads.~~

~~**R1.1.2.** Based on normal weather patterns as agreed to by the Planning Coordinator(s) and the Transmission Planner(s) for the area(s) of their responsibility.~~

~~**R1.1.3.** Identification of Demand Side Management (DSM) Load reductions consistent with operational requirements.~~

~~**R1.2.** Load models with supporting rationale that include power factor data based on historical System performance, validated by measurement during stressed System conditions, or documented Transmission planning area requirements.~~

~~**R1.3.** Firm transfers/Interchange Schedules and resources required to supply Load for each Balancing Authority.~~

~~**R1.4.** Known planned outages and long-term outages for Transmission and generation equipment including protective relays with consideration given to spare equipment strategy.~~

R1.5. ~~Planned Facilities defined in accordance with the documented criteria of the Planning Coordinator, including but not limited to: Transmission Lines, generators, circuit breakers, Reactive Power devices, Protection System equipment and control devices, and new technologies.~~

R2. Each Transmission Planner and Planning Coordinator shall conduct and document the results of its annual Planning Assessment of its portion of the BES. This Planning Assessment shall use current or past studies, and shall cover steady state analyses, short circuit analyses, and Stability analyses including both System and ~~plant~~ Generating Unit Stability. *[Violation Risk Factor: TBD] [Time Horizon: TBD]*

R2.1. ~~The steady state portion of~~ ~~t~~The Near-Term Transmission Planning Horizon ~~Planning Assessment~~ portion of the steady state analysis shall ~~address all five years of the assessment period~~ be assessed annually and be supported at a minimum by the following annual current studies, supplemented with qualified past studies as ~~shown~~ indicated in Requirement R2.6:

R2.1.1. System peak Load for either Year One or year two, and year five.

R2.1.2. System Off-Peak Load for one of the five years.

R2.1.3. For each of the studies described in Requirement R2.1.1 and Requirement R2.1.2, sensitivity case(s) that stress the System with sensitivities that reflect one or more of the following conditions shall be run and documentation ~~with~~ of the technical rationale for ~~the selected sensitivity(ies)~~ why each of the conditions was or was not selected shall be supplied:

R.2.1.3.1. Higher or lower Load than forecast~~s~~ed ~~from the Base Case~~ with variability of Load/demand and Load power factors due to season, weather, or time of day.

R.2.1.3.2. Modification of expected transfers.

R.2.1.3.3. Unavailability of long lead time Facilities.

R.2.1.3.4. Variability and outages of reactive resources.

R.2.1.3.5. Generation additions, retirements, or other dispatch scenarios.

R.2.1.3.6. Decreased effectiveness of controllable Loads and Demand Side Management.

R.2.1.3.7. Modification of planned Transmission outages.

R2.1.4. In addition to those sensitivities mentioned in Requirement R2.1.3, any other sensitivities, as deemed appropriate by the Transmission Planner or Planning Coordinator for their individual systems, shall be

run and the Planning Assessment shall include documentation of the technical rationale for why each was selected shall be supplied.

R2.2. For the ~~steady state portion of the~~ Long-Term Transmission Planning Horizon portion of the steady state analysis, ~~Planning Assessment,~~ at a minimum, a current System peak Load study is required annually for one of the years in the assessment period to support the annual Planning Assessment.

R2.2.1. To accommodate any known longer lead time projects that may take longer than ten years to complete, the Planning Assessment shall be extended accordingly.

R2.3. The short circuit analysis portion of the Planning Assessment shall be conducted annually and supported by current or past studies.

~~**R2.3.1.** A current study shall be performed if changes in the BES result in increased fault currents such as resource additions and other Facility changes that result in reductions in impedance.~~

R2.4. The ~~System Stability portion of the~~ Near-Term Transmission Planning Horizon portion of the Stability analysis ~~Planning Assessment~~ shall be assessed annually ~~address all five years of the assessment period,~~ and be supported by current or past studies. The following studies are required ~~annually~~:

R2.4.1. System peak Load for one of the five years. For peak System Load levels, ~~the~~a Load model shall ~~include the dynamic effects~~ be used which appropriately represents the dynamic behavior of Loads, including consideration of the behavior of induction motor Loads.

R2.4.2. System Off-Peak Load for one of the five years.

R2.4.3. For each of the studies described in Requirement R2.4.1 and Requirement R2.4.2, ~~S~~sensitivity case(s) that stress the System to reflect one or more of the following conditions shall be run ~~with documentation provided explaining the rationale for the selected sensitivity(ies)~~ and documentation of the technical rationale for why each of the conditions was or was not selected shall be supplied:

R.2.4.3.1. Variations in Load model assumptions.

R.2.4.3.2. ~~Expected simultaneous transfers including non-firm~~ Modification of expected transfers.

R.2.4.3.3. Unavailability of long lead time Facilities.

R.2.4.3.4. ~~Reactive dispatch of generators and other reactive power devices~~ Variability and outages of reactive resources.

R.2.4.3.5. Generation additions, retirements, or other dispatch scenarios.

R2.4.4. In addition to those sensitivities mentioned in Requirement R2.4.3, any other sensitivity, as deemed appropriate by the Transmission Planner or Planning Coordinator for their individual systems, shall be run and the Planning Assessment shall include documentation of the technical rationale for why each was selected shall be supplied.

R2.5. The ~~plant~~Generating Unit Stability analysis portion of the Planning Assessment shall be analyzed consistent with Requirement ~~R4.6~~ R5.6 with studies for the year when the following changes that could affect stability margins occur:

R2.5.1. New generator(s) are added or generation modifications are made such as ~~increasing~~changes in generation capability or replacing the exciter ~~or addition of a power System stabilizer~~.

R2.5.2. Material Transmission System changes ~~in the electrical vicinity of existing generation are made~~ are made at or near the point of Interconnection of existing Generation such as the ~~addition or~~ removal of a Transmission Line ~~at or near the point of Interconnection~~ or the addition of a new substation in one of the Transmission Lines connected to the plant.

R2.6. Past studies may be used to support the Planning Assessment if they meet the following requirements:

R2.6.1. For steady state, short circuit, or System Stability analysis: ~~if the study is less than three years old and no material changes have occurred to the System in the intervening period. Material changes include topology changes, generation additions/removals, and market structure changes~~ the study shall be five calendar years old or less.

R2.6.2. For steady state, short circuit ~~analysis~~, Generating Plant Stability, or System Stability analysis: ~~if the study is less than five years old and no material changes have occurred to the System in the intervening period.~~ the study shall not include any material changes, such as, generation or Transmission additions/removals, or topology changes that have occurred in the intervening period and would impact the study area.

~~**R2.6.3.** For plant and System Stability analysis: until material changes in the System make the study no longer valid. Material changes in the system include the addition of a Transmission Line or a generator.~~

R2.7. For Planning Events shown in Table 1 – Steady State Performance and Table 2 – Stability Performance, when the analysis indicates an inability of the System to meet the performance requirements in the tables, the Planning Assessment shall include Corrective Action Plans addressing how the performance requirements will be met. Revisions to the Corrective Action Plans are allowed ~~over time~~ in subsequent assessments but the System shall continue to meet the performance requirements in the tables. ~~Such plans shall:~~ Corrective Action Plans do not need to be developed solely to meet the performance requirements for sensitivities. The Corrective Action Plan shall:

R2.7.1. ~~Identify~~ List System deficiencies and the associated actions needed to achieve required System performance. ~~including Transmission and generation improvements, DSM, new technologies, or Operating Procedures including the duration of interim Operating Procedures.~~ Such actions may include installation, modification, retirement, or

removal of Transmission and generation Facilities and any associated equipment such as protective or Special Protection Schemes, rate applications, DSM, or other initiatives, new technologies, or Operating Procedures including how long the Operating Procedures will be needed as part of the Corrective Action Plan.

R.2.7.1.1. For the Near-Term Transmission Planning Horizon, include both a project initiation date as well as an in-service date.

R.2.7.1.2. For the Long-Term Transmission Planning Horizon, provide an in-service year.

R2.7.2. ~~Be added to study cases and the cases re-tested to show that the System with planned additions meets the performance requirements in the tables~~ Contain a description of how and why the consideration of the sensitivities selected in accordance with Requirements R2.1.3, R2.1.4, R2.4.3, and R2.4.4 in the Planning Assessment did or did not result in a modification or expansion of the list of actions developed in accordance with Requirement R2.7.1.

~~**R2.7.3.** Include documentation of the criteria for determining committed and proposed projects, with all projects identified as either, 'committed' or 'proposed.'~~

~~**R2.7.4.** Not remove committed projects without documentation to show that the revised plan meets the performance requirements.~~

R2.7.5. Be reviewed in subsequent annual Planning Assessments as to implementation status of identified System Facilities and Operating Procedures.

R3. For the steady state portion of the Planning Assessment, each Transmission Planner and Planning Coordinator shall perform analysis for the Near-Term and Long-Term Transmission Planning Horizon studies in Requirement R2.1 and Requirement R2.2. The studies shall be based on computer power flow simulations that analyze BES normal performance (n-0) and System response to contingencies in Table 1 – Steady State Performance. *[Violation Risk Factor: TBD] [Time Horizon: TBD]*

R3.1. Studies shall determine whether the BES meets the performance requirements in Table 1 – Steady State Performance.

R3.2. Contingency analyses shall simulate the removal of all elements including those that System protection is expected to disconnect for each Contingency without operator intervention.

R3.2.1. For all generators, studies shall consider the minimum steady state voltage limitations of all generators and identify how the generators are treated in the steady state simulation.

R3.2.2. For all Transmission lines, studies shall consider relay loadability and identify how loadability is treated in the steady state simulation.

R3.3. For Steady State studies:

R3.3.1. Performance criteria for System normal conditions and for Planning Events in Table 1 – Steady State Performance shall be met.

R3.3.2. Evaluations shall be performed for single Contingencies (identified in Table 1 – Steady State Performance).

R.3.3.2.1. Consequential Load loss (expected maximum demand and expected duration) following a single Contingency shall be identified in the Planning Assessment.

R.3.3.2.2. Following single Contingency events, ~~System adjustments other than shedding of firm Load or curtailment of firm transfers are permitted to meet performance requirements provided these adjustments can be accomplished within the time period allowed by the applicable time limited ratings.~~ Transmission configuration changes and redispatch of generation are allowed provided that all Facilities shall be operating within their Facility Ratings and within their thermal and voltage limits.

R3.3.3. Those Planning Event Contingencies in Table 1 – Steady State Performance not covered in Requirement R3.3.2 that are expected to produce more severe System impacts shall be identified, evaluated for System performance, and the rationale for the Contingencies selected for evaluation shall be available as supporting information and shall include an explanation of why the remaining Contingencies would produce less severe System results.

R3.4. Those Extreme Events in Table 1 – Steady State Performance that are expected to produce more severe System impacts shall be identified, evaluated for System performance, and the rationale for the Contingencies selected for evaluation shall be available as supporting information and shall include an explanation of why the remaining Contingencies would produce less severe System results. If the Extreme Events analysis concludes there are ~~C~~cascading ~~O~~outages caused by the occurrence of Extreme Events, an evaluation of implementing a change designed to reduce or mitigate the likelihood of such consequences shall be conducted.

R3.5. Manual and automatic generation run-back/tripping is allowed as a response to a single ~~and~~ or multiple Contingencies~~y~~ ~~as long as Facility Ratings are not exceeded.~~if the following conditions are met:

R3.5.1. All Facilities shall be operating within their Facility Ratings.

R3.5.2. Such action would not violate safety, equipment, regulatory or statutory requirements.

R3.5.3. A sustainable, stable, operating condition is maintained.

~~**R3.6.** Manual and automatic generation tripping is allowed for multiple Contingencies and for single Contingencies only in situations that meet all of the following conditions:~~

~~**R3.6.1.** TBD~~

~~Note: WECC has informed the SDT that it will be submitting an Interconnection-wide regional variance to allow automatic generation tripping for single Contingencies. The regional variance will be justified based on physic differences in the western Interconnection. WECC is developing a white paper to support this position. The a regional variance will be included in the next posting of this standard.~~

R4.

R4. For the short circuit portion of the Planning Assessment, as described in Requirement R2.3, each Transmission Planner and Planning Coordinator shall assess the short-circuit capability of its equipment under normal conditions and following any single Contingency condition that would result in greater circuit breaker interrupting duties. *[Violation Risk Factor: TBD] [Time Horizon: TBD]*

R5. For the Stability portion of the Planning Assessment, as described in Requirement R2.4 and Requirement R2.5, each Transmission Planner and Planning Coordinator shall perform the Contingency analyses listed in Table 2 – Stability Performance. The studies shall be based on computer simulations using models utilizing data provided in Requirements R9 through R14, the MOD-010 and MOD-012 standards, and other data sources, to include known planned and long term outages of Transmission or generation equipment. The studies shall cover both System Stability and ~~plant~~ Generating Unit Stability. The following requirements apply to both System Stability and ~~plant~~ Generating Unit Stability studies unless otherwise noted. *[Violation Risk Factor: TBD] [Time Horizon: TBD]*

R5.1. Studies to meet the performance requirements in Table 2 – Stability Performance shall use computer Stability simulations that analyze the response of the BES.

R5.2. Contingency analyses shall simulate the removal of all elements including those that System protection and other automatic controls are ~~is~~ expected to disconnect for each Contingency without operator intervention.

R5.3. Studies shall consider the voltage ride through capability of all generators and identify how the generators are treated in the simulation.

~~**R5.4.** Studies shall identify any planned upgrades (including protection and control modifications) needed to meet the performance requirements of the Planning Events of Table 2 – Stability Performance and validate their effectiveness.~~

R5.5. For the System Stability study:

R5.5.1. At a minimum, those Planning Event Contingencies in Table 2 – Stability Performance that would produce more severe System impacts shall be identified, evaluated for System performance, and the rationale for the Contingencies selected for evaluation shall be available as supporting information with an explanation of why the remaining Contingencies would produce less severe System results.

R5.5.2. Performance shall meet the requirements for Planning Events in Table 2 – Stability Performance.

R5.5.3. Automatic generation tripping is allowed to mitigate Stability violations if the following conditions are met:

R.5.5.3.1. All Facilities shall be operating within their Facility Ratings.

R.5.5.3.2. Such action would not violate safety, equipment, regulatory or statutory requirements.

R.5.5.3.3. A sustainable, stable, operating condition is maintained.

R5.5.4. At a minimum, those Extreme Events in Table 2 – Stability Performance that would produce more severe System impacts shall be identified, evaluated for System performance, and the rationale for the Contingencies selected for evaluation shall be available as supporting information and shall include an explanation of why the remaining Contingencies would produce less severe System results. If the Extreme Events analysis concludes there are ~~C~~cascading ~~O~~outages, an evaluation of implementing a change designed to reduce or mitigate the likelihood of such consequences shall be conducted.

R5.6. For the ~~Plant~~ Generating Unit Stability studies:

R5.6.1. Shall be performed for individual generating units 20 MW or greater directly connected through a step-up transformer to the BES and for generating units at the same location which total 75 MW or greater, directly connected through their step-up transformer(s) to the BES.

R5.6.2. Shall be performed for changes in the real power output of a generating unit by more than 10% of the existing capability or more than 20 MW whichever is greater.

R5.6.3. Shall be performed and evaluated for those Planning Events that would produce more severe System impacts and the rationale for the Contingencies selected for evaluation shall be available as supporting information and shall include an explanation of why the remaining Contingencies would produce less severe System results. ~~The identified Contingencies, at a minimum, shall be evaluated.~~

R5.6.4. Shall meet Performance requirements for Planning Events in Table 2 – Stability Performance.

R6. Each Transmission Planner and Planning Coordinator shall define and document the proxies used in simulation studies to identify System instability for conditions such as cascading outages, voltage instability, or uncontrolled islanding. *[Violation Risk Factor: TBD] [Time Horizon: TBD]*

R7. Each Transmission Planner and Planning Coordinator shall determine and identify individual and joint responsibilities for performing the required studies for the Planning Assessment. *[Violation Risk Factor: TBD] [Time Horizon: TBD]*

R8. Each Planning Coordinator shall coordinate the distribution of Planning Assessment results among ~~affected entities~~ neighboring systems, coordinating analysis of these

results through an open and transparent peer review process such as described in FERC Order 890. *[Violation Risk Factor: TBD] [Time Horizon: TBD]* This distribution shall include:

~~**R8.1.** Transmission Planners within the Planning Coordinator's area~~

~~**R8.2.** Transmission Planners of neighboring impacted areas~~

R8.3. ~~Planning Coordinators of neighboring areas~~

R9. Each Distribution Provider shall provide its respective Planning Coordinator with modeling information for real and reactive load forecast data for each year of the Transmission planning horizon at Transmission nodes based on expected or historical System performance including the expected mix of industrial, commercial, and residential Loads, within ninety days of a request for such information. *[Violation Risk Factor: TBD] [Time Horizon: TBD]*

R10. Each Transmission Planner shall provide its respective Planning Coordinator with modeling information for Firm Transmission Service data, Interchange Schedules and resources required to supply Load for each of its Balancing Authorities for each year of the Transmission planning horizon, within ninety days of a request for such information. *[Violation Risk Factor: TBD] [Time Horizon: TBD]*

R11. Each Transmission Owner shall provide its respective Planning Coordinator with modeling information for known planned outages and long-term outages for Transmission equipment for each year of the Transmission planning horizon with consideration given to spare equipment strategy, within ninety days of a request for such information. *[Violation Risk Factor: TBD] [Time Horizon: TBD]*

R12. Each Generator Owner shall provide its respective Planning Coordinator with modeling information for known planned outages and long-term outages for generation equipment for each year of the Transmission planning horizon, within ninety days of a request for such information. *[Violation Risk Factor: TBD] [Time Horizon: TBD]*

R13. Each Resource Planner shall provide its respective Planning Coordinator with the modeling information for new planned facilities for each year of the Transmission planning horizon including but not limited to generators, Reactive Power devices, and new technologies, within ninety days of a request for such information. *[Violation Risk Factor: TBD] [Time Horizon: TBD]*

R14. Each Transmission Planner shall provide its respective Planning Coordinator with modeling information for new planned facilities for each year of the Transmission planning horizon including but not limited to Transmission Lines, circuit breakers, Reactive Power devices, Protection System equipment and control devices, and new technologies, within ninety days of a request for such information. *[Violation Risk Factor: TBD] [Time Horizon: TBD]*

~~Table 1 – Steady State Performance~~

~~Performance Requirements~~			
~~For all Planning Events:~~ • ~~Equipment Ratings shall not be exceeded.~~ • ~~System steady state voltages and post-transient voltage deviation shall be within acceptable limits established by the Planning Coordinator (or Transmission Planner if more restrictive.)~~ • ~~Voltage instability, cascading outages, and uncontrolled islanding shall not occur.~~ • ~~Consequential Load loss is allowed for all cases shown.~~ • ~~Simulate the removal of all elements that Protection Systems and controls are expected to disconnect for each Contingency.~~ • ~~Simulate Normal Clearing unless otherwise specified.~~			
~~Planning Events~~			
~~#~~	**~~Event~~**	**~~Interruption of Firm Transfer Allowed (does not result in loss of Load)~~**	**~~Non-Consequential Load Loss Allowed~~**
~~P1~~ ~~(single Contingency)~~	~~Loss of:~~ ~~1. A generator~~ ~~2. A Transmission circuit~~ ~~3. A transformer~~ ~~4. A shunt device (including FACTS devices)~~	~~No~~	~~No~~
~~P2~~ ~~(single Contingency)~~	~~Loss of:~~ ~~1. Bus section above 300 kV~~ ~~2. Non-bus tie breaker (above 300 kV) due to internal fault~~ ~~3. Single pole of a DC line~~	~~Yes, if transfer is dependent on the outaged DC line~~ ~~No otherwise~~	~~No~~
~~P3~~ ~~(multiple Contingency)~~	~~Loss of either a generator, Transmission circuit, a transformer with low side voltage rating above 300 kV, or a bus and a stuck non-bus tie breaker (above 300 kV)~~	~~Yes, if transfer is dependent on the outaged DC line~~ ~~No otherwise~~	~~No~~
~~P4~~ ~~(multiple Contingency)~~	~~1. Loss of a generator followed by a System adjustment followed by the loss of a generator.~~ ~~2. Loss of a generator followed by a System adjustment followed by the loss of a monopolar DC line~~ ~~3. Loss of a generator followed by a System adjustment followed by the loss of a Transmission circuit~~ ~~4. Loss of a generator followed by a System adjustment followed by the~~	~~Yes, if transfer is dependent on the outaged DC line~~ ~~No otherwise~~	~~No~~

	~~loss of a transformer~~		
~~P5~~ ~~(multiple Contingency)~~	~~Above 300 kV, the loss of:~~ ~~1. A Transmission circuit followed by a System adjustment followed by the loss of another Transmission circuit~~ ~~2. A Transmission circuit followed by a System adjustment followed by the loss of a transformer with low side voltage rating above 300 kV~~ ~~3. A transformer with low side voltage rating above 300 kV followed by a System adjustment followed by the loss of another transformer~~	~~Yes~~	~~No~~
~~P6~~ ~~(single Contingency)~~	~~Loss of:~~ ~~1. A bus tie breaker due to internal fault~~ ~~2. A bipolar DC line or an asynchronous tie line~~ ~~3. A non-bus tie breaker (below 300 kV) due to internal fault~~ ~~4. A bus section below 300 kV~~	~~Yes~~	~~Yes~~
~~P7~~ ~~(multiple Contingency)~~	~~Loss of:~~ ~~1. A bus section above 300 kV and a stuck bus tie breaker~~ ~~2. Either a generator, a Transmission circuit, a transformer, or a bus and a stuck non-bus tie breaker (below 300 kV)~~	~~Yes~~	~~Yes~~
~~P8~~ ~~(multiple Contingency)~~	~~Below 300 kV, the loss of:~~ ~~1. A Transmission circuit followed by a System adjustment followed by the loss of another Transmission circuit~~ ~~2. A Transmission circuit followed by a System adjustment followed by the loss of a transformer~~ ~~3. A transformer followed by a System adjustment followed by the loss of another transformer~~	~~Yes~~	~~Yes~~
~~P9~~ ~~(multiple Contingency)~~	~~1. Loss of any two circuits on a common structure (excluding where multiple circuits share a common structure for no more than one mile)~~ ~~2. Loss of a generator followed by a System adjustment followed by the loss of a monopolar or bipolar DC line, or an asynchronous tie line~~ ~~3. Loss of a DC line (monopolar or bipolar) or asynchronous tie followed by a System adjustment followed by the loss of a second DC line (monopolar or bipolar) or asynchronous tie~~ ~~4. Loss of a DC line (monopolar or bipolar) or asynchronous tie followed by a System adjustment followed by the loss of a Transmission circuit~~	~~Yes~~	~~Yes~~

	~~5. Loss of a transformer followed by a System adjustment followed by the loss of a DC line (monopolar or bipolar) or asynchronous tie line~~ ~~6. Loss of a transformer followed by a System adjustment with a spare transformer available followed by the loss of another transformer~~		

~~Extreme Events~~

~~Evaluation Requirements~~

~~For all Extreme Events:~~

1. ~~See Requirement R3.4~~
2. ~~Simulate the removal of all elements that Protection Systems and controls are expected to disconnect for each Contingency.~~
3. ~~Simulate Normal Clearing unless otherwise specified.~~

~~Extreme Event Descriptions~~

~~1.~~ ~~Loss of a single generator, Transmission circuit, DC line, or transformer forced out of service followed by another single generator, Transmission circuit, DC line, or transformer forced out of service prior to System adjustments.~~

~~2.~~ ~~Local area events affecting the Transmission System such as:~~

- ~~a. Loss of tower line with three or more circuits~~
- ~~b. Loss of all Transmission lines on a common right-of-way~~
- ~~c. Loss of switching station or substation (loss of one voltage level plus transformers)~~
- ~~d. Loss of all generating units at a station~~
- ~~e. Loss of a large Load or major Load center~~

~~3.~~ ~~Wide area events affecting the Transmission System such as:~~

- ~~a. Loss of a large gas pipeline into a region or multiple regions that have significant gas-fired generation~~
- ~~b. A successful cyber attack~~
- ~~c. Regulation that restricts or eliminates the use of a river or lake or other body of water as the cooling source for generation~~
- ~~d. Shutdown of a nuclear power plant(s) and other facilities a day or more prior to a hurricane, tornado or wildfire, or for other common causes~~
- ~~e. Regulation that restricts or eliminates the use of a river or lake or other body of water as the cooling source for generation~~
- ~~f. Shutdown of a nuclear power plant(s) and other facilities a day or more prior to a hurricane, tornado or wildfire, or for other common causes such as problems with similarly designed plants~~
- ~~g. The loss of older Transmission lines which may not be constructed to meet an entity's present radial ice or wind loading requirements, while the newer or stronger Transmission lines remain in service~~
- ~~h. Other events based upon operating experience~~

~~Table 2 – Stability Performance Table~~

~~Performance Requirements~~

~~For all Planning Events:~~

- ~~The System shall be stable[1]~~
- ~~Dynamic voltages shall be within acceptable limits established by the Planning Coordinator or Transmission Planner (if more restrictive)~~
- ~~Uncontrolled islanding and Cascading Outages shall not occur~~
- ~~Simulate the removal of all elements that Protection Systems and controls are expected to disconnect for each Contingency.~~
- ~~Simulate Normal Clearing unless otherwise specified.~~

~~Planning Events~~			
~~#~~	**~~Initial Condition~~**	**~~Event~~**	**~~Non-Consequential Load Loss Allowed~~**
~~P1~~ ~~(single Contingency)~~	~~System normal~~	~~Single Line Ground (SLG) fault on, a 3-Phase (3Ø) fault on, or an unexpected loss without a fault of (whichever is worst):~~ ~~1. A generator~~ ~~2. A Transmission circuit~~ ~~3. A transformer~~	~~No~~
~~P2~~ ~~(single Contingency)~~	~~System normal~~	~~1. SLG fault on bus section above 300 kV~~ ~~2. SLG internal fault in non-bus tie breaker (above 300 kV)~~ ~~3. A single pole block of a DC line~~	~~No~~
~~P3~~ ~~(multiple Contingency)~~	~~System normal~~	~~SLG fault on either a generator, Transmission circuit, a transformer, or a bus and a stuck[2] non-bus tie breaker (above 300 kV)~~	~~No~~
~~P4~~ ~~(multiple Contingency)~~	~~A single generator out of service followed by System adjustments~~	~~1. Apply a P1.1 Contingency.~~ ~~2. Apply a P2.3 Contingency.~~ ~~3. Apply a P1.2 Contingency.~~ ~~4. Apply a P1.3 Contingency.~~	~~No~~
~~P5~~ ~~(multiple Contingency)~~	~~A Transmission circuit above 300 kV out of service followed by System adjustments~~	~~1. Apply a P1.2 Contingency.~~ ~~2. Apply a P1.3 Contingency.~~	~~No~~

	~~A transformer with low side voltage rating above 300 kV out of service followed by System adjustments~~	~~3. Apply a P1.3 Contingency.~~	
~~P6~~ ~~(single Contingency)~~	~~System normal~~	~~1. SLG internal fault in bus tie breaker~~ ~~2. A bipolar block of a DC line~~ ~~3. SLG internal fault in non-bus tie breaker (below 300 kV)~~ ~~4. SLG fault on bus section (below 300 kV)~~	~~Yes~~
~~P7~~ ~~(multiple Contingency)~~	~~System normal~~	~~1. SLG fault on a bus section above 300 kV and a stuck bus tie breaker~~ ~~2. SLG fault on either a generator, a Transmission circuit, a transformer, or a bus and a stuck non-bus tie breaker (below 300 kV)~~	~~Yes~~
~~P8~~ ~~(multiple Contingency)~~	~~A Transmission circuit below 300 kV out of service followed by System adjustments~~ ~~A transformer with low side voltage rating below 300 kV out of service followed by System adjustments~~	~~1. Apply a P1.2 Contingency.~~ ~~2. Apply a P1.3 Contingency.~~ ~~3. Apply a P1.3 Contingency.~~	~~Yes~~
~~P9~~ ~~(multiple Contingency)~~	~~System normal~~ ~~A single generator out of service followed by System adjustments~~ ~~A DC circuit out of service followed by~~	~~1. SLG fault on each circuit of any two circuits on a common structure (excluding events where multiple circuits share a common structure for no more than one mile).~~ ~~2. Apply a P6.2 Contingency.~~ ~~3. Apply a P2.3 Contingency.~~ ~~4. Apply a P1.2 Contingency.~~	~~Yes~~

	~~System adjustments~~ ~~A transformer out of service followed by System adjustments~~ ~~A spare transformer inserted to replace an outaged transformer followed by System adjustments~~	~~5. Apply a P2.3 Contingency.~~ ~~6. Apply a P1.3 Contingency.~~	
~~Extreme Events~~			
~~Evaluation Requirements~~ ~~For all Extreme Events:~~ • ~~See Requirement R4.5.2 in the text~~ • ~~Simulate the removal of all elements that Protection Systems and controls are expected to disconnect for each Contingency.~~ • ~~Simulate Normal Clearing unless otherwise specified.~~			
~~1. 3Ø fault on generator with stuck breaker~~ ~~2. 3Ø fault on Transmission circuit with stuck breaker~~ ~~3. 3Ø fault on transformer with stuck breaker~~ ~~4. 3Ø fault on bus section with stuck breaker~~ ~~5. 3Ø internal fault in breaker~~ ~~6. 3Ø fault on two or more circuits on a common structure~~ ~~7. SLG or 3Ø fault on all Transmission lines on a common right-of-way~~ ~~8. 3Ø fault on switching station or substation (loss of one voltage level plus transformers)~~ ~~9. 3Ø fault with loss of all generating units at a station~~			

~~Notes:~~

1. ~~System stable means:~~
   a. ~~Angular stability:~~
      i. ~~For Planning Events P1 and P3.2: No generating unit or units shall be allowed to pull out of synchronism. A generator being disconnected from the system by fault clearing action or by a Special Protection Scheme is not considered pulling out of synchronism.~~
      ii. ~~For all other Planning Events: No generating unit or units totaling more than the contingency reserve (spinning reserve) of the Balancing Authority shall be allowed to pull out of synchronism. Generators that pull out of synchronism must have out-of-step protection and the resulting apparent impedance swings must not pass through relay characteristics that would result in the tripping of~~

~~any transmission system elements other than the generating unit and its direct connection facilities.~~

~~iii. For all Planning Events: Power oscillations shall exhibit acceptable damping as established by the Planning Coordinator or Transmission Planner (if more restrictive).~~

~~b. General: Unplanned islanding of portions of the system shall not occur for Planning Events.~~

~~**2.** A stuck breaker means that for a gang-operated breaker, all three phases of the breaker have remained closed. For an independent pole operated (IPO) breaker, only one pole is assumed to remain closed.~~

Table 1 – Steady State Performance

1. Facility Ratings shall not be exceeded. Planned System adjustments are allowed, unless precluded in the Requirements, to keep Facilities within the Facility Ratings, if such adjustments are executable within the time duration applicable to the Facility Ratings.
2. System steady state voltages and post-transient voltage deviations shall be within acceptable limits as established by the Planning Coordinator (or Transmission Planner if more restrictive).
3. Voltage instability, cascading outages, and uncontrolled islanding shall not occur.
4. Consequential Load and consequential generation loss is allowed for all events shown.
5. Simulate the removal of all elements that Protection Systems and controls are expected to disconnect for each event.
6. Simulate Normal Clearing unless otherwise specified.

Planning Events

Category	Initial System Condition	Event[3]	BES Elements out of Service[2,3]		Interruption of Firm Transmission Service Allowed	Non-Consequential Load Loss Allowed
			(A) > 300 KV	(B) <= 300 KV		
P0 Normal System conditions	Normal System	None	X	X	No	No
P1 Single Contingency	Normal System	Loss of one of the following: 1. Generator 2. Transmission circuit 3. Transformer 4. Shunt device 5. Single pole of a DC line	X	X	No Yes, if transfer is dependent on the outaged DC line.	No

P2 Single Contingency	Normal System	Loss of one of the following: 1. Breaker(s) opening without a Fault resulting in a single ended line	X	X	No	No
		2. Bus section	X		No	No
				X	Yes	Yes
		3. Internal Breaker Fault (non-bus-tie)	X		No	No
				X	Yes	Yes
		4. Internal Breaker Fault (bus tie)	X	X	Yes	Yes
P3 Multiple Contingency (Generator + 1)	Loss of a generator followed by System adjustments	Loss of one of the following: 1. Generator 2. Transmission circuit 3. Transformer 4. Shunt device 5. Single pole of a DC line	X	X	No Yes, if transfer is dependent on the outaged DC line.	No

P4 Multiple Contingency (Fault plus stuck breaker)[1]	Normal System	Stuck breaker (non-bus-tie) attempting to clear a Fault on one of the following: 1. Generator 2. Transmission circuit 3. Transformer 4. Shunt device 5. Bus section	X		No	No
				X	Yes	Yes
		6. Stuck breaker (bus tie) attempting to clear a Fault on the associated bus	X	X	Yes	Yes
P5 Multiple Contingency (Fault plus Protection System failure)	Normal System	Loss of multiple elements due to a single component failure within a Protection System associated with clearing a Fault on one of the following: 1. Generator 2. Transmission circuit 3. Transformer 4. Shunt device 5. Bus section	X		No	No
				X	Yes	Yes

P6 Multiple Contingency (Two overlapping single Contingencies)	Loss of one of the following, followed by System adjustments: 1. Transmission circuit 2. Transformer 3. Single pole of a DC line 4. Shunt device	Loss of one of the following: 1. Transmission circuit 2. Transformer 3. Single pole of a DC line 4. Shunt device	X	X	Yes	Yes
P7 Multiple Contingency (Common Structure)	Normal System	1. Loss of any two Transmission circuits on a common structure. (Excludes circuits that share a common structure for 1 mile or less.) 2. Loss of a bipolar DC line	X	X	Yes	Yes

Extreme Events

Evaluation Requirements

For all Extreme Events evaluated:

1. See Requirement R3.4.
2. Simulate the removal of all elements that Protection Systems and controls are expected to disconnect for each Contingency.
3. Simulate Normal Clearing unless otherwise specified.

Extreme Event Descriptions

1. Loss of a single generator, Transmission Circuit, DC Line, or transformer forced out of service followed by another single generator, Transmission Circuit, DC Line, or transformer forced out of service prior to System adjustments.

2. Local area events affecting the Transmission System such as:
    a. Loss of a tower line with three or more circuits.
    b. Loss of all Transmission lines on a common right-of-way.
    c. Loss of a switching station or substation (loss of one voltage level plus transformers).
    d. Loss of all generating units at a station.
    e. Loss of a large Load or major Load center.
3. Wide area events affecting the Transmission System based on System topology such as:
    a. Loss of two generating plants resulting from conditions such as:
        i. Loss of a large gas pipeline into a region or multiple regions that have significant gas-fired generation.
        ii. Loss of the use of a large body of water as the cooling source for generation.
        iii. Wildfires.
        iv. Severe weather, e.g., hurricanes, tornadoes, etc.
        v. A successful cyber attack.
        vi. Shutdown of a nuclear power plant(s) and related facilities for a day or more for common causes such as problems with similarly designed plants.
    b. Loss of two Transmission lines in different rights-of-way prior to System adjustments for conditions such as:
        i. Wildfires.
        ii. Severe weather, e.g., hurricanes, tornadoes, etc.
    c. Other events based upon operating experience such as:
        i. Consideration of initiating events that experience suggests may result in wide area disturbances.

Notes

1. A stuck breaker means that for a gang-operated breaker, all three phases of the breaker have remained closed. For an independent pole operated (IPO) breaker, only one pole is assumed to remain closed. The stuck breaker event introduces a delayed clearing mode. Normal Clearing is when the Protection System operates as designed and the Fault is cleared in the time normally expected with proper functioning of the installed protection systems. Breaker fail relay operation is a predetermined time that occurs after the Protection System operates and the breaker has failed. Breaker fail relaying will also isolate a predetermined portion of the electric system to isolate the failed breaker. Delayed clearing of a Fault is due to failure of any Protection System

component that prevents the Protection System from operating normally.

2. If the event analyzed involves BES elements at multiple system voltage levels, the lowest system voltage level for stated performance criteria applies regarding allowances for interruptions of firm ~~transfers~~ transmission service and Non-Consequential Load.
3. For transformer outage events, the reference voltage applies to the low-side winding (excluding tertiary windings) and excluding generator step-up transformers. For generator outage events, the reference voltage apply to the BES connected voltage (high-side of GSU transformer). Requirements which are applicable to transformers also apply to variable frequency transformers and phase shifting transformers.
4. Requirements which are applicable to shunt devices also apply to FACTS devices.
5. An internal breaker Fault means a breaker failing internally, thus creating a System Fault which must be cleared by protection on both sides of the breaker.

Table 2 – Stability Performance

1. The System shall remain stable. [5]
2. Dynamic voltages shall be within acceptable limits established by the Planning Coordinator (or Transmission Planner if more restrictive).
3. Cascading outages and uncontrolled islanding shall not occur.
4. Simulate the removal of all elements that Protection Systems and controls are expected to disconnect for each event.
5. Simulate Normal Clearing unless otherwise specified.

Planning Events

Category	Initial System Conditions	Event [3]	BES Elements out of Service [2,3]		Interruption of Firm Transmission Service Allowed	Non-Consequential Load Loss Allowed
			(A) > 300 KV	(B) <= 300 KV		
P1 Single Contingency	Normal System	SLG or 3-phase Fault on one of the following: 1. Generator 2. Transmission circuit 3. Transformer 4. Shunt device 5. Single pole of a DC line	X	X	No Yes, if transfer is dependent on the outaged DC line.	No

P2 Single Contingency	Normal System	1. Breaker(s) opening without a Fault resulting in a single ended line	X	X	No	No
		2. SLG Fault on bus section	X		No	No
				X	Yes	Yes
		3. SLG internal breaker Fault (non-bus-tie)	X		No	No
				X	Yes	Yes
		4. SLG internal breaker Fault (bus tie)	X	X	Yes	Yes
P3 Multiple Contingency (Generator + 1)	Loss of a generator followed by System adjustments	SLG or 3-phase Fault on one of the following: 1. Generator 2. Transmission circuit 3. Transformer 4. Shunt device 5. Single pole of a DC line	X	X	No Yes, if transfer is dependent on the outaged DC line.	No

P4 Multiple Contingency (Fault plus stuck breaker) [1]	Normal System	Stuck breaker (non-bus-tie) attempting to clear a SLG Fault on one of the following:	X		No	No
				X	Yes	Yes
		1. Generator				
		2. Transmission circuit				
		3. Transformer				
		4. Shunt device				
		5. Bus section				
		6. Stuck breaker (bus tie) attempting to clear an SLG Fault on the associated bus	X	X	Yes	Yes

P5 Multiple Contingency (Fault plus Protection System failure)	Normal System	Loss of multiple elements due to a single component failure within a Protection System associated with clearing an SLG Fault on one of the following: 1. Generator 2. Transmission circuit 3. Transformer 4. Shunt device 5. Bus section	X		No	No
				X	Yes	Yes
P6 Multiple Contingency (Two overlapping single Contingencies)	Loss of one of the following, followed by System adjustments: 1. Transmission circuit 2. Transformer 3. Single pole of a DC line 4. Shunt device	SLG or 3-phase Fault on one of the following: 1. Transmission circuit 2. Transformer 3. Shunt device 4. Loss of single pole of a DC line	X	X	Yes	Yes

P7 Multiple Contingency (Common structure)	Normal System	1. SLG Fault on each circuit of any two Transmission circuits on a common structure (Excludes circuits that share a common structure for one mile or less) 2. Loss of a bipolar DC line	X	X	Yes	Yes

Extreme Events

Evaluation Requirements

For all Extreme Events evaluated:

1. See Requirement R5.5.4.
2. Simulate the removal of all elements that Protection Systems and controls are expected to disconnect for each Contingency.
3. Simulate Normal Clearing unless otherwise specified.

Extreme Event Descriptions

1. With an initial condition of a single generator, Transmission circuit, DC line, or transformer forced out of service, apply a 3Ø fault on another single generator, Transmission circuit, DC line, or transformer prior to System adjustments.
2. Local or wide area events affecting the Transmission System such as:
    a. 3Ø fault on generator with stuck breaker or a protection system failure due to a single component failure within the protection system.
    b. 3Ø fault on transmission circuit with stuck breaker or a protection system failure due to a single component failure within the protection system.
    c. 3Ø fault on transformer with stuck breaker or a protection system failure due to a single component failure within the protection system.

d. 3Ø fault on bus section with stuck breaker or a protection system failure due to a single component failure within the protection system.

e. 3Ø internal breaker fault.

f. 3Ø fault on two or more circuits on a common structure.

g. SLG or 3Ø fault on all transmission lines on a common right-of-way.

h. 3Ø fault on switching station or substation (loss of one voltage level plus transformers)

i. Other events based upon operating experience, such as consideration of initiating events that experience suggests may result in wide area disturbances.

Notes

1. A stuck breaker means that for a gang-operated breaker, all three phases of the breaker have remained closed. For an independent pole operated (IPO) breaker, only one pole is assumed to remain closed. The stuck breaker event introduces a delayed clearing mode. Normal Clearing is when the Protection System operates as designed and the Fault is cleared in the time normally expected with proper functioning of the installed Protection Systems and breakers. Breaker failure relay operation is a predetermined time that occurs after the Protection System operates and the breaker has failed. Breaker failure relaying will also isolate a predetermined portion of the electric System to isolate the failed breaker. Delayed clearing of a Fault is due to failure of any Protection System component or breaker that prevents the fault from clearing normally.
2. If the event analyzed involves BES elements at multiple system voltage levels, the lowest system voltage level for stated performance criteria applies regarding allowances for interruptions of firm ~~transfers~~ transmission service and Non-Consequential Load.
3. For transformer outage events, the reference voltage applies to the low-side winding (excluding tertiary windings) and excluding generator step-up transformers. For generator outage events, the reference voltage apply to the BES connected voltage (high-side of GSU transformer). Requirements which are applicable to transformers also apply to variable frequency transformers and phase shifting transformers.
4. An internal breaker fault means a breaker failing internally, thus creating a system fault which must be cleared by protection on both sides of the breaker.
5. System stable means:
   a. Angular Stability:
      i. For Planning Event P1: No generating unit or units shall be allowed to pull out of synchronism. A generator being disconnected from the System by Fault clearing action or by a Special Protection System is not considered pulling out of synchronism.
      ii. For all other Planning Events: No generating unit or units totaling more than the Contingency reserve of the Balancing Authority shall be allowed to pull out of synchronism. Generators that pull out of synchronism must have out-of-step protection or some other means to trip the generator for this condition and the resulting apparent impedance swings must not pass through relay characteristics that would result in the tripping of any Transmission System elements other than the generating unit and its direct connection Facilities.
   b. For all Planning Events evaluated: Power oscillations shall exhibit acceptable damping as established by the Planning Coordinator (or

Transmission Planner if more restrictive).

C. Measures

M1. To be supplied at a later date.

E. Regional Variances

~~1. WECC Interconnection-wide waiver is under development (see Requirement R3.6.2).~~

None.

Version History

Version	Date	Action	Change Tracking
1	TBD	Revision of TPL-001-0 as per Project 2006-02; includes merging requirements of TPL-001-0, TPL-002-0, TPL-003-0, and TPL-004-0 into one, single, comprehensive, coordinated standard: TPL-001-1	Not employed due to scope of revision

NERC
NORTH AMERICAN ELECTRIC RELIABILITY CORPORATION

Standards Announcement

Comment Period Opens
August 14–September 29, 2008

Now available at: http://www.nerc.com/filez/standards/Assess-Transmission-Future-Needs.html

The second draft of TPL-001-1 — Transmission System Planning Performance Requirements (Project 2006-02) is posted for a 45-day comment period from August 14 through September 29, 2008.

The purpose of the proposed standard is to establish transmission system planning performance requirements within the planning horizon to develop a bulk electric system that will operate reliably over a broad spectrum of system conditions and following a wide range of probable contingencies.
The proposed standard consolidates, clarifies, and expands on the requirements that had been in TPL-001-0, TPL-002-0, TPL-003-0, and TPL-004-0, and includes several new definitions. This effort is part of Project 2006-02 — Assess Transmission Future Needs and Develop Transmission Plans.

Note that the drafting team will hold a WebEx presentation and conference call on Tuesday, August 26, 2008 from 1330–1630 EDT to discuss the draft and to provide stakeholders with the opportunity to ask questions. An announcement containing further details about the call and links to the WebEx presentation will be sent separately.

Please use this electronic form to submit comments on the standard.

If you need an off-line, unofficial copy of the questions in the comment form, there is a copy of the comment form posted at the following site:

http://www.nerc.com/filez/standards/Assess-Transmission-Future-Needs.html

Please use only the electronic form to submit comments by September 29, 2008. If you experience any difficulties in using the electronic form, please contact Barbara Bogenrief at 609-452-8060

Standards Development Process

The *Reliability Standards Development Procedure* contains all the procedures governing the standards development process. The success of the NERC standards development process depends on stakeholder participation. We extend our thanks to all those who participate.

For more information or assistance, please contact Shaun Streeter, Standards Program Administrator, at shaun.streeter@nerc.net or at 609.452.8060.

North American Electric Reliability Corporation
116-390 Village Blvd.
Princeton, NJ 08540
609.452.8060 | www.nerc.com

Individual or group. (80 Responses)
Name (59 Responses)
Organization (59 Responses)
Group Name (21 Responses)
Lead Contact (21 Responses)
Contact Organization (21 Responses)
Question 1 (72 Responses)
Question 1 Comments (80 Responses)
Question 2 (72 Responses)
Question 2 Comments (80 Responses)
Question 3 (72 Responses)
Question 3 Comments (80 Responses)
Question 4 (72 Responses)
Question 4 Comments (80 Responses)
Question 5 (73 Responses)
Question 5 Comments (80 Responses)
Question 6 (70 Responses)
Question 6 Comments (80 Responses)
Question 7 (74 Responses)
Question 7 Comments (80 Responses)
Question 8 (70 Responses)
Question 8 Comments (80 Responses)
Question 9 (68 Responses)
Question 9 Comments (80 Responses)
Question 10 (71 Responses)
Question 10 Comments (80 Responses)
Question 11 (73 Responses)
Question 11 Comments (80 Responses)
1 - Question 12 Comments (80 Responses)
2 - Question 12 Comments (80 Responses)
3 - Question 12 Comments (80 Responses)
1 - Question 13 Comments (80 Responses)
2 - Question 13 Comments (80 Responses)
1 - Question 14 Comments (80 Responses)
2 - Question 14 Comments (80 Responses)
Question 15 (73 Responses)
Question 15 Comments (80 Responses)

Individual
Dennis Malone
El Paso Electric Company

B â€“ Unsure about supporting the revised standard

While this 2nd draft TPL standard has some positive changes, notably: The allowance to use RAS to trip generation for N-1 (see R3.5 Manual and automatic generation run-back/tripping is allowed as a response to a single or multiple Contingency ...) with some rather generic conditions. The allowance for Non-consequential Load Loss for loss of a transmission Facility, followed by system adjustment, followed by loss of a second transmission Facility (see P6 in draft performance Tables 1 and 2). This is the same as Category C3 in the existing TPL-003-0. On the down side, as proposed, Standard TPL-001-1: 1. Will not allow curtailment of firm transfer (or firm transmission service) after the first N-1, in preparation for the next N-1 regardless of transmission voltage level. This is a major issue. Curtailment of firm transfer after the first N-1 has always been a part of system adjustment in preparation for the next N-1 as stated in foot note b of the existing TPL-002-0: "b. Planned or controlled interruption of electric supply to radial customers or some local Network customers, connected to or supplied by the Faulted element or by the affected area, may occur in certain areas without impacting the overall reliability of the interconnected transmission systems. To prepare for the next contingency, system adjustments are permitted, including curtailments of contracted Firm (non-recallable reserved) electric power Transfers." Not allowing this could mean reduction of firm transfer capability pre-contingency unless new circuits are built. 2. The existing standard (http://www.nerc.com/files/TPL-003-0.pdf) does not distinguish between voltage classes, curtailment of firm transfer and, planned and controlled load shedding are allowed regardless of voltage class for Category C events. The proposed standard will not allow curtailment of firm transmission service, or planned and controlled load shedding for loss of Facilities with operating voltage above 300 kV involving the following in the proposed Performance Tables 1 and 2: P2-2: Bus Section fault (Category C1) P2-3: Breaker fault (Category C2) P4: SLG Fault + stuck breaker (Categories C6 - C9) P5: SLG Fault + protection system failure (Categories C6 - C9) The number of Facilities lost would depend on the bus configuration for above 300 kV. If you have a ring-bus, breaker and a half or double breaker double bus, you would lose at the most 2 Facilities. But if you have Main-Aux or single breaker double bus, you will lose all Facilities connecting to the faulted Facility.

Group

Dominion - Electric Transmission Planning

John Loftis

Dominion Virginia Power

Yes

No

Comments are subdivided according to different sections as listed below: R2.4.1: In principal, we agree that the dynamic behavior of loads, including consideration of the behavior of induction motor loads, should be represented. However, it is not easy to get the data on such loads. Most customers, including industrial ones, have no information/knowledge regarding their load characteristics. Also, the software tools currently in use do not accommodate the modeling of certain material effects (for example the load reduction due to thermal trips on large HVAC compressor motors). Additionally, if the entire case is populated with such detail dynamic load data, the case could not be solved. A lot of research would be required. A phase-in period of several years should be considered in order to accomplish the fundamental objective of dynamic load modeling. Please refer to Item 4 of Question 15 for further thoughts on modeling requirements. R2.4.3: It is acceptable to perform studies that include various sensitivity factors, but to document all rationals why they were chosen or not chosen for each study performed is burdensome. R2.5.1: Reduction in generation does not decrease stability margins. Therefore, the previous version's "increasing in generation" should be kept instead of changing it to "changes in generation." R5.4.3: This requirement allows automatic generation tripping to mitigate Stability violations (subject to meeting three listed conditions there in). Automatic generator trips should not be allowed for N-1 contingency studies (beginning with system normal and evaluating for the very first contingency) should the full output of the generating unit be classified as a capacity resource. Allowing a capacity resource generator to trip for N-1 contingency could result in reduced system reliability.

No

Non-Consequential Load Loss: In the example provided with the definition of Non-Consequential

Load Loss, it indicates that non-interruptible load loss that occurs through manual or automatic operations such as under voltage load shedding (UVLS), under-frequency load shedding (UFLS) or Special Protection Systems (SPS) would be considered Non-Consequential Load Loss. We recommend that the following statement be added to the standard in the definition -- "Interruptible loads such as the pump of a Pumped Storage Plant interrupted by an SPS should not be considered as a Non-Consequential load".

No

We generally agree with the modification, but feel that further clarification needs to be added as follows -- "Neither generation run-back (redispatch) nor tripping should be allowed to address deficiencies identified in single contingency (N-1) studies should the full output of the generation choose to be considered as a capacity resource". Should generation run-back be allowed, then a NERC Reliability Standard should be developed to require generator field testing to prove that generation run-back is a viable solution.

Yes and No

For requirements R9, R12, R13, the wording should be changed from ..."shall provide its respective Planning Coordinator with modeling information ..." to "shall provide its respective Planning Coordinator and Transmission Planner with modeling information ..."

Yes

Yes and No

(1) Dominion - Electric Transmission is okay with the format changes, but suggests that consideration be given to changing the category naming convention for Stability Performance Table 2 to S1, S2, etc. rather than P1, P2, etc. for clarity and to distinguish them from Steady State Performance Table 1. (2) The tables could be improved if the headings were put on each separate page.

Yes

Yes

No

We are of the opinion that the proof of a negative that is required for sensitivity cases (i.e. - that the sensitivity cases were more severe for those selected conditions vs. those not tested) is burdensome. The burden of proof lies on the transmission planner.

No

For Bulk Electric System (BES) Elements out of Service above 300 kV, interruption of Firm Transmission Service and Non-Consequential Load Loss should not be allowed. We favor the language proposed in the previous draft.

It is extremely difficult, if not impossible, to accurately determine the costs required to perform supplemental studies in order to become compliant with these proposed standards. It will take time to just become familiar with the proposed changes as well as developing the necessary documentation to show compliance. What is obvious is that increased staffing levels will be required to perform the assessments. Furthermore, it will take significant time to become fully compliant. Therefore, a grace period of 2 to 3 years should be granted in order to perform the required assessments and become compliant.

As stated above, this is difficult to predict but a grace period of 2 to 3 years should be considered.

At this point we are estimating at least 2 to 3 additional resources may be required to perform the additional studies on an ongoing basis. For Dominion, three (3) additional engineers to perform this analysis is approximately $500,000 per year (including benefits and overheads).

The initial process development and documentation will be the most difficult and time consuming portion. Dominion - Electric Transmission recommends a period of 3 to 5 years be given for this initial period of becoming compliant and preparing the documentation. As noted above, it is difficult to provide cost estimates, but we expect at least 2 to 3 additional resources will be required, at a minimum.

See response above.

Difficult to estimate the investment required, but it will be in the millions if not hundreds of millions of dollars.

Siting new transmission in Virginia can take a minimum of 5 to 7 years if new right-of-way acquisition is required. It is difficult to provide an estimate of time, but it will be quite extensive.

B â€“ Unsure about supporting the revised standard

(1) Unsure about cost/effort necessary to meet requirements (2) Uncertain that compliance with the proposed requirements in this standard would significantly improve reliability (3) R2.6.2: The entire sentence is confusing as it is modified. The original sentence in the previous draft made more sense. Please check and correct accordingly. (4) R 5.3: This requirement considers voltage

ride-through capability of all generators. Nowhere in this TPL standard or in the MOD standards are Generator Owners specifically required to provide such data to Transmision Planners and Planning Coordinators. Stating the requirements for generator dynamics data and dynamic load characteristics in general terms, as listed below (from the MOD Standards), are vague. (a) shall provide appropriate equipment characteristics (b) shall provide dynamics system modeling and simulation data (c) Shall develop comprehensive dynamics data requirements .... to model and analyze the dynamic behavior.... (5) In Table-2 Stability Performance, several places refer to "SLG or 3-phase Faults" . Since it states "or", does this mean we can get by with studying only SLG faults? We do not think that is the intent of this phrase; thus, a clarification is warranted. (6) One of our comments on the previous draft was with respect to a second-zone fault clearing due to protection system failure for a fault beyond zone 1 coverage of primary relys. The SDT's response was (Specific 1): "The SDT agrees with your concern and is working on a solution for a future draft." The question is repeated below, as a pending "to do" item, using the revised 'Table-2 Stability Performance' as reference: Category 5 in 'Table-2 Stability Performance' refers to a protection system failure event. We interpret this as, among other things, having a fault beyond the first-zone coverage of the primary protection scheme with the carrier equipment failure (or the carrier cut-off switch left in "OFF" position by a technition - a human error) resulting in a second-zone trip of the faulted line. The second-zone trip time is generally in the range of 30-35 cycles. This may be critical from the stability aspect for the terminal end at a generating plant even though only one element will be lost. Also, the second-zone trips may need to be studied for transmission lines out of next terminal from the generator end if the next terminal is connected to the generator terminal via a short line. We think that an additional single contingency Category should be added to this Table to cover the "Event" of second-zone trip scenario.

Group

NPCC

Guy Zito

NPCC

No

There should be no difference beween System and Generating Unit Stability studies. Each require discretion regarding which events need to be tested. The consequences are potentially similar: either the instability of one or more generators. Extreme Events should be considered for any stability analysis, again, recognizing that discretion needs to be applied when selecting or dismissing particular contingencies. Therefore, the definition of Generating Unit Stability Study should be stricken from the standard.

No

a. A MOD standard should be developed to address the assembly of dynamic load models, rather than specifying modeling in paragraph 2.4.1 (dynamic behavior of loads). Paragraph 2.4.1 should instead read, "System Peak Load for one of the five years." b. In paragraph R.2.4.3.4, what does "variability" mean? c. Add a new requirement "R5.4.3.4 Automatic generator tripping shall not have an Adverse Reliability Impact on overall system reliability." d. Remove Heading R5.5 and make generator unit stability a section of overall stability requirements. e. Modify R5.5.1 to become R5.4.5, with the following, "Shall be performed for the addition of an individual generating unit or generating units at the same interconnection point of 20 MW or greater that are directly connected to the BES." There may be little difference between the stability performance of a single 20 MW unit and an aggregation of units totalling 20 MW at the same BES interconnection point f. Strike R5.5.3 and R5.5.4, as they become redundant to R5.4.1

No

In the Consequential Load Loss definition, the word 'source' needs to be defined or explained further since it is unclear.

No

We do not feel that R3.5.1, R3.5.2 and R3.5.3 are limiting enough. Add paragraph 3.5.4 "Manual and automatic generator tripping shall not have an Adverse Reliability Impact."

No

With respect to R9 "including the expected mix of industrial, commercial and residential loads", this provision may be inadequate to be practically useful. The potential issues include the variation in end-use load mix through the daily load cycle, seasonal load composition variations, and the ability to translate these end-uses into reasonable and useful steady-state and dynamic load models. It is important to understand how the information will be used and how much additional detail, such as distribution network detail, is also required. It is also important to note that some Canadian Provinces do not "classify" their load mix using "industrial, commercial and residential" designations but their load modeling is sufficient, accurate and granular enough to simulate system response. Add to the last sentence of R9 through R14 the following phrase, "within ninety days of a request for such information or as otherwise described in procedures established by the Planning Coordinator."

No

In R4, suggest striking, "that would result in greater circuit breaker interrupting dutiesâ€¦".

No

In both Table 1 and Table 2, the "Interruption of Firm Transmission Service Allowed" column. It is problematic to try to create an "exemption" based on type of facility such as HVDC. There are many other situations in which Firm Transmission Service has been provided, but may need to be curtailed partially or completely following an outage. It is recommended that a note be added stating that the only exception would be for curtailment of conditioned (or Conditional) Firm Transmission Service, recognizing that there may need to be some form of grandfathering in order to avoid having to rewrite transmission service agreements. In both Table 1 and Table 2, the "Extreme Event Descriptions" item 1 should add "or shunt device." In Table 1, the "Extreme Event Descriptions" item 3b should be deleted; it is redundant with Item 1. In Table 2, Note 5 includes significant clarifications and should not be buried in the bottom of the contingency table; Note 5 would be better placed in the definitions section. In Table 1 and Table 2, Contingency P5 requires a fault plus Protection System Failure, such as a battery system, which may remove ALL protection at some substations. This Contingency P5 requires all voltages and loadings to remain within criteria, and a stable system response; without interruption of firm transmission service and without Non-Consequential Load Loss, at voltages above 300 kV. Was this an intended outcome of this standard?

No

The definition provided is too limiting. It says that if you have two rings with a bus tie breaker in between, it is no longer a bus tie breaker. NPCC Participating Members Recommend, "A circuit breaker that is positioned to connect two individual station configurations." We do not agree that, "(Substation configurations such as ring-bus, breaker-and-a-half, or double bus-double breaker protection schemes do not use bus-tie breakers.)", as we have examples where stations of this nature are connected through a single "bus-tie breaker".

Yes

No

If a TP/PC conducts the studies specified in R2.1.1 and R2.1.2 with one or more of the sensitivities which stress the system in the normal course of study, are we to assume that fulfills the requirements of R2.1 completely, without additional studies of a less-stressed system?

Yes

NPCC Participating Members believe some additional cost for analysis and study may be required in order to meet the final requirements of the standard and the associated performance tables. However, the ability to accurately estimate the costs of these studies, how long the analysis may take and how much additional effort may need to be made to compile the documentation is not possible at this time. Many believe posing this question is premature and cannot be quantified at this time, and it may hold questionable value without a better understanding of the complete final requirements of the standard. Many believed that the sensitivity language, although currently being performed to some extent within NPCC, that now appears in the standard, could have a drastic effect on the extent to which this additional analysis is conducted and the associated costs.

See above

NPCC participating members have expressed compliance concerns that this standard, and in particular this question, imply NERC has the ability to "force" transmission reinforcements and construction. It should be emphasized and clarified that the standard should require transmission studies only, and per the Energy Policy Act, NERC does not have this authority as the ERO as granted by FERC in the US and NO authority allowing this in Canada. Also NPCC participating members expressed concern that a validly conducted assessment which shows that criteria are not met (in the 5 or 10 year horizon) could result in non-compliance with the Standard. If NERC believes that it can issue monetary penalties for 5 or 10 year assessments that show that performance criteria will not be met under future system conditions, there is a key question that requires explanation: What behavior is NERC attempting to incent through fining parties for conducting assessments which identify problems in a 5 to 10 year horizon? Also, NERC should further explain how it would view the relevance of a State or Provincial decision not to permit new facilities when issuing such a potential penalty such as preclusive siting issues with Generating Plants.

See above

C â€“ Definitely do not support the revised standard

This standard as drafted does not allow exceptions for small parts of the system as long as interconnected system reliability is maintained, which is allowed in the existing TPL standards in

footnotes b) and c) in Table 1. Unless such exceptions are allowed significant transfer restrictions or large reinforcements must be made. The applicable TPL footnotes are: Planned or controlled interruption of electric supply to radial customers or some local Network customers, connected to or supplied by the Faulted element or by the affected area, may occur in certain areas without impacting the overall reliability of the interconnected transmission systems. To prepare for the next contingency, system adjustments are permitted, including curtailments of contracted Firm (non-recallable reserved) electric power Transfers. Depending on system design and expected system impacts, the controlled interruption of electric supply to customers (load shedding), the planned removal from service of certain generators, and/or the curtailment of contracted Firm (nonrecallable reserved) electric power Transfers may be necessary to maintain the overall reliability of the interconnected transmission systems. This comment form did not allow for the following items to be addressed: a. Definition of the Long-Term Planning Horizon. The planning horizon, for assessment purposes should be limited to 10 years. Such an assessment should be sufficient to identify requirements that may take an extended time to implement. b. Definition of Planning Coordinator is part of the NERC Functional Model, For consistency it should be removed from the Standard. c. Put headings on each section to identify requirements of section. Add headings to the tops of the subsequent pages in the performance tables. Headings only appear on the first page at the beginning of the Table. d. With respect to R2.2 - Delete "current" from the phrase"current System Peak Load study" and replace "study" with "assessment." e. Remove R2.2.1, the requirement to extend the assessment beyond 10 years. What does the length of the project have to do with the assessment? If it takes 15 years to build something, why does this require a review of year 15? What is the purpose of this assessment? f. R3.3.2 requires clarification - This standard needs to permit discretion regarding the single contingencies that need to be tested, similar to R 3.3.3 and R3.4. It is unnecessary to test all events. For example, contingencies may be limited to relevant disturbances that are contained within or directly impact the studied system. g. With respect to R3.2.1 - Clarify whether the intent of the standard is to address station service minimum voltage limitation, maximum leading VAR absorption capability or both at steady state. h. Remove R3.2.2 - Relay loadability is addressed in PRC-023 standard. i. With respect to R3.3.2.1 - Recommend the removal of the requirement to assess the expected duration of Consequential Load loss. It's not considered anywhere else in the standard. j. With respect to R3.3.3 - The paragraph refers to Table 1 Contingencies P3 through P7; this should be explicitly stated. Rationale for inclusion of testing should not be required; should only need to explain why certain Contingencies were not tested. This discretion should be applicable to all contingencies. k. With respect to section R5 - The concept of planned and long-term outages should apply to the general Planning Assessment, or not at all. It should not be specific to the Stability Assessment. l. The provisions of Section R.5.3 should have a corresponding MOD standard apply a requirement to provide information regarding all direct and indirect protective and control actions that could result in the inadvertant trip of the generator. Such a provision should include "other equipment (e.g. HVDC, SVC's, Statcoms)", and identify how these devices are treated in the simulation. m. Planned outages should be addressed in the operating horizion unless otherwise defined in the planning horizon.

Group

TVA System Planning

B. David Till

Tennessee Valley Authority

Yes

Yes

Yes

TVA agrees with the modified definitions. However, the definition for "Consequential Load Loss" can still be confusing. Suggest definition of "Load that is deenergized by relay action as a result of the the event being studied â€¦." Additional wording in "Consequential load loss" about transient conditions can be confusing as well - we suggest including this additional information later in the document. For Non-consequential load loss, suggest use of "Firm" instead of "Non - Interruptible" Load Loss.

Yes

Suggest applicable voltage limits must also be maintained during runback and tripping.

No

TVA provides the following comments: "Distribution Provider" in R9 should be replaced with "Load Serving Entity." Also in R9, is the expected mix of load to be presented individually or as a total of commerical, residential, and industrial loads? Would requiring this mix of load forecasts also result in a change to any MOD or FAC requirements dealing with load forecasts? "Transmission Planner" in R10 should be "Transmission Service Provider." Is this requirement also in MODs? In R11, R12, and R13 suggest adding "Transmission Planner" to "Planning Coordinator". In R13, Resource Planner may not have knowledge of Reactive Power devices and

new technologies.
Yes
Yes
TVA believes that the new table format does make the tables much easier to follow. However, the tables can be a little hard to follow for those categories that have both over and under 300-kV categories. Also having header pages at the top of each page of the tables would also help. Should P6 and P7 events be moved to Extreme Events since firm transmission and non-consequential load can be dropped for these events? Seems like these events are very similar to the Extreme Events.
Yes
TVA does appreciate this clarification, but suggests the following wording: "A circuit breaker that is positioned to connect two individual straight bus substation configurations that if faulted results in both bus sections being cleared."
No
Since an internal fault on any breaker is a low probability event, we believe that Non-consequential Load Loss should be allowed.
No
We recommend that sensitivity studies not be required for each of the near term years as required in R2.1.3 and R2.1.1. Sensitivities should only be required for only one year in the near term. These sensitivity study requirements are too prescriptive. Many examples of sensitivities are already inherent in the existing requirements. Sensitivity studies of load variation are inherent in the fact that several different study years and conditions are already being required. Outages of reactive sources and generation should already be included in studies of multiple contingencies. The process of planning new generation (system impact studies) will include studies of the future with and without the proposed new equipment. The TP and PC can better select the most appropriate sensitivities for their system.
Yes
One component of these costs is based on modification to the loadflow database. A massive effort would need to be undertaken to model bus sections and breaker codes in order to simulate the planning events needed to stay current with the proposed standards. Also, man-power to perform the extra analysis was considered. Additional man-power of 5 engineers (2 years) would be required at cost of $1,000,000
The majority of the time would be spent modifying the loadflow database so that the new planning event simulations could be analyzed. ï€ Time duration estimate of 2 years would be required.
Additional man-power of 4 engineers at costs of $400,000 per year would be required.
Additional man-power of 1 engineer (1 year) would be required at cost of $100,000
Additional man-power of 1 engineer at costs of $100,000 / year
Costs would include the implementation of redundant protection schemes for the P5 planning event (fault + failure of protection scheme), additional 500-kV facilities for P2.2 (single contingency - bus section outage) and P4 (fault + stuck breaker) events, and additional 161-kV facilities for the P3 (Generator +1) events. Estimated cost of $1 billion
Time duration of 10 years would be required
C â€“ Definitely do not support the revised standard
TVA's main concern is that no technical justification for "raising the bar" on facilities above 300-kV has yet been demonstrated such as required on P2, P4, and P5 for 300 kV and above. TVA is very concerned that "raising the bar" would be a finacial burden on TVA's ratepayers. TVA would also like to provide the following additional comments to this second draft as follows: 1. In R2.4.1, load models that appropriately represent the dynamic behavior of motor loads are required. TVA believes that industry guidance is needed on how to properly model these loads. Does this requirement mandate the use of specific load models for each bus, or would an aggragete load model which represents the system as a whole be sufficient? It should be clearly stated whether the load model in R2.4.3.1 refers to system load or the dynamic load model at individual busses. 2. In R3.2.1 and R5.3, need industry guidance on how to actually determine the minimum steady state voltage limitations of generators. Is there a MOD or FAC requirement for generation owners to provide this information? 3. Which single contingency events should be included in calculations for Available Transfer Capacity? Should P2 events be included in addition to P1 events since P2 events are also defined as single contingency events in Tables? 4. Would like further clarification from the team on what does P5 exactly includes? For instance, does it include battery failures, CT failures, etc? 5. The existing TPL 002-0 allows for some local load to be dropped for a single contingency event as long as the Bulk system reliability was not impacted. However there is no such allowance any longer for losing such load for a single contingency in the proposed draft. It would be very expensive for TVA to fix all such events in

several remote areas that would have very little impact on the overall reliability of the TVA bulk system. TVA believes that the capital spent for these fixes could be used to better strengthen the overall bulk system in much better ways. 6. Suggest rewording R2.2.1 from "To accommodate any known longer lead time projects" to "To identify any potential longer lead time projects". 7. Can operational guides be used indefinitely in R2.7.1 or does the team propose a limit on how long operational guides can be used until a capital fix is implemented? 8. In R3.3.2.1, what is the purpose for needing the expected duration of consequential load loss? There is a concern that this requirement will be very burdensome to keep track of the quantity of consequential load loss as well as expected duration. Who is requesting this info? It appears that this may be a local regulatory issue, not a reliability issue. 9. Suggest changing definition of "Planning Events" in the Definitions to say "Events that have a higher probability of occurrence and require Transmission system performance requirements to be met." 10. Should the proposed standard mention that utilities should run contingencies outside their system that could impact their own internal system? TVA believes that additional documentation be included in the new standard to address this. 11. Functional entity in 4.1.4 should be "LSE" instead of "DP" 12. In the Definitions for "Year One", suggest replacing "previous" with "most recent" to help clarify when the planning window should begin. 13. Should "peak" in R2.1.1 be replaced with "On Peak" as shown in the NERC glossary of terms? Also the requirements in this requirement are too prescriptive - should allow some flexibility to allow the TP which years to study as long as a minimum number of cases are studied. 14. Suggest replacing "Plant" in R2.6.2 with "Unit" to match terms used in Definitions. 15. In R2.7.1.1, what is meant by "project initiation date"? Is it when engineering starts, construction starts, etc? 16. Suggest rewording requirements R3.3.3 and R3.4 to be more clear - such as breaking each of these into several sentences each. Existing wording is very confusing. 17. There is a concern with R5.6.1 with the requirement to perform simulation on 20 MW generators (to be consistent with the Registration Criteria). We recommend a 75 MW generator cutoff for required simulations. Also in R5.6.2, should last word in sentence be "greater" or "lesser"? 18. In the Tables under Extreme Events, is 3.b. (loss of two TLs on different ROWs actually already covered under 1 (loss of two elements prior to system adjustments)? Also in the Tables under Extreme Events, it may be difficult for a TP to know enough about nuclear plant design to perform studies mentioned under 3.a.vi. 19. In the notes under Extreme Events, we suggest that notes #2 and #3 be combined together since they are very similar in nature. 20. Should the P3 planning event descriptor (G+1) in the performance tables be (G+N-1) or (G-1, N-1)? The existing descriptor (G+1) tends to note that an element is being added to the system instead of being removed. 21. Should the new standard address specific voltage limit requirements that must be maintained during these planning events? Since different utilities have different voltage limits on their buses, should there be some consolidation to ensure the standard is applied equally at all utilities? 22. The note for Planning Event P1 states that â€œNo generating unit or units shall be allowed to pull out of synchronism. A generator being disconnected from the System by Fault clearing action or by a Special Protection System is not considered pulling out of synchronism.â€œ The standard does not allow consideration for small units with a Zone 2 fault. It is not practical to add pilot relaying on all lines from a plant with a small unit that would be stable for close-in three phase faults, and could be adequately protected when a Zone-2 fault would cause a small generator to trip off with out-of-step (OOS) protection. The table for P1 should allow small units (<75 MW) to trip using SPS or OOS protection.

Individual

Karl Kohlrus

City Water, Light & Power - Springfield, Illinois

Yes

No

Near term stability analysis should not need to be performed each year unless there is a significant change to the system or the previous stud(ies) showed marginal performance.

Yes

Yes and No

There should be a time limit for manual generation runback.

Yes

Yes and No

For R2.4 stability studies should not be required ammually but should only be required if there is a significant change to the system or system stability was marginal as shown in previous studies.

Yes and No

Place the titles on each page and put the borders back in.

Yes

Yes

Yes

Yes and No

Shunt devices should only need to be included in contingency analysis at the discretion of the TP or PC.

A â€“ Generally support the revised standard

Individual

John P. Mayhan

Omaha Public Power District

No

The term "straight bus" is not an industry-standard term. Replace "straight bus" by "single-bus, single-breaker".

B â€“ Unsure about supporting the revised standard

Event 1 of Category P2 in Tables 1 and 2 addresses events consisting of "Breaker(s) opening without a Fault resulting in a single ended line." Category P2 is labeled as a "single contingency" category, yet it seems like an event consisting of the opening of more than one breaker would actually be a multiple contingency. Please consider whether the "(s)" should be removed after the word "breaker" in the event description so that it addresses only a single breaker opening without a Fault. Table 1 does not address multiple contingencies consisting of loss of a transmission circuit, transformer, single pole of a DC line, or shunt device, followed by System adjustments, followed by the loss of a generator. It seems like Table 1 should be modified to address this type of multiple contingency. In the description of Event 1 of Category P2 in Table 1, remove the text "Loss of one of the following:". In the description of Event 2 of Category P2 in Table 1, replace "Bus section" by "Loss of a bus section". Assuming that this does not change the intent of the drafting team, in R3.3.2.2, R3.5.1, R5.4.3.1, change "shall be operating" to "are operating". In R3.3.2.2, consider removing the phrase "and within their thermal and voltage limits", because it seems like it may be redundant given the definition of the term "Facility Rating". In the event descriptions of Categories P1, P3, and P6 of Table 2, does the term "3-phase fault" apply to DC lines? If not, consider using a separate introductory phrase with the event descriptions of Categories P1, P3, and P6 of Table 2 that involve DC lines. Also consider removing the words "Loss of" in the description of Event 4 of Category P6 in Table 2. Since a definition was developed for "Bus-tie Breaker", capitalize the terms "bus-tie" and "bus tie" wherever they appear in the standard.

Individual
Mark Byrd
Progress Energy Carolinas
No
The System Stability Study definition could be improved by clarifying that it is a study that focuses on the impact of contingencies to the system itself and covers a larger geographical area than one Generating Plant. A specific proposal is as follows. â€œSystem Stability Study - Study that focuses on how contingencies impact a larger portion of the System than a Generating Unit Study. These studies would examine issues such as angular stability, inter-area power oscillations, and dynamic voltages.â€
No
R 2.4.1 Load models that appropriately represent the dynamic behavior of induction motors are currently under development and may not be available for sometime. We believe that modeling the dynamic effects of loads is becoming increasingly necessary to obtain meaningful results. Therefore, it is appropriate that the revised standards address this. However, the present state of the industry is such that effective implementation of this requirement, as currently written, cannot be realistically achieved in the near term. The software tools currently in use do not accommodate the modeling of certain material effects (for example the load reduction due to thermal trips on HVAC compressor motors). Additionally, detailed load information necessary to allow the models which are available to be populated with meaningful data is not typically available or readily obtainable. Without resolving these issues, load model data submitted via the MMWG process will not improve simulation accuracy and could actually reduce the accuracy of results. Therefore, we would recommend R 2.4.1 rewritten to either a) allow a multi-year, phased approach to incorporating dynamic load modeling in simulation dynamic databases or b) provide an effective date for this particular requirement well into the future. This will accomplish the fundamental objective in a more accurate and meaningful manner. At least 48 months should be allowed before this requirement becomes effective. ï€ R 2.4.3 The proposed sensitivities create significant amount of additional work for the sole purpose of demonstrating compliance to this standard without any demonstratable benefit towards improving system reliability. While sensitivities should be appropriately considered in studies, this standard should not be overly prescriptive with respect to specific sensitivities or study methodologies. We propose removing the enumerated list of sensitivities starting with R2.4.3.1 and rewording R2.4.3 as follows: ï€- R2.4.3 For each of the studies described in Requirement R2.4.1 and Requirement R2.4.2, sensitivity case(s) that stress the System to reflect one or more conditions such as variations in dynamic Load model assumptions, modification of expected transfers, unavailability of long lead time Facilities, variability and outages of reactive resources, generation additions, retirements, or other dispatch scenarios shall be performed. The rationale for the sensitivity (ies) selected shall be documented. ï€ R 2.4.3.1 As stated above, this sub-requirement should be removed. However, if it is to remain, it should be clearly stated whether the Load model refers to system load or the dynamic load model at individual busses.
Yes
The definition of Consequential load loss has been appropriately modified to include loss of Load as a result of the Load's response to the transient condition. This recognizes the fact that when subjected to fault voltages of sufficient depth and duration, the resulting Load dynamics will result is loss of Load. Therefore, in order to more accurately replicate real-world behavior through dynamic stability simuation analysis, the proper representation of expected real world loss of load is acceptable. It is also proper that the computation of expected consequential Load loss and duration is not required for stability analysis. Attempts at determining additional Load loss due to load dynamics would not result in any useful information contributing to increased reliability.
Yes
Furthermore, PEC believes that generation run-back and tripping should not be allowed as a CAP for N-1 events with the possible exception of small reductions of generation.
Yes
Yes
Yes
The readability of the tables could be improved if the headings were put on each separate page. Separating out the tables for steady state and stability greatly improves and clarifies the requirements of the standard. Additionally, we would prefer that dynamic planning events use labeling such as D1, D2, etc. instead of P1, P2, etc. to differentiate them from steady state events.
The use of the word â€œstraightâ€ in the definition raised questions. We recommend the word straight be removed or change the definition to the following. "Bus-tie Breaker: A circuit breaker

positioned to connect two individual buses with one or more other breaker positions on each bus. (Substation configurations such as a ring-bus, breaker-and-a-half, or double-breaker do not generally include bus-tie breakers.)"
Yes
No
These requirements are overly prescriptive. Many examples of sensitivities are already inherent in the existing requirements. Some sensitivity studies are in effect adding an additional level of contingency (N-2 or N-3). Sensitivity studies of load variation are already inherent in the fact that several different study years and conditions are already being required. Outages of reactive sources and generation should already be included in studies of multiple contingencies. The process of planning new generation (system impact studies) will include studies of the future with and without the proposed new equipment. Proper consideration and selection of the most appropriate sensitivities is within the engineering judgement of the Transmission Planner and Planning Coordinator. Singling out and creating sub-requirements for the sensitivities listed in the current TPL draft creates a special focus on these specific sensitivities that may not be warranted for a given system. This could easily lead to an over focus on these particular issues to the detriment of overall system reliability. There should be no enumerated list of required sensitivities. Engineering judgment needs to be permitted.
No
While we agree interruption of firm transmission service and non-consequential load loss should not be allowed to meet the planning requirements for the first system contingency (defined as initial system condition in the table), these system adjustments should be allowed to prepare for the second event so that the system will meet the requirements following the second event. We recommend that clarifying changes be made to ensure that this is clearly understood. One suggestion would be to include the following footnote to P6 in both the Steady State and Stability Tables. ï€ Foot note: Interruption of firm transmission service and/or non-consequential load loss is allowed after the first event as a System adjustment to prepare for and meet the requirements of the second event. See also our related response to question 15.
$150,000
3 Years
$50,000/year
$60,000
$20,000/year
$100,000,000
10 years
C â€“ Definitely do not support the revised standard
While be believe that in many ways the proposed draft standard represents an improvement of the current standard, we have a number of significant concerns that preclude our endorsement for the proposed standard as currently drafted. These include those discussed in the comments to above questions and the below additional comments. 1) In both the Steady State and Stability Tables, Category P6 is the loss of a system element, following system adjustments, followed by the loss of another element. The table columns for this category say that interruption of firm transmission service is allowed. The table, however, is not clear whether the interruption of firm service is allowed as part of the system adjustment (between the outages) or whether it is only allowed after the second outage. It was stated in the NERC TPL SDT WebEx that the interruption is not allowed as part of the system adjustment. If this is the interpretation, this would be a dramatic change from the existing standard and would result in the unintended consequence of significantly reducing transfer capability of interfaces to a fraction of their currently reported capability. This would in effect be imposing an n-2 criteria for offering firm transmission service. This would not be an acceptable situation for the users, owners and operators of the bulk power system. 2) The proposed sensitivities create significant amount of additional work for the sole purpose of demonstrating compliance to this standard without any demonstratable benefit towards improving system reliability. While sensitivities should be appropriately considered in studies, this standard should not be overly prescriptive with respect to specific sensitivities or study methodologies.
Individual
John Collins
Platte River Power Authority
Yes and No
"Generator Unit Stability Study" assessments are applicable to FAC-001 and FAC-002. If specific requirements for a "Generator Unit Stability Study" are to be added to a standard, then those requirements belong in either a Revised FAC-001 or a Revised FAC-002 and not in a TPL standard. The "System Stability Study" assessments which are appropriate for TPL standards will capture both the performance of the system and the performance of specific generators at the

various demand and stressed sensitivity levels studied.
Yes and No
Yes
Yes
Yes
Yes and No
I like the emphasis on stability performance but I prefer one table combining steady-state and stability Categories since the Planning Events are common to both. Divide notes, Evaluation Requirements, and Extreme Events Descriptions into two sub-tables.
Yes and No
Delete the sentence in parentheses.
No
I think the performance for non-bus-tie breakers should be the same for all BES voltages for the same reason I agree with the performance of P2.4 Internal Breaker Fault (bus tie) and P4.6 Stuck Breaker where the Stuck Breaker could be a bus-tie or "sectionalizing" breaker.
Yes
Yes
A â€“ Generally support the revised standard
In Tables 1 and 2, Categories P1 and P3, under the column heading "Interruption of Firm Transmission Service Allowed," change the note in the performance box to read "Yes, if transfer is dependent on the outaged Element." (Not just for a DC line Element.) This conditional statement applies to most Firm Point-To-Point Transmission Service (Firm PTP) applications where an outaged Element reduces the Transfer Capability of the PTP service if the Element cannot be restored to service after an allowable time frame (30 minutes or so) and the Transfer Capability is reduced to a Prior Outage System Conditions level. This "extended Contingency situation" could cause an interruption or curtailment to the firm service. The interruption and curtailment responses to a Contingency might be different between Firm PTP and Network Integration Transmission Service.
Individual
Phil Park
BCTC
No
BCTC agrees with many other commenters, ABB, Ameren, Central Maine Power, NPCC RCWS, FirstEnergy, WECC, HQTE, Tenaska, FPL, FRCC, National Grid, New England ISO, NU, NStar, United Illuminating, BPA, Progress-Carolinas, TEP, and Northwestern Energy that there is no significant distinction between generator and system stability. These entities have significant experience with stability studies. Therefore, we cannot accept a simple statement from the SDT that it believes it is important to maintain this distinction without any explanation. We believe that the Generating Unit Stability Studies portion is attempting to introduce interconnection stability studies into the TPL standards. Interconnection stability studies are adequate addressed by open access tariffs and FAC-001. This should not be duplicated in TPL.
No
BCTC's open access tariff requires generator owners to apply for interconnection studies and facility studies to interconnect to our system or to make modifications to their generators as described in R2.5.1, R5.5.1, and R5.5.2. In fact, we may only be aware of the changes indentified in these requirements when generator owners make these applications. The generator owners are required to pay for these studies. Study requirements for generator interconnections are further defined by NERC Standards FAC-001 and FAC-002 (Coordination of Plans for New Facilities). By including these requirements in TPL, BCTC is concerned that generator owners may

think that they are no longer required to pay for the studies. Furthermore, the NERC standards would have redundant requirements. If SDT believes that FAC-001 is deficient, it should propose revisions to this standard, not simply add to TPL. Any studies resulting from new generators or increases in existing generator output should be charged to the owner.

No

Our understanding of these definitions and the performance requirements in Tables 1 and 2 is that they may eliminate the existing provision in Footnote (b) that allows loss of firm load for contingencies in local networks. Disconnection of loads on local networks in response to contingencies normally requires RAS/SPS, and the definition of NCLL states that this is NCLL. We are not clear whether our concern is with the definitions of CLL/NCLL, the Tables, or the definiton of BES. In the Consideration of Comments on First Draft of TPL-001-1, page 49, response to First Energy, the SDT states "FERC has determined that any Load loss that is not directly connected to the the faulted element is actually Non-Consequential Load loss." We found a similar response to WECC on page 449, item 6. While we do not disagree with the statements made by the SDT, that FERC wants clarification of what is CLL, we do not see where FERC has ruled out the use of RAS/SPS for CLL - see BCTC comments on the First Draft at page 28 of the Consideration of Comments. BCTC concurs with SaskPower and Manitoba Hydro that that CLL needs to include the concept of local networks. Another way to address this would be to exempt some local networks in the definition of the Bulk Electric System. In addition, BCTC cannot meet the proposed P1 (A) > 300 kV Steady State Performance of no Non-Consequential Load Loss for part of our 500 kV system. One radial segment of the BCTC 500 kV transmission system, a single circuit 450 km 500 kV transmission system, serves load and interconnects generation. For outages of the 500 kV transmission line, a RAS is used to shed load to match the generation in this island. We have no plans for transmission reinforcements (280 miles of 500 kV transmission line) to remove this RAS. Therefore, we will require some further clarification of the proposed P1 (A) >300 kV requirement of no Non-Consequential Load Loss for this requirement to be suitable for all of our system.

Yes

We agree that runback/tripping should be permitted for all contingencies. However, we are concerned that listing runback/tripping as an acceptable alternative, at least as currently worded, may encourage use when system reinforcements should be built. BCTC would prefer TPL-001 to be silent on this issue and that R3.5 be deleted. The list of conditions is very generic and should apply to all of TPL-001. If R3.5 is retained, the list of conditions should also require that all generation reserves requirements are met.

Yes

We can live with the proposed Requirements, but expect some problems may arise with implementation. For example, to accurately model our system for stability studies, we require models of adjacent systems. It is not clear how we will coordinate this requirement within the WECC base case process.

Yes

R.3 and R4 are acceptable, although we note the R4 gets into details of how to do short circuit analysis which is unnecessary for this standard. In some cases it may be necessary to consider multiple contingencies. Should R2.6.2 say "the SYSTEM shall not include material changesâ€¦"?

No

The differences in the tables requiring two tables are not apparent. Furthermore, we have become familiar with working with the current Table 1. Changing to these new tables will result in transition costs. We see no problems with continuing to use the current Table 1 and would prefer to retain it.

No

Some breaker-and-a-half and double-breaker layouts may have bus breakers located mid-way in the side elements. What would these breakers be called? We propose the following definition: A circuit breaker that divides a bus section with multiple tap off points into two bus sections.

Yes

BCTC agrees with different performance levels. However, we have a different rationale. Our reasoning is that a bus fault has a lower probability than a line fault. Bus tie breakers are called on to interrupt faults less often than line breakers. The failure probably may be the same but the frequency of failure is lower (because they are not called on to operate as often). The explanation given above by the SDT appears to be more related to a WECC issuee that bus breaker failure should be Category D.

Yes

Yes

We estimate an initial one time cost of up to $50,000 for BCTC planners to become familiar with the new format and requirements of the standards and make changes to their assessment

process. In addition, additional study costs for sensitivity studies (many stability studies) may cost an additional $50,000. Many segments of the BCTC system are stability limited and we have significant experience with the needs and timelines for doing stability studies. Stability studies identify the need for RAS for multiple contingencies, which is fairly short lead time. We are currently satisfied with the amount of stability studies we do for the near and long term planning horizons. We do not need to do sensitivity studies. We do not expect any significant additional costs for studying Extreme Events because most of the wide area events listed are not applicable to the BCTC system.

1 Year

The additional cost could be from $50,000 to $100,000 per year. We will incur additional study costs for sensitivity studies and expect additional planning administration costs for reconciling between reinforcements required to meet the CLL/NCLL definitions and P3 requirements vs. what we actually propose as doable projects.

Included in the above. We do not do analysis without documentation.

Included in the above. We do not do studies without documenting them

We do not believe that this cost is not relevant for determining the applicable standards and have not estimated it. The reinforcement costs are orders of magnitude greater that the costs of alternatives the changes in this standard propose to prohibit (e.g. use of RAS, curtailment in anticipation of the next contingency). We believe it is very unlikely that we would get approval for the projects that would be required to meet the proposed changes.

It is highly unlikely that we would be able to get funding approval for the system reinforcements required to meet the proposed changes in these standards.

C â€“ Definitely do not support the revised standard

BCTC appreciates the efforts of the SDT to explore ways to improve our planning standards. We understand that some of the proposed enhancements may assist Transmission Planners with justifying the need for system reinforcements. Many areas of our system already meet the proposed improvements, for example, most (but not all) of our 500 kV system already meets the proposed standards for systems above 300 kV. We have planned our system without support from a standard. The proposed changes do not really help us in any way and have a number of undesirable consequences. Consequently, BCTC does not support a number of the proposed additions and is uncertain about supporting some of the other changes. Our concerns are summarized below under headings of System Issues and Study Issues. System Issues: 1. BCTC plans, manages and operates 18,000 km of transmission in British Columbia. This includes 5700 km of 500 kV transmission lines. For the BCTC system, the proposed definitions for Consequential Load Loss and Non-consequential Load Loss, specifically that load loss due to RAS/SPS is Non-Consequential Load Loss, will provide no reliability benefits for our 500 kV transmission backbone system providing wholesale open access service and interconnecting to the rest of the western interconnection relative to what we have today. No reinforcements of this 500 kV transmission will be required as a result of these more stringent definitions. Any potential reliability benefits of any additional facilities built to comply with these definitions would be at the local service level, primarily in rural areas currently served by radial lines. The possible benefits would be small. There is a very low probability that we would get funding approval for these facilities. For most of our system including most of our backbone 500 kV and local networks in metropolitan and urban areas BCTC already meets the requirements for these definitions. As noted in our comments at item 3, a portion of the BCTC system above 300 kV cannot meet the proposed P1(A) > 300 kV. We require further clarification of these definitions such as allowing load shedding in local networks. Otherwise, we will not be planning a doable/plausible set of actions, but rather just generating a list of projects that will not be approved. Our resulting subsequent corrective plan will be to use load shedding RAS, which will conflict with the definitions. Order 693 does not require NERC to prohibit load shedding, only clarify the amount and duration of load shedding that is permitted (paragraphs 1795 and 1797). BCTC's concerns can be addressed by including the local network component of Footnote (b) - modify the definition of Consequential Load Loss to permit the use of RAS in local networks (including local networks interconnecting generation), by allowing Non-Consequential Load Loss for local networks in Tables 1 and 2, or by modifying the definition of BES to exempt local networks from the definition of BES. BCTC could also consider a limit on load shedding if the industry would develop one. BCTC raised these issues in our comments on the first draft. The SDT response (page 332) does not address our concerns. We also note FPL comment 7 (page 359) regarding removal of localized load reduction provided in Footnote (b). We do not believe that the SDT has addressed FPL's issue. Unless the local network component of Footnote (b) is included and we can get a clarification to address our concern with P1 (A), the proposed standard is not suitable for the BCTC system and we do not support the standard. 2. Contingency P1 needs to permit curtailment of firm service for flow through firm transmission service to prepare for the next contingency. If it does not, some flow through open access transmission customers may have less ATC available if RAS is not available to meet the new restrictions on the P6 contingency, while this ATC will be available for services sourcing or sinking within the transmission provider's system. P6 allows the use of RAS in response to the second contingency (Event). For firm service

originating or sinking in our system, we can use RAS and have many RAS systems already in place. However, for flow throughs it may not be possible to implement RAS or there may be a time delay until RAS can be installed. If RAS cannot be implemented, it would be preferrable to provide the firm service and curtail in preparation for the second contingency rather than deny the firm service (or require that the system be built for N-2 capability, which also may not be possible), which is what we will have to do to adhere to the new standard. The result is that flow through transactions will have to use non-firm service while non-flow-through may use exactly the same transmission for firm. Also keep in mind that while P4 and P5 are only those multiple contingencies initiated by a common mode failure, P6 is any two elements not necessarily common mode. Therefore, P6 can be more limiting than P4 or P5. For P4 and P5 contingencies the BCTC system has less dependence on RAS than does the second event of a P6. Consequently P6 will be more limiting on flow throughs than P4 and P5. Order 693 contains direction to NERC to address Footnote (b). Some commenters have taken issue with the SDT interpretation of Order 693 (e.g. FRCC item 2, page 365). Given the different interpretations and the potential for impacts on ATC, we suggest that the SDT review this issue with FERC and find out if what the SDT is proposing is what they really want. Without this change or clarification we do not support the standard. 3. Regarding Q30 in the Comments on First Draft, BCTC believes that DC and AC lines should have the same performance requirements with respect to interuption of firm transmission service. This relates to our concern above regarding flow through transactions. We do not understand why interruption of firm service would be an acceptable response to the loss of a single pole of a DC line (i.e. response to the contingency) but not an acceptable step to prepare for the next contingency of an AC line. We would ask that the SDT provide further explanation of its response that "many of the transfers over DC lines are automatically curtailed when the DC line is outaged" (page 220). We can do the same with AC lines for transfers sinking or sourcing within our system. Is the SDT assuming that RAS/SPS is used? We agree with the comments of FPL, FRCC, Southern Transmission and Manitoba Hydro (pages 219 and 221) and FPL (page 360, item 11). We disagree with the SDT decision to allow different performance for DC than AC lines. We do not support this element of this standard. 4. Contingency P3 should have the same performance requirement as P6. In two recent CPCN approvals for reinforcements of the BCTC backbone system, approval was granted based on generator contingencies being treated the same as transmission contingencies. We believe it highly unlikely that we would have received funding to approval to meet contingency P3. In our local service areas relying on generation for firm supply and for our bulk system, we consider dependable generator capacity on a case by case basis. We do not arbitrary assume a generator N-1 as a preexisting planning condition. We consider firm generator capability as a sensitivity case, not a planning criteria. We disagree with requiring a generator initial system condition having a more stringent performance requirement than other initial conditions. Without this change we do not support this standard. 5. BCTC is concerned that including the generator runback/tripping requirement in this standard will encourage more use of generator runback and tripping and will make it more difficult to get regulatory approval for transmission reinforcements. If retained, there needs to be a tie into reserves requirements. While we agree with permitting generator runback/tripping, at this time we are unsure about supporting this standard with this permissive requirement included. Study Issues: 6. R2.5 and R5.5 on Generating Unit Stability studies are adequately addressed by FAC-001 and 002. Triggering events such as increased output or new existers need to go through our generator interconnection process and be paid for by the customer. In fact, we would not be aware of any of these triggering events unless a request comes from a customer. Without clarification of which generator studies are addressed through FAC-001 first, we do not support this standard. 7. We request that the SDT provide an explanation of why it believes it is important to maintain a distinction between system and generating unit stability studies. 8. Table 1 Steady State Performance lists 6 items above the Planning Events title. Should these be listed below the Planning Events title?

Individual

Kris Manchur

Manitoba Hydro

No

Manitoba Hydro does not believe there is a need to distinquish between System Stablility Study and Generating Unit Stability Study. Both these studies as defined require that synchronous operation of generators is maintained (i.e. angular stability) and damping is acceptable (i.e. small signal stability). The stability assessment would cover the issues being requested in the Generating Unit stability Study. We suggest the defintion for System Stability Study - A study that determines whether angular stability is maintained, inter-area power oscillations are acceptably damped, and transient voltage swings remain within acceptable limits. Further, contrary to the SDT interpretation in the response to our first posting comments, Manitoba Hydro believes the Generating Unit Stability Study is a duplication of the what is required in FAC-002-0 as the FAC requirements mandate system performance required by the NERC Reliability Standards. Manitoba Hydro continues to believe this additional study is redundant. Should the SDT decide to retain the Generating Unit stability study, then Manitoba Hydro recommends that, consistent with the wording in other requirements of this assessment section, it would be more

appropriate to require that "Generating Unit Stability be assessed using current or qualifying past studies â€¦â€ This would allow use of current interconnection studies mandated by FAC-002-0 to be used to comply with the Generating Unit Study requirement. Currently, the wording in R2.5 requires that Generating unit stability be analyzed with studies for the conditions in R2.5.1 and/or R2.5.2.

Yes and No

R2.4: Agree with change except: R2.4.1.1: Needs to provide more detail on what is required to be compliant with respect to what is required to "appropriately represent the dynamic behaviour of Loads including consideration of the behavoiur of induction motor Loads". Is the appropriate modelling left to the judgement of the TP/PC, supported by peer review by adjacent planners? Should the TP be required to document why the dynamic modelling is appropriate. The requirement implies a requirement to consider detailed dynamic load modeling at every bus in the model as opposed in areas of high concentration of such load. - needs clarification. R2.4.3: Generally agree, except: R2.4.3.1:Can the SDT clarify if the Variations in load model refer to variations in dynamic load modelling? R2.4.3.4, what is meant by variability of reactive resources? R2.4.4:The use of the words â€œshall be runâ€ implies that additional scenario(s) are mandatory. Was this the intent of the SDT? R2.5: As stated in Q1 above,Manitoba Hydro continues to believe the Generating Unit Stability Analysis duplicates the FAC-002-0 requirements, creating potential for contradiction/non-compliance of both standards. The SDT should ensure there is no duplication of requirements of the FAC-002-0 standard. R2.5 should allow use of curent or qualifying past studies. R2.5.1: Is it the SDTs intent that the TP could rely on the Planning Assessment R2.5 and/or R5.6 to assess the impact of a generator addition or modification. This function should be the subject of an interconnection study conducted in accordance with the FERC tariff (LGIP) or other similar TP interconnection process. R2.5.2: The TP planning process for addition of facilities should be used to verify the impact of changes to the network, including changes near existing generators . A planning assessment is not the appropriate process. Other Comments related to R2: R2: There appears to be no requirement for an assessment of system stability in the long-term planning horizon. Was this the intent of the SDT? R2.1: States the â€œsteady state analysis shall be assessed annually and be supported at a minimum by the following annual current studies:â€ Does the term â€œannual current studiesâ€ preclude doing an assessment by using only qualified past studies? Please clarify! R2.1.1 & R2.1.2: NERC/ERAG will likely have to the models developed annually to ensure appropriate models are available. For example, in any given model series produced in past, there may not be a year five. Also, does System off-peak load refer to summer off peak? R2.1.3: WHiel Manitoba Hdro supports the need for scenario assessments, this significantly increase the workload for studies and documentation. The requirement to document why a scenario was not selected will present a problem, since without doing the study, the planner may not have a good justification. The long term objective to improve reliability could be met by requesting only different sensitivty per year, and dropping the need to justify why others were not done. R2.6: Manitoba Hydro suggests that this requirement be converted to a defintion of Past Studies. The definition should state that both R2.6.1 and 2.6.2 are necessary to qualify as a past study? R2.7:In the case were a CAP is required to meet the system performance requirements, will the assessment be deemed to be compliant on the assumption that the CAP will be put in place in a timely manner? R2.7.1.1: Can the SDT please clarify project initiation date? What is it? date permitting starts? Date construction starts? etc R5.4: System Stability The SDT should clarify if contingencies are to be applied to all elements in the case, or is it left to the judgement of the planner. Since there are numerous combinations of multiple contingencies, it is an impossible task to explain why the â€œremaining Contingencies" were not selected. If this is not the intent, can the SDT explain what is required? The requirement should simply allow the planner the discretion to use judgement to select these more severe Contingencies, and the elements they are applied to, with explanation as to why they are expected to be more severe. R5.4.1: Manitoba Hydro agrees that the rationale for Contingencies selected should be provided. However, it is an onerous task, and of little value to provide rationale for the contingencies not selected. R5.4.2: Manitoba Hydro's preference is that the performance requirements should be in the standard body. The approach in Table 2 is inconsistent. R5.4.2 refers to Table 2 for Planning Event performance requirements, however, for the Extreme Events, the Table 2 refers back to R5.4.4. R5.4.3: Manitoba Hydro agrees and commends the SDT for recognizing generator tripping as a viable option for meeting the performance requirements in certain systems. R5.4.3.2: Agree that regulatory and statutory requirements must be met; however, the references to safety violations and equipment requirements are very generic. It is difficult to imagine what type of safety violation may be caused by a generator trip considering this is a widely used practice in many regions. The SDT should also be more specific as to what is meant by "equipment requirements". The requirement to be within Facility (equipment) Ratings is already covered in R3.5.1. Manitoba Hydro recommends the reference to safety and equipment be removed. R5.4.3.3: can the SDT clarify how they want the planner to determine that "a sustainable operating condition is maintained". Demonstrating stability over a 20 second stability run may be sufficient, or is the SDT looking for longer time frame stability modeling. R5.4.4 The requirement to expain why extreme events were not chosen add extra documentation. The TP has to explain why certain events were chosen, consequently, events not chosen are judged to have less impact. What would the SDT

deem an adequate explanation? R5.5: Generating Unit Stability - As stated above, Manitoba Hydro does not agree that assessment of Generating Unit Stability iis necessary as it is covered by FAC-002-0. R5.5.1: This requirement implies the Generating Unit Study should consider every unit exceeding 20 MW. Consistent with R2.5, the SDT should clarify that only new generators need be studied. R5.5.3: Given the numerous possible contingencies that could be run if multiple contingencies are considered, it is impossible to explain why the remaining contingencies were not selected. Other Comments related to Requirement R5: R5: The sentence â€œThe studies shall be based on computer simulations using models using data provided in Requirements R9 to R14 â€¦..â€ should apply to both steady state (R3) and stability portions, yet it is only included in R5. R5.1: Essentially repeats the requirement in the first sentence of R5 - suggest deleting. R5.2: Suggest deleting the words â€œincluding thoseâ€ R5.3: Manitoba Hydro suggests that frequency ride through be added in addition to voltage ride through. The language "how the generators are treated in the simulation" is not crisp. Is the SDT looking for information on how the voltage ride through and frequency ride through are modelled in the study?

No

The definition of Consequential Load Loss implies the load lost as a result of "response to the transient condition of the event" need not be load directly connected to the element impacted by the event, but load in the local area. This definition could result in an interpretation that would justify unlimited load loss resulting from say voltage depression in an area impacted by a transient system swing. This opens a loop hole for allowing load loss for many single contingencies as a result of a transient swing causing a voltage dip and motor contactor drop-out as an example. There is a fine line between providing adequate voltage support or operating guides to avoid such load loss. Should a maximum level of load loss be specified? Comments on Other Definitions: Extreme Events: The definition should clarify whether or not Transmission system performance requirements must be met. - Events should be changed to Event - same for Planning Events Planning Coordinator: The Planning Coordinator definition should be left to the functional model. Having the term defined here may cause future confusion. For example, the FMWG has discussed the possible elimination of the PC, based on the realization that it is the Transmission Planner who integrates resources into the transmission plans.

Yes

Manitoba Hydro commends the SDT for recognizing that generator run-back and tripping is a valid option in the transmission planner's tool box, not unlike more expensive devices such as FACTs devices. Can the SDT confirm that the conditons in R3.5.1, R3.5.2 and R3.5.3 apply to post generator tripping period. R3.5.2: The references to safety violations and equipment requirements are very generic. It is difficult to imagine what type of saftey violation may be casued by a generator trip considering this is a widely used practice in many regions. The SDT should also be more specific as to what is meant by "equipment requirements". The requirement to be within Facility (equipment) Ratings is already covered in R3.5.1. manitoba Hydro recommends the to "safety, equipment" be deleted from R3.5.2. Other Requirement R3 Comments: R3: In the first sentence, "perform analysisâ€ should be changed to "perform studiesâ€ and the word â€œstudiesâ€ after Horizon should be deleted. R3.2: Delete the words â€œincluding thoseâ€. R3.2.1: Can the SDT clarify what is required? Is the requirement to ensure the generator undervoltage ride through is not violated? If so, Manitoba Hydro recommends overvoltage ride-through (maximum voltage) should also be added. Also, is â€œFor all Generatorsâ€ and â€œof all generatorsâ€ both needed? R3.3.1: Appears to be a repeat of R3.1. R3.3.2: R3.3.1 requires performance criteria to be met for Planning Events, which includes both single and multiple contingency events. Doesnâ€™t R3.3.2 repeat R3.3.1? R3.3.2.1:The requirement to report duration of the Consequential Load Loss would be a wild guess as the duration will relate to the nature of the event, so Manitoba Hydro questions the value. For example, the the event is a simple lightning hit on a line, the restoration time is expected to be short, but if the cause of the line loss is a tornado that takes down structures, it could be days. Can the SDT clarify the requirement. R3.3.2.2: Are â€œTransmission reconfiguration changes and redispatch of generatorsâ€ only allowed for single contingencies? Is redispatch allowed if such redispatch results in curtailment of Firm Transmission Service? R3.3.2: It appears that R3.3.2 can be deleted, and its subrequirements placed under R3.3.3: The contingencies that â€œare expected to produce more severe System impactsâ€ are very likely multicple contingencies. Since there are numerous combinations of multiple contingencies, it is an impossible task to explain why the â€œremaining Contingencies were not selected. If this is not the intent, can the SDT explain what is required? The requirement should simply allow the planner the discretion to use judgement to select these more severe Contingencies, and the elements they are applied to, with explanation as to why they are expected to be more severe.

Yes and No

R1: Requirement R1 places the obligation for maintaining a model on the PC/TP. While the PC/TP can maintain data for its system(s), the models generally used for planning assessments are regional models developed and maintained by the Regions. Could the SDT explain its expectation of the scope and responsibilities of the model to be maintained? R9-R14: This TPL draft includes Requirements R9 to R14 that impose obligations on the PC/TP that differ from the way planning models are compiled in accordance with the existing MOD standards. Manitoba Hydro comments

on R9 to R14, as follows: R9: Agree. R10: The TSP is the Functional Model entity that should provide the Firm Transmission Service data and Interchange Schedules to the PC. R11: Agree R12: Agree R13: We disagree that the Resource planner is responsible for Reactive Power devices. Can the SDT explain what they consider should be included in new technologies? R14: While we agree that the TP can provide the PC data of planned facilties, isn't this data already required to be provided under the MOD standards?

No

R4: The wording for the assessment should be changed from "shall assess the short circuit ability of its equipment" to "shall assess whether bus short circuit levels are within the capability of its equipment". The short circuit assessment should only be required if changes to system topology or generation occur. While short circuit levels are critical for system equipment specifications, ten year planning horizon models are generally not adequate for this purpose as ultimate system fault levels are required. The SDT should clarify the modelling details required for the short circuit assessment and the deliverable of the short circuit assessment. The standard doesn't stipulate if an existing NERC model will need to be modified to include the sequence data and thus allow for three phase and SLG fault analysis or if the planner is to use our "in house" models and just report the results. Typically, short circuit models used for fault studies are not load or season specific, and the simulation is conducted using a flat-analysis (load ignored and voltage at 1.0 pu). Typically, all elements are in service to ensure maximum fault contribution. Can the SDT provide details on what cases have to be assessed â€“ Year One, each of the first five year, etc. What is the generation dispatch that should be considered? For purposes of equipment rating, a dispatch considering all available generation may need to be considered. Manitoba Hydro requests the SDT to provide some specifics on the need for doing intact and n-1 fault analysis. We think the requirement to consider single contingency conditions is getting into the details of bus modeling to maximize the fault level. If so this seems to be getting into short circuit study methodolgy and is too prescriptive and unnecessary. To explain this comment, we include a summary of the process used at Manitoba Hydro as follows: Manitoba Hydro follows a two step procedure when studying breaker capability of our system: 1. Breaker Rating vs. Bus Fault - Breakers are required to accommodate the entire bus maximum symmetrical fault current at nominal bus voltage with no consideration given to what the circuit breaker may actually be required to interrupt due to its location in the ring. Stations with fault levels above 95% of rated breaker interrupting capability are flagged for further study. This type of analysis will accurately rule out a high percentage of breakers whose capability is adequate. If an appropriate model is available, this step could take up to three person-months for the Manitoba Hydro system. 2. Detailed Examination of Breaker Duty and Location - By considering faults on both the equipment and bus side of the breaker the exact fault current that the breaker must interrupt can be determined. In a ring bus arrangement the breaker in question is assumed the last breaker to clear the fault. In addition, factors such as X/R ratio & operating voltage are also taken into account. To provide a safety margin to account for modeling tolerances we recommend a circuit breaker for replacement when the fault value is greater then 95% of the breaker rating. Other companies may use different breaker replacement threshold levels. This detailed analysis could require up to one person-month, depending on the size of the station, for each detailed assessment. The standard should specify what is to be reported as a result of the short circuit study. Should the report include: â€¢ Documentation of the criteria used for the study â€¢ A listing of the SLG and three phase fault levels compared to the lowest breaker capability at a bus. â€¢ Documentation of more detailed analysis of for breakers wwhose capability is within threshold of the station fault level. â€¢ A listing of the breakers to be replaced. Alternatively, should the standard just require the planner have a separate report on the fault analysis that can be provided on request.

No

There appears to be little difference between Table I and II other than the performance requirements at the start of each table, which should be embedded within standard. Manitoba Hydro would prefer one table as we believe it serves to simplify the standard readibility. Additional Comments on Table 1: The Performance Requirements (Items 1 to 6) should have a heading "Evaluation Requirements". These evaluation requirements should be included in the standard body. Also they should be labeled A to F to avoid confusion with the Notes at the end of the Table. Item 6 is not applicable for steady state analysis. Suggest changing "Notes" to "Table I Notes" for improved readability if more than one table is retained. Planning Events: In cases where Non-consequential Load Loss is allowed, has the SDT discussed limiting the amount of load lost? Planning Events: For the multiple contingency events, in cases where Interruption of Firm Transmission Service or Non-Consequential Load Loss is allowed, the SDT should clarify that such loss is only allowed after the second event. P1: Similar to DC lines, interruption of Firm Transmission Service should be allowed for AC transmission lines, as in many cases, the firm transmission service is dependent on the outaged AC transmission line or transformer, that is, the contract path. P2-1: Suggest changing :single ended line: to "open ended line". P3: Similar to DC lines, interruption of Firm Transmission Service should be allowed if transfer is dependent on the outaged AC transmission line or transformer - the contract path. Planning Events >300 kV: Interruption of firm transfer should be allowed if AC contract path is lost due to an event. In

many cases the majority of the firm transfer is carried by the contract path ac line, not that unlike the case of the DC line. MH has sold Firm Transmisson Service, the delivery of which is dependent on the single circuit Wnnipeg-Twin Cities 500 kV line being in-service, This Firm Transmission Service is available in the order of 99.6% of the time. Assuming two 5 day planned maintenance outages per year the availability is 97.3% per year. MH's transmission customers did not want to pay some $800 million in capital costs for a second 500 kV line to increase the Firm Transmission Service availability by 2%, especially considering that Firm Transmission Service loss does not result in loss of load, but results in a call for redispatch (call for Operating Reserves being carried to cover for loss of the largest generator or largest loaded transmission line with associated fast generation runback (SPS)). The inability to interrupt Firm Transmission Service will drive expensive new line construction, or require withdrawal of 1500 MW of firm transmission service from the market. P4: Greater than 300 kV - Interruption of Firm Transmission Service should be allowed if transfer is dependent on the outaged AC transmission line or transformer.The low probability of P4 events does not warrant the cost of raising the reliability performance requirements. P5: Greater than 300 kV - Interruption of Firm Transmission Service should be allowed if transfer is dependent on the outaged AC transmission line or transformer. NERC defines a Protection System as "Protective relays, associated communication systems, voltage and current sensing devices, station batteries and DC control circuitry. In many cases, the protective relays, associated communication circuits and DC control circuits consist of two separate or redundant systems, but the voltage and current devices and station battery may be common. Is the SDT considering a current sensing device, or the station battery, for example, to be a single point of failure? Table 1 Note 4: Imposes a requirement on FACTS devices, and therefore should be elevated to the Requirements in the standard body. Also FACTs devices can be put in a series connectionas well as shunt. Perhaps some additional clarification is required. Additional Comments on Table 2: Stability Performance Requirements: ï €The Performance Requirements (Items 1 to 5) should have a heading "Evaluation Requirements". These evaluation requirements should be included in the standard body. Also they should be labeled A to E to avoid confusion with the Notes at the end of the Table 2 - Item 4: should the simulation also include the efect of reclosing where applicable? Planning Events: Same as comments on Table 1 regarding treatment of Firm Transmission Service and Non-Consequential Load Loss for >300 kV P4: Greater than 300 kV - Interruption of Firm Transmission Service should be allowed if transfer is dependent on the outaged AC transmission line or transformer. P5: Greater than 300 kV - Interruption of Firm Transmission Service should be allowed if transfer is dependent on the outaged AC transmission line or transformer. Multiple Contingency events (P3, P6): Does the SDT envision these multiple events being simulated as a stability run for the second event using a base case with an adjusted system - considering the first event is typically P1 which has been previously run as a separate simulation, typically a P1 event? P5: see Table 1 comment re what is considered a single point of failure. Extreme Events: Evaluation Requirement 1 - R5.5.4 should be R5.4.4 Extreme Event Description 2H: A 3 phase bus fault on a switching station would not normally result in loss of a voltage level and transformers at a station. The event should just be loss of one voltage level plus transformers in a substation. Table 2 Notes: Suggest changing "Notes" to "Table 2 Notes" if more than one table is reatained. Note 5 a. Stipulates requirements for generating unit performance - should not be buried in the notes. Also, what is the SDT rationale for allowing units to pull out of synchronism for single contingency events like P2, or P5 - stuck breaker, or P7 - common tower, which is a normal clearing event. P1: Similar to DC lines, interruption of Firm Transmission Service should be allowed if transfer is dependent on the outaged AC transmission line or transformer. P3: Similar to DC lines, interruption of Firm Transmission Service should be allowed if transfer is dependent on the outaged AC transmission line or transformer. It is important for a probabilistic measure of likelihood to be considered in designing Table 1 and Table 2. The various categories of contingencies, P1 to P7, for example, should be ideally arranged in order of magnitude of likelihood, so that the acceptable consequences or the performance requirements may be in an increasing level of severity. However, there are events with intrinsically different probabilities currently classified within each of these contingency categories. For example, in P3 (following loss of a generator followed by system adjustments), another generator forced outage is more likely than a transformer forced outage. In P2 (single contingency), loss of a bus section is less likely than the P3 event of a double generator contingency. Therefore, these P categories, as currently defined, overlap one another in the scale of likelihood. As a result of it, Table 1 and Table 2 have allowed for certain rarer events (e.g., included in single-contingency P2 and double-contingency P3 categories) to incur some siginificant consequences with unspecified limits, e.g., interruption of firm transmission services or "non-consequential" load loss. It may be better to follow the NERC Reliability Concepts White Paper's approach of displaying these tables in categories of event likelihood, so that the acceptable consequences would be in an increasing level of severity. This approach would then be consistent with Probabilistic Risk Assessment, when the industry has collected enough transmission outage data to enable such a method be applied. Though the US power industry does not have transmission outage statistics collected and analyzed across the industry, Canadian utilities do have excellent data. It seems to be possible for the various contingency events in the current Tables 1 and 2 to be recategorized according to five or six groups of "order of magnitude of likelihood", e.g., M0, M1, M2, M3, M4 and M5. Each

order of magnitude of likelihood is ten times less likely than the preceding order. For example, the first order (M1) would be for outage probabilities greater than 1%. The second order (M2) would be for outage probabilities between 0.1% and 1%. The third order (M3) would be between 0.01% and 0.1%, etc. Multiple independent contingencies could be classified based on the product of their individual probabilities, e.g., a generator outage is of order M1, and a transmission circuit outage is of order M2. Therefore, a double contingency of a generator and a transmission circuit is of order M3, but a double generator contingency is of order M2. Having placed the initiating contingencies in these orders of likelihood, it is then feasible for the industry stakeholders to try to agree on the level of acceptable consequences for these magnitude orders of likelihood. In the current draft of this standard, there is no quantified variable degree of acceptable consequences, as envisioned in the NERC Reliability Concept White Paper. There is distinctly different treatment of whether the out-of-service element is below or above 300KV. There is difference in allowing or not allowing firm transaction interruption and/or non-consequential load loss, but neither of them has a specified limit on the MW amounts. With the current layout of Tables 1 and 2, it is not readily apparent that the proposed standard is consistent with a sound risk approach. Having a sound risk approach is very important because investment decisions will be made according to these new, proposed and still-deterministic standards. Planners may find out in their studies that the costs of meeting some unlikely contingencies requiring expensive transmission investments are very high and that these costs are not justifiable based on avoiding those rare consequences. On the other hand, because the amounts of acceptable firm transaction interruption and non-consequential load loss are not specified, the transmission system designed to that standard with unspecified limits may become vulnerable to cascading events that initiate in the transmission grid below 300 KV. Many entries in the Tables allow non-consequential load losses, but no limits are specified. It raises the question, "If any non-consequential load loss is acceptable, is there a need to study that contingency scenario?" Without a reasonable set of limits, the criteria may not be effective in assuring system reliability. NERC's event analysis group has been using five categories of consequences to classify recent blackouts or major disturbances. A condensed summary of this is as follows. Category 1. Abnormal frequencies > 5min; or inter-area oscillations Cateorgy 2. System separation with no loss of load or generation; or loss of generation (between 1,000 and 2,000 MW in the EI or WI and between 500 MW and 1,000 MW in ERCOT) Category 3. Loss of load (less than 1,000 MW); or loss of generation (> 2,000 MW in the EI or WI and > 500 MW in ERCOT); System separation or islanding with loss of load or generation (less than 1,000 MW). Category 4. System separation or islanding of more than 1,000 MW of load; or loss of load (1,000 to 9,999 MW). Category 5. Loss of load (10,000 MW or more) Lay persons as well as transmission planners can understand and appreciate these ways of defining consequences, e.g., category 5 events mean more than 10,000 MW of load or generation loss. A way to propose reasonable limits to the highly unlikely but potentially severe contingencies, e.g., M3, M4, and M5, would be to limit their designed consequences to Category 2, 3 or 4. A well designed transmission system should limit the consequences of potential cascading outages and their likelihood so that fewer major blackouts would occur, while balancing the cost of investment to the cost of outages to the customers. A number of utilities are already performing PRA studies for their transmission planning. The advantages of using PRA have been demonstrated in the nuclear power industry. It would be desirable to have a pathway for the power industry to transition from the still-deterministic planning criteria in TPL-001 to a probabilistic planning criteria, without having to wait for another major revision to the TPL standard. If the Tables 1 and 2 are arranged and presented consistently with the NERC Reliability Concepts White Paper, the approach will enable that transition to take place naturally. If the TPL-001 standards establish a PRA-compatible Table 1 and Table 2, with contingency categories sorted in order of magnitude of likelihood, and their acceptable consequences also arranged in order of consequences (such as the five categories), the reliability requirement is already seen in the PRA-compatible way of a constant Risk level, Risk = Likelihood x Consequence. When the industry has good data to quantify the probabilities of these various contingencies, the implication of this â€œalready-acceptedâ€ Risk Level would be clear and numerically expressable. What is useful at this time is for the industry to make a forward-looking estimate of what this Risk level would be like, and consider whether it is appropriate and consistent with sound economic and risk principles.

Yes

The Bus-tie Breaker definition provides the clarification Manitoba Hydro requested in our draft 1 comments. However, we suggest the wording in brackets should be deleted as it is possible to add bus-tie breakers to schemes like the breaker-and-a-third bus in large stations.

No

Based on inductry outage statistics, event P4, the non-bus tie breaker failure has a lower probability of occurrence than event P7, the common structure event. Consequently, Manitoba Hydro recommends that the performance requirenent for >300 kV should be the same as P7. Imposing a higher performance expectation on the >300 kV facilities will require significant bus reconfiguration costs to ensure compliance for existing stations. The additional cost can not be justified by the reliability gain given the low probability of the event.

Yes
Yes
Considering the very low probability of such an event (based on industry data), Manitoba Hydro agrees that Interruption of Firm Transmission Service and Non-consequential Load Loss is acceptable.
$500,000
2to 3 person years years
$300,000
$200,000
$100,000
An estimate of the cost to Manitoba Hydro is $1.0 Billion.
The licensing and construction of facilities to achieve compliance will require at least 10 years.
C â€“ Definitely do not support the revised standard
Manitoba Hydro can not accept the standard due to the requirements imposed on Firm Transmission Service and on facilities >300 kV. The standard would have to allow Firm Transmission Service to be curtailed in situations where Non-consequential Load is not lost. The higher performance requirements for facilities >300 kV are tied to very low probability events, so the enhanced relaibility is not worth the cost. TPL-001-1 Other Comment Action Plan: Schedule of Anticipated Actions needs to be revised. - Action 3 shows rev 3 out for ballot in 2Q09. TPL-00101 Purpose:Is the purpose to â€œEstablish Transmission System planning performance requirementsâ€ or to â€œEstablish planned Transmission System performance requirementsâ €The term â€œprobable contingenciesâ€ is not defined or used in the standard â€“ use of the term may cause confusion. R7: The TP and PC are required to determine the responsibilities for performing the assessment. Are the responsibilities to be documented as part of the assessment? R8: This requirement should avoid reference to a FERC order as the order does not apply to all entities. The requirement should just require the planner to demonstrate that the assessment was distributed to potentially impacted stakeholders. The last sentence is incomplete.
Individual
Tim Wu
Los Angeles Department of Water and Power
No
Changing the name does not change the fact that this is wrong. The stability criteria in the standards are all measured on the high-side, i.e., the system side. So when a stability simulation is performed, if there is any problems, whether it be loss of synchronism, out-of-step, damping, interarea oscilations, etc, they will all appear on the same run and there is no distinctions between system stability or unit stability. To separate the two mplies there is a difference and requires two different simulations is either confusing at best or imply ignorance of the physics. Maybe the drafting team is concerned with the proper modeling of the generator in a stability simulation. There may be practice to "lump" similar units in a plant as one "unit" or the dynamic characteristics of a unit were not explicitly or correctly modeled; in such instances, the behavior of individual unit cannot be observed. But if that is the case, the entire stability simulation is incorrect to begin with anyway, even on the system side. To properly deal with unit modeling, the standard should prohibit lumping of units and require all dynamic data (including governor controls, exciters, stablizers, etc.) are included in the simulation model.
No
R2.4.3 requires sensitivity on various operating scenarios. These are best required under TOP, not TPL. It is totally useless and a waste of time to look at operating scenarios under planning horizon by planners, whether it be short term or long term. Operating scenarios are absolutely necessary under operating horizons but they need not be repeated and required in TPL when TOP alread addressed these. R2.5 See my comment on question 1. This may be a suitable place to require proper modeling of the genrator units to replace the existing languages. R5.4 is fine. R5.5 See my comment on question 1. The language here actually infers the size of a unit that should be modeled individually and not be lumped. But it should be more precise to prohibit any lumping as well as the explicit modeling of all dynamic data of any generator unit meeting the size requirement.
No
In general, support the comment from WECC on this question, however, where there are different performance allowed solely based on an arbitrary voltage class separation, it is discriminatory and without any scientific or historical basis.
Yes and No
R3.5.1, 3.5.2, and 3.5.3 are redundant and already covered in other standards or safety codes such as FAC, TOP, OSHA, NRC, NESC, etc. If these kind of "reminder" is required here just to

make sure planners do not ignor all the relevent codes, then it could also be argued that an absence of such reminders in other section would mean that these codes do not need to be observed unless they are specifically called out. I think they should all be deleted to avoid such twisted argument but portential loopholes.

Yes

See the comment from WECC

No

Short circuit study is a static study, there is no dynamic involved. The main purpose of short circuit study, from a planning perspective, is to size the breakers to ensure the breakers can interrupt a fault in the system when called upon. R4 requries simulation inculding contingencies, for what purpose is not known. The language implies there are single contingencies that could result in higher duties. I disagree. The highest duty a circuit breaker will see is when the system is whole and with all generator units in service and the fault to be cleared is a bus fault. Any single contingency that involve losing a unit or any component in the systme will result in a weaker systme and less short circuit duties. This is elementary. I cannot envision of any single contingency that would put more units on line or switch in additional transmission facilities beyond a full system with all unit already in service. In R2.3, the requirement is to do the study on an annual basis "and" support of past studies. If the intent is to allow past studies to substitute for annual study, the word "and" should be changed to "or". If the intent is to mandate annual study, then the support of past studies is irrelevant since the annual study supercedes past ones. In addition, short circuit study does not need to be performed annually unless there is substantive addition to the system in the form of a generating unit or a major transmission facility. So it make sense to allow past studies in lieu of annual study if there is no substantive addition to the system.

No

The performance table allows different performance for same contingency at different voltage classes that is arbitrary separated. This is discriminatory and without any scientific or historical basis. There should be only one class for the whole transmission system. Transmission systme at below 300kV should not be granted preferential treatment. Mindful also that the initiating causes of last two major continental wide blackouts(one in WECC and the other in the Eastern Interconnections) both started in system at less than 300kV.

Yes

No

The arbitrary separation based on voltage class is discriminatory and without any scientific or historical basis. The probability of breaker failure do not increase with voltage class. In fact, breaker failures are seldom heard of at above the 300kV classes. Most breaker failures occur in lower voltage classes such as 230kv, 115kv, etc. where the short circuit current tends to be higher and thus stressing breaker contacts more severely giving rise to breaker failures. Delete any separation of voltage classess.

No

R2.1.3 and 2.1.4 deal with operating scenarios that need to be studied by operating engineers under TOP but is duplicative and serve no useful purpose when performed by planning engineers for the purpose of future expansions. Transmission planning is to ensure that future system is expanded to handle expected system growth. Mixing operating studies in the planning of future system shows a confused perspective on the different roles between operating studies and planning studies. A responsible utility must perform both types of studies but they should not be mixed together or be required under two different standards, the TOP and TPL. The consideration of load variations, different dispatching scenarios, planned or unplanned transmission outages, system expansion not coming in on schedule, etc., are operating issues that should be and must be addressed in operating studies, and the proper place is in TOP, not TPL.

Yes

yes, only because there is no discrimination among different and arbitrary voltage classes.

I do not object to added studies serving useful purposes; however, duplicative studies are a waste of resources. Mixing operating studies and requiring such studies in the planning of future system shows a confused perspective on the purpose of planning studies verses operating studies.

Please be more specific as to what additional studies are being referred here.

This assumes that past studies are inadequate and supplemental studies are needed. The standard does add a lot of duplicative and unnecessary operating scenarios that are already required under TOP and MOD; but they should be deleted because they serve no useful purpose under TPL, why even spend an extra penny if it is for naught.

If this question is referring to discriminatory treatment between different voltage classes that is

arbitrary; the effort should be directed to either treat all the voltage classes equally or do come up with a scientific or historical basis to support the requirement. This is an engineering standard, all the criteria should have some scientific/engineering rationale that can be supported either by physics or historical data.

C â€“ Definitely do not support the revised standard

I do not support the standard as currently written. There are too many requirements that are discriminatory, duplicative, and arbitrary/punitive. The unintended consequence of this standard would be forcing companies and planners to plan the system to take advantage of some requirements that will result in a future system that is less robust (a single line serving multiple radial loads instead of network, for example) if not to entiely discourage any further expansion of the transmission system above 300kV (the discriminatory treatment of two classes without any rational justification).

Individual

Dave Larsen

Transmission Agency of Northern California

No

We believe that there is no significant distinction between Generating Unit Stability and System Stability other than the objective and focus of the study. Therefore, we cannot accept a simple statement from the SDT that it believes it is important to maintain this distinction without more explanation. If a distinction is maintained, then Generating Unit Stability Study should be and is already covered in FAC-001-0 and FAC-002-0. As defined, Generating Unit Stability Study â€œfocuses on an individual generating unit's or electrically closely-coupled generating units' Stability for various Contingencies on the Transmission Facilities connected to that generating unit(s) point(s) of interconnection or one bus away from that point. However, the Purpose of the proposed TPL-001-1 is to â€œdevelop a Bulk Electric System that will operate reliably over a broad spectrum of System conditions and following a wide range of probable Contingenciesâ€. If a Generating Unit becomes unstable, the unit can be disconnected from the BES without impacting system stability. Therefore, we believe that the Generating Unit Stability Studies portion is attempting to introduce interconnection stability studies into the TPL standards. Interconnection stability studies are adequately addressed by FAC-001 and does not need to be specifically called out in TPL-001-1. In addition, Generating unit stability studies are typically performed at the time of interconnection. Even though Generating Unit Stability Studies have been done as new generating unit(s) were interconnected or at the time changes occurred, such studies have not been done for the entire fleet of Generating Units at the same time. For very old units, stability study documentation may no longer exist, even though no potential stability problems have been identified when stability studies were run for interconnecting other newer units or for the System. If the requirement for Generating Unit Stability Study is retained in this proposed TPL-001-1, R2.5 needs to be clarified to say â€œonly whenâ€ the changes in R2.5.1 and R2.5.2 are made that the Generating Unit Stability Study needs to be done. There also needs to be language about how to treat generators that are existing prior to this Standard taking effect. We would also appreciate if the SDT would more clearly define with examples the terms in R2.5.2, â€œmaterial Transmission System changeâ€ and â€œat or near the point of Interconnectionâ€ to invoke a study.

Yes and No

- R2.4 is acceptable. Please consider deleting the conditions identified in R5.4.3.1, R5.4.3.2, and R5.4.3.3. We question the need to specifically call out these requirements in subrequirements of R5.4.3. We believe these conditions should be met for any and all requirements of the standard. It should not be necessary to list acceptable practices, especially if the conditions placed on the practice are general conditions that are addressed elsewhere or are generic. Otherwise, R5.4 is acceptable. - We generally agree that Transmission Owners with extensive Transmission Planning Function and Planning Coordinators need to perform and be held accountable for the Requirements in R2.4 and R5.4; however, the SDT needs to define an organization size level below which these requirements for the associated Transmission Planner may be slightly relaxed. There are numerous Transmission Planners; (e.g., those associated with PUDs, Municipals or REA, etc. where historically dynamic stability has not been a problem), for which performing these type of studies and assessments would be onerous and would not yield reliability benefits for the network. - The proposed requirements in R2.5 and R5.5 are already covered in FAC-001 and FAC-002 and should not be included again in the proposed TPL-001-1. Otherwise, the NERC standards would have redundant requirements. In addition, Transmission Ownerâ€™s open access tariffs requires Generator Owners to apply for interconnection to its transmission system or to make modifications to their generators as described in R2.5.1, R5.5.1, and R5.5.2. It is therefore the Generator Ownerâ€™s responsibility to cause these studies to be done at the time of interconnection or modification, yet R5 seems to place that responsibility only on the Transmission Planner and the Planning Coordinator. The Transmission Planner or the Planning Coordinator would not know of the changes until notified by the Generator Owner. If the SDT believes that FAC-001 is deficient, it should propose revisions to this standard, not simply add to

TPL. Requirement R5.5.2 needs to be clarified to state changes or additions to the generating unit that result in an increase in power output. Otherwise, it could be interpreted to apply to existing units with a change in dispatch.

No

We generally agree with the definitions by themselves but have concerns about potential unintended consequences. This definition will severely limit the loads that can be classified as â€œlocal Network customers, connected to or supplied by the Faulted element or by the affected area, may occur in certain areas without impacting the overall reliability of the interconnected transmission systemsâ€ in footnote b of the existing TPL standards. In combination with raising the bar for loss of Facilities with operating voltages 300 kV or higher (P2, P4 and P5 in the Performance Tables), this definition may result in encouraging entities to connect more loads in a radial fashion or avoid loop connection to improve service reliability just to fit in the Consequential Load Loss definition, â€œâ€¦load no longer being connected to a sourceâ€¦â€. As a result, service reliability to customer would be adversly impacted without commensurate improvement in overall system reliability. In addition, existing design of many such local networks would normally require RAS/SPS to disconnect loads on local networks in response to contingencies. However, the definition of Non-Consequential Load Loss states that using RAS/SPS is Non-Consequential Load Loss. In the Consideration of Comments on the First Draft of TPL-001-1, page 49, response to First Energy, the SDT states "FERC has determined that any Load loss that is not directly connected to the faulted element is actually Non-Consequential Load loss." We found a similar response to WECC on page 449, item 6. While we do not disagree with the statements made by the SDT, that FERC wants clarification of what is Consequential Load Loss, we do not see where FERC has ruled out the use of RAS/SPS for Consequential Load Loss. Consequential Load Loss needs to include the concept of local networks. Another way to address this would be to exempt some local networks in the definition of the Bulk Electric System. The performance of existing systems has been designed to be consistent with the concepts of the quoted sentence above from footnote b of Table 1 of the existing TPL standards. There are many instances where some local network customer curtailments or local area load loss has been allowed by local regulatory authorities as long as the overall reliability of the interconnected system was not impacted. This is a result of tradeoffs with the cost and environmental impacts of providing a higher level of reliability in a local area. An attempt to eliminate the concepts contained in footnote b of the existing TPL standards would invalidate local regulatory decisions, place a large unintended cost burden on existing customers and could potentially create criteria that could not be met anytime soon, if ever, as a result of the long lead time required for system improvements. Any attempt to raise the bar by interpreting the definition of Non-Consequential Load as eliminating the concepts of footnote b is considered unacceptable. The new criteria need to clearly maintain these concepts to prevent a large disconnect with existing design criteria. The last sentence in the Definition of Consequential Load Loss (â€œAlthough Load which is lost as a result of the Loadâ€™s response to the transient conditions of the event is considered Consequential Load Loss and is permitted when Consequential Load Loss is allowed, Transmission planning entities are not allowed to rely upon the expectation of such Load loss to meet steady state performance requirementsâ€) seems more appropriate to be requirements. Therefore, please move this sentence to the Notes Section at the beginning of Table 1 as new Item 7.

Yes

We agree. However, the conditions listed in R3.5.1, R3.5.2 and R3.5.3 are applicable to the overall TPL Standard. Their specific listing in R3.5 gives the impression that these Requirements are only applied to R3.5 and not to the other Requirements in this Standard. In other words, are there any Requirements in this Standard that R3.5.1, R3.5.2 and R3.5.3 do not apply to? Therefore, we suggest TPL-001-1 be silent on this issue and move R3.5.1 through R3.5.3, (and the equivalent in the stability study R5.4.3.1 through R5.4.3.3) to a Requirement applicable to Assessment studies in general, such as the bullet points in the Performance Tables.

Yes

While we agree with separating R1 to form R9 through R14, we believe that R9 (modeling information for real and reactive load forecast data) should be applicable to Load Serving Entities (LSE) instead of (or in additional to) the Distribution Provider. In any case, this type of exchange of load information is already covered in MOD Standard or in the respective tariffs, and should not be included again in the proposed TPL-001-1 Standard.

Yes and No

We agree with R2.3. However, R4 requires assessment of â€œShort-circuit capability of its equipment under normal conditions and following any single Contingency condition that would result in greater circuit breaker interrupting dutiesâ€. Since short circuit studies are typically performed by applying a fault on a Facility starting from a normal condition, there can be confusion whether the result would constitute â€œnormalâ€ condition or â€œfollowing any single Contingency conditionâ€. Also, by specifying the normal and single contingency conditions, R4 is straying into â€œhowâ€ to perform a study, which is not necessary in a standard. We suggest deleting the reference to the contingencies to be used in the study.

Yes and No

We do not disagree with the proposed format changes of the Tables. However, we are not sure if separating into two Tables is necessary, or beneficial. It seems like an extra column for event could be added and some changes to the notes would greatly simplify the table. Some of the rows could also be combined; one such example is P2-2 (Loss of Bus Section) and P2-3 (Internal Breaker Fault, non-bus-tie). Will the SDT plan on combining some similar rows? Table 1, P4 and P5 refer to "Faults" as part of the contingency. This is steady state performance and faults are not modeled in steady state. Table 1, P2.1 refers to a "single ended line". Technically, this means we need to generate a "false" bus at each end of the line to evaluate this condition or use a dispatcher power flow which included breaker modeling. Is this an accurate interpretation of the intent of this requirement? We believe there should be no distinction between the voltage classes and support the use of load shed for all cases identified in P4 through P7.

No

We do not disagree with the proposed definition change. However, we do not agree that â€œSubstation configurations such as ring-bus, breaker-and-a-half, or double bus-double breaker protection schemes do not use bus-tie breakers. Some breaker-and-a-half and double-breaker layouts may have bus breakers located mid-way in the side elements. We propose the following definition: A circuit breaker that divides a bus section with multiple tap off points into two bus sections.

Yes and No

We interpret â€œexit breakersâ€ to mean a breaker on an element that comes in from outside the substation. We agree with applying less stringent performance requirements to bus tie breakers above 300 kV. Further, we believe that Non-Consequential Load Loss should be allowed for loss of either Bus-Tie or Non-Bus-Tie Breakers regardless of voltage class. The SDT has not presented evidence that the probabilities of failure for breakers within the same substation are significantly different for different voltage classes.

Yes and No

We generally agree with the concept of the sensitivity analysis since this is standard practice in understanding system performance risks and the effectiveness of improvements. It is ambiguous from a criteria perspective, however, what role is played by the sensitivities in developing Corrective Action Plans and what risks are created by misapplication of the intent of such sensitivity analyses. Clarification of the following is needed along with examples of applicable sensitivities and how these would be factored into Corrective Action Plans. If a Transmission Planner performs studies on the â€œbase caseâ€ of which the loads represented are 1 in 10 year adverse weather condition (10% chance that the actual load may exceed the projected load), does this constitute a sensitivity analysis. If so, will the Transmission Planner have to then perform additional less stringent studies at the load levels representing 1 in 2 year adverse weather conditions (50% chance that the actual load may exceed the projected load) to demonstrate compliance? R2.1.4 requires explanation of performing additional sensitivities that are not listed in the R2.1.3. This would discourage entities from performing additional sensitivities. In addition, in the above example, the Transmission Planners should not have to explain why they feel that this higher level (1 in 10 year adverse weather) of load is the â€œbase caseâ€ condition. R2.7 also states that â€œCorrective Action Plans do not need to be developed solely to meet the performance requirements for sensitivitiesâ€. Consider a Transmission Planner that has built transmission based on the 1 in 10 year adverse weather load assumed in the â€œbase caseâ€, will the judgment of the Transmission Planner be then questioned because theâ€œbase caseâ€ used is equivalent to a sensitivity case and not a 1 in 2 year adverse weather base case?

Yes

We agree with revising P6 to permit loss of Non-Consequential Load to meet performance requirements for Systems above 300kV. However, we are concerned that with the loss of the first N-1 in P6, curtailment of firm transmission service or firm transfers would not be allowed as part of system adjustment in preparation for the next N-1. Allowing curtailment of transmission service or firm transfers for such system adjustments should be added to R3.3.2.2. Otherwise, the power transfer under normal condition (before the first N-1) will have to be significantly curtailed in anticipation for meeting performance requirements after N-1-1, or transmission facilities, which would have otherwise been unnecessary, would have to be built. Either would adversely impact customers. We also have questions on Event P6 in both Performance Tables 1 and 2: We would like some clarification on the overlapping single contingencies as denoted in Event P6 (N-1-1), and one where a single contingency, say Event P1 (N-1), follows a prior "planned" outage of a Facility (N-1). The former would allow the Non-consequential Load Loss, while the latter would prohibit it.

B â€“ Unsure about supporting the revised standard

- We agree that the Standard as presented is clearer, but there are numerous issues that still need resolution, Measures, VSLs, Implementation Plan, etc., before we can give a full approval of this Standard. - There is no mention in the purpose of the Standard about minimizing loss of load for more probable unplanned contingencies. Maybe there needs to be some definition around what is meant by reliability. - We believe that with the loss of the first N-1 in P6, curtailment of firm transmission service or firm transfers should be allowed as part of system adjustment in preparation for the next N-1. This should be added to R3.3.2.2. Otherwise, the power transfer under normal condition (before the first N-1) will have to be significantly curtailed in anticipation for meeting performance requirements after N-1-1. This will unnecessarily impede commerce. Or, to maintain the same firm power transfer under normal conditions, construction of transmission facilities will be required. Either way, this would impose a much stricter standard than exists today resulting in very costly unnecessary system improvements and invalidate terms of many transmission service contracts that allow for implementation of pro-rate curtailments of firm transmission rights during forced and planned outage conditions. - We disagree with the application of the proposed definitions of Consequential Load Loss and Non-Consequential Load Loss in conjunction with â€œraising the barâ€. Local Network load should be included in Consequential Load and the loss should be allowed for single contingencies. The TPL standard is to maintain reliability of the BES. Under certain conditions orderly dropping of local network load could limit the spread of the disturbance beyond the local area and allow BES reliability to be maintained. This would minimize the total amount of load loss and allow for quicker load restoration. The proposed definitions for Consequential Load Loss and Non-consequential Load Loss will provide no reliability benefits for high voltage (>300 kV) transmission backbone system providing wholesale open access service and interconnecting to the rest of the western interconnection. Any potential reliability benefits of any additional facilities built to comply with these definitions would be at the local service level. - As mentioned in comments to Q3 above, some local network customer curtailments or local area load loss has been allowed by local regulatory authorities as long as the overall reliability of the interconnected system was not impacted. This is a result of tradeoffs between providing a higher level of reliability in a local area and the cost and environmental impacts of providing that service. Such tradeoffs are subject to local regulatory authority or contract negotiated between the transmission provider and its transmission customers. Regarding the terms â€œinterruption of firm transmission serviceâ€, there needs be clarification on what Interruption means. Since it is referring to firm transmission service, we would interpret this to mean curtailment needed after a particular contingency and adjustments. There also needs to be clarification on what â€œFirm Transmission Serviceâ€ means. Two points, 1) the NERC definition states â€œhighest quality service offered to customers under a filed rate schedule that anticipates no planned interruption.â€ The Standard implies anticipation of â€œunplannedâ€ interruption for certain contingencies. 2) Is this referring to a transmission product as defined in FERC Order 890, or firm transfers modeled for the conditions being studied? One way to interpret the intent is the firm transfers being modeled for the conditions in the powerflow to meet demand that would result in load not being served if that firm transfer were curtailed. If there is other generation in the system that could increase to meet the load if the transfer being modeled is interrupted, then interruption of firm transmission service should also be allowed for P1 through P5 contingencies in the table. In addition, we believe that DC and AC lines should have the same performance requirements with respect to interuption of firm transmission service. We do not understand why interruption of firm service would be an acceptable response to the loss of a single pole of a DC line (i.e. response to the contingency) but not an acceptable response to prepare for the next contingency of an AC line. The transfers over both AC and DC lines can automatically be curtailed when the line is outaged.

Individual

Carol Sedewitz

National Grid

No

There should be no difference beween System and Generating Unit Stability studies. Each require discretion regarding which events need to be tested. The consequences are potentially similar: either the instability of one of more generators. Extreme Events should be considered for any stability analysis, again, recognizing that discretion needs to be applied when selecting or dismissing particular contingencies. If no distinction is made between System and Generating Unit Stability studies is made, then the definition of Generating Unit Stability Study should be stricken from the standard.

No

a. A MOD standard should be developed to address the assembly of dynamic load models, rather than specifying modeling in paragraph 2.4.1 (dynamic behavior of loads, including consideration of the behavior of induction motor Loads). Paragraph 2.4.1 should instead read, "System Peak

Load for one of the five years." The remainder of the paragraph should be deleted. b. In paragraph R.2.4.3.4, what does "variability" mean? Is variablity more of a concern than an outage? Suggest changing paragraph R.2.4.3.4 to simple say "Outages of Reactive Resources" c. Add a new requirement, "R5.4.3.4 Automatic generator tripping shall not have an significant adverse impact on overall system reliability." d. Remove Heading R5.5 and make generator unit stability for a new facility a section of overall stability requirements. e. Modify R5.5.1 to become R5.4.5, with the following, "Shall be performed for the addition of an individual generating unit or generating units at the same interconnection point 20 MW or greater that are directly connected to the BES." There may be little difference between the stability performance of a single 20 MW unit and an aggregation of units totalling 20 MW at the same BES interconnection point. f. If planning assessment studies all generators or stations above 20 MW, as suggested by R5.5.1, then this provision is unnecessary and R5.5.2 should be deleted. g. If the output of a generatiing station does not change by more than 20MW, then no new study is required and, it should be acceptable to rely on past stability assessments. This is not clear in R5.5.1. h. With respect to section R5 - The concept of planned and long-term outages should be addressed uniformly for the general Planning Assessment. It should not be specific to the Stability Assessment. i. Planned and long-term outages are two fundamentally different concepts and should be treated separately. Planned and Long-Term outages should be defined. Define how planning events in Tables 1 and 2 are associated with each type of outage. Define length of a "Long Term" outage. Planned outages should be addressed in the operating horizion unless otherwise defined in the planning horizion. j. The provisions of Section R.5.3 should be included in a MOD standard and applied to a requirement to provide information regarding all direct and indirect protective and control actions that could result in the inadvertant trip of the generator. Such a provision should include " other equipment (e.g. HVDC, SVC's, Statcoms)", and identify how these devices are treated in the simulation. k. Strike R5.5.3 and R5.5.4, as they become redundant to R5.4.1

No

a. In the Consequential Load Loss definition, the word 'source' needs to be defined or explained further since it is unclear. b. Non-Consequential references non-interruptable load. Non-Interruptible load should be defined. Suggest: "Demand that the end-use customer has not made available to its Load-Serving Entity via contract or agreement for curtailment." c. The Consequential Load definition should specify "Interruptible and Non-Interruptible Load that is no longer connected to a sourceâ€¦" d. The inclusion of "or which is lost as a result of the load's response to the transient conditions of the event (other than through the action of UVLS or UFLS schemes)" confuses the definition of Consequential Load Loss, because of the imbedded exception for steady state performance. It seems that the intent of this provision is to recognize that this type of load loss could occur for either transient or steady state conditions and that Planning Assessments should not be required to remedy this type of situation. However, this does seem to be at odds with the application and stated acceptability of Consequential Load Loss as noted in Table 1. Note: Table 2 has no reference to the treatment of Consequential Load Loss. It may be helpful to address the transient load loss situation in a separate definition. As proposed in the draft, Firm Transmission Service is treated equal to load. In New England and New York, we focus on stressing transfer limits across and within the systems. By so doing, we preserve the internal transfer capabilities by design rather than modeling specific contractual transfers, which may not stress the internal interfaces. The exception is for the inter-Area ties. For inter-Area ties, the import or export capability is comparable to a generating unit, which we believe is acceptable to interrupt. We therefore feel that it should be acceptable to interrupt Firm Transmission Service over inter-Area ties and that Firm Transmission Service shouldn't be treated equally with load. Suggested changes: Change "Consequential Load Loss" to "Consequential Interruption". Change the definition to "Load, Firm Demand, or Firm Transmission Service that is no longer connected ..." Change "Non-Consequential Load Loss" to "Non-Consequential Interruption". Change the definition to "Non-Interruptable Load, Firm Demand, or loss of Firm Transmission Service other than Consequential Interruption that occurs through manual (operator initiated), automatic operations (such as under-voltage load shedding, under-frequency load shedding, or Special Protection Systems), or uncontrolled loss of a local area which does not significantly impact the Bulk Electric System."

No

We do not feel that R3.5.1, R3.5.2 and R3.5.3 are limiting enough. We suggest adding a paragraph which which be numbered 3.5.4 and would read "Manual and automatic generator tripping shall not have a signifficant adverse impact on the system."

No

a. With respect to R9 "including the expected mix of industrial, commercial and residential loads", this provision may be inadequate to be practically useful. The potential issues include the variation in end-use load mix through the daily load cycle, seasonal load composition variations, and the ability to translate these end-uses into reasonable and useful steady-state and dynamic load models. It is important to understand how the information will be used and how much additional detail such as distribution network detail is also required. b. Add to the last sentence of R9 through R14 the following phrase, "within ninety days of a request for such information or as otherwise described in procedures established by the Planning Coordinator." c. Flexibility is

needed to conform with the requirements of the specific Planning Coordinator. Suggest changing R10 to read as follows: R10. Each Transmission Planner shall provide its respective Planning Coordinator with modeling information for Firm Transmission Service data, Interchange Schedules and resources required to supply Load for each of its Balancing Authorities for each year of the Transmission planning horizon, within ninety days of a request for such information or as otherwise described in procedures established by the Planning Coordinator. d. Flexibility is needed to conform with the requirements of the specific Planning Coordinator. Suggest changing R11 to read as follows R11. Each Transmission Owner shall provide its respective Planning Coordinator with modeling information for known planned outages and long-term outages for Transmission equipment for each year of the Transmission planning horizon with consideration given to spare equipment strategy, within ninety days of a request for such information or as otherwise described in procedures established by the Planning Coordinator. e. Flexibility is needed to conform with the requirements of the specific Planning Coordinator. Suggest changing R12 to read as follows: R12. Each Generator Owner shall provide its respective Planning Coordinator with modeling information for known planned outages and long-term outages for generation equipment for each year of the Transmission planning horizon, within ninety days of a request for such information or as otherwise described in procedures established by the Planning Coordinator. f. Flexibility is needed to conform with the requirements of the specific Planning Coordinator. Suggest changing R13 and R14 as follows: R13. Each Resource Planner shall provide its respective Planning Coordinator with the modeling information for new planned facilities for each year of the Transmission planning horizon including but not limited to generators, Reactive Power devices, and new technologies, within ninety days of a request for such information or as otherwise described in procedures established by the Planning Coordinator.. [Violation Risk Factor: TBD] [Time Horizon: TBD] R14. Each Transmission Planner shall provide its respective Planning Coordinator with modeling information for new planned facilities for each year of the Transmission planning horizon including but not limited to Transmission Lines, circuit breakers, Reactive Power devices, Protection System equipment and control devices, and new technologies, within ninety days of a request for such information or as otherwise described in procedures established by the Planning Coordinator. [Violation Risk Factor: TBD] [Time Horizon: TBD] g. Planned and long-term outages are two fundamentally different concepts and should be treated separately. Planned and Long-Term outages should be defined. Define how planning events in Tables 1 and 2 are associated with each type of outage (e.g. P4, P5, or P6). Should there be specific contingency descriptions associated with long-term outages? Define length of a "Long Term" outage. Planned outages should be addressed in the operating horizion unless otherwise defined in the planning horizion.

No

a. R2.3 should be changed to indicate the year(s) for short circuit analysis. b. In R4, suggest replacing, " and following any single Contingency condition that would result in greater circuit breaker interrupting duties" with , " giving due consideration to the potential sequence of equipment operation". c. It should be stated in the standard that assumptions should be based on procedures provided by each Transmission Planner and by the Planning Coordinator.

No

a. In the column "Interruption of Firm Transmission Service Allowed" in both Tables 1 and 2, it is problematic to try to create an "exemption" based on type of facility such as HVDC. There are many other situations in which Firm Transmission Service has been provided, but may need to be curtailed partially or completely following an outage. b. The term 'Firm' may have several different definitions. If 'Firm' Transmission Service or load may be interrupted for exceptional events, then it is conditional and 'Conditional Firm' should be defined. It is recommended that a note be added stating that "the only exception would be for curtailment of conditioned (or Conditional) Firm Transmission Service", recognizing that there may need to be some form of grandfathering in order to avoid having to rewrite transmission service agreements. c. In both Table 1 and Table 2, the "Extreme Event Descriptions" item 1 should add "or shunt device." d. In Table 1, the "Extreme Event Descriptions" items 3a and 3b should be deleted; they are redundant with Item 1. e. In Table 2, Note 5 includes significant clarifications and should not be buried in the bottom of the contingency table; Note 5 would be better placed in the definitions section. f. In Table 1 and Table 2, Contingency P5 requires a fault plus Protection System Failure. Assuming that the battery system is included in the Protection System, which it is in NPCC, then ALL protection at substations with single battery systems would be lost. This Contingency P5 requires a stable system response while all bus voltages and loadings to remain within criteria, without interruption of firm transmission service and without Non-Consequential Load Loss, at system voltages above 300 kV. Was this an intended outcome of this standard?

No

The definition provided is too limiting. It says that if you have a two rings with a bus tie breaker in between, it is no longer a bus tie breaker. We recommend modifying the definition to read, "A circuit breaker that is positioned to connect two individual station configurations. We do not agree that, "(Substation configurations such as ring-bus, breaker-and-a-half, or double bus-double breaker protection schemes do not use bus-tie breakers.)", as we have examples where stations of this nature are connected through a single "bus-tie breaker".

No
They should have the same performance requirements, however we understand that it is better to encourage bus-tie breakers in some applications than to hold them to the higher standard. Future station designs that need this differential treatment should be discouraged.
No
a. With respect to R2.1.3., delete "... that Stress the System with sensitivities ...". b. R2.1.3 should be revised to clarify that if a TP/PC conducts the studies specified in R2.1.1 and R2.1.2 with one or more of the sensitivities which stress the system in the normal course of study, then additional studies of a less-stressed system are not required. c. The intention of Paragraph R2.1.4 is unclear and appears to be unnecessary; therefore, it should be removed.
Yes
The comment period was not long enough to develop a thoughtfull response to the impact that the new standards might have. Therefore costs can be speculated to be incrementally hundreds of thousands per year.
The comment period was not long enough to develop a thoughtfull response to the impact that the new standards might have on the planning studies, but a very rough thought would be that any additional needs would be captured within the normal planning studies, which would likely occur within two study cycles of the effective date of the standard.
If the new requirements are included in the normal study cycle and the costs are the incremental costs required by additional study requirements, then the annual costs will be less than the first year costs, but we still will need additional staffing, which will cost hundreds of thousands per year. In addition to cost, there is a significant concern over whether or not the labor market can provide enough qualified staff to complete the required work.
See response to question 12.
See response to question 12.
The comment period was not long enough to develop a thoughtfull response to the impact that the new standards might have on the construction requirements. Therefore cost can not be reasonably speculated.
At least 5 beyond the study period. Lines requiring new Rights-of-Way may require 10.
B â€“ Unsure about supporting the revised standard
Aside from the comments to the prior questions, there are several issues of concern that prevent us from supporting the present draft of the revised standard. We offer the following constructive comments in an effort to support the worthwhile effort that is being pursued so that we can reach a point of satisfaction that we could vote to support the revised standard. Our concerns are listed in a rough order of priority. a. This standard as drafted does not allow exceptions for small parts of the system as long as interconnected system reliability is maintained, which is allowed in the existing TPL standards in footnotes b) and c) in Table 1. Unless such exceptions are allowed significant transfer restrictions or large reinforcements must be made. The applicable TPL footnotes are: Existing TPL footnote b) Planned or controlled interruption of electric supply to radial customers or some local Network customers, connected to or supplied by the Faulted element or by the affected area, may occur in certain areas without impacting the overall reliability of the interconnected transmission systems. To prepare for the next contingency, system adjustments are permitted, including curtailments of contracted Firm (non-recallable reserved) electric power Transfers. Existing TPL footnote c) Depending on system design and expected system impacts, the controlled interruption of electric supply to customers (load shedding), the planned removal from service of certain generators, and/or the curtailment of contracted Firm (nonrecallable reserved) electric power Transfers may be necessary to maintain the overall reliability of the interconnected transmission systems. b. This standard does not address base conditions. Without defining base conditions the initial status of generation dispatch and transfers across the system is ill defined. Therefore the contingency analysis doesn't have a predictable basis for a consistent and repeatable study. c. The reference to Special Protection Systems is completely permissive. Although there are good applications for Special Protection Systems, their use must be constrained to have a reliable system and to promote construction of needed infrastructure. d. This standard does not provide flexibility to shed load, which restricts the ability to control post contingency response for low impact events. This may result in advancing need for upgrades in response to low impact events. This is in conflict with FERC's directive to have the Trnamsission Provider waiting for market repsonse to transmission needs and having the Transmission Provider provide a role to back stop the market. e. Definition of the Long-Term Planning Horizion. The planning horizon, for assessment purposes should be limited to 10 years. Such an assessment should be sufficient to identify requirements that may take an extended time to implement. f. Definition of Planning Coordinator is part of the NERC Functional Model, Remove from Standard. g. Put headings on each section to identify requirements of section. h. With respect to R2.2 - Delete "current" from the phrase"current System Peak Load study" and replace "study" with "assessment." i. Remove R2.2.1, the requirement to extend the assessment beyond 10 years. What does the length of the project have to do with the

assessment? If it takes 15 years to build something, why does this require a review of year 15? What is the purpose of this assessment? j. R3.3.2 requires clarification - This standard needs to permit discretion regarding the single contingencies that need to be tested, similar to R 3.3.3 and R3.4. It is completely unnecessary to test all events. For example, contingencies may be limited to relevant disturbances that are contained within or directly impact the studied system. k. With respect to R3.2.1 - Clarify whether the intent of the standard is to address station service minimum voltage limitation, maximum leading VAR absorption capability or both at steady state. l. Remove R3.2.2 - Relay loadability is addressed in PRC-023 standard. m. With respect to R3.3.2.1 - Recommend the removal of the requirement to assess the expected duration of Consequential Load loss. It's not considered anywhere else in the standard. n. With respect to R3.3.3 - The paragraph refers to Table 1 Contingencies P3 through P7; this should be explicitly stated. Rationale for inclusion of testing should not be required; should only need to explain why certain Contingencies were not tested. This discretion should be applicable to all contingencies. o. With respect to section R5 - The concept of planned and long-term outages should apply to the general Planning Assessment, or not at all. It should not be specific to the Stability Assessment. p. The provisions of Section R.5.3 should have a corresponding MOD standard apply a requirement to provide information regarding all direct and indirect protective and control actions that could result in the inadvertant trip of the generator. Such a provision should include "other equipment (e.g. HVDC, SVC's, Statcoms)", and identify how these devices are treated in the simulation. q. Planned outages should be addressed in the operating horizion unless otherwise defined in the planning horizion. r. What is a "current" study?
Individual
Scott Helyer
Tenaska, Inc.
Yes
Yes
Yes
Yes
R.3.3.2.2 needs some re-wording to clarify that generator runback (re-dispatch) and tripping are allowed.
Yes
Yes
Yes and No
Should add a column to the tables indicated when automatic generation runback/tripping is allowed.
Yes
Yes and No
Voltage is a questionable criteria for determining whether a breaker's performance requirements should be different. May want to consider a lower voltage cutoff (below 100 or below 200) as lower performance MAY have less of an impact.
Yes
Yes
A â€“ Generally support the revised standard
A few issues that may need some thought include: Are reactive power devices a responsibility of Resource Planners in R13? On the Extreme Events description for local area, what is a load center? Does the loss of a large body of water as a cooling source result in the immediate loss of generation such that it is a contingency which affects steady state, stability, or short circuit

studies?
Individual
Matthew J Muldoon
OPUC
Yes and No
We cannot evaluate the need to distinguish generating unit stability and system stability without greater explanation inclusive of examples. We also need clarification of the intended interactions of this proposed standard with of FAC-001 and 2 to avoid duplication of efforts. Finally, if FAC-001 will cover generating unit or interconnection stability R 2.5 should clearly address existing older generators.
Yes and No
The concept of Consequential Load Loss is generally acceptable. However, the presentation, notes and cross referencing need to be adjusted to avoid confusion.
Yes
Yes
R9 â€“ 14 can be addressed in the MOD standards.
Yes and No
What constitutes a â€œnormal conditionâ€ still needs further clarity.
Yes and No
A better definition of Bus-Tie Breaker might be: â€œA circuit breaker that divides a bus section with multiple tap off points into two bus sections.â€
Yes
Individual
Chifong Thomas
Pacific Gas and Electric Co.
No
We believe that there is no significant distinction between Generating Unit Stability and System Stability other than the objective and focus of the study. Therefore, we cannot accept a simple statement from the SDT that it believes it is important to maintain this distinction without more explanation. If a distinction is maintained, then Generating Unit Stability Study should be and is already covered in FAC-001-0 and FAC-002-0. As defined, Generating Unit Stability Study â€œfocuses on an individual generating unit's or electrically closely-coupled generating units' Stability for various Contingencies on the Transmission Facilities connected to that generating unit(s) point(s) of interconnection or one bus away from that point. However, the Purpose of the proposed TPL-001-1 is to â€œdevelop a Bulk Electric System that will operate reliably over a broad spectrum of System conditions and following a wide range of probable Contingenciesâ€. If a Generating Unit becomes unstable, the unit can be disconnected from the BES without impacting system stability. Therefore, we believe that the Generating Unit Stability Studies portion is attempting to introduce interconnection stability studies into the TPL standards. Interconnection stability studies are adequately addressed by FAC-001 and does not need to be specifically called out in TPL-001-1. In addition, Generating unit stability studies are typically performed at the time of interconnection. Even though Generating Unit Stability Studies have been done as new generating unit(s) were interconnected or at the time changes occurred, such studies have not been done for the entire fleet of Generating Units at the same time. For very old units, stability study documentation may no longer exist, even though no potential stability problems have been identified when stability studies were run for interconnecting other newer units or for the System. If the requirement for Generating Unit Stability Study is retained in this proposed TPL-001-1, R2.5 needs to be clarified to say â€œonly whenâ€ the changes in R2.5.1

and R2.5.2 are made that the Generating Unit Stability Study needs to be done. There also needs to be language about how to treat generators that are existing prior to this Standard taking effect. We would also appreciate if the SDT would more clearly define with examples the terms in R2.5.2, â€œmaterial Transmission System changeâ€ and â€œat or near the point of Interconnectionâ€ to invoke a study.

Yes and No

R2.4 is acceptable. Please consider deleting the conditions identified in R5.4.3.1, R5.4.3.2, and R5.4.3.3. We question the need to specifically call out these requirement in subrequirements of R5.4.3. We believe these conditions should be met for any and all requirements of the standard. It should not be necessary to list acceptable practices, especially if the conditions placed on the practice are general conditions that are addressed elsewhere or are generic. Otherwise, R5.4 is acceptable. ï€ We generally agree that Transmission Owners with extensive Transmission Planning Function and Planning Coordinators need to perform and be held accountable for the Requirements in R2.4 and R5.4; however, the SDT needs to define an organization size level below which these requirements for the associated Transmission Planner may be slightly relaxed. There are numerous Transmission Planners; (e.g., those associated with PUDs, Municipals or REA, etc. where historically dynamic stability has not been a problem), for which performing these type of studies and assessments would be onerous and would not yield reliability benefits for the network. ï€ The proposed requirements in R2.5 and R5.5 are already covered in FAC-001 and FAC-002 and should not be included again in the proposed TPL-001-1. Otherwise, the NERC standards would have redundant requirements. In addition, Transmission Ownerâ€™s open access tariffs requires Generator Owners to apply for interconnection to its transmission system or to make modifications to their generators as described in R2.5.1, R5.5.1, and R5.5.2. It is therefore the Generator Ownerâ€™s responsibility to cause these studies to be done at the time of interconnection or modification, yet R5 seems to place that responsibility only on the Transmission Planner and the Planning Coordinator. The Transmission Planner or the Planning Coordinator would not know of the changes until notified by the Generator Owner. If the SDT believes that FAC-001 is deficient, it should propose revisions to this standard, not simply add to TPL. Requirement R5.5.2 needs to be clarified to state changes or additions to the generating unit that result in an increase in power output. Otherwise, it could be interpreted to apply to existing units with a change in dispatch.

No

We generally agree with the definitions by themselves but have concerns about potential unintended consequences. This definition will severely limit the loads that can be classified as â€œlocal Network customers, connected to or supplied by the Faulted element or by the affected area, may occur in certain areas without impacting the overall reliability of the interconnected transmission systemsâ€ in footnote b of the existing TPL standards. In combination with raising the bar for loss of Facilities with operating voltages 300 kV or higher (P2, P4 and P5 in the Performance Tables), this definition may result in encouraging entities to connect more loads in a radial fashion or avoid loop connection to improve service reliability just to fit in the Consequential Load Loss definition, â€œâ€¦load no longer being connected to a sourceâ€¦â€. As a result, service reliability to customer would be adversity impacted without commensurate improvement in overall system reliability. In addition, existing design of many such local networks would normally require RAS/SPS to disconnect loads on local networks in response to contingencies. However, the definition of Non-Consequential Load Loss states that using RAS/SPS is Non-Consequential Load Loss. In the Consideration of Comments on the First Draft of TPL-001-1, page 49, response to First Energy, the SDT states "FERC has determined that any Load loss that is not directly connected to the faulted element is actually Non-Consequential Load loss." We found a similar response to WECC on page 449, item 6. While we do not disagree with the statements made by the SDT, that FERC wants clarification of what is Consequential Load Loss, we do not see where FERC has ruled out the use of RAS/SPS for Consequential Load Loss. Consequential Load Loss needs to include the concept of local networks. Another way to address this would be to exempt some local networks in the definition of the Bulk Electric System. The performance of existing systems has been designed to be consistent with the concepts of the quoted sentence above from footnote b of Table 1 of the existing TPL standards. There are many instances where some local network customer curtailments or local area load loss has been allowed by local regulatory authorities as long as the overall reliability of the interconnected system was not impacted. This is a result of tradeoffs with the cost and environmental impacts of providing a higher level of reliability in a local area. An attempt to eliminate the concepts contained in footnote b of the existing TPL standards would invalidate local regulatory decisions, place a large unintended cost burden on existing customers and could potentially create criteria that could not be met anytime soon, if ever, as a result of the long lead time required for system improvements. Any attempt to raise the bar by interpreting the definition of Non-Consequential Load as eliminating the concepts of footnote b is considered unacceptable. The new criteria need to clearly maintain these concepts to prevent a large disconnect with existing design criteria. The last sentence in the Definition of Consequential Load Loss (â€œAlthough Load which is lost as a result of the Loadâ€™s response to the transient conditions of the event is considered Consequential Load Loss and is permitted when Consequential Load Loss is allowed, Transmission

planning entities are not allowed to rely upon the expectation of such Load loss to meet steady state performance requirementsâ€) seems more appropriate to be requirements. Therefore, please move this sentence to the Notes Section at the beginning of Table 1 as new Item 7.

Yes

We agree. However, the conditions listed in R3.5.1, R3.5.2 and R3.5.3 are applicable to the overall TPL Standard. Their specific listing in R3.5 gives the impression that these Requirements are only applied to R3.5 and not to the other Requirements in this Standard. In other words, are there any Requirements in this Standard that R3.5.1, R3.5.2 and R3.5.3 do not apply to? Therefore, we suggest TPL-001-1 be silent on this issue and move R3.5.1 through R3.5.3, (and the equivalent in the stability study R5.4.3.1 through R5.4.3.3) to a Requirement applicable to Assessment studies in general, such as the bullet points in the Performance Tables.

Yes

While we agree with separating R1 to form R9 through R14, we believe that R9 (modeling information for real and reactive load forecast data) should be applicable to Load Serving Entities (LSE) instead of (or in additional to) the Distribution Provider. In any case, this type of exchange of load information is already covered in MOD Standard or in the respective tariffs, and should not be included again in the proposed TPL-001-1 Standard.

Yes and No

We agree with R2.3. However, R4 requires assessment of â€œShort-circuit capability of its equipment under normal conditions and following any single Contingency condition that would result in greater circuit breaker interrupting dutiesâ€. Since short circuit studies are typically performed by applying a fault on a Facility starting from a normal condition, there can be confusion whether the result would constitute â€œnormalâ€ condition or â€œfollowing any single Contingency conditionâ€. Also, by specifying the normal and single contingency conditions, R4 is straying into â€œhowâ€ to perform a study, which is not necessary in a standard. We suggest deleting the reference to the contingencies to be used in the study.

Yes and No

We do not disagree with the proposed format changes of the Tables. However, we are not sure if separating into two Tables is necessary, or beneficial. It seems like an extra column for event could be added and some changes to the notes would greatly simplify the table. Some of the rows could also be combined; one such example is P2-2 (Loss of Bus Section) and P2-3 (Internal Breaker Fault, non-bus-tie). Will the SDT plan on combining some similar rows? Table 1, P4 and P5 refer to "Faults" as part of the contingency. This is steady state performance and faults are not modeled in steady state. Table 1, P2.1 refers to a "single ended line". Technically, this means we need to generate a "false" bus at each end of the line to evaluate this condition or use a dispatcher power flow which included breaker modeling. Is this an accurate interpretation of the intent of this requirement? We believe there should be no distinction between the voltage classes and support the use of load shed for all cases identified in P4 through P7.

No

We do not disagree with the proposed definition change. However, we do not agree that â€œSubstation configurations such as ring-bus, breaker-and-a-half, or double bus-double breaker protection schemes do not use bus-tie breakers. Some breaker-and-a-half and double-breaker layouts may have bus breakers located mid-way in the side elements. We propose the following definition: A circuit breaker that divides a bus section with multiple tap off points into two bus sections.

Yes and No

We interpret â€œexit breakersâ€ to mean a breaker on an element that comes in from outside the substation. We agree with applying less stringent performance requirements to bus tie breakers above 300 kV. Further, we believe that Non-Consequential Load Loss should be allowed for loss of either Bus-Tie or Non-Bus-Tie Breakers regardless of voltage class. The SDT has not presented evidence that the probabilities of failure for breakers within the same substation are significantly different for different voltage classes

Yes and No

We generally agree with the concept of the sensitivity analysis since this is standard practice in understanding system performance risks and the effectiveness of improvements. It is ambiguous from a criteria perspective, however, what role is played by the sensitivities in developing Corrective Action Plans and what risks are created by misapplication of the intent of such sensitivity analyses. Clarification of the following is needed along with examples of applicable sensitivities and how these would be factored into Corrective Action Plans. If a Transmission Planner performs studies on the â€œbase caseâ€ of which the loads represented are 1 in 10 year adverse weather condition (10% chance that the actual load may exceed the projected load), does this constitute a sensitivity analysis. If so, will the Transmission Planner have to then perform additional less stringent studies at the load levels representing 1 in 2 year adverse weather conditions (50% chance that the actual load may exceed the projected load) to demonstrate compliance? R2.1.4 requires explanation of performing additional sensitivities that are not listed in the R2.1.3. This would discourage entities from performing additional

sensitivities. In addition, in the above example, the Transmission Planners should not have to explain why they feel that this higher level (1 in 10 year adverse weather) of load is the â€œbase caseâ€ condition. R2.7 also states that â€œCorrective Action Plans do not need to be developed solely to meet the performance requirements for sensitivitiesâ€. Consider a Transmission Planner that has built transmission based on the 1 in 10 year adverse weather load assumed in the â€œbase caseâ€, will the judgment of the Transmission Planner be then questioned because theâ€œbase caseâ€ used is equivalent to a sensitivity case and not a 1 in 2 year adverse weather base case?

Yes

We agree with revising P6 to permit loss of Non-Consequential Load to meet performance requirements for Systems above 300kV. However, we are concerned that with the loss of the first N-1 in P6, curtailment of firm transmission service or firm transfers would not be allowed as part of system adjustment in preparation for the next N-1. Allowing curtailment of transmission service or firm transfers for such system adjustments should be added to R3.3.2.2. Otherwise, the power transfer under normal condition (before the first N-1) will have to be significantly curtailed in anticipation for meeting performance requirements after N-1-1, or transmission facilities, which would have otherwise been unnecessary, would have to be built. Either would adversely impact customers. We also have questions on Event P6 in both Performance Tables 1 and 2: We would like some clarification on the overlapping single contingencies as denoted in Event P6 (N-1-1), and one where a single contingency, say Event P1 (N-1), follows a prior "planned" outage of a Facility (N-1). The former would allow the Non-consequential Load Loss, while the latter would prohibit it.

We expect supplemental studies to be needed for the entire 500 kV system and most of the 230 kV system. We estimate the one time cost for supllemental studies to be around $100,000.

Assuming that the supplemental studies would be added to the on-going work, we estimate the time to complete the supplemental studies to be about 2 to 3 years.

We estimate that the additional cost for the expanded studies and analysis would be about $50,000/year.

This cost would be included in the cost of performing the supplemental studies.

This cost would be included in the cost of preforming the expanded studies and analysis

The capital investments would be dependent on the system reinforcements needed due to the added requirements. For example, if after the first contingency, redispatch to curtail firm transfers is not allowed in anticipation of the next single contingency, the system reinforcements could easily include more 500 kV lines and related facilities. The costs of such reinforcements could be a few Billion dollars.

Any transmission facilities that would require a certification of public convenience and necessity could take more that five years for permitting, engineering and construction. Transmission Planning could take a few more years depending on the transmission reinforcements to be constructed.

B â€“ Unsure about supporting the revised standard

We agree that the Standard as presented is clearer, but there are numerous issues that still need resolution, Measures, VSLs, Implementation Plan, etc., before WECC can give a full approval of this Standard. ï€ There is no mention in the purpose of the Standard about minimizing loss of load for more probable unplanned contingencies. Maybe there needs to be some definition around what is meant by reliability. ï€ We believe that with the loss of the first N-1 in P6, curtailment of firm transmission service or firm transfers should be allowed as part of system adjustment in preparation for the next N-1. This should be added to R3.3.2.2. Otherwise, the power transfer under normal condition (before the first N-1) will have to be significantly curtailed in anticipation for meeting performance requirements after N-1-1. This will unnecessarily impede commerce. Or, to maintain the same firm power transfer under normal conditions, construction of transmission facilities will be required. Either way, this would impose a much stricter standard than exists today resulting in very costly unnecessary system improvements and invalidate terms of many transmission service contracts that allow for implementation of pro-rate curtailments of firm transmission rights during forced and planned outage conditions. ï€ We disagree with the application of the proposed definitions of Consequential Load Loss and Non-Consequential Load Loss in conjunction with â€œraising the barâ€. Local Network load should be included in Consequential Load and the loss should be allowed for single contingencies. The TPL standard is to maintain reliability of the BES. Under certain conditions orderly dropping of local network load could limit the spread of the disturbance beyond the local area and allow BES reliability to be maintained. This would minimize the total amount of load loss and allow for quicker load restoration. The proposed definitions for Consequential Load Loss and Non-consequential Load Loss will provide no reliability benefits for high voltage (>300 kV) transmission backbone system providing wholesale open access service and interconnecting to the rest of the western interconnection. Any potential reliability benefits of any additional facilities built to comply with these definitions would be at the local service level. ï€ As mention in comments to Q3 above, some local network customer curtailments or local area load loss has been allowed by local regulatory authorities as long as the overall reliability of the

interconnected system was not impacted. This is a result of tradeoffs between providing a higher level of reliability in a local area and the cost and environmental impacts of providing that service. Such tradeoffs are subject to local regulatory authority or contract negotiated between the transmission provider and its transmission customers. Regarding the terms â€œinterruption of firm transmission serviceâ€, there needs be clarification on what Interruption means. Since it is referring to firm transmission service, we would interpret this to mean curtailment needed after a particular contingency and adjustments. There also needs to be clarification on what â€œFirm Transmission Serviceâ€ means. Two points, 1) the NERC definition states â€œhighest quality service offered to customers under a filed rate schedule that anticipates no planned interruption.â€ The Standard implies anticipation of â€œunplannedâ€ interruption for certain contingencies. 2) Is this referring to a transmission product as defined in FERC Order 890, or firm transfers modeled for the conditions being studied? One way to interpret the intent is the firm transfers being modeled for the conditions in the powerflow to meet demand that would result in load not being served if that firm transfer were curtailed. If there is other generation in the system that could increase to meet the load if the transfer being modeled is interrupted, then interruption of firm transmission service should also be allowed for P1 through P5 contingencies in the table. In addition, we believe that DC and AC lines should have the same performance requirements with respect to interuption of firm transmission service. We do not understand why interruption of firm service would be an acceptable response to the loss of a single pole of a DC line (i.e. response to the contingency) but not an acceptable response to prepare for the next contingency of an AC line. The transfers over both AC and DC lines can automatically be curtailed when the line is outaged.

Individual

Earl Fair

Gainesville Regional Utilities

No

Our small system does not have the present resources to deal with the large increase in stability type studies that this section seems to be requesting. Our system changes very little if at all from year to year. The ranking of the regional facilities where priority is given for stability study to the top 100 fault current buses shows that we do not have even a bus listed until position 611. We suggest that R2.4.1 should allow for only doing buses that have a ranking impact on the regional BES or no more that every 7 years for those systems without changes or are so small that their total separation or lost of their largest or almost total generation is not an issue for the RC. Stability should not have to be analyized annually for small, unchanging systems.

Yes and No

For smaller systems, please see Comment 1. As far as R.2.4.1, if the various loads are basic and not a large industrial type load (very large motors with across the line starting, electric arc furnances, etc.)then the dynamic behavior of the load should not require special consideration. Using proper power factors for the load should be enough for the transmission system evaluation. Under 2.4.3, as mentioned in Comment 1, evaluating the stressing of the smaller systems through a large amount of sensitivities does not add any reliability to the BES. It only adds much addition work to a limited resource entity. If the neighboring large systems agree that the smaller system can not impact them, this should support that the BES is not effected by any sensitivity that could exist on the smaller system. For R5.5, a threshold should be set to consider only the larger size units within the region. For a smaller system, the stability of a 50-100 MW unit probably would not perturb the interconnected regional BES's.

Yes

No

R3.5.3 is somewhat ambiguous. We need clarification as to whether the system needs to prepare for the next contingency (a secure state) or whether it needs to be maintained in a stable operating condition which is sustainable but not secure.

Yes and No

I agree with the approach you are taking concerning this modeling data. I understand that "long term outages" for transmission and generation elements refer to a time frame greater that one year. But I am unclear if the "known planned outage" refers to the same time frame or does it apply to a normal scheduled maintenance type outage of less that one year. Are these "shorter that one year" outages better handled by sensitivity studies since they are normally during an non-peak seasons of the year? Again, the smaller utilities should provide all the requested data to the RRO, but should only have to answer to issues involving their elements discovered at the RRO level.

Yes and No

With a small system like ours, I would like to see a provision where if you do not have any changes in our local portion of the BES, then the previous studies would support my assessment.

No

Some of the notes at the top of each table could be considered to apply to some of the events within the table that conflict in part with the standard and with what was stated in the nation wide phone conference. I would also like to see a note in the tables that reflect a technical rationale for the range of elements considered, since some may be impractical and of no technical value for contingencies involving certain facilities especially those on the smaller systems within the interconnected region.
Yes
Yes
Our control area operates at 138 kV. Does everyone think that holding the owners of above 300 kV operating voltage systems to a higher standard really increases the total BES reliability? Does giving the DC systems a pass on some of the requirements really make sense in the world of reliability?
No
If the RRO or the larger neighboring utilities agree, See Comment 1, it should be unnecessary for the smaller utility to performance any senstivities except for those agreed to and performed by the RRO level. If the smaller utility has any of their elements that create issues in these regionally conducted sensitivities, then they could be accoutable for providing potential remedies (most senstivities do not necessarily require a remedy or project, per say). The variety of sensitivities suggested to be performed for a smaller utility probably will not add any reliability to the regional BES while the effort will take up a very large amount of the smaller utilities' manpower resources.
Yes and No
I believe some clarification is needed to specify that you can or can not curtail firm transmission service prior to the next event, because as written it could lead to compliance audit issues. I don't believe the intend of order 693 was to cause a need for utilities to be exposed to large cost increases for their customers while very little to no improvement in reliability is provided as it deals with very low probability conditions which would yield no increase in transfer capability.
$50,000. I don't feel this is needed for smaller utilities.
3 years. Again, I don't feel this is needed for smaller utilities.
$60,000. Again, I don't feel this is needed for smaller utilities.
Probably would be covered in the previously provided annual cost. Again, I don't feel this is needed for smaller utilities.
Probably would be covered in the previously provided annual cost. Again, I don't feel this is needed for smaller utilities.
$50 Million. Again, I don't feel this is needed for smaller utilities.
7 years. Again, I don't feel this is needed for smaller utilities.
C â€“ Definitely do not support the revised standard
First, a starting point for the study process (base case) needs to be better defined even if the intent was to allow the TP's & PC's to make the decision. The standard should describe the rules to properly conduct a base case study within each region. This should support any following analysis studies and their finding since you will be starting from the same set of system elements operating at a base condition. Secondly, this standard should focus on what is best for the customer considering 1) the probability of the contingency events, 2) the potential expense to the customer for practically NO improvement in BES reliability, and 3)the extraordinary added burden on the smaller utilities to run additional, no added value studies with documentation to meet an exhausted detailed audit with the potential for penalties probabaly not proportioned to the utilities revenue stream.
Individual
Karl Bryan
US Army Corsp of Engineers, Northwestern Division
Yes
Yes
Yes
Yes
Yes and No
R12 requires the GO to provide "modeling information" for planned outages and/or changes to the generator owner facilities to the Planning Coordinator for each year of the Transmission planning horizon. You need to be more specific with what type of "modeling information" you are

requesting from the GO. The GO may have the model parameters for their equipment but this doesn't mean that they have expertise necessary to model system responses or even run a model simulation. So if you are expecting the GO to perform model simulations for each year of the Transmission planning horizon the GO may not have the expertise necessary to comply. Recommend you clarify what you mean by "modeling information".

Individual

Tom Duane

Public Service Company of New Mexico

No

We believe that there is no significant distinction between Generating Unit Stability and System Stability other than the objective and focus of the study. Therefore, we cannot accept a simple statement from the SDT that it believes it is important to maintain this distinction without more explanation. If a distinction is maintained, then Generating Unit Stability Study should be and is already covered in FAC-001-0 and FAC-002-0. As defined, Generating Unit Stability Study â€œfocuses on an individual generating unit's or electrically closely-coupled generating units' Stability for various Contingencies on the Transmission Facilities connected to that generating unit(s) point(s) of interconnection or one bus away from that point. However, the Purpose of the proposed TPL-001-1 is to â€œdevelop a Bulk Electric System that will operate reliably over a broad spectrum of System conditions and following a wide range of probable Contingenciesâ€. If a Generating Unit becomes unstable, the unit can be disconnected from the BES without impacting system stability. Therefore, we believe that the Generating Unit Stability Studies portion is attempting to introduce interconnection stability studies into the TPL standards. Interconnection stability studies are adequately addressed by FAC-001 and does not need to be specifically called out in TPL-001-1. In addition, Generating unit stability studies are typically performed at the time of interconnection. Even though Generating Unit Stability Studies have been done as new generating unit(s) were interconnected or at the time changes occurred, such studies have not been done for the entire fleet of Generating Units at the same time. For very old units, stability study documentation may no longer exist, even though no potential stability problems have been identified when stability studies were run for interconnecting other newer units or for the System. If the requirement for Generating Unit Stability Study is retained in this proposed TPL-001-1, R2.5 needs to be clarified to say â€œonly whenâ€ the changes in R2.5.1 and R2.5.2 are made that the Generating Unit Stability Study needs to be done. There also needs to be language about how to treat generators that are existing prior to this Standard taking effect. We would also appreciate if the SDT would more clearly define with examples the terms in R2.5.2, â€œmaterial Transmission System changeâ€ and â€œat or near the point of Interconnectionâ€ to invoke a study.

Yes and No

R2.4 is acceptable. Please consider deleting the conditions identified in R5.4.3.1, R5.4.3.2, and R5.4.3.3. We question the need to specifically call out these requirement in subrequirements of R5.4.3. We believe these conditions should be met for any and all requirements of the standard. It should not be necessary to list acceptable practices, especially if the conditions placed on the practice are general conditions that are addressed elsewhere or are generic. Otherwise, R5.4 is acceptable. ï€ We generally agree that Transmission Owners with extensive Transmission Planning Function and Planning Coordinators need to perform and be held accountable for the Requirements in R2.4 and R5.4; however, the SDT needs to define an organization size level below which these requirements for the associated Transmission Planner may be slightly relaxed. There are numerous Transmission Planners; (e.g., those associated with PUDs, Municipals or REA, etc. where historically dynamic stability has not been a problem), for which performing these type of studies and assessments would be onerous and would not yield reliability benefits for the network. ï€ The proposed requirements in R2.5 and R5.5 are already covered in FAC-001 and FAC-002 and should not be included again in the proposed TPL-001-1. Otherwise, the NERC

standards would have redundant requirements. In addition, Transmission Ownerâ€™s open access tariffs requires Generator Owners to apply for interconnection to its transmission system or to make modifications to their generators as described in R2.5.1, R5.5.1, and R5.5.2. It is therefore the Generator Ownerâ€™s responsibility to cause these studies to be done at the time of interconnection or modification, yet R5 seems to place that responsibility only on the Transmission Planner and the Planning Coordinator. The Transmission Planner or the Planning Coordinator would not know of the changes until notified by the Generator Owner. If the SDT believes that FAC-001 is deficient, it should propose revisions to this standard, not simply add to TPL. Requirement R5.5.2 needs to be clarified to state changes or additions to the generating unit that result in an increase in power output. Otherwise, it could be interpreted to apply to existing units with a change in dispatch.

Yes and No

We generally agree with the definitions by themselves but have concerns about potential unintended consequences. This definition will severely limit the loads that can be classified as â€œlocal Network customers, connected to or supplied by the Faulted element or by the affected area, may occur in certain areas without impacting the overall reliability of the interconnected transmission systemsâ€ in footnote b of the existing TPL standards. In combination with raising the bar for loss of Facilities with operating voltages 300 kV or higher (P2, P4 and P5 in the Performance Tables), this definition may result in encouraging entities to connect more loads in a radial fashion or avoid loop connection to improve service reliability just to fit in the Consequential Load Loss definition, â€œâ€¦load no longer being connected to a sourceâ€¦â€. As a result, service reliability to customer would be adversity impacted without commensurate improvement in overall system reliability. In addition, existing design of many such local networks would normally require RAS/SPS to disconnect loads on local networks in response to contingencies. However, the definition of Non-Consequential Load Loss states that using RAS/SPS is Non-Consequential Load Loss. In the Consideration of Comments on the First Draft of TPL-001-1, page 49, response to First Energy, the SDT states "FERC has determined that any Load loss that is not directly connected to the faulted element is actually Non-Consequential Load loss." We found a similar response to WECC on page 449, item 6. While we do not disagree with the statements made by the SDT, that FERC wants clarification of what is Consequential Load Loss, we do not see where FERC has ruled out the use of RAS/SPS for Consequential Load Loss. Consequential Load Loss needs to include the concept of local networks. Another way to address this would be to exempt some local networks in the definition of the Bulk Electric System. The performance of existing systems has been designed to be consistent with the concepts of the quoted sentence above from footnote b of Table 1 of the existing TPL standards. There are many instances where some local network customer curtailments or local area load loss has been allowed by local regulatory authorities as long as the overall reliability of the interconnected system was not impacted. This is a result of tradeoffs with the cost and environmental impacts of providing a higher level of reliability in a local area. An attempt to eliminate the concepts contained in footnote b of the existing TPL standards would invalidate local regulatory decisions, place a large unintended cost burden on existing customers and could potentially create criteria that could not be met anytime soon, if ever, as a result of the long lead time required for system improvements. Any attempt to raise the bar by interpreting the definition of Non-Consequential Load as eliminating the concepts of footnote b is considered unacceptable. The new criteria need to clearly maintain these concepts to prevent a large disconnect with existing design criteria. The last sentence in the Definition of Consequential Load Loss (â€œAlthough Load which is lost as a result of the Loadâ€™s response to the transient conditions of the event is considered Consequential Load Loss and is permitted when Consequential Load Loss is allowed, Transmission planning entities are not allowed to rely upon the expectation of such Load loss to meet steady state performance requirementsâ€) seems more appropriate to be requirements. Therefore, please move this sentence to the Notes Section at the beginning of Table 1 as new Item 7.

Yes

We agree. However, the conditions listed in R3.5.1, R3.5.2 and R3.5.3 are applicable to the overall TPL Standard. Their specific listing in R3.5 gives the impression that these Requirements are only applied to R3.5 and not to the other Requirements in this Standard. In other words, are there any Requirements in this Standard that R3.5.1, R3.5.2 and R3.5.3 do not apply to? Therefore, we suggest TPL-001-1 be silent on this issue and move R3.5.1 through R3.5.3, (and the equivalent in the stability study R5.4.3.1 through R5.4.3.3) to a Requirement applicable to Assessment studies in general, such as the bullet points in the Performance Tables.

Yes

While we agree with separating R1 to form R9 through R14, we believe that R9 (modeling information for real and reactive load forecast data) should be applicable to Load Serving Entities (LSE) instead of (or in additional to) the Distribution Provider. In any case, this type of exchange of load information is already covered in MOD Standard or in the respective tariffs, and should not be included again in the proposed TPL-001-1 Standard.

Yes and No

We agree with R2.3. However, R4 requires assessment of â€œShort-circuit capability of its

equipment under normal conditions and following any single Contingency condition that would result in greater circuit breaker interrupting dutiesâ€. Since short circuit studies are typically performed by applying a fault on a Facility starting from a normal condition, there can be confusion whether the result would constitute â€œnormalâ€ condition or â€œfollowing any single Contingency conditionâ€. Also, by specifying the normal and single contingency conditions, R4 is straying into â€œhowâ€ to perform a study, which is not necessary in a standard. We suggest deleting the reference to the contingencies to be used in the study.

Yes and No

We do not disagree with the proposed format changes of the Tables. However, we are not sure if separating into two Tables is necessary, or beneficial. It seems like an extra column for event could be added and some changes to the notes would greatly simplify the table. Some of the rows could also be combined; one such example is P2-2 (Loss of Bus Section) and P2-3 (Internal Breaker Fault, non-bus-tie). Will the SDT plan on combining some similar rows? Table 1, P4 and P5 refer to "Faults" as part of the contingency. This is steady state performance and faults are not modeled in steady state. Table 1, P2.1 refers to a "single ended line". Technically, this means we need to generate a "false" bus at each end of the line to evaluate this condition or use a dispatcher power flow which included breaker modeling. Is this an accurate interpretation of the intent of this requirement? We believe there should be no distinction between the voltage classes and support the use of load shed for all cases identified in P4 through P7.

No

We do not disagree with the proposed definition change. However, we do not agree that â€œSubstation configurations such as ring-bus, breaker-and-a-half, or double bus-double breaker protection schemes do not use bus-tie breakers. Some breaker-and-a-half and double-breaker layouts may have bus breakers located mid-way in the side elements. We propose the following definition: A circuit breaker that divides a bus section with multiple tap off points into two bus sections.

Yes and No

We interpret â€œexit breakersâ€ to mean a breaker on an element that comes in from outside the substation. We agree with applying less stringent performance requirements to bus tie breakers above 300 kV. Further, we believe that Non-Consequential Load Loss should be allowed for loss of either Bus-Tie or Non-Bus-Tie Breakers regardless of voltage class. The SDT has not presented evidence that the probabilities of failure for breakers within the same substation are significantly different for different voltage classes.

Yes and No

We generally agree with the concept of the sensitivity analysis since this is standard practice in understanding system performance risks and the effectiveness of improvements. It is ambiguous from a criteria perspective, however, what role is played by the sensitivities in developing Corrective Action Plans and what risks are created by misapplication of the intent of such sensitivity analyses. Clarification of the following is needed along with examples of applicable sensitivities and how these would be factored into Corrective Action Plans. If a Transmission Planner performs studies on the â€œbase caseâ€ of which the loads represented are 1 in 10 year adverse weather condition (10% chance that the actual load may exceed the projected load), does this constitute a sensitivity analysis. If so, will the Transmission Planner have to then perform additional less stringent studies at the load levels representing 1 in 2 year adverse weather conditions (50% chance that the actual load may exceed the projected load) to demonstrate compliance? R2.1.4 requires explanation of performing additional sensitivities that are not listed in the R2.1.3. This would discourage entities from performing additional sensitivities. In addition, in the above example, the Transmission Planners should not have to explain why they feel that this higher level (1 in 10 year adverse weather) of load is the â€œbase caseâ€ condition. R2.7 also states that â€œCorrective Action Plans do not need to be developed solely to meet the performance requirements for sensitivitiesâ€. Consider a Transmission Planner that has built transmission based on the 1 in 10 year adverse weather load assumed in the â€œbase caseâ€, will the judgment of the Transmission Planner be then questioned because theâ€œbase caseâ€ used is equivalent to a sensitivity case and not a 1 in 2 year adverse weather base case?

Yes

We agree with revising P6 to permit loss of Non-Consequential Load to meet performance requirements for Systems above 300kV. However, we are concerned that with the loss of the first N-1 in P6, curtailment of firm transmission service or firm transfers would not be allowed as part of system adjustment in preparation for the next N-1. Allowing curtailment of transmission service or firm transfers for such system adjustments should be added to R3.3.2.2. Otherwise, the power transfer under normal condition (before the first N-1) will have to be significantly curtailed in anticipation for meeting performance requirements after N-1-1, or transmission facilities, which would have otherwise been unnecessary, would have to be built. Either would adversely impact customers. We also have questions on Event P6 in both Performance Tables 1 and 2: We would like some clarification on the overlapping single contingencies as denoted in Event P6 (N-1-1), and one where a single contingency, say Event P1 (N-1), follows a prior

"planned" outage of a Facility (N-1). The former would allow the Non-consequential Load Loss, while the latter would prohibit it.
This ultimately depends on the degree to which the local area issues addressed by footnote b of Table 1 of the existing TPL are maintained. Without the local area concepts of the existing TPL, costs could run into the hundreds of millions of dollars.
This ultimately depends on the degree to which the local area issues addressed by footnote b of Table 1 of the existing TPL are maintained. Without the local area concepts of the existing TPL, permitting requirements would result in some projects exceeding 10-years.
C â€“ Definitely do not support the revised standard
We agree that the Standard as presented is clearer, but there are numerous issues that still need resolution, Measures, VSLs, Implementation Plan, etc., before WECC can give a full approval of this Standard. ï€ There is no mention in the purpose of the Standard about minimizing loss of load for more probable unplanned contingencies. Maybe there needs to be some definition around what is meant by reliability. ï€ We believe that with the loss of the first N-1 in P6, curtailment of firm transmission service or firm transfers should be allowed as part of system adjustment in preparation for the next N-1. This should be added to R3.3.2.2. Otherwise, the power transfer under normal condition (before the first N-1) will have to be significantly curtailed in anticipation for meeting performance requirements after N-1-1. This will unnecessarily impede commerce. Or, to maintain the same firm power transfer under normal conditions, construction of transmission facilities will be required. Either way, this would impose a much stricter standard than exists today resulting in very costly unnecessary system improvements and invalidate terms of many transmission service contracts that allow for implementation of pro-rate curtailments of firm transmission rights during forced and planned outage conditions. ï€ We disagree with the application of the proposed definitions of Consequential Load Loss and Non-Consequential Load Loss in conjunction with â€œraising the barâ€. Local Network load should be included in Consequential Load and the loss should be allowed for single contingencies. The TPL standard is to maintain reliability of the BES. Under certain conditions orderly dropping of local network load could limit the spread of the disturbance beyond the local area and allow BES reliability to be maintained. This would minimize the total amount of load loss and allow for quicker load restoration. The proposed definitions for Consequential Load Loss and Non-consequential Load Loss will provide no reliability benefits for high voltage (>300 kV) transmission backbone system providing wholesale open access service and interconnecting to the rest of the western interconnection. Any potential reliability benefits of any additional facilities built to comply with these definitions would be at the local service level. ï€ As mention in comments to Q3 above, some local network customer curtailments or local area load loss has been allowed by local regulatory authorities as long as the overall reliability of the interconnected system was not impacted. This is a result of tradeoffs between providing a higher level of reliability in a local area and the cost and environmental impacts of providing that service. Such tradeoffs are subject to local regulatory authority or contract negotiated between the transmission provider and its transmission customers. Regarding the terms â€œinterruption of firm transmission serviceâ€, there needs be clarification on what Interruption means. Since it is referring to firm transmission service, we would interpret this to mean curtailment needed after a particular contingency and adjustments. There also needs to be clarification on what â€œFirm Transmission Serviceâ€ means. Two points, 1) the NERC definition states â€œhighest quality service offered to customers under a filed rate schedule that anticipates no planned interruption.â€ The Standard implies anticipation of â€œunplannedâ€ interruption for certain contingencies. 2) Is this referring to a transmission product as defined in FERC Order 890, or firm transfers modeled for the conditions being studied? One way to interpret the intent is the firm transfers being modeled for the conditions in the powerflow to meet demand that would result in load not being served if that firm transfer were curtailed. If there is other generation in the system that could increase to meet the load if the transfer being modeled is interrupted, then interruption of firm transmission service should also be allowed for P1 through P5 contingencies in the table. In addition, we believe that DC and AC lines should have the same performance requirements with respect to interuption of firm transmission service. We do not understand why interruption of firm service would be an acceptable response to the loss of a single pole of a DC line (i.e. response to the contingency) but not an acceptable response to prepare for the next contingency of an AC line. The transfers over both AC and DC lines can automatically be curtailed when the line is outaged.
Individual
Mace Hunter
Lakeland electric

Yes

Yes

Yes

Yes

Yes

Yes

Yes

Yes

Yes

B â€“ Unsure about supporting the revised standard

Suggested changes listed below to more directly address what I think is the intent of the item: Planning Events: Events that require Transmission system performance requirements to be met. Comment: I think that this suggested revision better defines a Planning Event and how they may be used in a study or assessment. Revision to: Planning Events Planning Events: Simulated events that are modeled to test the Transmission systemâ€™s ability to meet performance requirements. R2.6.2. For steady state, short circuit, Generating Plant Stability, or System Stability analysis: the study shall not include any material changes, such as, generation or Transmission additions/removals, or topology changes that have occurred in the intervening period and would impact the study area. Comment: the requirement as stated leaves one guessing about the usability of a study that may have included the changes that occurred in the intervening period. Changes that were studied but not implemented could also invalidate a study they were included in. Revision to R2.6.2 R2.6.2. For steady state, short circuit, Generating Plant Stability, or System Stability analysis: the study shall not include any material changes, such as, generation or Transmission additions/removals, or topology changes that were not included in the original study but have occurred in the intervening period and would impact the study area results.

Individual

Don Gilbert

JEA

Yes

Yes and No

R2.4.1 Do we mean "Appropriate" for overall regional system response/behaviour or for individual customer behaviour. JEA would agree to an "appropriate" overall regional system response/behaviour model with unique individual or sub-regional customer behaviour models if determined significant. R2.4.3.1 JEA would agree to a load characteristic sensitivity studies if conducted within the scope of a RRO study. Suggest modifying wording to "Variations in Regional Load model assumptions" R2.4.3.3 Not sure what we mean by Unavailability of long-lead time facilities. Need to add a definition. If the standard is suggesting to treat the unavailability of autotransformers like the unavailability of generators i.e. N-2 assessments with no firm consequential load shedding, then JEA does not agree that the failure rate of autotransformers is on the same level as generators and do not agree this requires a minimum performance standard to mainatain grid reliability. In addition, a utility is most likely to be successful in finding a reasonable useful spare autotranformer somewhere in the world to replace the failed

unit. R2.5 JEA agrees. R5.4.2 See comments for steady state requirements for Table 1 P5. R5.4.3 JEA does not understand what is meant by Stability violations. Do we mean to say "unstable system conditions"? R5.5 JEA agrees

Yes

Recommend changing "Non-Interruptible Load" to "non-Interruptible Load" (first occurence of use in the new definition.

Yes and No

R3.5.1 JEA does not understand what measure will be applied to determine that Facility Ratings were not violated during the generator run-back period. R3.5.2 JEA does not understand what measure will be applied to determine compliance that generator trips and runbacks will not violate safety, equipment, regulatory, or statutory requirements. R3.5.3 JEA does not understand what is meant by the word "Sustainable". Needs a practical definition.

Yes and No

R9. JEA does not agree that the Transmission Planners should have the responsibility to perform load development or sanity checks on the DP's forecasted real and reactive loads based upon superfluous information like the customer mix. Also, JEA recommends adding language that gives the Planning Coordinator the option to require the forecast by season. R10. JEA agrees R11. JEA recommends that R11 be split into two functional requirements: (A) the provision of known planned outage information, and (B) the provision of "potential long-term forced outages of transmission equipment where readily avaialble spares are not identified". JEA can support requirement (A), but believes that requirement (B) should be part of an operating horizon standard (TOP?) where the availability of spares and spare equipment strategies can be refined in a responsive manner as the opportunities evolve. JEA does not believe that the industry should overbuild its system for the possibility of a rare "low probility" equipment failure event will occur and no reasonable replacement alternative will exist in the world. R12. Need to define long-term outages R13. JEA agrees R14. JEA agrees

Yes and No

JEA can agree to this requirement; however, JEA would like to see it addressed in FAC-002 to maintain consistency with the FAC standard requirements.

Yes and No

JEA can live with them as is, but would also welcome enhancements. Will defer enhancements to others.

Yes

Yes

Yes and No

Will stress JEA resources to provide auditable evidence depending on the final measure applied.

Yes and No

JEA agrees with the changes on the surface, but still does not agree with the concept that it can not curtail Firm Transmission Service after the first N-1 event in preperation for the second N-1 event. JEA's existing Firm Transmission Servcie customers understand the need to maintain these existing transmission loading relief procedures in order to maintain security of the BES. The only JEA system element that causes this concern has a very high availability and would have a very costly infrastructure improvement to meet this requirement resulting in all of JEA's Firm Transmission Service Customers experiencing increased service cost or in the worst case having their service opportunities permenantly curtailed.

$80,000 per year.

3 years

$80,000 per year.

Included in Question 12 estimates.

Included in Question 12 estimates.

Could be up to $1 Billion and would depend on the physical ability to terminate at existing 500 kV substations and the ability to acquire 500 kV ROW outside of JEA's and Florida's jurisdiction.

Minimum of 7 years if DOE declares a Corridor of National Interest. Otherwise it could be longer and more costly.

C â€“ Definitely do not support the revised standard

The inability to curtail Firm Transmission Service under P6 assessments in preperation for the next N-1 event. Also, under P1 and lower probability contingency events, JEA recommends a standard requirement that allows for the loss of Non-Consequential load during short term periods (suggest allowing up to 3 year minimum) where the system load growth has caused post-contingency remedial action plans to not be completely affective in bringing the Facility(ies) within normal operating limits. As a specific theoretical example, lets say a 10 year assessment

shows load growth causing this situation in year 5, but in year 7 generators are added to the area of concern and the issue is resolved, but in year 6, Non-consequential load is required to be shed, do we still need to propose a capital improvement project?

Group

PacifiCorp

Sandra Shaffer

PacifiCorp

Yes and No

We generally concur with the changes for the Requirements associated with the Generating Unit and System Stability, however, â€¢ Generating unit stability studies are typically performed at the time of interconnection. Even though stability studies have been done as new generating unit(s) were interconnected or at the time changes occurred, such studies have not been done for the entire fleet of generating units at the same time. For very old units, stability study documentation may no longer exist, even though no potential stability problems have been identified when stability studies were run for interconnecting other newer units. Will every TP have to benchmark their generating unit stability study for its entire fleet with the acceptance of this Standard? In other words, will every TP has to recreate documentation for all its older units? â€¢ We would appreciate that the SDT more clearly define the terms in R2.5.2, â€œmaterial Transmission System changeâ€ and â€œat or near the point of Interconnectionâ€ to invoke a study with examples.

Yes and No

av â€¢ We generally agree that utilities or large TPs and PCs need to perform and be held accountable for these Requirements; however, the SDT needs to define a organization size level, below which these requirements for the associated TP may be slightly relaxed. There are numerous TPs; (e.g., those associated with PUDs, Municipals or REA, etc.), for which performing these type of studies and assessments are onerous and do not yield reliability benefits for the network.

Yes and No

â€¢ We generally agree with the definition but have concerns about a potential unintended consequence. This definition will severely limit the loads that can be classified as â€œlocal Network customers, connected to or supplied by the Faulted element or by the affected area, may occur in certain areas without impacting the overall reliability of the interconnected transmission systemsâ€ in footnote b of the existing TPL standards. In combination with raising the bar for loss of Facilities with operating voltages 300 kV or higher (P2, P4 and P5 in the Performance Tables), this definition may result in encouraging entities to connect more loads in a radial fashion or avoid loop connection to improve service reliability just to fit in the Consequential Load Loss definition, â€œâ€¦load no longer being connected to a sourceâ€¦â€. At a result, service reliability to customer would be adversity impacted without commensurate improvement in overall system reliability.

Yes and No

â€¢ We generally agree, however, the conditions listed in R3.5.1, R3.5.2 and R3.5.3 are applicable to the overall TPL Standard. Their specific listing in R3.5 gives the impression that these Requirements are only applied to R3.5 and not to the other Requirements in this Standard. In other words, are there any Requirements in this Standard that R3.5.1, R3.5.2 and R3.5.3 do not apply to? Therefore, we suggest moving R3.5.1 through R3.5.3, (and the equivalent in the stability study R5.4.3.1 through R5.4.3.3) to a Requirement applicable to Assessment studies in general, such as the bullet points in the Performance Tables.

Yes

â€¢ We agree that the MOD Standards need modifications and additions to be used for Transmission Planning, â€¢ We also agree with the movement of the R1of the first draft to the R9 through R14 of this draft, â€¢ We also agree that when the MOD Standards are replaced, then remove these Requirements from the TPL Standard.

Yes and No

We agree with R2.3. However, R4 requires assessment of â€œShortcircuit capability of its equipment under normal condition and following any single Contingency condition that would result in greater circuit breaker interrupting dutiesâ€. Since short circuit studies are typically performed by applying a three phase fault on a Facility starting from a normal condition, please clarify whether the result would constitute â€œnormalâ€ condition or â€œfollowing any single Contingency conditionâ€.

Yes

We agree with the proposed format changes of the Tables.

Yes

We agree with the proposed format changes of the Tables.

No

We do not agree with the rationale for the requiring more stringent performance requirement levels for non-bus tie breakers above 300 kV. The SDT has not presented evidence that the probabilities of failure for breakers within the same substation are significantly different for different voltage classes.
Yes and No
We generally agrees with the concept of the sensitivity analysis. However, clarifications of the following is needed: â€¢ For example, if a TP performs studies on the â€œbase caseâ€ of which the loads are 90/10, does this constitute a sensitivity analysis. If so, will the TP have to then perform additional less stringent studies at the 50/50 load level to demonstrate compliance? â€¢ R2.1.4 requires explanation of performing additional sensitivities that are not listed in the R2.1.3. This would discourage entities from performing additional sensitivities. In addition, in the above example, the TP should not have to explain why they feel that this higher level (90/10) of load is the â€œbase caseâ€ condition. â€¢ R2.7 also states that â€œCorrective Action Plans do not need to be developed solely to meet the performance requirements for sensitivitiesâ€. Consider a TP that has built transmission based on the 90/10 load assumed in the â€œbase caseâ€, will the judgment of the TP be then questioned because of itâ€™s sensitivity â€œbase caseâ€ and not a 50/50 base case?
Yes
We agree with revising P6 to permit loss of Non-Consequential Load to meet performance requirements for Systems above 300kV.
$500,000 (approx)
three years
$250,000
$250,000 over two years
$125,00
$100,000,000 + Will not be able to estimate the total cost until after the studies are complete.
10 years
A â€“ Generally support the revised standard
We generally agree with the Standard as presented so far, but there are numerous issues that still need resolution, Measures, VSLs, Implementation Plan, etc., before WECC can give a full approval of this Standard. We believe that with the loss of the first N-1 in P6, curtailment of firm transmission service or firm transfers should be allowed as part of system adjustment in preparation for the next N-1. This should be added to R3.3.2.2. Otherwise, the power transfer under normal condition (before the first N-1) will have to be significantly curtailed in anticipation for meeting performance requirements after N-1-1. This will unnecessarily impede commerce.
Individual
Joe Seabrook
Puget Sound Energy, Inc.
No
We believe that there is no significant distinction between Generating Unit Stability and System Stability other than the objective and focus of the study. Therefore, we cannot accept a simple statement from the SDT that it believes it is important to maintain this distinction without more explanation. If a distinction is maintained, then Generating Unit Stability Study should be and is already covered in FAC-001-0 and FAC-002-0. As defined, Generating Unit Stability Study â €œfocuses on an individual generating unit's or electrically closely-coupled generating units' Stability for various Contingencies on the Transmission Facilities connected to that generating unit(s) point(s) of interconnection or one bus away from that point. However, the Purpose of the proposed TPL-001-1 is to â€œdevelop a Bulk Electric System that will operate reliably over a broad spectrum of System conditions and following a wide range of probable Contingenciesâ€. If a Generating Unit becomes unstable, the unit can be disconnected from the BES without impacting system stability. Therefore, we believe that the Generating Unit Stability Studies portion is attempting to introduce interconnection stability studies into the TPL standards. Interconnection stability studies are adequately addressed by FAC-001 and does not need to be specifically called out in TPL-001-1. In addition, Generating unit stability studies are typically performed at the time of interconnection. Even though Generating Unit Stability Studies have been done as new generating unit(s) were interconnected or at the time changes occurred, such studies have not been done for the entire fleet of Generating Units at the same time. For very old units, stability study documentation may no longer exist, even though no potential stability problems have been identified when stability studies were run for interconnecting other newer units or for the System. If the requirement for Generating Unit Stability Study is retained in this proposed TPL-001-1, R2.5 needs to be clarified to say â€œonly whenâ€ the changes in R2.5.1 and R2.5.2 are made that the Generating Unit Stability Study needs to be done. There also needs to be language about how to treat generators that are existing prior to this Standard taking effect. We would also appreciate if the SDT would more clearly define with examples the terms in R2.5.2, â€œmaterial Transmission System changeâ€ and â€œat or near the point of

Interconnectionâ€ to invoke a study.

Yes and No

R2.4 is acceptable. Please consider deleting the conditions identified in R5.4.3.1, R5.4.3.2, and R5.4.3.3. We question the need to specifically call out these requirement in sub-requirements of R5.4.3. We believe these conditions should be met for any and all requirements of the standard. It should not be necessary to list acceptable practices, especially if the conditions placed on the practice are general conditions that are addressed elsewhere or are generic. Otherwise, R5.4 is acceptable. The proposed requirements in R2.5 and R5.5 are already covered in FAC-001 and FAC-002 and should not be included again in the proposed TPL-001-1. Otherwise, the NERC standards would have redundant requirements. In addition, Transmission Ownerâ€™s open access tariffs requires Generator Owners to apply for interconnection to its transmission system or to make modifications to their generators as described in R2.5.1, R5.5.1, and R5.5.2. It is therefore the Generator Ownerâ€™s responsibility to cause these studies to be done at the time of interconnection or modification, yet R5 seems to place that responsibility only on the Transmission Planner and the Planning Coordinator. The Transmission Planner or the Planning Coordinator would not know of the changes until notified by the Generator Owner. If the SDT believes that FAC-001 is deficient, it should propose revisions to this standard, not simply add to TPL. Requirement R5.5.2 needs to be clarified to state changes or additions to the generating unit that result in an increase in power output. Otherwise, it could be interpreted to apply to existing units with a change in dispatch.

No

We generally agree with the definitions by themselves but have concerns about potential unintended consequences. This definition will severely limit the loads that can be classified as â€œlocal Network customers, connected to or supplied by the Faulted element or by the affected area, may occur in certain areas without impacting the overall reliability of the interconnected transmission systemsâ€ in footnote b of the existing TPL standards. In combination with raising the bar for loss of Facilities with operating voltages 300 kV or higher (P2, P4 and P5 in the Performance Tables), this definition may result in encouraging entities to connect more loads in a radial fashion or avoid loop connection used to improve service reliability just to fit in the Consequential Load Loss definition, â€œâ€¦load no longer being connected to a sourceâ€¦â€. As a result, service reliability to customer will be degraded without commensurate improvement in overall system reliability. In addition, existing design of many such local networks may use RAS/SPS to disconnect loads on local networks in response to low probability contingencies. However, the definition of Non-Consequential Load Loss states that using RAS/SPS is Non-Consequential Load Loss. In the Consideration of Comments on the First Draft of TPL-001-1, page 49, response to First Energy, the SDT states "FERC has determined that any Load loss that is not directly connected to the faulted element is actually Non-Consequential Load loss." We found a similar response to WECC on page 449, item 6. While we do not disagree with the statements made by the SDT, that FERC wants clarification of what is Consequential Load Loss, we do not see where FERC has ruled out the use of RAS/SPS for Consequential Load Loss. Consequential Load Loss needs to include the concept of local networks. Another way to address this would be to exempt some local networks in the definition of the Bulk Electric System. There are many instances where some local network customer curtailments or local area load loss has been allowed by local regulatory authorities as long as the overall reliability of the interconnected system was not impacted. This is a result of tradeoffs with the cost and environmental impacts of providing a higher level of reliability in a local area. An attempt to eliminate the concepts contained in footnote b of the existing TPL standards would invalidate local regulatory decisions, place a large unintended cost burden on existing customers and could potentially create criteria that could not be met anytime soon, if ever, as a result of the long lead time required for system improvements. Any attempt to raise the bar by interpreting the definition of Non-Consequential Load as eliminating the concepts of footnote b is considered unacceptable. The new criteria need to clearly maintain these concepts to prevent a large disconnect with existing design criteria. The last sentence in the Definition of Consequential Load Loss (â€œAlthough Load which is lost as a result of the Loadâ€™s response to the transient conditions of the event is considered Consequential Load Loss and is permitted when Consequential Load Loss is allowed, Transmission planning entities are not allowed to rely upon the expectation of such Load loss to meet steady state performance requirementsâ€) seems more appropriate to be requirements. Therefore, please move this sentence to the Notes Section at the beginning of Table 1 as new Item 7.

Yes

We agree. However, the conditions listed in R3.5.1, R3.5.2 and R3.5.3 are applicable to the overall TPL Standard. Their specific listing in R3.5 gives the impression that these Requirements are only applied to R3.5 and not to the other Requirements in this Standard. In other words, are there any Requirements in this Standard that R3.5.1, R3.5.2 and R3.5.3 do not apply to? Therefore, we suggest TPL-001-1 be silent on this issue and move R3.5.1 through R3.5.3, (and the equivalent in the stability study R5.4.3.1 through R5.4.3.3) to a Requirement applicable to Assessment studies in general, such as the bullet points in the Performance Tables.

Yes

While we agree with separating R1 to form R9 through R14, we believe that R9 (modeling information for real and reactive load forecast data) should be applicable to Load Serving Entities (LSE) instead of (or in additional to) the Distribution Provider. In any case, this type of exchange of load information is already covered in MOD Standard or in the respective tariffs, and should not be included again in the proposed TPL-001-1 Standard.

Yes and No

We agree with R2.3. However, R4 requires assessment of â€œShort circuit capability of its equipment under normal conditions and following any single Contingency condition that would result in greater circuit breaker interrupting dutiesâ€. Since short circuit studies are typically performed by applying a fault on a Facility starting from a normal condition, there can be confusion whether the result would constitute â€œnormalâ€ condition or â€œfollowing any single Contingency conditionâ€. Also, by specifying the normal and single contingency conditions, R4 is straying into â€œhowâ€ to perform a study, which is not necessary in a standard. We suggest deleting the reference to the contingencies to be used in the study.

Yes and No

We do not disagree with the proposed format changes of the Tables. However, we are not sure if separating into two Tables is necessary, or beneficial. It seems like an extra column for events could be added and some changes to the notes would greatly simplify the table. Some of the rows could also be combined; one such example is P2-2 (Loss of Bus Section) and P2-3 (Internal Breaker Fault, non-bus-tie). Will the SDT plan on combining some similar rows? Table 1, P4 and P5 refer to "Faults" as part of the contingency. This is steady state performance and faults are not modeled in steady state. Table 1, P2.1 refers to a "single ended line". Technically, this means we need to generate a "false" bus at each end of the line to evaluate this condition or use a dispatcher power flow which included breaker modeling. Is this an accurate interpretation of the intent of this requirement? We believe there should be no distinction between the voltage classes and support the use of load shed for all cases identified in P4 through P7.

No

We do not disagree with the proposed definition change. However, we do not agree that â€œSubstation configurations such as ring-bus, breaker-and-a-half, or double bus-double breaker protection schemes do not use bus-tie breakers. Some breaker-and-a-half and double-breaker layouts may have bus breakers located mid-way in the side elements. We propose the following definition: A circuit breaker that divides a bus section with multiple tap off points into two bus sections.

Yes

We agree that the failure of non-bus tie breakers above 300 kV to operate can have much higher consequence.

Yes and No

We generally agree with the concept of the sensitivity analysis since this is standard practice in understanding system performance risks and the effectiveness of improvements. It is ambiguous from a criteria perspective, however, what role is played by the sensitivities in developing Corrective Action Plans and what risks are created by misapplication of the intent of such sensitivity analyses. Clarification of the following is needed along with examples of applicable sensitivities and how these would be factored into Corrective Action Plans. If a Transmission Planner performs studies on the â€œbase caseâ€ of which the loads represented are 1 in 10 year adverse weather condition (10% chance that the actual load may exceed the projected load), does this constitute a sensitivity analysis. If so, will the Transmission Planner have to then perform additional less stringent studies at the load levels representing 1 in 2 year adverse weather conditions (50% chance that the actual load may exceed the projected load) to demonstrate compliance? R2.1.4 requires explanation of performing additional sensitivities that are not listed in the R2.1.3. This would discourage entities from performing additional sensitivities. In addition, in the above example, the Transmission Planners should not have to explain why they feel that this higher level (1 in 10 year adverse weather) of load is the â€œbase caseâ€ condition. R2.7 also states that â€œCorrective Action Plans do not need to be developed solely to meet the performance requirements for sensitivitiesâ€. Consider a Transmission Planner that has built transmission based on the 1 in 10 year adverse weather load assumed in the â€œbase caseâ€, will the judgment of the Transmission Planner be then questioned because the â€œbase caseâ€ used is equivalent to a sensitivity case and not a 1 in 2 year adverse weather base case?

Yes

We agree with revising P6 to permit loss of Non-Consequential Load to meet performance requirements for Systems above 300 kV. However, we are concerned that with the loss of the first N-1 in P6, curtailment of firm transmission service or firm transfers would not be allowed as part of system adjustment in preparation for the next N-1. Allowing curtailment of transmission service or firm transfers for such system adjustments should be added to R3.3.2.2. Otherwise, the power transfer under normal condition (before the first N-1) will have to be significantly curtailed in anticipation for meeting performance requirements after N-1-1, or transmission

facilities, which would have otherwise been unnecessary, would have to be built. Either would adversely impact customers. We also have questions on Event P6 in both Performance Tables 1 and 2: We would like some clarification on the overlapping single contingencies as denoted in Event P6 (N-1-1), and one where a single contingency, say Event P1 (N-1), follows a prior "planned" outage of a Facility (N-1). The former would allow the Non-consequential Load Loss, while the latter would prohibit it.
$1,000,000 for the STD in its current form. The recovery of firm transmission following N-1 will be the largest cost for PSE
10 years.
$300,000
$150,000 for the STD in its current form.
$50,000
$800,000,000 to recover Firm Transmission capacity with no adjustment following N-1.
15 years
C â€“ Definitely do not support the revised standard
We agree that the Standard as presented is clearer, but there are numerous issues that still need resolution, Measures, VSLs, Implementation Plan, etc., before PSE can give a full approval of this Standard. There is no mention in the purpose of the Standard about minimizing loss of load for more probable unplanned contingencies. Maybe there needs to be some definition around what is meant by reliability. We believe that with the loss of the first N-1 in P6, curtailment of firm transmission service or firm transfers should be allowed as part of system adjustment in preparation for the next N-1. This should be added to R3.3.2.2. Otherwise, the power transfer under normal condition (before the first N-1) will have to be significantly curtailed in anticipation for meeting performance requirements after N-1-1. This will unnecessarily impede commerce. Or, to maintain the same firm power transfer under normal conditions, construction of transmission facilities will be required. Either way, this would impose a much stricter standard than exists today resulting in very costly unnecessary system improvements and invalidate terms of many transmission service contracts that allow for implementation of pro-rate curtailments of firm transmission rights during forced and planned outage conditions. We disagree with the application of the proposed definitions of Consequential Load Loss and Non-Consequential Load Loss in conjunction with â€œraising the barâ€. Local Network load should be included in Consequential Load and the loss should be allowed for single contingencies. The TPL standard is to maintain reliability of the BES. Under certain conditions orderly dropping of local network load could limit the spread of the disturbance beyond the local area and allow BES reliability to be maintained. This would minimize the total amount of load loss and allow for quicker load restoration. The proposed definitions for Consequential Load Loss and Non-consequential Load Loss will provide no reliability benefits for high voltage (>300 kV) transmission backbone system providing wholesale open access service and interconnecting to the rest of the western interconnection. Any potential reliability benefits of any additional facilities built to comply with these definitions would be at the local service level. As mention in comments to Q3 above, some local network customer curtailments or local area load loss has been allowed by local regulatory authorities as long as the overall reliability of the interconnected system was not impacted. This is a result of tradeoffs between providing a higher level of reliability in a local area and the cost and environmental impacts of providing that service. Such tradeoffs are subject to local regulatory authority or contract negotiated between the transmission provider and its transmission customers. Regarding the terms â€œinterruption of firm transmission serviceâ€, there needs be clarification on what Interruption means. Since it is referring to firm transmission service, we would interpret this to mean curtailment needed after a particular contingency and adjustments. There also needs to be clarification on what â€œFirm Transmission Serviceâ€ means. Two points, 1) the NERC definition states â€œhighest quality service offered to customers under a filed rate schedule that anticipates no planned interruption.â€ The Standard implies anticipation of â€œunplannedâ€ interruption for certain contingencies. 2) Is this referring to a transmission product as defined in FERC Order 890, or firm transfers modeled for the conditions being studied? One way to interpret the intent is the firm transfers being modeled for the conditions in the power flow to meet demand that would result in load not being served if that firm transfer were curtailed. If there is other generation in the system that could increase to meet the load if the transfer being modeled is interrupted, then interruption of firm transmission service should also be allowed for P1 through P5 contingencies in the table. In addition, we believe that DC and AC lines should have the same performance requirements with respect to interruption of firm transmission service. We do not understand why interruption of firm service would be an acceptable response to the loss of a single pole of a DC line (i.e. response to the contingency) but not an acceptable response to prepare for the next contingency of an AC line. The transfers over both AC and DC lines can automatically be curtailed when the line is out of service.
Group
ITC Holdings: ITC, METC, ITC Midwest

Raymond Kershaw
ITC Holdings
Yes and No
Requirement R 5.4.4: Consider changing the last sentence to the following:â€œIf the Extreme Events analysis concludes there are widespread cascading outages, an evaluation of implementing a change designed to reduce or mitigate the likelihood of such consequences shall be conducted.â€
Yes and No
ï€ R 2.4.1 System peak Load for one of the five years. For peak System Load levels, a Load model shall be used which appropriately represents the dynamic behavior of Loads, including consideration of the behavior of induction motor Loads. ï€ R 2.4.2 System Off-Peak Load for one of the five years. ï€ Is there an inconsistency here in that the requirement for peak system load levels specifies details on what is needed for the load models, but the off-peak does not specify this? We donâ€™t believe this is the intent but it creates an appearance that the of the dynamic behavior of loads is not required for off-peak. ï€ Regarding R2.4 and R2.5 (& R5.4.1): It should be made clear that redoing studies is only necessary when it is not certain as to whether or not a system change will have a negative impact on system stability.An explanation should be sufficient if a study is unnecessary based on technical knowledge.. As to dynamic load models, we agree with a much longer implementation period than the rest of the standard. ï€ We have concerns that an auditor may not agree with our judgment as to what studies should be run or not run (R2.4, R2.5 and particularly in the case of R5.4.1). Additional guidelines, perhaps in the measurements section, would be appreciated. ï€
Yes
No
We do not believe that generation runback or tripping should be a CAP for a single contingency. This is particularly true if the generation scheme puts the system one contingency away from another potential condition requiring corrective action, such as load shedding. At a minimum R3.5.3 needs further definition as to what a â€œsustainable, stable, operating conditionsâ€ is. For example, creating another N-1 scenario is not a sustainable condition. Allowing for SPS is not raising the bar.
Yes and No
In general, we approve and concur with these requirements. The requirement R9 that the distribution providers submit the expected mix of residential, commercial, and industrial loads is necessary to model the dynamic behavior of loads as required in R 2.4.1. This requirement will better model the dynamic response of loads to voltage changes. In R10, the Transmission Planner provides OASIS type information. The TSP should provide this not the TP. R-13 â€“ Reactive Power Devices and new technologies belongs under every entity, i.e., Distribution Planners should be included as a provider of reactive power devices as well as Resource Planner and Transmission Planner.
Yes
Yes and No
While we like the tables, we donâ€™t understand what â€œInterruption of Firm Transmission Service Allowedâ€ means in a stability study (as per table 2). How would you interpret that in real-time & study terms? Would you make the stability scenario a limit to selling transmission service? In table 2, should we interpret SLG or 3-phase Fault in P1 and P3 to mean that SLG is the criteria (minimum) but you can run and document the more severe 3 phase faults for compliance purposes? What is the minimum criteria?
Yes
Yes
No
While we appreciate that the addition of sensitivity studies is commendable and agree with 2.1.3 and 2.1.4 per se, the later clarification in R2.7 that â€œCorrective Action Plans do not need to be developed solely to meet the performance requirements for sensitivitiesâ€ negates project justification (to many) based on sensitivity studies. Explaining as per R2.4.3 the reasons why you did or did not run a sensitivity study is less important, in many respects, than why you did or did not provide a Corrective Action Plan for performance failures observed in sensitivity studies. I.e., the study is the â€œcartâ€ and the CAP is the â€œhorseâ€. Hence, at a minimum some form of Corrective Action Plan should be required.
No
Allowing load loss for shutdown plus contingency might seriously jeopardize maintenance

outages when you actually encounter this situation in real-time. Itâ€™s easy to say these things in the â€œplanning horizonâ€ but it might be politically unacceptable for â€œreal-timeâ€. This is particularly true for higher voltage systems above 300kV. We understand that there could be â€œload-pocketâ€ situations at lower voltages where this might be allowed but EHV systems are back-bone systems. This would set a bad precedent if allowed.
While we recognize that the standards might require us to garner a little more manpower and will take a little more time, we believe that running these studies is important.
While we recognize that the standards might require us to garner a little more manpower and will take a little more time, we believe that running these studies is important.
While we recognize that the standards might require us to garner a little more manpower and will take a little more time, we believe that running these studies is important.
While we recognize that the standards might require us to garner a little more manpower and will take a little more time, we believe that running these studies is important.
While we recognize that the standards might require us to garner a little more manpower and will take a little more time, we believe that running these studies is important.
Since we have been following the NERC Planning Standards, at this point we do not expect an additional one time system reinforcement cost.
Since we have been following the NERC Planning Standards, at this point we do not expect an additional time-frame for a system reinforcement program.
B â€“ Unsure about supporting the revised standard
ITC and ITC Midwest biggest concerns are some missed opportunities to "raise the bar". We believe the draft standard is a significant improvement over existing standards which are largely fill-in-the-blank. However, we have some concerns regarding some of the language wherein CAPs are not required, even though a performance requirement has been violated. For example, providing for a bare minimum sensitivity study and not requiring a CAP based on a performance violation may increase operational awareness but does not â€˜raise the barâ€™ or improve transmission performance. Allowing for non-consequential load loss following a shutdown and contingency might be an acceptable real time operating procedure but is not a significant advancement on a transmission planning basis. Frequently, operating procedures like this should lead to a planning solution, particularly above 300kV
Individual
Milorad Papic
Idaho Power Company
No
We believe that there is no significant distinction between Generating Unit Stability and System Stability other than the objective and focus of the study. Therefore, we cannot accept a simple statement from the SDT that it believes it is important to maintain this distinction without more explanation. If a distinction is maintained, then Generating Unit Stability Study should be and is already covered in FAC-001-0 and FAC-002-0. As defined, Generating Unit Stability Study â€œfocuses on an individual generating unit's or electrically closely-coupled generating units' Stability for various Contingencies on the Transmission Facilities connected to that generating unit(s) point(s) of interconnection or one bus away from that point. However, the Purpose of the proposed TPL-001-1 is to â€œdevelop a Bulk Electric System that will operate reliably over a broad spectrum of System conditions and following a wide range of probable Contingenciesâ€. If a Generating Unit becomes unstable, the unit can be disconnected from the BES without impacting system stability. Therefore, we believe that the Generating Unit Stability Studies portion is attempting to introduce interconnection stability studies into the TPL standards. Interconnection stability studies are adequate addressed by FAC-001 and does not need to be specifically called out in TPL-001-1. In addition, Generating unit stability studies are typically performed at the time of interconnection. Even though Generating Unit Stability Studies have been done as new generating unit(s) were interconnected or at the time changes occurred, such studies have not been done for the entire fleet of Generating Units at the same time. For very old units, stability study documentation may no longer exist, even though no potential stability problems have been identified when stability studies were run for interconnecting other newer units or for the System. If the requirement for Generating Unit Stability Study is retained in this proposed TPL-001-1, R2.5 needs to be clarified to say â€œonly whenâ€ the changes in R2.5.1 and R2.5.2 are made that the Generating Unit Stability Study needs to be done. There also needs to be language about how to treat generators that are existing prior to this Standard taking effect. We would also appreciate if the SDT would more clearly define with examples the terms in R2.5.2, â€œmaterial Transmission System changeâ€ and â€œat or near the point of Interconnectionâ€ to invoke a study.
Yes and No
R2.4 is acceptable. Please consider deleting R5.4.3. It should not be necessary to list acceptable practices, especially if the conditions placed on the practice are general conditions that are addressed elsewhere or are generic. Otherwise, R5.4 is acceptable. ï€ We generally agree that Transmission Owners with extensive Transmission Planning Function and Planning Coordinators

need to perform and be held accountable for the Requirements in R2.4 and R5.4; however, the SDT needs to define an organization size level below which these requirements for the associated Transmission Planner may be slightly relaxed. There are numerous Transmission Planners; (e.g., those associated with PUDs, Municipals or REA, etc. where historically dynamic stability has not been a problem), for which performing these type of studies and assessments would be onerous and would not yield reliability benefits for the network. ï€ The proposed requirements in R2.5 and R5.5 are already covered in FAC-001 and FAC-002 and should not be included again in the proposed TPL-001-1. Otherwise, the NERC standards would have redundant requirements. In addition, Transmission Ownerâ€™s open access tariff requires Generator Owner to apply for interconnection to its transmission system or to make modifications to their generators as described in R2.5.1, R5.5.1, and R5.5.2. It is therefore the Generator Ownerâ€™s responsibility to cause these studies to be done at the time of interconnection or modification, yet R5 seems to place that responsibility only on the Transmission Planner and the Planning Coordinator. The Transmission Planner or the Planning Coordinator would not know of the changes until notified by the Generator Owner. If the SDT believes that FAC-001 is deficient, it should propose revisions to this standard, not simply add to TPL. Requirement R5.5.2 needs to be clarified to state changes or additions to the generating unit that result in an increase in power output. Otherwise, it could be interpreted to apply to existing units with a change in dispatch.

No

We generally do not disagree with the definitions by themselves but have concerns about potential unintended consequences. This definition will severely limit the loads that can be classified as â€œlocal Network customers, connected to or supplied by the Faulted element or by the affected area, may occur in certain areas without impacting the overall reliability of the interconnected transmission systemsâ€ in footnote b of the existing TPL standards. In combination with raising the bar for loss of Facilities with operating voltages 300 kV or higher (P2, P4 and P5 in the Performance Tables), this definition may result in encouraging entities to connect more loads in a radial fashion or avoid loop connection to improve service reliability just to fit in the Consequential Load Loss definition, â€œâ€¦load no longer being connected to a sourceâ€¦â€. As a result, service reliability to customer would be adversity impacted without commensurate improvement in overall system reliability. In addition, existing design of many such local networks would normally require RAS/SPS to disconnect loads on local networks in response to contingencies. However, the definition of Non-Consequential Load Loss states that using RAS/SPS is Non-Consequential Load Loss. In the Consideration of Comments on First Draft of TPL-001-1, page 49, response to First Energy, the SDT states "FERC has determined that any Load loss that is not directly connected to the faulted element is actually Non-Consequential Load loss." We found a similar response to WECC on page 449, item 6. While we do not disagree with the statements made by the SDT, that FERC wants clarification of what is Consequential Load Loss, we do not see where FERC has ruled out the use of RAS/SPS for Consequential Load Loss. Consequential Load Loss needs to include the concept of local networks. Another way to address this would be to exempt some local networks in the definition of the Bulk Electric System. The performance of existing systems has been designed to be consistent with the concepts of the quoted sentence above from footnote b of Table 1 of the existing TPL standards. There are many instances where some local network customer curtailments or local area load loss has been allowed by local regulatory authorities as long as the overall reliability of the interconnected system was not impacted. This is a result of tradeoffs with the cost and environmental impacts of providing a higher level of reliability in a local area. An attempt to eliminate the concepts contained in footnote b of the existing TPL standards would invalidate local regulatory decisions, place a large unintended cost burden on existing customers and could potentially create criteria that could not be met anytime soon, if ever, as a result of the long lead time required for system improvements. Any attempt to raise the bar by interpreting the definition of Non-Consequential Load as eliminating the concepts of footnote b is considered unacceptable. The new criteria need to clearly maintain these concepts to prevent a large disconnect with existing design criteria. The last sentence in the Definition of Consequential Load Loss (â€œAlthough Load which is lost as a result of the Loadâ€™s response to the transient conditions of the event is considered Consequential Load Loss and is permitted when Consequential Load Loss is allowed, Transmission planning entities are not allowed to rely upon the expectation of such Load loss to meet steady state performance requirementsâ€) seems more appropriate to be requirements. Therefore, please move this sentence to the Notes Section at the beginning of Table 1 as new Item 7.

Yes

We generally agree, however, the conditions listed in R3.5.1, R3.5.2 and R3.5.3 are applicable to the overall TPL Standard. Their specific listing in R3.5 gives the impression that these Requirements are only applied to R3.5 and not to the other Requirements in this Standard. In other words, are there any Requirements in this Standard that R3.5.1, R3.5.2 and R3.5.3 do not apply to? Therefore, we suggest TPL-001-1 be silent on this issue and move R3.5.1 through R3.5.3, (and the equivalent in the stability study R5.4.3.1 through R5.4.3.3) to a Requirement applicable to Assessment studies in general, such as the bullet points in the Performance Tables.

Yes

While we agree with separating R1 to form R9 through R14, we believe that R9 (modeling

information for real and reactive load forecast data) should be applicable to Load Serving Entities (LSE) instead of (or in additional to) the Distribution Provider. In any case, this type of exchange of load information is already covered in MOD Standard or in the respective tariffs, and should not be included again in the proposed TPL-001-1 Standard.

Yes and No

We agree with R2.3. However, R4 requires assessment of â€œShortcircuit capability of its equipment under normal condition and following any single Contingency condition that would result in greater circuit breaker interrupting dutiesâ€. Since short circuit studies are typically performed by applying a fault on a Facility starting from a normal condition, there can be confusion whether the result would constitute â€œnormalâ€ condition or â€œfollowing any single Contingency conditionâ€. Also, by specifying the normal and single contingency conditions, R4 is straying into â€œhowâ€ to perform a study, which is not necessary in a standard. We suggest deleting the reference to the contingencies to be used in the study.

Yes and No

We do not disagree with the proposed format changes of the Tables. However, we are not sure if separating into two Tables is necessary, or beneficial. It seems like an extra column for event could be added and some maybe some changes to the notes would greatly simplify the table. Some of the rows could also be combined; one such example is P2-2 (Loss of Bus Section) and P2-3 (Internal Breaker Fault, non-bus-tie). Will the SGT plan on combining some similar rows? Table 1, P4 and P5 refer to "Faults" as part of the contingency. This is steady state performance and faults are not modeled in steady state. Table 1, P2.1 refers to a "single ended line". Technically, this means we need to generate a "false" bus at each end of the line to evaluate this condition or use a dispatcher power flow which included breaker modeling. Is this an accurate interpretation of the intent of this requirement? We believes there should be no distinction between the voltage classes and supports the use of load shed for all cases identified in P4 through P7.

No

We do not disagree with the proposed definition change. However, we do not agree that â€œSubstation configurations such as ring-bus, breaker-and-a-half, or double bus-double breaker protection schemes do not use bus-tie breakers. Some breaker-and-a-half and double-breaker layouts may have bus breakers located mid-way in the side elements. We propose the following definition: A circuit breaker that divides a bus section with multiple tap off points into two bus sections.

Yes and No

We interpret â€œexit breakersâ€ to mean a breaker on an element that comes in from outside the substation. We agree with the rationale for the requiring more stringent performance requirement levels for non-bus tie breakers above 300 kV. Further, we believe that Non-Consequential Load Loss should be allowed for loss of either Bus-Tie or Non-Bus-Tie Breakers regardless of voltage class. The SDT has not presented evidence that the probabilities of failure for breakers within the same substation are significantly different for different voltage classes

Yes and No

We generally agree with the concept of the sensitivity analysis since this is standard practice in understanding system performance risks and the effectiveness of improvements. It is ambiguous from a criteria perspective, however, what role is played by the sensitivities in developing Corrective Action Plans and what risks are created by misapplication of the intent of such sensitivity analyses. Clarification of the following is needed along with examples of applicable sensitivities and how these would be factored into Corrective Action Plans. If a Transmission Planner performs studies on the â€œbase caseâ€ of which the loads represented are 1 in 10 year adverse weather condition (10% chance that the actual load may exceed the projected load), does this constitute a sensitivity analysis. If so, will the Transmission Planner have to then perform additional less stringent studies at the load levels representing 1 in 2 year adverse weather conditions (50% chance that the actual load may exceed the projected load) to demonstrate compliance? R2.1.4 requires explanation of performing additional sensitivities that are not listed in the R2.1.3. This would discourage entities from performing additional sensitivities. In addition, in the above example, the Transmission Planners should not have to explain why they feel that this higher level (1 in 10 year adverse weather) of load is the â€œbase caseâ€ condition. R2.7 also states that â€œCorrective Action Plans do not need to be developed solely to meet the performance requirements for sensitivitiesâ€. Consider a Transmission Planner that has built transmission based on the 1 in 10 year adverse weather load assumed in the â€œbase caseâ€, will the judgment of the Transmission Planner be then questioned because â€œbase caseâ€ used is equivalent to a sensitivity case and not a 1 in 2 year adverse weather base case?

Yes

We agree with revising P6 to permit loss of Non-Consequential Load to meet performance requirements for Systems above 300kV. However, we are concerned that with the loss of the first N-1 in P6, curtailment of firm transmission service or firm transfers would not allowed as

part of system adjustment in preparation for the next N-1. Allowing curtailment of transmission service or firm transfers for such system adjustments should be added to R3.3.2.2. Otherwise, the power transfer under normal condition (before the first N-1) will have to be significantly curtailed in anticipation for meeting performance requirements after N-1-1, or transmission facilities, which would have otherwise been unnecessary, would have to be built. Either would adversely impact customers. We also have questions on Event P6 in both Performance Tables 1 and 2: We would like some clarification on the overlapping single contingencies as denoted in Event P6 (N-1-1), and one where a single contingency, say Event P1 (N-1), follows a prior "planned" outage of a Facility (N-1). The former would allow the Non-consequential Load Loss, while the latter would prohibit it.
Appx $50k
2 to 3 years
Appx $50k
Appx $50k
Appx $50k
Not sure
5 years
B â€“ Unsure about supporting the revised standard
We agree that the Standard as presented is clearer, but there are numerous issues that still need resolution, Measures, VSLs, Implementation Plan, etc., before WECC can give a full approval of this Standard. âˆ’ There is no mention in the purpose of the Standard about minimizing loss of load for more probable unplanned contingencies. Maybe there needs to be some definition around what is meant by reliability. âˆ’ We believe that with the loss of the first N-1 in P6, curtailment of firm transmission service or firm transfers should be allowed as part of system adjustment in preparation for the next N-1. This should be added to R3.3.2.2. Otherwise, the power transfer under normal condition (before the first N-1) will have to be significantly curtailed in anticipation for meeting performance requirements after N-1-1. This will unnecessarily impede commerce. Or, to maintain the same firm power transfer under normal conditions, construction of transmission facilities will be required. Either way, this would impose a much stricter standard than exists today resulting in very costly unnecessary system improvements and invalidate terms of many transmission service contracts that allow for implementation of pro-rate curtailments of firm transmission rights during forced and planned outage conditions. âˆ’ We disagree with the application of the proposed definitions of Consequential Load Loss and Non-Consequential Load Loss in conjunction with â€œraising the barâ€. Local Network load should be included in Consequential Load and the loss should be allowed for single contingencies. The TPL standard is to maintain reliability of the BES. Under certain conditions orderly dropping of local network load could limit the spread of the disturbance beyond the local area and allow BES reliability to be maintained. This would minimize the total amount of load loss and allow for quicker load restoration. The proposed definitions for Consequential Load Loss and Non-consequential Load Loss will provide no reliability benefits for high voltage (>300 kV) transmission backbone system providing wholesale open access service and interconnecting to the rest of the western interconnection. Any potential reliability benefits of any additional facilities built to comply with these definitions would be at the local service level. âˆ’ As mention in comments to Q3 above, some local network customer curtailments or local area load loss has been allowed by local regulatory authorities as long as the overall reliability of the interconnected system was not impacted. This is a result of tradeoffs between providing a higher level of reliability in a local area and the cost and environmental impacts of providing that service. Such tradeoffs are subject to local regulatory authority or contract negotiated between the transmission provider and its transmission customers. Regarding the terms â€œinterruption of firm transmission serviceâ€, there needs be clarification on what Interruption means. Since it is referring to firm transmission service, we would interpret this to mean curtailment needed after a particular contingency and adjustments. There also needs to be clarification on what â€œFirm Transmission Serviceâ€ means. Two points, 1) the NERC definition states â€œhighest quality service offered to customers under a filed rate schedule that anticipates no planned interruption.â€ The Standard implies anticipation of â€œunplannedâ€ interruption for certain contingencies. 2) Is this referring to a transmission product as defined in FERC Order 890, or firm transfers modeled for the conditions being studied? One way Comment Form for 2nd Draft of Standard TPL-001-1 Assess Transmission Future Needs (Project 2006-02) Page 12 of 12 to interpret the intent is the firm transfers being modeled for the conditions in the powerflow to meet demand that would result in load not being served if that firm transfer were curtailed. If there is other generation in the system that could increase to meet the load if the transfer being modeled is interrupted, then interruption of firm transmission service should also be allowed for P1 through P5 contingencies in the table. In addition, we believe that DC and AC lines should have the same performance requirements with respect to interuption of firm transmission service. We do not understand why interruption of firm service would be an acceptable response to the loss of a single pole of a DC line (i.e. response to the contingency) but not an acceptable response to prepare for the next contingency of an AC line. The transfers over both AC and DC

lines can automatically be curtailed when the line is outaged.

Individual

Tacoma Power

Tacoma Power

Yes

Yes

Individual

Dilip Mahendra

SMUD

No

We believe that there is no significant distinction between Generating Unit Stability and System Stability other than the objective and focus of the study. Therefore, we cannot accept a simple statement from the SDT that it believes it is important to maintain this distinction without more explanation. If a distinction is maintained, then Generating Unit Stability Study should be and is already covered in FAC-001-0 and FAC-002-0. As defined, Generating Unit Stability Study â€œfocuses on an individual generating unit's or electrically closely-coupled generating units' Stability for various Contingencies on the Transmission Facilities connected to that generating unit(s) point(s) of interconnection or one bus away from that point. However, the Purpose of the proposed TPL-001-1 is to â€œdevelop a Bulk Electric System that will operate reliably over a broad spectrum of System conditions and following a wide range of probable Contingenciesâ€. If a Generating Unit becomes unstable, the unit can be disconnected from the BES without impacting system stability. Therefore, we believe that the Generating Unit Stability Studies portion is attempting to introduce interconnection stability studies into the TPL standards. Interconnection stability studies are adequately addressed by FAC-001 and does not need to be specifically called out in TPL-001-1. In addition, Generating unit stability studies are typically performed at the time of interconnection. Even though Generating Unit Stability Studies have been done as new generating unit(s) were interconnected or at the time changes occurred, such studies have not been done for the entire fleet of Generating Units at the same time. For very old units, stability study documentation may no longer exist, even though no potential stability problems have been identified when stability studies were run for interconnecting other newer units or for the System. If the requirement for Generating Unit Stability Study is retained in this proposed TPL-001-1, R2.5 needs to be clarified to say â€œonly whenâ€ the changes in R2.5.1 and R2.5.2 are made that the Generating Unit Stability Study needs to be done. There also needs to be language about how to treat generators that are existing prior to this Standard taking effect. We would also appreciate if the SDT would more clearly define with examples the terms in R2.5.2, â€œmaterial Transmission System changeâ€ and â€œat or near the point of Interconnectionâ€ to invoke a study.

Yes and No

R2.4 is acceptable. Please consider deleting the conditions identified in R5.4.3.1, R5.4.3.2, and R5.4.3.3. We question the need to specifically call out these requirement in subrequirements of R5.4.3. We believe these conditions should be met for any and all requirements of the standard. It should not be necessary to list acceptable practices, especially if the conditions placed on the practice are general conditions that are addressed elsewhere or are generic. Otherwise, R5.4 is

acceptable. ï€ The proposed requirements in R2.5 and R5.5 are already covered in FAC-001 and FAC-002 and should not be included again in the proposed TPL-001-1. Otherwise, the NERC standards would have redundant requirements. In addition, Transmission Ownerâ€™s open access tariffs requires Generator Owners to apply for interconnection to its transmission system or to make modifications to their generators as described in R2.5.1, R5.5.1, and R5.5.2. It is therefore the Generator Ownerâ€™s responsibility to cause these studies to be done at the time of interconnection or modification, yet R5 seems to place that responsibility only on the Transmission Planner and the Planning Coordinator. The Transmission Planner or the Planning Coordinator would not know of the changes until notified by the Generator Owner. If the SDT believes that FAC-001 is deficient, it should propose revisions to this standard, not simply add to TPL. Requirement R5.5.2 needs to be clarified to state changes or additions to the generating unit that result in an increase in power output. Otherwise, it could be interpreted to apply to existing units with a change in dispatch.

No

We generally agree with the definitions by themselves but have concerns about potential unintended consequences. This definition will severely limit the loads that can be classified as â€œlocal Network customers, connected to or supplied by the Faulted element or by the affected area, may occur in certain areas without impacting the overall reliability of the interconnected transmission systemsâ€ in footnote b of the existing TPL standards. In combination with raising the bar for loss of Facilities with operating voltages 300 kV or higher (P2, P4 and P5 in the Performance Tables), this definition may result in encouraging entities to connect more loads in a radial fashion or avoid loop connection to improve service reliability just to fit in the Consequential Load Loss definition, â€œâ€¦load no longer being connected to a sourceâ€¦â€. As a result, service reliability to customer would be adversity impacted without commensurate improvement in overall system reliability. In addition, existing design of many such local networks would normally require RAS/SPS to disconnect loads on local networks in response to contingencies. However, the definition of Non-Consequential Load Loss states that using RAS/SPS is Non-Consequential Load Loss. In the Consideration of Comments on the First Draft of TPL-001-1, page 49, response to First Energy, the SDT states "FERC has determined that any Load loss that is not directly connected to the faulted element is actually Non-Consequential Load loss." We found a similar response to WECC on page 449, item 6. While we do not disagree with the statements made by the SDT, that FERC wants clarification of what is Consequential Load Loss, we do not see where FERC has ruled out the use of RAS/SPS for Consequential Load Loss. Consequential Load Loss needs to include the concept of local networks. Another way to address this would be to exempt some local networks in the definition of the Bulk Electric System. The performance of existing systems has been designed to be consistent with the concepts of the quoted sentence above from footnote b of Table 1 of the existing TPL standards. There are many instances where some local network customer curtailments or local area load loss has been allowed by local regulatory authorities as long as the overall reliability of the interconnected system was not impacted. This is a result of tradeoffs with the cost and environmental impacts of providing a higher level of reliability in a local area. An attempt to eliminate the concepts contained in footnote b of the existing TPL standards would invalidate local regulatory decisions, place a large unintended cost burden on existing customers and could potentially create criteria that could not be met anytime soon, if ever, as a result of the long lead time required for system improvements. Any attempt to raise the bar by interpreting the definition of Non-Consequential Load as eliminating the concepts of footnote b is considered unacceptable. The new criteria need to clearly maintain these concepts to prevent a large disconnect with existing design criteria. The last sentence in the Definition of Consequential Load Loss (â€œAlthough Load which is lost as a result of the Loadâ€™s response to the transient conditions of the event is considered Consequential Load Loss and is permitted when Consequential Load Loss is allowed, Transmission planning entities are not allowed to rely upon the expectation of such Load loss to meet steady state performance requirementsâ€) seems more appropriate to be requirements. Therefore, please move this sentence to the Notes Section at the beginning of Table 1 as new Item 7.

Yes

We agree. However, the conditions listed in R3.5.1, R3.5.2 and R3.5.3 are applicable to the overall TPL Standard. Their specific listing in R3.5 gives the impression that these Requirements are only applied to R3.5 and not to the other Requirements in this Standard. In other words, are there any Requirements in this Standard that R3.5.1, R3.5.2 and R3.5.3 do not apply to? Therefore, we suggest TPL-001-1 be silent on this issue and move R3.5.1 through R3.5.3, (and the equivalent in the stability study R5.4.3.1 through R5.4.3.3) to a Requirement applicable to Assessment studies in general, such as the bullet points in the Performance Tables. Reference 3.5.1: In cases where an SPS is deployed to reduce thermal overloads such that flows are brought within established facility ratings, but, for a short duration (seconds) until it is fully executed, the facility flows exceed the established rating, is that considered a violation or an acceptable engineering judgment that facilities are judiciously being brought to operate within ratings? Or, should the facility owner ensure establishment of a documented rating even for the short duration of seconds?

Yes

Yes and No

We agree with R2.3. However, R4 requires assessment of â€œShort-circuit capability of its equipment under normal conditions and following any single Contingency condition that would result in greater circuit breaker interrupting dutiesâ€. Since short circuit studies are typically performed by applying a fault on a Facility starting from a normal condition, there can be confusion whether the result would constitute â€œnormalâ€ condition or â€œfollowing any single Contingency conditionâ€. Also, by specifying the normal and single contingency conditions, R4 is straying into â€œhowâ€ to perform a study, which is not necessary in a standard. We suggest deleting the reference to the contingencies to be used in the study.

Yes and No

We do not disagree with the proposed format changes of the Tables. However, we are not sure if separating into two Tables is necessary, or beneficial. It seems like an extra column for event could be added and some changes to the notes would greatly simplify the table. Some of the rows could also be combined; one such example is P2-2 (Loss of Bus Section) and P2-3 (Internal Breaker Fault, non-bus-tie). Will the SDT plan on combining some similar rows? Table 1, P4 and P5 refer to "Faults" as part of the contingency. This is steady state performance and faults are not modeled in steady state. Table 1, P2.1 refers to a "single ended line". Technically, this means we need to generate a "false" bus at each end of the line to evaluate this condition or use a dispatcher power flow which included breaker modeling. Is this an accurate interpretation of the intent of this requirement? We believe there should be no distinction between the voltage classes and support the use of load shed for all cases identified in P4 through P7.

No

We do not disagree with the proposed definition change. However, we do not agree that â€œSubstation configurations such as ring-bus, breaker-and-a-half, or double bus-double breaker protection schemes do not use bus-tie breakers. Some breaker-and-a-half and double-breaker layouts may have bus breakers located mid-way in the side elements. We propose the following definition: A circuit breaker that divides a bus section with multiple tap off points into two bus sections.

Yes and No

We interpret â€œexit breakersâ€ to mean a breaker on an element that comes in from outside the substation. We agree with applying less stringent performance requirements to bus tie breakers above 300 kV. Further, we believe that Non-Consequential Load Loss should be allowed for loss of either Bus-Tie or Non-Bus-Tie Breakers regardless of voltage class. The SDT has not presented evidence that the probabilities of failure for breakers within the same substation are significantly different for different voltage classes

Yes and No

We agree. However, the conditions listed in R3.5.1, R3.5.2 and R3.5.3 are applicable to the overall TPL Standard. Their specific listing in R3.5 gives the impression that these Requirements are only applied to R3.5 and not to the other Requirements in this Standard. In other words, are there any Requirements in this Standard that R3.5.1, R3.5.2 and R3.5.3 do not apply to? Therefore, we suggest TPL-001-1 be silent on this issue and move R3.5.1 through R3.5.3, (and the equivalent in the stability study R5.4.3.1 through R5.4.3.3) to a Requirement applicable to Assessment studies in general, such as the bullet points in the Performance Tables. Added: Reference 3.5.1: In cases where an SPS is deployed to reduce thermal overloads such that flows are brought within established facility ratings, but, for a short duration (seconds) until it is fully executed, the facility flows exceed the established rating, is that considered a violation or an acceptable engineering judgment that facilities are judiciously being brought to operate within ratings? Or, should the facility owner ensure establishment of a documented rating even for the short duration of seconds? Q10: TSS response: We generally agree with the concept of the sensitivity analysis since this is standard practice in understanding system performance risks and the effectiveness of improvements. It is ambiguous from a criteria perspective, however, what role is played by the sensitivities in developing Corrective Action Plans and what risks are created by misapplication of the intent of such sensitivity analyses. Clarification of the following is needed along with examples of applicable sensitivities and how these would be factored into Corrective Action Plans. If a Transmission Planner performs studies on the â€œbase caseâ€ of which the loads represented are 1 in 10 year adverse weather condition (10% chance that the actual load may exceed the projected load), does this constitute a sensitivity analysis. If so, will the Transmission Planner have to then perform additional less stringent studies at the load levels representing 1 in 2 year adverse weather conditions (50% chance that the actual load may exceed the projected load) to demonstrate compliance? R2.1.4 requires explanation of performing additional sensitivities that are not listed in the R2.1.3. This would discourage entities from performing additional sensitivities. In addition, in the above example, the Transmission Planners should not have to explain why they feel that this higher level (1 in 10 year adverse weather) of load is the â€œbase caseâ€ condition. R2.7 also states that â€œCorrective Action Plans do not need to be developed solely to meet the performance requirements for sensitivitiesâ€. Consider a Transmission Planner that has built transmission based on the 1 in 10 year adverse

weather load assumed in the â€œbase caseâ€, will the judgment of the Transmission Planner be then questioned because the â€œbase caseâ€ used is equivalent to a sensitivity case and not a 1 in 2 year adverse weather base case? Is some Non-Consequential Load Loss for an N-1 contingency on a sensitivity case using an extremely high load forecast acceptable as a Corrective Action Plan in the planning phase?

Yes

We agree with revising P6 to permit loss of Non-Consequential Load to meet performance requirements for Systems above 300kV. However, we are concerned that with the loss of the first N-1 in P6, curtailment of firm transmission service or firm transfers would not be allowed as part of system adjustment in preparation for the next N-1. Allowing curtailment of transmission service or firm transfers for such system adjustments should be added to R3.3.2.2. Otherwise, the power transfer under normal condition (before the first N-1) will have to be significantly curtailed in anticipation for meeting performance requirements after N-1-1, or transmission facilities, which would have otherwise been unnecessary, would have to be built. Either would adversely impact customers. We also have questions on Event P6 in both Performance Tables 1 and 2: We would like some clarification on the overlapping single contingencies as denoted in Event P6 (N-1-1), and one where a single contingency, say Event P1 (N-1), follows a prior "planned" outage of a Facility (N-1). The former would allow the Non-consequential Load Loss, while the latter would prohibit it.

Three study cycles would be my guess. Related matters: Since the definition for â€œYear Oneâ€ allows for the start of each assessment to be up to 18 month from the â€˜completionâ€™ of the previous Planning Assessment, using the term â€˜annualâ€™, â€˜annuallyâ€™ in the definition and in various sections of the standard is confusing. An alternate word or dropping the words annual/annually would make more sense. What is considered as â€˜completionâ€™ of an assessment (in definition of Year One)?

A field test of the revised standard would be the appropriate way to arrive at the approximate costs to support the new/modified requirements.

A field test would be the time to get an educated estimate.

C â€“ Definitely do not support the revised standard

We agree that the Standard as presented is clearer, but there are numerous issues that still need resolution, Measures, VSLs, Implementation Plan, etc., before giving a full approval of this Standard. ï€ There is no mention in the purpose of the Standard about minimizing loss of load for more probable unplanned contingencies. Maybe there needs to be some definition around what is meant by reliability. ï€ We believe that with the loss of the first N-1 in P6, curtailment of firm transmission service or firm transfers should be allowed as part of system adjustment in preparation for the next N-1. This should be added to R3.3.2.2. Otherwise, the power transfer under normal condition (before the first N-1) will have to be significantly curtailed in anticipation for meeting performance requirements after N-1-1. This will unnecessarily impede commerce. Or, to maintain the same firm power transfer under normal conditions, construction of transmission facilities will be required. Either way, this would impose a much stricter standard than exists today resulting in very costly unnecessary system improvements and invalidate terms of many transmission service contracts that allow for implementation of pro-rata curtailments of firm transmission rights during forced and planned outage conditions. ï€ We disagree with the application of the proposed definitions of Consequential Load Loss and Non-Consequential Load Loss in conjunction with â€œraising the barâ€. Local Network load should be included in Consequential Load and the loss should be allowed for single contingencies. The TPL standard is to maintain reliability of the BES. Under certain conditions orderly dropping of local network load could limit the spread of the disturbance beyond the local area and allow BES reliability to be maintained. This would minimize the total amount of load loss and allow for quicker load restoration. The proposed definitions for Consequential Load Loss and Non-consequential Load Loss will provide no reliability benefits for high voltage (>300 kV) transmission backbone system providing wholesale open access service and interconnecting to the rest of the western interconnection. Any potential reliability benefits of any additional facilities built to comply with these definitions would be at the local service level. ï€ As mention in comments to Q3 above, some local network customer curtailments or local area load loss has been allowed by local regulatory authorities as long as the overall reliability of the interconnected system was not impacted. This is a result of trade offs between providing a higher level of reliability in a local area and the cost and environmental impacts of providing that service. Such tradeoffs are subject to local regulatory authority or contract negotiated between the transmission provider and its transmission customers. Regarding the terms â€œinterruption of firm transmission serviceâ€, there needs be clarification on what Interruption means. Since it is referring to firm transmission service, we would interpret this to mean curtailment needed after a particular contingency and adjustments. There also needs to be clarification on what â€œFirm

Transmission Serviceâ€ means. Two points, 1) the NERC definition states â€œhighest quality service offered to customers under a filed rate schedule that anticipates no planned interruption.â€ The Standard implies anticipation of â€œunplannedâ€ interruption for certain contingencies. 2) Is this referring to a transmission product as defined in FERC Order 890, or firm transfers modeled for the conditions being studied? One way to interpret the intent is the firm transfers being modeled for the conditions in the powerflow to meet demand that would result in load not being served if that firm transfer were curtailed. If there is other generation in the system that could increase to meet the load if the transfer being modeled is interrupted, then interruption of firm transmission service should also be allowed for P1 through P5 contingencies in the table. In addition, we believe that DC and AC lines should have the same performance requirements with respect to interuption of firm transmission service. We do not understand why interruption of firm service would be an acceptable response to the loss of a single pole of a DC line (i.e. response to the contingency) but not an acceptable response to prepare for the next contingency of an AC line. The transfers over both AC and DC lines can automatically be curtailed when the line is outaged.

Individual

Roger Champagne

Hydro-Québec TransÉnergie (HQT)

No

There should be no difference beween System and Generating Unit Stability studies. Each require discretion regarding which events need to be tested. The consequences are potentially similar: either the instability of one of more generators. Extreme Events should be considered for any stability analysis, again, recognizing that discretion needs to be applied when selecting or dismissing particular contingencies. Therefore, the definition of Generating Unit Stability Study should be stricken from the standard.

No

a. A MOD standard should be developed to address the assembly of dynamic load models, rather than specifying modeling in paragraph 2.4.1 (dynamic behavior of loads). Paragraph 2.4.1 should instead read, "System Peak Load for one of the five years." b. In paragraph R.2.4.3.4, what does "variability" mean? c. Add a new requirement, "R5.4.3.4 Automatic generator tripping shall not have an significant adverse impact on overall system reliability." d. Remove Heading R5.5 and make generator unit stability a section of overall stability requirements. e. Modify R5.5.1 to become R5.4.5, with the following, "Shall be performed for the addition of an individual generating unit or generating units at the same interconnection point 20 MW or greater that are directly connected to the BES." There may be little difference between the stability performance of a single 20 MW unit and an aggregation of units totalling 20 MW at the same BES interconnection point f. Strike R5.5.3 and R5.5.4, as they become redundant to R5.4.1

Yes and No

In the Consequential Load Loss definition, the word 'source' needs to be defined or explained further since it is unclear. It should be indicated that this also applies to " stability performance requirements" (refer to the end of last sentence of the definition).

No

We do not feel that R3.5.1, R3.5.2 and R3.5.3 are limiting enough. Add paragraph 3.5.4 "Manual and automatic generator tripping shall not have an Adverse Reliability Impact."

No

With respect to R9 "including the expected mix of industrial, commercial and residential loads", this provision may be inadequate to be practically useful. The potential issues include the variation in end-use load mix through the daily load cycle, seasonal load composition variations, and the ability to translate these end-uses into reasonable and useful steady-state and dynamic load models. It is important to understand how the information will be used and how much additional detail such as distribution network detail is also required. It is also important to note that some Canadian Provinces do not "classify" their load mix using "industrial commercial and residential" designations but their load modeling is sufficient, accurate and granular enough to simulate system response. Add to the last sentence of R9 through R14 the following phrase, "within ninety days of a request for such information or as otherwise described in procedures established by the Planning Coordinator."

No

In R4, suggest striking, "that would result in greater circuit breaker interrupting dutiesâ€¦".

No

In both Table 1 and Table 2, the "Interruption of Firm Transmission Service Allowed", a definition should be provided to clarify that term. That term is more of a Market concept not used by all TOs and defined in their Transmission Tariff. Also, the standard might need to introduce a new term "Consequential Transmission Service Loss" as it does for the Load. Firm Transmission services are generally defined as a service of the same priority as the one for the native load. That does not mean it could not be interrupted. In both Table 1 and Table 2, the "Extreme Event

Descriptions" item 1 should add "or shunt device." In Table 1, the "Extreme Event Descriptions" item 3b should be deleted; it is redundant with Item 1. In Table 2, Note 5 includes significant clarifications and should not be buried in the bottom of the contingency table; Note 5 would be better placed in the definitions section. In Table 1 and Table 2, Contingency P5 requires a fault plus Protection System Failure. The "Protection System Failure" aspect of this contingency brings the necessity to define more clearly what is intended. The notion of needed redundancy or single elements of the protection system, be it physical or electric, has to be adressed to clearly understand the implication of that contingency. Until such clarification is included in this standard or in the future "Redundancy standard", this contingency should not be effective.

No

ï€ The definition provided is too limiting. It says that if you have a two rings with a bus tie breaker in between, it is no longer a bus tie breaker. HQT recommend, "A circuit breaker that is positioned to connect two individual station configurations. We do not agree that, "(Substation configurations such as ring-bus, breaker-and-a-half, or double bus-double breaker protection schemes do not use bus-tie breakers.)", as we have examples where stations of this nature are connected through a single "bus-tie breaker".

Yes

No

If a TP/PC conducts the studies specified in R2.1.1 and R2.1.2 with one or more of the sensitivities which stress the system in the normal course of study, are we to assume that fulfills the requirements of R2.1 completely, without additional studies of a less-stressed system?

Yes

HQT believe some additional cost for analysis and study may be required in order to meet the final requirements of the standard and the associated performance tables, however the ability to accurately estimate the costs of these studies, how long the analysis may take and how much additional effort may need to be made to compile the documentation is not possible at this time. Many believe posing this question is premature and cannot be quantified at this time and it may hold questionable value without a better understanding of the complete final requirements of the standard. Many believed that the sensitivity language, although currently being performed to some extent within NPCC, that now appears in the standard, could have a drastic affect on the extent to which this additional analysis is conducted and the associated costs

See Q12

HQT and NPCC participating members have expressed compliance concerns that this standard, and in particular this question, imply NERC has the ability to "force" transmission reinforcements and construction. It should be emphasized and clarified that the standard should require transmission studies only, and per the Energy Policy Act, NERC does not have this authority as the ERO as granted by FERC in the US and NO authority allowing this in Canada. Also HQT and NPCC participating members expressed concern that a validly-conducted assessment which shows that criteria are not met (in the 5 or 10 year horizon) could result in non-compliance with the Standard. If NERC believes that it can issue monetary penalties for 5 or 10 year assessments that show that performance criteria will not be met under future system conditions, there is a key question that requires explanation: What behavior is NERC attempting to incent through fining parties for conducting assessments which identify problems in a 5 to 10 year horizon? Also, NERC should further explain how it would view the relevance of a State or Provincial decision not to permit new facilities when issuing such a potential penalty such as preclusive siting issues with Generating Plants.

C â€“ Definitely do not support the revised standard

This standard as drafted does not allow exceptions for small parts of the system as long as interconnected system reliability is maintained, which is allowed in the existing TPL standards in footnotes b) and c) in Table 1. Unless such exceptions are allowed significant transfer restrictions or large reinforcements must be made. The applicable TPL footnotes are: ï€ Planned or controlled interruption of electric supply to radial customers or some local Network customers, connected to or supplied by the Faulted element or by the affected area, may occur in certain areas without impacting the overall reliability of the interconnected transmission systems. To prepare for the next contingency, system adjustments are permitted, including curtailments of contracted Firm (non-recallable reserved) electric power Transfers. ï€ Depending on system design and expected system impacts, the controlled interruption of electric supply to customers (load shedding), the planned removal from service of certain generators, and/or the curtailment of contracted Firm (nonrecallable reserved) electric power Transfers may be necessary to maintain the overall

reliability of the interconnected transmission systems. ï€ This comment form did not allow for the following items to be addressed: ï€ a. Definition of the Long-Term Planning Horizon. The planning horizon, for assessment purposes should be limited to 10 years. Such an assessment should be sufficient to identify requirements that may take an extended time to implement. ï€ b. Definition of Planning Coordinator is part of the NERC Functional Model, For consistency it should be removed from the Standard. ï€ c. We propose that the Standard be subdivided by subjects into 4 different Standards : ï€ TPL-001-1: Modeling and System Assessment (R1, R2, R9 to R14) ï€ TPL-002-1: Short circuit and Steady State Performance (R3, R4) ï€ TPL-003-1: Stability Performance (R5) ï€ TPL-004-1: Coordination (R6, R7, R8) ï€ If the previous proposition is not retained, at least the Standard Requirements should be organized by topics (Modeling, Assessment, Coordination, etc.) and headings put on each section to identify requirements of section. Add headings to the tops of the subsequent pages in the performance tables. Headings only appear on the first page at the beginning of the Table. ï€ d. With respect to R2.2 - Delete "current" from the phrase"current System Peak Load study" and replace "study" with "assessment." ï€ e. Remove R2.2.1, the requirement to extend the assessment beyond 10 years. What does the length of the project have to do with the assessment? If it takes 15 years to build something, why does this require a review of year 15? What is the purpose of this assessment? ï€ f. R3.3.2 requires clarification - This standard needs to permit discretion regarding the single contingencies that need to be tested, similar to R 3.3.3 and R3.4. It is unnecessary to test all events. For example, contingencies may be limited to relevant disturbances that are contained within or directly impact the studied system. ï€ g. With respect to R3.2.1 - Clarify whether the intent of the standard is to address station service minimum voltage limitation, maximum leading VAR absorption capability or both at steady state. ï€ h. Remove R3.2.2 - Relay loadability is addressed in PRC-023 standard. ï€ i. With respect to R3.3.2.1 - Recommend the removal of the requirement to assess the expected duration of Consequential Load loss. It's not considered anywhere else in the standard. ï€ j. With respect to R3.3.3 - The paragraph refers to Table 1 Contingencies P3 through P7; this should be explicitly stated. Rationale for inclusion of testing should not be required; should only need to explain why certain Contingencies were not tested. This discretion should be applicable to all contingencies. ï€ k. With respect to section R5 - The concept of planned and long-term outages should apply to the general Planning Assessment, or not at all. It should not be specific to the Stability Assessment. ï€ l. The provisions of Section R.5.3 should have a corresponding MOD standard apply a requirement to provide information regarding all direct and indirect protective and control actions that could result in the inadvertant trip of the generator. Such a provision should include "other equipment (e.g. HVDC, SVC's, Statcoms)", and identify how these devices are treated in the simulation. ï€ m. Planned outages should be addressed in the operating horizion unless otherwise defined in the planning horizion. ï€ n. In both Table 1 and Table 2, note 3, "variable frequency transformers" should be removed from the last sentence. A new sentence should be added for reference voltage as it applies to "variable frequency transformers" and "back-to-back" facilities.

Individual

Bart White

Progress Energy Florida, Inc.

No

Progress Energy Florida, Inc. (PEF) does not believe that Stability Analysis should be or can be successfully divided into the proposed two distinct concepts of System Stability and Generating Unit Stability. Most textbooks dealing with the matter of Stability Analysis divide the issue into two parts, steady state and transient, and then subdivide the transient part into power angle stability and voltage stability. PEF has been unable to find any engineering treatise that argues for dividing transient Stability Analysis into System Stability and Generating Unit Stability. NERC's present definition of Stability, "The ability of an electric system to maintain a state of equilibrium during normal and abnormal conditions or disturbances", succinctly and correctly addresses the fact that stability issues regarding plants cannot be extricated from analysis of the rest of the system. PEF feels that this existing definition is accurate and not in need of clarification or improvement. To cite an example, if under the auspices of Generating Unit Stability, a transmission line trips, or if a load shedding scheme is activated, does the event then get defined as a System Stability event (or both)? It should be noted that the SDT attempted to both improve and clarify the definition of Stability in Note 5 of Table 2. The SDT's wording in Table 2 Note 5, while not containing any inappropriate or inaccurate information, has two fundamental flaws: a) it unnecessarily replaces the existing definition and b) it does not contain any language tying in the new definitions of System Stability and Generating Unit Stability. Furthermore, given that both of the new definitions are held to the exact same requirements, those found in Table 2, PEF can see no tangible benefit to two definitions, and therefore recommends removal of the new definitions of System Stability and Generating Unit Stability, and a return to the existing definition of Stability. Stability analyses that are taking place under the present definition and under the existing TPL Standards are more than adequate to demonstrate reliability of the BES, and PEF feels that the introduction of two new definitions would only serve to cause confusion and discussion regarding unmerited additional analyses.

No

R2.4.4 as worded does not make sense, and could potentially create illogical situations where the Transmission Planner or Planning Coordinator would "offer up" additional sensitivities specific to their systems, for which they might not presently be analyzing and immediately have to self-report non-compliance. As a substitute to the language in R2.4.4, PEF suggests either returning to the language in each existing Standard's R1.3.2, or adding an R2.4.3.6 that states "Other known critical system conditions specific to the system studied by the Transmission Planner or Planning Coordinator. Regarding R5.4 and R5.5, PEF disagrees to the extent that a differentiation has been made between System Stability and Generating Unit Stability (see Question 1 comments). Given that System Stability and Generating Unit Stability are held to precisely the same standards in Table 2, PEF feels that significant modification is required to R5.4 and R5.5, specifically that the two sections need to be consolidated into a single section. Given the complex nature of Stability Analysis, and the fact that Generators are inextricably intertwined with all other components of the BES, the distinction that the SDT is attempting to make with this issue makes no sense from a power systems engineering perspective.

No

The Definitions of â€œConsequential Load Lossâ€ and â€œNon-Consequential Load Lossâ€, bring to mind the following concerns: Both Definitions are confusing and unclear as to their intent and meaning, and as presently worded it is PEFâ€™s belief that these particular Definitions can be interpreted in ways not intended by the SDT. For example, the definition of Consequential Load Loss contains the phrase "Load that is no longer connected to a source"; presumably this means "Load that is no longer connected to any source", but is not stated as such. PEF would note, however, its disagreement with the definition even with the wording change, given how the definition would be applied. UVLS, UFLS and SPS schemes are excluded from Consequential Load Loss, and thus are not allowed as mitigations for several outage scenarios. The SDT is essentially discouraging Transmission Owners from constructing such schemes, which is counterproductive to reliability, and actually reduces reasonable options left for Transmission Owners to the point that possible outcomes might be a) radializing of systems or b) removing breakers in order to convert load previously deemed Non-Consequential Load into Consequential Load. PEF maintains that where particular outage scenarios dictate the need for UVLS, UFLS and SPS schemes, the right to implement them should be allowed regardless of the category of event, so long as implementation in lieu of a more expensive project will not compromise the reliability of the BES. Whether or not UVLS, UFLS and SPS schemes continue to be categorized as Non-Consequential Load Loss, however, PEF disagrees with the definition given how it would be applied.

No

PEF does not disagree with the conditions described in Requirements R3.5.1, R3.5.2 and R3.5.3 when taken in particular contexts. PEF, however, is compelled to check "no" for this question due to the fact that no specification has been made as to when such CAPs can be applied. PEF feels that the CAPs specified (as well as the curtailment of Firm Transactions and Non-Consequential Load) should be allowed following any N-1 event, and also as system adjustment actions in between the two events of a P6 event. Given that no such specification has been made here, PEF objects to the wording, and suggests that the language be modified to clarify that the application of these CAPs are allowable after N-1 events and in between the two events of Event P6.

No

PEF as a general rule believes that Requirements R9-14 can and should be addressed in a MOD Standard. Individual comments on particular ones that PEFs sees as problematic are as follows: R9: This requirement is problematic in its present wording. As worded it would appear to infringe upon the outlined process regarding provision of load forecast data as stipulated in PEF's Attachment K document, mandated to be included as an Attachment to our Tariff per FERC Order 890. In PEF's Attachment K, load forecast data, as submitted by all entities responsible for providing such data for PEF native load, must be submitted by January 1 of each year. Implementation of R9 would thus set in place two binding regulatory processes for a situation in which only one is needed. Furthermore, the requirement uses the term "transmission node", a term which is ambiguous and not easily applicable in the electric utility business. Terms such as "feeders", "substations" or "delivery points" might be more appropriate. R11: PEF appreciates the consideration given with the term "known planned outages", given that specific dates for planned outages in the long-term planning horizon are often difficult to know. This point concludes, however, with the addition of the phrase â€œwith consideration given to spare equipment strategyâ€, and PEF does not understand what is meant by this term nor why it is given special consideration in a discussion of planned outages. Spare equipment is just as crucial, if not more so, in the event of an unplanned outage. Furthermore, consideration of spare equipment strategy is already handled as part of PEF's planning processes and as part of the existing TPL Standards. PEF therefore requests that the phrase "with consideration given to spare equipment strategy" be removed from R11. R13: PEF is unsure as to the meaning of "for each year of the Planning horizon". PEF would point out that if from one planning cycle to the next, the modeling of a particular planned generator has not changed, the Resource Planners should not have to re-submit the same data over and over again on an annual basis. Additionally, PEF asserts that its Resource Planners are not involved in the development or implementation of Reactive Power devices or new technologies, and therefore requests that these specifications be removed.

No

PEF disagrees with, and recommends removal of both R2.3 and R4 on the following grounds: R2.3: Evidence that short circuit analysis has been performed is already mandated through Requirement R1.4 NERC Standard FAC-002-0. Inclusion of the mandate in the TPL Standard is redundant. R4: While the fundamental inadequacy of the short circuit issue is its inclusion in the TPL Standard to begin with (see R2.3 comments), PEF is perplexed at the proposed requirement to perform short circuit analysis for single contingencies. PEF cannot conceive of a scenario for which a single contingency scenario would result in increased fault duty. Such a mindset essentially considers short circuit analysis as equivalent to load flow analysis, which it clearly is not. Short circuit analysis is performed to adequately set relays, size equipment and prevent equipment damage, and as such is not appropriate for inclusion in a TPL Standard.

No

The Steady State and Stability Tables (Tables 1 and 2), are overly long, confusing, and contain circular references. PEF strongly advises returning to the content and format of Table 1 in the existing TPL Standards, or at the very least, consolidation of the Tables into a single Table. Furthermore, for certain events in Tables 1 and 2, the SDTâ€™s intent concerning the scope of the events and how the events would be simulated in Transmission Planning analyses is not clear. PEF furthermore does not agree with "Interruption of Firm Transmission Service Allowed" and "Non-Consequential Load Loss Allowed" as benchmarks for whether or not a particular BES is reliable (see additional comments in Question 15 on this issue). Tables 1 and 2 at present are 13 pages in total, whereas the existing Table 1, which PEF feels is comprehensive and not in need of revision, is merely 1.5 pages long. PEF understands that the reason behind the length and complexity of Tables 1 and 2 stems from a desire by some to contain all of the primary TPL compliance issues in a tabular format. The end result, however, is not effective and must be made more concise.

No

PEF understands the intent behind the wording of the definition, but neither agrees with the definition nor its use in various applications in the Standard. Bus tie breakers as defined in the draft Standard are limited to connecting two straight bus configurations. In reality, the term bus-tie breaker can be, and is used for other applications. PEF suggests that the SDT further research the use of this term in the industry. But more to the point, PEF does not see the need for a distinction between bus tie and non bus tie breakers and ultimately recommends that this be removed from the Standard.

No

PEF is opposed to distinction between non-Bus-tie breakers and Bus-tie breakers, and furthermore is opposed to the more stringent requirements for both in facilities above 300 kV. One primary reason has already been acknowledged by the SDT, that breakers have the same failure rate no matter the configuration in which they are placed. PEF can see two potential outcomes to the missteps being made regarding the breaker distinction: a) multiple redundancy of breakers for both Bus-tie and non-Bus-tie breaker schemes, which will require tearing down many Substations, acquiring additional property in many cases, and completely rebuilding the Substations to allow room for redundancy of breakers in series with one another; b) choosing to remove existing breakers for which a scenario of non-compliance is imminent, which could potentially pose a reliability risk to the system and possibly result in heightened risk for other Event categories.

No

PEF has significant concerns with each of the sub-Requirements listed in R2.1.3. Each is ambiguous, vague and open to variations in interpretation. It therefore makes no sense that "documentation of the technical rationale for why each of the conditions was or was not selected" is a requirement. Indeed, given that all of the sub-Requirements of R2.1.3 are vague, unspecific, unwieldy concepts, PEF is not sure how said documentation could be accomplished. Concerning R2.1.4, PEF has the same concerns that were expressed regarding the modified requirements mentioned in Question 2, and similarly here would suggest a substitute to the language in R2.1.4. Significant concerns with the previous sub-Requirements notwithstanding, PEF suggests either returning to the language in each existing Standard's R1.3.2, or adding an R2.1.3.8 that states "Other known critical system conditions specific to the system studied by the Transmission Planner or Planning Coordinator."

No

PEF is pleased that between the 1st and 2nd drafts, the "no" was changed to "yes" concerning allowance of curtailment of Firm Transmission Service or curtailment of Non-Consequential Load for Event P6. PEF has significant concerns, however, regarding the issue of "System Adjustments" associated with P6 and P6's direct association with P1, and thus must check "no" on this Question despite the improvements that have been made. A major misstep has been made with regard to development of P6. Every P1 event is by default the first half of a P6 event. Given that fact, PEF sees several concerns with this issue. First, for P1 events, neither curtailment of Firm Transmission Service nor curtailment of Non-Consequential Load are allowed, regardless of voltage. Both are allowed, however, for a P6 event. In order for the two events to

not contradict each other, the conclusion that must be reached is that curtailment of Firm Transmission Service and curtailment of Non-Consequential Load are not allowed as part of System Adjustments, i.e. they are not allowed in between the two steps of P6, only after the 2nd step of P6 (Note: this is not clear partly due to the fact that the term "System Adjustments" is not defined anywhere in the Standard, and PEF therefore requests that the SDT define the term, and that the term should include the allowance of curtailment of Firm Transmission Service and the loss of Non-Consequential Load). PEF has two very serious concerns with that conclusion: a) FERC in its Order 693 stated that the BES is not required to have to withstand another N-1 contingency. Specifically, in Paragraph 1788 of Order 693 FERC states that â€œUnder TPL-002-0 the system is not required to be able to withstand another N-1 contingency. That N-1 requirement is a Category C contingency which is addressed by TPL-003-0.â€ Thus FERC clearly made a distinction between N-1 events for which a 2nd N-1 event never happens and N-1-1 events. The SDT, however, has not written the draft TPL Standard in such a way that Transmission Owners can reasonably and fairly plan for the 2nd N-1 event as TPL-003-0 has done. b) PEF has several 1st N-1 events on their 500 kV system for which "System Adjustments" are necessarily going to have to include either the curtailment of Firm Transmission Service or the curtailment of Non-Consequential Load in order to prepare for the 2nd N-1 event. The draft TPL Standard, while far from definitive on this matter, appears to allow neither as part of System Adjustments. PEF will thus be forced to i) construct redundant 500 kV facilities, at a cost to our ratepayers that will doubtless run into the range of billions of dollars, or ii) significantly reduce the posted levels of ATC/TTC of the various transmission paths available. Option (ii) is not a better option than option (i), for two main reasons: reducing ATC/TTC essentially puts marketing entities out of business, and forces utilities to build more generation sites to compensate for the loss of energy brought in using the previously higher ATC values. Either option results in prohibitively high costs to be passed on to the ratepayers for no measurable increase in BES reliability. This discussion also brings up additional concerns that include the lack of consideration of State government jurisdiction, the lack of public involvement, and ultimately, the lack of sufficient reason to construct such redundancy. PEF has never had a 500 kV N-1-1 event on its system. For this draft Standard to require redundancy projects costing billions of dollars for events that to date have never occurred is preposterous (note: additional comments concerning public outreach, no State government involvement, etc., are contained in the response to Question 15).

Given that a) PEF has never performed analysis to the extent that the draft TPL Standard is requiring and b) the draft is going through an iterative process and is at present considered a "moving target", a reasonably accurate estimate, or even a wild guess, cannot be provided for this answer. Having said that, it can be reasonably said that any estimate that could safely claim a reasonable degree of accuracy would require analysis performed full-time by several individuals over a period of several months (or possibly a period greater than one year). Just the cost of the assessment analysis alone would present an O&M challenge to PEF's Transmission department.

PEF has assessed this question and determined that any period of time less than 10 years would be inadequate to assess the supplemental nature of the requirements of the draft TPL Standard, to say nothing of the time required to construct the required facilities.

PEF, again stating that this cannot be considered an accurate estimate for the reasons stated in 12a, would estimate the burdened labor cost to perform such supplemental analysis on an ongoing basis to be at least $1M annually.

Again, these costs cannot be reasonably estimated given the difficulties stated in the answer to Question 12a. It would reasonable to expect that the number of individuals in PEF's Transmission Planning group would have to dramatically increase, at least doubling in size or possibly significantly more than doubling.

Documentation cannot be separated from the actual analysis itself, and thus would be included as part of the $1M estimate stated in the answer to Question 12b above.

Again, due to the difficulties described in the answer to Question 12a, given that the amount of analysis cannot be reasonably estimated, neither can the one-time capital cost. PEF did state in the answer to Question 11 that the cost to our 500 kV system alone would easily run in to the range of costing billions of dollars. How many billions, we are not sure, but we have sufficient experience through presently planned 500 kV projects on our system to know that the cost for such expansion is in the range of billions of dollars. Given that PEF has not been able to comprehensively assess the costs to its 230 kV and 115 kV system, it is likely that the total cost of implementing the draft TPL Standard would be many, many billions of dollars. As stated earlier, this concern is reinforced in the answer to Question 15, but we are extremely concerned that our ratepayers will potentially be burdened with such exorbitant cost for so little benefit, and are certain that our PSC and our ratepayers will agree.

PEF does not believe the undertaking required in the present draft of the TPL Standard, questionably described here as an "initial" program, could reasonably be implemented in our lifetime. As stated in our answers to Questions 12 and 13, the planning time would run at least 10 years, or one complete long-term planning cycle. Implementation, particularly given the scope of 500 kV projects and challenges with operating the existing system while constructing such large projects, will take an additional 10 years. An estimate of 20 years, however, assumes

that the industry is in place to make such projects feasible continent-wide. Just a cursory assessment of the limited resources of the Transmission Construction industry, combined with the global demand for concrete and steel, leads us to conclude that implementation of the draft Standard's requirements is not feasible short of a World War II-scale re-tooling of our entire economy. Given the significant challenges the U.S. economy is already facing, the prudency of such a colossal undertaking with minimal benefit becomes even more questionable.

C â€“ Definitely do not support the revised standard

PEF considers the draft TPL Standard in its present state to be infeasible, unnecessary, burdensome and inferior to the existing Standards. The basic approach to equate reliability of the BES to whether or not Firm Transmission Service and/or Non-Consequential Load Loss can be sustained is an erroneous approach, is not justifiable, infringes upon regulation already in place as part of dealings with the Florida Public Service Commission (PSC), and infringes upon requirements in the OATT. Given the numerous concerns PEF has with the revised draft Standard, expounding on those concerns requires extensive documentation. We therefore cannot reduce our concerns down to a single issue, nor can we single out a single requirement or set of requirements as the top concern, other than to say that the entire Standard development process either needs to be discontinued or the SDT should provide detail as to how much consideration would be given to transmission systems with historically excellent reliability via a variance process. The following is a list of PEFâ€™s primary concerns with the revised draft Standard and explanation as to why the Standard development process should be discontinued: 1. PEF has planned to, and demonstrated compliance with, the existing TPL Standards for several years now. PEF is intimately familiar with the existing Standards, and has done an excellent job in planning the PEF system, in conjunction with the other Transmission Owner members of FRCC, non-FRCC adjacent Transmission Owners, and all requestors of Transmission or Generator Interconnection Service using the existing TPL Standards. PEF thus believes that history has shown, particularly within the realm of PEFâ€™s Transmission Planning boundaries, that the existing four TPL Standards are not inadequate or inferior in any way. Statements in recent months alluding to the existing Standardsâ€™ inferiority, confusing language or language subject to opposing interpretations, do not hold up when applied to the PEF and FRCC systems. PEF thus does not believe the Standards require modification. 2. PEF, through its aforementioned participation with FRCC and through its interaction and compliance with regulation by the Florida PSC, has historically demonstrated excellent Transmission Reliability, and can provide documentation to that effect through FRCC and Florida PSC channels. PEF therefore again asserts that modification or increased stringency in the TPL Standards is not merited. 3. The development of TPL-001-1 stems from a fundamental misinterpretation of the intent of FERC Order 693. NERC for the most part, rather than â€œclarifyâ€ or â€œconsiderâ€ various matters raised by FERC, chose to accept all suggestions. Specifically, PEF notes the following misinterpretations regarding Order 693: a) In Paragraph 1692, the Commission agreed with one particular utilityâ€™s assertion that integrating the four existing TPL Standards into a single standard would be an improvement, and directed NERC to â€œconsiderâ€ this. NERC, rather than considering this, formed the SDT, which appears to have spent little considering the issue but rather have deemed it a foregone conclusion that the four existing TPL standards must be abolished and a new standard must be written. b) In Paragraphs 1694 and 1706, the Commission recognizes the significant differences in the various transmission systems, and the impossibility of developing a standardized list of â€œsensitivitiesâ€ of critical operating conditions that every Transmission Planner and Planning Coordinator must analyze, regardless of their applicability. The Commission therefore stated that it is reasonable for planning entities to have a means to identify an appropriate range of critical operating conditions, without having to anticipate â€œevery conceivable critical operating condition.â€ They furthermore state that their conclusion on the whole matter is that â€œonly those deemed to be significant need to be assessedâ€. PEF agrees, and thus is perplexed by the erroneous developments in Requirements R2.4, R2.5, R5.4, R5.5, R2.1.3 and R2.1.4. PEF has addressed the inadequacies of these Requirements in the answers to Questions 2 and 10. c) In Paragraph 1704, the Commission, amongst other statements, states that they â€œare not requiring the construction of additional facilitiesâ€. This general statement made by the Commission is demonstrated to be untrue upon examining the realities of the Standard development process. FERC, by directing NERC to consider various clarifications and/or improvements to the TPL Standards, has set in motion a process which will prohibit either Interruption of Firm Transmission Service or the loss of Non-Consequential Load for various outage scenarios, effectively necessitating the construction of redundant facilities. FERC's statement conflicts with the ongoing process in a major way, and PEF respectfully requests that the SDT confer with appropriate FERC personnel to get clarification on this matter. d) In Paragraph 1725, the Commission directs the ERO to modify the planning Reliability Standards to require the assessment of planned outages consistent with the entityâ€™s spare equipment strategy. PEF does not disagree with the specifics of analyzing events with respect to spare equipment, except to the extent that the Commission appears to think that such analysis is not adequately covered in the existing TPL Standards. PEF believes that the existing TPL Standards adequately address this issue and all other issues pertaining to the planning of a transmission system. Furthermore, the process is to be followed â€œconsistent with the entityâ€™s spare equipment strategyâ€, thus deferring to the processes and judgment of the individual

Transmission Owners, which calls into question the need to include it in the draft Standard. For additional discussion on this issue, see the answer to Question 5 with regard to Requirement R11. e) In Paragraph 1782, PG&E points out the contradiction that FERC creates in Paragraph 1796 by directing NERC to remove the 2nd sentence of footnote (b). The contradiction also involves key statements made by the Commission in Paragraph 1788. For a more detailed explanation of this contradiction, see the answer to Question 11. f) Paragraph 1794 is part of the Commission Determination section. The Commission states its belief that no TPL Standard should allow an entity to plan for the loss of non-consequential load in the event of a single contingency. The Commission then directs NERC to â€œclarify the Reliability Standard.â€, and furthermore state that any Transmission Planners or Planning Coordinators seeking to plan for the loss of non-consequential load in the event of a single contingency can make their comments known through a) filing comments in the standards development process, or b) filing for a regional difference for case-specific circumstances. PEF points out that the Commission merely stated their belief and directed NERC to clarify the Standard. They did not order NERC to change the Standard to reflect its beliefs. NERC, while having the leeway to question FERCâ€™s approach in this Paragraph, did not question the approach, but rather deferred to the suggestion in Paragraph 1794 (as well as nearly every other suggestion or request for clarification) that FERC made. PEF is concerned that NERC and the SDT appear to be limiting the extent to which they question or make suggestions to FERC. PEF at present will take the approach of stating the prudency and need to plan for the curtailment of Firm Transmission Service and loss of non-consequential load in the event of a single contingency through the comments process. PEF, however, reserves the right to consider the variance approach or legal approaches, depending on further iterations in the development of the Standard. g) In Paragraph 1795, â€œThe Commissionâ€¦suggests that the ERO consider developing a ceiling on the amount and duration of consequential load loss that will be acceptable. If the ERO determines that such a ceiling is appropriate, it should be developed through the EROâ€™s Reliability Standards development process.â€ To this effect, the SDT drafted Requirement R.3.3.2.1, which at present states â€œConsequential Load loss (expected maximum demand and expected duration) following a single Contingency shall be identified in the Planning Assessment.â€ PEF asserts that this issue is under the jurisdiction of the State Public Service Commissions, who are already doing an excellent job in regulating Consequential Load Loss as part of SAIDI/CMI requirements. FERC and NERC are overstepping their bounds of jurisdiction by attempting to essentially â€œdouble-regulateâ€ an issue that is already adequately regulated via the States. PEF furthermore objects to Requirement R.3.3.2.1 on the grounds that duration of events cannot be estimated with any reasonable degree of accuracy. To handle the challenges of this issue by stating a long-duration worst-case scenario for each outage would be inaccurate, and would tend to foster needless scrutiny and concern on any and all outages associated with Consequential Load Loss. h) In Paragraph 1796, â€œThe Commissionâ€¦directs the ERO to modify the second sentence of footnote (b) to clarify that manual system adjustments other than shedding of firm load or curtailment of firm transfers are permitted to return the system to a normal operating state after the first contingency, provided these adjustment can be accomplished within the time period allowed by the short term or emergency ratings.â€ The Commission directed the ERO only to make modifications on the 2nd sentence of footnote (b). The SDT in the draft TPL Standard has eliminated footnote (b) altogether. PEF is surprised and disappointed at the response by FERC to PG&Eâ€™s very correct assertion that eliminating the allowance of shedding of firm load or curtailment of firm transfers from footnote (b) contradicts the allowance made in footnote (c) regarding C.3 events. FERCâ€™s only response was to state that â€œmanual adjustments referred to in both cases [i.e. Category B and Category C.3 events] apply after the first N-1 contingencyâ€. The fallacy of this statement is that shedding of firm load or curtailment of firm transfers is allowed by footnote (c) for C.3 events, and that every Category B event is by default the first part of a Category C.3 event. PEF asserts that FERC, and consequently the NERC SDT, has created a draft Standard that contradicts direction and suggestion in Order 693 regarding this issue. PEF furthermore asserts that curtailment of Firm Transmission Service or Non-Consequential Load are not valid benchmarks for assessing the reliability of the BES. For additional comments on this issue, see the answer to Question 11. i) Regarding Paragraph 1833, the paragraph in its entirety states: â€œMidAmerican states that it supports the proposal to modify TPL-004-0 to require identification of options for reducing the probability or impacts of extreme events that cause cascading. Accordingly, for the reasons cited in the NOPR, the Commission directs the ERO to modify the Reliability Standard to make this modification to the Reliability Standard.â€ PEF does not understand what FERC has directed on this matter. Furthermore, PEF does not understand the meaning or requirements behind the entire â€œExtreme Eventsâ€ section in the draft Standard, which appears to have resulted from the direction in this particular Paragraph. FERC wants NERC to modify the Standard to â€œrequire identification of options for reducing the probability or impacts of extreme events that cause cascading.â€ This statement is vague, confusing and does not appear to mandate anything. PEF therefore requests that language in TPL-001-1 to this effect be removed. Furthermore, in Paragraph 1834, the Commission, regarding its preference to expand TPL-004-0 to include analysis of more events such as hurricanes, ice storms, successful cyber attacks, etc., directs NERC to â€œexpand the list of events with examples of such events identified above.â€ This

request, similar to Paragraph 1833, does not appear to direct NERC to make specific directions in a Standard. If it was FERCâ€™s intent that TPL-004 or its successor be modified to include some or all of FERCâ€™s suggested events, and to expand the list further, PEF has many concerns concerning this. The direction in Paragraph 1834 has resulted in the aforementioned Extreme Events section, which contains a note 1 referring to Requirement R3.4. PEF has multiple questions and concerns with the language in this Requirement. The Requirement as worded appears to mandate that Transmission Planners and Planning Coordinators must find the most severe Extreme Event scenarios that can be conceived. Such wording would define any reasonable limit as to which Extreme Events are likely and worthy of analysis, and which are not. Furthermore, many of the events suggested by FERC, such as loss of a large gas pipeline, wildfires, hurricanes, tornadoes, cyber attacks, etc., cannot reasonably be studied. To make any assessment of these events that even approached a level of thoroughness is infeasible, and furthermore has no significant benefit. PEF requests that the SDT point out to FERC that these events cannot be studied, and therefore need to be excluded from any TPL Standard. 4. The main approach of the draft TPL Standard consists of whether to allow or disallow load loss for certain outage scenarios (the most problematic Event categories being P1, P2.2, P2.3, P3, P4, P5 and P6), an approach to which PEF is opposed, and furthermore believes that level of service to retail load is not an issue that NERC/FERC should be regulating. The local utility commissions (the Florida PSC, etc.) have already set in place processes for reviewing/approving the level of transmission built to support the level of service to load, and thus FERC and NERC inappropriately attempt to regulate an issue which the States already adequately regulate. PEF can, and has demonstrated in its internal planning assessments and in assessments performed with FRCC that load curtailment and/or Firm Transmission Service curtailment do not adversely impact the reliability of the BES. In fact, certain post-contingency scenarios can be shown to demonstrate that such curtailments actually promote reliability and a speedier, safer, more efficient recovery of the BES after an event. 5. Several Event categories as presently defined in the draft TPL Standard present outage scenarios on the PEF system for which implementation of redundant transmission facilities would be required, at an exorbitant cost to ratepayers. The redundancy requirements at PEFâ€™s 500 kV, 230 kV and 115 kV Substations are numerous, and have not yet been comprehensively quantified, although this analysis is underway. One scenario for which PEF is already certain that redundancy of the 500 kV system would be required is the apparent disallowance of curtailment of Firm Transmission Service or Non-Consequential Load as part of â€œSystem Adjustmentsâ€ in between the two events of P6. PEF again would point out that no definition of â€œSystem Adjustmentsâ€ exists at present, and the SDT therefore must define it if compliance is expected. Be that as it may, PEFâ€™s 500 kV redundancy projects would clearly cost many billions of dollars, with extremely little benefit. PEF would furthermore point out that this is but one example requiring unnecessary Transmission upgrades, and that further analysis will potentially reveal several more Event categories in Tables 1 and 2 for which additional cost-prohibitive and unneeded projects would be mandated. 6. PEF is surprised and disappointed that neither FERC nor NERC have accepted any responsibility to alert the public or the State and local governments to this process. The public have not been involved in the development of the draft standard, nor have they been informed that they would bear the financial impact of the increased stringency. In fact, The SDT on p. 369 of the 1st draft Comments Document has stated that â€œThis is a performance based reliability standard and does not and should not consider economics.â€ PEF considers this statement to be reckless and irresponsible, and does not accept FERCâ€™s and NERCâ€™s apparent position that they have no responsibility in this matter. The fact that the draft Standard and FERC Order 693 can be downloaded by anyone from FERCâ€™s and NERCâ€™s websites does not constitute a sufficient good-faith notice of this process to the public. PEF requests that FERC and NERC specifically address this issue by explaining their failure to involve and inform the public. Assigning this responsibility to each Transmission Planner and Planning Coordinator is not acceptable. FERC and NERC have set this process in motion, and as creators of the process owe an explanation to those who would â€œfoot the billâ€ for the process. 7. The low voltage threshold of jurisdiction of the draft Standard, previously defined in NERCâ€™s definition of the BES as 100 kV, is not specified in the draft Standard. This is a significant misstep by NERC in that a change to NERCâ€™s Glossary Definition of the BES, which would ostensibly be done outside the boundaries of this Standard, could profoundly change the requirement for complying with TPL-001-1 without changing a single word of the Standard. PEF is particularly concerned that this Standard must never have jurisdiction over local load-serving transmission systems, regardless of voltage. Any TPL Standard, existing or future, must focus on the reliability of the BES, i.e. the bulk grid, NOT the local load-serving portions of the transmission system. The draft Standard at present does not address this issue at all and leaves Transmission Planners and Planning Coordinators vulnerable to non-compliance with a mere change in the wording of a Definition outside of the Standard. 8. PEF strenuously objects to the allowance of interruption of Firm Transmission Service in Events P1 and P3 for DC lines, while disallowing the same for AC lines. PEF asserts that the determination should be â€œYesâ€ for both, and that disallowance for AC lines a) puts DC systems into an elite class of transmission for no explicable reason and b) encourages owners of AC Transmission Systems to replace them with DC, cost concerns notwithstanding. Furthermore, this differentiation fails to recognize or give consideration to the fact that AC

systems support Firm Transmission Service; some areas of the AC transmission system carry significant amounts of Firm Transmission Service, and thus a â€œNoâ€ determination for P1 and P3 essentially mandates either implementing redundancy for those parts of the AC system carrying significant amounts of Firm Transmission Service, or severely curtailing Firm Transmission Service on the existing AC systems.

Individual

Jessica Rice

Sierra Pacific Power Comapny / Nevada Power Company

No

We believe that there is no significant distinction between Generating Unit Stability and System Stability other than the objective and focus of the study. Therefore, we cannot accept a simple statement from the SDT that it believes it is important to maintain this distinction without more explanation. If a distinction is maintained, then Generating Unit Stability Study should be and is already covered in FAC-001-0 and FAC-002-0. As defined, Generating Unit Stability Study â €œfocuses on an individual generating unit's or electrically closely-coupled generating units' Stability for various Contingencies on the Transmission Facilities connected to that generating unit(s) point(s) of interconnection or one bus away from that point. However, the Purpose of the proposed TPL-001-1 is to â€œdevelop a Bulk Electric System that will operate reliably over a broad spectrum of System conditions and following a wide range of probable Contingenciesâ€. If a Generating Unit becomes unstable, the unit can be disconnected from the BES without impacting system stability. Therefore, we believe that the Generating Unit Stability Studies portion is attempting to introduce interconnection stability studies into the TPL standards. Interconnection stability studies are adequate addressed by FAC-001 and does not need to be specifically called out in TPL-001-1. In addition, Generating unit stability studies are typically performed at the time of interconnection. Even though Generating Unit Stability Studies have been done as new generating unit(s) were interconnected or at the time changes occurred, such studies have not been done for the entire fleet of Generating Units at the same time. For very old units, stability study documentation may no longer exist, even though no potential stability problems have been identified when stability studies were run for interconnecting other newer units or for the System. If the requirement for Generating Unit Stability Study is retained in this proposed TPL-001-1, R2.5 needs to be clarified to say â€œonly whenâ€ the changes in R2.5.1 and R2.5.2 are made that the Generating Unit Stability Study needs to be done. There also needs to be language about how to treat generators that are existing prior to this Standard taking effect. We would also appreciate if the SDT would more clearly define with examples the terms in R2.5.2, â€œmaterial Transmission System changeâ€ and â€œat or near the point of Interconnectionâ€ to invoke a study.

Yes and No

R2.4 is acceptable. Please consider deleting R5.4.3. It should not be necessary to list acceptable practices, especially if the conditions placed on the practice are general conditions that are addressed elsewhere or are generic. Otherwise, R5.4 is acceptable. We generally agree that Transmission Owners with extensive Transmission Planning Function and Planning Coordinators need to perform and be held accountable for the Requirements in R2.4 and R5.4; however, the SDT needs to define an organization size level below which these requirements for the associated Transmission Planner may be slightly relaxed. There are numerous Transmission Planners; (e.g., those associated with PUDs, Municipals or REA, etc. where historically dynamic stability has not been a problem), for which performing these type of studies and assessments would be onerous and would not yield reliability benefits for the network. The proposed requirements in R2.5 and R5.5 are already covered in FAC-001 and FAC-002 and should not be included again in the proposed TPL-001-1. Otherwise, the NERC standards would have redundant requirements. In addition, Transmission Ownerâ€™s open access tariff requires Generator Owner to apply for interconnection to its transmission system or to make modifications to their generators as described in R2.5.1, R5.5.1, and R5.5.2. It is therefore the Generator Ownerâ€™s responsibility to cause these studies to be done at the time of interconnection or modification, yet R5 seems to place that responsibility only on the Transmission Planner and the Planning Coordinator. The Transmission Planner or the Planning Coordinator would not know of the changes until notified by the Generator Owner. If the SDT believes that FAC-001 is deficient, it should propose revisions to this standard, not simply add to TPL. Requirement R5.5.2 needs to be clarified to state changes or additions to the generating unit that result in an increase in power output. Otherwise, it could be interpreted to apply to existing units with a change in dispatch.

No

We generally do not disagree with the definitions by themselves but have concerns about potential unintended consequences. This definition will severely limit the loads that can be classified as â€œlocal Network customers, connected to or supplied by the Faulted element or by the affected area, may occur in certain areas without impacting the overall reliability of the interconnected transmission systemsâ€ in footnote b of the existing TPL standards. In combination with raising the bar for loss of Facilities with operating voltages 300 kV or higher (P2, P4 and P5 in the Performance Tables), this definition may result in encouraging entities to

connect more loads in a radial fashion or avoid loop connection to improve service reliability just to fit in the Consequential Load Loss definition, â€œâ€¦load no longer being connected to a sourceâ€¦â€. As a result, service reliability to customer would be adversity impacted without commensurate improvement in overall system reliability. In addition, existing design of many such local networks would normally require RAS/SPS to disconnect loads on local networks in response to contingencies. However, the definition of Non-Consequential Load Loss states that using RAS/SPS is Non-Consequential Load Loss. In the Consideration of Comments on First Draft of TPL-001-1, page 49, response to First Energy, the SDT states "FERC has determined that any Load loss that is not directly connected to the faulted element is actually Non-Consequential Load loss." We found a similar response to WECC on page 449, item 6. While we do not disagree with the statements made by the SDT, that FERC wants clarification of what is Consequential Load Loss, we do not see where FERC has ruled out the use of RAS/SPS for Consequential Load Loss. Consequential Load Loss needs to include the concept of local networks. Another way to address this would be to exempt some local networks in the definition of the Bulk Electric System. The performance of existing systems has been designed to be consistent with the concepts of the quoted sentence above from footnote b of Table 1 of the existing TPL standards. There are many instances where some local network customer curtailments or local area load loss has been allowed by local regulatory authorities as long as the overall reliability of the interconnected system was not impacted. This is a result of tradeoffs with the cost and environmental impacts of providing a higher level of reliability in a local area. An attempt to eliminate the concepts contained in footnote b of the existing TPL standards would invalidate local regulatory decisions, place a large unintended cost burden on existing customers and could potentially create criteria that could not be met anytime soon, if ever, as a result of the long lead time required for system improvements. Any attempt to raise the bar by interpreting the definition of Non-Consequential Load as eliminating the concepts of footnote b is considered unacceptable. The new criteria need to clearly maintain these concepts to prevent a large disconnect with existing design criteria. The last sentence in the Definition of Consequential Load Loss (â€œAlthough Load which is lost as a result of the Loadâ€™s response to the transient conditions of the event is considered Consequential Load Loss and is permitted when Consequential Load Loss is allowed, Transmission planning entities are not allowed to rely upon the expectation of such Load loss to meet steady state performance requirementsâ€) seems more appropriate to be requirements. Therefore, please move this sentence to the Notes Section at the beginning of Table 1 as new Item 7.

Yes

We generally agree, however, the conditions listed in R3.5.1, R3.5.2 and R3.5.3 are applicable to the overall TPL Standard. Their specific listing in R3.5 gives the impression that these Requirements are only applied to R3.5 and not to the other Requirements in this Standard. In other words, are there any Requirements in this Standard that R3.5.1, R3.5.2 and R3.5.3 do not apply to? Therefore, we suggest TPL-001-1 be silent on this issue and move R3.5.1 through R3.5.3, (and the equivalent in the stability study R5.4.3.1 through R5.4.3.3) to a Requirement applicable to Assessment studies in general, such as the bullet points in the Performance Tables.

Yes

While we agree with separating R1 to form R9 through R14, we believe that R9 (modeling information for real and reactive load forecast data) should be applicable to Load Serving Entities (LSE) instead of (or in additional to) the Distribution Provider. In any case, this type of exchange of load information is already covered in MOD Standard or in the respective tariffs, and should not be included again in the proposed TPL-001-1 Standard.

Yes and No

We agree with R2.3. However, R4 requires assessment of â€œShortcircuit capability of its equipment under normal condition and following any single Contingency condition that would result in greater circuit breaker interrupting dutiesâ€. Since short circuit studies are typically performed by applying a fault on a Facility starting from a normal condition, there can be confusion whether the result would constitute â€œnormalâ€ condition or â€œfollowing any single Contingency conditionâ€. Also, by specifying the normal and single contingency conditions, R4 is straying into â€œhowâ€ to perform a study, which is not necessary in a standard. We suggest deleting the reference to the contingencies to be used in the study.

Yes and No

We do not disagree with the proposed format changes of the Tables. However, we are not sure if separating into two Tables is necessary, or beneficial. It seems like an extra column for event could be added and some maybe some changes to the notes would greatly simplify the table. Some of the rows could also be combined; one such example is P2-2 (Loss of Bus Section) and P2-3 (Internal Breaker Fault, non-bus-tie). Will the SGT plan on combining some similar rows? Table 1, P4 and P5 refer to "Faults" as part of the contingency. This is steady state performance and faults are not modeled in steady state. Table 1, P2.1 refers to a "single ended line". Technically, this means we need to generate a "false" bus at each end of the line to evaluate this condition or use a dispatcher power flow which included breaker modeling. Is this an accurate interpretation of the intent of this requirement? We believes there should be no distinction between the voltage classes and supports the use of load shed for all cases identified in P4

through P7.

No

We do not disagree with the proposed definition change. However, we do not agree that â€œSubstation configurations such as ring-bus, breaker-and-a-half, or double bus-double breaker protection schemes do not use bus-tie breakers. Some breaker-and-a-half and double-breaker layouts may have bus breakers located mid-way in the side elements. We propose the following definition: A circuit breaker that divides a bus section with multiple tap off points into two bus sections.

Yes

We interpret â€œexit breakersâ€ to mean a breaker on an element that comes in from outside the substation. We agree with the rationale for the requiring more stringent performance requirement levels for non-bus tie breakers above 300 kV. Further, we believe that Non-Consequential Load Loss should be allowed for loss of either Bus-Tie or Non-Bus-Tie Breakers regardless of voltage class. The SDT has not presented evidence that the probabilities of failure for breakers within the same substation are significantly different for different voltage classes

Yes and No

We generally agree with the concept of the sensitivity analysis since this is standard practice in understanding system performance risks and the effectiveness of improvements. It is ambiguous from a criteria perspective, however, what role is played by the sensitivities in developing Corrective Action Plans and what risks are created by misapplication of the intent of such sensitivity analyses. Clarification of the following is needed along with examples of applicable sensitivities and how these would be factored into Corrective Action Plans. If a Transmission Planner performs studies on the â€œbase caseâ€ of which the loads represented are 1 in 10 year adverse weather condition (10% chance that the actual load may exceed the projected load), does this constitute a sensitivity analysis. If so, will the Transmission Planner have to then perform additional less stringent studies at the load levels representing 1 in 2 year adverse weather conditions (50% chance that the actual load may exceed the projected load) to demonstrate compliance? R2.1.4 requires explanation of performing additional sensitivities that are not listed in the R2.1.3. This would discourage entities from performing additional sensitivities. In addition, in the above example, the Transmission Planners should not have to explain why they feel that this higher level (1 in 10 year adverse weather) of load is the â€œbase caseâ€ condition. R2.7 also states that â€œCorrective Action Plans do not need to be developed solely to meet the performance requirements for sensitivitiesâ€. Consider a Transmission Planner that has built transmission based on the 1 in 10 year adverse weather load assumed in the â€œbase caseâ€, will the judgment of the Transmission Planner be then questioned because â€œbase caseâ€ used is equivalent to a sensitivity case and not a 1 in 2 year adverse weather base case?

Yes

We agree with revising P6 to permit loss of Non-Consequential Load to meet performance requirements for Systems above 300kV. However, we are concerned that with the loss of the first N-1 in P6, curtailment of firm transmission service or firm transfers would not allowed as part of system adjustment in preparation for the next N-1. Allowing curtailment of transmission service or firm transfers for such system adjustments should be added to R3.3.2.2. Otherwise, the power transfer under normal condition (before the first N-1) will have to be significantly curtailed in anticipation for meeting performance requirements after N-1-1, or transmission facilities, which would have otherwise been unnecessary, would have to be built. Either would adversely impact customers. We also have questions on Event P6 in both Performance Tables 1 and 2: We would like some clarification on the overlapping single contingencies as denoted in Event P6 (N-1-1), and one where a single contingency, say Event P1 (N-1), follows a prior "planned" outage of a Facility (N-1). The former would allow the Non-consequential Load Loss, while the latter would prohibit it.

$400,000

2 Man Years

$250,000/year

$100,000

$50,000

$800 Million

10 years

B â€“ Unsure about supporting the revised standard

We agree that the Standard as presented is clearer, but there are numerous issues that still need resolution, Measures, VSLs, Implementation Plan, etc., before WECC can give a full approval of this Standard. There is no mention in the purpose of the Standard about minimizing loss of load for more probable unplanned contingencies. Maybe there needs to be some definition around what is meant by reliability. We believe that with the loss of the first N-1 in P6, curtailment of firm transmission service or firm transfers should be allowed as part of system

adjustment in preparation for the next N-1. This should be added to R3.3.2.2. Otherwise, the power transfer under normal condition (before the first N-1) will have to be significantly curtailed in anticipation for meeting performance requirements after N-1-1. This will unnecessarily impede commerce. Or, to maintain the same firm power transfer under normal conditions, construction of transmission facilities will be required. Either way, this would impose a much stricter standard than exists today resulting in very costly unnecessary system improvements and invalidate terms of many transmission service contracts that allow for implementation of pro-rate curtailments of firm transmission rights during forced and planned outage conditions. We disagree with the application of the proposed definitions of Consequential Load Loss and Non-Consequential Load Loss in conjunction with â€œraising the barâ€. Local Network load should be included in Consequential Load and the loss should be allowed for single contingencies. The TPL standard is to maintain reliability of the BES. Under certain conditions orderly dropping of local network load could limit the spread of the disturbance beyond the local area and allow BES reliability to be maintained. This would minimize the total amount of load loss and allow for quicker load restoration. The proposed definitions for Consequential Load Loss and Non-consequential Load Loss will provide no reliability benefits for high voltage (>300 kV) transmission backbone system providing wholesale open access service and interconnecting to the rest of the western interconnection. Any potential reliability benefits of any additional facilities built to comply with these definitions would be at the local service level. As mention in comments to Q3 above, some local network customer curtailments or local area load loss has been allowed by local regulatory authorities as long as the overall reliability of the interconnected system was not impacted. This is a result of tradeoffs between providing a higher level of reliability in a local area and the cost and environmental impacts of providing that service. Such tradeoffs are subject to local regulatory authority or contract negotiated between the transmission provider and its transmission customers. Regarding the terms â€œinterruption of firm transmission serviceâ€, there needs be clarification on what Interruption means. Since it is referring to firm transmission service, we would interpret this to mean curtailment needed after a particular contingency and adjustments. There also needs to be clarification on what â€œFirm Transmission Serviceâ€ means. Two points, 1) the NERC definition states â€œhighest quality service offered to customers under a filed rate schedule that anticipates no planned interruption.â€ The Standard implies anticipation of â€œunplannedâ€ interruption for certain contingencies. 2) Is this referring to a transmission product as defined in FERC Order 890, or firm transfers modeled for the conditions being studied? One way to interpret the intent is the firm transfers being modeled for the conditions in the powerflow to meet demand that would result in load not being served if that firm transfer were curtailed. If there is other generation in the system that could increase to meet the load if the transfer being modeled is interrupted, then interruption of firm transmission service should also be allowed for P1 through P5 contingencies in the table. In addition, we believe that DC and AC lines should have the same performance requirements with respect to interuption of firm transmission service. We do not understand why interruption of firm service would be an acceptable response to the loss of a single pole of a DC line (i.e. response to the contingency) but not an acceptable response to prepare for the next contingency of an AC line. The transfers over both AC and DC lines can automatically be curtailed when the line is outaged.

Individual

Gary Newell (Thompson Coburn LLP -- Counsel to Lafayette Utilities System)

Lafayette Utilities System

No

Lafayette Utilities System (Lafayette) does not dispute the need for stability studies, especially in connection with significant system topology changes. We are concerned, however, by the possibility of inconsistencies between the results of interconnection studies conducted for new generating units pursuant to the Large Generator Interconnection Procedures prescribed by FERC and Generating Unit Stability Studies conducted as part of the TPL-001 planning assessment. For example, if a TPL-001 stability analysis indicates the need for more costly or extensive transmission upgrades that were indicated in an earlier LGIP interconnection study, the generation developer could be placed in an untenable situation: it would have proceeded with its project based on the assumption of responsibility for LGIP-indicated upgrades, but then could face demands for the funding of additional upgrades pursuant to the TPL-001 stability analysis. Improved integration between the two sets of stability studies appears warranted, in order to avoid placing generation developers in this position.

Yes and No

Requirement 2.4.1 directs the furnishing of information that would reveal the location of new large inductive loads. Large inductive loads typically are induction motors used in industrial applications. Therefore, a Distribution Provider's forecasts about the expected level of its inductive load could effectively reveal non-public information about the anticipated location of new industrial loads. If a Distribution Provider were required to disclose such information to its Transmission Planner, the confidentiality of information having considerable commercial and competitive significance could be compromised. This would be of particular concern if the Transmission Planner and the Distribution Provider also happen to be competitors for new retail loads.

No
Non-consequential load loss is described as including non-interruptible load lost that results from manual or automatic operations "such as under-voltage Load shedding, under-frequency Load shedding, or Special Protection Systems â€¦." It should be clarified that the quoted items are not intended to be exhaustive of the non-manual Load loss situations that would be considered the loss of Non-consequential Load. For instance, some types of industrial applications that are power-quality dependent may be expected to disconnect or shut down in the event of fluctuations in frequency, voltage or current. Foreseeable load interruptions of this nature should be treated as "Non-consequential Load loss" even if the mechanism by which the load disconnects is other than a UFLS, UVLS or SPS system operated by the Distribution Provider.
No
Requirement R.3.5 states that generation run-back is allowed as a response to single or multiple contingencies, as long as certain conditions are met. Lafayetteâ€™s concern is that the allowance for generation run-back is not limited to generation owned by the Transmission Planner or under the Transmission Plannerâ€™s direct operational control. For that reason, the language could be interpreted to permit reliance (for planning purposes) on redispatch of generation owned by third-party generation owners that is undertaken in compliance with Reliability Coordinator directives during a Transmission Loading Relief event. During the SDT conference call held on August 26, 2008, the SDT representative stated that the team did not intend that R.3.5 would permit a Transmission Planner to rely on third-party generation redispatch, and that the intent was only to permit reliance on run-back (redispatch) of generation owned by or under the direct control of the Transmission Planner. Lafayette believes the language of R.3.5 needs to be clarified to state in express terms the limitation intended by the SDT. Reliance on third-party redispatch should not be permitted unless a Transmission Planner has entered into a contractual arrangement with the generation owner authorizing such use.
No
In Draft 2 of TPL-001, the SDT has adopted â€œPlanning Coordinatorâ€ as a new defined term. That term is used frequently in the new draft Reliability Standard (including in Requirements R9 - R14 but also, most notably, in Section A.4.1.1). The SDT explained in its response to comments on Draft 1 that it had taken the definition of â€œPlanning Coordinatorâ€ from the NERC Functional Model. However, the term â€œPlanning Coordinatorâ€ is not used in the NERC Registry Criteria, nor does it appear in the NERC Glossary. Because the latter form the basis for allocating compliance responsibilities, the SDT should eliminate use of â€œPlanning Authorityâ€ and should adopt in its stead a term that is used in the Registry Criteria (such as â€œPlanning Authorityâ€). With respect to the incorporation of data provided under Reliability Standards MOD-010 and MOD-012 into the studies contemplated by the revised version of TPL-001 (see Requirements R1 and R5), Lafayette urges the SDT to clarify entitiesâ€™ obligations with respect to the provision and use of this data, particularly with respect to Planning Coordinators/Authorities. As presently drafted, MOD-010 and MOD-012 do not apply to Planning Coordinators or Planning Authorities, and these standards also do not provide for these entities to receive MOD-010 and MOD-012 data from the entities that are subject to these two Standards. Further, to the extent that Requirements R1 and R5 require Transmission Planners to use MOD-010 and MOD-012 data, is it contemplated that Transmission Planners will obtain this data from Resource Planners and Transmission/Generation Owners in their areas, or will Transmission Planners merely be obligated to incorporate the data that they themselves provide under MOD-010 and MOD-012 into their studies? Requirement R9 directs each Distribution Provider to furnish its â€œPlanning Coordinatorâ€ with modeling information that includes â€œreal and reactive load forecast data â€¦ at Transmission nodesâ€ and â€œthe expected mix of industrial, commercial, and residential Loads.â€ As discussed previously with respect to Requirement 2.4.1, Distribution Providers may consider the information required by R9 to be commercially sensitive such that its disclosure could have adverse competitive effects. The information specified in R9 therefore should be protected from disclosure unless the provider of the information authorizes its release or other appropriate protections are in place. Additionally, given that this requirement directs the provision of â€œload forecast data,â€ it seems more appropriate that the requirement apply to â€œLoad-Serving Entities,â€ â€œDistribution Providers that serve load,â€ or â€œDistribution Providers that are also Load-Serving Entities.â€ Requirement R10 assumes that the Transmission Planner has access at all times (and, therefore, is in a position to provide within 90 days of a request) to Firm Transmission Service Data, Interchange Schedules, and resources required to serve load for each of its Balancing Authorities for each year of the transmission planning horizon. The Transmission Planner, however, may only receive such information periodically (e.g., annually or semi-annually) from its Balancing Authorities for use in the planning process. It is more likely that, at any point during the year, the Transmission Owner, Transmission Operator, or Transmission Service Provider would have access to the specified information. Requirement R10 should be expanded to include these other entities, who probably will have access to the data throughout the planning cycle. Requirement R11 does not specify whether outage information provided by a Transmission Owner must be updated (e.g., if the outage schedule changes after being provided upon request by the Planning

Coordinator). The Transmission Ownerâ€™s obligations with respect to providing updated information should be clearly stated. Additionally, it is not clear what the SDT means by the phrase â€œgiving consideration to spare equipment strategy.â€ If the intent is that Transmission Owners shall factor into their outage decisions and timing the availability of spare equipment that might affect the need for or duration of an outage, that intent should be stated in clear terms.

No

Lafayette has identified two issues with respect to the Short Circuit Analysis required in TPL-001. First, Requirements R2.3 and R4 do not describe the required Short Circuit Analyses in sufficient detail to ensure that these studies are performed using topology assumptions that are consistent with the assumptions used in the Steady-State and Stability Studies. If inconsistent topology assumptions are used, the results of the analyses would not present a clear and consistent picture for planning purposes. Second, interconnection studies performed under the FERC LGIP procedures typically include considerable short-circuit analysis of the interconnecting transmission system. Entities required to perform an annual Planning Assessment should be permitted to use, for TPL-001 compliance purposes, any up-to-date short-circuit analyses that may have been conducted for an LGIP interconnection study. Forcing these entities to re-perform the analyses for TPL-001 compliance would impose unnecessary cost.

Yes

Yes

No

See paragraph (b) in response to Question 15.

No

As to the performance of sensitivity analyses under R2.1.3, Lafayette believes that insufficient detail is provided to define with clarity cases that involve â€œmodification of expected transfersâ€ (per R2.1.3.2). For example, it is unclear whether the phrase â€œmodification of expected transfersâ€ is intended to refer to a change in directional bias in the model, a reduction in flows due to variation between reservations and schedules, or something else. Additional definition should be provided to ensure that sensitivity cases performed pursuant to R2.1.3.2 are meaningful and useful.

No

Lafayette does not agree that the loss of Non-Consequential Load should be permitted as a corrective action. See also paragraph (b) in response to Question 15.

Lafayette has not analyzed in any detail the resource requirements addressed in this question. Based on available information, we estimate that supplementing existing studies would require at least 1 FTE familiar with stability analysis to be able to complete this portion of TPL. The new steady-state analysis will require the addition of 1 FTE to be able to complete the additional P5-P7 requirements. These will be ongoing expenses whether accomplished by hiring new staff or relying on external service providers.

See response to part 1 of Question 12.

See response to part 1 of Question 12.

See response to part 1 of Question 12.

See response to part 1 of Question 12.

See response to part 1 of Question 12.

See response to part 1 of Question 12.

C â€“ Definitely do not support the revised standard

Lafayetteâ€™s single biggest concern is that the second draft version of TPL-001 imposes performance requirements that are less stringent than those imposed in the previous draft. As the SDT stated in its response to comments on Draft 1: â€œThe SDT modified the performance requirements relative to Non-Consequential Loss of Load and revised Tables 1 & 2 to add greater detail and provide for more situations where it is acceptable to lose Non-Consequential Load.â€ This â€œwatering downâ€ of the standard appears to result from complaints about the costs that certain commenting parties claimed would be necessary to achieve compliance with the performance requirements set forth in Draft 1. This is evident from the SDTâ€™s statement in the foreword to the comments form for Draft 2 that the SDT has â€œattempted to adjust and clarify the proposed requirements and performance in light of these initial comments,â€ and that the SDT needs additional information about cost and other compliance issues so that it can â€œmake more adjustments as appropriate.â€ Lafayette questions whether it is appropriate for the SDT to shape the performance standards to alleviate certain commentersâ€™ cost concerns. The SDT should be focused on developing performance requirements that are judged to be optimal from the standpoint of protecting reliability consistent with sound engineering and planning. Striking a balance between reliability and cost is a policy determination for which responsibility lies elsewhere than in the SDT. Claims that the standards would impose excessive

costs are more properly addressed to FERC when the revised TPL-001 is filed for approval because Congress assigned to FERC the responsibility to make judgments of this sort. The SDT should not be â€œadjustingâ€ (that is, watering down) the performance requirements in response to transmission owner arguments about the costs of compliance. The dilution of the performance requirements is manifest in a number of elements contained in the proposed draft, including (but not limited to) the following: a) Table 1 (Steady State Performance) would permit the interruption of Firm Transmission Service and the loss of Non-Consequential Load in three P1 (Single Contingency) scenarios involving AC lines. In Order 693 (at paragraph 1794), however, FERC emphasized that loss of Non-Consequential Load in single contingency situations is not permissible. b) Adopting less stringent performance requirements for loss of elements below 300kV may be discriminatory. Most wholesale customer loads are served from delivery facilities that operate at voltages lower than 300kV. The outage of facilities operating at less than 300kV therefore may encompass 100% of a wholesale customerâ€™s load, while it is likely to impact a much smaller portion of the total load served by the owner of the affected transmission facilities. Therefore, adopting less stringent performance requirements for facilities operating at less than 300kV would impose a disproportionate burden on affected wholesale customers, as compared to the transmission owner. c) In addition to its potentially discriminatory effect, the notion of imposing difference performance standards based on operating voltage would incent transmission owners to scrimp on needed improvements to lower voltage facilities. Presumably, the distinction originates from a belief that outages on 300kV and lower facilities will have less impact on the Bulk Electric System. As the August 2003 blackout demonstrated, however, disruptions on lower voltage circuits can cause real and reactive power flow fluctuations across, and eventual separation of, higher-voltage networks. d) Regarding the SDTâ€™s elimination of the requirement to re-test cases to ascertain the efficacy of additions included in a Corrective Action Plan (sub-requirement 2.7.2 in Draft 1), it is unclear why this requirement was deleted since very few commenters complained that it would be burdensome. It is hard to see how such a re-testing obligation would impose a significant burden, at least insofar as the steady state analysis is concerned. Eliminating the re-testing requirement seems likely to provide minimal savings, but could be important to verifying that appropriate Corrective Action Plan decisions are made.

Individual

Eric Egge

Black Hills Corporation

No

We believe that there is no significant distinction between Generating Unit Stability and System Stability other than the objective and focus of the study. Therefore, we cannot accept a simple statement from the SDT that it believes it is important to maintain this distinction without more explanation. If a distinction is maintained, then Generating Unit Stability Study should be and is already covered in FAC-001-0 and FAC-002-0. As defined, Generating Unit Stability Study â€œfocuses on an individual generating unit's or electrically closely-coupled generating units' Stability for various Contingencies on the Transmission Facilities connected to that generating unit(s) point(s) of interconnection or one bus away from that point. However, the Purpose of the proposed TPL-001-1 is to â€œdevelop a Bulk Electric System that will operate reliably over a broad spectrum of System conditions and following a wide range of probable Contingenciesâ€. If a Generating Unit becomes unstable, the unit can be disconnected from the BES without impacting system stability. Therefore, we believe that the Generating Unit Stability Studies portion is attempting to introduce interconnection stability studies into the TPL standards. Interconnection stability studies are adequately addressed by FAC-001 and does not need to be specifically called out in TPL-001-1. In addition, Generating unit stability studies are typically performed at the time of interconnection. Even though Generating Unit Stability Studies have been done as new generating unit(s) were interconnected or at the time changes occurred, such studies have not been done for the entire fleet of Generating Units at the same time. For very old units, stability study documentation may no longer exist, even though no potential stability problems have been identified when stability studies were run for interconnecting other newer units or for the System. If the requirement for Generating Unit Stability Study is retained in this proposed TPL-001-1, R2.5 needs to be clarified to say â€œonly whenâ€ the changes in R2.5.1 and R2.5.2 are made that the Generating Unit Stability Study needs to be done. There also needs to be language about how to treat generators that are existing prior to this Standard taking effect. We would also appreciate if the SDT would more clearly define with examples the terms in R2.5.2, â€œmaterial Transmission System changeâ€ and â€œat or near the point of Interconnectionâ€ to invoke a study.

Yes and No

R2.4 is acceptable. Please consider deleting the conditions identified in R5.4.3.1, R5.4.3.2, and R5.4.3.3. We question the need to specifically call out these requirement in subrequirements of R5.4.3. We believe these conditions should be met for any and all requirements of the standard. It should not be necessary to list acceptable practices, especially if the conditions placed on the practice are general conditions that are addressed elsewhere or are generic. Otherwise, R5.4 is acceptable. We generally agree that Transmission Owners with extensive Transmission Planning Function and Planning Coordinators need to perform and be held accountable for the

Requirements in R2.4 and R5.4; however, the SDT needs to define an organization size level below which these requirements for the associated Transmission Planner may be slightly relaxed. There are numerous Transmission Planners; (e.g., those associated with PUDs, Municipals or REA, etc. where historically dynamic stability has not been a problem), for which performing these type of studies and assessments would be onerous and would not yield reliability benefits for the network. The proposed requirements in R2.5 and R5.5 are already covered in FAC-001 and FAC-002 and should not be included again in the proposed TPL-001-1. Otherwise, the NERC standards would have redundant requirements. In addition, Transmission Ownerâ€™s open access tariffs requires Generator Owners to apply for interconnection to its transmission system or to make modifications to their generators as described in R2.5.1, R5.5.1, and R5.5.2. It is therefore the Generator Ownerâ€™s responsibility to cause these studies to be done at the time of interconnection or modification, yet R5 seems to place that responsibility only on the Transmission Planner and the Planning Coordinator. The Transmission Planner or the Planning Coordinator would not know of the changes until notified by the Generator Owner. If the SDT believes that FAC-001 is deficient, it should propose revisions to this standard, not simply add to TPL. Requirement R5.5.2 needs to be clarified to state changes or additions to the generating unit that result in an increase in power output. Otherwise, it could be interpreted to apply to existing units with a change in dispatch.

No

We generally agree with the definitions by themselves but have concerns about potential unintended consequences. This definition will severely limit the loads that can be classified as â€œlocal Network customers, connected to or supplied by the Faulted element or by the affected area, may occur in certain areas without impacting the overall reliability of the interconnected transmission systemsâ€ in footnote b of the existing TPL standards. In combination with raising the bar for loss of Facilities with operating voltages 300 kV or higher (P2, P4 and P5 in the Performance Tables), this definition may result in encouraging entities to connect more loads in a radial fashion or avoid loop connection to improve service reliability just to fit in the Consequential Load Loss definition, â€œâ€¦load no longer being connected to a sourceâ€¦â€. As a result, service reliability to customer would be adversity impacted without commensurate improvement in overall system reliability. In addition, existing design of many such local networks would normally require RAS/SPS to disconnect loads on local networks in response to contingencies. However, the definition of Non-Consequential Load Loss states that using RAS/SPS is Non-Consequential Load Loss. In the Consideration of Comments on the First Draft of TPL-001-1, page 49, response to First Energy, the SDT states "FERC has determined that any Load loss that is not directly connected to the faulted element is actually Non-Consequential Load loss." We found a similar response to WECC on page 449, item 6. While we do not disagree with the statements made by the SDT, that FERC wants clarification of what is Consequential Load Loss, we do not see where FERC has ruled out the use of RAS/SPS for Consequential Load Loss. Consequential Load Loss needs to include the concept of local networks. Another way to address this would be to exempt some local networks in the definition of the Bulk Electric System. The performance of existing systems has been designed to be consistent with the concepts of the quoted sentence above from footnote b of Table 1 of the existing TPL standards. There are many instances where some local network customer curtailments or local area load loss has been allowed by local regulatory authorities as long as the overall reliability of the interconnected system was not impacted. This is a result of tradeoffs with the cost and environmental impacts of providing a higher level of reliability in a local area. An attempt to eliminate the concepts contained in footnote b of the existing TPL standards would invalidate local regulatory decisions, place a large unintended cost burden on existing customers and could potentially create criteria that could not be met anytime soon, if ever, as a result of the long lead time required for system improvements. Any attempt to raise the bar by interpreting the definition of Non-Consequential Load as eliminating the concepts of footnote b is considered unacceptable. The new criteria need to clearly maintain these concepts to prevent a large disconnect with existing design criteria. The last sentence in the Definition of Consequential Load Loss (â€œAlthough Load which is lost as a result of the Loadâ€™s response to the transient conditions of the event is considered Consequential Load Loss and is permitted when Consequential Load Loss is allowed, Transmission planning entities are not allowed to rely upon the expectation of such Load loss to meet steady state performance requirementsâ€) seems more appropriate to be requirements. Therefore, please move this sentence to the Notes Section at the beginning of Table 1 as new Item 7.

Yes

We agree. However, the conditions listed in R3.5.1, R3.5.2 and R3.5.3 are applicable to the overall TPL Standard. Their specific listing in R3.5 gives the impression that these Requirements are only applied to R3.5 and not to the other Requirements in this Standard. In other words, are there any Requirements in this Standard that R3.5.1, R3.5.2 and R3.5.3 do not apply to? Therefore, we suggest TPL-001-1 be silent on this issue and move R3.5.1 through R3.5.3, (and the equivalent in the stability study R5.4.3.1 through R5.4.3.3) to a Requirement applicable to Assessment studies in general, such as the bullet points in the Performance Tables.

Yes

While we agree with separating R1 to form R9 through R14, we believe that R9 (modeling

information for real and reactive load forecast data) should be applicable to Load Serving Entities (LSE) instead of (or in additional to) the Distribution Provider. In any case, this type of exchange of load information is already covered in MOD Standard or in the respective tariffs, and should not be included again in the proposed TPL-001-1 Standard.

Yes and No

We agree with R2.3. However, R4 requires assessment of â€œShort-circuit capability of its equipment under normal conditions and following any single Contingency condition that would result in greater circuit breaker interrupting dutiesâ€. Since short circuit studies are typically performed by applying a fault on a Facility starting from a normal condition, there can be confusion whether the result would constitute â€œnormalâ€ condition or â€œfollowing any single Contingency conditionâ€. Also, by specifying the normal and single contingency conditions, R4 is straying into â€œhowâ€ to perform a study, which is not necessary in a standard. We suggest deleting the reference to the contingencies to be used in the study.

Yes and No

We do not disagree with the proposed format changes of the Tables. However, we are not sure if separating into two Tables is necessary, or beneficial. It seems like an extra column for event could be added and some changes to the notes would greatly simplify the table. Some of the rows could also be combined; one such example is P2-2 (Loss of Bus Section) and P2-3 (Internal Breaker Fault, non-bus-tie). Will the SDT plan on combining some similar rows? Table 1, P4 and P5 refer to "Faults" as part of the contingency. This is steady state performance and faults are not modeled in steady state. Table 1, P2.1 refers to a "single ended line". Technically, this means we need to generate a "false" bus at each end of the line to evaluate this condition or use a dispatcher power flow which included breaker modeling. Is this an accurate interpretation of the intent of this requirement? We believe there should be no distinction between the voltage classes and support the use of load shed for all cases identified in P4 through P7.

Yes

Yes and No

We interpret â€œexit breakersâ€ to mean a breaker on an element that comes in from outside the substation. We agree with applying less stringent performance requirements to bus tie breakers above 300 kV. Further, we believe that Non-Consequential Load Loss should be allowed for loss of either Bus-Tie or Non-Bus-Tie Breakers regardless of voltage class. The SDT has not presented evidence that the probabilities of failure for breakers within the same substation are significantly different for different voltage classes

Yes and No

We generally agree with the concept of the sensitivity analysis since this is standard practice in understanding system performance risks and the effectiveness of improvements. It is ambiguous from a criteria perspective, however, what role is played by the sensitivities in developing Corrective Action Plans and what risks are created by misapplication of the intent of such sensitivity analyses. Clarification of the following is needed along with examples of applicable sensitivities and how these would be factored into Corrective Action Plans. If a Transmission Planner performs studies on the â€œbase caseâ€ of which the loads represented are 1 in 10 year adverse weather condition (10% chance that the actual load may exceed the projected load), does this constitute a sensitivity analysis. If so, will the Transmission Planner have to then perform additional less stringent studies at the load levels representing 1 in 2 year adverse weather conditions (50% chance that the actual load may exceed the projected load) to demonstrate compliance? R2.1.4 requires explanation of performing additional sensitivities that are not listed in the R2.1.3. This would discourage entities from performing additional sensitivities. In addition, in the above example, the Transmission Planners should not have to explain why they feel that this higher level (1 in 10 year adverse weather) of load is the â€œbase caseâ€ condition. R2.7 also states that â€œCorrective Action Plans do not need to be developed solely to meet the performance requirements for sensitivitiesâ€. Consider a Transmission Planner that has built transmission based on the 1 in 10 year adverse weather load assumed in the â€œbase caseâ€, will the judgment of the Transmission Planner be then questioned because theâ€œbase caseâ€ used is equivalent to a sensitivity case and not a 1 in 2 year adverse weather base case?

Yes

We agree with revising P6 to permit loss of Non-Consequential Load to meet performance requirements for Systems above 300kV. However, we are concerned that with the loss of the first N-1 in P6, curtailment of firm transmission service or firm transfers would not be allowed as part of system adjustment in preparation for the next N-1. Allowing curtailment of transmission service or firm transfers for such system adjustments should be added to R3.3.2.2. Otherwise, the power transfer under normal condition (before the first N-1) will have to be significantly curtailed in anticipation for meeting performance requirements after N-1-1, or transmission facilities, which would have otherwise been unnecessary, would have to be built. Either would adversely impact customers. We also have questions on Event P6 in both Performance Tables 1

and 2: We would like some clarification on the overlapping single contingencies as denoted in Event P6 (N-1-1), and one where a single contingency, say Event P1 (N-1), follows a prior "planned" outage of a Facility (N-1). The former would allow the Non-consequential Load Loss, while the latter would prohibit it.

B â€“ Unsure about supporting the revised standard

We agree that the Standard as presented is clearer, but there are numerous issues that still need resolution, Measures, VSLs, Implementation Plan, etc., before a full approval of this Standard can be given. There is no mention in the purpose of the Standard about minimizing loss of load for more probable unplanned contingencies. Maybe there needs to be some definition around what is meant by reliability. We believe that with the loss of the first N-1 in P6, curtailment of firm transmission service or firm transfers should be allowed as part of system adjustment in preparation for the next N-1. This should be added to R3.3.2.2. Otherwise, the power transfer under normal condition (before the first N-1) will have to be significantly curtailed in anticipation for meeting performance requirements after N-1-1. This will unnecessarily impede commerce. Or, to maintain the same firm power transfer under normal conditions, construction of transmission facilities will be required. Either way, this would impose a much stricter standard than exists today resulting in very costly unnecessary system improvements and invalidate terms of many transmission service contracts that allow for implementation of pro-rate curtailments of firm transmission rights during forced and planned outage conditions. We disagree with the application of the proposed definitions of Consequential Load Loss and Non-Consequential Load Loss in conjunction with â€œraising the barâ€. Local Network load should be included in Consequential Load and the loss should be allowed for single contingencies. The TPL standard is to maintain reliability of the BES. Under certain conditions orderly dropping of local network load could limit the spread of the disturbance beyond the local area and allow BES reliability to be maintained. This would minimize the total amount of load loss and allow for quicker load restoration. The proposed definitions for Consequential Load Loss and Non-consequential Load Loss will provide no reliability benefits for high voltage (>300 kV) transmission backbone system providing wholesale open access service and interconnecting to the rest of the western interconnection. Any potential reliability benefits of any additional facilities built to comply with these definitions would be at the local service level. As mention in comments to Q3 above, some local network customer curtailments or local area load loss has been allowed by local regulatory authorities as long as the overall reliability of the interconnected system was not impacted. This is a result of tradeoffs between providing a higher level of reliability in a local area and the cost and environmental impacts of providing that service. Such tradeoffs are subject to local regulatory authority or contract negotiated between the transmission provider and its transmission customers. Regarding the terms â€œinterruption of firm transmission serviceâ€, there needs be clarification on what Interruption means. Since it is referring to firm transmission service, we would interpret this to mean curtailment needed after a particular contingency and adjustments. There also needs to be clarification on what â€œFirm Transmission Serviceâ€ means. Two points, 1) the NERC definition states â€œhighest quality service offered to customers under a filed rate schedule that anticipates no planned interruption.â€ The Standard implies anticipation of â€œunplannedâ€ interruption for certain contingencies. 2) Is this referring to a transmission product as defined in FERC Order 890, or firm transfers modeled for the conditions being studied? One way to interpret the intent is the firm transfers being modeled for the conditions in the powerflow to meet demand that would result in load not being served if that firm transfer were curtailed. If there is other generation in the system that could increase to meet the load if the transfer being modeled is interrupted, then interruption of firm transmission service should also be allowed for P1 through P5 contingencies in the table. In addition, we believe that DC and AC lines should have the same performance requirements with respect to interuption of firm transmission service. We do not understand why interruption of firm service would be an acceptable response to the loss of a single pole of a DC line (i.e. response to the contingency) but not an acceptable response to prepare for the next contingency of an AC line. The transfers over both AC and DC lines can automatically be curtailed when the line is outaged.

Individual

Baj Agrawaal

Arizona Public Service Co.

Yes and No

We generally concur with the changes for the Requirements associated with the Generating Unit and System Stability, however, â€¢ Generating unit stability studies are typically performed at

the time of interconnection. Even though stability studies have been done as new generating unit(s) were interconnected or at the time changes occurred, such studies have not been done for the entire fleet of generating units at the same time. For very old units, stability study documentation may no longer exist, even though no potential stability problems have been identified when stability studies were run for interconnecting other newer units. Will every TP have to benchmark their generating unit stability study for its entire fleet with the acceptance of this Standard? In other words, will every TP has to recreate documentation for all its older units? â€¢We would appreciate that the SDT more clearly define the terms in R2.5.2, â€œmaterial Transmission System changeâ€ and â€œat or near the point of Interconnectionâ€ to invoke a study with examples.

Yes and No

â€¢We generally agree that utilities or large TPs and PCs need to perform and be held accountable for these Requirements; however, the SDT needs to define a organization size level, below which these requirements for the associated TP may be slightly relaxed. There are numerous TPs; (e.g., those associated with PUDs, Municipals or REA, etc.), for which performing these type of studies and assessments are onerous and do not yield reliability benefits for the network.

Yes and No

We generally agree with the definition but have concerns about a potential unintended consequence. This definition will severely limit the loads that can be classified as â€œlocal Network customers, connected to or supplied by the Faulted element or by the affected area, may occur in certain areas without impacting the overall reliability of the interconnected transmission systemsâ€ in footnote b of the existing TPL standards. In combination with raising the bar for loss of Facilities with operating voltages 300 kV or higher (P2, P4 and P5 in the Performance Tables), this definition may result in encouraging entities to connect more loads in a radial fashion or avoid loop connection to improve service reliability just to fit in the Consequential Load Loss definition, â€œâ€¦load no longer being connected to a sourceâ€¦â€. At a result, service reliability to customer would be adversity impacted without commensurate improvement in overall system reliability.

Yes and No

We generally agree, however, the conditions listed in R3.5.1, R3.5.2 and R3.5.3 are applicable to the overall TPL Standard. Their specific listing in R3.5 gives the impression that these Requirements are only applied to R3.5 and not to the other Requirements in this Standard. In other words, are there any Requirements in this Standard that R3.5.1, R3.5.2 and R3.5.3 do not apply to? Therefore, we suggest moving R3.5.1 through R3.5.3, (and the equivalent in the stability study R5.4.3.1 through R5.4.3.3) to a Requirement applicable to Assessment studies in general, such as the bullet points in the Performance Tables.

Yes

â€¢We agree that the MOD Standards need modifications and additions to be used for Transmission Planning, â€¢We also agree with the movement of the R1of the first draft to the R9 through R14 of this draft, â€¢We also agree that when the MOD Standards are replaced, then remove these Requirements from the TPL Standard.

Yes and No

We agree with R2.3. However, R4 requires assessment of â€œShortcircuit capability of its equipment under normal condition and following any single Contingency condition that would result in greater circuit breaker interrupting dutiesâ€. Since short circuit studies are typically performed by applying a three phase fault on a Facility starting from a normal condition, please clarify whether the result would constitute â€œnormalâ€ condition or â€œfollowing any single Contingency conditionâ€.

Yes

We agrees with the proposed format changes of the Tables.

Yes

We agree with the proposed definition change.

No

We do not agree with the rationale for the requiring more stringent performance requirement levels for non-bus tie breakers above 300 kV. The SDT has not presented evidence that the probabilities of failure for breakers within the same substation are significantly different for different voltage classes.

Yes and No

We generally agrees with the concept of the sensitivity analysis. However, clarifications of the following is needed: â€¢For example, if a TP performs studies on the â€œbase caseâ€ of which the loads are 90/10, does this constitute a sensitivity analysis. If so, will the TP have to then perform additional less stringent studies at the 50/50 load level to demonstrate compliance? â€¢R2.1.4 requires explanation of performing additional sensitivities that are not listed in the R2.1.3. This would discourage entities from performing additional sensitivities. In addition, in the

above example, the TP should not have to explain why they feel that this higher level (90/10) of load is the â€œbase caseâ€ condition. â€¢R2.7 also states that â€œCorrective Action Plans do not need to be developed solely to meet the performance requirements for sensitivitiesâ€. Consider a TP that has built transmission based on the 90/10 load assumed in the â€œbase caseâ€, will the judgment of the TP be then questioned because of itâ€™s sensitivity â€œbase caseâ€ and not a 50/50 base case?
Yes
We agree with revising P6 to permit loss of Non-Consequential Load to meet performance requirements for Systems above 300kV.
Two person-year.
2-years.
one person year.
$200,000.00
$100,000.
Hard to quantify without studying.
5 years
A â€“ Generally support the revised standard
We generally agree with the Standard as presented so far, but there are numerous issues that still need resolution, Measures, VSLs, Implementation Plan, etc., before WECC can give a full approval of this Standard.
Individual
John E. Sullivan
Ameren
No
Agree with the revised definition of Generating Unit Stability Study. Propose new definition for System Stability Study, as follows - "Study that focuses on portions of the System, including the impact of contingencies on multiple generating units in an area. These studies would examine issues such as angular Stability, inter-area oscillation, and voltages during dynamic simulations."
Yes and No
In R2.4, it is suggested that the word "System" be re-inserted ahead of the word "Stability". It is believed that the sub-requirements of R2.4 are for System studies as opposed to Plant or Generator stability studies. In R2.4.1, agree that the system peak load should be studied for at least one of the five years in the near-term planning horizon. What is the meaning of the term "appropriate", and who decides what dynamic representation of load is "appropriate", and for what conditions? Guidelines for the development of load models used in powerflow and dynamic models to represent residential air conditioner induction motor load response including the effects of underground distribution cable and distribution capacitor banks are not available. Why can't the standard load representation be used to meet R2.4.1, and the more detailed load representation, including dynamic sytem induction motor load response, be used to meet R2.4.3? In R2.4.2, agree that off-peak load levels should be covered for one of the five years. In R2.4.3, there should not be a requirement to explain why sensitivites were not selected. Further, these items in R2.4.3.1-5 appear to be options and not sub-requirements, and therefore are too prescriptive and inappropriate for inclusion here. The proposed sensitivities appear to over-focus on the particular issues listed and may result in the detriment of overall system reliability. Engineering judgement should be used to develop the sensitivity scenarios, and it should be encouraged that the same scenarios should not be performed every year so that a portfolio of sensitivity scenarios would be developed over time. The standard should not include an enumerated list of required sensitivities. If two sensitivities are required to be performed each year, then the standard should state so, but we believe that more than one sensitivity scenario for each peak and off-peak case is burdensome. We are unsure if R2.4.4 is a requirement or an option. If R2.4.3 were not so prescriptive, the additional sensitivity could be covered under the engineering judgement comment provided above. The prescriptive listing of sensitivities under 2.4.3.1 through 2.4.3.5 should be eliminated. Proposed alternative wording for R2.4.3 which addresses above concerns is as follows: R2.4.3. "For each of the studies described in Requirement R2.4.1 and Requirement R2.4.2, sensitivity case(s) that stress the System to reflect one or more conditions such as variations in dynamic Load model assumptions, modification of expected transfers, variability and outages of reactive resources, generation additions, retirements, or other dispatch scenarios are integral to a thorough assessment of reliability. Document how and why appropriate sensitivities were selected." R2.5 should be reworded as follows. "The Generating Unit Stability portion of the Planning Assessment shall be assessed for the year and conditions when the following changes that could affect stability margins occur:" Agree with most of R5.5. In R5.5.4, a risk/benefit vs. cost analysis should be included in the evaluation of implementing a change to mitigate the likelihood of cascading outages for the extreme events. Agree with R5.6.
Yes and No

The revised definition of Consequential Load Loss needs to be simplified, as follows, "Consquential Load Loss: Load that is no longer served because it has been isolated from its network supply by a planned protection system operation to mitigate fault conditions." Additional clarifications as to when Consequential Load loss is allowed should not be included in the definition, but should instead be included in the Tables 1 and 2. Agree with the revised definition of Non-Consequential Load Loss.

Yes

R3.5.1 should be modified as "All Facilities shall be operating within their applicable Facility Ratings, including the use of short-time emergency ratings."

No

We consider the proposed requirements R9-R14 to be largely a duplication of the MOD standards and do not agree that they belong in the proposed TPL-001-1. We would propose that a reference to the MOD standards would be more appropriate so as not to create a double-jeopardy compliance situation. If it is determined that the requirements R9-R14 need to stay, the proposed standard needs to reflect the existing data flow processes and consider who builds the models, which is the Transmission Planner, and not the Planning Coordinator. According to the definition provided in this standard, the Planning Coordinator is "The responsible entity that coordinates and integrates transmission facility and service plans, resource plans, and protection systems." In our case, the Transmission Planner receives: a) load forecast (real and reactive) information from the Distribution Planner or Load Serving Entity, b) transmission ratings/impedance/topology(outage) information from the Transmission Owners, c) generation ratings/capabilities/outage information from the Generation Owners, and d) designated network resources (existing and future), as well as external obligations, from Resource Planners. The Transmission Planner develops powerflow and corresponding dynamic models from this information including load magnitude and distribution, generation dispatch, and net scheduled interchange, and provides the models or modeling components to the Reliabiity Coordinator and Planning Coordinator. Other organizations may have similar problems with data flow processes as specified in R9-R14. We view the R9 requirement of the proposed TPL-001-1 for the Distribution Provider to provide real and reactive load forecast data, including load mix information, to conflict with R1.4 of MOD-013-1 which has the RRO as setting the requirement for the dynamic load data. R10 needs to be modified to reflect the RTO activities related to the coordination and sale of Firm Transmission Service, which is not a Transmssion Planning activity. R11 needs to be modified to drop the "spare equipment strategy". This is not a modeling issue and should be covered in standard TOP-002-2 (see R1 and R6). R13 needs to be modified to drop the "Reactive Power devices and new technologies" because Resource Planners typically do not know about these devices. The Transmission Planner or Owner may be the more appropriate entity. We view R14 as an extension of Standards MOD-010-0, MOD-011-0, MOD-012-0, and MOD-013-0.

No

Requirement R4 should be modified to remove the Planning Coordinator such that the "Transmission Planner shall assess the short-circuit capability of its equipment considering maximum interrupting duty for normal or single element outage conditions".

Yes

The tables could be improved by including the column headings on each page. Separating the steady-state and stability performance requirements for each planning event helps to provide clarification.

No

To provide clarity, a revised definition is proposed. "A bus-tie breaker is a circuit breaker that connects two individual bus sections with one or more breaker positions on each bus; substation configurations such as ring-bus, breaker-and-a-half, or double bus-double-breaker do not have bus-tie circuit breakers."

Yes and No

Yes: The installation of bus-tie circuit breakers in a straight bus configuration would reduce exposure to a) bus faults or to b) line faults with breaker failure without adding much risk for internal fault in the bus-tie breaker. Those entities that employ a straight bus substation design with bus-tie breakers have recognized that failure of the bus-tie breaker, a very low probability event, would result in the loss of multiple transmission elements and perhaps firm load for a short time until the bus sections can be restored, but bus-tie breakers are an investment worth the risk. Therefore, it is generally agreed that the outage of non-bus-tie circuit breakers should have higher performance requirements than the outage of bus-tie circuit breakers. The SDT should be commended for this change since the previous draft version. No: However, it is not clear that adopting a higher standard of performance for planning events involving transmission facilities 345 kV and above will improve overall system reliability. Some areas of the continent already have n-2 planning criteria, yet these systems have still experienced significant outages including blackouts. It is suggested that a review of the Transmission Availability Data System (TADS) data, when available, should be conducted to help assess what system performance

requirements need to be strengthened before arbitrarily determining to "raise the bar" for certain voltage levels and system designs. The industry should not be forced to invest a great deal of capital to meet a new standard requirement when it would not have an immediate impact on system reliability. Some sort of cost/benefit analysis should be performed to justify any change from the present TPL-001 through 004 standard requirements. On the Ameren system, there is no indication that transmission system reliability has been degraded through the use of straight bus configurations. Also, further clarification is required to explain how to drop consequential load without cutting firm transmission service to those affected/outaged customers, and this needs to be added to the notes in Tables 1 and 2.

No

Similar to our comment above for R2.4.3, there should not be a requirement to explain why sensitivites were not selected. Also, it is not clear if R2.1.4 is a requirement or an option. While we agree that the system cannot be adequately planned based on a single snapshot of expected system conditions, these items in R2.1.3.1-7 are too prescriptive and are inappropriate for inclusion here. The sensitivities listed appear to be options and not sub-requirements, and may result in over-focusing on the particular issues listed to the detriment of overall system reliability. Some sensitivity studies are in effect adding an additional level of contingency to the analysis work (n-2 or n-3). Outages of reactive sources and generation should already be included in studies of multiple contingencies. The process of planning new generation (system impact studies) will include studies of the future system with and without the proposed new equipment. Engineering judgement should be used to develop the sensitivity scenarios, and it should be encouraged that the same scenarios should not be performed every year so that a portfolio of sensitivity scenarios would be developed over time. The standard should not include an enumerated list of required sensitivities. If two sensitivities are required to be performed each year, then the standard should state so, but we believe that more than one sensitivity scenario for each peak and off-peak case per year for asssessment is too burdensome to run complete contingency analyses. Proposed alternative wording for R2.1.3 which addresses above concerns is as follows: R2.1.3. "For each of the studies described in Requirement R2.1.1 and Requirement R2.1.2, sensitivity case(s) that stress the System to reflect one or more conditions such as variation in load assumptions, modification of expected transfers, variability and outages of reactive resources, generation additions, retirements, or other dispatch scenarios are integral to a thorough assessment of reliability. Document how and why appropriate sensitivities were selected."

No

Please clarify that the shunt devices to be considered for outage are those that are directly connected to the transmission system. For the P6 events involving a transmission facility and a shunt device, local voltage instability issues may result in dropping of load in the vicinity of the outaged facilities, but the concern should be that the load dropped is not wide-spread. The words "Voltage instability" should be removed from Header Note 3 of Table 1 so that it becomes "Cascading outages and uncontrolled islanding shall not occur."

One component of cost is to model in more detail all straight busses and bus-tie breakers at all transmission voltage levels. Contingency scenarios would also need to be developed and/or modified to correspond with the new powerflow models. The sensitivies presently specified will greatly increase the cost and time needed for updating all plant stability studies.

One-time costs to provide additional modeling detail and modify and test the revised contingency lists would be approximately 1 man-month or about $8000. Updating all plant stability studies would take approximately 5 man-years, at an estimated cost of approximately $500,000 (including benefits). Given existing regional requirements to complete the annual assessment by July 1 of the calendar year, additional staffing would likely be needed to complete this work, unless compliance were phased in over a number of years, similar to the MOD-024 and MOD-025 standards with respect to generator testing.

A review of the studies required for R2.1 indicates that at least 6 powerflow modeling scenarios would need to be completed to cover the base cases and sensitivities, which would be a 50% increase in the amount of work presently performed to meet the existing TPL-001 through 004 requirements for the near-term assessment. A review of the studies required for R2.4 indicates that at least 4 stability scenario models would need to be completed, which would be a 100% increase in the amount of work presently performed. Our present compliance performance and analyses activities take approximately 30 man-months to complete. We would expect the additional study analyses to add an additional 20 man-months of work and require 4-5 additional engineers at an annual cost of $400,000 to $500,000 (including benefits), given the regional requirement to complete the annual assessment by July 1.

Documentation preparation to include the short-circuit assessment, the amount of consequential load dropped for single contingencies, the expanded requirements of the Corrective Action Plan, and how the sensitivities affect the Corrective Action Plan would take a man-week or two at most (no significant cost increase or manpower increase).

Our present documentation activities to develop the assessment and the corrective action plan take approximately 2 man-months to complete. We would expect the documentation to cover

the additional study analyses to add an additional 2 man-months of work. The additional documentation for the Consequential Load Loss, short-circuit analysis, expanded requirements of the Corrective Action Plan, and documentation of how the sensitivities studied affect the corrective plan are estimated to double the existing reporting requirements, resulting in an increase of 3.5 man-months and require 2 additional engineers at an annual cost of $200,000 (including benefits), given the regional requirement to complete the assessment by July 1.
Our present interpretation is that the proposed revised standard would have a minimum impact on the reinforcement of the Ameren system. The modification to remove the requirement that bus-tie circuit breakers must have the same performance requirements as non-bus-tie breakers significantly reduces our issues of non-compliance, and particularly for circuit breakers 300 kV and above.
Our present interpretation is that the proposed revised standard would have a minimum impact on the reinforcement of the Ameren system.
C â€“ Definitely do not support the revised standard
From an engineering perspective, the biggest concerns are the additional requirements, including prescribed sensitivity studies, associated with R2 for both steady-state and stability scenarios. We believe that we already cover the needs of our system with the existing NERC standards and Ameren Transmission Planning Criteria & Guidelines. The additional analyses proposed by the revised standard are not warrranted and any upgrades indentified by the additional analyses will not provide any significant increase in system reliability. For 2008 compliance, Ameren performed the following steady-state contingency analyses on each of four near-term models and one long-term model: 617 Category B single contingencies involving lines and transformers. 30 Category B single contingencies involving generators 50 MW and above. 1699 Category B single branch outages. 135 Category C-1 bus faults. 260 Category C-2 breaker failures. 112,575 Category C-3 double contingencies involving lines and transformers. 18,510 Category C3 contingencies involving 617 lines and transformers and 30 generating units. 73 Category C-5 double-circuit tower outages. For 2008 compliance, Ameren performed 496 stability scenarios of four near-term models and one long-term model: Assuming that we can acquire the qualified manpower, which is presently not available, we estimate that proposed new requirements will increase our compliance activity time by approximately 24 man-months or 2 man-years in a six-month window (January-June) to produce the same quality studies that we produce now. Consequently, we view these proposed additional study efforts as excessively burdensome. Further, we do not see how the additional study work and documentation required by the proposed standard will lead to any significant improvements in reliability. Additional comments: The question of expected Consequential Load Loss magnitude and duration, as specified in R3.3.2.1, is not germane to the reliability of the Bulk Electric System, and is a matter for Distribution Planners and local regulatory authority and is not needed in this reliability standard.
Individual
Gary S. Brinkworth, P.E.
City of Tallahassee, FL
Yes and No
while this was an improvement, the tables are still confusing and make determination of the compliance requirements difficult. Especially where there are multiple events within a single event category (like P3 or P6) there's confusion about what would be allowed between the two element outages.
we estimate a cost of $100,000 minimum since the City would likely have to outsource some of this analysis in addition to the work done by in-house system planning staff.
hard to give a good estimate since the full ramifications of the required studies is not clear in the current draft. I would estimate 2 years at least.
similar costs to what was estimated above for the supplemental study cost, since staffing level is such that much of this ongoing work will likely be outsourced.
documentation cost was included in the cost estimates for #12, since development of the documentation is part of the study work scope.

depending on the interpretation of the standard as currently drafted, this cost could be substantial (at least $20M) over a 5-year capital budget period (consistent with the City's current practice). It's doubtful this level of funding could be achieved/maintained given other financial pressures for local governments.

Unable to develop an answer to this question, since it depends on the ability to successfully site and permit generation and transmission facilities (which is becoming increasingly harder to complete), and the requirements of any successful siting effort may make the costs prohibitive (ie, underground transmission facilities and/or stringent controls on generating facilities).

C â€“ Definitely do not support the revised standard

The requirement regarding non-interruption of firm transmission service in the steady state performance table for Category P1 events does not properly take into consideration the flexibility necessary for utilities with limited interconnections or interconnections with limited transfer capability. This flexibility, which currently exists in the TPL-001 standard (footnote b in the table), allows a utility to curtail firm transactions to prepare for the next contingency. As drafted, in the circumstance where the single element outage in Category P1 was a tie line, even if this line were critical to supporting the transaction (or were required to be in service by the terms of the power contract), interruption of firm service would be a violation of the proposed standard even though such interruption would be either required or appropriate to ensure the reliability of the bulk electric system. For utilities where tie line capacity is constrained or limited, this requirement for Category P1 will require substantial investment in duplicate facilities to ensure that firm transfers would not be interrupted, and the cost of that investment would likely not offer ratepayers a commensurate benefit (presuming such a duplicate facility could even be sited and permitted). For utilities with just a few large generating units (such as a small municipal utility), the requirements for Category P3 in Table 1 set a threshold for compliance that may not be achievable without substantial investment in additional/duplicate transmission facilities and possibly generating units. The concern relates to the restriction about limiting interruption of firm transmission service or non-consequential load following a G-1/N-1 event; the particular scenario is outlined in the bullets below: · Presume a utility with only two large units and some small gas turbines · Under P3, one of these large units is forced out of service · Reserves are called for and delivered along with replacement power using available import capability · Then presume that the N-1 outage in P3 is a major tie line that is critical to the support of the firm power imports · Under the proposed standard, the utility would be unable to curtail the firm purchase or shed any non-consequential load and remain compliant, even though there would be a significant generation/load imbalance & the appropriate response for the reliability of the grid in the region would be to interrupt the transaction and possibly shed load. The flexibility afforded in the existing TPL-001 standard would in fact allow the utility to respond to this event in a more appropriate way while avoiding a very expensive expansion/duplication of facilities (notwithstanding the considerable challenges that the utility would face for siting and permitting of the necessary facilities).

Group

Florida Power and Light

Hector J. Sanchez

Transmission Services and Planning

No

This draft did not modify the existing NERC definition of Stability. Footnote 5 of the Tables describes the expected acceptable performance of a System that is stable, but the terms â €œSystem Stabilityâ€ and â€œGenerating Unit Stabilityâ€ are not defined, except as studies. All stability studies must meet the Performance Requirements for Planning Events in Table 2 - Stability Performance. If there were different Performance Requirements then the distinction may be warranted. However system stability studies should be sufficient and not warrant additional work. R6 requires Transmission Planners to define proxies used to identify instability. Presumably the â€œproxiesâ€ would be used as a checklist for assessment of stability, however, not all stability limitations can be simplified as a proxy in the loadflow. Proxies should only be used as indicative of a potential stability issue, not "to identify System instabilityâ€¦", or replace stability studies, since a stability study to identify the issue was initially required to define the proxy. The requirement should be reworded to state "R6. If proxies are used in simulation studies to identify System instability for conditions such as cascading outages, voltage instability, or uncontrolled islanding, then each Transmission Planner and Planning Coordinator shall define the proxies used in the simulation studies."

No

R2.4.4 is inappropriate for a compliance assessment. Essentially R2.4.4 requires the Transmission Planner or Planning Coordinator to deem appropriate and justify inclusion or exclusion of any sensitivity other than the required sensitivities listed in R2.4.3. The only way that a an entity could be found non-compliant is if the entity deems a sensitivity as appropriate, and then inexplicably did not perform the sensitivity, which makes no sense. The requirement seems to put a burden of justifying by "technical rationale" a sensitivity that is deemed appropriate already. R2.4.4 could be eliminated and its intent absorbed in R2.4.3 by changing its

wording slightly: "R2.4.3 For each of the studies in Requirement R2.4.1 and Requirement R2.4.2, sensitivity case(s) deemed appropriate by the Transmission Planner or Planning Coordinator that stress the System to reflect conditions including, but not limited to, one or more of the following conditions, shall be run and documentation of the technical rationale for why each of the conditions was or was not selected shall be supplied."
Yes
None.
No
The sub-requirements of R3.5 are not clear as to whether the conditions apply to before or after generator run-back/tripping and mixes together N-1 and N-2 contingencies. In addition, the phrase "sustainable, stable, operating condition" in R3.5.3. is ambiguous as to whether it means the system is secure (prepared for the next contingency), or the system is maintained in a stable operating condition which is sustainable but not secure.
No
The requirement that â€œall projected firm transfers modeledâ€ (appropriate for the load level being studied) currently in the TPL Standards does not appear in the proposed standard. Does the SDT feel that Transmission Planners should have unlimited latitude in deciding which types of power transfers to assume in their reliability studies? R9. is not an appropriate requirement as the distribution provider will in many cases not know the exact mix of load types at each â €œtransmission nodeâ€ The meaning of â€œtransmission nodeâ€ is unclear, is this a substation? R11. is unclear as to what is meant by â€œconsideration given to spare equipment strategyâ€. What is the approriate consideration for compliance? What facilities are required to have a spare equipment strategy for compliance? Maintenance outages and times for all BES equipment are not likely to be scheduled or known throughout the entire planning horizon. Rather than specifying "for each year of the planning horizon" it should be limited to "if specifically known". The Resource Planners identified in R13. should know about future generation additions and retirements as well as expected range DSM capabilities but would not generally know about reactive power devices or new technologies. Reactive power devices or new technologies should be removed from R13.
No
R4. Why is short circuit analysis required for single contingencies? Removing equipment through contingency outages lowers available short circuit duty. Short circuit analysis is not a parallel version of load flow analysis. Evidence that short circuit studies have been performed is currently required in the existing FAC-002-0 Standard. Since the primary concern is the appropriate sizing of equipment and the prevention of equipment damage as opposed to overall grid reliability, we do not see the need for a set of requirements within the proposed TPL standard for short circuit studies.
No
The Table format is extremely confusing and too long. The allowed and disallowed actions as well as the applicable time frames for them is not clearly stated. The tables 1 &2 should be combined and condensed so that they can be read more easily. In their current format, these tables sprawl across 13 pages. The use of footnotes or expanded information in the Table headings is needed to understand the performance requirements.
No
Bus tie breakers are defined exclusively to straight bus configurations. They can be used for other breaker configurations. We do not see the need for a distinction between bus tie and non bus tie breakers.
No
These provisions made to not discourage the use of bus tie breakers will also not discourage the use of the single breaker/single bus substation arrangement which can have very severe consequence when used on critical BES substations. The TPL-001-1 draft also sets a threshold of higher performance to facilities above 300 kV than previously established in the existing standard. We do not agree that such a threshold is necessary or warranted. Requirements which are more stringent for these facilities may wrongly influence decisions on project alternatives in favor of facilities with less stringent requirements. Related to the more stringent requirements for facilities above 300 kV, FPL also disagrees with the performance requirements contemplated by the proposed draft standarad for DC lines. The SDT stated performance requirements for DC lines as currently drafted, is discriminatory as compared to AC line performance, and needs to be addressed. This could be viewed as an exemption for DC lines and violates FERC's comparability principle as it relates to reliability performance. The TPL-001-1 draft sets a lower performance requirement for the loss of a single pole of a DC line than in the existing standard by allowing interruption of firm transfer if the transfer is deemed to be dependent on the outaged line. Firm transfers are also dependent upon AC lines. The proposed standard does not distinguish between asynchronous DC ties and the more common parallel connected DC tie. With an asynchronous DC tie, the transfer is lost with the tie, which is anlogous to Consequential Load Loss which is already allowed. With a parallel DC tie, the transfer will be shifted to the parallel AC system and

should have the same performance requirements. We do not agree that such an exception for DC lines is necessary or warranted. The decision in selecting DC vs. AC in transmission lines has traditionally been based on the break-even cost and performance of the two alternatives. The lower performance requirement may wrongly influence decisions on project alternatives in favor of DC facilities because of the less stringent reliability performance requirements.

No

The words â€œdocumentation of the technical rationale for why each of the conditions was or was not selected shall be suppliedâ€ should be removed from R2.4.3. The sensitivity selection is necessarily subjective and judgmental. It is not clear what constitutes a valid rationale document. Compliance assessment of such a document would be subjective and is not needed.

No

The P6 Planning Event is not clearly defined. It appears that the Initial System Condition is the Planning Event of P1, with the â€œSystem Adjustmentsâ€ allowed under P1 to keep facilities within the applicable ratings. R3.5.3. requires that â€œa sustainable, stable, operating condition is maintained.â€ This does not state â€œprepared for the next contingencyâ€. Given FERCâ€™s interpretation of TPL-002-0 Category B (see paragraphs below for excerpts from Order 693) that the system is not required to be able to withstand another N-1 contingency, the proposed new standard appears to require that this state be â€œsustainedâ€ indefinetly after a P1 event, or until the P6 Event, which is loss of the second element, with no mention of the time duration between the initial system condition and the event. The performance criteria for a P1 event can be met as long as it does not contemplate another event that would change the event to a P6 event. However, a P6 event is a TPL-003-0 Category C event which must contemplate a second contingency after the first. The existing TPL standards accomplished this with footnote b) in the Tables for all of the TPL standards, allowing system adjustments including curtailment of contracted firm transfers to prepare for the next contingency. Since FERC clearly states that this is not a requirement under TPL-002-0, but that it is addressed in TPL-003-0, they directed the ERO to modify the footnote for TPL-002-0. In TPL-003-0 the Category C3 event refers to a "Category B contingency, manual system adjustments, followed by another Category B contingency", however since the footnote for Category B contained the "To prepare for the next contingencyâ€¦" language, and it is contained in the Table for TPL-003-0, that language must apply to the C3 event. Further, in Order 693, on TPL-003-0, FERC (1) did not direct the ERO to modify the same footnote which is contained in TPL-003-0, (2) recognizes that these are low probability events, and (3) stated that it "does not intend to recommend action on this issue [the appropriateness and value of including the ability of the system to withstand two simultaneous Category B contingencies for major load pockets] at this time and, instead, directs the ERO to consider the comments in possible future revisions to the Reliability Standard.â€ The SDT has inappropriately applied the direction of FERC on TPL-002-0 to the P6 event (which is similar to TPL-003-0 C3) without regard to its implications on the industry, the ratepayers, or even its own standards, as the impact of the team's interpretation would require changes in the methods of determining TTC's, ATC's, and SOL's. The additional costs (both monetary and intangible) incurred by ratepayers for no gain in the ability to transfer firm electric power, far outweigh any gain in reliability benefits for these low probability events. Just to provide one example to illustrate this point, if the SDT's current interpretation for a P6 event is not modified, FPL would have to spend in excess of $ 1 Billion dollars, in order to meet this performance criteria for 500 kV facilities, for an event with a probability of less than 0.07 per hundred mile-years (based on FPL's 500 kV facilities), which would be passed on to its ratepayers. There are many other examples on the FPL system, as well as other systems. This interpretation is fatally flawed and makes no sense from a reliability or cost perspective, not to mention the intangible impacts of siting, right-of-way acquisition, EMF, NIMBY, etc. Further, assuming the SDT interpretation, how could one justify the need before state commisions, and exercise eminent domain in the courts to take someone's land for right-of-way, a process that could take as long as 8-10 years, for minimal increase in reliability, and no increase in transfer capability. In order to assist the SDT, these paragraphs are included with references to FERC Order 693, to show that it has misinterpretedOrder 693. The following captions stated below should help clarify this point. Order 693 states: P.1788 â€œUnder TPL-002-0 the system is not required to be able to withstand another N-1 contingency. That N-1 requirement is a Category C contingency which is addressed by TPL-003-0.â€ Therefore, the end state of P1 is not a â€œsecureâ€ state, but a â€œnormal operating stateâ€, as stated in P. 1796 â€œThe Commission, therefore, directs the ERO to modify the second sentence of footnote (b) to clarify that manual system adjustments other than shedding of firm load or curtailment of firm transfers are permitted to return the system to a normal operating state after the first contingency, provided these adjustment can be accomplished within the time period allowed by the short term or emergency ratings.â€ These two determinations by FERC together show that their interpretation of normal operating state is not the secure, ready for the next contingency state, rather, it is the state in which the performance criteria have been met for that planning event. With regard to the FERC direction of Order 693 on TPL-003 and â€œthe appropriateness and value of including the ability of the system to withstand two simultaneous Category B contingencies for major load pocketsâ€, FERC states in P. 1824, â€œMany commenters indicated that this was a very low probability event and

the costs for addressing such an event would be significant. As a result, EEI states that a dialogue must first be initiated within the industry and with state public utility commissions to identify such load pockets, to target the required potentially significant transmission investments and to develop plans for allocating the costs of such investments. In light of these comments, the Commission does not intend to recommend action on this issue at this time and, instead, directs the ERO to consider the comments in possible future revisions to the Reliability Standard.â€ FPL agrees with the increased performance requirement for the P3 multiple contingency event that assumes the loss of a generator as the first contingency. Firm transfers should not depend upon specific generators being on line, however firm transfers must depend upon transmission lines being in-service.
These costs cannot be determined without having experience with the new standard and its analysis requirements. Analysis of existing studies will undoubtedly uncover substantial additional study that would need to be performed, but the costs of such analysis and studies could not be reasonably estimated beyond stating that the costs would be significant resulting from 1000's of man-hours spent on supplemental work that would only determine if we were in compliance, not including any work necessary to determine what would be necessary to bring deficiencies in to compliance.
It would not be unreasonable to find that it takes one full planning horizon (10 years) to complete supplemental studies and analysis for the draft standard, because it is so prescriptive. Requirements such as R2.2.1 that requires that the planning assessment be extended for longer lead time projects (such as the multiple new nuclear projects being considered across the U.S.) and R2.4.1 that specifies "...including the behavior of induction motor loads" will likely invalidate past studies that took considerable time to perform and would have to be reproduced with the newly required considerations. Requirements such as R2.6 (and subrequirenments) invalidate many existing studies, because of subjective terms such as "material changes" and "would impact the study area" without definitions of "material" or "impact". Re-analyzing all existing studies and re-writing the results and conclusions using the new terminology (P0, P1, P5 etc. instead of Category A, B or C2, C3, C5 etc.) used in the new performance tables will also add substanstially to the effort needed to insure compliance and make the information auditable.
$ 5 million dollars annually is perhaps very conservative.
These costs cannot be determined without having experience with the new standard and its documentation requirements. Analysis of existing studies will undoubtedly uncover substantial additional documentation that would need to be produced, but the costs of such document production could not be reasonably estimated beyond stating that the costs would be significant resulting from 1000's of man-hours spent on supplemental work that would only serve to meet audit requirements.
This would be included in the $5 million dollar estimate provided above.
These costs cannot be determined without having experience with the new standard and its performance requirements. The costs of such investment could be in the 10's of billions of dollars for FPL because of the increased level of performance contemplated by the draft standard.
If we knew what was needed today, it could conceivably take up to 10 years to complete, if the projects are all feasible. Without knowing what is necessary, a fair estimate would be 20 years. This does not take into consideration that the entire industry would be competing for the same limited resources of material and manpower to complete this reinforcement. Justification would be problematic and eminent domain may not be enforceable due to the remote low probability of an N-1-1 event, and lack of a true reliability need.
C â€“ Definitely do not support the revised standard
The standard, as currently drafted, is unacceptable. Without the ability to curtail firm transfers to prepare for a next contingency, a â€œsuper-firmâ€ priority of transmission service is created for non-native load customers. This goes contrary to the intent of the Open Access Transmission Tariff (OATT) that curtailments be comparable and non-discriminatory. ï€ From the OATT: â€œCurtailment of Firm Transmission Service: In the event that a Curtailment on the Transmission Provider's Transmission System, or a portion thereof, is required to maintain reliable operation of such system, Curtailments will be made on a non-discriminatory basis to the transaction(s) that effectively relieve the constraint. If multiple transactions require Curtailment, to the extent practicable and consistent with Good Utility Practice, the Transmission Provider will curtail service to Network Customers and Transmission Customers taking Firm Point-To-Point Transmission Service on a basis comparable to the curtailment of service to the Transmission Providerâ€™s Native Load Customers. All Curtailments will be made on a non-discriminatory basis, however, Non-Firm Point-To-Point Transmission Service shall be subordinate to Firm Transmission Service. When the Transmission Provider determines that an electrical emergency exists on its Transmission System and implements emergency procedures to Curtail Firm Transmission Service, the Transmission Customer shall make the required reductions upon request of the Transmission Provider. However, the Transmission Provider reserves the right to Curtail, in whole or in part, any Firm Transmission Service provided under the Tariff when, in the Transmission Provider's sole discretion, an emergency or other unforeseen condition impairs or degrades the reliability of its Transmission System. The Transmission Provider will notify all

affected Transmission Customers in a timely manner of any scheduled Curtailments.â€ The SDT has drafted language contrary to FERC specific requirements on comparability. The FERC has consistently directed Transmission Providers to treat all firm transaction on a comparable basis, yet the SDT, in its latest draft is creating a "super-firm" category for only firm transmission service. By creating a higher priority ("super-firm", non-comparable service) for non-native load customers than for native load, native load customers bear a higher cost burden. This and the costs to the ratepayers for negligible increase in already high reliability due to the performance requirements of the standard makes this draft completely unacceptable for FPL to support. FPL will vote against acceptance of this draft standard unless significant changes are made to comport what FPL believes was the intent of FERC Order 693 with regard to the TPL standards.

Group

Exelon Transmission Planning

Eric Mortenson

Exelon - ComEd / PECO

Yes and No

The definitions of System Stability and Generating Unit Stability are clear. We agree that there is value in performing small signal analysis but we are concerned about the availability of software and exptertise required to execute the analysis. R5.3 is ambiguous, as it is not clear what the requirement to consider the voltage ride through capability of all generators entail. Ride through could involve the unit or station having the capability to ride through without tripping or the unit could trip but the system remain stable. General Observations R3.2.1 should be reworded so as not to be misinterpreted that GOs are prescribing their 'required' voltage levels. R2.6.2 should be Unit not Plant with regard to stability studies. R2.7.1 and elsewhere - The NERC Glossary specifies that SPSs are 'Special Protection Systems' (not 'schemes'). R5.2 Wording should be changed from '..disconnect for each contingency..' to '..isolate the disturbance..' R5.5.1 There are too many studies required. The 20 MW threshold for unit studies may be too low. There should be a mechanism to provide a proxy for smaller units on 138 or possible 230 kV systems that can't affect system stability rather than to automatically require a study every 5 years. R2.1 and 2.2 should have the words 'at a minimum' removed with regards to describing which studies are required annually. The requirement to supply a 'project initiation date' for near-term Corrective Action Plans should be removed. If it remains, it should be clarified (Project identification date, construction start date, PUC certification date, executive approval date, etc?)

No

R2.4 should be specific as to applicability to generator stability, system stability or both. R2.4.1 requires the use of load models for motors. Detailed load data may not be available and studies would therefore produce questionable results. It is our understanding that the industry has recognized the importance of using better load models and there are multiple ongoing initiatives to improve our ability to do this modeling but these initiatives are not complete. However, the industry's ability to provide accurate models is not sufficient to ensure compliance at this time. The sensitivities for near-term studies in R2.4.3 aren't clearly defined, especially R2.4.3.3, 'Unavailability of Long Lead Time Facilities'. Doesn't the study that determined the original need for these facilities document the consequence of unavailability? The peer review component of the Planning Assessment has CEII concerns, especially with regard to extreme contingencies and whether or not they involve cascading.

No

UVLS should be allowed for in the definition of non-consequential load shedding in certain lower probability contingencies above 300 kV. The complete disallowance seems to disincent their use, contrary to the NERC Blackout Recommendation 13c. There is a value in their use for certain voltage stability situations. There does not appear to be any limit (except no cascading) to the amount of acceptable load loss once non-consequential load loss is allowed.

Yes and No

We agree that manual and automatic generation run-back and tripping should be allowed in these situations. We do not agree with the portion of R3.5.2 that states that non-compliance would result if the action were to violate statutory or regulatory requirements. A local governmental body could impose a restriction that would then trigger NERC compliance issues without independent or sufficient review. Other regulatory entities have their own enforcement mechanisms. It should be clear that SPSs, by definition, are allowed for other purposes than generation runback or tripping (such as system reconfiguration with automated breaker operation).

Yes and No

R11 shouldn't include consideration of a spare equipment strategy. All known planned and long-term outages of transmission equipment should be included regardless of the spare equipment strategy.

No

R2.3 is not clear as to which years studies are required. Is the Planning Assessment time frames in R2 also applicable to R4? The phrase 'years one or two of the near-term planning horizon'

should be included.

No

Tables 1 and 2 should be changed such that the header should read 'BES Elements Overloaded' rather than 'BES Elements out of Service' regarding the voltage distinction. The header notes should either not be numbered or numbered with a different scheme to differentiate them from the numbered footnotes to avoid confusion. It is not obvious that all of the footnotes are used in the Tables. The headings should be repeated on each page. Could these tables be made smaller by eliminating some of the unused space such as the large boxes containing a single 'x'?

Yes

Yes

No

We support efforts to improve load and dynamic load modeling, however we have concerns in being able to do so in an accurate manner - See comments to question #2. The state of industry development is such that this is not ready for includion in a standard such as R2.4.1 and R2.4.3.1.

No

We do not agree that the requirement should be so much more severe for an internal breaker fault as opposed to two single line outages for elements over 300 kV.

Analysis has not been completed at this time to determine the extent of the additional burdeen, but significant expenditures, in terms of personnel, tools and transmission upgrades, are anticipated if this draft were implemented.

C â€“ Definitely do not support the revised standard

We appreciate the effort involved in improving this planning standard, and believe in this goal. We are not yet able to support this revised at this time due to the concerns expressed above.

Group

CenterPoint Energy and CPS Energy

Paul Rocha

CenterPoint Energy

No

Most industry commenters from the previous draft advised against making a distinction between system and generating unit stability, which are not commonly accepted industry terms. We (CenterPoint Energy and CPS Energy) remain unconvinced that the distinction is needed. If most industry commenters concur after this second draft, we believe the SDT should listen.

No

We believe the requirements are overly broad and overly prescriptive. We further believe the extent of the "problem" these requirements would address does not justify such overly broad and overly prescriptive requirements. To clarify, we wholeheartedly agree that transmission planners should consider and selectively study potential stability concerns. However, we believe that transmission planners are already considering and selectively studying potential stability concerns. We are not aware of any signficant bulk electric reliability problem actually occurring in recent memory due to the failure of transmission planners to perform the assessments and studies this standard proposes to require. Some might argue that instability occurred in the northeast blackout, and we would agree. However, requiring transmission planners to perform all the assessments and all the studies proposed herein would not have prevented instability from occurring in that event. A targeted approach focusing on the specific vulnerabilities of that area of the network would be far more effective than the scattergun approach proposed here. Furthermore, even if all the stability analyses proposed in this standard were performed and audited, the studies likely would not have revealed the actual underlying reliability concern. In the end, the root cause of the failure was thermal overloading, not stability. Instability eventually occurred when the root cause (thermal overloading) led to a situation where circuits sequentially tripped over the course of an hour or so. Events that occur over the course of an hour are generally outside the scope of stability analyses, so these proposed requirements are off the mark for that event. We recommend deletion of R2.4.3, R2.4.4, R2.5, R5.2, R5.3, R5.4 (or 5.5), and R5.5 (or R5.6). Removing this excess baggage would allow transmission planners to use their judgment to selectively analyze stability concerns germane to their system. We realize such an

approach requires a recognition that transmission planners are already doing the appropriate analyses, and we encourage the SDT to be receptive to this premise. To further clarify this last point, some would argue that assuming entities are already doing the right thing belies the underlying premise behind enforceable reliability standards. We believe that acceptance of the need for enforceable reliability standards does not pre-suppose that some or all entities are always doing the wrong thing all the time in all aspects of their business. Nor does acceptance of mandatory reliability standards require acceptance that all aspects of the business are equally likely to produce reliability concerns. We believe most or all entities are already doing some things well such that, in some aspects of the business, there is no evidence that a "problem" actually exists. If the SDT accepts this premise, it would focus its attention on actual problem areas, not imaginary ones. We submit that performing appropriate stability studies is not a "problem" that requires an the overly prescriptive requirements proposed here. Rather than solving an actual problem, these requirements are more likely to detract resources from actual concerns by causing planning resources to be expended documenting and defending to auditors that imaginary concerns do not exist.

Yes

No

We believe the SDT should have reflected the views of most commenters in this revised draft. Requirements R9 through R14 are overly prescriptive and do not solve an actual problem. Furthermore, we are concerned about requirement "creep" where standards include new requirements appropriately addressed in other standards (in this case, the MOD standards) because a different SDT believes the approved standard is inadequate. To clarify our main premise that the excess, misplaced requirements do not solve an actual problem, we believe one would need an extensive imagination to conjure a scenario where insufficient modeling by transmission planners in the subject matter addressed by requirements R9 through R14 have contributed or are reasonably likely to contribute in any meaningful way to a significant reliability event. In summary, we concur with the majority of commenters from the previous draft that R9 through R14 should be deleted. We also believe R1.1 is hopelessly unrealistic. In fact, we are concerned it is counter-productive and more likely to degrade reliability than improve it. R1.1 discourages transmission planners from revising inaccurate, speculative, or outdated modeling data by imposing new documentation burdens and compliance liability. We recommend that R1.1 be deleted.

No

We believe R4 is unnecessary and, judging from industry comments to the previous draft, likely to cause confusion among auditors and planners alike. Furthermore, we believe R4 does not address an actual problem. We are not aware of situations where equipment has been under-rated from the standpoint of short circuit ratings. We recommend that R4 be deleted.

No

We originally believed that eliminating the old Category A, B, C, and D nomenclature would be beneficial. However, looking at the contingency types now being proposed, we are concerned that more confusion has been created. For example, matching applicable facility ratings to Category A, B, and C conditions is reasonably manageable. Matching applicable facility ratings to 7 contingency "buckets" is more confusing, less mangeable, and unnecessary. NYISO proposed the concept of analyzing credible multiple contingencies in the operating realm. Most industry opined that NYISO's proposal lacked merit for operating requirements, and we agreed. However, we believe the proposal may have merit for planning requirements. The concept of applying reasonable credibility criteria to multiple contingencies to be studied offers a way to limit multiple contingency analysis to credible scenarios. Less credible (or incredible) scenarios would then fall into the Extreme category. As proposed, the multiple (seven-fold) approach of categorizing contingencies, combined with various sensitivities or alternative scenarios, for multiple years, is unrealistic and unnecessary. We believe creating a separate table for stability performance might be beneficial, but we believe 7 buckets of contingencies is hopelessly unrealistic for stability analyses.

No

We believe R2.1.3 and R2.1.4 are overly prescriptive and should be deleted. It requires engineering judgement and experience to know whether a planning analysis is materially impacted by certain assumptions and, if so, which sensitivity analyses should be performed. Literally interpreted by an auditor, R2.1.3 would require at least one sensitivty analysis for each one of the contingencies shown in Tables 1 and 2 for each stuudy specified in R2.1.1 and R2.1.2 and documentation for each contingency of each study why each senstivity specified in R2.1.3 was or was not selected. The likely result is not value-added engineering analysis of actual reliability concerns. Instead, the likely outcome is unnecessary and burdensome additional

analysis and documentation that is impractical, creating confusion and uncertainty as to what the practical interpretation of impractical requirements might ultimately be.

No

We believe P6 should be deleted. As noted earlier, we believe credible multiple contingencies should be studied as planning events, with incredible multiple contingencies possibly considered as extreme events. If P6 is retained, we believe loss of shunt devices should not be studied and believes the ability to systematically study the contingency loss of every indiviudal switched shunt device is not supported by commercially available PTI software because up to this point it has not generally been recognized as a necessary or desirable analysis to perform. Also, if P6 is retained, we believe loss of Non-Consequential Load should be permitted at any voltage level for this type of extreme event.

We have no analysis to support an answer to this question, and we believe any such analysis would be speculative. We believe the reality of the situation is that the requirements are not practically achievable at any cost, so the ultimate cost would depend on practical interpretations of impractical requirements. Even if the cost could be reasonably estimated, we oppose detracting valuable expertise away from necessary, value-added analyses to unnecessary, over-reaching theoretical analyses and documentation for audit purposes.

3-4 years, assuming reasonably practical interpretation of the impractical requirements.

As with our response to question 12, we believe the answer depends upon the ultimate practical interpretation of the impractical requirements.

We believe the proposed requirements may not impose additional capital investment for system re-inforcements for our companies. We believe we are already achieving the reliability goals embodied in the proposed requirements but in a much more efficient and cost-effective way than the overly prescriptive approach proposed in these requirements.

C â€“ Definitely do not support the revised standard

Without re-iterating previous comments, we will summarize that we find this proposed standard to be an overly prescriptive and unrealistic paper chase that does not add value to the planning process. We also are concerned that this standard demonstrates an unhealthy, one sided approach to planning that does not balance reliability goals against other public policy goals, such as cost and landowner impact.

Individual

Brian K. Keel

SRP

No

We believe that there is no significant distinction between Generating Unit Stability and System Stability other than the objective and focus of the study. Therefore, we cannot accept a simple statement from the SDT that it believes it is important to maintain this distinction without more explanation. If a distinction is maintained, then Generating Unit Stability Study should be and is already covered in FAC-001-0 and FAC-002-0. As defined, Generating Unit Stability Study â €œfocuses on an individual generating unit's or electrically closely-coupled generating units' Stability for various Contingencies on the Transmission Facilities connected to that generating unit(s) point(s) of interconnection or one bus away from that point. However, the Purpose of the proposed TPL-001-1 is to â€œdevelop a Bulk Electric System that will operate reliably over a broad spectrum of System conditions and following a wide range of probable Contingenciesâ€. If a Generating Unit becomes unstable, the unit can be disconnected from the BES without impacting system stability. Therefore, we believe that the Generating Unit Stability Studies portion is attempting to introduce interconnection stability studies into the TPL standards. Interconnection stability studies are adequately addressed by FAC-001 and does not need to be specifically called out in TPL-001-1. In addition, Generating unit stability studies are typically performed at the time of interconnection. Even though Generating Unit Stability Studies have been done as new generating unit(s) were interconnected or at the time changes occurred, such studies have not been done for the entire fleet of Generating Units at the same time. For very old units, stability study documentation may no longer exist, even though no potential stability problems have been identified when stability studies were run for interconnecting other newer units or for the System. If the requirement for Generating Unit Stability Study is retained in this proposed TPL-001-1, R2.5 needs to be clarified to say â€œonly whenâ€ the changes in R2.5.1 and R2.5.2 are made that the Generating Unit Stability Study needs to be done. There also needs to be language about how to treat generators that are existing prior to this Standard taking effect. We would also appreciate if the SDT would more clearly define with examples the terms in R2.5.2, â€œmaterial Transmission System changeâ€ and â€œat or near the point of Interconnectionâ€ to invoke a study.

Yes and No

R2.4 is acceptable. Please consider deleting the conditions identified in R5.4.3.1, R5.4.3.2, and R5.4.3.3. We question the need to specifically call out these requirement in subrequirements of R5.4.3. We believe these conditions should be met for any and all requirements of the standard. It should not be necessary to list acceptable practices, especially if the conditions placed on the practice are general conditions that are addressed elsewhere or are generic. Otherwise, R5.4 is acceptable. ï€ We generally agree that Transmission Owners with extensive Transmission Planning Function and Planning Coordinators need to perform and be held accountable for the Requirements in R2.4 and R5.4; however, the SDT needs to define an organization size level below which these requirements for the associated Transmission Planner may be slightly relaxed. There are numerous Transmission Planners; (e.g., those associated with PUDs, Municipals or REA, etc. where historically dynamic stability has not been a problem), for which performing these type of studies and assessments would be onerous and would not yield reliability benefits for the network. ï€ The proposed requirements in R2.5 and R5.5 are already covered in FAC-001 and FAC-002 and should not be included again in the proposed TPL-001-1. Otherwise, the NERC standards would have redundant requirements. In addition, Transmission Ownerâ€™s open access tariffs requires Generator Owners to apply for interconnection to its transmission system or to make modifications to their generators as described in R2.5.1, R5.5.1, and R5.5.2. It is therefore the Generator Ownerâ€™s responsibility to cause these studies to be done at the time of interconnection or modification, yet R5 seems to place that responsibility only on the Transmission Planner and the Planning Coordinator. The Transmission Planner or the Planning Coordinator would not know of the changes until notified by the Generator Owner. If the SDT believes that FAC-001 is deficient, it should propose revisions to this standard, not simply add to TPL. Requirement R5.5.2 needs to be clarified to state changes or additions to the generating unit that result in an increase in power output. Otherwise, it could be interpreted to apply to existing units with a change in dispatch.

No

We generally agree with the definitions by themselves but have concerns about potential unintended consequences. This definition will severely limit the loads that can be classified as â€œlocal Network customers, connected to or supplied by the Faulted element or by the affected area, may occur in certain areas without impacting the overall reliability of the interconnected transmission systemsâ€ in footnote b of the existing TPL standards. In combination with raising the bar for loss of Facilities with operating voltages 300 kV or higher (P2, P4 and P5 in the Performance Tables), this definition may result in encouraging entities to connect more loads in a radial fashion or avoid loop connection to improve service reliability just to fit in the Consequential Load Loss definition, â€œâ€¦load no longer being connected to a sourceâ€¦â€. As a result, service reliability to customer would be adversity impacted without commensurate improvement in overall system reliability. In addition, existing design of many such local networks would normally require RAS/SPS to disconnect loads on local networks in response to contingencies. However, the definition of Non-Consequential Load Loss states that using RAS/SPS is Non-Consequential Load Loss. In the Consideration of Comments on the First Draft of TPL-001-1, page 49, response to First Energy, the SDT states "FERC has determined that any Load loss that is not directly connected to the faulted element is actually Non-Consequential Load loss." We found a similar response to WECC on page 449, item 6. While we do not disagree with the statements made by the SDT, that FERC wants clarification of what is Consequential Load Loss, we do not see where FERC has ruled out the use of RAS/SPS for Consequential Load Loss. Consequential Load Loss needs to include the concept of local networks. Another way to address this would be to exempt some local networks in the definition of the Bulk Electric System. The performance of existing systems has been designed to be consistent with the concepts of the quoted sentence above from footnote b of Table 1 of the existing TPL standards. There are many instances where some local network customer curtailments or local area load loss has been allowed by local regulatory authorities as long as the overall reliability of the interconnected system was not impacted. This is a result of tradeoffs with the cost and environmental impacts of providing a higher level of reliability in a local area. An attempt to eliminate the concepts contained in footnote b of the existing TPL standards would invalidate local regulatory decisions, place a large unintended cost burden on existing customers and could potentially create criteria that could not be met anytime soon, if ever, as a result of the long lead time required for system improvements. Any attempt to raise the bar by interpreting the definition of Non-Consequential Load as eliminating the concepts of footnote b is considered unacceptable. The new criteria need to clearly maintain these concepts to prevent a large disconnect with existing design criteria. The last sentence in the Definition of Consequential Load Loss (â€œAlthough Load which is lost as a result of the Loadâ€™s response to the transient conditions of the event is considered Consequential Load Loss and is permitted when Consequential Load Loss is allowed, Transmission planning entities are not allowed to rely upon the expectation of such Load loss to meet steady state performance requirementsâ€) seems more appropriate to be requirements. Therefore, please move this sentence to the Notes Section at the beginning of Table 1 as new Item 7.

Yes

We agree. However, the conditions listed in R3.5.1, R3.5.2 and R3.5.3 are applicable to the overall TPL Standard. Their specific listing in R3.5 gives the impression that these Requirements

are only applied to R3.5 and not to the other Requirements in this Standard. In other words, are there any Requirements in this Standard that R3.5.1, R3.5.2 and R3.5.3 do not apply to? Therefore, we suggest TPL-001-1 be silent on this issue and move R3.5.1 through R3.5.3, (and the equivalent in the stability study R5.4.3.1 through R5.4.3.3) to a Requirement applicable to Assessment studies in general, such as the bullet points in the Performance Tables.

Yes

While we agree with separating R1 to form R9 through R14, we believe that R9 (modeling information for real and reactive load forecast data) should be applicable to Load Serving Entities (LSE) instead of (or in additional to) the Distribution Provider. In any case, this type of exchange of load information is already covered in MOD Standard or in the respective tariffs, and should not be included again in the proposed TPL-001-1 Standard.

Yes and No

We agree with R2.3. However, R4 requires assessment of â€œShort-circuit capability of its equipment under normal conditions and following any single Contingency condition that would result in greater circuit breaker interrupting dutiesâ€. Since short circuit studies are typically performed by applying a fault on a Facility starting from a normal condition, there can be confusion whether the result would constitute â€œnormalâ€ condition or â€œfollowing any single Contingency conditionâ€. Also, by specifying the normal and single contingency conditions, R4 is straying into â€œhowâ€ to perform a study, which is not necessary in a standard. We suggest deleting the reference to the contingencies to be used in the study.

Yes and No

We do not disagree with the proposed format changes of the Tables. However, we are not sure if separating into two Tables is necessary, or beneficial. It seems like an extra column for event could be added and some changes to the notes would greatly simplify the table. Some of the rows could also be combined; one such example is P2-2 (Loss of Bus Section) and P2-3 (Internal Breaker Fault, non-bus-tie). Will the SDT plan on combining some similar rows? Table 1, P4 and P5 refer to "Faults" as part of the contingency. This is steady state performance and faults are not modeled in steady state. Table 1, P2.1 refers to a "single ended line". Technically, this means we need to generate a "false" bus at each end of the line to evaluate this condition or use a dispatcher power flow which included breaker modeling. Is this an accurate interpretation of the intent of this requirement? We believe there should be no distinction between the voltage classes and support the use of load shed for all cases identified in P4 through P7.

No

We do not disagree with the proposed definition change. However, we do not agree that â€œSubstation configurations such as ring-bus, breaker-and-a-half, or double bus-double breaker protection schemes do not use bus-tie breakers. Some breaker-and-a-half and double-breaker layouts may have bus breakers located mid-way in the side elements. We propose the following definition: A circuit breaker that divides a bus section with multiple tap off points into two bus sections.

Yes and No

We interpret â€œexit breakersâ€ to mean a breaker on an element that comes in from outside the substation. We agree with applying less stringent performance requirements to bus tie breakers above 300 kV. Further, we believe that Non-Consequential Load Loss should be allowed for loss of either Bus-Tie or Non-Bus-Tie Breakers regardless of voltage class. The SDT has not presented evidence that the probabilities of failure for breakers within the same substation are significantly different for different voltage classes

Yes and No

We generally agree with the concept of the sensitivity analysis since this is standard practice in understanding system performance risks and the effectiveness of improvements. It is ambiguous from a criteria perspective, however, what role is played by the sensitivities in developing Corrective Action Plans and what risks are created by misapplication of the intent of such sensitivity analyses. Clarification of the following is needed along with examples of applicable sensitivities and how these would be factored into Corrective Action Plans. If a Transmission Planner performs studies on the â€œbase caseâ€ of which the loads represented are 1 in 10 year adverse weather condition (10% chance that the actual load may exceed the projected load), does this constitute a sensitivity analysis. If so, will the Transmission Planner have to then perform additional less stringent studies at the load levels representing 1 in 2 year adverse weather conditions (50% chance that the actual load may exceed the projected load) to demonstrate compliance? R2.1.4 requires explanation of performing additional sensitivities that are not listed in the R2.1.3. This would discourage entities from performing additional sensitivities. In addition, in the above example, the Transmission Planners should not have to explain why they feel that this higher level (1 in 10 year adverse weather) of load is the â€œbase caseâ€ condition. R2.7 also states that â€œCorrective Action Plans do not need to be developed solely to meet the performance requirements for sensitivitiesâ€. Consider a Transmission Planner that has built transmission based on the 1 in 10 year adverse weather load assumed in the â€œbase caseâ€, will the judgment of the Transmission Planner be then

questioned because theâ€œbase caseâ€ used is equivalent to a sensitivity case and not a 1 in 2 year adverse weather base case?

Yes

We agree with revising P6 to permit loss of Non-Consequential Load to meet performance requirements for Systems above 300kV. However, we are concerned that with the loss of the first N-1 in P6, curtailment of firm transmission service or firm transfers would not be allowed as part of system adjustment in preparation for the next N-1. Allowing curtailment of transmission service or firm transfers for such system adjustments should be added to R3.3.2.2. Otherwise, the power transfer under normal condition (before the first N-1) will have to be significantly curtailed in anticipation for meeting performance requirements after N-1-1, or transmission facilities, which would have otherwise been unnecessary, would have to be built. Either would adversely impact customers. We also have questions on Event P6 in both Performance Tables 1 and 2: We would like some clarification on the overlapping single contingencies as denoted in Event P6 (N-1-1), and one where a single contingency, say Event P1 (N-1), follows a prior "planned" outage of a Facility (N-1). The former would allow the Non-consequential Load Loss, while the latter would prohibit it.

The additional study work associated with this Standard could cost up to SRP $100k.

1 to 2 years to complete these additional studies.

Estimate addition on-going costs of $50k.

Estimate $30k to prepare documentaion.

Estimate $15k each additional year documentation.

Unknown costs, there are numerous raise the bar Standards, hard to determine the additional cost to SRP until the complete studies are performed and evaluated.

Unknown unitl the reinforcements are determined.

B â€“ Unsure about supporting the revised standard

SRP is concerned about what actions will be allowed to meet the higher performace requirements in the transition period and how long will these transition periods last for the different Requirements?

Individual

Tom Mielnik

MidAmerican Energy Company

Yes and No

MidAmerican Energy Company (MEC) believes the definitions are improved. However, MEC suggests that the SDT clarify what stability analyses are required such as angular and voltage stability for which time frames such as the transient and steady state time frames and for what planning horizons such as the Near-Term and Long-Term planning horizons.

No

a.MEC disagrees with the proposed R2.4.1 text. This inclusion of this requirement may be premature at this time for several reasons. There is presently no industry consensus on how the dynamic behavior of loads should be properly represented and analyzed. In addition, it would be a large and difficult effort to identify, collect, and maintain the pertinent information. It is presently difficult to obtain and maintain the percentage of residential, commercial, and industrial load at each transmission interconnection point, much less try to get the proper percentage of the various types of induction motor loads. If this requirement is retained then R2.4.1 should be modified to specify a minimum threshold size where dynamic induction motor load or dynamic load behavior becomes significant such as near mining areas. The SDT should consider a 25 MW size threshold for induction motors and a 100 MW size threshold for industrial complexes where the dynamic loads are inadequately represented by normal powerflow dynamic assumptions. b. R2.4 as stated refers to Near-Term Transmission Planning Horizon Stability analysis but there is no requirement in the standard refering to Long-Term Transmission Planning Horizon Stability analysis. The SDT should reword R2.4 so that it is clear that no Long-Term Stability analysis is required by stating that "Stability analysis for the Near-Term Transmission Planning Horizon shall be assessed annuallyâ€¦". ï€ In R2.4.4, we believe this requirement should not be added. Why was it included? It seems superfluous, because any entity can study other sensitivities if they want. Why should TP or PC have to study what the other entity wants to study? Who would be the judge in case of disagreement over the technical rationale? ï€ In R2.5.2, Why was the addition of a new substation included? We would not expect a new substation to negatively impact the system or generating unit stability. We note the R5.5 and R5.6 should really have been updated to refer to 5.4 and R5.5.

No

MEC notes that Non-Consequential Load Loss is defined by the SDT to include load dropped by Special Protection Systems while Consequential Load Loss does not exclude load dropped by Special Protection Systems. The SDT should resolve this contradiction between these two definitions by adding an appropriate reference to Special Protection Systems in the Consequential Load Loss.

Yes

No

MEC disagrees with the approach of temporary requirements because of the problems that arise due to conflicting or uncoordinated standards (e.g. conflicting requirements between FAC-010-1 and TPL-002-0). We suggest the the drafting team submitt SARs to make the desired changes in the appropriate MOD standards. However, if these requirements are retained than we suggest the following few changes to R9-R14: The R9 wording on providing "the expected mix of industrial, commercial, and residential loads" should be dropped as the representative mix is difficult to quantify and verify while the benefit to representing the mix is unproven versus normal regional dynamic load representation practices. Many regions already convert normal steady state powerflow loads to standard mixes of, constant MVA, constant currrent, and shunt admittances which accounts for dynamic behavior. If the SDT decides not to drop these words, the MRO recommends "the expected mix of industrial, commercial, and residential loads" be changed to "the forecasted mix of industrial, commercial, and residential loads". In R9 through R13 the reponsible entities should be giving their information to the Transmission Planner in addtion to the Planning Coordinator. In R10, revise the text to: "Each Transmission Service Provider shall provide â€¦" In R11, is the text referring to "known planned outages" and "known long term outages"? What is the distinction that is meant to be made between the two specified types of outages? In R12, revise the text to: "â€¦ modeling information for planned facilities changes, known planned outages â€¦". Also, is the text referring to "known planned outages" and "known long term outages"? What is the distinction that is meant to be made between the two specified types of outages? In R13, revise the text to: "â€¦ for planned facilities changes for each year of the Transmission planning horizon including but not limited to generators, and new technologies â€¦". This wording broadens the meaning from simply "new" facilities to also include any "changes" to existing facilities. In R14, revise the text to: "â€¦ for planned facilities changes for each year â€¦". This wording broadens the meaning from simply "new" facilities to also include any "changes" to existing facilities.

No

a. Since the TPL contingency requirements already require bus fault, stuck breaker, and breaker failure contingencies, MEC asks the SDT to clarify the purpose of the short circuit study requirements. The benefit to additional short-circuit studies is minimal since analyses already ensure that the system can withstand bus faults and breaker failures. b. The SDT should clarify what single contingencies are to be studied for short circuit studies in R2.4. Is it single contingency as defined in Table 1? Or is it a broader or narrower definition? MEC recommends that since this is a new requirement, that TPL-001-1 be limited to raise the bar only to involve the single contingencies identified in P1. Failure to do so will require a great deal of additional modeling work in short-circuit studies if single contingencies in P2 are to be included in these studies with minimal benefit.

No

MEC suggests that the Categories symbols in Table 1 and Table 2 be different to help distinguish between them (e.g. P1:S1, P2:S2, P3.2:S3.2, etc.) MEC suggests that the header text (i.e. Category, Initial System Condition, etc.) be repeated on every applicable page to be more reader-friendly. The superscripts do not refer clearly to the respective notes. (There are numbered notes in the beginning of the table, numbered items in the extreme events evaluation requirements section, numbered items in extreme event description section, and numbered notes at the end of the table). Perhaps the referenced notes should have unique numerology or format to make the superscript references clearer.

No

MEC suggests applying the proposed definition to a new term, "Straight Bus-Tie Breaker". The creation of a narrow, special application definition of "bus tie breaker" is generally confusing and misleading. The term "bus tie breakers" is widely used in the industry in the context of various bus configurations. In addition, this narrow definition may create confusion if other Standards refer to bus-tie breaker in a different context.

No

MEC recognizes that the addition of this requirement is an attempt to raise the bar above the existing standards. However, the more stringent non-bus-tie performance criteria should only be adopted if there is sufficient evidence to demonstrate the expected reliability risk (i.e. system impact x probability of occurance) is high enough to warrant the cost of the system modifications that would be needed to meet the criteria. System modifications that involve the installation of line and substation facilities >300 kV will likely take years and cost tens to hundreds of millions to build. There should be a reliability risk analysis that justifies the application of this performance criteria before it is adopted.

No

a. MEC is not sure why R2.4.3.1 for sensitivities for Stability studies is a less definitive definition for load model variations then the steady state studies in R2.1.3.1. MEC recommends that

R2.1.3.1 be changed to "Variations in Load model assumptions." b. MEC believes R2.1.4 and R2.4.4 should be deleted because its unnessesary to make a requirement of senitivities that an entity chooses to do above and beyond the requirements in R2.1.3 and R2.4.3. If the SDT chooses not to delete these requirements, then MEC believes that R2.1.4 should be a subrequirement of R2.1.3 and R2.4.4 should be made a subrequirement of R2.4.3. The responsible entity should be allowed to select the appropriate sensitivity that should be performed. This is especially necessary given the need to perform each of these sensitivity analyses for six situations each year: peak and off-peak for two short-term years and one long-term year. Even with the requirement for one senstivity for each case that amounts to six additional sets of analysis for steady-state and six for stability.

No

MEC suggests that there be more explanation of what system adjustments are permitted. There should be some specific limit like 100MW below which load loss is allowed. Otherwise, very high cost solutions will be required for very low probability events.

MEC estimates that the total cost for one-time software licenses would be about $100,000.

MEC estimates that the lead time to perform supplemental studies and analyses to meet the new requirements would be 2 years.

MEC estimates that the on-going additional cost of expanded studies and analyses to meet the new requirements would be about $150,000 to $200,000 for additional staff and continuing software fees.

Included in amounts for 12.

Included in amounts in 12.

The additional one-time costs of system reinforcements to meet the new requirements would depend on the results of the new studies and be hard to forecast. However, if they involved just a few 345 kV substation modifications and 345 kV line additions, then MEC estimates that it would cost in the range of hundreds of millions of dollars per responsible entity.

The lead time to build new system projects would depend on the results of new studies and be hard to forecast. However, if they involved a 345 kV substation modification or a 345 kV line addition, MEC estimates that it would take 5 to 7 years to complete the new projects.

C â€“ Definitely do not support the revised standard

MEC commends the SDT for significantly improving the standard, MEC believes that the standard still must be improved significantly. Probably the most important improvement would be to completely reformat the standard to provide for more organization and clearer VSLs. MEC recognizes that this may result in some initial confusion during the standard writing process, but if such organization results in less confusion over the next decade of applying the standard, the reorganization is well worth it. If the SDT does nothing else, it should reorganize the standard. Here are some suggestions for improvement: a. R1.1 is not clear. What does this mean? Surely the SDT does not expect that any time the data is modified a rationale is required. Shouldn't this data be updated as necessary? Wouldn't a requirement for providing a rationale each time such changes are made potentially discourage improvements to the models? This requirement should be clarified and limited to a few specific cases that were there are real reliability concerns. b. R2.5.2 - the SDT should revise the material transmission system changes. Addition of a new substation in one of the transmission lines connected to the plant should be revised to specifically refer to a switching station or to a non-distribution substation. A substation directly serving load is not a good example of a material transmission system change in the context of Generation Unit Stability studies. c. R2.6.2 - The SDT should revise the material transmission system changes because as presently defined, studies will need to be conducted every year for every year in the assessment period. This is because apparently the SDT has defined any system change as a material change. Since it is rare for there to be a system that does not exhibit some system change from year to year, this will mean ten-year and more studies every year. MEC recommends that the SDT revise this requirement to make clear that only significant system changes are material changes. d. R2.7.1 - The SDT has written this requirement to include a requirement that the responsible entity must indicate how long Operating Procedures apply. This implies that Operating Procedures should be interim measures. MEC believes that reliability can be maintained with permanent Operating Procedures and recommends that the need to indicate "how long the Operating Procedures will be needed" be deleted from this requirement. e. R3.3.2.1 - The SDT should delete the need to provide the expected duration of the Consequential Load Loss in this requirement because this requirements a probabilistic calculation and probabilistic planning is not the state-of-the art of the industry. This is reflected in the standard which has been written to continue deterministic planning criteria. As a result, it is a contradiction to require this probabilistic quantity in the middle of this deterministic planning standard. f. R3.3.2.2 - clarify that the single contingency events are the events in the tab le. g. R3.4 and R5.4.4 - MEC urges that the SDT delete or revise the words "why the remaining Contingencies would produce less severe System results." Given the expansive nature of the Extreme events it is virtually impossible to comply with this requirement. It is more likely that the responsible entity could show that the more likely and more severe Extreme events were studied. It would be better yet if the SDT would merely require that the responsible entity

provide the rationale for the selection of Extreme Events that were studied. h. R5.5.1 provides an exclusion for changes in individual generating units that require study. Yet R2.6.2 has a broader defintion of when Generating Plant Stability is required. These definitions need to be consistent. The definition in R5.5.1 seems to narrow to be a good definition for "material changes." MEC believes that the R5.5.1 should be expanded. i. Year One definition - MEC suggests that the Standards Drafting Team's (SDT's) Year One definition unnecessarily constrains the time between the completion of assessments as compared to the study period to begin no more or no less than 12 to 18 months. There is no reliability benefits derived by constraining the period between the completion of an assessment and the study period for the next study period. In fact, this may encourage a Transmission Planner to unnecessarily delay "completing" a study just to ensure that the 12 to 18 month requirement is met. For example, lets assume that a Transmission Planner's 2008 Assessment is complete as of May 2008. By the definition of Year One, then the study period for the 2009 Assessment will need to begin from May 2009 through November 2009. This means that the 2009 Assessment must include the 2009-2010 Winter Peak and cannot start with the 2010 Calandar Year. Why??? If a Tranmission Planner wants to have a study period that begins with the calandar year, then the Transmission Planner would need to delay completing the study until July 2009. Why??? What is the reliability benefits for delay??? MidAmerican suggests that the definition of Year One be changed to allow the study period to begin no later than 24 months after the completion of the previous year's study. ï€- Accountability: We suggest that Transmission Service Provider be added because we also suggest that the Transmission Service Provider be responsible for R10. ï€ R2.1 - We suggest that this requirement involves too much study work and we ask that the SDT reduce the number of current studies needed for all subrequirements. ï€ R2.7.1 - We agree with the requirement, but suggest a slight text change replace "â€¦ or Special Protection Schemes,â€¦" with " . . . or Special Protection Systems, . . ." ï€ R2.7.1.1 - We disagree with the "include project initiation date" portion of this requirement. The initiation date is often uncertain and subject to change, which may add considerable work to investigate, monitor and update the date. In addition, we do not know why this information is required to assure BES reliability. ï€ R3.3.2.1 - We agree with the requirement, but suggest a slight text change of: ". . . shall be allowed in the Planning Assessment". ï€ R3.3.2.2 - We agree with the requirement, but suggest a slight text change of: ". . . within their Facility Ratings and within the time period allowed by the applicable time limited ratings.". ï€ R5.4.3.1 - We agree with the requirement, but suggest a slight text change of: ". . . within their Facility Ratings and within the time period allowed by the applicable time limited ratings.". ï€ Table 1 ï€ Planning Events ï€ Header: We suggest that the header be repeated on every applicable page to be more reader-friendly. ï€ Superscripts: The superscripts do not refer clearly to the respective notes (e.g. there are number notes in the beginning of the table, in the extreme events evaluation requirements section, in extreme event description section, and at the end of the table). Perhaps the notes at the end of the table should have unique numbering to make the superscript references clearer. ï€ Shunt device: To avoid the need for future interpretation or clarification, we suggest that the meaning of shunt device be explained or defined somewhere in the standard (e.g. cap bank, inductor bank, SVC, STATCOM, etc.). We need to find out how shunt device outages can (or could in the future) be automatically included in the ACCC routine. We interpret that if each stage of a capacitor bank has a circuit switcher, then the outage would be of the largest cap bank stage. ï€ Extreme Event Evaluation Requirements ï€ 3 Extreme Event Descriptions ï€ 2b & 3b - We agree with the descriptions, but suggest referring to the defined term: "Right-of-Way." ï€ Note 4 - We agree with the description, but the acronym FACTS should be explained in the standard or a definition be added for "FACTS". Table 2 Header: We suggest that the header be repeated on every applicable page to be more reader-friendly. Other numbering and format changes suggested for Table 1 should also be considered for Table 2.

Individual

Gary Trent

Tucson Electric Power Company

No

We believe that there is no significant distinction between Generating Unit Stability and System Stability other than the objective and focus of the study. Therefore, we cannot accept a simple statement from the SDT that it believes it is important to maintain this distinction without more explanation. If a distinction is maintained, then Generating Unit Stability Study should be and is already covered in FAC-001-0 and FAC-002-0. As defined, Generating Unit Stability Study â €œfocuses on an individual generating unit's or electrically closely-coupled generating units' Stability for various Contingencies on the Transmission Facilities connected to that generating unit(s) point(s) of interconnection or one bus away from that point. However, the Purpose of the proposed TPL-001-1 is to â€œdevelop a Bulk Electric System that will operate reliably over a broad spectrum of System conditions and following a wide range of probable Contingenciesâ€. If a Generating Unit becomes unstable, the unit can be disconnected from the BES without impacting system stability. Therefore, we believe that the Generating Unit Stability Studies portion is attempting to introduce interconnection stability studies into the TPL standards. Interconnection stability studies are adequately addressed by FAC-001 and does not need to be

specifically called out in TPL-001-1. In addition, Generating unit stability studies are typically performed at the time of interconnection. Even though Generating Unit Stability Studies have been done as new generating unit(s) were interconnected or at the time changes occurred, such studies have not been done for the entire fleet of Generating Units at the same time. For very old units, stability study documentation may no longer exist, even though no potential stability problems have been identified when stability studies were run for interconnecting other newer units or for the System. If the requirement for Generating Unit Stability Study is retained in this proposed TPL-001-1, R2.5 needs to be clarified to say â€œonly whenâ€ the changes in R2.5.1 and R2.5.2 are made that the Generating Unit Stability Study needs to be done. There also needs to be language about how to treat generators that are existing prior to this Standard taking effect. We would also appreciate if the SDT would more clearly define with examples the terms in R2.5.2, â€œmaterial Transmission System changeâ€ and â€œat or near the point of Interconnectionâ€ to invoke a study.

Yes and No

In general, R2.4 is acceptable but some of the sub-requirements are to prescriptive. We generally agree that Transmission Owners with extensive Transmission Planning Function and Planning Coordinators need to perform and be held accountable for the Requirements in R2.4 and R5.4; however, the SDT needs to define an organization size level below which these requirements for the associated Transmission Planner may be slightly relaxed. There are numerous Transmission Planners; (e.g., those associated with PUDs, Municipals or REA, etc. where historically dynamic stability has not been a problem), for which performing these type of studies and assessments would be onerous and would not yield reliability benefits for the network. Off-peak analysis (R2.4.2) in the Planning Horizon is of limited value for smaller entities. This analysis is best left to the Operating Horizon. Please consider deleting the conditions identified in R5.4.3.1, R5.4.3.2, and R5.4.3.3. We question the need to specifically call out these requirement in subrequirements of R5.4.3. We believe these conditions should be met for any and all requirements of the standard. It should not be necessary to list acceptable practices, especially if the conditions placed on the practice are general conditions that are addressed elsewhere or are generic. Otherwise, R5.4 is acceptable. ï€ The proposed requirements in R2.5 and R5.5 are already covered in FAC-001 and FAC-002 and should not be included again in the proposed TPL-001-1. Otherwise, the NERC standards would have redundant requirements. In addition, Transmission Ownerâ€™s open access tariffs requires Generator Owners to apply for interconnection to its transmission system or to make modifications to their generators as described in R2.5.1, R5.5.1, and R5.5.2. It is therefore the Generator Ownerâ€™s responsibility to cause these studies to be done at the time of interconnection or modification, yet R5 seems to place that responsibility only on the Transmission Planner and the Planning Coordinator. The Transmission Planner or the Planning Coordinator would not know of the changes until notified by the Generator Owner. If the SDT believes that FAC-001 is deficient, it should propose revisions to this standard, not simply add to TPL. Requirement R5.5.2 needs to be clarified to state changes or additions to the generating unit that result in an increase in power output. Otherwise, it could be interpreted to apply to existing units with a change in dispatch.

No

We generally agree with the definitions by themselves but have concerns about potential unintended consequences. This definition will severely limit the loads that can be classified as â€œlocal Network customers, connected to or supplied by the Faulted element or by the affected area, may occur in certain areas without impacting the overall reliability of the interconnected transmission systemsâ€ in footnote b of the existing TPL standards. In combination with raising the bar for loss of Facilities with operating voltages 300 kV or higher (P2, P4 and P5 in the Performance Tables), this definition may result in encouraging entities to connect more loads in a radial fashion or avoid loop connection to improve service reliability just to fit in the Consequential Load Loss definition, â€œâ€¦load no longer being connected to a sourceâ€¦â€. As a result, service reliability to customer would be adversity impacted without commensurate improvement in overall system reliability. In addition, existing design of many such local networks would normally require RAS/SPS to disconnect loads on local networks in response to contingencies. However, the definition of Non-Consequential Load Loss states that using RAS/SPS is Non-Consequential Load Loss. In the Consideration of Comments on the First Draft of TPL-001-1, page 49, response to First Energy, the SDT states "FERC has determined that any Load loss that is not directly connected to the faulted element is actually Non-Consequential Load loss." We found a similar response to WECC on page 449, item 6. While we do not disagree with the statements made by the SDT, that FERC wants clarification of what is Consequential Load Loss, we do not see where FERC has ruled out the use of RAS/SPS for Consequential Load Loss. Consequential Load Loss needs to include the concept of local networks. Another way to address this would be to exempt some local networks in the definition of the Bulk Electric System. The performance of existing systems has been designed to be consistent with the concepts of the quoted sentence above from footnote b of Table 1 of the existing TPL standards. There are many instances where some local network customer curtailments or local area load loss has been allowed by local regulatory authorities as long as the overall reliability of the interconnected

system was not impacted. This is a result of tradeoffs with the cost and environmental impacts of providing a higher level of reliability in a local area. An attempt to eliminate the concepts contained in footnote b of the existing TPL standards would invalidate local regulatory decisions, place a large unintended cost burden on existing customers and could potentially create criteria that could not be met anytime soon, if ever, as a result of the long lead time required for system improvements. Any attempt to raise the bar by interpreting the definition of Non-Consequential Load as eliminating the concepts of footnote b is considered unacceptable. The new criteria need to clearly maintain these concepts to prevent a large disconnect with existing design criteria. The last sentence in the Definition of Consequential Load Loss (â€œAlthough Load which is lost as a result of the Loadâ€™s response to the transient conditions of the event is considered Consequential Load Loss and is permitted when Consequential Load Loss is allowed, Transmission planning entities are not allowed to rely upon the expectation of such Load loss to meet steady state performance requirementsâ€) seems more appropriate to be requirements. Therefore, please move this sentence to the Notes Section at the beginning of Table 1 as new Item 7.

Yes

We agree. However, the conditions listed in R3.5.1, R3.5.2 and R3.5.3 are applicable to the overall TPL Standard. Their specific listing in R3.5 gives the impression that these Requirements are only applied to R3.5 and not to the other Requirements in this Standard. In other words, are there any Requirements in this Standard that R3.5.1, R3.5.2 and R3.5.3 do not apply to? Therefore, we suggest TPL-001-1 be silent on this issue and move R3.5.1 through R3.5.3, (and the equivalent in the stability study R5.4.3.1 through R5.4.3.3) to a Requirement applicable to Assessment studies in general, such as the bullet points in the Performance Tables.

Yes

While we agree with separating R1 to form R9 through R14, we believe that R9 (modeling information for real and reactive load forecast data) should be applicable to Load Serving Entities (LSE) instead of (or in addition to) the Distribution Provider. In any case, this type of exchange of load information is already covered in MOD Standard or in the respective tariffs, and should not be included again in the proposed TPL-001-1 Standard.

Yes and No

We agree with R2.3. However, R4 requires assessment of â€œShort-circuit capability of its equipment under normal conditions and following any single Contingency condition that would result in greater circuit breaker interrupting dutiesâ€. Since short circuit studies are typically performed by applying a fault on a Facility starting from a normal condition, there can be confusion whether the result would constitute â€œnormalâ€ condition or â€œfollowing any single Contingency conditionâ€. Also, by specifying the normal and single contingency conditions, R4 is straying into â€œhowâ€ to perform a study, which is not necessary in a standard. We suggest deleting the reference to the contingencies to be used in the study.

Yes and No

We do not disagree with the proposed format changes of the Tables. However, we are not sure if separating into two Tables is necessary, or beneficial. It seems like an extra column for event could be added and some changes to the notes would greatly simplify the table. Some of the rows could also be combined; one such example is P2-2 (Loss of Bus Section) and P2-3 (Internal Breaker Fault, non-bus-tie). Will the SDT plan on combining some similar rows? Table 1, P4 and P5 refer to "Faults" as part of the contingency. This is steady state performance and faults are not modeled in steady state. Table 1, P2.1 refers to a "single ended line". Technically, this means we need to generate a "false" bus at each end of the line to evaluate this condition or use a dispatcher power flow which included breaker modeling. Is this an accurate interpretation of the intent of this requirement? We believe there should be no distinction between the voltage classes and support the use of load shed for all cases identified in P4 through P7. The proposed format covers multiple pages. Add the header rows to each page for easier reading.

No

We do not disagree with the proposed definition change. However, we do not agree that â€œSubstation configurations such as ring-bus, breaker-and-a-half, or double bus-double breaker protection schemes do not use bus-tie breakers. Some breaker-and-a-half and double-breaker layouts may have bus breakers located mid-way in the side elements. We propose the following definition: A circuit breaker that divides a bus section with multiple tap off points into two bus sections.

Yes and No

We interpret â€œexit breakersâ€ to mean a breaker on an element that comes in from outside the substation. We agree with applying less stringent performance requirements to bus tie breakers above 300 kV. Further, we believe that Non-Consequential Load Loss should be allowed for loss of either Bus-Tie or Non-Bus-Tie Breakers regardless of voltage class. The SDT has not presented evidence that the probabilities of failure for breakers within the same substation are significantly different for different voltage classes

Yes and No

We generally agree with the concept of the sensitivity analysis since this is standard practice in

understanding system performance risks and the effectiveness of improvements. It is ambiguous from a criteria perspective, however, what role is played by the sensitivities in developing Corrective Action Plans and what risks are created by misapplication of the intent of such sensitivity analyses. Clarification of the following is needed along with examples of applicable sensitivities and how these would be factored into Corrective Action Plans. If a Transmission Planner performs studies on the â€œbase caseâ€ of which the loads represented are 1 in 10 year adverse weather condition (10% chance that the actual load may exceed the projected load), does this constitute a sensitivity analysis. If so, will the Transmission Planner have to then perform additional less stringent studies at the load levels representing 1 in 2 year adverse weather conditions (50% chance that the actual load may exceed the projected load) to demonstrate compliance? R2.1.4 requires explanation of performing additional sensitivities that are not listed in the R2.1.3. This would discourage entities from performing additional sensitivities. In addition, in the above example, the Transmission Planners should not have to explain why they feel that this higher level (1 in 10 year adverse weather) of load is the â€œbase caseâ€ condition. R2.7 also states that â€œCorrective Action Plans do not need to be developed solely to meet the performance requirements for sensitivitiesâ€. Consider a Transmission Planner that has built transmission based on the 1 in 10 year adverse weather load assumed in the â€œbase caseâ€, will the judgment of the Transmission Planner be then questioned because theâ€œbase caseâ€ used is equivalent to a sensitivity case and not a 1 in 2 year adverse weather base case?

Yes

We agree with revising P6 to permit loss of Non-Consequential Load to meet performance requirements for Systems above 300kV. However, we are concerned that with the loss of the first N-1 in P6, curtailment of firm transmission service or firm transfers would not be allowed as part of system adjustment in preparation for the next N-1. Allowing curtailment of transmission service or firm transfers for such system adjustments should be added to R3.3.2.2. Otherwise, the power transfer under normal condition (before the first N-1) will have to be significantly curtailed in anticipation for meeting performance requirements after N-1-1, or transmission facilities, which would have otherwise been unnecessary, would have to be built. Either would adversely impact customers. We also have questions on Event P6 in both Performance Tables 1 and 2: We would like some clarification on the overlapping single contingencies as denoted in Event P6 (N-1-1), and one where a single contingency, say Event P1 (N-1), follows a prior "planned" outage of a Facility (N-1). The former would allow the Non-consequential Load Loss, while the latter would prohibit it.

$200,000

6 month study performed by consultant

1 man-year

included in previous question

included in previous question

unable to determine without actual studies

10+ years 5 year budget and 10 year plans have been approved. Proposed projects in the 5-10 year time frame would need revised and accelerated and new projects would be proposed following the completion of these proposed projects.

C â€“ Definitely do not support the revised standard

The Standard as presented is clearer, but there are numerous issues that still need resolution. There should be no distinction in voltage classes for allowing or not allowing controlled load shed for applicable events. We support the use of load shed for events at voltages greater than 300 kV where load shed is allowed for the same type of event for voltages below 300 kV. We agree that the Standard as presented is clearer, but there are numerous issues that still need resolution, Measures, VSLs, Implementation Plan, etc., before WECC can give a full approval of this Standard. ï€ There is no mention in the purpose of the Standard about minimizing loss of load for more probable unplanned contingencies. Maybe there needs to be some definition around what is meant by reliability. ï€ We believe that with the loss of the first N-1 in P6, curtailment of firm transmission service or firm transfers should be allowed as part of system adjustment in preparation for the next N-1. This should be added to R3.3.2.2. Otherwise, the power transfer under normal condition (before the first N-1) will have to be significantly curtailed in anticipation for meeting performance requirements after N-1-1. This will unnecessarily impede commerce. Or, to maintain the same firm power transfer under normal conditions, construction of transmission facilities will be required. Either way, this would impose a much stricter standard than exists today resulting in very costly unnecessary system improvements and invalidate terms of many transmission service contracts that allow for implementation of pro-rate curtailments of firm transmission rights during forced and planned outage conditions. ï€ We disagree with the application of the proposed definitions of Consequential Load Loss and Non-Consequential Load Loss in conjunction with â€œraising the barâ€. Local Network load should be included in Consequential Load and the loss should be allowed for single contingencies. The TPL standard is to maintain reliability of the BES. Under certain conditions orderly dropping of local network load could limit the spread of the disturbance beyond the local area and allow BES reliability to be

maintained. This would minimize the total amount of load loss and allow for quicker load restoration. The proposed definitions for Consequential Load Loss and Non-consequential Load Loss will provide no reliability benefits for high voltage (>300 kV) transmission backbone system providing wholesale open access service and interconnecting to the rest of the western interconnection. Any potential reliability benefits of any additional facilities built to comply with these definitions would be at the local service level. ï€ As mention in comments to Q3 above, some local network customer curtailments or local area load loss has been allowed by local regulatory authorities as long as the overall reliability of the interconnected system was not impacted. This is a result of tradeoffs between providing a higher level of reliability in a local area and the cost and environmental impacts of providing that service. Such tradeoffs are subject to local regulatory authority or contract negotiated between the transmission provider and its transmission customers. Regarding the terms â€œinterruption of firm transmission serviceâ€, there needs be clarification on what Interruption means. Since it is referring to firm transmission service, we would interpret this to mean curtailment needed after a particular contingency and adjustments. There also needs to be clarification on what â€œFirm Transmission Serviceâ€ means. Two points, 1) the NERC definition states â€œhighest quality service offered to customers under a filed rate schedule that anticipates no planned interruption.â€ The Standard implies anticipation of â€œunplannedâ€ interruption for certain contingencies. 2) Is this referring to a transmission product as defined in FERC Order 890, or firm transfers modeled for the conditions being studied? One way to interpret the intent is the firm transfers being modeled for the conditions in the powerflow to meet demand that would result in load not being served if that firm transfer were curtailed. If there is other generation in the system that could increase to meet the load if the transfer being modeled is interrupted, then interruption of firm transmission service should also be allowed for P1 through P5 contingencies in the table. In addition, we believe that DC and AC lines should have the same performance requirements with respect to interuption of firm transmission service. We do not understand why interruption of firm service would be an acceptable response to the loss of a single pole of a DC line (i.e. response to the contingency) but not an acceptable response to prepare for the next contingency of an AC line. The transfers over both AC and DC lines can automatically be curtailed when the line is outaged.

Group

SERC Dynamics Review Subcommittee

Herb Schrayshuen

SERC Reliability Corporation

No

An improvement for the System Stability Study definition is to clarify that it is a study that focuses on the impact to the system itself and covers an area larger than one Generating Plant, covering a large geographical area. See specific proposal below: â€œSystem Stability Study - Study that focuses on how contingencies impact a larger portion of the System than a Generating Unit Study. These studies would examine issues such as angular Stability, inter-area power oscillation, and dynamic voltages.â€

No

R 2.4.1 Load models that appropriately represent the dynamic behavior of induction motors are under development and may not be available for some time. The implementation plan should take this into account and allow at least 36 months for implementation; otherwise this requirement will not be achievable in the near term. R 2.4.3 One should only explain why sensitivity was performed. In general we believe that breaking these requirements into specific sub-requirements focusing on specific sensitivities is too prescriptive and inappropriate; it will lead to over-focus on these particular issues to the detriment of system reliability. There should be no enumerated list of required sensitivities. Engineering judgment needs to be permitted. R 2.4.3.1 It should be clearly stated whether the load model refers to system load or the dynamic load model at individual busses. We have a specific proposal for R2.4.3 which addresses the above concerns as follows: R2.4.3. For each of the studies described in Requirement R2.4.1 and Requirement R2.4.2, sensitivity case(s) that stress the System to reflect one or more conditions such as variations in dynamic Load model assumptions, modification of expected transfers, unavailability of long lead time Facilities, variability and outages of reactive resources, generation additions, retirements, or other dispatch scenarios. Document why each sensitivity was selected.

Yes

The modified definitions of Consequential load loss has been appropriately modified to include loss of Load as a result of the Load's response to the transient condition. This recognizes the fact that when subjected to fault voltages of sufficient depth and duration, the resulting Load dynamics will result is loss of Load. Therefore, in order to more accurately replicate real-world behavior through dynamic stability simuation analysis, the proper representation of expected real world loss of load is acceptable. It is also proper that the computation of expected consequential Load loss and duration is not required for single contingency stability analysis. If there is a need, Load loss due to the resulting transmission system configuration would be captured by steady state analysis. Attempts at determining additional Load loss due to load dynamics would not

result in any useful information contributing to increased reliability.
Yes
Generation run-back and tripping should be allowed and the proposed sub-requirements are appropriate.
No
For R9 the LSE should provide the load forecast instead of the DP. For R9 - R14, It is not clear that the specification of data flow appropriate for both RTO and non-RTO situations because there are significant differences in the role of planning coordinator. For example: 1) Who builds and manages the base cases? Shouldnâ€™t the data be submitted to this entity? 2) According to the definition provided in this standard, the Planning Coordinator is â€œThe responsible entity that coordinates and integrates transmission facility and service plans, resource plans, and protection systems.â€ Additionally, we recommend the TPL SDT write a SAR to get the data related changes into the MOD standards or adding it the issues to be considered by the drafting team in the development plan under project number 2010-04 otherwise it will be difficult to remember to include these items in the revised MOD standards.
Yes
It is not clear in the standard what is meant by â€œsingle contingencyâ€? Is the concern in Requirement R4 limited to single contingencies that may result in a system state which results in a greater circuit breaker interrupting duty?
Yes
The tables could be improved if the headings were put on each separate page. Separating out the tables for steady state and stability improves and clarifies the requirements of the standard.
No
The use of the word â€œstraightâ€ in the definition raised questions. We recommend the word straight be removed or change the definition to the suggestion below: Suggestion: Bus-tie breakers are defined as a circuit breaker position that connects two individual buses with one or more breaker positions on each bus.
Yes
The logic and the proposal seem reasonable.
No
These requirements are very prescriptive. Many examples of sensitivities are already inherent in the existing requirements. Some sensitivity studies are in effect adding an additional level of contingency (N-2 or N-3). Sensitivity studies of load variation are already inherent in the fact that several different study years and conditions are already being required. Outages of reactive sources and generation should already be included in studies of multiple contingencies. The process of planning new generation (system impact studies) will include studies of the future with and without the proposed new equipment. The TP and PC can better select the most appropriate sensitivities for their system. In general we believe that breaking these requirements into specific sub requirements, focusing on specific sensitivities, is too prescriptive and inappropriate. It will lead to over focus on these particular issues to the detriment of system reliability. There should be no enumerated list of required sensitivities. Engineering judgment needs to be permitted.
Yes
The changes are more practical. If two or more 500kV lines are lost, it makes complete sense to allow loss of non-consequential load so long as cascading outages are not triggered. While we agree interruption of firm transmission service and non-consequential load loss should not be allowed to meet the planning requirements for the first system contingency (defined as initial system condition in the table), these system adjustments should be allowed to prepare for the second event so that the system will meet the requirements following the second event. We recommend that clarifying changes be made to incorporate this concept. We recommend that the statement above be included as modification or as a footnote for the P6 portion of the table as follows: Foot note: Interruption of firm transmission service and non-consequential load loss should be allowed after the first event as a system adjustment to prepare for the second event and meet the requirements following the second event. See our related response to question 15.
The sensitivities will greatly increase the cost and time need for planning because the work is directly proportional to the number of sensitivities.
The lead time for new line construction is at least 7 years.
B â€“ Unsure about supporting the revised standard
SERC is in category B A â€“ Generally support the revised standard â€“ B â€“ Unsure about supporting the revised standard â€“ See three specific concerns below C â€“ Definitely do not

support the revised standard â€“ 1) Load Modeling is a significant open issue. The models for dynamic studies have yet to be developed and the data is not in hand. This is conflicting with implementation of the TPL standards because modeling details are a gating item to completing some system studies. 2) The proposed sensitivities create significant amount of additional work making the compliance aspect more burdensome and less clear. 3) Category P6 is the loss of a system element, following system adjustments, followed by the loss of another element. The table columns for this category say that interruption of firm transmission service is allowed. The table, however, is not clear whether the interruption of firm service is allowed as part of the system adjustment (between the outages) or whether it is only allowed after the second outage. It was stated in the NERC TPL SDT WebEx that the interruption is not allowed as part of the system adjustment. If this is the interpretation, this will cause many SERC members to not support the revised standard. This would be a dramatic change from the existing standard and would result in the unintended consequence of significantly reducing transfer capability of interfaces to a fraction of their currently reported capability. This would in effect be imposing an n-2 criteria for offering firm transmission service. This would not be an acceptable situation for the users, owners and operators of the bulk power system.

Group

MRO NERC Standards Review Subcommittee

Tom Mielnik

MEC

No

The MRO believes the definitions are improved. However, the MRO suggests that the SDT clarify what stability analysis are required such as angular and voltage stability for which time frames such as the transient and steady state time frames and for what planning horizons such as the Near-Term and Long-Term planning horizons. Generating Unit Stability Study definition - The MRO suggests deleting the text, "on the Transmission Facilities connected to that generating unit(s) point(s) of interconnection or one bus away from that point.", because certain Generation Facility contingencies should be considered and key Transmission Facility contingencies can be more than one bus away from the interconnection point. System Stability Study definition - The MRO suggests this alternate wording: "Study that focuses on portions of the System, which may include many generating units with various Contingencies. This study is concerned with loss of synchronism, lack of damping of inter-area power oscillations, and voltages during the dynamic simulation." We suggest this wording because the definition of a study should not give the criteria, but rather the general elements of the study.

No

a. The MRO disagrees with the proposed R2.4.1 text. This inclusion of this requirement may be premature at this time for several reasons. There is presently no industry consensus on how the dynamic behavior of loads should be properly represented and analyzed. In addition, it would be a large and difficult effort to identify, collect, and maintain the pertinent information. It is presently difficult to obtain and maintain the percentage of residential, commercial, and industrial load at each transmission interconnection point, much less try to get the proper percentage of the various types of induction motor loads. If this requirement is retained then R2.4.1 should be modified to specify a minimum threshold size where dynamic induction motor load or dynamic load behavior becomes significant such as near mining areas. The SDT should consider a 25 MW size threshold for induction motors and a 100 MW size threshold for industrial complexes where the dynamic loads are inadequately represented by normal powerflow dynamic assumptions. b. R2.4 as stated refers to Near-Term Transmission Planning Horizon Stability analysis but there is no requirement in the standard refering to Long-Term Transmission Planning Horizon Stability analysis. The SDT should reword R2.4 so that it is clear that no Long-Term Stability analysis is required by stating that "Stability analysis for the Near-Term Transmission Planning Horizon shall be assessed annuallyâ€¦". ï€ The MRO does not accept the R2.4.3.1 text and want some explanation of the what, when, and how to provide the technical rationale for why each condition was or was not used. ï€ In R2.4.3.1, what is meant by â€œvariationsâ€ (e.g. how much variation is enough)? ï€ In R2.4.3.2, what is meant by â€œmodificationâ€ (e.g. how much modification is enough) and "expected transfers" (e.g. firm or non-firm transfers)? ï€ In R2.4.3.3, what is meant by â€œlong lead timeâ€ (e.g. 1 month, 1 season, 1 year, 2 years, etc.)? The MRO suggests that â€œlong lead timeâ€ be stated 18 months or more. ï€ In R2.4.4, we believe this requirement should not be added. Why was it included? It seems superfluous, because any entity can study other sensitivities if they want. Why should TP or PC have to study what the other entity wants to study? Who would be the judge in case of disagreement over the technical rationale? ï€ In R2.5.2, Why was the addition of a new substation included? We would not expect a new substation to negatively impact the system or generating unit stability. The MRO notes that R5.5 and R5.6 should really have been updated to refer to 5.4 and R5.5. In R5.4.3.1, we suggest that the time-limited aspect of Facility Ratings should be included in the Glossary Definition by adding the words "within the applicable time period of the rating" and then it would not need to be clarified in various locations (R3.3.2.2, R3.5.1, R5.4.3.1, Table 1-Note 1, & Table 2-Note 1) throughout the standard.

No

Non-Consequential Load Loss is defined by the SDT to include load dropped by Special Protection Systems while Consequential Load Loss does not exclude load dropped by Special Protection Systems. The SDT should resolve this contradiction between these two definitions by adding an appropriate reference to Special Protection Systems in the Consequential Load Loss. For Consequential Load Loss definition, The MRO suggests that the last sentence be deleted because it is application text, rather than definition text.

Yes

No

The MRO disagrees with the approach of temporary requirements because of the problems that arise due to conflicting or uncoordinated standards (e.g. conflicting requirements between FAC-010-1 and TPL-002-0). We suggest the drafting team submit SARs to make the desired changes in the appropriate MOD standards. However, if these requirements are retained than we suggest the following few changes to R9-R14: In R9, revise the text to: "â€¦ load forecast data for at least the coincident peak of each year â€¦" The R9 wording on providing "the expected mix of industrial, commercial, and residential loads" should be dropped as the representative mix is difficult to quantify and verify while the benefit to representing the mix is unproven versus normal regional dynamic load representation practices. Many regions already convert normal steady state powerflow loads to standard mixes of, constant MVA, constant current, and shunt admittances which accounts for dynamic behavior. If the SDT decides not to drop these words, the MRO recommends "the expected mix of industrial, commercial, and residential loads" be changed to "the forecasted mix of industrial, commercial, and residential loads". In R9 through R13 the responsible entities should be giving their information to the Transmission Planner in addition to the Planning Coordinator. In R9, revise the text to: "â€¦ load forecast data for at least the coincident peak of each year â€¦" In R10, revise the text to: "Each Transmission Service Provider shall provide â€¦" In R11, is the text referring to "known planned outages" and "known long term outages"? What is the distinction that is meant to be made between the two specified types of outages? In R12, revise the text to: "â€¦ modeling information for planned facilities changes, known planned outages â€¦". Also, is the text referring to "known planned outages" and "known long term outages"? What is the distinction that is meant to be made between the two specified types of outages? In R13, revise the text to: "â€¦ for planned facilities changes for each year of the Transmission planning horizon including but not limited to generators, and new technologies â€¦". This wording broadens the meaning from simply "new" facilities to also include any "changes" to existing facilities. We suggested removing the reference to Reactive Power Devices because these devices would not be owned by Resource Planners. In R14, revise the text to: "â€¦ for planned facilities changes for each year â€¦". This wording broadens the meaning from simply "new" facilities to also include any "changes" to existing facilities.

No

a. Since the TPL contingency requirements already require bus fault, stuck breaker, and breaker failure contingencies, the MRO asks the SDT to clarify the purpose of the short circuit study requirements. The benefit to additional short-circuit studies is minimal since analyses already ensure that the system can withstand bus faults and breaker failures. b. The SDT should clarify what single contingencies are to be studied for short circuit studies in R2.4. Is it single contingency as defined in Table 1? Or is it a broader or narrower definition? The MRO recommends that since this is a new requirement, that TPL-001-1 be limited to raise the bar only to involve the single contingencies identified in P1. Failure to do so will require a great deal of additional modeling work in short-circuit studies if single contingencies in P2 are to be included in these studies with minimal benefit. c. The MRO suggests added clarification of the following questions: 1. Should analysis be performed for the near-term and long-term planning horizon? 2. Should only the peak system condition be analyzed? 3. What does the analysis include (e.g. breaker overduty evaluation and protective relay coordination)? R4 - Clarify that the "short-circuit capability of its equipment under normal conditions" (P0) refers to interruptible rating for breakers only.

No

The MRO suggests that the Categories symbols in Table 1 and Table 2 be different to help distinguish between them (e.g. P1:S1, P2:S2, P3.2:S3.2, etc.) The MRO suggests that the header text (i.e. Category, Initial System Condition, etc.) be repeated on every applicable page to be more reader-friendly. The superscripts do not refer clearly to the respective notes. (There are numbered notes in the beginning of the table, numbered items in the extreme events evaluation requirements section, numbered items in extreme event description section, and numbered notes at the end of the table). Perhaps the referenced notes should have unique numerology or format to make the superscript references clearer.

No

The MRO suggests applying the proposed definition to a new term, "Straight Bus-Tie Breaker". The creation of a narrow, special application definition of "bus tie breaker" is generally confusing

and misleading. The term "bus tie breakers" is widely used in the industry in the context of various bus configurations. In addition, this narrow definition may create confusion if other Standards refer to bus-tie breaker in a different context.

No

The MRO recognizes that the addition of this requirement is an attempt top raise the bar above the existing standards. However, the more stringent non-bus-tie performance criteria should only be adopted if there is sufficient evidence to demonstrate the expected reliability risk (i.e. system impact x probability of occurrence) is high enough to warrant the cost of the system modifications that would be needed to meet the criteria. System modifications that involve the installation of line and substation facilities >300 kV will likely take years and cost tens to hundreds of millions to build. There should be a reliability risk analysis that justifies the application of this performance criteria before it is adopted.

No

a. The MRO is not sure why R2.4.3.1 for sensitivities for Stability studies is a less definitive definition for load model variations then the steady state studies in R2.1.3.1. The MRO recommends that R2.1.3.1 be changed to "Variations in Load model assumptions." b. The MRO believes R2.1.4 and R2.4.4 should be deleted because its unnecessary to make a requirement of senitivities that an entity chooses to do above and beyond the requirements in R2.1.3 and R2.4.3. If the SDT chooses not to delete these requirements, then MRO believes that R2.1.4 should be a subrequirement of R2.1.3 and R2.4.4 should be made a subrequirement of R2.4.3. The responsible entity should be allowed to select the appropriate sensitivity that should be performed. This is especially necessary given the need to perform each of these sensitivity analyses for six situations each year: peak and off-peak for two short-term years and one long-term year. Even with the requirement for one sensitivity for each case that amounts to six additional sets of analysis for steady-state and six for stability. c. For R2.1.4, we suspect that these analysis are similar to extreme event contingencies and do not have specific performance requirements. We would also like some explanation of what and how to provide the technical rationale for why each condition was or was not used.

No

The MRO suggests that there be more explanation of what system adjustments are permitted. There should be some specific limit like 100MW below which load loss is allowed. Otherwise, very high cost solutions will be required for very low probability events.

The MRO estimates that the additional one-time costs of supplemental studies and analysis to meet the new requirements might be spread over five years because some analysis only has to be updated every five years. The MRO estimates that the total cost over five years for additional staff, consulting services, or software fees would be about $200,000 to $300,000 per responsible entity.

The MRO estimates that the lead time to perform supplemental studies and analysis to meet the new requirements would be up to 5 years.

The MRO estimates that the on-going additional cost of expanded studies and analysis to meet the new requirements would be about $150,000 to $200,000 for additional staff and continuing software fees per responsible entity.

Included in amounts for 12.

Included in amounts for 12.

The additional one-time costs of system reinforcements to meet the new requirements would depend on the results of the new studies and be hard to forecast. However, if they involved just a few 345 kV substation modifications and 345 kV line additions, then we estimate that it would cost in the range of hundreds of millions of dollars per responsible entity.

The lead time to build new system projects would depend on the results of new studies and be hard to forecast. However, if they involved a 345 kV substation modification or a 345 kV line addition, we estimate that it would take 5 to 7 years to complete the substation project and 8 to 12 years (or more) to complete the new transmission line project.

C â€“ Definitely do not support the revised standard

While the MRO commends the SDT for significantly improving the standard, the MRO believes that the standard still must be improved significantly. Here are some suggestions for improvement: a. R1.1 is not clear. What does this mean? Surely the SDT does not expect that any time the data is modified a rationale is required. Shouldn't this data be updated as necessary? Wouldn't a requirement for providing a rationale each time such changes are made potentially discourage improvements to the models? This requirement should be clarified and limited to a few specific cases that were there are real reliability concerns. b. R2.5.2 - the SDT should revise the material transmission system changes. Addition of a new substation in one of the transmission lines connected to the plant should be revised to specifically refer to a switching station or to a non-distribution substation. A substation directly serving load is not a good example of a material transmission system change in the context of Generation Unit Stability studies. c. R2.6.2 - The SDT should revise the material transmission system changes because as presently defined, studies will need to be conducted every year for every year in the assessment

period. This is because apparently the SDT has defined any system change as a material change. Since it is rare for there to be a system that does not exhibit some system change from year to year, this will mean ten-year and more studies every year. The MRO recommends that the SDT revise this requirement to make clear that only significant system changes are material changes. d. R2.7.1 - The SDT has written this requirement to include a requirement that the responsible entity must indicate how long Operating Procedures apply. This implies that Operating Procedures should be interim measures. The MRO believes that reliability can be maintained with permanent Operating Procedures and recommends that the need to indicate "how long the Operating Procedures will be needed" be deleted from this requirement. e. R3.3.2.1 - The SDT should delete the need to provide the expected duration of the Consequential Load Loss in this requirement because this requirements a probabilistic calculation and probabilistic planning is not the state-of-the art of the industry. This is reflected in the standard which has been written to continue deterministic planning criteria. As a result, it is a contradiction to require this probabilistic quantity in the middle of this deterministic planning standard. f. R3.3.2.2 - clarify that the single contingency events are the events in the table. g. R3.4 and R5.4.4 - the MRO urges that the SDT delete or revise the words "why the remaining Contingencies would produce less severe System results." Given the expansive nature of the Extreme events it is virtually impossible to comply with this requirement. It is more likely that the responsible entity could show that the more likely and more severe Extreme events were studied. It would be better yet if the SDT would merely require that the responsible entity provide the rationale for the selection of Extreme Events that were studied. h. R5.5.1 provides an exclusion for changes in individual generating units that require study. Yet R2.6.2 has a broader definition of when Generating Plant Stability is required. These definitions need to be consistent. The definition in R5.5.1 seems to narrow to be a good definition for "material changes." The MRO believes that the R5.5.1 should be expanded. i. Year One definition - The MRO suggests that the Standards Drafting Team's (SDT's) Year One definition unnecessarily constrains the time between the completion of assessments as compared to the study period to begin no more or no less than 12 to 18 months. There are no reliability benefits derived by constraining the period between the completion of an assessment and the study period for the next study period. In fact, this may encourage a Transmission Planner to unnecessarily delay "completing" a study just to ensure that the 12 to 18 month requirement is met. For example, letâ€™s assume that a Transmission Planner's 2008 Assessment is complete as of May 2008. By the definition of Year One, then the study period for the 2009 Assessment will need to begin from May 2009 through November 2009. This means that the 2009 Assessment must include the 2009-2010 Winter Peak and cannot start with the 2010 Calendar Year. Why? If a Transmission Planner wants to have a study period that begins with the calendar year, then the Transmission Planner would need to delay completing the study until July 2009. Why? What are the reliability benefits for delay? The MRO suggests that the definition of Year One be changed to allow the study period to begin no later than 24 months after the completion of the previous year's study. ï€ Definitions: The MRO agrees with the removal of the "Base Case" definition and the revisions to the other definitions, except as noted below or elsewhere. ï€ Long Term Planning Horizon definition: The MRO suggests a slight text change of: "Transmission planning period that covers years six through ten. Studies beyond ten years are required to accommodate . . .". ï€ Accountability: The MRO suggests that Transmission Service Provider be added because we also suggest that the Transmission Service Provider be responsible for R10. ï€ Requirements: The MRO agrees with the revisions to the Requirements, except as noted below or elsewhere. ï€ R1.1 - The MRO agrees with the requirement, but would like more description of what to provide in the technical rationale. ï€ R2.1 - The MRO suggests that this requirement involves too much study work and we ask that the SDT reduce the number of current studies needed for all subrequirements. ï€ R2.6.2 - The MRO agrees with the requirement, but suggest a slight text change of: " . . . short circuit, Generating Unit Stability or System Stability analysis . . .". ï€ R2.7 - The MRO agrees with the requirement, as long as it is really required by FERC Order 693 paragraph 1704. ï€ R2.7.1 - The MRO agrees with the requirement, but suggest a slight text change replace "â€¦ or Special Protection Schemes,â€¦" with " . . . or Special Protection Systems, . . ." ï€ R2.7.1.1 - The MRO disagrees with the "include project initiation date" portion of this requirement. The initiation date is often uncertain and subject to change, which may add considerable work to investigate, monitor and update the date. In addition, we do not know why this information is required to assure BES reliability. ï€- R2.7.2 - The MRO agrees with the requirement, as long as it is really required by FERC Order 693 paragraph 1704. ï€ R3.2.2 - The MRO agrees with the requirement, but suggest a slight text change of: "For all BES Transmission lines . . .". ï€ R3.3.2.1 - The MRO agrees with the requirement, but suggest a slight text change of: ". . . shall be allowed in the Planning Assessment". ï€ R3.3.2.2 - The MRO agrees with the requirement, but suggest a slight text change of: ". . . within their Facility Ratings and within the time period allowed by the applicable time limited ratings.". ï€ R5.1 - The MRO agrees with the requirement, but suggest a slight text change of: ". . . the response of the applicable portion of the BES". ï€ R5.2 - This clarifying requirement should also be included in the steady state and short circuit analysis sections. ï€- R5.3 - The MRO agrees with the requirement, but suggest a slight text change of: ". . . capability of all generators that may have a significant adverse effect on the BES." ï€ R5.4.3.1 - The MRO agrees with the requirement, but suggest a slight text change of: ". . . within their Facility

Ratings and within the time period allowed by the applicable time limited ratings.". ï€ R6 - The MRO agrees with the requirement, but suggest a slight text change of: ". . . shall provide the rationale for and document . . .". ï€ R8 - The MRO disagrees with the requirement, but suggest a text change of: "Each Planning Coordinator shall establish a list of neighboring system and coordinate the distribution of Planning Assessment results among affected entities the listed neighboring systems, coordinating analysis of these results through an open and transparent peer review process." ï€ Table 1 ï€ Planning Events ï€ Header: The MRO suggests that the header be repeated on every applicable page to be more reader-friendly. ï€ Superscripts: The superscripts do not refer clearly to the respective notes (e.g. there are number notes in the beginning of the table, in the extreme events evaluation requirements section, in extreme event description section, and at the end of the table). Perhaps the notes at the end of the table should have unique numbering to make the superscript references clearer. ï€ Shunt device: To avoid the need for future interpretation or clarification, we suggest that the meaning of shunt device be explained or defined somewhere in the standard (e.g. cap bank, inductor bank, SVC, STATCOM, etc.). We need to find out how shunt device outages can (or could in the future) be automatically included in the ACCC routine. We interpret that if each stage of a capacitor bank has a circuit switcher, then the outage would be of the largest cap bank stage. ï€ P2.2 (>300 kV), P2.3(>300 kV), P3 (>300 kV), P4 (>300 kV), P5 (>300 kV), P6 (>300 kV) - This requirement is raising the bar above the existing standards. In the existing standards, this is a Category C event in which load shedding was allowed. A higher criteria for >300 kV may not be appropriate at this time. The new requirement may require the installation of facilities that are costly and have a very long implementation timeframe. We should consider what the cost of this higher requirement might be for ATC and other utilities. If the new >300 kV requirement is not reduced, then we would want the implementation timeframe to be long enough to allow reasonable time to transition from a system built to the old requirement to a system built for the new requirement. The time needed for planning, design engineering, regulatory approvals, and construction of >300 kV facilities can be very long (e.g. up to 10 or more years). ï€ P6 - Why isnâ€™t the generator listed as a one of the possible subsequent element outages? ï€ P7 - The MRO disagrees with this requirement. Wisconsin statues require giving preference to using existing ROW for new transmission circuits, but this requirement discourages building multiple circuits on common ROW. Should there be an exclusion in this standard similar to the TLP-503-MRO-1 standard (e.g. could be slightly more than 1 mile due to review?. ï€ Extreme Event Evaluation Requirements ï€ 2 - The MRO agrees with the requirement, but perhaps a definition be added for "System Controls", since one exists for "System Protection". ï€ 3 - The MRO agrees with the requirement, but suggest a slight text change of: "Simulate Normal Clearing unless otherwise specified in the Extreme Event Descriptions." ï€ Extreme Event Descriptions ï€ 2a - The MRO agrees with the description, but suggest a slight text change of: "Loss of a structure or tower line with three or more circuits.." ï€ 2b & 3b - The MRO agrees with the descriptions, but suggest referring to the defined term: "Right-of-Way." ï€ 2e, 3.a.i, & 3.a.ii - The MRO agrees with the descriptions, but how large is "large" and how major is "major"? ï€ 3.a.v - What is meant by successful cyber attack? Is it a type of cyber attack that is documented to have been successful? ï€ 3c - The MRO agrees with the description, but suggest a slight text change of: "Other events based upon actual operating experience such as:" ï€ Note 4 - The MRO agrees with the description, but the acronym FACTS should be explained in the standard or a definition be added for "FACTS". ï€ Table 2 ï€ 1 - The MRO disagrees with this note. We suggest that it be expanded to include the applicable part as Table 1. "The System shall remain stable. In addition, Facility Equipment Ratings shall not be exceeded. Planned System adjustments are allowed, unless precluded in the Requirements, to keep Facilities within the Facility Ratings, if such adjustments are executable within the time duration applicable to the Facility Ratings." ï€ 3 - The MRO disagrees with this note. We suggest that it be expanded to include the applicable part as Table 1. "Dynamic voltage instability, Cascading outages, and uncontrolled islanding shall not occur." ï€ Between 3 & 4 - The MRO disagrees with omitting Note 4 of Table 1 from Table 2. We suggest including: "Consequential Load and consequential generation loss is allowed for all events shown." ï€ Planning Events ï€ Same comments on Header, Superscripts, and Shunt Device as in Table 1. ï€ Same comments about stricter requirements for P2.2 (>300 kV), P2.3(>300 kV), P3 (>300 kV), P4 (>300 kV), P5 (>300 kV), P6 (>300 kV) as in Table 1. ï€- Same comment about P7 as in Table 1. ï€ Extreme Event Evaluation Requirements ï€ Same comment about Requirement 2 and 3 as in Table 1. ï€ 3 - The MRO agrees with the requirement, but suggest a slight text change of: "Simulate Normal Clearing unless otherwise specified in the Extreme Event Descriptions." ï€ Notes 5 - The MRO disagrees with limiting this requirement to just Category P1 category. We suggest that the synchronism requirement be applied to more categories.

Individual

James C. Armke

Austin Energy

No

There is no need to separate system stability studies and generating unit stability studies. Requirement R5.4 should be written to include generating unit stability analysis.

No

The routine sensitivity cases requirement contained in R2.4.3 is overly burdensome and unnecessary and should be deleted. Sensitivity analysis should be limited to what may be deemed appropriate by the Transmission Planner or Planning Coordinator. Similarly, R2.5 and R5.5 requirements for Generating Unit Stability should be deleted. Removing these burdensom requirement will allow transmission planners and/or the Planning Coordinator (ISO)to determine the appropriate Generator Unit Stability analysis needed as part of R5.4 System Stability.

Yes

Yes

No

Requirements R9 through R14 should be deleted and re-introduced later as part of a change to MOD standards. R1.1 imposes burdensom documentation requirements which will likely become a disincentive for revising modeling data and should be deleted.

Yes and No

Transmission Planners should assess equipment short-circuit capability under normal conditions, but the need assess its capability following a contingency is so rare it should be left to the planner's selective analysis and not made a specific requirement in the standards.

No

Matching facility rating to seven contingency categories is confusing. Furthermore, these seven categoriesa combined with alternative scenarios and sensitivity studies for several years into the future is overly burdensom, unnecessary, and unrealistic.

Yes

Yes

No

Appropriate sensitivity analysis should be determined by the Transmission Planner and/or the Planning Coordinator (ISO or RTO) and not made a routine requirement. Therefore, R2.1.3 should be deleted.

No

It should be left to the Transmission Planner and/or Planning Coordinator (ISO or RTO) to select the credible multiple contingencies to be studied as planning evernts. Therefore P6 should be deleted.

C â€“ Definitely do not support the revised standard

The proposed standard is overly burdensome and too perscriptive. It will only result in a marginal improvement in reliability and its primary effect will be to devolve into a paper-chase for auditors.

Individual

Spencer Tacke

Modesto Irrigation District

No

Comments: We believe that there is no significant distinction between Generating Unit Stability and System Stability other than the objective and focus of the study. Therefore, we cannot accept a simple statement from the SDT that it believes it is important to maintain this distinction without more explanation. If a distinction is maintained, then Generating Unit Stability Study should be and is already covered in FAC-001-0 and FAC-002-0. As defined, Generating Unit Stability Study â€œfocuses on an individual generating unit's or electrically closely-coupled generating units' Stability for various Contingencies on the Transmission Facilities connected to that generating unit(s) point(s) of interconnection or one bus away from that point. However, the Purpose of the proposed TPL-001-1 is to â€œdevelop a Bulk Electric System that will operate reliably over a broad spectrum of System conditions and following a wide range of probable Contingenciesâ€. If a Generating Unit becomes unstable, the unit can be disconnected from the BES without impacting system stability. Therefore, we believe that the Generating Unit

Stability Studies portion is attempting to introduce interconnection stability studies into the TPL standards. Interconnection stability studies are adequately addressed by FAC-001 and does not need to be specifically called out in TPL-001-1. In addition, Generating unit stability studies are typically performed at the time of interconnection. Even though Generating Unit Stability Studies have been done as new generating unit(s) were interconnected or at the time changes occurred, such studies have not been done for the entire fleet of Generating Units at the same time. For very old units, stability study documentation may no longer exist, even though no potential stability problems have been identified when stability studies were run for interconnecting other newer units or for the System. If the requirement for Generating Unit Stability Study is retained in this proposed TPL-001-1, R2.5 needs to be clarified to say â€œonly whenâ€ the changes in R2.5.1 and R2.5.2 are made that the Generating Unit Stability Study needs to be done. There also needs to be language about how to treat generators that are existing prior to this Standard taking effect. We would also appreciate if the SDT would more clearly define with examples the terms in R2.5.2, â€œmaterial Transmission System changeâ€ and â€œat or near the point of Interconnectionâ€ to invoke a study.

Yes and No

Comments: R2.4 is acceptable. Please consider deleting the conditions identified in R5.4.3.1, R5.4.3.2, and R5.4.3.3. We question the need to specifically call out these requirement in subrequirements of R5.4.3. We believe these conditions should be met for any and all requirements of the standard. It should not be necessary to list acceptable practices, especially if the conditions placed on the practice are general conditions that are addressed elsewhere or are generic. Otherwise, R5.4 is acceptable. â^' We generally agree that Transmission Owners with extensive Transmission Planning Function and Planning Coordinators need to perform and be held accountable for the Requirements in R2.4 and R5.4; however, the SDT needs to define an organization size level below which these requirements for the associated Transmission Planner may be slightly relaxed. There are numerous Transmission Planners; (e.g., those associated with PUDs, Municipals or REA, etc. where historically dynamic stability has not been a problem), for which performing these type of studies and assessments would be onerous and would not yield reliability benefits for the network. â^' The proposed requirements in R2.5 and R5.5 are already covered in FAC-001 and FAC-002 and should not be included again in the proposed TPL-001-1. Otherwise, the NERC standards would have redundant requirements. In addition, Transmission Ownerâ€™s open access tariffs requires Generator Owners to apply for interconnection to its transmission system or to make modifications to their generators as described in R2.5.1, R5.5.1, and R5.5.2. It is therefore the Generator Ownerâ€™s responsibility to cause these studies to be done at the time of interconnection or modification, yet R5 seems to place that responsibility only on the Transmission Planner and the Planning Coordinator. The Transmission Planner or the Planning Coordinator would not know of the changes until notified by the Generator Owner. If the SDT believes that FAC-001 is deficient, it should propose revisions to this standard, not simply add to TPL. Requirement R5.5.2 needs to be clarified to state changes or additions to the generating unit that result in an increase in power output. Otherwise, it could be interpreted to apply to existing units with a change in dispatch.

Comments: We generally agree with the definitions by themselves but have concerns about potential unintended consequences. This definition will severely limit the loads that can be classified as â€œlocal Network customers, connected to or supplied by the Faulted element or by the affected area, may occur in certain areas without impacting the overall reliability of the interconnected transmission systemsâ€ in footnote b of the existing TPL standards. In combination with raising the bar for loss of Facilities with operating voltages 300 kV or higher (P2, P4 and P5 in the Performance Tables), this definition may result in encouraging entities to connect more loads in a radial fashion or avoid loop connection to improve service reliability just to fit in the Consequential Load Loss definition, â€œâ€¦load no longer being connected to a sourceâ€¦â€. As a result, service reliability to customer would be adversity impacted without commensurate improvement in overall system reliability. In addition, existing design of many such local networks would normally require RAS/SPS to disconnect loads on local networks in response to contingencies. However, the definition of Non-Consequential Load Loss states that using RAS/SPS is Non- Consequential Load Loss. In the Consideration of Comments on the First Draft of TPL- 001-1, page 49, response to First Energy, the SDT states "FERC has determined that any Load loss that is not directly connected to the faulted element is actually Non-Consequential Load loss." We found a similar response to WECC on page 449, item 6. While we do not disagree with the statements made by the SDT, that FERC wants clarification of what is Consequential Load Loss, we do not see where FERC has ruled out the use of RAS/SPS for Consequential Load Loss. Consequential Load Loss needs to include the concept of local networks. Another way to address this would be to exempt some local networks in the definition of the Bulk Electric System. The performance of existing systems has been designed to be consistent with the concepts of the quoted sentence above from footnote b of Table 1 of the existing TPL standards. There are many instances where some local network customer curtailments or local area load loss has been allowed by local regulatory authorities as long as the overall reliability of the interconnected system was not impacted. This is a result of tradeoffs with the cost and environmental impacts of providing a higher level of reliability in a local area.

An attempt to eliminate the concepts contained in footnote b of the existing TPL standards would invalidate local regulatory decisions, place a large unintended cost burden on existing customers and could potentially create criteria that could not be met anytime soon, if ever, as a result of the long lead time required for system improvements. Any attempt to raise the bar by interpreting the definition of Non-Consequential Load as eliminating the concepts of footnote b is considered unacceptable. The new criteria need to clearly maintain these concepts to prevent a large disconnect with existing design criteria. The last sentence in the Definition of Consequential Load Loss (â€œAlthough Load which is lost as a result of the Loadâ€™s response to the transient conditions of the event is considered Consequential Load Loss and is permitted when Consequential Load Loss is allowed, Transmission planning entities are not allowed to rely upon the expectation of such Load loss to meet steady state performance requirementsâ€) seems more appropriate to be requirements. Therefore, please move this sentence to the Notes Section at the beginning of Table 1 as new Item 7.

Yes

Comments: We agree. However, the conditions listed in R3.5.1, R3.5.2 and R3.5.3 are applicable to the overall TPL Standard. Their specific listing in R3.5 gives the impression that these Requirements are only applied to R3.5 and not to the other Requirements in this Standard. In other words, are there any Requirements in this Standard that R3.5.1, R3.5.2 and R3.5.3 do not apply to? Therefore, we suggest TPL- 001-1 be silent on this issue and move R3.5.1 through R3.5.3, (and the equivalent in the stability study R5.4.3.1 through R5.4.3.3) to a Requirement applicable to Assessment studies in general, such as the bullet points in the Performance Tables.

Yes

Comments: While we agree with separating R1 to form R9 through R14, we believe that R9 (modeling information for real and reactive load forecast data) should be applicable to Load Serving Entities (LSE) instead of (or in additional to) the Distribution Provider. In any case, this type of exchange of load information is already covered in MOD Standard or in the respective tariffs, and should not be included again in the proposed TPL-001-1 Standard.

Yes and No

Comments: We agree with R2.3. However, R4 requires assessment of â€œShort-circuit capability of its equipment under normal conditions and following any single Contingency condition that would result in greater circuit breaker interrupting dutiesâ€. Since short circuit studies are typically performed by applying a fault on a Facility starting from a normal condition, there can be confusion whether the result would constitute â€œnormalâ€ condition or â€œfollowing any single Contingency conditionâ€. Also, by specifying the normal and single contingency conditions, R4 is straying into â€œhowâ€ to perform a study, which is not necessary in a standard. We suggest deleting the reference to the contingencies to be used in the study.

Yes and No

Comments: We do not disagree with the proposed format changes of the Tables. However, we are not sure if separating into two Tables is necessary, or beneficial. It seems like an extra column for event could be added and some changes to the notes would greatly simplify the table. Some of the rows could also be combined; one such example is P2-2 (Loss of Bus Section) and P2-3 (Internal Breaker Fault, non-bus-tie). Will the SDT plan on combining some similar rows? Table 1, P4 and P5 refer to "Faults" as part of the contingency. This is steady state performance and faults are not modeled in steady state. Table 1, P2.1 refers to a "single ended line". Technically, this means we need to generate a "false" bus at each end of the line to evaluate this condition or use a dispatcher power flow which included breaker modeling. Is this an accurate interpretation of the intent of this requirement? We believe there should be no distinction between the voltage classes and support the use of load shed for all cases identified in P4 through P7.

No

We do not disagree with the proposed definition change. However, we do not agree that â€œSubstation configurations such as ring-bus, breaker-and-a-half, or double bus-double breaker protection schemes do not use bus-tie breakers. Some breaker-and-ahalf and double-breaker layouts may have bus breakers located mid-way in the side elements. We propose the following definition: A circuit breaker that divides a bus section with multiple tap off points into two bus sections.

Yes and No

Comments: We interpret â€œexit breakersâ€ to mean a breaker on an element that comes in from outside the substation. We agree with applying less stringent performance requirements to bus tie breakers above 300 kV. Further, we believe that Non- Consequential Load Loss should be allowed for loss of either Bus-Tie or Non-Bus-Tie Breakers regardless of voltage class. The SDT has not presented evidence that the probabilities of failure for breakers within the same substation are significantly different for different voltage classes

Yes and No

We generally agree with the concept of the sensitivity analysis since this is standard practice in understanding system performance risks and the effectiveness of improvements. It is ambiguous

from a criteria perspective, however, what role is played by the sensitivities in developing Corrective Action Plans and what risks are created by misapplication of the intent of such sensitivity analyses. Clarification of the following is needed along with examples of applicable sensitivities and how these would be factored into Corrective Action Plans. If a Transmission Planner performs studies on the â€œbase caseâ€ of which the loads represented are 1 in 10 year adverse weather condition (10% chance that the actual load may exceed the projected load), does this constitute a sensitivity analysis. If so, will the Transmission Planner have to then perform additional less stringent studies at the load levels representing 1 in 2 year adverse weather conditions (50% chance that the actual load may exceed the projected load) to demonstrate compliance? R2.1.4 requires explanation of performing additional sensitivities that are not listed in the R2.1.3. This would discourage entities from performing additional sensitivities. In addition, in the above example, the Transmission Planners should not have to explain why they feel that this higher level (1 in 10 year adverse weather) of load is the â€œbase caseâ€ condition. R2.7 also states that â€œCorrective Action Plans do not need to be developed solely to meet the performance requirements for sensitivitiesâ€. Consider a Transmission Planner that has built transmission based on the 1 in 10 year adverse weather load assumed in the â€œbase caseâ€, will the judgment of the Transmission Planner be then questioned because theâ€œbase caseâ€ used is equivalent to a sensitivity case and not a 1 in 2 year adverse weather base case?

Yes

We agree with revising P6 to permit loss of Non-Consequential Load to meet performance requirements for Systems above 300kV. However, we are concerned that with the loss of the first N-1 in P6, curtailment of firm transmission service or firm transfers would not be allowed as part of system adjustment in preparation for the next N-1. Allowing curtailment of transmission service or firm transfers for such system adjustments should be added to R3.3.2.2. Otherwise, the power transfer under normal condition (before the first N-1) will have to be significantly curtailed in anticipation for meeting performance requirements after N-1-1, or transmission facilities, which would have otherwise been unnecessary, would have to be built. Either would adversely impact customers. We also have questions on Event P6 in both Performance Tables 1 and 2: We would like some clarification on the overlapping single contingencies as denoted in Event P6 (N-1- 1), and one where a single contingency, say Event P1 (N-1), follows a prior "planned" outage of a Facility (N-1). The former would allow the Non-consequential Load Loss, while the latter would prohibit it.

Unknown at this time.

B â€“ Unsure about supporting the revised standard

Concerns about the following: attempt to introduce interconnection stability studies into TPL studies, and redefiniton of Consequential and Non-Consequential Load Loss.

Individual

Ronnie Frizzell

Arkansas Electric Coop. Corp.

Yes and No

There are situations where one bus away may not be far enough. While one bus may cover most situations the standard shouldn't limit the study to just one bus away. Suggested language change: Transmission Facilities connected to that generating unit(s) point(s) of inteconnection, one bus away from the electrically closely-coupled units.

Yes

No

These defintions are still confusing. I offer the following example to explain: If you have a networked transmission line serving several loads, a fault occurs on the line, and the load is dropped because of the line breakers at either end of the line operating. As a result the operator would normally sectionalize the line and isolate the faulted section. This results in the networked line now being two radials and the load is restored. From a planning standpoint the resulting steady state is the resulting two radials and there should not be any consequential load loss. From an operational standpoint steady state would have occurred at the time of the breakers opening and dropping the load. Operationally the load is consequential load loss. This being a planning standard the standard should require that all the load be served and the transmission line meet the (planning)steady state performance requirements. If the SDT agrees that the resulting radials should be capable of serving all the load and meet the planning steady state

performance requirements then I can agree with the definition. If not then I disagree. In the planning environment systems should be studied and assessed based on an switchable element to switchable element basis and not just breaker to breaker. Non-Consequential Load Loss - 1. Is it the intent of the SDT that Non-Consequential Load Loss be all firm load other than Consequential Load Loss? If not it should be. Is there a definition of "Non-Interruptible Load"? Didn't see it in the Glossary. 2. additional language should be added stating that the examples given are not inclusive. I have a problem with NERC providing examples in definitions because often the examples are interpreted as the definition itself when in reality their purpose is to clarify.

No

R9. I diagree with providing the mix of industrial, commercial and residential, especially within a 90 day period. It is difficult enough to be able to develop a forecast must less try to quesstimate the mix of the loads. R9 through R14 -- the timing requirement should be tied to the regions model development schedule and not 90 days. The 90 days is too restrictive and not practical however model data should be updated at least annually.

No

R2.3.1 should not be deleted. While system wide short circuit analysis should be done annually, there are situations where changes in the BES do impact the short circuit. If these changes result in new equipment needing to be ordered then this needs to be know as soon as possible in order to prevent exceeding equipment ratings or delays because of lead times on equipment.

No

I disagree with statement #4 for the reasons given in my comments on question 3. Also, if you are going to allow it then consequential generation loss needs to be defined. I also disagree with statement #5. This is a planning standard and as such systems should be planned for planning steady state. Statement #5 should only be allowed if the resulting operator actions are taken into account. A fault on a networked transmission line may open the breakers at each end. Statement #5 stops here when in reality operator actions would isolate the faulted sections and service restored with the transmission line now being operated as two radials. The resulting two radials are what need to meet the performance requirements. Events should be taken to their logical conclusions and the resulting system topology be what meets the performance requirements. The tables need some borders and section dividers. Headers should be on each page. No firm transmission or Non-Consequential Load Loss should be allowed for P2. I think the SDT has it backwards. Non-Consequential Load Loss should never occur and the tables should reflect what is allowed to happen with Consequential Load Loss for each event. Many of the scenarios reflect what should happen with Consequential Load Loss and not Non-Conseqeuntial Load Loss. For example: P2 Bus Section for less than 300 kV -- The load on that bus under this contingency would be Consequential NOT Non-Consequential. For the loss of that bus the load connected to that bus should be ALL the load that is lost, therefore no Non-Consequential Load Loss should occur.

Yes

Yes

No

Non-Consequential Load Loss should not be allowed. See comments to question 7.

B â€“ Unsure about supporting the revised standard

I have a growing concern that the NERC Reliability Standards are not going far enough to ensure adequate and reliabile service to customers and users of the BES. Each revision of the standards seem to be driven by the need to preserve the integrity of the grid and preventing cascading blackouts but stop short of ensuring that load continues to be served under contingency conditions and adequate grid capacity is available. For the customers and end users of the system if their load is allowed to be dropped or can not be served because of the lack of capacity then the BES is not reliable. The definitions of Consequential Load Loss and Non-Consequential Load Loss concern me the most. How these definitions are then applied in the tables is also a great concern. Hopefully my previous comments to the other questions in the comment form

provide explanation. Another concern I have is the fact that I tried to provide comments last fall to draft 1 of the standards and they were not allowed. After following the instructions provided I provided my comments before the deadline. I later discovered they were not posted. After repeated attempts asking NERC to determine why my comments were not received and posted and showing evidence that they had been provided by the deadline, the only response I received was pretty much "sorry Charlie". Mistakes happen. NERC should be big enough to admit when they make a mistake instead of just blowing them off. I have no way of knowing if or how many times this may have happened before. I am not trying to say that anything malicious was entended, however it does leaves me with concern that fair treatment is being given to all comments and cast a shadow over confidence in the standards approval process.

Individual

Marie Knox

Midwest ISO

Yes

No

The language in R2.4 retains the appropriate clarification that while annual assessments are required, these assessments do not necessarily have to be based upon annually performed simulations. This same distinction should be retained for steady-state assessments required under requirement R2.1, not withstanding the fact that steady-state simulations are easier to perform. The principle is the same for both. Requirement R2.4.1 is to open ended in specifying the years to be studied. Rather, it should parallel requirement R2.1.1 in requiring that at a minimum either year one or two should be evaluated, and additional years at the option of the responsible entity. If the system could go unstable in the next 1-2 years, it is important to know this. Regarding R2.4.3 & R2.4.4, the standards should not require analysis for which corrective action is optional regardless of the conclusion of the analysis. Requirement R2.7 establishes that corrective action to any sensistivities is optional. Therefore, the performance of sensitivities should be at the descretion of the applicable entity. If the SDT believes it is important to recommend that sensitivities be performed then those Requirements addressing sensitivities should state that the performance of the sensitivity is recommended but optional. If you keep sensistivities in the standard then the requirement in R2.4.4 to document why an entity performed sensitivities in addition to the Requirements should be dropped. As long as the entity selected a sensitivity and documented the results of the sensitivity there should be no reason to explain why he tested it. Requirement R2.5.2 is unclear with respect to when generator unit stability needs to be retested following modifications to the transmission system. Nearly all additions to the transmission system will tend to improve generator stability. We suggest this language be modified to say: "Material transmission system changes are made at or near the point of interconnection of existing generation that would tend to degrade stability margins of that generation, such as the removal of a transmission line, or associated with the addition of new generation, or other system changes as determined by the Planning Coordinator or Transmission Planner". R5.4.3.1 & R5.4.3.3 are redundant with the stated requirement to mitigate stability. Under the subrequirement of R5.4.3.2 it may not be possible for the PC/TP to determine whether the safety, equipment, regulatory or statuatory requirements are violated without collaboration with the Transmission Owner and/or the Generator Owner. Therefore, if this subrequirement is retained it should be ammended to include the following sentence: "Applicable Transmission Owners and/or Generator Owners shall collaborate with the PC/TP in determining whether such action would violate safety, equipment, regulatory or statuatory requirements". Subrequirements R5.4.3.X are superfluous; we suggest removing these subrequirements. However, if this requirement is retained it should be ammended to include the following sentence: "Automatic generation tripping is allowed to mitigate Stability violations if the performance criteria in Table 2 is met".

No

Under the definition of consequential load, it is not clear who the term "Transmission planning entities" is referring to. Perhaps it should say "entities to which the standard is applicable". The last sentence could be ammended to say: "Load that is no longer connected to a source as a result of the event being studied or which is lost as a result of the load's response to the transiet conditions of the event (other than through the action of UVLSâ€¦..

Yes and No

Under the subrequirement of R3.5.2 it may not be possible for the PC/TP to determine whether the safety, equipment, regulatory or statuatory requirements are violated without collaboration with the Transmission Owner and/or the Generator Owner. Therefore, if this subrequirement is retained it should be ammended to include the following sentence: "Applicable Transmission Owners and/or Generator Owners shall collaborate with the PC/TP in determining whether such action would violate safety, equipment, regulatory or statuatory requirements".

No

Since the Transmission Planner has the primary model building responsibility it makes sense to

have them aggregate model building information. Therefore, requirement R9 should have the Distribution Provider providing the Transmission Planner and Planning Coordinator with modeling information for real and reactive load forecastâ€¦etc. The data of R10 such as firm TS data may not be known by the Transmission Planner (ofter a TO in the RTOs). Also the langauge implies that there are more than one BA under a TP, also not a typical arrangement in an RTO/ISO. A hierarchical approach might be more appropriate such that the Distribution Provider, the Transmission Provider, and the Transmission Owner supply the data they control to the Tranmission Planner and the Planning AUthority so that those entities can build models they need to meet the study requirements of the standard.

No

The language throughout the standard is not precise as relates to "studies", "analysis", and "assessments". R2.3 appears to say that the actual simulations upon which the annual assessments are made need not be a current year study. If that is the intent the following wording would be more clear: "Short-circuit assessments shall be conducted annually and may be supported by current or past studies. R4 should be grouped with R2.4. In general the standard seems to meander and elements of the same types of studies are scattered, making it difficult to grasp the study requirements with clarity. Also the language of R4 is unclear as it describes short circuit studies in terms of contingencies. Better langauge would be "shall assess the short-circuit capability of its equipment under system intact topology and any single facility (or branch) out condition that is expected to result in greater â€¦".

No

Please add a General Requirements heading before items 1-6 (Steady State) and 1-5 (Stability) which appear to be applicable to all events for each table. The two columns under "BES elements out of Service" could be stricken for simplicity and clarity. If there is a voltage distinction needed, then add it next to the "Yes" or "No" under the "Interuption of Firm Service" or "Loss of Load" columns. Items P0 through P7 are identical in Table 1 - Steady State Performance and Table 2 Stability Performance. The only distinctions are the notes or whether it is an outaged event in Table 1 or a 3 phase/SLG fault in Table 2. Having two tables is redundant and unnecessary, and does not add clarity. It is also recommended that you combine the notes and extreme events from Table 1 - Steady State Performance and Table 2 - Stability Performance into one table. If both tables are to be retained then it is recommended that the SDT take into consideration the following suggestions. With the old Version 0 table, where there was not a separate stability table, it was understood that each of the event types needed to be assessed, but only those that the responsible entity knew were the more severe from a stability perspective needed to have stability analysis performed. By listing events such as single circuit faults (P1) under Table 2, this implies that all events should be simulated with dynamics, though requirement 5.4.1 states events "that would produce more severe System impacts shall be identified,...". The burden to explain why certain events were not selected can be construed now as having to run dynamics on all line faults, or explain why each line was not selected. Most lines embedded within the grid and not near generators or of particular significance to grid dynamic stability need not be studied. We do not believe that the SDT is requiring any additional burden of proof as to why every line in the system is not studied with dynamics, but the standard makes that question more murky than it was before. An overzealous compliance monitor could be confused by the new layout at great expense to the industry. If Table 2 remains, change Table 2 - Stability Performance to only those events that are important to Stability Analysis. For example the following faults to run would be: 1) Faults near large generators (generator buses, generator lines or transformers near generators) 2) Faults with delayed clearing near large generators 3) Faults on long or heavily loaded lines with large phase angle differences between terminals. A majority of faults on lines less than 200kV are rarely severe so it is recommeded to have the standards reflect this in Table 2 - Stability Performance.

Yes

This is a good definition.

Yes

No

This reminds us of Category D from original table--requiring us to study something but take no action. Sensitivities are not appropriate nor effective in a planning world in which you require an array of sensitivity studies but require no action will be taken. While running sensitivities enables us to better understand system limits, why have it as a requirement if there is no action plan obligation.

Yes

Some additional costs will be required to comply with all the requirements. This is difficult to quantify at this time.

This is difficult to quantify at this time, but any increased requirements should be clearly identified by the SDT and a transition period should be developed if the standards are intended

to be more restrictive.
There will be an increase in ongoing cost for expanded studies and analysis. A transition period for staffing and process development will be required.
We agree some additional costs will be incurred for expanded documentation.
ore requirements and more studies will increase documentation costs.
This is difficult to quantify at this time.
This is difficult to quantify at this time.
C â€“ Definitely do not support the revised standard
We apprecaite the hard work of the SDT and understand the difficulty of this task. We applaud the efforts to imnprove the standard. However, in its present state, in general the revised standard fails in one if its primary stated goals: create a "clear and concise standard". While some of the ideas are an improvement, overall the standard is very meandering and it makes it difficult to figure out what the requirements are for a particular analysis type without flipping back and forth between the scaterred requirements. For example R2 addresses various aspects of both Near and long term studies, steady state, short circuit, stability, on peak, off peak and other topics. Then there are separate sections (R3, 4, 5) that speak to the various analysis types again. It probably makes sense to the SDT that has evolved with the drafts and discussions, but when you pick it up it is very confusing. One thing that would help greatly would be to label the major Requirements sections to convey the organization of the document. If the SDT made a topical outline of the standard by major Requirement this could help the team organize the standard better. Reulting topical headers may look something like the following for example, R1: Modeling R2: Study Types and Assessment Requirements R3: Steady State Analysis Methods R4: Short Circuit Analysis Methods? R5: Stability Analysis Methods Etc. If it has not been done (and it looks like it has not), the SDT should consider having the language reviewed by the NERC or other legal team. Langauge that seems clear to experienced engineers may not be precise as is critical for standards that carry monitary penalties. An independent review by a non-engineer lawyer would help greatly. Of course, the SDT would then have to undo some damage that would undoubteldy be done to context by the lawyers - but the pass through legal would be a good step. ï€ ï€ Other concerns: ï€ P5 requires testing for a single component failure within a Protection System. What is this referencing? How can a PC/TP be expected to be intricately aware of protection systems and effects of single component failures? Under 2.7.2, there is a generic requirement to expand a list of possible corrective actions under 2.7.1 for any sensitivies under R2.1.3, 2.1.4, 2.4.3 and 2.4.4. This is very open ended and subject to interpretation. How can an auditor review such requirements with consistency?
Individual
Mark Graham
Tri-State Generatino and Transmission Association, Inc.
No
Starting from this version, we think it would be clearer to not distinguish between generator and system stability studies, but rather list both as requirements for Stability Studies. Generating unit analyses would include tests of models such as generator exciters, and System Stability studies would model such things as bus faults.
Yes and No
R2.4.1 "System peak load" needs a definition. Forecast descriptions by the utility should describe probability levels and other specifics.
Yes
We agree with the definitions in concept - that Consequential Load Loss is load which would be unserved following a specific outage event, without any load shedding relay operations. However, there is some ambiguity in how things are defined for N-1-1 contingencies. For example, a firm contract or firm resource would not be automatically curtailed upon the first outage (N-1), but operators may need to curtail the contract or resource schedule to restore the system to acceptable operating limits, or arm relay schemes that would interrupt certain facilities for the second outage (N-1-1). It seems unreasonable that some such operator actions would not be allowed.
Yes
Agree with the described corrective actions, but wonder whether the sub-requirements R3.5.1 - R3.5.3 must be specifically listed.
Yes
We are pleased the SDT pulled out these Requirements. Does the SDT plan to leave them in the standard as notes until they can be incorporated into other standards where they belong? In R11, the term "long-term" is not clear.
Yes and No
R2.3 is acceptable as written. R4 is redundant and should be eliminated. Also, the contingency short circuit study requirement does not appear to meet the purpose described in this draft

standard (breaker duty monitoring). Three-phase short circuits on an intact system should cover the highest fault conditions, and thus the most critical breaker duty conditions.
Yes and No
It does not seem that there should be different performance limits for DC and AC lines. It is unclear why there is a separation of voltage classes. Perhaps it would be helpful for each TP to specify which voltage levels are considered Bulk on their particular system, then split studies according to that definition. We applaud the SDT's efforts to split contingencies into groups with more-or-less the same system impact. We encourage the SDT that it would be very beneficial to regroup them in order of probability of occurance, or even better, to group them by order-of-magnitude of occurance probability. The P categories as now defined seem to overlap in likelihood. For example, in P3 following loss of a generator followed by system adjustments, another generator forced outage is more likely than a transformer forced outage. Loss of a bus section (P2 single contingency) is less likely than the P3 event of a double generator contingency. There is more on the concept of grouping Performance Tables in order of event likelihood in the NERC White Paper, "Reliability Concepts". At the least, notes in the tables - regarding 1) system impact and 2) likelihood of events listed - would be most welcome.
Yes
No
Performance requirements should depend on the potential loss of load impact of a breaker failure, not the voltage level.
No
We appreciate the extra detail describing sensitivity cases, but do not think it is reasonable to require explanations of why each conditon suggested in R2.1.3.1-R2.1.3.7 was or was not studied. It should be sufficient that sensitivity studies are considered appropriate by the individual utility. R2.1.4 should be demoted to R2.1.3.8 (and the "shall include rationale" clause removed).
Yes
Scenario assessments will significantly increase workload. Development of dynamic load models is ongoing, and will need a much longer implementation period than the steady state portions of the standard. As much as $500,000 may be required to address all of R2.1.3 scenario requirements.
It would take as much as two years for the initial supplemental studies with existing staff.
Ongoing additional sensitivity and dynamic studies would cost approximately $300,000 per year.
An additional $100,000 would be required to document studies for compliance purposes.
Perhaps $50,000/year - half of the initial amount required.
We do not anticipate additional investment beyond currently planned facilities.
Transmission projects generally take between 3 and 6 years to complete.
A â€“ Generally support the revised standard
We appreciate the efforts of the SDT, considering the difficulty of the task that was and is before them. Our biggest concern is potential confusion regarding sensitivity studies. Secondly, we absolutely must make the Performance Table completely clear and concise. Additional work now will pay big dividends later. Thirdly, there is some ambiguity of several terms used in the Standard that prevents exact interpretation of significant portions of the Standard. Here are a few additional comments we hope the SDT will find helpful: It may simplify considerations of assessments and modeling work to define â€œassessmentâ€ as including written documentation. Then the Standard would not need to separately include "and shall include written documentation" in the body of the standard titles. Also, the SDT should make it clear that "assessment" is what is required; that annual re-study analysis may not necessarily be required. Thanks to the SDT for keeping this feature. It will greatly simplify our work, and should speed the audit process as well. There seems to be some ambiguity between either 1) requiring specific years to be studied and 2) leaving timeframe selection to the TP. Assessment for year One or Two (R2.1.1) may be performed by either the TOP or the TP. Studies of year One or year Two are generally considered to be operating studies and should probably not be required in TPL-001-1. Also in R2.1.1, year Five is specified as a required study year. No matter what the requirement says, the TP will need to assess performance for critical timeframes. This would lead to additional study if year four were the critical year for example. And for sensitivity studies of delayed facilities (R2.1.3.3) additional study years might be required. Perhaps a reasonable compromise would be to require something in the 2 to 5-year timeframe, and something in the 6 to 10-year timeframe. For coordination with regional study groups in our area, one would logically choose year 5 and year 10, but the specific choice should be up to the TP (and PC if any). Sole-Customers on radial service who are responsible for facility upgrades should be allowed to elect a lower reliability than the rest of the system. It seems that operating scenarios required to be studied by TOP should not need study in the planning horizon by the TP, and

should be excluded from this standard. Specific comments concerning other sections of the draft standard: 1. In the definition of Generating Stability Study, we suggest "the lack of damping" be changed to "damping" 2. In R2.1 title, please move listed requirements in the second sentence to sub-requirements (they are already there). 3. In R2.1 title sentence, the term "annual current" presents two additional requirements. We suggest those words be deleted. 4. In R2.1, delete the end of the title sentence, ending the sentence with "the following studies" 5. In R2.1.3.2, the meaning of "transfer" is not clear. 6. In R2.1.3.4, the term "variability" is not clear. do you mean "Operating Capability"? 7. In R2.1, R2.2 and 2.4, the phrase "Near Term (or Long Term) Transmission Planning Horizon portion of the" could be omitted. "Near Term" and "Long Term" study horizons should just be specified as sub-requirements of Steady State, Stability, and Short Circuit 8. In R2.7.3, the term "identified System Facilities" is not clear. System Additions? 9. Heading R3.3 is not needed. Renumber section sub headings to 3.2.3, etc.

Individual

Andy Leoni

Tri-State G&T

No

We believe that there is no significant distinction between Generating Unit Stability and System Stability other than the objective and focus of the study. Therefore, we cannot accept a simple statement from the SDT that it believes it is important to maintain this distinction without more explanation. If a distinction is maintained, then Generating Unit Stability Study should be and is already covered in FAC-001-0 and FAC-002-0. As defined, Generating Unit Stability Study â€œfocuses on an individual generating unit's or electrically closely-coupled generating units' Stability for various Contingencies on the Transmission Facilities connected to that generating unit(s) point(s) of interconnection or one bus away from that point. However, the Purpose of the proposed TPL-001-1 is to â€œdevelop a Bulk Electric System that will operate reliably over a broad spectrum of System conditions and following a wide range of probable Contingenciesâ€. If a Generating Unit becomes unstable, the unit can be disconnected from the BES without impacting system stability. Therefore, we believe that the Generating Unit Stability Studies portion is attempting to introduce interconnection stability studies into the TPL standards. Interconnection stability studies are adequately addressed by FAC-001 and does not need to be specifically called out in TPL-001-1. In addition, Generating unit stability studies are typically performed at the time of interconnection. Even though Generating Unit Stability Studies have been done as new generating unit(s) were interconnected or at the time changes occurred, such studies have not been done for the entire fleet of Generating Units at the same time. For very old units, stability study documentation may no longer exist, even though no potential stability problems have been identified when stability studies were run for interconnecting other newer units or for the System. If the requirement for Generating Unit Stability Study is retained in this proposed TPL-001-1, R2.5 needs to be clarified to say â€œonly whenâ€ the changes in R2.5.1 and R2.5.2 are made that the Generating Unit Stability Study needs to be done. There also needs to be language about how to treat generators that are existing prior to this Standard taking effect. We would also appreciate if the SDT would more clearly define with examples the terms in R2.5.2, â€œmaterial Transmission System changeâ€ and â€œat or near the point of Interconnectionâ€ to invoke a study.

Yes and No

R2.4 is acceptable. Please consider deleting the conditions identified in R5.4.3.1, R5.4.3.2, and R5.4.3.3. We question the need to specifically call out these requirement in subrequirements of R5.4.3. We believe these conditions should be met for any and all requirements of the standard. It should not be necessary to list acceptable practices, especially if the conditions placed on the practice are general conditions that are addressed elsewhere or are generic. Otherwise, R5.4 is acceptable. ï€ We generally agree that Transmission Owners with extensive Transmission Planning Function and Planning Coordinators need to perform and be held accountable for the Requirements in R2.4 and R5.4; however, the SDT needs to define an organization size level below which these requirements for the associated Transmission Planner may be slightly relaxed. There are numerous Transmission Planners; (e.g., those associated with PUDs, Municipals or REA, etc. where historically dynamic stability has not been a problem), for which performing these type of studies and assessments would be onerous and would not yield reliability benefits for the network. ï€ The proposed requirements in R2.5 and R5.5 are already covered in FAC-001 and FAC-002 and should not be included again in the proposed TPL-001-1. Otherwise, the NERC standards would have redundant requirements. In addition, Transmission Ownerâ€™s open access tariffs requires Generator Owners to apply for interconnection to its transmission system or to make modifications to their generators as described in R2.5.1, R5.5.1, and R5.5.2. It is therefore the Generator Ownerâ€™s responsibility to cause these studies to be done at the time of interconnection or modification, yet R5 seems to place that responsibility only on the Transmission Planner and the Planning Coordinator. The Transmission Planner or the Planning Coordinator would not know of the changes until notified by the Generator Owner. If the SDT believes that FAC-001 is deficient, it should propose revisions to this standard, not simply add to TPL. Requirement R5.5.2 needs to be clarified to state changes or additions to the generating unit that result in an increase in power output. Otherwise, it could be interpreted to apply to

existing units with a change in dispatch.

No

We generally agree with the definitions by themselves but have concerns about potential unintended consequences. This definition will severely limit the loads that can be classified as â€œlocal Network customers, connected to or supplied by the Faulted element or by the affected area, may occur in certain areas without impacting the overall reliability of the interconnected transmission systemsâ€ in footnote b of the existing TPL standards. In combination with raising the bar for loss of Facilities with operating voltages 300 kV or higher (P2, P4 and P5 in the Performance Tables), this definition may result in encouraging entities to connect more loads in a radial fashion or avoid loop connection to improve service reliability just to fit in the Consequential Load Loss definition, â€œâ€¦load no longer being connected to a sourceâ€¦â€. As a result, service reliability to customer would be adversity impacted without commensurate improvement in overall system reliability. In addition, existing design of many such local networks would normally require RAS/SPS to disconnect loads on local networks in response to contingencies. However, the definition of Non-Consequential Load Loss states that using RAS/SPS is Non-Consequential Load Loss. In the Consideration of Comments on the First Draft of TPL-001-1, page 49, response to First Energy, the SDT states "FERC has determined that any Load loss that is not directly connected to the faulted element is actually Non-Consequential Load loss." We found a similar response to WECC on page 449, item 6. While we do not disagree with the statements made by the SDT, that FERC wants clarification of what is Consequential Load Loss, we do not see where FERC has ruled out the use of RAS/SPS for Consequential Load Loss. Consequential Load Loss needs to include the concept of local networks. Another way to address this would be to exempt some local networks in the definition of the Bulk Electric System. The performance of existing systems has been designed to be consistent with the concepts of the quoted sentence above from footnote b of Table 1 of the existing TPL standards. There are many instances where some local network customer curtailments or local area load loss has been allowed by local regulatory authorities as long as the overall reliability of the interconnected system was not impacted. This is a result of tradeoffs with the cost and environmental impacts of providing a higher level of reliability in a local area. An attempt to eliminate the concepts contained in footnote b of the existing TPL standards would invalidate local regulatory decisions, place a large unintended cost burden on existing customers and could potentially create criteria that could not be met anytime soon, if ever, as a result of the long lead time required for system improvements. Any attempt to raise the bar by interpreting the definition of Non-Consequential Load as eliminating the concepts of footnote b is considered unacceptable. The new criteria need to clearly maintain these concepts to prevent a large disconnect with existing design criteria. The last sentence in the Definition of Consequential Load Loss (â€œAlthough Load which is lost as a result of the Loadâ€™s response to the transient conditions of the event is considered Consequential Load Loss and is permitted when Consequential Load Loss is allowed, Transmission planning entities are not allowed to rely upon the expectation of such Load loss to meet steady state performance requirementsâ€) seems more appropriate to be requirements. Therefore, please move this sentence to the Notes Section at the beginning of Table 1 as new Item 7.

Yes

We agree. However, the conditions listed in R3.5.1, R3.5.2 and R3.5.3 are applicable to the overall TPL Standard. Their specific listing in R3.5 gives the impression that these Requirements are only applied to R3.5 and not to the other Requirements in this Standard. In other words, are there any Requirements in this Standard that R3.5.1, R3.5.2 and R3.5.3 do not apply to? Therefore, we suggest TPL-001-1 be silent on this issue and move R3.5.1 through R3.5.3, (and the equivalent in the stability study R5.4.3.1 through R5.4.3.3) to a Requirement applicable to Assessment studies in general, such as the bullet points in the Performance Tables.

Yes

While we agree with separating R1 to form R9 through R14, we believe that R9 (modeling information for real and reactive load forecast data) should be applicable to Load Serving Entities (LSE) instead of (or in additional to) the Distribution Provider. In any case, this type of exchange of load information is already covered in MOD Standard or in the respective tariffs, and should not be included again in the proposed TPL-001-1 Standard.

Yes and No

We agree with R2.3. However, R4 requires assessment of â€œShort-circuit capability of its equipment under normal conditions and following any single Contingency condition that would result in greater circuit breaker interrupting dutiesâ€. Since short circuit studies are typically performed by applying a fault on a Facility starting from a normal condition, there can be confusion whether the result would constitute â€œnormalâ€ condition or â€œfollowing any single Contingency conditionâ€. Also, by specifying the normal and single contingency conditions, R4 is straying into â€œhowâ€ to perform a study, which is not necessary in a standard. We suggest deleting the reference to the contingencies to be used in the study.

Yes and No

We do not disagree with the proposed format changes of the Tables. However, we are not sure if separating into two Tables is necessary, or beneficial. It seems like an extra column for event

could be added and some changes to the notes would greatly simplify the table. Some of the rows could also be combined; one such example is P2-2 (Loss of Bus Section) and P2-3 (Internal Breaker Fault, non-bus-tie). Will the SDT plan on combining some similar rows? Table 1, P4 and P5 refer to "Faults" as part of the contingency. This is steady state performance and faults are not modeled in steady state. Table 1, P2.1 refers to a "single ended line". Technically, this means we need to generate a "false" bus at each end of the line to evaluate this condition or use a dispatcher power flow which included breaker modeling. Is this an accurate interpretation of the intent of this requirement? We believe there should be no distinction between the voltage classes and support the use of load shed for all cases identified in P4 through P7.

No

We do not disagree with the proposed definition change. However, we do not agree that â€œSubstation configurations such as ring-bus, breaker-and-a-half, or double bus-double breaker protection schemes do not use bus-tie breakers. Some breaker-and-a-half and double-breaker layouts may have bus breakers located mid-way in the side elements. We propose the following definition: A circuit breaker that divides a bus section with multiple tap off points into two bus sections.

Yes and No

We interpret â€œexit breakersâ€ to mean a breaker on an element that comes in from outside the substation. We agree with applying less stringent performance requirements to bus tie breakers above 300 kV. Further, we believe that Non-Consequential Load Loss should be allowed for loss of either Bus-Tie or Non-Bus-Tie Breakers regardless of voltage class. The SDT has not presented evidence that the probabilities of failure for breakers within the same substation are significantly different for different voltage classes

Yes and No

e generally agree with the concept of the sensitivity analysis since this is standard practice in understanding system performance risks and the effectiveness of improvements. It is ambiguous from a criteria perspective, however, what role is played by the sensitivities in developing Corrective Action Plans and what risks are created by misapplication of the intent of such sensitivity analyses. Clarification of the following is needed along with examples of applicable sensitivities and how these would be factored into Corrective Action Plans. If a Transmission Planner performs studies on the â€œbase caseâ€ of which the loads represented are 1 in 10 year adverse weather condition (10% chance that the actual load may exceed the projected load), does this constitute a sensitivity analysis. If so, will the Transmission Planner have to then perform additional less stringent studies at the load levels representing 1 in 2 year adverse weather conditions (50% chance that the actual load may exceed the projected load) to demonstrate compliance? R2.1.4 requires explanation of performing additional sensitivities that are not listed in the R2.1.3. This would discourage entities from performing additional sensitivities. In addition, in the above example, the Transmission Planners should not have to explain why they feel that this higher level (1 in 10 year adverse weather) of load is the â€œbase caseâ€ condition. R2.7 also states that â€œCorrective Action Plans do not need to be developed solely to meet the performance requirements for sensitivitiesâ€. Consider a Transmission Planner that has built transmission based on the 1 in 10 year adverse weather load assumed in the â€œbase caseâ€, will the judgment of the Transmission Planner be then questioned because theâ€œbase caseâ€ used is equivalent to a sensitivity case and not a 1 in 2 year adverse weather base case?

Yes

We agree with revising P6 to permit loss of Non-Consequential Load to meet performance requirements for Systems above 300kV. However, we are concerned that with the loss of the first N-1 in P6, curtailment of firm transmission service or firm transfers would not be allowed as part of system adjustment in preparation for the next N-1. Allowing curtailment of transmission service or firm transfers for such system adjustments should be added to R3.3.2.2. Otherwise, the power transfer under normal condition (before the first N-1) will have to be significantly curtailed in anticipation for meeting performance requirements after N-1-1, or transmission facilities, which would have otherwise been unnecessary, would have to be built. Either would adversely impact customers. We also have questions on Event P6 in both Performance Tables 1 and 2: We would like some clarification on the overlapping single contingencies as denoted in Event P6 (N-1-1), and one where a single contingency, say Event P1 (N-1), follows a prior "planned" outage of a Facility (N-1). The former would allow the Non-consequential Load Loss, while the latter would prohibit it.

5

6-10

C â€“ Definitely do not support the revised standard

We agree that the Standard as presented is clearer, but there are numerous issues that still need resolution, Measures, VSLs, Implementation Plan, etc., before WECC can give a full approval of this Standard. ï€ There is no mention in the purpose of the Standard about minimizing loss of load for more probable unplanned contingencies. Maybe there needs to be some definition around what is meant by reliability. ï€ We believe that with the loss of the first N-1 in P6, curtailment of firm transmission service or firm transfers should be allowed as part of system adjustment in preparation for the next N-1. This should be added to R3.3.2.2. Otherwise, the power transfer under normal condition (before the first N-1) will have to be significantly curtailed in anticipation for meeting performance requirements after N-1-1. This will unnecessarily impede commerce. Or, to maintain the same firm power transfer under normal conditions, construction of transmission facilities will be required. Either way, this would impose a much stricter standard than exists today resulting in very costly unnecessary system improvements and invalidate terms of many transmission service contracts that allow for implementation of pro-rate curtailments of firm transmission rights during forced and planned outage conditions. ï€ We disagree with the application of the proposed definitions of Consequential Load Loss and Non-Consequential Load Loss in conjunction with â€œraising the barâ€. Local Network load should be included in Consequential Load and the loss should be allowed for single contingencies. The TPL standard is to maintain reliability of the BES. Under certain conditions orderly dropping of local network load could limit the spread of the disturbance beyond the local area and allow BES reliability to be maintained. This would minimize the total amount of load loss and allow for quicker load restoration. The proposed definitions for Consequential Load Loss and Non-consequential Load Loss will provide no reliability benefits for high voltage (>300 kV) transmission backbone system providing wholesale open access service and interconnecting to the rest of the western interconnection. Any potential reliability benefits of any additional facilities built to comply with these definitions would be at the local service level. ï€ As mention in comments to Q3 above, some local network customer curtailments or local area load loss has been allowed by local regulatory authorities as long as the overall reliability of the interconnected system was not impacted. This is a result of tradeoffs between providing a higher level of reliability in a local area and the cost and environmental impacts of providing that service. Such tradeoffs are subject to local regulatory authority or contract negotiated between the transmission provider and its transmission customers. Regarding the terms â€œinterruption of firm transmission serviceâ€, there needs be clarification on what Interruption means. Since it is referring to firm transmission service, we would interpret this to mean curtailment needed after a particular contingency and adjustments. There also needs to be clarification on what â€œFirm Transmission Serviceâ€ means. Two points, 1) the NERC definition states â€œhighest quality service offered to customers under a filed rate schedule that anticipates no planned interruption.â€ The Standard implies anticipation of â€œunplannedâ€ interruption for certain contingencies. 2) Is this referring to a transmission product as defined in FERC Order 890, or firm transfers modeled for the conditions being studied? One way to interpret the intent is the firm transfers being modeled for the conditions in the powerflow to meet demand that would result in load not being served if that firm transfer were curtailed. If there is other generation in the system that could increase to meet the load if the transfer being modeled is interrupted, then interruption of firm transmission service should also be allowed for P1 through P5 contingencies in the table. In addition, we believe that DC and AC lines should have the same performance requirements with respect to interuption of firm transmission service. We do not understand why interruption of firm service would be an acceptable response to the loss of a single pole of a DC line (i.e. response to the contingency) but not an acceptable response to prepare for the next contingency of an AC line. The transfers over both AC and DC lines can automatically be curtailed when the line is outaged.

Individual

Thad Ness

AEP

Yes

No

We are concerned about unintended consequences with regard to System Stability studies, specifically, the possibility of generating unnecessary work. We would like the SDT to consider language changes that recognize the following realities. (1) While System Stability studies may be justified as a more detailed look at contingency scenarios whose observed severity in steady-state analysis suggests the need for more in-depth study, they cannot be expected to achieve the same breadth of scope as steady-state analyses. In decoupling System Stability studies from steady-state analysis, the draft standard may unnecessarily tend to force stability study scopes to approach those of steady-state analyses. (2) The characteristic limiting factors of systems are generally known (whether thermally limited, voltage drop limited, or transient or small-signal stability limited) and in many systems the limiting factors are thermal or steady-state voltage, but not stability. The draft standard may end up forcing System Stability studies to be done

solely for compliance. It is not that independent System Stability studies are never justified (they are, for example, where inter-area small-signal instability is a known factor), but in many systems, they are not necessary. We observe that as sub-requirements of R2 and R5, R2.5 and R5.5 are the responsibility of the Transmission Planner and Planning Coordinator. Is it the SDTâ€™s intention that these entities be responsible for conducting the Generating Unit Stability analysis, irrespective of the ownership of the generating units? Should the Generator Owner be responsible for conducting the Generating Unit Stability analysis?
No
Should clarify that itâ€™s load that is no longer connected since the transmission facilities to which it is connected have been outaged as expected by the normal relay response to the event being studied. In other words, the loss of load that is connected to facilities that have cascaded as a result of the event being studied is not consequential load loss (nor is it non-consequential load loss). See load loss definitions under Attachment D of PJM Manual 14B for additional wording suggestions.
No
Generator tripping should not be regarded the same as generator runback. With tripping, a resource is lost from the system and there is no assurance that it can be restored to service within a reasonable time. Runback allows the resource to stay connected and the original MW level is potentially restorable if the precipitating factors for runback can be resolved. The generator may be valuable for MVAR as well as MW. The existing TPL standards imply that generator tripping is not permissible in connection with Category B events in that Table 1 footnote b does not mention it, whereas it is mentioned in connection with Category C events in footnote c; we agree with this. Generation is a system resource and should be protected against the more common single contingency transmission events. We would like to see the present implied restriction on generator tripping following single contingencies to be maintained and clearly articulated in the new standard, with a provision for regional variance. In contrast to tripping, what the standard has now for manual or automatic runback in R3.5 is okay.
Yes
However, although the responsible entities listed for each individual requirement are correct from a functional model (compliance) perspective, in actual practice the data flow may not (and in many instances does not) follow the paths outlined in this draft. For example, the node loads, scheduled interchanges, generation models, facility additions, etc., are all provided to the Transmission Owner (TO), since itâ€™s the TO that typically builds the planning models for their transmission footprint and then provides those models to the Transmission Planner and Planning Coordinator. Therefore, the Transmission Owner should be added as a recipient of this type of data.
Yes
The formatting is okay. We would like to see the two tables merged. Except in the extreme disturbances sections, Table 1 and Table 2 are nearly identical (the only difference is that fault types are added to Table 2). The tables could easily be merged into one, including the extreme disturbances sections to some extent.
Yes
Yes
Yes
Yes
Table 1 does not specify a maximum amount of allowable non-consequential load loss for those categories (including P6) that have a "Yes" listed under the "Non-Consequential Load Loss Allowed" (last) column. See load loss definition under Attachment D of PJM Manual 14B for an example of a maximum amount specification.
Additional one-time cost of 33 man-months
2 years
Additional ongoing cost of 12 man-months
Additional one-time cost of 15 man-months
Additional ongoing cost of 7 man-months
Individual
Andrew Wilcox

NB Power Transmission

No

In the past, power systems within the NPCC Region have been designed to meet NPCC design criteria, which is basically that any design contingency does not cause instability of the NPCC defined bulk power system, and does not result in any emergency limit violations (thermal, voltage or stability), unless those violations are contained within a small local area of the system and can be mitigated. Design to NPCC criteria may include, and does include in many cases, interruption or curtailment of firm transmission service, underfrequency load shedding, undervoltage load shedding or SPS tripping of generation and/or load. The proposed table introduces new design criteria for which present power systems within NPCC are not presently designed to - being the restrictions on interruption of firm transmission service and consequential load for certain contingencies as outlined in the table, which up to this point was acceptable by NPCC design criteria, and the present NERC TPL Standard. The table should not impose new design criteria on the existing power system and should be relaxed such that present NPCC design criteria is acceptable into the future, as historically it has been proven to provide acceptable levels of reliability in the NPCC area. There would be enourmous impacts on existing transmission service agreements and compliance issues if the design criteria outlined in the table is imposed. Meeting the design criteria outline in the table would require building new transmission facilities with, in some cases, very little benefit to the loads in terms of reliability. For example, there is an area of the system consisting predominately load. This area is supplied by two 345 kV transmission lines and three 138 kV lines. Studies show that under certain low probability, but predictable, conditions that the loss of one of the 345 kV supplies will result in unacceptable low voltage or thermal limit violations on equipment within the area. Therefore, an SPS has been utilized which trips load within the area on the loss of the 345 kV line in order to prevent unacceptable low voltage or thermal limit violations under these low probability conditions. In this case these loads are considered non-consequential and tripping them for a loss of a 345 kV line is unacceptable as per P1 in the table. Now assume that this arrangement has been in service operationally for the past 10 years and has only operated twice resulting in a 2 hour outage to these loads each time. Now also assume that these same loads have been interrupted 15 times (for a total of 30 hours) in the past 10 years because outages of a radial line within the area that these loads connected to. In this case, the loads are considered consequential and these interruptions are acceptable. Compliance with the design criteria in the table in this case would require building additional transmission into this area to prevent the load loss by SPS on the loss of the 345 kV line. Assume the cost of this new transmission is 80 million dollars and its net benefit would be to prevent (historically) 2 interruptions out of 17 total interruptions to only the loads in question within the area. The design criteria in the table in this case do not provide adequate benefit for cost for these loads in this area. Adequate transmission planning must take into account engineering judgement concerning cost/benefit ratio to loads as well as type of loads served, expectations of loads in terms of interruptions and where money can be best spent to reduce interruptions to loads. The criteria outlined in the table does not achieve this in all cases. The table should not dictate what contingencies can result in consequential load loss or interruption of firm transmission service. These decisions should be left to local planning engineers who have in-depth knowledge of local tranmission issues (as well the interconnected power system)and reliabilitiy needs of loads involved. The table should only state that the listed contingencies will not result in system instability or violations of emergency thermal and voltage limits following all automatic actions. Table 1 in the existing version of the TPL Standards with its footnotes b) and C) presently allows for this and does not have criteria as stringent as the new table. The new table should not introduce new, more stringent design criteria.

Individual
Larry Watt
Lakeland Electric
Yes
No
Modeling the dynamic behavior of Loads is difficult at best and merits a discussion or white paper. Recommend requirement 2.4.1 specify the size of induction motor that should be considered and comment on modeling of small induction motor loads such as air conditioning.
No
Recommend: Consequential: Load that is no longer served because its electrical path to the BES is open as a direct result of system response to the event under study. Load lost due to event induced transients is Consequential load loss; however, the this load must be included in the model during steady-state analysis. Load lost due to UFLS, UVLS, Special Protection Schemes and operator actions are not considered Consequential. Non-Consequential: Load that is no longer served for any reason other than those identified in the definition on Consequential.
Yes
No
It is sufficienct to direct the TP or PC to obtain and include the appropriate data outlined in R9 through R14 in their respective model cases. The proposed addition of R9-R14 just adds more evidential paperwork requirements to the TP or PCs plate.
No
R2.3 or R4 should specify how many and / or how to choose which years of the planning horizon shall be studied. R4 should specify method of choosing which single contingencies to study as larger systems will require an inordinate amount of work to outage every element during each of the study years of the short circuit analysis.
No
Separating steady-state from dynamic (stability) in the tables makes sense. Several suggestions: On page 11 move the planning events note 1 below the Planning Events title or begin note 1 with "For planning events â€¦" to remove confusion between planning events and extreme event requirements. Include an analysis section in the steady-state and stability requirements sections of TPL-1 that explicitly lays out the performance requirements (including the notes) - this would make the performance requiements very clear on a line item basis and the tables would become a quick reference. Special attention should be given to defined period of time between multiple events and the actions available to the operator. In table 2 (page 17) note 3 should be changed to: "Uncontrolled cascading and islanding â€¦" in order to be consistant with R5.4.4. " . . . If the evaluation of implementing a change . . . shall be conducted."
Yes
Yes
No
R2.1.3.1 requires other than peak sensitivity studies while R2.1.2 requires Off peak studies. Recommend further defining of R2.1.2 to specific load level or points on forecast demand curves to eliminate any overlap between two requiements.
Yes
Unknown
Unknown
Unknown
Unknown
Unknown
Unknown
Unknown
B â€“ Unsure about supporting the revised standard
Curtailing firm transmission should explicitly be a viable option when preparing for the next contingency if the previous contingency and a credible next contingency call for curtailing firm transactions for reliabilities sake. Not allowing for firm transmission curtailment in this case seems to be a market requirment driving a reliability requirement. Determining the duration of

consequential load loss (R3.3.2.1) is impractical as the root cause of the event vice the defined event type (e.g. - loss of line) determines the duration of the outage. A line can be outaged by a temperary lock out of protection device or 15 spans of a line might be destroyed by fire. The difference between the two make determination of duration impractical. System peak Load (R2.1.1) needs to specify if it is the specific year, season or historical peak demand. Forecasting methodologies affect the system peak load that is projected. Differences between a 50/50 and 80/20 case will result in different forecast peak data.
Group
Southern Company Transmission
Roman Carter
Southern Co. Transmission
No
We suggest the following for the System Stability Study definition: Study that focuses on large portions of the System (which may include many generating units) and how contingencies affect that larger area to determine whether angular Stability is maintained, inter-area power oscillations are damped, and voltages during the dynamic simulation stay within acceptable performance limits.
No
R 2.4 needs to have the word System inserted in front of the word Stability. R 2.4.3 One should only have to explain why a sensitivity was performed, not why it was not performed. In general we believe that breaking these requirements into specific sub requirements focusing on specific sensitivities is too prescriptive and inappropriate. It will lead to over focus on these particular issues to the detriment of system reliability. There should be no list of sensitivities enumerated as subrequirements. Engineering judgment needs to be permitted. R 2.4.3.1 It should be clearly stated whether the load model refers to system load or the dynamic load model at individual busses A specific proposal for R2.4.3 which addresses the above concerns is provided as follows: R2.4.3. For each of the studies described in Requirement R2.4.1 and Requirement R2.4.2, sensitivity case(s) shall be run and documented that stress the System to reflect one or more conditions such as variations in dynamic Load model assumptions, modification of expected transfers, unavailability of long lead time facilities, variability and outages of reactive resources, generation additions, retirements, or other dispatch scenarios. Document why each sensitivity was selected.
Yes and No
Yes on the definition. The definition of Consequential Load Loss has been appropriately modified to include loss of load as a result of the load's response to the transient condition. This recognizes the fact that when subjected to fault voltages of sufficient depth and duration, the load undervoltage protection will result in loss of Load. Therefore, in order to more accurately replicate real-world behavior through dynamic stability simuation analysis, the proper representation of expected real world loss of load is acceptable. No on R3.3.2.1 dealing with Consequential Load. The computation of expected consequential load loss and duration does not result in any useful information contributing to increased reliability. Therefore, this requirement R3.3.2.1 should be dropped. If the computation is not deleted, at least the duration part of it should be dropped. In a Planning analysis, the duration is indeterminate.
No
Generation run-back and tripping should be allowed and most of the the proposed sub-requirements are appropriate. However, R3.5.2 is overly broad. We suggest that regulatory and statutory requirements should be deleted from R3.5.2.
No
R9 needs to be clarified that the forecast is based on expected mix of residential, commercial, and industrial loads, but that this mix does not have to be supplied.
Yes
Yes and No
We suggest that the word "requirements" be added to the title of the tables as in Steady State Performance Requirements. We also suggest for header note 2 of Table 2 that the words be changed from "Dynamic voltages shall" to "Voltages during dynamic simulation shall"
Yes
Yes
No
R 2.1.3 One should only have to explain why sensitivity was performed, not why it was not performed. In general we believe that breaking these requirements into specific sub requirements focusing on specific sensitivities is too prescriptive and inappropriate. It will lead to

over focus on these particular issues to the detriment of system reliability. There should be no list of sensitivities enumerated as subrequirements. Engineering judgment needs to be permitted. A specific proposal for R2.1.3 which addresses the above concerns is provided as follows: R2.1.3. For each of the studies described in Requirement R2.1.1 and Requirement R2.1.2, sensitivity case(s) shall be run and documented that stress the System to reflect one or more conditions such as higher or lower Load than forecasted with variability of Load/demand and Load power factors due to season, weather, or time of day; modification of expected transfers; unavailability of long lead time Facilities; variability and outages of reactive resources; generation additions, retirements, or other dispatch scenarios; decreased effectiveness of controllable Loads and Demand Side Management; modification of planned Transmission outages. Document why each sensitivity was selected.

Yes and No

The requirements are more practical now. If two or more 500kV lines are lost, it makes complete sense to allow loss of non-consequential load so long as cascading outages are not triggered. While we agree interruption of firm transmission service and non-consequential load loss should not be allowed to meet the planning requirements for the first system contingency (to get loadings back within normal ratings), these system adjustments should be allowed to prepare for the second event so that the system will meet the requirements following the second event. We recommend that clarifying changes be made to incorporate this concept. We recommend that the statement below be included as modification or as a footnote for the P6 portion of the table as follows: Interruption of firm transmission service and non-consequential load loss are allowed after the first event as a system adjustment to prepare for the second event in order to meet the requirements following the second event.

These costs cannot be determined without having experience with the new standard and its performance requirements.

C â€“ Definitely do not support the revised standard

Category P6 is the loss of a system element, followed by system adjustments, followed by the loss of another element. The table columns for this category say that interruption of firm transmission service is allowed. The table, however, is not clear whether the interruption of firm service is allowed as part of the system adjustment (between the outages) or whether it is only allowed after the second outage. It was stated in the NERC TPL SDT WebEx (August 26, 2008) that the interruption is not allowed as part of the system adjustment. If this is the interpretation, this will cause Southern Company to not support the revised standard. This would be a dramatic change from the existing standard and would result in the unintended consequence of significantly reducing transmission system capability to accommodate firm transmission service including reduction of transfer capability of interfaces to a fraction of their currently reported capability. This would in effect be imposing an n-2 criteria for offering firm transmission service. This would not be an acceptable situation for the users, owners and operators of the bulk power system. In addition, the standard should clarify the accommodation of Conditional Firm Service as defined by FERC Order 890.

Individual

J. David Carpenter

Brazos Electric Power Cooperative, Inc.

No

We do not see the need to have 2 separate requirement sections nor definitions for both System and Generating stability studies. The section for stability studies should simply suggest when these studies should be performed, when new generation is added, conditions for that, etcâ€¦ Confusion continues to come from the ambiguous use of language such as 'Material Transmission System changes' or 'changes in generation capability'. Of note in 2.5.2, requiring stability studies for the addition of a new substation in a transmission line connected to a generator is completely unnecessary most of the time but the wording in 2.5 does not appear to allow flexibility. Discretion should be provided to the TP. A first course of action would be to bring the related stability criteria under one section. It seems like 5.6 can be combined under a requirements section for stability studies.

No

We do agree with the wording change in 2.4 which uses 'assessed annually'. 2.4.1 and 2.4.2 are ok. 2.4.3 is not agreeable, as it implies or could imply a number of studies are required. Stability studies are not required as often as steady state studies. A new in-line load serving substation can certainly impact the steady state results of an area but would not have the same impact

from a steady state perspective. In other words, we feel that running stability studies for a number of small variables does not provide any added benefit and thus stability studies should not be treated the same as steady state studies from a requirement standpoint. More emphasis should continue to be placed on the steady state analysis. 2.4.3 should be edited to say "Sensitivity cases as deemed appropriate by the TP or PC, that stress the System (or BES) may be run reflecting one or more of the following conditions. Other sensitivities not included below may also be run. Appropriate documention should be included describing the rationale for the selection of the cases and conditions" delete 2.4.4 as it is taken care of in 2.4.3 2.5 can be deleted as it adds nothing to the stability requirements 2.5.1 should be modified to be included under 2.4 as a required study with the caveats from 5.6 brought over defining parameters, or delete 2.5.1 altogether as 5.6 covers the addition of generation. 2.5.2 is still fairly ambiguous even with the changes and should be deleted. However if kept it should be modified to remove the last part of the sentence beginning with "or the addition of a new substationâ€¦". The addition of a simple in-line substation does not have a material impact on the stability of a near-by plant. 2.6.1 and 2.6.2 should be combined to remove the mention of generating plant stability. deleting 5.4 is ok Not sure of the need to add 5.5.2. Isn't that the intent of the whole Standard? 5.5.3 seems to be acceptable.
No
Non-consequential is fine. For 'Consequential Load Loss' the entire last part of the definition that begins with "Although Load which is lostâ€¦" can be deleted or at least deleted to the part that begins with "Transmission planning entities are not allowedâ€¦". We think the last part of the sentence is intuitive.
Yes
Yes
R9-R14 do not belong in this Standard. Adding requirements in the wrong location only adds to the confusion by forcing review of more Standards by other less relevant entities and causing additional burden by insuring the requirements match between Standards for the SDT. R1.1 should be deleted. Tracking all those changes (outages, etcâ€¦) is unreasonable and will essentially be unenforceable, for if the data is not tracked, how will anyone know it is not tracked?. Requiring large amounts of documention that provide no additional benefit or causes undo burden will result in fewer studies or effort placed into proper study.
No
2.3 is acceptable, the deletion was recommended in our previous comments. R4 should not be added to this Standard. It adds nothing to the document the way it is worded and is quite similar to 2.3.
No
Compared to the new table format, the old Categories were better. Perhaps if there is confusion with the old table or format, this should be cleaned up. We suggest the old tables remain, or combine some of the new sections to reduce the number of categories.
No
Part of the definition of a bus tie breaker as outlined in this Standard should be that it is the ONLY connection between 2 substation buses. Not sure why the word 'straight' is used in this definition. If a bus with a 90 degree turn is connected to another bus by a single tie breaker, does this not apply? Also, breaker and a half schemes do sometimes have a bus tie breaker in them although its probably not common. Including those specifics in not needed.
Yes
Yes but this seems to add another category of items to provide for in the assessment.
No
2.1.3 should have been left alone. We have a real problem with the addition of 'technical' and documenting why things were NOT selected. We would also like to see more leeway provided to the TP and PC by adding language similar to that mentioned above such as "as deemed necessary by the TP or PC". 2.1.4 should be incorporated into 2.1.3 in a similar fashion as our suggested changes for 2.4.3.
No
P6 should be incorporated back into P5. Up to this point, studying all shunt devices has not been considered to have a significant impact on the BES. In addition these are picked up when studying other contingencies. Certain type devices should be reviewed individually, FACTS devices, etcâ€¦ but this should be at the discretion of the TP or PC. Currently adding shunt devices as a category would reqiure modification to case data or software to be able to automatically run through them all and we are not convinced this is worth the effort.
We have no real way to estimate this or determine these costs.
Again, we have no real feel for making an estimate but it would be safe to say that the studies would take longer than the planning window. In other words, the results would not be completed before we would have to start them over again.

C â€“ Definitely do not support the revised standard

Our biggest concern is the apparent lack of experience or understanding in the repercussions of including so many required studies and detailed documention. And to what end? The amount of data that would be required to be saved will be so voluminous no one could go through it all to make any meaningful determination in a timely fashion. It's one thing to study every possible combination of outage but you then have to do something with the results, not just record them somewhere because a standard requires it. On the other hand some progress is being made in removing some of the more ambiguous or useless items so we are getting there to some degree. Deleting 1.1.2, 1.1.3, 2.7.3, 2.7.4, and 5.4 are good starts. However it appears some things were added that are just confusing or are unnecessary. 5.5.2 seems to simply restate the obvious intent of the section, to meet the performance requirements so its not really needed. Phrases such as "document why categories were NOT selected" are intuitively obvious. Categories were not selected because, in the judgement of the TP or PC, they were not deemed useful to study so why document this each time. R6 is also a confusing addition to this Standard and we aren't sure what it's intended to require. Use of the word "proxies" is probably not the best substitute for what was intended. We suggest R6 be deleted as well.

Individual

Sergio Garza

LCRA TSC

Yes

Yes

Yes

Yes

No

R-11 states that "Each Transmission Owner shall provide its respective Planning Coordinator with modeling information for known planned outages and long-term outages for Transmission equipment." This is typically achieved through outage coordination between the individual Transmission Operators and the System Operator. More clarification may help by defining the difference between planned outages and long-term outages as they are used in R-11. This may be an Operations standard versus a Planning standard requirement.

Yes

Yes

Yes

Yes

Yes

Yes

A â€“ Generally support the revised standard

LCRA had a comment on the first posting stating that the loss of any two Transmission circuits

on a common structure should be viewed as a single contingency as a single component failure (tower, shield wire, conductor, hardware) could in-fact lead to the loss of two circuits. In the second draft, this outage is still being viewed as a Multiple Contingency (P7). At the same time, the loss of a tower line with three or more circuits is being viewed as an Extreme Event, when the same single failure could lead to the loss of multiple circuits. So, even if a double circuit outage is viewed as a Multiple Contingency, shouldn't a multiple circuit outage be viewed the same. In the Definitions of Terms Used in Standard, Extreme Event is defined as Events which are more severe and have a lower probability of occurance than Planning Events. What is a "lower probability of occurance"? Is this to be determined by each TP or TO? How is this probability determined? Are we to assume from this definition that we can use probabilistic planning to determine which Events should be studies even at the N-1 level?

Group

PJM Interconnection LLC

Patrick Brown

NERC and Regional Coordination

No

In the definition of Consequential Load Loss - Revise Transmission Planning Entities to Transmission Planners; or otherwise clearly identifying the entiities that are meant to be addressed by the term "Transmission Planning Entities." Revise "which" to "that" as indicated by the text below that is in quotes and Upper Case: Load that is no longer served because it is directly connected to an element(s) that is removed from service due to fault clearing action or mis-operation connected to a source as a result of the event being studied or "THAT" is lost as a result of the loadâ€™s response to the transient conditions of the event (other than through the action of UVLS or UFLS schemes). Although Load "THAT" is lost as a result of the Loadâ€™s response to the transient conditions of the event is considered Consequential Load Loss and is permitted when Consequential Load Loss is allowed, [Transmission planning entities] TRANSMISSION PLANNERS are not allowed to rely upon the expectation of such Load loss to meet steady state performance requirements. Regarding the definition of Planning Event - The given words do not define the term. For example is an event meant to be an forced outage condition; or is meant to be any set of state conditions. If an event can be anything, then the term is not a definition. Planning Coordinator - Explicitly state that this defination will be deleted when the functional model defination for this entity is approved May consider deleting the term because it is not unique to this standard. The term is already defined in the Functional Model. R1.1 â€“ Data changes are routine in such studies and need to better quantify when technical justification is required.

No

PJM concurs with the general direction; however the sensitivity analysis section as written requires explanation of why certain sensitivities were not selected. However the sensitivity requirement must be defined. Prove the rationing. R2.4 should state for stability we should use light load rather than system peak which is for steady state analysis. R2.4 should be modified as follows R2.4 should be modified as follows R2.4 The Near-Term Transmission Planning Horizon portion of the Stability analysis requires: Suggest making all sub requirements bullets under R2.4 The words in R2.4 seem to state that the "analysis must be assessed annually" which seems to leave open the option of assessing an old study, whereas R2.2. and R2.3 state a study is required each year, and a study is conducted each year. The words need R2 must be clearer and more consistent. System stability requirements seem to be poorly defined. It appears that there is going to be an expectation that inter-area oscillation and small signal analysis be performed frequently over a variety of conditions. I'm not sure how geared up industry is for this. R2.4.1 is too ambiguous. This subrequirement requires a model that "appropriately represents the dynamic behavior of loads". However, the requirement does not reference how that judgement is made nor who would make the judgement. The subbullets are vague and again provide no basis for performance or for arbitration. R2.4.4 should be deleted as it will deter TPs and PCs from conducting additional studies. R2.4.4.1-5; Should clearly define words like variation,modification, unavailabilty of long lead time facility,variability of reactive resources. R2.5 is ambiguous regarding the definition of "affects stability margins". What is the technical performance margin for "affect"? If not defined in the standard then who makes the decision? The TP? the auditor? NERC staff? Do you mean crtical clearing time and how much of change for example percentage or cycle.

Yes

No

Delete R3.5.2 as redundant. The limit data provided by the asset owners is expected to ensure that safty, equipment, regulatory and statutory requirements are met. For example to require the PC to ensure that equipement is not at risk would require the PC to make financial decisions that belong to the asset owner (e.g. the owner may be willing to exchange loss of equipment life for short term financial gains). R3.5.3 - the term sustainable, stable condition is not defined.

Futher the maintenance of such a state is beyond a PC's capability.

No

R9 - Reactive load forecasts are not generally provided by distribution provider to the Transmission Planner. R11 â€“ The requirements for providing â€œlong term outagesâ€ to the Planning Coordinator is vague. What is a â€œlong term outageâ€ and do I need to plan for it? I think the right answer is only if it is expected to occur over the period that the TP establishes their critical system conditions. SDT should initiate the appropriate SAR prior to disbanding.

No

Attributes of the short circuit analysis needs to be better define. For example which studies need to be done, for what period and how often.

Yes

Yes

Yes

Comments: PJM supports the use of bus tie breakers.

No

The standard as worded: â€¢ Implies all tests are run for a given sensitivity o the standard should be revised to read applicable testing for the applicable sensitivity. â€¢ Requires proof of negative o Why a sensitivity was not selected â€¢ Requires that expansion plans identify the impact of sensitivity o Many sensitivities may have varying impacts on an expansion plan. Suggested changes: R2.1.3 - For each of the studies described in Requirement R2.1.1 and Requirement R2.1.2, sensitivity case(s) that reflect one or more of the following conditions shall be incorporated into the assessment. Documentation of the technical rationale for why each of the conditions was selected and the portion of the assessment that included each selected sensitivity shall be supplied. R2.1.4, R2.4.3, and R2.4.4 - need to be modified accordingly. Delete R2.1.4 as it is superfluous. If a PC runs a sensitivity study and includes that analysis in its Plan, then why would NERC mandate that the PC explain why the non-mandated sensitivity study was run. If a study is required then it should be mandated. If a study is not mandated then he PC should not be held accountable for explaining the un-mandated study. R2.4.3.1 â€“ Variation in load model. Specific numbers should be included. R2.4.3.2 - Modification of expected transfers â€“ Be more specific. Firm or non- firm transfer and amount of MW R2.4.3.3 - Unavailability of long lead time Facilities. How many years out we are looking at and for how long it must be out of service. R2.4.3.4 - Variability of Reactive Source â€“ need to be more specific (give me MVARS). We already test this under FAC 010 for lost of shunt capacitor. R2.4.3.5 - This should already been taken into account when we do studies. So be more specific. R2.7.2 - Include a description of how results of the sensitivities selected in accordance with Requirements R2.1.3, R2.1.4, R2.4.3, and R2.4.4 impacted the list of actions developed in accordance with R2.7.1. R2.1 - Revise wording - The annual assessment of the of the NT Planning Horizon shall include: then go into the sub-bullets. The SDT must clarify exactly explicitly how many studies (in terms of numbers) must be done each planning horizon for short term and long term and how much sensitivity study for term.

Yes

Clarity about the exact number of supplemental studies required needs to be added to the standard before this question can bee addressed. The requirements contained within the standard are nebulous. The requirements need to clearly state the depth of the studies required for each time horizon.

Clarity about the required documentation and coordination needs to be added to the standard before this question can bee addressed. As written, our interpretation is the increase in documentation requirements is substantial.

Clarity needs to be added throughout the requirements. Our interpretation of the standards as written will not result in substantial capitol investment. These standards will not have a substantial impact on improved system reliability, however; the requirements do significantly increase the manpower investment in study documentation and efforts associated with reporting study results.

C â€“ Definitely do not support the revised standard

Changes should be made to the sensitivity analysis. See question 10 above. R2.6 - The need to restudy previously studied years should be left to the transmission planner when in their judgment there is a material change. Based on the material change the TP should be responsible

for determining what aspects of the performance requirements need to be proven

Individual

Marv Landauer

ColumbiaGrid

Yes and No

We generally concur with the changes for the Requirements associated with the Generating Unit and System Stability, however, â€¢ Generating unit stability studies are typically performed at the time of interconnection. Even though stability studies have been done as new generating unit(s) were interconnected or at the time changes occurred, such studies have not been done for the entire fleet of generating units at the same time. For very old units, stability study documentation may no longer exist, even though no potential stability problems have been identified when stability studies were run for interconnecting other newer units. Will every TP have to benchmark their generating unit stability study for its entire fleet with the acceptance of this Standard? In other words, will every TP has to recreate documentation for all its older units? â€¢ We would appreciate that the SDT more clearly define the terms in R2.5.2, â€œmaterial Transmission System changeâ€ and â€œat or near the point of Interconnectionâ€ to invoke a study with examples.

Yes and No

R2.4 is acceptable. Please consider deleting R5.4.3. It should not be necessary to list acceptable practices, especially if the conditions placed on the practice are general conditions that are addressed elsewhere or are generic. Otherwise, R5.4 is acceptable. We generally agree that Transmission Owners with extensive Transmission Planning Function and Planning Coordinators need to perform and be held accountable for the Requirements in R2.4 and R5.4; however, the SDT needs to define an organization size level below which these requirements for the associated Transmission Planner may be slightly relaxed. There are numerous Transmission Planners; (e.g., those associated with PUDs, Municipals or REA, etc. where historically dynamic stability has not been a problem), for which performing these type of studies and assessments would be onerous and would not yield reliability benefits for the network. The proposed requirements in R2.5 and R5.5 are already covered in FAC-001 and FAC-002 and should not be included again in the proposed TPL-001-1. Otherwise, the NERC standards would have redundant requirements. In addition, Transmission Ownerâ€™s open access tariff requires Generator Owner to apply for interconnection to its transmission system or to make modifications to their generators as described in R2.5.1, R5.5.1, and R5.5.2. It is therefore the Generator Ownerâ€™s responsibility to cause these studies to be done at the time of interconnection or modification, yet R5 seems to place that responsibility only on the Transmission Planner and the Planning Coordinator. The Transmission Planner or the Planning Coordinator would not know of the changes until notified by the Generator Owner. If the SDT believes that FAC-001 is deficient, it should propose revisions to this standard, not simply add to TPL. Requirement R5.5.2 needs to be clarified to state changes or additions to the generating unit that result in an increase in power output. Otherwise, it could be interpreted to apply to existing units with a change in dispatch.

No

We generally do not disagree with the definitions by themselves but have concerns about potential unintended consequences. This definition will severely limit the loads that can be classified as â€œlocal Network customers, connected to or supplied by the Faulted element or by the affected area, may occur in certain areas without impacting the overall reliability of the interconnected transmission systemsâ€ in footnote b of the existing TPL standards. In combination with raising the bar for loss of Facilities with operating voltages 300 kV or higher (P2, P4 and P5 in the Performance Tables), this definition may result in encouraging entities to connect more loads in a radial fashion or avoid loop connection to improve service reliability just to fit in the Consequential Load Loss definition, â€œâ€¦load no longer being connected to a sourceâ€¦â€. As a result, service reliability to customer would be adversity impacted without commensurate improvement in overall system reliability. In addition, existing design of many such local networks would normally require RAS/SPS to disconnect loads on local networks in response to contingencies. However, the definition of Non-Consequential Load Loss states that using RAS/SPS is Non-Consequential Load Loss. In the Consideration of Comments on First Draft of TPL-001-1, page 49, response to First Energy, the SDT states "FERC has determined that any Load loss that is not directly connected to the faulted element is actually Non-Consequential Load loss." We found a similar response to WECC on page 449, item 6. While we do not disagree with the statements made by the SDT, that FERC wants clarification of what is Consequential Load Loss, we do not see where FERC has ruled out the use of RAS/SPS for Consequential Load Loss. Consequential Load Loss needs to include the concept of local networks. Another way to address this would be to exempt some local networks in the definition of the Bulk Electric System. The performance of existing systems has been designed to be consistent with the concepts of the quoted sentence above from footnote b of Table 1 of the existing TPL standards. There are many instances where some local network customer curtailments or local area load loss has been allowed by local regulatory authorities as long as the overall reliability of the interconnected system was not impacted. This is a result of tradeoffs with the cost and environmental impacts of

providing a higher level of reliability in a local area. An attempt to eliminate the concepts contained in footnote b of the existing TPL standards would invalidate local regulatory decisions, place a large unintended cost burden on existing customers and could potentially create criteria that could not be met anytime soon, if ever, as a result of the long lead time required for system improvements. Any attempt to raise the bar by interpreting the definition of Non-Consequential Load as eliminating the concepts of footnote b is considered unacceptable. The new criteria need to clearly maintain these concepts to prevent a large disconnect with existing design criteria. The last sentence in the Definition of Consequential Load Loss (â€œAlthough Load which is lost as a result of the Loadâ€™s response to the transient conditions of the event is considered Consequential Load Loss and is permitted when Consequential Load Loss is allowed, Transmission planning entities are not allowed to rely upon the expectation of such Load loss to meet steady state performance requirementsâ€) seems more appropriate to be requirements. Therefore, please move this sentence to the Notes Section at the beginning of Table 1 as new Item 7.

Yes

We generally agree, however, the conditions listed in R3.5.1, R3.5.2 and R3.5.3 are applicable to the overall TPL Standard. Their specific listing in R3.5 gives the impression that these Requirements are only applied to R3.5 and not to the other Requirements in this Standard. In other words, are there any Requirements in this Standard that R3.5.1, R3.5.2 and R3.5.3 do not apply to? Therefore, we suggest TPL-001-1 be silent on this issue and move R3.5.1 through R3.5.3, (and the equivalent in the stability study R5.4.3.1 through R5.4.3.3) to a Requirement applicable to Assessment studies in general, such as the bullet points in the Performance Tables.

Yes

While we agree with separating R1 to form R9 through R14, we believe that R9 (modeling information for real and reactive load forecast data) should be applicable to Load Serving Entities (LSE) instead of (or in additional to) the Distribution Provider. In any case, this type of exchange of load information is already covered in MOD Standard or in the respective tariffs, and should not be included again in the proposed TPL-001-1 Standard.

Yes and No

We agree with R2.3. However, R4 requires assessment of â€œShortcircuit capability of its equipment under normal condition and following any single Contingency condition that would result in greater circuit breaker interrupting dutiesâ€. Since short circuit studies are typically performed by applying a fault on a Facility starting from a normal condition, there can be confusion whether the result would constitute â€œnormalâ€ condition or â€œfollowing any single Contingency conditionâ€. Also, by specifying the normal and single contingency conditions, R4 is straying into â€œhowâ€ to perform a study, which is not necessary in a standard. We suggest deleting the reference to the contingencies to be used in the study. We suggest R4 be modified to read â€œShortcircuit capability of its equipment under plausible system configurations that would result in the greatest circuit breaker interrupting dutiesâ€.

Yes and No

We do not disagree with the proposed format changes of the Tables. However, we are not sure if separating into two Tables is necessary, or beneficial. It seems like an extra column for event could be added and some maybe some changes to the notes would greatly simplify the table. Some of the rows could also be combined; one such example is P2-2 (Loss of Bus Section) and P2-3 (Internal Breaker Fault, non-bus-tie). Will the SGT plan on combining some similar rows? Table 1, P4 and P5 refer to "Faults" as part of the contingency. This is steady state performance and faults are not modeled in steady state. Please explain/define the term "single ended line" used in Table 1, P2.1. We believe there should be no distinction between the voltage classes and support the use of load shed for all cases identified in P4 through P7.

No

We do not disagree with the proposed definition change. However, we do not agree that â€œSubstation configurations such as ring-bus, breaker-and-a-half, or double bus-double breaker protection schemes do not use bus-tie breakers. Some breaker-and-a-half and double-breaker layouts may have bus breakers located mid-way in the side elements. We propose the following definition: A circuit breaker that divides a bus section with multiple tap off points into two bus sections.

Yes

Please explain/define the term â€œexit breakersâ€. We agree with the rationale for the requiring more stringent performance requirement levels for non-bus tie breakers above 300 kV. Further, we believe that Non-Consequential Load Loss should be allowed for loss of either Bus-Tie or Non-Bus-Tie Breakers regardless of voltage class. The SDT has not presented evidence that the probabilities of failure for breakers within the same substation are significantly different for different voltage classes.

Yes

We generally agree with the concept of the sensitivity analysis since this is standard practice in understanding system performance risks and the effectiveness of improvements. R2.1.4 requires explanation of performing additional sensitivities that are not listed in the R2.1.3. This would

discourage entities from performing additional sensitivities. In addition, in the above example, the Transmission Planners should not have to explain why they feel that this higher level (1 in 10 year adverse weather) of load is the â€œbase caseâ€ condition.

Yes

We agree with revising P6 to permit loss of Non-Consequential Load to meet performance requirements for Systems above 300kV. However, we are concerned that with the loss of the first N-1 in P6, curtailment of firm transmission service or firm transfers would not be allowed as part of system adjustment in preparation for the next N-1. Allowing curtailment of transmission service or firm transfers for such system adjustments should be added to R3.3.2.2. Otherwise, the power transfer under normal condition (before the first N-1) will have to be significantly curtailed in anticipation for meeting performance requirements after N-1-1, or transmission facilities, which would have otherwise been unnecessary, would have to be built. Either would adversely impact customers. We also have questions on Event P6 in both Performance Tables 1 and 2: We would like some clarification on the overlapping single contingencies as denoted in Event P6 (N-1-1), and one where a single contingency, say Event P1 (N-1), follows a prior "planned" outage of a Facility (N-1). The former would allow the Non-consequential Load Loss, while the latter would prohibit it.

The new TPL Standard raises the bar of transmission system performance. This can be expected to require significant additional analysis, documentation and system reinforcements (or reduced firm transfers allowed on the system if system reinforcements are not made). We will defer to our members to provide quantification of those elements.

The new TPL Standard raises the bar of transmission system performance. This can be expected to require significant additional analysis, documentation and system reinforcements (or reduced firm transfers allowed on the system if system reinforcements are not made). We will defer to our members to provide quantification of those elements.

The new TPL Standard raises the bar of transmission system performance. This can be expected to require significant additional analysis, documentation and system reinforcements (or reduced firm transfers allowed on the system if system reinforcements are not made). We will defer to our members to provide quantification of those elements.

A â€“ Generally support the revised standard

We agree that the Standard as presented is clearer, but there are numerous issues that still need resolution. There is no mention in the purpose of the Standard about minimizing loss of load for more probable unplanned contingencies. Maybe there needs to be some definition around what is meant by reliability. We believe that with the loss of the first N-1 in P6, curtailment of firm transmission service or firm transfers should be allowed as part of system adjustment in preparation for the next N-1. This should be added to R3.3.2.2. Otherwise, the power transfer under normal condition (before the first N-1) will have to be significantly curtailed in anticipation for meeting performance requirements after N-1-1. This will unnecessarily impede commerce. Or, to maintain the same firm power transfer under normal conditions, construction of transmission facilities will be required. Either way, this would impose a much stricter standard than exists today resulting in very costly unnecessary system improvements and invalidate terms of many transmission service contracts that allow for implementation of pro-rate curtailments of firm transmission rights during forced and planned outage conditions. We disagree with the application of the proposed definitions of Consequential Load Loss and Non-Consequential Load Loss in conjunction with â€œraising the barâ€. Local Network load should be included in Consequential Load and the loss should be allowed for single contingencies. The TPL standard is to maintain reliability of the BES. Under certain conditions orderly dropping of local network load could limit the spread of the disturbance beyond the local area and allow BES reliability to be maintained. This would minimize the total amount of load loss and allow for quicker load restoration. The proposed definitions for Consequential Load Loss and Non-consequential Load Loss will provide no reliability benefits for high voltage (>300 kV) transmission backbone system providing wholesale open access service and interconnecting to the rest of the western interconnection. Any potential reliability benefits of any additional facilities built to comply with these definitions would be at the local service level. As mention in comments to Q3 above, some local network customer curtailments or local area load loss has been allowed by local regulatory authorities as long as the overall reliability of the interconnected system was not impacted. This is a result of tradeoffs between providing a higher level of reliability in a local area and the cost and environmental impacts of providing that service. Such tradeoffs are subject to local regulatory authority or contract negotiated between the transmission provider and its transmission customers. Interruption of firm transmission service does not mean that firm load is not served. If there is other generation in the system that could increase to meet the firm load requirements if the firm transfer being modeled is interrupted, then interruption of firm transmission service should be allowed for P1 through P5 contingencies in the table. In addition,

we believe that DC and AC lines should have the same performance requirements with respect to interruption of firm transmission service. We do not understand why interruption of firm service would be an acceptable response to the loss of a single pole of a DC line (i.e. response to the contingency) but not an acceptable response to prepare for the next contingency of an AC line. The transfers over both AC and DC lines should be allowed to be curtailed when the line is outaged.

Individual

Dan Rochester

IESO

No

(i) Generating Unit Stability Study: We do not agree with the phrase ".. or one bus away from that point." This limits the scope of the testing to only the next bus. At times, contingencies that remove critical transmission facilities several buses away from a generating plant may affect generating unit stability performance. We suggest to reword this phrase to "..or in the nearby vicinty that can have an adverse reliability impact on the generating units' stability performance." (ii) Long-Term Transmission Planning Horizon: A nit-picking suggestion to change the first "longer" to "long". (iii) Planning Coordinator: We not not see the need to repeat a definition that is already proviced in the NERC Glossary of Terms and the Functional Model. There is a plan to implement a wholesale change from Planning Authority to Planning Coordinator. This is expected to occur in the first half of 2009. (iv) System Stability Study: Since voltage performance is included in this assessment, we suggest to add to the phrase "â€¦which may include many generating units AND GROUPS OF TRANSMISSION FACILITIES..". (v) Year One: The second part of the definition is confusing. By "12-18 months from the completion of the previous annual Planning Assessment." does it mean 12-18 months from the "complete date" of the previous assessment, or from the "end of the previous assessment period"? For example, a previous assessment was completed on April 30, 2008 that cover a 12 month period from May 1, 2008 to April 30, 2009. Does year one for the subsequent assessment start from May 1, 2009 or May 1, 2010? In view of the confusion, having only the first sentence would suffice. In fact, there is only one reference made in the requirement (R2.1.1). Qualifying "year one" can easily be made in that requirement without having to have a defined term. Adding defined terms without a good cause adds to the maintenance task for the glossary of terms. Further, it begs the question on why "year two" and "year five" referenced in that same requirement are not defined.

No

A. R2.4 (i) We suggest to remove words such as "consideration of" and "deemed appropriate" since these are not measurable and not enforceable. Further, we continue to disagree with mandating sensitivity testing with descriptive subrequirements. Sensitivity testing (ii) Specific to R2.4.3, we continue to express our disagreement to include sensitivity testing in the requirements. We are disappointed that despite disagreements by the majority of the commenters and their suggestions to leave sensitivity testing to the TP's and PC's discretion, the SDT continues to stipulate detailed requirements for sensitivity testing. The SDT in its summary response to comments indicates that these testing are intended as "â€¦providing some guidance on what could be included in the sensitivity studies without being too prescriptive." If these are indeed intended as guidance rather than enforceable requirements, then they should be provided in a technical document or a reference document that supports the standard, not in the standard itself. B. R2.5 (i) Similar to our comments unde Q1 (i), the requirements should not restrict to changes at or near the Interconnection point. Transmission changes several buses removed from the generator's Interconnection point may also affect the stability performance of the generators. Suggest to reword it to "â€¦ in the nearby vicinty that can have an adverse reliability impact on the generating units' stability performance". (ii) There seems to be a hole or incomplete scenario in R2.5.2 in the sentence: "removal of a Transmission Line or the addition of a new substation in one of the Transmission Lines connected to the plant." We agree that removal of a transmission line in the vicinity needs to be assessed; we also believe that addition of not just a substation but also any transmission facilities in the vicinity should be assessed. We therefore suggest to reword this to: "removal of a Transmission Line or the addition of new transmission facilities in the generating plant's nearby vicinty that can have an adverse reliability impact on the generating units' stability performance. C. R3.4 (i) We do not agree with the requirement that: "If the Extreme Events analysis concludes there are cascading outages, an evaluation of implementing a change designed to reduce or mitigate the likelihood of such consequences shall be conducted." Future transmission systems are planned and designed accordingly to Planning Events. It should not be a surprise that applying Extreme Events to the planned transmission system for which it is not designed to withstand such events would show instability and/or cascading outages. The follow on actions should be to evaluate possible acitions to contain and minimize the impact of cascading outages, rather than to come up with options or alternative designs to reduce or mitigate the likelihood of such occurrences (since doing so will imply that we design and plan for Extreme Events). We therefore suggest to reword it to: "If the Extreme Events analysis concludes there are cascading outages, an evaluation of possible acitions to contain and minimize the impacts of cascading outages.

Yes

Yes and No

We agree with the conditions stipulated in R3.5.2 and R3.5.3 but do not agree with R3.5.1. This is one of the performance objectives that the use of manual and/or automatic generation run-back/tripping is intended to achieve, and it is already stipulated in Table 1. Suggest to remove this condition.

Yes and No

A. R9: Agreed B. R10: Holding the TP to provide modeling information on Firm Transmission Service, (a TSP's role), Interchange Schedules (also a TSP's role), and resources required to supply Load for each of its Balancing Authorities (Resource Planner's role) may not be appropriate. In fact, the TP relies on others to provide this set of information for developing its own study model. We suggest to change the responsible entities to these specific entities; or if the TP is required to provide the PC with the model, then there should be requirements in other standards to obligte these other entities to provide the TP with the needed information. C. R11: The phrase "with consideration given to spare equipment strategy" is vague (not enforceable or measurable) and does not appear to add anything to the required product which should already have the spare strategy and capability taken into account when outage plans are developed. We suggest to remove this phrase. If this was retained, the follow on question is why R12 doesn't have a similar requirement (note that a generator outage may not be due to maintenance of the generator itself; it could be due to outages to step-up transformers, breakers or switches for which spares may be carried). D. R12: Agreed. E. R13: We are not sure what purpose to include "and new technologies" would serve if such technologies do not result in the provision of generators and/or reactive sources which are already covered. Further, this is vague to determine what consitutes "new technologies" and hence this is not enforceable or measurable. We suggest to remove this term. F. R14: Same comment as in R13 on "new technologies".

Yes

Yes and No

Condition (5) at the top of Table 1, and Condition (4) at the top of Table 2 are not required since they are already covered by R3.2 and R5.2, respectively. Further, Condition (6) in Table (1) and Condition (5) in Table 2 should be stipulated in R3 and R5 since these are not performance requirements, but rather the analysis (simulation) requirements.

Yes

No

We hold the view that all breakers can be exposed to the same types of event, i.e., they can have internal faults and can be "stuck" when attempting to open as instructed. As such, there should not be any difference in the expected system performance among them in response to system events, and regardless of the voltage levels. We suggest the SDT to revised Tables 1 and 2 such that their expected performance are identical.

No

As we commented on R2.4.3, we continue to express our disagreement to include sensitivity testing in R2.1.3 and R2.1.4. We are disappointed that despite disagreements by the majority of the commenters and their suggestions to leave sensitivity testing to the TP's and PC's discretion, the SDT continues to stipulate detailed requirements for sensitivity testing. The SDT in its summary response to comments indicates that these testing are intended as "â€¦providing some guidance on what could be included in the sensitivity studies without being too prescriptive." If these are indeed intended as guidance rather than enforceable requirements, then they should be provided in a technical document or a reference document that supports the standard, not in the standard itself.

Yes

We concur with the need to test N-1-1 contingencies involving transmission facilities allowing interruptions to firm transmission services and non-consequential load loss to meet performance requirements, for any voltage levels as long as adverse reliability impacts on the BES are exhibited.

Minimal, if any, since the IESO has been conducting and documenting planning studies that meet events and performance criteria that are very similar to those specified in the draft TPL-001 standard. However, this is speculative at this time since we are not sure what the eventual standard will be like. Another uncertain area is the extent to which additional studies are required if sensitivity testing is mandated. Please see our comments under Q2 and Q10 on sensitivity testing. If sentivity testing should become a requirement, then the scope is very wide and we are unable to have a good handle on the increamental time and cost to supplement past study portfolio.

Minimal, if any, for the reasons indicated above, other than for meeting the sensitivity testing

requirements (if mandated) which cannot be quantified.

Minimal, if any, for the reasons indicated above, other than for meeting the sensitivity testing requirements (if mandated) which cannot be quantified.

Minimal, if any, for the reasons indicated above, other than for meeting the sensitivity testing requirements (if mandated) which cannot be quantified.

Minimal, if any, for the reasons indicated above, other than for meeting the sensitivity testing requirements (if mandated) which cannot be quantified.

None expected at this time.

None expected at this time.

A â€“ Generally support the revised standard

(i) We generally support the direction and principle of the revised standard. It is a step in the right direction to more clearly stipulate the types of events and expected performance requirements with inclusion of multiple element contingencies and multiple single contingencies, and allowance for interruptions to firm transmission services and non-consequential load loss. (ii) More details and refinements are expected to be provided that address the issue of sensitivity testing, reduce the number of layers in the subrequirements (to facilitate ease of developing Measures and Violation Severity Levels), more clearly specify the responsible entities, etc. We look forward to seeing these improvements in the next revision, along with the first draft of Violation Risk Factors, Time Horizons, Measures, Data Retention Periods, and Violation Risk Factors when the requirements approach their near final draft form. (iii) We suggest the SDT review the development plan with the Standard Process Manager, especially the timing for posting the standard for balloting, responding to comments and conducting recirculating ballot. the timing between the initial ballot and recirculating ballot is usually short, and the balloted standard is not supposed to change. The proposed development plan appears to allow a long lead time between the two ballots, and for making changes to the standard between them.

Group

Southern California Edison

Dana Cabbell

Transmission and Interconnection Planning

No

We believe that there is no significant distinction between Generating Unit Stability and System Stability other than the objective and focus of the study. Therefore, we cannot accept a simple statement from the SDT that it believes it is important to maintain this distinction without more explanation. If a distinction is maintained, then Generating Unit Stability Study should be and is already covered in FAC-001-0 and FAC-002-0. As defined, Generating Unit Stability Study â€œfocuses on an individual generating unit's or electrically closely-coupled generating units' Stability for various Contingencies on the Transmission Facilities connected to that generating unit(s) point(s) of interconnection or one bus away from that point. However, the Purpose of the proposed TPL-001-1 is to â€œdevelop a Bulk Electric System that will operate reliably over a broad spectrum of System conditions and following a wide range of probable Contingenciesâ€. If a Generating Unit becomes unstable, the unit can be disconnected from the BES without impacting system stability. Therefore, we believe that the Generating Unit Stability Studies portion is attempting to introduce interconnection stability studies into the TPL standards. Interconnection stability studies are adequately addressed by FAC-001 and does not need to be specifically called out in TPL-001-1. In addition, Generating unit stability studies are typically performed at the time of interconnection. Even though Generating Unit Stability Studies have been done as new generating unit(s) were interconnected or at the time changes occurred, such studies have not been done for the entire fleet of Generating Units at the same time. For very old units, stability study documentation may no longer exist, even though no potential stability problems have been identified when stability studies were run for interconnecting other newer units or for the System. If the requirement for Generating Unit Stability Study is retained in this proposed TPL-001-1, R2.5 needs to be clarified to say â€œonly whenâ€ the changes in R2.5.1 and R2.5.2 are made that the Generating Unit Stability Study needs to be done. There also needs to be language about how to treat generators that are existing prior to this Standard taking effect. We would also appreciate if the SDT would more clearly define with examples the terms in R2.5.2, â€œmaterial Transmission System changeâ€ and â€œat or near the point of Interconnectionâ€ to invoke a study.

Yes and No

R2.4 is acceptable. Please consider deleting the conditions identified in R5.4.3.1, R5.4.3.2, and R5.4.3.3. We question the need to specifically call out these requirement in subrequirements of R5.4.3. We believe these conditions should be met for any and all requirements of the standard. It should not be necessary to list acceptable practices, especially if the conditions placed on the practice are general conditions that are addressed elsewhere or are generic. Otherwise, R5.4 is acceptable. ï€ We generally agree that Transmission Owners with extensive Transmission Planning Function and Planning Coordinators need to perform and be held accountable for the Requirements in R2.4 and R5.4; however, the SDT needs to define an organization size level

below which these requirements for the associated Transmission Planner may be slightly relaxed. There are numerous Transmission Planners; (e.g., those associated with PUDs, Municipals or REA, etc. where historically dynamic stability has not been a problem), for which performing these type of studies and assessments would be onerous and would not yield reliability benefits for the network. ï€ The proposed requirements in R2.5 and R5.5 are already covered in FAC-001 and FAC-002 and should not be included again in the proposed TPL-001-1. Otherwise, the NERC standards would have redundant requirements. In addition, Transmission Ownerâ€™s open access tariffs requires Generator Owners to apply for interconnection to its transmission system or to make modifications to their generators as described in R2.5.1, R5.5.1, and R5.5.2. It is therefore the Generator Ownerâ€™s responsibility to cause these studies to be done at the time of interconnection or modification, yet R5 seems to place that responsibility only on the Transmission Planner and the Planning Coordinator. The Transmission Planner or the Planning Coordinator would not know of the changes until notified by the Generator Owner. If the SDT believes that FAC-001 is deficient, it should propose revisions to this standard, not simply add to TPL. Requirement R5.5.2 needs to be clarified to state changes or additions to the generating unit that result in an increase in power output. Otherwise, it could be interpreted to apply to existing units with a change in dispatch.

No

We generally agree with the definitions by themselves but have concerns about potential unintended consequences. This definition will severely limit the loads that can be classified as â€œlocal Network customers, connected to or supplied by the Faulted element or by the affected area, may occur in certain areas without impacting the overall reliability of the interconnected transmission systemsâ€ in footnote b of the existing TPL standards. In combination with raising the bar for loss of Facilities with operating voltages 300 kV or higher (P2, P4 and P5 in the Performance Tables), this definition may result in encouraging entities to connect more loads in a radial fashion or avoid loop connection to improve service reliability just to fit in the Consequential Load Loss definition, â€œâ€¦load no longer being connected to a sourceâ€¦â€. As a result, service reliability to customer would be adversity impacted without commensurate improvement in overall system reliability. In addition, existing design of many such local networks would normally require RAS/SPS to disconnect loads on local networks in response to contingencies. However, the definition of Non-Consequential Load Loss states that using RAS/SPS is Non-Consequential Load Loss. In the Consideration of Comments on the First Draft of TPL-001-1, page 49, response to First Energy, the SDT states "FERC has determined that any Load loss that is not directly connected to the faulted element is actually Non-Consequential Load loss." We found a similar response to WECC on page 449, item 6. While we do not disagree with the statements made by the SDT, that FERC wants clarification of what is Consequential Load Loss, we do not see where FERC has ruled out the use of RAS/SPS for Consequential Load Loss. Consequential Load Loss needs to include the concept of local networks. Another way to address this would be to exempt some local networks in the definition of the Bulk Electric System. The performance of existing systems has been designed to be consistent with the concepts of the quoted sentence above from footnote b of Table 1 of the existing TPL standards. There are many instances where some local network customer curtailments or local area load loss has been allowed by local regulatory authorities as long as the overall reliability of the interconnected system was not impacted. This is a result of tradeoffs with the cost and environmental impacts of providing a higher level of reliability in a local area. An attempt to eliminate the concepts contained in footnote b of the existing TPL standards would invalidate local regulatory decisions, place a large unintended cost burden on existing customers and could potentially create criteria that could not be met anytime soon, if ever, as a result of the long lead time required for system improvements. Any attempt to raise the bar by interpreting the definition of Non-Consequential Load as eliminating the concepts of footnote b is considered unacceptable. The new criteria need to clearly maintain these concepts to prevent a large disconnect with existing design criteria. The last sentence in the Definition of Consequential Load Loss (â€œAlthough Load which is lost as a result of the Loadâ€™s response to the transient conditions of the event is considered Consequential Load Loss and is permitted when Consequential Load Loss is allowed, Transmission planning entities are not allowed to rely upon the expectation of such Load loss to meet steady state performance requirementsâ€) seems more appropriate to be requirements. Therefore, please move this sentence to the Notes Section at the beginning of Table 1 as new Item 7.

Yes

We agree. However, the conditions listed in R3.5.1, R3.5.2 and R3.5.3 are applicable to the overall TPL Standard. Their specific listing in R3.5 gives the impression that these Requirements are only applied to R3.5 and not to the other Requirements in this Standard. In other words, are there any Requirements in this Standard that R3.5.1, R3.5.2 and R3.5.3 do not apply to? Therefore, we suggest TPL-001-1 be silent on this issue and move R3.5.1 through R3.5.3, (and the equivalent in the stability study R5.4.3.1 through R5.4.3.3) to a Requirement applicable to Assessment studies in general, such as the bullet points in the Performance Tables.

Yes

While we agree with separating R1 to form R9 through R14, we believe that R9 (modeling information for real and reactive load forecast data) should be applicable to Load Serving Entities

(LSE) instead of (or in additional to) the Distribution Provider. In any case, this type of exchange of load information is already covered in MOD Standard or in the respective tariffs, and should not be included again in the proposed TPL-001-1 Standard.

Yes and No

We agree with R2.3. However, R4 requires assessment of â€œShort-circuit capability of its equipment under normal conditions and following any single Contingency condition that would result in greater circuit breaker interrupting dutiesâ€. Since short circuit studies are typically performed by applying a fault on a Facility starting from a normal condition, there can be confusion whether the result would constitute â€œnormalâ€ condition or â€œfollowing any single Contingency conditionâ€. Also, by specifying the normal and single contingency conditions, R4 is straying into â€œhowâ€ to perform a study, which is not necessary in a standard. We suggest deleting the reference to the contingencies to be used in the study.

Yes and No

We do not disagree with the proposed format changes of the Tables. However, we are not sure if separating into two Tables is necessary, or beneficial. It seems like an extra column for event could be added and some changes to the notes would greatly simplify the table. Some of the rows could also be combined; one such example is P2-2 (Loss of Bus Section) and P2-3 (Internal Breaker Fault, non-bus-tie). Will the SDT plan on combining some similar rows? Table 1, P4 and P5 refer to "Faults" as part of the contingency. This is steady state performance and faults are not modeled in steady state. Table 1, P2.1 refers to a "single ended line". Technically, this means we need to generate a "false" bus at each end of the line to evaluate this condition or use a dispatcher power flow which included breaker modeling. Is this an accurate interpretation of the intent of this requirement? We believe there should be no distinction between the voltage classes and support the use of load shed for all cases identified in P4 through P7.

No

We do not disagree with the proposed definition change. However, we do not agree that â€œSubstation configurations such as ring-bus, breaker-and-a-half, or double bus-double breaker protection schemes do not use bus-tie breakers. Some breaker-and-a-half and double-breaker layouts may have bus breakers located mid-way in the side elements. We propose the following definition: A circuit breaker that divides a bus section with multiple tap off points into two bus sections.

Yes and No

We interpret â€œexit breakersâ€ to mean a breaker on an element that comes in from outside the substation. We agree with applying less stringent performance requirements to bus tie breakers above 300 kV. Further, we believe that Non-Consequential Load Loss should be allowed for loss of either Bus-Tie or Non-Bus-Tie Breakers regardless of voltage class. The SDT has not presented evidence that the probabilities of failure for breakers within the same substation are significantly different for different voltage classes

Yes and No

We generally agree with the concept of the sensitivity analysis since this is standard practice in understanding system performance risks and the effectiveness of improvements. It is ambiguous from a criteria perspective, however, what role is played by the sensitivities in developing Corrective Action Plans and what risks are created by misapplication of the intent of such sensitivity analyses. Clarification of the following is needed along with examples of applicable sensitivities and how these would be factored into Corrective Action Plans. If a Transmission Planner performs studies on the â€œbase caseâ€ of which the loads represented are 1 in 10 year adverse weather condition (10% chance that the actual load may exceed the projected load), does this constitute a sensitivity analysis. If so, will the Transmission Planner have to then perform additional less stringent studies at the load levels representing 1 in 2 year adverse weather conditions (50% chance that the actual load may exceed the projected load) to demonstrate compliance? R2.1.4 requires explanation of performing additional sensitivities that are not listed in the R2.1.3. This would discourage entities from performing additional sensitivities. In addition, in the above example, the Transmission Planners should not have to explain why they feel that this higher level (1 in 10 year adverse weather) of load is the â€œbase caseâ€ condition. R2.7 also states that â€œCorrective Action Plans do not need to be developed solely to meet the performance requirements for sensitivitiesâ€. Consider a Transmission Planner that has built transmission based on the 1 in 10 year adverse weather load assumed in the â€œbase caseâ€, will the judgment of the Transmission Planner be then questioned because theâ€œbase caseâ€ used is equivalent to a sensitivity case and not a 1 in 2 year adverse weather base case?

Yes

We agree with revising P6 to permit loss of Non-Consequential Load to meet performance requirements for Systems above 300kV. However, we are concerned that with the loss of the first N-1 in P6, curtailment of firm transmission service or firm transfers would not be allowed as part of system adjustment in preparation for the next N-1. Allowing curtailment of transmission service or firm transfers for such system adjustments should be added to R3.3.2.2. Otherwise,

the power transfer under normal condition (before the first N-1) will have to be significantly curtailed in anticipation for meeting performance requirements after N-1-1, or transmission facilities, which would have otherwise been unnecessary, would have to be built. Either would adversely impact customers. We also have questions on Event P6 in both Performance Tables 1 and 2: We would like some clarification on the overlapping single contingencies as denoted in Event P6 (N-1-1), and one where a single contingency, say Event P1 (N-1), follows a prior "planned" outage of a Facility (N-1). The former would allow the Non-consequential Load Loss, while the latter would prohibit it.

B â€“ Unsure about supporting the revised standard

Our Response is (B) and (C). We agree that the Standard as presented is clearer, but there are numerous issues that still need resolution, Measures, VSLs, Implementation Plan, etc., before WECC can give a full approval of this Standard. ï€ There is no mention in the purpose of the Standard about minimizing loss of load for more probable unplanned contingencies. Maybe there needs to be some definition around what is meant by reliability. ï€ We believe that with the loss of the first N-1 in P6, curtailment of firm transmission service or firm transfers should be allowed as part of system adjustment in preparation for the next N-1. This should be added to R3.3.2.2. Otherwise, the power transfer under normal condition (before the first N-1) will have to be significantly curtailed in anticipation for meeting performance requirements after N-1-1. This will unnecessarily impede commerce. Or, to maintain the same firm power transfer under normal conditions, construction of transmission facilities will be required. Either way, this would impose a much stricter standard than exists today resulting in very costly unnecessary system improvements and invalidate terms of many transmission service contracts that allow for implementation of pro-rate curtailments of firm transmission rights during forced and planned outage conditions. ï€ We disagree with the application of the proposed definitions of Consequential Load Loss and Non-Consequential Load Loss in conjunction with â€œraising the barâ€. Local Network load should be included in Consequential Load and the loss should be allowed for single contingencies. The TPL standard is to maintain reliability of the BES. Under certain conditions orderly dropping of local network load could limit the spread of the disturbance beyond the local area and allow BES reliability to be maintained. This would minimize the total amount of load loss and allow for quicker load restoration. The proposed definitions for Consequential Load Loss and Non-consequential Load Loss will provide no reliability benefits for high voltage (>300 kV) transmission backbone system providing wholesale open access service and interconnecting to the rest of the western interconnection. Any potential reliability benefits of any additional facilities built to comply with these definitions would be at the local service level. ï€ As mention in comments to Q3 above, some local network customer curtailments or local area load loss has been allowed by local regulatory authorities as long as the overall reliability of the interconnected system was not impacted. This is a result of tradeoffs between providing a higher level of reliability in a local area and the cost and environmental impacts of providing that service. Such tradeoffs are subject to local regulatory authority or contract negotiated between the transmission provider and its transmission customers. Regarding the terms â€œinterruption of firm transmission serviceâ€, there needs be clarification on what Interruption means. Since it is referring to firm transmission service, we would interpret this to mean curtailment needed after a particular contingency and adjustments. There also needs to be clarification on what â€œFirm Transmission Serviceâ€ means. Two points, 1) the NERC definition states â€œhighest quality service offered to customers under a filed rate schedule that anticipates no planned interruption.â€ The Standard implies anticipation of â€œunplannedâ€ interruption for certain contingencies. 2) Is this referring to a transmission product as defined in FERC Order 890, or firm transfers modeled for the conditions being studied? One way to interpret the intent is the firm transfers being modeled for the conditions in the powerflow to meet demand that would result in load not being served if that firm transfer were curtailed. If there is other generation in the system that could increase to meet the load if the transfer being modeled is interrupted, then interruption of firm transmission service should also be allowed for P1 through P5 contingencies in the table. In addition, we believe that DC and AC lines should have the same performance requirements with respect to interuption of firm transmission service. We do not understand why interruption of firm service would be an acceptable response to the loss of a single pole of a DC line (i.e. response to the contingency) but not an acceptable response to prepare for the next contingency of an AC line. The transfers over both AC and DC lines can automatically be curtailed when the line is outaged.

Individual

Rick White

Northeast Utilities
No
Northeast Utilties has participated with ISO-NE and NPCC and supports the comments filed by those organizations.
No
Northeast Utilties has participated with ISO-NE and NPCC and supports the comments filed by those organizations.
No
Northeast Utilties has participated with ISO-NE and NPCC and supports the comments filed by those organizations.
No
Northeast Utilties has participated with ISO-NE and NPCC and supports the comments filed by those organizations.
No
Northeast Utilties has participated with ISO-NE and NPCC and supports the comments filed by those organizations.
No
Northeast Utilties has participated with ISO-NE and NPCC and supports the comments filed by those organizations.
No
Northeast Utilties has participated with ISO-NE and NPCC and supports the comments filed by those organizations.
No
Northeast Utilties has participated with ISO-NE and NPCC and supports the comments filed by those organizations.
Yes
Northeast Utilties has participated with ISO-NE and NPCC and supports the comments filed by those organizations.
No
Northeast Utilties has participated with ISO-NE and NPCC and supports the comments filed by those organizations.
Yes
Northeast Utilties has participated with ISO-NE and NPCC and supports the comments filed by those organizations.
Northeast Utilties has participated with ISO-NE and NPCC and supports the comments filed by those organizations.
Northeast Utilties has participated with ISO-NE and NPCC and supports the comments filed by those organizations.
Northeast Utilties has participated with ISO-NE and NPCC and supports the comments filed by those organizations.
Northeast Utilties has participated with ISO-NE and NPCC and supports the comments filed by those organizations.
Northeast Utilties has participated with ISO-NE and NPCC and supports the comments filed by those organizations.
Northeast Utilties has participated with ISO-NE and NPCC and supports the comments filed by those organizations.
Northeast Utilties has participated with ISO-NE and NPCC and supports the comments filed by those organizations.
C â€“ Definitely do not support the revised standard
Northeast Utilties has participated with ISO-NE and NPCC and supports the comments filed by those organizations.
Group
North Carolina Electric Membership Corp
James Manning
North Carolina Electric Membership Corp
Yes and No
We think we understand the direction that the SDT is heading but needs to be clearer. Angular stability for a single unit is the focus of Generating Unit Stability where as System Stability involves multiple generating machines or plants, and may also encompass voltage stability of loads which should be addressed separately in our opinion since different tools are used for this assessment.

No

We assume that 2.4 is supposed to be for "System" Stability. Please confirm. R2.4.1 - Is this for On-Peak? Please confirm. Also the subrequirement that requires a model that "appropriately represents the dynamic behavior of loads" is too ambiguous. The requirement does not reference how that judgement is made nor who would makes the judgement. The subbullets are vague and provide no basis for performance. It should be clarified. How does the TP/PC model 3rd party loads from LSEs or DPs within its area that it interconnects? Is there an additional requirement to LSE/DPs needed in R9-R14 to collect such characteristics of load data? There is concern with load modeling requirements (use of word â€œappropriatelyâ€ in R2.4.1). Does this requirement mandate the use of specific load models for each bus, or would an aggregate load model which represents the system as a whole be sufficient? Does the use of the PSS/E CONL function satisfy the requirements for a load model? The subrequirements of R2.4.3 are much too vague and are subject to various interpretations. These should be more specific as to what should be assessed, e.g. 5% variation in load model. Why aren't the last 2 subrequirements already accounted for within the assessment? R2.5 is ambiguous. What is meant by "affects stability margins"? What is the technical performance margin for "affect"? As defined by whom? The TP/PC? the auditor? Is this a % change or what? R5.4 - OK R5.5 - We are OK with changes made, but we do share a concern with others that the requirement to perform simulations on 20 MW generators (to be consistent with the Registration Criteria) per R5.5.1 may be too much, and we recommend also a 75 MW generator cutoff for required simulations.

No

Although the modified definitions are an improvement over the previous version, addressing the following issues in the Consequential Load Loss definition will further improve clarity: 1) Redundancy: The second sentence in the definition says "Although Load which is lost as a result of the Load's response to the transient condtions of the event is considered Consequential Load Loss and is permitted when Consequential Load Loss is allowed,â€¦". It appears that "â€¦and is permitted when Consequential Load Loss is allowed,â€¦" is redundant and may be omitted/deleted -- isn't this *always* permitted for all events, except P0 (normal)? (See headnote 4 in Table 1 -- Steady State Performance). 2) Who are the "planning entities"? Suggest replacing with Functional Model terms Transmission Planner and Planning Coordinator. 3) Verbosity: It appears that the intent of the second sentence in the definition can be conveyed more concisely. Consider changing to "However, relying upon the expected Load loss during transient conditions of the event to meet steady state performance requirements is not allowed." 4) If the verbiage proposed above is found acceptable, we offer a follow-up suggestion. Because the second sentence in the definition essentially characterizes the exception to the allowed Consequential Load Loss during steady state performance evaluation, we suggest moving it out of the definition and appending it within headnote 4 in Table 1 -- Steady State Performance. 5) While the Consequential Load Loss definition employs the acronyms UFLS and UVLS, their expanded descriptions have been used in the Non-Consequential Load Loss definition. Suggest that these terms be used consistently in both definitions. Also, why is Special Protection Systems included as an example of what constitutes Non-Consequential Load Loss but is excluded from the list of exceptions to Consequential Load Loss (whereas UVLS and UFLS appear consistently in both)? Perhaps examples of each are needed: Consequential Load Loss examples might be a) tapped load from an outaged networked line from main station breaker to main station breaker of entire line, b) outaged T/T transformer serving radial load that that taps the networked transmission line, c) load served from a radial feeder from a single source. Non-consequential might include a) manual load dump or generator trip to mitigate cascading or uncontrolled load loss or an overload during adverse conditions, b) SPS addressing above, c) UFLS, d) UVLS.

Yes and No

The generation run-back/trip should not put any load or firm transfer at risk of also being harmed. Maybe this is implied within the conditions required.

Yes

We would like to add a couple of items for clarification. 1) Planning Coordinators and Transmission Planners should make it clear to LSEs, DPs and GOs as to what extent they model loads, reactive devices, and generators and not just rely on FAC-001, FAC-002 or the entities Facility Connection Requirements document to convey that information. 2) If requirements 9 through 14 are to be removed at a later date, then the SDT should be required to initiate the appropriate action or SAR before its disbanding to insure this happens.

Yes

Yes and No

We would like the headings to be repeated at the head of each page. Also, enumerate Stability Tables different from the Steady State to distinguish between them.

No

To provide clarity, a revised definition is proposed. A bus-tie breaker is a circuit breaker that connects two individual bus sections in a straight bus substation configuration. Substation

configurations such as ring-bus, breaker-and-a-half, or double bus-double-breaker do not have bus-tie circuit breakers.

Yes and No

The installation of bus-tie circuit breakers in a straight bus configuration would reduce exposure to a) bus faults or to b) line faults with breaker failure without adding much risk for internal fault in the bus-tie breaker. Those entities that employ a straight bus substation design with bus-tie breakers have recognized that failure of the bus-tie breaker, a very low probability event, would result in the loss of multiple transmission elements and perhaps firm load for a short time until the bus sections can be restored, but bus-tie breakers are an investment worth the risk. Therefore, it is generally agreed that the outage of non-bus-tie circuit breakers should have higher performance requirements than the outage of bus-tie circuit breakers. The SDT should be commended for this change since the previous draft version. However, it is not clear that adopting a higher standard of performance for planning events involving transmission facilities 345 kV and above will improve overall system reliability. Some areas of the continent already have n-2 planning criteria, yet these systems have still experienced significant outages including blackouts. It is suggested that a review of the Transmission Availability Data System (TADS) data, when available, should be conducted to help assess what system performance requirements need to be strengthened before arbitrarily determining to "raise the bar" for certain voltage levels and system designs. The industry should not be forced to invest a great deal of capital to meet a new standard requirement when it would not have an immediate impact on system reliability. Some sort of cost/benefit analysis should be performed to justify any change from the present TPL-001 through 004 standard requirements. Also, further clarification is required to explain how to drop consequential load without cutting firm transmission service to those affected/outaged customers, and this needs to be added to the notes in Tables 1 and 2.

Yes and No

Sensitivities to base assumptions for studies are always good utility practice. But we agree with others that these may be overly prescriptive in requiring each and every one. Allow the TP and PC to select the appropriate sensitivites for the annual assessments with input from customers and affected stakeholders. We are concerned that the requirement for every sensitivity each and every year would result in excessive burden to existing PCs and TPs doing this analysis with no resulting improvement to reliability.

Yes

N/A

N/A

N/A

N/A

N/A

N/A

N/A

B â€“ Unsure about supporting the revised standard

While we are satified that the changes are moving in the right direction, we share concerns that are being expressed by other SERC TPs and PCs that the standard may be overly prescriptive in some areas such as the sensitivies being required.

Group

E.ON U.S. Transmission Planning

Keith Yocum - Manger, Transmission Strategy & Planning

E.ON U.S.

Yes

Yes and No

R2.4 â€œThe Near-Term Transmission Planning Horizon portionâ€ implies that there are other portions of the [System] Stability analysis. This needs to be reworded to make it clear that there are no other portions. Add the word â€œSystemâ€ to make it clear. R5 The data to be included in all models for the Planning Assessment is included in R1. The discussion here is redundant. This should be deleted. R5.4.3.1 Is this the intent? â€“ Following Single Contingency events, Transmission configuration changes and redispatch of generation can be simulated to return the system to Normal Rating provided that all Facilities shall be operating within their Emergency Rating.

Yes

Yes and No

R3.5.1 Is this the intent? â€“ Following Single Contingency events, Transmission configuration

changes and redispatch of generation can be simulated to return the system to Normal Rating provided that all Facilities shall be operating within their Emergency Rating.
Yes and No
R1 states â€œEach Transmission Planner and Planning Coordinator shall maintain System models â€¦ and R7 states â€œEach Transmission Planner and Planning Coordinator shall determine and identify individual and joint responsibilities â€¦ but R9-R14 requires that data flow through the Planning Coordinator. Requirements R9-R14 should allow the data to be provided to either, as appropriate for the situation. R9 â€œneighboring systemsâ€ should be replaced with more descriptive terms such as Planning Coordinators of â€¦ or Transmission Planners of â€¦ R10 The Transmission Planner is a user of this data, just like the Planning Coordinator, and is not the source of this data. The responsibility should be placed on the â€œsource providerâ€ like R9 and R11-R14. R11 The requirement should be limited to planned outages and existing outages that may be long-term due to the spare equipment strategy. The contingency analysis covers all other future outages. R12 The requirement should be limited to planned outages and existing outages that may be long-term due to the spare equipment strategy. The contingency analysis covers all other future outages.
Yes
Yes
Yes
Yes
Yes and No
2. R2.1.3.2 refers to modification of expected transfers as a sensitivity test. Does this include transfers across the system, such as a transfer from Cinergy to TVA?
Yes
C â€“ Definitely do not support the revised standard
It is confusing that single Contingency and multiple Contingency are used throughout the document when the Categories in Tables 1 and 2 are Single Contingency and Multiple Contingency. Also System normal, normal conditions and Normal System are spread throughout the document. If they all mean the same, use the same wording. If not, explain the difference. R2.4.1. - Does this apply only to motors directly connected to the BES? Is there a size (hp/MW) limit? Who is responsible to provide this data to the Planning Coordinator? I would think it would both the Distribution Providers or the Generator Owners but R9 & R12 do not mention this. R2.4.1 refers to â€˜the dynamic behavior of Loadsâ€™ and induction motor loads. How would this model data be developed, and by who? R2.5.2. - Define â€œMaterialâ€. Is an addition of a load tap point material? R2.6.2. â€“ Define â€œstudy areaâ€. Does a topology change over 300 miles away trigger a stability study for a generating plant? R2.7.1.1. â€“ Define â€œproject initiation dateâ€. Would this include going to the PSC to get approval or just when construction begins? R3.2.1 states â€œâ€¦ and identify how the generators are treated in the steady state simulation.â€ What is meant by â€œtreatedâ€? I request the use of more descriptive wording. R3.2.2 states â€œâ€¦ and identify how loadability is treated in the steady state simulation.â€ What is meant by â€œtreatedâ€? I request the use of more descriptive wording. R3.3.1 â€œSystem normalâ€ is a Planning Event included in Table 1. R3.3.2 capitalize â€œSingleâ€ if you referring to P1 and P2 events. If not, this is confusing. R3.3.2.1 states â€œConsequential Load loss (expected maximum demand and expected duration) following a single Contingency shall be identified in the Planning Assessment.â€ Quantification of expected duration requires a probability analysis of load cycles, repair time, and potentially of other factors that will be difficult, if not impossible, to develop with any confidence. The Planning Assessment is based on a deterministic evaluation. Requiring the expected duration is inconsistent and useless. R3.3.2.2 Is this the intent? â€“ Following Single Contingency events, Transmission configuration changes and redispatch of generation can be simulated to return the system to Normal Rating provided that all Facilities shall be operating within their Emergency Rating. R5.3 states â€œâ€¦ and identify how the generators are treated in the simulation.â€ What is meant by â€œtreatedâ€? I

request the use of more descriptive wording. R5.5.1 and R5.5.2 should be moved to 2.5. These requirements outline the generators and the sensitivities to be analyzed. R5 appears to focus on Tables 1 and 2. R5.5.2 states â€œShall be performed for changes in the real power outputâ€¦â€ What types of â€œchangesâ€, or â€œchangesâ€ due to what? Is intention of the requirement, that Generating Unit Stability be assessed at two levels of real power output that differ by more than 10% of the existing capability or more than 20 MW, whichever is greater? R6 states â€œâ€¦ and document the proxies used in the simulationâ€¦.â€ What is meant by â€œproxiesâ€? I request the use of more descriptive wording. R8 ends with â€œThis distribution shall include:â€ Include what? Table 1 There used to be limits on multiple circuit towers and common ROW greater than 1 mile. Is this left to the Transmission Planner and Planning Coordinator? Extreme Events â€“ Item 3b is the same as Item 1, this should be removed. Table 2 Note 5.a.ii How can this be applied when the largest unit in the Balancing Authority Area is larger than the contingency reserve of the Balancing Authority. This requirement is excessive. At some level, subsequent trips of generators and/or lines should be allowed as long as Cascading does not occur.

Group

ERCOT System Planning

Jay Teixeira

ERCOT

No

Most industry commenters from the previous draft advised against making a distinction between system and generating unit stability, which are not commonly accepted industry terms. The only difference between the two seems to be location of contingencies tested. ERCOT suggests removing specific requirements for Generating Unit stability, as System Stability covers everything.

No

ERCOT believes R2.4.3, R2.4.4, R2.5, R5.2, and R5.3 should be deleted and R5.4 and R5.5 should be combined as follows: R2.4.3 should be deleted due to the unacceptable increase of stability runs required to meet the requirement. Considering sensitivities for outages of reactive resources and various dispatches and retirements for at least two different load levels is beyond the capability of most organizations, for both technical and manpower reasons. R2.4.4 is unbounded and not measurable, and should not be included as a requirement. R2.5 and all requirements for Generating Unit Stability analysis should be deleted since there is little or no difference between this and System Stability. R5.2 should be deleted because contingency definition standards should be defined in a modeling standard. R5.3 Voltage ride through capability should be included in the model provided by the generator and should not be necessary as a requirement in the TPL standard. R5.4 and R5.5 could be combined, as there is little or no difference between Generating Unit Stability analysis and System Stability analysis. In this case, R5.5.1 and R5.5.2 would be moved to R5.4 and R5.5.3 would be removed (repeats R.5.4.1). Also, it appears that R5.4.1 is in conflict with R5.4.2 because R5.4.1 says â€œidentified and evaluated for System Performanceâ€ but not have to meet requirements but R5.4.2 says â€œmeet requirements â€¦ Table 2â€. Also, R5.4.2 is repetitious with text of R5.

No

ERCOT feels the amount and duration of load loss should be considered in the definition.

No

The requirement is unclear whether runback is allowed if the conditions are met or if runback is allowed to meet the conditions. What is the need for generation run-back/tripping if all facilities are within their Facility Ratings? Many times the run-back/tripping of units, such as wind farms, is necessary to remove a post-contingency overload associated with these units. The protection scheme includes the run-back/tripping to allow these units to generate at higher levels pre-contingency.

No

ERCOT recommends that R1.1 be deleted. ERCOT shares the opinion of some that R1.1 is counter-productive and more likely to degrade reliability than improve it. R1.1 discourages transmission planners from revising inaccurate, speculative, or outdated modeling data by imposing new documentation burdens and compliance liability. Adding additional requirements to document changes to data required in requirements R9 through R14, MOD-010, and MOD-012 could induce an atmosphere of using inaccurate data to eliminate the need to document a needed change. Furthermore, it is believed that all modeling requirements should exist in a Modeling standard not a performance standard.

No

ERCOT believes R4 is unnecessary and does not address an actual problem; ERCOT recommends that R4 be deleted. ERCOT does not presently posess the capability or have access to the data needed to perform the calculations required by R4 as this requirement should apply to only the equipment owner (GO or TO).

No

The table is hard to read and follow since it spans multiple pages and the table headers are not repeated on each page. ERCOT believes that there are two many categories. For example, in Table 1 both Category P1 and Category P3 are not necessary. Since they require the same system performance and P3 is more severe than P1, it can be assumed that successful simulation of P3 would result in successful simulation of P1. Category P2-1 can not be simulated without modification to typical transmission models. Normal steady state power flow software typically has as a line either in or out of service, but not half in and half out. â€œBreaker Faultâ€ and â€œStuck Breakerâ€ definitions are included in the table notes, but would probably be better placed with the other defined terms. It is somewhat unclear as to why there are multiple names as the steady state system impact and requirements are the same. Also, the stability impacts would be more severe for a stuck breaker assuming delayed clearing. This would allow for removal of P2-3 and P2-4 in both Tables 1 & 2. It appears that P4 and P5 are duplicating efforts as well. It is not specified which entity is responsible to define and provide contingency definitions in industry standard software format such as those requiring knowledge of protection system failures and lines on the same structure for more than 1 mile. Only entities such as TOs and GOs have access to that knowledge.

Yes

Yes

The sensitivity cases suggested are unnecessary and unfeasible. For example, generation additions to cases that can already meet the load under contingency conditions do not create a reliability problem as the new generator can always be turned off. On the other extreme, sensitivity analysis of possible, unknown and uncontrollable generation retirements along with the Table 1 requirements of P3 (Generator + 1) contingency analysis presents an overwhelming study and documentation burden that will not add a corresponding benefit to the study and the results would be meaningless.

No

The former P5 of the first draft only required transmission circuits of 300 kV and above to be simulated out of service followed by loss of transmission circuit or transformer. P6 of the second draft requires all BES (100 kV and above) transmission circuits, transformers, dc lines, and shunt devices in combination of another BES circuit, transformer, dc line, and shunt device. The number of contingencies that have to be simulated increased dramatically to an impractical level and would require days of uninterrupted computer run time to complete. This, in combination with other contingencies and sensitivities required in this draft of the standard, is not feasible for large entities. ERCOT recommends that this planning event P6 retain the verbiage regarding transmission lines and transformer low side windings above 300kV.

At least 4 years. It will take as long as the largest entity in our system which has estimated about 4 years. We are totally dependent on them for all data needed for these studies.

he workload to support the existing TPL-001 to TPL-004 has already consumed two full-time senior positions. Add to that the new requirements for steady state studies necessary in this standard would take at least another full time position. The new stability study requirements and short circuit requirement added would double the number of people necessary for a total of approximately six full time positions with moderate to high experience levels. (Four incremental FTEs with estimated annual cost of $650,000). Purchasing additional licenses for study software is an additional expense.

C â€“ Definitely do not support the revised standard

The NERC reliability standard requirements should represent the minimum studies necessary to achieve reliability given the broad range of entities of various sizes and capabilities. Instead, the standards seem to represent the gold standard of the kind of studies that could be accomplished (steady-state, short circuit, and stability) given infinite time and resources with the number and variety of contingencies and sensitivities necessary. This level of steady state and stability studies can only be undertaken by the larger entities with a deep and experienced engineering staff. Why are most of the requirements applicable to a Transmission Planner and Planning Coordinator? Unless they are the same entity, this is an unnecessary duplication of effort. If a Planning Coordinator has a number of Transmission Planners in its region, then these requirements have to be fulfilled by each Transmission Planner for its individual area and the Planning Coordinator for the region made up of the individual areas? What is the Planning Coordinator coordinating if it is duplicating the work of the Transmission Planner?

Individual

Jason Shaver

American Transmission Company

No

Generating Unit Stability Study definition - We suggest deleting the text, "on the Transmission Facilities connected to that generating unit(s) point(s) of interconnection or one bus away from that point.", because certain Generation Facility contingencies should be considered and key Transmission Facility contingencies can be more than one bus away from the interconnection point. System Stability Study definition - We suggest this alternate wording: "Study that focuses on portions of the System, which may include many generating units with various Contingencies. This study is concerned with loss of synchronism, lack of damping of inter-area power oscillations, and voltages during the dynamic simulation." We suggest this wording because the definition of a study should not give the criteria, but rather the general elements of the study.

No

We disagree with the proposed R2.4.1 text. This inclusion of this requirement may be premature at this time for several reasons. There is presently no industry consensus on how the dynamic behavior of loads should be properly represented and analyzed. In addition, it would be a large and difficult effort to identify, collect, and maintain the pertinent information. It is presently difficult to obtain and maintain the percentage of residential, commercial, and industrial load at each transmission interconnection point, much less try to get the proper percentage of the various types of induction motor loads. We do not accept the R2.4.3.1 text and want some explanation of the what, when, and how to provide the technical rationale for why each condition was or was not used. In R2.4.3.1, what is meant by â€œvariationsâ€ (e.g. how much variation is enough)? In R2.4.3.2, what is meant by â€œmodificationâ€ (e.g. how much modification is enough) and "expected transfers" (e.g. firm or non-firm transfers)? In R2.4.3.3, what is meant by â€œlong lead timeâ€ (e.g. 1 month, 1 season, 1 year, 2 years, etc.)? In R2.4.4, we believe this requirement should not be added. Why was it included? It seems superfluous, because any entity can study other sensitivities if they want. Why should TP or PC have to study what the other entity wants to study? Who would be the judge in case of disagreement over the technical rationale? In R2.5.2, Why was the addition of a new substation included? We would not expect a new substation to negatively impact the system or generating unit stability. We note the R5.5 and R5.6 should really have been updated to refer to 5.4 and R5.5. In R5.4.3.1, we suggest that the time-limited aspect of Facility Ratings be included in the Glossary Definition and then it would not need to be clarified in various locations (R3.3.2.2, R3.5.1, R5.4.3.1, Table 1-Note 1, & Table 2-Note 1) throughout the standard.

No

For Consequential Load Loss definition, we suggest that the last sentence be deleted because it is application text, rather than definition text. We accept the Non-Consequential Load Loss definition as written.

No

We generally accept this text, but would like the Facility Rating reference to include the applicable time frame (see response to Question 2.)

No

We disagree with the approach of temporary requirements because of the problems that arise due to conflicting or uncoordinated standards (e.g. conflicting requirements between FAC-010-1 and TPL-002-0). We support the approach of developing appropriate MOD standards SARs to make the desired changes. However, if these requirements are retained than we suggest the following few changes to R9-R14. In R9, revise the text to: "â€¦ load forecast data for at least the coincident peak of each year â€¦" In R10, revise the text to: "Each Transmission Service Provider shall provide â€¦" In R11, is the text referring to "known planned outages" and "known long term outages"? What is the distinction that is meant to be made between the two specified types of outages? In R12, revise the text to: "â€¦ modeling information for planned facilities changes, known planned outages â€¦". Also, is the text referring to "known planned outages" and "known long term outages"? What is the distinction that is meant to be made between the two specified types of outages? In R13, revise the text to: "â€¦ for planned facilities changes for each year of the Transmission planning horizon including but not limited to generators, and new technologies â€¦". This wording broadens the meaning from simply "new" facilities to also include any "changes" to existing facilities. We suggested removing the reference to Reactive Power Devices because these devices would not be owned by Resource Planners. In R14, revise the text to: "â€¦ for planned facilities changes for each year â€¦". This wording broadens the meaning from simply "new" facilities to also include any "changes" to existing facilities.

No

We suggest added clarification of the following questions: 1. Should analysis be performed for the near-term and long-term planning horizon? 2. Should only the peak system condition be analyzed? 3. What does the analysis include (e.g. breaker overduty evaluation and protective relay coordination)? 4. Does the analysis of single contingency for greater duties refer to only the

P1 category or both the P1 and P2 categories? R4 - Does the equipment capability reference include the ground grid and bus structures?

No

We think that the tables are so similar that they should be recombined into one. This would require reasonable adaptation of the tables. If the tables are kept separate, then we suggest that the Categories symbols in Table 1 and Table 2 be different to help distinguish between them (e.g. P1:S1, P2:S2, P3.2:S3.2, etc. We suggest that the header text (i.e. Category, Initial System Condition, etc.) be repeated on every applicable page to be more reader-friendly. The superscripts do not refer clearly to the respective notes. (There are numbered notes in the beginning of the table, numbered items in the extreme events evaluation requirements section, numbered items in extreme event description section, and numbered notes at the end of the table). Perhaps the referenced notes should have unique numerology or format to make the superscript references clearer.

No

We suggest applying the proposed definition to a new term, "Straight Bus-Tie Breaker". The creation of a narrow, special application definition of "bus tie breaker" is generally confusing and misleading. The term "bus tie breakers" is widely used in the industry in the context of various bus configurations. In addition, this narrow definition may create confusion if other Standards refer to bus-tie breaker in a different context.

No

We recognize that the addition of this requirement is an attempt top raise the bar above the existing standards. However, the more stringent non-bus-tie performance criteria should only be adopted if there is sufficient evidence to demonstrate the expected reliability risk (i.e. system impact x probability of occurance) is high enough to warrant the cost of the system modifications that would be needed to meet the criteria. System modifications that involve the installation of line and substation facilities >300 kV will likely take years and cost tens to hundreds of millions to build. It would be helpful to have a reliability risk analysis that justifies the application of this performance criteria before it is adopted.

No

For R2.1.3, we would like further explanation of what technical rationale is expected and how it should be provided as to why each condition sensitivity was or was not used. In the subrequirements, we are unsure of what is exactly meant by "variability of load demand and load power factors", "modification of expected transfers", "long lead time Facitilites", and "modification of planned outages". For R2.1.4, it is unclear what specific performance requirements must be met for these other sensitivities. We would also like some explanation of what technical rationale is expected and how it should be provided as to why each condition sensitivity was or was not used.

Yes

We suggest that there be more explanation of what system adjustments are permitted. We understand that the revised P6 allows loss of Non-Consequential Load for Systems below 300 kV as well.

We estimate that the additional one-time costs of supplemental studies and analyses to meet the new requirements might be spread over five years because some analysis only has to be updated every five years. So, we estimate that the total cost over five years for additional staff or consulting services may about $200,000 to $300,000.

We estimate that the lead time to perform supplemental studies and analyses to meet the new requirements might be up to 5 years.

We estimate that the on-going additional cost of expanded studies and analyses to meet the new requirements might be about $150,000 to $200,000 for additional staff.

We estimate that the one time cost for expanded studies and analysis documentation to meet the new requirements might be about $20,000.

We estimate that the on-going cost for expanded studies and analysis documentation to meet the new requirements might be about $10,000.

The additional one-time costs of system reinforcements to meet the new requirements would depend on the results of the new studies and be hard to forecast. However, if they involved just a few 345 kV substation modifications and 345 kV line additions, then we would estimate that it costs may be in the range of hundreds of millions of dollars.

The lead time to build new system projects would depend on the results of new studies and be hard to forecast. However, if they involved a 345 kV substation modification or a 345 kV line addition, we estimate that it might take 5 to 7 years to complete the substation project and 8 to 12 years (or more) to complete the new transmission line project.

B â€“ Unsure about supporting the revised standard

We agree with most of the requirements of revised standard. However, the following list of suggestions and comments are given for consideration. Definitions: We agree with the removal of the "Base Case" definition and the revisions to the other definitions, except as noted above or

below. Long Term Planning Horizon definition: We suggest a slight text change of: "Transmission planning period that covers years six through ten. Studies beyond ten years are required to accommodate . . .". Accountability: We suggest that Transmission Service Provider be added because we also suggest that the Transmission Service Provider be the responsible entity for R10. Requirements: We agree with the revisions to the Requirements, except as noted above or below. R1.1 - We agree with the requirement, but would like more description of what to provide in the technical rationale. R2.1 - We agree with the requirement, but suggest this text change, ". . . by the following annual studies . . .". R2.6.1 - We agree with the requirement, but suggest a slight text change of: " . . . short circuit, Generating Unit Stability or System Stability analysis . . .". R2.6.2 - We agree with the requirement, but suggest a slight text change of: " . . . short circuit, Generating Unit Stability or System Stability analysis . . .". R2.7 - We agree with the requirement, as long as it is really required by FERC Order 693 paragraph 1704. R2.7.1 - We agree with the requirement, but suggest a slight text change of: " . . . or Special Protection Systems, . . ." R2.7.1.1 - We disagree with the "include project initiation date" portion of this requirement. The initiation date is often uncertain and subject to change, which may add considerable work to investigate, monitor and update the date. In addition, we do not know why this information is required to assure BES reliability. R2.7.2 - We agree with the requirement, as long as it is really requried by FERC Order 693 paragraph 1704. R3.2.2 - We agree with the requirement, but suggest a slight text change of: "For all BES Transmission lines . . .". R3.3.2.1 - We agree with the requirement, but suggest a slight text change of: ". . . shall be allowed in the Planning Assessment". R3.3.2.2 - We agree with the requirement, but suggest a slight text change of: ". . . within their Facility Ratings and within the time period allowed by the applicable time limited ratings.". R5 - Is the text refering to "known planned outages" and "known long term outages"? What is the distinction that is meant to be made between the two specified types of outages? R5.1 - We agree with the requirement, but suggest a slight text change of: ". . . the response of the applicable portion of the BES". R5.2 - This clarifying requirement should also be included in the short circuit analysis section. R5.3 - We agree with the requirement, but suggest a slight text change of: ". . . capability of all generators that may have a significant adverse effect on the BES." R5.4.3.1 - We agree with the requirement, but suggest a slight text change of: ". . . within their Facility Ratings and within the time period allowed by the applicable time limited ratings.". R8 - We disagree with the requirement, but suggest a text change of: "Each Planning Coordinator shall establish a list of neighboring system and coordinate the distribution of Planning Assessment results among affected entities the listed neighboring systems, coordinating analysis of these results through an open and transparent peer review process." Table 1 Planning Events Header: We suggest that the header be repeated on every applicable page to be more reader-friendly. Superscripts: The superscripts do not refer clearly to the respective notes (e.g. there are number notes in the beginning of the table, in the extreme events evaluation requirements section, in extreme event description section, and at the end of the table). Perhaps the notes at the end of the table should have unique numbering to make the superscript references clearer. Shunt device: To avoid the need for future interpretation or clarification, we suggest that the meaning of shunt device be explained or defined somewhere in the standard (e.g. cap bank, inductor bank, SVC, STATCOM, etc.). We need to find out how shunt device outages can (or could in the future) be automatically included in the ACCC routine. We interpret that if each stage of a capacitor bank has a circuit switcher, then the outage would be of the largest cap bank stage. P2.2 (>300 kV), P2.3(>300 kV), P3 (>300 kV), P4 (>300 kV), P5 (>300 kV) - We recognize that the addition of this requirement is an attempt top raise the bar above the existing standards. However, the more stringent performance criteria should only be adopted if there is sufficient evidence to demonstrate the expected reliability risk (i.e. system impact x probability of occurance) is high enough to warrant the cost of the system modifications that would be needed to meet the criteria.. System modifications that involve the installation of line and substation facilities >300 kV will likely take years and cost tens to hundreds of millions to build. It would be helpful to have a reliability risk analysis that justifies the application of this performance criteria before it is adopted. If the proposed >300 kV performance requirement is retained, then we would want the implementation timeframe to be long enough to allow reasonable time to transition from a system built to the old requirement to a system built for the new requirement. The time needed for planning, design engineering, regulatory approvals, and construction of >300 kV facilities can be very long (e.g. up to 10 or more years). P7 - We disagree with this requirement. Wisconsin statues require giving preference to using existing ROW for new transmission circuits, but this requirement discourages building multiple circuits on common ROW. Should there be a waiver in this standard similar to the TLP-503-MRO-1 standard for lines slightly more than 1 mile based on a review? Extreme Event Evaluation Requirements 2 - We agree with the requirment, but perhaps a definition be added for "System Controls", since one exists for "System Protection". 3 - We agree with the requirement, but suggest a slight text change of: "Simulate Normal Clearing unless otherwise specified in the Extreme Event Descriptions." Extreme Event Descriptions 2a - We agree with the description, but suggest a slight text change of: "Loss of a structure or tower line with three or more circuits.." 2b & 3b - We agree with the descriptions, but suggest referring to the defined term: "Right-of-Way." 2e, 3.a.i, & 3.a.ii - We agree with the descriptiona, but how large is "large" and how major is "major"? 3.a.v - What is meant by successful cyber attack? Is it a type of cyber attack

that is documented to have been successful? 3c - We agree with the description, but suggest a slight text change of: "Other events based upon actual operating experience such as:" Note 4 - We agree with the description, but the acronym FACTS should be explained in the standard or a definition be added for "FACTS". Table 2 1 - We disagree with this note. We suggest that it be expanded to include the applicable part as Table 1. "The System shall remain stable. In addition, Facility Equipment Ratings shall not be exceeded. Planned System adjustments are allowed, unless precluded in the Requirements, to keep Facilities within the Facility Ratings, if such adjustments are executable within the time duration applicable to the Facility Ratings." 3 - We disagree with this note. We suggest that it be expanded to include the applicable part as Table 1. "Dynamic voltage instability, Cascading outages, and uncontrolled islanding shall not occur." Between 3 & 4 - We disagree with omitting Note 4 of Table 1 from Table 2. We suggest including: "Consequential Load and consequential generation loss is allowed for all events shown." Planning Events Same comments on Header, Superscripts, and Shunt Device as in Table 1. Same comments about stricter requirements for P2.2 (>300 kV), P2.3 (>300 kV), P3 (>300 kV), P4 (>300 kV), P5 (>300 kV) as in Table 1. Same comment about P7 as in Table 1. Extreme Event Evaluation Requirements Same comment about Requirement 2 and 3 as in Table 1. 3 - We agree with the requirement, but suggest a slight text change of: "Simulate Normal Clearing unless otherwise specified in the Extreme Event Descriptions." Notes 5 - We disagree with limiting this requirement to just Category P1 category. We suggest that the synchronism requirement be applied to more categories.
Individual
Greg Rowland
Duke Energy
Yes
No
R2.4.1 Load models that appropriately represent the dynamic behavior of induction motors are under development and may not be available for sometime. The implementation plan should take this into account and allow at least 36 months for implementation. This requirement is not immediately achievable. R2.4.3 - Although we agree with the perceived intent of R2.4.3, we believe the wording should be revised to make it very clear that it is not necessary to perform studies to substantiate your technical rationale for choosing not to perform any particular sensitivity study. Documented engineering judgment to support the decision not to perform the particular sensitivity studies should be sufficient. R2.4.3.1 should clearly state whether the load model refers to overall system load or parameters of the dynamic load model at individual busses. Recommend renumbering R2.4.4 to R2.4.3.6, and reword R2.4.3.6 as follows: Any other sensitivity, as deemed appropriate by the Transmission Planner or Planning Coordinator for their individual systems. R2.4 should say "System Stability", not just "Stability".
Yes
Yes
Generation run-back and tripping should be allowed and the proposed sub-requirements are appropriate.
Yes
In order to ensure these requirements move to the MOD standards, the TPL SDT is encouraged to write a SAR to get the data related changes into the MOD standards or add it to the issues to be considered by the drafting team in the development plan under project number 2010-04.
No
It is not clear in R4 what is meant by â€œsingle contingencyâ€ and this situation is unlikely to increase fault current. The phrase â€œunder normal conditions and following any single Contingency condition that would result in greater circuit breaker interrupting dutiesâ€ should be deleted.
Yes
Separating the steady state and stability tables greatly improves and clarifies the requirements of the standard. The tables could be improved if the headings were put on each separate page. Placing headers in the requirements section of the standard would improve understanding of the flow of the document.
No
The use of the word â€œstraightâ€ in the definition raised questions and did not seem crucial to the definition. We recommend the word â€œstraightâ€ be removed from the definition.
No
In Table 1, Category P4, Events 1 through 5 addressing a stuck non-bus tie breaker >300kV should allow Interruption of Firm Transmission Service and Non-Consequential Load Loss, because P4 addresses a multiple contingency.

No

Although we agree with the perceived intent of R2.1.3, we believe the wording should be revised to make it very clear that it is not necessary to perform studies to substantiate your technical rationale for choosing not to perform any particular sensitivity study. Documented engineering judgment to support the decision not to perform the particular sensitivity studies should be sufficient. Recommend renumbering R2.1.4 to R2.1.3.8 and reword as follows: Any other sensitivity, as deemed appropriate by the Transmission Planner or Planning Coordinator for their individual systems.

Yes

The changes are more practical. If two or more 500kV lines are lost, it makes complete sense to allow loss of non-consequential load so long as cascading outages are not triggered. ï€ While we agree interruption of firm transmission service and non-consequential load loss should not be allowed to meet the planning requirements for the first system contingency (defined as initial system condition in the table), these system adjustments should be allowed to prepare for the second event so that the system will meet the requirements following the second event. ï€ We recommend that clarifying changes be made to incorporate this concept. We recommend that the statement above be included as a modification or as a footnote for the P6 portion of the Steady State and Stability tables as follows: "For P6 multiple contingency events, Transmission configuration changes and redispatch of generation are allowed provided that all Facilities shall be operating within their Facility Ratings and within their thermal and voltage limits. Permissible Transmission configuration changes include dropping of load and firm transfers needed to prepare for the second contingency. See our related response to question 15.

B â€“ Unsure about supporting the revised standard

While we generally support the revised standard, we are unsure of the total cost impact, and whether the additional costs are justified by increased reliability. 1) Load Modeling is a significant open issue. The models for dynamic studies have yet to be developed and the data is not in hand. This standard should allow for the use of the best available information. 2) Category P6 is the loss of a system element, following system adjustments, followed by the loss of another element. The table columns for this category say that interruption of firm transmission service and non-consequential load loss is allowed. The table, however, is not clear whether the interruption of firm service and non-consequential load loss is allowed as part of the system adjustment (between the outages) or whether it is only allowed after the second outage. It was stated in the NERC TPL SDT WebEx that the interruption is not allowed as part of the system adjustment. This would be a dramatic change from the existing standard and would result in the unintended consequence of significantly reducing transfer capability of interfaces to a fraction of their currently reported capability. This would in effect be imposing an n-2 criteria for offering firm transmission service. Duke Energy does not believe this would be an acceptable situation for the users, owners and operators of the bulk power system. 3) The statement in R2.7 "Corrective Action Plans do not need to be developed solely to meet the performance requirements for sensitivities," implies that there are performance requirements for sensitivity studies. Recommend rewording to clarify that there are no performance requirements for sensitivity studies. 4) Recommend rewording R3.3.2.1 as follows: "The single highest consequential load loss and its expected duration following a single contingency shall be documented in the Planning Assessment." 5) In R5.3 the statement, â€œand identify how the generators are treated in the simulation,â€ should be deleted. The word "treated" is vague and typically specific equipment modeling is not identified in studies. The implementation schedule should also take into account the Standard to develop and provide this data is not approved. Since this data is not yet available, please revise the statement as follows: â€œStudies shall use the best available information to consider the voltage ride through capability of all generators." 6) In Table 1, Category P2 Event 1 needs to be revised to recognize the impact of this event on Bulk Electric System reliability for events on the system that are > 300 kV vs. events on the system that are <= 300 kV. P2.1 should not allow for interruption of firm transmission service or loss of non-consequential load for > 300kV; however, it should allow for interruption of firm transmission service or loss of non-consequential load for <= 300 kV. The requirement as currently written would require expenditures for the <= 300 KV system where such an event has minimal impact on Bulk Electric System reliability. In addition, the likelihood of events needs to be considered as requirements are developed. A review of Duke Energy Carolinas data shows that the likelihood of a P2.1 event on Dukeâ€™s 100 kV system is an order of magnitude less than for a P1 event on the same 100 kV system. This is another indicator that the requirement as written would result

in the need for expenditures that provide minimal value to enhancing the reliability of the Bulk Electric System.

Group

FRCC

Richard Becker

Florida Reliability Coordinating Council, inc

No

R2.4.4 and R2.4.3 as written can create issues during the compliance assessment. These requirements place the burden of justifying the inclusion / exclusion of the sensitivities on the TP or PC. Thus, only a sensitivity deem appropriate by the TP or PC and not performed can be found non-compliant. R2.4.4 can be eliminated by changing the wording in R2.4.3 to include sensitivitiesâ€™ deemed appropriate by the TP or PC as follows: â€œFor each of the studies described in Requirement R2.4.1 and Requirement R2.4.2, sensitivity case(s) deemed appropriate by the Transmission Planner or Planning Coordinator that stress the System to reflect, but not limited to, one or more of the following conditions shall be run and documentation of the technical rationale for why each of the conditions was or was not selected shall be supplied.â€

No

Propose changing the word â€œaâ€ to â€œanyâ€ in the definition of Consequential Load Loss. Consequential Load Loss: Load that is no longer connected to â€œANYâ€ source as a result â€¦ The second sentence in the definition could be interpreted to disallow voltage dependent load models to meet Steady State Performance requirements. Since many planning events result in steady state voltage significantly lower than nominal, system load would be reduced. This definition would be clarified by differentiating load that is lost (no longer connected to a source) and load that is reduced as a result of reduced system voltage. Although Load which is lost (no longer connected to a source) as a result of the Loadâ€™s response to the transient conditions of the event is considered Consequential Load Loss and is permitted when Consequential Load loss is allowed, Transmission planning entities are not allowed to rely upon the expectation of such Load Loss to meet steady state performance requirements.

No

R3.5.1 â€“ This requirement should be clarified to state that all facilities shall operate within their Facility Ratings before, during and after system adjustments including generation adjustments. R3.5.2 â€“ How can an entity demonstrate that it is not violating this requirement.. The SDT should indicate the type of regulatory and/or statutory requirement that this requirement trying to address (i.e., FERC, EPA, etc.)?. Otherwise, the FRCC recommends removing R3.5.2. R3.5.3 â€“The SDT should clarify this requirement to define what is meant by sustainable and stable. Sustainable and stable may not necessarily be the same as being in a secure condition (ready for the next possible event).

No

R9 through R14 â€“R9 through R14 should not be addressed in this TPL Standard. Requirements R9 through R14 should be included in future revisions to the MOD standards. If R9 through R14 remain in the Standard, then the following comments are appropriate: R9 â€“ Recommend adding â€œand season (as defined by the Planning Coordinator)â€ after â€œâ€¦ load forecast data for each yearâ€. Recommend adding â€œ(as defined by the Planning Coordinator)â€ after â€œTransmission nodesâ€ to allow the Planning Coordinator to appropriately define the term Transmission node. Recommend deleting â€œincluding the expected mix of industrial, commercial, and residential Loads,â€ from the requirement since this information is not required by Transmission Planners or the Planning Coordinator. Many distribution providers will not know the mix of load type for a given Transmission node. R11 â€“Recommend the removal of â€œwith consideration given to spare equipment strategy,â€ from this requirement. We feel that the consideration of spare equipment strategy would be better suited in an operating horizon standard (TOPâ€™s) rather than in the TPL standard. The term â€œlong-term outageâ€ in this requirement is vague and the text â€œand long-term outagesâ€ should be eliminated. The FERC language in Order 693 P-1725 states â€œAccordingly, the Commission directs the ERO to modify the planning Reliability Standards to require the assessment of planned outages consistent with the entityâ€™s spare equipment strategy.â€ There is no mention of â€œlong-term outagesâ€ in conjunction with spare equipment strategy. R12 â€“ Recommend rewording as follows: â€œEach Generator Owner shall provide its respective Planning Coordinator with modeling information for known planned generator outages for each year of the Transmission planning horizon, within ninety days of a request for such information.â€ The language â€œlong-term outages for generation equipmentâ€ is vague and unclear as to what is a long-term outage and what specific type of generation equipment should be considered. R13 â€“ Propose adding â€œand any changes to existing plansâ€ after â€œnew planned facilitiesâ€ as shown below: â€œEach Transmission Planner shall provide its respective Planning Coordinator with modeling information for new planned Facilities and any changes to existing plans for each year of the Transmission

planning horizonâ€¦â€

No

Recommend for the removal of both R2.3 and R2.4. Short Circuit analysis should be addressed in FAC-002 by revising the standard to include additional detail within FAC-002. Another option would be to develop a new standard addressing short circuit studies and requirements.

No

The Steady State and Stability Performance Tables are very long (currently the these two table are 13 pages) and confusing. Please consider combining and condensing the two tables into one, and either add footnotes or expand the table headings to allow better understanding of the performance requirements.

No

R2.1.3 and R2.1.4 as written can create issues during the compliance assessment. These requirements place the burden of justifying the inclusion / exclusion of the sensitivities on the TP or PC. Thus, only a sensitivity deem appropriate by the TP or PC and not performed can be found non-compliant. R2.1.4 can be eliminated by modifying the wording in R2.1.3 as follows: â€œ For each of the studies described in Requirement R2.1.1 and Requirement R2.1.2, at least one sensitivity shall be performed that stress the system based on one or more of the following conditions, plus any additional conditions determined by the Transmission Planer and Planning Coordinator. The Planning Assessment will also include the technical rationale for why each of the conditions was or was not selected for study that year.â€

No

For P6 events (and all other events that allow system adjustments after the loss of a transmission device), this draft does not clearly define when the requirements in the columns marked as â€œInterruption of Firm Transmission Serviceâ€ or â€œNon-consequential Load Loss Allowedâ€ apply. The SDT should clearly state that the requirements in these columns are only applicable after the Event occurs from the Initial System Condition. In addition, the SDT should make it clear whether Interruption of Firm Transmission Service and Non-consequential Load Loss is allowed in preparation for the 2nd Event. On the NERC conference call for the 2nd draft, the SDT chair indicated that Interruption of Firm Transmission Service and Non-consequential Load Loss is not acceptable in preparation for the next event. In Order 693, Para. 1788 - Para. 1796, FERC distinguished between â€œpreparing for the next contingencyâ€ and returning to a system normal state. The SDT removed the allowance that was made in footnote c of TPL-003-0 to â€œTo prepare for the next contingency, system adjustments are permitted, including curtailments of contracted Firm (non-recallable reserved) electric power Transfers.â€ (emphasis added) for Category C3 events (now P6 for facilities greater than 300kV). This change in the standard is not directed by the FERC Order 693 and is not a reliability improvement that is cost justified. Forced outage rates for equipment greater than 300kV is very low and the impact on markets is very large. Many utilities have granted long term transmission service to entities with the expectation that the service can be curtailed if required in preparation for the next event. If this is not allowed, entities within FRCC will have to greatly reduce the long term firm imports into FRCC or construct additional EHV transmission lines from a location well into Georgia down to a point in the southeastern portion of FRCC. While an in-depth cost has not been completed for a project of this size in many years, it is reasonable to expect that a cost in excess of $1.5 - $2.0 Billion. This investment will only slightly increase the amount of firm imports into FRCC (and replace the imports allowed before this change) for an event that may only occur only once every 20+ years. If this event happens, the Transmission Owners will re-dispatch their own generation to curtail their transactions in addition to curtailing the firm transmission service of others, per their OATT. The SDT should clearly state for these Planning Events, all system adjustments including Interruption of Firm Transmission Service and Non-consequential Load Loss is acceptable in preparation for the second Event where system adjustments are allowed between events.

C â€“ Definitely do not support the revised standard

The SDT should consider and allow, for all planning events, , loss of Non-Consequential load as an interim measure for a period of up to 5 years in the situation where system load growth has caused post-contingency action plans to not effectively bring Facilities within normal operating limits due to unexpected or unforeseen regulatory requirements, equipment capability* and/or

the installation of large industrial/commercial customers. *Equipment Capability is added to address unforeseen industry changes in the methodology used to calculating the rating of equipment.

Individual

David M. Conroy

Central Maine Power Company

No

There should be no difference beween System and Generating Unit Stability studies. Each require discretion regarding which events need to be tested. The consequences are potentially similar: either the instability of one of more generators. Extreme Events should be considered for any stability analysis, again, recognizing that discretion needs to be applied when selecting or dismissing particular contingencies. Therefore, the definition of Generating Unit Stability Study should be stricken from the standard.

No

a. A MOD standard should be developed to address the assembly of dynamic load models, rather than specifying modeling in paragraph 2.4.1 (dynamic behavior of loads, including consideration of the behavior of induction motor Loads). Paragraph 2.4.1 should instead read, "System Peak Load for one of the five years." The remainder of the paragraph should be deleted. b. In paragraph R.2.4.3.4, what does "variability" mean? Is variablity more of a concern than an outage? Suggest changing paragraph R.2.4.3.4 to simple say "Outages of Reactive Resources" c. Add a new requirement, "R5.4.3.4 Automatic generator tripping shall not have an significant adverse impact on overall system reliability." d. Remove Heading R5.5 and make generator unit stability for a new facility a section of overall stability requirements. e. Modify R5.5.1 to become R5.4.5, with the following, "Shall be performed for the addition of an individual generating unit or generating units at the same interconnection point 20 MW or greater that are directly connected to the BES." There may be little difference between the stability performance of a single 20 MW unit and an aggregation of units totalling 20 MW at the same BES interconnection point. f. If planning assessment studies all generators or stations above 20 MW, as suggested by R5.5.1, then this provision is unnecessary and R5.5.2 should be deleted. g. If the output of a generatiing station does not change by more than 20MW, then no new study is required and, it should be acceptable to rely on past stability assessments. This is not clear in R5.5.1. h. With respect to section R5, the concept of planned and long-term outages should be addressed uniformly for the general Planning Assessment. It should not be specific to the Stability Assessment. i. Planned and long-term outages are two fundamentally different concepts and should be treated separately. Planned and Long-Term outages should be defined. Define how planning events in Tables 1 and 2 are associated with each type of outage. Define length of a "Long Term" outage. Planned outages should be addressed in the operating horizion unless otherwise defined in the planning horizion. j. The provisions of Section R.5.3 should be included in a MOD standard and applied to a requirement to provide information regarding all direct and indirect protective and control actions that could result in the inadvertant trip of the generator. Such a provision should include "other equipment (e.g. HVDC, SVC's, Statcoms)", and identify how these devices are treated in the simulation. k. Strike R5.5.3 and R5.5.4, as they become redundant to R5.4.1

No

There are a few significant concerns with these definitions: The definitions should be expanded to include interruption of Firm Transmission Service in a manner that is comparable to interruption of load; otherwise, Firm Transmission Service (FTS) is being treated in a manner that is superior to load. (The expansion of the defintions to include FTS would also address stated concerns associated with loss of radial or single facilities over which Firm Transmission arrangements have been made). There are perceived limitations to what constitutes Non-Consequential Load Loss. It must be clear that Non-Consequential load loss allows the cascading loss of a local area that does not adversely impact the BES. It would be impractical and unnecessary to anticipate that every such situation could be or needs to be managed by operator action or automatic control. Non-Interruptible load should be defined as, "Demand that the end-use customer has not made available to its Load-Serving Entity via contract or agreement for curtailment." The Consequential Load definition should specify "Interruptible and Non-Interruptible Load that is no longer connected to a sourceâ€¦" The inclusion of "or which is lost as a result of the load's response to the transient conditions of the event (other than through the action of UVLS or UFLS schemes)" confuses the definition of Consequential Load Loss, because of the imbedded exception for steady state performance. It seems that the intent of this provision is to recognize that this type of load loss could occur for either transient or steady state conditions and that Planning Assessments should not be required to remedy this type of situation. However, this does seem to be at odds with the application and stated acceptability of Consequential Load Loss as noted in Table 1. Note: Table 2 has no reference to the treatment of Consequential Load Loss. It may be helpful to address the transient load loss situation in a separate defintion. Recommended Changes: Change "Consequential Load Loss" and definition to "Consequential Interruption - Load, Firm Demand, or Firm Transmission Service that is no longer connectedâ€¦" Change "Non-Consequential Load Loss" and definition to "Non-Consequential

Interruption - Non-Interruptible Load, Firm Demand, or Firm Transmission Service loss other than Consequential Interruption loss that occurs through manual (operator initiated), automatic operations such as under-voltage Load shedding, under-frequency Load shedding, or Special Protection Systems, or uncontrolled loss of a local area which does not significantly impact the BES."
No
R3.5.1, R3.5.2 and R3.5.3 are not limiting enough. Add paragraph 3.5.4 "Automatic generator tripping shall not impose undue complexity and risk to the operation and relability of the system."
No
a. With respect to R9 "including the expected mix of industrial, commercial and residential loads", this provision may be inadequate to be practically useful. The potential issues include the variation in end-use load mix through the daily load cycle, seasonal load composition variations, and the ability to translate these end-uses into reasonable and useful steady-state and dynamic load models. It is important to understand how the information will be used and how much additional detail such as distribution network detail is also required. b. Add to the last sentence of R9 through R14 the following phrase, "within ninety days of a request for such information or as otherwise described in procedures established by the Planning Coordinator."
No
a. R2.3 should be changed to indicate the year(s) for short circuit analysis. b. In R4, suggest replacing, " and following any single Contingency condition that would result in greater circuit breaker interrupting duties" with, " giving due consideration to the potential sequence of equipment operation". c. It should be stated in the standard that assumptions should be based on procedures provided by each Transmission Planner and by the Planning Coordinator.
No
a. In both Table 1 and Table 2, the "Interruption of Firm Transmission Service Allowed" column. It is problematic to try to create an "exemption" based on type of facility such as HVDC. There are many other situations in which Firm Transmission Service has been provided, but may need to be curtailed partially or completely following an outage. b. The term 'Firm' may have several different definitions. If 'Firm' Transmission Service or load may be interrupted for exceptional events, then it is conditional and 'Conditional Firm' should be defined. It is recommended that a note be added stating that "the only exception would be for curtailment of conditioned (or Conditional) Firm Transmission Service", recognizing that there may need to be some form of grandfathering in order to avoid having to rewrite transmission service agreements. c. In both Table 1 and Table 2, the "Extreme Event Descriptions" item 1 should add "or shunt device." d. In Table 1, the "Extreme Event Descriptions" items 3a and 3b should be deleted; they are redundant with Item 1. e. In Table 2, Note 5 includes significant clarifications and should not be buried in the bottom of the contingency table; Note 5 would be better placed in the definitions section. f. In Table 1 and Table 2, Contingency P5 requires a fault plus Protection System Failure. Assuming that the battery system is included in the Protection System, which it is in NPCC, then ALL protection at substations with single battery systems would be lost. This Contingency P5 requires a stable system response while all bus voltages and loadings to remain within criteria, without interruption of firm transmission service and without Non-Consequential Load Loss, at system voltages above 300 kV. Was this an intended outcome of this standard?
No
The definition provided is too limiting. It indicates that if a substation has two rings with a bus tie breaker in between, that breaker is no longer a bus tie breaker. Recommend instead, "A circuit breaker that is positioned to connect two individual station configurations. The breakers in a bus scheme are not bus tie breakers but the breakers that tie bus schemes together are bus-tie breakers."
No
They should have the same performance requirements, however we understand that it is better to encourage bus-tie breakers in some applications than to hold them to the higher standard. Future station designs that need this differential treatment should be discouraged.
No
a. With respect to R2.1.3 delete "â€¦ that Stress the System with sensitivitiesâ€¦". b. R2.1.3 should be revised to clarify that if a TP/PC conducts the studies specified in R2.1.1 and R2.1.2 with one or more of the sensitivities which stress the system in the normal course of study, then additional studies of a less-stressed system are not required. c. The intention of Paragraph R2.1.4 is unclear and appears to be unnecessary; therefore, it should be removed.
Yes

B â€“ Unsure about supporting the revised standard

Aside from the comments to the prior questions, there are several issues of concern that prevent us from supporting the present draft of the revised standard. We offer the following constructive comments in an effort to support the worthwhile effort that is being pursued so that we can reach a point of satisfaction that we could vote to support the revised standard. Our concerns are listed in a rough order of priority. a. This standard as drafted does not allow exceptions for small parts of the system as long as interconnected system reliability is maintained, which is allowed in the existing TPL standards in footnotes b) and c) in Table 1. Unless such exceptions are allowed significant transfer restrictions or large reinforcements must be made. The applicable TPL footnotes are: Existing TPL footnote b) Planned or controlled interruption of electric supply to radial customers or some local Network customers, connected to or supplied by the Faulted element or by the affected area, may occur in certain areas without impacting the overall reliability of the interconnected transmission systems. To prepare for the next contingency, system adjustments are permitted, including curtailments of contracted Firm (non-recallable reserved) electric power Transfers. Existing TPL footnote c) Depending on system design and expected system impacts, the controlled interruption of electric supply to customers (load shedding), the planned removal from service of certain generators, and/or the curtailment of contracted Firm (nonrecallable reserved) electric power Transfers may be necessary to maintain the overall reliability of the interconnected transmission systems. b. This standard does no address base conditions. Without defining base conditions the initial status of genertaion dispatch and transers across the sysetm is ill defined. Therefore the contingency analysis doesn't have a predictable basis for a consistent and repeatable study. c. The reference to Special Protection Systems is completely permissive. Although there are good applications for Special Protection Systems, their use must be constrained to have a reliable system and to promote construction of needed infrastructure. d. This standard does not provide flexibility to shed load, which restricts the ability to control post contingency response for low impact events. This may result in advancing need for upgrades in response to low impact events. This may result in advancing need for upgrades in response to low impact events. This is in conflict with FERC's directive to have the Transmission Provider waiting for market response to transmission needs and having the Transmission Provider provide a role to back stop the market. e. Definition of the Long-Term Planning Horizion. The planning horizion, for assessment purposes should be limited to 10 years. Such an assessment should be sufficient to identify requirements that may take an extended time to implement. f. Definition of Planning Coordinator is part of the NERC Functional Model, Remove from the standard. g. Put headings on each section to identify the requirements of the section. h. With respect to R2.2 - Delete "current" from the phrase "current System Peak Load Study" and replace "study" with "assessment." i. Remove R2.2.1, the requirement to extend the assessment beyond 10 years. What does the length of the project have to do with the assessment? If it takes 15 years to build something, why does this require a review of year 15? What is the purpose of this assessment? j. R3.3.2 requires clarification - This standard needs to permit discretion regarding the single contingencies that need to be tested, similar to R3.3.3 and R3.4. It is completely unnecessary to test all events. For example, contingencies may be limited to relevant disturbances that are contained within or directly impact the studied system. k. With respect to R3.2.1 - Claraify whether the intent of the standard is to address station service minimum voltage limitation, maximum leading VAR absorption capability or both at steady state. l. Remove R3.2.2 - Relay loadibility is addressed in the PRC-023 Standard. m. With respect to R3.3.2.1 - Recommend the removal of the requirement to assess the expected duration of Consequential Load loss. It's not considered anywhere else in the standard. n. With respect to R3.3.3 - The paragraph refers to Table 1 Contingencies P3 through P7; this should be explicitly stated. Rationale for inclusion of testing should not be required; should only need to explain why certain Contingencies were not tested. This discretion should be applicable to all contingencies. o. With respect to section R5 - The concept of planned and long-term outages should apply to the general Planning Assessment, or not at all. It should not be specific to the Stability Assessment. p. The provisions of Section R5.3 should have a corresponding MOD standard apply a requirement to provide information regarding all direct and indirect protective and control actions that could result in the inadvertant trip of the generator. Such a provision should include "other equipment (e.g. HVDC, SVC's, Statcoms)", and identify how those devices are treated in the simulation. q. Planned outages should be addressed in the operating horizion unless otherwise defined in the planning horizion. r. Recommend allowing the same non-consequential interuption for >300kV as for <300kV. Distinctions and acceptability should be based on consequence, not voltage class. s. What is a "current" study?

Individual

Steven Masse

NSTAR Electric

No

There should be no difference beween System and Generating Unit Stability studies. Each require discretion regarding which events need to be tested. The consequences are potentially similar: either the instability of one of more generators. Extreme Events should be considered for any stability analysis, again, recognizing that discretion needs to be applied when selecting or dismissing particular contingencies. If no distinction is made between System and Generating Unit Stability studies is made, then the definition of Generating Unit Stability Study should be stricken from the standard.

No

1. A MOD standard should be developed to address the assembly of dynamic load models, rather than specifying modeling in paragraph 2.4.1 (dynamic behavior of loads, including consideration of the behavior of induction motor Loads). Paragraph 2.4.1 should instead read, "System Peak Load for one of the five years." The remainder of the paragraph should be deleted. 2. Change paragraph R.2.4.3.4 to "Outages of Reactive Resources". It is not clear what "variability" means and why it would be more servere than outages. 3. Add a new requirement, "R5.4.3.4 Automatic generator tripping schemes shall not be overly complex or have an significant adverse impact on overall system reliability." 4. Requirements of R5.5 should be rolled into R5.4 and made applicable to all stability studies. 5. Modify R5.5.1 to the following "Shall be performed for an individual generating unit or generating units at the same interconnection point 20 MW or greater that are directly connected to the BES." There may be little difference between the stability performance of a single 20 MW unit and an aggregation of units totalling 20 MW at the same BES interconnection point. 6. Delete R5.5.2. If planning assessment studies all generators or stations above 20 MW, as suggested by R5.5.1, then this provision is unnecessary. If the system has not changed, it should be acceptable to rely on past stability assessments. 7. With respect to section R5, the concept of planned and long-term outages should be addressed uniformly for the general Planning Assessment. It should not be specific to the Stability Assessment. 8. Planned and long-term outages are two fundamentally different concepts and should be treated separately. Planned and Long-Term outages should be defined. Define how planning events in Tables 1 and 2 are associated with each type of outage. Define length of a "Long Term" outage. Planned outages should be addressed in the operating horizion unless otherwise defined in the planning horizion. 9. The provisions of Section R.5.3 should be included in an MOD standard and applied to a requirement to provide information regarding all direct and indirect protective and control actions that could result in the inadvertant trip of the generator. Such a provision should include " other equipment (e.g. HVDC, SVC's, Statcoms)", and identify how these devices are treated in the simulation.

No

There are a few significant concerns with these definitions: The definitions need to be expanded to include interruption of Firm Transmission Service in a manner that is comparable to interruption of load; otherwise, Firm Transmission Service (FTS) is being treated in a manner that is superior to load. The expansion of the defintions to include FTS would also address stated concerns associated with loss of radial or single facilities over which Firm Transmission arrangements have been made. There are perceived limitations to what constitutes Non-Consequential Load Loss. It must be clear that Non-Consequential load loss allows for the cascading loss of a local area that does not adversely impact the BES. It would be impractical and unnecessary to anticipate that every such situation could be or needs to be managed by operator action or automatic control. Non-Interruptible load needs to be defined as,"Demand that the end-use customer has not made available to its Load-Serving Entity via contract or agreement for curtailment." The Consequential Load definition should specify "Interruptible and Non-Interruptible Load that is no longer connected to a sourceâ€¦" The inclusion of "or which is lost as a result of the load's response to the transient conditions of the event (other than through the action of UVLS or UFLS schemes)" confuses the definition of Consequential Load Loss, because of the imbedded exception for steady state performance. It seems that the intent of this provision is to recognize that this type of load loss could occur for either transient or steady state conditions and that Planning Assessments should not be required to remedy this type of situation. However, this does seem to be at odds with the application and stated acceptability of Consequential Load Loss as noted in Table 1. Note: Table 2 has no reference to the treatment of Consequential Load Loss. It may be helpful to address the transient load loss situation in a separate defintion. Recommended Changes: Change "Consequential Load Loss" and definition to "Consequential Interruption - Load, Firm Demand, or Firm Transmission Service that is no longer connectedâ€¦" Change "Non-Consequential Load Loss" and definition to "Non-Consequential Interruption - Non-Interruptible Load, Firm Demand, or Firm Transmission Service loss other than Consequential Interruption loss that occurs through manual (operator initiated), automatic operations such as under-voltage Load shedding, under-frequency Load shedding, or Special Protection Systems, or uncontrolled loss of a local area which does not significantly impact the BES."

No

R3.5.1, R3.5.2 and R3.5.3 are not limiting enough. Add paragraph 3.5.4 "Automatic generator tripping schemes shall not be overly complex and risk to the operation and relability of the

system." Complex SPS's or multiple installations of SPS's can have an adverse impact on the ability to reliably operate the system, especially during maintenance outage conditions.
No
1. With respect to R9 "including the expected mix of industrial, commercial and residental loads", this provision may be inadequate to be practically useful. The potential issues include the variation in end-use load mix through the daily load cycle, seasonal load composition variations, and the ability to translate these end-uses into reasonable and useful steady-state and dynamic load models. It is important to understand how the information will be used and how much additional detail such as distribution network detail is also required. 2. Add to the last sentence of R9 as follows "within ninety days of a request for such information or as otherwise described in procedures established by the Planning Coordinator." 3. Flexibility is needed to conform with the requirements of the specific Planning Coordinator. Suggest changing R10 to read as follows: "R10. Each Transmission Planner shall provide its respective Planning Coordinator with modeling information for Firm Transmission Service data, Interchange Schedules and resources required to supply Load for each of its Balancing Authorities for each year of the Transmission planning horizon, within ninety days of a request for such information or as otherwise described in procedures established by the Planning Coordinator." 4. Flexibility is needed to conform with the requirements of the specific Planning Coordinator. Suggest changing R11 to read as follows: "R11. Each Transmission Owner shall provide its respective Planning Coordinator with modeling information for known planned outages and long-term outages for Transmission equipment for each year of the Transmission planning horizon with consideration given to spare equipment strategy, within ninety days of a request for such information or as otherwise described in procedures established by the Planning Coordinator." 5. Flexibility is needed to conform with the requirements of the specific Planning Coordinator. Suggest changing R12 to read as follows: "R12. Each Generator Owner shall provide its respective Planning Coordinator with modeling information for known planned outages and long-term outages for generation equipment for each year of the Transmission planning horizon, within ninety days of a request for such information or as otherwise described in procedures established by the Planning Coordinator." 6. Flexibility is needed to conform with the requirements of the specific Planning Coordinator. Suggest changing R13 and R14 to read as follows: "R13. Each Resource Planner shall provide its respective Planning Coordinator with the modeling information for new planned facilities for each year of the Transmission planning horizon including but not limited to generators, Reactive Power devices, and new technologies, within ninety days of a request for such information or as otherwise described in procedures established by the Planning Coordinator.. [Violation Risk Factor: TBD] [Time Horizon: TBD] R14. Each Transmission Planner shall provide its respective Planning Coordinator with modeling information for new planned facilities for each year of the Transmission planning horizon including but not limited to Transmission Lines, circuit breakers, Reactive Power devices, Protection System equipment and control devices, and new technologies, within ninety days of a request for such information or as otherwise described in procedures established by the Planning Coordinator.. [Violation Risk Factor: TBD] [Time Horizon: TBD] " 7. Planned and long-term outages are two fundamentally different concepts and should be treated separately. Planned and Long-Term outages should be defined. Define how planning events in Tables 1 and 2 are associated with each type of outage (e.g. P4, P5, or P6). There should be specific contingency descriptions associated with long-term outages. Define length of a "Long Term" outage. Planned outages should be addressed in the operating horizion unless otherwise defined in the planning horizion.
No
1. R2.3 should be changed to indicate the year(s) for short circuit analysis. 2. In R4, suggest replacing, " and following any single Contingency condition that would result in greater circuit breaker interrupting duties" with , " giving due consideration to the potential sequence of equipment operation". 3. It should be stated in the standard that assumptions should be based on procedures provided by each Transmission Planner and by the Planning Coordinator.
No
1. Refering to both Table 1 and Table 2, the "Interruption of Firm Transmission Service Allowed" column, it is problematic to try to create an "exemption" based on the type of facility such as HVDC. There are situations in which Firm Transmission Service has been provided, but may need to be curtailed partially or completely following an outage. The term 'Firm' may have several different definitions. If 'Firm' Transmission Service or load may be interrupted for exceptional events, then it is conditional and 'Conditional Firm' should be defined. It is recommended that a note be added stating that "the only exception would be for curtailment of conditioned (or Conditional) Firm Transmission Service", recognizing that there may need to be some form of grandfathering in order to avoid having to rewrite transmission service agreements. 2. In both Table 1 and Table 2, the "Extreme Event Descriptions" item 1 should add "or shunt device." 3. In Table 1, the "Extreme Event Descriptions" items 3a and 3b should be deleted; they are redundant with Item 1. 4. Table 2, Note 5 includes significant clarifications which should not be buried in the back; they are better placed in the definitions section. 5. In Table 1 and Table 2, Contingency P5 requires a fault plus Protection System Failure. Protection System Failure should be defined and noted if the battery system is included.

No
The definition provided is too limiting and should be changed to "A circuit breaker that is positioned to connect two individual station configurations. The breakers in a bus scheme are not bus tie breakers but the breakers that tie bus schemes together are bus-tie breakers."
No
They should have the same performance requirements. The performance standards should not encourage differential treatment for the same equipment.
No
1. With respect to R2.1.3 delete "that Stress the System with sensitivities". 2. R2.1.3 should be revised to clarify that if a TP/PC conducts the studies specified in R2.1.1 and R2.1.2 with one or more of the sensitivities which stress the system in the normal course of study, then additional studies of a less-stressed system are not required. 3. The intention of Paragraph R2.1.4 is unclear and appears to be unnecessary; therefore, it should be removed.
Yes
B â€“ Unsure about supporting the revised standard
Aside from the comments to the prior questions, listed below are several others issues: 1. This standard does not address base conditions regarding generation dispatch and transers across the system. Initial condition guidelines would be very important to establishing consistent application of the performance standards. 2. This standard should allow exceptions for loss of small parts of the system as long as reliability is maintained on the interconnected BES. There is such an allowance in the existing TPL standards in Table 1, footnotes b) and c). 3. The reference to Special Protection Systems is too permissive. The use of Special Protection Systems and their inherent complexity should be restricted to ensure a reliable system and to promote construction of needed infrastructure. 4. The Long-Term Planning Horizion should be limited to 10 years, a sufficient timeframe to identify requirements that may take an extended time to implement. 5. Definition of Planning Coordinator is part of the NERC Functional Model. It should be removed from the TPL standard. 6. Put headings on each section to identify the requirements of the section. 7. With respect to R2.2, delete "current" from the phrase "current System Peak Load Study" and replace "Study" with "Assessment." 8. R3.3.2 should be changed to permit discretion regarding the single contingencies that need to be tested, similar to R3.3.3 and R3.4. It is unnecessary to test all possible events. 9. R3.2.1 should be clarified as to whether the intent of the standard is to address station service minimum voltage limitation, maximum leading VAR absorption capability or both. 10. Remove R3.2.2. Relay loadibility is addressed in the PRC-023 Standard. 11. In R3.3.2.1, remove the requirement to assess the expected duration of Consequential Load loss. This requirement is unnecessary and not considered anywhere else in the standard. 12. With respect to R3.3.3, the paragraph refers to Table 1 Contingencies P3 through P7; this should be explicitly stated. Also, the rationale for inclusion of testing should not be required. It only makes sense to explain why certain Contingencies were not tested. This discretion should be applicable to all contingencies in all sections of the standard.
Group
Compliance Elements Development Resource Pool (CEDRP)
John Blazekovich
Exelon Corporation

With regard to Violation Severity Levels for this standard, the CEDRP doesnâ€™t believe the version that has be posted for comment can be commented on from a VSL perspective for two reasons 1) it does not have any measures listed and 2) there are so many "sub-requirements" the VSLs would be quite unmanageable, unless each sub-requirement is of equal importance to fulfilling the objective of the standard. Because there are no measures we can't achieve any insight into importance. The SDT may want to consider trimming the standard down to its most basic elements and providing the details (sub-requirements) in a reference document.

Individual

Gregory Campoli

New York Independent System Operator

No

There should be no difference beween System and Generating Unit Stability studies. Each require discretion regarding which events need to be tested. The consequences are potentially similar: either the instability of one of more generators. Extreme Events should be considered for any stability analysis, again, recognizing that discretion needs to be applied when selecting or dismissing particular contingencies. Therefore, the definition of Generating Unit Stability Study should be stricken from the standard.

No

a. A MOD standard should be developed to address the assembly of dynamic load models, rather than specifying modeling in paragraph 2.4.1 (dynamic behavior of loads). Paragraph 2.4.1 should instead read, "System Peak Load for one of the five years." b. In paragraph R.2.4.3.4, what does "variability" mean? c. Add a new requirement, "R5.4.3.4 Automatic generator tripping shall not have an significant adverse impact on overall system reliability." d. Remove Heading R5.5 and make generator unit stability a section of overall stability requirements. e. Modify R5.5.1 to become R5.4.5, with the following, "Shall be performed for the addition of an individual generating unit or generating units at the same interconnection point 20 MW or greater that are directly connected to the BES." There may be little difference between the stability performance of a single 20 MW unit and an aggregation of units totalling 20 MW at the same BES interconnection point. f. ---- g. Strike R5.5.3 and R5.5.4, as they become redundant to R5.4.1

No

In the Consequential Load Loss definition, the word 'source' needs to be defined or explained further since it is unclear.

No

We do not feel that R3.5.1, R3.5.2 and R3.5.3 are limiting enough. Add paragraph 3.5.4 "Manual and automatic generator tripping shall not have an Adverse Reliability Impact."

No

With respect to R9 "including the expected mix of industrial, commercial and residential loads", this provision may be inadequate to be practically useful. The potential issues include the variation in end-use load mix through the daily load cycle, seasonal load composition variations, and the ability to translate these end-uses into reasonable and useful steady-state and dynamic load models. It is important to understand how the information will be used and how much additional detail such as distribution network detail is also required. Add to the last sentence of R9 through R14 the following phrase, "within ninety days of a request for such information or as otherwise described in procedures established by the Planning Coordinator."

No

In R4, suggest striking, "that would result in greater circuit breaker interrupting dutiesâ€¦".

No

In both Table 1 and Table 2, the "Interruption of Firm Transmission Service Allowed" column. It is problematic to try to create an "exemption" based on type of facility such as HVDC. There are many other situations in which Firm Transmission Service has been provided, but may need to be curtailed partially or completely following an outage. It is recommended that a note be added stating that the only exception would be for curtailment of conditioned (or Conditional) Firm Transmission Service, recognizing that there may need to be some form of grandfathering in order to avoid having to rewrite transmission service agreements. In both Table 1 and Table 2, the "Extreme Event Descriptions" item 1 should add "or shunt device." In Table 1, the "Extreme Event Descriptions" item 3b should be deleted; it is redundant with Item 1. In Table 2, Note 5 includes significant clarifications and should not be buried in the bottom of the contingency table;

Note 5 would be better placed in the definitions section. In Table 1 and Table 2, Contingency P5 requires a fault plus Protection System Failure, such as a battery system which may remove ALL protection at some substations. This Contingency P5 requires all voltages and loadings to remain within criteria, and a stable system response; without interruption of firm transmission service and without Non-Consequential Load Loss, at voltages above 300 kV. Was this an intended outcome of this standard?
No
The definition provided is too limiting. It says that if you have a two rings with a bus tie breaker in between, it is no longer a bus tie breaker. Recommend, "A circuit breaker that is positioned to connect two individual station configurations. We do not agree that, "(Substation configurations such as ring-bus, breaker-and-a-half, or double bus-double breaker protection schemes do not use bus-tie breakers.)", as we have examples where stations of this nature are connected through a single "bus-tie breaker".
No
If a TP/PC conducts the studies specified in R2.1.1 and R2.1.2 with one or more of the sensitivities which stress the system in the normal course of study, we assume that fulfills the requirements of R2.1 completely, without additional studies of a less-stressed system. Is that correct?
Yes
A very preliminary estimate would be potentially millions of dollars.
Again, a very preliminary estimate would be two years.
Preliminary estimate is on the order of hundreds of thousands of dollars In addition to cost, there is a significant concern over whether or not there will be enough staff to complete the required work.
included above
included above
Depending on facilities covered by the standard, it is estimated that the cost to bring facilities into compliance potentially could be on the order of billions of dollars.
A preliminary estimate is that it would take at least five but potentially up to ten years to bring facilities into compliance.
C â€“ Definitely do not support the revised standard
This standard as drafted does not allow exceptions for small parts of the system as long as interconnected system reliability is maintained, which is allowed in the existing TPL standards in footnotes b) and c) in Table 1. Unless such exceptions are allowed significant transfer restrictions or large reinforcements must be made. The applicable TPL footnotes are: ï€ b) Planned or controlled interruption of electric supply to radial customers or some local Network customers, connected to or supplied by the Faulted element or by the affected area, may occur in certain areas without impacting the overall reliability of the interconnected transmission systems. To prepare for the next contingency, system adjustments are permitted, including curtailments of contracted Firm (non-recallable reserved) electric power Transfers. ï€ c) Depending on system design and expected system impacts, the controlled interruption of electric supply to customers (load shedding), the planned removal from service of certain generators, and/or the curtailment of contracted Firm (nonrecallable reserved) electric power Transfers may be necessary to maintain the overall reliability of the interconnected transmission systems. This comment form did not allow for the following items to be addressed: a. Definition of the Long-Term Planning Horizion. The planning horizon, for assessment purposes should be limited to 10 years. Such an assessment should be sufficient to identify requirements that may take an extended time to implement. b. Definition of Planning Coordinator is part of the NERC Functional Model, Remove from Standard. c. Put headings on each section to identify requirements of section. d. With respect to R2.2 - Delete "current" from the phrase"current System Peak Load study" and replace "study" with "assessment." e. Remove R2.2.1, the requirement to extend the assessment beyond 10 years. What does the length of the project have to do with the assessment? If it takes 15 years to build something, why does this require a review of year 15? What is the purpose of this assessment? f. R3.3.2 requires clarification - This standard needs to permit discretion regarding the single contingencies that need to be tested, similar to R 3.3.3 and R3.4. It is completely unnecessary to test all events. For example, contingencies may be limited to relevant disturbances that are contained within or directly impact the studied system. g. With respect to R3.2.1 - Clarify whether the intent of the standard is to address station service minimum voltage limitation, maximum leading VAR absorption capability or both at steady state. h. Remove R3.2.2 - Relay loadability is addressed in PRC-023 standard. i. With respect to R3.3.2.1 - Recommend the removal of the requirement to assess the expected duration of Consequential Load loss. It's not considered anywhere else in the standard. j. With respect to R3.3.3 - The paragraph refers to Table 1 Contingencies P3 through P7; this should be explicitly stated. Rationale for inclusion of testing should not be required; should only need to explain why

certain Contingencies were not tested. This discretion should be applicable to all contingencies. k. With respect to section R5 - The concept of planned and long-term outages should apply to the general Planning Assessment, or not at all. It should not be specific to the Stability Assessment. l. The provisions of Section R.5.3 should have a corresponding MOD standard apply a requirement to provide information regarding all direct and indirect protective and control actions that could result in the inadvertant trip of the generator. Such a provision should include "other equipment (e.g. HVDC, SVC's, Statcoms)", and identify how these devices are treated in the simulation. m. Planned outages should be addressed in the operating horizion unless otherwise defined in the planning horizion.

Group

SERC Reliability Review Subcommittee and Planning Standards Subcommittee

Herbert Schrayshuen

SERC Reliability Corporation

No

There is an inconsistency between the defined terms â€œGenerating Unit Stability Studyâ€ and â€œSystem Stability Studyâ€ and the usage within the standard. The requirements refer to these terms by omitting the word â€œstudyâ€. An improvement for the System Stability Study definition is to clarify that it is a study that focuses on the impact to the system itself and covers an area larger than one Generating Plant, covering a large geographical area. See specific proposal below: â€œSystem Stability Study - Study that focuses on how contingencies impact a larger portion of the System than a Generating Unit Study. These studies would examine issues such as angular Stability, inter-area power oscillation, and dynamic voltages.â€

Yes and No

R2.4. No The word â€œSystemâ€ was deleted during the re-write and only â€œStabilityâ€ is used. However, the sub-sections appear to be more appropriate to a â€œSystem Stabilityâ€ assessment than for a â€œGenerating Unit Stabilityâ€ assessment. â€œGenerating Unit Stabilityâ€ assessments are the subject of Section R2.5 and â€œSystem Stabilityâ€ assessments appear to be the intent of Section R2.4. Why does Requirement 2.4. specify the near-term transmission planning horizon â€œportionâ€? We recommend removal of the words â€œportion of theâ€. R2.4.1. No Change â€œPeak System Loadâ€ to â€œSystem On-Peak Loadâ€. This is the term defined in the â€œNERC Glossaryâ€ and is consistent with the usage of â€œOff-Peak Loadâ€. This change would be required through out the TPL Standard as well as in other standards. There is concern with load modeling requirements (use of word â€œappropriatelyâ€ in R2.4.1). Does this requirement mandate the use of specific load models for each bus, or would an aggregate load model which represents the system as a whole be sufficient? Does the use of the PSS/E CONL function satisfy the requirements for a load model? R2.4.3 No In general we believe that breaking these requirements into specific sub-requirements, focusing on specific sensitivities, is too prescriptive and inappropriate. It will lead to over focus on these particular issues to the detriment of system reliability. The standard should not include an enumerated list of required sensitivities. Engineering judgment needs to be permitted. R2.5 Concur R5.4 Concur R5.5 No There is a concern with R5.5.1 with the requirement to perform simulations on 20 MW generators (to be consistent with the Registration Criteria). We recommend a 75 MW generator cutoff for required simulations.

No

Comments: Although the modified definitions are a good improvement over the previous version, addressing the following issues in the Consequential Load Loss definition will further improve clarity: 1) Redundancy: The second sentence in the definition says "Although Load which is lost as a result of the Load's response to the transient condtions of the event is considered Consequential Load Loss and is permitted when Consequential Load Loss is allowed,â€¦". It appears that "â€¦and is permitted when Consequential Load Loss is allowed,â€¦" is redundant and may be omitted/deleted -- isn't this *always* permitted for all events? (See headnote 4 in Table 1 -- Steady State Performance). 2) Who are the "planning entities"? Suggest replacing with Functional Model terms Transmission Planner and Planning Coordinator. 3) Verbosity: It appears that the intent of the second sentence in the definition can be conveyed more concisely. Consider changing to "However, relying upon the expected Load loss during transient conditions of the event to meet steady state performance requirements is not allowed." 4) If the verbiage proposed above is found acceptable, we offer a follow-up suggestion. Because the second sentence in the definition essentially characterizes the exception to the allowed Consequential Load Loss during steady state performance evaluation, we suggest moving it out of the definition and appending it within headnote 4 in Table 1 -- Steady State Performance. 5) While the Consequential Load Loss definition employs the acronyms UFLS and UVLS, their expanded descriptions have been used in the Non-Consequential Load Loss definition. Suggest that these terms be used consistently in both definitions. Also, why is Special Protection Systems included as an example of what constitutes Non-Consequential Load Loss but is excluded from the list of exceptions to Consequential Load Loss (whereas UVLS and UFLS appear consistently in both)?

Yes
Yes
Yes
We recommend that the headings be repeated at the head of each page.
No
To provide clarity, a revised definition is proposed. A bus-tie breaker is a circuit breaker that connects two individual bus sections in a straight bus substation configuration. Substation configurations such as ring-bus, breaker-and-a-half, or double bus-double-breaker do not have bus-tie circuit breakers.
No
The installation of bus-tie circuit breakers in a straight bus configuration would reduce exposure to a) bus faults or to b) line faults with breaker failure without adding much risk for internal fault in the bus-tie breaker. Those entities that employ a straight bus substation design with bus-tie breakers have recognized that failure of the bus-tie breaker, a very low probability event, would result in the loss of multiple transmission elements and perhaps firm load for a short time until the bus sections can be restored, but bus-tie breakers are an investment worth the risk. Therefore, it is generally agreed that the outage of non-bus-tie circuit breakers should have higher performance requirements than the outage of bus-tie circuit breakers. The SDT should be commended for this change since the previous draft version. However, it is not clear that adopting a higher standard of performance for planning events involving transmission facilities 345 kV and above will improve overall system reliability. Some areas of the continent already have n-2 planning criteria, yet these systems have still experienced significant outages including blackouts. It is suggested that a review of the Transmission Availability Data System (TADS) data, when available, should be conducted to help assess what system performance requirements need to be strengthened before arbitrarily determining to "raise the bar" for certain voltage levels and system designs. The industry should not be forced to invest a great deal of capital to meet a new standard requirement when it would not have an immediate impact on system reliability. Some sort of cost/benefit analysis should be performed to justify any change from the present TPL-001 through 004 standard requirements. Also, further clarification is required to explain how to drop consequential load without cutting firm transmission service to those affected/outaged customers, and this needs to be added to the notes in Tables 1 and 2.
No
These requirements are very prescriptive. Many examples of sensitivities are already inherent in the existing requirements. Some sensitivity studies are in effect adding an additional level of contingency (N-2 or N-3). Sensitivity studies of load variation are already inherent in the fact that several different study years and conditions are already being required. Outages of reactive sources and generation should already be included in studies of multiple contingencies. The process of planning new generation (system impact studies) will include studies of the future with and without the proposed new equipment. The TP and PC can better select the most appropriate sensitivities for their system. In general we believe that breaking these requirements into specific sub requirements, focusing on specific sensitivities, is too prescriptive and inappropriate. It will lead to over focus on these particular issues to the detriment of system reliability. The standard should not include an enumerated list of required sensitivities Engineering judgment needs to be permitted.
Yes
Since Event P6 is essentially a sub-set of the existing Category C.3 Contingency events, we support these modifications which make the system performance requirements for P6 consistent with what exist today for Category C.3. While we agree interruption of firm transmission service and non-consequential load loss should not be allowed to meet the planning requirements for the first system contingency, these system adjustments should be allowed to prepare for the second event so that the system will meet the requirements following the second event. We recommend that clarifying changes be made to incorporate this concept. We recommend that the statement below be included as modification or as a footnote for the P6 portion of the table as follows: Interruption of firm transmission service and non-consequential load loss are allowed after the first event as a system adjustment to prepare for the second event in order to meet the requirements following the second event.
One component of these costs is based on modification to the loadflow database. A massive effort would need to be undertaken to model bus sections and breaker codes in order to simulate the planning events needed to stay current with the new standards. Also, man-power to perform the extra analysis was considered. Additional man-power: 5 engineers (2 years) Cost: $1,000,000
The majority of the time would be spent modifying the loadflow database so that the new planning event simulations could be analyzed. Time: 2 years
Additional man-power: 4 engineers Costs: $400,000 / year The following analysis was performed

by one large integrated utility in SERC. The results are not representative of all utilities in the SERC region, but would be multiplied many times over to fully represent the SERC region as a whole. A comprehensive study of the impact of these proposed and incomplete standards is not feasible until they are finalized. Regarding manpower, aside from the estimated costs there is the very real situation that the number of qualified engineers available in the industry is nowhere near what would be necessary to carry out the studies (including sensitivities) called for by the proposed standard. This reality needs to be taken into consideration by the Standards Drafting Team when it makes its implementation plan recommendations.

Additional man-power: 1 engineer (1 year) Costs: $100,000

Additional man-power: 1 engineer Costs: $100,000 / year The following analysis was performed by one large integrated utility in SERC. The results are not representative of all utilities in the SERC region, but would be multiplied many times over to fully represent the SERC region as a whole. A comprehensive study of the impact of these proposed and incomplete standards is not feasible until they are finalized. Regarding manpower, aside from the estimated costs there is the very real situation that the number of qualified engineers available in the industry is nowhere near what would be necessary to carry out the studies (including sensitivities) called for by the proposed standard. This reality needs to be taken into consideration by the Standards Drafting Team when it makes its implementation plan recommendations.

Typical costs for a large utility in SERC would include the implementation of redundant protection schemes for the P5 planning event (fault + failure of protection scheme), additional 500-kV facilities for P2.2 (single contingency - bus section outage) and P4 (fault + stuck breaker) events, and additional 161-kV facilities for the P3 (Generator +1) events. Cost: $1 billion

Time: 10 years The following analysis was performed by one large integrated utility in SERC. The results are not representative of all utilities in the SERC region, but would be multiplied many times over to fully represent the SERC region as a whole. A comprehensive study of the impact of these proposed and incomplete standards is not feasible until they are finalized. Regarding manpower, aside from the estimated costs there is the very real situation that the number of qualified engineers available in the industry is nowhere near what would be necessary to carry out the studies (including sensitivities) called for by the proposed standard. This reality needs to be taken into consideration by the Standards Drafting Team when it makes its implementation plan recommendations.

C. Definitely do not support the revised standard. A majority of SERC technical experts do not support the revised standard. The primary concern is that the need for additional requirements for planning 300kV systems and above has not been demonstrated. We do not believe that a sufficient case for â€œraising the barâ€ has been provided and that this requirement can have a huge impact on utilities and ratepayers. R2.1.3 and R2.4.3 requirements are very prescriptive. Many examples of sensitivities are already inherent in the existing requirements. Some sensitivity studies are in effect adding an additional level of contingency (N-2 or N-3). Sensitivity studies of load variation are already inherent in the fact that several different study years and conditions are already being required. Outages of reactive sources and generation should already be included in studies of multiple contingencies. The process of planning new generation (system impact studies) will include studies of the future with and without the proposed new equipment. The TP and PC can better select the most appropriate sensitivities for their system. We recommend that engineering judgment continue to be recognized as a vital component of planning. Category P6 is the loss of a system element, followed by system adjustments, followed by the loss of another element. The table columns for this category say that interruption of firm transmission service is allowed. The table, however, is not clear whether the interruption of firm service is allowed as part of the system adjustment (between the outages) or whether it is only allowed after the second outage. It was stated in the NERC TPL SDT WebEx (August 26, 2008) that the interruption is not allowed as part of the system adjustment. This would be a dramatic change from the existing standard and would result in the unintended consequence of significantly reducing transmission system capability to accommodate firm transmission service including reduction of transfer capability of interfaces to a fraction of their currently reported capability. This would in effect be imposing an n-2 criteria for offering firm transmission service. This would not be an acceptable situation for the users, owners and operators of the bulk power system. Additional Comments: There is concern with load modeling requirements (use of word â€œappropriatelyâ€ in R2.4.1). Does this requirement mandate the use of specific load models for each bus, or would an aggregate load model which represents the system as a whole be sufficient? Does the use of the PSS/E CONL function satisfy the requirements for a load model? There is a concern that R3.3.2.1 is burdensome regarding the need to keep track of the quantity of consequential load loss and expected duration. Who is collecting this information and why is it needed? It appears that this is a local regulatory issue, not a reliability issue. There is a concern with R5.6.1 with the requirement to perform simulations on 20 MW generators (to be consistent with the Registration Criteria). We recommend a 75 MW generator cutoff for required simulations.

Individual

Anita Lee

Alberta Electric System Operator

No

We believe that there is no significant distinction between Generating Unit Stability and System Stability other than the objective and focus of the study. Therefore, we cannot accept a simple statement from the SDT that it believes it is important to maintain this distinction without more explanation. If a distinction is maintained, then Generating Unit Stability Study should be and is already covered in FAC-001-0 and FAC-002-0. As defined, Generating Unit Stability Study â€œfocuses on an individual generating unit's or electrically closely-coupled generating units' Stability for various Contingencies on the Transmission Facilities connected to that generating unit(s) point(s) of interconnection or one bus away from that point. However, the Purpose of the proposed TPL-001-1 is to â€œdevelop a Bulk Electric System that will operate reliably over a broad spectrum of System conditions and following a wide range of probable Contingenciesâ€. If a Generating Unit becomes unstable, the unit can be disconnected from the BES without impacting system stability. Therefore, we believe that the Generating Unit Stability Studies portion is attempting to introduce interconnection stability studies into the TPL standards. Interconnection stability studies are adequately addressed by FAC-001 and does not need to be specifically called out in TPL-001-1. In addition, Generating unit stability studies are typically performed at the time of interconnection. Even though Generating Unit Stability Studies have been done as new generating unit(s) were interconnected or at the time changes occurred, such studies have not been done for the entire fleet of Generating Units at the same time. For very old units, stability study documentation may no longer exist, even though no potential stability problems have been identified when stability studies were run for interconnecting other newer units or for the System. If the requirement for Generating Unit Stability Study is retained in this proposed TPL-001-1, R2.5 needs to be clarified to say â€œonly whenâ€ the changes in R2.5.1 and R2.5.2 are made that the Generating Unit Stability Study needs to be done. There also needs to be language about how to treat generators that are existing prior to this Standard taking effect. We would also appreciate if the SDT would more clearly define with examples the terms in R2.5.2, â€œmaterial Transmission System changeâ€ and â€œat or near the point of Interconnectionâ€ to invoke a study.

No

R2.4 is acceptable. - Please consider deleting the conditions identified in R5.4.3.1, R5.4.3.2, and R5.4.3.3. We question the need to specifically call out these requirement in subrequirements of R5.4.3. We believe these conditions should be met for any and all requirements of the standard. It should not be necessary to list acceptable practices, especially if the conditions placed on the practice are general conditions that are addressed elsewhere or are generic. Otherwise, R5.4 is acceptable. - The proposed requirements in R2.5 and R5.5 are already covered in FAC-001 and FAC-002 and should not be included again in the proposed TPL-001-1. Otherwise, the NERC standards would have redundant requirements. In addition, Generator Owners are to apply for interconnection to the transmission system or to make modifications to their generators as described in R2.5.1, R5.5.1, and R5.5.2. It is therefore the Generator Ownerâ€™s responsibility to cause these studies to be done at the time of interconnection or modification, yet R5 seems to place that responsibility only on the Transmission Planner and the Planning Coordinator. The Transmission Planner or the Planning Coordinator would not know of the changes until notified by the Generator Owner. If the SDT believes that FAC-001 is deficient, it should propose revisions to this standard, not simply add to TPL. - Requirement R5.5.2 needs to be clarified to state changes or additions to the generating unit that result in an increase in power output. Otherwise, it could be interpreted to apply to existing units with a change in dispatch.

No

We generally agree with the definitions by themselves but have concerns about regarding application, please refer to response in Q15. The last sentence in the Definition of Consequential Load Loss (â€œAlthough Load which is lost as a result of the Loadâ€™s response to the transient conditions of the event is considered Consequential Load Loss and is permitted when Consequential Load Loss is allowed, Transmission planning entities are not allowed to rely upon the expectation of such Load loss to meet steady state performance requirementsâ€) seems more appropriate to be requirements. Therefore, recommend moving this sentence to the Notes Section at the beginning of Table 1 as new Item 7.

Yes

We agree. However, the conditions listed in R3.5.1, R3.5.2 and R3.5.3 are applicable to the overall TPL Standard. Their specific listing in R3.5 gives the impression that these Requirements are only applied to R3.5 and not to the other Requirements in this Standard. In other words, are there any Requirements in this Standard that R3.5.1, R3.5.2 and R3.5.3 do not apply to? Therefore, we suggest R3.5 and R3.4.3 be silent on this issue and move R3.5.1 through R3.5.3, (and the equivalent in the stability study R5.4.3.1 through R5.4.3.3) to a Requirement applicable to Assessment studies in general, such as the bullet points in the Performance Tables.

Yes

While we agree with separating R1 to form R9 through R14, we believe that R9 (modeling information for real and reactive load forecast data) should be applicable to Load Serving Entities

(LSE) instead of (or in additional to) the Distribution Provider. In any case, this type of exchange of load information is already covered in MOD Standard or in the respective tariffs, and should not be included again in the proposed TPL-001-1 Standard.

No

We agree with R2.3. However, R4 requires assessment of â€œShort-circuit capability of its equipment under normal conditions and following any single Contingency condition that would result in greater circuit breaker interrupting dutiesâ€. Since short circuit studies are typically performed by applying a fault on a Facility starting from a normal condition, there can be confusion whether the result would constitute â€œnormalâ€ condition or â€œfollowing any single Contingency conditionâ€. Also, by specifying the normal and single contingency conditions, R4 is straying into â€œhowâ€ to perform a study, which is not necessary in a standard. We suggest deleting the reference to the contingencies to be used in the study.

No

We do not agree with the proposed format changes of the Tables, separating into two Tables is not necessary, or beneficial. It seems like an extra column for event could be added and some changes to the notes would greatly simplify the table. Some of the rows could also be combined; one such example is P2-2 (Loss of Bus Section) and P2-3 (Internal Breaker Fault, non-bus-tie). Will the SDT plan on combining some similar rows? Table 1, P4 and P5 refer to "Faults" as part of the contingency. This is steady state performance and faults are not modeled in steady state. Table 1, P2.1 refers to a "single ended line". Technically, this means we need to generate a "false" bus at each end of the line to evaluate this condition or use a dispatcher power flow which included breaker modeling. Is this an accurate interpretation of the intent of this requirement? We believe there should be no distinction between the voltage classes and support the use of load shed for all cases identified in P4 through P7.

No

We do not disagree with the proposed definition change. However, we do not agree that â€œSubstation configurations such as ring-bus, breaker-and-a-half, or double bus-double breaker protection schemes do not use bus-tie breakers. Some breaker-and-a-half and double-breaker layouts may have bus breakers located mid-way in the side elements. We propose the following definition: "A circuit breaker thats only protective purpose is to isolate a segment of a bus."

No

We believe that Non-Consequential Load Loss should be allowed for loss of either Bus-Tie or Non-Bus-Tie Breakers regardless of voltage class.

No

We generally agree with the concept of the sensitivity analysis since this is standard practice in understanding system performance risks and the effectiveness of improvements. It is ambiguous from a criteria perspective, however, what role is played by the sensitivities in developing Corrective Action Plans and what risks are created by misapplication of the intent of such sensitivity analyses. Clarification of the following is needed along with examples of applicable sensitivities and how these would be factored into Corrective Action Plans. If a Transmission Planner performs studies on the â€œbase caseâ€ of which the loads represented are 1 in 10 year adverse weather condition (10% chance that the actual load may exceed the projected load), does this constitute a sensitivity analysis. If so, will the Transmission Planner have to then perform additional less stringent studies at the load levels representing 1 in 2 year adverse weather conditions (50% chance that the actual load may exceed the projected load) to demonstrate compliance? R2.1.4 requires explanation of performing additional sensitivities that are not listed in the R2.1.3. This would discourage entities from performing additional sensitivities. In addition, in the above example, the Transmission Planners should not have to explain why they feel that this higher level (1 in 10 year adverse weather) of load is the â€œbase caseâ€ condition. R2.7 also states that â€œCorrective Action Plans do not need to be developed solely to meet the performance requirements for sensitivitiesâ€. Consider a Transmission Planner that has built transmission based on the 1 in 10 year adverse weather load assumed in the â€œbase caseâ€, will the judgment of the Transmission Planner be then questioned because theâ€œbase caseâ€ used is equivalent to a sensitivity case and not a 1 in 2 year adverse weather base case?

Yes

We agree with revising P6 to permit loss of Non-Consequential Load to meet performance requirements for Systems above 300kV. However, we are concerned that with the loss of the first N-1 in P6, curtailment of firm transmission service or firm transfers would not be allowed as part of system adjustment in preparation for the next N-1. Allowing curtailment of transmission service or firm transfers for such system adjustments should be added to R3.3.2.2. Otherwise, the power transfer under normal condition (before the first N-1) will have to be significantly curtailed in anticipation for meeting performance requirements after N-1-1, or transmission facilities, which would have otherwise been unnecessary, would have to be built. Either would adversely impact customers. We also have questions on Event P6 in both Performance Tables 1

and 2: We would like some clarification on the overlapping single contingencies as denoted in Event P6 (N-1-1), and one where a single contingency, say Event P1 (N-1), follows a prior "planned" outage of a Facility (N-1). The former would allow the Non-consequential Load Loss, while the latter would prohibit it.
C â€“ Definitely do not support the revised standard
We agree that the Standard as presented is clearer, but there are numerous identified issues that still need resolution, in addition to the Measures, VSLs, Implementation Plan, etc., before AESO could give a full approval of this Standard. - There is no mention in the purpose of the Standard about minimizing loss of load for more probable unplanned contingencies. Maybe there needs to be some definition around what is meant by reliability. - We believe that with the loss of the first N-1 in P6, curtailment of firm transmission service or firm transfers should be allowed as part of system adjustment in preparation for the next N-1. This should be added to R3.3.2.2. Otherwise, the power transfer under normal condition (before the first N-1) will have to be significantly curtailed in anticipation for meeting performance requirements after N-1-1. This will unnecessarily impede commerce. Or, to maintain the same firm power transfer under normal conditions, construction of transmission facilities will be required. Either way, this would impose a much stricter standard than exists today resulting in very costly unnecessary system improvements and invalidate terms of many transmission service contracts that allow for implementation of pro-rate curtailments of firm transmission rights during forced and planned outage conditions. - We disagree with the application of the proposed definitions of Consequential Load Loss and Non-Consequential Load Loss in conjunction with â€œraising the barâ€ for loss of Facilities with operating voltages 300 kV or higher (P2, P4, and P5 in the Performance Tables). We believe there should be no distinction between the voltage classes. - Regarding the terms â€œinterruption of firm transmission serviceâ€, there needs be clarification on what Interruption means. Since it is referring to firm transmission service, we would interpret this to mean curtailment needed after a particular contingency and adjustments. There also needs to be clarification on what â€œFirm Transmission Serviceâ€ means. Two points, 1) the NERC definition states â€œhighest quality service offered to customers under a filed rate schedule that anticipates no planned interruption.â€ The Standard implies anticipation of â€œunplannedâ€ interruption for certain contingencies. 2) Is this referring to a transmission product, or firm transfers modeled for the conditions being studied? One way to interpret the intent is the firm transfers being modeled for the conditions in the powerflow to meet demand that would result in load not being served if that firm transfer were curtailed. If there is other generation in the system that could increase to meet the load if the transfer being modeled is interrupted, then interruption of firm transmission service should also be allowed for P1 through P5 contingencies in the table. - In addition, we believe that DC and AC lines should have the same performance requirements with respect to interuption of firm transmission service. We do not understand why interruption of firm service would be an acceptable response to the loss of a single pole of a DC line (i.e. response to the contingency) but not an acceptable response to prepare for the next contingency of an AC line. The transfers over both AC and DC lines can automatically be curtailed when the line is outaged.
Individual
Greg Ward / Darryl Curtis
Oncor Electric Delivery
Yes
NA
No
For Requirement R2.4 would prefer to see more clarification on the System Off-Peak stability studies required and their purpose. Define/quantify type of stability issues to be addressed with this type of study. For sub requirement R2.4.3 the level of detail in the load modeling is very subjective and greatly impacts the analysis and results.
Yes
NA
Yes
NA
Yes
NA

Yes
NA
No
In Table 1-Steady State Performance several terms more relating to system stability performance appear such as post-transient voltage, voltage instability, fault plus stuck breaker, etc. These terms would appear to be most appropriate in only Table 2-Stability Performance, where this type of analysis is performed, e.g.- placing a fault at a location based on available short circuit MVA at that point in the transmission system and then analyzing the post transient voltage and generator response.
Yes
NA
Yes
NA
Yes
Generally agree with modifications although would again stress that detailed load modeling for stability analysis may be as revealing as some of the sensitity studies recommended in R2.1.3 if they were only run with steady state analysis.
Yes
NA
Cost to supplement past study portfolio would be between $250,000 to 750,000.
3 to 5 years with added resources (staff)
$500,000 annually
$250,000
$100,000
Unknown, dependent on results of analysis and solutions implemented
Unknown, dependent on results of analysis and solutions implemented
B â€“ Unsure about supporting the revised standard
Initially performing outstanding tasks as well as annual maintenance of documentation and regular updates would require extreme significant resources both personel and financial. Transmission Planning to this level requires high level subject matter experts with both specific transmission system knowledge as well as overall industry experience. Considerable expense would also be required to train personel and track activities. The procurement documents necessary to interface with consultants in this area where "in house" expertise is not available would also be required. Time would also be spent on evaluating new software and analysis tools such as EPRI dynamic models. A phased in approach would be taken to complete the tasks while still perfoming essential Oncor and ERCOT related activities associated with System Planning.
Group
FirstEnergy
Sam Ciccone
FirstEnergy Corp.
Yes
No
R2.4.1 â€“ This requirement should be separated into two requirements as it covers two distinct topics; a) peak load study for one of the near-term years and b) dynamic load modeling. The use of the words "appropriately represents" and "consideration" is too vague and not strong enough for requirement language. Also, the requirement needs to better describe what is needed related to the modeling of induction motor load. What % of the load needs to be represented as motor load for various load classes â€“ commercial, industrial, residential? An industry white paper is needed to provide direction related to this undertaking. The SDT, when considering their Implementation Plan, will need to allow sufficient time to complete the dynamic load modeling which largely does not exist today. R2.4.3 â€“ Typo, need to remove strikethrough text on the word sensitivity. R2.4.4 â€“ Suggest making this a sub-requirement of R2.4.3 and only require documentation as to why each sensitivity case was selected. Documenting why something was not selected does not seem constructive and places an unneeded burden on documentation. It should be expected that over time, a range of sensitivities would be covered as a library of studies is built.
No
Regarding the definition of "Consequential Load Loss" we do not agree with the inclusion of Load which is lost as a result of the Loadâ€™s response to the transient conditions of the event and recommend that the team restrict the definition to account for only load which is directly served by the facilities which were de-energized as a result of the contingency event. To include this within in the definition seems counterproductive to the planning of the transmission system that

is required by this reliability standard. Comments on other definitions: 1) Planning Coordinator (PC) â€“ The SDT included a new definition for PC for inclusion in the NERC Glossary of Terms. We agree that this addition better aligns the Glossary with the PC applicable entity which is prevalent in a variety of standards. However, we are curious why the SDT did not indicate a deletion of the Planning Authority (PA) definition and what steps, if any, are being made by NERC to align registry criteria which uses Planning Authority (PA) to the reliability standards use of the PC. 2) Year-One: The definition for Year-One is awkwardly written. We suggest that the definition be adjusted to read "The planning year that begins with the upcoming annual period under study". We believe the attempt to try and delineate between the near-term planning horizon and operational planning horizon is not needed within the TPL standard and that the near-term period should account for the upcoming annual study periods. If not revised, the need for two near-term studies on an annual basis is overly burdensome as many transmission planning organizations perform upcoming annual seasonal assessments for seasonal peak (summer/winter) periods. Requiring an additional two studies near-term does not provide significant benefit. Further reasoning for making the change is the allowance of operating procedures as part of Corrective Action plans. Operating procedures can easily be developed and implemented to mitigate projected performance violations prior to an upcoming seasonal period. 3) BES â€“ The acronym BES is used throughout the standard but never defined. We suggest this could easily be done in the purpose statement by simply adding the text "(BES)" after the reference to Bulk Electric System.

Yes

No

FE does not support the modeling requirements within the TPL standard and suggest that the SDT remove these requirements. This standard should be viewed on a premise that a valid and appropriate system model exist so that the fundamental focus of the standard is as stated in its purpose statement "Establish Transmission System planning performance requirements... to develop a Bulk Electric System that will operate reliably over a broad spectrum of System conditions." If the R9 through R14 requirements remain, we offer the following comments: R9 - In requirement R9, the DP is to provide nodal load projections and include the expected mix of industrial, commercial, and residential Loads. System planning software can not presently accommodate this level of detail along with other load codes/classifications that may already be in use; i.e. municipal load, rural electric cooperative load, etc. Is the intent to require this information in models built and maintained by industry, i.e. MMWG? R10 - The TP does not have access to Interchange Schedules and resources required to supply Load for each of its Balancing Authority. This information may need to be provided by the Resource Planner or some other appropriate entity.

No

We do not feel that it is necessary to annually update the short circuit analysis. We suggest the SDT consider increasing this timeframe. In addition, short circuit analysis should be reviewed in areas where transmission or generation changes are planned. Lastly, we feel it would be beneficial for the standard to provide examples of contingencies that could increase fault duties.

Yes

The overall table format is much improved over Draft 1 and it provides better alignment between the steady-state and stability tables. The SDT is encouraged to consider consolidation into one table based on the minimal differences within the two tables. FE offers the following additional comments related to the tables: TABLE 1, STEADY-STATE & TABLE 2, STABILITY: 1) Do the table notes at the top of the table only apply to the Planning Events? If so, it is suggested to move the row that says Planning Events to be positioned above the notes. 2) Top Table Notes, Item 2 - It is our opinion that it should be based on the TPs criteria. 3) Top Table Notes, Item 3 - These should read consistent on both tables. Also, is cascading well understood and how is it tested for? 4) The use of numeric notes at both the top and bottom of the table causes confusion related to the superscript number references on various terms within the table. The superscript items appear to be footnote references to the notes area at the bottom of the table. It is suggested that the items listed at the top of the table use alpha character references to demarcate each item. 5) Remove the footnote reference to note 3 on the Header titled "Event" (column 3). The reference in column 4 is better suited and covers the intent of the note. 6) For the P3 contingencies, it is unnecessary to individually analyze all BES generation units within a footprint along with an additional contingency. The planner allowed to use reasonable judgment and run only a subset of the larger units in this scenario. For example, there would be no need to contingencies against an outage of each unit at a multi-unit plant. Checking the contingencies against the outage of the largest unit at that plant would be sufficient. 7) A header row should be repeated on each page for improved readability. TABLE 1, STEADY-STATE: 1) Extreme event descriptions, item 2e â€“ why is this needed? How would this occur? What would be evaluated, high voltage? Stability issues? Note that it wouldnâ€™t be stability concern - this is the steady state table. 2) Extreme event descriptions, item 3b - how is this condition any different than what is studied in extreme event item 1 (N-2, no adjustment)? We suggest that item 3b be

removed. 3) Extreme event descriptions, item 3c is too vague and it is suggested that it be removed. 4) Notes section (bottom of table), item 1 - Various topics are covered within this note - stuck breaker, breaker relay failure, normal clearing, delayed clearing - it should be broken up. Why include a discussion about delayed clearing in a steady-state table? 5) Notes section (bottom of table), item 4 â€“ We interpret FACTS to mean Flexible AC Transmission Devices and this means different things to different companies. FACTS devices can be series devices and not necessarily shunts as referred to in the table. It is noted that there is not footnote reference pointing to item 4 within the table. TABLE 2, Stability: 1) Planning Event P1 - Indicates SLG or 3-PH, which one is needed? This should be clarified in the requirements that reference this table. The intent is likely that most planners would perform the less labor intensive 3-PH simulation and if criteria were met, then the conclusion would be that SLG is also met. However, as presently written, the "OR" could be manipulated to allow someone to meet criteria for SLG but not the 3-PH. The requirements should provide clear expectations in this regard. (Same comment applies to P3 and P6) 2) Planning Event P1.2 - At what position on the line is the fault to be tested? Either the table or requirements that reference this Planning Event should be clear in what is required. 3) Planning Event P1.3 â€“ Is the fault to be placed on the high-side or low-side of the transformer? Either the table or requirements that reference this Planning Event should be clear. 4) Planning Events P1 and P2 - Is the intent that a TP would need to run all possible P1 and P2 events in dynamic stability simulations? If not, the requirements should be worded to allow the TP some flexibility in selecting the items having the most impact. To expect all of these events to be simulated within dynamics is unrealistic and unnecessary. 5) Planning Event P2.1 â€“ While we agree this event is warranted in steady-state, we question the need to cover this item within stability. Wouldn't breaker action clearing a fault always produce a more severe system disturbance than an inadvertent breaker trip? 6) Extreme Events â€“ The reference to R5.5.4 should be R5.4.4 7) Extreme Events - Items 2, a,b,c,d - should "protection system" be capitalized as the defined term in the NERC Glossary? 8) Extreme Events - Items 2f and 2gshould be removed. It is inconceivable that the simultaneous faults described could occur. 9) Notes section (bottom of table), item 1 - Does not read consistent with Note 1 from Table 1 Steady-State. As stated above, various topics are covered within this note - stuck breaker, breaker relay failure, normal clearing, delayed clearing - it should be broken up. 10) Note number 4 from Table 1 Steady-State (item on shunt/FACTS) is missing in Table 2. The first 5 notes from Table 1 should be reflected in Table 2 with the existing Table 2 note 5 being re-numbered to item 6. 11) Table 2 Note 5.a.ii. - We question whether the number of units totalling the Contingency reserve is a good criteria. Also, with regard to the phrase "the resulting apparent impedance swings must not pass through relay characteristics that would result in the tripping of any Transmission System elements", we suggest a change to "the resulting power swing shall not cause the system to separate or form electrical islands".

Yes

Yes and No

Fundamentally, from a purest perspective, we believe that all breakers should be treated as having the same probability of failure. However, we understand the SDT's intent and agree to the higher performance expectations for the above 300kV transmission system. We also agree that without the exception provided for bus-tie breakers, some entities may take the approach to simply operate their bus-tie breakers open in order to meet the performance requirements, which would be counterproductive to the improved reliability sought by the team. The alternative would be back to back bus-tie breaker installations which may not even be feasible due to space limitations. On a going forward basis, future station designs at this voltage level should avoid straight bus designs.

No

The requirements related to sensitivity cases as written in draft 2 are an improvement over draft 1 as they now allow flexibility in choosing sensitivities, compared to what use to be a fixed list of options. However, we do not agree with the need to document the technical rationale for why each listed condition was or was not selected. This seems to create a needless paper trail from an auditing viewpoint. If any documentation is needed, it should be limited to why the sensitivity was selected and it should not be required to indicate why others were not selected. Therefore, we suggest rewording 2.3.1 as follows: "For each of the studies described in Requirement R2.1.1 and Requirement R2.1.2, sensitivity case(s) that stress the System with sensitivities that reflect one or more of the following conditions shall be run and documentation of the technical rationale for why each of the conditions was selected shall be supplied:" R2.1.4 - This is an optional requirement and should be worked into the list of options within 2.1.3. As a stand alone requirement, what type of measure or VSL would be applicable for this requirement? We suggest re-numbering this requirement as a new 2.1.3.8 and reword it as follows: "Any other sensitivities, as deemed appropriate by the Transmission Planner or Planning Coordinator for their individual systems". R2.1.3.3 â€“ This requirement indicates sensitivity is needed for "Unavailability of long lead time facilities." Why is this required in a near-term planning horizon? How long is long? Doesn't the N-1-1 (Planning Event P6) test already account for this related to the outage of existing equipment which may present long lead times? Same comments apply for

R2.4.3 and R2.4.4 in the stability study section.

Yes

We agree with the change that now permits the loss of Non-Consequential Load for N-1-1 to meet performance requirements regardless of the voltage level studied. It is well understood that following a single contingency (N-1) that no Non-Consequential Load loss or interruption of Firm Transmission service is permitted. The SDT needs to clarify for industry if interruption of Firm Transfers is permitted pre-contingency to prepare for the 2nd (over-lapping) contingency. This is presently permissible in the existing TPL standards as Table 1 footnote 'b' reads â€œâ€¦ To prepare for the next contingency, system adjustments are permitted, including curtailments of contracted Firm (non-recallable reserved) electric power Transfers.â€

A â€“ Generally support the revised standard

1) For this standard, "Protection System" failure should be limited to only relay event failures. 2) R1 â€“ As stated in our response to Question 5, FE does not support the modeling requirements within the TPL standard and suggest that the SDT remove these requirements. This standard should be viewed on a premise that a valid and appropriate system model exist so that the fundamental focus of the standard is as stated in its purpose statement "Establish Transmission System planning performance requirements... to develop a Bulk Electric System that will operate reliably over a broad spectrum of System conditions." If R1 remains, the phrase "and other data sources" should be removed. 3) R1.1 â€“ this requirement requires the documentation of ANY data modification. Do you really mean ANY? How much detail is needed in the documentation? Is a line by line comparison of all data values before/after needed or is a general overview discussion sufficient? For instance, FE replaces its system model as shown in the MMWG representation with a more detailed system representation model when performing planning studies. This can included many differences from the MMWG system equivalent. How much documentation is needed in this situation? 4) R2.6 â€“ This is not a requirement and should be removed and shown as explanatory text (footnote). 5) R3 - Requirement R3.1 is redundant to statements in the text of R3 and R3.3 and R3.4. We suggest that R3.1 be removed. It is suggested that R3.4 be indented and become a R3.3 sub-requirement. R3.5 would be better placed ahead of R3.3 along with the existing R3.2.

Individual

Kathleen Goodman

ISO New England Inc.

No

There should be no difference beween System and Generating Unit Stability studies. Each require discretion regarding which events need to be tested. The consequences are potentially similar: either the instability of one of more generators. Extreme Events should be considered for any stability analysis, again, recognizing that discretion needs to be applied when selecting or dismissing particular contingencies. If no distinction is made between System and Generating Unit Stability studies is made, then the definition of Generating Unit Stability Study should be stricken from the standard.

No

a. A MOD standard should be developed to address the assembly of dynamic load models, rather than specifying modeling in paragraph 2.4.1 (dynamic behavior of loads, including consideration of the behavior of induction motor Loads). Paragraph 2.4.1 should instead read, "System Peak Load for one of the five years." The remainder of the paragraph should be deleted. b. In paragraph R.2.4.3.4, what does "variability" mean? Is variablity more of a concern than an outage? Suggest changing paragraph R.2.4.3.4 to simple say "Outages of Reactive Resources" c. Add a new requirement, "R5.4.3.4 Automatic generator tripping shall not have an significant adverse impact on overall system reliability." d. Remove Heading R5.5 and make generator unit stability for a new facility a section of overall stability requirements. e. Modify R5.5.1 to become R5.4.5, with the following, "Shall be performed for the addition of an individual generating unit or generating units at the same interconnection point 20 MW or greater that are directly connected to the BES." There may be little difference between the stability performance of a single 20 MW unit and an aggregation of units totalling 20 MW at the same BES interconnection point. f. If planning assessment studies all generators or stations above 20 MW, as suggested by R5.5.1, then this provision is unnecessary and R5.5.2 should be deleted. g. If the output of a generatiing station does not change by more than 20MW, then no new study is required and, it should be acceptable to rely on past stability assessments. This is not clear in R5.5.1. h. With respect to

section R5 - The concept of planned and long-term outages should be addressed uniformly for the general Planning Assessment. It should not be specific to the Stability Assessment. i. Planned and long-term outages are two fundamentally different concepts and should be treated separately. Planned and Long-Term outages should be defined. Define how planning events in Tables 1 and 2 are associated with each type of outage. Define length of a "Long Term" outage. Planned outages should be addressed in the operating horizion unless otherwise defined in the planning horizion. j. The provisions of Section R.5.3 should be included in a MOD standard and applied to a requirement to provide information regarding all direct and indirect protective and control actions that could result in the inadvertant trip of the generator. Such a provision should include " other equipment (e.g. HVDC, SVC's, Statcoms)", and identify how these devices are treated in the simulation. k. Strike R5.5.3 and R5.5.4, as they become redundant to R5.4.1

No

There are a few significant concerns with these definitions: The definitions need to be expanded to include interruption of Firm Transmission Service in a manner that is comparable to interruption of load; otherwise, Firm Transmission Service (FTS) is being treated in a manner that is superior to load. (The expansion of the defintions to include FTS would also address stated concerns associated with loss of radial or single facilities over which Firm Transmission arrangements have been made). There are perceived limitations to what constitutes Non-Consequential Load Loss. It must be clear that Non-Consequential load loss allows the cascading loss of a local area that does not adversely impact the BES. It would be impractical and unnecessary to anticipate that every such situation could be or needs to be managed by operator action or automatic control. Non-Interruptible load needs to be defined as,"Demand that the end-use customer has not made available to its Load-Serving Entity via contract or agreement for curtailment." The Consequential Load definition should specify "Interruptible and Non-Interruptible Load that is no longer connected to a sourceâ€¦" The inclusion of "or which is lost as a result of the load's response to the transient conditions of the event (other than through the action of UVLS or UFLS schemes)" confuses the definition of Consequential Load Loss, because of the imbedded exception for steady state performance. It seems that the intent of this provision is to recognize that this type of load loss could occur for either transient or steady state conditions and that Planning Assessments should not be required to remedy this type of situation. However, this does seem to be at odds with the application and stated acceptability of Consequential Load Loss as noted in Table 1. Note: Table 2 has no reference to the treatment of Consequential Load Loss. It may be helpful to address the transient load loss situation in a separate defintion. Recommended Changes: Change "Consequential Load Loss" and definition to "Consequential Interruption - Load, Firm Demand, or Firm Transmission Service that is no longer connectedâ€¦" Change "Non-Consequential Load Loss" and definition- "Non-Consequential Interruption - Non-Interruptible Load, Firm Demand, or Firm Transmission Service loss other than Consequential Interruption loss that occurs through manual (operator initiated), automatic operations such as under-voltage Load shedding, under-frequency Load shedding, or Special Protection Systems, or uncontrolled loss of a local area which does not significantly impact the BES."

No

We do not feel that R3.5.1, R3.5.2 and R3.5.3 are limiting enough. Add paragraph 3.5.4 "Manual and automatic generator tripping shall not have a signifficant adverse impact on the system."

No

a. With respect to R9 "including the expected mix of industrial, commercial and residential loads", this provision may be inadequate to be practically useful. The potential issues include the variation in end-use load mix through the daily load cycle, seasonal load composition variations, and the ability to translate these end-uses into reasonable and useful steady-state and dynamic load models. It is important to understand how the information will be used and how much additional detail such as distribution network detail is also required. b. Add to the last sentence of R9 through R14 the following phrase, "within ninety days of a request for such information or as otherwise described in procedures established by the Planning Coordinator." c. Flexibility is needed to conform with the requirements of the specific Planning Coordinator. Suggest changing R10 to read as follows: R10. Each Transmission Planner shall provide its respective Planning Coordinator with modeling information for Firm Transmission Service data, Interchange Schedules and resources required to supply Load for each of its Balancing Authorities for each year of the Transmission planning horizon, within ninety days of a request for such information or as otherwise described in procedures established by the Planning Coordinator. d. Flexibility is needed to conform with the requirements of the specific Planning Coordinator. Suggest changing R11 to read as follows R11. Each Transmission Owner shall provide its respective Planning Coordinator with modeling information for known planned outages and long-term outages for Transmission equipment for each year of the Transmission planning horizon with consideration given to spare equipment strategy, within ninety days of a request for such information or as otherwise described in procedures established by the Planning Coordinator. e. Flexibility is needed to conform with the requirements of the specific Planning Coordinator. Suggest changing R12 to read as follows: R12. Each Generator Owner shall provide its respective Planning Coordinator with modeling information for known planned outages and long-term outages for

generation equipment for each year of the Transmission planning horizon, within ninety days of a request for such information or as otherwise described in procedures established by the Planning Coordinator. f. Flexibility is needed to conform with the requirements of the specific Planning Coordinator. Suggest changing R13 and R14 as follows: R13. Each Resource Planner shall provide its respective Planning Coordinator with the modeling information for new planned facilities for each year of the Transmission planning horizon including but not limited to generators, Reactive Power devices, and new technologies, within ninety days of a request for such information or as otherwise described in procedures established by the Planning Coordinator.. [Violation Risk Factor: TBD] [Time Horizon: TBD] R14. Each Transmission Planner shall provide its respective Planning Coordinator with modeling information for new planned facilities for each year of the Transmission planning horizon including but not limited to Transmission Lines, circuit breakers, Reactive Power devices, Protection System equipment and control devices, and new technologies, within ninety days of a request for such information or as otherwise described in procedures established by the Planning Coordinator. [Violation Risk Factor: TBD] [Time Horizon: TBD] g. Planned and long-term outages are two fundamentally different concepts and should be treated separately. Planned and Long-Term outages should be defined. Define how planning events in Tables 1 and 2 are associated with each type of outage (e.g. P4, P5, or P6). Should there be specific contingency descriptions associated with long-term outages? Define length of a "Long Term" outage. Planned outages should be addressed in the operating horizion unless otherwise defined in the planning horizion.
No
a. R2.3 should be changed to indicate the year(s) for short circuit analysis. b. In R4, suggest replacing, " and following any single Contingency condition that would result in greater circuit breaker interrupting duties" with , " giving due consideration to the potential sequence of equipment operation". c. It should be stated in the standard that assumptions should be based on procedures provided by each Transmission Planner and by the Planning Coordinator.
No
a. In both Table 1 and Table 2, the "Interruption of Firm Transmission Service Allowed" column. It is problematic to try to create an "exemption" based on type of facility such as HVDC. There are many other situations in which Firm Transmission Service has been provided, but may need to be curtailed partially or completely following an outage. b. The term 'Firm' may have several different definitions. If 'Firm' Transmission Service or load may be interrupted for exceptional events, then it is conditional and 'Conditional Firm' should be defined. It is recommended that a note be added stating that "the only exception would be for curtailment of conditioned (or Conditional) Firm Transmission Service", recognizing that there may need to be some form of grandfathering in order to avoid having to rewrite transmission service agreements. c. In both Table 1 and Table 2, the "Extreme Event Descriptions" item 1 should add "or shunt device." d. In Table 1, the "Extreme Event Descriptions" items 3a and 3b should be deleted; they are redundant with Item 1. e. In Table 2, Note 5 includes significant clarifications and should not be buried in the bottom of the contingency table; Note 5 would be better placed in the definitions section. f. In Table 1 and Table 2, Contingency P5 requires a fault plus Protection System Failure. Assuming that the battery system is included in the Protection System, which it is in NPCC, then ALL protection at substations with single battery systems would be lost. This Contingency P5 requires a stable system response while all bus voltages and loadings to remain within criteria, without interruption of firm transmission service and without Non-Consequential Load Loss, at system voltages above 300 kV. Was this an intended outcome of this standard?
No
he definition provided is too limiting. It says that if you have two rings with a bus tie breaker in between, it is no longer a bus tie breaker. Recommend, "A circuit breaker that is positioned to connect two individual station configurations. The breakers in a bus scheme are not bus tie breakers but the breakers that tie bus schemes together are bus-tie breakers."
No
They should have the same performance requirements, however we understand that it is better to encourage bus-tie breakers in some applications than to hold them to the higher standard. Future station designs that need this differential treatment should be discouraged.
No
a. With respect to R2.1.3 delete "â€¦ that Stress the System with sensitivitiesâ€¦". b. R2.1.3 should be revised to clarify that if a TP/PC conducts the studies specified in R2.1.1 and R2.1.2 with one or more of the sensitivities which stress the system in the normal course of study, then additional studies of a less-stressed system are not required. c. The intention of Paragraph R2.1.4 is unclear and appears to be unnecessary; therefore, it should be removed.
Yes
The comment period was not long enough to develop a thoughtfull response to the impact that the new standards might have. Therefore cost can not be reasonably speculated.
The comment period was not long enough to develop a thoughtfull response to the impact that

the new standards might have on the planning studies, but a very rough thought would be that any additional needs would be captured within the normal planning studies, which would likely occur within two study cycles of the effective date of the standard.
The comment period was not long enough to develop a thoughtfull response to the impact that the new standards might have on study effort and the associated cost. In addition to cost, there is a significant concern over whether or not there will be enough staff to complete the required work.
See response to question 12.
See response to question 12.
See response to question 12.
See response to question 12.
B â€“ Unsure about supporting the revised standard
side from the comments to the prior questions, there are several issues of concern that prevent us from supporting the present draft of the revised standard. We offer the following constructive comments in an effort to support the worthwhile effort that is being pursued so that we can reach a point of satisfaction that we could vote to support the revised standard. Our concerns are listed in a rough order of priority. a. This standard as drafted does not allow exceptions for small parts of the system as long as interconnected system reliability is maintained, which is allowed in the existing TPL standards in footnotes b) and c) in Table 1. Unless such exceptions are allowed significant transfer restrictions or large reinforcements must be made. The applicable TPL footnotes are: Existing TPL footnote b) Planned or controlled interruption of electric supply to radial customers or some local Network customers, connected to or supplied by the Faulted element or by the affected area, may occur in certain areas without impacting the overall reliability of the interconnected transmission systems. To prepare for the next contingency, system adjustments are permitted, including curtailments of contracted Firm (non-recallable reserved) electric power Transfers. Existing TPL footnote c) Depending on system design and expected system impacts, the controlled interruption of electric supply to customers (load shedding), the planned removal from service of certain generators, and/or the curtailment of contracted Firm (nonrecallable reserved) electric power Transfers may be necessary to maintain the overall reliability of the interconnected transmission systems. b. This standard does no address base conditions. Without defining base conditions the initial status of genertaion dispatch and transers across the sysetm is ill defined. Therefore the contingency analysis doesn't have a predictable basis for a consistent and repeatable study. c. The reference to Special Protection Systems is completely permissive. Although there are good applications for Special Protection Systems, their use must be constrained to have a reliable system and to promote construction of needed infrastructure. d. This standard does not provide flexibility to shed load, which restricts the ability to control post contingency response for low impact events. This may result in advancing need for upgrades in response to low impact events. This may result in advancing need for upgrades in response to low impact events. This is in conflict with FERC's directive to have the Transmission Provider waiting for market response to transmission needs and having the Transmission Provider provide a role to back stop the market. e. Definition of the Long-Term Planning Horizion. The planning horizion, for assessment purposes should be limited to 10 years. Such an assessment should be sufficient to identify requirements that may take an extended time to implement. f. Definition of Planning Coordinator is part of the NERC Functional Model, Remove from the standard. g. Put headings on each section to identify the requirements of the section. h. With respect to R2.2 - Delete "current" from the phrase "current System Peak Load Study" and replace "study" with "assessment." i. Remove R2.2.1, the requirement to extend the assessment beyond 10 years. What does the length of the project have to do with the assessment? If it takes 15 years to build something, why does this require a review of year 15? What is the purpose of this assessment? j. R3.3.2 requires clarification - This standard needs to permit discretion regarding the single contingencies that need to be tested, similar to R3.3.3 and R3.4. It is completely unnecessary to test all events. For example, contingencies may be limited to relevant disturbances that are contained within or directly impact the studied system. k. With respect to R3.2.1 - Claraify whether the intent of the standard is to address station service minimum voltage limitation, maximum leading VAR absorption capability or both at steady state. l. Remove R3.2.2 - Relay loadibility is addressed in the PRC-023 Standard. m. With respect to R3.3.2.1 - Recommend the removal of the requirement to assess the expected duration of Consequential Load loss. It's not considered anywhere else in the standard. n. With respect to R3.3.3 - The paragraph refers to Table 1 Contingencies P3 through P7; this should be explicitly stated. Rationale for inclusion of testing should not be required; should only need to explain why certain Contingencies were not tested. This discretion should be applicable to all contingencies. o. With respect to section R5 - The concept of planned and long-term outages should apply to the general Planning Assessment, or not at all. It should not be specific to the Stability Assessment. p. The provisions of Section R5.3 should have a corresponding MOD standard apply a requirement to provide information regarding all direct and indirect protective and control actions that could result in the inadvertant trip of the generator. Such a provision should include "other equipment (e.g. HVDC, SVC's, Statcoms)", and identify how those devices are treated in the simulation. q. Planned outages should be addressed in the operating horizion unless

otherwise defined in the planning horizion. r. Recommend allowing the same non-consequential interuption for >300kV as for <300kV. Distinctions and acceptability should be based on consequence, not voltage class. s. What is a "current" study?

Individual

Aaron Staley

Orlando Utiliites Commission

No

I support the comments from Florida Power & Light regarding System Stability vs Generating unit studies and proxies.

No

OUC supports the comments from FPL and Lakeland Electric on this issue.

No

The definition refers to "A source" which implies that an area served by several sources that loses access to one source could lose some load since it lost "a source" or "its source". This is a different meaning then the one expressed on the national conference call. As written this definition also implies that the triggering of a UVLS, UFLS or load shedding SPS is not acceptable under the conditions for which non-consequential load loss is not allowed. If the Drafting teamâ€™s intent is to forbid the use of these devices for certain levels of contingencies then it should be done directly in the standard not hidden in a definition. (While an SPS may or may not include load loss, UVLS and UFLS are effective because of the load loss.)

No

The requirement R3.5.1 is not clear. If the intent is that following a single or multiple contingency facilities are within their ratings before, during and after the generation adjustment it's should be specified that way. "All facilities shall operate within their facility ratings prior to, during, and after the generation adjustment". Also I am unclear on how I would prove that I am not violating and safety or statutory requirements, that seems to be attempting to prove a negative since it is not specific on which requirements. Maybe â€œNot violating any known safety and statutory requirementsâ€ if it is necessary to have this part. However since any real statutory and safety requirements have their own enforcement mechanism it is unnecessary to have the NERC auditor monitor these in addition to the existing monitors. I am not sure on the definition of sustainable? Is it a system that requires no further adjustment to be within itâ€™s long term ratings? Or is it a system that is prepared for the next event (Secure)?

No

If improvements are needed to the MOD standards then those should be addressed in the MOD standards. This is beyond the scope of the TPL standards. Creating requirements that are not within the scope of a particular standard invites compliances issues and also creates an environment where it may not be possible to comply with both standards. However if you are going to retain these please consider: R7: Revising to state "Each Transmission Planner and their associated Planning Coordinator" otherwise this could be interpreted that every TP & PC has to have an agreement with every other TP and PC in existence on their joint and individual responsibilities. R8: This seems to be redundant with the FERC order 890 requirements for an Attachment K process. That process already has an audit mechanism in FERC and a reporting mechanism in the form of the clients of that process. Having NERC auditors monitor this type of process seems a distraction from their purpose of enhancing system reliability.

Yes and No

OUC agrees with other commentors that if there is a need for monitoring this, it should perhaps be in a different standard.

Yes and No

I like the concept of the new performance tables however if they could be made shorter that would be handy. I have the following specific suggestions, although they may be moot if the table is redesigned. The way the notes at the top of table 1 and table 2 are written it appears that they apply to planning single, planning multiple and extreme event sub-tables. However this is in conflict with some parts of the standard itself and the teamâ€™s comments on the conference call. For example Requirement R3.3.2.2 applies facility ratings only to planning single contingencies only, so which is correct the requirement or the note that applies it to everything? I have several suggestions to fix this: 1. Move the "notes" to under the Planning Event sub table 2. Making 4 tables with the Extreme Events being a table 2 & 4 respectively 3. Indicating the notes as only applying to specific planning events. The discrepancy between requirement R3.3.2.2, the table note and comments on the conference call also needs to be corrected either by expanding the applicability of R3.3.2.2 to multiple contingencies or reducing the scope of the corresponding note. It should be clarified somewhere that the Transmission Planner and Planning Coordinator select the range of the system contingencies for N-1. Otherwise some may interpret this as only having to test contingencies on their own system (insufficient from a reliability perspective for many systems) while some auditors may interpret this as requiring every possible n-1 in the US and Canada as necessary. For example a requirement R3.2.3 could be added

stating "The planning assessment should include a technical rationale for the range of transmission lines, transformers and other equipment considered". This could also be handled as a note on the tables to the effect of "The study should include a technical rationale for the range of transmission line and generators considered."
Yes and No
I neither for or against breaking out these breakers as a seperate class. However a graphic or sketch of some example an easier concept to understand both in terms of what it is and why it is worthy of special attention.
Yes and No
If they are going to be two classes of equipment with an arbitrary cut off 300 kV is a good cutoff. However I would prefer to see the decision on what is "super BES" and regular "BES" less arbitrary and more reliablity driven, such as letting the regions define this cut off just as they define BES in a manner suitable to the design of their regional system.
Yes and No
I generally agree with the intent of requiring studies beyond just one load level and system condition; however I have some specific suggestions, questions and comments. R2.1.3: As worded I have several concerns: 1. This would make any study performed that did not include sensitivities useless for performing the assessment. I recommend identify sensitivities and studies separately, with sensitivities just being smaller versions of studies. (Our usual definition is that a study demonstrates specific solutions to problems identified, whereas a sensitivity merely comments on the presence or lack of problems and how they relate to what is seen in the more formal studies. Obviously a problem found in a sensitivity not seen in a regular study receives additional focus.) 2. This would force the study to look only at the sensitivities listed rather then allow one or more of the conditions, plus additional conditions all in one run. This would force an entity to run additional studies if they wished to exceed the requirements rather then a single study that meets and exceeds the requirements. I suggest the following wording instead to still require the sensitivities, but allow flexibility in how they are performed. "R 2.1.3: At least one sensitivity shall be performed that stress the system based on one or more of the following conditions, plus any additional conditions determined by the transmission planner and planning coordinator. The Planning Assessment will also include the technical rationale for why each of the conditions was or was not selected for study that year. R.2.1.3.1- Suggest adding system growth, for example "season, weather, unpredicted system growth, or time of day". As written it does not seem to allow a study based on the long range load growth prediction being off, but instead only on a change in season, weather or time of day. R2.1.4: What was intended by using the phrase "Documentation of the technical rationale" instead of simply saying "shall include technical rationale"? I suggest dropping the "documentation of the" as this could cause confusion on an audit as to what is the difference between the "technical rationale" and "documentation of the technical rationale" unless the drafting team plans to define what "documentation of technical rationale is" other then the rationale itself.
Yes and No
As written the standard does not seem to forbid the adjustment of firm transfers and non-consequential load in preparation for the second part of an N-1-1, however that conflicts with the teams statements on the recent national call. If the intent is to forbid the adjustment of firm transfers and non-consequential load in preparation for the second part of an n-1-1 that needs to be made explicitly clear in the standard. This is especially important since one of the current understandings of the standards relating to Transmission Planning and System Operating Limits clearly allow such adjustments, and to not make it clear is building a compliance trap for the unwary. While I do not support the creation of this n-1-1 threshold if it is going to be established it needs to be abundantly clear.
$75,000 to supplement past study portfolio. (We have a fairly small system, only 1400 MW)
Two years, one year to recruit additional planner, the second to perform the baseline studies. This assumes there are sufficent trained personnel in the industry and they can be recruited.
$75,000 each year.
$25,000
$25,000
$0.00 if system adjustment in preperation for the second part of N-1-1 can include firm transfer and non-consequential load adjustments when neccessary. $500 Million if n-1-1 conditions must be met without firm transfer and non-consequential load - adjustements before the second event, at 230 kV and above $1 Billion if n-1-1 conditions above are met on load serving systems below 230 kV.
10 Years to meet n-1-1 without curtialment/reduction prior to the second n-1. A significant portion of the work would be in either downtown, established residential or highly sensitive enviromental areas, all of which may require extensive legal proceedings to build the projects. There would also be a large amount of simultanenous work going on nationwide that would result in a shortage in construction & design personnel as well a scarcity in needed materials.
C â€“ Definitely do not support the revised standard

This standard is a definite improvement over the current set of standards. The majority of my comments are on details rather then the overall concept. My single biggest concern is the handling of n-1-1. This represents a significant expense to transmission customers and serious restriction on making firm transmission available, but due to the low probability of these events it would represent little if any practical improvement in customer reliability or grid security.

Individual

Charles W. Long

Entergy Services, Inc.

Yes and No

Entergy agrees with the intent. However, there will be some confusion because the industry standard terms for stability are omitted. It should be clear that the System Stability Study is a wide area view/assessment of both angular and voltage stability. In contrast, the Generating Unit Stability Study is focused on a specific unit or plant and the immediate area. Typically, this study looks at angular stability. The confusion may be exacerbated by the exclusion of a definition for voltage (or load) stability in the notes on page 31. There is a discussion of angular stability, but voltage stability is conspicuously missing. An improvement for the System Stability Study definition is to clarify that it is a study that focuses on the impact to the system itself and covers an area larger than one Generating Plant, covering a large geographical area. See specific proposal below: â€œSystem Stability Study - Study that focuses on how contingencies impact a larger portion of the System than a Generating Unit Study. These studies would examine issues such as angular Stability, inter-area power oscillation, and dynamic voltages.â€

No

General Comments: The enhanced requirements in this standard will result in an exponential increase in the amount of studies required to become compliant. Some of the changes such as the list of specific sensitivity studies will make it difficult to audit. Standards need to be measurable. As currently written, these requirements are difficult to measure. Furthermore, as indicated in the later questions, there could be significant costs to comply with these revised requirements Specific Comments: In 2.4.1, it would be better to address the "consideration of the behavior of induction motor Loads" in the sensitivity studies bullet, 2.4.3.1.,if this bullet is to be included at all. Furthermore, induction motor modeling is primarily required in areas with high load concentration that could be subject to angular and voltage stability issues. Considerable effort is required to collect information on motors. Therefore, studies to evaluate induction motor effects should be included in the sensitivity analysis section. In 2.4.3, what was the rationale for including only a portion of the sub-bullets included in 2.1.3? Also, in 2.1.3.7, does "Modification of planned Transmission outages" imply changes in dates? It seems unlikely that the cancellation of an outage would have negative impacts. More clarification is needed on what "modification" means in this requirement. R 2.4.3 Each transmission provider has its own transmission planning needs and requirements. While it is true there are common elements and considerations that have to be incorporated in every transmission providerâ€™s planning process, it is difficult, if not impossible, to prescribe a list of sensitivities that is, or should be, applicable to everyone. Entergy has specific concerns regarding the following sensitivities. R.2.4.3.2 Modification of expected transfers: The use of "expected" transfer levels suggests that one can expect certain transfer patterns beyond what is modeled in base cases as firm. These sensitivities could result in an endless string of â€œwhat-ifâ€ scenarios where transmission users would attempt to influence these studies to advantage their respective market positions. Any system improvements based on such "expected" use of the system shall not result in discriminatory treatment of transmission users. R.2.4.3.5. Generation additions, retirements, or other dispatch scenarios. Generation additions are addressed by FERC-mandated study criteria. These requests are handled through the generation interconnection and system impact study processes. Generation retirements and other dispatch scenarios can have both positive and negative impacts on reliability. However, assumptions used to pick which resources are changed, and in what way, will likely be difficult to justify. R5.5 There is a concern with R5.5.1 with the requirement to perform simulations on 20 MW generators (to be consistent with the Registration Criteria). We recommend a 75 MW generator cutoff for required simulations.

No

To the extent stakeholders agree with the use of UVLS or other special protection systems to mitigate events and avoid costly infrastructure improvements, the load that is reduced due to the operation of these systems should be capable of being classified as consequential load. In some cases, these systems can enhance grid reliability by removing components that have no significant impact on the BES. The definition of Non-consequential Load Loss includes load dropped by UVLS, UFLS, as well as SPS. However, Consequential Load Loss does not name SPS load loss as an exception, while UVLS and UFLS are named specifically. Shouldn't load lost by SPS action also be included in this exception to reduce confusion? There also seems to be another category missing. Non-consequential load loss could also be a result of "regular" protection systems beyond those directly protecting the faulted equipment. The second part of the Consequential Load loss definition is confusing - "Although Load which is lost as a result of the Loadâ€™s response to the transient conditions of the event is considered Consequential Load

Loss and is permitted when Consequential Load Loss is allowed, Transmission planning entities are not allowed to rely upon the expectation of such Load loss to meet steady state performance requirements." While it Is part of consequential load loss per the definition, planners are not allowed by the standard to plan for it. Therefore, this definition seems to make the Performance Tables incorrect. With this statement we seem to need another term like "Allowable Consequential Load loss."
Yes and No
The intent seems reasonable, but the wording needs work. There needs to be consistent verb usage. All 3 sub-bullets need to use "shall" instead of "would" and "is."
Yes
Yes
Yes and No
Given the type of information the SDT was trying to convey in the Tables, the format is fine. However, the enhanced standards create a conflict between the planning criteria used for evaluating transmission service (typically a standard N-1 thermal only analysis for ATC/AFC calculations) and the criteria for reliability as proposed by this standard. This disconnect will unfairly shift the cost of expanding the transmission system to the native load customers while wholesale and point-to-point transmission customers will reap the benefits of the additional capacity installed.
No
Change term from â€œBus-tie Breakerâ€ to â€œStraight Bus Substation Bus-tie Breakerâ€ with the following definition: A bus-tie breaker is a circuit breaker that connects two individual bus sections in a straight bus substation configuration. References to Bus-tie Breaker in the standard would also need to be changed accordingly.
No
The probability of an EHV breaker failure is extremely low. Statistically, the probability of an internal breaker failure on any given day in our system is approximately 1 failure every 10,000 days. The probability of a stuck EHV breaker in our system is approximately 1 failure every 21,000 days. While the impact of such events can be severe, the significant cost to remedy such low probability events seems unlikely to pass any reasonable cost/benefit analysis.
No
R2.1.3.2 - Modification of expected transfers: Modification of expected transfers infers that non-firm transmission use would be estimated based on historical data or perhaps an economic outlook. To plan the system for such non-firm use is an imprudent burden on rate payers. Economic tools are available to ascertain the benefits of system upgrades and prudently allocate the costs of such upgrades. Generation assets and the future plans of those assets is market sensitive information that could easily be extracted from such sensitivity analyses. Results of these sensitivity studies should be used to aid in reliably operating the system. They should not be a basis for constructing transmission facilities for reliability. These types of studies are aligned with the operating horizon. See also comments made above regarding 2.1.3.4 and 2.1.3.7. In general, we believe that breaking these requirements into specific sub requirements, focusing on specific sensitivities, is too prescriptive and inappropriate. It will lead to over focus on these particular issues to the detriment of system reliability. There should be no enumerated list of required sensitivities. Engineering judgment needs to be permitted. Many examples of sensitivities are already inherent in the existing requirements. Some sensitivity studies are in effect adding an additional level of contingency (N-2 or N-3). Sensitivity studies of load variation are already inherent in the fact that several different study years and conditions are already being required. Outages of reactive sources and generation should already be included in studies of multiple contingencies. The process of planning new generation (system impact studies) will include studies of the future with and without the proposed new equipment. The TP and PC can better select the most appropriate sensitivities for their system. We recommend that engineering judgment continue to be recognized as a vital component of planning.
Yes and No
Since Event P6 is essentially a sub-set of the existing Category C.3 Contingency events, we support these modifications which make the system performance requirements for P6 consistent with what exist today for Category C.3. While we agree interruption of firm transmission service and non-consequential load loss should not be allowed to meet the planning requirements for the first system contingency (to get loadings back within normal ratings), these system adjustments should be allowed to prepare for the second event so that the system will meet the requirements following the second event. We recommend that clarifying changes be made to incorporate this concept. We recommend that the statement below be included as modification or as a footnote for the P6 portion of the table as follows: Interruption of firm transmission service and non-consequential load loss are allowed after the first event as a system adjustment to prepare for the second event in order to meet the requirements following the second event. As the

requirement is now implemented in the table, transmission service would need to be made available only if they can be accommodated for N-2 events. This would place these services on equal footing from a reliability perspective but would virtually eliminate the firm transmission market.
Cost will be covered by the on-going study costs as indicated below.
18 to 24 months
$1,200,000 / year
$150,000
$100,000 / year
Without performing the requisite analyses, Entergy does not know definitively how much it will cost to comply with these revised standards. However, Entergy expects the cost could be up to $1 billion to become fully compliant.
15 - 20 years The time required for construction will be elongated due to the need for significant numbers of new construction projects. This will require that projects be queued by the TPs because of constraints in available materials, labor and other resources.
C â€“ Definitely do not support the revised standard
No cost-benefit studies have been completed to justify the significant investment and no detailed analysis of the expected reliability impact has been conducted for the Eastern Interconnection. Some research suggests that infrastructure expansion will reduce the number of large BES events, but that each event would impact larger areas with longer restoration times. http://eceserv0.ece.wisc.edu/~dobson/PAPERS/complexsystemsresearch.html Additionally, there is a fatal disconnect between the enhanced reliability standard and the FERCâ€™s current standard for selling firm transmission service. A utility cannot be required to build to an N-1-1 standard to satisfy reliability requirements and also be required to sell additional firm transmission service using a lower N-1 reliability standard. Such a situation would create an untenable situation where reliability standards force construction that the utility is then required to make available for sale pursuant to the provisions of the OATT and, once sold in accordance with the OATT, results in the utility being out of compliance with the reliability requirement. Requirement P2.1 in the table will have direct impact on local load reliability but not grid reliability. For example, a long line in a radial configuration due to a single contingency would only impact the reliability in a local area. Any implementation plan should consider all aspects of obstacles that Transmission owners will encounter including, ROW and land acquisition delays, inflationary impact on raw materials and other resources, capital funding constraints and associated regulatory lag, etc. Category P6 prescribes what is effectively an n-2 criteria for offering firm transmission service by not allowing the curtailment of firm transmission service as a system adjustment. Many areas are limited in how much local generation is available for re-dispatch as a system adjustment and thus compliance would be realized only by costly transmission construction by TPs.
Individual
Jay Seitz
US Bureau of Reclamation
No
Comments: We believe that there is no significant distinction between Generating Unit Stability and System Stability other than the objective and focus of the study. Therefore, we cannot accept a simple statement from the SDT that it believes it is important to maintain this distinction without more explanation. If a distinction is maintained, then Generating Unit Stability Study should be and is already covered in FAC-001-0 and FAC-002-0. As defined, Generating Unit Stability Study â€œfocuses on an individual generating unit's or electrically closely-coupled generating units' Stability for various Contingencies on the Transmission Facilities connected to that generating unit(s) point(s) of interconnection or one bus away from that point. However, the Purpose of the proposed TPL-001-1 is to â€œdevelop a Bulk Electric System that will operate reliably over a broad spectrum of System conditions and following a wide range of probable Contingenciesâ€. If a Generating Unit becomes unstable, the unit can be disconnected from the BES without impacting system stability. Therefore, we believe that the Generating Unit Stability Studies portion is attempting to introduce interconnection stability studies into the TPL standards. Interconnection stability studies are adequately addressed by FAC-001 and does not need to be specifically called out in TPL-001-1. In addition, Generating unit stability studies are typically performed at the time of interconnection. Even though Generating Unit Stability Studies have been done as new generating unit(s) were interconnected or at the time changes occurred, such studies have not been done for the entire fleet of Generating Units at the same time. For very old units, stability study documentation may no longer exist, even though no potential stability problems have been identified when stability studies were run for interconnecting other newer units or for the System. If the requirement for Generating Unit Stability Study is retained in this proposed TPL-001-1, R2.5 needs to be clarified to say â€œonly whenâ€ the changes in R2.5.1 and R2.5.2 are made that the Generating Unit Stability Study needs to be done. There also needs to be language about how to treat generators that are existing prior to this Standard

taking effect. We would also appreciate if the SDT would more clearly define with examples the terms in R2.5.2, â€œmaterial Transmission System changeâ€ and â€œat or near the point of Interconnectionâ€ to invoke a study.

No

Comments: R2.4 is acceptable. Please consider deleting the conditions identified in R5.4.3.1, R5.4.3.2, and R5.4.3.3. We question the need to specifically call out these requirement in subrequirements of R5.4.3. We believe these conditions should be met for any and all requirements of the standard. It should not be necessary to list acceptable practices, especially if the conditions placed on the practice are general conditions that are addressed elsewhere or are generic. Otherwise, R5.4 is acceptable. â^' We generally agree that Transmission Owners with extensive Transmission Planning Function and Planning Coordinators need to perform and be held accountable for the Requirements in R2.4 and R5.4; however, the SDT needs to define an organization size level below which these requirements for the associated Transmission Planner may be slightly relaxed. There are numerous Transmission Planners; (e.g., those associated with PUDs, Municipals or REA, etc. where historically dynamic stability has not been a problem), for which performing these type of studies and assessments would be onerous and would not yield reliability benefits for the network. â^' The proposed requirements in R2.5 and R5.5 are already covered in FAC-001 and FAC-002 and should not be included again in the proposed TPL-001-1. Otherwise, the NERC standards would have redundant requirements. In addition, Transmission Ownerâ€™s open access tariffs requires Generator Owners to apply for interconnection to its transmission system or to make modifications to their generators as described in R2.5.1, R5.5.1, and R5.5.2. It is therefore the Generator Ownerâ€™s responsibility to cause these studies to be done at the time of interconnection or modification, yet R5 seems to place that responsibility only on the Transmission Planner and the Planning Coordinator. The Transmission Planner or the Planning Coordinator would not know of the changes until notified by the Generator Owner. If the SDT believes that FAC-001 is deficient, it should propose revisions to this standard, not simply add to TPL. Requirement R5.5.2 needs to be clarified to state changes or additions to the generating unit that result in an increase in power output. Otherwise, it could be interpreted to apply to existing units with a change in dispatch.

No

We generally agree with the definitions by themselves but have concerns about potential unintended consequences. This definition will severely limit the loads that can be classified as â€œlocal Network customers, connected to or supplied by the Faulted element or by the affected area, may occur in certain areas without impacting Comment Form for 2nd Draft of Standard TPL-001-1 Assess Transmission Future Needs (Project 2006-02) Page 5 of 12 the overall reliability of the interconnected transmission systemsâ€ in footnote b of the existing TPL standards. In combination with raising the bar for loss of Facilities with operating voltages 300 kV or higher (P2, P4 and P5 in the Performance Tables), this definition may result in encouraging entities to connect more loads in a radial fashion or avoid loop connection to improve service reliability just to fit in the Consequential Load Loss definition, â€œâ€¦load no longer being connected to a sourceâ€¦â€. As a result, service reliability to customer would be adversity impacted without commensurate improvement in overall system reliability. In addition, existing design of many such local networks would normally require RAS/SPS to disconnect loads on local networks in response to contingencies. However, the definition of Non-Consequential Load Loss states that using RAS/SPS is Non- Consequential Load Loss. In the Consideration of Comments on the First Draft of TPL- 001-1, page 49, response to First Energy, the SDT states "FERC has determined that any Load loss that is not directly connected to the faulted element is actually Non- Consequential Load loss." We found a similar response to WECC on page 449, item 6. While we do not disagree with the statements made by the SDT, that FERC wants clarification of what is Consequential Load Loss, we do not see where FERC has ruled out the use of RAS/SPS for Consequential Load Loss. Consequential Load Loss needs to include the concept of local networks. Another way to address this would be to exempt some local networks in the definition of the Bulk Electric System. The performance of existing systems has been designed to be consistent with the concepts of the quoted sentence above from footnote b of Table 1 of the existing TPL standards. There are many instances where some local network customer curtailments or local area load loss has been allowed by local regulatory authorities as long as the overall reliability of the interconnected system was not impacted. This is a result of tradeoffs with the cost and environmental impacts of providing a higher level of reliability in a local area. An attempt to eliminate the concepts contained in footnote b of the existing TPL standards would invalidate local regulatory decisions, place a large unintended cost burden on existing customers and could potentially create criteria that could not be met anytime soon, if ever, as a result of the long lead time required for system improvements. Any attempt to raise the bar by interpreting the definition of Non-Consequential Load as eliminating the concepts of footnote b is considered unacceptable. The new criteria need to clearly maintain these concepts to prevent a large disconnect with existing design criteria. The last sentence in the Definition of Consequential Load Loss (â€œAlthough Load which is lost as a result of the Loadâ€™s response to the transient conditions of the event is considered Consequential Load Loss and is permitted when Consequential Load Loss is allowed, Transmission planning entities are not allowed to rely upon

the expectation of such Load loss to meet steady state performance requirementsâ€) seems more appropriate to be requirements. Therefore, please move this sentence to the Notes Section at the beginning of Table 1 as new Item 7.

Yes

We agree. However, the conditions listed in R3.5.1, R3.5.2 and R3.5.3 are applicable to the overall TPL Standard. Their specific listing in R3.5 gives the impression that these Requirements are only applied to R3.5 and not to the other Requirements in this Standard. In other words, are there any Requirements in this Standard that R3.5.1, R3.5.2 and R3.5.3 do not apply to? Therefore, we suggest TPL- 001-1 be silent on this issue and move R3.5.1 through R3.5.3, (and the equivalent in the stability study R5.4.3.1 through R5.4.3.3) to a Requirement applicable to Assessment studies in general, such as the bullet points in the Performance Tables.

Yes

Comments: While we agree with separating R1 to form R9 through R14, we believe that R9 (modeling information for real and reactive load forecast data) should be applicable to Load Serving Entities (LSE) instead of (or in additional to) the Distribution Provider. In any case, this type of exchange of load information is already covered in MOD Standard or in the respective tariffs, and should not be included again in the proposed TPL-001-1 Standard.

No

Comments: We agree with R2.3. However, R4 requires assessment of â€œShort-circuit capability of its equipment under normal conditions and following any single Contingency condition that would result in greater circuit breaker interrupting dutiesâ€. Comment Form for 2nd Draft of Standard TPL-001-1 Assess Transmission Future Needs (Project 2006-02) Page 7 of 12 Since short circuit studies are typically performed by applying a fault on a Facility starting from a normal condition, there can be confusion whether the result would constitute â€œnormalâ€ condition or â€œfollowing any single Contingency conditionâ€. Also, by specifying the normal and single contingency conditions, R4 is straying into â€œhowâ€ to perform a study, which is not necessary in a standard. We suggest deleting the reference to the contingencies to be used in the study.

No

We do not disagree with the proposed format changes of the Tables. However, we are not sure if separating into two Tables is necessary, or beneficial. It seems like an extra column for event could be added and some changes to the notes would greatly simplify the table. Some of the rows could also be combined; one such example is P2-2 (Loss of Bus Section) and P2-3 (Internal Breaker Fault, non-bus-tie). Will the SDT plan on combining some similar rows? Table 1, P4 and P5 refer to "Faults" as part of the contingency. This is steady state performance and faults are not modeled in steady state. Table 1, P2.1 refers to a "single ended line". Technically, this means we need to generate a "false" bus at each end of the line to evaluate this condition or use a dispatcher power flow which included breaker modeling. Is this an accurate interpretation of the intent of this requirement? We believe there should be no distinction between the voltage classes and support the use of load shed for all cases identified in P4 through P7.

No

We do not disagree with the proposed definition change. However, we do not agree that â€œSubstation configurations such as ring-bus, breaker-and-a-half, or double bus-double breaker protection schemes do not use bus-tie breakers. Some breaker-and-ahalf and double-breaker layouts may have bus breakers located mid-way in the side elements. We propose the following definition: A circuit breaker that divides a bus section with multiple tap off points into two bus sections.

No

We interpret â€œexit breakersâ€ to mean a breaker on an element that comes in from outside the substation. We agree with applying less stringent performance requirements to bus tie breakers above 300 kV. Further, we believe that Non- Consequential Load Loss should be allowed for loss of either Bus-Tie or Non-Bus-Tie Breakers regardless of voltage class. The SDT has not presented evidence that the probabilities of failure for breakers within the same substation are significantly different for different voltage classes

No

We generally agree with the concept of the sensitivity analysis since this is standard practice in understanding system performance risks and the effectiveness of improvements. It is ambiguous from a criteria perspective, however, what role is played by the sensitivities in developing Corrective Action Plans and what risks are created by misapplication of the intent of such sensitivity analyses. Clarification of the following is needed along with examples of applicable sensitivities and how these would be factored into Corrective Action Plans. If a Transmission Planner performs studies on the â€œbase caseâ€ of which the loads represented are 1 in 10 year adverse weather condition (10% chance that the actual load may exceed the projected load), does this constitute a sensitivity analysis. If so, will the Transmission Planner have to then perform additional less stringent studies at the load levels representing 1 in 2 year adverse weather conditions (50% chance that the actual load may exceed the projected load) to

demonstrate compliance? R2.1.4 requires explanation of performing additional sensitivities that are not listed in the R2.1.3. This would discourage entities from performing additional sensitivities. In addition, in the above example, the Transmission Planners should not have to explain Comment Form for 2nd Draft of Standard TPL-001-1 Assess Transmission Future Needs (Project 2006-02) Page 9 of 12 why they feel that this higher level (1 in 10 year adverse weather) of load is the â€œbase caseâ€ condition. R2.7 also states that â€œCorrective Action Plans do not need to be developed solely to meet the performance requirements for sensitivitiesâ€. Consider a Transmission Planner that has built transmission based on the 1 in 10 year adverse weather load assumed in the â€œbase caseâ€, will the judgment of the Transmission Planner be then questioned because theâ€œbase caseâ€ used is equivalent to a sensitivity case and not a 1 in 2 year adverse weather base case?

Yes

We agree with revising P6 to permit loss of Non-Consequential Load to meet performance requirements for Systems above 300kV. However, we are concerned that with the loss of the first N-1 in P6, curtailment of firm transmission service or firm transfers would not be allowed as part of system adjustment in preparation for the next N-1. Allowing curtailment of transmission service or firm transfers for such system adjustments should be added to R3.3.2.2. Otherwise, the power transfer under normal condition (before the first N-1) will have to be significantly curtailed in anticipation for meeting performance requirements after N-1-1, or transmission facilities, which would have otherwise been unnecessary, would have to be built. Either would adversely impact customers. We also have questions on Event P6 in both Performance Tables 1 and 2: We would like some clarification on the overlapping single contingencies as denoted in Event P6 (N-1- 1), and one where a single contingency, say Event P1 (N-1), follows a prior "planned" outage of a Facility (N-1). The former would allow the Non-consequential Load Loss, while the latter would prohibit it.

C â€“ Definitely do not support the revised standard

We agree that the Standard as presented is clearer, but there are numerous issues that still need resolution, Measures, VSLs, Implementation Plan, etc., before WECC can give a full approval of this Standard. âˆ’ There is no mention in the purpose of the Standard about minimizing loss of load for more probable unplanned contingencies. Maybe there needs to be some definition around what is meant by reliability. âˆ’ We believe that with the loss of the first N-1 in P6, curtailment of firm transmission service or firm transfers should be allowed as part of system adjustment in preparation for the next N-1. This should be added to R3.3.2.2. Otherwise, the power transfer under normal condition (before the first N-1) will have to be significantly curtailed in anticipation for meeting performance requirements after N-1-1. This will unnecessarily impede commerce. Or, to maintain the same firm power transfer under normal conditions, construction of transmission facilities will be required. Either way, this would impose a much stricter standard than exists today resulting in very costly unnecessary system improvements and invalidate terms of many transmission service contracts that allow for implementation of pro-rate curtailments of firm transmission rights during forced and planned outage conditions. âˆ’ We disagree with the application of the proposed definitions of Consequential Load Loss and Non-Consequential Load Loss in conjunction with â€œraising the barâ€. Local Network load should be included in Consequential Load and the loss should be allowed for single contingencies. The TPL standard is to maintain reliability of the BES. Under certain conditions orderly dropping of local network load could limit the spread of the disturbance beyond the local area and allow BES reliability to be maintained. This would minimize the total amount of load loss and allow for quicker load restoration. The proposed definitions for Consequential Load Loss and Non-consequential Load Loss will provide no reliability benefits for high voltage (>300 kV) transmission backbone system providing wholesale open access service and interconnecting to the rest of the western interconnection. Any potential reliability benefits of any additional facilities built to comply with these definitions would be at the local service level. âˆ’ As mention in comments to Q3 above, some local network customer curtailments or local area load loss has been allowed by local regulatory authorities as long as the overall reliability of the interconnected system was not impacted. This is a result of tradeoffs between providing a higher level of reliability in a local area and the cost and environmental impacts of providing that service. Such tradeoffs are subject to local regulatory authority or contract negotiated between the transmission provider and its transmission customers. Regarding the terms â€œinterruption of firm transmission serviceâ€, there needs be clarification on what Interruption means. Since it is referring to firm transmission service, we would interpret this to mean curtailment needed after a particular contingency and adjustments. There also needs to be clarification on what â

€œFirm Transmission Serviceâ€ means. Two points, 1) the NERC definition states â€œhighest quality service offered to customers under a filed rate schedule that anticipates no planned interruption.â€ The Standard implies anticipation of â€œunplannedâ€ interruption for certain contingencies. 2) Is this referring to a transmission product as defined in FERC Order 890, or firm transfers modeled for the conditions being studied? One way Comment Form for 2nd Draft of Standard TPL-001-1 Assess Transmission Future Needs (Project 2006-02) Page 12 of 12 to interpret the intent is the firm transfers being modeled for the conditions in the powerflow to meet demand that would result in load not being served if that firm transfer were curtailed. If there is other generation in the system that could increase to meet the load if the transfer being modeled is interrupted, then interruption of firm transmission service should also be allowed for P1 through P5 contingencies in the table. In addition, we believe that DC and AC lines should have the same performance requirements with respect to interuption of firm transmission service. We do not understand why interruption of firm service would be an acceptable response to the loss of a single pole of a DC line (i.e. response to the contingency) but not an acceptable response to prepare for the next contingency of an AC line. The transfers over both AC and DC lines can automatically be curtailed when the line is outaged.

Group

Bonneville Power Administration

Denise Koehn

Transmission Reliability Program

No

Generating Unit Stability is adequately addressed by the System Stability studies and does not need to be evaluated separately. Footnote 5.a.i in the notes following the Performance Requirements Tables, already specifies the requirements to meet. Therefore, we recommend removing the section on Generating Unit Stability Studies from standard TPL-001-1. The focus of this standard should be on "System Stability" which encompasses all generating units.

No

R2.4.1 references the use of a load model which appropriately represents the dynamic behavior of loads. However, such load models have not been developed yet. We recommend removing that requirement for load models until these models have been developed and approved. R2.5 and R5.5 refer to Generating Unit Stability studies. As stated above under Item 1, Generating Unit Stability is adequately addressed by the System Stability studies and does not need to be evaluated separately. Footnote 5.a.i in the notes following the Performance Requirements Tables, already specifies the requirements to meet. Therefore, we recommend removing the section on Generating Unit Stability Studies from standard TPL-001-1. The focus of this standard should be on "System Stability" which encompasses all generating units. Some of the requirements listed under R5.4 apply more generally than just within this section and are already covered elsewhere in the standards. R5.4.3.1 is already covered in Note 1 of Table 1. R5.4.3.2 is not relevant to Reliability Standards and would already be addressed by the the relevant regulations, so it does not belong in this Standard. R5.4.3.3 is already covered in Note 1 of Table 2. Because these requirements are already covered by other sections of the Standard, they can be removed from R5.4.

No

The definition of Consequential Load Loss needs to be modified to include all of the concepts that were contained in footnote b of the existing TPL standards.

No

R3.5 is not a requirement, but an allowed action in order to meet performance criteria. Therefore, the statement about generation run-back/tripping in R3.5 should be moved to become part of the notes in the Performance Tables and not part of the requirements text. The conditions described under R.3.5.1 through R.3.5.3 are covered elsewhere in the standards and should be removed from this section. Since R3.5 and R5.4 contain some similar wording, also see comments relating to R5.4 under Item 2, above.

No

Requirements for data gathering and load modeling belong in the MOD Standard and not in TPL-001-1. Requirements for dynamic load models should not be specified at this time, because the models have not been developed yet or approved by the RRO (also see comments regarding R2.4.1 under Item 2, above).

Yes and No

We agree with R2.3. However, we recommend removing the reference to single contingency conditions in R4, for the same reasons as described in the WECC comments. See below: "Since short circuit studies are typically performed by applying a fault on a Facility starting from a normal condition, there can be confusion whether the result would constitute â€œnormalâ€ condition or â€œfollowing any single Contingency conditionâ€. Also, by specifying the normal and single contingency conditions, R4 is straying into â€œhowâ€ to perform a study, which is not necessary in a standard. We suggest deleting the reference to the contingencies to be used in the study.

No
We suggest that the tables for Steady State and Stability Performance could be combined into one table, for simplicity. Separate columns could be used for Steady State versus Stability performance criteria.
No
The term "Bus Tie" implies tying any two buses together. However, the intent of this standard is actually referring to connecting the main buses of two adjacent main and auxiliary configured substations together. Therefore, we recommend changing the term "Bus Tie Breaker" to "Bus Sectionalizing Breaker". We also recommend removing the parentheses portion of the Bus Tie Breaker definition. It does not provide clarification and may not apply to all utilities' systems.
Yes
In general, performance requirements should be more stringent for higher voltage systems. Therefore, we agree that non-bus-tie breakers above 300 kV should have more stringent requirements.
No
For those conditions that are "not" studied, it makes sense to explain why that particular condition was not selected. However, we do not agree with R2.1.3 that a rationale needs to be provided for why a particular sensitivity "is" selected for study. Running additional sensitivities provides a better understanding of system performance and doesn't need further justification. Requirement R2.1.4 is not needed and should be removed. It should be up to the Transmission Provider's discretion whether they run additional sensitivity studies beyond what the standard requires in R2.1.3, and it should not be necessary to justify why they chose to run them. What a sensitivity study consists of, needs further clarification. For example, if a system assessment is performed using a case with transmission paths stressed near their limits, is this considered the baseline or a sensitivity? If it is considered the baseline, would a sensitivity be required at reduced stress levels and what purpose would this serve when the original case produced the more severe system impacts? This needs further clarification.
Yes and No
We agree with the revision to permit the loss of Non-Consequential Load to meet performance requirements for Systems above 300 kV. However, a better definition is needed for "system adjustments". For example, are curtailments permitted as part of "system adjustments"? Within category P6, there needs to be a common reason for the overlapping outage to occur, such as lines on a common tower, and the appropriate reasons need to be clearly identified in the requirements. In general, we believe that performance category P6 should be part of the Operating Standards rather than the Planning Standards. For these types of events, it is the responsibility of Operations to determine the necessary system adjustments to prepare for the next contingency within the operating horizon prior to year one as defined in the Planning Standards. Therefore, the performance requirements for this category of contingencies, do not belong in the Planning Standards.
This information is not available.
This information is not available.
This information is not available.
This information is not available.
This information is not available.
This information is not available.
This information is not available.
B â€“ Unsure about supporting the revised standard
We are unsure about supporting the revised standard. A couple of additional concerns are described below. The purpose of the Standard is not clearly defined. There should be more clarity given to what reliability means in the context of these standards (e.g. minimize load loss for more probable contingencies, etc.). Regarding the terms "interruption of firm transmission service", there needs to be clarification of what "Interruption" means. Does it include curtailment needed after a particular contingency and adjustments? There also needs to be clarification on what "Firm Transmission Service" means. Two points: 1) the NERC definition states "highest quality of service offered to customers under a filed rate schedule that anticipates no planned interruption." The Standard implies anticipation of "unplanned' interruption for certain contingencies. 2) Is this referring to a transmission product as defined in FERC Order 890, or firm transfers modeled for the conditions being studied? One way to interpret the intent, is the firm transfers being modeled for the conditions in the powerflow, to meet demand that would result in load not being served if that firm transfer were curtailed. If there is other generation in the system that could increase to meet the load, if the transfer being modeled is interrupted, then interruption of firm transmission service should be allowed for P1 through P5 contingencies in the table.
Individual
john cummings

ppl energy plus
Yes and No
R2.4.3 and 2.4.4 together with R2.7 are a very good effort to direct TSP's to not let scenarios drive their plans. Rather, the base case should drive the plan. If anything, the language in the standard could be strengthened.
Yes
The SDT conference call was helpful to my understanding of non-consequential. As I understand it, non-consequencial load loss allows transmission planners to drop load that chooses to be dropped under certain conditions. This is a useful tool as not all loads demand the same quality of service.
Yes and No
My concern is that some TSP's over-use RAS and at some point, system improvements must take place. The best approach is a collaborative effort of all stakeholders (esp operations folks) to prevent abusing RAS. Possibly R3.5 could tie to or be put under an Requirement that involves collaboration with stakeholders.
Yes
The new format is a nice improvement. On the SDT conference call, it was stated that table 1 and table 2 assume different starting points; if so, could this be spelled out in the standard? Also, consequential generatio nloss isn't defined.
Yes and No
All of the sensitivity requirements should be structured to keep sensitivities from forcing un-needed construction. R2.1.3 & 4 are a good step but the point about planning around the base case might be made even more forcefully.
Yes
A â€“ Generally support the revised standard

Comments for 2nd Draft of Standard TPL-001-1 — Assess Transmission Future Needs (Project 2006-02)

The Assess Transmission Future Needs Standards Drafting Team thanks all commenters who submitted comments on the 2nd draft of reliability standard TPL-00101 — System Performance under Normal Conditions. The proposed standard was posted for a 45-day public comment period from August 14, 2008 through September 29, 2008. The stakeholders were asked to provide feedback on the proposed metrics through a special electronic Standard Comment Form. There were more than 80 sets of comments, including comments from more than 150 different people from more than 100 companies representing 8 of the 10 Industry Segments as shown in the table on the following pages.

http://www.nerc.com/filez/standards/Assess-Transmission-Future-Needs.html

Due to the large number of comments received and the addition of VRF, Time Horizons, Measures, Data Retention requirements, and VSL, the SDT recommends an additional posting for this standard.

Due to industry comments, the following definitions have been changed: Bus-tie Breaker, Consequential Load Loss, Non-Consequential Load Loss, and Year One.

Due to industry comments, the following definitions have been deleted: Generating Unit Stability Study, Planning Coordinator, and System Stability Study.

Due to industry comments, the following definitions have been added: Load Reduction and Supplemental Load Loss.

Due to industry comments, the following requirements have been changed: R1, R1.1, R1.1.1, R1.1.2, R1.1.3, R1.1.4, R1.1.5, R1.1.6, R2, R2.1, R2.1.3, R2.1.3.4, R2.1.5, R2.2, R2.3, R2.4.1, R2.4.3, R2.6.1, R2.6.2, R2.6.2.1, R2.6.2, R2.7, R2.7.1, R2.7.1, R2.8, R2.8.1, R2.8.2, R2.9, R2.10, R3, R3.1, R3.2, R3.3, R3.3.1, R3.3.2, R3.3.3, R3.3.4, R3.5, R3.6, R5, R5.1, R5.2, R5.3, R5.3.2, R5.5, R5.6, R6, and R8.

Due to industry comments, the following requirements have been deleted: R2.1.4, R2.4.4, R2.5, R2.5.1, R2.5.2, R2.7.4, R3.4, R3.7, R4, R5.4, R5.5.1, R5.5.2, R5.5.3, R5.5.3.1, R5.5.3.2, R5.5.3.3, R5.7, R9, R10, R11, R12, R13, and R14.

Due to industry comments, the following table notes have been changed: Header note ‘b’, ‘e’, ‘i’, Footnotes 1.a.ii, 3, 5, 10 and 12.

The two table concept has been replaced by a single table with necessary corresponding changes to the notes and footnotes as appropriate. In addition, a typo in Extreme Event 2b was corrected due to an industry comment.

If you feel that your comment has been overlooked, please let us know immediately. Our goal is to give every comment serious consideration in this process! If you feel there has been an error or omission, you can contact the Vice President and Director of Standards,

Gerry Adamski, at 609-452-8060 or at gerry.adamski@nerc.net. In addition, there is a NERC Reliability Standards Appeals Process.[1]

[1] The appeals process is in the Reliability Standards Development Procedures: http://www.nerc.com/standards/newstandardsprocess.html.

Index to Questions, Comments, and Responses:

1. The SDT has modified the definitions and requirements associated with System Stability and Generating Unit Stability (formerly Plant Stability) in response to industry comments. Do you concur with the modified definitions for stability and, if not, please state why and/or suggest specific changes. 12

2. Do you concur with the modified Requirements R2.4, R2.5, R5.4, and R5.5? If not, please state why and/or suggest specific changes. 41

3. The SDT has modified the definitions of Consequential and Non-Consequential Load Loss in response to industry comments. Do you concur with the modified definitions of Consequential and Non-Consequential Load Loss? If not, please state why and/or suggest specific changes. 103

4. The SDT has modified Requirement R3.5 and eliminated Requirement R3.6 from the first draft to clarify that manual and automatic generation run-back (redispatch) and tripping is allowed as a Corrective Action Plan as long as the conditions in Requirements R3.5.1, R3.5.2 and R3.5.3 are met. Do you agree that generation run-back and tripping (manual and automatic) should be limited by these conditions? If not, please explain why you disagree with the proposed requirements. 144

5. The SDT has modified the modeling requirements. Some commenters expressed concern that the modeling requirements contained in Requirement R1 of the first draft of TPL-001-1 were either duplicative of the requirements in the MOD standards, or to the extent new modeling requirements were proposed, that the appropriate venue for such modeling requirements would be the MOD standards. The SDT believes that additional modeling requirements not presently contained in the MOD standards are necessary for Transmission Planning purposes. The SDT has incorporated these additional requirements with the intent that they will be removed from the TPL standard when they are incorporated into the MOD standards at a later date. The SDT has also modified proposed modeling requirements contained in Requirement R1 of the first draft of TPL-001-1 based on industry comments and moved these requirements to Requirements R9 through R14 in the second draft for ease of removal later on. Furthermore, in response to industry comments, the SDT has separated the modeling requirements into individual requirements for each responsible entity. Do you concur with the modifications reflected in Requirements R9 – R14? If not, please state why and/or suggest specific changes.. 160

6. The SDT has modified the requirements relating to short circuit analysis Do you concur with the modifications reflected in Requirements R2.3 and R4. If not, please state why and/or suggest specific changes. 189

7. The SDT has reformatted the Steady State and Stability Performance Tables. Do you concur with the modified format? If not, please state why and/or suggest specific changes. 206

8. A new definition for "Bus-Tie Breaker" was added to clarify the type of substation design and breaker position that qualify as a Bus-tie Breaker. Do you agree with the proposed definition? If not, please explain.....258

9. Some commenters questioned why a Bus-tie Breaker would have a different performance requirement than a non-Bus-tie Breaker, stating that all breakers have the same probability for failure. It may be true that generally the probability for failure of any given breaker would not vary substantially among similar types of breakers, but the Bus-tie Breaker reduces exposure and consequences of bus faults. The different performance expectations in Tables 1 and 2 are based on promoting a higher level of reliability for the Transmission Systems operated above 300 kV. It is recognized by

the SDT that a straight bus design has some undesirable exposure to bus faults, but that Bus-tie Breakers can be utilized to improve reliability for bus faults and problems associated with exit breakers. As a result, the risk of an internal breaker fault was deemed to be significantly less than the benefit that is gained by reducing the exposure to a total bus failure. Therefore, provisions were built into the performance requirements that would not discourage their use. Do you agree that non-Bus-tie Breakers rated above 300 kV should have more stringent performance requirements than Bus-tie Breakers? If not, please explain why and/or suggest specific changes. . 267

10. The SDT made modifications in this second draft to the requirements relating to sensitivity cases. Do you concur with the modifications reflected in Requirements R2.1.3 and 2.1.4? If not, please state why and/or suggest specific changes. 285

11. In response to industry comments, the SDT modified Table 1 requirements for Planning Event P6. Planning Event P6 involves independent overlapping single contingencies (n-1-1) involving two Transmission Facilities excluding generators. This Planning Event generally correlates to P5 of the first draft and now includes shunt devices. The P6 event was also revised to permit loss of Non-Consequential Load to meet performance requirements for Systems above 300 kV. Do you concur with the modifications? If not, please state why and/or suggest specific changes. 320

12. Comments from some entities received from the posting of the 1st draft standard indicated that significant additional costs will be required to meet the proposed requirements and performance tables. Commenters also indicated that it would take several years to install the additional facilities needed to meet the change in requirements. The SDT has attempted to adjust and clarify the proposed requirements and performance in light of these initial comments; however, the SDT needs more specific information on these concerns so that it can put the proposed requirements in perspective and make more adjustments as appropriate. Questions 12, 13 & 14 address these concerns. 341

13. Documentation: 355

14. System Reinforcement: One time cost, capital investment, to expand your system reinforcement program (due to lead times associated with different types of facilities, this will probably be an accumulated cost over several years). How many years do you estimate that it will take to complete this initial expanded system reinforcement program: 361

15. (A) Do you generally support the revised standard? (B) Are you unsure whether you generally support the revised standard? or (C) Do you definitely not support the revised standard? Please check the appropriate box below. If your response is either (B) or (C), please explain your single biggest concern with the revised standard, including which specific requirement or set of requirements causes you the most concern and why. 370

The Industry Segments are:

1 — Transmission Owners
2 — RTOs, ISOs
3 — Load-serving Entities
4 — Transmission-dependent Utilities
5 — Electric Generators
6 — Electricity Brokers, Aggregators, and Marketers
7 — Large Electricity End Users
8 — Small Electricity End Users
9 — Federal, State, Provincial Regulatory or other Government Entities
10 — Regional Reliability Organizations, Regional Entities

Commenter		Organization	Industry Segment									
			1	2	3	4	5	6	7	8	9	10
1.	Thad Ness	AEP	x		x		x	x				
2.	Anita Lee	Alberta Electric System Operator		x								
3.	John E. Sullivan	Ameren	x		x		x	x				
4.	Jason Shaver	American Transmission Company	x									
5.	Baj Agrawaal	Arizona Public Service Co.	x									
6.	Ronnie Frizzell	Arkansas Electric Coop. Corp.				x						
7.	James C. Armke	Austin Energy	x				x					
8.	Phil Park	BCTC		x								
9.	Eric Egge	Black Hills Corporation	x									
10.	J. David Carpenter	Brazos Electric Power Cooperative, Inc.	x		x		x					
11.	Paul Rocha	CenterPoint Energy and CPS Energy	x									

Additional Member	Additional Organization	Region	Segment Selection
1.	Glenn Pressler	City of San Antonio City Public Service (CPS Energy)	ERCOT	1

12.	David M. Conroy	Central Maine Power Company	x									

Commenter		Organization	Industry Segment									
			1	2	3	4	5	6	7	8	9	10
13.	Gary S. Brinkworth, P.E.	City of Tallahassee, FL	x		x		x					
14.	Karl Kohlrus	City Water, Light & Power - Springfield, Illinois	x		x		x					
15.	Marv Landauer	ColumbiaGrid										
16.	John Blazekovich (Exelon Corporation)	Compliance Elements Development Resource Pool (CEDRP)										
17.	John Loftis (Dominion Virginia Power)	Dominion - Electric Transmission Planning	x									

Additional Member	Additional Organization	Region	Segment Selection
1.	John Loftis	SERC	1
2.	Ronnie Bailey	SERC	1
3.	Peter Nedwick	SERC	1
4.	William Bigdely	SERC	1
5.	Mark Gill	SERC	1
6.	Larry Carter	SERC	1
7.	Mehdi Shakibafar	SERC	1
8.	Kirit Doshi	SERC	1
9.	Craig Crider	SERC	1
10.	Solomon Yirga	SERC	1
11.	Matthew Gardner	SERC	1

18.	Greg Rowland	Duke Energy	x		x		x	x				
19.	Keith Yocum - Manger, Transmission Strategy & Planning	E.ON U.S. Transmission Planning	x									
20.	Dennis Malone	El Paso Electric Company	x		x		x					
21.	Charles W. Long	Entergy Services, Inc.	x									
22.	Jay Teixeira (ERCOT)	ERCOT System Planning		x								

Additional Member	Additional Organization	Region	Segment Selection
1.	John Schmall	ERCOT ERCOT	2

23.	Eric Mortenson	Exelon Transmission Planning	x		x							
24.	Sam Ciccone	FirstEnergy Corp.	x		x	x	x	x				

Additional Member	Additional Organization	Region	Segment

Commenter	Organization	Industry Segment									
		1	2	3	4	5	6	7	8	9	10
		Selection									
1. John Stephens FE RFC 1											
2. Doug Hohlbaugh FE RFC 1, 3, 4, 5, 6											
3. Don Morrison FE RFC 1											
4. Art Buanno FE RFC 1											
25. Hector J. Sanchez	Florida Power and Light	x		x		x					
Additional Member / Additional Organization / Region / Segment Selection											
1. Bob Schoneck FRCC 1											
2. Kiko Barredo FRCC 1											
3. John W. Shaffer FRCC 1											
4. Carlos Candelaria FRCC 1											
26. Richard Becker (FRCC)	Florida Reliability Coordinating Council, Inc										x
Additional Member / Additional Organization / Region / Segment Selection											
1. Ballard Keith Mutters Orlando Utilities Commission FRCC 3											
2. Rodney Hawkins Lee County Electric Cooperative FRCC 1											
3. Roger Allen Westphal Gainesville Regional Utilities FRCC 3											
4. Luther E. Fair Gainesville Regional Utilities FRCC 1											
5. Ted E. Hobson JEA FRCC 1											
6. Garry Baker JEA FRCC 3											
7. Donald Gilbert JEA FRCC 5											
8. W. R. Schoneck Florida Power & Light Co. FRCC 3											
9. Hector Sanchez Florida Power & Light Co. FRCC 1											
10. John Shaffer Florida Power & Light Co. FRCC 5											
11. Kiko Barredo Florida Power & Light Co. FRCC 1											
12. Ronald L. Donahey Tampa Electric Co. FRCC 3											
13. Gary S. Brinkworth City of Tallahassee FRCC 1											
14. Larry E Watt Lakeland Electric FRCC 1											
15. Bart B White Florida Power Corporation FRCC 1											
27. Earl Fair	Gainesville Regional Utilities	x		x		x					
28. Roger Champagne	Hydro-Québec TransÉnergie (HQT)	x									
29. Milorad Papic	Idaho Power Company										
30. Dan Rochester	IESO		x								

Commenter		Organization	Industry Segment									
			1	2	3	4	5	6	7	8	9	10
31.	Kathleen Goodman	ISO New England Inc.		x								
32.	Raymond Kershaw (ITC Holdings)	ITC Holdings: ITC, METC, ITC Midwest	x									
33.	Don Gilbert	JEA					x					
34.	Gary Newell (Thompson Coburn LLP -- Counsel to Lafayette Utilities System)	Lafayette Utilities System	x		x		x					
35.	Mace Hunter	Lakeland Electric	x		x		x					
36.	Larry Watt	Lakeland Electric	x									
37.	Sergio Garza	LCRA TSC	x									
38.	Tim Wu	Los Angeles Department of Water and Power	x		x		x					
39.	Kris Manchur	Manitoba Hydro	x		x		x	x				
40.	Tom Mielnik	MidAmerican Energy Company	x		x		x	x				
41.	Marie Knox	Midwest ISO										
42.	Spencer Tacke	Modesto Irrigation District	x		x		x	x				
43.	Tom Mielnik (MEC)	MRO NERC Standards Review Subcommittee	x		x		x	x				

Additional Member	Additional Organization	Region	Segment Selection
1.	Neal Balu	WPS	MRO	3, 4, 5, 6
2.	Terry Bilke	MISO	MRO	2
3.	Carol Gerou	MP	MRO	1, 3, 5, 6
4.	Jim Haigh	WAPA	MRO	1, 6
5.	Charles Lawrence	ATC	MRO	1
6.	Ken Goldsmith	ALTW	MRO	4
7.	Pam Sordet	XCEL	MRO	1, 3, 5, 6
8.	Dave Rudolph	BEPC	MRO	1, 3, 5, 6
9.	Eric Ruskamp	LES	MRO	1, 3, 5, 6
10.	Joseph Knight	GRE	MRO	1, 3, 5, 6
11.	Joe DePoorter	MGE	MRO	3, 4, 5, 6
12.	Larry Brusseau	MRO	MRO	10

Commenter		Organization	Industry Segment									
			1	2	3	4	5	6	7	8	9	10
13.	Michael Brytowski	MRO MRO 10										
44.	Carol Sedewitz	National Grid	x									
45.	Andrew Wilcox	NB Power Transmission	x			x						
46.	Patrick Brown (PJM Interconnection, L.L.C.	NERC and Regional Coordination		x								
47.	Gregory Campoli	New York Independent System Operator		x								
48.	James Manning	North Carolina Electric Membership Corp			x	x	x	x				

Additional Member	Additional Organization	Region	Segment Selection
1.	Bob Beadle	NCEMC SERC	3, 4, 5, 6

49.	Rick White	Northeast Utilities	x									
50.	Guy Zito (NPCC)	NPCC										x

Additional Member	Additional Organization	Region	Segment Selection
1.	David Kiguel	Hydro One Networks Inc.	NPCC 1
2.	Ralph Rufrano	New York Power Authority	NPCC 5
3.	Dan Rochester	Independent Electricity System Operator	NPCC 2
4.	Rick White	Northeast Utilities	NPCC 1
5.	Lee Pedowicz	NPCC	NPCC 10
6.	Gerry Dunbar	NPCC	10
7.	Brian Hogue	NPCC	10
8.	Alan Adamson	New York State Reliability Council	NPCC 10
9.	Donald E. Nelson	Massachusetts Dept. of Public Utilities	NPCC 9
10.	Kathleen Goodman	ISO - New England	NPCC 2
11.	Gregory Campoli	New York Independent System Operator	NPCC 2
12.	Chris De Graffenried	Consolidated Edison Co. of New York, Inc.	NPCC 1
13.	Brian Gooder	Ontario Power Generation Incorporated	NPCC 5

51.	Steven Masse	NSTAR Electric	x		x							
52.	John P. Mayhan	Omaha Public Power District	x		x		x	x				
53.	Greg Ward / Darryl Curtis	Oncor Electric Delivery	x									
54.	Matthew J Muldoon	OPUC									x	
55.	Aaron Staley	Orlando Utilities Commission	x		x		x	x				

Commenter		Organization	Industry Segment									
			1	2	3	4	5	6	7	8	9	10
56.	Chifong Thomas	Pacific Gas and Electric Co.	x									
57.	Sandra Shaffer	PacifiCorp	x									
58.	John Collins	Platte River Power Authority	x		x			x				
59.	John Cummings	PPL EnergyPlus					x	x				
60.	Mark Byrd	Progress Energy Carolinas	x		x		x					
61.	Bart White	Progress Energy Florida, Inc.	x		x							
62.	Tom Duane	Public Service Company of New Mexico	x		x							
63.	Joe Seabrook	Puget Sound Energy, Inc.	x		x							
64.	Herb Schrayshuen (SERC Reliability Corporation)	SERC Dynamics Review Subcommittee										x
65.	Herbert Schrayshuen (SERC Reliability Corporation)	SERC Reliability Review Subcommittee and Planning Standards Subcommittee										x
66.	Jessica Rice	Sierra Pacific Power Company/Nevada Power Company	x									
67.	Dilip Mahendra	SMUD	x		x		x	x				
68.	Dana Cabbell	Southern California Edison	x	x								
69.	Roman Carter	Southern Company Transmission	x									

Additional Member	Additional Organization	Region	Segment Selection
1.	JT Wood	SOCO Transmission	SERC	1
2.	Jim Busbin	SOCO Transmission	SERC	1
3.	Shih-Min Hsu	SOCO Transmission	SERC	1
4.	Rod Hardiman	SOCO Transmission	SERC	1
5.	Randy Cobb	SOCO Transmission	SERC	1
6.	Chase Battaglio	SOCO Transmission	SERC	1
7.	Bill Botters	SOCO Transmission	SERC	1
8.	Tom Sims	SOCO Transmission	SERC	1
9.	Chuck Chakravarthi	SOCO Transmission	SERC	1
10.	Gary Gorham	SOCO Transmission	SERC	1
11.	Chris Wilson	SOCO Transmission	SERC	1

Commenter		Organization	Industry Segment									
			1	2	3	4	5	6	7	8	9	10
12. Terry Coggins, SOCO Transmission, SERC, 1 13. Bob Jones, SOCO Transmission, SERC, 1 14. Raymond Vice, SOCO Transmission, SERC, 1												
70.	Brian K. Keel	SRP	x									
71.	Tacoma Power	Tacoma Power	x									
72.	Scott Helyer	Tenaska, Inc.	x									
73.	Dave Larsen	Transmission Agency of Northern California	x									
74.	Denise Koehn (BPA)	Transmission Reliability Program	x		x		x	x				
Additional Member, Additional Organization, Region, Segment Selection 1. Chuck Matthews, Transmission Planning, WECC, 1 2. Berhanu Tesema, Transmission Planning, WECC, 1 3. Kendall Rydell, Transmission Planning, WECC, 1												
75.	Andy Leoni	Tri-State G&T	x									
76.	Mark Graham	Tri-State Generation and Transmission Association, Inc.	x									
77.	Gary Trent	Tucson Electric Power Company	x		x		x					
78.	B. David Till (TVA)	TVA System Planning	x									
79.	Karl Bryan	US Army Corps of Engineers, Northwestern Division					x					
80.	Jay Seitz	US Bureau of Reclamation					x					

1. **The SDT has modified the definitions and requirements associated with System Stability and Generating Unit Stability (formerly Plant Stability) in response to industry comments. Do you concur with the modified definitions for stability and, if not, please state why and/or suggest specific changes.**

Summary Consideration:

By a significant majority (about 2/3), the industry did not agree with the two definitions as modified in the second draft. Most of those disagreeing still express a fundamental disagreement with the approach of separating plant Stability from System Stability. Essentially many argue that plant Stability is simply a subset of System Stability, and the standard requirements could be simplified by focusing on Stability performance in a generic way. In this way Stability performance could be viewed in the context of individual units (generating unit Stability) or groups of units (System Stability). Some of these same commenters also argue that generating unit Stability is already covered by FAC–001 and -002 and, therefore, should be dropped from the TPL-001-1 standard; otherwise double jeopardy could apply. Many of these same commenters also suggested that if separation of generating unit Stability is retained in the final draft, then certain refinements of the requirements language should be made.

Others who voted 'No', as well as some who generally support the language of the current draft, recommended a variety of changes to the definitions and requirements for further clarity.

Only some 20+ percent of the commenters supported the current draft Stability definitions without reservation.

The SDT agrees with the Industry's majority view that generating unit Stability and System Stability need not and should not be treated as distinct issues. Consequently, the two new Stability terms have been removed from the third draft, and this revised draft references the already approved term "Stability." Furthermore, as indicated by the SDT's response to commenters, the Stability related requirements have been modified to create a single generic set of requirements that no longer distinguishes between generating unit and System Stability.

In summary, due to these and other industry comments in response to this question, the SDT has changed the following definition and requirements:

Consequential Load Loss: ~~Load that is no longer connected to a source as a result of the event being studied or which is lost as a result of the load's response to the transient conditions of the event (other than through the action of UVLS or UFLS schemes). Although Load which is lost as a result of the Load's response to the transient conditions of the event is considered Consequential Load Loss and is permitted when Consequential Load Loss is allowed, Transmission planning entities are not allowed to rely upon the expectation of such Load loss to meet steady state performance requirements.~~ All Load that is no longer served by any Transmission Facilities as a result of the Facilities being removed from service by a planned Protection System operation to isolate fault conditions.

R2. Each Transmission Planner and Planning Coordinator shall ~~conduct and document the results of~~ prepare ~~its~~an annual Planning Assessment of its portion of the BES. This Planning Assessment shall use current or past studies, document assumptions, document results, and shall cover steady state analyses, short circuit analyses, and Stability analyses ~~including both System and Generating Unit Stability~~.

R2.1 The Near-Term Transmission Planning Horizon portion of the steady state analysis shall be assessed annually and be supported ~~at a minimum~~ by the following annual current studies, supplemented with qualified past studies as indicated in Requirement R2.6:

R2.2 For the Long-Term Transmission Planning Horizon portion of the steady state analysis, ~~at a minimum,~~ a current System peak Load study is required annually for one of the years in the assessment period to support the annual Planning Assessment.

R2.6.1 (now 2.5.1) For steady state, short circuit, or ~~System~~ Stability analysis: the study shall be five calendar years old or less.

R2.6.2 (now 2.5.2) For steady state, short circuit, ~~Generating Plant Stability,~~ or ~~System~~ Stability analysis: the ~~study~~ present System model shall not include any material changes, such as, generation or Transmission additions/removals, or topology changes that have occurred in the intervening period and would impact the study area. Material generation changes could include:

R3.3.1 (now 3.3.2) For all generators, studies shall consider the minimum steady state voltage limitations ~~of all generators~~ and identify how the generators are ~~treated~~ analyzed in the steady state simulation.

R5. For the Stability portion of the Planning Assessment, as described in Requirement R2.4 ~~and Requirement R2.5~~, each Transmission Planner and Planning Coordinator shall perform the Contingency analyses listed in Table ~~2~~1 ~~– Stability Performance~~. The studies shall be based on computer simulations using models utilizing data provided in Requirement R1. ~~The studies shall be based on computer simulations using models utilizing data provided in Requirements R9 through R14, the MOD-010 and MOD-012 standards, and other data sources, to include known planned and long term outages of Transmission or generation equipment. The studies shall cover both System Stability and Generating Unit Stability. The following requirements apply to both System Stability and Generating Unit Stability studies unless otherwise noted.~~

R6. Each Transmission Planner and Planning Coordinator shall define and document, within their Planning Assessment, ~~the~~any proxies used in ~~simulation studies~~ the analysis to identify System instability for conditions such as cascading outages, voltage instability, or uncontrolled islanding.

The wording of sub-requirements R5.6.1 and R5.6.2 was modified and relocated to become bullets under Requirement R2.5.2.

- The addition/deletion/change of individual generating unit capability of 20 MW or greater.
- An aggregated addition/deletion/change to a group of generating units directly connected through their step-up transformer(s) to the BES which total 20 MW or greater.

The definitions of Generating Unit Stability Study and System Stability Study as well as the following sub-requirements were deleted: R2.5, R2.5.1, R2.5.2, and R5.5.

Organization	Question 1:	Question 1 Comments:
NPCC	No	There should be no difference between System and Generating Unit Stability studies. Each requires discretion regarding which events need to be tested. The consequences are potentially similar: either the instability of one or more generators. Extreme Events should be considered for any stability analysis, again, recognizing that discretion needs to be applied when selecting or dismissing particular contingencies. Therefore, the definition of Generating Unit Stability Study should be stricken from the standard.
Los Angeles	No	Changing the name does not change the fact that this is wrong. The stability criteria in the standards are all measured on

Organization	Question 1:	Question 1 Comments:
Department of Water and Power		the high-side, i.e., the system side. So when a stability simulation is performed, if there is any problems, whether it be loss of synchronism, out-of-step, damping, inter-area oscillations, etc, they will all appear on the same run and there is no distinctions between system stability or unit stability. To separate the two implies there is a difference and requires two different simulations is either confusing at best or imply ignorance of the physics. Maybe the drafting team is concerned with the proper modeling of the generator in a stability simulation. There may be practice to "lump" similar units in a plant as one "unit" or the dynamic characteristics of a unit were not explicitly or correctly modeled; in such instances, the behavior of individual unit cannot be observed. But if that is the case, the entire stability simulation is incorrect to begin with anyway, even on the system side. To properly deal with unit modeling, the standard should prohibit lumping of units and require all dynamic data (including governor controls, exciters, stabilizers, etc.) are included in the simulation model.
National Grid	No	There should be no difference between System and Generating Unit Stability studies. Each requires discretion regarding which events need to be tested. The consequences are potentially similar: either the instability of one of more generators. Extreme Events should be considered for any stability analysis, again, recognizing that discretion needs to be applied when selecting or dismissing particular contingencies. If no distinction is made between System and Generating Unit Stability studies is made, then the definition of Generating Unit Stability Study should be stricken from the standard.
PacifiCorp	Yes and No	We generally concur with the changes for the Requirements associated with the Generating Unit and System Stability, however, Generating unit stability studies are typically performed at the time of interconnection. Even though stability studies have been done as new generating unit(s) were interconnected or at the time changes occurred, such studies have not been done for the entire fleet of generating units at the same time. For very old units, stability study documentation may no longer exist, even though no potential stability problems have been identified when stability studies were run for interconnecting other newer units. Will every TP have to benchmark their generating unit stability study for its entire fleet with the acceptance of this Standard? In other words, will every TP has to recreate documentation for all its older units? We would appreciate that the SDT more clearly define the terms in R2.5.2, “material Transmission System change” and “at or near the point of Interconnection” to invoke a study with examples.
Hydro-Québec TransEnergie (HQT)	No	There should be no difference between System and Generating Unit Stability studies. Each requires discretion regarding which events need to be tested. The consequences are potentially similar: either the instability of one of more generators. Extreme Events should be considered for any stability analysis, again, recognizing that discretion needs to be applied when selecting or dismissing particular contingencies. Therefore, the definition of Generating Unit Stability Study should be stricken from the standard.
CenterPoint Energy and CPS Energy	No	Most industry commenters from the previous draft advised against making a distinction between system and generating unit stability, which are not commonly accepted industry terms. We (CenterPoint Energy and CPS Energy) remain unconvinced that the distinction is needed. If most industry commenters concur after this second draft, we believe the

Organization	Question 1:	Question 1 Comments:
		SDT should listen.
Austin Energy	No	There is no need to separate system stability studies and generating unit stability studies. Requirement R5.4 should be written to include generating unit stability analysis.
Tri-State Generation and Transmission Association, Inc.	No	Starting from this version, we think it would be clearer to not distinguish between generator and system stability studies, but rather list both as requirements for Stability Studies. Generating unit analyses would include tests of models such as generator exciters, and System Stability studies would model such things as bus faults.
Brazos Electric Power Cooperative, Inc.	No	We do not see the need to have 2 separate requirement sections nor definitions for both System and Generating stability studies. The section for stability studies should simply suggest when these studies should be performed, when new generation is added, conditions for that, etc? Confusion continues to come from the ambiguous use of language such as 'Material Transmission System changes' or 'changes in generation capability'. Of note in 2.5.2, requiring stability studies for the addition of a new substation in a transmission line connected to a generator is completely unnecessary most of the time but the wording in 2.5 does not appear to allow flexibility. Discretion should be provided to the TP.A first course of action would be to bring the related stability criteria under one section. It seems like 5.6 can be combined under a requirements section for stability studies.
Northeast Utilities	No	Northeast Utilities has participated with ISO-NE and NPCC and supports the comments filed by those organizations.
North Carolina Electric Membership Corp	Yes and No	We think we understand the direction that the SDT is heading but needs to be clearer. Angular stability for a single unit is the focus of Generating Unit Stability where as System Stability involves multiple generating machines or plants, and may also encompass voltage stability of loads which should be addressed separately in our opinion since different tools are used for this assessment.
ERCOT System Planning	No	Most industry commenters from the previous draft advised against making a distinction between system and generating unit stability, which are not commonly accepted industry terms. The only difference between the two seems to be location of contingencies tested. ERCOT suggests removing specific requirements for Generating Unit stability, as System Stability covers everything.
Central Maine Power Company	No	There should be no difference between System and Generating Unit Stability studies. Each requires discretion regarding which events need to be tested. The consequences are potentially similar: either the instability of one of more generators. Extreme Events should be considered for any stability analysis, again, recognizing that discretion needs to be applied when selecting or dismissing particular contingencies. Therefore, the definition of Generating Unit Stability Study should

Organization	Question 1:	Question 1 Comments:
		be stricken from the standard.
NSTAR Electric	No	There should be no difference between System and Generating Unit Stability studies. Each requires discretion regarding which events need to be tested. The consequences are potentially similar: either the instability of one of more generators. Extreme Events should be considered for any stability analysis, again, recognizing that discretion needs to be applied when selecting or dismissing particular contingencies. If no distinction is made between System and Generating Unit Stability studies is made, then the definition of Generating Unit Stability Study should be stricken from the standard.
New York Independent System Operator	No	There should be no difference between System and Generating Unit Stability studies. Each requires discretion regarding which events need to be tested. The consequences are potentially similar: either the instability of one of more generators. Extreme Events should be considered for any stability analysis, again, recognizing that discretion needs to be applied when selecting or dismissing particular contingencies. Therefore, the definition of Generating Unit Stability Study should be stricken from the standard.
ISO New England Inc.	No	There should be no difference between System and Generating Unit Stability studies. Each requires discretion regarding which events need to be tested. The consequences are potentially similar: either the instability of one of more generators. Extreme Events should be considered for any stability analysis, again, recognizing that discretion needs to be applied when selecting or dismissing particular contingencies. If no distinction is made between System and Generating Unit Stability studies is made, then the definition of Generating Unit Stability Study should be stricken from the standard.
Entergy Services, Inc.	Yes and No	Entergy agrees with the intent. However, there will be some confusion because the industry standard terms for stability are omitted. It should be clear that the System Stability Study is a wide area view/assessment of both angular and voltage stability. In contrast, the Generating Unit Stability Study is focused on a specific unit or plant and the immediate area. Typically, this study looks at angular stability. The confusion may be exacerbated by the exclusion of a definition for voltage (or load) stability in the notes on page 31. There is a discussion of angular stability, but voltage stability is conspicuously missing. An improvement for the System Stability Study definition is to clarify that it is a study that focuses on the impact to the system itself and covers an area larger than one Generating Plant, covering a large geographical area. See specific proposal below: System Stability Study - Study that focuses on how contingencies impact a larger portion of the System than a Generating Unit Study. These studies would examine issues such as angular Stability, inter-area power oscillation, and dynamic voltages.
BPA Transmission	No	Generating Unit Stability is adequately addressed by the System Stability studies and does not need to be evaluated separately. Footnote 5.a.i in the notes following the Performance Requirements Tables, already specifies the

Organization	Question 1:	Question 1 Comments:
Reliability Program		requirements to meet. Therefore, we recommend removing the section on Generating Unit Stability Studies from standard TPL-001-1. The focus of this standard should be on "System Stability" which encompasses all generating units.

Response: The SDT agrees and has modified the definitions and Requirements accordingly.

R2. Each Transmission Planner and Planning Coordinator shall ~~conduct and document the results of~~ prepare ~~its~~an annual Planning Assessment of its portion of the BES. This Planning Assessment shall use current or past studies, document assumptions, document results, and shall cover steady state analyses, short circuit analyses, and Stability analyses ~~including both System and Generating Unit Stability~~.

R2.6.1 (now 2.5.1) For steady state, short circuit, or ~~System~~ Stability analysis: the study shall be five calendar years old or less.

R2.6.2 (now 2.5.2) For steady state, short circuit, ~~Generating Plant Stability,~~ or ~~System~~ Stability analysis: the ~~study~~ present System model shall not include any material changes, such as, generation or Transmission additions/removals, or topology changes that have occurred in the intervening period and would impact the study area. Material generation changes could include:

R5. For the Stability portion of the Planning Assessment, as described in Requirement R2.4 ~~and Requirement R2.5~~, each Transmission Planner and Planning Coordinator shall perform the Contingency analyses listed in Table ~~2~~1 ~~– Stability Performance~~. The studies shall be based on computer simulations using models utilizing data provided in Requirement R1. ~~The studies shall be based on computer simulations using models utilizing data provided in Requirements R9 through R14, the MOD-010 and MOD-012 standards, and other data sources, to include known planned and long term outages of Transmission or generation equipment. The studies shall cover both System Stability and Generating Unit Stability. The following requirements apply to both System Stability and Generating Unit Stability studies unless otherwise noted.~~

The wording of sub-requirements R5.6.1 and R5.6.2 was modified and relocated to become bullets under Requirement R2.5.2.

The addition/deletion/change of individual generating unit capability of 20 MW or greater.

An aggregated addition/deletion/change to a group of generating units directly connected through their step-up transformer(s) to the BES which total 20 MW or greater.

The definitions of Generating Unit Stability Study and System Stability Study as well as the following sub-requirements were deleted: R2.5, R2.5.1, R2.5.2, and R5.5

Progress Energy Carolinas	No	The System Stability Study definition could be improved by clarifying that it is a study that focuses on the impact of contingencies to the system itself and covers a larger geographical area than one Generating Plant. A specific proposal is as follows. System Stability Study - Study that focuses on how contingencies impact a larger portion of the System than a Generating Unit Study. These studies would examine issues such as angular stability, inter-area power oscillations, and dynamic voltages.

Organization	Question 1:	Question 1 Comments:
Ameren	No	Agree with the revised definition of Generating Unit Stability Study. Propose new definition for System Stability Study, as follows - "Study that focuses on portions of the System, including the impact of contingencies on multiple generating units in an area. These studies would examine issues such as angular Stability, inter-area oscillation, and voltages during dynamic simulations."
SERC Dynamics Review Subcommittee	No	An improvement for the System Stability Study definition is to clarify that it is a study that focuses on the impact to the system itself and covers an area larger than one Generating Plant, covering a large geographical area. See specific proposal below: System Stability Study - Study that focuses on how contingencies impact a larger portion of the System than a Generating Unit Study. These studies would examine issues such as angular Stability, inter-area power oscillation, and dynamic voltages.
Southern Company Transmission	No	We suggest the following for the System Stability Study definition: Study that focuses on large portions of the System (which may include many generating units) and how contingencies affect that larger area to determine whether angular Stability is maintained, inter-area power oscillations are damped, and voltages during the dynamic simulation stay within acceptable performance limits.
American Transmission Company	No	Generating Unit Stability Study definition - We suggest deleting the text, "on the Transmission Facilities connected to that generating unit(s) point(s) of interconnection or one bus away from that point.", because certain Generation Facility contingencies should be considered and key Transmission Facility contingencies can be more than one bus away from the interconnection point. System Stability Study definition - We suggest this alternate wording: "Study that focuses on portions of the System, which may include many generating units with various Contingencies. This study is concerned with loss of synchronism, lack of damping of inter-area power oscillations, and voltages during the dynamic simulation." We suggest this wording because the definition of a study should not give the criteria, but rather the general elements of the study.
SERC Reliability Review Subcommittee and Planning Standards Subcommittee	No	There is an inconsistency between the defined terms “Generating Unit Stability Study” and “System Stability Study” and the usage within the standard. The requirements refer to these terms by omitting the word “study” .An improvement for the System Stability Study definition is to clarify that it is a study that focuses on the impact to the system itself and covers an area larger than one Generating Plant, covering a large geographical area. See specific proposal below: System Stability Study - Study that focuses on how contingencies impact a larger portion of the System than a Generating Unit Study. These studies would examine issues such as angular Stability, inter-area power oscillation, and dynamic voltages.?

Organization	Question 1:	Question 1 Comments:
Response: The SDT appreciates your suggested improvements. However, a majority of the Industry believes that there should be no distinction between System Stability and Generating Unit Stability.		
Platte River Power Authority	Yes and No	"Generator Unit Stability Study" assessments are applicable to FAC-001 and FAC-002. If specific requirements for a "Generator Unit Stability Study" are to be added to a standard, then those requirements belong in either a Revised FAC-001 or a Revised FAC-002 and not in a TPL standard. The "System Stability Study" assessments which are appropriate for TPL standards will capture both the performance of the system and the performance of specific generators at the various demand and stressed sensitivity levels studied.
BCTC	No	BCTC agrees with many other commenters, ABB, Ameren, Central Maine Power, NPCC RCWS, FirstEnergy, WECC, HQTE, Tenaska, FPL, FRCC, National Grid, New England ISO, NU, NStar, United Illuminating, BPA, Progress-Carolinas, TEP, and Northwestern Energy that there is no significant distinction between generator and system stability. These entities have significant experience with stability studies. Therefore, we cannot accept a simple statement from the SDT that it believes it is important to maintain this distinction without any explanation. We believe that the Generating Unit Stability Studies portion is attempting to introduce interconnection stability studies into the TPL standards. Interconnection stability studies are adequate addressed by open access tariffs and FAC-001. This should not be duplicated in TPL.
Manitoba Hydro	No	Manitoba Hydro does not believe there is a need to distinguish between System Stability Study and Generating Unit Stability Study. Both these studies as defined require that synchronous operation of generators is maintained (i.e. angular stability) and damping is acceptable (i.e. small signal stability). The stability assessment would cover the issues being requested in the Generating Unit stability Study. We suggest the definition for System Stability Study - A study that determines whether angular stability is maintained, inter-area power oscillations are acceptably damped, and transient voltage swings remain within acceptable limits. Further, contrary to the SDT interpretation in the response to our first posting comments, Manitoba Hydro believes the Generating Unit Stability Study is a duplication of what is required in FAC-002-0 as the FAC requirements mandate system performance required by the NERC Reliability Standards. Manitoba Hydro continues to believe this additional study is redundant. Should the SDT decide to retain the Generating Unit stability study, then Manitoba Hydro recommends that, consistent with the wording in other requirements of this assessment section, it would be more appropriate to require that "Generating Unit Stability be assessed using current or qualifying past studies." This would allow use of current interconnection studies mandated by FAC-002-0 to be used to comply with the Generating Unit Study requirement. Currently, the wording in R2.5 requires that Generating unit stability be analyzed with studies for the conditions in R2.5.1 and/or R2.5.2.
Transmission Agency of	No	We believe that there is no significant distinction between Generating Unit Stability and System Stability other than the objective and focus of the study. Therefore, we cannot accept a simple statement from the SDT that it believes it is

Organization	Question 1:	Question 1 Comments:
Northern California		important to maintain this distinction without more explanation. If a distinction is maintained, then Generating Unit Stability Study should be and is already covered in FAC-001-0 and FAC-002-0. As defined, Generating Unit Stability Study ?focuses on an individual generating unit's or electrically closely-coupled generating units' Stability for various Contingencies on the Transmission Facilities connected to that generating unit(s) point(s) of interconnection or one bus away from that point. However, the Purpose of the proposed TPL-001-1 is to “develop a Bulk Electric System that will operate reliably over a broad spectrum of System conditions and following a wide range of probable Contingencies”. If a Generating Unit becomes unstable, the unit can be disconnected from the BES without impacting system stability. Therefore, we believe that the Generating Unit Stability Studies portion is attempting to introduce interconnection stability studies into the TPL standards. Interconnection stability studies are adequately addressed by FAC-001 and does not need to be specifically called out in TPL-001-1. In addition, Generating unit stability studies are typically performed at the time of interconnection. Even though Generating Unit Stability Studies have been done as new generating unit(s) were interconnected or at the time changes occurred, such studies have not been done for the entire fleet of Generating Units at the same time. For very old units, stability study documentation may no longer exist, even though no potential stability problems have been identified when stability studies were run for interconnecting other newer units or for the System. If the requirement for Generating Unit Stability Study is retained in this proposed TPL-001-1, R2.5 needs to be clarified to say “only when” the changes in R2.5.1 and R2.5.2 are made that the Generating Unit Stability Study needs to be done. There also needs to be language about how to treat generators that are existing prior to this Standard taking effect. We would also appreciate if the SDT would more clearly define with examples the terms in R2.5.2, “material Transmission System change” and “at or near the point of Interconnection” to invoke a study.
OPUC	Yes and No	We cannot evaluate the need to distinguish generating unit stability and system stability without greater explanation inclusive of examples. We also need clarification of the intended interactions of this proposed standard with of FAC-001 and 2 to avoid duplication of efforts. Finally, if FAC-001 will cover generating unit or interconnection stability R 2.5 should clearly address existing older generators.
Pacific Gas and Electric Co.	No	We believe that there is no significant distinction between Generating Unit Stability and System Stability other than the objective and focus of the study. Therefore, we cannot accept a simple statement from the SDT that it believes it is important to maintain this distinction without more explanation. If a distinction is maintained, then Generating Unit Stability Study should be and is already covered in FAC-001-0 and FAC-002-0. As defined, Generating Unit Stability Study ?focuses on an individual generating unit's or electrically closely-coupled generating units' Stability for various Contingencies on the Transmission Facilities connected to that generating unit(s) point(s) of interconnection or one bus away from that point. However, the Purpose of the proposed TPL-001-1 is to "develop a Bulk Electric System that will operate reliably over a broad spectrum of System conditions and following a wide range of probable Contingencies". If a Generating Unit becomes unstable, the unit can be disconnected from the BES without impacting system stability. Therefore, we believe that the Generating Unit Stability Studies portion is attempting to introduce interconnection stability studies into the TPL standards. Interconnection stability studies are adequately addressed by FAC-001 and does not

Organization	Question 1:	Question 1 Comments:
		need to be specifically called out in TPL-001-1. In addition, Generating unit stability studies are typically performed at the time of interconnection. Even though Generating Unit Stability Studies have been done as new generating unit(s) were interconnected or at the time changes occurred, such studies have not been done for the entire fleet of Generating Units at the same time. For very old units, stability study documentation may no longer exist, even though no potential stability problems have been identified when stability studies were run for interconnecting other newer units or for the System. If the requirement for Generating Unit Stability Study is retained in this proposed TPL-001-1, R2.5 needs to be clarified to say “only when” the changes in R2.5.1 and R2.5.2 are made that the Generating Unit Stability Study needs to be done. There also needs to be language about how to treat generators that are existing prior to this Standard taking effect. We would also appreciate if the SDT would more clearly define with examples the terms in R2.5.2, “material Transmission System change” and “at or near the point of Interconnection” to invoke a study.
Public Service Company of New Mexico	No	We believe that there is no significant distinction between Generating Unit Stability and System Stability other than the objective and focus of the study. Therefore, we cannot accept a simple statement from the SDT that it believes it is important to maintain this distinction without more explanation. If a distinction is maintained, then Generating Unit Stability Study should be and is already covered in FAC-001-0 and FAC-002-0. As defined, Generating Unit Stability Study ?focuses on an individual generating unit's or electrically closely-coupled generating units' Stability for various Contingencies on the Transmission Facilities connected to that generating unit(s) point(s) of interconnection or one bus away from that point. However, the Purpose of the proposed TPL-001-1 is to "develop a Bulk Electric System that will operate reliably over a broad spectrum of System conditions and following a wide range of probable Contingencies". If a Generating Unit becomes unstable, the unit can be disconnected from the BES without impacting system stability. Therefore, we believe that the Generating Unit Stability Studies portion is attempting to introduce interconnection stability studies into the TPL standards. Interconnection stability studies are adequately addressed by FAC-001 and does not need to be specifically called out in TPL-001-1. In addition, Generating unit stability studies are typically performed at the time of interconnection. Even though Generating Unit Stability Studies have been done as new generating unit(s) were interconnected or at the time changes occurred, such studies have not been done for the entire fleet of Generating Units at the same time. For very old units, stability study documentation may no longer exist, even though no potential stability problems have been identified when stability studies were run for interconnecting other newer units or for the System. If the requirement for Generating Unit Stability Study is retained in this proposed TPL-001-1, R2.5 needs to be clarified to say “only when” the changes in R2.5.1 and R2.5.2 are made that the Generating Unit Stability Study needs to be done. There also needs to be language about how to treat generators that are existing prior to this Standard taking effect. We would also appreciate if the SDT would more clearly define with examples the terms in R2.5.2, “material Transmission System change” and “at or near the point of Interconnection” to invoke a study.
Puget Sound Energy, Inc.	No	We believe that there is no significant distinction between Generating Unit Stability and System Stability other than the objective and focus of the study. Therefore, we cannot accept a simple statement from the SDT that it believes it is important to maintain this distinction without more explanation. If a distinction is maintained, then Generating Unit

Organization	Question 1:	Question 1 Comments:
		Stability Study should be and is already covered in FAC-001-0 and FAC-002-0. As defined, Generating Unit Stability Study ?focuses on an individual generating unit's or electrically closely-coupled generating units' Stability for various Contingencies on the Transmission Facilities connected to that generating unit(s) point(s) of interconnection or one bus away from that point. However, the Purpose of the proposed TPL-001-1 is to "develop a Bulk Electric System that will operate reliably over a broad spectrum of System conditions and following a wide range of probable Contingencies". If a Generating Unit becomes unstable, the unit can be disconnected from the BES without impacting system stability. Therefore, we believe that the Generating Unit Stability Studies portion is attempting to introduce interconnection stability studies into the TPL standards. Interconnection stability studies are adequately addressed by FAC-001 and does not need to be specifically called out in TPL-001-1. In addition, Generating unit stability studies are typically performed at the time of interconnection. Even though Generating Unit Stability Studies have been done as new generating unit(s) were interconnected or at the time changes occurred, such studies have not been done for the entire fleet of Generating Units at the same time. For very old units, stability study documentation may no longer exist, even though no potential stability problems have been identified when stability studies were run for interconnecting other newer units or for the System. If the requirement for Generating Unit Stability Study is retained in this proposed TPL-001-1, R2.5 needs to be clarified to say “only when” the changes in R2.5.1 and R2.5.2 are made that the Generating Unit Stability Study needs to be done. There also needs to be language about how to treat generators that are existing prior to this Standard taking effect. We would also appreciate if the SDT would more clearly define with examples the terms in R2.5.2, “material Transmission System change” and “at or near the point of Interconnection” to invoke a study.
Idaho Power Company	No	We believe that there is no significant distinction between Generating Unit Stability and System Stability other than the objective and focus of the study. Therefore, we cannot accept a simple statement from the SDT that it believes it is important to maintain this distinction without more explanation. If a distinction is maintained, then Generating Unit Stability Study should be and is already covered in FAC-001-0 and FAC-002-0. As defined, Generating Unit Stability Study ?focuses on an individual generating unit's or electrically closely-coupled generating units' Stability for various Contingencies on the Transmission Facilities connected to that generating unit(s) point(s) of interconnection or one bus away from that point. However, the Purpose of the proposed TPL-001-1 is to “develop a Bulk Electric System that will operate reliably over a broad spectrum of System conditions and following a wide range of probable Contingencies”. If a Generating Unit becomes unstable, the unit can be disconnected from the BES without impacting system stability. Therefore, we believe that the Generating Unit Stability Studies portion is attempting to introduce interconnection stability studies into the TPL standards. Interconnection stability studies are adequate addressed by FAC-001 and does not need to be specifically called out in TPL-001-1. In addition, Generating unit stability studies are typically performed at the time of interconnection. Even though Generating Unit Stability Studies have been done as new generating unit(s) were interconnected or at the time changes occurred, such studies have not been done for the entire fleet of Generating Units at the same time. For very old units, stability study documentation may no longer exist, even though no potential stability problems have been identified when stability studies were run for interconnecting other newer units or for the System. If the requirement for Generating Unit Stability Study is retained in this proposed TPL-001-1, R2.5 needs to be clarified to

Organization	Question 1:	Question 1 Comments:
		say “only when” the changes in R2.5.1 and R2.5.2 are made that the Generating Unit Stability Study needs to be done. There also needs to be language about how to treat generators that are existing prior to this Standard taking effect. We would also appreciate if the SDT would more clearly define with examples the terms in R2.5.2, “material Transmission System change” and “at or near the point of Interconnection” to invoke a study.
SMUD	No	We believe that there is no significant distinction between Generating Unit Stability and System Stability other than the objective and focus of the study. Therefore, we cannot accept a simple statement from the SDT that it believes it is important to maintain this distinction without more explanation. If a distinction is maintained, then Generating Unit Stability Study should be and is already covered in FAC-001-0 and FAC-002-0. As defined, Generating Unit Stability Study focuses on an individual generating units or electrically closely-coupled generating units' Stability for various Contingencies on the Transmission Facilities connected to that generating unit(s) point(s) of interconnection or one bus away from that point. However, the Purpose of the proposed TPL-001-1 is to “develop a Bulk Electric System that will operate reliably over a broad spectrum of System conditions and following a wide range of probable Contingencies”. If a Generating Unit becomes unstable, the unit can be disconnected from the BES without impacting system stability. Therefore, we believe that the Generating Unit Stability Studies portion is attempting to introduce interconnection stability studies into the TPL standards. Interconnection stability studies are adequately addressed by FAC-001 and does not need to be specifically called out in TPL-001-1. In addition, Generating unit stability studies are typically performed at the time of interconnection. Even though Generating Unit Stability Studies have been done as new generating unit(s) were interconnected or at the time changes occurred, such studies have not been done for the entire fleet of Generating Units at the same time. For very old units, stability study documentation may no longer exist, even though no potential stability problems have been identified when stability studies were run for interconnecting other newer units or for the System. If the requirement for Generating Unit Stability Study is retained in this proposed TPL-001-1, R2.5 needs to be clarified to say “only when” the changes in R2.5.1 and R2.5.2 are made that the Generating Unit Stability Study needs to be done. There also needs to be language about how to treat generators that are existing prior to this Standard taking effect. We would also appreciate if the SDT would more clearly define with examples the terms in R2.5.2, “material Transmission System change” and “at or near the point of Interconnection” to invoke a study.
Sierra Pacific Power Company / Nevada Power Company	No	We believe that there is no significant distinction between Generating Unit Stability and System Stability other than the objective and focus of the study. Therefore, we cannot accept a simple statement from the SDT that it believes it is important to maintain this distinction without more explanation. If a distinction is maintained, then Generating Unit Stability Study should be and is already covered in FAC-001-0 and FAC-002-0. As defined, Generating Unit Stability Study focuses on an individual generating units or electrically closely-coupled generating units' Stability for various Contingencies on the Transmission Facilities connected to that generating unit(s) point(s) of interconnection or one bus away from that point. However, the Purpose of the proposed TPL-001-1 is to develop a Bulk Electric System that will operate reliably over a broad spectrum of System conditions and following a wide range of probable Contingencies? If a Generating Unit becomes unstable, the unit can be disconnected from the BES without impacting system stability.

Organization	Question 1:	Question 1 Comments:
		Therefore, we believe that the Generating Unit Stability Studies portion is attempting to introduce interconnection stability studies into the TPL standards. Interconnection stability studies are adequate addressed by FAC-001 and does not need to be specifically called out in TPL-001-1. In addition, Generating unit stability studies are typically performed at the time of interconnection. Even though Generating Unit Stability Studies have been done as new generating unit(s) were interconnected or at the time changes occurred, such studies have not been done for the entire fleet of Generating Units at the same time. For very old units, stability study documentation may no longer exist, even though no potential stability problems have been identified when stability studies were run for interconnecting other newer units or for the System. If the requirement for Generating Unit Stability Study is retained in this proposed TPL-001-1, R2.5 needs to be clarified to say “only when” the changes in R2.5.1 and R2.5.2 are made that the Generating Unit Stability Study needs to be done. There also needs to be language about how to treat generators that are existing prior to this Standard taking effect. We would also appreciate if the SDT would more clearly define with examples the terms in R2.5.2, “material Transmission System change” and “at or near the point of Interconnection” to invoke a study.
Black Hills Corporation	No	We believe that there is no significant distinction between Generating Unit Stability and System Stability other than the objective and focus of the study. Therefore, we cannot accept a simple statement from the SDT that it believes it is important to maintain this distinction without more explanation. If a distinction is maintained, then Generating Unit Stability Study should be and is already covered in FAC-001-0 and FAC-002-0. As defined, Generating Unit Stability Study ?focuses on an individual generating unit's or electrically closely-coupled generating units' Stability for various Contingencies on the Transmission Facilities connected to that generating unit(s) point(s) of interconnection or one bus away from that point. However, the Purpose of the proposed TPL-001-1 is to "develop a Bulk Electric System that will operate reliably over a broad spectrum of System conditions and following a wide range of probable Contingencies". If a Generating Unit becomes unstable, the unit can be disconnected from the BES without impacting system stability. Therefore, we believe that the Generating Unit Stability Studies portion is attempting to introduce interconnection stability studies into the TPL standards. Interconnection stability studies are adequately addressed by FAC-001 and does not need to be specifically called out in TPL-001-1. In addition, Generating unit stability studies are typically performed at the time of interconnection. Even though Generating Unit Stability Studies have been done as new generating unit(s) were interconnected or at the time changes occurred, such studies have not been done for the entire fleet of Generating Units at the same time. For very old units, stability study documentation may no longer exist, even though no potential stability problems have been identified when stability studies were run for interconnecting other newer units or for the System. If the requirement for Generating Unit Stability Study is retained in this proposed TPL-001-1, R2.5 needs to be clarified to say “only when” the changes in R2.5.1 and R2.5.2 are made that the Generating Unit Stability Study needs to be done. There also needs to be language about how to treat generators that are existing prior to this Standard taking effect. We would also appreciate if the SDT would more clearly define with examples the terms in R2.5.2, “material Transmission System change” and “at or near the point of Interconnection” to invoke a study.
SRP	No	We believe that there is no significant distinction between Generating Unit Stability and System Stability other than the

Organization	Question 1:	Question 1 Comments:
		objective and focus of the study. Therefore, we cannot accept a simple statement from the SDT that it believes it is important to maintain this distinction without more explanation. If a distinction is maintained, then Generating Unit Stability Study should be and is already covered in FAC-001-0 and FAC-002-0. As defined, Generating Unit Stability Study focuses on an individual generating units or electrically closely-coupled generating units' Stability for various Contingencies on the Transmission Facilities connected to that generating unit(s) point(s) of interconnection or one bus away from that point. However, the Purpose of the proposed TPL-001-1 is to develop a Bulk Electric System that will operate reliably over a broad spectrum of System conditions and following a wide range of probable Contingencies?. If a Generating Unit becomes unstable, the unit can be disconnected from the BES without impacting system stability. Therefore, we believe that the Generating Unit Stability Studies portion is attempting to introduce interconnection stability studies into the TPL standards. Interconnection stability studies are adequately addressed by FAC-001 and does not need to be specifically called out in TPL-001-1. In addition, Generating unit stability studies are typically performed at the time of interconnection. Even though Generating Unit Stability Studies have been done as new generating unit(s) were interconnected or at the time changes occurred, such studies have not been done for the entire fleet of Generating Units at the same time. For very old units, stability study documentation may no longer exist, even though no potential stability problems have been identified when stability studies were run for interconnecting other newer units or for the System. If the requirement for Generating Unit Stability Study is retained in this proposed TPL-001-1, R2.5 needs to be clarified to say “only when” the changes in R2.5.1 and R2.5.2 are made that the Generating Unit Stability Study needs to be done. There also needs to be language about how to treat generators that are existing prior to this Standard taking effect. We would also appreciate if the SDT would more clearly define with examples the terms in R2.5.2, “material Transmission System change” and “at or near the point of Interconnection” to invoke a study.
Tucson Electric Power Company	No	We believe that there is no significant distinction between Generating Unit Stability and System Stability other than the objective and focus of the study. Therefore, we cannot accept a simple statement from the SDT that it believes it is important to maintain this distinction without more explanation. If a distinction is maintained, then Generating Unit Stability Study should be and is already covered in FAC-001-0 and FAC-002-0. As defined, Generating Unit Stability Study ?focuses on an individual generating unit's or electrically closely-coupled generating units' Stability for various Contingencies on the Transmission Facilities connected to that generating unit(s) point(s) of interconnection or one bus away from that point. However, the Purpose of the proposed TPL-001-1 is to ?develop a Bulk Electric System that will operate reliably over a broad spectrum of System conditions and following a wide range of probable Contingencies?. If a Generating Unit becomes unstable, the unit can be disconnected from the BES without impacting system stability. Therefore, we believe that the Generating Unit Stability Studies portion is attempting to introduce interconnection stability studies into the TPL standards. Interconnection stability studies are adequately addressed by FAC-001 and does not need to be specifically called out in TPL-001-1. In addition, Generating unit stability studies are typically performed at the time of interconnection. Even though Generating Unit Stability Studies have been done as new generating unit(s) were interconnected or at the time changes occurred, such studies have not been done for the entire fleet of Generating Units at the same time. For very old units, stability study documentation may no longer exist, even though no potential stability

Organization	Question 1:	Question 1 Comments:
		problems have been identified when stability studies were run for interconnecting other newer units or for the System. If the requirement for Generating Unit Stability Study is retained in this proposed TPL-001-1, R2.5 needs to be clarified to say “only when” the changes in R2.5.1 and R2.5.2 are made that the Generating Unit Stability Study needs to be done. There also needs to be language about how to treat generators that are existing prior to this Standard taking effect. We would also appreciate if the SDT would more clearly define with examples the terms in R2.5.2, “material Transmission System change” and “at or near the point of Interconnection” to invoke a study.
Modesto Irrigation District	No	Comments: We believe that there is no significant distinction between Generating Unit Stability and System Stability other than the objective and focus of the study. Therefore, we cannot accept a simple statement from the SDT that it believes it is important to maintain this distinction without more explanation. If a distinction is maintained, then Generating Unit Stability Study should be and is already covered in FAC-001-0 and FAC-002-0. As defined, Generating Unit Stability Study focuses on an individual generating units or electrically closely-coupled generating units' Stability for various Contingencies on the Transmission Facilities connected to that generating unit(s) point(s) of interconnection or one bus away from that point. However, the Purpose of the proposed TPL-001-1 is to “develop a Bulk Electric System that will operate reliably over a broad spectrum of System conditions and following a wide range of probable Contingencies”. If a Generating Unit becomes unstable, the unit can be disconnected from the BES without impacting system stability. Therefore, we believe that the Generating Unit Stability Studies portion is attempting to introduce interconnection stability studies into the TPL standards. Interconnection stability studies are adequately addressed by FAC-001 and does not need to be specifically called out in TPL-001-1.In addition, Generating unit stability studies are typically performed at the time of interconnection. Even though Generating Unit Stability Studies have been done as new generating unit(s) were interconnected or at the time changes occurred, such studies have not been done for the entire fleet of Generating Units at the same time. For very old units, stability study documentation may no longer exist, even though no potential stability problems have been identified when stability studies were run for interconnecting other newer units or for the System. If the requirement for Generating Unit Stability Study is retained in this proposed TPL-001-1, R2.5 needs to be clarified to say “only when” the changes in R2.5.1 and R2.5.2 are made that the Generating Unit Stability Study needs to be done. There also needs to be language about how to treat generators that are existing prior to this Standard taking effect. We would also appreciate if the SDT would more clearly define with examples the terms in R2.5.2, “material Transmission System change” and “at or near the point of Interconnection” to invoke a study.
Tri-State G&T	No	We believe that there is no significant distinction between Generating Unit Stability and System Stability other than the objective and focus of the study. Therefore, we cannot accept a simple statement from the SDT that it believes it is important to maintain this distinction without more explanation. If a distinction is maintained, then Generating Unit Stability Study should be and is already covered in FAC-001-0 and FAC-002-0. As defined, Generating Unit Stability Study ?focuses on an individual generating unit's or electrically closely-coupled generating units' Stability for various Contingencies on the Transmission Facilities connected to that generating unit(s) point(s) of interconnection or one bus away from that point. However, the Purpose of the proposed TPL-001-1 is to ?develop a Bulk Electric System that will

Organization	Question 1:	Question 1 Comments:
		operate reliably over a broad spectrum of System conditions and following a wide range of probable Contingencies?. If a Generating Unit becomes unstable, the unit can be disconnected from the BES without impacting system stability. Therefore, we believe that the Generating Unit Stability Studies portion is attempting to introduce interconnection stability studies into the TPL standards. Interconnection stability studies are adequately addressed by FAC-001 and does not need to be specifically called out in TPL-001-1. In addition, Generating unit stability studies are typically performed at the time of interconnection. Even though Generating Unit Stability Studies have been done as new generating unit(s) were interconnected or at the time changes occurred, such studies have not been done for the entire fleet of Generating Units at the same time. For very old units, stability study documentation may no longer exist, even though no potential stability problems have been identified when stability studies were run for interconnecting other newer units or for the System. If the requirement for Generating Unit Stability Study is retained in this proposed TPL-001-1, R2.5 needs to be clarified to say “only when” the changes in R2.5.1 and R2.5.2 are made that the Generating Unit Stability Study needs to be done. There also needs to be language about how to treat generators that are existing prior to this Standard taking effect. We would also appreciate if the SDT would more clearly define with examples the terms in R2.5.2, “material Transmission System change” and “at or near the point of Interconnection” to invoke a study.
Southern California Edison	No	We believe that there is no significant distinction between Generating Unit Stability and System Stability other than the objective and focus of the study. Therefore, we cannot accept a simple statement from the SDT that it believes it is important to maintain this distinction without more explanation. If a distinction is maintained, then Generating Unit Stability Study should be and is already covered in FAC-001-0 and FAC-002-0. As defined, Generating Unit Stability Study ?focuses on an individual generating unit's or electrically closely-coupled generating units' Stability for various Contingencies on the Transmission Facilities connected to that generating unit(s) point(s) of interconnection or one bus away from that point. However, the Purpose of the proposed TPL-001-1 is to ?develop a Bulk Electric System that will operate reliably over a broad spectrum of System conditions and following a wide range of probable Contingencies?. If a Generating Unit becomes unstable, the unit can be disconnected from the BES without impacting system stability. Therefore, we believe that the Generating Unit Stability Studies portion is attempting to introduce interconnection stability studies into the TPL standards. Interconnection stability studies are adequately addressed by FAC-001 and does not need to be specifically called out in TPL-001-1. In addition, Generating unit stability studies are typically performed at the time of interconnection. Even though Generating Unit Stability Studies have been done as new generating unit(s) were interconnected or at the time changes occurred, such studies have not been done for the entire fleet of Generating Units at the same time. For very old units, stability study documentation may no longer exist, even though no potential stability problems have been identified when stability studies were run for interconnecting other newer units or for the System. If the requirement for Generating Unit Stability Study is retained in this proposed TPL-001-1, R2.5 needs to be clarified to say “only when” the changes in R2.5.1 and R2.5.2 are made that the Generating Unit Stability Study needs to be done. There also needs to be language about how to treat generators that are existing prior to this Standard taking effect. We would also appreciate if the SDT would more clearly define with examples the terms in R2.5.2, “material Transmission System change” and “at or near the point of Interconnection? to invoke a study.

Organization	Question 1:	Question 1 Comments:
Alberta Electric System Operator	No	We believe that there is no significant distinction between Generating Unit Stability and System Stability other than the objective and focus of the study. Therefore, we cannot accept a simple statement from the SDT that it believes it is important to maintain this distinction without more explanation. If a distinction is maintained, then Generating Unit Stability Study should be and is already covered in FAC-001-0 and FAC-002-0. As defined, Generating Unit Stability Study ?focuses on an individual generating unit's or electrically closely-coupled generating units' Stability for various Contingencies on the Transmission Facilities connected to that generating unit(s) point(s) of interconnection or one bus away from that point. However, the Purpose of the proposed TPL-001-1 is to ?develop a Bulk Electric System that will operate reliably over a broad spectrum of System conditions and following a wide range of probable Contingencies?. If a Generating Unit becomes unstable, the unit can be disconnected from the BES without impacting system stability. Therefore, we believe that the Generating Unit Stability Studies portion is attempting to introduce interconnection stability studies into the TPL standards. Interconnection stability studies are adequately addressed by FAC-001 and does not need to be specifically called out in TPL-001-1. In addition, Generating unit stability studies are typically performed at the time of interconnection. Even though Generating Unit Stability Studies have been done as new generating unit(s) were interconnected or at the time changes occurred, such studies have not been done for the entire fleet of Generating Units at the same time. For very old units, stability study documentation may no longer exist, even though no potential stability problems have been identified when stability studies were run for interconnecting other newer units or for the System. If the requirement for Generating Unit Stability Study is retained in this proposed TPL-001-1, R2.5 needs to be clarified to say “only when” the changes in R2.5.1 and R2.5.2 are made that the Generating Unit Stability Study needs to be done. There also needs to be language about how to treat generators that are existing prior to this Standard taking effect. We would also appreciate if the SDT would more clearly define with examples the terms in R2.5.2, “material Transmission System change” and “at or near the point of Interconnection” to invoke a study.
US Bureau of Reclamation	No	Comments: We believe that there is no significant distinction between Generating Unit Stability and System Stability other than the objective and focus of the study. Therefore, we cannot accept a simple statement from the SDT that it believes it is important to maintain this distinction without more explanation. If a distinction is maintained, then Generating Unit Stability Study should be and is already covered in FAC-001-0 and FAC-002-0. As defined, Generating Unit Stability Study ?focuses on an individual generating unit's or electrically closely-coupled generating units' Stability for various Contingencies on the Transmission Facilities connected to that generating unit(s) point(s) of interconnection or one bus away from that point. However, the Purpose of the proposed TPL-001-1 is to ?develop a Bulk Electric System that will operate reliably over a broad spectrum of System conditions and following a wide range of probable Contingencies?. If a Generating Unit becomes unstable, the unit can be disconnected from the BES without impacting system stability. Therefore, we believe that the Generating Unit Stability Studies portion is attempting to introduce interconnection stability studies into the TPL standards. Interconnection stability studies are adequately addressed by FAC-001 and does not need to be specifically called out in TPL-001-1.In addition, Generating unit stability studies are typically performed at the time of interconnection. Even though Generating Unit Stability Studies have been done as new generating unit(s) were interconnected or at the time changes occurred, such studies have not been done for the entire fleet of Generating Units

Organization	Question 1:	Question 1 Comments:
		at the same time. For very old units, stability study documentation may no longer exist, even though no potential stability problems have been identified when stability studies were run for interconnecting other newer units or for the System. If the requirement for Generating Unit Stability Study is retained in this proposed TPL-001-1, R2.5 needs to be clarified to say "only when" the changes in R2.5.1 and R2.5.2 are made that the Generating Unit Stability Study needs to be done. There also needs to be language about how to treat generators that are existing prior to this Standard taking effect. We would also appreciate if the SDT would more clearly define with examples the terms in R2.5.2, "material Transmission System change" and "at or near the point of Interconnection" to invoke a study.

Response: The SDT disagrees with your view that generating unit Stability assessments should be covered in FAC-001 or FAC-002. The SDT recognizes that such studies are performed for new generator interconnection, following the requirements of the appropriate FAC Standards. However, the TPL-001-1 Standard is intended to ensure on-going assessments of generating unit Stability so as to capture any significant performance changes over the course of time. Nevertheless, the SDT has eliminated the distinction between generating unit Stability and System Stability by modifying the definitions and Requirements as shown.

R2. Each Transmission Planner and Planning Coordinator shall ~~conduct and document the results of~~ prepare ~~its~~an annual Planning Assessment of its portion of the BES. This Planning Assessment shall use current or past studies, document assumptions, document results, and shall cover steady state analyses, short circuit analyses, and Stability analyses ~~including both System and Generating Unit Stability~~.

R2.6.1 (now 2.5.1) For steady state, short circuit, or ~~System~~ Stability analysis: the study shall be five calendar years old or less.

R2.6.2 (now 2.5.2) For steady state, short circuit, ~~Generating Plant Stability,~~ or ~~System~~ Stability analysis: the ~~study~~ present System model shall not include any material changes, such as, generation or Transmission additions/removals, or topology changes that have occurred in the intervening period and would impact the study area. Material generation changes could include:

R5. For the Stability portion of the Planning Assessment, as described in Requirement R2.4 ~~and Requirement R2.5~~, each Transmission Planner and Planning Coordinator shall perform the Contingency analyses listed in Table ~~2~~1 ~~– Stability Performance~~. The studies shall be based on computer simulations using models utilizing data provided in Requirement R1. ~~The studies shall be based on computer simulations using models utilizing data provided in Requirements R9 through R14, the MOD-010 and MOD-012 standards, and other data sources, to include known planned and long term outages of Transmission or generation equipment. The studies shall cover both System Stability and Generating Unit Stability. The following requirements apply to both System Stability and Generating Unit Stability studies unless otherwise noted.~~

The wording of sub-requirements R5.6.1 and R5.6.2 was modified and relocated to become bullets under Requirement R2.5.2.

The addition/deletion/change of individual generating unit capability of 20 MW or greater.

An aggregated addition/deletion/change to a group of generating units directly connected through their step-up transformer(s) to the BES which total 20 MW or greater.

The definitions of Generating Unit Stability Study and System Stability Study as well as the following sub-requirements were deleted: R2.5, R2.5.1, R2.5.2, and

Organization	Question 1:	Question 1 Comments:
R5.5.		
Gainesville Regional Utilities	No	Our small system does not have the present resources to deal with the large increase in stability type studies that this section seems to be requesting. Our system changes very little if at all from year to year. The ranking of the regional facilities where priority is given for stability study to the top 100 fault current buses shows that we do not have even a bus listed until position 611. We suggest that R2.4.1 should allow for only doing buses that have a ranking impact on the regional BES or no more that every 7 years for those systems without changes or are so small that their total separation or lost of their largest or almost total generation is not an issue for the RC. Stability should not have to be analyzed annually for small, unchanging systems.
Response: Where material changes do not occur as you describe for your System, studies would not have to be run any more frequently than once every five years, as described in Requirement R2.6 (now R2.5).		
ITC Holdings: ITC, METC, ITC Midwest	Yes and No	Requirement R 5.4.4: Consider changing the last sentence to the following: "If the Extreme Events analysis concludes there are widespread cascading outages, an evaluation of implementing a change designed to reduce or mitigate the likelihood of such consequences shall be conducted."
Response: The wording suggested is basically identical to what is already there. The SDT does not feel that this change provides any clarity or alters the context of the present text. Also, widespread is an ambiguous term and not measurable. No change made.		
Progress Energy Florida, Inc.	No	Progress Energy Florida, Inc. (PEF) does not believe that Stability Analysis should be or can be successfully divided into the proposed two distinct concepts of System Stability and Generating Unit Stability. Most textbooks dealing with the matter of Stability Analysis divide the issue into two parts, steady state and transient, and then subdivide the transient part into power angle stability and voltage stability. PEF has been unable to find any engineering treatise that argues for dividing transient Stability Analysis into System Stability and Generating Unit Stability. NERC's present definition of Stability, "The ability of an electric system to maintain a state of equilibrium during normal and abnormal conditions or disturbances", succinctly and correctly addresses the fact that stability issues regarding plants cannot be extricated from analysis of the rest of the system. PEF feels that this existing definition is accurate and not in need of clarification or improvement. To cite an example, if under the auspices of Generating Unit Stability, a transmission line trips, or if a load shedding scheme is activated, does the event then get defined as a System Stability event (or both)? It should be noted that the SDT attempted to both improve and clarify the definition of Stability in Note 5 of Table 2. The SDT's wording in Table 2 Note 5, while not containing any inappropriate or inaccurate information, has two fundamental flaws: a) it unnecessarily replaces the existing definition and b) it does not contain any language tying in the new definitions of System Stability and Generating Unit Stability. Furthermore, given that both of the new definitions are held to the exact same requirements, those found in Table 2, PEF can see no tangible benefit to two definitions, and therefore recommends removal of the new definitions of System Stability and Generating Unit Stability, and a return to the existing

Organization	Question 1:	Question 1 Comments:
		definition of Stability. Stability analyses that are taking place under the present definition and under the existing TPL Standards are more than adequate to demonstrate reliability of the BES, and PEF feels that the introduction of two new definitions would only serve to cause confusion and discussion regarding unmerited additional analyses.

Response: The SDT agrees and has modified the definitions and Requirements accordingly. Furthermore, with these changes, the SDT believes that Note 5 of Table 2 has value to the Industry as a clarification of the existing Stability definition and should no longer be viewed as a replacement definition.

R2. Each Transmission Planner and Planning Coordinator shall ~~conduct and document the results of~~ prepare ~~its~~an annual Planning Assessment of its portion of the BES. This Planning Assessment shall use current or past studies, document assumptions, document results, and shall cover steady state analyses, short circuit analyses, and Stability analyses ~~including both System and Generating Unit Stability~~.

R2.6.1 (now 2.5.1) For steady state, short circuit, or ~~System~~ Stability analysis: the study shall be five calendar years old or less.

R2.6.2 (now 2.5.2) For steady state, short circuit, ~~Generating Plant Stability,~~ or ~~System~~ Stability analysis: the ~~study~~ present System model shall not include any material changes, such as, generation or Transmission additions/removals, or topology changes that have occurred in the intervening period and would impact the study area. Material generation changes could include:

R5. For the Stability portion of the Planning Assessment, as described in Requirement R2.4 ~~and Requirement R2.5~~, each Transmission Planner and Planning Coordinator shall perform the Contingency analyses listed in Table ~~2~~1 ~~– Stability Performance~~. The studies shall be based on computer simulations using models utilizing data provided in Requirement R1. ~~The studies shall be based on computer simulations using models utilizing data provided in Requirements R9 through R14, the MOD-010 and MOD-012 standards, and other data sources, to include known planned and long term outages of Transmission or generation equipment. The studies shall cover both System Stability and Generating Unit Stability. The following requirements apply to both System Stability and Generating Unit Stability studies unless otherwise noted.~~

The wording of sub-requirements R5.6.1 and R5.6.2 was modified and relocated to become bullets under Requirement R2.5.2.

The addition/deletion/change of individual generating unit capability of 20 MW or greater.

An aggregated addition/deletion/change to a group of generating units directly connected through their step-up transformer(s) to the BES which total 20 MW or greater.

The definitions of Generating Unit Stability Study and System Stability Study as well as the following sub-requirements were deleted: R2.5, R2.5.1, R2.5.2, and R5.5

Lafayette Utilities System	No	Lafayette Utilities System (Lafayette) does not dispute the need for stability studies, especially in connection with significant system topology changes. We are concerned, however, by the possibility of inconsistencies between the results of interconnection studies conducted for new generating units pursuant to the Large Generator Interconnection Procedures prescribed by FERC and Generating Unit Stability Studies conducted as part of the TPL-001 planning assessment. For example, if a TPL-001 stability analysis indicates the need for more costly or extensive transmission upgrades that were indicated in an earlier LGIP interconnection study, the generation developer could be placed in an

Organization	Question 1:	Question 1 Comments:
		untenable situation: it would have proceeded with its project based on the assumption of responsibility for LGIP-indicated upgrades, but then could face demands for the funding of additional upgrades pursuant to the TPL-001 stability analysis. Improved integration between the two sets of stability studies appears warranted, in order to avoid placing generation developers in this position.
Response: The SDT understands your concerns; however, we believe that TPL-001-1 will not create an untenable position for generation developers following the LGIP. Studies to interconnect the generator in accordance with the LGIP will identify those Facilities to be incorporated in the Interconnection Agreement. Future studies carried out in compliance with TPL-001-1 will ensure on-going System reliability, and any Facility upgrades required for that purpose will be the responsibility of the Transmission Owner, not the generation developer.		
Arizona Public Service Co.	Yes and No	We generally concur with the changes for the Requirements associated with the Generating Unit and System Stability, however, Generating unit stability studies are typically performed at the time of interconnection. Even though stability studies have been done as new generating unit(s) were interconnected or at the time changes occurred, such studies have not been done for the entire fleet of generating units at the same time. For very old units, stability study documentation may no longer exist, even though no potential stability problems have been identified when stability studies were run for interconnecting other newer units. Will every TP have to benchmark their generating unit stability study for its entire fleet with the acceptance of this Standard? In other words, will every TP has to recreate documentation for all its older units?? We would appreciate that the SDT more clearly define the terms in R2.5.2, "material Transmission System change" and "at or near the point of Interconnection" to invoke a study with examples.
ColumbiaGrid	Yes and No	We generally concur with the changes for the Requirements associated with the Generating Unit and System Stability, however, Generating unit stability studies are typically performed at the time of interconnection. Even though stability studies have been done as new generating unit(s) were interconnected or at the time changes occurred, such studies have not been done for the entire fleet of generating units at the same time. For very old units, stability study documentation may no longer exist, even though no potential stability problems have been identified when stability studies were run for interconnecting other newer units. Will every TP have to benchmark their generating unit stability study for its entire fleet with the acceptance of this Standard? In other words, will every TP has to recreate documentation for all its older units?? We would appreciate that the SDT more clearly define the terms in R2.5.2, "material Transmission System change" and "at or near the point of Interconnection" to invoke a study with examples.
Response: The SDT believes that the modified definitions and Requirements in the third draft address your concerns. **R2**. Each Transmission Planner and Planning Coordinator shall ~~conduct and document the results of~~ prepare ~~its~~an annual Planning Assessment of its portion of the BES. This Planning Assessment shall use current or past studies, document assumptions, document results, and shall cover steady state analyses, short circuit analyses, and Stability analyses ~~including both System and Generating Unit Stability~~		

Organization	Question 1:	Question 1 Comments:
R2.6.1 (now R2.5.1) For steady state, short circuit, or ~~System~~ Stability analysis: the study shall be five calendar years old or less. **R2.6.2** (now R2.5.2) For steady state, short circuit, ~~Generating Plant Stability,~~ or ~~System~~ Stability analysis: the ~~study~~ present System model shall not include any material changes, such as, generation or Transmission additions/removals, or topology changes that have occurred in the intervening period and would impact the study area. Material generation changes could include: **R5**. For the Stability portion of the Planning Assessment, as described in Requirement R2.4 ~~and Requirement R2.5~~, each Transmission Planner and Planning Coordinator shall perform the Contingency analyses listed in Table ~~2~~1 ~~– Stability Performance~~. The studies shall be based on computer simulations using models utilizing data provided in Requirement R1. ~~The studies shall be based on computer simulations using models utilizing data provided in Requirements R9 through R14, the MOD-010 and MOD-012 standards, and other data sources, to include known planned and long term outages of Transmission or generation equipment. The studies shall cover both System Stability and Generating Unit Stability. The following requirements apply to both System Stability and Generating Unit Stability studies unless otherwise noted.~~ The wording of sub-requirements R5.6.1 and R5.6.2 was modified and relocated to become bullets under Requirement R2.5.2. The addition/deletion/change of individual generating unit capability of 20 MW or greater. An aggregated addition/deletion/change to a group of generating units directly connected through their step-up transformer(s) to the BES which total 20 MW or greater. The definitions of Generating Unit Stability Study and System Stability Study as well as the following sub-requirements were deleted: R2.5, R2.5.1, R2.5.2, and R5.5 Specifically, as to your question regarding "benchmarking," the revised requirements would not necessitate studies of each individual generating unit or generating plant.		
Florida Power and Light	No	This draft did not modify the existing NERC definition of Stability. Footnote 5 of the Tables describes the expected acceptable performance of a System that is stable, but the terms "System Stability" and "Generating Unit Stability" are not defined, except as studies. All stability studies must meet the Performance Requirements for Planning Events in Table 2 - Stability Performance. If there were different Performance Requirements then the distinction may be warranted. However system stability studies should be sufficient and not warrant additional work. R6 requires Transmission Planners to define proxies used to identify instability. Presumably the "proxies" would be used as a checklist for assessment of stability; however, not all stability limitations can be simplified as a proxy in the load flow. Proxies should only be used as indicative of a potential stability issue, not "to identify System instability", or replace stability studies, since a stability study to identify the issue was initially required to define the proxy. The requirement should be reworded to state "R6. If proxies are used in simulation studies to identify System instability for conditions such as cascading outages, voltage instability, or uncontrolled islanding, then each Transmission Planner and Planning Coordinator shall define the proxies used in the simulation studies."

Organization	Question 1:	Question 1 Comments:
Orlando Utilities Commission	No	I support the comments from Florida Power & Light regarding System Stability vs. Generating unit studies and proxies.

Response: The SDT agrees and has modified the definitions and Requirements accordingly. Furthermore, the SDT has also modified the wording of R6 to address your concern.

R2. Each Transmission Planner and Planning Coordinator shall ~~conduct and document the results of~~ prepare ~~its~~an annual Planning Assessment of its portion of the BES. This Planning Assessment shall use current or past studies, document assumptions, document results, and shall cover steady state analyses, short circuit analyses, and Stability analyses ~~including both System and Generating Unit Stability~~.

R2.6.1 (now R2.5.1) For steady state, short circuit, or ~~System~~ Stability analysis: the study shall be five calendar years old or less.

R2.6.2 (now R2.5.2) For steady state, short circuit, ~~Generating Plant Stability,~~ or ~~System~~ Stability analysis: the ~~study~~ present System model shall not include any material changes, such as, generation or Transmission additions/removals, or topology changes that have occurred in the intervening period and would impact the study area. Material generation changes could include:

R5. For the Stability portion of the Planning Assessment, as described in Requirement R2.4 ~~and Requirement R2.5~~, each Transmission Planner and Planning Coordinator shall perform the Contingency analyses listed in Table ~~2~~1 ~~– Stability Performance~~. The studies shall be based on computer simulations using models utilizing data provided in Requirement R1. ~~The studies shall be based on computer simulations using models utilizing data provided in Requirements R9 through R14, the MOD-010 and MOD-012 standards, and other data sources, to include known planned and long term outages of Transmission or generation equipment. The studies shall cover both System Stability and Generating Unit Stability. The following requirements apply to both System Stability and Generating Unit Stability studies unless otherwise noted.~~

The wording of sub-requirements R5.6.1 and R5.6.2 was modified and relocated to become bullets under Requirement R2.5.2.

The addition/deletion/change of individual generating unit capability of 20 MW or greater.

An aggregated addition/deletion/change to a group of generating units directly connected through their step-up transformer(s) to the BES which total 20 MW or greater.

The definitions of Generating Unit Stability Study and System Stability Study as well as the following sub-requirements were deleted: R2.5, R2.5.1, R2.5.2, and R5.5.

R6. Each Transmission Planner and Planning Coordinator shall define and document, within their Planning Assessment, ~~the~~any proxies used in ~~simulation studies~~ the analysis to identify System instability for conditions such as cascading outages, voltage instability, or uncontrolled islanding.

Exelon Transmission	Yes and No	The definitions of System Stability and Generating Unit Stability are clear. We agree that there is value in performing small signal analysis but we are concerned about the availability of software and expertise required to execute the

Organization	Question 1:	Question 1 Comments:
Planning		analysis.R5.3 is ambiguous, as it is not clear what the requirement to consider the voltage ride through capability of all generators entail. Ride through could involve the unit or station having the capability to ride through without tripping or the unit could trip but the system remain stable. General Observations R3.2.1 should be reworded so as not to be misinterpreted that GOs are prescribing their 'required' voltage levels. R2.6.2 should be Unit not Plant with regard to stability studies. R2.7.1 and elsewhere - The NERC Glossary specifies that SPSs are 'Special Protection Systems' (not 'schemes'). R5.2 Wording should be changed from '...disconnect for each contingency..' to '..isolate the disturbance... .' R5.5.1 There are too many studies required. The 20 MW threshold for unit studies may be too low. There should be a mechanism to provide a proxy for smaller units on 138 or possible 230 kV systems that can't affect system stability rather than to automatically require a study every 5 years. R2.1 and 2.2 should have the words 'at a minimum' removed with regards to describing which studies are required annually. The requirement to supply a 'project initiation date' for near-term Corrective Action Plans should be removed. If it remains, it should be clarified (Project identification date, construction start date, PUC certification date, executive approval date, etc?)

Response: The intent of Requirement R5.3 is to ensure that the generating unit models realistically replicate the behavior of the generator in response to a low voltage condition encountered during the simulation.

The requirement on voltage ride through has been changed to provide clarity (now R4.3.2).

R3.2.1 (now R3.3.2) For all generators, studies shall consider the minimum steady state voltage limitations ~~of all generators~~ and identify how the generators are ~~treated~~ analyzed in the steady state simulation.

The SDT has deleted the distinction between Unit/Plant and System Stability based on other comments.

The SDT agrees that SPS means “Special Protection Systems” and the third draft uses this terminology consistently.

The SDT disagrees with your suggested rewording of Requirement R5.2 because the concept that the requirement is addressing relates to the resultant topology of the system after the fault is cleared and not the removal of the disturbance.

In response to your comment on Requirement R5.5.1, the SDT believes that all of the studies needed to satisfy this requirement are essential to maintain reliability. The SDT has thoroughly debated the 20 MW generating unit threshold and continues to believe that this is the appropriate value.

In Requirements R2.1 and R2.2, the SDT has removed the words “at a minimum” as you have suggested.

Organization	Question 1:	Question 1 Comments:
R2.1 The Near-Term Transmission Planning Horizon portion of the steady state analysis shall be assessed annually and be supported ~~at a minimum~~ by the following annual current studies, supplemented with qualified past studies as indicated in Requirement R2.6: **R2.2** For the Long-Term Transmission Planning Horizon portion of the steady state analysis, ~~at a minimum,~~ a current System peak Load study is required annually for one of the years in the assessment period to support the annual Planning Assessment. In response to your comment on "project initiation date," the SDT considered your suggestion; however, the SDT believes that the current language is satisfactory, and few comments were received suggesting need for a modification.		
MidAmerican Energy Company	Yes and No	MidAmerican Energy Company (MEC) believes the definitions are improved. However, MEC suggests that the SDT clarify what stability analyses are required such as angular and voltage stability for which time frames such as the transient and steady state time frames and for what planning horizons such as the Near-Term and Long-Term planning horizons.
MRO NERC Standards Review Subcommittee	No	The MRO believes the definitions are improved. However, the MRO suggests that the SDT clarify what stability analysis are required such as angular and voltage stability for which time frames such as the transient and steady state time frames and for what planning horizons such as the Near-Term and Long-Term planning horizons. Generating Unit Stability Study definition - The MRO suggests deleting the text, "on the Transmission Facilities connected to that generating unit(s) point(s) of interconnection or one bus away from that point.", because certain Generation Facility contingencies should be considered and key Transmission Facility contingencies can be more than one bus away from the interconnection point. System Stability Study definition - The MRO suggests this alternate wording: "Study that focuses on portions of the System, which may include many generating units with various Contingencies. This study is concerned with loss of synchronism, lack of damping of inter-area power oscillations, and voltages during the dynamic simulation." We suggest this wording because the definition of a study should not give the criteria, but rather the general elements of the study.
Response: The SDT believes that your comments requesting clarifications have been addressed through the changes made as shown. **R2**. Each Transmission Planner and Planning Coordinator shall ~~conduct and document the results of~~ prepare ~~its~~an annual Planning Assessment of its portion of the BES. This Planning Assessment shall use current or past studies, document assumptions, document results, and shall cover steady state analyses, short circuit analyses, and Stability analyses ~~including both System and Generating Unit Stability~~. **R2.6.1** (now R2.5.1) For steady state, short circuit, or ~~System~~ Stability analysis: the study shall be five calendar years old or less. **R2.6.2** (now R2.5.2) For steady state, short circuit, ~~Generating Plant Stability,~~ or ~~System~~ Stability analysis: the ~~study~~ present System model shall not include any material changes, such as, generation or Transmission additions/removals, or topology changes that have occurred in the intervening period and would impact the study area. Material generation changes could include: **R5**. For the Stability portion of the Planning Assessment, as described in Requirement R2.4 ~~and Requirement R2.5~~, each Transmission Planner and Planning		

Organization	Question 1:	Question 1 Comments:
Coordinator shall perform the Contingency analyses listed in Table ~~2~~1 ~~– Stability Performance~~. The studies shall be based on computer simulations using models utilizing data provided in Requirement R1. ~~The studies shall be based on computer simulations using models utilizing data provided in Requirements R9 through R14, the MOD-010 and MOD-012 standards, and other data sources, to include known planned and long term outages of Transmission or generation equipment. The studies shall cover both System Stability and Generating Unit Stability. The following requirements apply to both System Stability and Generating Unit Stability studies unless otherwise noted.~~ The wording of sub-requirements R5.6.1 and R5.6.2 was modified and relocated to become bullets under Requirement R2.5.2. The addition/deletion/change of individual generating unit capability of 20 MW or greater. An aggregated addition/deletion/change to a group of generating units directly connected through their step-up transformer(s) to the BES which total 20 MW or greater. The definitions of Generating Unit Stability Study and System Stability Study as well as the following sub-requirements were deleted: R2.5, R2.5.1, R2.5.2, and R5.5		
Arkansas Electric Coop. Corp.	Yes and No	There are situations where one bus away may not be far enough. While one bus may cover most situations the standard shouldn't limit the study to just one bus away. Suggested language change: Transmission Facilities connected to that generating unit(s) point(s) of interconnection, one bus away from the electrically closely-coupled units.
Response: The definition for Generating Unit Stability Study has been deleted so the offending phrase is no longer in this standard.		
NERC and Regional Coordination (PJM)	No	In the definition of Consequential Load Loss - Revise Transmission Planning Entities to Transmission Planners; or otherwise clearly identifying the entities that are meant to be addressed by the term "Transmission Planning Entities. "Revise "which" to "that" as indicated by the text below that is in quotes and Upper Case: Load that is no longer served because it is directly connected to an element(s) that is removed from service due to fault clearing action or mis-operation connected to a source as a result of the event being studied or "THAT" is lost as a result of the load's response to the transient conditions of the event (other than through the action of UVLS or UFLS schemes). Although Load "THAT" is lost as a result of the Load's response to the transient conditions of the event is considered Consequential Load Loss and is permitted when Consequential Load Loss is allowed, [Transmission planning entities] TRANSMISSION PLANNERS are not allowed to rely upon the expectation of such Load loss to meet steady state performance requirements. Regarding the definition of Planning Event -The given words do not define the term. For example is an event meant to be an forced outage condition; or is meant to be any set of state conditions. If an event can be anything, then the term is not a definition. Planning Coordinator -Explicitly state that this definition will be deleted when the functional model definition for this entity is approved May consider deleting the term because it is not unique to this standard. The term is already defined in the Functional Model.R1.1 ? Data changes are routine in such studies and need to better quantify when technical justification is required.

Organization	Question 1:	Question 1 Comments:
Response: The definition of Consequential Load Loss has been changed in an attempt to clear up issues such as you addressed**.** **Consequential Load Loss:** ~~Load that is no longer connected to a source as a result of the event being studied or which is lost as a result of the load's response to the transient conditions of the event (other than through the action of UVLS or UFLS schemes). Although Load which is lost as a result of the Load's response to the transient conditions of the event is considered Consequential Load Loss and is permitted when Consequential Load Loss is allowed, Transmission planning entities are not allowed to rely upon the expectation of such Load loss to meet steady state performance requirements.~~ All Load that is no longer served by any Transmission Facilities as a result of the Facilities being removed from service by a planned Protection System operation to isolate fault conditions.		
IESO	No	(i) Generating Unit Stability Study: We do not agree with the phrase "…or one bus away from that point." This limits the scope of the testing to only the next bus. At times, contingencies that remove critical transmission facilities several buses away from a generating plant may affect generating unit stability performance. We suggest to reword this phrase to "..or in the nearby vicinity that can have an adverse reliability impact on the generating units' stability performance."(ii) Long-Term Transmission Planning Horizon: A nit-picking suggestion to change the first "longer" to "long".(iii) Planning Coordinator: We not see the need to repeat a definition that is already provided in the NERC Glossary of Terms and the Functional Model. There is a plan to implement a wholesale change from Planning Authority to Planning Coordinator. This is expected to occur in the first half of 2009.(iv) System Stability Study: Since voltage performance is included in this assessment, we suggest to add to the phrase "?which may include many generating units AND GROUPS OF TRANSMISSION FACILITIES..".(v) Year One: The second part of the definition is confusing. By "12-18 months from the completion of the previous annual Planning Assessment." does it mean 12-18 months from the "complete date" of the previous assessment, or from the "end of the previous assessment period"? For example, a previous assessment was completed on April 30, 2008 that covers a 12 month period from May 1, 2008 to April 30, 2009. Does year one for the subsequent assessment start from May 1, 2009 or May 1, 2010? In view of the confusion, having only the first sentence would suffice. In fact, there is only one reference made in the requirement (R2.1.1). Qualifying "year one" can easily be made in that requirement without having to have a defined term. Adding defined terms without a good cause adds to the maintenance task for the glossary of terms. Further, it begs the question on why "year two" and "year five" referenced in that same requirement are not defined.
Response: With regard to your comments (i) and (iv), **t**he SDT agrees and has modified the definitions and Requirements accordingly. **R2**. Each Transmission Planner and Planning Coordinator shall ~~conduct and document the results of~~ prepare ~~its~~an annual Planning Assessment of its portion of the BES. This Planning Assessment shall use current or past studies, document assumptions, document results, and shall cover steady state analyses, short circuit analyses, and Stability analyses ~~including both System and Generating Unit Stability~~. **R2.6.1** (now R2.5.1) For steady state, short circuit, or ~~System~~ Stability analysis: the study shall be five calendar years old or less.		

Organization	Question 1:	Question 1 Comments:
R2.6.2 (now R2.5.2) For steady state, short circuit, ~~Generating Plant Stability,~~ or ~~System~~ Stability analysis: the ~~study~~ present System model shall not include any material changes, such as, generation or Transmission additions/removals, or topology changes that have occurred in the intervening period and would impact the study area. Material generation changes could include: **R5**. For the Stability portion of the Planning Assessment, as described in Requirement R2.4 ~~and Requirement R2.5~~, each Transmission Planner and Planning Coordinator shall perform the Contingency analyses listed in Table ~~2~~1 ~~– Stability Performance~~. The studies shall be based on computer simulations using models utilizing data provided in Requirement R1. ~~The studies shall be based on computer simulations using models utilizing data provided in Requirements R9 through R14, the MOD-010 and MOD-012 standards, and other data sources, to include known planned and long term outages of Transmission or generation equipment. The studies shall cover both System Stability and Generating Unit Stability. The following requirements apply to both System Stability and Generating Unit Stability studies unless otherwise noted.~~ The wording of sub-requirements R5.6.1 and R5.6.2 was modified and relocated to become bullets under Requirement R2.5.2. The addition/deletion/change of individual generating unit capability of 20 MW or greater. An aggregated addition/deletion/change to a group of generating units directly connected through their step-up transformer(s) to the BES which total 20 MW or greater. The definitions of Generating Unit Stability Study and System Stability Study as well as the following sub-requirements were deleted: R2.5, R2.5.1, R2.5.2, and R5.5. (ii) Thank you for your suggestion. The SDT sees no material difference in the suggested change and has decided to leave the definition unchanged. (iii) As you note, NERC is transitioning from the use of the term Planning Authority to the term Planning Coordinator. Since the new terminology has not been officially adopted yet in the Functional Model, it must be defined in this standard revision. (v) The definition is intended to be flexible to accommodate different practices and schedules. The key points are: 1) an assessment must be done each year and completed any time during the year, 2) the first year of the assessment period should be beyond the period examined to address operational planning issues, and 3) the time to complete the assessment could vary and take up to 18 months. In your example, if you have chosen Year One to be May 1, 2008 to April 30, 2009, then Year One for the subsequent assessment would begin May 1, 2009.		
Dominion - Electric Transmission Planning	Yes	
TVA System Planning	Yes	
City Water, Light & Power -	Yes	

Organization	Question 1:	Question 1 Comments:
Springfield, Illinois		
Tenaska, Inc.	Yes	
US Army Corps of Engineers, Northwestern Division	Yes	
JEA	Yes	
Midwest ISO	Yes	
AEP	Yes	
Lakeland Electric	Yes	
LCRA TSC	Yes	
E.ON U.S. Transmission Planning	Yes	
Duke Energy	Yes	
Oncor Electric Delivery	Yes	NA
FirstEnergy Corp.	Yes	
Response: Thank you for your response.		

2. Do you concur with the modified Requirements R2.4, R2.5, R5.4, and R5.5? If not, please state why and/or suggest specific changes.

Summary Consideration:

In response to industry comments, the SDT decided that generating unit Stability and System Stability need not and should not be treated as distinct issues. The Stability related requirements have been modified to create a single generic set of requirements that no longer distinguishes between generating unit and System Stability. This should address any potential conflict between this standard and the FAC standards.

Requirement R2.4.1 has been modified to clarify that a detailed dynamic Load model is not required at each bus. An aggregate System Load model which represents the overall dynamic behavior of the Load is acceptable. Because of this clarification, the SDT believes that a 24 month implementation period for this requirement is sufficient.

Requirement R2.4.3 has been modified to remove the need for stating the technical rationale for why or why not a particular sensitivity was selected. Requirement R2.4.4 was deleted because it was essentially a voluntary requirement. The specific wording for each of the sensitivities to be considered has been changed and should be clearer as to what is needed. The TP is allowed to use its judgment as to how the variations of the sensitivity parameters should be made.

The requirement to include "known planned and long term outages of Transmission or generation equipment" has been removed from Requirement R5. This is covered in the revised Requirement R1.1.1.

Stability studies will continue to be required for smaller entities. Smaller entities have the option of not registering as a TP to avoid compliance concerns. Furthermore, it would be difficult to establish criteria for exempting “smaller entities.”

The definitions for Generating Unit Stability Study and System Stability Study have been deleted and the following requirements have been added or changed due to industry comments:

R1.1.1 Planned outages of generation and Transmission Facilities, if specifically known.

R2.1.3 For each of the studies described in Requirements R2.1.1 and ~~Requirement~~ R2.1.2, sensitivity case(s) that are intended to stress the System with ~~sensitivities~~ variations ~~that reflect~~ in one or more of the following conditions not already included in the studies shall be ~~run and documentation of the technical rationale for why each of the conditions was or was not selected shall be supplied~~ included in the Assessment:

R2.1.4 When an entity’s spare equipment strategy could result in the unavailability of major Transmission equipment that has a lead time of one year or more (such as a transformer), an analysis of the impact on System performance shall be assessed. The analysis shall reflect the Contingencies identified in Table 1 during the conditions that the System is expected to experience due to the unavailability of the long lead time equipment.

R2.4.1 System peak Load for one of the five years. For peak System Load levels, a Load model shall be used which appropriately represents the dynamic behavior of Loads, including consideration of the behavior of induction motor Loads. An aggregate system Load model which represents the overall dynamic behavior of the Load is acceptable.

R2.4.3 For each of the studies described in Requirements R2.4.1 and ~~Requirement~~ R2.4.2, ~~s~~ensitivity case(s) that are intended to stress the System with variations ~~to reflect~~ in one or more of the following conditions not already included in the studies shall be ~~run and documentation of the technical rationale for why each of the conditions was or was not selected shall be supplied~~ included in the Assessment:

- ~~Variations in~~ Load model assumptions
- ~~Modification of e~~Expected transfers
- ~~Unavailability of long lead time Facilities~~ Timing of the installation of new or modified Facilities.
- ~~Variability and outages of r~~Reactive resource~~s~~ capability.

R2.6.2 (now R2.5.2) For steady state, short circuit, ~~Generating Plant Stability,~~ or ~~System~~ Stability analysis: the ~~study~~ present System model shall not include any material changes, such as, generation or Transmission additions/removals, or topology changes that have occurred in the intervening period and would impact the study area. Material generation changes could include:

- The addition/deletion/change of individual generating unit capability of 20 MW or greater.
- An aggregated addition/deletion/change to a group of generating units directly connected through their step-up transformer(s) to the BES which total 20 MW or greater.

R3 For the steady state portion of the Planning Assessment, each Transmission Planner and Planning Coordinator shall perform analysis for the Near-Term and Long-Term Transmission Planning Horizon studies in Requirement R2.1 and Requirement R2.2. ~~The studies shall be based on computer power flow simulations that analyze BES normal performance (n-0) and System response to c~~Contingencies ~~in Table 1 – Steady State Performance.~~ The studies shall be based on computer simulations using models utilizing data provided in Requirement R1.

R3.4 (now R3.5) Those Extreme Events in Table 1 ~~– Steady State Performance~~ that are expected to produce more severe System impacts shall be identified~~,~~ and a list of those events to be evaluated for System performance in Requirement R3.2 created~~,~~. ~~and t~~The rationale for the Contingencies selected for evaluation shall be available as supporting information and shall ~~includ~~include~~e~~ an explanation of why the remaining Contingencies would produce less severe System results. If the ~~Extreme Events~~ analysis concludes there are cascading outages caused by the occurrence of Extreme Events, an evaluation of ~~implementing a change~~ possible actions designed to reduce ~~or mitigate~~ the likelihood or mitigate ~~of such~~the consequences and adverse impacts of the event(s) shall be conducted.

R5. For the Stability portion of the Planning Assessment, as described in Requirement R2.4 ~~and Requirement R2.5~~, each Transmission Planner and Planning Coordinator shall perform the Contingency analyses listed in Table ~~2~~1 ~~– Stability Performance~~. The studies shall be based on computer simulations using models utilizing data provided in Requirement R1. ~~The studies shall be based on computer simulations using models utilizing data provided in Requirements R9 through R14, the MOD-010 and MOD-012 standards, and other data sources, to include known planned and long term outages of Transmission or generation equipment. The studies shall cover both System Stability and Generating Unit Stability. The following requirements apply to both System Stability and Generating Unit Stability studies unless otherwise noted~~

R5.2 (now R4.3 and R4.3.1) Contingency analyses shall: ~~s~~Simulate the removal of all elements ~~including those~~ that the Protection System ~~protection~~ and other automatic controls are expected to disconnect for each Contingency without operator intervention.

R5.4.4 (now R4.5) ~~At a minimum, t~~Those Extreme Events in Table ~~2~~1 ~~– Stability Performance~~ that ~~would~~are expected to produce more severe System impacts shall be identified and a list of those events to be~~,~~ evaluated for System performance in Requirement R5.2 created~~,~~. ~~and t~~The rationale for the Contingencies selected for evaluation shall be available as supporting information and shall include~~e~~ an explanation of why the remaining Contingencies would produce less severe System results. If the ~~Extreme Events~~ analysis concludes there are cascading outages caused by the occurrence of Extreme Events, an evaluation of ~~implementing a change~~ possible actions designed to reduce ~~or mitigate~~ the likelihood or mitigate ~~of such~~the consequences of the event(s) shall be conducted.

The following requirements were deleted due to industry comment:

R2.4.4 ~~In addition to those sensitivities mentioned in Requirement R2.4.3, any other sensitivity, as deemed appropriate by the Transmission Planner or Planning Coordinator for their individual systems, shall be run and the Planning Assessment shall include documentation of the technical rationale for why each was selected shall be supplied.~~

R2.5 ~~The Generating Unit Stability analysis portion of the Planning Assessment shall be analyzed consistent with Requirement R5.5 with studies for the year when the following changes that could affect stability margins occur:~~

R2.5.1 ~~New generator(s) are added or generation modifications are made such as changes in generation capability or replacing the exciter.~~

R2.5.2 ~~Material Transmission System changes are made at or near the point of Interconnection of existing Generation such as the removal of a Transmission Line or the addition of a new substation in one of the Transmission Lines connected to the plant.~~

R5.4.3 ~~Automatic generation tripping is allowed to mitigate Stability violations if the following conditions are met:~~

R5.4.3.1 ~~All Facilities shall be operating within their Facility Ratings~~

R5.4.3.2 ~~Such action would not violate safety, equipment, regulatory or statutory requirements~~

R5.4.3.3 ~~A sustainable, stable, operating condition is maintained~~

R5.5 ~~For the Generating Unit Stability studies:~~

R5.5.1 ~~Shall be performed for individual generating units 20 MW or greater directly connected through a step-up transformer to the BES and for generating units at the same location which total 75 MW or greater, directly connected through their step-up transformer(s) to the BES.~~

R5.5.2 ~~Shall be performed for changes in the real power output of a generating unit by more than 10% of the existing capability or more than 20 MW whichever is greater.~~

R5.5.3 ~~Shall be performed and evaluated for those Planning Events that would produce more severe System impacts and the rationale for the Contingencies selected for evaluation shall be available as supporting information and shall include an explanation of why the remaining Contingencies would produce less severe System results.~~

R5.5.4 ~~Shall meet Performance requirements for Planning Events in Table 2 – Stability Performance~~

Organization	Question 2:	Question 2 Comments:
Dominion - Electric Transmission Planning	No	Comments are subdivided according to different sections as listed below: R2.4.1: In principal, we agree that the dynamic behavior of loads, including consideration of the behavior of induction motor loads, should be represented. However, it is not easy to get the data on such loads. Most customers, including industrial ones, have no information/knowledge regarding their load characteristics. Also, the software tools currently in use do not accommodate the modeling of certain material effects (for example the load reduction due to thermal trips on large HVAC compressor motors). Additionally, if the entire case is populated with such detail dynamic load data, the case could not be solved. A lot of research would be required. A phase-in period of several years should be considered in order to accomplish the fundamental objective of dynamic load modeling. Please refer to Item 4 of Question 15 for further thoughts on modeling requirements. R2.4.3: It is acceptable to perform studies that include various sensitivity factors, but to document all rationales why they were chosen or not chosen for each study performed is burdensome. R2.5.1: Reduction in generation does not decrease stability margins. Therefore, the previous version's "increasing in generation" should be kept instead of changing it to "changes in generation." R5.4.3: This requirement allows automatic generation tripping to mitigate Stability violations (subject to meeting three listed conditions there in). Automatic generator trips should not be allowed for N-1 contingency studies (beginning with system normal and evaluating for the very first contingency) should the full output of the generating unit be classified as a capacity resource. Allowing a capacity resource generator to trip for N-1 contingency could result in reduced system reliability.

Response: Requirement R2.4.1 has been modified to clarify that a detailed dynamic Load model is not required at each bus. An aggregate System Load model which represents the overall dynamic behavior of the Load is acceptable. Because of this clarification, the SDT believes that a 24 month implementation period for this requirement is sufficient. This will be covered in the Implementation Plan which will be posted along with the third draft of the standard.

R2.4.1 System peak Load for one of the five years. For peak System Load levels, a Load model shall be used which appropriately represents the dynamic behavior of Loads, including consideration of the behavior of induction motor Loads. An aggregate system Load model which represents the overall dynamic behavior of the Load is acceptable.

R2.4.3: The SDT agrees and has modified the language of Requirement R2.4.3 to not require the rationale for why a sensitivity was chosen or not.

R2.4.3 For each of the studies described in Requirements R2.4.1 and ~~Requirement~~ R2.4.2, ~~s~~ensitivity case(s) that are intended to stress the System with variations ~~to reflect~~ in one or more of the following conditions not already included in the studies shall be ~~run and documentation of the technical rationale for why each of the conditions was or was not selected shall be supplied~~ included in the Assessment:

Organization	Question 2:	Question 2 Comments:
R2.5.1: The SDT has removed the distinction between System Stability and generating unit Stability. Requirement R2.5.1 has been deleted. R5.4.3: This requirement has been deleted.		
NPCC	No	a. A MOD standard should be developed to address the assembly of dynamic load models, rather than specifying modeling in paragraph 2.4.1 (dynamic behavior of loads). Paragraph 2.4.1 should instead read, "System Peak Load for one of the five years." b. In paragraph R.2.4.3.4, what does "variability" mean? c. Add a new requirement "R5.4.3.4 Automatic generator tripping shall not have an Adverse Reliability Impact on overall system reliability." d. Remove Heading R5.5 and make generator unit stability a section of overall stability requirements. e. Modify R5.5.1 to become R5.4.5, with the following, "Shall be performed for the addition of an individual generating unit or generating units at the same interconnection point of 20 MW or greater that are directly connected to the BES." There may be little difference between the stability performance of a single 20 MW unit and an aggregation of units totaling 20 MW at the same BES interconnection point f. Strike R5.5.3 and R5.5.4, as they become redundant to R5.4.1
Hydro-Québec TransEnergie (HQT)	No	a. A MOD standard should be developed to address the assembly of dynamic load models, rather than specifying modeling in paragraph 2.4.1 (dynamic behavior of loads). Paragraph 2.4.1 should instead read, "System Peak Load for one of the five years." b. In paragraph R.2.4.3.4, what does "variability" mean? c. Add a new requirement, "R5.4.3.4 Automatic generator tripping shall not have an significant adverse impact on overall system reliability." d. Remove Heading R5.5 and make generator unit stability a section of overall stability requirements. e. Modify R5.5.1 to become R5.4.5, with the following, "Shall be performed for the addition of an individual generating unit or generating units at the same interconnection point 20 MW or greater that are directly connected to the BES." There may be little difference between the stability performance of a single 20 MW unit and an aggregation of units totaling 20 MW at the same BES interconnection point f. Strike R5.5.3 and R5.5.4, as they become redundant to R5.4.1
New York	No	a. A MOD standard should be developed to address the assembly of dynamic load models, rather than specifying

Organization	Question 2:	Question 2 Comments:
Independent System Operator		modeling in paragraph 2.4.1 (dynamic behavior of loads). Paragraph 2.4.1 should instead read, "System Peak Load for one of the five years." b. In paragraph R.2.4.3.4, what does "variability" mean? c. Add a new requirement, "R5.4.3.4 Automatic generator tripping shall not have an significant adverse impact on overall system reliability." d. Remove Heading R5.5 and make generator unit stability a section of overall stability requirements. e. Modify R5.5.1 to become R5.4.5, with the following, "Shall be performed for the addition of an individual generating unit or generating units at the same interconnection point 20 MW or greater that are directly connected to the BES." There may be little difference between the stability performance of a single 20 MW unit and an aggregation of units totaling 20 MW at the same BES interconnection point. f. ---- g. Strike R5.5.3 and R5.5.4, as they become redundant to R5.4.1

Response: a: The SDT disagrees and believes it is appropriate to require this in the TPL standard. Requirement R2.4.1 has been modified to clarify that an aggregate system Load model which represents the overall dynamic behavior of the Load is acceptable. It is not necessary to have a dynamic Load model which is specific to each bus.

R2.4.1 System peak Load for one of the five years. For peak System Load levels, a Load model shall be used which appropriately represents the dynamic behavior of Loads, including consideration of the behavior of induction motor Loads. An aggregate system Load model which represents the overall dynamic behavior of the Load is acceptable.

b: The specific wording for Requirement R2.4.3.4 has been changed to variations in "reactive resource capability". The sub-requirement is now also part of a bulleted list. This could mean a degradation of the capability of a reactive resource. The TP is allowed to use its judgment as to how the variations of the sensitivity parameters should be made.

~~Variability and outages of r~~Reactive resource~~s~~ capability.

c: The SDT has decided to remove Requirement R5.4.3 because the sub-requirements are already implicitly covered by the standard. Your suggested sub-requirement is also already implicitly covered by the standard.

d: In response to industry comments, the SDT has removed the distinction in the standard between System Stability and generating unit Stability.

e: The SDT agrees that there is little distinction between a single unit of a specific MW and an aggregation of the same number of MW. The requirement for study has been changed to 20 MW for a single generator or for an aggregate of generators. This requirement is now located at Requirement R2.5.2.

Organization	Question 2:	Question 2 Comments:
R2.5.2 For steady state, short circuit, ~~Generating Plant Stability,~~ or ~~System~~ Stability analysis: the ~~study~~ present System model shall not include any material changes, such as, generation or Transmission additions/removals, or topology changes that have occurred in the intervening period and would impact the study area. Material generation changes could include: The addition/deletion/change of individual generating unit capability of 20 MW or greater. An aggregated addition/deletion/change to a group of generating units directly connected through their step-up transformer(s) to the BES which total 20 MW or greater. **f**: Generating unit Stability and System Stability have been combined.		
Northeast Utilities	No	Northeast Utilities has participated with ISO-NE and NPCC and supports the comments filed by those organizations.
ISO New England Inc.	No	a. A MOD standard should be developed to address the assembly of dynamic load models, rather than specifying modeling in paragraph 2.4.1 (dynamic behavior of loads, including consideration of the behavior of induction motor Loads). Paragraph 2.4.1 should instead read, "System Peak Load for one of the five years." The remainder of the paragraph should be deleted. b. In paragraph R.2.4.3.4, what does "variability" mean? Is variability more of a concern than an outage? Suggest changing paragraph R.2.4.3.4 to simple say "Outages of Reactive Resources" c. Add a new requirement, "R5.4.3.4 Automatic generator tripping shall not have an significant adverse impact on overall system reliability." d. Remove Heading R5.5 and make generator unit stability for a new facility a section of overall stability requirements. e. Modify R5.5.1 to become R5.4.5, with the following, "Shall be performed for the addition of an individual generating unit or generating units at the same interconnection point 20 MW or greater that are directly connected to the BES." There may be little difference between the stability performance of a single 20 MW unit and an aggregation of units totaling 20 MW at the same BES interconnection point. f. If planning assessment studies all generators or stations above 20 MW, as suggested by R5.5.1, then this provision is unnecessary and R5.5.2 should be deleted. g. If the output of a generating station does not change by more than 20MW, then no new study is required and, it should be acceptable to rely on past stability assessments. This is not clear in R5.5.1. h. With respect to section R5 - The concept of planned and long-term outages should be addressed uniformly for the general Planning Assessment. It should not be specific to the Stability Assessment. i. Planned and long-term outages are two fundamentally different concepts and should be treated separately.

Organization	Question 2:	Question 2 Comments:
		Planned and Long-Term outages should be defined. Define how planning events in Tables 1 and 2 are associated with each type of outage. Define length of a "Long Term" outage. Planned outages should be addressed in the operating horizon unless otherwise defined in the planning horizon. j. The provisions of Section R.5.3 should be included in a MOD standard and applied to a requirement to provide information regarding all direct and indirect protective and control actions that could result in the inadvertent trip of the generator. Such a provision should include " other equipment (e.g. HVDC, SVC's, Statcoms)", and identify how these devices are treated in the simulation. k. Strike R5.5.3 and R5.5.4, as they become redundant to R5.4.1
National Grid	No	a. A MOD standard should be developed to address the assembly of dynamic load models, rather than specifying modeling in paragraph 2.4.1 (dynamic behavior of loads, including consideration of the behavior of induction motor Loads). Paragraph 2.4.1 should instead read, "System Peak Load for one of the five years." The remainder of the paragraph should be deleted. b. In paragraph R.2.4.3.4, what does "variability" mean? Is variability more of a concern than an outage? Suggest changing paragraph R.2.4.3.4 to simple say "Outages of Reactive Resources" c. Add a new requirement, "R5.4.3.4 Automatic generator tripping shall not have an significant adverse impact on overall system reliability." d. Remove Heading R5.5 and make generator unit stability for a new facility a section of overall stability requirements. e. Modify R5.5.1 to become R5.4.5, with the following, "Shall be performed for the addition of an individual generating unit or generating units at the same interconnection point 20 MW or greater that are directly connected to the BES." There may be little difference between the stability performance of a single 20 MW unit and an aggregation of units totaling 20 MW at the same BES interconnection point. f. If planning assessment studies all generators or stations above 20 MW, as suggested by R5.5.1, then this provision is unnecessary and R5.5.2 should be deleted. g. If the output of a generating station does not change by more than 20MW, then no new study is required and, it should be acceptable to rely on past stability assessments. This is not clear in R5.5.1. h. With respect to section R5 - The concept of planned and long-term outages should be addressed uniformly for the general Planning Assessment. It should not be specific to the Stability Assessment. i. Planned and long-term outages are two fundamentally different concepts and should be treated separately. Planned and Long-Term outages should be defined. Define how planning events in Tables 1 and 2 are associated with each type of outage. Define length of a "Long Term" outage. Planned outages should be addressed in the

Organization	Question 2:	Question 2 Comments:
		operating horizon unless otherwise defined in the planning horizon. j. The provisions of Section R.5.3 should be included in a MOD standard and applied to a requirement to provide information regarding all direct and indirect protective and control actions that could result in the inadvertent trip of the generator. Such a provision should include " other equipment (e.g. HVDC, SVC's, Statcoms)", and identify how these devices are treated in the simulation. k. Strike R5.5.3 and R5.5.4, as they become redundant to R5.4.1
Central Maine Power Company	No	a. A MOD standard should be developed to address the assembly of dynamic load models, rather than specifying modeling in paragraph 2.4.1 (dynamic behavior of loads, including consideration of the behavior of induction motor Loads). Paragraph 2.4.1 should instead read, "System Peak Load for one of the five years." The remainder of the paragraph should be deleted. b. In paragraph R.2.4.3.4, what does "variability" mean? Is variability more of a concern than an outage? Suggest changing paragraph R.2.4.3.4 to simple say "Outages of Reactive Resources" c. Add a new requirement, "R5.4.3.4 Automatic generator tripping shall not have an significant adverse impact on overall system reliability." d. Remove Heading R5.5 and make generator unit stability for a new facility a section of overall stability requirements. e. Modify R5.5.1 to become R5.4.5, with the following, "Shall be performed for the addition of an individual generating unit or generating units at the same interconnection point 20 MW or greater that are directly connected to the BES." There may be little difference between the stability performance of a single 20 MW unit and an aggregation of units totaling 20 MW at the same BES interconnection point. f. If planning assessment studies all generators or stations above 20 MW, as suggested by R5.5.1, then this provision is unnecessary and R5.5.2 should be deleted. g. If the output of a generating station does not change by more than 20MW, then no new study is required and, it should be acceptable to rely on past stability assessments. This is not clear in R5.5.1. h. With respect to section R5, the concept of planned and long-term outages should be addressed uniformly for the general Planning Assessment. It should not be specific to the Stability Assessment. i. Planned and long-term outages are two fundamentally different concepts and should be treated separately. Planned and Long-Term outages should be defined. Define how planning events in Tables 1 and 2 are associated with each type of outage. Define length of a "Long Term" outage. Planned outages should be addressed in the operating horizon unless otherwise defined in the planning horizon.

Organization	Question 2:	Question 2 Comments:
		j. The provisions of Section R.5.3 should be included in a MOD standard and applied to a requirement to provide information regarding all direct and indirect protective and control actions that could result in the inadvertent trip of the generator. Such a provision should include "other equipment (e.g. HVDC, SVC's, Statcoms)", and identify how these devices are treated in the simulation. k. Strike R5.5.3 and R5.5.4, as they become redundant to R5.4.1

Response: a: The SDT disagrees and believes it is appropriate to require this in the TPL standard. Requirement R2.4.1 has been modified to clarify that an aggregate system Load model which represents the overall dynamic behavior of the Load is acceptable. It is not necessary to have a dynamic Load model which is specific to each bus.

R2.4.1 System peak Load for one of the five years. For peak System Load levels, a Load model shall be used which appropriately represents the dynamic behavior of Loads, including consideration of the behavior of induction motor Loads. An aggregate system Load model which represents the overall dynamic behavior of the Load is acceptable.

b: The specific wording for Requirement R2.4.3.4 has been changed to variations in "reactive resource capability". The sub-requirement has also been changed to become a part of a bulleted list. This could mean a degradation of the capability of a reactive resource. The TP is allowed to use its judgment as to how the variations of the sensitivity parameters should be made.

~~Variability and outages of r~~Reactive resource~~s~~ capability.

c: The SDT has decided to remove Requirement R5.4.3 because the sub-requirements are already implicitly covered by the standard. Your suggested sub-requirement is also already implicitly covered by the standard.

d: In response to industry comments, the SDT has removed the distinction in the standard between System Stability and generating unit Stability.

e: The SDT agrees that there is little distinction between a single unit of a specific MW and an aggregation of the same number of MW. The requirement for study has been changed to 20 MW for a single generator or for an aggregate of generators. This requirement is now located at Requirement R2.5.2.

R2.5.2 For steady state, short circuit, ~~Generating Plant Stability,~~ or ~~System~~ Stability analysis: the ~~study~~ present System model shall not include any material changes, such as, generation or Transmission additions/removals, or topology changes that have occurred in the intervening period and would impact the study area. Material generation changes could include:

The addition/deletion/change of individual generating unit capability of 20 MW or greater.

An aggregated addition/deletion/change to a group of generating units directly connected through their step-up transformer(s) to the BES which total 20 MW or greater.

f: There are no longer two requirements covering this. The new generator size which requires a study and the change of generator size which requires a study have been combined into Requirement R2.6.2.

Organization	Question 2:	Question 2 Comments:
g: Requirement R5.5.1 has been deleted. h and i: The requirement to include "known planned and long term outages of Transmission or generation equipment" has been removed from Requirement R5. Planned outages are covered in Requirement R1.1.1 for both Stability and Steady State. Long term outages are covered in new Requirement R2.1.4. **R1.1.1** Planned outages of generation and Transmission Facilities, if specifically known. **R2.1.4** When an entity's spare equipment strategy could result in the unavailability of major Transmission equipment that has a lead time of one year or more (such as a transformer), an analysis of the impact on System performance shall be assessed. The analysis shall reflect the Contingencies identified in Table 1 during the conditions that the System is expected to experience due to the unavailability of the long lead time equipment. j: This is the subject of PRC-024 currently under development. But the question of how you treated this in your planning studies belongs in TPL. **k**: Generating unit Stability and System Stability have been combined.		
NSTAR Electric	No	1. A MOD standard should be developed to address the assembly of dynamic load models, rather than specifying modeling in paragraph 2.4.1 (dynamic behavior of loads, including consideration of the behavior of induction motor Loads). Paragraph 2.4.1 should instead read, "System Peak Load for one of the five years." The remainder of the paragraph should be deleted. 2. Change paragraph R.2.4.3.4 to "Outages of Reactive Resources". It is not clear what "variability" means and why it would be more severe than outages. 3. Add a new requirement, "R5.4.3.4 Automatic generator tripping schemes shall not be overly complex or have an significant adverse impact on overall system reliability." 4. Requirements of R5.5 should be rolled into R5.4 and made applicable to all stability studies. 5. Modify R5.5.1 to the following "Shall be performed for an individual generating unit or generating units at the same interconnection point 20 MW or greater that are directly connected to the BES." There may be little difference between the stability performance of a single 20 MW unit and an aggregation of units totaling 20 MW at the same BES interconnection point. 6. Delete R5.5.2. If planning assessment studies all generators or stations above 20 MW, as suggested by R5.5.1, then this provision is unnecessary. If the system has not changed, it should be acceptable to rely on past stability assessments. 7. With respect to section R5, the concept of planned and long-term outages should be addressed uniformly for the general Planning Assessment. It should not be specific to the Stability Assessment.

Organization	Question 2:	Question 2 Comments:
		8. Planned and long-term outages are two fundamentally different concepts and should be treated separately. Planned and Long-Term outages should be defined. Define how planning events in Tables 1 and 2 are associated with each type of outage. Define length of a "Long Term" outage. Planned outages should be addressed in the operating horizon unless otherwise defined in the planning horizion. 9. The provisions of Section R.5.3 should be included in an MOD standard and applied to a requirement to provide information regarding all direct and indirect protective and control actions that could result in the inadvertent trip of the generator. Such a provision should include "…other equipment (e.g. HVDC, SVC's, Statcoms)", and identify how these devices are treated in the simulation.

Response: 1: The SDT disagrees and believes it is appropriate to require this in the TPL standard. Requirement R2.4.1 has been modified to clarify that an aggregate system Load model which represents the overall dynamic behavior of the Load is acceptable. It is not necessary to have a dynamic Load model which is specific to each bus.

R2.4.1 System peak Load for one of the five years. For peak System Load levels, a Load model shall be used which appropriately represents the dynamic behavior of Loads, including consideration of the behavior of induction motor Loads. An aggregate system Load model which represents the overall dynamic behavior of the Load is acceptable.

2: The specific wording for old Requirement R2.4.3.4 has been changed to "reactive resource capability". This could mean a degradation of the capability of a reactive resource. The TP is allowed to use its judgment as to how the variations of the sensitivity parameters should be made.

~~Variability and outages of r~~Reactive resource~~s~~ capability.

3: The SDT has decided to remove Requirement R5.4.3 because the sub-requirements are already implicitly covered by the standard. Your suggested sub-requirement is also already implicitly covered by the standard.

4: In response to industry comments, the SDT has removed the distinction in the standard between System Stability and generating unit Stability.

5: The SDT agrees that there is little distinction between a single unit of a specific MW and an aggregation of the same number of MW. The requirement for study has been changed to 20 MW for a single generator or for an aggregate of generators. This requirement is now located at Requirement R2.5.2.

R2.5.2 For steady state, short circuit, ~~Generating Plant Stability,~~ or ~~System~~ Stability analysis: the ~~study~~ present System model shall not include any material changes, such as, generation or Transmission additions/removals, or topology changes that have occurred in the intervening period and would impact the study area. Material generation changes could include:

The addition/deletion/change of individual generating unit capability of 20 MW or greater.

An aggregated addition/deletion/change to a group of generating units directly connected through their step-up transformer(s) to the BES which total 20 MW or greater.

Organization	Question 2:	Question 2 Comments:
6: There are no longer two requirements covering this. The new generator size which requires a study and the change of generator size which requires a study have been combined into Requirement R2.5.2. 7 and 8: The requirement to include "known planned and long term outages of Transmission or generation equipment" has been removed from R5. Planned outages are covered in Requirement R1.1.1 for both Stability and Steady State. Long term outages are covered in new Requirement R2.1.4. **R1.1.1** Planned outages of generation and Transmission Facilities, if specifically known. **R2.1.4** When an entity's spare equipment strategy could result in the unavailability of major Transmission equipment that has a lead time of one year or more (such as a transformer), an analysis of the impact on System performance shall be assessed. The analysis shall reflect the Contingencies identified in Table 1 during the conditions that the System is expected to experience due to the unavailability of the long lead time equipment. 9: This is the subject of PRC-024 currently under development. But the question of how you treated this in your planning studies belongs in TPL.		
City Water, Light & Power - Springfield, Illinois	No	Near term stability analysis should not need to be performed each year unless there is a significant change to the system or the previous study(ies) showed marginal performance.
Response: The near term Stability analysis does NOT have to be performed every year as long as you have a qualified past study which covers it.		
Progress Energy Carolinas	No	R 2.4.1 Load models that appropriately represent the dynamic behavior of induction motors are currently under development and may not be available for sometime. We believe that modeling the dynamic effects of loads is becoming increasingly necessary to obtain meaningful results. Therefore, it is appropriate that the revised standards address this. However, the present state of the industry is such that effective implementation of this requirement, as currently written, cannot be realistically achieved in the near term. The software tools currently in use do not accommodate the modeling of certain material effects (for example the load reduction due to thermal trips on HVAC compressor motors). Additionally, detailed load information necessary to allow the models which are available to be populated with meaningful data is not typically available or readily obtainable. Without resolving these issues, load model data submitted via the MMWG process will not improve simulation accuracy and could actually reduce the accuracy of results. Therefore, we would recommend R 2.4.1 rewritten to either a) allow a multi-year, phased approach to incorporating dynamic load modeling in simulation dynamic databases or b) provide an effective date for this particular requirement well into the future. This will accomplish the fundamental objective in a more accurate and meaningful manner. At least 48 months should be allowed before this requirement becomes effective. R 2.4.3 The proposed sensitivities create significant amount of additional work for the sole purpose of demonstrating compliance to this standard without any demonstratable benefit towards improving system reliability. While sensitivities should be appropriately considered in studies, this standard should not be overly prescriptive with respect to specific sensitivities or study methodologies. We propose removing the enumerated list of sensitivities starting with

Organization	Question 2:	Question 2 Comments:
		R2.4.3.1 and rewording R2.4.3 as follows: R2.4.3 For each of the studies described in Requirement R2.4.1 and Requirement R2.4.2, sensitivity case(s) that stress the System to reflect one or more conditions such as variations in dynamic Load model assumptions, modification of expected transfers, unavailability of long lead time Facilities, variability and outages of reactive resources, generation additions, retirements, or other dispatch scenarios shall be performed. The rationale for the sensitivity(ies) selected shall be documented. R 2.4.3.1 As stated above, this sub-requirement should be removed. However, if it is to remain, it should be clearly stated whether the Load model refers to system load or the dynamic load model at individual busses.
Response: Requirement R2.4.1 has been modified to clarify that an aggregate System Load model which represents the overall dynamic behavior of the Load is acceptable. It is not necessary to have a dynamic Load model which is specific to each bus. Because of this clarification, the SDT believes that a 24 month implementation period for this requirement is sufficient. This will be covered in the Implementation Plan which will be posted along with the third draft of the standard. Requirement R2.4.3: The SDT believes that running sensitivity cases will give the TP a better understanding of its System and better understanding yields a more reliable System. The SDT believes an enumerated list is more appropriate than the list that you suggest and an enumerated list must have a sub-requirement format. The requirement for sensitivity studies is not overly prescriptive. There is much room for the engineering judgment of the TP. **R2.4.1** System peak Load for one of the five years. For peak System Load levels, a Load model shall be used which appropriately represents the dynamic behavior of Loads, including consideration of the behavior of induction motor Loads. An aggregate system Load model which represents the overall dynamic behavior of the Load is acceptable. **R2.4.3** For each of the studies described in Requirements R2.4.1 and ~~Requirement~~ R2.4.2, sensitivity case(s) that are intended to stress the System with variations ~~to reflect~~ in one or more of the following conditions not already included in the studies shall be ~~run and documentation of the technical rationale for why each of the conditions was or was not selected shall be supplied~~ included in the Assessment: R2.4.3.1: The variations in Load model assumptions are to be applied to the aggregate System Load model which represents the overall dynamic behavior of the Load		
BCTC	No	BCTC's open access tariff requires generator owners to apply for interconnection studies and facility studies to interconnect to our system or to make modifications to their generators as described in R2.5.1, R5.5.1, and R5.5.2. In fact, we may only be aware of the changes indentified in these requirements when generator owners make these applications. The generator owners are required to pay for these studies. Study requirements for generator interconnections are further defined by NERC Standards FAC-001 and FAC-002 (Coordination of Plans for New Facilities). By including these requirements in TPL, BCTC is concerned that generator owners may think that they are no longer required to pay for the studies. Furthermore, the NERC standards would have redundant requirements. If SDT believes that FAC-001 is deficient, it should propose revisions to this standard, not simply add to TPL. Any

Organization	Question 2:	Question 2 Comments:
		studies resulting from new generators or increases in existing generator output should be charged to the owner.
Response: The SDT agrees with the Industry's majority view that generating unit Stability and System Stability need not and should not be treated as distinct issues. The Stability related requirements have been modified to create a single generic set of requirements that no longer distinguishes between generating unit and System Stability. This should address your concern with potential conflicts with the FAC standards.		
Manitoba Hydro	Yes and No	R2.4: Agree with change except:R2.4.1.1: Needs to provide more detail on what is required to be compliant with respect to what is required to "appropriately represent the dynamic behavior of Loads including consideration of the behavior of induction motor Loads". Is the appropriate modeling left to the judgment of the TP/PC, supported by peer review by adjacent planners? Should the TP be required to document why the dynamic modeling is appropriate. The requirement implies a requirement to consider detailed dynamic load modeling at every bus in the model as opposed in areas of high concentration of such load. - needs clarification. R2.4.3: Generally agree, except:R2.4.3.1:Can the SDT clarify if the Variations in load model refer to variations in dynamic load modeling" R2.4.3.4, what is meant by variability of reactive resources? R2.4.4: The use of the words "shall be run" implies that additional scenario(s) are mandatory. Was this the intent of the SDT? R2.5: As stated in Q1 above, Manitoba Hydro continues to believe the Generating Unit Stability Analysis duplicates the FAC-002-0 requirements, creating potential for contradiction/non-compliance of both standards. The SDT should ensure there is no duplication of requirements of the FAC-002-0 standard. R2.5 should allow use of current or qualifying past studies. R2.5.1: Is it the SDTs intent that the TP could rely on the Planning Assessment R2.5 and/or R5.6 to assess the impact of a generator addition or modification. This function should be the subject of an interconnection study conducted in accordance with the FERC tariff (LGIP) or other similar TP interconnection process. R2.5.2: The TP planning process for addition of facilities should be used to verify the impact of changes to the network, including changes near existing generators . A planning assessment is not the appropriate process. Other Comments related to R2:R2: There appears to be no requirement for an assessment of system stability in the long-term planning horizon. Was this the intent of the SDT? R2.1: States the "steady state analysis shall be assessed annually and be supported at a minimum by the following annual current studies: Does the term ?annual current studies? preclude doing an assessment by using only qualified past studies? Please clarify!

Organization	Question 2:	Question 2 Comments:
		R2.1.1 & R2.1.2: NERC/ERAG will likely have to the models developed annually to ensure appropriate models are available. For example, in any given model series produced in past, there may not be a year five. Also, does System off-peak load refer to summer off peak? R2.1.3: While Manitoba Hydro supports the need for scenario assessments, this significantly increase the workload for studies and documentation. The requirement to document why a scenario was not selected will present a problem, since without doing the study, the planner may not have a good justification. The long term objective to improve reliability could be met by requesting only different sensitivity per year, and dropping the need to justify why others were not done. R2.6: Manitoba Hydro suggests that this requirement be converted to a definition of Past Studies. The definition should state that both R2.6.1 and 2.6.2 are necessary to qualify as a past study? R2.7:In the case were a CAP is required to meet the system performance requirements, will the assessment be deemed to be compliant on the assumption that the CAP will be put in place in a timely manner? R2.7.1.1: Can the SDT please clarify project initiation date? What is it? date permitting starts? Date construction starts? Etc R5.4: System Stability. The SDT should clarify if contingencies are to be applied to all elements in the case, or is it left to the judgment of the planner. Since there are numerous combinations of multiple contingencies, it is an impossible task to explain why the ?remaining Contingencies" were not selected. If this is not the intent, can the SDT explain what is required? The requirement should simply allow the planner the discretion to use judgment to select these more severe Contingencies, and the elements they are applied to, with explanation as to why they are expected to be more severe. R5.4.1: Manitoba Hydro agrees that the rationale for Contingencies selected should be provided. However, it is an onerous task, and of little value to provide rationale for the contingencies not selected. R5.4.2: Manitoba Hydro's preference is that the performance requirements should be in the standard body. The approach in Table 2 is inconsistent. R5.4.2 refers to Table 2 for Planning Event performance requirements, however, for the Extreme Events, the Table 2 refers back to R5.4.4. R5.4.3: Manitoba Hydro agrees and commends the SDT for recognizing generator tripping as a viable option for meeting the performance requirements in certain systems. R5.4.3.2: Agree that regulatory and statutory requirements must be met; however, the references to safety violations and equipment requirements are very generic. It is difficult to imagine what type of safety violation may be caused by

Organization	Question 2:	Question 2 Comments:
		a generator trip considering this is a widely used practice in many regions. The SDT should also be more specific as to what is meant by "equipment requirements". The requirement to be within Facility (equipment) Ratings is already covered in R3.5.1. Manitoba Hydro recommends the reference to safety and equipment be removed. R5.4.3.3: can the SDT clarify how they want the planner to determine that "a sustainable operating condition is maintained". Demonstrating stability over a 20 second stability run may be sufficient, or is the SDT looking for longer time frame stability modeling. R5.4.4 The requirement to explain why extreme events were not chosen add extra documentation. The TP has to explain why certain events were chosen, consequently, events not chosen are judged to have less impact. What would the SDT deem an adequate explanation? R5.5: Generating Unit Stability - As stated above, Manitoba Hydro does not agree that assessment of Generating Unit Stability is necessary as it is covered by FAC-002-0. R5.5.1: This requirement implies the Generating Unit Study should consider every unit exceeding 20 MW. Consistent with R2.5, the SDT should clarify that only new generators need be studied. R5.5.3: Given the numerous possible contingencies that could be run if multiple contingencies are considered, it is impossible to explain why the remaining contingencies were not selected. Other Comments related to Requirement R5:R5: The sentence ?The studies shall be based on computer simulations using models using data provided in Requirements R9 to R14 ?..? should apply to both steady state (R3) and stability portions, yet it is only included in R5. R5.1: Essentially repeats the requirement in the first sentence of R5 - suggest deleting. R5.2: Suggest deleting the words ?including those? R5.3: Manitoba Hydro suggests that frequency ride through be added in addition to voltage ride through. The language "how the generators are treated in the simulation" is not crisp. Is the SDT looking for information on how the voltage ride through and frequency ride through are modeled in the study?

Response: R2.4.1 has been modified to clarify that an aggregate system Load model which represents the overall dynamic behavior of the Load is acceptable. It is not necessary to have a dynamic Load model which is specific to each bus. The determination of the aggregate Load model is left to the judgment of the TP/PC.

R2.4.1 System peak Load for one of the five years. For peak System Load levels, a Load model shall be used which appropriately represents the dynamic behavior of Loads, including consideration of the behavior of induction motor Loads. An aggregate system Load model which represents the overall dynamic behavior of the Load is acceptable.

Organization	Question 2:	Question 2 Comments:

R2.4.3.1: The variations in load model assumptions are to be applied to the aggregate system Load model which represents the overall dynamic behavior of the Load.

R2.4.3.4: The specific wording for Requirement R2.4.3.4 has been changed to variations in "reactive resource capability". The sub-requirement has also been changed to become a part of a bulleted list. This could mean a degradation of the capability of a reactive resource. The TP is allowed to use his judgment as to how the variations of the sensitivity parameters should be made.

~~Variability and outages of r~~Reactive resource~~s~~ capability.

R2.4.4: Requirement R2.4.4 has been deleted.

R2.5: The SDT agrees with the Industry's majority view that generating unit Stability and System Stability need not and should not be treated as distinct issues. The Stability related requirements have been modified to create a single generic set of requirements that no longer distinguishes between generating unit and System Stability. This should address your concern with potential conflicts with the FAC standards.

Other Comments related to R2: Yes, no System Stability is required for the Long-term Planning Horizon.

R2.1: Yes, current studies are required for Requirement R2.1. The assessment for steady state cannot be based solely on past studies.

R2.1.1 & R2.1.2: Not necessarily. The intent was that off-peak refers to any Load level other than peak that the TP deems appropriate.

R2.1.3: R2.1.3 and R2.4.3 have been modified to remove the requirement for specifying the technical rationale for why or why not a particular sensitivity was selected.

R2.1.3 For each of the studies described in Requirements R2.1.1 and ~~Requirement~~ R2.1.2, sensitivity case(s) that are intended to stress the System with ~~sensitivities~~ variations ~~that reflect~~ in one or more of the following conditions not already included in the studies shall be ~~run and documentation of the technical rationale for why each of the conditions was or was not selected shall be supplied~~ included in the Assessment:

R2.4.3 For each of the studies described in Requirements R2.4.1 and ~~Requirement~~ R2.4.2, sensitivity case(s) that are intended to stress the System with variations ~~to reflect~~ in one or more of the following conditions not already included in the studies shall be ~~run and documentation of the technical rationale for why each of the conditions was or was not selected shall be supplied~~ included in the Assessment:

R2.6: A formal definition would apply to all NERC standards. The SDT believes this explanation of what qualifies as a past study should only apply to this standard.

R2.7: Not necessarily. While the SDT can't answer as to formal compliance, the intent was that If the corrective action will not be in place at the time it is needed, the PC/TP will not be in compliance unless it can find an acceptable way (perhaps an Operating Procedure) to meet the performance requirement.

R2.7.1.1: This requirement is now Requirement R2.6.2. It is left up to the individual entity to define and document what is meant by the project initiation date. This requirement was intended to represent the same thing as Requirement R2.1 in the existing TPL-002-0.

R5.4 and R5.4.1 (now R3.4): The SDT believes the existing wording does allow the planner the discretion to use judgment to select these more severe Contingencies, and the elements they are applied to, with explanation as to why they are expected to be more severe.

Organization	Question 2:	Question 2 Comments:
R5.4.2: The SDT agrees that this cross-referencing is inconsistent. The reference back to Requirement R5.4.4 has been removed from the Table. R5.4.3: Thank you for your comment. R5.4.3.2 and R5.4.3.3: The SDT agrees and has removed these requirements. R5.4.4: The SDT believes that Transmission Planners know their Systems well enough to select Contingencies for which they suspect cascading or severe problems will result. Since there are an infinite number of possible scenarios to study, judgment is a necessity to limit scope to a reasonable level. The judgment of the TP is assumed to be a sufficient explanation as to why certain Contingencies were chosen. R5.5: The distinction between Generating Unit Stability and System Stability has been removed from the standard. R5.5.3: The requirement has been deleted. R5: Requirement R3 has been modified to be consistent with Requirement R5. **R3** For the steady state portion of the Planning Assessment, each Transmission Planner and Planning Coordinator shall perform analysis for the Near-Term and Long-Term Transmission Planning Horizon studies in Requirement R2.1 and Requirement R2.2. ~~The studies shall be based on computer power flow simulations that analyze BES normal performance (n-0) and System response to c~~Contingencies ~~in Table 1 – Steady State Performance.~~ The studies shall be based on computer simulations using models utilizing data provided in Requirement R1. R5.1: There is a difference between the two. The first sentence of Requirement R5 says to run Contingencies. Requirement R5.1 says to meet performance requirements. R5.2: The SDT agrees and has removed those words from new Requirements R4.3 and 4.3.1: **R5.2 (new R4.3 and R4.3.1)** Contingency analyses shall: ~~s~~Simulate the removal of all elements ~~including those~~ that the Protection System ~~protection~~ and other automatic controls are expected to disconnect for each Contingency without operator intervention. R5.3: The SDT is looking for how generators were treated in the study when there were voltage excursions. Did you trip them or not? What criteria do you use to decide if they should be tripped?		
Los Angeles Department of Water and Power	No	R2.4.3 requires sensitivity on various operating scenarios. These are best required under TOP, not TPL. It is totally useless and a waste of time to look at operating scenarios under planning horizon by planners, whether it be short term or long term. Operating scenarios are absolutely necessary under operating horizons but they need not be repeated and required in TPL when TOP already addressed these. R2.5 See my comment on question 1. This may be a suitable place to require proper modeling of the generator units to replace the existing languages.

Organization	Question 2:	Question 2 Comments:
		R5.4 is fine. R5.5 See my comment on question 1. The language here actually infers the size of a unit that should be modeled individually and not be lumped. But it should be more precise to prohibit any lumping as well as the explicit modeling of all dynamic data of any generator unit meeting the size requirement.
Response: R2.4.3: The SDT does not view the required sensitivity studies as operating studies. These are planning studies intended to investigate conditions that are different from the base case to bracket the range of possible outcomes if conditions vary from expected. R2.5: The SDT agrees with the majority of the Industry, including your comments, that there is no significant distinction between generator and System Stability and has modified the third draft to remove that distinction. R5.4: Thanks for your comment. R5.5: This requirement has been deleted.		
Transmission Agency of Northern California	Yes and No	R2.4 is acceptable. Please consider deleting the conditions identified in R5.4.3.1, R5.4.3.2, and R5.4.3.3. We question the need to specifically call out these requirements in sub requirements of R5.4.3. We believe these conditions should be met for a
Response: R2.4: thanks for your comment. The SDT agrees and has deleted Requirement R5.4.3.		
Pacific Gas and Electric Co.	Yes and No	R2.4 is acceptable. Please consider deleting the conditions identified in R5.4.3.1, R5.4.3.2, and R5.4.3.3. We question the need to specifically call out these requirement in sub requirements of R5.4.3. We believe these conditions should be met for any and all requirements of the standard. It should not be necessary to list acceptable practices, especially if the conditions placed on the practice are general conditions that are addressed elsewhere or are generic. Otherwise, R5.4 is acceptable? We generally agree that Transmission Owners with extensive Transmission Planning Function and Planning Coordinators need to perform and be held accountable for the Requirements in R2.4 and R5.4; however, the SDT

Organization	Question 2:	Question 2 Comments:
		needs to define an organization size level below which these requirements for the associated Transmission Planner may be slightly relaxed. There are numerous Transmission Planners; (e.g., those associated with PUDs, Municipals or REA, etc. where historically dynamic stability has not been a problem), for which performing these type of studies and assessments would be onerous and would not yield reliability benefits for the network. ? The proposed requirements in R2.5 and R5.5 are already covered in FAC-001 and FAC-002 and should not be included again in the proposed TPL-001-1. Otherwise, the NERC standards would have redundant requirements. In addition, Transmission Owner's open access tariffs requires Generator Owners to apply for interconnection to its transmission system or to make modifications to their generators as described in R2.5.1, R5.5.1, and R5.5.2. It is therefore the Generator Owner's responsibility to cause these studies to be done at the time of interconnection or modification, yet R5 seems to place that responsibility only on the Transmission Planner and the Planning Coordinator. The Transmission Planner or the Planning Coordinator would not know of the changes until notified by the Generator Owner. If the SDT believes that FAC-001 is deficient, it should propose revisions to this standard, not simply add to TPL. Requirement R5.5.2 needs to be clarified to state changes or additions to the generating unit that result in an increase in power output. Otherwise, it could be interpreted to apply to existing units with a change in dispatch.
Public Service Company of New Mexico	Yes and No	R2.4 is acceptable. Please consider deleting the conditions identified in R5.4.3.1, R5.4.3.2, and R5.4.3.3. We question the need to specifically call out these requirements in subrequirements of R5.4.3. We believe these conditions should be met for any and all requirements of the standard. It should not be necessary to list acceptable practices, especially if the conditions placed on the practice are general conditions that are addressed elsewhere or are generic. Otherwise, R5.4 is acceptable? We generally agree that Transmission Owners with extensive Transmission Planning Function and Planning Coordinators need to perform and be held accountable for the Requirements in R2.4 and R5.4; however, the SDT needs to define an organization size level below which these requirements for the associated Transmission Planner may be slightly relaxed. There are numerous Transmission Planners; (e.g., those associated with PUDs, Municipals or REA, etc. where historically dynamic stability has not been a problem), for which performing these type of studies and assessments would be onerous and would not yield reliability benefits for the network. ? The proposed requirements in R2.5 and R5.5 are already covered in FAC-001 and FAC-002 and should not be included again in the proposed TPL-001-1. Otherwise, the NERC standards would have redundant requirements. In addition, Transmission Owner's open access tariffs requires Generator Owners to apply for interconnection to its transmission system or to make modifications to their generators as described in R2.5.1, R5.5.1, and R5.5.2. It is therefore the Generator Owner's responsibility to cause these studies to be done at the time of interconnection or

Organization	Question 2:	Question 2 Comments:
		modification, yet R5 seems to place that responsibility only on the Transmission Planner and the Planning Coordinator. The Transmission Planner or the Planning Coordinator would not know of the changes until notified by the Generator Owner. If the SDT believes that FAC-001 is deficient, it should propose revisions to this standard, not simply add to TPL. Requirement R5.5.2 needs to be clarified to state changes or additions to the generating unit that result in an increase in power output. Otherwise, it could be interpreted to apply to existing units with a change in dispatch.
Puget Sound Energy, Inc.	Yes and No	R2.4 is acceptable. Please consider deleting the conditions identified in R5.4.3.1, R5.4.3.2, and R5.4.3.3. We question the need to specifically call out these requirements in sub-requirements of R5.4.3. We believe these conditions should be met for any and all requirements of the standard. It should not be necessary to list acceptable practices, especially if the conditions placed on the practice are general conditions that are addressed elsewhere or are generic. Otherwise, R5.4 is acceptable. The proposed requirements in R2.5 and R5.5 are already covered in FAC-001 and FAC-002 and should not be included again in the proposed TPL-001-1. Otherwise, the NERC standards would have redundant requirements. In addition, Transmission Owner's open access tariffs requires Generator Owners to apply for interconnection to its transmission system or to make modifications to their generators as described in R2.5.1, R5.5.1, and R5.5.2. It is therefore the Generator Owner's responsibility to cause these studies to be done at the time of interconnection or modification, yet R5 seems to place that responsibility only on the Transmission Planner and the Planning Coordinator. The Transmission Planner or the Planning Coordinator would not know of the changes until notified by the Generator Owner. If the SDT believes that FAC-001 is deficient, it should propose revisions to this standard, not simply add to TPL. Requirement R5.5.2 needs to be clarified to state changes or additions to the generating unit that result in an increase in power output. Otherwise, it could be interpreted to apply to existing units with a change in dispatch.
Idaho Power Company	Yes and No	R2.4 is acceptable. Please consider deleting R5.4.3. It should not be necessary to list acceptable practices, especially if the conditions placed on the practice are general conditions that are addressed elsewhere or are generic. Otherwise, R5.4 is acceptable. We generally agree that Transmission Owners with extensive Transmission Planning Function and Planning Coordinators need to perform and be held accountable for the Requirements in R2.4 and R5.4; however, the SDT needs to define an organization size level below which these requirements for the associated Transmission Planner

Organization	Question 2:	Question 2 Comments:
		may be slightly relaxed. There are numerous Transmission Planners; (e.g., those associated with PUDs, Municipals or REA, etc. where historically dynamic stability has not been a problem), for which performing these type of studies and assessments would be onerous and would not yield reliability benefits for the network. ? The proposed requirements in R2.5 and R5.5 are already covered in FAC-001 and FAC-002 and should not be included again in the proposed TPL-001-1. Otherwise, the NERC standards would have redundant requirements. In addition, Transmission Owner's open access tariff requires Generator Owner to apply for interconnection to its transmission system or to make modifications to their generators as described in R2.5.1, R5.5.1, and R5.5.2. It is therefore the Generator Owner's responsibility to cause these studies to be done at the time of interconnection or modification, yet R5 seems to place that responsibility only on the Transmission Planner and the Planning Coordinator. The Transmission Planner or the Planning Coordinator would not know of the changes until notified by the Generator Owner. If the SDT believes that FAC-001 is deficient, it should propose revisions to this standard, not simply add to TPL. Requirement R5.5.2 needs to be clarified to state changes or additions to the generating unit that result in an increase in power output. Otherwise, it could be interpreted to apply to existing units with a change in dispatch.
SMUD	Yes and No	R2.4 is acceptable. Please consider deleting the conditions identified in R5.4.3.1, R5.4.3.2, and R5.4.3.3. We question the need to specifically call out these requirements in subrequirements of R5.4.3. We believe these conditions should be met for any and all requirements of the standard. It should not be necessary to list acceptable practices, especially if the conditions placed on the practice are general conditions that are addressed elsewhere or are generic. Otherwise, R5.4 is acceptable.? The proposed requirements in R2.5 and R5.5 are already covered in FAC-001 and FAC-002 and should not be included again in the proposed TPL-001-1. 'Otherwise, the NERC standards would have redundant requirements. In addition, Transmission Owner's open access tariffs requires Generator Owners to apply for interconnection to its transmission system or to make modifications to their generators as described in R2.5.1, R5.5.1, and R5.5.2. It is therefore the Generator Owner's responsibility to cause these studies to be done at the time of interconnection or modification, yet R5 seems to place that responsibility only on the Transmission Planner and the Planning Coordinator. The Transmission Planner or the Planning Coordinator would not know of the changes until notified by the Generator Owner. If the SDT believes that FAC-001 is deficient, it should propose revisions to this standard, not simply add to TPL. Requirement R5.5.2 needs to be clarified to state changes or additions to the generating unit that result in an increase in power output. Otherwise, it could be interpreted to apply to existing units with a change in dispatch.

Organization	Question 2:	Question 2 Comments:
Sierra Pacific Power Company / Nevada Power Company	Yes and No	R2.4 is acceptable. Please consider deleting R5.4.3. It should not be necessary to list acceptable practices, especially if the conditions placed on the practice are general conditions that are addressed elsewhere or are generic. Otherwise, R5.4 is acceptable. We generally agree that Transmission Owners with extensive Transmission Planning Function and Planning Coordinators need to perform and be held accountable for the Requirements in R2.4 and R5.4; however, the SDT needs to define an organization size level below which these requirements for the associated Transmission Planner may be slightly relaxed. There are numerous Transmission Planners; (e.g., those associated with PUDs, Municipals or REA, etc. where historically dynamic stability has not been a problem), for which performing these type of studies and assessments would be onerous and would not yield reliability benefits for the network. The proposed requirements in R2.5 and R5.5 are already covered in FAC-001 and FAC-002 and should not be included again in the proposed TPL-001-1. Otherwise, the NERC standards would have redundant requirements. In addition, Transmission Owner's open access tariff requires Generator Owner to apply for interconnection to its transmission system or to make modifications to their generators as described in R2.5.1, R5.5.1, and R5.5.2. It is therefore the Generator Owner's responsibility to 'cause these studies to be done at the time of interconnection or modification, yet R5 seems to place that responsibility only on the Transmission Planner and the Planning Coordinator. The Transmission Planner or the Planning Coordinator would not know of the changes until notified by the Generator Owner. If the SDT believes that FAC-001 is deficient, it should propose revisions to this standard, not simply add to TPL. Requirement R5.5.2 needs to be clarified to state changes or additions to the generating unit that result in an increase in power output. Otherwise, it could be interpreted to apply to existing units with a change in dispatch.
Black Hills Corporation	Yes and No	R2.4 is acceptable. Please consider deleting the conditions identified in R5.4.3.1, R5.4.3.2, and R5.4.3.3. We question the need to specifically call out these requirement in subrequirements of R5.4.3. We believe these conditions should be met for any and all requirements of the standard. It should not be necessary to list acceptable practices, especially if the conditions placed on the practice are general conditions that are addressed elsewhere or are generic. Otherwise, R5.4 is acceptable. We generally agree that Transmission Owners with extensive Transmission Planning Function and Planning Coordinators need to perform and be held accountable for the Requirements in R2.4 and R5.4; however, the SDT needs to define an organization size level below which these requirements for the associated Transmission Planner may be slightly relaxed. There are numerous Transmission Planners; (e.g., those associated with PUDs, Municipals or

Organization	Question 2:	Question 2 Comments:
		REA, etc. where historically dynamic stability has not been a problem), for which performing these type of studies and assessments would be onerous and would not yield reliability benefits for the network. The proposed requirements in R2.5 and R5.5 are already covered in FAC-001 and FAC-002 and should not be included again in the proposed TPL-001-1. Otherwise, the NERC standards would have redundant requirements. In addition, Transmission Owner's open access tariffs requires Generator Owners to apply for interconnection to its transmission system or to make modifications to their generators as described in R2.5.1, R5.5.1, and R5.5.2. It is therefore the Generator Owner's responsibility to cause these studies to be done at the time of interconnection or modification, yet R5 seems to place that responsibility only on the Transmission Planner and the Planning Coordinator. The Transmission Planner or the Planning Coordinator would not know of the changes until notified by the Generator Owner. If the SDT believes that FAC-001 is deficient, it should propose revisions to this standard, not simply add to TPL. Requirement R5.5.2 needs to be clarified to state changes or additions to the generating unit that result in an increase in power output. Otherwise, it could be interpreted to apply to existing units with a change in dispatch.
SRP	Yes and No	R2.4 is acceptable. Please consider deleting the conditions identified in R5.4.3.1, R5.4.3.2, and R5.4.3.3. We question the need to specifically call out these requirements in subrequirements of R5.4.3. We believe these conditions should be met for any and all requirements of the standard. It should not be necessary to list acceptable practices, especially if the conditions placed on the practice are general conditions that are addressed elsewhere or are generic. Otherwise, R5.4 is acceptable.? We generally agree that Transmission Owners with extensive Transmission Planning Function and Planning Coordinators need to perform and be held accountable for the Requirements in R2.4 and R5.4; however, the SDT needs to define an organization size level below which these requirements for the associated Transmission Planner may be slightly relaxed. There are numerous Transmission Planners; (e.g., those associated with PUDs, Municipals or REA, etc. where historically dynamic stability has not been a problem), for which performing these type of studies and assessments would be onerous and would not yield reliability benefits for the network. ? The proposed requirements in R2.5 and R5.5 are already covered in FAC-001 and FAC-002 and should not be included again in the proposed TPL-001-1. Otherwise, the NERC standards would have redundant requirements. In addition, Transmission Owner's open access tariffs requires Generator Owners to apply for interconnection to its transmission system or to make modifications to their generators as described in R2.5.1, R5.5.1, and R5.5.2. It is therefore the Generator Owner's responsibility to cause these studies to be done at the time of interconnection or modification, yet R5 seems to place that responsibility only on the Transmission Planner and the Planning Coordinator. The Transmission Planner or the Planning Coordinator would not know of the changes until notified by

Organization	Question 2:	Question 2 Comments:
		the Generator Owner. If the SDT believes that FAC-001 is deficient, it should propose revisions to this standard, not simply add to TPL. Requirement R5.5.2 needs to be clarified to state changes or additions to the generating unit that result in an increase in power output. Otherwise, it could be interpreted to apply to existing units with a change in dispatch.
Tucson Electric Power Company	Yes and No	In general, R2.4 is acceptable but some of the sub-requirements are to prescriptive. We generally agree that Transmission Owners with extensive Transmission Planning Function and Planning Coordinators need to perform and be held accountable for the Requirements in R2.4 and R5.4; however, the SDT needs to define an organization size level below which these requirements for the associated Transmission Planner may be slightly relaxed. There are numerous Transmission Planners; (e.g., those associated with PUDs, Municipals or REA, etc. where historically dynamic stability has not been a problem), for which performing these type of studies and assessments would be onerous and would not yield reliability benefits for the network. Off-peak analysis (R2.4.2) in the Planning Horizon is of limited value for smaller entities. This analysis is best left to the Operating Horizon. Please consider deleting the conditions identified in R5.4.3.1, R5.4.3.2, and R5.4.3.3. We question the need to specifically call out these requirements in subrequirements of R5.4.3. We believe these conditions should be met for any and all requirements of the standard. It should not be necessary to list acceptable practices, especially if the conditions placed on the practice are general conditions that are addressed elsewhere or are generic. Otherwise, R5.4 is acceptable.? The proposed requirements in R2.5 and R5.5 are already covered in FAC-001 and FAC-002 and should not be included again in the proposed TPL-001-1. Otherwise, the NERC standards would have redundant requirements. In addition, Transmission Owner's open access tariffs requires Generator Owners to apply for interconnection to its transmission system or to make modifications to their generators as described in R2.5.1, R5.5.1, and R5.5.2. It is therefore the Generator Owner's responsibility to cause these studies to be done at the time of interconnection or modification, yet R5 seems to place that responsibility only on the Transmission Planner and the Planning Coordinator. The Transmission Planner or the Planning Coordinator would not know of the changes until notified by the Generator Owner. If the SDT believes that FAC-001 is deficient, it should propose revisions to this standard, not simply add to TPL. Requirement R5.5.2 needs to be clarified to state changes or additions to the generating unit that result in an increase in power output. Otherwise, it could be interpreted to apply to existing units with a change in dispatch.
Modesto Irrigation District	Yes and No	Comments: R2.4 is acceptable. Please consider deleting the conditions identified in R5.4.3.1, R5.4.3.2, and R5.4.3.3. We question the need to

Organization	Question 2:	Question 2 Comments:
		specifically call out these requirements in subrequirements of R5.4.3. We believe these conditions should be met for any and all requirements of the standard. It should not be necessary to list acceptable practices, especially if the conditions placed on the practice are general conditions that are addressed elsewhere or are generic. Otherwise, R5.4 is acceptable.? We generally agree that Transmission Owners with extensive Transmission Planning Function and Planning Coordinators need to perform and be held accountable for the Requirements in R2.4 and R5.4; however, the SDT needs to define an organization size level below which these requirements for the associated Transmission Planner may be slightly relaxed. There are numerous Transmission Planners; (e.g., those associated with PUDs, Municipals or REA, etc. where historically dynamic stability has not been a problem), for which performing these type of studies and assessments would be onerous and would not yield reliability benefits for the network.? The proposed requirements in R2.5 and R5.5 are already covered in FAC-001 andFAC-002 and should not be included again in the proposed TPL-001-1. Otherwise, the NERC standards would have redundant requirements. In addition, Transmission Owner's open access tariffs requires Generator Owners to apply for interconnection to its transmission system or to make modifications to their generators as described in R2.5.1, R5.5.1, and R5.5.2. It is therefore the Generator Owner's responsibility to cause these studies to be done at the time of interconnection or modification, yetR5 seems to place that responsibility only on the Transmission Planner and the Planning Coordinator. The Transmission Planner or the Planning Coordinator would not know of the changes until notified by the Generator Owner. If the SDT believes that FAC-001 is deficient, it should propose revisions to this standard, not simply add to TPL. Requirement R5.5.2 needs to be clarified to state changes or additions to the generating unit that result in an increase in power output. Otherwise, it could be interpreted to apply to existing units with a change in dispatch.
Tri-State G&T	Yes and No	R2.4 is acceptable. Please consider deleting the conditions identified in R5.4.3.1, R5.4.3.2, and R5.4.3.3. We question the need to specifically call out these requirements in subrequirements of R5.4.3. We believe these conditions should be met for any and all requirements of the standard. It should not be necessary to list acceptable practices, especially if the conditions placed on the practice are general conditions that are addressed elsewhere or are generic. Otherwise, R5.4 is acceptable.? We generally agree that Transmission Owners with extensive Transmission Planning Function and Planning Coordinators need to perform and be held accountable for the Requirements in R2.4 and R5.4; however, the SDT needs to define an organization size level below which these requirements for the associated Transmission Planner may be slightly relaxed. There are numerous Transmission Planners; (e.g., those associated with PUDs, Municipals or REA, etc. where historically dynamic stability has not been a problem), for which performing these type of studies and

Organization	Question 2:	Question 2 Comments:
		assessments would be onerous and would not yield reliability benefits for the network. ? The proposed requirements in R2.5 and R5.5 are already covered in FAC-001 and FAC-002 and should not be included again in the proposed TPL-001-1. Otherwise, the NERC standards would have redundant requirements. In addition, Transmission Owner's open access tariffs requires Generator Owners to apply for interconnection to its transmission system or to make modifications to their generators as described in R2.5.1, R5.5.1, and R5.5.2. It is therefore the Generator Owner's responsibility to cause these studies to be done at the time of interconnection or modification, yet R5 seems to place that responsibility only on the Transmission Planner and the Planning Coordinator. The Transmission Planner or the Planning Coordinator would not know of the changes until notified by the Generator Owner. If the SDT believes that FAC-001 is deficient, it should propose revisions to this standard, not simply add to TPL. Requirement R5.5.2 needs to be clarified to state changes or additions to the generating unit that result in an increase in power output. Otherwise, it could be interpreted to apply to existing units with a change in dispatch.
ColumbiaGrid	Yes and No	R2.4 is acceptable. Please consider deleting R5.4.3. It should not be necessary to list acceptable practices, especially if the conditions placed on the practice are general conditions that are addressed elsewhere or are generic. Otherwise, R5.4 is acceptable. We generally agree that Transmission Owners with extensive Transmission Planning Function and Planning Coordinators need to perform and be held accountable for the Requirements in R2.4 and R5.4; however, the SDT needs to define an organization size level below which these requirements for the associated Transmission Planner may be slightly relaxed. There are numerous Transmission Planners; (e.g., those associated with PUDs, Municipals or REA, etc. where historically dynamic stability has not been a problem), for which performing these type of studies and assessments would be onerous and would not yield reliability benefits for the network. The proposed requirements in R2.5 and R5.5 are already covered in FAC-001 and FAC-002 and should not be included again in the proposed TPL-001-1. Otherwise, the NERC standards would have redundant requirements. In addition, Transmission Owner's open access tariff requires Generator Owner to apply for interconnection to its transmission system or to make modifications to their generators as described in R2.5.1, R5.5.1, and R5.5.2. It is therefore the Generator Owner's responsibility to cause these studies to be done at the time of interconnection or modification, yet R5 seems to place that responsibility only on the Transmission Planner and the Planning Coordinator. The Transmission Planner or the Planning Coordinator would not know of the changes until notified by the Generator Owner. If the SDT believes that FAC-001 is deficient, it should propose revisions to this standard, not simply add to TPL. Requirement R5.5.2 needs to be clarified to state changes or additions to the generating unit that result in an increase

Organization	Question 2:	Question 2 Comments:
		in power output. Otherwise, it could be interpreted to apply to existing units with a change in dispatch.
Southern California Edison	Yes and No	R2.4 is acceptable. Please consider deleting the conditions identified in R5.4.3.1, R5.4.3.2, and R5.4.3.3. We question the need to specifically call out these requirement in subrequirements of R5.4.3. We believe these conditions should be met for any and all requirements of the standard. It should not be necessary to list acceptable practices, especially if the conditions placed on the practice are general conditions that are addressed elsewhere or are generic. Otherwise, R5.4 is acceptable.? We generally agree that Transmission Owners with extensive Transmission Planning Function and Planning Coordinators need to perform and be held accountable for the Requirements in R2.4 and R5.4; however, the SDT needs to define an organization size level below which these requirements for the associated Transmission Planner may be slightly relaxed. There are numerous Transmission Planners; (e.g., those associated with PUDs, Municipals or REA, etc. where historically dynamic stability has not been a problem), for which performing these type of studies and assessments would be onerous and would not yield reliability benefits for the network. ? The proposed requirements in R2.5 and R5.5 are already covered in FAC-001 and FAC-002 and should not be included again in the proposed TPL-001-1. Otherwise, the NERC standards would have redundant requirements. In addition, Transmission Owner's open access tariffs requires Generator Owners to apply for interconnection to its transmission system or to make modifications to their generators as described in R2.5.1, R5.5.1, and R5.5.2. It is therefore the Generator Owner's responsibility to cause these studies to be done at the time of interconnection or modification, yet R5 seems to place that responsibility only on the Transmission Planner and the Planning Coordinator. The Transmission Planner or the Planning Coordinator would not know of the changes until notified by the Generator Owner. If the SDT believes that FAC-001 is deficient, it should propose revisions to this standard, not simply add to TPL. Requirement R5.5.2 needs to be clarified to state changes or additions to the generating unit that result in an increase in power output. Otherwise, it could be interpreted to apply to existing units with a change in dispatch.
Alberta Electric System Operator	No	R2.4 is acceptable. - Please consider deleting the conditions identified in R5.4.3.1, R5.4.3.2, and R5.4.3.3. We question the need to specifically call out these requirement in subrequirements of R5.4.3. We believe these conditions should be met for any and all requirements of the standard. It should not be necessary to list acceptable practices, especially if the conditions placed on the practice are general conditions that are addressed elsewhere or

Organization	Question 2:	Question 2 Comments:
		are generic. Otherwise, R5.4 is acceptable.- The proposed requirements in R2.5 and R5.5 are already covered in FAC-001 and FAC-002 and should not be included again in the proposed TPL-001-1. Otherwise, the NERC standards would have redundant requirements. In addition, Generator Owners are to apply for interconnection to the transmission system or to make modifications to their generators as described in R2.5.1, R5.5.1, and R5.5.2. It is therefore the Generator Owner's responsibility to cause these studies to be done at the time of interconnection or modification, yet R5 seems to place that responsibility only on the Transmission Planner and the Planning Coordinator. The Transmission Planner or the Planning Coordinator would not know of the changes until notified by the Generator Owner. If the SDT believes that FAC-001 is deficient, it should propose revisions to this standard, not simply add to TPL. – Requirement R5.5.2 needs to be clarified to state changes or additions to the generating unit that result in an increase in power output. Otherwise, it could be interpreted to apply to existing units with a change in dispatch.
US Bureau of Reclamation	No	Comments: R2.4 is acceptable. Please consider deleting the conditions identified in R5.4.3.1, R5.4.3.2, and R5.4.3.3. We question the need to specifically call out these requirement in subrequirements of R5.4.3. We believe these conditions should be met for any and all requirements of the standard. It should not be necessary to list acceptable practices, especially if the conditions placed on the practice are general conditions that are addressed elsewhere or are generic. Otherwise, R5.4 is acceptable.? We generally agree that Transmission Owners with extensive Transmission Planning Function and Planning Coordinators need to perform and be held accountable for the Requirements in R2.4 and R5.4; however, the SDT needs to define an organization size level below which these requirements for the associated Transmission Planner may be slightly relaxed. There are numerous Transmission Planners; (e.g., those associated with PUDs, Municipals or REA, etc. where historically dynamic stability has not been a problem), for which performing these type of studies and assessments would be onerous and would not yield reliability benefits for the network.? The proposed requirements in R2.5 and R5.5 are already covered in FAC-001 andFAC-002 and should not be included again in the proposed TPL-001-1. Otherwise, the NERC standards would have redundant requirements. In addition, Transmission Owner's open access tariffs requires Generator Owners to apply for interconnection to its transmission system or to make modifications to their generators as described in R2.5.1, R5.5.1, and R5.5.2. It is therefore the Generator Owner's responsibility to cause these studies to be done at the time of interconnection or modification, yetR5 seems to place that responsibility only on the Transmission Planner and the Planning Coordinator.

Organization	Question 2:	Question 2 Comments:
		The Transmission Planner or the Planning Coordinator would not know of the changes until notified by the Generator Owner. If the SDT believes that FAC-001 is deficient, it should propose revisions to this standard, not simply add to TPL. Requirement R5.5.2 needs to be clarified to state changes or additions to the generating unit that result in an increase in power output. Otherwise, it could be interpreted to apply to existing units with a change in dispatch.
Response: R5.4.3: This requirement and its sub-requirements have been deleted. R2.4 and R5.4: Stability studies will continue to be required for smaller utilities. Small entities have the option of not registering as a TP to avoid compliance concerns. Furthermore, it would be difficult to establish criteria for exempting "smaller entities". R2.5 and R5.5: The SDT changed the language to reflect that updated Stability studies only need to be performed as specified in Requirements R2.5.2. The addition/deletion/change of individual generating unit capability of 20 MW or greater. An aggregated addition/deletion/change to a group of generating units directly connected through their step-up transformer(s) to the BES which total 20 MW or greater. R5.5.2 This has been clarified with the words "change of individual generating unit capability". This is now covered in Requirement R2.5.2		
Gainesville Regional Utilities	Yes and No	For smaller systems, please see Comment 1. As far as R.2.4.1, if the various loads are basic and not a large industrial type load (very large motors with across the line starting, electric arc furnaces, etc.) then the dynamic behavior of the load should not require special consideration. Using proper power factors for the load should be enough for the transmission system evaluation. Under 2.4.3, as mentioned in Comment 1, evaluating the stressing of the smaller systems through a large amount of sensitivities does not add any reliability to the BES. It only adds much addition work to a limited resource entity. If the neighboring large systems agree that the smaller system can not impact them, this should support that the BES is not affected by any sensitivity that could exist on the smaller system. For R5.5, a threshold should be set to consider only the larger size units within the region. For a smaller system, the stability of a 50-100 MW unit probably would not perturb the interconnected regional BES's.
Response: R2.4.1: Residential air conditioners and other small motors can have a significant impact on dynamic simulations of the System. Using proper power factors for the Load is definitely not enough for dynamic simulations of Systems with large amounts of residential air conditioning. R2.4.3: In Order 693, FERC directed NERC to modify the TPL standard to require that critical System conditions be determined by conducting sensitivity studies. The SDT believes this should apply to any entity regardless of size that is registered as a Transmission Planner.		

Organization	Question 2:	Question 2 Comments:
R5.5: The SDT believes the appropriate size to study is any generator of 20 MW or more.		
JEA	Yes and No	R2.4.1 Do we mean "Appropriate" for overall regional system response/behavior or for individual customer behavior. JEA would agree to an "appropriate" overall regional system response/behavior model with unique individual or sub-regional customer behavior models if determined significant. R2.4.3.1 JEA would agree to a load characteristic sensitivity studies if conducted within the scope of a RRO study. Suggest modifying wording to "Variations in Regional Load model assumptions" R2.4.3.3 Not sure what we mean by Unavailability of long-lead time facilities. Need to add a definition. If the standard is suggesting to treat the unavailability of autotransformers like the unavailability of generators i.e. N-2 assessments with no firm consequential load shedding, then JEA does not agree that the failure rate of autotransformers is on the same level as generators and do not agree this requires a minimum performance standard to maintain grid reliability. In addition, a utility is most likely to be successful in finding a reasonable useful spare autotransformer somewhere in the world to replace the failed unit. R2.5 JEA agrees. R5.4.2 See comments for steady state requirements for Table 1 P5.R5.4.3 JEA does not understand what is meant by Stability violations. Do we mean to say "unstable system conditions"? R5.5 JEA agrees

Response: R2.4.1: The intent is "appropriate for overall System behavior", but not just on a "Regional" basis. Requirement R2.4.1 has been modified to clarify that a detailed dynamic Load model is not required at each bus. An aggregate System Load model which represents the overall dynamic behavior of the Load is acceptable.

R2.4.1 System peak Load for one of the five years. For peak System Load levels, a Load model shall be used which appropriately represents the dynamic behavior of Loads, including consideration of the behavior of induction motor Loads. An aggregate system Load model which represents the overall dynamic behavior of the Load is acceptable.

R2.4.3.1: The SDT believes that this requirement should apply to an individual TP, not on a Regional level.

R2.4.3.3: The requirement for unavailability of long lead time Facilities has been broken into two pieces for better clarity. Old Requirement R2.4.3.3 has been clarified with the words "Timing of the installation of new or modified Facilities". For example, this would include consideration of a new line not being in service by the scheduled date. Also a new requirement, Requirement R2.1.4 has been added to cover unavailability of major Transmission equipment. These modifications should help alleviate your concerns.

~~Unavailability of long lead time Facilities~~ Timing of the installation of new or modified Facilities.

R2.1.4 When an entity's spare equipment strategy could result in the unavailability of major Transmission equipment that has a lead time of one year or more

Organization	Question 2:	Question 2 Comments:
(such as a transformer), an analysis of the impact on System performance shall be assessed. The analysis shall reflect the Contingencies identified in Table 1 during the conditions that the System is expected to experience due to the unavailability of the long lead time equipment. R2.5: Thank you for your comment. R5.4.2: "Stability violations" means that the System did not meet performance requirements for Stability studies. R5.5: Thank you for your comment.		
PacifiCorp	Yes and No	av? We generally agree that utilities or large TPs and PCs need to perform and be held accountable for these Requirements; however, the SDT needs to define a organization size level, below which these requirements for the associated TP may be slightly relaxed. There are numerous TPs; (e.g., those associated with PUDs, Municipals or REA, etc.), for which performing these type of studies and assessments are onerous and do not yield reliability benefits for the network.
Arizona Public Service Co.	Yes and No	We generally agree that utilities or large TPs and PCs need to perform and be held accountable for these Requirements; however, the SDT needs to define a organization size level, below which these requirements for the associated TP may be slightly relaxed. There are numerous TPs; (e.g., those associated with PUDs, Municipals or REA, etc.), for which performing these type of studies and assessments are onerous and do not yield reliability benefits for the network.
Response: Stability studies will continue to be required for smaller entities. Smaller entities have the option of not registering as a TP to avoid compliance concerns. Furthermore, it would be difficult to establish criteria for exempting "smaller entities.		
ITC Holdings: ITC, METC, ITC Midwest	Yes and No	? R 2.4.1 System peak Load for one of the five years. For peak System Load levels, a Load model shall be used which appropriately represents the dynamic behavior of Loads, including consideration of the behavior of induction motor Loads. R 2.4.2 System Off-Peak Load for one of the five years. Is there an inconsistency here in that the requirement for peak system load levels specifies details on what is needed for the load models, but the off-peak does not specify this? We don't believe this is the intent but it creates an appearance that the dynamic behavior of loads is not required for off-peak.? Regarding R2.4 and R2.5 (& R5.4.1): It should be made clear that redoing studies is only necessary when it is not certain as to whether or not a system change will have a negative impact on system stability. An explanation should be sufficient if a study is unnecessary based on technical knowledge.. As to dynamic load models, we agree with a much longer implementation period than the rest of the standard.

Organization	Question 2:	Question 2 Comments:
		We have concerns that an auditor may not agree with our judgment as to what studies should be run or not run (R2.4, R2.5 and particularly in the case of R5.4.1). Additional guidelines, perhaps in the measurements section, would be appreciated.?
Response: R2.4.1 and R2.4.2: The dynamic behavior of induction motor loads has caused problems (e.g., slow voltage recovery) at higher System Load levels. Thus the requirement in the TPL standard is to make sure you properly represent the behavior of induction motor Loads at high Load levels, i.e., peak. It is not as much of a problem at lower Load levels and therefore there is no requirement for off-peak Load levels. Of course, even at off-peak a proper representation of Loads is needed. But for lower system Load levels, standard models are usually sufficient. R2.4 and R2.5: For R2.4 (Stability Studies) current or qualified past studies must be used to show that the five year period has been assessed. This means the TP must be able to demonstrate with engineering judgment that past studies are still valid. Dynamic load models: R2.4.1 has been modified to clarify that a detailed dynamic Load model is not required at each bus. An aggregate System Load model which represents the overall dynamic behavior of the Load is acceptable. Because of this clarification, the SDT believes that a 24 month implementation period for this requirement is sufficient. This will be covered in the Implementation Plan which will be posted along with the third draft of the standard. **R2.4.1** System peak Load for one of the five years. For peak System Load levels, a Load model shall be used which appropriately represents the dynamic behavior of Loads, including consideration of the behavior of induction motor Loads. An aggregate system Load model which represents the overall dynamic behavior of the Load is acceptable. R2.4 and R2.5: The SDT does not believe that additional guidelines are needed. The standard leaves room for appropriate engineering judgment by the TP.		
Progress Energy Florida, Inc.	No	R2.4.4 as worded does not make sense, and could potentially create illogical situations where the Transmission Planner or Planning Coordinator would "offer up" additional sensitivities specific to their systems, for which they might not presently be analyzing and immediately have to self-report non-compliance. As a substitute to the language in R2.4.4, PEF suggests either returning to the language in each existing Standard's R1.3.2, or adding an R2.4.3.6 that states "Other known critical system conditions specific to the system studied by the Transmission Planner or Planning Coordinator. Regarding R5.4 and R5.5, PEF disagrees to the extent that a differentiation has been made between System Stability and Generating Unit Stability (see Question 1 comments). Given that System Stability and Generating Unit Stability are held to precisely the same standards in Table 2, PEF feels that significant modification is required to R5.4 and R5.5, specifically that the two sections need to be consolidated into a single section. Given the complex nature of Stability Analysis, and the fact that Generators are inextricably intertwined with all other components of the BES, the distinction that the SDT is attempting to make with this issue makes no sense from a power systems engineering perspective.
Response: R2.4.4: The SDT agrees and has deleted this requirement.		

Organization	Question 2:	Question 2 Comments:
R5.4 and R5.5: In response to industry comments, the SDT decided that generating unit Stability and System Stability need not and should not be treated as distinct issues. The Stability related requirements have been modified to create a single generic set of requirements that no longer distinguishes between generating unit and System Stability.		
Lafayette Utilities System	Yes and No	Requirement 2.4.1 directs the furnishing of information that would reveal the location of new large inductive loads. Large inductive loads typically are induction motors used in industrial applications. Therefore, a Distribution Provider's forecasts about the expected level of its inductive load could effectively reveal non-public information about the anticipated location of new industrial loads. If a Distribution Provider were required to disclose such information to its Transmission Planner, the confidentiality of information having considerable commercial and competitive significance could be compromised. This would be of particular concern if the Transmission Planner and the Distribution Provider also happen to be competitors for new retail loads.
Lakeland Electric	No	Modeling the dynamic behavior of Loads is difficult at best and merits a discussion or white paper. Recommend requirement 2.4.1 specify the size of induction motor that should be considered and comment on modeling of small induction motor loads such as air conditioning.
Orlando Utilities Commission	No	OUC supports the comments from FPL and Lakeland Electric on this issue.
Response: Requirement R2.4.1 has been modified to clarify that a detailed dynamic load model is not required at each bus. An aggregate system load model which represents the overall dynamic behavior of the Load is acceptable. **R2.4.1** System peak Load for one of the five years. For peak System Load levels, a Load model shall be used which appropriately represents the dynamic behavior of Loads, including consideration of the behavior of induction motor Loads. An aggregate system Load model which represents the overall dynamic behavior of the Load is acceptable.		
Ameren	Yes and No	In R2.4, it is suggested that the word "System" be re-inserted ahead of the word "Stability". It is believed that the sub-requirements of R2.4 are for System studies as opposed to Plant or Generator stability studies. In R2.4.1, agree that the system peak load should be studied for at least one of the five years in the near-term planning horizon. What is the meaning of the term "appropriate", and who decides what dynamic representation of load is "appropriate", and for what conditions? Guidelines for the development of load models used in power flow and dynamic models to represent residential air conditioner induction motor load response including the effects of underground distribution cable and distribution capacitor banks are not available. Why can't the standard load representation be used to meet R2.4.1, and the more detailed load representation,

Organization	Question 2:	Question 2 Comments:
		including dynamic system induction motor load response, be used to meet R2.4.3? In R2.4.2, agree that off-peak load levels should be covered for one of the five years. In R2.4.3, there should not be a requirement to explain why sensitivities were not selected. Further, these items in R2.4.3.1-5 appear to be options and not sub-requirements, and therefore are too prescriptive and inappropriate for inclusion here. The proposed sensitivities appear to over-focus on the particular issues listed and may result in the detriment of overall system reliability. Engineering judgment should be used to develop the sensitivity scenarios, and it should be encouraged that the same scenarios should not be performed every year so that a portfolio of sensitivity scenarios would be developed over time. The standard should not include an enumerated list of required sensitivities. If two sensitivities are required to be performed each year, then the standard should state so, but we believe that more than one sensitivity scenario for each peak and off-peak case is burdensome. We are unsure if R2.4.4 is a requirement or an option. If R2.4.3 were not so prescriptive, the additional sensitivity could be covered under the engineering judgment comment provided above. The prescriptive listing of sensitivities under 2.4.3.1 through 2.4.3.5 should be eliminated. Proposed alternative wording for R2.4.3 which addresses above concerns is as follows:R2.4.3. "For each of the studies described in Requirement R2.4.1 and Requirement R2.4.2, sensitivity case(s) that stress the System to reflect one or more conditions such as variations in dynamic Load model assumptions, modification of expected transfers, variability and outages of reactive resources, generation additions, retirements, or other dispatch scenarios are integral to a thorough assessment of reliability. Document how and why appropriate sensitivities were selected." R2.5 should be reworded as follows. "The Generating Unit Stability portion of the Planning Assessment shall be assessed for the year and conditions when the following changes that could affect stability margins occur:" Agree with most of R5.5. In R5.5.4, a risk/benefit vs. cost analysis should be included in the evaluation of implementing a change to mitigate the likelihood of cascading outages for the extreme events. Agree with R5.6.
Response: R2.4: Adding the word "System" is no longer necessary because the SDT has eliminated the distinction between System Stability and Generating Unit Stability. R2.4.1: The TP and PC decide what is appropriate for their System. R2.4.1: The sensitivity of studying effects of induction motor Loads may not be chosen by the TP. The SDT thinks that studies incorporating the effects of induction motor Loads must be done for peak Load levels.		

Organization	Question 2:	Question 2 Comments:
R2.4.2: Thank you for your comment. R2.4.3: The requirement to explain why or why not sensitivities were selected has been deleted. The sub-requirements have been converted into bullet lists. R2.4.4: Requirement R2.4.4 has been deleted. R2.4.3: The SDT believes an enumerated list is more appropriate than the list that you suggest and as stated above, an enumerated list must have a sub-requirement format. The requirement for sensitivity studies is not overly prescriptive. There is much room for the engineering judgment of the TP. R2.5: In response to industry comments, Generating Unit Stability has been combined with System Stability. Requirement R2.5 on Generating Unit Stability has therefore been deleted. R5.5.4: This requirement has been deleted. R5.6: Thank you for your comment. The separate requirement for Generating Unit Stability Studies has been deleted.		
Florida Power and Light	No	R2.4.4 is inappropriate for a compliance assessment. Essentially R2.4.4 requires the Transmission Planner or Planning Coordinator to deem appropriate and justify inclusion or exclusion of any sensitivity other than the required sensitivities listed in R2.4.3. The only way that a an entity could be found non-compliant is if the entity deems a sensitivity as appropriate, and then inexplicably did not perform the sensitivity, which makes no sense. The requirement seems to put a burden of justifying by "technical rationale" a sensitivity that is deemed appropriate already. R2.4.4 could be eliminated and its intent absorbed in R2.4.3 by changing its wording slightly: "R2.4.3 For each of the studies in Requirement R2.4.1 and Requirement R2.4.2, sensitivity case(s) deemed appropriate by the Transmission Planner or Planning Coordinator that stress the System to reflect conditions including, but not limited to, one or more of the following conditions, shall be run and documentation of the technical rationale for why each of the conditions was or was not selected shall be supplied."
Response: The SDT agrees and has deleted Requirement R2.4.4. Other sensitivities deemed appropriate by the TP or PC can always be run.		
Exelon Transmission Planning	No	R2.4 should be specific as to applicability to generator stability, system stability or both. R2.4.1 requires the use of load models for motors. Detailed load data may not be available and studies would therefore produce questionable results. It is our understanding that the industry has recognized the importance of using better load models and there are multiple ongoing initiatives to improve our ability to do this modeling but these initiatives are not complete. However, the industry's ability to provide accurate models is not sufficient to ensure compliance at this time. The sensitivities for near-term studies in R2.4.3 aren't clearly defined, especially R2.4.3.3, 'Unavailability of Long Lead Time Facilities'. Doesn't the study that determined the original need for these facilities document the consequence of

Organization	Question 2:	Question 2 Comments:
		unavailability? The peer review component of the Planning Assessment has CEII concerns, especially with regard to extreme contingencies and whether or not they involve cascading.

Response: R2.4: In response to industry comments, Generating Unit Stability has been combined with System Stability. Therefore, Requirement R2.4 applies to Stability analysis.

R2.4.1: The intent of R2.4.1 is to have dynamic Load models which are appropriate for overall system behavior, not necessarily on an individual substation basis. The SDT believes that type of model is available. Requirement R2.4.1 has been modified to clarify that a detailed dynamic Load model is not required at each bus. An aggregate system Load model which represents the overall dynamic behavior of the Load is acceptable.

R2.4.1 System peak Load for one of the five years. For peak System Load levels, a Load model shall be used which appropriately represents the dynamic behavior of Loads, including consideration of the behavior of induction motor Loads. An aggregate system Load model which represents the overall dynamic behavior of the Load is acceptable.

R2.4.3 and R2.4.3.3: The sensitivities in Requirement R2.4.3 have been reworded for better clarity. Old Requirement R2.4.3.3 for unavailability of long lead time facilities has been broken into two pieces for better clarity. Old Requirement R2.4.3.3 has been clarified with the words "Timing of the installation of new or modified Facilities". For example, this would include consideration of a new line not being in service by the scheduled date and how you would plan to get around that problem. Also, a new Requirement R2.1.4 has been added to cover unavailability of major Transmission equipment.

~~Unavailability of long lead time Facilities~~ Timing of the installation of new or modified Facilities.

R2.1.4 When an entity's spare equipment strategy could result in the unavailability of major Transmission equipment that has a lead time of one year or more (such as a transformer), an analysis of the impact on System performance shall be assessed. The analysis shall reflect the Contingencies identified in Table 1 during the conditions that the System is expected to experience due to the unavailability of the long lead time equipment.

Peer review comment: The SDT does not believe this to be an issue because the existing standards TPL-001 through TPL-004 already require in Requirement R1.3 a review of assessments by Regional Reliability Organizations.

CenterPoint Energy and CPS Energy	No	We believe the requirements are overly broad and overly prescriptive. We further believe the extent of the "problem" these requirements would address does not justify such overly broad and overly prescriptive requirements. To clarify, we wholeheartedly agree that transmission planners should consider and selectively study potential stability concerns. However, we believe that transmission planners are already considering and selectively studying potential stability concerns. We are not aware of any significant bulk electric reliability problem actually occurring in recent memory due to the failure of transmission planners to perform the assessments and studies this standard proposes to require. Some might argue that instability occurred in the northeast blackout, and we would agree. However, requiring transmission planners to perform all the assessments and all the studies proposed herein would not have prevented instability from occurring in that event. A targeted approach focusing on the specific vulnerabilities of that area of the

Organization	Question 2:	Question 2 Comments:
		network would be far more effective than the scattergun approach proposed here. Furthermore, even if all the stability analyses proposed in this standard were performed and audited, the studies likely would not have revealed the actual underlying reliability concern. In the end, the root cause of the failure was thermal overloading, not stability. Instability eventually occurred when the root cause (thermal overloading) led to a situation where circuits sequentially tripped over the course of an hour or so. Events that occur over the course of an hour are generally outside the scope of stability analyses, so these proposed requirements are off the mark for that event. We recommend deletion of R2.4.3, R2.4.4, R2.5, R5.2, R5.3, R5.4 (or 5.5), and R5.5 (or R5.6). Removing this excess baggage would allow transmission planners to use their judgment to selectively analyze stability concerns germane to their system. We realize such an approach requires a recognition that transmission planners are already doing the appropriate analyses, and we encourage the SDT to be receptive to this premise. To further clarify this last point, some would argue that assuming entities are already doing the right thing belies the underlying premise behind enforceable reliability standards. We believe that acceptance of the need for enforceable reliability standards does not pre-suppose that some or all entities are always doing the wrong thing all the time in all aspects of their business. Nor does acceptance of mandatory reliability standards require acceptance that all aspects of the business are equally likely to produce reliability concerns. We believe most or all entities are already doing some things well such that, in some aspects of the business, there is no evidence that a "problem" actually exists. If the SDT accepts this premise, it would focus its attention on actual problem areas, not imaginary ones. We submit that performing appropriate stability studies is not a "problem" that requires an the overly prescriptive requirements proposed here. Rather than solving an actual problem, these requirements are more likely to detract resources from actual concerns by causing planning resources to be expended documenting and defending to auditors that imaginary concerns do not exist.
Response: The SDT disagrees and believes the Stability requirements are necessary to ensure that appropriate studies are being made.		
MidAmerican Energy Company	No	a. MEC disagrees with the proposed R2.4.1 text. This inclusion of this requirement may be premature at this time for several reasons. There is presently no industry consensus on how the dynamic behavior of loads should be properly represented and analyzed. In addition, it would be a large and difficult effort to identify, collect, and maintain the pertinent information. It is presently difficult to obtain and maintain the percentage of residential, commercial, and industrial load at each transmission interconnection point, much less try to get the proper percentage of the various types of induction motor loads. If this requirement is retained then R2.4.1 should be modified to specify a minimum threshold size where dynamic induction motor load or dynamic load behavior becomes significant such as near mining areas. The SDT should consider a 25 MW size threshold for induction motors and a 100 MW size threshold for industrial complexes where the dynamic loads are inadequately represented by normal power flow dynamic assumptions. b. R2.4 as stated refers to Near-Term Transmission Planning Horizon Stability analysis but there is no requirement in the standard referring to Long-Term Transmission Planning Horizon Stability analysis. The SDT should reword R2.4 so that it is clear that no Long-Term Stability analysis is required by stating that "Stability analysis for the Near-Term

Organization	Question 2:	Question 2 Comments:
		Transmission Planning Horizon shall be assessed annually?.". ? In R2.4.4, we believe this requirement should not be added. Why was it included? It seems superfluous, because any entity can study other sensitivities if they want. Why should TP or PC have to study what the other entity wants to study? Who would be the judge in case of disagreement over the technical rationale?? In R2.5.2, Why was the addition of a new substation included? We would not expect a new substation to negatively impact the system or generating unit stability. We note the R5.5 and R5.6 should really have been updated to refer to 5.4 and R5.5.
Response: a: The intent of Requirement R2.4.1 is to have dynamic Load models which are appropriate for overall system behavior, not necessarily on an individual substation basis. The SDT believes that type of model is available. Requirement R2.4.1 has been modified to clarify that a detailed dynamic Load model is not required at each bus. An aggregate System Load model which represents the overall dynamic behavior of the Load is acceptable. **R2.4.1** System peak Load for one of the five years. For peak System Load levels, a Load model shall be used which appropriately represents the dynamic behavior of Loads, including consideration of the behavior of induction motor Loads. An aggregate system Load model which represents the overall dynamic behavior of the Load is acceptable. b: There is no requirement in the standard for Long-Term Transmission Planning Horizon Stability analysis. The only requirement is for Near-Term Transmission Planning Horizon Stability analysis. The SDT believes this is clear in the standard. R2.4.4: The SDT agrees and has deleted Requirement R2.4.4. R2.5.2: A new substation in a line could change the requirements for relaying on the new shorter line so that the generating unit remains stable. Zone 2 clearing from the generator end of the line may not be fast enough on a shorter line. Requirement R5 has been re-numbered due to deletions and the sub-requirement numbering is now correct.		
SERC Dynamics Review Subcommittee	No	R 2.4.1 Load models that appropriately represent the dynamic behavior of induction motors are under development and may not be available for some time. The implementation plan should take this into account and allow at least 36 months for implementation; otherwise this requirement will not be achievable in the near term. R 2.4.3 One should only explain why sensitivity was performed. In general we believe that breaking these requirements into specific sub-requirements focusing on specific sensitivities is too prescriptive and inappropriate; it will lead to over-focus on these particular issues to the detriment of system reliability. There should be no enumerated list of required sensitivities. Engineering judgment needs to be permitted. R 2.4.3.1 It should be clearly stated whether the load model refers to system load or the dynamic load model at individual busses. We have a specific proposal for R2.4.3 which addresses the above concerns as follows: R2.4.3. For each of the studies described in Requirement R2.4.1 and Requirement R2.4.2, sensitivity case(s) that stress the

Organization	Question 2:	Question 2 Comments:
		System to reflect one or more conditions such as variations in dynamic Load model assumptions, modification of expected transfers, unavailability of long lead time Facilities, variability and outages of reactive resources, generation additions, retirements, or other dispatch scenarios. Document why each sensitivity was selected.
Response: R2.4.1: Requirement R2.4.1 has been modified to clarify that a detailed dynamic Load model is not required at each bus. An aggregate System Load model which represents the overall dynamic behavior of the Load is acceptable. Because of this clarification, the SDT believes that a 24 month implementation period for this requirement is sufficient. This will be covered in the Implementation Plan which will be posted along with the third draft of the standard. **R2.4.1** System peak Load for one of the five years. For peak System Load levels, a Load model shall be used which appropriately represents the dynamic behavior of Loads, including consideration of the behavior of induction motor Loads. An aggregate system Load model which represents the overall dynamic behavior of the Load is acceptable. R2.4.3: The requirement to explain why or why not sensitivities were selected has been deleted. The sub-requirements are now part of a bullet list. For Requirement R2.4.3.1: The variations in Load model assumptions are to be applied to the aggregate System Load model which represents the overall dynamic behavior of the Load		
MRO NERC Standards Review Subcommittee	No	a. The MRO disagrees with the proposed R2.4.1 text. This inclusion of this requirement may be premature at this time for several reasons. There is presently no industry consensus on how the dynamic behavior of loads should be properly represented and analyzed. In addition, it would be a large and difficult effort to identify, collect, and maintain the pertinent information. It is presently difficult to obtain and maintain the percentage of residential, commercial, and industrial load at each transmission interconnection point, much less try to get the proper percentage of the various types of induction motor loads. If this requirement is retained then R2.4.1 should be modified to specify a minimum threshold size where dynamic induction motor load or dynamic load behavior becomes significant such as near mining areas. The SDT should consider a 25 MW size threshold for induction motors and a 100 MW size threshold for industrial complexes where the dynamic loads are inadequately represented by normal power flow dynamic assumptions. b. R2.4 as stated refers to Near-Term Transmission Planning Horizon Stability analysis but there is no requirement in the standard referring to Long-Term Transmission Planning Horizon Stability analysis. The SDT should reword R2.4 so that it is clear that no Long-Term Stability analysis is required by stating that "Stability analysis for the Near-Term Transmission Planning Horizon shall be assessed annually?.". ? The MRO does not accept the R2.4.3.1 text and want some explanation of the what, when, and how to provide the technical rationale for why each condition was or was not used. ? In R2.4.3.1, what is meant by “variations” (e.g. how much variation is enough)? ?

Organization	Question 2:	Question 2 Comments:
		In R2.4.3.2, what is meant by “modification” (e.g. how much modification is enough) and "expected transfers" (e.g. firm or non-firm transfers)? ? In R2.4.3.3, what is meant by “long lead time” (e.g. 1 month, 1 season, 1 year, 2 years, etc.)? The MRO suggests that “long lead time” be stated 18 months or more.? In R2.4.4, we believe this requirement should not be added. Why was it included? It seems superfluous, because any entity can study other sensitivities if they want. Why should TP or PC have to study what the other entity wants to study? Who would be the judge in case of disagreement over the technical rationale?? In R2.5.2, Why was the addition of a new substation included? We would not expect a new substation to negatively impact the system or generating unit stability. The MRO notes that R5.5 and R5.6 should really have been updated to refer to 5.4 and R5.5. In R5.4.3.1, we suggest that the time-limited aspect of Facility Ratings should be included in the Glossary Definition by adding the words "within the applicable time period of the rating" and then it would not need to be clarified in various locations (R3.3.2.2, R3.5.1, R5.4.3.1, Table 1-Note 1, & Table 2-Note 1) throughout the standard.

Response: a: The intent of Requirement R2.4.1 is to have dynamic Load models which are appropriate for overall System behavior, not necessarily on an individual substation basis. The SDT believes that type of model is available. Requirement R2.4.1 has been modified to clarify that a detailed dynamic Load model is not required at each bus. An aggregate System Load model which represents the overall dynamic behavior of the Load is acceptable.

R2.4.1 System peak Load for one of the five years. For peak System Load levels, a Load model shall be used which appropriately represents the dynamic behavior of Loads, including consideration of the behavior of induction motor Loads. An aggregate system Load model which represents the overall dynamic behavior of the Load is acceptable.

b: R2.4: There is no requirement in the standard for Long-Term Transmission Planning Horizon Stability analysis. The only requirement is for Near-Term Transmission Planning Horizon Stability analysis. The SDT believes this is clear in the standard.

R2.4.3: The requirement to explain why or why not sensitivities were selected has been deleted.

R2.4.3.1: The variations in load model assumptions are to be applied to the aggregate system Load model which represents the overall dynamic behavior of the Load. The amount of variation is left to the judgment of the TP and PC.

~~Variations in~~ Load model assumptions

R2.4.3.2: The wording has been changed to variations in expected transfers. The amount of variation is left to the judgment of the TP and PC.

~~Modification of e~~Expected transfers

R2.4.3.3: The requirement for unavailability of long lead time Facilities has been broken into two pieces for better clarity. Old Requirement R2.4.3.3 has been

Organization	Question 2:	Question 2 Comments:
clarified with the words "Timing of the installation of new or modified Facilities". For example, this would include consideration of a new line not being in service by the scheduled date. Also a new Requirement R2.1.5 has been added to cover unavailability of major Transmission equipment. These modifications should help alleviate your concerns. ~~Unavailability of long lead time Facilities~~ Timing of the installation of new or modified Facilities. **R2.1.4** When an entity's spare equipment strategy could result in the unavailability of major Transmission equipment that has a lead time of one year or more (such as a transformer), an analysis of the impact on System performance shall be assessed. The analysis shall reflect the Contingencies identified in Table 1 during the conditions that the System is expected to experience due to the unavailability of the long lead time equipment. R2.4.4: The SDT agrees and has deleted Requirement R2.4.4. R2.5.2: This requirement has been deleted. Requirement R5 has been re-numbered due to deletions and the sub-requirement numbering is now correct. R5.4.3.1: The SDT believes the existing definitions of Facility Rating and Equipment Rating sufficiently cover the time limited aspect of the ratings.		
Austin Energy	No	The routine sensitivity cases requirement contained in R2.4.3 is overly burdensome and unnecessary and should be deleted. Sensitivity analysis should be limited to what may be deemed appropriate by the Transmission Planner or Planning Coordinator. Similarly, R2.5 and R5.5 requirements for Generating Unit Stability should be deleted. Removing these burdensome requirement will allow transmission planners and/or the Planning Coordinator (ISO) to determine the appropriate Generator Unit Stability analysis needed as part of R5.4 System Stability.
Response: R2.4.3: The SDT believes that running sensitivity cases will give the TP a better understanding of its System and better understanding yields a more reliable System. The requirement for sensitivity studies is not overly prescriptive. There is much room for the engineering judgment of the TP. The sub-requirements have been converted into a bullet list. R2.5 and R5.5: The separate System and Generator Unit Stability Requirements have been removed from the Standard and replaced with Requirement R2.4, which addresses all Stability studies. Appropriate levels of generation additions are listed as bullets under Requirement R2.5.2; The addition/deletion/change of individual generating unit capability of 20 MW or greater. An aggregated addition/deletion/change to a group of generating units directly connected through their step-up transformer(s) to the BES which total 20 MW or greater.		
Midwest ISO	No	The language in R2.4 retains the appropriate clarification that while annual assessments are required, these assessments do not necessarily have to be based upon annually performed simulations. This same distinction should be retained for steady-state assessments required under requirement R2.1, not withstanding the fact that steady-state simulations are easier to perform. The principle is the same for both. Requirement R2.4.1 is to open ended in

Organization	Question 2:	Question 2 Comments:
		specifying the years to be studied. Rather, it should parallel requirement R2.1.1 in requiring that at a minimum either year one or two should be evaluated, and additional years at the option of the responsible entity. If the system could go unstable in the next 1-2 years, it is important to know this. Regarding R2.4.3 & R2.4.4, the standards should not require analysis for which corrective action is optional regardless of the conclusion of the analysis. Requirement R2.7 establishes that corrective action to any sensitivities is optional. Therefore, the performance of sensitivities should be at the discretion of the applicable entity. If the SDT believes it is important to recommend that sensitivities be performed then those Requirements addressing sensitivities should state that the performance of the sensitivity is recommended but optional. If you keep sensitivities in the standard then the requirement in R2.4.4 to document why an entity performed sensitivities in addition to the Requirements should be dropped. As long as the entity selected a sensitivity and documented the results of the sensitivity there should be no reason to explain why he tested it. Requirement R2.5.2 is unclear with respect to when generator unit stability needs to be retested following modifications to the transmission system. Nearly all additions to the transmission system will tend to improve generator stability. We suggest this language be modified to say: "Material transmission system changes are made at or near the point of interconnection of existing generation that would tend to degrade stability margins of that generation, such as the removal of a transmission line, or associated with the addition of new generation, or other system changes as determined by the Planning Coordinator or Transmission Planner". R5.4.3.1 & R5.4.3.3 are redundant with the stated requirement to mitigate stability. Under the sub requirement of R5.4.3.2 it may not be possible for the PC/TP to determine whether the safety, equipment, regulatory or statutory requirements are violated without collaboration with the Transmission Owner and/or the Generator Owner. Therefore, if this sub requirement is retained it should be amended to include the following sentence: "Applicable Transmission Owners and/or Generator Owners shall collaborate with the PC/TP in determining whether such action would violate safety, equipment, regulatory or statutory requirements". Subrequirements R5.4.3.X are superfluous; we suggest removing these subrequirements. However, if this requirement is retained it should be amended to include the following sentence: "Automatic generation tripping is allowed to mitigate Stability violations if the performance criteria in Table 2 is met".

Response: R2.4 The Requirement is allowing the TP and PC the option to determine which time frame to study so as not to be as prescriptive as Requirement R 2.1.1.

R2.4.3 & R2.4.4: The language of Requirement R2.4.3 has been changed to clearly state the objective of sensitivity analyses and their applicability.

R2.4.3 For each of the studies described in Requirements R2.4.1 and ~~Requirement~~ R2.4.2, sensitivity case(s) that are intended to stress the System with variations ~~to reflect~~ in one or more of the following conditions not already included in the studies shall be ~~run and documentation of the technical rationale for why each of the conditions was or was not selected shall be supplied~~ included in the Assessment:

Organization	Question 2:	Question 2 Comments:
R2.5.2: This language has been removed from the Standard. R5.4.3.1 & R5.4.3.3: The specific sub-Requirements have been removed from the Standard; they are already implicitly covered in the Standard.		
Tri-State Generation and Transmission Association, Inc.	Yes and No	R2.4.1 "System peak load" needs a definition. Forecast descriptions by the utility should describe probability levels and other specifics.
Response: The SDT has changed this language in Requirement R2.4.3 by allowing the use of sensitivities already considered in the base case. **R2.4.3** For each of the studies described in Requirements R2.4.1 and ~~Requirement~~ R2.4.2, sensitivity case(s) that are intended to stress the System with variations ~~to reflect~~ in one or more of the following conditions not already included in the studies shall be ~~run and documentation of the technical rationale for why each of the conditions was or was not selected shall be supplied~~ included in the Assessment:		
AEP	No	We are concerned about unintended consequences with regard to System Stability studies, specifically, the possibility of generating unnecessary work. We would like the SDT to consider language changes that recognize the following realities. (1) While System Stability studies may be justified as a more detailed look at contingency scenarios whose observed severity in steady-state analysis suggests the need for more in-depth study, they cannot be expected to achieve the same breadth of scope as steady-state analyses. In decoupling System Stability studies from steady-state analysis, the draft standard may unnecessarily tend to force stability study scopes to approach those of steady-state analyses. (2) The characteristic limiting factors of systems are generally known (whether thermally limited, voltage drop limited, or transient or small-signal stability limited) and in many systems the limiting factors are thermal or steady-state voltage, but not stability. The draft standard may end up forcing System Stability studies to be done solely for compliance. It is not that independent System Stability studies are never justified (they are, for example, where inter-area small-signal instability is a known factor), but in many systems, they are not necessary. We observe that as sub-requirements of R2 and R5, R2.5 and R5.5 are the responsibility of the Transmission Planner and Planning Coordinator. Is it the SDT's intention that these entities be responsible for conducting the Generating Unit Stability analysis, irrespective of the ownership of the generating units? Should the Generator Owner be responsible for conducting the Generating Unit Stability analysis?
Response: (1) The SDT agrees that Stability studies are more in-depth; the study requirements for Stability are less than that of Steady State. (2) Not in all areas, there are numerous Systems that are limited by Stability, not just thermal limits. R2 and R5, R2.5 and R5.5: The distinction between Generating Unit Stability and System Stability has been removed.		

Organization	Question 2:	Question 2 Comments:
Southern Company Transmission	No	R 2.4 needs to have the word System inserted in front of the word Stability. R 2.4.3 One should only have to explain why a sensitivity was performed, not why it was not performed. In general we believe that breaking these requirements into specific sub requirements focusing on specific sensitivities is too prescriptive and inappropriate. It will lead to over focus on these particular issues to the detriment of system reliability. There should be no list of sensitivities enumerated as subrequirements. Engineering judgment needs to be permitted. R 2.4.3.1 It should be clearly stated whether the load model refers to system load or the dynamic load model at individual busses A specific proposal for R2.4.3 which addresses the above concerns is provided as follows:R2.4.3. For each of the studies described in Requirement R2.4.1 and Requirement R2.4.2, sensitivity case(s) shall be run and documented that stress the System to reflect one or more conditions such as variations in dynamic Load model assumptions, modification of expected transfers, unavailability of long lead time facilities, variability and outages of reactive resources, generation additions, retirements, or other dispatch scenarios. Document why each sensitivity was selected.
Response: R 2.4: The distinction between Unit and System Stability has been deleted. R 2.4.3 The SDT has changed the language of R2.4.3 to reflect this; to examine one or more sensitivities and the documentation of the technical rationale for why each of the sensitivities was not chosen has been removed. R 2.4.3.1: The language has been changed to allow the Transmission Planner to use their judgment in application of sensitivities. ~~Variations in~~ Load model assumptions R2.4.3 The SDT wanted to keep the sensitivities clear from the rest of the language for base case study requirements. The language of this section has been changed and the use of documentation has been removed. **R2.4.3** For each of the studies described in Requirements R2.4.1 and ~~Requirement~~ R2.4.2, sensitivity case(s) that are intended to stress the System with variations ~~to reflect~~ in one or more of the following conditions not already included in the studies shall be ~~run and documentation of the technical rationale for why each of the conditions was or was not selected shall be supplied~~ included in the Assessment:		
Brazos Electric Power Cooperative, Inc.	No	We do agree with the wording change in 2.4 which uses 'assessed annually'. 2.4.1 and 2.4.2 are ok. 2.4.3 is not agreeable, as it implies or could imply a number of studies are required. Stability studies are not required as often as steady state studies. A new in-line load serving substation can certainly impact the steady state results of an area but would not have the same impact from a steady state perspective. In other words, we feel that running stability studies for a number of small variables does not provide any added benefit and thus stability studies should not be treated the same as steady state studies from a requirement standpoint. More emphasis should continue to be

Organization	Question 2:	Question 2 Comments:
		placed on the steady state analysis. 2.4.3 should be edited to say "Sensitivity cases as deemed appropriate by the TP or PC, that stress the System (or BES) may be run reflecting one or more of the following conditions. Other sensitivities not included below may also be run. Appropriate documentation should be included describing the rationale for the selection of the cases and conditions "delete 2.4.4 as it is taken care of in 2.4.3 2.5 can be deleted as it adds nothing to the stability requirements2.5.1 should be modified to be included under 2.4 as a required study with the caveats from 5.6 brought over defining parameters, or delete 2.5.1 altogether as 5.6 covers the addition of generation.2.5.2 is still fairly ambiguous even with the changes and should be deleted. However if kept it should be modified to remove the last part of the sentence beginning with "or the addition of a new substation?". The addition of a simple in-line substation does not have a material impact on the stability of a near-by plant.2.6.1 and 2.6.2 should be combined to remove the mention of generating plant stability. deleting 5.4 is ok Not sure of the need to add 5.5.2. Isn't that the intent of the whole Standard? 5.5.3 seems to be acceptable.
Response: R2.4: Thanks for your comment. R2.4.3: The SDT has changed this language to clarify the requirement; the use of documentation has been removed from the language. **R2.4.3** For each of the studies described in Requirements R2.4.1 and ~~Requirement~~ R2.4.2, sensitivity case(s) that are intended to stress the System with variations ~~to reflect~~ in one or more of the following conditions not already included in the studies shall be ~~run and documentation of the technical rationale for why each of the conditions was or was not selected shall be supplied~~ included in the Assessment: R2.4.4: This part of the Standard language has been removed. R2.5: This part of the Standard language has been removed and bullets under (new) Requirements R2.5.2 have been added to the language to clarify this position. The addition/deletion/change of individual generating unit capability of 20 MW or greater. An aggregated addition/deletion/change to a group of generating units directly connected through their step-up transformer(s) to the BES which total 20 MW or greater. R5.5.2: This requirement was deleted.		
NERC and Regional	No	PJM concurs with the general direction; however the sensitivity analysis section as written requires explanation of why

Organization	Question 2:	Question 2 Comments:
Coordination		certain sensitivities were not selected. However the sensitivity requirement must be defined. Prove the rationing. R2.4 should state for stability we should use light load rather than system peak which is for steady state analysis. R2.4 should be modified as followsR2.4 should be modified as followsR2.4 The Near-Term Transmission Planning Horizon portion of the Stability analysis requires: Suggest making all sub requirements bullets under R2.4 The words in R2.4 seem to state that the "analysis must be assessed annually" which seems to leave open the option of assessing an old study, whereas R2.2. and R2.3 state a study is required each year, and a study is conducted each year. The words need R2 must be clearer and more consistent. System stability requirements seem to be poorly defined. It appears that there is going to be an expectation that inter-area oscillation and small signal analysis be performed frequently over a variety of conditions. I'm not sure how geared up industry is for this. R2.4.1 is too ambiguous. This sub requirement requires a model that "appropriately represents the dynamic behavior of loads". However, the requirement does not reference how that judgment is made nor who would make the judgment. The sub bullets are vague and again provide no basis for performance or for arbitration. R2.4.4 should be deleted as it will deter TPs and PCs from conducting additional studies. R2.4.4.1-5; Should clearly define words like variation, modification, unavailability of long lead time facility, variability of reactive resources. R2.5 is ambiguous regarding the definition of "affects stability margins". What is the technical performance margin for "affect"? If not defined in the standard then who makes the decision? The TP? the auditor? NERC staff? Do you mean critical clearing time and how much of change for example percentage or cycle.

Response: The SDT has changed this language to reflect that this is to examine one sensitivity or more and the documentation requirement has been removed.

R2.1.3 For each of the studies described in Requirements R2.1.1 and ~~Requirement~~ R2.1.2, sensitivity case(s) that are intended to stress the System with ~~sensitivities~~ variations ~~that reflect~~ in one or more of the following conditions not already included in the studies shall be ~~run and documentation of the technical rationale for why each of the conditions was or was not selected shall be supplied~~ included in the Assessment:

R2.4: The SDT has determined that both Peak and Off-Peak should be studied; another Load case can be evaluated as a sensitivity.

R2.4 does state that an assessment shall be performed each year and the applicability of past studies is listed in Requirement R2.6.

R2.2. and R2.3: The language clearly states that a study is required for one of the years in the assessment period.

The SDT believes that each TP and PC should have discretion to determine the appropriate Stability studies applicable to their System.

Organization	Question 2:	Question 2 Comments:
R2.4.1: The SDT has changed this language to clarify that aggregate Load can be used here as well. This Requirement is to make you properly represent the dynamic behavior of Loads at high System Load levels. **R2.4.1** System peak Load for one of the five years. For peak System Load levels, a Load model shall be used which appropriately represents the dynamic behavior of Loads, including consideration of the behavior of induction motor Loads. An aggregate system Load model which represents the overall dynamic behavior of the Load is acceptable. R2.4.4 The SDT has deleted this section. R2.4.4.1-4 (now R2.4.3): The SDT has changed the language in these sections and made them a bulleted list. ~~Variations in~~ Load model assumptions ~~Modification of e~~Expected transfers ~~Unavailability of long lead time Facilities~~ Timing of the installation of new or modified Facilities. ~~Variability and outages of r~~Reactive resource~~s~~ capability. R2.5 This section of the Standard language has been removed.		
IESO	No	A. R2.4(i) We suggest to remove words such as "consideration of" and "deemed appropriate" since these are not measurable and not enforceable. Further, we continue to disagree with mandating sensitivity testing with descriptive subrequirements. Sensitivity testing (ii) Specific to R2.4.3, we continue to express our disagreement to include sensitivity testing in the requirements. We are disappointed that despite disagreements by the majority of the commenters and their suggestions to leave sensitivity testing to the TPs and PCs discretion, the SDT continues to stipulate detailed requirements for sensitivity testing. The SDT in its summary response to comments indicates that these testing are intended as "?providing some guidance on what could be included in the sensitivity studies without being too prescriptive." If these are indeed intended as guidance rather than enforceable requirements, then they should be provided in a technical document or a reference document that supports the standard, not in the standard itself. B. R2.5 (i) Similar to our comments under Q1 (i), the requirements should not restrict to changes at or near the Interconnection point. Transmission changes several buses removed from the generator's Interconnection point may also affect the stability performance of the generators. Suggest to reword it to "? in the nearby vicinity that can have an adverse reliability impact on the generating units' stability performance".(ii) There seems to be a hole or incomplete scenario in R2.5.2 in the sentence: "removal of a Transmission Line or the addition of a new substation in one of the Transmission Lines connected to the plant." We agree that removal of a transmission line in the vicinity needs to be assessed; we also believe that addition of not just a substation but also any transmission facilities in the vicinity should be assessed. We therefore suggest to reword this to: "removal of a Transmission Line or the addition of new

Organization	Question 2:	Question 2 Comments:
		transmission facilities in the generating plant's nearby vicinity that can have an adverse reliability impact on the generating units' stability performance. C. R3.4 (i) We do not agree with the requirement that: "If the Extreme Events analysis concludes there are cascading outages, an evaluation of implementing a change designed to reduce or mitigate the likelihood of such consequences shall be conducted." Future transmission systems are planned and designed accordingly to Planning Events. It should not be a surprise that applying Extreme Events to the planned transmission system for which it is not designed to withstand such events would show instability and/or cascading outages. The follow on actions should be to evaluate possible actions to contain and minimize the impact of cascading outages, rather than to come up with options or alternative designs to reduce or mitigate the likelihood of such occurrences (since doing so will imply that we design and plan for Extreme Events). We therefore suggest to reword it to: "If the Extreme Events analysis concludes there are cascading outages, an evaluation of possible actions to contain and minimize the impacts of cascading outages.

Response: The SDT examined the use of these terms and still believes that these are the best terms to use here.

The SDT has changed the language of Requirement R2.4.3 to examine one or more sensitivities and the documentation of the technical rationale for why each of the sensitivities not chosen has been removed.

R2.4.3 For each of the studies described in Requirements R2.4.1 and ~~Requirement~~ R2.4.2, sensitivity case(s) that are intended to stress the System with variations ~~to reflect~~ in one or more of the following conditions not already included in the studies shall be ~~run and documentation of the technical rationale for why each of the conditions was or was not selected shall be supplied~~ included in the Assessment:

R2.5: This section of the Standard language has been removed.

R3.4: The SDT has modified this requirement (now Requirement R3.5 and also Requirement R5.5.4 – now Requirement R4.5) to include mitigating the "adverse impacts of the event(s)."

R3.5 Those Extreme Events in Table 1 ~~– Steady State Performance~~ that are expected to produce more severe System impacts shall be identified~~,~~ and a list of those events to be evaluated for System performance in Requirement R3.2 created~~,~~. ~~and t~~The rationale for the Contingencies selected for evaluation shall be available as supporting information and shall ~~includ~~include~~e~~ an explanation of why the remaining Contingencies would produce less severe System results. If the ~~Extreme Events~~ analysis concludes there are cascading outages caused by the occurrence of Extreme Events, an evaluation of ~~implementing a change~~ possible actions designed to reduce ~~or mitigate~~ the likelihood or mitigate ~~of such~~the consequences and adverse impacts of the event(s) shall be conducted.

R4.5 ~~At a minimum, t~~Those Extreme Events in Table ~~2~~1 ~~– Stability Performance~~ that ~~would~~are expected to produce more severe System impacts shall be identified and a list of those events to be~~,~~ evaluated for System performance in Requirement R4.2 created~~,~~. ~~and t~~The rationale for the Contingencies selected for evaluation shall be available as supporting information and shall include~~e~~ an explanation of why the remaining Contingencies would produce less severe System results. If the ~~Extreme Events~~ analysis concludes there are cascading outages caused by the occurrence of Extreme Events, an evaluation of ~~implementing a change~~ possible actions designed to reduce ~~or mitigate~~ the likelihood or mitigate ~~of such~~the consequences of the event(s) shall be conducted

Organization	Question 2:	Question 2 Comments:
North Carolina Electric Membership Corp	No	We assume that 2.4 is supposed to be for "System" Stability. Please confirm.R2.4.1 - Is this for On-Peak? Please confirm. Also the subrequirement that requires a model that "appropriately represents the dynamic behavior of loads" is too ambiguous. The requirement does not reference how that judgment is made nor who would makes the judgment. The sub bullets are vague and provide no basis for performance. It should be clarified. How does the TP/PC model 3rd party loads from LSEs or DPs within its area that it interconnects? Is there an additional requirement to LSE/DPs needed in R9-R14 to collect such characteristics of load data? There is concern with load modeling requirements (use of word “appropriately” in R2.4.1). Does this requirement mandate the use of specific load models for each bus, or would an aggregate load model which represents the system as a whole be sufficient? Does the use of the PSS/E CONL function satisfy the requirements for a load model? The subrequirements of R2.4.3 are much too vague and are subject to various interpretations. These should be more specific as to what should be assessed, e.g. 5% variation in load model. Why aren't the last 2 subrequirements already accounted for within the assessment? R2.5 is ambiguous. What is meant by "affects stability margins"? What is the technical performance margin for "affect"? As defined by whom? The TP/PC? the auditor? Is this a % change or what? R5.4 – OK R5.5 - We are OK with changes made, but we do share a concern with others that the requirement to perform simulations on 20 MW generators (to be consistent with the Registration Criteria) per R5.5.1 may be too much, and we recommend also a 75 MW generator cutoff for required simulations.

Response: R2.4: The terms ‘unit’ and ‘System’ have been removed from the language and Stability has replaced them.

R2.4.1: Yes, this is for peak conditions. Requirement R2.4.2 is listed for Off-Peak Load.

R2.4.1: The SDT has changed this language to clarify that aggregate Load can be used here as well. This Requirement is to make you properly represent the dynamic behavior of Loads at high System Load levels.

R2.4.1 System peak Load for one of the five years. For peak System Load levels, a Load model shall be used which appropriately represents the dynamic behavior of Loads, including consideration of the behavior of induction motor Loads. An aggregate system Load model which represents the overall dynamic behavior of the Load is acceptable.

R2.4.3: This list of sensitivities is not overly prescriptive and allows the use of engineering judgment of the Planner. Language has been changed to provide clarity.

Organization	Question 2:	Question 2 Comments:
~~Variations in~~ Load model assumptions ~~Modification of e~~Expected transfers ~~Unavailability of long lead time Facilities~~ Timing of the installation of new or modified Facilities. ~~Variability and outages of r~~Reactive resource~~s~~ capability. The specific wording for Requirement R2.4.3.4 has been changed to "Reactive resource capability". This could mean a degradation of the capability of a reactive resource. This would not normally be covered in the assessment unless sensitivity studies require it. R.2.4.3.5. Generation additions, retirements, or other dispatch scenarios would not necessarily be studied in the assessment unless there were firm plans to change generation. The purpose of sensitivity studies is to answer "what if" questions which would not otherwise be covered in the assessment. R2.5: This language has been removed from the Standard. R5.5 The requirement for study has been changed to 25MW for a single generator or for an aggregate of generators. This language is now in Requirement R2.5.2. The addition/deletion/change of individual generating unit capability of 20 MW or greater. An aggregated addition/deletion/change to a group of generating units directly connected through their step-up transformer(s) to the BES which total 20 MW or greater.		
E.ON U.S. Transmission Planning	Yes and No	R2.4 The Near-Term Transmission Planning Horizon portion? implies that there are other portions of the [System] Stability analysis. This needs to be reworded to make it clear that there are no other portions. Add the word "System" to make it clear. R5 The data to be included in all models for the Planning Assessment is included in R1. The discussion here is redundant. This should be deleted. R5.4.3.1 Is this the intent? ? Following Single Contingency events, Transmission configuration changes and redispatch of generation can be simulated to return the system to Normal Rating provided that all Facilities shall be operating within their Emergency Rating.
Response: R2.4: The wording used is appropriate; there are no Stability Requirements beyond Near-Term R5: That language has been removed and replaced by language in Requirement R1. **R5** (now R4.) For the Stability portion of the Planning Assessment, as described in Requirement R2.4 ~~and Requirement R2.5~~, each Transmission Planner and Planning Coordinator shall perform the Contingency analyses listed in Table ~~2~~1 ~~– Stability Performance~~. The studies shall be based on computer simulations using models utilizing data provided in Requirement R1. ~~The studies shall be based on computer simulations using models utilizing data provided in~~		

Organization	Question 2:	Question 2 Comments:
~~Requirements R9 through R14, the MOD-010 and MOD-012 standards, and other data sources, to include known planned and long term outages of Transmission or generation equipment. The studies shall cover both System Stability and Generating Unit Stability. The following requirements apply to both System Stability and Generating Unit Stability studies unless otherwise noted~~ R5.4.3.1: This section of the language has been removed but these principles are applicable throughout the Standard.		
ERCOT System Planning	No	ERCOT believes R2.4.3, R2.4.4, R2.5, R5.2, and R5.3 should be deleted and R5.4 and R5.5 should be combined as follows: R2.4.3 should be deleted due to the unacceptable increase of stability runs required to meet the requirement. Considering sensitivities for outages of reactive resources and various dispatches and retirements for at least two different load levels is beyond the capability of most organizations, for both technical and manpower reasons. R2.4.4 is unbounded and not measurable, and should not be included as a requirement. R2.5 and all requirements for Generating Unit Stability analysis should be deleted since there is little or no difference between this and System Stability. R5.2 should be deleted because contingency definition standards should be defined in a modeling standard.R5.3 Voltage ride through capability should be included in the model provided by the generator and should not be necessary as a requirement in the TPL standard. R5.4 and R5.5 could be combined, as there is little or no difference between Generating Unit Stability analysis and System Stability analysis. In this case, R5.5.1 and R5.5.2 would be moved to R5.4 and R5.5.3 would be removed (repeats R.5.4.1).Also, it appears that R5.4.1 is in conflict with R5.4.2 because R5.4.1 says ?identified and evaluated for System Performance? but not have to meet requirements but R5.4.2 says ?meet requirements ? Table 2?. Also, R5.4.2 is repetitious with text of R5.
Response: The SDT has changed the language of R2.4.3 to examine one or more sensitivities and the documentation of the technical rationale for why each of the sensitivities not chosen has been removed. **R2.4.3** For each of the studies described in Requirements R2.4.1 and ~~Requirement~~ R2.4.2, sensitivity case(s) that are intended to stress the System with variations ~~to reflect~~ in one or more of the following conditions not already included in the studies shall be ~~run and documentation of the technical rationale for why each of the conditions was or was not selected shall be supplied~~ included in the Assessment: R2.4.4 and R2.5 were deleted from the language of this draft Standard. R5.2 and R5.3 The SDT did not agree to delete this language; language is needed to be in the Standard describing Contingencies and the use of low voltage ride through in studies. (Note that in the revised standard, Requirements R5.2 and R5.3 have become Requirements R4.3 through R4.3.2.) R5.4 & 5.5: The SDT has removed the distinction between System Stability and generator unit Stability.		

Organization	Question 2:	Question 2 Comments:
American Transmission Company	No	We disagree with the proposed R2.4.1 text. This inclusion of this requirement may be premature at this time for several reasons. There is presently no industry consensus on how the dynamic behavior of loads should be properly represented and analyzed. In addition, it would be a large and difficult effort to identify, collect, and maintain the pertinent information. It is presently difficult to obtain and maintain the percentage of residential, commercial, and industrial load at each transmission interconnection point, much less try to get the proper percentage of the various types of induction motor loads. We do not accept the R2.4.3.1 text and want some explanation of the what, when, and how to provide the technical rationale for why each condition was or was not used. In R2.4.3.1, what is meant by ?variations? (e.g. how much variation is enough)? In R2.4.3.2, what is meant by ?modification? (e.g. how much modification is enough) and "expected transfers" (e.g. firm or non-firm transfers)? In R2.4.3.3, what is meant by ?long lead time? (e.g. 1 month, 1 season, 1 year, 2 years, etc.)? In R2.4.4, we believe this requirement should not be added. Why was it included? It seems superfluous, because any entity can study other sensitivities if they want. Why should TP or PC have to study what the other entity wants to study? Who would be the judge in case of disagreement over the technical rationale? In R2.5.2, Why was the addition of a new substation included? We would not expect a new substation to negatively impact the system or generating unit stability. We note the R5.5 and R5.6 should really have been updated to refer to 5.4 and R5.5. In R5.4.3.1, we suggest that the time-limited aspect of Facility Ratings be included in the Glossary Definition and then it would not need to be clarified in various locations (R3.3.2.2, R3.5.1, R5.4.3.1, Table 1-Note 1, & Table 2-Note 1) throughout the standard.

Response: R2.4.1: The SDT has changed the language of Requirement R2.4.1. The SDT has changed this language to clarify that aggregate Load can be used here as well. This Requirement is to make you properly represent the dynamic behavior of Loads at high System Load levels.

R2.4.1 System peak Load for one of the five years. For peak System Load levels, a Load model shall be used which appropriately represents the dynamic behavior of Loads, including consideration of the behavior of induction motor Loads. An aggregate system Load model which represents the overall dynamic behavior of the Load is acceptable.

R2.4.3.1 The SDT has changed the language of R2.4.3 to examine one or more sensitivities and the documentation of the technical rationale for why each of the sensitivities not chosen has been removed.

R2.4.3 For each of the studies described in Requirements R2.4.1 and ~~Requirement~~ R2.4.2, sensitivity case(s) that are intended to stress the System with variations ~~to reflect~~ in one or more of the following conditions not already included in the studies shall be ~~run and documentation of the technical rationale for why~~

Organization	Question 2:	Question 2 Comments:
~~each of the conditions was or was not selected shall be supplied~~ included in the Assessment: R2.4.3.2, The SDT has changed the language of R2.4.3 to examine one or more sensitivities and the documentation of the technical rationale for why each of the sensitivities not chosen has been removed. R2.4.4 has been removed from the language of this Standard draft. R2.5.2: This language has also been removed from this draft Standard. R5.5 and R5.6: This new version contains renumbering which should address your concerns. R5.4.3.1: This section of the language has been removed but these principles are applicable all throughout the Standard.		
Duke Energy	No	R2.4.1 Load models that appropriately represent the dynamic behavior of induction motors are under development and may not be available for sometime. The implementation plan should take this into account and allow at least 36 months for implementation. This requirement is not immediately achievable. R2.4.3 - Although we agree with the perceived intent of R2.4.3, we believe the wording should be revised to make it very clear that it is not necessary to perform studies to substantiate your technical rationale for choosing not to perform any particular sensitivity study. Documented engineering judgment to support the decision not to perform the particular sensitivity studies should be sufficient. R2.4.3.1 should clearly state whether the load model refers to overall system load or parameters of the dynamic load model at individual busses. Recommend renumbering R2.4.4 to R2.4.3.6, and reword R2.4.3.6 as follows: Any other sensitivity, as deemed appropriate by the Transmission Planner or Planning Coordinator for their individual systems.R2.4 should say "System Stability", not just "Stability".
Response: R2.4.1 has been modified to clarify that a detailed dynamic Load model is not required at each bus. An aggregate System Load model which represents the overall dynamic behavior of the Load is acceptable. Because of this clarification, the SDT believes that a 24 month implementation period for this requirement is sufficient. This will be covered in the Implementation Plan which will be posted along with the third draft of the standard. **R2.4.1** System peak Load for one of the five years. For peak System Load levels, a Load model shall be used which appropriately represents the dynamic behavior of Loads, including consideration of the behavior of induction motor Loads. An aggregate system Load model which represents the overall dynamic behavior of the Load is acceptable. R2.4.3 The SDT has changed the language of R2.4.3 to reflect this, to examine one or more sensitivity and the documentation of the technical rationale for why each of the sensitivities not chosen has been removed. **R2.4.3** For each of the studies described in Requirements R2.4.1 and ~~Requirement~~ R2.4.2, sensitivity case(s) that are intended to stress the System with variations ~~to reflect~~ in one or more of the following conditions not already included in the studies shall be ~~run and documentation of the technical rationale for why~~		

Organization	Question 2:	Question 2 Comments:
~~each of the conditions was or was not selected shall be supplied~~ included in the Assessment: R2.4.3.1 The SDT has changed this language to clarify that aggregate load can be used here as well. This Requirement is to make you properly represent the dynamic behavior of loads at high system load levels. R2.4.4 to R2.4.3.6.The SDT has removed the distinction in the Standard between System Stability and generator unit Stability.		
Florida Reliability Coordinating Council, inc	No	R2.4.4 and R2.4.3 as written can create issues during the compliance assessment. These requirements place the burden of justifying the inclusion / exclusion of the sensitivities on the TP or PC. Thus, only a sensitivity deem appropriate by the TP or PC and not performed can be found non-compliant.R2.4.4 can be eliminated by changing the wording in R2.4.3 to include sensitivities? deemed appropriate by the TP or PC as follows:? For each of the studies described in Requirement R2.4.1 and Requirement R2.4.2, sensitivity case(s) deemed appropriate by the Transmission Planner or Planning Coordinator that stress the System to reflect, but not limited to, one or more of the following conditions shall be run and documentation of the technical rationale for why each of the conditions was or was not selected shall be supplied.?
Response: The SDT has changed the language of Requirement R2.4.3 to examine one or more sensitivities and the documentation of the technical rationale for why each of the sensitivities not chosen has been removed. **R2.4.3** For each of the studies described in Requirements R2.4.1 and ~~Requirement~~ R2.4.2, sensitivity case(s) that are intended to stress the System with variations ~~to reflect~~ in one or more of the following conditions not already included in the studies shall be ~~run and documentation of the technical rationale for why each of the conditions was or was not selected shall be supplied~~ included in the Assessment:		
SERC Reliability Review Subcommittee and Planning Standards Subcommittee	Yes and No	R2.4. No The word “System” was deleted during the re-write and only “Stability” is used. However, the sub-sections appear to be more appropriate to a “System Stability” assessment than for a “Generating Unit Stability” assessment. “Generating Unit Stability” assessments are the subject of Section R2.5 and “System Stability” assessments appear to be the intent of Section R2.4. Why does Requirement 2.4. specify the near-term transmission planning horizon “portion”? We recommend removal of the words “portion of the”. R2.4.1. No Change “Peak System Load” to “System On-Peak Load”. This is the term defined in the “NERC Glossary” and is consistent with the usage of “Off-Peak Load”. This change would be required through out the TPL Standard as well as in other standards. There is concern with load modeling requirements (use of word “appropriately” in R2.4.1). Does this requirement mandate the use of specific load models for each bus, or would an aggregate load model which represents the system as a whole be sufficient? Does the use of the PSS/E CONL function satisfy the requirements for a load model?

Organization	Question 2:	Question 2 Comments:
		R2.4.3 NoIn general we believe that breaking these requirements into specific sub-requirements, focusing on specific sensitivities, is too prescriptive and inappropriate. It will lead to over focus on these particular issues to the detriment of system reliability. The standard should not include an enumerated list of required sensitivities. Engineering judgment needs to be permitted. R2.5 Concur R5.4 Concur R5.5 No There is a concern with R5.5.1 with the requirement to perform simulations on 20 MW generators (to be consistent with the Registration Criteria). We recommend a 75 MW generator cutoff for required simulations.

Response: R2.4: The SDT has removed the distinction between System Stability and generator unit Stability.

R2.4.1 – The SDT does not believe there is any ambiguity in the term "peak System Load" and will continue to use that term.

R2.4.1 The SDT has changed this language to clarify that aggregate Load can be used here as well. This Requirement is to make you properly represent the dynamic behavior of Loads at high System Load levels.

R2.4.1 System peak Load for one of the five years. For peak System Load levels, a Load model shall be used which appropriately represents the dynamic behavior of Loads, including consideration of the behavior of induction motor Loads. An aggregate system Load model which represents the overall dynamic behavior of the Load is acceptable.

R2.4.3 The SDT has changed the language of Requirement R2.4.3 to reflect examining one or more sensitivity and the documentation of the technical rationale for why each of the sensitivities not chosen has been removed.

R2.4.3 For each of the studies described in Requirements R2.4.1 and ~~Requirement~~ R2.4.2, sensitivity case(s) that are intended to stress the System with variations ~~to reflect~~ in one or more of the following conditions not already included in the studies shall be ~~run and documentation of the technical rationale for why each of the conditions was or was not selected shall be supplied~~ included in the Assessment:

R5.5: The SDT agrees that there is little distinction between a single unit of a specific MW and an aggregation of the same number of MW. The requirement for study has been changed to 20 MW for a single generator or for an aggregate of generators. This is now located at Requirement R2.5.2.

The addition/deletion/change of individual generating unit capability of 20 MW or greater.

An aggregated addition/deletion/change to a group of generating units directly connected through their step-up transformer(s) to the BES which total 20 MW or greater.

Oncor Electric Delivery	No	For Requirement R2.4 would prefer to see more clarification on the System Off-Peak stability studies required and their purpose. Define/quantify type of stability issues to be addressed with this type of study. For sub requirement R2.4.3 the level of detail in the load modeling is very subjective and greatly impacts the analysis

Organization	Question 2:	Question 2 Comments:
		and results.
Response: R2.4: Transient Stability is generally worse at lower System Load levels when base load units are still generating near maximum output. All of the Contingencies in the table are to be considered for Off-Peak Load levels R2.4.3 The SDT has changed this language to clarify that aggregate Load can be used here as well. This Requirement is to make you properly represent the dynamic behavior of Loads at high System Load levels. The SDT has changed the language of Requirement R2.4.3 to examine one or more sensitivity and the documentation of the technical rationale for why each of the sensitivities not chosen has been removed. **R2.4.3** For each of the studies described in Requirements R2.4.1 and ~~Requirement~~ R2.4.2, sensitivity case(s) that are intended to stress the System with variations ~~to reflect~~ in one or more of the following conditions not already included in the studies shall be ~~run and documentation of the technical rationale for why each of the conditions was or was not selected shall be supplied~~ included in the Assessment		
FirstEnergy Corp.	No	R2.4.1 ? This requirement should be separated into two requirements as it covers two distinct topics; a) peak load study for one of the near-term years and b) dynamic load modeling. The use of the words "appropriately represents" and "consideration" is too vague and not strong enough for requirement language. Also, the requirement needs to better describe what is needed related to the modeling of induction motor load. What % of the load needs to be represented as motor load for various load classes ? commercial, industrial, residential? An industry white paper is needed to provide direction related to this undertaking. The SDT, when considering their Implementation Plan, will need to allow sufficient time to complete the dynamic load modeling which largely does not exist today. R2.4.3 ? Typo, need to remove strikethrough text on the word sensitivity. R2.4.4 ? Suggest making this a sub-requirement of R2.4.3 and only require documentation as to why each sensitivity case was selected. Documenting why something was not selected does not seem constructive and places an unneeded burden on documentation. It should be expected that over time, a range of sensitivities would be covered as a library of studies is built.
Response: R2.4.1: The SDT has changed this language to clarify that aggregate Load can be used here as well. This Requirement is to make you properly represent the dynamic behavior of Loads at high System Load levels. **R2.4.1** System peak Load for one of the five years. For peak System Load levels, a Load model shall be used which appropriately represents the dynamic behavior of Loads, including consideration of the behavior of induction motor Loads. An aggregate system Load model which represents the overall dynamic behavior of the Load is acceptable R2.4.3 The SDT did not find the typo indicated. R2.4.4 The language of R2.4.4 was deleted from the Standard language.		

Organization	Question 2:	Question 2 Comments:
Entergy Services, Inc.	No	General Comments: The enhanced requirements in this standard will result in an exponential increase in the amount of studies required to become compliant. Some of the changes such as the list of specific sensitivity studies will make it difficult to audit. Standards need to be measurable. As currently written, these requirements are difficult to measure. Furthermore, as indicated in the later questions, there could be significant costs to comply with these revised requirements Specific Comments: In 2.4.1, it would be better to address the "consideration of the behavior of induction motor Loads" in the sensitivity studies bullet, 2.4.3.1.,if this bullet is to be included at all. Furthermore, induction motor modeling is primarily required in areas with high load concentration that could be subject to angular and voltage stability issues. Considerable effort is required to collect information on motors. Therefore, studies to evaluate induction motor effects should be included in the sensitivity analysis section. In 2.4.3, what was the rationale for including only a portion of the sub-bullets included in 2.1.3? Also, in 2.1.3.7, does "Modification of planned Transmission outages" imply changes in dates? It seems unlikely that the cancellation of an outage would have negative impacts. More clarification is needed on what "modification" means in this requirement. R 2.4.3Each transmission provider has its own transmission planning needs and requirements. While it is true there are common elements and considerations that have to be incorporated in every transmission provider's planning process, it is difficult, if not impossible, to prescribe a list of sensitivities that is, or should be, applicable to everyone. Entergy has specific concerns regarding the following sensitivities. R.2.4.3.2 Modification of expected transfers: The use of "expected" transfer levels suggests that one can expect certain transfer patterns beyond what is modeled in base cases as firm. These sensitivities could result in an endless string of "what-if" scenarios where transmission users would attempt to influence these studies to advantage their respective market positions. Any system improvements based on such "expected" use of the system shall not result in discriminatory treatment of transmission users. R.2.4.3.5. Generation additions, retirements, or other dispatch scenarios. Generation additions are addressed by FERC-mandated study criteria. These requests are handled through the generation interconnection and system impact study processes. Generation retirements and other dispatch scenarios can have both positive and negative impacts on reliability. However, assumptions used to pick which resources are changed, and in what way, will likely be difficult to justify. R5.5 There is a concern with R5.5.1 with the requirement to perform simulations on 20 MW generators (to be consistent with the Registration Criteria). We recommend a 75 MW generator cutoff for required simulations.
Response: R2.4.1 The SDT has changed this language to clarify that aggregate Load can be used here as well. This Requirement is to make you properly represent the dynamic behavior of Loads at high System Load levels. **R2.4.1** System peak Load for one of the five years. For peak System Load levels, a Load model shall be used which appropriately represents the dynamic		

Organization	Question 2:	Question 2 Comments:
behavior of Loads, including consideration of the behavior of induction motor Loads. An aggregate system Load model which represents the overall dynamic behavior of the Load is acceptable R2.4.3The SDT has changed the language of Requirement R2.4.3 to examine one or more sensitivity and the documentation of the technical rationale for why each of the sensitivities not chosen has been removed. **R2.4.3** For each of the studies described in Requirements R2.4.1 and ~~Requirement~~ R2.4.2, sensitivity case(s) that are intended to stress the System with variations ~~to reflect~~ in one or more of the following conditions not already included in the studies shall be ~~run and documentation of the technical rationale for why each of the conditions was or was not selected shall be supplied~~ included in the Assessment: ~~Variations in~~ Load model assumptions ~~Modification of e~~Expected transfers ~~Unavailability of long lead time Facilities~~ Timing of the installation of new or modified Facilities. ~~Variability and outages of r~~Reactive resource~~s~~ capability. R2.4.3.5: These are changes to consider as possible sensitivities to give the TP a better understanding of its System. There is no justification of your assumptions required by the Standard. R5.5 The requirement for study has been changed to 20 MW for a single generator or for an aggregate of generators. This is now located at Requirement R2.5.2. The addition/deletion/change of individual generating unit capability of 20 MW or greater. An aggregated addition/deletion/change to a group of generating units directly connected through their step-up transformer(s) to the BES which total 20 MW or greater		
BPA Transmission Reliability Program	No	R2.4.1 references the use of a load model which appropriately represents the dynamic behavior of loads. However, such load models have not been developed yet. We recommend removing that requirement for load models until these models have been developed and approved. R2.5 and R5.5 refer to Generating Unit Stability studies. As stated above under Item 1, Generating Unit Stability is adequately addressed by the System Stability studies and does not need to be evaluated separately. Footnote 5.a.i in the notes following the Performance Requirements Tables, already specifies the requirements to meet. Therefore, we recommend removing the section on Generating Unit Stability Studies from standard TPL-001-1. The focus of this standard should be on "System Stability" which encompasses all generating units .Some of the requirements listed under R5.4 apply more generally than just within this section and are already covered elsewhere in the standards. R5.4.3.1 is already covered in Note 1 of Table 1. R5.4.3.2 is not relevant to Reliability Standards and would already be addressed by the relevant regulations, so it does not belong in this Standard. R5.4.3.3 is already covered in Note 1 of

Organization	Question 2:	Question 2 Comments:
		Table 2. Because these requirements are already covered by other sections of the Standard, they can be removed from R5.4.
Response: R2.4.1 The SDT has changed this language to clarify that aggregate Load can be used here as well. This Requirement is to make you properly represent the dynamic behavior of Loads at high System Load levels. **R2.4.1** System peak Load for one of the five years. For peak System Load levels, a Load model shall be used which appropriately represents the dynamic behavior of Loads, including consideration of the behavior of induction motor Loads. An aggregate system Load model which represents the overall dynamic behavior of the Load is acceptable R2.5 and R5.5: In response to industry comments, the SDT has to remove the distinction in the standard between System Stability and generating unit Stability. R5.4.3.1: The SDT has decided to remove Requirement R5.4.3 because the sub-requirements are already implicitly covered by the standard. Your suggested sub-requirement is also already implicitly covered by the standard.		
PPL EnergyPlus	Yes and No	R2.4.3 and 2.4.4 together with R2.7 are a very good effort to direct TSPs to not let scenarios drive their plans. Rather, the base case should drive the plan. If anything, the language in the standard could be strengthened.
Response: R2.4.4 has been removed from the language. R2.4.3: The SDT has changed the language of Requirement R2.4.3 to one or more sensitivity and the documentation of the technical rationale for why each of the sensitivities not chosen has been removed. **R2.4.3** For each of the studies described in Requirements R2.4.1 and ~~Requirement~~ R2.4.2, sensitivity case(s) that are intended to stress the System with variations ~~to reflect~~ in one or more of the following conditions not already included in the studies shall be ~~run and documentation of the technical rationale for why each of the conditions was or was not selected shall be supplied~~ included in the Assessment: ~~Variations in~~ Load model assumptions ~~Modification of e~~Expected transfers ~~Unavailability of long lead time Facilities~~ Timing of the installation of new or modified Facilities. ~~Variability and outages of r~~Reactive resource~~s~~ capability.		
TVA System Planning	Yes	
Tenaska, Inc.	Yes	

Organization	Question 2:	Question 2 Comments:
US Army Corp of Engineers, Northwestern Division	Yes	
Arkansas Electric Coop. Corp.	Yes	
LCRA TSC	Yes	
Response: Thank you for your response.		

3. The SDT has modified the definitions of Consequential and Non-Consequential Load Loss in response to industry comments. Do you concur with the modified definitions of Consequential and Non-Consequential Load Loss? If not, please state why and/or suggest specific changes.

Summary Consideration:

In response to numerous concerns the following changes were made to the draft standard:

- The definitions of Consequential Load Loss and Non-Consequential Load Loss were modified to be more direct.
- New definitions were added for Load Reduction and Supplemental Load Loss to address issues that were previously included in the Consequential Load Loss definition.
- Changes were made in the notes for Table 1 (item b) to address application of the revised definitions.
- Note 'b' in Table 1 has been revised to associate comments on Load loss to Steady State rather than Stability.
- Footnotes 5 & 10 were added to the Table to differentiate between Firm Transfer Service and Load Loss.
- The SDT didn't feel non-interruptible Load needed to be defined because Interruptible Load is a defined term.
- The requirement (old Requirement R3.3.2.1 – new Requirement R2.9) to specify the amount and duration of Load that may be lost was clarified to be the maximum for any Contingency and the requirement for duration was eliminated.

There is lingering concern in the industry with the following issues:

- The inability to shed firm Load for a first Contingency event
    - o The SDT considered this issue, but did not change the standard because it was specifically prohibited in FERC Order 693, Section 1773.
- The different treatment for Facilities greater than 300 kV versus Facilities less than 300 kV
    - o The SDT considered this issue, but did not change its perspective since the last posting. The following is the response provided in response to the first posting and the SDT has not been convinced that it should change:

"The initial draft of the proposed Transmission planning standard held the planning of 300 kV and higher Transmission Systems to a more stringent requirement than the remaining BES. Although not unanimous, the majority of the SDT believed the 300 kV and higher Systems (EHV) generally represent the backbone of many Systems in the various Interconnections and that the more stringent requirements were appropriate when considering N-1-1 Contingencies of two EHV Facilities. Systems operated above 300 kV generally do not directly serve end-use Load customers but rather act as the medium for moving large amounts of power from production to various Load centers where the energy is then delivered by other Transmission or sub-Transmission Systems to end-

use customers. It is the desire of NERC and various stakeholders that the backbone of the electric power grid be robust and held to a higher degree of reliability.

When EHV Systems are compromised, the large volumes of power they serve can place a severe amount of stress on parallel EHV or lower voltage paths. For example, if a large EHV transformer experiences a catastrophic failure, not only are other systems Facilities required to carry more Load but the System is also exposed to other N-1 conditions for long periods of time while awaiting a replacement or repair of the failed equipment. Large generation sources are typically connected at EHV levels and maintenance of the EHV Transmission lines within the vicinity of large generation plants must often be coordinated during scheduled unit outages, resulting again in multiple Facility outages over extended periods of time.

Therefore, it was the conclusion of the SDT in Draft 1 to propose greater reliability and operational flexibility through more stringent performance requirements when considering certain N-1 and N-1-1 Contingency events of EHV Systems. Throughout the industry, substation arrangements at EHV levels reflect the importance of these systems as the designs often consist of the more flexible and reliable ring-bus, breaker-and–a-half, or double bus-double breaker protection schemes as compared to the simpler, lower cost, single bus arrangements that are commonly found on lower voltage systems.

The feedback received from the industry was divided related to the SDT's emphasis placed on a higher expectation for the 300 kV and higher systems. Some commenters questioned the importance and the high costs that may be needed to mitigate existing system designs. Others agreed with the SDT's approach and indicated that the impact to their systems would be minimal. Some commenters even questioned why the more stringent approach was not applied to the entire 100 kV and higher systems. The SDT believes the Draft 2 changes are responsive to industry feedback and reflect an appropriate middle ground related to the importance of the EHV Transmission System."

There was no change with regards to the definition of Year One. The drafting team felt that if the studies referenced in the comments are duplicative, then the language in the Standard would allow them to use one study for both applications.

The definition for Planning Coordinator was deleted because the term has already been defined and added to the NERC Glossary by another SDT.

With regards to comments on the definitions creating a disincentive to build network Facilities, the Standards do not specify how an entity will comply.

The following changes have been made to the definitions due to industry comment:

Consequential Load Loss: ~~Load that is no longer connected to a source as a result of the event being studied or which is lost as a result of the load's response to the transient conditions of the event (other than through the action of UVLS or UFLS schemes). Although Load which is lost as a result of the Load's response to the transient conditions of the event is considered Consequential Load Loss and is permitted when Consequential Load Loss is allowed, Transmission planning entities are not allowed to rely upon the expectation of such Load loss to meet steady state performance requirements.~~ All Load that is no longer served by any Transmission Facilities as a result of the Facilities being removed from service by a planned Protection System operation to isolate fault conditions.

Load Reduction: Load that is still connected to the System, but is reduced due to lower voltage conditions following a Planning or Extreme Event.

Non-Consequential Load Loss: Non-Interruptible Load loss other than Consequential Load Loss, Supplemental Load Loss, and Load Reduction.~~. For example, non-Interruptible Load loss that occurs through manual (operator initiated) or automatic operations such as under-voltage Load shedding, under-frequency Load shedding, or Special Protection Systems would be considered Non-Consequential Load Loss~~.

Supplemental Load Loss: Load that is disconnected from the network by end-user equipment responding to post-Contingency System conditions.

The following requirement was added due to industry comments:

R2.9 The Planning Assessment shall identify the maximum permissible Non-Consequential Load Loss (megawatt Demand) for those Planning Events where Non-Consequential Load Loss is allowed in Table 1.

The following notes in the Table have been changed due to industry comment: ‘b’, ‘e’, and ‘i’.

Organization	Question 3:	Question 3 Comments:
Dominion - Electric Transmission Planning	No	Non-Consequential Load Loss: In the example provided with the definition of Non-Consequential Load Loss, it indicates that non-interruptible load loss that occurs through manual or automatic operations such as under voltage load shedding (UVLS), under-frequency load shedding (UFLS) or Special Protection Systems (SPS) would be considered Non-Consequential Load Loss. We recommend that the following statement be added to the standard in the definition -- "Interruptible loads such as the pump of a Pumped Storage Plant interrupted by an SPS should not be considered as a Non-Consequential load".
Response: The definition of the Non-Consequential Load Loss is qualified as ‘Non-Interruptible Load”. In your example, the Pumped Hydro load is defined as ‘interruptible’. There is nothing in the standard that associates Interruptible Load with Non-Consequential Load and nothing that prohibits the interruption of Interruptible Load. However, the SDT did change the definition to provide additional clarity. **Non-Consequential Load Loss:** Non-Interruptible Load loss other than Consequential Load Loss, Supplemental Load Loss, and Load Reduction.~~. For example, non-Interruptible Load loss that occurs through manual (operator initiated) or automatic operations such as under-voltage Load shedding, under-frequency Load shedding, or Special Protection Systems would be considered Non-Consequential Load Loss~~.		
NPCC	No	In the Consequential Load Loss definition, the word 'source' needs to be defined or explained further since it is unclear.
Hydro-Québec TransEnergie (HQT)	Yes and No	In the Consequential Load Loss definition, the word 'source' needs to be defined or explained further since it is unclear. It should be indicated that this also applies to " stability performance requirements" (refer to the end of last sentence of the definition).

Organization	Question 3:	Question 3 Comments:
Ameren	Yes and No	The revised definition of Consequential Load Loss needs to be simplified, as follows, "Consequential Load Loss: Load that is no longer served because it has been isolated from its network supply by a planned protection system operation to mitigate fault conditions." Additional clarifications as to when Consequential Load loss is allowed should not be included in the definition, but should instead be included in the Tables 1 and 2.Agree with the revised definition of Non-Consequential Load Loss.
Midwest ISO	No	Under the definition of consequential load, it is not clear who the term "Transmission planning entities" is referring to. Perhaps it should say "entities to which the standard is applicable". The last sentence could be amended to say: "Load that is no longer connected to a source as a result of the event being studied or which is lost as a result of the load's response to the transient conditions of the event (other than through the action of UVLS?..
Brazos Electric Power Cooperative, Inc.	No	Non-consequential is fine. For 'Consequential Load Loss' the entire last part of the definition that begins with "Although Load which is lost?" can be deleted or at least deleted to the part that begins with "Transmission planning entities are not allowed?". We think the last part of the sentence is intuitive.
Northeast Utilities	No	Northeast Utilities has participated with ISO-NE and NPCC and supports the comments filed by those organizations.
American Transmission Company	No	For Consequential Load Loss definition, we suggest that the last sentence be deleted because it is application text, rather than definition text. We accept the Non-Consequential Load Loss definition as written.
Florida Reliability Coordinating Council, inc	No	Propose changing the word ?a? to ?any? in the definition of Consequential Load Loss. Consequential Load Loss: Load that is no longer connected to ?ANY? source as a result ? The second sentence in the definition could be interpreted to disallow voltage dependent load models to meet Steady State Performance requirements. Since many planning events result in steady state voltage significantly lower than nominal, system load would be reduced. This definition would be clarified by differentiating load that is lost (no longer connected to a source) and load that is reduced as a result of reduced system voltage. Although Load which is lost (no longer connected to a source) as a result of the Load's response to the transient conditions of the event is considered Consequential Load Loss and is permitted when Consequential Load loss is allowed, Transmission planning entities are not allowed to rely upon the expectation of such Load Loss to meet steady state performance requirements.
New York Independent System Operator	No	In the Consequential Load Loss definition, the word 'source' needs to be defined or explained further since it is unclear.

Organization	Question 3:	Question 3 Comments:
Response: The definition of 'Consequential Load Loss' has been revised to make it more direct, which has resulted in the elimination of the reference. **Consequential Load Loss:** ~~Load that is no longer connected to a source as a result of the event being studied or which is lost as a result of the load's response to the transient conditions of the event (other than through the action of UVLS or UFLS schemes). Although Load which is lost as a result of the Load's response to the transient conditions of the event is considered Consequential Load Loss and is permitted when Consequential Load Loss is allowed, Transmission planning entities are not allowed to rely upon the expectation of such Load loss to meet steady state performance requirements.~~ All Load that is no longer served by any Transmission Facilities as a result of the Facilities being removed from service by a planned Protection System operation to isolate fault conditions.		
TVA System Planning	Yes	TVA agrees with the modified definitions. However, the definition for "Consequential Load Loss" can still be confusing. Suggest definition of "Load that is deenergized by relay action as a result of the event being studied ?." Additional wording in "Consequential load loss" about transient conditions can be confusing as well - we suggest including this additional information later in the document. For Non-consequential load loss, suggest use of "Firm" instead of "Non - Interruptible" Load Loss.
Response: The definition of 'Consequential Load Loss' has been revised to make it more direct and has eliminated the reference to 'transient'. There are potential associations with the term 'Firm' that the SDT is trying to avoid in this definition and therefore has decided to stay with the reference to Non-interruptible. **Consequential Load Loss:** ~~Load that is no longer connected to a source as a result of the event being studied or which is lost as a result of the load's response to the transient conditions of the event (other than through the action of UVLS or UFLS schemes). Although Load which is lost as a result of the Load's response to the transient conditions of the event is considered Consequential Load Loss and is permitted when Consequential Load Loss is allowed, Transmission planning entities are not allowed to rely upon the expectation of such Load loss to meet steady state performance requirements.~~ All Load that is no longer served by any Transmission Facilities as a result of the Facilities being removed from service by a planned Protection System operation to isolate fault conditions.		
Progress Energy Carolinas	Yes	The definition of Consequential load loss has been appropriately modified to include loss of Load as a result of the Load's response to the transient condition. This recognizes the fact that when subjected to fault voltages of sufficient depth and duration, the resulting Load dynamics will result is loss of Load. Therefore, in order to more accurately replicate real-world behavior through dynamic stability simulation analysis, the proper representation of expected real world loss of load is acceptable. It is also proper that the computation of expected consequential Load loss and duration is not required for stability analysis. Attempts at determining additional Load loss due to load dynamics would not result in any useful information contributing to increased reliability.
Response: New definitions have been created to recognize other forms of acceptable Load loss that might occur in response to an event. The calculation of the potential Load loss for anything other than Consequential Load Loss is not required and the analysis is not expected to include it (see new 'Supplemental Load Loss' definition). However, a calculation of the maximum expected contingent Consequential Load Loss is expected (see Requirement R2.9). Note 'b" in the table has been revised to associate requirements to serve Supplemental Load Loss in Steady State rather than Stability. **Consequential Load Loss:** ~~Load that is no longer connected to a source as a result of the event being studied or which is lost as a result of the load's response~~		

Organization	Question 3:	Question 3 Comments:
~~to the transient conditions of the event (other than through the action of UVLS or UFLS schemes). Although Load which is lost as a result of the Load's response to the transient conditions of the event is considered Consequential Load Loss and is permitted when Consequential Load Loss is allowed, Transmission planning entities are not allowed to rely upon the expectation of such Load loss to meet steady state performance requirements.~~ All Load that is no longer served by any Transmission Facilities as a result of the Facilities being removed from service by a planned Protection System operation to isolate fault conditions. **Load Reduction:** Load that is still connected to the System, but is reduced due to lower voltage conditions following a Planning or Extreme Event. **Non-Consequential Load Loss:** Non-Interruptible Load loss other than Consequential Load Loss, Supplemental Load Loss, and Load Reduction.~~. For example, non-Interruptible Load loss that occurs through manual (operator initiated) or automatic operations such as under-voltage Load shedding, under-frequency Load shedding, or Special Protection Systems would be considered Non-Consequential Load Loss~~. **Supplemental Load Loss:** Load that is disconnected from the network by end-user equipment responding to post-Contingency System conditions. **R2.9** The Planning Assessment shall identify the maximum permissible Non-Consequential Load Loss (megawatt Demand) for those Planning Events where Non-Consequential Load Loss is allowed in Table 1. **Note "b":** Consequential Load Loss, Supplemental Load Loss, Load Reduction, and consequential generation loss ~~is allowed for all events shown.~~are acceptable as a consequence of any Planning or Extreme Event excluding P0. However, Supplemental Load Loss associated with an event shall not be used to meet steady state performance requirements.		
BCTC	No	Our understanding of these definitions and the performance requirements in Tables 1 and 2 is that they may eliminate the existing provision in Footnote (b) that allows loss of firm load for contingencies in local networks. Disconnection of loads on local networks in response to contingencies normally requires RAS/SPS, and the definition of NCLL states that this is NCLL. We are not clear whether our concern is with the definitions of CLL/NCLL, the Tables, or the definition of BES. In the Consideration of Comments on First Draft of TPL-001-1, page 49, response to First Energy, the SDT states "FERC has determined that any Load loss that is not directly connected to the faulted element is actually Non-Consequential Load loss." We found a similar response to WECC on page 449, item 6. While we do not disagree with the statements made by the SDT, that FERC wants clarification of what is CLL, we do not see where FERC has ruled out the use of RAS/SPS for CLL - see BCTC comments on the First Draft at page 28 of the Consideration of Comments. BCTC concurs with SaskPower and Manitoba Hydro that that CLL needs to include the concept of local networks. Another way to address this would be to exempt some local networks in the definition of the Bulk Electric System. In addition, BCTC cannot meet the proposed P1 (A) > 300 kV Steady State Performance of no Non-Consequential Load Loss for part of our 500 kV system. One radial segment of the BCTC 500 kV transmission system, a single circuit 450 km 500 kV transmission system, serves load and interconnects generation. For outages of the 500 kV transmission line, a RAS is used to shed load to match the generation in this island. We have no plans for transmission reinforcements (280 miles of 500 kV transmission line) to remove this RAS. Therefore, we will require some further clarification of the proposed P1 (A) >300 kV requirement of no Non-Consequential Load Loss for this requirement to be suitable for all of our system.
Response: FERC Order 693 Section 1773 does not permit loss of Non-Consequential Load (see reference). There is no provision in the FERC Order to allow		

Organization	Question 3:	Question 3 Comments:
loss of Load with the use of an RAS/SPS or to provide exceptions for local networks. The SDT's interpretation of the Order is that FERC is indicating that other alternatives must be pursued to eliminate this operating scheme. However, the SDT has provided an exception (Requirement R2.6.4) if a situation arises that is beyond the control of the Transmission Planner or Planning Coordinator that prevent the implementation of a Corrective Action Plan in the required timeframe. "1773. The Commission proposed in the NOPR to approve Reliability Standard TPL-002-0 as mandatory and enforceable. In addition, pursuant to section 215(d)(5) of the FPA and § 39.5(f) of our regulations, we proposed to direct NERC to submit a modification to TPL-002-0 that: (1) requires that critical system conditions be determined in the same manner as proposed for TPL-001-0; (2) requires the inclusion of the reliability impact of the entity's existing spare equipment strategy; (3) explicitly requires all generators to ride through the same set of Category B and C contingencies as required for wind generators in Order No. 661; (4) requires documentation of load models used in system studies and supporting rationale for their use; (5) clarifies the phrase "permit operating steps necessary to maintain system control" and (6) clarifies footnote (b) to Table 1 to allow no firm load or firm transactions to be interrupted except for consequential load loss."		
Manitoba Hydro	No	The definition of Consequential Load Loss implies the load lost as a result of "response to the transient condition of the event" need not be load directly connected to the element impacted by the event, but load in the local area. This definition could result in an interpretation that would justify unlimited load loss resulting from say voltage depression in an area impacted by a transient system swing. This opens a loop hole for allowing load loss for many single contingencies as a result of a transient swing causing a voltage dip and motor contactor drop-out as an example. There is a fine line between providing adequate voltage support or operating guides to avoid such load loss. Should a maximum level of load loss be specified? Comments on Other Definitions: Extreme Events: The definition should clarify whether or not Transmission system performance requirements must be met. – Events should be changed to Event - same for Planning Events Planning Coordinator: The Planning Coordinator definition should be left to the functional model. Having the term defined here may cause future confusion. For example, the FMWG has discussed the possible elimination of the PC, based on the realization that it is the Transmission Planner who integrates resources into the transmission plans.
Response: The standard is not designed to address regional performance standards, which should govern relative to acceptable voltage depressions or the magnitude of acceptable loss of Load during Planned Events or in response to Extreme Events. This is the responsibility of the Planning Coordinator and the Transmission Owner, which has been included as notes 'e' and 'i' in Table 1. **Header note 'e'** For all Planning Events, planned System adjustments such as Transmission configuration changes and redispatch of generation are allowed if such adjustments are executable within the time duration applicable to the Facility Ratings. **Header note 'i'**: ~~Dynamic voltages~~Transient voltage response shall be within acceptable limits established by the Planning Coordinator (or Transmission Planner if more restrictive).		

Organization	Question 3:	Question 3 Comments:
The reference has been reviewed and revised as appropriate. When the reference is to all events, such as in the title to Table 1, then 'Events' is correct. When the reference is to a single event, such as in the column header to Table 1, then 'Event' is correct. The definition for Planning Coordinator was deleted because the term has already been defined and added to the NERC Glossary by another SDT.		
Los Angeles Department of Water and Power	No	In general, support the comment from WECC on this question, however, where there are different performance allowed solely based on an arbitrary voltage class separation, it is discriminatory and without any scientific or historical basis.
Response: Many responders have asked the question why the distinction for bus sections above 300 kV. The SDT has prepared the following response. The initial draft of the proposed Transmission planning standard held the planning of 300 kV and higher Transmission Systems to a more stringent requirement than the remaining BES. Although not unanimous, the majority of the SDT believed the 300 kV and higher Systems (EHV) generally represent the backbone of many Systems in the various Interconnections and that the more stringent requirements were appropriate when considering N-1-1 Contingencies of two EHV Facilities. Systems operated above 300 kV generally do not directly serve end-use Load customers but rather act as the medium for moving large amounts of power from production to various Load centers where the energy is then delivered by other Transmission or sub-Transmission Systems to end-use customers. It is the desire of NERC and various stakeholders that the backbone of the electric power grid be robust and held to a higher degree of reliability. When EHV Systems are compromised, the large volumes of power they serve can place a severe amount of stress on parallel EHV or lower voltage paths. For example, if a large EHV transformer experiences a catastrophic failure, not only are other systems Facilities required to carry more Load but the System is also exposed to other N-1 conditions for long periods of time while awaiting a replacement or repair of the failed equipment. Large generation sources are typically connected at EHV levels and maintenance of the EHV Transmission lines within the vicinity of large generation plants must often be coordinated during scheduled unit outages, resulting again in multiple Facility outages over extended periods of time. Therefore, it was the conclusion of the SDT in Draft 1 to propose greater reliability and operational flexibility through more stringent performance requirements when considering certain N-1 and N-1-1 Contingency events of EHV Systems. Throughout the industry, substation arrangements at EHV levels reflect the importance of these systems as the designs often consist of the more flexible and reliable ring-bus, breaker-and–a-half, or double bus-double breaker protection schemes as compared to the simpler, lower cost, single bus arrangements that are commonly found on lower voltage systems. The feedback received from the industry was divided related to the SDT's emphasis placed on a higher expectation for the 300 kV and higher systems. Some commenters questioned the importance and the high costs that may be needed to mitigate existing system designs. Others agreed with the SDT's approach and indicated that the impact to their systems would be minimal. Some commenters even questioned why the more stringent approach was not applied to the entire 100 kV and higher systems. The SDT believes the Draft 2 changes are responsive to industry feedback and reflect an appropriate middle ground related to the importance of the EHV Transmission System.		
Transmission Agency of Northern	No	We generally agree with the definitions by themselves but have concerns about potential unintended consequences. This definition will severely limit the loads that can be classified as ?local Network customers, connected to or supplied by the Faulted element or by the affected area, may occur in certain areas without impacting the overall reliability of the

Organization	Question 3:	Question 3 Comments:
California		interconnected transmission systems? in footnote b of the existing TPL standards. In combination with raising the bar for loss of Facilities with operating voltages 300 kV or higher (P2, P4 and P5 in the Performance Tables), this definition may result in encouraging entities to connect more loads in a radial fashion or avoid loop connection to improve service reliability just to fit in the Consequential Load Loss definition, ??load no longer being connected to a source??. As a result, service reliability to customer would be adversely impacted without commensurate improvement in overall system reliability. In addition, existing design of many such local networks would normally require RAS/SPS to disconnect loads on local networks in response to contingencies. However, the definition of Non-Consequential Load Loss states that using RAS/SPS is Non-Consequential Load Loss. In the Consideration of Comments on the First Draft of TPL-001-1, page 49, response to First Energy, the SDT states "FERC has determined that any Load loss that is not directly connected to the faulted element is actually Non-Consequential Load loss." We found a similar response to WECC on page 449, item 6. While we do not disagree with the statements made by the SDT, that FERC wants clarification of what is Consequential Load Loss, we do not see where FERC has ruled out the use of RAS/SPS for Consequential Load Loss. Consequential Load Loss needs to include the concept of local networks. Another way to address this would be to exempt some local networks in the definition of the Bulk Electric System. The performance of existing systems has been designed to be consistent with the concepts of the quoted sentence above from footnote b of Table 1 of the existing TPL standards. There are many instances where some local network customer curtailments or local area load loss has been allowed by local regulatory authorities as long as the overall reliability of the interconnected system was not impacted. This is a result of tradeoffs with the cost and environmental impacts of providing a higher level of reliability in a local area. An attempt to eliminate the concepts contained in footnote b of the existing TPL standards would invalidate local regulatory decisions, place a large unintended cost burden on existing customers and could potentially create criteria that could not be met anytime soon, if ever, as a result of the long lead time required for system improvements. Any attempt to raise the bar by interpreting the definition of Non-Consequential Load as eliminating the concepts of footnote b is considered unacceptable. The new criteria need to clearly maintain these concepts to prevent a large disconnect with existing design criteria. The last sentence in the Definition of Consequential Load Loss (?Although Load which is lost as a result of the Load's response to the transient conditions of the event is considered Consequential Load Loss and is permitted when Consequential Load Loss is allowed, Transmission planning entities are not allowed to rely upon the expectation of such Load loss to meet steady state performance requirements?) seems more appropriate to be requirements. Therefore, please move this sentence to the Notes Section at the beginning of Table 1 as new Item 7.
Pacific Gas and Electric Co.	No	We generally agree with the definitions by themselves but have concerns about potential unintended consequences. This definition will severely limit the loads that can be classified as ?local Network customers, connected to or supplied by the Faulted element or by the affected area, may occur in certain areas without impacting the overall reliability of the interconnected transmission systems? in footnote b of the existing TPL standards. In combination with raising the bar for loss of Facilities with operating voltages 300 kV or higher (P2, P4 and P5 in the Performance Tables), this definition may result in encouraging entities to connect more loads in a radial fashion or avoid loop connection to improve service reliability just to fit in the Consequential Load Loss definition, ??load no longer being connected to a source??. As a result, service

Organization	Question 3:	Question 3 Comments:
		reliability to customer would be adversity impacted without commensurate improvement in overall system reliability. In addition, existing design of many such local networks would normally require RAS/SPS to disconnect loads on local networks in response to contingencies. However, the definition of Non-Consequential Load Loss states that using RAS/SPS is Non-Consequential Load Loss. In the Consideration of Comments on the First Draft of TPL-001-1, page 49, response to First Energy, the SDT states "FERC has determined that any Load loss that is not directly connected to the faulted element is actually Non-Consequential Load loss." We found a similar response to WECC on page 449, item 6. While we do not disagree with the statements made by the SDT, that FERC wants clarification of what is Consequential Load Loss, we do not see where FERC has ruled out the use of RAS/SPS for Consequential Load Loss. Consequential Load Loss needs to include the concept of local networks. Another way to address this would be to exempt some local networks in the definition of the Bulk Electric System. The performance of existing systems has been designed to be consistent with the concepts of the quoted sentence above from footnote b of Table 1 of the existing TPL standards. There are many instances where some local network customer curtailments or local area load loss has been allowed by local regulatory authorities as long as the overall reliability of the interconnected system was not impacted. This is a result of tradeoffs with the cost and environmental impacts of providing a higher level of reliability in a local area. An attempt to eliminate the concepts contained in footnote b of the existing TPL standards would invalidate local regulatory decisions, place a large unintended cost burden on existing customers and could potentially create criteria that could not be met anytime soon, if ever, as a result of the long lead time required for system improvements. Any attempt to raise the bar by interpreting the definition of Non-Consequential Load as eliminating the concepts of footnote b is considered unacceptable. The new criteria need to clearly maintain these concepts to prevent a large disconnect with existing design criteria. The last sentence in the Definition of Consequential Load Loss (Although Load which is lost as a result of the Load's response to the transient conditions of the event is considered Consequential Load Loss and is permitted when Consequential Load Loss is allowed, Transmission planning entities are not allowed to rely upon the expectation of such Load loss to meet steady state performance requirements?) seems more appropriate to be requirements. Therefore, please move this sentence to the Notes Section at the beginning of Table 1 as new Item 7.
Public Service Company of New Mexico	Yes and No	We generally agree with the definitions by themselves but have concerns about potential unintended consequences. This definition will severely limit the loads that can be classified as ?local Network customers, connected to or supplied by the Faulted element or by the affected area, may occur in certain areas without impacting the overall reliability of the interconnected transmission systems? in footnote b of the existing TPL standards. In combination with raising the bar for loss of Facilities with operating voltages 300 kV or higher (P2, P4 and P5 in the Performance Tables), this definition may result in encouraging entities to connect more loads in a radial fashion or avoid loop connection to improve service reliability just to fit in the Consequential Load Loss definition, ??load no longer being connected to a source??. As a result, service reliability to customer would be adversity impacted without commensurate improvement in overall system reliability. In addition, existing design of many such local networks would normally require RAS/SPS to disconnect loads on local networks in response to contingencies. However, the definition of Non-Consequential Load Loss states that using RAS/SPS is Non-Consequential Load Loss. In the Consideration of Comments on the First Draft of TPL-001-1, page 49,

Organization	Question 3:	Question 3 Comments:
		response to First Energy, the SDT states "FERC has determined that any Load loss that is not directly connected to the faulted element is actually Non-Consequential Load loss." We found a similar response to WECC on page 449, item 6. While we do not disagree with the statements made by the SDT, that FERC wants clarification of what is Consequential Load Loss, we do not see where FERC has ruled out the use of RAS/SPS for Consequential Load Loss. Consequential Load Loss needs to include the concept of local networks. Another way to address this would be to exempt some local networks in the definition of the Bulk Electric System. The performance of existing systems has been designed to be consistent with the concepts of the quoted sentence above from footnote b of Table 1 of the existing TPL standards. There are many instances where some local network customer curtailments or local area load loss has been allowed by local regulatory authorities as long as the overall reliability of the interconnected system was not impacted. This is a result of tradeoffs with the cost and environmental impacts of providing a higher level of reliability in a local area. An attempt to eliminate the concepts contained in footnote b of the existing TPL standards would invalidate local regulatory decisions, place a large unintended cost burden on existing customers and could potentially create criteria that could not be met anytime soon, if ever, as a result of the long lead time required for system improvements. Any attempt to raise the bar by interpreting the definition of Non-Consequential Load as eliminating the concepts of footnote b is considered unacceptable. The new criteria need to clearly maintain these concepts to prevent a large disconnect with existing design criteria. The last sentence in the Definition of Consequential Load Loss (?Although Load which is lost as a result of the Load's response to the transient conditions of the event is considered Consequential Load Loss and is permitted when Consequential Load Loss is allowed, Transmission planning entities are not allowed to rely upon the expectation of such Load loss to meet steady state performance requirements?) seems more appropriate to be requirements. Therefore, please move this sentence to the Notes Section at the beginning of Table 1 as new Item 7.
Puget Sound Energy, Inc.	No	We generally agree with the definitions by themselves but have concerns about potential unintended consequences. This definition will severely limit the loads that can be classified as ?local Network customers, connected to or supplied by the Faulted element or by the affected area, may occur in certain areas without impacting the overall reliability of the interconnected transmission systems? in footnote b of the existing TPL standards. In combination with raising the bar for loss of Facilities with operating voltages 300 kV or higher (P2, P4 and P5 in the Performance Tables), this definition may result in encouraging entities to connect more loads in a radial fashion or avoid loop connection used to improve service reliability just to fit in the Consequential Load Loss definition, ??load no longer being connected to a source??. As a result, service reliability to customer will be degraded without commensurate improvement in overall system reliability. In addition, existing design of many such local networks may use RAS/SPS to disconnect loads on local networks in response to low probability contingencies. However, the definition of Non-Consequential Load Loss states that using RAS/SPS is Non-Consequential Load Loss. In the Consideration of Comments on the First Draft of TPL-001-1, page 49, response to First Energy, the SDT states "FERC has determined that any Load loss that is not directly connected to the faulted element is actually Non-Consequential Load loss." We found a similar response to WECC on page 449, item 6. While we do not disagree with the statements made by the SDT, that FERC wants clarification of what is Consequential Load Loss, we do not see where FERC has ruled out the use of RAS/SPS for Consequential Load Loss. Consequential Load Loss needs to

Organization	Question 3:	Question 3 Comments:
		include the concept of local networks. Another way to address this would be to exempt some local networks in the definition of the Bulk Electric System. There are many instances where some local network customer curtailments or local area load loss has been allowed by local regulatory authorities as long as the overall reliability of the interconnected system was not impacted. This is a result of tradeoffs with the cost and environmental impacts of providing a higher level of reliability in a local area. An attempt to eliminate the concepts contained in footnote b of the existing TPL standards would invalidate local regulatory decisions, place a large unintended cost burden on existing customers and could potentially create criteria that could not be met anytime soon, if ever, as a result of the long lead time required for system improvements. Any attempt to raise the bar by interpreting the definition of Non-Consequential Load as eliminating the concepts of footnote b is considered unacceptable. The new criteria need to clearly maintain these concepts to prevent a large disconnect with existing design criteria. The last sentence in the Definition of Consequential Load Loss (?Although Load which is lost as a result of the Load's response to the transient conditions of the event is considered Consequential Load Loss and is permitted when Consequential Load Loss is allowed, Transmission planning entities are not allowed to rely upon the expectation of such Load loss to meet steady state performance requirements?) seems more appropriate to be requirements. Therefore, please move this sentence to the Notes Section at the beginning of Table 1 as new Item 7.
Idaho Power Company	No	We generally do not disagree with the definitions by themselves but have concerns about potential unintended consequences. This definition will severely limit the loads that can be classified as ?local Network customers, connected to or supplied by the Faulted element or by the affected area, may occur in certain areas without impacting the overall reliability of the interconnected transmission systems? in footnote b of the existing TPL standards. In combination with raising the bar for loss of Facilities with operating voltages 300 kV or higher (P2, P4 and P5 in the Performance Tables), this definition may result in encouraging entities to connect more loads in a radial fashion or avoid loop connection to improve service reliability just to fit in the Consequential Load Loss definition, ??load no longer being connected to a source??. As a result, service reliability to customer would be adversity impacted without commensurate improvement in overall system reliability. In addition, existing design of many such local networks would normally require RAS/SPS to disconnect loads on local networks in response to contingencies. However, the definition of Non-Consequential Load Loss states that using RAS/SPS is Non-Consequential Load Loss. In the Consideration of Comments on First Draft of TPL-001-1, page 49, response to First Energy, the SDT states "FERC has determined that any Load loss that is not directly connected to the faulted element is actually Non-Consequential Load loss." We found a similar response to WECC on page 449, item 6. While we do not disagree with the statements made by the SDT, that FERC wants clarification of what is Consequential Load Loss, we do not see where FERC has ruled out the use of RAS/SPS for Consequential Load Loss. Consequential Load Loss needs to include the concept of local networks. Another way to address this would be to exempt some local networks in the definition of the Bulk Electric System. The performance of existing systems has been designed to be consistent with the concepts of the quoted sentence above from footnote b of Table 1 of the existing TPL standards. There are many instances where some local network customer curtailments or local area load loss has been allowed by local regulatory authorities as long as the overall reliability of the interconnected system was not impacted. This is a result of tradeoffs with the cost and environmental impacts of providing a higher level of reliability in a local area. An attempt to

Organization	Question 3:	Question 3 Comments:
		eliminate the concepts contained in footnote b of the existing TPL standards would invalidate local regulatory decisions, place a large unintended cost burden on existing customers and could potentially create criteria that could not be met anytime soon, if ever, as a result of the long lead time required for system improvements. Any attempt to raise the bar by interpreting the definition of Non-Consequential Load as eliminating the concepts of footnote b is considered unacceptable. The new criteria need to clearly maintain these concepts to prevent a large disconnect with existing design criteria. The last sentence in the Definition of Consequential Load Loss (?Although Load which is lost as a result of the Load's response to the transient conditions of the event is considered Consequential Load Loss and is permitted when Consequential Load Loss is allowed, Transmission planning entities are not allowed to rely upon the expectation of such Load loss to meet steady state performance requirements?) seems more appropriate to be requirements. Therefore, please move this sentence to the Notes Section at the beginning of Table 1 as new Item 7.
SMUD	No	We generally agree with the definitions by themselves but have concerns about potential unintended consequences. This definition will severely limit the loads that can be classified as ?local Network customers, connected to or supplied by the Faulted element or by the affected area, may occur in certain areas without impacting the overall reliability of the interconnected transmission systems? in footnote b of the existing TPL standards. In combination with raising the bar for loss of Facilities with operating voltages 300 kV or higher (P2, P4 and P5 in the Performance Tables), this definition may result in encouraging entities to connect more loads in a radial fashion or avoid loop connection to improve service reliability just to fit in the Consequential Load Loss definition, ??load no longer being connected to a source??. As a result, service reliability to customer would be adversity impacted without commensurate improvement in overall system reliability. In addition, existing design of many such local networks would normally require RAS/SPS to disconnect loads on local networks in response to contingencies. However, the definition of Non-Consequential Load Loss states that using RAS/SPS is Non-Consequential Load Loss. In the Consideration of Comments on the First Draft of TPL-001-1, page 49, response to First Energy, the SDT states "FERC has determined that any Load loss that is not directly connected to the faulted element is actually Non-Consequential Load loss." We found a similar response to WECC on page 449, item 6. While we do not disagree with the statements made by the SDT, that FERC wants clarification of what is Consequential Load Loss, we do not see where FERC has ruled out the use of RAS/SPS for Consequential Load Loss. Consequential Load Loss needs to include the concept of local networks. Another way to address this would be to exempt some local networks in the definition of the Bulk Electric System. The performance of existing systems has been designed to be consistent with the concepts of the quoted sentence above from footnote b of Table 1 of the existing TPL standards. There are many instances where some local network customer curtailments or local area load loss has been allowed by local regulatory authorities as long as the overall reliability of the interconnected system was not impacted. This is a result of tradeoffs with the cost and environmental impacts of providing a higher level of reliability in a local area. An attempt to eliminate the concepts contained in footnote b of the existing TPL standards would invalidate local regulatory decisions, place a large unintended cost burden on existing customers and could potentially create criteria that could not be met anytime soon, if ever, as a result of the long lead time required for system improvements. Any attempt to raise the bar by interpreting the definition of Non-Consequential Load as eliminating the concepts of footnote b is considered unacceptable.

Organization	Question 3:	Question 3 Comments:
		The new criteria need to clearly maintain these concepts to prevent a large disconnect with existing design criteria. The last sentence in the Definition of Consequential Load Loss (?Although Load which is lost as a result of the Load's response to the transient conditions of the event is considered Consequential Load Loss and is permitted when Consequential Load Loss is allowed, Transmission planning entities are not allowed to rely upon the expectation of such Load loss to meet steady state performance requirements?) seems more appropriate to be requirements. Therefore, please move this sentence to the Notes Section at the beginning of Table 1 as new Item 7.
Sierra Pacific Power Company / Nevada Power Company	No	We generally do not disagree with the definitions by themselves but have concerns about potential unintended consequences. This definition will severely limit the loads that can be classified as ?local Network customers, connected to or supplied by the Faulted element or by the affected area, may occur in certain areas without impacting the overall reliability of the interconnected transmission systems? in footnote b of the existing TPL standards. In combination with raising the bar for loss of Facilities with operating voltages 300 kV or higher (P2, P4 and P5 in the Performance Tables), this definition may result in encouraging entities to connect more loads in a radial fashion or avoid loop connection to improve service reliability just to fit in the Consequential Load Loss definition, ??load no longer being connected to a source??. As a result, service reliability to customer would be adversity impacted without commensurate improvement in overall system reliability. In addition, existing design of many such local networks would normally require RAS/SPS to disconnect loads on local networks in response to contingencies. However, the definition of Non-Consequential Load Loss states that using RAS/SPS is Non-Consequential Load Loss. In the Consideration of Comments on First Draft of TPL-001-1, page 49, response to First Energy, the SDT states "FERC has determined that any Load loss that is not directly connected to the faulted element is actually Non-Consequential Load loss." We found a similar response to WECC on page 449, item 6. While we do not disagree with the statements made by the SDT, that FERC wants clarification of what is Consequential Load Loss, we do not see where FERC has ruled out the use of RAS/SPS for Consequential Load Loss. Consequential Load Loss needs to include the concept of local networks. Another way to address this would be to exempt some local networks in the definition of the Bulk Electric System. The performance of existing systems has been designed to be consistent with the concepts of the quoted sentence above from footnote b of Table 1 of the existing TPL standards. There are many instances where some local network customer curtailments or local area load loss has been allowed by local regulatory authorities as long as the overall reliability of the interconnected system was not impacted. This is a result of tradeoffs with the cost and environmental impacts of providing a higher level of reliability in a local area. An attempt to eliminate the concepts contained in footnote b of the existing TPL standards would invalidate local regulatory decisions, place a large unintended cost burden on existing customers and could potentially create criteria that could not be met anytime soon, if ever, as a result of the long lead time required for system improvements. Any attempt to raise the bar by interpreting the definition of Non-Consequential Load as eliminating the concepts of footnote b is considered unacceptable. The new criteria need to clearly maintain these concepts to prevent a large disconnect with existing design criteria. The last sentence in the Definition of Consequential Load Loss (?Although Load which is lost as a result of the Load's response to the transient conditions of the event is considered Consequential Load Loss and is permitted when Consequential Load Loss is allowed, Transmission planning entities are not allowed to rely upon the expectation of such Load loss to meet

Organization	Question 3:	Question 3 Comments:
		steady state performance requirements?) seems more appropriate to be requirements. Therefore, please move this sentence to the Notes Section at the beginning of Table 1 as new Item 7.
Black Hills Corporation	No	We generally agree with the definitions by themselves but have concerns about potential unintended consequences. This definition will severely limit the loads that can be classified as ?local Network customers, connected to or supplied by the Faulted element or by the affected area, may occur in certain areas without impacting the overall reliability of the interconnected transmission systems? in footnote b of the existing TPL standards. In combination with raising the bar for loss of Facilities with operating voltages 300 kV or higher (P2, P4 and P5 in the Performance Tables), this definition may result in encouraging entities to connect more loads in a radial fashion or avoid loop connection to improve service reliability just to fit in the Consequential Load Loss definition, ??load no longer being connected to a source??. As a result, service reliability to customer would be adversity impacted without commensurate improvement in overall system reliability. In addition, existing design of many such local networks would normally require RAS/SPS to disconnect loads on local networks in response to contingencies. However, the definition of Non-Consequential Load Loss states that using RAS/SPS is Non-Consequential Load Loss. In the Consideration of Comments on the First Draft of TPL-001-1, page 49, response to First Energy, the SDT states "FERC has determined that any Load loss that is not directly connected to the faulted element is actually Non-Consequential Load loss." We found a similar response to WECC on page 449, item 6. While we do not disagree with the statements made by the SDT, that FERC wants clarification of what is Consequential Load Loss, we do not see where FERC has ruled out the use of RAS/SPS for Consequential Load Loss. Consequential Load Loss needs to include the concept of local networks. Another way to address this would be to exempt some local networks in the definition of the Bulk Electric System. The performance of existing systems has been designed to be consistent with the concepts of the quoted sentence above from footnote b of Table 1 of the existing TPL standards. There are many instances where some local network customer curtailments or local area load loss has been allowed by local regulatory authorities as long as the overall reliability of the interconnected system was not impacted. This is a result of tradeoffs with the cost and environmental impacts of providing a higher level of reliability in a local area. An attempt to eliminate the concepts contained in footnote b of the existing TPL standards would invalidate local regulatory decisions, place a large unintended cost burden on existing customers and could potentially create criteria that could not be met anytime soon, if ever, as a result of the long lead time required for system improvements. Any attempt to raise the bar by interpreting the definition of Non-Consequential Load as eliminating the concepts of footnote b is considered unacceptable. The new criteria need to clearly maintain these concepts to prevent a large disconnect with existing design criteria. The last sentence in the Definition of Consequential Load Loss (?Although Load which is lost as a result of the Load's response to the transient conditions of the event is considered Consequential Load Loss and is permitted when Consequential Load Loss is allowed, Transmission planning entities are not allowed to rely upon the expectation of such Load loss to meet steady state performance requirements?) seems more appropriate to be requirements. Therefore, please move this sentence to the Notes Section at the beginning of Table 1 as new Item 7.
Arizona Public	Yes and No	We generally agree with the definition but have concerns about a potential unintended consequence. This definition will

Organization	Question 3:	Question 3 Comments:
Service Co.		severely limit the loads that can be classified as ?local Network customers, connected to or supplied by the Faulted element or by the affected area, may occur in certain areas without impacting the overall reliability of the interconnected transmission systems? in footnote b of the existing TPL standards. In combination with raising the bar for loss of Facilities with operating voltages 300 kV or higher (P2, P4 and P5 in the Performance Tables), this definition may result in encouraging entities to connect more loads in a radial fashion or avoid loop connection to improve service reliability just to fit in the Consequential Load Loss definition, ??load no longer being connected to a source??. At a result, service reliability to customer would be adversity impacted without commensurate improvement in overall system reliability.
SRP	No	We generally agree with the definitions by themselves but have concerns about potential unintended consequences. This definition will severely limit the loads that can be classified as ?local Network customers, connected to or supplied by the Faulted element or by the affected area, may occur in certain areas without impacting the overall reliability of the interconnected transmission systems? in footnote b of the existing TPL standards. In combination with raising the bar for loss of Facilities with operating voltages 300 kV or higher (P2, P4 and P5 in the Performance Tables), this definition may result in encouraging entities to connect more loads in a radial fashion or avoid loop connection to improve service reliability just to fit in the Consequential Load Loss definition, ??load no longer being connected to a source??. As a result, service reliability to customer would be adversity impacted without commensurate improvement in overall system reliability. In addition, existing design of many such local networks would normally require RAS/SPS to disconnect loads on local networks in response to contingencies. However, the definition of Non-Consequential Load Loss states that using RAS/SPS is Non-Consequential Load Loss. In the Consideration of Comments on the First Draft of TPL-001-1, page 49, response to First Energy, the SDT states "FERC has determined that any Load loss that is not directly connected to the faulted element is actually Non-Consequential Load loss." We found a similar response to WECC on page 449, item 6. While we do not disagree with the statements made by the SDT, that FERC wants clarification of what is Consequential Load Loss, we do not see where FERC has ruled out the use of RAS/SPS for Consequential Load Loss. Consequential Load Loss needs to include the concept of local networks. Another way to address this would be to exempt some local networks in the definition of the Bulk Electric System. The performance of existing systems has been designed to be consistent with the concepts of the quoted sentence above from footnote b of Table 1 of the existing TPL standards. There are many instances where some local network customer curtailments or local area load loss has been allowed by local regulatory authorities as long as the overall reliability of the interconnected system was not impacted. This is a result of tradeoffs with the cost and environmental impacts of providing a higher level of reliability in a local area. An attempt to eliminate the concepts contained in footnote b of the existing TPL standards would invalidate local regulatory decisions, place a large unintended cost burden on existing customers and could potentially create criteria that could not be met anytime soon, if ever, as a result of the long lead time required for system improvements. Any attempt to raise the bar by interpreting the definition of Non-Consequential Load as eliminating the concepts of footnote b is considered unacceptable. The new criteria need to clearly maintain these concepts to prevent a large disconnect with existing design criteria. The last sentence in the Definition of Consequential Load Loss (?Although Load which is lost as a result of the Load's response to the transient conditions of the event is considered Consequential Load Loss and is permitted when Consequential Load

Organization	Question 3:	Question 3 Comments:
		Loss is allowed, Transmission planning entities are not allowed to rely upon the expectation of such Load loss to meet steady state performance requirements?) seems more appropriate to be requirements. Therefore, please move this sentence to the Notes Section at the beginning of Table 1 as new Item 7.
Tucson Electric Power Company	No	We generally agree with the definitions by themselves but have concerns about potential unintended consequences. This definition will severely limit the loads that can be classified as ?local Network customers, connected to or supplied by the Faulted element or by the affected area, may occur in certain areas without impacting the overall reliability of the interconnected transmission systems? in footnote b of the existing TPL standards. In combination with raising the bar for loss of Facilities with operating voltages 300 kV or higher (P2, P4 and P5 in the Performance Tables), this definition may result in encouraging entities to connect more loads in a radial fashion or avoid loop connection to improve service reliability just to fit in the Consequential Load Loss definition, ??load no longer being connected to a source??. As a result, service reliability to customer would be adversity impacted without commensurate improvement in overall system reliability. In addition, existing design of many such local networks would normally require RAS/SPS to disconnect loads on local networks in response to contingencies. However, the definition of Non-Consequential Load Loss states that using RAS/SPS is Non-Consequential Load Loss. In the Consideration of Comments on the First Draft of TPL-001-1, page 49, response to First Energy, the SDT states "FERC has determined that any Load loss that is not directly connected to the faulted element is actually Non-Consequential Load loss." We found a similar response to WECC on page 449, item 6. While we do not disagree with the statements made by the SDT, that FERC wants clarification of what is Consequential Load Loss, we do not see where FERC has ruled out the use of RAS/SPS for Consequential Load Loss. Consequential Load Loss needs to include the concept of local networks. Another way to address this would be to exempt some local networks in the definition of the Bulk Electric System. The performance of existing systems has been designed to be consistent with the concepts of the quoted sentence above from footnote b of Table 1 of the existing TPL standards. There are many instances where some local network customer curtailments or local area load loss has been allowed by local regulatory authorities as long as the overall reliability of the interconnected system was not impacted. This is a result of tradeoffs with the cost and environmental impacts of providing a higher level of reliability in a local area. An attempt to eliminate the concepts contained in footnote b of the existing TPL standards would invalidate local regulatory decisions, place a large unintended cost burden on existing customers and could potentially create criteria that could not be met anytime soon, if ever, as a result of the long lead time required for system improvements. Any attempt to raise the bar by interpreting the definition of Non-Consequential Load as eliminating the concepts of footnote b is considered unacceptable. The new criteria need to clearly maintain these concepts to prevent a large disconnect with existing design criteria. The last sentence in the Definition of Consequential Load Loss (?Although Load which is lost as a result of the Load's response to the transient conditions of the event is considered Consequential Load Loss and is permitted when Consequential Load Loss is allowed, Transmission planning entities are not allowed to rely upon the expectation of such Load loss to meet steady state performance requirements?) seems more appropriate to be requirements. Therefore, please move this sentence to the Notes Section at the beginning of Table 1 as new Item 7.

Organization	Question 3:	Question 3 Comments:
Modesto Irrigation District		Comments: We generally agree with the definitions by themselves but have concerns about potential unintended consequences. This definition will severely limit the loads that can be classified as ?local Network customers, connected to or supplied by the Faulted element or by the affected area, may occur in certain areas without impacting the overall reliability of the interconnected transmission systems? in footnote b of the existing TPL standards. In combination with raising the bar for loss of Facilities with operating voltages 300 kV or higher (P2, P4 and P5 in the Performance Tables), this definition may result in encouraging entities to connect more loads in a radial fashioner avoid loop connection to improve service reliability just to fit in the Consequential Load Loss definition, ??load no longer being connected to a source??. As a result, service reliability to customer would be adversity impacted without commensurate improvement in overall system reliability. In addition, existing design of many such local networks would normally require AS/SPS to disconnect loads on local networks in response to contingencies. However, the definition of Non-Consequential Load Loss states that using RAS/SPS is Non-Consequential Load Loss. In the Consideration of Comments on the First Draft of TPL-001-1, page 49, response to First Energy, the SDT states "FERC has determined that any Load loss that is not directly connected to the faulted element is actually Non-Consequential Load loss." We found a similar response to WECC on page 449, item 6.While we do not disagree with the statements made by the SDT, that FERC wants clarification of what is Consequential Load Loss, we do not see where FERC has ruled out the use of RAS/SPS for Consequential Load Loss. Consequential Load Loss needs to include the concept of local networks. Another way to address this would be to exempt some local networks in the definition of the Bulk Electric System. The performance of existing systems has been designed to be consistent with the concepts of the quoted sentence above from footnote b of Table 1 of the existing TPL standards. There are many instances where some local network customer curtailments or local area load loss has been allowed by local regulatory authorities as long as the overall reliability of the interconnected system was not impacted. This is a result of tradeoffs with the cost and environmental impacts of providing a higher level of reliability in a local area. An attempt to eliminate the concepts contained in footnote bof the existing TPL standards would invalidate local regulatory decisions, place a large unintended cost burden on existing customers and could potentially create criteria that could not be met anytime soon, if ever, as a result of the long lead time required for system improvements. Any attempt to raise the bar by interpreting the definition of Non-Consequential Load as eliminating the concepts of footnote b is considered unacceptable. The new criteria need to clearly maintain these concepts to prevent a large disconnect with existing design criteria. The last sentence in the Definition of Consequential Load Loss (?Although Load which is lost as a result of the Load's response to the transient conditions of the event is considered Consequential Load Loss and is permitted when Consequential Load Loss disallowed, Transmission planning entities are not allowed to rely upon the expectation of such Load loss to meet steady state performance requirements?) seems more appropriate to be requirements. Therefore, please move this sentence to the Notes Section at the beginning of Table 1 as new Item 7.
Tri-State G&T	No	We generally agree with the definitions by themselves but have concerns about potential unintended consequences. This definition will severely limit the loads that can be classified as ?local Network customers, connected to or supplied by the Faulted element or by the affected area, may occur in certain areas without impacting the overall reliability of the interconnected transmission systems? in footnote b of the existing TPL standards. In combination with raising the bar for

Organization	Question 3:	Question 3 Comments:
		loss of Facilities with operating voltages 300 kV or higher (P2, P4 and P5 in the Performance Tables), this definition may result in encouraging entities to connect more loads in a radial fashion or avoid loop connection to improve service reliability just to fit in the Consequential Load Loss definition, ??load no longer being connected to a source??. As a result, service reliability to customer would be adversity impacted without commensurate improvement in overall system reliability. In addition, existing design of many such local networks would normally require RAS/SPS to disconnect loads on local networks in response to contingencies. However, the definition of Non-Consequential Load Loss states that using RAS/SPS is Non-Consequential Load Loss. In the Consideration of Comments on the First Draft of TPL-001-1, page 49, response to First Energy, the SDT states "FERC has determined that any Load loss that is not directly connected to the faulted element is actually Non-Consequential Load loss." We found a similar response to WECC on page 449, item 6. While we do not disagree with the statements made by the SDT, that FERC wants clarification of what is Consequential Load Loss, we do not see where FERC has ruled out the use of RAS/SPS for Consequential Load Loss. Consequential Load Loss needs to include the concept of local networks. Another way to address this would be to exempt some local networks in the definition of the Bulk Electric System. The performance of existing systems has been designed to be consistent with the concepts of the quoted sentence above from footnote b of Table 1 of the existing TPL standards. There are many instances where some local network customer curtailments or local area load loss has been allowed by local regulatory authorities as long as the overall reliability of the interconnected system was not impacted. This is a result of tradeoffs with the cost and environmental impacts of providing a higher level of reliability in a local area. An attempt to eliminate the concepts contained in footnote b of the existing TPL standards would invalidate local regulatory decisions, place a large unintended cost burden on existing customers and could potentially create criteria that could not be met anytime soon, if ever, as a result of the long lead time required for system improvements. Any attempt to raise the bar by interpreting the definition of Non-Consequential Load as eliminating the concepts of footnote b is considered unacceptable. The new criteria need to clearly maintain these concepts to prevent a large disconnect with existing design criteria. The last sentence in the Definition of Consequential Load Loss (?Although Load which is lost as a result of the Load's response to the transient conditions of the event is considered Consequential Load Loss and is permitted when Consequential Load Loss is allowed, Transmission planning entities are not allowed to rely upon the expectation of such Load loss to meet steady state performance requirements?) seems more appropriate to be requirements. Therefore, please move this sentence to the Notes Section at the beginning of Table 1 as new Item 7.
ColumbiaGrid	No	We generally do not disagree with the definitions by themselves but have concerns about potential unintended consequences. This definition will severely limit the loads that can be classified as ?local Network customers, connected to or supplied by the Faulted element or by the affected area, may occur in certain areas without impacting the overall reliability of the interconnected transmission systems? in footnote b of the existing TPL standards. In combination with raising the bar for loss of Facilities with operating voltages 300 kV or higher (P2, P4 and P5 in the Performance Tables), this definition may result in encouraging entities to connect more loads in a radial fashion or avoid loop connection to improve service reliability just to fit in the Consequential Load Loss definition, ??load no longer being connected to a source??. As a result, service reliability to customer would be adversity impacted without commensurate improvement in

Organization	Question 3:	Question 3 Comments:
		overall system reliability. In addition, existing design of many such local networks would normally require RAS/SPS to disconnect loads on local networks in response to contingencies. However, the definition of Non-Consequential Load Loss states that using RAS/SPS is Non-Consequential Load Loss. In the Consideration of Comments on First Draft of TPL-001-1, page 49, response to First Energy, the SDT states "FERC has determined that any Load loss that is not directly connected to the faulted element is actually Non-Consequential Load loss." We found a similar response to WECC on page 449, item 6. While we do not disagree with the statements made by the SDT, that FERC wants clarification of what is Consequential Load Loss, we do not see where FERC has ruled out the use of RAS/SPS for Consequential Load Loss. Consequential Load Loss needs to include the concept of local networks. Another way to address this would be to exempt some local networks in the definition of the Bulk Electric System. The performance of existing systems has been designed to be consistent with the concepts of the quoted sentence above from footnote b of Table 1 of the existing TPL standards. There are many instances where some local network customer curtailments or local area load loss has been allowed by local regulatory authorities as long as the overall reliability of the interconnected system was not impacted. This is a result of tradeoffs with the cost and environmental impacts of providing a higher level of reliability in a local area. An attempt to eliminate the concepts contained in footnote b of the existing TPL standards would invalidate local regulatory decisions, place a large unintended cost burden on existing customers and could potentially create criteria that could not be met anytime soon, if ever, as a result of the long lead time required for system improvements. Any attempt to raise the bar by interpreting the definition of Non-Consequential Load as eliminating the concepts of footnote b is considered unacceptable. The new criteria need to clearly maintain these concepts to prevent a large disconnect with existing design criteria. The last sentence in the Definition of Consequential Load Loss (?Although Load which is lost as a result of the Load's response to the transient conditions of the event is considered Consequential Load Loss and is permitted when Consequential Load Loss is allowed, Transmission planning entities are not allowed to rely upon the expectation of such Load loss to meet steady state performance requirements?) seems more appropriate to be requirements. Therefore, please move this sentence to the Notes Section at the beginning of Table 1 as new Item 7.
Southern California Edison	No	We generally agree with the definitions by themselves but have concerns about potential unintended consequences. This definition will severely limit the loads that can be classified as ?local Network customers, connected to or supplied by the Faulted element or by the affected area, may occur in certain areas without impacting the overall reliability of the interconnected transmission systems? in footnote b of the existing TPL standards. In combination with raising the bar for loss of Facilities with operating voltages 300 kV or higher (P2, P4 and P5 in the Performance Tables), this definition may result in encouraging entities to connect more loads in a radial fashion or avoid loop connection to improve service reliability just to fit in the Consequential Load Loss definition, ??load no longer being connected to a source??. As a result, service reliability to customer would be adversity impacted without commensurate improvement in overall system reliability. In addition, existing design of many such local networks would normally require RAS/SPS to disconnect loads on local networks in response to contingencies. However, the definition of Non-Consequential Load Loss states that using RAS/SPS is Non-Consequential Load Loss. In the Consideration of Comments on the First Draft of TPL-001-1, page 49, response to First Energy, the SDT states "FERC has determined that any Load loss that is not directly connected to the

Organization	Question 3:	Question 3 Comments:
		faulted element is actually Non-Consequential Load loss." We found a similar response to WECC on page 449, item 6. While we do not disagree with the statements made by the SDT, that FERC wants clarification of what is Consequential Load Loss, we do not see where FERC has ruled out the use of RAS/SPS for Consequential Load Loss. Consequential Load Loss needs to include the concept of local networks. Another way to address this would be to exempt some local networks in the definition of the Bulk Electric System. The performance of existing systems has been designed to be consistent with the concepts of the quoted sentence above from footnote b of Table 1 of the existing TPL standards. There are many instances where some local network customer curtailments or local area load loss has been allowed by local regulatory authorities as long as the overall reliability of the interconnected system was not impacted. This is a result of tradeoffs with the cost and environmental impacts of providing a higher level of reliability in a local area. An attempt to eliminate the concepts contained in footnote b of the existing TPL standards would invalidate local regulatory decisions, place a large unintended cost burden on existing customers and could potentially create criteria that could not be met anytime soon, if ever, as a result of the long lead time required for system improvements. Any attempt to raise the bar by interpreting the definition of Non-Consequential Load as eliminating the concepts of footnote b is considered unacceptable. The new criteria need to clearly maintain these concepts to prevent a large disconnect with existing design criteria. The last sentence in the Definition of Consequential Load Loss (?Although Load which is lost as a result of the Load's response to the transient conditions of the event is considered Consequential Load Loss and is permitted when Consequential Load Loss is allowed, Transmission planning entities are not allowed to rely upon the expectation of such Load loss to meet steady state performance requirements?) seems more appropriate to be requirements. Therefore, please move this sentence to the Notes Section at the beginning of Table 1 as new Item 7.
US Bureau of Reclamation	No	We generally agree with the definitions by themselves but have concerns about potential unintended consequences. This definition will severely limit the loads that can be classified as ?local Network customers, connected to or supplied by the Faulted element or by the affected area, may occur in certain areas without impacting Comment Form for 2nd Draft of Standard TPL-001-1Assess Transmission Future Needs (Project 2006-02)Page 5 of 12the overall reliability of the interconnected transmission systems? in footnote b of the existing TPL standards. In combination with raising the bar for loss of Facilities with operating voltages 300 kV or higher (P2, P4 and P5 in the Performance Tables), this definition may result in encouraging entities to connect more loads in a radial fashion or avoid loop connection to improve service reliability just to fit in the Consequential Load Loss definition, ??load no longer being connected to a source??. As a result, service reliability to customer would be adversity impacted without comments urate improvement in overall system reliability. In addition, existing design of many such local networks would normally require RAS/SPS to disconnect loads on local networks in response to contingencies. However, the definition of Non-Consequential Load Loss states that using RAS/SPS is Non-Consequential Load Loss. In the Consideration of Comments on the First Draft of TPL-001-1, page 49, response to First Energy, the SDT states "FERC has determined that any Load loss that is not directly connected to the faulted element is actually Non-Consequential Load loss." We found a similar response to WECC on page 449, item 6.While we do not disagree with the statements made by the SDT, that FERC wants clarification of what is Consequential Load Loss, we do not see where FERC has ruled out the use of RAS/SPS for Consequential Load Loss. Consequential

Organization	Question 3:	Question 3 Comments:
		Load Loss needs to include the concept of local networks. Another way to address this would be to exempt some local networks in the definition of the Bulk Electric System. The performance of existing systems has been designed to be consistent with the concepts of the quoted sentence above from footnote b of Table 1 of the existing TPL standards. There are many instances where some local network customer curtailments or local area load loss has been allowed by local regulatory authorities as long as the overall reliability of the interconnected system was not impacted. This is a result of tradeoffs with the cost and environmental impacts of providing a higher level of reliability in a local area. An attempt to eliminate the concepts contained in footnote bof the existing TPL standards would invalidate local regulatory decisions, place a large unintended cost burden on existing customers and could potentially create criteria that could not be met anytime soon, if ever, as a result of the long lead time required for system improvements. Any attempt to raise the bar by interpreting the definition of Non-Consequential Load as eliminating the concepts of footnote b is considered unacceptable. The new criteria need to clearly maintain these concepts to prevent a large disconnect with existing design criteria. The last sentence in the Definition of Consequential Load Loss (?Although Load which is lost as a result of the Load's response to the transient conditions of the event is considered Consequential Load Loss and is permitted when Consequential Load Loss is allowed, Transmission planning entities are not allowed to rely upon the expectation of such Load loss to meet steady state performance requirements?) seems more appropriate to be requirements. Therefore, please move this sentence to the Notes Section at the beginning of Table 1 as new Item 7.

Response: With regards to the disincentives of the Consequential Load definition, the Standards do not specify how an entity will comply.

The SDT has made changes to the definitions and has clarified acceptable loss of Load situations. This includes moving the last sentence of the Consequential Load definition to the Table. However, FERC Order 693 Section 1773 does not permit loss of Non-Consequential Load (see reference). There is no provision in the FERC Order to allow loss of Load with the use of an RAS/SPS or to provide exceptions for local networks. Our interpretation of the Order is that FERC is indicating that other alternatives must be pursued to avoid loss of Non-Consequential Load. However, the SDT has provided an exception (Requirement R2.7.4) if a situation arises that is beyond the control of the Transmission Planner or Planning Coordinator that prevent the implementation of a Corrective Action Plan in the required timeframe.

Consequential Load Loss: ~~Load that is no longer connected to a source as a result of the event being studied or which is lost as a result of the load's response to the transient conditions of the event (other than through the action of UVLS or UFLS schemes). Although Load which is lost as a result of the Load's response to the transient conditions of the event is considered Consequential Load Loss and is permitted when Consequential Load Loss is allowed, Transmission planning entities are not allowed to rely upon the expectation of such Load loss to meet steady state performance requirements.~~ All Load that is no longer served by any Transmission Facilities as a result of the Facilities being removed from service by a planned Protection System operation to isolate fault conditions.

Load Reduction: Load that is still connected to the System, but is reduced due to lower voltage conditions following a Planning or Extreme Event.

Non-Consequential Load Loss: Non-Interruptible Load loss other than Consequential Load Loss, Supplemental Load Loss, and Load Reduction.~~. For example, non-Interruptible Load loss that occurs through manual (operator initiated) or automatic operations such as under-voltage Load shedding, under-frequency Load shedding, or Special Protection Systems would be considered Non-Consequential Load Loss~~.

Organization	Question 3:	Question 3 Comments:
Supplemental Load Loss: Load that is disconnected from the network by end-user equipment responding to post-Contingency System conditions. **Note 'b":** Consequential Load Loss, Supplemental Load Loss, Load Reduction, and consequential generation loss ~~is allowed for all events shown.~~are acceptable as a consequence of any Planning or Extreme Event excluding P0. However, Supplemental Load Loss associated with an event shall not be used to meet steady state performance requirements. "1773. The Commission proposed in the NOPR to approve Reliability Standard TPL-002-0 as mandatory and enforceable. In addition, pursuant to section 215(d)(5) of the FPA and § 39.5(f) of our regulations, we proposed to direct NERC to submit a modification to TPL-002-0 that: (1) requires that critical system conditions be determined in the same manner as proposed for TPL-001-0; (2) requires the inclusion of the reliability impact of the entity's existing spare equipment strategy; (3) explicitly requires all generators to ride through the same set of Category B and C contingencies as required for wind generators in Order No. 661; (4) requires documentation of load models used in system studies and supporting rationale for their use; (5) clarifies the phrase "permit operating steps necessary to maintain system control" and (6) clarifies footnote (b) to Table 1 to allow no firm load or firm transactions to be interrupted except for consequential load loss."		
National Grid	No	a. In the Consequential Load Loss definition, the word 'source' needs to be defined or explained further since it is unclear. b. Non-Consequential references non-interruptible load. Non-Interruptible load should be defined. Suggest: "Demand that the end-use customer has not made available to its Load-Serving Entity via contract or agreement for curtailment." c. The Consequential Load definition should specify "Interruptible and Non-Interruptible Load that is no longer connected to a source?" d. The inclusion of "or which is lost as a result of the load's response to the transient conditions of the event (other than through the action of UVLS or UFLS schemes)" confuses the definition of Consequential Load Loss, because of the imbedded exception for steady state performance. It seems that the intent of this provision is to recognize that this type of load loss could occur for either transient or steady state conditions and that Planning Assessments should not be required to remedy this type of situation. However, this does seem to be at odds with the application and stated acceptability of Consequential Load Loss as noted in Table 1. Note: Table 2 has no reference to the treatment of Consequential Load Loss. It may be helpful to address the transient load loss situation in a separate definition. As proposed in the draft, Firm Transmission Service is treated equal to load. In New England and New York, we focus on stressing transfer limits across and within the systems. By so doing, we preserve the internal transfer capabilities by design rather than modeling specific contractual transfers, which may not stress the internal interfaces. The exception is for the inter-Area ties. For inter-Area ties, the import or export capability is comparable to a generating unit, which we believe is acceptable to interrupt. We therefore feel that it should be acceptable to interrupt Firm Transmission Service over inter-Area ties and that Firm Transmission Service shouldn't be treated equally with load. Suggested changes: Change "Consequential Load Loss" to "Consequential Interruption". Change the definition to "Load, Firm Demand, or Firm Transmission Service that is no longer connected ..."Change "Non-Consequential Load Loss" to "Non-Consequential Interruption". Change the definition to "Non-Interruptible Load, Firm Demand, or loss of Firm Transmission Service other than Consequential Interruption that occurs

Organization	Question 3:	Question 3 Comments:
		through manual (operator initiated), automatic operations (such as under-voltage load shedding, under-frequency load shedding, or Special Protection Systems), or uncontrolled loss of a local area which does not significantly impact the Bulk Electric System."
Central Maine Power Company	No	There are a few significant concerns with these definitions: The definitions should be expanded to include interruption of Firm Transmission Service in a manner that is comparable to interruption of load; otherwise, Firm Transmission Service (FTS) is being treated in a manner that is superior to load. (The expansion of the definitions to include FTS would also address stated concerns associated with loss of radial or single facilities over which Firm Transmission arrangements have been made). There are perceived limitations to what constitutes Non-Consequential Load Loss. It must be clear that Non-Consequential load loss allows the cascading loss of a local area that does not adversely impact the BES. It would be impractical and unnecessary to anticipate that every such situation could be or needs to be managed by operator action or automatic control. Non-Interruptible load should be defined as, "Demand that the end-use customer has not made available to its Load-Serving Entity via contract or agreement for curtailment." The Consequential Load definition should specify "Interruptible and Non-Interruptible Load that is no longer connected to a source?" The inclusion of "or which is lost as a result of the load's response to the transient conditions of the event (other than through the action of UVLS or UFLS schemes)" confuses the definition of Consequential Load Loss, because of the imbedded exception for steady state performance. It seems that the intent of this provision is to recognize that this type of load loss could occur for either transient or steady state conditions and that Planning Assessments should not be required to remedy this type of situation. However, this does seem to be at odds with the application and stated acceptability of Consequential Load Loss as noted in Table 1. Note: Table 2 has no reference to the treatment of Consequential Load Loss. It may be helpful to address the transient load loss situation in a separate definition. Recommended Changes: Change "Consequential Load Loss" and definition to "Consequential Interruption - Load, Firm Demand, or Firm Transmission Service that is no longer connected?" Change "Non-Consequential Load Loss" and definition to "Non-Consequential Interruption - Non-Interruptible Load, Firm Demand, or Firm Transmission Service loss other than Consequential Interruption loss that occurs through manual (operator initiated), automatic operations such as under-voltage Load shedding, under-frequency Load shedding, or Special Protection Systems, or uncontrolled loss of a local area which does not significantly impact the BES."
NSTAR Electric	No	There are a few significant concerns with these definitions: The definitions need to be expanded to include interruption of Firm Transmission Service in a manner that is comparable to interruption of load; otherwise, Firm Transmission Service (FTS) is being treated in a manner that is superior to load. The expansion of the definitions to include FTS would also address stated concerns associated with loss of radial or single facilities over which Firm Transmission arrangements have been made. There are perceived limitations to what constitutes Non-Consequential Load Loss. It must be clear that Non-Consequential load loss allows for the cascading loss of a local area that does not adversely impact the BES. It would be impractical and unnecessary to anticipate that every such situation could be or needs to be managed by operator action or automatic control. Non-Interruptible load needs to be defined as," Demand that the end-use customer has not made available to its Load-Serving Entity via contract or agreement for curtailment." The Consequential Load definition should

Organization	Question 3:	Question 3 Comments:
		specify "Interruptible and Non-Interruptible Load that is no longer connected to a source?" The inclusion of "or which is lost as a result of the load's response to the transient conditions of the event (other than through the action of UVLS or UFLS schemes)" confuses the definition of Consequential Load Loss, because of the imbedded exception for steady state performance. It seems that the intent of this provision is to recognize that this type of load loss could occur for either transient or steady state conditions and that Planning Assessments should not be required to remedy this type of situation. However, this does seem to be at odds with the application and stated acceptability of Consequential Load Loss as noted in Table 1. Note: Table 2 has no reference to the treatment of Consequential Load Loss. It may be helpful to address the transient load loss situation in a separate definition. Recommended Changes: Change "Consequential Load Loss" and definition to "Consequential Interruption - Load, Firm Demand, or Firm Transmission Service that is no longer connected?" Change "Non-Consequential Load Loss" and definition to "Non-Consequential Interruption - Non-Interruptible Load, Firm Demand, or Firm Transmission Service loss other than Consequential Interruption loss that occurs through manual (operator initiated), automatic operations such as under-voltage Load shedding, under-frequency Load shedding, or Special Protection Systems, or uncontrolled loss of a local area which does not significantly impact the BES."
ISO New England Inc.	No	There are a few significant concerns with these definitions: The definitions need to be expanded to include interruption of Firm Transmission Service in a manner that is comparable to interruption of load; otherwise, Firm Transmission Service (FTS) is being treated in a manner that is superior to load. (The expansion of the definitions to include FTS would also address stated concerns associated with loss of radial or single facilities over which Firm Transmission arrangements have been made). There are perceived limitations to what constitutes Non-Consequential Load Loss. It must be clear that Non-Consequential load loss allows the cascading loss of a local area that does not adversely impact the BES. It would be impractical and unnecessary to anticipate that every such situation could be or needs to be managed by operator action or automatic control. Non-Interruptible load needs to be defined as," Demand that the end-use customer has not made available to its Load-Serving Entity via contract or agreement for curtailment." The Consequential Load definition should specify "Interruptible and Non-Interruptible Load that is no longer connected to a source?" The inclusion of "or which is lost as a result of the load's response to the transient conditions of the event (other than through the action of UVLS or UFLS schemes)" confuses the definition of Consequential Load Loss, because of the imbedded exception for steady state performance. It seems that the intent of this provision is to recognize that this type of load loss could occur for either transient or steady state conditions and that Planning Assessments should not be required to remedy this type of situation. However, this does seem to be at odds with the application and stated acceptability of Consequential Load Loss as noted in Table 1. Note: Table 2 has no reference to the treatment of Consequential Load Loss. It may be helpful to address the transient load loss situation in a separate definition. Recommended Changes: Change "Consequential Load Loss" and definition to "Consequential Interruption - Load, Firm Demand, or Firm Transmission Service that is no longer connected?" Change "Non-Consequential Load Loss" and definition- "Non-Consequential Interruption - Non-Interruptible Load, Firm Demand, or Firm Transmission Service loss other than Consequential Interruption loss that occurs through manual (operator initiated), automatic operations such as under-voltage Load shedding, under-frequency Load shedding, or Special Protection Systems, or uncontrolled loss of a local area which does not significantly impact the BES."

Organization	Question 3:	Question 3 Comments:
Orlando Utilities Commission	No	The definition refers to "A source" which implies that an area served by several sources that loses access to one source could lose some load since it lost "a source" or "its source". This is a different meaning then the one expressed on the national conference call. As written this definition also implies that the triggering of a UVLS, UFLS or load shedding SPS is not acceptable under the conditions for which non-consequential load loss is not allowed. If the Drafting team's intent is to forbid the use of these devices for certain levels of contingencies then it should be done directly in the standard not hidden in a definition. (While an SPS may or may not include load loss, UVLS and UFLS are effective because of the load loss.)
Response: Definitions have been changed to clarify the definition of Consequential Load Loss. The reference to 'source' has been eliminated. The SDT does not believe that a definition for Non-Interruptible load is necessary because Interruptible Load is defined. Notes have been added to provide conditions and clarifications relative to the interruptions of Firm Transmission Service. The definition of Non-Consequential Load Loss has also been changed to remove the reference to UFLS and UVLS, which are systems used for operations and are not applicable to a planning standard. **Consequential Load Loss:** ~~Load that is no longer connected to a source as a result of the event being studied or which is lost as a result of the load's response to the transient conditions of the event (other than through the action of UVLS or UFLS schemes). Although Load which is lost as a result of the Load's response to the transient conditions of the event is considered Consequential Load Loss and is permitted when Consequential Load Loss is allowed, Transmission planning entities are not allowed to rely upon the expectation of such Load loss to meet steady state performance requirements.~~ All Load that is no longer served by any Transmission Facilities as a result of the Facilities being removed from service by a planned Protection System operation to isolate fault conditions. **Load Reduction:** Load that is still connected to the System, but is reduced due to lower voltage conditions following a Planning or Extreme Event. **Non-Consequential Load Loss:** Non-Interruptible Load loss other than Consequential Load Loss, Supplemental Load Loss, and Load Reduction.~~. For example, non-Interruptible Load loss that occurs through manual (operator initiated) or automatic operations such as under-voltage Load shedding, under-frequency Load shedding, or Special Protection Systems would be considered Non-Consequential Load Loss~~. **Supplemental Load Loss:** Load that is disconnected from the network by end-user equipment responding to post-Contingency System conditions. **Note 'b":** Consequential Load Loss, Supplemental Load Loss, Load Reduction, and consequential generation loss ~~is allowed for all events shown.~~are acceptable as a consequence of any Planning or Extreme Event excluding P0. However, Supplemental Load Loss associated with an event shall not be used to meet steady state performance requirements.		
OPUC	Yes and No	The concept of Consequential Load Loss is generally acceptable. However, the presentation, notes and cross referencing need to be adjusted to avoid confusion.
Response: The SDT has reviewed references for consistency as part of the changes made in response to the comments received in this posting.		
JEA	Yes	Recommend changing "Non-Interruptible Load" to "non-Interruptible Load" (first occurrence of use in the new definition.

Organization	Question 3:	Question 3 Comments:
Response: The first use is at the beginning of a sentence and the SDT feels that the term is correctly capitalized.		
PacifiCorp	Yes and No	? We generally agree with the definition but have concerns about a potential unintended consequence. This definition will severely limit the loads that can be classified as ?local Network customers, connected to or supplied by the Faulted element or by the affected area, may occur in certain areas without impacting the overall reliability of the interconnected transmission systems? in footnote b of the existing TPL standards. In combination with raising the bar for loss of Facilities with operating voltages 300 kV or higher (P2, P4 and P5 in the Performance Tables), this definition may result in encouraging entities to connect more loads in a radial fashion or avoid loop connection to improve service reliability just to fit in the Consequential Load Loss definition, ??load no longer being connected to a source??. At a result, service reliability to customer would be adversity impacted without commensurate improvement in overall system reliability.
Response: With regards to the disincentives of the Consequential Load definition, the Standards do not specify how an entity will comply. However, if Systems are upgraded such that Load is not interrupted for first Contingency events, then there will be improvements to the overall reliability of the System.		
Progress Energy Florida, Inc.	No	The Definitions of ?Consequential Load Loss? and ?Non-Consequential Load Loss?, bring to mind the following concerns: Both Definitions are confusing and unclear as to their intent and meaning, and as presently worded it is PEFs belief that these particular Definitions can be interpreted in ways not intended by the SDT. For example, the definition of Consequential Load Loss contains the phrase "Load that is no longer connected to a source"; presumably this means "Load that is no longer connected to any source", but is not stated as such. PEF would note, however, its disagreement with the definition even with the wording change, given how the definition would be applied. UVLS, UFLS and SPS schemes are excluded from Consequential Load Loss, and thus are not allowed as mitigations for several outage scenarios. The SDT is essentially discouraging Transmission Owners from constructing such schemes, which is counterproductive to reliability, and actually reduces reasonable options left for Transmission Owners to the point that possible outcomes might be a) radializing of systems or b) removing breakers in order to convert load previously deemed Non-Consequential Load into Consequential Load. PEF maintains that where particular outage scenarios dictate the need for UVLS, UFLS and SPS schemes, the right to implement them should be allowed regardless of the category of event, so long as implementation in lieu of a more expensive project will not compromise the reliability of the BES. Whether or not UVLS, UFLS and SPS schemes continue to be categorized as Non-Consequential Load Loss, however, PEF disagrees with the definition given how it would be applied.
Response: With regards to the disincentives of the Consequential Load definition, the Standards do not specify how an entity will comply. The SDT has made changes to the definitions and has clarified acceptable loss of Load situations. This includes moving the last sentence of the Consequential Load definition to the Table. However, FERC Order 693 Section 1773 does not permit loss of Non-Consequential Load (see reference). There is no provision in the FERC Order to allow loss of Load with the use of an RAS/SPS or to provide exceptions for local networks. Our interpretation of the Order is that FERC is indicating that other alternatives must be pursued to avoid loss of Non-Consequential Load. However, the SDT has provided an exception (Requirement R2.6.4) if		

Organization	Question 3:	Question 3 Comments:
a situation arises that is beyond the control of the Transmission Planner or Planning Coordinator that prevent the implementation of a Corrective Action Plan in the required timeframe. “1773. The Commission proposed in the NOPR to approve Reliability Standard TPL-002-0 as mandatory and enforceable. In addition, pursuant to section 215(d)(5) of the FPA and § 39.5(f) of our regulations, we proposed to direct NERC to submit a modification to TPL-002-0 that: (1) requires that critical system conditions be determined in the same manner as proposed for TPL-001-0; (2) requires the inclusion of the reliability impact of the entity’s existing spare equipment strategy; (3) explicitly requires all generators to ride through the same set of Category B and C contingencies as required for wind generators in Order No. 661; (4) requires documentation of load models used in system studies and supporting rationale for their use; (5) clarifies the phrase “permit operating steps necessary to maintain system control” and (6) clarifies footnote (b) to Table 1 to allow no firm load or firm transactions to be interrupted except for consequential load loss.” The definition of Non-Consequential Load Loss has been changed to remove the reference to UFLS and UVLS, which are systems used for operations and are not applicable to a planning standard. **Non-Consequential Load Loss:** Non-Interruptible Load loss other than Consequential Load Loss, Supplemental Load Loss, and Load Reduction.~~. For example, non-Interruptible Load loss that occurs through manual (operator initiated) or automatic operations such as under-voltage Load shedding, under-frequency Load shedding, or Special Protection Systems would be considered Non-Consequential Load Loss~~		
Lafayette Utilities System	No	Non-consequential load loss is described as including non-interruptible load lost that results from manual or automatic operations "such as under-voltage Load shedding, under-frequency Load shedding, or Special Protection Systems ?." It should be clarified that the quoted items are not intended to be exhaustive of the non-manual Load loss situations that would be considered the loss of Non-consequential Load. For instance, some types of industrial applications that are power-quality dependent may be expected to disconnect or shut down in the event of fluctuations in frequency, voltage or current. Foreseeable load interruptions of this nature should be treated as "Non-consequential Load loss" even if the mechanism by which the load disconnects is other than a UFLS, UVLS or SPS system operated by the Distribution Provider.
Response: The definition of ‘Consequential Load Loss’ has been revised to make it more direct. New definitions have also been created to recognize other forms of acceptable Load loss that might occur in response to an event. The definition of Non-Consequential Load Loss has also been changed to remove the reference to UFLS and UVLS, which are systems used for operations and are not applicable to a planning standard. **Consequential Load Loss:** ~~Load that is no longer connected to a source as a result of the event being studied or which is lost as a result of the load’s response to the transient conditions of the event (other than through the action of UVLS or UFLS schemes). Although Load which is lost as a result of the Load’s response to the transient conditions of the event is considered Consequential Load Loss and is permitted when Consequential Load Loss is allowed, Transmission planning entities are not allowed to rely upon the expectation of such Load loss to meet steady state performance requirements.~~ All Load that is no longer served by any Transmission Facilities as a result of the Facilities being removed from service by a planned Protection System operation to isolate fault conditions. **Load Reduction:** Load that is still connected to the System, but is reduced due to lower voltage conditions following a Planning or Extreme Event.		

Organization	Question 3:	Question 3 Comments:
Non-Consequential Load Loss: Non-Interruptible Load loss other than Consequential Load Loss, Supplemental Load Loss, and Load Reduction.~~. For example, non-Interruptible Load loss that occurs through manual (operator initiated) or automatic operations such as under-voltage Load shedding, under-frequency Load shedding, or Special Protection Systems would be considered Non-Consequential Load Loss~~. **Supplemental Load Loss:** Load that is disconnected from the network by end-user equipment responding to post-Contingency System conditions.		
Exelon Transmission Planning	No	UVLS should be allowed for in the definition of non-consequential load shedding in certain lower probability contingencies above 300 kV. The complete disallowance seems to disincentive their use, contrary to the NERC Blackout Recommendation 13c. There is a value in their use for certain voltage stability situations. There does not appear to be any limit (except no cascading) to the amount of acceptable load loss once non-consequential load loss is allowed.
Response: Recommendation 13c appears to be focused on reviewing practices. It does not appear to make a recommendation relative to any of those practices. **"**Recommendation 13c: The Planning Committee, working in conjunction with the regional reliability councils, shall within two years reevaluate the criteria, methods, and practices used for system design, planning, and analysis; and shall report the results and recommendations to the NERC board. This review shall include an evaluation of transmission facility ratings methods and practices, and the sharing of consistent ratings information. Regional reliability councils may consider assembling a regional database that includes the ratings of all Bulk Electric System (100-kV and higher voltage) transmission lines, transformers, phase angle regulators, and phase shifters. This database should be shared with neighboring regions as needed for system planning and analysis. NERC and the regional reliability councils should review the scope, frequency, and coordination of interregional studies, to include the possible need for simultaneous transfer studies. Study criteria will be reviewed, particularly the maximum credible contingency criteria used for system analysis. Each control area will be required to identify, for both the planning and operating time horizons, the planned emergency import capabilities for each major load area." As a result, it is unclear whether the proposed Standard is actually contrary to the recommendation as you suggest. The definition of Non-Consequential Load Loss has also been changed to remove the reference to UFLS and UVLS, which are systems used for operations and are not applicable to a planning standard. **Non-Consequential Load Loss:** Non-Interruptible Load loss other than Consequential Load Loss, Supplemental Load Loss, and Load Reduction.~~. For example, non-Interruptible Load loss that occurs through manual (operator initiated) or automatic operations such as under-voltage Load shedding, under-frequency Load shedding, or Special Protection Systems would be considered Non-Consequential Load Loss~~.		
MidAmerican Energy Company	No	MEC notes that Non-Consequential Load Loss is defined by the SDT to include load dropped by Special Protection Systems while Consequential Load Loss does not exclude load dropped by Special Protection Systems. The SDT should resolve this contradiction between these two definitions by adding an appropriate reference to Special Protection Systems in the Consequential Load Loss.
MRO NERC Standards Review	No	Non-Consequential Load Loss is defined by the SDT to include load dropped by Special Protection Systems while Consequential Load Loss does not exclude load dropped by Special Protection Systems. The SDT should resolve this

Organization	Question 3:	Question 3 Comments:
Subcommittee		contradiction between these two definitions by adding an appropriate reference to Special Protection Systems in the Consequential Load Loss. For Consequential Load Loss definition, The MRO suggests that the last sentence be deleted because it is application text, rather than definition text.
Response: The definition of 'Consequential Load Loss' and 'Non-Consequential Load Loss' have been revised to make them more direct. New definitions have also been created to recognize other forms of acceptable Load loss that might occur in response to an event. **Consequential Load Loss:** ~~Load that is no longer connected to a source as a result of the event being studied or which is lost as a result of the load's response to the transient conditions of the event (other than through the action of UVLS or UFLS schemes). Although Load which is lost as a result of the Load's response to the transient conditions of the event is considered Consequential Load Loss and is permitted when Consequential Load Loss is allowed, Transmission planning entities are not allowed to rely upon the expectation of such Load loss to meet steady state performance requirements.~~ All Load that is no longer served by any Transmission Facilities as a result of the Facilities being removed from service by a planned Protection System operation to isolate fault conditions. **Load Reduction:** Load that is still connected to the System, but is reduced due to lower voltage conditions following a Planning or Extreme Event. **Non-Consequential Load Loss:** Non-Interruptible Load loss other than Consequential Load Loss, Supplemental Load Loss, and Load Reduction.~~. For example, non-Interruptible Load loss that occurs through manual (operator initiated) or automatic operations such as under-voltage Load shedding, under-frequency Load shedding, or Special Protection Systems would be considered Non-Consequential Load Loss~~. **Supplemental Load Loss:** Load that is disconnected from the network by end-user equipment responding to post-Contingency System conditions.		
SERC Dynamics Review Subcommittee	Yes	The modified definitions of Consequential load loss has been appropriately modified to include loss of Load as a result of the Load's response to the transient condition. This recognizes the fact that when subjected to fault voltages of sufficient depth and duration, the resulting Load dynamics will result is loss of Load. Therefore, in order to more accurately replicate real-world behavior through dynamic stability simulation analysis, the proper representation of expected real world loss of load is acceptable. It is also proper that the computation of expected consequential Load loss and duration is not required for single contingency stability analysis. If there is a need, Load loss due to the resulting transmission system configuration would be captured by steady state analysis. Attempts at determining additional Load loss due to load dynamics would not result in any useful information contributing to increased reliability.
Response: In response to other industry comments, the SDT has added a new definition which covers the loss of Load due to Load dynamics - Supplemental Load Loss. It is no longer included as part of Consequential Load Loss. In dynamic studies, Supplemental Load Loss is allowed for any planning or extreme event. The tabulation of Load lost due to a Contingency does not include Supplemental Load Loss.		
Arkansas Electric Coop. Corp.	No	These definitions are still confusing. I offer the following example to explain: If you have a networked transmission line serving several loads, a fault occurs on the line, and the load is dropped because of the line breakers at either end of the line operating. As a result the operator would normally sectionalize the line and isolate the faulted section. This results in the networked line now being two radials and the load is restored. From a planning standpoint the resulting steady state is

Organization	Question 3:	Question 3 Comments:
		the resulting two radials and there should not be any consequential load loss. From an operational standpoint steady state would have occurred at the time of the breakers opening and dropping the load. Operationally the load is consequential load loss. This being a planning standard the standard should require that all the load be served and the transmission line meet the (planning)steady state performance requirements. If the SDT agrees that the resulting radials should be capable of serving all the load and meet the planning steady state performance requirements then I can agree with the definition. If not then I disagree. In the planning environment systems should be studied and assessed based on an switchable element to switchable element basis and not just breaker to breaker. on-Consequential Load Loss - 1. Is it the intent of the SDT that Non-Consequential Load Loss be all firm load other than Consequential Load Loss? If not it should be. Is there a definition of "Non-Interruptible Load"? Didn't see it in the Glossary. 2. additional language should be added stating that the examples given are not inclusive. I have a problem with NERC providing examples in definitions because often the examples are interpreted as the definition itself when in reality their purpose is to clarify.

Response: In your example**,** Consequential Load Loss occurs with the initial event. The standard does not address the size of the Consequential Load or whether alternative sources are required to restore Consequential Load Loss.

Non-Consequential Load is intended to be Firm, which is evident by FERC Order 693 which states:

"1773. The Commission proposed in the NOPR to approve Reliability Standard TPL-002-0 as mandatory and enforceable. In addition, pursuant to section 215(d)(5) of the FPA and § 39.5(f) of our regulations, we proposed to direct NERC to submit a modification to TPL-002-0 that: (1) requires that critical system conditions be determined in the same manner as proposed for TPL-001-0; (2) requires the inclusion of the reliability impact of

the entity's existing spare equipment strategy; (3) explicitly requires all generators to ride through the same set of Category B and C contingencies as required for wind generators in Order No. 661; (4) requires documentation of load models used in system studies and supporting rationale for their use; (5) clarifies the phrase "permit operating steps necessary to maintain system control" and (6) clarifies footnote (b) to Table 1 to allow no firm load or firm transactions to be interrupted except for consequential load loss."

The definition of 'Consequential Load Loss' has been revised to make it more direct. New definitions have also been created to recognize other forms of acceptable Load loss that might occur in response to an event.

Consequential Load Loss: ~~Load that is no longer connected to a source as a result of the event being studied or which is lost as a result of the load's response to the transient conditions of the event (other than through the action of UVLS or UFLS schemes). Although Load which is lost as a result of the Load's response to the transient conditions of the event is considered Consequential Load Loss and is permitted when Consequential Load Loss is allowed, Transmission planning entities are not allowed to rely upon the expectation of such Load loss to meet steady state performance requirements.~~ All Load that is no longer served by any Transmission Facilities as a result of the Facilities being removed from service by a planned Protection System operation to isolate fault conditions.

Organization	Question 3:	Question 3 Comments:
Load Reduction: Load that is still connected to the System, but is reduced due to lower voltage conditions following a Planning or Extreme Event. **Non-Consequential Load Loss:** Non-Interruptible Load loss other than Consequential Load Loss, Supplemental Load Loss, and Load Reduction.~~. For example, non-Interruptible Load loss that occurs through manual (operator initiated) or automatic operations such as under-voltage Load shedding, under-frequency Load shedding, or Special Protection Systems would be considered Non-Consequential Load Loss~~. **Supplemental Load Loss:** Load that is disconnected from the network by end-user equipment responding to post-Contingency System conditions. The SDT didn't feel non-Interruptible Load needed to be defined because Interruptible Load is a defined term		
Tri-State Generation and Transmission Association, Inc.	Yes	We agree with the definitions in concept - that Consequential Load Loss is load which would be unserved following a specific outage event, without any load shedding relay operations. However, there is some ambiguity in how things are defined for N-1-1 contingencies. For example, a firm contract or firm resource would not be automatically curtailed upon the first outage (N-1), but operators may need to curtail the contract or resource schedule to restore the system to acceptable operating limits, or arm relay schemes that would interrupt certain facilities for the second outage (N-1-1). It seems unreasonable that some such operator actions would not be allowed.
Response: The SDT has revised the definitions and tables to provide greater clarification on what can be curtailed. **Consequential Load Loss:** ~~Load that is no longer connected to a source as a result of the event being studied or which is lost as a result of the load's response to the transient conditions of the event (other than through the action of UVLS or UFLS schemes). Although Load which is lost as a result of the Load's response to the transient conditions of the event is considered Consequential Load Loss and is permitted when Consequential Load Loss is allowed, Transmission planning entities are not allowed to rely upon the expectation of such Load loss to meet steady state performance requirements.~~ All Load that is no longer served by any Transmission Facilities as a result of the Facilities being removed from service by a planned Protection System operation to isolate fault conditions. **Load Reduction:** Load that is still connected to the System, but is reduced due to lower voltage conditions following a Planning or Extreme Event. **Non-Consequential Load Loss:** Non-Interruptible Load loss other than Consequential Load Loss, Supplemental Load Loss, and Load Reduction.~~. For example, non-Interruptible Load loss that occurs through manual (operator initiated) or automatic operations such as under-voltage Load shedding, under-frequency Load shedding, or Special Protection Systems would be considered Non-Consequential Load Loss~~. **Supplemental Load Loss:** Load that is disconnected from the network by end-user equipment responding to post-Contingency System conditions. **Note 'b":** Consequential Load Loss, Supplemental Load Loss, Load Reduction, and consequential generation loss ~~is allowed for all events shown.~~are acceptable as a consequence of any Planning or Extreme Event excluding P0. However, Supplemental Load Loss associated with an event shall not be used to meet steady state performance requirements.		
AEP	No	Should clarify that it's load that is no longer connected since the transmission facilities to which it is connected have been outaged as expected by the normal relay response to the event being studied. In other words, the loss of load that is connected to facilities that have cascaded as a result of the event being studied is not consequential load loss (nor is it non-

Organization	Question 3:	Question 3 Comments:
		consequential load loss). See load loss definitions under Attachment D of PJM Manual 14B for additional wording suggestions.
Response: The definition of 'Consequential Load Loss' has been revised to make it more direct, which clarifies that the causal event is a 'fault' that is cleared by 'planned protection system operation'. **Consequential Load Loss:** ~~Load that is no longer connected to a source as a result of the event being studied or which is lost as a result of the load's response to the transient conditions of the event (other than through the action of UVLS or UFLS schemes). Although Load which is lost as a result of the Load's response to the transient conditions of the event is considered Consequential Load Loss and is permitted when Consequential Load Loss is allowed, Transmission planning entities are not allowed to rely upon the expectation of such Load loss to meet steady state performance requirements.~~ All Load that is no longer served by any Transmission Facilities as a result of the Facilities being removed from service by a planned Protection System operation to isolate fault conditions.		
Lakeland Electric	No	Recommend: Consequential: Load that is no longer served because its electrical path to the BES is open as a direct result of system response to the event under study. Load lost due to event induced transients is Consequential load loss; however, the this load must be included in the model during steady-state analysis. Load lost due to UFLS, UVLS, Special Protection Schemes and operator actions are not considered Consequential. Non-Consequential: Load that is no longer served for any reason other than those identified in the definition on Consequential.
Response: The SDT has made changes to the definitions which are conceptually consistent with your suggestion. **Consequential Load Loss:** ~~Load that is no longer connected to a source as a result of the event being studied or which is lost as a result of the load's response to the transient conditions of the event (other than through the action of UVLS or UFLS schemes). Although Load which is lost as a result of the Load's response to the transient conditions of the event is considered Consequential Load Loss and is permitted when Consequential Load Loss is allowed, Transmission planning entities are not allowed to rely upon the expectation of such Load loss to meet steady state performance requirements.~~ All Load that is no longer served by any Transmission Facilities as a result of the Facilities being removed from service by a planned Protection System operation to isolate fault conditions. **Load Reduction:** Load that is still connected to the System, but is reduced due to lower voltage conditions following a Planning or Extreme Event. **Non-Consequential Load Loss:** Non-Interruptible Load loss other than Consequential Load Loss, Supplemental Load Loss, and Load Reduction.~~. For example, non-Interruptible Load loss that occurs through manual (operator initiated) or automatic operations such as under-voltage Load shedding, under-frequency Load shedding, or Special Protection Systems would be considered Non-Consequential Load Loss~~. **Supplemental Load Loss:** Load that is disconnected from the network by end-user equipment responding to post-Contingency System conditions.		
Southern Company Transmission	Yes and No	Yes on the definition. The definition of Consequential Load Loss has been appropriately modified to include loss of load as a result of the load's response to the transient condition. This recognizes the fact that when subjected to fault voltages of sufficient depth and duration, the load undervoltage protection will result in loss of Load. Therefore, in order to more accurately replicate real-world behavior through dynamic stability simulation analysis, the proper representation of expected

Organization	Question 3:	Question 3 Comments:
		real world loss of load is acceptable. No on R3.3.2.1 dealing with Consequential Load. The computation of expected consequential load loss and duration does not result in any useful information contributing to increased reliability. Therefore, this requirement R3.3.2.1 should be dropped. If the computation is not deleted, at least the duration part of it should be dropped. In a Planning analysis, the duration is indeterminate.
Response: New definitions have been created to recognize other forms of acceptable Load loss that might occur in response to an event. The calculation of the potential Load loss for anything other than Consequential Load Loss is not required and the analysis is not expected to include it (see new 'Supplemental Load Loss' definition). However, a calculation of the maximum expected contingent Consequential Load Loss is expected (see Requirement R2.9). Requirement R3.3.2.1 has been rewritten as Requirement R2.9 to more specifically identify what is required and 'duration' has been dropped. **Consequential Load Loss:** ~~Load that is no longer connected to a source as a result of the event being studied or which is lost as a result of the load's response to the transient conditions of the event (other than through the action of UVLS or UFLS schemes). Although Load which is lost as a result of the Load's response to the transient conditions of the event is considered Consequential Load Loss and is permitted when Consequential Load Loss is allowed, Transmission planning entities are not allowed to rely upon the expectation of such Load loss to meet steady state performance requirements.~~ All Load that is no longer served by any Transmission Facilities as a result of the Facilities being removed from service by a planned Protection System operation to isolate fault conditions. **Load Reduction:** Load that is still connected to the System, but is reduced due to lower voltage conditions following a Planning or Extreme Event. **Non-Consequential Load Loss:** Non-Interruptible Load loss other than Consequential Load Loss, Supplemental Load Loss, and Load Reduction.~~. For example, non-Interruptible Load loss that occurs through manual (operator initiated) or automatic operations such as under-voltage Load shedding, under-frequency Load shedding, or Special Protection Systems would be considered Non-Consequential Load Loss~~. **Supplemental Load Loss:** Load that is disconnected from the network by end-user equipment responding to post-Contingency System conditions. **R2.9** The Planning Assessment shall identify the maximum permissible Non-Consequential Load Loss (megawatt Demand) for those Planning Events where Non-Consequential Load Loss is allowed in Table 1.		
North Carolina Electric Membership Corp	No	Although the modified definitions are an improvement over the previous version, addressing the following issues in the Consequential Load Loss definition will further improve clarity:1) Redundancy: The second sentence in the definition says "Although Load which is lost as a result of the Load's response to the transient conditions of the event is considered Consequential Load Loss and is permitted when Consequential Load Loss is allowed,?". It appears that "?and is permitted when Consequential Load Loss is allowed,?" is redundant and may be omitted/deleted -- isn't this *always* permitted for all events, except P0 (normal)? (See head note 4 in Table 1 -- Steady State Performance). 2) Who are the "planning entities"? Suggest replacing with Functional Model terms Transmission Planner and Planning Coordinator. 3) Verbosity: It appears that the intent of the second sentence in the definition can be conveyed more concisely. Consider

Organization	Question 3:	Question 3 Comments:
		changing to "However, relying upon the expected Load loss during transient conditions of the event to meet steady state performance requirements is not allowed." 4) If the verbiage proposed above is found acceptable, we offer a follow-up suggestion. Because the second sentence in the definition essentially characterizes the exception to the allowed Consequential Load Loss during steady state performance evaluation, we suggest moving it out of the definition and appending it within head note 4 in Table 1 -- Steady State Performance. 5) While the Consequential Load Loss definition employs the acronyms UFLS and UVLS, their expanded descriptions have been used in the Non-Consequential Load Loss definition. Suggest that these terms be used consistently in both definitions. Also, why is Special Protection Systems included as an example of what constitutes Non-Consequential Load Loss but is excluded from the list of exceptions to Consequential Load Loss (whereas UVLS and UFLS appear consistently in both)? Perhaps examples of each are needed: Consequential Load Loss examples might be a) tapped load from an outaged networked line from main station breaker to main station breaker of entire line, b) outaged T/T transformer serving radial load that that taps the networked transmission line, c) load served from a radial feeder from a single source. Non-consequential might include a) manual load dump or generator trip to mitigate cascading or uncontrolled load loss or an overload during adverse conditions, b) SPS addressing above, c) UFLS, d) UVLS.
SERC Reliability Review Subcommittee and Planning Standards Subcommittee	No	Comments: Although the modified definitions are a good improvement over the previous version, addressing the following issues in the Consequential Load Loss definition will further improve clarity:1) Redundancy: The second sentence in the definition says "Although Load which is lost as a result of the Load's response to the transient conditions of the event is considered Consequential Load Loss and is permitted when Consequential Load Loss is allowed,?". It appears that "?and is permitted when Consequential Load Loss is allowed,?" is redundant and may be omitted/deleted -- isn't this *always* permitted for all events? (See head note 4 in Table 1 -- Steady State Performance). 2) Who are the "planning entities"? Suggest replacing with Functional Model terms Transmission Planner and Planning Coordinator. 3) Verbosity: It appears that the intent of the second sentence in the definition can be conveyed more concisely. Consider changing to "However, relying upon the expected Load loss during transient conditions of the event to meet steady state performance requirements is not allowed." 4) If the verbiage proposed above is found acceptable, we offer a follow-up suggestion. Because the second sentence in the definition essentially characterizes the exception to the allowed Consequential Load Loss during steady state performance evaluation, we suggest moving it out of the definition and appending it within head note 4 in Table 1 -- Steady State Performance. 5) While the Consequential Load Loss definition employs the acronyms UFLS and UVLS, their expanded descriptions have been used in the Non-Consequential Load Loss definition. Suggest that these terms be used consistently in both

Organization	Question 3:	Question 3 Comments:
		definitions. Also, why is Special Protection Systems included as an example of what constitutes Non-Consequential Load Loss but is excluded from the list of exceptions to Consequential Load Loss (whereas UVLS and UFLS appear consistently in both)?
Response: The SDT has made changes to the definitions and text, which are conceptually consistent with your suggestions. The revised definitions are more direct and eliminate examples. The reference to Planning Entities has been deleted. The definition of Non-Consequential Load Loss has also been changed to remove the reference to UFLS and UVLS, which are systems used for operations and are not applicable to a planning standard. **Consequential Load Loss:** ~~Load that is no longer connected to a source as a result of the event being studied or which is lost as a result of the load's response to the transient conditions of the event (other than through the action of UVLS or UFLS schemes). Although Load which is lost as a result of the Load's response to the transient conditions of the event is considered Consequential Load Loss and is permitted when Consequential Load Loss is allowed, Transmission planning entities are not allowed to rely upon the expectation of such Load loss to meet steady state performance requirements.~~ All Load that is no longer served by any Transmission Facilities as a result of the Facilities being removed from service by a planned Protection System operation to isolate fault conditions. **Load Reduction:** Load that is still connected to the System, but is reduced due to lower voltage conditions following a Planning or Extreme Event. **Non-Consequential Load Loss:** Non-Interruptible Load loss other than Consequential Load Loss, Supplemental Load Loss, and Load Reduction.~~. For example, non-Interruptible Load loss that occurs through manual (operator initiated) or automatic operations such as under-voltage Load shedding, under-frequency Load shedding, or Special Protection Systems would be considered Non-Consequential Load Loss~~. **Supplemental Load Loss:** Load that is disconnected from the network by end-user equipment responding to post-Contingency System conditions.		
ERCOT System Planning	No	ERCOT feels the amount and duration of load loss should be considered in the definition.
Response: Requirement R3.3.2.1 has been rewritten as Requirement R2.9 to more specifically identify what is required. As part of that review, the consensus was that duration is too difficult to accurately prescribe and had no value in a Planning Standard and has been dropped. **R2.9** The Planning Assessment shall identify the maximum permissible Non-Consequential Load Loss (megawatt Demand) for those Planning Events where Non-Consequential Load Loss is allowed in Table 1.		
Alberta Electric System Operator	No	We generally agree with the definitions by themselves but have concerns about regarding application, please refer to response in Q15. The last sentence in the Definition of Consequential Load Loss (?Although Load which is lost as a result of the Load's response to the transient conditions of the event is considered Consequential Load Loss and is permitted when Consequential Load Loss is allowed, Transmission planning entities are not allowed to rely upon the expectation of

Organization	Question 3:	Question 3 Comments:
		such Load loss to meet steady state performance requirements?) seems more appropriate to be requirements. Therefore, recommend moving this sentence to the Notes Section at the beginning of Table 1 as new Item 7.
Response: Definitions have been changed to clarify Consequential Load Loss and the last sentence in the definition has been moved to the tables. **Consequential Load Loss:** ~~Load that is no longer connected to a source as a result of the event being studied or which is lost as a result of the load's response to the transient conditions of the event (other than through the action of UVLS or UFLS schemes). Although Load which is lost as a result of the Load's response to the transient conditions of the event is considered Consequential Load Loss and is permitted when Consequential Load Loss is allowed, Transmission planning entities are not allowed to rely upon the expectation of such Load loss to meet steady state performance requirements.~~ All Load that is no longer served by any Transmission Facilities as a result of the Facilities being removed from service by a planned Protection System operation to isolate fault conditions. **Note 'b":** Consequential Load Loss, Supplemental Load Loss, Load Reduction, and consequential generation loss ~~is allowed for all events shown.~~are acceptable as a consequence of any Planning or Extreme Event excluding P0. However, Supplemental Load Loss associated with an event shall not be used to meet steady state performance requirements.		
FirstEnergy Corp.	No	Regarding the definition of "Consequential Load Loss" we do not agree with the inclusion of Load which is lost as a result of the Load's response to the transient conditions of the event and recommend that the team restrict the definition to account for only load which is directly served by the facilities which were de-energized as a result of the contingency event. To include this within in the definition seems counterproductive to the planning of the transmission system that is required by this reliability standard. Comments on other definitions:1) Planning Coordinator (PC) ? The SDT included a new definition for PC for inclusion in the NERC Glossary of Terms. We agree that this addition better aligns the Glossary with the PC applicable entity which is prevalent in a variety of standards. However, we are curious why the SDT did not indicate a deletion of the Planning Authority (PA) definition and what steps, if any, are being made by NERC to align registry criteria which uses Planning Authority (PA) to the reliability standards use of the PC. 2) Year-One: The definition for Year-One is awkwardly written. We suggest that the definition be adjusted to read "The planning year that begins with the upcoming annual period under study". We believe the attempt to try and delineate between the near-term planning horizon and operational planning horizon is not needed within the TPL standard and that the near-term period should account for the upcoming annual study periods. If not revised, the need for two near-term studies on an annual basis is overly burdensome as many transmission planning organizations perform upcoming annual seasonal assessments for seasonal peak (summer/winter) periods. Requiring an additional two studies near-term does not provide significant benefit. Further reasoning for making the change is the allowance of operating procedures as part of Corrective Action plans. Operating procedures can easily be developed and implemented to mitigate projected performance violations prior to an upcoming seasonal period. 3) BES ? The acronym BES is used throughout the standard but never defined. We suggest this could easily be done in

Organization	Question 3:	Question 3 Comments:
		the purpose statement by simply adding the text "(BES)" after the reference to Bulk Electric System.
Response: Definitions have been changed to clarify Consequential Load Loss. **Consequential Load Loss:** ~~Load that is no longer connected to a source as a result of the event being studied or which is lost as a result of the load's response to the transient conditions of the event (other than through the action of UVLS or UFLS schemes). Although Load which is lost as a result of the Load's response to the transient conditions of the event is considered Consequential Load Loss and is permitted when Consequential Load Loss is allowed, Transmission planning entities are not allowed to rely upon the expectation of such Load loss to meet steady state performance requirements.~~ All Load that is no longer served by any Transmission Facilities as a result of the Facilities being removed from service by a planned Protection System operation to isolate fault conditions. The definition for Planning Coordinator was deleted because the term has already been defined and added to the NERC Glossary by another SDT. The standard does not require that studies are duplicated. If an operating study can be used to demonstrate an assessment for planning purposes, then the operating study would be sufficient. Bulk Electric System will be spelled out in the first reference.		
Entergy Services, Inc.	No	To the extent stakeholders agree with the use of UVLS or other special protection systems to mitigate events and avoid costly infrastructure improvements, the load that is reduced due to the operation of these systems should be capable of being classified as consequential load. In some cases, these systems can enhance grid reliability by removing components that have no significant impact on the BES. The definition of Non-consequential Load Loss includes load dropped by UVLS, UFLS, as well as SPS. However, Consequential Load Loss does not name SPS load loss as an exception, while UVLS and UFLS are named specifically. Shouldn't load lost by SPS action also be included in this exception to reduce confusion? There also seems to be another category missing. Non-consequential load loss could also be a result of "regular" protection systems beyond those directly protecting the faulted equipment. The second part of the Consequential Load loss definition is confusing - "Although Load which is lost as a result of the Load's response to the transient conditions of the event is considered Consequential Load Loss and is permitted when Consequential Load Loss is allowed, Transmission planning entities are not allowed to rely upon the expectation of such Load loss to meet steady state performance requirements." While it Is part of consequential load loss per the definition, planners are not allowed by the standard to plan for it. Therefore, this definition seems to make the Performance Tables incorrect. With this statement we seem to need another term like "Allowable Consequential Load loss."
Response: The SDT has made changes to the definitions and text, which are conceptually consistent with your suggestion. The definition of Non-consequential Load Loss has also been changed to remove the reference to UFLS and UVLS, which are systems used for operations and are not applicable to a planning standard. Examples have been removed from definitions. **Consequential Load Loss:** ~~Load that is no longer connected to a source as a result of the event being studied or which is lost as a result of the load's response to the transient conditions of the event (other than through the action of UVLS or UFLS schemes). Although Load which is lost as a result of the Load's response~~		

Organization	Question 3:	Question 3 Comments:
~~to the transient conditions of the event is considered Consequential Load Loss and is permitted when Consequential Load Loss is allowed, Transmission planning entities are not allowed to rely upon the expectation of such Load loss to meet steady state performance requirements.~~ All Load that is no longer served by any Transmission Facilities as a result of the Facilities being removed from service by a planned Protection System operation to isolate fault conditions. **Load Reduction:** Load that is still connected to the System, but is reduced due to lower voltage conditions following a Planning or Extreme Event. **Non-Consequential Load Loss:** Non-Interruptible Load loss other than Consequential Load Loss, Supplemental Load Loss, and Load Reduction.~~. For example, non-Interruptible Load loss that occurs through manual (operator initiated) or automatic operations such as under-voltage Load shedding, under-frequency Load shedding, or Special Protection Systems would be considered Non-Consequential Load Loss~~. **Supplemental Load Loss:** Load that is disconnected from the network by end-user equipment responding to post-Contingency System conditions.		
BPA Transmission Reliability Program	No	The definition of Consequential Load Loss needs to be modified to include all of the concepts that were contained in footnote b of the existing TPL standards.
Response: "All of the concepts that were contained" are subject to interpretation and there are different interpretations of what the concepts are. Therefore it is not clear what you would like to see. The SDT has continued to revise the definitions in response to the comments received subsequent to the second posting. Notes have been added to provide conditions and clarifications relative to the interruptions of Firm Transmission Service. Hopefully these changes will address your concerns. **Consequential Load Loss:** ~~Load that is no longer connected to a source as a result of the event being studied or which is lost as a result of the load's response to the transient conditions of the event (other than through the action of UVLS or UFLS schemes). Although Load which is lost as a result of the Load's response to the transient conditions of the event is considered Consequential Load Loss and is permitted when Consequential Load Loss is allowed, Transmission planning entities are not allowed to rely upon the expectation of such Load loss to meet steady state performance requirements.~~ All Load that is no longer served by any Transmission Facilities as a result of the Facilities being removed from service by a planned Protection System operation to isolate fault conditions. **Load Reduction:** Load that is still connected to the System, but is reduced due to lower voltage conditions following a Planning or Extreme Event. **Non-Consequential Load Loss:** Non-Interruptible Load loss other than Consequential Load Loss, Supplemental Load Loss, and Load Reduction.~~. For example, non-Interruptible Load loss that occurs through manual (operator initiated) or automatic operations such as under-voltage Load shedding, under-frequency Load shedding, or Special Protection Systems would be considered Non-Consequential Load Loss~~. **Supplemental Load Loss:** Load that is disconnected from the network by end-user equipment responding to post-Contingency System conditions. **Note 'b":** Consequential Load Loss, Supplemental Load Loss, Load Reduction, and consequential generation loss ~~is allowed for all events shown.~~are acceptable as a consequence of any Planning or Extreme Event excluding P0. However, Supplemental Load Loss associated with an event shall not be used to meet steady state performance requirements.		

Organization	Question 3:	Question 3 Comments:
PPL EnergyPlus	Yes	The SDT conference call was helpful to my understanding of non-consequential. As I understand it, non-consequential load loss allows transmission planners to drop load that chooses to be dropped under certain conditions. This is a useful tool as not all loads demand the same quality of service.
Response: Yes, interruption of Interruptible Load is acceptable.		
City Water, Light & Power - Springfield, Illinois	Yes	
Platte River Power Authority	Yes and No	
Tenaska, Inc.	Yes	
Gainesville Regional Utilities	Yes	
US Army Corp of Engineers, Northwestern Division	Yes	
ITC Holdings: ITC, METC, ITC Midwest	Yes	
Florida Power and Light	Yes	None.
Austin Energy	Yes	
LCRA TSC	Yes	

Organization	Question 3:	Question 3 Comments:
NERC and Regional Coordination	Yes	
IESO	Yes	
E.ON U.S. Transmission Planning	Yes	
Duke Energy	Yes	
Oncor Electric Delivery	Yes	NA
Response: Thank you for your response. However, the majority of commenters requested changes to the definitions which can be seen in the summary response above.		

4. **The SDT has modified Requirement R3.5 and eliminated Requirement R3.6 from the first draft to clarify that manual and automatic generation run-back (redispatch) and tripping is allowed as a Corrective Action Plan as long as the conditions in Requirements R3.5.1, R3.5.2 and R3.5.3 are met. Do you agree that generation run-back and tripping (manual and automatic) should be limited by these conditions? If not, please explain why you disagree with the proposed requirements.**

Summary Consideration:

By a nearly unanimous response the industry agrees with the modification to Requirement R3.5 in the latest draft that allows manual and automatic generation run-back and tripping as a response to a single or multiple Contingency. However, in response to the question, only a small percentage of the commenters supported the current modification including the conditions in Requirements R3.5.1, R3.5.2, and R3.5.3 without reservation. A wide variety of changes, additions and clarifications to these conditions were suggested.

The SDT agrees with the industry's majority view that the Sub-requirement conditions for manual and automatic generation run-back or tripping as a response to a single or multiple Contingency and the Sub-requirement conditions for automatic generation tripping as a response to mitigate Stability violations are applicable to all requirements of the TPL Standard and are already stated elsewhere in the Standard or should be eliminated because they are specified in other ways, including national codes such as OSHA and NESC. Consequently, these conditions, specified in Requirements R3.5.1, R3.5.2, and R3.5.3 have been removed from this third draft.

In summary, due to industry comments in response to this question, the SDT changed the following requirements and footnote:

R2.7.1. (now R2.6.1)– added bullet #3: Installation or modification of automatic generation tripping as a response to a single or multiple Contingency to mitigate Stability performance violations.

R2.7.1. (now R2.6.1)– added bullet #4: Installation or modification of manual and automatic generation runback/tripping as a response to a single or multiple Contingency to mitigate Steady State performance violations.

R2.9 The Planning Assessment shall identify the maximum permissible Non-Consequential Load Loss (megawatt Demand) for those Planning Events where Non-Consequential Load Loss is allowed in Table 1.

R3.2 (now R3.3 and R3.3.1) Contingency analyses shall simulate the removal of all elements ~~including those~~ that the Protection System ~~protection is~~ and other automatic controls are expected to disconnect for each contingency without operator intervention.

R3.2.1 (now R3.3.2) For all generators, studies shall consider the minimum steady state voltage limitations ~~of all generators~~ and identify how the generators are ~~treated~~ analyzed in the steady state simulation.

Footnote #10 – Curtailment of firm transmission service, when coupled with the appropriate re-dispatch of resources obligated to re-dispatch, is allowed both as a System adjustment (as identified in the column titled 'Initial System Conditions') and a corrective action, where it can be demonstrated that Facilities remain within applicable Facility Ratings and those adjustments do not result in the shedding of any firm Load.

Where limited options for re-dispatch exist, sensitivities associated with the availability of those resources must be considered. Where Facilities external to the Transmission Planner's planning region are relied upon, Facility Ratings in those regions must be considered.

In addition, the following requirements have been deleted:

R3.5 ~~Manual and automatic generation run-back/tripping is allowed as a response to a single or multiple Contingency if the following conditions are met~~

R3.5.1 ~~All Facilities shall be operating within their Facility Ratings~~

R3.5.2 ~~Such action would not violate safety, equipment, regulatory or statutory requirements~~

R3.5.3 ~~A sustainable, stable, operating condition is maintained~~

R5.4.3 ~~Automatic generation tripping is allowed to mitigate Stability violations if the following conditions are met:~~

R5.4.3.1 ~~All Facilities shall be operating within their Facility Ratings~~

R5.4.3.2 ~~Such action would not violate safety, equipment, regulatory or statutory requirements~~

R5.4.3.3 ~~A sustainable, stable, operating condition is maintained~~

Organization	Question 4:	Question 4 Comments:
Dominion - Electric Transmission Planning	No	We generally agree with the modification, but feel that further clarification needs to be added as follows -- "Neither generation run-back (redispatch) nor tripping should be allowed to address deficiencies identified in single contingency (N-1) studies should the full output of the generation choose to be considered as a capacity resource". Should generation run-back be allowed, then a NERC Reliability Standard should be developed to require generator field testing to prove that generation run-back is a viable solution.
Duke Energy	Yes	Generation run-back and tripping should be allowed and the proposed sub-requirements are appropriate.
Progress Energy Carolinas	Yes	Furthermore, PEC believes that generation run-back and tripping should not be allowed as a CAP for N-1 events with the possible exception of small reductions of generation.

Organization	Question 4:	Question 4 Comments:
BCTC	Yes	We agree that runback/tripping should be permitted for all contingencies. However, we are concerned that listing runback/tripping as an acceptable alternative, at least as currently worded, may encourage use when system reinforcements should be built. BCTC would prefer TPL-001 to be silent on this issue and that R3.5 be deleted. The list of conditions is very generic and should apply to all of TPL-001. If R3.5 is retained, the list of conditions should also require that all generation reserves requirements are met.
ITC Holdings: ITC, METC, ITC Midwest	No	We do not believe that generation runback or tripping should be a CAP for a single contingency. This is particularly true if the generation scheme puts the system one contingency away from another potential condition requiring corrective action, such as load shedding. At a minimum R3.5.3 needs further definition as to what a ?sustainable, stable, operating conditions? is. For example, creating another N-1 scenario is not a sustainable condition. Allowing for SPS is not raising the bar.
AEP	No	Generator tripping should not be regarded the same as generator runback. With tripping, a resource is lost from the system and there is no assurance that it can be restored to service within a reasonable time. Runback allows the resource to stay connected and the original MW level is potentially restorable if the precipitating factors for runback can be resolved. The generator may be valuable for MVAR as well as MW. The existing TPL standards imply that generator tripping is not permissible in connection with Category B events in that Table 1 footnote b does not mention it, whereas it is mentioned in connection with Category C events in footnote c; we agree with this. Generation is a system resource and should be protected against the more common single contingency transmission events. We would like to see the present implied restriction on generator tripping following single contingencies to be maintained and clearly articulated in the new standard, with a provision for regional variance. In contrast to tripping, what the standard has now for manual or automatic runback in R3.5 is okay.
Response: By a nearly unanimous response the Industry favors manual and automatic generation run-back and tripping as a response to a single or multiple Contingency. Therefore, the SDT has modified Sub-requirement R3.5 for Contingency events and relocated it to become Sub-requirement R2.6.1- bullet #4. Likewise, the SDT has modified Sub-requirement R5.4.3 for Stability events and relocated it to become Sub-requirement R2.6.1- bullet #3. **R2.6.1. – bullet #3:** Installation or modification of automatic generation tripping as a response to a single or multiple Contingency to mitigate Stability performance violations. **R2.6.1. – bullet #4:** Installation or modification of manual and automatic generation runback/tripping as a response to a single or multiple Contingency to mitigate Steady State performance violations.		
NPCC	No	We do not feel that R3.5.1, R3.5.2 and R3.5.3 are limiting enough. Add paragraph 3.5.4 "Manual and automatic generator tripping shall not have an Adverse Reliability Impact."
Northeast Utilities	No	Northeast Utilities has participated with ISO-NE and NPCC and supports the comments filed by those organizations.

Organization	Question 4:	Question 4 Comments:
TVA System Planning	Yes	Suggest applicable voltage limits must also be maintained during runback and tripping.
National Grid	No	We do not feel that R3.5.1, R3.5.2 and R3.5.3 are limiting enough. We suggest adding a paragraph which be numbered 3.5.4 and would read "Manual and automatic generator tripping shall not have a significant adverse impact on the system."
Tenaska, Inc.	Yes	R.3.3.2.2 needs some re-wording to clarify that generator runback (re-dispatch) and tripping are allowed.
Gainesville Regional Utilities	No	R3.5.3 is somewhat ambiguous. We need clarification as to whether the system needs to prepare for the next contingency (a secure state) or whether it needs to be maintained in a stable operating condition which is sustainable but not secure.
Hydro-Québec TransEnergie (HQT)	No	We do not feel that R3.5.1, R3.5.2 and R3.5.3 are limiting enough. Add paragraph 3.5.4 "Manual and automatic generator tripping shall not have an Adverse Reliability Impact."
Central Maine Power Company	No	R3.5.1, R3.5.2 and R3.5.3 are not limiting enough. Add paragraph 3.5.4 "Automatic generator tripping shall not impose undue complexity and risk to the operation and reliability of the system."
NSTAR Electric	No	R3.5.1, R3.5.2 and R3.5.3 are not limiting enough. Add paragraph 3.5.4 "Automatic generator tripping schemes shall not be overly complex and risk to the operation and reliability of the system." Complex SPSs or multiple installations of SPSs can have an adverse impact on the ability to reliably operate the system, especially during maintenance outage conditions.
New York Independent System Operator	No	We do not feel that R3.5.1, R3.5.2 and R3.5.3 are limiting enough. Add paragraph 3.5.4 "Manual and automatic generator tripping shall not have an Adverse Reliability Impact."
ISO New England Inc.	No	We do not feel that R3.5.1, R3.5.2 and R3.5.3 are limiting enough. Add paragraph 3.5.4 "Manual and automatic generator tripping shall not have a significant adverse impact on the system."
Response: The SDT appreciates your suggested improvements. However, the SDT has eliminated these conditions in Sub-requirements R3.5.1, R3.5.2 and R3.5.3 for Contingency events as well as similar conditions in Sub-requirements R5.4.3.1, R5.4.3.2 and R5.4.3.3 for Stability events in the third draft. Accordingly, the SDT has modified Sub-requirement R3.5 for Contingency events and relocated it to become Sub-requirement R2.6.1- bullet #4. Likewise, the SDT has		

Organization	Question 4:	Question 4 Comments:
modified Sub-requirement R5.4.3 for Stability events and relocated it to become Sub-requirement R2.6.1 – bullet #3. **R2.6.1. – bullet# 3:** Installation or modification of automatic generation tripping as a response to a single or multiple Contingency to mitigate Stability performance violations. **R2.6.1. – bullet #4:** Installation or modification of manual and automatic generation runback/tripping as a response to a single or multiple Contingency to mitigate Steady State performance violations.		
City Water, Light & Power - Springfield, Illinois	Yes and No	There should be a time limit for manual generation runback.
Response: As stated in Footnote 10 of Table 1, planned System adjustments are allowed, unless precluded in the Requirements, to keep Facilities within the Facility Ratings, if such adjustments are executable within the time duration applicable to the Facility Ratings. **Footnote #10** – Curtailment of firm transmission service, when coupled with the appropriate re-dispatch of resources obligated to re-dispatch, is allowed both as a System adjustment (as identified in the column titled 'Initial System Conditions') and a corrective action, where it can be demonstrated that Facilities remain within applicable Facility Ratings and those adjustments do not result in the shedding of any firm Load. Where limited options for re-dispatch exist, sensitivities associated with the availability of those resources must be considered. Where Facilities external to the Transmission Planner's planning region are relied upon, Facility Ratings in those regions must be considered.		
Manitoba Hydro	Yes	Manitoba Hydro commends the SDT for recognizing that generator run-back and tripping is a valid option in the transmission planner's tool box, not unlike more expensive devices such as FACTs devices. Can the SDT confirm that the conditions in R3.5.1, R3.5.2 and R3.5.3 apply to post generator tripping period. R3.5.2: The references to safety violations and equipment requirements are very generic. It is difficult to imagine what type of safety violation may be caused by a generator trip considering this is a widely used practice in many regions. The SDT should also be more specific as to what is meant by "equipment requirements". The requirement to be within Facility (equipment) Ratings is already covered in R3.5.1. Manitoba Hydro recommends the to "safety, equipment" be deleted from R3.5.2. Other Requirement R3 Comments:R3: In the first sentence, "perform analysis? should be changed to "perform studies? and the word ?studies? after Horizon should be deleted. R3.2: Delete the words ?including those?. R3.2.1: Can the SDT clarify what is required? Is the requirement to ensure the generator undervoltage ride through is not violated? If so, Manitoba Hydro recommends overvoltage ride-through (maximum voltage) should also be added. Also, is ?For all Generators? and ?of all generators? both needed?

Organization	Question 4:	Question 4 Comments:
		R3.3.1: Appears to be a repeat of R3.1.R3.3.2: R3.3.1 requires performance criteria to be met for Planning Events, which includes both single and multiple contingency events. Doesn't R3.3.2 repeat R3.3.1? R3.3.2.1:The requirement to report duration of the Consequential Load Loss would be a wild guess as the duration will relate to the nature of the event, so Manitoba Hydro questions the value. For example, the event is a simple lightning hit on a line, the restoration time is expected to be short, but if the cause of the line loss is a tornado that takes down structures, it could be days. Can the SDT clarify the requirement. R3.3.2.2: Are ?Transmission reconfiguration changes and redispatch of generators? only allowed for single contingencies? Is redispatch allowed if such redispatch results in curtailment of Firm Transmission Service? R3.3.2: It appears that R3.3.2 can be deleted, and its subrequirements placed under R3.3.3: The contingencies that ?are expected to produce more severe System impacts? are very likely multiple contingencies. Since there are numerous combinations of multiple contingencies, it is an impossible task to explain why the ?remaining Contingencies were not selected. If this is not the intent, can the SDT explain what is required? The requirement should simply allow the planner the discretion to use judgment to select these more severe Contingencies, and the elements they are applied to, with explanation as to why they are expected to be more severe.

Response: The SDT has eliminated these conditions in Sub-Requirements R3.5.1, R3.5.2 and R3.5.3 for Contingency events as well as similar conditions in Sub-Requirements R5.4.3.1, R5.4.3.2 and R5.4.3.3 for Stability events in the third draft. Accordingly, the SDT has modified Sub-Requirement R3.5 for Contingency events and relocated to become Sub-Requirement R2.6.1. Likewise, the SDT has modified Sub-Requirement R5.4.3 for Stability events and relocated to become Sub-Requirement R2.6.1.

R3.5.2 – The SDT has modified Sub-requirement R3.5 for Contingency events and relocated it to become Sub-requirement R2.6.1 – bullet #4. Likewise, the SDT has modified Sub-requirement R5.4.3 for Stability events and relocated it to become Sub-requirement R2.6.1 – bullet #3.

R2.6.1. – bullet #3: Installation or modification of automatic generation tripping as a response to a single or multiple Contingency to mitigate Stability performance violations.

R2.6.1. – bullet #4: Installation or modification of manual and automatic generation runback/tripping as a response to a single or multiple Contingency to mitigate Steady State performance violations.

The SDT appreciates your suggested changes to Requirement R3 but after reviewing the suggestion has decided that the original wording is correct.

Your suggested change to Requirement R3.2 (now Requirement R3.3.1) has been adopted.

R3.3.1 Contingency analyses shall simulate the removal of all elements ~~including those~~ that the Protection System ~~protection is~~ and other automatic controls are expected to disconnect for each contingency without operator intervention.

Requirement R3.2.1 (now Requirement R3.3.2) is intended to require realistic representation in simulations of whether a generator will trip due to low voltage; it is not a requirement that the generator be able to ride through a low voltage condition. Your suggested deletion was accepted.

Organization	Question 4:	Question 4 Comments:
R3.3.2 For all generators, studies shall consider the minimum steady state voltage limitations ~~of all generators~~ and identify how the generators are ~~treated~~ analyzed in the steady state simulation. Regarding your comments on old Requirements R3.3.1 and R3.3.2, there is a subtle difference. Requirement R3.3.1 addresses performance criteria, while Requirement R3.3.2 deals with the Contingencies that need to be evaluated and to which the performance criteria should be applied. The requirement to report duration of Consequential Load Loss in R3.3.2.1 (now Requirement R2.9) has been removed from this draft. **R2.9** The Planning Assessment shall identify the maximum permissible Non-Consequential Load Loss (megawatt Demand) for those Planning Events where Non-Consequential Load Loss is allowed in Table 1. Curtailment of Firm Transmission Service is explained in the new footnote #10 in the Table. **Footnote #10** – Curtailment of firm transmission service, when coupled with the appropriate re-dispatch of resources obligated to re-dispatch, is allowed both as a System adjustment (as identified in the column titled 'Initial System Conditions') and a corrective action, where it can be demonstrated that Facilities remain within applicable Facility Ratings and those adjustments do not result in the shedding of any firm Load. Where limited options for re-dispatch exist, sensitivities associated with the availability of those resources must be considered. Where Facilities external to the Transmission Planner's planning region are relied upon, Facility Ratings in those regions must be considered. The SDT has considered your comments regarding the requirement to explain why less severe Contingencies were not selected; however, there were few other comments that raised this concern, and the SDT has retained the original language.		
Los Angeles Department of Water and Power	Yes and No	R3.5.1, 3.5.2, and 3.5.3 are redundant and already covered in other standards or safety codes such as FAC, TOP, OSHA, NRC, NESC, etc. If these kind of "reminder" is required here just to make sure planners do not ignore all the relevant codes, then it could also be argued that an absence of such reminders in other section would mean that these codes do not need to be observed unless they are specifically called out. I think they should all be deleted to avoid such twisted argument but potential loopholes.
Transmission Agency of Northern California	Yes	We agree. However, the conditions listed in R3.5.1, R3.5.2 and R3.5.3 are applicable to the overall TPL Standard. Their specific listing in R3.5 gives the impression that these Requirements are only applied to R3.5 and not to the other Requirements in this Standard. In other words, are there any Requirements in this Standard that R3.5.1, R3.5.2 and R3.5.3 do not apply to? Therefore, we suggest TPL-001-1 be silent on this issue and move R3.5.1 through R3.5.3, (and the equivalent in the stability study R5.4.3.1 through R5.4.3.3) to a Requirement applicable to Assessment studies in general, such as the bullet points in the Performance Tables.
Pacific Gas and Electric Co.	Yes	We agree. However, the conditions listed in R3.5.1, R3.5.2 and R3.5.3 are applicable to the overall TPL Standard. Their specific listing in R3.5 gives the impression that these Requirements are only applied to R3.5 and not to the other Requirements in this Standard. In other words, are there any Requirements in this Standard that R3.5.1, R3.5.2 and R3.5.3 do not apply to? Therefore, we suggest TPL-001-1 be silent on this issue and move R3.5.1 through R3.5.3, (and the equivalent in the stability

Organization	Question 4:	Question 4 Comments:
		study R5.4.3.1 through R5.4.3.3) to a Requirement applicable to Assessment studies in general, such as the bullet points in the Performance Tables.
Public Service Company of New Mexico	Yes	We agree. However, the conditions listed in R3.5.1, R3.5.2 and R3.5.3 are applicable to the overall TPL Standard. Their specific listing in R3.5 gives the impression that these Requirements are only applied to R3.5 and not to the other Requirements in this Standard. In other words, are there any Requirements in this Standard that R3.5.1, R3.5.2 and R3.5.3 do not apply to? Therefore, we suggest TPL-001-1 be silent on this issue and move R3.5.1 through R3.5.3, (and the equivalent in the stability study R5.4.3.1 through R5.4.3.3) to a Requirement applicable to Assessment studies in general, such as the bullet points in the Performance Tables.
JEA	Yes and No	R3.5.1 JEA does not understand what measure will be applied to determine that Facility Ratings were not violated during the generator run-back period.R3.5.2 JEA does not understand what measure will be applied to determine compliance that generator trips and runbacks will not violate safety, equipment, regulatory, or statutory requirements.R3.5.3 JEA does not understand what is meant by the word "Sustainable". Needs a practical definition.
PacifiCorp	Yes and No	? We generally agree, however, the conditions listed in R3.5.1, R3.5.2 and R3.5.3 are applicable to the overall TPL Standard. Their specific listing in R3.5 gives the impression that these Requirements are only applied to R3.5 and not to the other Requirements in this Standard. In other words, are there any Requirements in this Standard that R3.5.1, R3.5.2 and R3.5.3 do not apply to? Therefore, we suggest moving R3.5.1 through R3.5.3, (and the equivalent in the stability study R5.4.3.1 through R5.4.3.3) to a Requirement applicable to Assessment studies in general, such as the bullet points in the Performance Tables.
Puget Sound Energy, Inc.	Yes	We agree. However, the conditions listed in R3.5.1, R3.5.2 and R3.5.3 are applicable to the overall TPL Standard. Their specific listing in R3.5 gives the impression that these Requirements are only applied to R3.5 and not to the other Requirements in this Standard. In other words, are there any Requirements in this Standard that R3.5.1, R3.5.2 and R3.5.3 do not apply to? Therefore, we suggest TPL-001-1 be silent on this issue and move R3.5.1 through R3.5.3, (and the equivalent in the stability study R5.4.3.1 through R5.4.3.3) to a Requirement applicable to Assessment studies in general, such as the bullet points in the Performance Tables.
Idaho Power Company	Yes	We generally agree, however, the conditions listed in R3.5.1, R3.5.2 and R3.5.3 are applicable to the overall TPL Standard. Their specific listing in R3.5 gives the impression that these Requirements are only applied to R3.5 and not to the other Requirements in this Standard. In other words, are there any Requirements in this Standard that R3.5.1, R3.5.2 and R3.5.3 do not apply to? Therefore, we suggest TPL-001-1 be silent on this issue and move R3.5.1 through R3.5.3, (and the equivalent in the stability study R5.4.3.1 through R5.4.3.3) to a Requirement applicable to Assessment studies in general, such as the bullet points in the Performance Tables.

Organization	Question 4:	Question 4 Comments:
SMUD	Yes	We agree. However, the conditions listed in R3.5.1, R3.5.2 and R3.5.3 are applicable to the overall TPL Standard. Their specific listing in R3.5 gives the impression that these Requirements are only applied to R3.5 and not to the other Requirements in this Standard. In other words, are there any Requirements in this Standard that R3.5.1, R3.5.2 and R3.5.3 do not apply to? Therefore, we suggest TPL-001-1 be silent on this issue and move R3.5.1 through R3.5.3, (and the equivalent in the stability study R5.4.3.1 through R5.4.3.3) to a Requirement applicable to Assessment studies in general, such as the bullet points in the Performance Tables. Reference 3.5.1: In cases where an SPS is deployed to reduce thermal overloads such that flows are brought within established facility ratings, but, for a short duration (seconds) until it is fully executed, the facility flows exceed the established rating, is that considered a violation or an acceptable engineering judgment that facilities are judiciously being brought to operate within ratings? Or, should the facility owner ensure establishment of a documented rating even for the short duration of seconds?
Progress Energy Florida, Inc.	No	PEF does not disagree with the conditions described in Requirements R3.5.1, R3.5.2 and R3.5.3 when taken in particular contexts. PEF, however, is compelled to check "no" for this question due to the fact that no specification has been made as to when such CAPs can be applied. PEF feels that the CAPs specified (as well as the curtailment of Firm Transactions and Non-Consequential Load) should be allowed following any N-1 event, and also as system adjustment actions in between the two events of a P6 event. Given that no such specification has been made here, PEF objects to the wording, and suggests that the language be modified to clarify that the application of these CAPs are allowable after N-1 events and in between the two events of Event P6.
Sierra Pacific Power Company / Nevada Power Company	Yes	We generally agree, however, the conditions listed in R3.5.1, R3.5.2 and R3.5.3 are applicable to the overall TPL Standard. Their specific listing in R3.5 gives the impression that these Requirements are only applied to R3.5 and not to the other Requirements in this Standard. In other words, are there any Requirements in this Standard that R3.5.1, R3.5.2 and R3.5.3 do not apply to? Therefore, we suggest TPL-001-1 be silent on this issue and move R3.5.1 through R3.5.3, (and the equivalent in the stability study R5.4.3.1 through R5.4.3.3) to a Requirement applicable to Assessment studies in general, such as the bullet points in the Performance Tables.
Black Hills Corporation	Yes	We agree. However, the conditions listed in R3.5.1, R3.5.2 and R3.5.3 are applicable to the overall TPL Standard. Their specific listing in R3.5 gives the impression that these Requirements are only applied to R3.5 and not to the other Requirements in this Standard. In other words, are there any Requirements in this Standard that R3.5.1, R3.5.2 and R3.5.3 do not apply to? Therefore, we suggest TPL-001-1 be silent on this issue and move R3.5.1 through R3.5.3, (and the equivalent in the stability study R5.4.3.1 through R5.4.3.3) to a Requirement applicable to Assessment studies in general, such as the bullet points in the Performance Tables.
Arizona Public Service Co.	Yes and No	We generally agree, however, the conditions listed in R3.5.1, R3.5.2 and R3.5.3 are applicable to the overall TPL Standard. Their specific listing in R3.5 gives the impression that these Requirements are only applied to R3.5 and not to the other

Organization	Question 4:	Question 4 Comments:
		Requirements in this Standard. In other words, are there any Requirements in this Standard that R3.5.1, R3.5.2 and R3.5.3 do not apply to? Therefore, we suggest moving R3.5.1 through R3.5.3, (and the equivalent in the stability study R5.4.3.1 through R5.4.3.3) to a Requirement applicable to Assessment studies in general, such as the bullet points in the Performance Tables.
Florida Power and Light	No	The sub-requirements of R3.5 are not clear as to whether the conditions apply to before or after generator run-back/tripping and mixes together N-1 and N-2 contingencies. In addition, the phrase "sustainable, stable, operating condition" in R3.5.3. is ambiguous as to whether it means the system is secure (prepared for the next contingency), or the system is maintained in a stable operating condition which is sustainable but not secure.
Exelon Transmission Planning	Yes and No	We agree that manual and automatic generation run-back and tripping should be allowed in these situations. We do not agree with the portion of R3.5.2 that states that non-compliance would result if the action were to violate statutory or regulatory requirements. A local governmental body could impose a restriction that would then trigger NERC compliance issues without independent or sufficient review. Other regulatory entities have their own enforcement mechanisms. It should be clear that SPSs, by definition, are allowed for other purposes than generation runback or tripping (such as system reconfiguration with automated breaker operation).
SRP	Yes	We agree. However, the conditions listed in R3.5.1, R3.5.2 and R3.5.3 are applicable to the overall TPL Standard. Their specific listing in R3.5 gives the impression that these Requirements are only applied to R3.5 and not to the other Requirements in this Standard. In other words, are there any Requirements in this Standard that R3.5.1, R3.5.2 and R3.5.3 do not apply to? Therefore, we suggest TPL-001-1 be silent on this issue and move R3.5.1 through R3.5.3, (and the equivalent in the stability study R5.4.3.1 through R5.4.3.3) to a Requirement applicable to Assessment studies in general, such as the bullet points in the Performance Tables.
Tucson Electric Power Company	Yes	We agree. However, the conditions listed in R3.5.1, R3.5.2 and R3.5.3 are applicable to the overall TPL Standard. Their specific listing in R3.5 gives the impression that these Requirements are only applied to R3.5 and not to the other Requirements in this Standard. In other words, are there any Requirements in this Standard that R3.5.1, R3.5.2 and R3.5.3 do not apply to? Therefore, we suggest TPL-001-1 be silent on this issue and move R3.5.1 through R3.5.3, (and the equivalent in the stability study R5.4.3.1 through R5.4.3.3) to a Requirement applicable to Assessment studies in general, such as the bullet points in the Performance Tables.
SERC Dynamics Review Subcommittee	Yes	Generation run-back and tripping should be allowed and the proposed sub-requirements are appropriate.

Organization	Question 4:	Question 4 Comments:
Modesto Irrigation District	Yes	Comments: We agree. However, the conditions listed in R3.5.1, R3.5.2 and R3.5.3 are applicable to the overall TPL Standard. Their specific listing in R3.5 gives the impression that these Requirements are only applied to R3.5 and not to the other Requirements in this Standard. In other words, are there any Requirements in this Standard that R3.5.1, R3.5.2 and R3.5.3 do not apply to? Therefore, we suggest TPL-001-1 be silent on this issue and move R3.5.1 through R3.5.3, (and the equivalent in the stability study R5.4.3.1 through R5.4.3.3) to a Requirement applicable to Assessment studies in general, such as the bullet points in the Performance Tables.
Midwest ISO	Yes and No	Under the subrequirement of R3.5.2 it may not be possible for the PC/TP to determine whether the safety, equipment, regulatory or statutory requirements are violated without collaboration with the Transmission Owner and/or the Generator Owner. Therefore, if this subrequirement is retained it should be amended to include the following sentence: "Applicable Transmission Owners and/or Generator Owners shall collaborate with the PC/TP in determining whether such action would violate safety, equipment, regulatory or statutory requirements".
Tri-State Generation and Transmission Association, Inc.	Yes	Agree with the described corrective actions, but wonder whether the sub-requirements R3.5.1 - R3.5.3 must be specifically listed.
Tri-State G&T	Yes	We agree. However, the conditions listed in R3.5.1, R3.5.2 and R3.5.3 are applicable to the overall TPL Standard. Their specific listing in R3.5 gives the impression that these Requirements are only applied to R3.5 and not to the other Requirements in this Standard. In other words, are there any Requirements in this Standard that R3.5.1, R3.5.2 and R3.5.3 do not apply to? Therefore, we suggest TPL-001-1 be silent on this issue and move R3.5.1 through R3.5.3, (and the equivalent in the stability study R5.4.3.1 through R5.4.3.3) to a Requirement applicable to Assessment studies in general, such as the bullet points in the Performance Tables.
Southern Company Transmission	No	Generation run-back and tripping should be allowed and most of the proposed sub-requirements are appropriate. However, R3.5.2 is overly broad. We suggest that regulatory and statutory requirements should be deleted from R3.5.2.
NERC and Regional Coordination	No	Delete R3.5.2 as redundant. The limit data provided by the asset owners is expected to ensure that safety, equipment, regulatory and statutory requirements are met. For example to require the PC to ensure that equipment is not at risk would require the PC to make financial decisions that belong to the asset owner (e.g. the owner may be willing to exchange loss of equipment life for short term financial gains).R3.5.3 - the term sustainable, stable condition is not defined. Further the

Organization	Question 4:	Question 4 Comments:
		maintenance of such a state is beyond a PC's capability.
ColumbiaGrid	Yes	We generally agree, however, the conditions listed in R3.5.1, R3.5.2 and R3.5.3 are applicable to the overall TPL Standard. Their specific listing in R3.5 gives the impression that these Requirements are only applied to R3.5 and not to the other Requirements in this Standard. In other words, are there any Requirements in this Standard that R3.5.1, R3.5.2 and R3.5.3 do not apply to? Therefore, we suggest TPL-001-1 be silent on this issue and move R3.5.1 through R3.5.3, (and the equivalent in the stability study R5.4.3.1 through R5.4.3.3) to a Requirement applicable to Assessment studies in general, such as the bullet points in the Performance Tables.
IESO	Yes and No	We agree with the conditions stipulated in R3.5.2 and R3.5.3 but do not agree with R3.5.1. This is one of the performance objectives that the use of manual and/or automatic generation run-back/tripping is intended to achieve, and it is already stipulated in Table 1. Suggest to remove this condition.
Southern California Edison	Yes	We agree. However, the conditions listed in R3.5.1, R3.5.2 and R3.5.3 are applicable to the overall TPL Standard. Their specific listing in R3.5 gives the impression that these Requirements are only applied to R3.5 and not to the other Requirements in this Standard. In other words, are there any Requirements in this Standard that R3.5.1, R3.5.2 and R3.5.3 do not apply to? Therefore, we suggest TPL-001-1 be silent on this issue and move R3.5.1 through R3.5.3, (and the equivalent in the stability study R5.4.3.1 through R5.4.3.3) to a Requirement applicable to Assessment studies in general, such as the bullet points in the Performance Tables.
North Carolina Electric Membership Corp	Yes and No	The generation run-back/trip should not put any load or firm transfer at risk of also being harmed. Maybe this is implied within the conditions required.
ERCOT System Planning	No	The requirement is unclear whether runback is allowed if the conditions are met or if runback is allowed to meet the conditions. What is the need for generation run-back/tripping if all facilities are within their Facility Ratings? Many times the run-back/tripping of units, such as wind farms, is necessary to remove a post-contingency overload associated with these units. The protection scheme includes the run-back/tripping to allow these units to generate at higher levels pre-contingency.
Florida Reliability Coordinating Council, inc	No	R3.5.1 ? This requirement should be clarified to state that all facilities shall operate within their Facility Ratings before, during and after system adjustments including generation adjustments.R3.5.2 ? How can an entity demonstrate that it is not violating this requirement.. The SDT should indicate the type of regulatory and/or statutory requirement that this requirement trying to address (i.e., FERC, EPA, etc.)?. Otherwise, the FRCC recommends removing R3.5.2.R3.5.3 ?The SDT should clarify this requirement to define what is meant by sustainable and stable. Sustainable and stable may not necessarily be the same as

Organization	Question 4:	Question 4 Comments:
		being in a secure condition (ready for the next possible event).
Alberta Electric System Operator	Yes	We agree. However, the conditions listed in R3.5.1, R3.5.2 and R3.5.3 are applicable to the overall TPL Standard. Their specific listing in R3.5 gives the impression that these Requirements are only applied to R3.5 and not to the other Requirements in this Standard. In other words, are there any Requirements in this Standard that R3.5.1, R3.5.2 and R3.5.3 do not apply to? Therefore, we suggest R3.5 and R3.4.3 be silent on this issue and move R3.5.1 through R3.5.3, (and the equivalent in the stability study R5.4.3.1 through R5.4.3.3) to a Requirement applicable to Assessment studies in general, such as the bullet points in the Performance Tables.
Orlando Utilities Commission	No	The requirement R3.5.1 is not clear. If the intent is that following a single or multiple contingency facilities are within their ratings before, during and after the generation adjustment it's should be specified that way. "All facilities shall operate within their facility ratings prior to, during, and after the generation adjustment". Also I am unclear on how I would prove that I am not violating and safety or statutory requirements, that seems to be attempting to prove a negative since it is not specific on which requirements. Maybe ?Not violating any known safety and statutory requirements? if it is necessary to have this part. However since any real statutory and safety requirements have their own enforcement mechanism it is unnecessary to have the NERC auditor monitor these in addition to the existing monitors. I am not sure on the definition of sustainable? Is it a system that requires no further adjustment to be within it's long term ratings? Or is it a system that is prepared for the next event (Secure)?
Entergy Services, Inc.	Yes and No	The intent seems reasonable, but the wording needs work. There needs to be consistent verb usage. All 3 sub-bullets need to use "shall" instead of "would" and "is."
US Bureau of Reclamation	Yes	We agree. However, the conditions listed in R3.5.1, R3.5.2 and R3.5.3 are applicable to the overall TPL Standard. Their specific listing in R3.5 gives the impression that these Requirements are only applied to R3.5 and not to the other Requirements in this Standard. In other words, are there any Requirements in this Standard that R3.5.1, R3.5.2 and R3.5.3 do not apply to? Therefore, we suggest TPL-001-1 be silent on this issue and move R3.5.1 through R3.5.3, (and the equivalent in the stability study R5.4.3.1 through R5.4.3.3) to a Requirement applicable to Assessment studies in general, such as the bullet points in the Performance Tables.
BPA Transmission Reliability Program	No	R3.5 is not a requirement, but an allowed action in order to meet performance criteria. Therefore, the statement about generation run-back/tripping in R3.5 should be moved to become part of the notes in the Performance Tables and not part of the requirements text. The conditions described under R.3.5.1 through R.3.5.3 are covered elsewhere in the standards and should be removed from this section. Since R3.5 and R5.4 contain some similar wording, also see comments relating to R5.4 under Item 2, above.
Response: The SDT agrees and has eliminated these conditions in Sub-requirements R3.5.1, R3.5.2 and R3.5.3 for Contingency events as well as similar conditions in Sub-requirements R5.4.3.1, R5.4.3.2 and R5.4.3.3 for Stability events in the third draft. Accordingly, the SDT has modified Sub-requirement R3.5 for		

Organization	Question 4:	Question 4 Comments:
Contingency events and relocated it to become Sub-requirement R2.6.1 – bullet #4. Likewise, the SDT has modified Sub-requirement R5.4.3 for Stability events and relocated it to become Sub-requirement R2.6.1 – bullet #3. **R2.6.1. – bullet #3:** Installation or modification of automatic generation tripping as a response to a single or multiple Contingency to mitigate Stability performance violations. **R2.6.1. – bullet #4:** Installation or modification of manual and automatic generation runback/tripping as a response to a single or multiple Contingency to mitigate Steady State performance violations.		
Lafayette Utilities System	No	Requirement R.3.5 states that generation run-back is allowed as a response to single or multiple contingencies, as long as certain conditions are met. Lafayette's concern is that the allowance for generation run-back is not limited to generation owned by the Transmission Planner or under the Transmission Planner's direct operational control. For that reason, the language could be interpreted to permit reliance (for planning purposes) on redispatch of generation owned by third-party generation owners that is undertaken in compliance with Reliability Coordinator directives during a Transmission Loading Relief event. During the SDT conference call held on August 26, 2008, the SDT representative stated that the team did not intend that R.3.5 would permit a Transmission Planner to rely on third-party generation redispatch, and that the intent was only to permit reliance on run-back (redispatch) of generation owned by or under the direct control of the Transmission Planner. Lafayette believes the language of R.3.5 needs to be clarified to state in express terms the limitation intended by the SDT. Reliance on third-party redispatch should not be permitted unless a Transmission Planner has entered into a contractual arrangement with the generation owner authorizing such use.
Response: The SDT agrees that if a Transmission Planner does intend to rely upon third party generation as an option to meet this requirement then the Transmission Planner's contractual arrangements between that Generation Owner and the Transmission Operator must be in place. However, the SDT does not believe that this needs to be stated as a Requirement in this Standard.		
Ameren	Yes	R3.5.1 should be modified as "All Facilities shall be operating within their applicable Facility Ratings, including the use of short-time emergency ratings."
E.ON U.S. Transmission Planning	Yes and No	R3.5.1 Is this the intent? ? Following Single Contingency events, Transmission configuration changes and redispatch of generation can be simulated to return the system to Normal Rating provided that all Facilities shall be operating within their Emergency Rating.
Response: As stated in Footnote 10 of Table 1, planned System adjustments are allowed, unless precluded in the Requirements, to keep Facilities within the Facility Ratings, if such adjustments are executable within the time duration applicable to the Facility Ratings. **Footnote #10** – Curtailment of firm transmission service, when coupled with the appropriate re-dispatch of resources obligated to re-dispatch, is allowed both as a System adjustment (as identified in the column titled 'Initial System Conditions') and a corrective action, where it can be demonstrated that Facilities remain within		

Organization	Question 4:	Question 4 Comments:
applicable Facility Ratings and those adjustments do not result in the shedding of any firm Load. Where limited options for re-dispatch exist, sensitivities associated with the availability of those resources must be considered. Where Facilities external to the Transmission Planner's planning region are relied upon, Facility Ratings in those regions must be considered.		
American Transmission Company	No	We generally accept this text, but would like the Facility Rating reference to include the applicable time frame (see response to Question 2.)
Response: As stated in Footnote 1 of Table 1, planned System adjustments are allowed, unless precluded in the Requirements, to keep Facilities within the Facility Ratings, if such adjustments are executable within the time duration applicable to the Facility Ratings.		
PPL EnergyPlus	Yes and No	My concern is that some TSPs over-use RAS and at some point, system improvements must take place. The best approach is a collaborative effort of all stakeholders (esp. operations folks) to prevent abusing RAS. Possibly R3.5 could tie to or be put under an Requirement that involves collaboration with stakeholders.
Response: The SDT has modified Sub-requirement R3.5 for Contingency events and relocated it to become Sub-requirement R2.6.1 – bullet #4. Likewise, the SDT has modified Sub-requirement R5.4.3 for Stability events and relocated it to become Sub-requirement R2.6.1 – bullet #3. Collaboration between the Transmission Planner and the Planning Coordinator is referenced in Requirements R5, R6, and R7. **R2.6.1. – bullet #3:** Installation or modification of automatic generation tripping as a response to a single or multiple Contingency to mitigate Stability performance violations. **R2.6.1. – bullet #4:** Installation or modification of manual and automatic generation runback/tripping as a response to a single or multiple Contingency to mitigate Steady State performance violations.		
OPUC	Yes	
US Army Corp of Engineers, Northwestern Division	Yes	
CenterPoint Energy and CPS Energy	Yes	

Organization	Question 4:	Question 4 Comments:
MidAmerican Energy Company	Yes	
MRO NERC Standards Review Subcommittee	Yes	
Austin Energy	Yes	
Lakeland Electric	Yes	
Brazos Electric Power Cooperative, Inc.	Yes	
LCRA TSC	Yes	
Oncor Electric Delivery	Yes	NA
FirstEnergy Corp.	Yes	
Platte River Power Authority	Yes	
Response: Thank you for your response.		

5. **The SDT has modified the modeling requirements. Some commenters expressed concern that the modeling requirements contained in Requirement R1 of the first draft of TPL-001-1 were either duplicative of the requirements in the MOD standards, or to the extent new modeling requirements were proposed, that the appropriate venue for such modeling requirements would be the MOD standards. The SDT believes that additional modeling requirements not presently contained in the MOD standards are necessary for Transmission Planning purposes. The SDT has incorporated these additional requirements with the intent that they will be removed from the TPL standard when they are incorporated into the MOD standards at a later date.**

   The SDT has also modified proposed modeling requirements contained in Requirement R1 of the first draft of TPL-001-1 based on industry comments and moved these requirements to Requirements R9 through R14 in the second draft for ease of removal later on. Furthermore, in response to industry comments, the SDT has separated the modeling requirements into individual requirements for each responsible entity. Do you concur with the modifications reflected in Requirements R9 – R14? If not, please state why and/or suggest specific changes..

Summary Consideration:

In response to industry comments, the SDT has removed requirements R9-R14 and enhanced requirement R1 to more clearly specify the modeling information needed to support accurate Planning Assessments. Any comments received from the industry on MOD standards will be forwarded to NERC staff for inclusion in NERC Reliability Standards Development Projects 2010-04 Modeling Data and 2010-05 Demand Data.

The following requirements have been changed due to industry comments:

R1. Each Transmission Planner and Planning Coordinator shall maintain System models for performing the studies needed to complete their Planning Assessment. The models shall use data consistent with the data provided in accordance with ~~Requirements R9 through R14,~~ the MOD-010 and MOD-012 standards~~,~~ and other data sources,~~.~~ and shall simulate projected System conditions including requirements of regulatory authorities and other legal obligations.

R1.1 ~~The Planning Assessment shall include documentation of the technical rationale for modification of any data that was provided in Requirement R9 through R14, MOD-010, and MOD-012.~~Models for the Planning Assessment shall represent:

R1.1.1 Planned outages of generation and Transmission Facilities, if specifically known.

R1.1.2 New planned Facilities and changes to existing Facilities for each year of the Near-Term and Long-Term Transmission Planning Horizon, such as:

- Transmission Lines
- Generators
- Circuit breakers
- Reactive Power devices

- Protection System equipment
- Control devices
- New technologies

R1.1.3 Real and reactive Demand of Load

R1.1.4 Firm Transmission Service

R1.1.5 Interchange

R1.1.6 Network resources required to supply Load

R2.1.4 When an entity's spare equipment strategy could result in the unavailability of major Transmission equipment that has a lead time of one year or more (such as a transformer), an analysis of the impact on System performance shall be assessed. The analysis shall reflect the Contingencies identified in Table 1 during the conditions that the System is expected to experience due to the unavailability of the long lead time equipment.

Organization	Question 5:	Question 5 Comments:
Dominion - Electric Transmission Planning	Yes and No	For requirements R9, R12, R13, the wording should be changed from ..."shall provide its respective Planning Coordinator with modeling information ..." to "shall provide its respective Planning Coordinator and Transmission Planner with modeling information ..."
NPCC	No	With respect to R9 "including the expected mix of industrial, commercial and residential loads", this provision may be inadequate to be practically useful. The potential issues include the variation in end-use load mix through the daily load cycle, seasonal load composition variations, and the ability to translate these end-uses into reasonable and useful steady-state and dynamic load models. It is important to understand how the information will be used and how much additional detail, such as distribution network detail, is also required. It is also important to note that some Canadian Provinces do not "classify" their load mix using "industrial, commercial and residential" designations but their load modeling is sufficient, accurate and granular enough to simulate system response. Add to the last sentence of R9 through R14 the following phrase, "within ninety days of a request for such information or as otherwise described in procedures established by the Planning Coordinator."
TVA System Planning	No	TVA provides the following comments: " Distribution Provider" in R9 should be replaced with "Load Serving Entity." Also in R9, is the expected mix of load to be presented individually or as a total of commercial, residential, and industrial loads? Would requiring this mix of load forecasts also result in a change to any MOD or FAC requirements dealing with

Organization	Question 5:	Question 5 Comments:
		load forecasts?” Transmission Planner" in R10 should be "Transmission Service Provider." Is this requirement also in MODs? In R11, R12, and R13 suggest adding "Transmission Planner" to "Planning Coordinator". In R13, Resource Planner may not have knowledge of Reactive Power devices and new technologies.
Manitoba Hydro	Yes and No	R1: Requirement R1 places the obligation for maintaining a model on the PC/TP. While the PC/TP can maintain data for its system(s), the models generally used for planning assessments are regional models developed and maintained by the Regions. Could the SDT explain its expectation of the scope and responsibilities of the model to be maintained? R9-R14: This TPL draft includes Requirements R9 to R14 that impose obligations on the PC/TP that differ from the way planning models are compiled in accordance with the existing MOD standards. Manitoba Hydro comments on R9 to R14, as follows: R9: Agree. R10: The TSP is the Functional Model entity that should provide the Firm Transmission Service data and Interchange Schedules to the PC. R11: Agree R12: Agree R13: We disagree that the Resource planner is responsible for Reactive Power devices. Can the SDT explain what they consider should be included in new technologies? R14: While we agree that the TP can provide the PC data of planned faculties, isn't this data already required to be provided under the MOD standards?
Transmission Agency of Northern California	Yes	While we agree with separating R1 to form R9 through R14, we believe that R9 (modeling information for real and reactive load forecast data) should be applicable to Load Serving Entities (LSE) instead of (or in additional to) the Distribution Provider. In any case, this type of exchange of load information is already covered in MOD Standard or in the respective tariffs, and should not be included again in the proposed TPL-001-1 Standard.
OPUC	Yes	R9. — 14 can be addressed in the MOD standards.
Pacific Gas and Electric Co.	Yes	While we agree with separating R1 to form R9 through R14, we believe that R9 (modeling information for real and reactive load forecast data) should be applicable to Load Serving Entities (LSE) instead of (or in additional to) the Distribution Provider. In any case, this type of exchange of load information is already covered in MOD Standard or in the respective

Organization	Question 5:	Question 5 Comments:
		tariffs, and should not be included again in the proposed TPL-001-1 Standard.
US Army Corsp of Engineers, Northwestern Division	Yes and No	R12 requires the GO to provide "modeling information" for planned outages and/or changes to the generator owner facilities to the Planning Coordinator for each year of the Transmission planning horizon. You need to be more specific with what type of "modeling information" you are requesting from the GO. The GO may have the model parameters for their equipment but this doesn't mean that they have expertise necessary to model system responses or even run a model simulation. So if you are expecting the GO to perform model simulations for each year of the Transmission planning horizon the GO may not have the expertise necessary to comply. Recommend you clarify what you mean by "modeling information".
Public Service Company of New Mexico	Yes	While we agree with separating R1 to form R9 through R14, we believe that R9 (modeling information for real and reactive load forecast data) should be applicable to Load Serving Entities (LSE) instead of (or in additional to) the Distribution Provider. In any case, this type of exchange of load information is already covered in MOD Standard or in the respective tariffs, and should not be included again in the proposed TPL-001-1 Standard.
Puget Sound Energy, Inc.	Yes	While we agree with separating R1 to form R9 through R14, we believe that R9 (modeling information for real and reactive load forecast data) should be applicable to Load Serving Entities (LSE) instead of (or in additional to) the Distribution Provider. In any case, this type of exchange of load information is already covered in MOD Standard or in the respective tariffs, and should not be included again in the proposed TPL-001-1 Standard.
ITC Holdings: ITC, METC, ITC Midwest	Yes and No	In general, we approve and concur with these requirements. The requirement R9 that the distribution providers submit the expected mix of residential, commercial, and industrial loads is necessary to model the dynamic behavior of loads as required in R 2.4.1. This requirement will better model the dynamic response of loads to voltage changes. In R10, the Transmission Planner provides OASIS type information. The TSP should provide this not the TP. R-13 ? Reactive Power Devices and new technologies belongs under every entity, i.e., Distribution Planners should be included as a provider of reactive power devices as well as Resource Planner and Transmission Planner.
Idaho Power Company	Yes	While we agree with separating R1 to form R9 through R14, we believe that R9 (modeling information for real and reactive load forecast data) should be applicable to Load Serving Entities (LSE) instead of (or in additional to) the Distribution Provider. In any case, this type of exchange of load information is already covered in MOD Standard or in the respective tariffs, and should not be included again in the proposed TPL-001-1 Standard.
Hydro-Québec TransEnergie (HQT)	No	With respect to R9 "including the expected mix of industrial, commercial and residential loads", this provision may be inadequate to be practically useful. The potential issues include the variation in end-use load mix through the daily load

Organization	Question 5:	Question 5 Comments:
		cycle, seasonal load composition variations, and the ability to translate these end-uses into reasonable and useful steady-state and dynamic load models. It is important to understand how the information will be used and how much additional detail such as distribution network detail is also required. It is also important to note that some Canadian Provinces do not "classify" their load mix using "industrial commercial and residential" designations but their load modeling is sufficient, accurate and granular enough to simulate system response. Add to the last sentence of R9 through R14 the following phrase, "within ninety days of a request for such information or as otherwise described in procedures established by the Planning Coordinator."
Sierra Pacific Power Company / Nevada Power Company	Yes	While we agree with separating R1 to form R9 through R14, we believe that R9 (modeling information for real and reactive load forecast data) should be applicable to Load Serving Entities (LSE) instead of (or in additional to) the Distribution Provider. In any case, this type of exchange of load information is already covered in MOD Standard or in the respective tariffs, and should not be included again in the proposed TPL-001-1 Standard.
Black Hills Corporation	Yes	While we agree with separating R1 to form R9 through R14, we believe that R9 (modeling information for real and reactive load forecast data) should be applicable to Load Serving Entities (LSE) instead of (or in additional to) the Distribution Provider. In any case, this type of exchange of load information is already covered in MOD Standard or in the respective tariffs, and should not be included again in the proposed TPL-001-1 Standard.
Florida Power and Light	No	The requirement that “all projected firm transfers modeled” (appropriate for the load level being studied) currently in the TPL Standards does not appear in the proposed standard. Does the SDT feel that Transmission Planners should have unlimited latitude in deciding which types of power transfers to assume in their reliability studies? R9. is not an appropriate requirement as the distribution provider will in many cases not know the exact mix of load types at each ?transmission node? The meaning of “transmission node” is unclear, is this substation? R11. is unclear as to what is meant by “consideration given to spare equipment strategy.” What is the appropriate consideration for compliance? What facilities are required to have a spare equipment strategy for compliance? Maintenance outages and times for all BES equipment are not likely to be scheduled or known throughout the entire planning horizon. Rather than specifying "for each year of the planning horizon" it should be limited to "if specifically known”. The Resource Planners identified in R13. should know about future generation additions and retirements as well as expected range DSM capabilities but would not generally know about reactive power devices or new technologies. Reactive power devices or new technologies should be removed from R13.
CenterPoint Energy	No	We believe the SDT should have reflected the views of most commenters in this revised draft. Requirements R9 through R14 are overly prescriptive and do not solve an actual problem. Furthermore, we are concerned about requirement

Organization	Question 5:	Question 5 Comments:
and CPS Energy		"creep" where standards include new requirements appropriately addressed in other standards (in this case, the MOD standards) because a different SDT believes the approved standard is inadequate. To clarify our main premise that the excess, misplaced requirements do not solve an actual problem, we believe one would need an extensive imagination to conjure a scenario where insufficient modeling by transmission planners in the subject matter addressed by requirements R9 through R14 have contributed or are reasonably likely to contribute in any meaningful way to a significant reliability event. In summary, we concur with the majority of commenters from the previous draft that R9 through R14 should be deleted. We also believe R1.1 is hopelessly unrealistic. In fact, we are concerned it is counter-productive and more likely to degrade reliability than improve it. R1.1 discourages transmission planners from revising inaccurate, speculative, or outdated modeling data by imposing new documentation burdens and compliance liability. We recommend that R1.1 be deleted.
SRP	Yes	While we agree with separating R1 to form R9 through R14, we believe that R9 (modeling information for real and reactive load forecast data) should be applicable to Load Serving Entities (LSE) instead of (or in additional to) the Distribution Provider. In any case, this type of exchange of load information is already covered in MOD Standard or in the respective tariffs, and should not be included again in the proposed TPL-001-1 Standard.
Tucson Electric Power Company	Yes	While we agree with separating R1 to form R9 through R14, we believe that R9 (modeling information for real and reactive load forecast data) should be applicable to Load Serving Entities (LSE) instead of (or in addition to) the Distribution Provider. In any case, this type of exchange of load information is already covered in MOD Standard or in the respective tariffs, and should not be included again in the proposed TPL-001-1 Standard.
SERC Dynamics Review Subcommittee	No	For R9 the LSE should provide the load forecast instead of the DP. For R9 - R14, It is not clear that the specification of data flow appropriate for both RTO and non-RTO situations because there are significant differences in the role of planning coordinator. For example: 1) Who builds and manages the base cases? Shouldn't the data be submitted to this entity? 2) According to the definition provided in this standard, the Planning Coordinator is ?The responsible entity that coordinates and integrates transmission facility and service plans, resource plans, and protection systems.? Additionally, we recommend the TPL SDT write a SAR to get the data related changes into the MOD standards or adding it the issues to be considered by the drafting team in the development plan under project number 2010-04 otherwise it will be difficult to remember to include these items in the revised MOD standards.
Modesto Irrigation District	Yes	Comments: While we agree with separating R1 to form R9 through R14, we believe that R9 (modeling information for real and reactive load forecast data) should be applicable to Load Serving Entities (LSE) instead of (or in additional to) the Distribution Provider. In any case, this type of exchange of load information is already covered in MOD Standard or in the

Organization	Question 5:	Question 5 Comments:
		respective tariffs, and should not be included again in the proposed TPL-001-1 Standard.
Arkansas Electric Coop. Corp.	No	R9. I disagree with providing the mix of industrial, commercial and residential, especially within a 90 day period. It is difficult enough to be able to develop a forecast must less try to quesstimate the mix of the loads.R9 through R14 -- the timing requirement should be tied to the regions model development schedule and not 90 days. The 90 days is too restrictive and not practical however model data should be updated at least annually.
Midwest ISO	No	Since the Transmission Planner has the primary model building responsibility it makes sense to have them aggregate model building information. Therefore, requirement R9 should have the Distribution Provider providing the Transmission Planner and Planning Coordinator with modeling information for real and reactive load forecast? etc. The data of R10 such as firm TS data may not be known by the Transmission Planner (ofter a TO in the RTOs). Also the language implies that there are more than one BA under a TP, also not a typical arrangement in an RTO/ISO. A hierarchical approach might be more appropriate such that the Distribution Provider, the Transmission Provider, and the Transmission Owner supply the data they control to the Transmission Planner and the Planning Authority so that those entities can build models they need to meet the study requirements of the standard.
Tri-State Generation and Transmission Association, Inc.	Yes	We are pleased the SDT pulled out these Requirements. Does the SDT plan to leave them in the standard as notes until they can be incorporated into other standards where they belong? In R11, the term "long-term" is not clear.
Tri-State G&T	Yes	While we agree with separating R1 to form R9 through R14, we believe that R9 (modeling information for real and reactive load forecast data) should be applicable to Load Serving Entities (LSE) instead of (or in additional to) the Distribution Provider. In any case, this type of exchange of load information is already covered in MOD Standard or in the respective tariffs, and should not be included again in the proposed TPL-001-1 Standard.
AEP	Yes	However, although the responsible entities listed for each individual requirement are correct from a functional model (compliance) perspective, in actual practice the data flow may not (and in many instances does not) follow the paths outlined in this draft. For example, the node loads, scheduled interchanges, generation models, facility additions, etc., are all provided to the Transmission Owner (TO), since it's the TO that typically builds the planning models for their transmission footprint and then provides those models to the Transmission Planner and Planning Coordinator. Therefore, the Transmission Owner should be added as a recipient of this type of data.
Austin Energy	No	Requirements R9 through R14 should be deleted and re-introduced later as part of a change to MOD standards. R1.1 imposes burdensome documentation requirements which will likely become a disincentive for revising modeling data and

Organization	Question 5:	Question 5 Comments:
		should be deleted.
Lakeland Electric	No	It is sufficient to direct the TP or PC to obtain and include the appropriate data outlined in R9 through R14 in their respective model cases. The proposed addition of R9-R14 just adds more evidential paperwork requirements to the TP or PCs plate.
Southern Company Transmission	No	R9 needs to be clarified that the forecast is based on expected mix of residential, commercial, and industrial loads, but that this mix does not have to be supplied.
Brazos Electric Power Cooperative, Inc.	Yes	R9-R14 do not belong in this Standard. Adding requirements in the wrong location only adds to the confusion by forcing review of more Standards by other less relevant entities and causing additional burden by insuring the requirements match between Standards for the SDT. R1.1 should be deleted. Tracking all those changes (outages, etc?) is unreasonable and will essentially be unenforceable, for if the data is not tracked, how will anyone know it is not tracked?. Requiring large amounts of documentation that provide no additional benefit or causes undo burden will result in fewer studies or effort placed into proper study.
ColumbiaGrid	Yes	While we agree with separating R1 to form R9 through R14, we believe that R9 (modeling information for real and reactive load forecast data) should be applicable to Load Serving Entities (LSE) instead of (or in additional to) the Distribution Provider. In any case, this type of exchange of load information is already covered in MOD Standard or in the respective tariffs, and should not be included again in the proposed TPL-001-1 Standard.
Southern California Edison	Yes	While we agree with separating R1 to form R9 through R14, we believe that R9 (modeling information for real and reactive load forecast data) should be applicable to Load Serving Entities (LSE) instead of (or in additional to) the Distribution Provider. In any case, this type of exchange of load information is already covered in MOD Standard or in the respective tariffs, and should not be included again in the proposed TPL-001-1 Standard.
Northeast Utilities	No	Northeast Utilities has participated with ISO-NE and NPCC and supports the comments filed by those organizations.
North Carolina Electric Membership Corp	Yes	We would like to add a couple of items for clarification. 1) Planning Coordinators and Transmission Planners should make it clear to LSEs, DPs and GOs as to what extent they model loads, reactive devices, and generators and not just rely on FAC-001, FAC-002 or the entities Facility Connection Requirements document to convey that information. 2) If requirements 9 through 14 are to be removed at a later date, then the SDT should be required to initiate the

Organization	Question 5:	Question 5 Comments:
		appropriate action or SAR before its disbanding to insure this happens.
ERCOT System Planning	No	ERCOT recommends that R1.1 be deleted. ERCOT shares the opinion of some that R1.1 is counter-productive and more likely to degrade reliability than improve it. R1.1 discourages transmission planners from revising inaccurate, speculative, or outdated modeling data by imposing new documentation burdens and compliance liability. Adding additional requirements to document changes to data required in requirements R9 through R14, MOD-010, and MOD-012 could induce an atmosphere of using inaccurate data to eliminate the need to document a needed change. Furthermore, it is believed that all modeling requirements should exist in a Modeling standard not a performance standard.
Duke Energy	Yes	In order to ensure these requirements move to the MOD standards, the TPL SDT is encouraged to write a SAR to get the data related changes into the MOD standards or add it to the issues to be considered by the drafting team in the development plan under project number 2010-04.
Central Maine Power Company	No	a. With respect to R9 "including the expected mix of industrial, commercial and residential loads", this provision may be inadequate to be practically useful. The potential issues include the variation in end-use load mix through the daily load cycle, seasonal load composition variations, and the ability to translate these end-uses into reasonable and useful steady-state and dynamic load models. It is important to understand how the information will be used and how much additional detail such as distribution network detail is also required. b. Add to the last sentence of R9 through R14 the following phrase, "within ninety days of a request for such information or as otherwise described in procedures established by the Planning Coordinator."
New York Independent System Operator	No	With respect to R9 "including the expected mix of industrial, commercial and residential loads", this provision may be inadequate to be practically useful. The potential issues include the variation in end-use load mix through the daily load cycle, seasonal load composition variations, and the ability to translate these end-uses into reasonable and useful steady-state and dynamic load models. It is important to understand how the information will be used and how much additional detail such as distribution network detail is also required. Add to the last sentence of R9 through R14 the following phrase, "within ninety days of a request for such information or as otherwise described in procedures established by the Planning Coordinator."
Alberta Electric System Operator	Yes	While we agree with separating R1 to form R9 through R14, we believe that R9 (modeling information for real and reactive load forecast data) should be applicable to Load Serving Entities (LSE) instead of (or in additional to) the Distribution Provider. In any case, this type of exchange of load information is already covered in MOD Standard or in the respective tariffs, and should not be included again in the proposed TPL-001-1 Standard.

Organization	Question 5:	Question 5 Comments:
FirstEnergy Corp.	No	FE does not support the modeling requirements within the TPL standard and suggest that the SDT remove these requirements. This standard should be viewed on a premise that a valid and appropriate system model exist so that the fundamental focus of the standard is as stated in its purpose statement "Establish Transmission System planning performance requirements... to develop a Bulk Electric System that will operate reliably over a broad spectrum of System conditions." If the R9 through R14 requirements remain, we offer the following comments: R9 - In requirement R9, the DP is to provide nodal load projections and include the expected mix of industrial, commercial, and residential Loads. System planning software can not presently accommodate this level of detail along with other load codes/classifications that may already be in use; i.e. municipal load, rural electric cooperative load, etc. Is the intent to require this information in models built and maintained by industry, i.e. MMWG? R10 - The TP does not have access to Interchange Schedules and resources required to supply Load for each of its Balancing Authority. This information may need to be provided by the Resource Planner or some other appropriate entity.
US Bureau of Reclamation	Yes	Comments: While we agree with separating R1 to form R9 through R14, we believe that R9 (modeling information for real and reactive load forecast data) should be applicable to Load Serving Entities (LSE) instead of (or in additional to) the Distribution Provider. In any case, this type of exchange of load information is already covered in MOD Standard or in the respective tariffs, and should not be included again in the proposed TPL-001-1 Standard.
BPA Transmission Reliability Program	No	Requirements for data gathering and load modeling belong in the MOD Standard and not in TPL-001-1. Requirements for dynamic load models should not be specified at this time, because the models have not been developed yet or approved by the RRO (also see comments regarding R2.4.1 under Item 2, above).

Response: In response to comments from you and others in the industry, the SDT has removed Requirements R9-R14 and enhanced Requirement R1 to more clearly specify the modeling information needed to support accurate Planning Assessments.

R1. Each Transmission Planner and Planning Coordinator shall maintain System models for performing the studies needed to complete their Planning Assessment. The models shall use data consistent with the data provided in accordance with ~~Requirements R9 through R14,~~ the MOD-010 and MOD-012 standards~~,~~ and other data sources,~~.~~ and shall simulate projected System conditions including requirements of regulatory authorities and other legal obligations.

R1.1 ~~The Planning Assessment shall include documentation of the technical rationale for modification of any data that was provided in Requirement R9 through R14, MOD-010, and MOD-012.~~Models for the Planning Assessment shall represent:

R1.1.1 Planned outages of generation and Transmission Facilities, if specifically known.

R1.1.2 New planned Facilities and changes to existing Facilities for each year of the Near-Term and Long-Term Transmission Planning Horizon, such as

Transmission Lines

Organization	Question 5:	Question 5 Comments:
Generators Circuit breakers Reactive Power devices Protection System equipment Control devices New technologies **R1.1.3** Real and reactive Demand of Load **R1.1.4** Firm Transmission Service **R1.1.5** Interchange **R1.1.6** Network resources required to supply Load		
Los Angeles Department of Water and Power	Yes	See the comment from WECC
Response: The SDT did not receive any specific comments from WECC.		
National Grid	No	a. With respect to R9 "including the expected mix of industrial, commercial and residential loads", this provision may be inadequate to be practically useful. The potential issues include the variation in end-use load mix through the daily load cycle, seasonal load composition variations, and the ability to translate these end-uses into reasonable and useful steady-state and dynamic load models. It is important to understand how the information will be used and how much additional detail such as distribution network detail is also required. b. Add to the last sentence of R9 through R14 the following phrase, "within ninety days of a request for such information or as otherwise described in procedures established by the Planning Coordinator." c. Flexibility is needed to conform with the requirements of the specific Planning Coordinator. Suggest changing R10 to read as follows: R10. Each Transmission Planner shall provide its respective Planning Coordinator with modeling information for Firm Transmission Service data, Interchange Schedules and resources required to supply Load for each of its Balancing Authorities for each year of the Transmission planning horizon, within ninety days of a request for such information or as otherwise described in procedures established by the Planning Coordinator.

Organization	Question 5:	Question 5 Comments:
		d. Flexibility is needed to conform with the requirements of the specific Planning Coordinator. Suggest changing R11 to read as follows R11. Each Transmission Owner shall provide its respective Planning Coordinator with modeling information for known planned outages and long-term outages for Transmission equipment for each year of the Transmission planning horizon with consideration given to spare equipment strategy, within ninety days of a request for such information or as otherwise described in procedures established by the Planning Coordinator. e. Flexibility is needed to conform with the requirements of the specific Planning Coordinator. Suggest changing R12 to read as follows: R12. Each Generator Owner shall provide its respective Planning Coordinator with modeling information for known planned outages and long-term outages for generation equipment for each year of the Transmission planning horizon, within ninety days of a request for such information or as otherwise described in procedures established by the Planning Coordinator. f. Flexibility is needed to conform with the requirements of the specific Planning Coordinator. Suggest changing R13 and R14 as follows:R13. Each Resource Planner shall provide its respective Planning Coordinator with the modeling information for new planned facilities for each year of the Transmission planning horizon including but not limited to generators, Reactive Power devices, and new technologies, within ninety days of a request for such information or as otherwise described in procedures established by the Planning Coordinator.. [Violation Risk Factor: TBD] [Time Horizon: TBD] R14. Each Transmission Planner shall provide its respective Planning Coordinator with modeling information for new planned facilities for each year of the Transmission planning horizon including but not limited to Transmission Lines, circuit breakers, Reactive Power devices, Protection System equipment and control devices, and new technologies, within ninety days of a request for such information or as otherwise described in procedures established by the Planning Coordinator. [Violation Risk Factor: TBD] [Time Horizon: TBD] g. Planned and long-term outages are two fundamentally different concepts and should be treated separately. Planned and Long-Term outages should be defined. Define how planning events in Tables 1 and 2 are associated with each type of outage (e.g. P4, P5, or P6). Should there be specific contingency descriptions associated with long-term outages? Define length of a "Long Term" outage. Planned outages should be addressed in the operating horizon unless otherwise defined in the planning horizon.
MidAmerican Energy Company	No	MEC disagrees with the approach of temporary requirements because of the problems that arise due to conflicting or uncoordinated standards (e.g. conflicting requirements between FAC-010-1 and TPL-002-0). We suggest the drafting team submit SARs to make the desired changes in the appropriate MOD standards. However, if these requirements are retained than we suggest the following few changes to R9-R14: The R9 wording on providing "the expected mix of industrial, commercial, and residential loads" should be dropped as the representative mix is difficult to quantify and verify while the benefit to representing the mix is unproven versus normal regional dynamic load representation practices. Many regions already convert normal steady state powerflow loads to standard mixes of, constant MVA, constant current, and shunt admittances which accounts for dynamic behavior. If the SDT decides not to drop these words, the MRO recommends "the expected mix of industrial, commercial, and residential loads" be changed to "the forecasted mix of industrial, commercial,

Organization	Question 5:	Question 5 Comments:
		and residential loads". In R9 through R13 the responsible entities should be giving their information to the Transmission Planner in addition to the Planning Coordinator. In R10, revise the text to: "Each Transmission Service Provider shall provide ?" In R11, is the text referring to "known planned outages" and "known long term outages"? What is the distinction that is meant to be made between the two specified types of outages? In R12, revise the text to: "? modeling information for planned facilities changes, known planned outages ?". Also, is the text referring to "known planned outages" and "known long term outages"? What is the distinction that is meant to be made between the two specified types of outages? In R13, revise the text to: "? for planned facilities changes for each year of the Transmission planning horizon including but not limited to generators, and new technologies ?". This wording broadens the meaning from simply "new" facilities to also include any "changes" to existing facilities. In R14, revise the text to: "? for planned facilities changes for each year ?". This wording broadens the meaning from simply "new" facilities to also include any "changes" to existing facilities.
MRO NERC Standards Review Subcommittee	No	The MRO disagrees with the approach of temporary requirements because of the problems that arise due to conflicting or uncoordinated standards (e.g. conflicting requirements between FAC-010-1 and TPL-002-0). We suggest the drafting team submit SARs to make the desired changes in the appropriate MOD standards. However, if these requirements are retained than we suggest the following few changes to R9-R14: In R9, revise the text to: "? load forecast data for at least the coincident peak of each year ?" The R9 wording on providing "the expected mix of industrial, commercial, and residential loads" should be dropped as the representative mix is difficult to quantify and verify while the benefit to representing the mix is unproven versus normal regional dynamic load representation practices. Many regions already convert normal steady state powerflow loads to standard mixes of, constant MVA, constant current, and shunt admittances which accounts for dynamic behavior. If the SDT decides not to drop these words, the MRO recommends "the expected mix of industrial, commercial, and residential loads" be changed to "the forecasted mix of industrial, commercial, and residential loads". In R9 through R13 the responsible entities should be giving their information to the Transmission Planner in addition to the Planning Coordinator. In R9, revise the text to: "? load forecast data for at least the coincident peak of each year ?"In R10, revise the text to: "Each Transmission Service Provider shall provide ?" In R11, is the text referring to "known planned outages" and "known long term outages"? What is the distinction that is

Organization	Question 5:	Question 5 Comments:
		meant to be made between the two specified types of outages? In R12, revise the text to: "? modeling information for planned facilities changes, known planned outages ?". Also, is the text referring to "known planned outages" and "known long term outages"? What is the distinction that is meant to be made between the two specified types of outages? In R13, revise the text to: "? for planned facilities changes for each year of the Transmission planning horizon including but not limited to generators, and new technologies ?". This wording broadens the meaning from simply "new" facilities to also include any "changes" to existing facilities. We suggested removing the reference to Reactive Power Devices because these devices would not be owned by Resource Planners. In R14, revise the text to: "? for planned facilities changes for each year ?". This wording broadens the meaning from simply "new" facilities to also include any "changes" to existing facilities.
LCRA TSC	No	R-11 states that "Each Transmission Owner shall provide its respective Planning Coordinator with modeling information for known planned outages and long-term outages for Transmission equipment." This is typically achieved through outage coordination between the individual Transmission Operators and the System Operator. More clarification may help by defining the difference between planned outages and long-term outages as they are used in R-11. This may be an Operations standard versus a Planning standard requirement.
NERC and Regional Coordination	No	R9 - Reactive load forecasts are not generally provided by distribution provider to the Transmission Planner.R11 - The requirements for providing “long term outages” to the Planning Coordinator is vague. What is a “long term outage” and do I need to plan for it? I think the right answer is only if it is expected to occur over the period that the TP establishes their critical system conditions. SDT should initiate the appropriate SAR prior to disbanding.
American Transmission Company	No	We disagree with the approach of temporary requirements because of the problems that arise due to conflicting or uncoordinated standards (e.g. conflicting requirements between FAC-010-1 and TPL-002-0). We support the approach of developing appropriate MOD standards SARs to make the desired changes. However, if these requirements are retained than we suggest the following few changes to R9-R14.In R9, revise the text to: "? load forecast data for at least the coincident peak of each year In R10, revise the text to: "Each Transmission Service Provider shall provide "In R11, is the text referring to "known planned outages" and "known long term outages" What is the distinction that is meant to be made between the two specified types of outages In R12, revise the text to: "? modeling information for planned facilities changes, known planned outages ?". Also, is the text referring to "known planned outages" and "known long term outages"? What is the distinction that is meant to be made between the two specified types of outages

Organization	Question 5:	Question 5 Comments:
		In R13, revise the text to: "? for planned facilities changes for each year of the Transmission planning horizon including but not limited to generators, and new technologies ?". This wording broadens the meaning from simply "new" facilities to also include any "changes" to existing facilities. We suggested removing the reference to Reactive Power Devices because these devices would not be owned by Resource Planners. In R14, revise the text to: "for planned facilities changes for each year ?". This wording broadens the meaning from simply "new" facilities to also include any "changes" to existing facilities.
Florida Reliability Coordinating Council, inc	No	R9 through R14 ?R9 through R14 should not be addressed in this TPL Standard. Requirements R9 through R14 should be included in future revisions to the MOD standards. If R9 through R14 remain in the Standard, then the following comments are appropriate: R9 ? Recommend adding ?and season (as defined by the Planning Coordinator)? after ?? load forecast data for each year? .Recommend adding ?(as defined by the Planning Coordinator)? after ?Transmission nodes? to allow the Planning Coordinator to appropriately define the term Transmission node. Recommend deleting ?including the expected mix of industrial, commercial, and residential Loads,? from the requirement since this information is not required by Transmission Planners or the Planning Coordinator. Many distribution providers will not know the mix of load type for a given Transmission node. R11 ?Recommend the removal of ?with consideration given to spare equipment strategy,? from this requirement. We feel that the consideration of spare equipment strategy would be better suited in an operating horizon standard (TOPs) rather than in the TPL standard. The term ?long-term outage? in this requirement is vague and the text ?and long-term outages? should be eliminated. The FERC language in Order 693 P-1725 states ?Accordingly, the Commission directs the ERO to modify the planning Reliability Standards to require the assessment of planned outages consistent with the entity's spare equipment strategy.? There is no mention of ?long-term outages? in conjunction with spare equipment strategy. R12 ? Recommend rewording as follows: ?Each Generator Owner shall provide its respective Planning Coordinator with modeling information for known planned generator outages for each year of the Transmission planning horizon, within ninety days of a request for such information." The language ?long-term outages for generation equipment? is vague and unclear as to what is a long-term outage and what specific type of generation equipment should be considered. R13 ? Propose adding ?and any changes to existing plans? after ?new planned facilities? as shown below: ?Each Transmission Planner shall provide its respective Planning Coordinator with modeling information for new planned Facilities and any changes to existing plans for each year of the Transmission planning horizon??
NSTAR Electric	No	1. With respect to R9 "including the expected mix of industrial, commercial and residential loads", this provision may be inadequate to be practically useful. The potential issues include the variation in end-use load mix through the daily load

Organization	Question 5:	Question 5 Comments:
		cycle, seasonal load composition variations, and the ability to translate these end-uses into reasonable and useful steady-state and dynamic load models. It is important to understand how the information will be used and how much additional detail such as distribution network detail is also required. 2. Add to the last sentence of R9 as follows "within ninety days of a request for such information or as otherwise described in procedures established by the Planning Coordinator." 3. Flexibility is needed to conform with the requirements of the specific Planning Coordinator. Suggest changing R10 to read as follows: "R10. Each Transmission Planner shall provide its respective Planning Coordinator with modeling information for Firm Transmission Service data, Interchange Schedules and resources required to supply Load for each of its Balancing Authorities for each year of the Transmission planning horizon, within ninety days of a request for such information or as otherwise described in procedures established by the Planning Coordinator." 4. Flexibility is needed to conform with the requirements of the specific Planning Coordinator. Suggest changing R11 to read as follows:"R11. Each Transmission Owner shall provide its respective Planning Coordinator with modeling information for known planned outages and long-term outages for Transmission equipment for each year of the Transmission planning horizon with consideration given to spare equipment strategy, within ninety days of a request for such information or as otherwise described in procedures established by the Planning Coordinator." 5. Flexibility is needed to conform with the requirements of the specific Planning Coordinator. Suggest changing R12 to read as follows:"R12. Each Generator Owner shall provide its respective Planning Coordinator with modeling information for known planned outages and long-term outages for generation equipment for each year of the Transmission planning horizon, within ninety days of a request for such information or as otherwise described in procedures established by the Planning Coordinator." 6. Flexibility is needed to conform with the requirements of the specific Planning Coordinator. Suggest changing R13 and R14 to read as follows:"R13. Each Resource Planner shall provide its respective Planning Coordinator with the modeling information for new planned facilities for each year of the Transmission planning horizon including but not limited to generators, Reactive Power devices, and new technologies, within ninety days of a request for such information or as otherwise described in procedures established by the Planning Coordinator.. [Violation Risk Factor: TBD] [Time Horizon: TBD] R14. Each Transmission Planner shall provide its respective Planning Coordinator with modeling information for new planned facilities for each year of the Transmission planning horizon including but not limited to Transmission Lines, circuit breakers, Reactive Power devices, Protection System equipment and control devices, and new technologies, within ninety days of a request for such information or as otherwise described in procedures established by the Planning Coordinator.. [Violation Risk Factor: TBD] [Time Horizon: TBD] " 7. Planned and long-term outages are two fundamentally different concepts and should be treated separately. Planned and Long-Term outages should be defined. Define how planning events in Tables 1 and 2 are associated with each type of outage (e.g. P4, P5, or P6). There should be specific contingency descriptions associated with long-term outages.

Organization	Question 5:	Question 5 Comments:
		Define length of a "Long Term" outage. Planned outages should be addressed in the operating horizon unless otherwise defined in the planning horizon.
ISO New England Inc.	No	a. With respect to R9 "including the expected mix of industrial, commercial and residential loads", this provision may be inadequate to be practically useful. The potential issues include the variation in end-use load mix through the daily load cycle, seasonal load composition variations, and the ability to translate these end-uses into reasonable and useful steady-state and dynamic load models. It is important to understand how the information will be used and how much additional detail such as distribution network detail is also required. b. Add to the last sentence of R9 through R14 the following phrase, "within ninety days of a request for such information or as otherwise described in procedures established by the Planning Coordinator." c. Flexibility is needed to conform with the requirements of the specific Planning Coordinator. Suggest changing R10 to read as follows: R10. Each Transmission Planner shall provide its respective Planning Coordinator with modeling information for Firm Transmission Service data, Interchange Schedules and resources required to supply Load for each of its Balancing Authorities for each year of the Transmission planning horizon, within ninety days of a request for such information or as otherwise described in procedures established by the Planning Coordinator. d. Flexibility is needed to conform with the requirements of the specific Planning Coordinator. Suggest changing R11 to read as followsR11. Each Transmission Owner shall provide its respective Planning Coordinator with modeling information for known planned outages and long-term outages for Transmission equipment for each year of the Transmission planning horizon with consideration given to spare equipment strategy, within ninety days of a request for such information or as otherwise described in procedures established by the Planning Coordinator. e. Flexibility is needed to conform with the requirements of the specific Planning Coordinator. Suggest changing R12 to read as follows: R12. Each Generator Owner shall provide its respective Planning Coordinator with modeling information for known planned outages and long-term outages for generation equipment for each year of the Transmission planning horizon, within ninety days of a request for such information or as otherwise described in procedures established by the Planning Coordinator. f. Flexibility is needed to conform with the requirements of the specific Planning Coordinator. Suggest changing R13 and R14 as follows:R13. Each Resource Planner shall provide its respective Planning Coordinator with the modeling information for new planned facilities for each year of the Transmission planning horizon including but not limited to generators, Reactive Power devices, and new technologies, within ninety days of a request for such information or as otherwise described in procedures established by the Planning Coordinator.. [Violation Risk Factor: TBD] [Time Horizon: TBD] R14. Each Transmission Planner shall provide its respective Planning Coordinator with modeling information for new planned facilities for each year of the Transmission planning horizon including but not limited to Transmission Lines, circuit breakers, Reactive Power devices, Protection System equipment and control devices, and new technologies, within ninety days of a request for such information or as otherwise described in procedures established by the Planning Coordinator.

Organization	Question 5:	Question 5 Comments:
		[Violation Risk Factor: TBD] [Time Horizon: TBD] g. Planned and long-term outages are two fundamentally different concepts and should be treated separately. Planned and Long-Term outages should be defined. Define how planning events in Tables 1 and 2 are associated with each type of outage (e.g. P4, P5, or P6). Should there be specific contingency descriptions associated with long-term outages? Define length of a "Long Term" outage. Planned outages should be addressed in the operating horizon unless otherwise defined in the planning horizon.

Response: In response to comments from you and others in the industry, the SDT has removed Requirements R9-R14 and enhanced Requirement R1 to more clearly specify the modeling information needed to support accurate Planning Assessments.

The SDT agrees that the wording regarding modeling of outages is confusing. In response the SDT has eliminated Requirement R11 and included a new Requirement R1.1.1 to require modeling of planned outages of generation and Transmission Facilities when they are specifically known.

R1. Each Transmission Planner and Planning Coordinator shall maintain System models for performing the studies needed to complete their Planning Assessment. The models shall use data consistent with the data provided in accordance with ~~Requirements R9 through R14,~~ the MOD-010 and MOD-012 standards~~,~~ and other data sources,~~.~~ and shall simulate projected System conditions including requirements of regulatory authorities and other legal obligations.

R1.1 ~~The Planning Assessment shall include documentation of the technical rationale for modification of any data that was provided in Requirement R9 through R14, MOD-010, and MOD-012.~~Models for the Planning Assessment shall represent:

R1.1.1 Planned outages of generation and Transmission Facilities, if specifically known.

R1.1.2 New planned Facilities and changes to existing Facilities for each year of the Near-Term and Long-Term Transmission Planning Horizon, such as

- Transmission Lines
- Generators
- Circuit breakers
- Reactive Power devices
- Protection System equipment
- Control devices
- New technologies

R1.1.3 Real and reactive Demand of Load

R1.1.4 Firm Transmission Service

Organization	Question 5:	Question 5 Comments:
R1.1.5 Interchange **R1.1.6** Network resources required to supply Load		
Gainesville Regional Utilities	Yes and No	I agree with the approach you are taking concerning this modeling data. I understand that "long term outages" for transmission and generation elements refer to a time frame greater that one year. But I am unclear if the "known planned outage" refers to the same time frame or does it apply to a normal scheduled maintenance type outage of less that one year. Are these "shorter that one year" outages better handled by sensitivity studies since they are normally during an non-peak seasons of the year? Again, the smaller utilities should provide all the requested data to the RRO, but should only have to answer to issues involving their elements discovered at the RRO level.
Response: The SDT agrees that the wording regarding modeling of outages is confusing. In response the SDT has eliminated Requirement R11 and included a new Requirement R1.1.1 to require modeling of planned outages of generation and Transmission Facilities when they are specifically known. **R1.1.1** Planned outages of generation and Transmission Facilities, if specifically known		
JEA	Yes and No	R9. JEA does not agree that the Transmission Planners should have the responsibility to perform load development or sanity checks on the DP's forecasted real and reactive loads based upon superfluous information like the customer mix. Also, JEA recommends adding language that gives the Planning Coordinator the option to require the forecast by season. R10. JEA agrees R11. JEA recommends that R11 be split into two functional requirements: (A) the provision of known planned outage information, and (B) the provision of "potential long-term forced outages of transmission equipment where readily available spares are not identified". JEA can support requirement (A), but believes that requirement (B) should be part of an operating horizon standard (TOP?) where the availability of spares and spare equipment strategies can be refined in a responsive manner as the opportunities evolve. JEA does not believe that the industry should overbuild its system for the possibility of a rare "low probability" equipment failure event will occur and no reasonable replacement alternative will exist in the world. R12. Need to define long-term outages R13. JEA agrees R14. JEA agrees
Ameren	No	We consider the proposed requirements R9-R14 to be largely a duplication of the MOD standards and do not agree that they belong in the proposed TPL-001-1. We would propose that a reference to the MOD standards would be more appropriate so as not to create a double-jeopardy compliance situation. If it is determined that the requirements R9-R14

Organization	Question 5:	Question 5 Comments:
		need to stay, the proposed standard needs to reflect the existing data flow processes and consider who builds the models, which is the Transmission Planner, and not the Planning Coordinator. According to the definition provided in this standard, the Planning Coordinator is "The responsible entity that coordinates and integrates transmission facility and service plans, resource plans, and protection systems." In our case, the Transmission Planner receives: a) load forecast (real and reactive) information from the Distribution Planner or Load Serving Entity, b) transmission ratings/impedance/topology(outage) information from the Transmission Owners, c) generation ratings/capabilities/outage information from the Generation Owners, and d) designated network resources (existing and future), as well as external obligations, from Resource Planners. The Transmission Planner develops powerflow and corresponding dynamic models from this information including load magnitude and distribution, generation dispatch, and net scheduled interchange, and provides the models or modeling components to the Reliability Coordinator and Planning Coordinator. Other organizations may have similar problems with data flow processes as specified in R9-R14.We view the R9 requirement of the proposed TPL-001-1 for the Distribution Provider to provide real and reactive load forecast data, including load mix information, to conflict with R1.4 of MOD-013-1 which has the RRO as setting the requirement for the dynamic load data. R10 needs to be modified to reflect the RTO activities related to the coordination and sale of Firm Transmission Service, which is not a Transmission Planning activity.R11 needs to be modified to drop the "spare equipment strategy". This is not a modeling issue and should be covered in standard TOP-002-2 (see R1 and R6).R13 needs to be modified to drop the "Reactive Power devices and new technologies" because Resource Planners typically do not know about these devices. The Transmission Planner or Owner may be the more appropriate entity. We view R14 as an extension of Standards MOD-010-0, MOD-011-0, MOD-012-0, and MOD-013-0.
Exelon Transmission Planning	Yes and No	R11 shouldn't include consideration of a spare equipment strategy. All known planned and long-term outages of transmission equipment should be included regardless of the spare equipment strategy.
IESO	Yes and No	A. R9: Agreed B. R10: Holding the TP to provide modeling information on Firm Transmission Service, (a TSP's role), Interchange Schedules (also a TSP's role), and resources required to supply Load for each of its Balancing Authorities (Resource Planner's role) may not be appropriate. In fact, the TP relies on others to provide this set of information for developing its own study model. We suggest to change the responsible entities to these specific entities; or if the TP is required to provide the PC with the model, then there should be requirements in other standards to obligate these other entities to provide the TP with the needed information. C. R11: The phrase "with consideration given to spare equipment strategy" is vague (not enforceable or measurable) and does not appear to add anything to the required product which should already have the spare strategy and capability taken into account when outage plans are developed. We suggest to remove this phrase. If this was retained, the follow on question is why R12 doesn't have a similar requirement (note that a generator outage may not be due to maintenance of the generator itself; it could be due to outages to step-up transformers, breakers or switches for which spares may be

Organization	Question 5:	Question 5 Comments:
		carried). D. R12: Agreed. E. R13: We are not sure what purpose to include "and new technologies" would serve if such technologies do not result in the provision of generators and/or reactive sources which are already covered. Further, this is vague to determine what constitutes "new technologies" and hence this is not enforceable or measurable. We suggest to remove this term. F. R14: Same comment as in R13 on "new technologies".

Response: In response to comments from you and others in the industry, the SDT has removed Requirements R9-R14 and enhanced Requirement R1 to more clearly specify the modeling information needed to support accurate Planning Assessments.

The standard's wording regarding "spare equipment strategy" has also been revised and removed from the modeling requirements. Requirement R2.1.5 now addresses how a Transmission Planner's "spare equipment strategy" should be considered in Transmission planning.

R1. Each Transmission Planner and Planning Coordinator shall maintain System models for performing the studies needed to complete their Planning Assessment. The models shall use data consistent with the data provided in accordance with ~~Requirements R9 through R14,~~ the MOD-010 and MOD-012 standards~~,~~ and other data sources,~~.~~ and shall simulate projected System conditions including requirements of regulatory authorities and other legal obligations.

R1.1 ~~The Planning Assessment shall include documentation of the technical rationale for modification of any data that was provided in Requirement R9 through R14, MOD-010, and MOD-012.~~Models for the Planning Assessment shall represent:

R1.1.1 Planned outages of generation and Transmission Facilities, if specifically known.

R1.1.2 New planned Facilities and changes to existing Facilities for each year of the Near-Term and Long-Term Transmission Planning Horizon, such as

- Transmission Lines
- Generators
- Circuit breakers
- Reactive Power devices
- Protection System equipment
- Control devices
- New technologies

R1.1.3 Real and reactive Demand of Load

Organization	Question 5:	Question 5 Comments:
R1.1.4 Firm Transmission Service **R1.1.5** Interchange **R1.1.6** Network resources required to supply Load **R2.1.4** When an entity's spare equipment strategy could result in the unavailability of major Transmission equipment that has a lead time of one year or more (such as a transformer), an analysis of the impact on System performance shall be assessed. The analysis shall reflect the Contingencies identified in Table 1 during the conditions that the System is expected to experience due to the unavailability of the long lead time equipment.		
Progress Energy Florida, Inc.	No	PEF as a general rule believes that Requirements R9-14 can and should be addressed in a MOD Standard. Individual comments on particular ones that PEFs sees as problematic are as follows:R9: This requirement is problematic in its present wording. As worded it would appear to infringe upon the outlined process regarding provision of load forecast data as stipulated in PEFs Attachment K document, mandated to be included as an Attachment to our Tariff per FERC Order 890. In PEF's Attachment K, load forecast data, as submitted by all entities responsible for providing such data for PEF native load, must be submitted by January 1 of each year. Implementation of R9 would thus set in place two binding regulatory processes for a situation in which only one is needed. Furthermore, the requirement uses the term "transmission node", a term which is ambiguous and not easily applicable in the electric utility business. Terms such as "feeders", "substations" or "delivery points" might be more appropriate.R11: PEF appreciates the consideration given with the term "known planned outages", given that specific dates for planned outages in the long-term planning horizon are often difficult to know. This point concludes, however, with the addition of the phrase ?with consideration given to spare equipment strategy?, and PEF does not understand what is meant by this term nor why it is given special consideration in a discussion of planned outages. Spare equipment is just as crucial, if not more so, in the event of an unplanned outage. Furthermore, consideration of spare equipment strategy is already handled as part of PEF's planning processes and as part of the existing TPL Standards. PEF therefore requests that the phrase "with consideration given to spare equipment strategy" be removed from R11.R13: PEF is unsure as to the meaning of "for each year of the Planning horizon". PEF would point out that if from one planning cycle to the next, the modeling of a particular planned generator has not changed, the Resource Planners should not have to re-submit the same data over and over again on an annual basis. Additionally, PEF asserts that its Resource Planners are not involved in the development or implementation of Reactive Power devices or new technologies, and therefore requests that these specifications be removed.
Response: In response to comments from you and others in the industry, the SDT has removed Requirements R9-R14 and enhanced Requirement R1 to more clearly specify the modeling information needed to support accurate Planning Assessments. The standard's wording regarding "spare equipment strategy" has also been revised and removed from the modeling requirements. Requirement R2.1.4 now addresses how a Transmission Planner's "spare equipment strategy" should be considered in Transmission planning. The phrase "for each year of the Transmission Planning Horizon" was deleted in the associated requirements. Requirement R1.1.2 now addresses that the models		

Organization	Question 5:	Question 5 Comments:
shall represent each year of the Near-Term and Long Term Transmission Planning Horizon. The SDT agrees with your comment on the Resource Planner. The standard is no longer applicable to the Resource Planner and the requirement has been deleted. **R1.** Each Transmission Planner and Planning Coordinator shall maintain System models for performing the studies needed to complete their Planning Assessment. The models shall use data consistent with the data provided in accordance with ~~Requirements R9 through R14,~~ the MOD-010 and MOD-012 standards~~,~~ and other data sources,~~.~~ and shall simulate projected System conditions including requirements of regulatory authorities and other legal obligations. **R1.1** ~~The Planning Assessment shall include documentation of the technical rationale for modification of any data that was provided in Requirement R9 through R14, MOD-010, and MOD-012.~~Models for the Planning Assessment shall represent: **R1.1.1** Planned outages of generation and Transmission Facilities, if specifically known. **R1.1.2** New planned Facilities and changes to existing Facilities for each year of the Near-Term and Long-Term Transmission Planning Horizon, such as Transmission Lines Generators Circuit breakers Reactive Power devices Protection System equipment Control devices New technologies **R1.1.3** Real and reactive Demand of Load **R1.1.4** Firm Transmission Service **R1.1.5** Interchange **R1.1.6** Network resources required to supply Load **R2.1.4** When an entity's spare equipment strategy could result in the unavailability of major Transmission equipment that has a lead time of one year or more (such as a transformer), an analysis of the impact on System performance shall be assessed. The analysis shall reflect the Contingencies identified in Table 1 during the conditions that the System is expected to experience due to the unavailability of the long lead time equipment.		
Lafayette Utilities	No	In Draft 2 of TPL-001, the SDT has adopted ?Planning Coordinator? as a new defined term. That term is used frequently in the new draft Reliability Standard (including in Requirements R9 - R14 but also, most notably, in Section A.4.1.1). The

Organization	Question 5:	Question 5 Comments:
System		SDT explained in its response to comments on Draft 1 that it had taken the definition of "Planning Coordinator" from the NERC Functional Model. However, the term "Planning Coordinator" is not used in the NERC Registry Criteria, nor does it appear in the NERC Glossary. Because the latter form the basis for allocating compliance responsibilities, the SDT should eliminate use of "Planning Authority" and should adopt in its stead a term that is used in the Registry Criteria (such as "Planning Authority"). With respect to the incorporation of data provided under Reliability Standards MOD-010 and MOD-012 into the studies contemplated by the revised version of TPL-001 (see Requirements R1 and R5), Lafayette urges the SDT to clarify entities? obligations with respect to the provision and use of this data, particularly with respect to Planning Coordinators/Authorities. As presently drafted, MOD-010 and MOD-012 do not apply to Planning Coordinators or Planning Authorities, and these standards also do not provide for these entities to receive MOD-010 and MOD-012 data from the entities that are subject to these two Standards. Further, to the extent that Requirements R1 and R5 require Transmission Planners to use MOD-010 and MOD-012 data, is it contemplated that Transmission Planners will obtain this data from Resource Planners and Transmission/Generation Owners in their areas, or will Transmission Planners merely be obligated to incorporate the data that they themselves provide under MOD-010 and MOD-012 into their studies? Requirement R9 directs each Distribution Provider to furnish its "Planning Coordinator" with modeling information that includes "real and reactive load forecast data" at Transmission nodes" and "the expected mix of industrial, commercial, and residential Loads." As discussed previously with respect to Requirement 2.4.1, Distribution Providers may consider the information required by R9 to be commercially sensitive such that its disclosure could have adverse competitive effects. The information specified in R9 therefore should be protected from disclosure unless the provider of the information authorizes its release or other appropriate protections are in place. Additionally, given that this requirement directs the provision of "load forecast data," it seems more appropriate that the requirement apply to "Load-Serving Entities," "Distribution Providers that serve load" or "Distribution Providers that are also Load-Serving Entities." Requirement R10 assumes that the Transmission Planner has access at all times (and, therefore, is in a position to provide within 90 days of a request) to Firm Transmission Service Data, Interchange Schedules, and resources required to serve load for each of its Balancing Authorities for each year of the transmission planning horizon. The Transmission Planner, however, may only receive such information periodically (e.g., annually or semi-annually) from its Balancing Authorities for use in the planning process. It is more likely that, at any point during the year, the Transmission Owner, Transmission Operator, or Transmission Service Provider would have access to the specified information. Requirement R10 should be expanded to include these other entities, which probably will have access to the data throughout the planning cycle. Requirement R11 does not specify whether outage information provided by a Transmission Owner must be updated (e.g., if the outage schedule changes after being provided upon request by the Planning Coordinator). The Transmission Owner's obligations with respect to providing updated information should be clearly stated. Additionally, it is not clear what the SDT means by the phrase "giving consideration to spare equipment strategy." If the intent is that Transmission Owners shall factor into their outage decisions and timing the availability of spare equipment that might affect the need for or duration of an outage, that intent should be stated in clear terms.
Response: v4 of the Functional Model which has been approved by the BOT includes the term 'Planning Coordinator'. The definition has been deleted from this		

Organization	Question 5:	Question 5 Comments:

posting as it has already been implemented in another project.

In response to comments from you and others in the industry, the SDT has removed Requirements R9-R14 and enhanced Requirement R1 to more clearly specify the modeling information needed to support accurate Planning Assessments.

The standard's wording regarding "spare equipment strategy" has also been revised and removed from the modeling requirements. Requirement R2.1.4 now addresses how a Transmission Planner's "spare equipment strategy" should be considered in Transmission planning.

R1. Each Transmission Planner and Planning Coordinator shall maintain System models for performing the studies needed to complete their Planning Assessment. The models shall use data consistent with the data provided in accordance with ~~Requirements R9 through R14,~~ the MOD-010 and MOD-012 standards~~,~~ and other data sources,~~.~~ and shall simulate projected System conditions including requirements of regulatory authorities and other legal obligations.

R1.1 ~~The Planning Assessment shall include documentation of the technical rationale for modification of any data that was provided in Requirement R9 through R14, MOD-010, and MOD-012.~~Models for the Planning Assessment shall represent:

R1.1.1 Planned outages of generation and Transmission Facilities, if specifically known.

R1.1.2 New planned Facilities and changes to existing Facilities for each year of the Near-Term and Long-Term Transmission Planning Horizon, such as

- Transmission Lines
- Generators
- Circuit breakers
- Reactive Power devices
- Protection System equipment
- Control devices
- New technologies

R1.1.3 Real and reactive Demand of Load

R1.1.4 Firm Transmission Service

R1.1.5 Interchange

R1.1.6 Network resources required to supply Load

R2.1.4 When an entity's spare equipment strategy could result in the unavailability of major Transmission equipment that has a lead time of one year or more (such as a transformer), an analysis of the impact on System performance shall be assessed. The analysis shall reflect the Contingencies identified in Table 1 during the conditions that the System is expected to experience due to the unavailability of the long lead time equipment.

Organization	Question 5:	Question 5 Comments:
E.ON U.S. Transmission Planning	Yes and No	R1 states "Each Transmission Planner and Planning Coordinator shall maintain System models " and R7 states "Each Transmission Planner and Planning Coordinator shall determine and identify individual and joint responsibilities" but R9-R14 requires that data flow through the Planning Coordinator. Requirements R9-R14 should allow the data to be provided to either, as appropriate for the situation.R9 ?neighboring systems? should be replaced with more descriptive terms such as Planning Coordinators of ? or Transmission Planners of ? R10 The Transmission Planner is a user of this data, just like the Planning Coordinator, and is not the source of this data. The responsibility should be placed on the "source provider" like R9 and R11-R14. R11 The requirement should be limited to planned outages and existing outages that may be long-term due to the spare equipment strategy. The contingency analysis covers all other future outages. R12 The requirement should be limited to planned outages and existing outages that may be long-term due to the spare equipment strategy. The contingency analysis covers all other future outages.

Response: In response to comments from you and others in the industry, the SDT has removed Requirements R9-R14 and enhanced Requirement R1 to more clearly specify the modeling information needed to support accurate Planning Assessments.

The SDT agrees that the wording regarding modeling of outages is confusing. In response the SDT has eliminated Requirement R11 and included a new Requirement R1.1.1 to require modeling of planned outages of generation and Transmission Facilities when they are specifically known.

The standard's wording regarding "spare equipment strategy" has also been revised and removed from the modeling requirements. Requirement R2.1.4 now addresses how a Transmission Planner's "spare equipment strategy" should be considered in Transmission planning.

R1. Each Transmission Planner and Planning Coordinator shall maintain System models for performing the studies needed to complete their Planning Assessment. The models shall use data consistent with the data provided in accordance with ~~Requirements R9 through R14,~~ the MOD-010 and MOD-012 standards~~,~~ and other data sources,~~.~~ and shall simulate projected System conditions including requirements of regulatory authorities and other legal obligations.

R1.1 ~~The Planning Assessment shall include documentation of the technical rationale for modification of any data that was provided in Requirement R9 through R14, MOD-010, and MOD-012.~~Models for the Planning Assessment shall represent:

R1.1.1 Planned outages of generation and Transmission Facilities, if specifically known.

R1.1.2 New planned Facilities and changes to existing Facilities for each year of the Near-Term and Long-Term Transmission Planning Horizon, such as

- Transmission Lines
- Generators
- Circuit breakers
- Reactive Power devices

Organization	Question 5:	Question 5 Comments:
Protection System equipment Control devices New technologies **R1.1.3** Real and reactive Demand of Load **R1.1.4** Firm Transmission Service **R1.1.5** Interchange **R1.1.6** Network resources required to supply Load **R2.1.4** When an entity's spare equipment strategy could result in the unavailability of major Transmission equipment that has a lead time of one year or more (such as a transformer), an analysis of the impact on System performance shall be assessed. The analysis shall reflect the Contingencies identified in Table 1 during the conditions that the System is expected to experience due to the unavailability of the long lead time equipment.		
Orlando Utiliites Commission	No	If improvements are needed to the MOD standards then those should be addressed in the MOD standards. This is beyond the scope of the TPL standards. Creating requirements that are not within the scope of a particular standard invites compliances issues and also creates an environment where it may not be possible to comply with both standards. However if you are going to retain these please consider: R7: Revising to state "Each Transmission Planner and their associated Planning Coordinator" otherwise this could be interpreted that every TP & PC has to have an agreement with every other TP and PC in existence on their joint and individual responsibilities. R8: This seems to be redundant with the FERC order 890 requirements for an Attachment K process. That process already has an audit mechanism in FERC and a reporting mechanism in the form of the clients of that process. Having NERC auditors monitor this type of process seems a distraction from their purpose of enhancing system reliability.
Response: In response to comments from you and others in the industry, the SDT has removed Requirements R9-R14 and enhanced Requirement R1 to more clearly specify the modeling information needed to support accurate Planning Assessments. **R1.** Each Transmission Planner and Planning Coordinator shall maintain System models for performing the studies needed to complete their Planning Assessment. The models shall use data consistent with the data provided in accordance with ~~Requirements R9 through R14,~~ the MOD-010 and MOD-012 standards~~,~~ and other data sources,~~.~~ and shall simulate projected System conditions including requirements of regulatory authorities and other legal obligations. **R1.1** ~~The Planning Assessment shall include documentation of the technical rationale for modification of any data that was provided in Requirement R9 through R14, MOD-010, and MOD-012.~~Models for the Planning Assessment shall represent:		

Organization	Question 5:	Question 5 Comments:
R1.1.1 Planned outages of generation and Transmission Facilities, if specifically known. **R1.1.2** New planned Facilities and changes to existing Facilities for each year of the Near-Term and Long-Term Transmission Planning Horizon, such as Transmission Lines Generators Circuit breakers Reactive Power devices Protection System equipment Control devices New technologies **R1.1.3** Real and reactive Demand of Load **R1.1.4** Firm Transmission Service **R1.1.5** Interchange **R1.1.6** Network resources required to supply Load Regarding the comment pertaining to Requirement R7, the SDT believes there is an inherent association between the TP and its PC and it should not be interpreted that every TP needs an agreement with every other TP and PC. Regarding the comment pertaining to Requirement R8, the SDT believes the requirement captures the intent of FERC Order 890.		
BCTC	Yes	We can live with the proposed Requirements, but expect some problems may arise with implementation. For example, to accurately model our system for stability studies, we require models of adjacent systems. It is not clear how we will coordinate this requirement within the WECC base case process.
PacifiCorp	Yes	We agree that the MOD Standards need modifications and additions to be used for Transmission Planning, We also agree with the movement of the R1of the first draft to the R9 through R14 of this draft, We also agree that when the MOD Standards are replaced, then remove these Requirements from the TPL Standard.
Arizona Public Service Co.	Yes	We agree that the MOD Standards need modifications and additions to be used for Transmission Planning, We also agree with the movement of the R1of the first draft to the R9 through R14 of this draft, We also agree that when the MOD Standards are replaced, then remove these Requirements from the TPL Standard.

Organization	Question 5:	Question 5 Comments:
City Water, Light & Power - Springfield, Illinois	Yes	
Progress Energy Carolinas	Yes	
Platte River Power Authority	Yes	
Tenaska, Inc.	Yes	
SMUD	Yes	
SERC Reliability Review Subcommittee and Planning Standards Subcommittee	Yes	
Oncor Electric Delivery	Yes	NA
Entergy Services, Inc.	Yes	
Response: Thank you for your response but the majority of the industry has responded negatively and the SDT has changed the requirements as shown in the summary response. .		

6. The SDT has modified the requirements relating to short circuit analysis Do you concur with the modifications reflected in Requirements R2.3 and R4. If not, please state why and/or suggest specific changes.

Summary Consideration:

The majority of commenters responded negatively. In general, commenters indicated a need for clarifying what specific short-circuit studies were required. While it's an annual requirement, what year or years should be studied? Is there both a short-term and long-term requirement or is it just short-term? In addition, the need for studies beyond those of a "normal system" was also questioned. To provide clarity on these issues, the SDT changed Requirements R2.3 and R2.6.2 and created a new Requirement, R2.7, to address the need for corrective actions specific to when fault interrupting duties are exceeded while also deleting Requirement R4 as those requirements are now included in Requirement R2.3. In addition, some entities suggested these requirements belong in a separate standard such as FAC-002 or a new standard. However, the SAR for this project specified that short-circuit requirements would be included in TPL-001; therefore, the suggestion to move these short-circuit study requirements to a separate standard cannot be implemented. Also, the need for, or applicability, of 'single Contingencies' in Requirement R4 was dropped when Requirement R4 was merged into Requirement R2.3.

In response to industry comments, Requirement R4 has been deleted and the following requirements have been changed:

R2.3 The short circuit analysis portion of the Planning Assessment shall be conducted annually addressing the Near-Term Transmission Planning Horizon and can be supported by current or past studies. The analysis shall determine the maximum short circuit interruption duty on fault interrupting devices using the System short circuit model with any generation and Transmission Facilities in service which could impact the study area.

R2.6.2 (now R2.5.2) For steady state, short circuit, ~~Generating Plant Stability,~~ or ~~System~~ Stability analysis: the ~~study~~ present System model shall not include any material changes, such as, generation or Transmission additions/removals, or topology changes that have occurred in the intervening period and would impact the study area. Material generation changes could include:

- The addition/deletion/change of individual generating unit capability of 20 MW or greater.
- An aggregated addition/deletion/change to a group of generating units directly connected through their step-up transformer(s) to the BES which total 20 MW or greater.

R2.7 For short circuit analysis, if the short circuit current interruption duty on fault interrupting devices determined in Requirement R2.3 exceeds their Equipment Rating, the Planning Assessment shall include a Corrective Action Plan to address the Equipment Rating violations. The Corrective Action Plan shall:

R2.7.1 List System deficiencies and the associated actions needed to achieve required System performance.

R2.7.2 Be reviewed in subsequent annual Planning Assessments as to implementation status.

Organization	Question 6:	Question 6 Comments:
NPCC	No	In R4, suggest striking, "that would result in greater circuit breaker interrupting duties?".
Los Angeles Department of Water and Power	No	Short circuit study is a static study, there is no dynamic involved. The main purpose of short circuit study, from a planning perspective, is to size the breakers to ensure the breakers can interrupt a fault in the system when called upon. R4 requires simulation including contingencies, for what purpose is not known. The language implies there are single contingencies that could result in higher duties. I disagree. The highest duty a circuit breaker will see is when the system is whole and with all generator units in service and the fault to be cleared is a bus fault. Any single contingency that involve losing a unit or any component in the system will result in a weaker system and less short circuit duties. This is elementary. I cannot envision of any single contingency that would put more units on line or switch in additional transmission facilities beyond a full system with all unit already in service. In R2.3, the requirement is to do the study on an annual basis "and" support of past studies. If the intent is to allow past studies to substitute for annual study, the word "and" should be changed to "or". If the intent is to mandate annual study, then the support of past studies is irrelevant since the annual study supersedes past ones. In addition, short circuit study does not need to be performed annually unless there is substantive addition to the system in the form of a generating unit or a major transmission facility. So it make sense to allow past studies in lieu of annual study if there is no substantive addition to the system.
Transmission Agency of Northern California	Yes and No	We agree with R2.3. However, R4 requires assessment of ?Short-circuit capability of its equipment under normal conditions and following any single Contingency condition that would result in greater circuit breaker interrupting duties?. Since short circuit studies are typically performed by applying a fault on a Facility starting from a normal condition, there can be confusion whether the result would constitute ?normal? condition or ?following any single Contingency condition?. Also, by specifying the normal and single contingency conditions, R4 is straying into ?how? to perform a study, which is not necessary in a standard. We suggest deleting the reference to the contingencies to be used in the study.
OPUC	Yes and No	What constitutes a ?normal condition? still needs further clarity.
Pacific Gas and Electric Co.	Yes and No	We agree with R2.3. However, R4 requires assessment of ?Short-circuit capability of its equipment under normal conditions and following any single Contingency condition that would result in greater circuit breaker interrupting duties?. Since short circuit studies are typically performed by applying a fault on a Facility starting from a normal condition, there can be confusion whether the result would constitute “normal” condition or “following any single Contingency condition”. Also, by specifying the normal and single contingency conditions, R4 is straying into ?how? to perform a study, which is not necessary in a standard. We suggest deleting the reference to the contingencies to be used in the study.
Public Service Company of New Mexico	Yes and No	We agree with R2.3. However, R4 requires assessment of ?Short-circuit capability of its equipment under normal conditions and following any single Contingency condition that would result in greater circuit breaker interrupting duties?. Since short circuit studies are typically performed by applying a fault on a Facility starting from a normal condition, there can be confusion

Organization	Question 6:	Question 6 Comments:
		whether the result would constitute ?normal? condition or ?following any single Contingency condition?. Also, by specifying the normal and single contingency conditions, R4 is straying into “how” to perform a study, which is not necessary in a standard. We suggest deleting the reference to the contingencies to be used in the study.
PacifiCorp	Yes and No	We agree with R2.3. However, R4 requires assessment of “Short circuit capability of its equipment under normal condition and following any single Contingency condition that would result in greater circuit breaker interrupting duties”. Since short circuit studies are typically performed by applying a three phase fault on a Facility starting from a normal condition, please clarify whether the result would constitute ?normal? condition or ?following any single Contingency condition?.
Puget Sound Energy, Inc.	Yes and No	We agree with R2.3. However, R4 requires assessment of “Short circuit capability of its equipment under normal conditions and following any single Contingency condition that would result in greater circuit breaker interrupting duties”. Since short circuit studies are typically performed by applying a fault on a Facility starting from a normal condition, there can be confusion whether the result would constitute “normal” condition or “following any single Contingency condition”. Also, by specifying the normal and single contingency conditions, R4 is straying into “how” to perform a study, which is not necessary in a standard. We suggest deleting the reference to the contingencies to be used in the study.
Idaho Power Company	Yes and No	We agree with R2.3. However, R4 requires assessment of “Short circuit capability of its equipment under normal condition and following any single Contingency condition that would result in greater circuit breaker interrupting duties”. Since short circuit studies are typically performed by applying a fault on a Facility starting from a normal condition, there can be confusion whether the result would constitute “normal” condition or ?following any single Contingency condition”. Also, by specifying the normal and single contingency conditions, R4 is straying into “how” to perform a study, which is not necessary in a standard. We suggest deleting the reference to the contingencies to be used in the study.
SMUD	Yes and No	We agree with R2.3. However, R4 requires assessment of ?Short-circuit capability of its equipment under normal conditions and following any single Contingency condition that would result in greater circuit breaker interrupting duties?. Since short circuit studies are typically performed by applying a fault on a Facility starting from a normal condition, there can be confusion whether the result would constitute ?normal? condition or ?following any single Contingency condition?. Also, by specifying the normal and single contingency conditions, R4 is straying into ?how? to perform a study, which is not necessary in a standard. We suggest deleting the reference to the contingencies to be used in the study.
Hydro-Quebec TransEnergie (HQT)	No	In R4, suggest striking, "that would result in greater circuit breaker interrupting duties?".
Sierra Pacific Power Comapny	Yes and No	We agree with R2.3. However, R4 requires assessment of “Short circuit capability of its equipment under normal condition and following any single Contingency condition that would result in greater circuit breaker interrupting duties”. Since short circuit

Organization	Question 6:	Question 6 Comments:
/ Nevada Power Company		studies are typically performed by applying a fault on a Facility starting from a normal condition, there can be confusion whether the result would constitute “normal” condition or “following any single Contingency condition”. Also, by specifying the normal and single contingency conditions, R4 is straying into “how” to perform a study, which is not necessary in a standard. We suggest deleting the reference to the contingencies to be used in the study.
Black Hills Corporation	Yes and No	We agree with R2.3. However, R4 requires assessment of ?Short-circuit capability of its equipment under normal conditions and following any single Contingency condition that would result in greater circuit breaker interrupting duties?. Since short circuit studies are typically performed by applying a fault on a Facility starting from a normal condition, there can be confusion whether the result would constitute “normal” condition or “following any single Contingency condition”. Also, by specifying the normal and single contingency conditions, R4 is straying into “how” to perform a study, which is not necessary in a standard. We suggest deleting the reference to the contingencies to be used in the study.
Arizona Public Service Co.	Yes and No	We agree with R2.3. However, R4 requires assessment of “Short circuit capability of its equipment under normal condition and following any single Contingency condition that would result in greater circuit breaker interrupting duties”. Since short circuit studies are typically performed by applying a three phase fault on a Facility starting from a normal condition, please clarify whether the result would constitute “normal” condition or “following any single Contingency condition”.
Exelon Transmission Planning	No	R2.3 is not clear as to which year’s studies are required. Is the Planning Assessment time frames in R2 also applicable to R4? The phrase 'years one or two of the near-term planning horizon' should be included.
SRP	Yes and No	We agree with R2.3. However, R4 requires assessment of ?Short-circuit capability of its equipment under normal conditions and following any single Contingency condition that would result in greater circuit breaker interrupting duties?. Since short circuit studies are typically performed by applying a fault on a Facility starting from a normal condition, there can be confusion whether the result would constitute ?normal? condition or ?following any single Contingency condition?. Also, by specifying the normal and single contingency conditions, R4 is straying into ?how? to perform a study, which is not necessary in a standard. We suggest deleting the reference to the contingencies to be used in the study.
Tucson Electric Power Company	Yes and No	We agree with R2.3. However, R4 requires assessment of ?Short-circuit capability of its equipment under normal conditions and following any single Contingency condition that would result in greater circuit breaker interrupting duties?. Since short circuit studies are typically performed by applying a fault on a Facility starting from a normal condition, there can be confusion whether the result would constitute ?normal? condition or ?following any single Contingency condition?. Also, by specifying the normal and single contingency conditions, R4 is straying into ?how? to perform a study, which is not necessary in a standard. We suggest deleting the reference to the contingencies to be used in the study.

Organization	Question 6:	Question 6 Comments:
SERC Dynamics Review Subcommittee	Yes	It is not clear in the standard what is meant by ?single contingency?? Is the concern in Requirement R4 limited to single contingencies that may result in a system state which results in a greater circuit breaker interrupting duty?
Austin Energy	Yes and No	Transmission Planners should assess equipment short-circuit capability under normal conditions, but the need assess its capability following a contingency is so rare it should be left to the planner's selective analysis and not made a specific requirement in the standards.
Modesto Irrigation District	Yes and No	Comments: We agree with R2.3. However, R4 requires assessment of ?Short-circuit capability of its equipment under normal conditions and following any single Contingency condition that would result in greater circuit breaker interrupting duties?. Since short circuit studies are typically performed by applying a fault on a Facility starting from a normal condition, there can be confusion whether the result would constitute ?normal? condition or ?following any single Contingency condition?. Also, by specifying the normal and single contingency conditions, R4 is straying into “how” to perform a study, which is not necessary in a standard. We suggest deleting there reference to the contingencies to be used in the study.
Tri-State Generatino and Transmission Association, Inc.	Yes and No	R2.3 is acceptable as written. R4 is redundant and should be eliminated. Also, the contingency short circuit study requirement does not appear to meet the purpose described in this draft standard (breaker duty monitoring). Three-phase short circuits on an intact system should cover the highest fault conditions, and thus the most critical breaker duty conditions.
Tri-State G&T	Yes and No	We agree with R2.3. However, R4 requires assessment of ?Short-circuit capability of its equipment under normal conditions and following any single Contingency condition that would result in greater circuit breaker interrupting duties?. Since short circuit studies are typically performed by applying a fault on a Facility starting from a normal condition, there can be confusion whether the result would constitute “normal” condition or “following any single Contingency condition.” Also, by specifying the normal and single contingency conditions, R4 is straying into “how” to perform a study, which is not necessary in a standard. We suggest deleting the reference to the contingencies to be used in the study.
Lakeland Electric	No	R2.3 or R4 should specify how many and / or how to choose which years of the planning horizon shall be studied. R4 should specify method of choosing which single contingencies to study as larger systems will require an inordinate amount of work to outage every element during each of the study years of the short circuit analysis.
Brazos Electric Power Cooperative, Inc.	No	2.3 is acceptable, the deletion was recommended in our previous comments.R4 should not be added to this Standard. It adds nothing to the document the way it is worded and is quite similar to 2.3.

Organization	Question 6:	Question 6 Comments:
NERC and Regional Coordination	No	Attributes of the short circuit analysis needs to be better define. For example which studies need to be done, for what period and how often.
ColumbiaGrid	Yes and No	We agree with R2.3. However, R4 requires assessment of “Short circuit capability of its equipment under normal condition and following any single Contingency condition that would result in greater circuit breaker interrupting duties”. Since short circuit studies are typically performed by applying a fault on a Facility starting from a normal condition, there can be confusion whether the result would constitute “normal” condition or “following any single Contingency condition”. Also, by specifying the normal and single contingency conditions, R4 is straying into “how” to perform a study, which is not necessary in a standard. We suggest deleting the reference to the contingencies to be used in the study. We suggest R4 be modified to read “Short circuit capability of its equipment under plausible system configurations that would result in the greatest circuit breaker interrupting duties”.
Midwest ISO	No	The language throughout the standard is not precise as relates to "studies", "analysis", and "assessments". R2.3 appears to say that the actual simulations upon which the annual assessments are made need not be a current year study. If that is the intent the following wording would be more clear: "Short-circuit assessments shall be conducted annually and may be supported by current or past studies. R4 should be grouped with R2.4. In general the standard seems to meander and elements of the same types of studies are scattered, making it difficult to grasp the study requirements with clarity. Also the language of R4 is unclear as it describes short circuit studies in terms of contingencies. Better language would be "shall assess the short-circuit capability of its equipment under system intact topology and any single facility (or branch) out condition that is expected to result in greater ?".
Southern California Edison	Yes and No	We agree with R2.3. However, R4 requires assessment of “Short-circuit capability of its equipment under normal conditions and following any single Contingency condition that would result in greater circuit breaker interrupting duties?. Since short circuit studies are typically performed by applying a fault on a Facility starting from a normal condition, there can be confusion whether the result would constitute “normal” condition or “following any single Contingency condition”. Also, by specifying the normal and single contingency conditions, R4 is straying into “how” to perform a study, which is not necessary in a standard. We suggest deleting the reference to the contingencies to be used in the study.
Northeast Utilities	No	Northeast Utilities has participated with ISO-NE and NPCC and supports the comments filed by those organizations.
Duke Energy	No	It is not clear in R4 what is meant by ?single contingency? and this situation is unlikely to increase fault current. The phrase ?under normal conditions and following any single Contingency condition that would result in greater circuit breaker interrupting

Organization	Question 6:	Question 6 Comments:
		duties? should be deleted.
Central Maine Power Company	No	a. R2.3 should be changed to indicate the year(s) for short circuit analysis. b. In R4, suggest replacing, " and following any single Contingency condition that would result in greater circuit breaker interrupting duties" with, " giving due consideration to the potential sequence of equipment operation". c. It should be stated in the standard that assumptions should be based on procedures provided by each Transmission Planner and by the Planning Coordinator.
NSTAR Electric	No	1. R2.3 should be changed to indicate the year(s) for short circuit analysis. 2. In R4, suggest replacing, " and following any single Contingency condition that would result in greater circuit breaker interrupting duties" with , " giving due consideration to the potential sequence of equipment operation". 3. It should be stated in the standard that assumptions should be based on procedures provided by each Transmission Planner and by the Planning Coordinator.
New York Independent System Operator	No	In R4, suggest striking, "that would result in greater circuit breaker interrupting duties?".
Alberta Electric System Operator	No	We agree with R2.3. However, R4 requires assessment of ?Short-circuit capability of its equipment under normal conditions and following any single Contingency condition that would result in greater circuit breaker interrupting duties?. Since short circuit studies are typically performed by applying a fault on a Facility starting from a normal condition, there can be confusion whether the result would constitute ?normal? condition or ?following any single Contingency condition?. Also, by specifying the normal and single contingency conditions, R4 is straying into ?how? to perform a study, which is not necessary in a standard. We suggest deleting the reference to the contingencies to be used in the study.
ISO New England Inc.	No	a. R2.3 should be changed to indicate the year(s) for short circuit analysis. b. In R4, suggest replacing, " and following any single Contingency condition that would result in greater circuit breaker interrupting duties" with , " giving due consideration to the potential sequence of equipment operation". c. It should be stated in the standard that assumptions should be based on procedures provided by each Transmission Planner and by the Planning Coordinator.
US Bureau of	No	Comments: We agree with R2.3. However, R4 requires assessment of “Short circuit capability of its equipment under normal

Organization	Question 6:	Question 6 Comments:
Reclamation		conditions and following any single Contingency condition that would result in greater circuit breaker interrupting duties". Comment Form for 2nd Draft of Standard TPL-001-1Assess Transmission Future Needs (Project 2006-02)Page 7 of 12Since short circuit studies are typically performed by applying a fault on a Facility starting from a normal condition, there can be confusion whether the result would constitute ?normal? condition or ?following any single Contingency condition?. Also, by specifying the normal and single contingency conditions, R4 is straying into ?how? to perform a study, which is not necessary in a standard. We suggest deleting the reference to the contingencies to be used in the study.
BPA Transmission Reliability Program	Yes and No	We agree with R2.3. However, we recommend removing the reference to single contingency conditions in R4, for the same reasons as described in the WECC comments. See below: "Since short circuit studies are typically performed by applying a fault on a Facility starting from a normal condition, there can be confusion whether the result would constitute "normal" condition or "following any single Contingency condition". Also, by specifying the normal and single contingency conditions, R4 is straying into "how" to perform a study, which is not necessary in a standard. We suggest deleting the reference to the contingencies to be used in the study.
Response: Requirement R4 has been deleted and those requirements have been merged into Requirement R2.3 to reflect the expected short circuit model. Also, the need for, or applicability, of 'single Contingencies' in Requirement R4 was dropped when Requirement R4 was merged into Requirement R2.3. **R2.3** The short circuit analysis portion of the Planning Assessment shall be conducted annually addressing the Near-Term Transmission Planning Horizon and can be supported by current or past studies. The analysis shall determine the maximum short circuit interruption duty on fault interrupting devices using the System short circuit model with any generation and Transmission Facilities in service which could impact the study area.		
City Water, Light & Power - Springfield, Illinois	Yes and No	For R2.4 stability studies should not be required annually but should only be required if there is a significant change to the system or system stability was marginal as shown in previous studies.
Response: This question is related to short circuit, Requirement R2.3, not Requirement R2.4, Stability. However, if past studies are applicable, it is not necessary to rerun Stability studies more often than once every 5 years. Your examples are good examples of when a Stability study may need to be rerun more often than once every 5 years.		
BCTC	Yes	R.3 and R4 are acceptable, although we note the R4 gets into details of how to do short circuit analysis which is unnecessary for this standard. In some cases it may be necessary to consider multiple contingencies. Should R2.6.2 say "the SYSTEM shall not include material changes?"?
Response: Requirement R4 has been deleted and those requirements have been merged into Requirement R2.3 to reflect the expected short circuit model. **R2.3** The short circuit analysis portion of the Planning Assessment shall be conducted annually addressing the Near-Term Transmission Planning Horizon and can		

Organization	Question 6:	Question 6 Comments:
be supported by current or past studies. The analysis shall determine the maximum short circuit interruption duty on fault interrupting devices using the System short circuit model with any generation and Transmission Facilities in service which could impact the study area. The SDT has changed Requirement R2.6.2 (now R2.5.2) to provide clarification. **R2.5.2** For steady state, short circuit, ~~Generating Plant Stability,~~ or ~~System~~ Stability analysis: the ~~study~~ present System model shall not include any material changes, such as, generation or Transmission additions/removals, or topology changes that have occurred in the intervening period and would impact the study area. Material generation changes could include:		
Manitoba Hydro	No	R4: The wording for the assessment should be changed from "shall assess the short circuit ability of its equipment" to "shall assess whether bus short circuit levels are within the capability of its equipment". The short circuit assessment should only be required if changes to system topology or generation occur. While short circuit levels are critical for system equipment specifications, ten year planning horizon models are generally not adequate for this purpose as ultimate system fault levels are required. The SDT should clarify the modelling details required for the short circuit assessment and the deliverable of the short circuit assessment. The standard doesn't stipulate if an existing NERC model will need to be modified to include the sequence data and thus allow for three phase and SLG fault analysis or if the planner is to use our "in house" models and just report the results. Typically, short circuit models used for fault studies are not load or season specific, and the simulation is conducted using a flat-analysis (load ignored and voltage at 1.0 pu). Typically, all elements are in service to ensure maximum fault contribution. Can the SDT provide details on what cases have to be assessed ? Year One, each of the first five year, etc. What is the generation dispatch that should be considered? For purposes of equipment rating, a dispatch considering all available generation may need to be considered. Manitoba Hydro requests the SDT to provide some specifics on the need for doing intact and n-1 fault analysis. We think the requirement to consider single contingency conditions is getting into the details of bus modeling to maximize the fault level. If so this seems to be getting into short circuit study methodology and is too prescriptive and unnecessary. To explain this comment, we include a summary of the process used at Manitoba Hydro as follows: Manitoba Hydro follows a two step procedure when studying breaker capability of our system:1. Breaker Rating vs. Bus Fault - Breakers are required to accommodate the entire bus maximum symmetrical fault current at nominal bus voltage with no consideration given to what the circuit breaker may actually be required to interrupt due to its location in the ring. Stations with fault levels above 95% of rated breaker interrupting capability are flagged for further study. This type of analysis will accurately rule out a high percentage of breakers whose capability is adequate. If an appropriate model is available, this step could take up to three person-months for the Manitoba Hydro system. 2. Detailed Examination of Breaker Duty and Location - By considering faults on both the equipment and bus side of the breaker the exact fault current that the breaker must interrupt can be determined. In a ring bus arrangement the breaker in question is assumed the last breaker to clear the fault. In addition, factors such as X/R ratio & operating voltage are also taken into account. To provide a safety margin to account for modeling tolerances we recommend a circuit breaker for replacement when the fault value is greater then 95% of the breaker rating. Other companies may use different breaker replacement threshold levels. This detailed analysis could require up to one person-month, depending on the size of the station, for each detailed assessment. The standard should specify what is to be reported as a result of the short circuit study. Should the report include:? Documentation of the criteria used for the study? A

Organization	Question 6:	Question 6 Comments:
		listing of the SLG and three phase fault levels compared to the lowest breaker capability at a bus. ? Documentation of more detailed analysis of for breakers whose capability is within threshold of the station fault level.? A listing of the breakers to be replaced. Alternatively, should the standard just require the planner have a separate report on the fault analysis that can be provided on request.
Response: Requirement R4 has been deleted and those requirements have been merged into Requirement R2.3 to reflect the expected short circuit model. **R2.3** The short circuit analysis portion of the Planning Assessment shall be conducted annually addressing the Near-Term Transmission Planning Horizon and can be supported by current or past studies. The analysis shall determine the maximum short circuit interruption duty on fault interrupting devices using the System short circuit model with any generation and Transmission Facilities in service which could impact the study area. The SDT has chosen not to prescribe all conditions but expects that studies would assume all equipment in service, which could impact the study area, to calculate maximum potential fault currents.		
National Grid	No	a. R2.3 should be changed to indicate the year(s) for short circuit analysis. b. In R4, suggest replacing, " and following any single Contingency condition that would result in greater circuit breaker interrupting duties" with , " giving due consideration to the potential sequence of equipment operation". c. It should be stated in the standard that assumptions should be based on procedures provided by each Transmission Planner and by the Planning Coordinator.
Response: (a) & (b): Requirement R4 has been deleted and those requirements have been merged into Requirement R2.3 to reflect the expected short circuit model. Also, the need for, or applicability, of 'single Contingencies' in Requirement R4 was dropped when Requirement R4 was merged into Requirement R2.3. **R2.3** The short circuit analysis portion of the Planning Assessment shall be conducted annually addressing the Near-Term Transmission Planning Horizon and can be supported by current or past studies. The analysis shall determine the maximum short circuit interruption duty on fault interrupting devices using the System short circuit model with any generation and Transmission Facilities in service which could impact the study area. (c) Procedures used to meet short-circuit requirements of Requirement R2.3 should be included in Requirement R2.7.1 mandated Corrective Action Plans.		
Gainesville Regional Utilities	Yes and No	With a small system like ours, I would like to see a provision where if you do not have any changes in our local portion of the BES, then the previous studies would support my assessment.
Response: This is addressed in the revised Requirement R2.6.2 (now R2.5.2). **R2.5.2** For steady state, short circuit, ~~Generating Plant Stability,~~ or ~~System~~ Stability analysis: the ~~study~~ present System model shall not include any material changes, such as, generation or Transmission additions/removals, or topology changes that have occurred in the intervening period and would impact the study area. Material generation changes could include:		

Organization	Question 6:	Question 6 Comments:
The addition/deletion/change of individual generating unit capability of 20 MW or greater. An aggregated addition/deletion/change to a group of generating units directly connected through their step-up transformer(s) to the BES which total 20 MW or greater.		
JEA	Yes and No	JEA can agree to this requirement; however, JEA would like to see it addressed in FAC-002 to maintain consistency with the FAC standard requirements.
Response: FAC-002 references the TPL standards to ensure that a short-circuit study is run for new Facilities. The SDT believes that the consistency will continue to exist. The SAR for TPL-001-1 specified that short-circuit studies were to be included in the requirements.		
Progress Energy Florida, Inc.	No	PEF disagrees with, and recommends removal of both R2.3 and R4 on the following grounds:R2.3: Evidence that short circuit analysis has been performed is already mandated through Requirement R1.4 NERC Standard FAC-002-0. Inclusion of the mandate in the TPL Standard is redundant.R4: While the fundamental inadequacy of the short circuit issue is its inclusion in the TPL Standard to begin with (see R2.3 comments), PEF is perplexed at the proposed requirement to perform short circuit analysis for single contingencies. PEF cannot conceive of a scenario for which a single contingency scenario would result in increased fault duty. Such a mindset essentially considers short circuit analysis as equivalent to load flow analysis, which it clearly is not. Short circuit analysis is performed to adequately set relays, size equipment and prevent equipment damage, and as such is not appropriate for inclusion in a TPL Standard.
Florida Power and Light	No	R4. Why is short circuit analysis required for single contingencies? Removing equipment through contingency outages lowers available short circuit duty. Short circuit analysis is not a parallel version of load flow analysis. Evidence that short circuit studies have been performed is currently required in the existing FAC-002-0 Standard. Since the primary concern is the appropriate sizing of equipment and the prevention of equipment damage as opposed to overall grid reliability, we do not see the need for a set of requirements within the proposed TPL standard for short circuit studies.
Florida Reliability Coordinating Council, inc	No	Recommend for the removal of both R2.3 and R2.4. Short Circuit analysis should be addressed in FAC-002 by revising the standard to include additional detail within FAC-002. Another option would be to develop a new standard addressing short circuit studies and requirements.
Response: FAC-002 requires coordination for new Facilities but points back to the TPL standards for requirements that must be coordinated. The SDT believes short-circuit requirements belong in TPL-001-1 and the SAR for TPL-001-1 specified that short-circuit studies were to be included in requirements. Requirement R4 has been deleted and those requirements have been merged into Requirement R2.3 to reflect the expected short circuit model. **R2.3** The short circuit analysis portion of the Planning Assessment shall be conducted annually addressing the Near-Term Transmission Planning Horizon and can be supported by current or past studies. The analysis shall determine the maximum short circuit interruption duty on fault interrupting devices using the System		

Organization	Question 6:	Question 6 Comments:
short circuit model with any generation and Transmission Facilities in service which could impact the study area.		
Lafayette Utilities System	No	Lafayette has identified two issues with respect to the Short Circuit Analysis required in TPL-001. First, Requirements R2.3 and R4 do not describe the required Short Circuit Analyses in sufficient detail to ensure that these studies are performed using topology assumptions that are consistent with the assumptions used in the Steady-State and Stability Studies. If inconsistent topology assumptions are used, the results of the analyses would not present a clear and consistent picture for planning purposes. Second, interconnection studies performed under the FERC LGIP procedures typically include considerable short-circuit analysis of the interconnecting transmission system. Entities required to perform an annual Planning Assessment should be permitted to use, for TPL-001 compliance purposes, any up-to-date short-circuit analyses that may have been conducted for an LGIP interconnection study. Forcing these entities to re-perform the analyses for TPL-001 compliance would impose unnecessary cost.
Response: Requirement R4 has been deleted and those requirements have been merged into Requirement R2.3 to reflect the expected short circuit model. **R2.3** The short circuit analysis portion of the Planning Assessment shall be conducted annually addressing the Near-Term Transmission Planning Horizon and can be supported by current or past studies. The analysis shall determine the maximum short circuit interruption duty on fault interrupting devices using the System short circuit model with any generation and Transmission Facilities in service which could impact the study area. Please note that this requirement allows for the utilization of past studies.		
Ameren	No	Requirement R4 should be modified to remove the Planning Coordinator such that the "Transmission Planner shall assess the short-circuit capability of its equipment considering maximum interrupting duty for normal or single element outage conditions".
Response: The Planning Coordinator is the appropriate entity in some areas. In those areas where this is not the case, the Planning Coordinator may defer to the Transmission Planner's studies. This is a joint responsibility between the Transmission Planner and Planning Coordinator.		
CenterPoint Energy and CPS Energy	No	We believe R4 is unnecessary and, judging from industry comments to the previous draft, likely to cause confusion among auditors and planners alike. Furthermore, we believe R4 does not address an actual problem. We are not aware of situations where equipment has been under-rated from the standpoint of short circuit ratings. We recommend that R4 be deleted.
Response: The SDT does not believe that the concepts of Requirement R4 should be eliminated as without them, there would be a requirement for short-circuit studies with no specific result expected. However, Requirement R4 has been deleted and those requirements have been merged into Requirement R2.3 to reflect the expected short circuit model. **R2.3** The short circuit analysis portion of the Planning Assessment shall be conducted annually addressing the Near-Term Transmission Planning Horizon and can be supported by current or past studies. The analysis shall determine the maximum short circuit interruption duty on fault interrupting devices using the System		

Organization	Question 6:	Question 6 Comments:
short circuit model with any generation and Transmission Facilities in service which could impact the study area.		
MidAmerican Energy Company	No	a. Since the TPL contingency requirements already require bus fault, stuck breaker, and breaker failure contingencies, MEC asks the SDT to clarify the purpose of the short circuit study requirements. The benefit to additional short-circuit studies is minimal since analyses already ensure that the system can withstand bus faults and breaker failures. b. The SDT should clarify what single contingencies are to be studied for short circuit studies in R2.4. Is it single contingency as defined in Table 1? Or is it a broader or narrower definition? MEC recommends that since this is a new requirement, that TPL-001-1 be limited to raise the bar only to involve the single contingencies identified in P1. Failure to do so will require a great deal of additional modeling work in short-circuit studies if single contingencies in P2 are to be included in these studies with minimal benefit.
Response: (a) These requirements apply to steady state (load flow) and Stability analysis but they do not specifically address short-circuit requirements. The performance requirements in Requirement R2.3 are specific to short-circuit studies. (b) Requirement R4 has been deleted and those requirements have been merged into Requirement R2.3 to reflect the expected short circuit model. Also, the need for, or applicability, of 'single Contingencies' in Requirement R4 was dropped when Requirement R4 was merged into Requirement R2.3. **R2.3** The short circuit analysis portion of the Planning Assessment shall be conducted annually addressing the Near-Term Transmission Planning Horizon and can be supported by current or past studies. The analysis shall determine the maximum short circuit interruption duty on fault interrupting devices using the System short circuit model with any generation and Transmission Facilities in service which could impact the study area.		
MRO NERC Standards Review Subcommittee	No	a. Since the TPL contingency requirements already require bus fault, stuck breaker, and breaker failure contingencies, the MRO asks the SDT to clarify the purpose of the short circuit study requirements. The benefit to additional short-circuit studies is minimal since analyses already ensure that the system can withstand bus faults and breaker failures. b. The SDT should clarify what single contingencies are to be studied for short circuit studies in R2.4. Is it single contingency as defined in Table 1? Or is it a broader or narrower definition? The MRO recommends that since this is a new requirement, that TPL-001-1 be limited to raise the bar only to involve the single contingencies identified in P1. Failure to do so will require a great deal of additional modeling work in short-circuit studies if single contingencies in P2 are to be included in these studies with minimal benefit. c. The MRO suggests added clarification of the following questions: 1. Should analysis be performed for the near-term and long-term planning horizon? 2. Should only the peak system condition be analyzed? 3. What does the analysis include (e.g. breaker over duty evaluation and protective relay coordination)? R4 - Clarify that the "short-circuit capability of its equipment under normal conditions" (P0) refers to interruptible rating for breakers only.
Response: (a) These requirements apply to steady state (load flow) and Stability analysis but they do not specifically address short-circuit requirements. The		

Organization	Question 6:	Question 6 Comments:
performance requirements in Requirement R2.3 are specific to short-circuit studies. (b) Requirement R4 has been deleted and those requirements have been merged into Requirement R2.3 to reflect the expected short circuit model. Also, the need for, or applicability, of 'single Contingencies' in Requirement R4 was dropped when Requirement R4 was merged into Requirement R2.3. **R2.3** The short circuit analysis portion of the Planning Assessment shall be conducted annually addressing the Near-Term Transmission Planning Horizon and can be supported by current or past studies. The analysis shall determine the maximum short circuit interruption duty on fault interrupting devices using the System short circuit model with any generation and Transmission Facilities in service which could impact the study area. (c) The SDT believes that the concerns raised here are covered in the revised requirement R2.3.		
Arkansas Electric Coop. Corp.	No	R2.3.1 should not be deleted. While system wide short circuit analysis should be done annually, there are situations where changes in the BES do impact the short circuit. If these changes result in new equipment needing to be ordered then this needs to be know as soon as possible in order to prevent exceeding equipment ratings or delays because of lead times on equipment.
Response: Requirement R4 has been deleted and those requirements have been merged into Requirement R2.3 to reflect the expected short circuit model. **R2.3** The short circuit analysis portion of the Planning Assessment shall be conducted annually addressing the Near-Term Transmission Planning Horizon and can be supported by current or past studies. The analysis shall determine the maximum short circuit interruption duty on fault interrupting devices using the System short circuit model with any generation and Transmission Facilities in service which could impact the study area. The SDT has added Requirement R2.7 to provide a Corrective Action Plan. **R2.7** For short circuit analysis, if the short circuit current interruption duty on fault interrupting devices determined in Requirement R2.3 exceeds their Equipment Rating, the Planning Assessment shall include a Corrective Action Plan to address the Equipment Rating violations. The Corrective Action Plan shall: **R2.7.1** List System deficiencies and the associated actions needed to achieve required System performance. **R2.7.2** Be reviewed in subsequent annual Planning Assessments as to implementation status.		
ERCOT System Planning	No	ERCOT believes R4 is unnecessary and does not address an actual problem; ERCOT recommends that R4 be deleted. ERCOT does not presently possess the capability or have access to the data needed to perform the calculations required by R4 as this requirement should apply to only the equipment owner (GO or TO).
Response: The Planning Coordinator is the appropriate entity in some areas. In those areas where this is not the case, the Planning Coordinator may defer to the Transmission Planner's studies. This is a joint responsibility between the Transmission Planner and Planning Coordinator. Requirement R4 has been deleted and those requirements have been merged into Requirement R2.3 to reflect the expected short circuit model. **R2.3** The short circuit analysis portion of the Planning Assessment shall be conducted annually addressing the Near-Term Transmission Planning Horizon and can		

Organization	Question 6:	Question 6 Comments:
be supported by current or past studies. The analysis shall determine the maximum short circuit interruption duty on fault interrupting devices using the System short circuit model with any generation and Transmission Facilities in service which could impact the study area.		
American Transmission Company	No	We suggest added clarification of the following questions: 1. Should analysis be performed for the near-term and long-term planning horizon? 2. Should only the peak system condition be analyzed? 3. What does the analysis include (e.g. breaker over duty evaluation and protective relay coordination)? 4. Does the analysis of single contingency for greater duties refer to only the P1 category or both the P1 and P2 categories?R4 - Does the equipment capability reference include the ground grid and bus structures?
Response: The SDT did not add references to equipment beyond interrupting equipment. Circuit breaker or interrupting device ratings should already include support equipment. Lines are rated by the most limiting element and interrupting equipment ratings should also be rated by the most limiting equipment. Requirement R4 has been deleted and those requirements have been merged into Requirement R2.3 to reflect the expected short circuit model. **R2.3** The short circuit analysis portion of the Planning Assessment shall be conducted annually addressing the Near-Term Transmission Planning Horizon and can be supported by current or past studies. The analysis shall determine the maximum short circuit interruption duty on fault interrupting devices using the System short circuit model with any generation and Transmission Facilities in service which could impact the study area.		
FirstEnergy Corp.	No	We do not feel that it is necessary to annually update the short circuit analysis. We suggest the SDT consider increasing this timeframe. In addition, short circuit analysis should be reviewed in areas where transmission or generation changes are planned. Lastly, we feel it would be beneficial for the standard to provide examples of contingencies that could increase fault duties.
Response: An annual "assessment" must be made, but this doesn't necessarily mean a new study unless topology changes accordingly. The SDT has revised Requirement R2.6.2 (now R2.5.2) which allows for the use of past studies. **R2.5.2** For steady state, short circuit, ~~Generating Plant Stability,~~ or ~~System~~ Stability analysis: the ~~study~~ present System model shall not include any material changes, such as, generation or Transmission additions/removals, or topology changes that have occurred in the intervening period and would impact the study area. Material generation changes could include: The addition/deletion/change of individual generating unit capability of 20 MW or greater. An aggregated addition/deletion/change to a group of generating units directly connected through their step-up transformer(s) to the BES which total 20 MW or greater. Requirement R4 has been deleted and those requirements have been merged into Requirement R2.3 to reflect the expected short circuit model. **R2.3** The short circuit analysis portion of the Planning Assessment shall be conducted annually addressing the Near-Term Transmission Planning Horizon and can be supported by current or past studies. The analysis shall determine the maximum short circuit interruption duty on fault interrupting devices using the System		

Organization	Question 6:	Question 6 Comments:
short circuit model with any generation and Transmission Facilities in service which could impact the study area.		
Orlando Utiliites Commission	Yes and No	OUC agrees with other commentors that if there is a need for monitoring this, it should perhaps be in a different standard.
Response: The SAR for TPL-001-1 specified that short-circuit studies were to be included in the requirements.		
Dominion - Electric Transmission Planning	Yes	
TVA System Planning	Yes	
Progress Energy Carolinas	Yes	
Platte River Power Authority	Yes	
Tenaska, Inc.	Yes	
ITC Holdings: ITC, METC, ITC Midwest	Yes	
Southern Company Transmission	Yes	
LCRA TSC	Yes	
IESO	Yes	

Organization	Question 6:	Question 6 Comments:
North Carolina Electric Membership Corp	Yes	
E.ON U.S. Transmission Planning	Yes	
SERC Reliability Review Subcommittee and Planning Standards Subcommittee	Yes	
Oncor Electric Delivery	Yes	NA
Entergy Services, Inc.	Yes	
Response: Thank you for your response.		

7. The SDT has reformatted the Steady State and Stability Performance Tables. Do you concur with the modified format? If not, please state why and/or suggest specific changes.

Summary Consideration:

In responding to the reformatted performance tables, industry stakeholders had several comments related to the format changes and also took an opportunity to provide feedback on the table content as well. A summary of the more common industry responses is provided below along with the SDT's reply to each.

FORMAT COMMENTS:

1. The most common input received from industry related to the format of the tables was a desire for the SDT to consider a single table design covering both steady-state and stability. The SDT has reformatted the performance tables (Table 1 Steady-State and Table 2 Stability) into a single table format based on commonalities between the two prior individual tables. The new Table 1 is titled "Steady State and Stability Performance". The move to a single table was based on a significant number of comments and based on the SDT's view that the Planning Events were the same for both Steady-State and Stability. For Extreme Events, the separation of Steady-State and Stability that many in industry seem to prefer for the two table format has been retained in the new table design.

2. Many commenters felt the two table design was unduly long covering 13 pages compared to the two (2) pages used for the existing FERC approved TPL standards. Based on the redesigned single format table, the SDT has condensed the information to only 3 pages in the proposed Draft 3 version.

3. Another format change requested was to repeat the header row of column headings on each page. The SDT agrees and has made this change.

4. A few commenters correctly pointed out confusion between the introductory notes and the footnotes which both used numeric references. The SDT corrected this problem by using alpha character references for the introductory notes. The references within the table now clearly point to the footnotes and follow a more logical numerical order.

5. Several stakeholders suggested a Planning Event category naming convention for Planning Steady-State as (P1, P2, P3, …) and Stability as (S1, S2, S3, …) for the two table design. The SDT did not make this change based on a redesign to a single performance table. The team has retained the P1 through P7 references for Planning Events.

CONTENT COMMENTS:

1. The SDT agrees with a number of stakeholders that expressed an opinion on the need to allow for all types of conditional Firm Transmission Service Interruptions, not just those limited to HVDC. The SDT recognizes that the prior Draft 2 version unintentionally provided preferential treatment to HVDC. In the new performance Table 1, a new footnote has been added (see footnote 5) to the column title "Interruption of Firm Transmission Service Allowed" that corrects the problem identified.

2. Some commenters questioned the distinction in performance requirements for the above 300 kV systems. The SDT believes the Draft 2 changes are responsive to the prior industry feedback and reflect an appropriate middle ground related to the importance of the EHV Transmission System. The team has now included a slightly modified version of stated performance requirements in Draft 3. The SDT has clarified that interruption of Firm Transmission Service is warranted for some Contingencies. The SDT has added footnotes 5 and 10 related to Firm Transmission Service. Footnote 5 indicates that interruption of conditional firm Transmission service is permitted for all Planning Events and footnote 10 indicates that interruption of Firm Transmission Service coupled with appropriate generation re-dispatch can be utilized for multiple Contingency events as a System adjustment, where indicated in Table 1 as being part of the Initial System Condition, and as a post-Contingency corrective action so long as no interruption of Non-Consequential Load occurs and all Facility Ratings are maintained.

3. A number of commenters expressed concern related to Planning Event P5 "Protection System Failure" and the need to evaluate a single component failure of a BES Protection System; particularly a failure of a station battery. The SDT has revised the P5 Planning Event description to remove the reference to "single component failure" and the event description was changed to match what is stated in the currently approved TPL standards under Category C6 through C9. The intent of P5 is to evaluate a failure of a single Protection System design that introduces a delayed clearing mode that may also include additional electrical Facilities being removed when compared to normal fault clearing. A Protection System failure resulting in loss of the substation (one voltage level plus transformers) would not qualify as a P5 Planning Event since that event is considered an Extreme Event. A Standard Authorization Request (SAR) has been issued for industry comment (1/20/2009 through 2/18/2009) based on work completed by the System Protection and Controls Task Force (SPCTF). The proposed project will address the need for Protection System redundancy, based on an n-1 failure of individual components of the Protection System.

4. Some commenters were confused by Planning Event P2.1 and the SDT has added footnote 8 to better clarify the intent of the P2.1 Contingency review.

5. Many stakeholders correctly noted that Extreme Event item 1 excluded the reference to shunt device. This has been corrected and now includes shunt devices.

6. Some commenters questioned the order of the Planning Events and questioned if they were based on a high to low probability order. The SDT chose to order the table by three main areas: 1) no Contingency (P0), 2) single Contingency

(P1 and P2), and multiple Contingency (P3 through P7). While the SDT agrees there is some overlap in probability order, for example, between P2 and P3, the SDT has more importantly made the proper performance level requirements based on a reliability "risk" level where risk accounts for impact times (x) probability of occurrence.

7. Some commenters expressed concern with the inability to shed Non-Consequential Load in response to a single Contingency event. It was indicated that some stakeholders rely on an SPS to drop local area network Load in response to some single Contingency events and that these system designs are permissible under the presently approved TPL-002-0 standard. FERC, in Order 693, was clear in paragraph 1794 that interruption of Non-Consequential Load is not permitted for single Contingency events. This position was vetted in draft 1 of TPL-001-1 and most stakeholders and the SDT support this position. The use of an SPS design would be permitted for a single Contingency event if the SPS design interrupts service to customers involved in an interruptible Load contract arrangement. As an alternative, an entity could seek an entity variance for the situation described through their Regional Entity organization. In paragraph 1794, FERC clarified that "…an entity may seek a regional difference to the Reliability Standard from the ERO for case-specific circumstances". The process described by FERC as a regional difference is described in detail in the "NERC Standards Development Procedure" document under the subsection titled "Variances to NERC Reliability Standards".

The following changes have been made to the standard based on industry comments:

Requirements:

R2.8 The Planning Assessment shall provide the largest Consequential Load Loss (megawatt Demand) and the associated event caused by any P1 event and any P2 event in Table 1.

R2.9 The Planning Assessment shall identify the maximum permissible Non-Consequential Load Loss (megawatt Demand) for those Planning Events where Non-Consequential Load Loss is allowed in Table 1.

Table 1 Header Notes

e. For all Planning Events, planned System adjustments such as Transmission configuration changes and redispatch of generation are allowed if such adjustments are executable within the time duration applicable to the Facility Ratings.

h. Planning Event P0 is applicable to steady state only.

Table 1 - Extreme Events – Steady State:

1. Loss of a single generator, Transmission Circuit, DC Line, shunt device, or transformer forced out of service followed by another single generator, Transmission Circuit, DC Line, shunt device, or transformer forced out of service prior to System adjustments.

3b. ~~Loss of two Transmission lines in different rights-of-way prior to System adjustments for conditions such as:~~

Table 1 Footnotes:

2. If the event analyzed involves BES elements at multiple System voltage levels, the lowest System voltage level for stated performance criteria applies regarding allowances for interruptions of Firm Transmission Service and loss of Non-Consequential Load.

3. Unless specified otherwise, simulate Normal Clearing faults. Single line to ground (SLG) or three phase (3Ø) are the fault types, that must be evaluated in Stability simulations for the event described. A 3Ø fault study indicating criteria are being met shall provide sufficient evidence that a SLG condition would also meet criteria.

5. When the conditions and/or event(s) being studied form the basis for conditional Firm Transmission Service, curtailment of that conditional Firm Transmission Service is allowed.

7. Requirements which are applicable to shunt devices also apply to FACTS devices that are connected to ground.

8. Inadvertent tripping of breakers on one end of a normally networked Transmission circuit such that the line is now open at that end and possibly serving Load radial from a single source point.

10. Curtailment of firm transmission service, when coupled with the appropriate re-dispatch of resources obligated to re-dispatch, is allowed both as a System adjustment (as identified in the column titled 'Initial System Conditions') and a corrective action, where it can be demonstrated that Facilities remain within applicable Facility Ratings and those adjustments do not result in the shedding of any firm Load. Where limited options for re-dispatch exist, sensitivities associated with the availability of those resources must be considered. Where Facilities external to the Transmission Planner's planning region are relied upon, Facility Ratings in those regions must be considered.

11. A stuck breaker means that for a gang-operated breaker, all three phases of the breaker have remained closed. For an independent pole operated (IPO) breaker, only one pole is assumed to remain closed. ~~The~~A stuck breaker ~~event~~ introduces a delayed clearing mode. ~~Normal Clearing is when the Protection System operates as designed and the Fault is cleared in the time normally expected with proper functioning of the installed protection systems. Breaker fail relay operation is a predetermined time that occurs after the Protection System operates and the breaker has failed. Breaker fail relaying will also isolate a predetermined portion of the electric system to isolate the failed breaker. Delayed clearing of a Fault is due to failure of any Protection System component that prevents the Protection System from operating normally.~~

Organization	Question 7:	Question 7 Comments:
Dominion - Electric Transmission Planning	Yes and No	(1) Dominion - Electric Transmission is okay with the format changes, but suggests that consideration be given to changing the category naming convention for Stability Performance Table 2 to S1, S2, etc. rather than P1, P2, etc. for clarity and to distinguish them from Steady State Performance Table 1.(2) The tables could be improved if the headings were put on each separate page.
Response: The SDT has reformatted the performance tables (Table 1 Steady-State and Table 2 Stability) into a single table format based on commonalities between the two prior individual tables. The new Table 1 is titled "Steady State and Stability Performance". This change has negated the need for the Planning		

Organization	Question 7:	Question 7 Comments:
Event category naming convention changes suggested by the commenter and the SDT retained the P1 through P7 references for Planning Events. The new single performance table is greatly condensed from the Draft 2 version and the entire body of material is now contained on three pages compared to the thirteen pages that the prior Table 1 and Table 2 encompassed. Headers are repeated on subsequent pages.		
NPCC	No	In both Table 1 and Table 2, the "Interruption of Firm Transmission Service Allowed" column. It is problematic to try to create an "exemption" based on type of facility such as HVDC. There are many other situations in which Firm Transmission Service has been provided, but may need to be curtailed partially or completely following an outage. It is recommended that a note be added stating that the only exception would be for curtailment of conditioned (or Conditional) Firm Transmission Service, recognizing that there may need to be some form of grandfathering in order to avoid having to rewrite transmission service agreements. In both Table 1 and Table 2, the "Extreme Event Descriptions" item 1 should add "or shunt device." In Table 1, the "Extreme Event Descriptions" item 3b should be deleted; it is redundant with Item 1. In Table 2, Note 5 includes significant clarifications and should not be buried in the bottom of the contingency table; Note 5 would be better placed in the definitions section. In Table 1 and Table 2, Contingency P5 requires a fault plus Protection System Failure, such as a battery system, which may remove ALL protection at some substations. This Contingency P5 requires all voltages and loadings to remain within criteria, and a stable system response; without interruption of firm transmission service and without Non-Consequential Load Loss, at voltages above 300 kV. Was this an intended outcome of this standard?
Northeast Utilities	No	Northeast Utilities has participated with ISO-NE and NPCC and supports the comments filed by those organizations.
Response: The SDT team agrees with the commenter's opinion on the need to allow for all types of conditional Firm Transmission Service Interruptions and that the prior Draft 2 version unintentionally provided preferential treatment to HVDC. In the new performance Table 1, a new footnote has been added (see footnote 5) to the column title "Interruption of Firm Transmission Service Allowed" that corrects the problem identified by the commenter. **5**. When the conditions and/or event(s) being studied form the basis for conditional Firm Transmission Service, curtailment of that conditional Firm Transmission Service is allowed. The SDT agrees that shunt devices were excluded in Extreme Event item 1 of the Steady-State and Stability tables and the problem has been corrected. The SDT agrees with the commenter regarding the opinion that item 3B in the Extreme Event portion of the prior Daft 2 Table 1 Steady-State was redundant and the item has been removed and is no longer referenced in this draft. **Extreme Events - 3b**. ~~Loss of two Transmission lines in different rights-of-way prior to System adjustments for conditions such as:~~ The SDT appreciates the input related to the footnote on "System Stable" (new footnote 1). The SDT has chosen to leave the information within a footnote and		

Organization	Question 7:	Question 7 Comments:
did not include it as a new definition for the NERC Glossary of Terms as suggested by the commenter. Related to the P5 "Protection System Failure" Planning Event the SDT has not deviated from its stance of requiring more stringent performance requirements for the above 300 kV System. The SDT has revised the P5 Planning Event description to remove the reference to "single component failure" and the event description was changed to match what is stated in the currently approved TPL standards under Category C6 through C9. The intent of P5 is to evaluate a failure of a single Protection System design that introduces a delayed clearing mode that may also include additional electrical Facilities being removed when compared to the normal fault clearing. A Protection System failure resulting in loss of the substation (one voltage level plus transformers) would not qualify as a P5 Planning Event since that event is considered an Extreme Event. A Standard Authorization Request (SAR) has been issued for industry comment (1/20/2009 through 2/18/2009) based on work completed by the System Protection and Controls Task Force (SPCTF). The proposed project will address the need for Protection System redundancy, based on an n-1 failure of individual components of the Protection System.		
TVA System Planning	Yes	TVA believes that the new table format does make the tables much easier to follow. However, the tables can be a little hard to follow for those categories that have both over and under 300-kV categories. Also having header pages at the top of each page of the tables would also help. Should P6 and P7 events be moved to Extreme Events since firm transmission and non-consequential load can be dropped for these events? Seems like these events are very similar to the Extreme Events.
Response: The SDT has reformatted the performance tables (Table 1 Steady-State and Table 2 Stability) into a single table format based on commonalities between the two prior individual tables. The new Table 1 is titled "Steady State and Stability Performance". The new single performance table is greatly condensed from the Draft 2 version and the entire body of material is now contained on three pages compared to the thirteen pages that the prior Table 1 and Table 2 encompassed. Headers are repeated on subsequent pages. The SDT has elected to retain both P6 (N-1-1) and P7 (Common Tower N-2) Planning Events in this third draft. There was no compelling industry opinion for the change and the events were considered by the SDT to be credible events and warrant the Planning Event level of scrutiny. There are more severe versions of these events contained with the Extreme Event area.		
City Water, Light & Power - Springfield, Illinois	Yes and No	Place the titles on each page and put the borders back in.
Response: The SDT has reformatted the performance tables (Table 1 Steady-State and Table 2 Stability) into a single table format based on commonalities between the two prior individual tables. The new Table 1 is titled "Steady State and Stability Performance". The new single performance table is greatly condensed from the Draft 2 version and the entire body of material is now contained on three pages compared to the thirteen pages that the prior Table 1 and Table 2 encompassed. Headers are repeated on subsequent pages. The SDT believes the new table will also address your concern regarding the borders. If not, please provide a more specific comment in your review of the Draft		

Organization	Question 7:	Question 7 Comments:
3 standard.		
Progress Energy Carolinas	Yes	The readability of the tables could be improved if the headings were put on each separate page. Separating out the tables for steady state and stability greatly improves and clarifies the requirements of the standard. Additionally, we would prefer that dynamic planning events use labeling such as D1, D2, etc. instead of P1, P2, etc. to differentiate them from steady state events.
Response: The SDT has reformatted the performance tables (Table 1 Steady-State and Table 2 Stability) into a single table format based on commonalities between the two prior individual tables. The new Table 1 is titled "Steady State and Stability Performance". The move to a single table has negated the need for the Planning Event category naming convention changes suggested by the commenter and the team retained the P1 through P7 references for Planning Events. The move to a single table was based on a significant number of comments and based on the SDT's view that the Planning Events were the same for both Steady-State and Stability. For Extreme Events, the separation of Steady-State and Stability that many in industry seem to prefer for the two table format has been retained in the new table. The new single performance table is greatly condensed from the Draft 2 version and the entire body of material is now contained on three pages compared to the thirteen pages that the prior Table 1 and Table 2 encompassed. Headers are repeated on subsequent pages.		
Platte River Power Authority	Yes and No	I like the emphasis on stability performance but I prefer one table combining steady-state and stability Categories since the Planning Events are common to both. Divide notes, Evaluation Requirements, and Extreme Events Descriptions into two sub-tables.
Response: The SDT has reformatted the performance tables (Table 1 Steady-State and Table 2 Stability) into a single table format based on commonalities between the two prior individual tables. The new Table 1 is titled "Steady State and Stability Performance". The move to a single table was based on a significant number of commenters, like yourself, who felt a single table would suffice. For Extreme Events, the separation of Steady-State and Stability that many in industry seem to prefer for the two table format has been retained in the new table. The SDT divided the top notes between those that are applicable to Steady-state, Stability or both as suggested by the commenter.		
BCTC	No	The differences in the tables requiring two tables are not apparent. Furthermore, we have become familiar with working with the current Table 1. Changing to these new tables will result in transition costs. We see no problems with continuing to use the current Table 1 and would prefer to retain it.
Response: While the new tables and naming conventions will require some effort for industry adaption, the SDT believes the tables provide greater clarity and drive the reliability improvements desired by FERC Order 693.		

Organization	Question 7:	Question 7 Comments:
Manitoba Hydro	No	There appears to be little difference between Table I and II other than the performance requirements at the start of each table, which should be embedded within standard. Manitoba Hydro would prefer one table as we believe it serves to simplify the standard readability. Additional Comments on Table 1:The Performance Requirements (Items 1 to 6) should have a heading "Evaluation Requirements". These evaluation requirements should be included in the standard body. Also they should be labeled A to F to avoid confusion with the Notes at the end of the Table. Item 6 is not applicable for steady state analysis. Suggest changing "Notes" to "Table I Notes" for improved readability if more than one table is retained. Planning Events: In cases where Non-consequential Load Loss is allowed, has the SDT discussed limiting the amount of load lost? Planning Events: For the multiple contingency events, in cases where Interruption of Firm Transmission Service or Non-Consequential Load Loss is allowed, the SDT should clarify that such loss is only allowed after the second event. P1: Similar to DC lines, interruption of Firm Transmission Service should be allowed for AC transmission lines, as in many cases, the firm transmission service is dependent on the outaged AC transmission line or transformer, that is, the contract path. P2-1: Suggest changing :single ended line: to "open ended line". P3: Similar to DC lines, interruption of Firm Transmission Service should be allowed if transfer is dependent on the outaged AC transmission line or transformer - the contract path. Planning Events >300 kV: Interruption of firm transfer should be allowed if AC contract path is lost due to an event. In many cases the majority of the firm transfer is carried by the contract path ac line, not that unlike the case of the DC line. MH has sold Firm Transmission Service, the delivery of which is dependent on the single circuit Winnipeg-Twin Cities 500 kV line being in-service, This Firm Transmission Service is available in the order of 99.6% of the time. Assuming two 5 day planned maintenance outages per year the availability is 97.3% per year. MH's transmission customers did not want to pay some $800 million in capital costs for a second 500 kV line to increase the Firm Transmission Service availability by 2%, especially considering that Firm Transmission Service loss does not result in loss of load, but results in a call for redispatch (call for Operating Reserves being carried to cover for loss of the largest generator or largest loaded transmission line with associated fast generation runback (SPS)). The inability to interrupt Firm Transmission Service will drive expensive new line construction, or require withdrawal of 1500 MW of firm transmission service from the market. P4: Greater than 300 kV - Interruption of Firm Transmission Service should be allowed if transfer is dependent on the outaged AC transmission line or transformer. The low probability of P4 events does not warrant the cost of raising the reliability performance requirements.

Organization	Question 7:	Question 7 Comments:
		P5: Greater than 300 kV - Interruption of Firm Transmission Service should be allowed if transfer is dependent on the outaged AC transmission line or transformer. NERC defines a Protection System as "Protective relays, associated communication systems, voltage and current sensing devices, station batteries and DC control circuitry. In many cases, the protective relays, associated communication circuits and DC control circuits consist of two separate or redundant systems, but the voltage and current devices and station battery may be common. Is the SDT considering a current sensing device, or the station battery, for example, to be a single point of failure? Table 1 Note 4: Imposes a requirement on FACTS devices, and therefore should be elevated to the Requirements in the standard body. Also FACTs devices can be put in a series connection as well as shunt. Perhaps some additional clarification is required. Additional Comments on Table 2: Stability Performance Requirements: ?The Performance Requirements (Items 1 to 5) should have a heading "Evaluation Requirements". These evaluation requirements should be included in the standard body. Also they should be labeled A to E to avoid confusion with the Notes at the end of the Table 2 – Item 4: should the simulation also include the effect of reclosing where applicable? Planning Events: Same as comments on Table 1 regarding treatment of Firm Transmission Service and Non-Consequential Load Loss for >300 kV P4: Greater than 300 kV - Interruption of Firm Transmission Service should be allowed if transfer is dependent on the outaged AC transmission line or transformer. P5: Greater than 300 kV - Interruption of Firm Transmission Service should be allowed if transfer is dependent on the outaged AC transmission line or transformer. Multiple Contingency events (P3, P6): Does the SDT envision these multiple events being simulated as a stability run for the second event using a base case with an adjusted system - considering the first event is typically P1 which has been previously run as a separate simulation, typically a P1 event? P5: see Table 1 comment re what is considered a single point of failure. Extreme Events: Evaluation Requirement 1 - R5.5.4 should be R5.4.4 Extreme Event Description 2H: A 3 phase bus fault on a switching station would not normally result in loss of a voltage level and transformers at a station. The event should just be loss of one voltage level plus transformers in a substation. Table 2 Notes: Suggest changing "Notes" to "Table 2 Notes" if more than one table is retained. Note 5 a. Stipulates requirements for generating unit performance - should not be buried in the notes. Also, what is the SDT rationale for allowing units to pull out of synchronism for single contingency events like P2, or P5 - stuck breaker, or P7 - common tower, which is a normal clearing event.

Organization	Question 7:	Question 7 Comments:
		P1: Similar to DC lines, interruption of Firm Transmission Service should be allowed if transfer is dependent on the outaged AC transmission line or transformer. P3: Similar to DC lines, interruption of Firm Transmission Service should be allowed if transfer is dependent on the outaged AC transmission line or transformer. It is important for a probabilistic measure of likelihood to be considered in designing Table 1 and Table 2. The various categories of contingencies, P1 to P7, for example, should be ideally arranged in order of magnitude of likelihood, so that the acceptable consequences or the performance requirements may be in an increasing level of severity. However, there are events with intrinsically different probabilities currently classified within each of these contingency categories. For example, in P3 (following loss of a generator followed by system adjustments), another generator forced outage is more likely than a transformer forced outage. In P2 (single contingency), loss of a bus section is less likely than the P3 event of a double generator contingency. Therefore, these P categories, as currently defined, overlap one another in the scale of likelihood. As a result of it, Table 1 and Table 2 have allowed for certain rarer events (e.g., included in single-contingency P2 and double-contingency P3 categories) to incur some significant consequences with unspecified limits, e.g., interruption of firm transmission services or "non-consequential" load loss. It may be better to follow the NERC Reliability Concepts White Paper's approach of displaying these tables in categories of event likelihood, so that the acceptable consequences would be in an increasing level of severity. This approach would then be consistent with Probabilistic Risk Assessment, when the industry has collected enough transmission outage data to enable such a method be applied. Though the US power industry does not have transmission outage statistics collected and analyzed across the industry, Canadian utilities do have excellent data. It seems to be possible for the various contingency events in the current Tables 1 and 2 to be recategorized according to five or six groups of "order of magnitude of likelihood", e.g., M0, M1, M2, M3, M4 and M5. Each order of magnitude of likelihood is ten times less likely than the preceding order. For example, the first order (M1) would be for outage probabilities greater than 1%. The second order (M2) would be for outage probabilities between 0.1% and 1%. The third order (M3) would be between 0.01% and 0.1%, etc. Multiple independent contingencies could be classified based on the product of their individual probabilities, e.g., a generator outage is of order M1, and a transmission circuit outage is of order M2. Therefore, a double contingency of a generator and a transmission circuit is of order M3, but a double generator contingency is of order M2. Having placed the initiating contingencies in these orders of likelihood, it is then feasible for the industry stakeholders to try to agree on the level of acceptable consequences for these magnitude orders of likelihood. In the current draft of this standard, there is no quantified variable degree of acceptable consequences, as envisioned in the NERC Reliability Concept White Paper.There is distinctly different treatment of whether the out-of-service element is below or above 300KV. There is difference in allowing or not allowing firm transaction interruption and/or non-consequential load loss, but neither of them has a specified limit on the MW amounts. With the current layout of Tables 1 and 2, it is not readily apparent that the proposed standard is consistent with a sound risk approach. Having a sound risk approach is very important because investment decisions will be made according to these new, proposed and still-deterministic standards. Planners may find out in their studies that the costs of meeting some unlikely contingencies requiring expensive transmission investments are very high and that these costs are not justifiable based on avoiding those rare consequences. On the other hand, because the amounts of acceptable firm transaction interruption and non-consequential load loss are not specified, the transmission system designed to that

Organization	Question 7:	Question 7 Comments:
		standard with unspecified limits may become vulnerable to cascading events that initiate in the transmission grid below 300 KV. Many entries in the Tables allow non-consequential load losses, but no limits are specified. It raises the question, "If any non-consequential load loss is acceptable, is there a need to study that contingency scenario?" Without a reasonable set of limits, the criteria may not be effective in assuring system reliability. NERC's event analysis group has been using five categories of consequences to classify recent blackouts or major disturbances. A condensed summary of this is as follows. Category 1. Abnormal frequencies > 5min; or inter-area oscillations Cateorgy 2. System separation with no loss of load or generation; or loss of generation (between 1,000 and 2,000 MW in the EI or WI and between 500 MW and 1,000 MW in ERCOT) Category 3. Loss of load (less than 1,000 MW); or loss of generation (> 2,000 MW in the EI or WI and > 500 MW in ERCOT); System separation or islanding with loss of load or generation (less than 1,000 MW). Category 4. System separation or islanding of more than 1,000 MW of load; or loss of load (1,000 to 9,999 MW). Category 5. Loss of load (10,000 MW or more) Lay persons as well as transmission planners can understand and appreciate these ways of defining consequences, e.g., category 5 events mean more than 10,000 MW of load or generation loss. A way to propose reasonable limits to the highly unlikely but potentially severe contingencies, e.g., M3, M4, and M5, would be to limit their designed consequences to Category 2, 3 or 4. A well designed transmission system should limit the consequences of potential cascading outages and their likelihood so that fewer major blackouts would occur, while balancing the cost of investment to the cost of outages to the customers. A number of utilities are already performing PRA studies for their transmission planning. The advantages of using PRA have been demonstrated in the nuclear power industry. It would be desirable to have a pathway for the power industry to transition from the still-deterministic planning criteria in TPL-001 to a probabilistic planning criteria, without having to wait for another major revision to the TPL standard. If the Tables 1 and 2 are arranged and presented consistently with the NERC Reliability Concepts White Paper, the approach will enable that transition to take place naturally. If the TPL-001 standards establish a PRA-compatible Table 1 and Table 2, with contingency categories sorted in order of magnitude of likelihood, and their acceptable consequences also arranged in order of consequences (such as the five categories), the reliability requirement is already seen in the PRA-compatible way of a constant Risk level, Risk = Likelihood x Consequence. When the industry has good data to quantify the probabilities of these various contingencies, the implication of this ?already-accepted? Risk Level would be clear and numerically expressable. What is useful at this time is for the industry to make a forward-looking estimate of what this Risk level would be like, and consider whether it is appropriate and consistent with sound economic and risk principles.

Response: The SDT has reformatted the performance tables (Table 1 Steady-State and Table 2 Stability) into a single table format based on commonalities between the two prior individual tables. The new Table 1 is titled “Steady State and Stability Performance”. The move to a single table was based on a significant number of comments and based on the SDT’s view that the Planning Events were the same for both Steady-State and Stability. For Extreme Events, the separation of Steady-State and Stability that many in industry seem to prefer for the two table format has been retained in the new table. The new single performance table is greatly condensed from the Draft 2 version and the entire body of material is now contained on three pages compared to the thirteen pages that the prior Table 1 and Table 2 encompassed. Headers are repeated on subsequent pages.

The top introductory notes have been retained and are now referred to alphabetically to avoid confusion with the referenced footer notes. The top notes also

Organization	Question 7:	Question 7 Comments:

better clarify which are applicable to steady-state, stability or both.

The standard does not place a limit on the amount of Non-Consequential Load loss allowed. However, the maximum Consequential Load loss and its associated Contingency require documentation. See Requirements R2.9 and 2.10.

R2.8 The Planning Assessment shall provide the largest Consequential Load Loss (megawatt Demand) and the associated event caused by any P1 event and any P2 event in Table 1.

R2.9 The Planning Assessment shall identify the maximum permissible Non-Consequential Load Loss (megawatt Demand) for those Planning Events where Non-Consequential Load Loss is allowed in Table 1.

In regards to the Planning Event P3, the SDT team agrees with the commenter's opinion on the need to allow for all types of conditional Firm Transmission Service interruptions and that the prior Draft 2 version unintentionally provided preferential treatment to HVDC. In the new performance Table 1, a new footnote has been added (see footnote 5) to the column title "Interruption of Firm Transmission Service Allowed" that corrects the problem identified by the commenter. The SDT believes that interruption of Firm Transmission Service may be justified, so long no firm load loss occurs if the performance requirements do not permit the load shed. See new footnote 10 regarding the SDT stance on interruption of Firm Transmission Service and its use in multiple contingency Planning Events.

In regards to Planning Event P2.1, the reference to "single ended" has been removed and footnote 8 was added to further clarify the event required for study.

Based on feedback received the SDT was not compelled to alter its stance on the provision for Non-Consequential Load shed for a P4 and P5 event. However, the SDT has added footnotes 5 and 10 related to Firm Transmission Service. Footnote 5 indicates that interruption of conditional firm transfers is permitted for all Planning Events and footnote 10 indicates that interruption of Firm Transmission Service coupled with appropriate generation re-dispatch can be utilized for multiple Contingency events as a System adjustment, where indicated in Table 1 as being part of the Initial System Condition, and as a post-Contingency corrective action so long as no interruption of Non-Consequential Load occurs and all Facility Ratings are maintained.

The SDT has revised the P5 Planning Event description to remove the reference to "single component failure" and the event description was changed to match what is stated in the currently approved TPL standards under Category C6 through C9. The intent of P5 is to evaluate a failure of a single Protection System design that introduces a delayed clearing mode that may also include additional electrical Facilities being removed when compared to the normal fault clearing. A Protection System failure resulting in loss of the substation (one voltage level plus transformers) would not qualify as a P5 Planning Event since that event is considered an Extreme Event. A Standard Authorization Request (SAR) has been issued for industry comment (1/20/2009 through 2/18/2009) based on work completed by the System Protection and Controls Task Force (SPCTF). The proposed project will address the need for Protection System redundancy, based on an n-1 failure of individual components of the Protection System.

The SDT agrees that FACTS can be series devices and the footnote reference has been modified to better clarify the intent is shunt devices, connected to ground. See footnote 7.

7. Requirements which are applicable to shunt devices also apply to FACTS devices that are connected to ground.

The SDT has reformatted the performance tables (Table 1 Steady-State and Table 2 Stability) into a single table format based on commonalities between the two prior individual tables. The new Table 1 is titled "Steady State and Stability Performance". The move to a single table was based on a significant number of

Organization	Question 7:	Question 7 Comments:
comments and based on the SDT's view that the Planning Events were the same for both Steady-State and Stability. For Extreme Events, the separation of Steady-State and Stability that many in industry seem to prefer for the two table format has been retained in the new table. The new single performance table is greatly condensed from the Draft 2 version and the entire body of material is now contained on three pages compared to the thirteen pages that the prior Table 1 and Table 2 encompassed. Headers are repeated on subsequent pages. The requirements do not require study of reclosing actions. Only the initial Protection System responses must be simulated. P3 – see above response for Table 1. Based on feedback received the SDT was not compelled to alter its stance on the provision for Non-Consequential Load shed for a P4 and P5 event. However, the SDT has added footnotes 5 and 10 related to Firm Transmission Service. Footnote 5 indicates that interruption of conditional firm transfers is permitted for all Planning Events and footnote 10 indicates that interruption of Firm Transmission Service coupled with appropriate generation re-dispatch can be utilized for multiple Contingency events as a System adjustment, where indicated in Table 1 as being part of the Initial System Condition, and as a post-Contingency corrective action so long as no interruption of Non-Consequential Load occurs and all Facility Ratings are maintained. In the multiple Contingency P3 (Gen + 1) and P6 (N-1-1), within a stability study only the 2nd outage is required to be reviewed. The first Contingency is a precondition that needs to be modeled but not evaluated for its Stability response if the P3 or P6 condition is studied for Stability. The SDT has revised the P5 Planning Event description to remove the reference to "single component failure" and the event description was changed to match what is stated in the currently approved TPL standards under Category C6 through C9. The intent of P5 is to evaluate a failure of a single Protection System design that introduces a delayed clearing mode that may also include additional electrical Facilities being removed when compared to the normal fault clearing. A Protection System failure resulting in loss of the substation (one voltage level plus transformers) would not qualify as a P5 Planning Event since that event is considered an Extreme Event. A Standard Authorization Request (SAR) has been issued for industry comment (1/20/2009 through 2/18/2009) based on work completed by the System Protection and Controls Task Force (SPCTF). The proposed project will address the need for Protection System redundancy, based on an n-1 failure of individual components of the Protection System. In the Extreme Events area of the Stability table the reference to Requirement R5.5.4 has been removed due to a circular reference between the requirements and the table. The Extreme Event item 2h is written consistent with the presently approved TPL D8 and D9 contingencies. The SDT has reformatted the performance tables (Table 1 Steady-State and Table 2 Stability) into a single table format based on commonalities between the two prior individual tables. The new Table 1 is titled "Steady State and Stability Performance". The move to a single table was based on a significant number of comments and based on the SDT's view that the Planning Events were the same for both Steady-State and Stability. For Extreme Events, the separation of Steady-State and Stability that many in industry seem to prefer for the two table format has been retained in the new table. The new single performance table is greatly condensed from the Draft 2 version and the entire body of material is now contained on three pages compared to the thirteen pages that the prior Table 1 and Table 2 encompassed. Headers are repeated on subsequent pages. The SDT team agrees with the commenter's opinion on the need to allow for all types of conditional Firm Transmission Service interruptions and that the prior Draft 2 version unintentionally provided preferential treatment to HVDC. In the new performance Table 1, a new footnote has been added (see footnote 5) to the			

Organization	Question 7:	Question 7 Comments:
column title "Interruption of Firm Transmission Service Allowed" that corrects the problem identified by the commenter Regarding bottom note 5a, now shown as footnote 1, the SDT believes that no unit should be allowed to pull out of synchronism for more likely single Contingency events such as a three-phase fault on a line, transformer, or generator - a P1 event. The P2 events, even though classified as single Contingency events with normal clearing, are less likely to occur (bus faults, internal breaker faults, etc.). P5 and P7 are multiple Contingency events and are less likely to occur. The SDT believes it is appropriate to allow units to pull out of synchronism for less likely events as long as the other conditions of footnote 1 are maintained. The Planning Events, in general are ordered based on level of probability. However, the SDT chose to order the table by three main areas: 1) no Contingency (P0), 2) single Contingency (P1, P2) and 3) multiple Contingency (P3 through P7). While the SDT agrees with the commenter that there is some overlap in probability order, for example between P2 and P3, we believe the SDT has more importantly made the proper performance level requirements based on a reliability "risk" level where risk accounts for impact times (x) probability of occurrence. The commenter's proposed shift from deterministic planning to probabilistic planning is outside the scope of the SAR for this project. The SDT believes the commenters suggested focus on more detailed probabilistic analysis is better addressed after the industry obtains additional outage data and insight obtained through the TADS effort.		
Los Angeles Department of Water and Power	No	The performance table allows different performance for same contingency at different voltage classes that is arbitrary separated. This is discriminatory and without any scientific or historical basis. There should be only one class for the whole transmission system. Transmission system at below 300kV should not be granted preferential treatment. Mindful also that the initiating causes of last two major continental wide blackouts(one in WECC and the other in the Eastern Interconnections) both started in system at less than 300kV.
Response: The SDT believes it has provided sufficient reasoning why the above 300 kV System should be held to a higher standard. The initial draft of the proposed Transmission planning standard held the planning of 300 kV and higher Transmission Systems to a more stringent requirement than the remaining BES. Although not unanimous, the majority of the SDT believed the 300 kV and higher Systems (EHV) generally represent the backbone of many Systems in the various Interconnections and that the more stringent requirements were appropriate when considering N-1-1 Contingencies of two EHV Facilities. Systems operated above 300 kV generally do not directly serve end-use Load customers but rather act as the medium for moving large amounts of power from production to various Load centers where the energy is then delivered by other Transmission or sub-Transmission Systems to end-use customers. It is the desire of NERC and various stakeholders that the backbone of the electric power grid be robust and held to a higher degree of reliability. Additionally, loss of the EHV system stresses the lower voltage parallel paths. EHV transformers can be exposed to long duration outages. Therefore, it was the conclusion of the SDT in Draft 1 to propose greater reliability and operational flexibility through more stringent performance requirements when considering certain N-1 and N-1-1 Contingency events of EHV Systems. Throughout the industry, substation arrangements at EHV levels reflect the importance of these Systems as the designs often consist of the more flexible and reliable ring-bus, breaker-and–a-half or double bus-double breaker protection schemes as compared to the simpler, lower cost single bus arrangements that are commonly found on lower voltage systems. The feedback received from the industry was divided related to the SDT's emphasis placed on a higher expectation for the 300 kV and higher systems. Some commenters questioned the importance and the high costs that may be needed to mitigate existing system designs. Others agreed with the SDT's approach and indicated that the impact to their systems would be minimal. Some commenters even questioned why the more stringent approach was not applied to the entire		

Organization	Question 7:	Question 7 Comments:
100 kV and higher systems. The SDT believes the Draft 2 changes are responsive to industry feedback and reflect an appropriate middle ground related to the importance of the EHV Transmission System.		
Transmission Agency of Northern California	Yes and No	We do not disagree with the proposed format changes of the Tables. However, we are not sure if separating into two Tables is necessary, or beneficial. It seems like an extra column for event could be added and some changes to the notes would greatly simplify the table. Some of the rows could also be combined; one such example is P2-2 (Loss of Bus Section) and P2-3 (Internal Breaker Fault, non-bus-tie). Will the SDT plan on combining some similar rows? Table 1, P4 and P5 refer to "Faults" as part of the contingency. This is steady state performance and faults are not modeled in steady state. Table 1, P2.1 refers to a "single ended line". Technically, this means we need to generate a "false" bus at each end of the line to evaluate this condition or use a dispatcher power flow which included breaker modeling. Is this an accurate interpretation of the intent of this requirement? We believe there should be no distinction between the voltage classes and support the use of load shed for all cases identified in P4 through P7.
Public Service Company of New Mexico	Yes and No	We do not disagree with the proposed format changes of the Tables. However, we are not sure if separating into two Tables is necessary, or beneficial. It seems like an extra column for event could be added and some changes to the notes would greatly simplify the table. Some of the rows could also be combined; one such example is P2-2 (Loss of Bus Section) and P2-3 (Internal Breaker Fault, non-bus-tie). Will the SDT plan on combining some similar rows? Table 1, P4 and P5 refer to "Faults" as part of the contingency. This is steady state performance and faults are not modeled in steady state. Table 1, P2.1 refers to a "single ended line". Technically, this means we need to generate a "false" bus at each end of the line to evaluate this condition or use a dispatcher power flow which included breaker modeling. Is this an accurate interpretation of the intent of this requirement? We believe there should be no distinction between the voltage classes and support the use of load shed for all cases identified in P4 through P7.
Puget Sound Energy, Inc.	Yes and No	We do not disagree with the proposed format changes of the Tables. However, we are not sure if separating into two Tables is necessary, or beneficial. It seems like an extra column for events could be added and some changes to the notes would greatly simplify the table. Some of the rows could also be combined; one such example is P2-2 (Loss of Bus Section) and P2-3 (Internal Breaker Fault, non-bus-tie). Will the SDT plan on combining some similar rows? Table 1, P4 and P5 refer to "Faults" as part of the contingency. This is steady state performance and faults are not

Organization	Question 7:	Question 7 Comments:
		modeled in steady state. Table 1, P2.1 refers to a "single ended line". Technically, this means we need to generate a "false" bus at each end of the line to evaluate this condition or use a dispatcher power flow which included breaker modeling. Is this an accurate interpretation of the intent of this requirement? We believe there should be no distinction between the voltage classes and support the use of load shed for all cases identified in P4 through P7.
Black Hills Corporation	Yes and No	We do not disagree with the proposed format changes of the Tables. However, we are not sure if separating into two Tables is necessary, or beneficial. It seems like an extra column for event could be added and some changes to the notes would greatly simplify the table. Some of the rows could also be combined; one such example is P2-2 (Loss of Bus Section) and P2-3 (Internal Breaker Fault, non-bus-tie). Will the SDT plan on combining some similar rows? Table 1, P4 and P5 refer to "Faults" as part of the contingency. This is steady state performance and faults are not modeled in steady state. Table 1, P2.1 refers to a "single ended line". Technically, this means we need to generate a "false" bus at each end of the line to evaluate this condition or use a dispatcher power flow which included breaker modeling. Is this an accurate interpretation of the intent of this requirement? We believe there should be no distinction between the voltage classes and support the use of load shed for all cases identified in P4 through P7.
Tucson Electric Power Company	Yes and No	We do not disagree with the proposed format changes of the Tables. However, we are not sure if separating into two Tables is necessary, or beneficial. It seems like an extra column for event could be added and some changes to the notes would greatly simplify the table. Some of the rows could also be combined; one such example is P2-2 (Loss of Bus Section) and P2-3 (Internal Breaker Fault, non-bus-tie). Will the SDT plan on combining some similar rows? Table 1, P4 and P5 refer to "Faults" as part of the contingency. This is steady state performance and faults are not modeled in steady state. Table 1, P2.1 refers to a "single ended line". Technically, this means we need to generate a "false" bus at each end of the line to evaluate this condition or use a dispatcher power flow which included breaker modeling. Is this an accurate interpretation of the intent of this requirement? We believe there should be no distinction between the voltage classes and support the use of load shed for all cases identified in P4 through P7.The proposed format covers multiple pages. Add the header rows to each page for easier reading.

Organization	Question 7:	Question 7 Comments:
Pacific Gas and Electric Co.	Yes and No	We do not disagree with the proposed format changes of the Tables. However, we are not sure if separating into two Tables is necessary, or beneficial. It seems like an extra column for event could be added and some changes to the notes would greatly simplify the table. Some of the rows could also be combined; one such example is P2-2 (Loss of Bus Section) and P2-3 (Internal Breaker Fault, non-bus-tie). Will the SDT plan on combining some similar rows? Table 1, P4 and P5 refer to "Faults" as part of the contingency. This is steady state performance and faults are not modeled in steady state. Table 1, P2.1 refers to a "single ended line". Technically, this means we need to generate a "false" bus at each end of the line to evaluate this condition or use a dispatcher power flow which included breaker modeling. Is this an accurate interpretation of the intent of this requirement? We believe there should be no distinction between the voltage classes and support the use of load shed for all cases identified in P4 through P7.
Idaho Power Company	Yes and No	We do not disagree with the proposed format changes of the Tables. However, we are not sure if separating into two Tables is necessary, or beneficial. It seems like an extra column for event could be added and some maybe some changes to the notes would greatly simplify the table. Some of the rows could also be combined; one such example is P2-2 (Loss of Bus Section) and P2-3 (Internal Breaker Fault, non-bus-tie). Will the SGT plan on combining some similar rows? Table 1, P4 and P5 refer to "Faults" as part of the contingency. This is steady state performance and faults are not modeled in steady state. Table 1, P2.1 refers to a "single ended line". Technically, this means we need to generate a "false" bus at each end of the line to evaluate this condition or use a dispatcher power flow which included breaker modeling. Is this an accurate interpretation of the intent of this requirement? We believes there should be no distinction between the voltage classes and supports the use of load shed for all cases identified in P4 through P7.
SMUD	Yes and No	We do not disagree with the proposed format changes of the Tables. However, we are not sure if separating into two Tables is necessary, or beneficial. It seems like an extra column for event could be added and some changes to the notes would greatly simplify the table. Some of the rows could also be combined; one such example is P2-2 (Loss of Bus Section) and P2-3 (Internal Breaker Fault, non-bus-tie). Will the SDT plan on combining some similar rows? Table 1, P4 and P5 refer to "Faults" as part of the contingency. This is steady state performance and faults are not modeled in steady state.

Organization	Question 7:	Question 7 Comments:
		Table 1, P2.1 refers to a "single ended line". Technically, this means we need to generate a "false" bus at each end of the line to evaluate this condition or use a dispatcher power flow which included breaker modeling. Is this an accurate interpretation of the intent of this requirement? We believe there should be no distinction between the voltage classes and support the use of load shed for all cases identified in P4 through P7.
Sierra Pacific Power Comapny / Nevada Power Company	Yes and No	We do not disagree with the proposed format changes of the Tables. However, we are not sure if separating into two Tables is necessary, or beneficial. It seems like an extra column for event could be added and some maybe some changes to the notes would greatly simplify the table. Some of the rows could also be combined; one such example is P2-2 (Loss of Bus Section) and P2-3 (Internal Breaker Fault, non-bus-tie). Will the SGT plan on combining some similar rows? Table 1, P4 and P5 refer to "Faults" as part of the contingency. This is steady state performance and faults are not modeled in steady state. Table 1, P2.1 refers to a "single ended line". Technically, this means we need to generate a "false" bus at each end of the line to evaluate this condition or use a dispatcher power flow which included breaker modeling. Is this an accurate interpretation of the intent of this requirement? We believes there should be no distinction between the voltage classes and supports the use of load shed for all cases identified in P4 through P7.
SRP	Yes and No	We do not disagree with the proposed format changes of the Tables. However, we are not sure if separating into two Tables is necessary, or beneficial. It seems like an extra column for event could be added and some changes to the notes would greatly simplify the table. Some of the rows could also be combined; one such example is P2-2 (Loss of Bus Section) and P2-3 (Internal Breaker Fault, non-bus-tie). Will the SDT plan on combining some similar rows? Table 1, P4 and P5 refer to "Faults" as part of the contingency. This is steady state performance and faults are not modeled in steady state. Table 1, P2.1 refers to a "single ended line". Technically, this means we need to generate a "false" bus at each end of the line to evaluate this condition or use a dispatcher power flow which included breaker modeling. Is this an accurate interpretation of the intent of this requirement? We believe there should be no distinction between the voltage classes and support the use of load shed for all cases identified in P4 through P7.
Tucson Electric	Yes and No	We do not disagree with the proposed format changes of the Tables. However, we are not sure if separating into two

Organization	Question 7:	Question 7 Comments:
Power Company		Tables is necessary, or beneficial. It seems like an extra column for event could be added and some changes to the notes would greatly simplify the table. Some of the rows could also be combined; one such example is P2-2 (Loss of Bus Section) and P2-3 (Internal Breaker Fault, non-bus-tie). Will the SDT plan on combining some similar rows? Table 1, P4 and P5 refer to "Faults" as part of the contingency. This is steady state performance and faults are not modeled in steady state. Table 1, P2.1 refers to a "single ended line". Technically, this means we need to generate a "false" bus at each end of the line to evaluate this condition or use a dispatcher power flow which included breaker modeling. Is this an accurate interpretation of the intent of this requirement? We believe there should be no distinction between the voltage classes and support the use of load shed for all cases identified in P4 through P7.The proposed format covers multiple pages. Add the header rows to each page for easier reading.
Modesto Irrigation District	Yes and No	Comments: We do not disagree with the proposed format changes of the Tables. However, we are not sure if separating into two Tables is necessary, or beneficial. It seems like an extra column for event could be added and some changes to the notes would greatly simplify the table. Some of the rows could also be combined; one such example is P2-2 (Loss of Bus Section) and P2-3 (Internal Breaker Fault, non-bus-tie). Will the SDT plan on combining some similar rows? Table 1, P4 and P5 refer to "Faults" as part of the contingency. This is steady state performance and faults are not modeled in steady state. Table 1, P2.1 refers to a "single ended line". Technically, this means we need to generate a "false" bus at each end of the line to evaluate this condition or use a dispatcher power flow which included breaker modeling. Is this an accurate interpretation of the intent of this requirement? We believe there should be no distinction between the voltage classes and support the use of load shed for all cases identified in P4 through P7.
Tri-State G&T	Yes and No	We do not disagree with the proposed format changes of the Tables. However, we are not sure if separating into two Tables is necessary, or beneficial. It seems like an extra column for event could be added and some changes to the notes would greatly simplify the table. Some of the rows could also be combined; one such example is P2-2 (Loss of Bus Section) and P2-3 (Internal Breaker Fault, non-bus-tie). Will the SDT plan on combining some similar rows? Table 1, P4 and P5 refer to "Faults" as part of the contingency. This is steady state performance and faults are not modeled in steady state. Table 1, P2.1 refers to a "single ended line". Technically, this means we need to generate a "false" bus at each end of the line to evaluate this condition or use a dispatcher power flow which included breaker modeling. Is this an accurate

Organization	Question 7:	Question 7 Comments:
		interpretation of the intent of this requirement? We believe there should be no distinction between the voltage classes and support the use of load shed for all cases identified in P4 through P7.
ColumbiaGrid	Yes and No	We do not disagree with the proposed format changes of the Tables. However, we are not sure if separating into two Tables is necessary, or beneficial. It seems like an extra column for event could be added and some maybe some changes to the notes would greatly simplify the table. Some of the rows could also be combined; one such example is P2-2 (Loss of Bus Section) and P2-3 (Internal Breaker Fault, non-bus-tie). Will the SGT plan on combining some similar rows? Table 1, P4 and P5 refer to "Faults" as part of the contingency. This is steady state performance and faults are not modeled in steady state. Please explain/define the term "single ended line" used in Table 1, P2.1. We believe there should be no distinction between the voltage classes and support the use of load shed for all cases identified in P4 through P7.
Alberta Electric System Operator	No	We do not agree with the proposed format changes of the Tables, separating into two Tables is not necessary, or beneficial. It seems like an extra column for event could be added and some changes to the notes would greatly simplify the table. Some of the rows could also be combined; one such example is P2-2 (Loss of Bus Section) and P2-3 (Internal Breaker Fault, non-bus-tie). Will the SDT plan on combining some similar rows? Table 1, P4 and P5 refer to "Faults" as part of the contingency. This is steady state performance and faults are not modeled in steady state. Table 1, P2.1 refers to a "single ended line". Technically, this means we need to generate a "false" bus at each end of the line to evaluate this condition or use a dispatcher power flow which included breaker modeling. Is this an accurate interpretation of the intent of this requirement? We believe there should be no distinction between the voltage classes and support the use of load shed for all cases identified in P4 through P7.
US Bureau of Reclamation	No	We do not disagree with the proposed format changes of the Tables. However, we are not sure if separating into two Tables is necessary, or beneficial. It seems like an extra column for event could be added and some changes to the notes would greatly simplify the table. Some of the rows could also be combined; one such example is P2-2 (Loss of Bus Section) and P2-3 (Internal Breaker Fault, non-bus-tie). Will the SDT plan on combining some similar rows? Table 1, P4 and P5 refer to "Faults" as part of the contingency. This is steady state performance and faults are not

Organization	Question 7:	Question 7 Comments:
		modeled in steady state. Table 1, P2.1 refers to a "single ended line". Technically, this means we need to generate a "false" bus at each end of the line to evaluate this condition or use a dispatcher power flow which included breaker modeling. Is this an accurate interpretation of the intent of this requirement? We believe there should be no distinction between the voltage classes and support the use of load shed for all cases identified in P4 through P7.

Response: The SDT agrees with the commenter related to the prior two table format and based on feedback received from the Draft 2 standard the SDT has reformatted the performance tables (Table 1 Steady-State and Table 2 Stability) into a single table format based on commonalities between the two prior individual tables. The new Table 1 is titled "Steady State and Stability Performance". The SDT believes the commenter will find that the new format is greatly condensed and more user friendly from a readability view.

The commenter is correct that the use of the term "fault" in the P4 and P5 events is not needed from a steady-state view; however, the SDT felt the term is needed to accurately describe the event to be analyzed. From a steady-state perspective, only the resulting condition would be analyzed. Also, with the combined format the term is now better used as the Planning Events also describe the type of fault to be studied within a Stability study. Footnote 3 clarifies that the type of fault is referenced only for the Stability studies.

In regards to the P2.1 event, the intent is to capture a potential condition of serving Load that is tapped from a normally networked line from a single source location. If a line exists (breaker to breaker) that does not directly serve Load, the P2.1 condition would not apply and only the normal N-1 condition of the line would be studied. See the newly added footnote 8 that better describes the intent of the P2.1 Planning Event.

The SDT believes it provided sufficient justification in its Draft 1 response as to why a greater expectation is placed on the above 300 kV (EHV) system. The feedback received from the industry was divided related to the SDT's emphasis placed on a higher expectation for the 300 kV and higher systems. Some commenters questioned the importance and the high costs that may be needed to mitigate existing system designs. Others agreed with the SDT's approach and indicated that the impact to their systems would be minimal. Some commenters even questioned why the more stringent approach was not applied to the entire 100 kV and higher systems. The SDT believes the Draft 2 changes are responsive to industry feedback and reflect an appropriate middle ground related to the importance of the EHV Transmission System.

Based on feedback received the SDT was not compelled to alter its stance on the provision for non-consequential load shed. However, the SDT has added footnotes 5 and 10 related to Firm Transmission Service. Footnote 5 indicates that interruption of conditional firm transfers is permitted for all Planning Events and footnote 10 indicates that interruption of Firm Transmission Service coupled with appropriate generation re-dispatch can be utilized for multiple Contingency events as a System adjustment, where indicated in Table 1 as being part of the Initial System Condition, and as a post-Contingency corrective action so long as no interruption of Non-Consequential Load occurs and all Facility Ratings are maintained.

5. When the conditions and/or event(s) being studied form the basis for conditional Firm Transmission Service, curtailment of that conditional Firm Transmission Service is allowed.

Organization	Question 7:	Question 7 Comments:
National Grid	No	a. In the column "Interruption of Firm Transmission Service Allowed" in both Tables 1 and 2, it is problematic to try to create an "exemption" based on type of facility such as HVDC. There are many other situations in which Firm Transmission Service has been provided, but may need to be curtailed partially or completely following an outage. b. The term 'Firm' may have several different definitions. If 'Firm' Transmission Service or load may be interrupted for exceptional events, then it is conditional and 'Conditional Firm' should be defined. It is recommended that a note be added stating that "the only exception would be for curtailment of conditioned (or Conditional) Firm Transmission Service", recognizing that there may need to be some form of grandfathering in order to avoid having to rewrite transmission service agreements. c. In both Table 1 and Table 2, the "Extreme Event Descriptions" item 1 should add "or shunt device." d. In Table 1, the "Extreme Event Descriptions" items 3a and 3b should be deleted; they are redundant with Item 1. e. In Table 2, Note 5 includes significant clarifications and should not be buried in the bottom of the contingency table; Note 5 would be better placed in the definitions section. f. In Table 1 and Table 2, Contingency P5 requires a fault plus Protection System Failure. Assuming that the battery system is included in the Protection System, which it is in NPCC, then ALL protection at substations with single battery systems would be lost. This Contingency P5 requires a stable system response while all bus voltages and loadings to remain within criteria, without interruption of firm transmission service and without Non-Consequential Load Loss, at system voltages above 300 kV. Was this an intended outcome of this standard?
Central Maine Power Company	No	a. In both Table 1 and Table 2, the "Interruption of Firm Transmission Service Allowed" column. It is problematic to try to create an "exemption" based on type of facility such as HVDC. There are many other situations in which Firm Transmission Service has been provided, but may need to be curtailed partially or completely following an outage. b. The term 'Firm' may have several different definitions. If 'Firm' Transmission Service or load may be interrupted for exceptional events, then it is conditional and 'Conditional Firm' should be defined. It is recommended that a note be added stating that "the only exception would be for curtailment of conditioned (or Conditional) Firm Transmission Service", recognizing that there may need to be some form of grandfathering in order to avoid having to rewrite transmission service agreements. c. In both Table 1 and Table 2, the "Extreme Event Descriptions" item 1 should add "or shunt device." d. In Table 1, the "Extreme Event Descriptions" items 3a and 3b should be deleted; they are redundant with Item 1. e. In Table 2, Note 5 includes significant clarifications and should not be buried in the bottom of the contingency table; Note 5 would be better placed in the definitions section.

Organization	Question 7:	Question 7 Comments:
		f. In Table 1 and Table 2, Contingency P5 requires a fault plus Protection System Failure. Assuming that the battery system is included in the Protection System, which it is in NPCC, then ALL protection at substations with single battery systems would be lost. This Contingency P5 requires a stable system response while all bus voltages and loadings to remain within criteria, without interruption of firm transmission service and without Non-Consequential Load Loss, at system voltages above 300 kV. Was this an intended outcome of this standard?
NSTAR Electric	No	1. Referring to both Table 1 and Table 2, the "Interruption of Firm Transmission Service Allowed" column, it is problematic to try to create an "exemption" based on the type of facility such as HVDC. There are situations in which Firm Transmission Service has been provided, but may need to be curtailed partially or completely following an outage. The term 'Firm' may have several different definitions. If 'Firm' Transmission Service or load may be interrupted for exceptional events, then it is conditional and 'Conditional Firm' should be defined. It is recommended that a note be added stating that "the only exception would be for curtailment of conditioned (or Conditional) Firm Transmission Service", recognizing that there may need to be some form of grandfathering in order to avoid having to rewrite transmission service agreements. 2. In both Table 1 and Table 2, the "Extreme Event Descriptions" item 1 should add "or shunt device." 3. In Table 1, the "Extreme Event Descriptions" items 3a and 3b should be deleted; they are redundant with Item 1. 4. Table 2, Note 5 includes significant clarifications which should not be buried in the back; they are better placed in the definitions section. 5. In Table 1 and Table 2, Contingency P5 requires a fault plus Protection System Failure. Protection System Failure should be defined and noted if the battery system is included.
New York Independent System Operator	No	In both Table 1 and Table 2, the "Interruption of Firm Transmission Service Allowed" column. It is problematic to try to create an "exemption" based on type of facility such as HVDC. There are many other situations in which Firm Transmission Service has been provided, but may need to be curtailed partially or completely following an outage. It is recommended that a note be added stating that the only exception would be for curtailment of conditioned (or Conditional) Firm Transmission Service, recognizing that there may need to be some form of grandfathering in order to avoid having to rewrite transmission service agreements. In both Table 1 and Table 2, the "Extreme Event Descriptions" item 1 should add "or shunt device." In Table 1, the "Extreme Event Descriptions" item 3b should be deleted; it is redundant with Item 1. In Table 2, Note 5 includes significant clarifications and should not be buried in the bottom of the contingency table; Note

Organization	Question 7:	Question 7 Comments:
		5 would be better placed in the definitions section. In Table 1 and Table 2, Contingency P5 requires a fault plus Protection System Failure, such as a battery system which may remove ALL protection at some substations. This Contingency P5 requires all voltages and loadings to remain within criteria, and a stable system response; without interruption of firm transmission service and without Non-Consequential Load Loss, at voltages above 300 kV. Was this an intended outcome of this standard?
ISO New England Inc.	No	a. In both Table 1 and Table 2, the "Interruption of Firm Transmission Service Allowed" column. It is problematic to try to create an "exemption" based on type of facility such as HVDC. There are many other situations in which Firm Transmission Service has been provided, but may need to be curtailed partially or completely following an outage. b. The term 'Firm' may have several different definitions. If 'Firm' Transmission Service or load may be interrupted for exceptional events, then it is conditional and 'Conditional Firm' should be defined. It is recommended that a note be added stating that "the only exception would be for curtailment of conditioned (or Conditional) Firm Transmission Service", recognizing that there may need to be some form of grandfathering in order to avoid having to rewrite transmission service agreements. c. In both Table 1 and Table 2, the "Extreme Event Descriptions" item 1 should add "or shunt device." d. In Table 1, the "Extreme Event Descriptions" items 3a and 3b should be deleted; they are redundant with Item 1. e. In Table 2, Note 5 includes significant clarifications and should not be buried in the bottom of the contingency table; Note 5 would be better placed in the definitions section. f. In Table 1 and Table 2, Contingency P5 requires a fault plus Protection System Failure. Assuming that the battery system is included in the Protection System, which it is in NPCC, then ALL protection at substations with single battery systems would be lost. This Contingency P5 requires a stable system response while all bus voltages and loadings to remain within criteria, without interruption of firm transmission service and without Non-Consequential Load Loss, at system voltages above 300 kV. Was this an intended outcome of this standard?

Response:

The SDT agrees with the commenter's opinion on the need to allow for all types of conditional Firm Transmission Service interruptions and that the prior Draft 2 version unintentionally provided preferential treatment to HVDC. In the new performance Table 1, a new footnote has been added (see footnote 5) to the column title "Interruption of Firm Transmission Service Allowed" that corrects the problem identified by the commenter.

The SDT agrees with the commenter that interruption of Firm Transmission Service may be justified, so long as firm Non-Consequential Load is not interrupted if the performance requirements do not permit the Load shed. See new footnote 10 regarding the SDT stance on interruption of Firm Transmission Service and its use in multiple Contingency Planning Events.

Organization	Question 7:	Question 7 Comments:
The SDT agrees that shunt devices were excluded in Extreme Event item 1 of the Steady-State and Stability tables and the problem has been corrected. The SDT agrees with the commenter regarding the opinion that item 3B in the Extreme Event portion of the prior Daft 2 Table 1 Steady-State was redundant and the item has been removed and is no longer referenced in this draft. **Extreme Events - 3b**. ~~Loss of two Transmission lines in different rights-of-way prior to System adjustments for conditions such as:~~ The SDT appreciates the input related to the footnote on "System Stable" (new footnote 1) but the SDT chose to keep it as a footnote reference for convenience to the TPL standard and not include it as a new definition for the NERC Glossary of Terms as suggested by the commenter. Related to the P5 "Protection System Failure" Planning Event the SDT has not deviated from its stance of requiring more stringent performance requirements for the above 300 kV System. The SDT has revised the P5 Planning Event description to remove the reference to "single component failure" and the event description was changed to match what is stated in the currently approved TPL standards under Category C6 through C9. The intent of P5 is to evaluate a failure of a single Protection System design that introduces a delayed clearing mode that may also include additional electrical Facilities being removed when compared to the normal fault clearing. A Protection System failure resulting in loss of the substation (one voltage level plus transformers) would not qualify as a P5 Planning Event since that event is considered an Extreme Event. A Standard Authorization Request (SAR) has been issued for industry comment (1/20/2009 through 2/18/2009) based on work completed by the System Protection and Controls Task Force (SPCTF). The proposed project will address the need for Protection System redundancy, based on an n-1 failure of individual components of the Protection System.		
Tenaska, Inc.	Yes and No	Should add a column to the tables indicated when automatic generation runback/tripping is allowed.
Response: Redispatch of generation is allowed for all Planning Events provided that all Facilities shall be operating within their Facility Ratings and within their thermal and voltage limits. The requirement has been removed and replaced with Table 1 header note "e" since the text in the former requirement was explanatory of what was allowed and not requirement language. **Header note 'e'**: For all Planning Events, planned System adjustments such as Transmission configuration changes and redispatch of generation are allowed if such adjustments are executable within the time duration applicable to the Facility Ratings.		
Gainesville Regional Utilities	No	Some of the notes at the top of each table could be considered to apply to some of the events within the table that conflict in part with the standard and with what was stated in the nation wide phone conference. I would also like to see a note in the tables that reflect a technical rationale for the range of elements considered, since some may be impractical and of no technical value for contingencies involving certain facilities especially those on the smaller systems within the interconnected region.
Response: The SDT has adjusted the top notes and refer to them with alpha character references to avoid confusion with the table footnotes that are referenced within the table. The set of Contingencies considered are not greatly different than those in the currently approved TPL suite of standards. We have attempted to add simplicity as to those Contingencies that are deemed to be Planning Events, thus requiring corrective action plans, and the Extreme Events which do not require corrective action plans.		

Organization	Question 7:	Question 7 Comments:
ITC Holdings: ITC, METC, ITC Midwest	Yes and No	While we like the tables, we don't understand what ?Interruption of Firm Transmission Service Allowed? means in a stability study (as per table 2). How would you interpret that in real-time & study terms? Would you make the stability scenario a limit to selling transmission service? In table 2, should we interpret SLG or 3-phase Fault in P1 and P3 to mean that SLG is the criteria (minimum) but you can run and document the more severe 3 phase faults for compliance purposes? What is the minimum criteria?
Response: The SDT has added footnotes 5 and 10 related to Firm Transmission Service. Footnote 5 indicates that interruption of conditional firm transfers is permitted for all Planning Events and footnote 10 indicates that interruption of Firm Transmission Service coupled with appropriate generation re-dispatch can be utilized as a System adjustment, where indicated in Table 1 as being part of the Initial System Condition, and as a post-Contingency corrective action so long as no interruption of Non-Consequential Load occurs and all Facility Ratings are maintained. In some instances, it may be necessary to interrupt Firm Transmission Service in preparation for the studied condition. It could be that from a Stability point of view such action would be beneficial under some conditions. **Footnote 5.** When the conditions and/or event(s) being studied form the basis for conditional Firm Transmission Service, curtailment of that conditional Firm Transmission Service is allowed. **Footnote #10** – Curtailment of firm transmission service, when coupled with the appropriate re-dispatch of resources obligated to re-dispatch, is allowed both as a System adjustment (as identified in the column titled 'Initial System Conditions') and a corrective action, where it can be demonstrated that Facilities remain within applicable Facility Ratings and those adjustments do not result in the shedding of any firm Load. Where limited options for re-dispatch exist, sensitivities associated with the availability of those resources must be considered. Where Facilities external to the Transmission Planner's planning region are relied upon, Facility Ratings in those regions must be considered. The SDT has corrected the confusion related to the "SLG or 3-phase" fault reference that the commenter describes in the P1 Planning Event. The table now says 3-phase. We added footnote #3 to clarify the fault types and what study results are sufficient for the case of an SLG fault condition. **3.** Unless specified otherwise, simulate Normal Clearing faults. Single line to ground (SLG) or three phase (3Ø) are the fault types, that must be evaluated in Stability simulations for the event described. A 3Ø fault study indicating criteria are being met shall provide sufficient evidence that a SLG condition would also meet criteria.		
Hydro-Quebec Transenergie (HQT)	No	In both Table 1 and Table 2, the "Interruption of Firm Transmission Service Allowed", a definition should be provided to clarify that term. That term is more of a Market concept not used by all TOs and defined in their Transmission Tariff. Also, the standard might need to introduce a new term "Consequential Transmission Service Loss" as it does for the Load. Firm Transmission services are generally defined as a service of the same priority as the one for the native load. That does not mean it could not be interrupted. In both Table 1 and Table 2, the "Extreme Event Descriptions" item 1 should add "or shunt device." In Table 1, the "Extreme Event Descriptions" item 3b should be deleted; it is redundant with Item 1.

Organization	Question 7:	Question 7 Comments:
		In Table 2, Note 5 includes significant clarifications and should not be buried in the bottom of the contingency table; Note 5 would be better placed in the definitions section. In Table 1 and Table 2, Contingency P5 requires a fault plus Protection System Failure. The "Protection System Failure" aspect of this contingency brings the necessity to define more clearly what is intended. The notion of needed redundancy or single elements of the protection system, be it physical or electric, has to be addressed to clearly understand the implication of that contingency. Until such clarification is included in this standard or in the future "Redundancy standard", this contingency should not be effective.

Response: The NERC Glossary of Terms presently defines Firm Transmission Service as "The highest quality (priority) service offered to customers under a filed rate schedule that anticipates no planned interruption." FERC in Order 693 was clear that no planned interruption of Firm Transmission Service should be permitted for single Contingency conditions. We agree that there may be times when Firm Transmission Service should be permitted. The SDT has added footnotes 5 and 10 related to Firm Transmission Service. Footnote 5 indicates that interruption of conditional firm transfers is permitted for all Planning Events and footnote 10 indicates that interruption of Firm Transmission Service coupled with appropriate generation re-dispatch can be utilized for multiple Contingency events as a System adjustment, where indicated in Table 1 as being part of the Initial System Condition, and as a post-Contingency corrective action so long as no interruption of Non-Consequential Load occurs and all Facility Ratings are maintained.

5. When the conditions and/or event(s) being studied form the basis for conditional Firm Transmission Service, curtailment of that conditional Firm Transmission Service is allowed.

Footnote #10 – Curtailment of firm transmission service , when coupled with the appropriate re-dispatch of resources obligated to re-dispatch, is allowed both as a System adjustment (as identified in the column titled 'Initial System Conditions') and a corrective action, where it can be demonstrated that Facilities remain within applicable Facility Ratings and those adjustments do not result in the shedding of any firm Load. Where limited options for re-dispatch exist, sensitivities associated with the availability of those resources must be considered. Where Facilities external to the Transmission Planner's planning region are relied upon, Facility Ratings in those regions must be considered.

The SDT agrees that shunt devices were excluded in Extreme Event item 1 of the Steady-State and Stability tables and the problem has been corrected.

Extreme Event Steady State #1

Loss of a single generator, Transmission Circuit, DC Line, shunt device, or transformer forced out of service followed by another single generator, Transmission Circuit, DC Line, shunt device, or transformer forced out of service prior to System adjustments.

The SDT agrees with the commenter regarding the opinion that item 3B in the Extreme Event portion of the prior Daft 2 Table 1 Steady-State was redundant and the item has been removed and is no longer referenced in this draft.

Extreme Event – Steady State:

3b. ~~Loss of two Transmission lines in different rights-of-way prior to System adjustments for conditions such as:~~

The SDT appreciates the input related to the footnote on "System Stable" (new footnote 1) but the SDT chose to keep it as a footnote reference for convenience

Organization	Question 7:	Question 7 Comments:
to the TPL standard and not include it as definition for the NERC Glossary of Terms as suggested by the commenter. Related to the P5 "Protection System Failure" Planning Event the SDT has not deviated from its stance of requiring more stringent performance requirements for the above 300 kV System. The SDT has revised the P5 Planning Event description to remove the reference to "single component failure" and the event description was changed to match what is stated in the currently approved TPL standards under Category C6 through C9. The intent of P5 is to evaluate a failure of a single Protection System design that introduces a delayed clearing mode that may also include additional electrical facilities being removed when compared to the normal fault clearing. A Protection System failure resulting in loss of the substation (one voltage level plus transformers) would not qualify as a P5 Planning Event since that event is considered an Extreme Event. A Standard Authorization Request (SAR) has been issued for industry comment (1/20/2009 through 2/18/2009) based on work completed by the System Protection and Controls Task Force (SPCTF). The proposed project will address the need for Protection System redundancy, based on an n-1 failure of individual components of the Protection System.		
Progress Energy Florida, Inc.	No	The Steady State and Stability Tables (Tables 1 and 2), are overly long, confusing, and contain circular references. PEF strongly advises returning to the content and format of Table 1 in the existing TPL Standards, or at the very least, consolidation of the Tables into a single Table. Furthermore, for certain events in Tables 1 and 2, the SDT's intent concerning the scope of the events and how the events would be simulated in Transmission Planning analyses is not clear. PEF furthermore does not agree with "Interruption of Firm Transmission Service Allowed" and "Non-Consequential Load Loss Allowed" as benchmarks for whether or not a particular BES is reliable (see additional comments in Question 15 on this issue). Tables 1 and 2 at present are 13 pages in total, whereas the existing Table 1, which PEF feels is comprehensive and not in need of revision, is merely 1.5 pages long. PEF understands that the reason behind the length and complexity of Tables 1 and 2 stems from a desire by some to contain all of the primary TPL compliance issues in a tabular format. The end result, however, is not effective and must be made more concise.
Response: The SDT has reformatted the performance tables (Table 1 Steady-State and Table 2 Stability) into a single table format based on commonalities between the two prior individual tables. The new Table 1 is titled "Steady State and Stability Performance". The new single performance table is greatly condensed from the Draft 2 version and the entire body of material is now contained on three pages compared to the thirteen pages that the prior Table 1 and Table 2 encompassed. The new format more closely mimics the existing TPL table in its readability. The set of Contingencies considered are not greatly different than those in the currently approved TPL suite of standards. The SDT has attempted to add simplicity as to those Contingencies that are deemed to be Planning Events, thus requiring corrective action plans, and the Extreme Events which do not require corrective action plans. The change in performance expectations for the above 300 kV System are supported by many in the industry. Please see our response to Q15 for further information.		
Ameren	Yes	The tables could be improved by including the column headings on each page.

Organization	Question 7:	Question 7 Comments:
		Separating the steady-state and stability performance requirements for each planning event helps to provide clarification.
Response: The SDT has reformatted the performance tables (Table 1 Steady-State and Table 2 Stability) into a single table format based on commonalities between the two prior individual tables. The new Table 1 is titled "Steady State and Stability Performance". The move to a single table was based on a significant number of comments and based on the SDT's view that the Planning Events were the same for both Steady-State and Stability. For Extreme Events, the separation of Steady-State and Stability that many in industry seem to prefer for the two table format has been retained in the new table. The new single performance table is greatly condensed from the Draft 2 version and the entire body of material is now contained on three pages compared to the thirteen pages that the prior Table 1 and Table 2 encompassed. Headers are repeated on subsequent pages.		
City of Tallahassee, FL	Yes and No	while this was an improvement, the tables are still confusing and make determination of the compliance requirements difficult. Especially where there are multiple events within a single event category (like P3 or P6) there's confusion about what would be allowed between the two element outages.
Response: The SDT has reformatted the performance tables (Table 1 Steady-State and Table 2 Stability) into a single table format based on commonalities between the two prior individual tables. The new Table 1 is titled "Steady State and Stability Performance". The move to a single table was based on a significant number of comments to do so and based on the SDT's view that the Planning Events were the same for both Steady-State and Stability. For Extreme Events, the separation of Steady-State and Stability that many in industry seem to prefer for the two table format has been retained in the new table. The new single performance table is greatly condensed from the Draft 2 version and the entire body of material is now contained on three pages compared to the thirteen pages that the prior Table 1 and Table 2 encompassed. The SDT believes the changes improve the readability of the tables. There are concerns expressed by numerous respondents that after the first single Contingency and System adjustment, curtailment of Firm Transmission Services (or firm transfers) and shedding of firm Load would not be allowed in preparation for the second Contingency. The SDT added Footnote # 10 to the end of Table 1 to reflect that Curtailment or Interruption of Firm Transmission Service in preparation for the next Contingency will be allowed as long as firm Load, not outaged by the initial event, continues to be served. **Footnote #10** – Curtailment of firm transmission service , when coupled with the appropriate re-dispatch of resources obligated to re-dispatch, is allowed both as a System adjustment (as identified in the column titled 'Initial System Conditions') and a corrective action, where it can be demonstrated that Facilities remain within applicable Facility Ratings and those adjustments do not result in the shedding of any firm Load. Where limited options for re-dispatch exist, sensitivities associated with the availability of those resources must be considered. Where Facilities external to the Transmission Planner's planning region are relied upon, Facility Ratings in those regions must be considered.		
Florida Power and	No	The Table format is extremely confusing and too long.

Organization	Question 7:	Question 7 Comments:
Light		The allowed and disallowed actions as well as the applicable time frames for them is not clearly stated. The tables 1 &2 should be combined and condensed so that they can be read more easily. In their current format, these tables sprawl across 13 pages. The use of footnotes or expanded information in the Table headings is needed to understand the performance requirements.
Response: The SDT has reformatted the performance tables (Table 1 Steady-State and Table 2 Stability) into a single table format based on commonalities between the two prior individual tables. The new Table 1 is titled "Steady State and Stability Performance". The move to a single table was based on a significant number of comments to do so and based on the SDT's view that the Planning Events were the same for both Steady-State and Stability. For Extreme Events, the separation of Steady-State and Stability that many in industry seem to prefer for the two table format has been retained in the new table. The new single performance table is greatly condensed from the Draft 2 version and the entire body of material is now contained on three pages compared to the thirteen pages that the prior Table 1 and Table 2 encompassed. The SDT believes the changes improve the readability of the tables. The changes to the new table have removed the need for repeat headers. Regarding the commenter's statement "The allowed and disallowed actions as well as the applicable time frames for them is not clearly stated." It is assumed that this is in reference to the P6 N-1-1 Planning Event. There are concerns expressed by numerous respondents that after the first single Contingency and System adjustment, curtailment of Firm Transmission Services (or firm transfers) and shedding of firm Load would not be allowed in preparation for the second Contingency. The SDT added Footnote # 10 to the end of Table 1 to reflect that Curtailment or Interruption of Firm Transmission Service in preparation for the next Contingency will be allowed as long as firm Load, not outaged by the initial event, continues to be served. **Footnote #10** – Curtailment of firm transmission service, when coupled with the appropriate re-dispatch of resources obligated to re-dispatch, is allowed both as a System adjustment (as identified in the column titled 'Initial System Conditions') and a corrective action, where it can be demonstrated that Facilities remain within applicable Facility Ratings and those adjustments do not result in the shedding of any firm Load. Where limited options for re-dispatch exist, sensitivities associated with the availability of those resources must be considered. Where Facilities external to the Transmission Planner's planning region are relied upon, Facility Ratings in those regions must be considered.		
Exelon Transmission Planning	No	Tables 1 and 2 should be changed such that the header should read 'BES Elements Overloaded' rather than 'BES Elements out of Service' regarding the voltage distinction. The header notes should either not be numbered or numbered with a different scheme to differentiate them from the numbered footnotes to avoid confusion. It is not obvious that all of the footnotes are used in the Tables. The headings should be repeated on each page. Could these tables be made smaller by eliminating some of the unused space such as the large boxes containing a single

Organization	Question 7:	Question 7 Comments:
		'x'?
Response: The SDT has reformatted the performance tables (Table 1 Steady-State and Table 2 Stability) into a single table format based on commonalities between the two prior individual tables. The new Table 1 is titled "Steady State and Stability Performance". The move to a single table was based on a significant number of comments to do so and based on the SDT's view that the Planning Events were the same for both Steady-State and Stability. For Extreme Events, the separation of Steady-State and Stability that many in industry seem to prefer for the two table format has been retained in the new table. The new single performance table is greatly condensed from the Draft 2 version and the entire body of material is now contained on three pages compared to the thirteen pages that the prior Table 1 and Table 2 encompassed. The SDT believes the changes improve the readability of the tables. The confusion with regards to the prior "BES Elements Overloaded" has been eliminated in the new table as the prior columns have been deleted. The commenters' suggestion to repeat table headings was a common response from industry, but is no longer a need based on the new table design. The SDT has now utilized alpha character references for the top notes of the table to avoid confusion with the footnotes which are referenced throughout the table. All footnotes are accounted for with the table and are now referenced sequentially for improved readability.		
CenterPoint Energy and CPS Energy	No	We originally believed that eliminating the old Category A, B, C, and D nomenclature would be beneficial. However, looking at the contingency types now being proposed, we are concerned that more confusion has been created. For example, matching applicable facility ratings to Category A, B, and C conditions is reasonably manageable. Matching applicable facility ratings to 7 contingency "buckets" is more confusing, less manageable, and unnecessary. NYISO proposed the concept of analyzing credible multiple contingencies in the operating realm. Most industry opined that NYISO's proposal lacked merit for operating requirements, and we agreed. However, we believe the proposal may have merit for planning requirements. The concept of applying reasonable credibility criteria to multiple contingencies to be studied offers a way to limit multiple contingency analysis to credible scenarios. Less credible (or incredible) scenarios would then fall into the Extreme category. As proposed, the multiple (seven-fold) approach of categorizing contingencies, combined with various sensitivities or alternative scenarios, for multiple years, is unrealistic and unnecessary. We believe creating a separate table for stability performance might be beneficial, but we believe 7 buckets of contingencies is hopelessly unrealistic for stability analyses.
Response: The set of Contingencies considered are not greatly different than those in the currently approved TPL suite of standards. The SDT tried to better clarify those Contingencies that are deemed to be Planning Events, thus requiring corrective action plans, and the Extreme Events which do not require corrective action plans. Most in industry are receptive to the new Contingency categorization so the TPL SDT has not altered its organization of the performance requirements. The SDT believes the Planning Events describe the credible Contingencies that warrant more rigorous study and the Extreme Events represent the less credible events that need to be reviewed on a more selective basis by the individual transmission planner. In regards to matching an applicable Facility Rating to the 7 Planning Event categories, the SDT believes the 7 categories do not add any additional level of		

Organization	Question 7:	Question 7 Comments:
complexity. The need to cover sensitivity analysis is based on a FERC directive from Order 693 and the SDT believes it is a reasonable request which will drive the industry to better understand their individual Transmission Systems. At this time all Planning Events are still within the scope of possible System conditions that could require a Stability review. The SDT believes the proposed TPL explicitly clarifies that only the "more severe" events require Stability analysis as stated in Requirement R4.4. At this time all Planning Events are still within the scope of possible system conditions that could require a Stability review. The SDT believes the proposed TPL explicitly clarifies that only the "more severe" events require Stability analysis which was implicitly understood within industry for the Version 0 standards as the commenter describes. Many of the conditions described by the commenter could be used as the basis for how a Transmission Planner would select the subset of Planning Events requiring a Stability review.		
MidAmerican Energy Company	No	MEC suggests that the Categories symbols in Table 1 and Table 2 be different to help distinguish between them (e.g. P1:S1, P2:S2, P3.2:S3.2, etc.) MEC suggests that the header text (i.e. Category, Initial System Condition, etc.) be repeated on every applicable page to be more reader-friendly. The superscripts do not refer clearly to the respective notes. (There are numbered notes in the beginning of the table, numbered items in the extreme events evaluation requirements section, numbered items in extreme event description section, and numbered notes at the end of the table). Perhaps the referenced notes should have unique numerology or format to make the superscript references clearer.
MRO NERC Standards Review Subcommittee	No	The MRO suggests that the Categories symbols in Table 1 and Table 2 be different to help distinguish between them (e.g. P1:S1, P2:S2, P3.2:S3.2, etc.) The MRO suggests that the header text (i.e. Category, Initial System Condition, etc.) be repeated on every applicable page to be more reader-friendly. The superscripts do not refer clearly to the respective notes. (There are numbered notes in the beginning of the table, numbered items in the extreme events evaluation requirements section, numbered items in extreme event description section, and numbered notes at the end of the table). Perhaps the referenced notes should have unique numerology or format to make the superscript references clearer.
American Transmission Company	No	We think that the tables are so similar that they should be recombined into one. This would require reasonable adaptation of the tables. If the tables are kept separate, then we suggest that the Categories symbols in Table 1 and Table 2 be different to help distinguish between them (e.g. P1:S1, P2:S2, P3.2:S3.2, etc. We suggest that the header text (i.e. Category, Initial System Condition, etc.) be repeated on every applicable page to be

Organization	Question 7:	Question 7 Comments:
		more reader-friendly. The superscripts do not refer clearly to the respective notes. (There are numbered notes in the beginning of the table, numbered items in the extreme events evaluation requirements section, numbered items in extreme event description section, and numbered notes at the end of the table). Perhaps the referenced notes should have unique numerology or format to make the superscript references clearer.
Response: The SDT has reformatted the performance tables (Table 1 Steady-State and Table 2 Stability) into a single table format based on commonalities between the two prior individual tables. The new Table 1 is titled "Steady State and Stability Performance". This changed has negated the need for the Planning Event category naming convention changes suggested by the commenter and the team retained the P1 through P7 references for Planning Events. The new single performance table is greatly condensed from the Draft 2 version and the entire body of material is now contained on three pages compared to the thirteen pages that the prior Table 1 and Table 2 encompassed. Headers are repeated on subsequent pages. The SDT agrees with the commenter regarding the top notes within the table. We have changed the references to alpha characters to avoid confusion with the footnotes that are referenced with the tables using superscript characters.		
SERC Dynamics Review Subcommittee	Yes	The tables could be improved if the headings were put on each separate page. Separating out the tables for steady state and stability improves and clarifies the requirements of the standard.
Response: The SDT has reformatted the performance tables (Table 1 Steady-State and Table 2 Stability) into a single table format based on commonalities between the two prior individual tables. The new Table 1 is titled "Steady State and Stability Performance". This changed has negated the need for the Planning Event category naming convention changes suggested by the commenter and the team retained the P1 through P7 references for Planning Events. The new single performance table is greatly condensed from the Draft 2 version and the entire body of material is now contained on three pages compared to the thirteen pages that the prior Table 1 and Table 2 encompassed. Headers are repeated on subsequent pages. The move to a single table was based on a significant number of comments and based on the SDT's view that the Planning Events were the same for both Steady-State and Stability. For Extreme Events, the separation of Steady-State and Stability that many in industry seem to prefer for the two table format has been retained in the new table.		
Austin Energy	No	Matching facility rating to seven contingency categories is confusing. Furthermore, these seven categories combined with alternative scenarios and sensitivity studies for several years into the future is overly burdensome, unnecessary, and unrealistic.
Response: In regards to matching an applicable Facility Rating to the 7 Planning Event categories, the SDT believes the 7 categories do not add any additional level of complexity. The set of Contingencies considered are not greatly different than those in the currently approved TPL suite of standards. The SDT tried to		

Organization	Question 7:	Question 7 Comments:
better clarify those Contingencies that are deemed to be Planning Events, thus requiring corrective action plans, and the Extreme Events which do not require corrective action plans. Most in industry are receptive to the new Contingency categorization so the TPL SDT has altered its organization of the performance requirements. The need to cover sensitivity analysis is based on a FERC directive from Order 693 and the SDT believes it is a reasonable request which will drive the industry to better understand their individual transmission systems.		
Arkansas Electric Coop. Corp.	No	I disagree with statement #4 for the reasons given in my comments on question 3. Also, if you are going to allow it then consequential generation loss needs to be defined. I also disagree with statement #5. This is a planning standard and as such systems should be planned for planning steady state. Statement #5 should only be allowed if the resulting operator actions are taken into account. A fault on a networked transmission line may open the breakers at each end. Statement #5 stops here when in reality operator actions would isolate the faulted sections and service restored with the transmission line now being operated as two radials. The resulting two radials are what need to meet the performance requirements. Events should be taken to their logical conclusions and the resulting system topology be what meets the performance requirements. The tables need some borders and section dividers. Headers should be on each page. No firm transmission or Non-Consequential Load Loss should be allowed for P2. I think the SDT has it backwards. Non-Consequential Load Loss should never occur and the tables should reflect what is allowed to happen with Consequential Load Loss for each event. Many of the scenarios reflect what should happen with Consequential Load Loss and not Non-Conseqeuntial Load Loss. For example: P2 Bus Section for less than 300 kV -- The load on that bus under this contingency would be Consequential NOT Non-Consequential. For the loss of that bus the load connected to that bus should be ALL the load that is lost, therefore no Non-Consequential Load Loss should occur.
Response: Please see the SDT's response to your question 3 comment regarding your disagreement with statement #4. The SDT concluded from the overall industry comments that a definition for consequential generation loss was not needed and therefore was not added to the standard at this time. The commenter disagrees with statement #5 of the Draft 2 standard which states "Simulate the removal of all elements that Protection Systems and controls are expected to disconnect for each event." However, FERC Order 693 paragraph 1707 references that within the NOPR that preceded the Final Rule "…the Commission believes that the simulations used in planning assessments should faithfully duplicate what will happen in the actual power system and not a generic listing of outages" In paragraph 1716, the Final Rule further clarified that this is the intent of the Commission. Therefore, the wording in the proposed standard. The commenter's disagreement seems to be based on a feeling of needing to plan for no Load drop for single Contingency events; however, in paragraph 1773 it is clear the FERC does allow the loss of Consequential Load. Therefore, Consequential Load Loss that occurs with the initial event is permitted. Serving radial Load tapped from a networked line, from a "singled ended" view or from a single source end (one end of the line open) is covered by Planning Event P2.1 and new footnote 8 should help alleviate the commenter's concerns. Under P2.1 it should be expected that no Load loss would occur. **Footnote 8**: Inadvertent tripping of breakers on one end of a normally networked Transmission circuit such that the line is now open at that end and possibly		

Organization	Question 7:	Question 7 Comments:
		serving Load radial from a single source point. The need for headers on each page has been alleviated based on the SDT reformatting of the table to a single table format and greatly condensing the tabular information. The SDT disagrees with the commenter that the SDT "has it backwards" related to the references of Consequential Load Loss and Non-Consequential Load Loss for each event. The performance table accurately depicts when Non-Consequential Load Loss is permitted for various events. Consequential Load Loss is allowed for all events. The table does not try to categorize a type of Load (Consequential or Non-Consequential) that the event is causing to lose electrical service. The initial Protection System actions to the event always trip Consequential Load. The performance table merely clarifies if the Transmission Planner can drop any additional Firm Load (Non-Consequential Load Loss) to alleviate the event and meet performance requirements. In the P2.2 (bus section) event that the commenter references, the difference between the EHV and HV performance requirements is that the Transmission Planner is allowed to drop additional Non-Consequential Load for the HV event.
Midwest ISO	No	Please add a General Requirements heading before items 1-6 (Steady State) and 1-5 (Stability) which appear to be applicable to all events for each table. The two columns under "BES elements out of Service" could be stricken for simplicity and clarity. If there is a voltage distinction needed, then add it next to the "Yes" or "No" under the "Interuption of Firm Service" or "Loss of Load" columns. Items P0 through P7 are identical in Table 1 - Steady State Performance and Table 2 Stability Performance. The only distinctions are the notes or whether it is an outaged event in Table 1 or a 3 phase/SLG fault in Table 2. Having two tables is redundant and unnecessary, and does not add clarity. It is also recommended that you combine the notes and extreme events from Table 1 - Steady State Performance and Table 2 - Stability Performance into one table. If both tables are to be retained then it is recommended that the SDT take into consideration the following suggestions. With the old Version 0 table, where there was not a separate stability table, it was understood that each of the event types needed to be assessed, but only those that the responsible entity knew were the more severe from a stability perspective needed to have stability analysis performed. By listing events such as single circuit faults (P1) under Table 2, this implies that all events should be simulated with dynamics, though requirement 5.4.1 states events "that would produce more severe System impacts shall be identified,...". The burden to explain why certain events were not selected can be construed now as having to run dynamics on all line faults, or explain why each line was not selected. Most lines embedded within the grid and not near generators or of particular significance to grid dynamic stability need not be studied. We do not believe that the SDT is requiring any additional burden of proof as to why every line in the system is not studied with dynamics, but the standard makes that question more murky than it was before. An overzealous compliance monitor could be confused by the new layout at great expense to the industry. If Table 2 remains, change

Organization	Question 7:	Question 7 Comments:
		Table 2 - Stability Performance to only those events that are important to Stability Analysis. For example the following faults to run would be: 1) Faults near large generators (generator buses, generator lines or transformers near generators)2) Faults with delayed clearing near large generators3) Faults on long or heavily loaded lines with large phase angle differences between terminals. A majority of faults on lines less than 200kV are rarely severe so it is recommended to have the standards reflect this in Table 2 - Stability Performance.
Response: The SDT was persuaded by the commenter and other industry respondents that the two performance tables presented in Draft 2 were redundant in many areas. The SDT has reformatted the performance tables (Table 1 Steady-State and Table 2 Stability) into a single table format based on commonalities between the two prior individual tables. The new Table 1 is titled "Steady State and Stability Performance" The new single performance table is greatly condensed from the Draft 2 version and the entire body of material is now contained on three pages compared to the thirteen pages that the prior Table 1 and Table 2 encompassed. At this time all Planning Events are still within the scope of possible system conditions that could require a Stability review. The SDT believes the proposed TPL explicitly clarifies that only the "more severe" events require Stability analysis which was implicitly understood within industry for the Version 0 standards as the commenter describes. Many of the conditions described by the commenter could be used as the basis for how a Transmission Planner would select the subset of Planning Events requiring a Stability review.		
Tri-State Generation and Transmission Association, Inc.	Yes and No	It does not seem that there should be different performance limits for DC and AC lines. It is unclear why there is a separation of voltage classes. Perhaps it would be helpful for each TP to specify which voltage levels are considered Bulk on their particular system, then split studies according to that definition. We applaud the SDT's efforts to split contingencies into groups with more-or-less the same system impact. We encourage the SDT that it would be very beneficial to regroup them in order of probability of occurrence, or even better, to group them by order-of-magnitude of occurrence probability. The P categories as now defined seem to overlap in likelihood. For example, in P3 following loss of a generator followed by system adjustments, another generator forced outage is more likely than a transformer forced outage. Loss of a bus section (P2 single contingency) is less likely than the P3 event of a double generator contingency. There is more on the concept of grouping Performance Tables in order of event likelihood in the NERC White Paper, "Reliability Concepts". At the least, notes in the tables - regarding 1) system impact and 2) likelihood of events listed - would be most welcome.
Response: The SDT agrees with the commenter's opinion on the need to allow for all types of conditional Firm Transmission Service interruptions and that the prior Draft 2 version unintentionally provided preferential treatment to HVDC. In the new performance Table 1, a new footnote has been added (see footnote 5) to the column title "Interruption of Firm Transmission Service Allowed" that corrects the problem identified by the commenter. **5**. When the conditions and/or event(s) being studied form the basis for conditional Firm Transmission Service, curtailment of that conditional Firm Transmission Service is allowed.		

Organization	Question 7:	Question 7 Comments:
The SDT believes it provided sufficient justification in its Draft 1 response as to why a greater expectation is placed on the above 300 kV (EHV) System. The feedback received from the industry was divided related to the SDT's emphasis placed on a higher expectation for the 300 kV and higher Systems. Some commenters questioned the importance and the high costs that may be needed to mitigate existing System designs. Others agreed with the SDT's approach and indicated that the impact to their Systems would be minimal. Some commenters even questioned why the more stringent approach was not applied to the entire 100 kV and higher Systems. The SDT believes the Draft 2 changes are responsive to industry feedback and reflect an appropriate middle ground related to the importance of the EHV Transmission System. The performance requirements only apply to the Bulk Electric System and the split in voltage provides a subset of the BES. The Planning Events, in general, are ordered based on level of probability. However, the SDT chose to order the table by three main areas: 1) no Contingency (P0), 2) single Contingency (P1, P2) and 3) multiple Contingency (P3 through P7). While the SDT agrees with the commenter that there is some overlap in probability order, for example between P2 and P3, the SDT believes it has more importantly made the proper performance level requirements based on a reliability "risk" level where risk accounts for impact times (x) probability of occurrence.		
AEP	Yes	The formatting is okay. We would like to see the two tables merged. Except in the extreme disturbances sections, Table 1 and Table 2 are nearly identical (the only difference is that fault types are added to Table 2). The tables could easily be merged into one, including the extreme disturbances sections to some extent.
Response: The SDT was persuaded by the commenter and others industry respondents that the two performance tables presented in Draft 2 were redundant in many areas. The SDT has reformatted the performance tables (Table 1 Steady-State and Table 2 Stability) into a single table format based on commonalities between the two prior individual tables. The new Table 1 is titled "Steady State and Stability Performance" The new single performance table is greatly condensed from the Draft 2 version and the entire body of material is now contained on three pages compared to the thirteen pages that the prior Table 1 and Table 2 encompassed.		
NB Power Transmission	No	In the past, power systems within the NPCC Region have been designed to meet NPCC design criteria, which is basically that any design contingency does not cause instability of the NPCC defined bulk power system, and does not result in any emergency limit violations (thermal, voltage or stability), unless those violations are contained within a small local area of the system and can be mitigated. Design to NPCC criteria may include, and does include in many cases, interruption or curtailment of firm transmission service, underfrequency load shedding, undervoltage load shedding or SPS tripping of generation and/or load. The proposed table introduces new design criteria for which present power systems within NPCC are not presently designed to - being the restrictions on interruption of firm transmission service and consequential load for certain contingencies as outlined in the table, which up to this point was acceptable by NPCC design criteria, and the present NERC TPL Standard. The table should not impose new design criteria on the existing power system and should be relaxed such that present NPCC design criteria is acceptable into the future, as historically it has been proven to provide acceptable levels of reliability in the NPCC area. There would be enormous impacts on existing transmission service agreements and compliance issues if the design criteria outlined in the table is imposed. Meeting the design criteria outline in the table would require building new transmission facilities with, in some cases, very little benefit to the

Organization	Question 7:	Question 7 Comments:
		loads in terms of reliability. For example, there is an area of the system consisting predominately load. This area is supplied by two 345 kV transmission lines and three 138 kV lines. Studies show that under certain low probability, but predictable, conditions that the loss of one of the 345 kV supplies will result in unacceptable low voltage or thermal limit violations on equipment within the area. Therefore, an SPS has been utilized which trips load within the area on the loss of the 345 kV line in order to prevent unacceptable low voltage or thermal limit violations under these low probability conditions. In this case these loads are considered non-consequential and tripping them for a loss of a 345 kV line is unacceptable as per P1 in the table. Now assume that this arrangement has been in service operationally for the past 10 years and has only operated twice resulting in a 2 hour outage to these loads each time. Now also assume that these same loads have been interrupted 15 times (for a total of 30 hours) in the past 10 years because outages of a radial line within the area that these loads connected to. In this case, the loads are considered consequential and these interruptions are acceptable. Compliance with the design criteria in the table in this case would require building additional transmission into this area to prevent the load loss by SPS on the loss of the 345 kV line. Assume the cost of this new transmission is 80 million dollars and its net benefit would be to prevent (historically) 2 interruptions out of 17 total interruptions to only the loads in question within the area. The design criteria in the table in this case do not provide adequate benefit for cost for these loads in this area. Adequate transmission planning must take into account engineering judgment concerning cost/benefit ratio to loads as well as type of loads served, expectations of loads in terms of interruptions and where money can be best spent to reduce interruptions to loads. The criteria outlined in the table does not achieve this in all cases. The table should not dictate what contingencies can result in consequential load loss or interruption of firm transmission service. These decisions should be left to local planning engineers who have in-depth knowledge of local transmission issues (as well the interconnected power system)and reliability needs of loads involved. The table should only state that the listed contingencies will not result in system instability or violations of emergency thermal and voltage limits following all automatic actions. Table 1 in the existing version of the TPL Standards with its footnotes b) and C) presently allows for this and does not have criteria as stringent as the new table. The new table should not introduce new, more stringent design criteria.

Response: The NB Power Transmission company has two primary concerns within their response: 1) an inability to interrupt Firm Transmission Service and 2) the inability to shed local Load for what they deem a low probability single Contingency event involving a 345 kV line.

Regarding the Firm Transmission Service concern, the SDT has added footnotes 5 and 10 that should help alleviate the NB Power Transmission company's concerns. Footnote 5 indicates that interruption of conditional firm transfers is permitted for all Planning Events and footnote 10 indicates that interruption of Firm Transmission Service coupled with appropriate generation re-dispatch can be utilized for multiple Contingency events as a System adjustment, where indicated in Table 1 as being part of the Initial System Condition, and as a post-Contingency corrective action so long as no interruption of Non-Consequential Load occurs and all Facility Ratings are maintained.

Footnote 5 – When the conditions and/or event(s) being studied form the basis for conditional Firm Transmission Service, curtailment of that conditional Firm Transmission Service is allowed.

Footnote 10 – Curtailment of firm transmission service, when coupled with the appropriate re-dispatch of resources obligated to re-dispatch, is allowed both as a

Organization	Question 7:	Question 7 Comments:
System adjustment (as identified in the column titled 'Initial System Conditions') and a corrective action, where it can be demonstrated that Facilities remain within applicable Facility Ratings and those adjustments do not result in the shedding of any firm Load. Where limited options for re-dispatch exist, sensitivities associated with the availability of those resources must be considered. Where Facilities external to the Transmission Planner's planning region are relied upon, Facility Ratings in those regions must be considered. NB Power expressed concern with the inability to shed Non-Consequential Load in response to a single Contingency event. It was indicated that they rely on an SPS to drop local area network Load in response to some single Contingency events and that these system designs are permissible under the presently approved TPL-002-0 standard. FERC in Order 693 was clear in paragraph 1794 that that interruption of Non-Consequential Load is not permitted for single Contingency events. This position was vetted in draft 1 of the TPL-001-1 and most stakeholders (and the SDT) aligned with FERC's position. The use of an SPS design would be permitted for a single Contingency event if the SPS design interrupts service to customers involved in an interruptible Load contract arrangement. As an alternative, an entity could seek an entity variance for the situation described. The process for obtaining an entity variance is described in detail in the "NERC Standards Development Procedure" document under the subsection titled "Variances to NERC Reliability Standards" The commenter seems to be confused by the term Consequential Load Loss based on the statement "…The proposed table introduces new design criteria for which present power systems within NPCC are not presently designed to - being the restrictions on interruption of firm transmission service and consequential load for certain contingencies as outlined in the table…" The proposed standard places no restrictions on Consequential Load Loss for any of the Planning Events or Extreme Events. The as designed Protection System actions to the event always trip Consequential Load. The performance table merely clarifies if the Transmission Planner can drop any additional Firm Load (Non-Consequential Load Loss) to alleviate the event and meet performance requirements.		
Lakeland Electric	No	Separating steady-state from dynamic (stability) in the tables makes sense. Several suggestions: On page 11 move the planning events note 1 below the Planning Events title or begin note 1 with "For planning events ?" to remove confusion between planning events and extreme event requirements. Include an analysis section in the steady-state and stability requirements sections of TPL-1 that explicitly lays out the performance requirements (including the notes) - this would make the performance requirements very clear on a line item basis and the tables would become a quick reference. Special attention should be given to defined period of time between multiple events and the actions available to the operator. In table 2 (page 17) note 3 should be changed to: "Uncontrolled cascading and islanding ?" in order to be consistent with R5.4.4. " . . . If the evaluation of implementing a change . . . shall be conducted."
Response: The SDT has reformatted the performance tables (Table 1 Steady-State and Table 2 Stability) into a single table format based on commonalities between the two prior individual tables. The new Table 1 is titled "Steady State and Stability Performance". The move to a single table was based on a significant number of comments and based on the SDT's view that the Planning Events were the same for both Steady-State and Stability. For Extreme Events, the separation of Steady-State and Stability that many in industry seem to prefer for the two table format has been retained in the new table. The new single performance table is greatly condensed from the Draft 2 version and the entire body of material is now contained on three pages compared to the thirteen pages		

Organization	Question 7:	Question 7 Comments:
that the prior Table 1 and Table 2 encompassed. In the new table format, the top notes were placed under the heading of "Planning Events" as the commenter and other industry participants of suggested. It is not exactly clear what the commenter has in mind related to the "analysis section" described in the response. However, the SDT believes the new table format provides a better "at glance" view of what is needed. However, this does not negate the need to fully understand all requirements within the standard. The time period for allowable System adjustments made to avert performance requirement violations must be completed within the time duration rating and respect the ratings limit. The reference to Requirement R5.4.4 has been deleted.		
Southern Company Transmission	Yes and No	We suggest that the word "requirements" be added to the title of the tables as in Steady State Performance Requirements. We also suggest for header note 2 of Table 2 that the words be changed from "Dynamic voltages shall" to "Voltages during dynamic simulation shall"
Response: The SDT did not include the proposed use of "requirements" in the title of the performance table since they are not within the requirements section of the standard. The SDT agrees with the proposed change in note two of Table 2. The two tables have been consolidated into one table and the header note reference for this item is now note "h". **Header note 'h'**: Planning Event P0 is applicable to steady state only.		
Brazos Electric Power Cooperative, Inc.	No	Compared to the new table format, the old Categories were better. Perhaps if there is confusion with the old table or format, this should be cleaned up. We suggest the old tables remain, or combine some of the new sections to reduce the number of categories.
Response: The set of Contingencies considered are not greatly different than those in the currently approved TPL suite of standards. The SDT tried to better clarify those Contingencies that are deemed to be Planning Events, thus requiring corrective action plans, and the Extreme Events which do not require corrective action plans. Most in industry are receptive to the new Contingency.		
IESO	Yes and No	Condition (5) at the top of Table 1, and Condition (4) at the top of Table 2 are not required since they are already covered by R3.2 and R5.2, respectively. Further, Condition (6) in Table (1) and Condition (5) in Table 2 should be stipulated in R3 and R5 since these are not performance requirements, but rather the analysis (simulation) requirements.

Organization	Question 7:	Question 7 Comments:
Response: The commenter is correct that Condition 5 of the Table 1 and condition 4 of Table 2 which state "Simulate the removal of all elements that Protection Systems and controls are expected to disconnect for each event" is also within the standard's requirement language. However, the SDT has retained this information within the new performance table as it is key information repeated for clarity and convenience. In regards to the comments on condition 6 and condition 5 which refer to "normal clearing", the SDT believes that Requirements R3 and R4 which refer to the need to meet performance requirements stated within Table 1 cover the concern raised. The table note that references "simulate Normal Clearing unless otherwise specified" is now introductory note "d".		
North Carolina Electric Membership Corp	Yes and No	We would like the headings to be repeated at the head of each page. Also, enumerate Stability Tables different from the Steady State to distinguish between them.
Response: The SDT has reformatted the performance tables (Table 1 Steady-State and Table 2 Stability) into a single table format based on commonalities between the two prior individual tables. The new Table 1 is titled "Steady State and Stability Performance". This changed has negated the need for the Planning Event category naming convention changes suggested by the commenter and the team retained the P1 through P7 references for Planning Events. The new single performance table is greatly condensed from the Draft 2 version and the entire body of material is now contained on three pages compared to the thirteen pages that the prior Table 1 and Table 2 encompassed. Therefore, the need for repeating headers on subsequent pages has been eliminated as all Planning Events are presented on a single page.		
ERCOT System Planning	No	The table is hard to read and follow since it spans multiple pages and the table headers are not repeated on each page. ERCOT believes that there are two many categories. For example, in Table 1 both Category P1 and Category P3 are not necessary. Since they require the same system performance and P3 is more severe than P1, it can be assumed that successful simulation of P3 would result in successful simulation of P1. Category P2-1 can not be simulated without modification to typical transmission models. Normal steady state power flow software typically has as a line either in or out of service, but not half in and half out. "Breaker Fault" and "Stuck Breaker" definitions are included in the table notes, but would probably be better placed with the other defined terms. It is somewhat unclear as to why there are multiple names as the steady state system impact and requirements are the same. Also, the stability impacts would be more severe for a stuck breaker assuming delayed clearing. This would allow for removal of P2-3 and P2-4 in both Tables 1 & 2. It appears that P4 and P5 are duplicating efforts as well. It is not specified which entity is responsible to define and provide contingency definitions in industry standard software format such as those requiring knowledge of protection system failures and lines on the same structure for more than 1 mile. Only entities such as TOs and GOs have access to that knowledge.

Organization	Question 7:	Question 7 Comments:

Response: The SDT has reformatted the performance tables (Table 1 Steady-State and Table 2 Stability) into a single table format based on commonalities between the two prior individual tables. The new Table 1 is titled "Steady State and Stability Performance". The new single performance table is greatly condensed from the Draft 2 version and the entire body of material is now contained on three pages compared to the thirteen pages that the prior Table 1 and Table 2 encompassed. Headers are repeated on subsequent pages.

The set of Contingencies considered are not greatly different than those in the currently approved TPL suite of standards. The SDT tried to better clarify those Contingencies that are deemed to be Planning Events, thus requiring corrective action plans, and the Extreme Events which do not require corrective action plans. Most in industry are receptive to the new Contingency categorization so the TPL SDT has not altered its organization of the performance requirements. The P3 and P1 Contingency events are unique and can provide differing results since they result in unique generation dispatch. The SDT believes it is import to study both conditions.

In regards to the P2.1 event, the intent is to capture a potential condition of serving Load that is tapped from a normally networked line from a single source location in the Contingency (single ended) condition. If a line exists (breaker to breaker) that does not directly serve Load, the P2.1 condition would not apply and only the normal N-1 condition of the line would be studied. See the newly added footnote 8 that better describes the intent of the P2.1 Planning Event. The SDT believe existing transmission models will not require adjustment for the P2.1 event, however, Contingency lists run against the model may require some adjustments.

8. Inadvertent tripping of breakers on one end of a normally networked Transmission circuit such that the line is now open at that end and possibly serving Load radial from a single source point.

The stuck breaker reference remains as a footnote to the table – see footnote #11.

11. A stuck breaker means that for a gang-operated breaker, all three phases of the breaker have remained closed. For an independent pole operated (IPO) breaker, only one pole is assumed to remain closed. ~~The~~A stuck breaker ~~event~~ introduces a delayed clearing mode. ~~Normal Clearing is when the Protection System operates as designed and the Fault is cleared in the time normally expected with proper functioning of the installed protection systems. Breaker fail relay operation is a predetermined time that occurs after the Protection System operates and the breaker has failed. Breaker fail relaying will also isolate a predetermined portion of the electric system to isolate the failed breaker. Delayed clearing of a Fault is due to failure of any Protection System component that prevents the Protection System from operating normally.~~

The commenter is correct that some conditions such as "stuck breaker" or "internal breaker fault" would yield similar outcomes from a steady-state perspective, however, when considered from a dynamic Stability analysis each could have unique outcomes. As the commenter notes a delayed clearing mode, such as the stuck breaker analysis, would be expected to be more severe from a Stability mode. The SDT has retained P2.3 and P2.4 as they are considered single Contingency events as compared to the multiple Contingency stuck breaker event.

The P4 and P5 are unique Planning Events. The P5 Protection System failure can produce various outcomes depending on the Protection System element which failed – relay, CT, PT, battery, etc. The SDT has revised the P5 event description to remove the reference to "single component failure" and has revised the P5 event description to retain what is stated in the currently approved TPL standards under Category C6 through C9 related to the study of Protection System failures. It is left to the judgment of the Transmission Planner and the Planning Coordinator to select the appropriate review and it is expected that a worst case scenario that is something less than loss of the substation, which is considered an Extreme Event, would be evaluated. Finally, as noted in Requirement R3.4,

Organization	Question 7:	Question 7 Comments:
the Transmission Planner and Planning Coordinator is provided flexibility in selecting the more severe P5 events for study related to their system and it is not expected that every possible scenario for Protection System failure would be studied. It most cases it is unlikely that detailed system protection knowledge would be needed to develop the Contingency lists needed to perform Transmission planning studies. Ultimately it is the Transmission Planner and Planning Coordinator responsibility to ensure the simulated Contingencies accurately simulate the removal of all elements that the Protection Systems are expected to disconnect for a given event. If assistance is needed from asset owners then it is the Transmission Planner and/or Planning Coordinator's responsibility to coordinate such a review. The standard does not place requirements on the asset owners.		
Duke Energy	Yes	Separating the steady state and stability tables greatly improves and clarifies the requirements of the standard. The tables could be improved if the headings were put on each separate page. Placing headers in the requirements section of the standard would improve understanding of the flow of the document.
Response: The SDT has reformatted the performance tables (Table 1 Steady-State and Table 2 Stability) into a single table format based on commonalities between the two prior individual tables. The new Table 1 is titled "Steady State and Stability Performance". The move to a single table was based on a significant number of comments to do so and based on the SDT's view that the Planning Events were the same for both Steady-State and Stability. For Extreme Events, the separation of Steady-State and Stability that many in industry seem to prefer for the two table format has been retained in the new table. The SDT feels that with the consolidation of requirements that were made for the third posting that headings within the body of the requirements are not needed and NERC legal staff does not support the use of headings to subdivide requirements.		
Florida Reliability Coordinating Council, inc	No	The Steady State and Stability Performance Tables are very long (currently the these two table are 13 pages) and confusing. Please consider combining and condensing the two tables into one, and either add footnotes or expand the table headings to allow better understanding of the performance requirements.
Response: The SDT has reformatted the performance tables (Table 1 Steady-State and Table 2 Stability) into a single table format based on commonalities between the two prior individual tables. The new Table 1 is titled "Steady State and Stability Performance". The move to a single table was based on a significant number of comments and based on the SDT's view that the Planning Events were the same for both Steady-State and Stability. For Extreme Events, the separation of Steady-State and Stability that many in industry seem to prefer for the two table format has been retained in the new table. The new single performance table is greatly condensed from the Draft 2 version and the entire body of material is now contained on three pages compared to the thirteen pages that the prior Table 1 and Table 2 encompassed. Therefore, the need for repeating headers on subsequent pages has been eliminated as all Planning Events are presented on a single page.		

Organization	Question 7:	Question 7 Comments:
The SDT believes the new table format improves the readability of the expected performance requirements.		
SERC Reliability Review Subcommittee and Planning Standards Subcommittee	Yes	We recommend that the headings be repeated at the head of each page.
Response: The SDT has reformatted the performance tables (Table 1 Steady-State and Table 2 Stability) into a single table format based on commonalities between the two prior individual tables. The new Table 1 is titled "Steady State and Stability Performance". The new single performance table is greatly condensed from the Draft 2 version and the entire body of material is now contained on three pages compared to the thirteen pages that the prior Table 1 and Table 2 encompassed. Headers are repeated on subsequent pages.		
Oncor Electric Delivery	No	In Table 1-Steady State Performance several terms more relating to system stability performance appear such as post-transient voltage, voltage instability, fault plus stuck breaker, etc. These terms would appear to be most appropriate in only Table 2-Stability Performance, where this type of analysis is performed, e.g.- placing a fault at a location based on available short circuit MVA at that point in the transmission system and then analyzing the post transient voltage and generator response.
Response: The SDT agrees that the prior draft Table 1 included some terms that were more appropriate for stability analysis references. The SDT has reformatted the performance tables (Table 1 Steady-State and Table 2 Stability) into a single table format based on commonalities between the two prior individual tables. The new Table 1 is titled "Steady State and Stability Performance". The move to a single table was based on a significant number of comments to do so and based on the SDT's view that the Planning Events were the same for both Steady-State and Stability. For Extreme Events, the separation of Steady-State and Stability that many in industry seem to prefer for the two table format has been retained in the new table. The SDT believes the new table format improves the readability of the expected performance requirements. Additionally, the SDT took great care to separate the introductory table notes for those items that apply to both steady-state and stability analysis as well as independently to one or the other.		
FirstEnergy Corp.	Yes	The overall table format is much improved over Draft 1 and it provides better alignment between the steady-state and stability tables. The SDT is encouraged to consider consolidation into one table based on the minimal differences within the two tables. FE offers the following additional comments related to the tables:TABLE 1, STEADY-STATE & TABLE 2, STABILITY: 1) Do the table notes at the top of the table only apply to the Planning Events? If so, it is suggested to move the row that says Planning Events to be positioned above the notes.

Organization	Question 7:	Question 7 Comments:
		2) Top Table Notes, Item 2 - It is our opinion that it should be based on the TPs criteria. 3) Top Table Notes, Item 3 - These should read consistent on both tables. Also, is cascading well understood and how is it tested for? 4) The use of numeric notes at both the top and bottom of the table causes confusion related to the superscript number references on various terms within the table. The superscript items appear to be footnote references to the notes area at the bottom of the table. It is suggested that the items listed at the top of the table use alpha character references to demarcate each item. 5) Remove the footnote reference to note 3 on the Header titled "Event" (column 3). The reference in column 4 is better suited and covers the intent of the note. 6) For the P3 contingencies, it is unnecessary to individually analyze all BES generation units within a footprint along with an additional contingency. The planner allowed to use reasonable judgment and run only a subset of the larger units in this scenario. For example, there would be no need to contingencies against an outage of each unit at a multi-unit plant. Checking the contingencies against the outage of the largest unit at that plant would be sufficient. 7) A header row should be repeated on each page for improved readability. TABLE 1, STEADY-STATE: 1) Extreme event descriptions, item 2e ? why is this needed? How would this occur? What would be evaluated, high voltage? Stability issues? Note that it wouldn't be stability concern - this is the steady state table. 2) Extreme event descriptions, item 3b - how is this condition any different than what is studied in extreme event item 1 (N-2, no adjustment)? We suggest that item 3b be removed. 3) Extreme event descriptions, item 3c is too vague and it is suggested that it be removed. 4) Notes section (bottom of table), item 1 - Various topics are covered within this note - stuck breaker, breaker relay failure, normal clearing, delayed clearing - it should be broken up. Why include a discussion about delayed clearing in a steady-state table? 5) Notes section (bottom of table), item 4 ? We interpret FACTS to mean Flexible AC Transmission Devices and this means different things to different companies. FACTS devices can be series devices and not necessarily shunts as referred to in the table. It is noted that there is not footnote reference pointing to item 4 within the table. TABLE 2, Stability: 1) Planning Event P1 - Indicates SLG or 3-PH, which one is needed? This should be clarified in the requirements that reference this table. The intent is likely that most planners would perform the less labor intensive 3-PH simulation and if criteria were met, then the conclusion would be that SLG is also met. However, as presently written, the "OR" could be manipulated to allow someone to meet criteria for SLG but not the 3-PH. The requirements should provide clear

Organization	Question 7:	Question 7 Comments:
		expectations in this regard. (Same comment applies to P3 and P6) 2) Planning Event P1.2 - At what position on the line is the fault to be tested? Either the table or requirements that reference this Planning Event should be clear in what is required. 3) Planning Event P1.3 ? Is the fault to be placed on the high-side or low-side of the transformer? Either the table or requirements that reference this Planning Event should be clear. 4) Planning Events P1 and P2 - Is the intent that a TP would need to run all possible P1 and P2 events in dynamic stability simulations? If not, the requirements should be worded to allow the TP some flexibility in selecting the items having the most impact. To expect all of these events to be simulated within dynamics is unrealistic and unnecessary. 5) Planning Event P2.1 ? While we agree this event is warranted in steady-state, we question the need to cover this item within stability. Wouldn't breaker action clearing a fault always produce a more severe system disturbance than an inadvertent breaker trip? 6) Extreme Events ? The reference to R5.5.4 should be R5.4.4 7) Extreme Events - Items 2, a,b,c,d - should "protection system" be capitalized as the defined term in the NERC Glossary? 8) Extreme Events - Items 2f and 2gshould be removed. It is inconceivable that the simultaneous faults described could occur. 9) Notes section (bottom of table), item 1 - Does not read consistent with Note 1 from Table 1 Steady-State. As stated above, various topics are covered within this note - stuck breaker, breaker relay failure, normal clearing, delayed clearing - it should be broken up. 10) Note number 4 from Table 1 Steady-State (item on shunt/FACTS) is missing in Table 2. The first 5 notes from Table 1 should be reflected in Table 2 with the existing Table 2 note 5 being re-numbered to item 6. 11) Table 2 Note 5.a.ii. - We question whether the number of units totaling the Contingency reserve is a good criteria. Also, with regard to the phrase "the resulting apparent impedance swings must not pass through relay characteristics that would result in the tripping of any Transmission System elements", we suggest a change to "the resulting power swing shall not cause the system to separate or form electrical islands".
Response: The SDT has reformatted the performance tables (Table 1 Steady-State and Table 2 Stability) into a single table format based on commonalities between the two prior individual tables. The new Table 1 is titled “Steady State and Stability Performance”. The move to a single table was based on a significant number of comments to do so and based on the SDT’s view that the Planning Events were the same for both Steady-State and Stability. For Extreme Events, the separation of Steady-State and Stability that many in industry seem to prefer for the two table format has been retained in the new table.		

Organization	Question 7:	Question 7 Comments:

SDT RESPONSE TO THE COMMENTS MADE THAT ARE APPLICABLE TO BOTH TABLE 1 AND TABLE 2:

1) The notes at the top of the table are intended for the Planning Events. The SDT has taken the advance offered by FE and others within industry and moved the "Planning Events" title to be positioned above the introductory notes.

2) Regarding prior Top note 2, now note "g". The SDT did not make the change recommended and believes both the Transmission Planner and Planning Coordinator criteria need to be considered and the more restrictive criteria applied if warranted. Generally, the criteria used for applicable facilities would be known and agreed upon between the Transmission Planner and Planning Coordinator, for example within an RTO environment.

3) Top Table note item 3 is now referred to as note "a". The inconsistency described by the commenter is now corrected with the single table format. Cascading is a defined term in the NERC Glossary of Terms.

4) The SDT has adjusted the top notes and refer to them with alpha character references to avoid confusion with the table footnotes that are referenced within the table.

5) The footnote reference to note 3 on the Header titled "Event" (column 3) of the prior Table version has been removed. The footnote recommended by the commenter is now used and is referenced as footnote 2 in the new table.

2. If the event analyzed involves BES elements at multiple System voltage levels, the lowest System voltage level for stated performance criteria applies regarding allowances for interruptions of Firm Transmission Service and loss of Non-Consequential Load.

6) Contingency P3 is considered a multiple Contingency event and as described in Requirement R3.4 the Transmission Planner is expected to cover those Contingencies "… that are expected to produce more severe System impacts shall be identified, evaluated for System performance, and the rationale for the Contingencies selected for evaluation shall be available as supporting information and shall include an explanation of why the remaining Contingencies would produce less severe System results." Therefore, the SDT agrees with the commenter that the Transmission Planner would not be required to run every generation outage in combination with an addition single Contingency.

7) The new single performance table is greatly condensed from the Draft 2 version and the entire body of material is now contained on three pages compared to the thirteen pages that the prior Table 1 and Table 2 encompassed. Headers are repeated on subsequent pages.

SDT RESPONSE TO THE COMMENTS MADE THAT ARE APPLICABLE ONLY TO TABLE 1:

1) The 2e Extreme Event came from the existing TPL standard, category D11 contingency. The SDT considers this to be more appropriate for steady state analysis than for Stability analysis and that the main intent is to guard against an extreme voltage rise.

2) The SDT agrees with FE related to Extreme Event item 3b and it has been removed in the new table.

3b. ~~Loss of two Transmission lines in different rights-of-way prior to System adjustments for conditions such as:~~

3) The SDT disagrees with the commenter that "Extreme event description item 3c is too vague and it is suggested that it be removed."

4) The SDT agrees that a variety of topics were covered in the prior footnote 1 of Table 1 and that a discussion on delayed clearing was not applicable to a steady-state table. We have revised this footnote which is now footnote 11 to focus on the stuck breaker topic. Many of the prior references in this note were

Organization	Question 7:	Question 7 Comments:

NERC Glossary of Terms definitions and have been removed.

11. A stuck breaker means that for a gang-operated breaker, all three phases of the breaker have remained closed. For an independent pole operated (IPO) breaker, only one pole is assumed to remain closed. ~~The~~A stuck breaker ~~event~~ introduces a delayed clearing mode. ~~Normal Clearing is when the Protection System operates as designed and the Fault is cleared in the time normally expected with proper functioning of the installed protection systems. Breaker fail relay operation is a predetermined time that occurs after the Protection System operates and the breaker has failed. Breaker fail relaying will also isolate a predetermined portion of the electric system to isolate the failed breaker. Delayed clearing of a Fault is due to failure of any Protection System component that prevents the Protection System from operating normally.~~

5) The SDT has corrected the footnote reference to FACTS to better clarify that the SDT's intent of referring to only those FACTS devices which are shunt devices. The new footnote is footnote 7 and is now referenced within the Planning Event table information.

7. Requirements which are applicable to shunt devices also apply to FACTS devices that are connected to ground.

SDT RESPONSE TO THE COMMENTS MADE THAT ARE APPLICABLE ONLY TO TABLE 2:

1) The confusion in Planning Event P1 – indicating a "SLG or 3-PH" has been resolved and now more clearly indicates that a 3-PH fault must be passed. The P3 and P6 Planning Events now indicate the intent is to pass a SLG event for these items. However, as stated in footnote 3, if a Stability study indicates that criteria is met for a 3-PH analysis, the results of that test are sufficient to meet the less stringent SLG criteria.

2) This is left to the judgment of the Transmission Planner and the Planning Coordinator. It is expected that you study the worst case fault location.

3) This is left to the judgment of the Transmission Planner and the Planning Coordinator. It is expected that you study the worst case fault location.

4) It is not expected that a Transmission Planner would analyze every Planning Event scenario for P1 and P2 within a Stability study. Requirement R4.5 provides the Transmission Planner the flexibility desired by FE in selecting the items having the most impact.

5) No. Sometimes opening a breaker produces a more severe dynamic voltage swing than clearing a fault at that location. A fault can stimulate machine exciters into a faster response. A slower response from exciters due to opening a breaker can result in larger dynamic voltage swings.

6) The reference to requirement R5.5.4 has been removed as some commenters felt this created a circular reference between the table and the requirement language.

7) The commenter is correct that the term "Protection System" as used in Extreme (Stability) Events items 2, a,b,c,d is a NERC defined term in the NERC Glossary of Terms and is now correctly capitalized within these Extreme Event descriptions

8) Extreme (Stability) Events items 2f and 2g have been retained by the SDT and these items are consistent with the current FERC approved TPL-004 category D6 and D7. Other commenters have not objected to these items.

9) The SDT agrees that a variety of topics were covered in the prior footnote 1 of Table 2 and that a discussion on delayed clearing was not applicable to a steady-state table. We have revised this footnote which is now footnote 11 to focus on the stuck breaker topic. Many of the prior references in this note were NERC Glossary of Terms definitions and have been removed. The prior footnote 1 inconsistencies indicated by the commenter have been resolved by moving to

Organization	Question 7:	Question 7 Comments:
the single table format. 10) The SDT agrees that there were missing footnotes in Table 2 when compared to the prior Table 1 footnotes. This is no longer an issue in the single table format as only one set of footnotes is used. 11) The SDT believes that the Contingency reserve is the appropriate maximum amount of generation which should be allowed to be lost for Planning events P2-P7. Also, the SDT believes the appropriate performance requirement for Planning Events is for no additional lines to be allowed to trip due to apparent impedance swings.		
Orlando Utiliites Commission	Yes and No	I like the concept of the new performance tables however if they could be made shorter that would be handy. I have the following specific suggestions, although they may be moot if the table is redesigned. The way the notes at the top of table 1 and table 2 are written it appears that they apply to planning single, planning multiple and extreme event sub-tables. However this is in conflict with some parts of the standard itself and the team's comments on the conference call. For example Requirement R3.3.2.2 applies facility ratings only to planning single contingencies only, so which is correct the requirement or the note that applies it to everything? I have several suggestions to fix this: 1. Move the "notes" to under the Planning Event sub table 2. Making 4 tables with the Extreme Events being a table 2 & 4 respectively 3. Indicating the notes as only applying to specific planning events. The discrepancy between requirement R3.3.2.2, the table note and comments on the conference call also needs to be corrected either by expanding the applicability of R3.3.2.2 to multiple contingencies or reducing the scope of the corresponding note. It should be clarified somewhere that the Transmission Planner and Planning Coordinator select the range of the system contingencies for N-1. Otherwise some may interpret this as only having to test contingencies on their own system (insufficient from a reliability perspective for many systems) while some auditors may interpret this as requiring every possible n-1 in the US and Canada as necessary. For example a requirement R3.2.3 could be added stating "The planning assessment should include a technical rationale for the range of transmission lines, transformers and other equipment considered". This could also be handled as a note on the tables to the effect of "The study should include a technical rationale for the range of transmission line and generators considered."
Response: The introductory notes have been moved under the "Planning Event" portion of the performance table as suggested by the commenter. The notes apply to all Planning Events – system normal (n-0), single Contingency and multiple Contingency. The commenter raises a valid point of confusion related to allowable System adjustments as Requirement R3.3.2.2 seems to imply that the System adjustments may only be applicable for single Contingency. Redispatch of generation and other System adjustments are allowed for provided that all Facilities shall be operating within their Facility Ratings. The requirement has been removed and replaced with Table 1 header note "e" since the text in the former requirement was explanatory of what was allowed and not requirement language. **e.** For all Planning Events, planned System adjustments such as Transmission configuration changes and redispatch of generation are allowed if such		

Organization	Question 7:	Question 7 Comments:
adjustments are executable within the time duration applicable to the Facility Ratings. The SDT has reformatted the performance tables (Table 1 Steady-State and Table 2 Stability) into a single table format based on commonalities between the two prior individual tables. The new Table 1 is titled "Steady State and Stability Performance". The new single performance table is greatly condensed from the Draft 2 version and the entire body of material is now contained on three pages compared to the thirteen pages that the prior Table 1 and Table 2 encompassed. The list of Contingencies is expected to cover the Transmission Planner or Planning Coordinator system for which they are responsible for, including any tie-lines to adjacent Transmission systems. The standard does not preclude the Transmission Planner or Planning Coordinator to expand the list of Contingencies to include some Contingencies of interest or known impact for the adjacent System(s). It is expected that through peer reviews, the Transmission Planner or Planning Coordinator may initially learn of any new event within an adjacent System that impacts their own System.		
Entergy Services, Inc.	Yes and No	Given the type of information the SDT was trying to convey in the Tables, the format is fine. However, the enhanced standards create a conflict between the planning criteria used for evaluating transmission service (typically a standard N-1 thermal only analysis for ATC/AFC calculations) and the criteria for reliability as proposed by this standard. This disconnect will unfairly shift the cost of expanding the transmission system to the native load customers while wholesale and point-to-point transmission customers will reap the benefits of the additional capacity installed.
Response: The SDT has added footnotes 5 and 10 related to Firm Transmission Service. Footnote 5 indicates that interruption of conditional firm transfers is permitted for all Planning Events and footnote 10 indicates that interruption of Firm Transmission Service coupled with appropriate generation re-dispatch can be utilized for multiple Contingency events as a System adjustment, where indicated in Table 1 as being part of the Initial System Condition, and as a post-Contingency corrective action so long as no interruption of Non-Consequential Load occurs and all Facility Ratings are maintained. **5**. When the conditions and/or event(s) being studied form the basis for conditional Firm Transmission Service, curtailment of that conditional Firm Transmission Service is allowed. **Footnote #10** – Curtailment of firm transmission service, when coupled with the appropriate re-dispatch of resources obligated to re-dispatch, is allowed both as a System adjustment (as identified in the column titled 'Initial System Conditions') and a corrective action, where it can be demonstrated that Facilities remain within applicable Facility Ratings and those adjustments do not result in the shedding of any firm Load. Where limited options for re-dispatch exist, sensitivities associated with the availability of those resources must be considered. Where Facilities external to the Transmission Planner's planning region are relied upon, Facility Ratings in those regions must be considered.		
BPA Transmission Reliability Program	No	We suggest that the tables for Steady State and Stability Performance could be combined into one table, for simplicity. Separate columns could be used for Steady State versus Stability performance criteria.
Response: The SDT has reformatted the performance tables (Table 1 Steady-State and Table 2 Stability) into a single table format based on commonalities between the two prior individual tables. The new Table 1 is titled "Steady State and Stability Performance". The move to a single table was based on a significant number of comments to do so and based on the SDT's view that the Planning Events were the same for		

Organization	Question 7:	Question 7 Comments:
both Steady-State and Stability. For Extreme Events, the separation of Steady-State and Stability that many in industry seem to prefer for the two table format has been retained in the new table. The new single performance table is greatly condensed from the Draft 2 version and the entire body of material is now contained on three pages compared to the thirteen pages that the prior Table 1 and Table 2 encompassed. Headers are repeated on subsequent pages.		
PPL EnergyPlus	Yes	The new format is a nice improvement. On the SDT conference call, it was stated that table 1 and table 2 assume different starting points; if so, could this be spelled out in the standard? Also, consequential generation loss isn't defined.
Response: The SDT has reformatted the performance tables (Table 1 Steady-State and Table 2 Stability) into a single table format based on commonalities between the two prior individual tables. The new Table 1 is titled "Steady State and Stability Performance". The move to a single table was based on a significant number of comments and based on the SDT's view that the Planning Events were the same for both Steady-State and Stability. For Extreme Events, the separation of Steady-State and Stability that many in industry seem to prefer for the two table format has been retained in the new table. The new single performance table is greatly condensed from the Draft 2 version and the entire body of material is now contained on three pages compared to the thirteen pages that the prior Table 1 and Table 2 encompassed. Headers are repeated on subsequent pages. The initial system conditions are described for each of the Planning Events and are the same for both steady-state and Stability. The SDT did not feel the need to define consequential generation loss for the standard.		
PacifiCorp	Yes	We agree with the proposed format changes of the Tables.
JEA	Yes and No	JEA can live with them as is, but would also welcome enhancements. Will defer enhancements to others.
Lafayette Utilities System	Yes	
Arizona Public Service Co.	Yes	We agrees with the proposed format changes of the Tables.
LCRA TSC	Yes	
NERC and Regional Coordination	Yes	

Organization	Question 7:	Question 7 Comments:
E.ON U.S. Transmission Planning	Yes	

Response: Thank you for your response. The SDT has reformatted the performance tables (Table 1 Steady-State and Table 2 Stability) into a single table format based on commonalities between the two prior individual tables. The new Table 1 is titled "Steady State and Stability Performance".

The move to a single table was based on a significant number of comments and based on the SDT's view that the Planning Events were the same for both Steady-State and Stability. For Extreme Events, the separation of Steady-State and Stability that many in industry seem to prefer for the two table format has been retained in the new table.

The new single performance table is greatly condensed from the Draft 2 version and the entire body of material is now contained on three pages compared to the thirteen pages that the prior Table 1 and Table 2 encompassed. Headers are repeated on subsequent pages.

8. **A new definition for "Bus-Tie Breaker" was added to clarify the type of substation design and breaker position that qualify as a Bus-tie Breaker. Do you agree with the proposed definition? If not, please explain.**

Summary Consideration:

Based on the comments received from the industry, the SDT has revised the definition of Bus-tie Breaker.

Bus-tie Breaker: A circuit breaker that is positioned to connect two individual ~~straight bus~~ substation bus configurations. ~~(Substation configurations such as ring-bus, breaker-and-a-half, or double bus-double breaker protection schemes do not use bus-tie breakers.)~~.

Organization	Question 8:	Question 8 Comments:
NPCC	No	The definition provided is too limiting. It says that if you have two rings with a bus tie breaker in between, it is no longer a bus tie breaker. NPCC Participating Members Recommend, "A circuit breaker that is positioned to connect two individual station configurations." We do not agree that, "(Substation configurations such as ring-bus, breaker-and-a-half, or double bus-double breaker protection schemes do not use bus-tie breakers.)", as we have examples where stations of this nature are connected through a single "bus-tie breaker".
TVA System Planning	Yes	TVA does appreciate this clarification, but suggests the following wording: "A circuit breaker that is positioned to connect two individual straight bus substation configurations that if faulted results in both bus sections being cleared."
Omaha Public Power District	No	The term "straight bus" is not an industry-standard term. Replace "straight bus" by "single-bus, single-breaker".
Progress Energy Carolinas		The use of the word "straight" in the definition raised questions. We recommend the word straight be removed or change the definition to the following. "Bus-tie Breaker: A circuit breaker positioned to connect two individual buses with one or more other breaker positions on each bus. (Substation configurations such as a ring-bus, breaker-and-a-half, or double-breaker do not generally include bus-tie breakers.)"
Platte River Power Authority	Yes and No	Delete the sentence in parentheses.
BCTC	No	Some breaker-and-a-half and double-breaker layouts may have bus breakers located mid-way in the side elements. What would these breakers be called? We propose the following definition: A circuit breaker that divides a bus section with multiple tap off points into two bus sections.

Organization	Question 8:	Question 8 Comments:
Manitoba Hydro	Yes	The Bus-tie Breaker definition provides the clarification Manitoba Hydro requested in our draft 1 comments. However, we suggest the wording in brackets should be deleted as it is possible to add bus-tie breakers to schemes like the breaker-and-a-third bus in large stations.
Transmission Agency of Northern California	No	We do not disagree with the proposed definition change. However, we do not agree that ?Substation configurations such as ring-bus, breaker-and-a-half, or double bus-double breaker protection schemes do not use bus-tie breakers. Some breaker-and-a-half and double-breaker layouts may have bus breakers located mid-way in the side elements. We propose the following definition: A circuit breaker that divides a bus section with multiple tap off points into two bus sections.
National Grid	No	The definition provided is too limiting. It says that if you have a two rings with a bus tie breaker in between, it is no longer a bus tie breaker. We recommend modifying the definition to read, "A circuit breaker that is positioned to connect two individual station configurations. We do not agree that, "(Substation configurations such as ring-bus, breaker-and-a-half, or double bus-double breaker protection schemes do not use bus-tie breakers.)", as we have examples where stations of this nature are connected through a single "bus-tie breaker".
OPUC	Yes and No	A better definition of Bus-Tie Breaker might be: “A circuit breaker that divides a bus section with multiple tap off points into two bus sections.”
Pacific Gas and Electric Co.	No	We do not disagree with the proposed definition change. However, we do not agree that ?Substation configurations such as ring-bus, breaker-and-a-half, or double bus-double breaker protection schemes do not use bus-tie breakers. Some breaker-and-a-half and double-breaker layouts may have bus breakers located mid-way in the side elements. We propose the following definition: A circuit breaker that divides a bus section with multiple tap off points into two bus sections.
Public Service Company of New Mexico	No	We do not disagree with the proposed definition change. However, we do not agree that “Substation configurations such as ring-bus, breaker-and-a-half, or double bus-double breaker protection schemes do not use bus-tie breakers. Some breaker-and-a-half and double-breaker layouts may have bus breakers located mid-way in the side elements. We propose the following definition: A circuit breaker that divides a bus section with multiple tap off points into two bus sections.
Puget Sound Energy, Inc.	No	We do not disagree with the proposed definition change. However, we do not agree that “Substation configurations such as ring-bus, breaker-and-a-half, or double bus-double breaker protection schemes do not use bus-tie breakers. Some breaker-and-a-half and double-breaker layouts may have bus breakers located mid-way in the side elements. We propose the following definition: A circuit breaker that divides a bus section with multiple tap off points into two

Organization	Question 8:	Question 8 Comments:
		bus sections.
Idaho Power Company	No	We do not disagree with the proposed definition change. However, we do not agree that ?Substation configurations such as ring-bus, breaker-and-a-half, or double bus-double breaker protection schemes do not use bus-tie breakers. Some breaker-and-a-half and double-breaker layouts may have bus breakers located mid-way in the side elements. We propose the following definition: A circuit breaker that divides a bus section with multiple tap off points into two bus sections.
SMUD	No	We do not disagree with the proposed definition change. However, we do not agree that “Substation configurations such as ring-bus, breaker-and-a-half, or double bus-double breaker protection schemes do not use bus-tie breakers. Some breaker-and-a-half and double-breaker layouts may have bus breakers located mid-way in the side elements. We propose the following definition: A circuit breaker that divides a bus section with multiple tap off points into two bus sections.
Hydro-Qu?bec Trans?nergie (HQT)	No	? The definition provided is too limiting. It says that if you have a two rings with a bus tie breaker in between, it is no longer a bus tie breaker. HQT recommend, "A circuit breaker that is positioned to connect two individual station configurations. We do not agree that, "(Substation configurations such as ring-bus, breaker-and-a-half, or double bus-double breaker protection schemes do not use bus-tie breakers.)", as we have examples where stations of this nature are connected through a single "bus-tie breaker".
Sierra Pacific Power Comapny / Nevada Power Company	No	We do not disagree with the proposed definition change. However, we do not agree that ?Substation configurations such as ring-bus, breaker-and-a-half, or double bus-double breaker protection schemes do not use bus-tie breakers. Some breaker-and-a-half and double-breaker layouts may have bus breakers located mid-way in the side elements. We propose the following definition: A circuit breaker that divides a bus section with multiple tap off points into two bus sections.
Ameren	No	To provide clarity, a revised definition is proposed. "A bus-tie breaker is a circuit breaker that connects two individual bus sections with one or more breaker positions on each bus; substation configurations such as ring-bus, breaker-and-a-half, or double bus-double-breaker do not have bus-tie circuit breakers."
SRP	No	We do not disagree with the proposed definition change. However, we do not agree that ?Substation configurations such as ring-bus, breaker-and-a-half, or double bus-double breaker protection schemes do not use bus-tie breakers. Some breaker-and-a-half and double-breaker layouts may have bus breakers located mid-way in the side elements. We propose the following definition: A circuit breaker that divides a bus section with multiple tap off points into two bus sections.

Organization	Question 8:	Question 8 Comments:
MidAmerican Energy Company	No	MEC suggests applying the proposed definition to a new term, "Straight Bus-Tie Breaker". The creation of a narrow, special application definition of "bus tie breaker" is generally confusing and misleading. The term "bus tie breakers" is widely used in the industry in the context of various bus configurations. In addition, this narrow definition may create confusion if other Standards refer to bus-tie breaker in a different context.
Tucson Electric Power Company	No	We do not disagree with the proposed definition change. However, we do not agree that ?Substation configurations such as ring-bus, breaker-and-a-half, or double bus-double breaker protection schemes do not use bus-tie breakers. Some breaker-and-a-half and double-breaker layouts may have bus breakers located mid-way in the side elements. We propose the following definition: A circuit breaker that divides a bus section with multiple tap off points into two bus sections.
SERC Dynamics Review Subcommittee	No	The use of the word ?straight? in the definition raised questions. We recommend the word straight be removed or change the definition to the suggestion below: Suggestion: Bus-tie breakers are defined as a circuit breaker position that connects two individual buses with one or more breaker positions on each bus.
MRO NERC Standards Review Subcommittee	No	The MRO suggests applying the proposed definition to a new term, "Straight Bus-Tie Breaker". The creation of a narrow, special application definition of "bus tie breaker" is generally confusing and misleading. The term "bus tie breakers" is widely used in the industry in the context of various bus configurations. In addition, this narrow definition may create confusion if other Standards refer to bus-tie breaker in a different context.
Modesto Irrigation District	No	We do not disagree with the proposed definition change. However, we do not agree that ?Substation configurations such as ring-bus, breaker-and-a-half, or double bus-double breaker protection schemes do not use bus-tie breakers. Some breaker-and-a half and double-breaker layouts may have bus breakers located mid-way in the side elements. We propose the following definition: A circuit breaker that divides a bus section with multiple tap off points into two bus sections.
Tri-State G&T	No	We do not disagree with the proposed definition change. However, we do not agree that ?Substation configurations such as ring-bus, breaker-and-a-half, or double bus-double breaker protection schemes do not use bus-tie breakers. Some breaker-and-a-half and double-breaker layouts may have bus breakers located mid-way in the side elements. We propose the following definition: A circuit breaker that divides a bus section with multiple tap off points into two bus sections.
Brazos Electric Power Cooperative,	No	Part of the definition of a bus tie breaker as outlined in this Standard should be that it is the ONLY connection between 2 substation buses. Not sure why the word 'straight' is used in this definition. If a bus with a 90 degree turn is connected to another bus by a single tie breaker, does this not apply? Also, breaker and a half schemes do

Organization	Question 8:	Question 8 Comments:
Inc.		sometimes have a bus tie breaker in them although its probably not common. Including those specifics in not needed.
ColumbiaGrid	No	We do not disagree with the proposed definition change. However, we do not agree that ?Substation configurations such as ring-bus, breaker-and-a-half, or double bus-double breaker protection schemes do not use bus-tie breakers. Some breaker-and-a-half and double-breaker layouts may have bus breakers located mid-way in the side elements. We propose the following definition: A circuit breaker that divides a bus section with multiple tap off points into two bus sections.
Southern California Edison	No	We do not disagree with the proposed definition change. However, we do not agree that ?Substation configurations such as ring-bus, breaker-and-a-half, or double bus-double breaker protection schemes do not use bus-tie breakers. Some breaker-and-a-half and double-breaker layouts may have bus breakers located mid-way in the side elements. We propose the following definition: A circuit breaker that divides a bus section with multiple tap off points into two bus sections.
Northeast Utilities	No	Northeast Utilities has participated with ISO-NE and NPCC and supports the comments filed by those organizations.
North Carolina Electric Membership Corp	No	To provide clarity, a revised definition is proposed. A bus-tie breaker is a circuit breaker that connects two individual bus sections in a straight bus substation configuration. Substation configurations such as ring-bus, breaker-and-a-half, or double bus-double-breaker do not have bus-tie circuit breakers.
American Transmission Company	No	We suggest applying the proposed definition to a new term, "Straight Bus-Tie Breaker". The creation of a narrow, special application definition of "bus tie breaker" is generally confusing and misleading. The term "bus tie breakers" is widely used in the industry in the context of various bus configurations. In addition, this narrow definition may create confusion if other Standards refer to bus-tie breaker in a different context.
Duke Energy	No	The use of the word ?straight? in the definition raised questions and did not seem crucial to the definition. We recommend the word ?straight? be removed from the definition.
Central Maine Power Company	No	The definition provided is too limiting. It indicates that if a substation has two rings with a bus tie breaker in between, that breaker is no longer a bus tie breaker. Recommend instead, "A circuit breaker that is positioned to connect two individual station configurations. The breakers in a bus scheme are not bus tie breakers but the breakers that tie bus schemes together are bus-tie breakers."
NSTAR Electric	No	The definition provided is too limiting and should be changed to "A circuit breaker that is positioned to connect two individual station configurations. The breakers in a bus scheme are not bus tie breakers but the breakers that tie bus

Organization	Question 8:	Question 8 Comments:
		schemes together are bus-tie breakers."
New York Independent System Operator	No	The definition provided is too limiting. It says that if you have a two rings with a bus tie breaker in between, it is no longer a bus tie breaker. Recommend, "A circuit breaker that is positioned to connect two individual station configurations. We do not agree that, "(Substation configurations such as ring-bus, breaker-and-a-half, or double bus-double breaker protection schemes do not use bus-tie breakers.)", as we have examples where stations of this nature are connected through a single "bus-tie breaker".
SERC Reliability Review Subcommittee and Planning Standards Subcommittee	No	To provide clarity, a revised definition is proposed. A bus-tie breaker is a circuit breaker that connects two individual bus sections in a straight bus substation configuration. Substation configurations such as ring-bus, breaker-and-a-half, or double bus-double-breaker do not have bus-tie circuit breakers.
Alberta Electric System Operator	No	We do not disagree with the proposed definition change. However, we do not agree that ?Substation configurations such as ring-bus, breaker-and-a-half, or double bus-double breaker protection schemes do not use bus-tie breakers. Some breaker-and-a-half and double-breaker layouts may have bus breakers located mid-way in the side elements. We propose the following definition: "A circuit breaker that's only protective purpose is to isolate a segment of a bus."
ISO New England Inc.	No	he definition provided is too limiting. It says that if you have two rings with a bus tie breaker in between, it is no longer a bus tie breaker. Recommend, "A circuit breaker that is positioned to connect two individual station configurations. The breakers in a bus scheme are not bus tie breakers but the breakers that tie bus schemes together are bus-tie breakers."
Orlando Utiliites Commission	Yes and No	I neither for or against breaking out these breakers as a separate class. However a graphic or sketch of some example an easier concept to understand both in terms of what it is and why it is worthy of special attention.
Entergy Services, Inc.	No	Change term from ?Bus-tie Breaker? to ?Straight Bus Substation Bus-tie Breaker? with the following definition: A bus-tie breaker is a circuit breaker that connects two individual bus sections in a straight bus substation configuration. References to Bus-tie Breaker in the standard would also need to be changed accordingly.
US Bureau of Reclamation	No	We do not disagree with the proposed definition change. However, we do not agree that ?Substation configurations such as ring-bus, breaker-and-a-half, or double bus-double breaker protection schemes do not use bus-tie breakers. Some breaker-and-a half and double-breaker layouts may have bus breakers located mid-way in the side elements. We propose the following definition: A circuit breaker that divides a bus section with multiple tap off points into two

Organization	Question 8:	Question 8 Comments:
		bus sections.
BPA Transmission Reliability Program	No	The term "Bus Tie" implies tying any two buses together. However, the intent of this standard is actually referring to connecting the main buses of two adjacent main and auxiliary configured substations together. Therefore, we recommend changing the term "Bus Tie Breaker" to "Bus Sectionalizing Breaker". We also recommend removing the parentheses portion of the Bus Tie Breaker definition. It does not provide clarification and may not apply to all utilities' systems.
Response: The SDT has revised the definition as follows: **Bus-tie Breaker**: A circuit breaker that is positioned to connect two individual ~~straight bus~~ substation bus configurations. ~~(Substation configurations such as ring-bus, breaker-and-a-half, or double bus-double breaker protection schemes do not use bus-tie breakers.)~~		
Progress Energy Florida, Inc.	No	PEF understands the intent behind the wording of the definition, but neither agrees with the definition nor its use in various applications in the Standard. Bus tie breakers as defined in the draft Standard are limited to connecting two straight bus configurations. In reality, the term bus-tie breaker can be, and is used for other applications. PEF suggests that the SDT further research the use of this term in the industry. But more to the point, PEF does not see the need for a distinction between bus tie and non bus tie breakers and ultimately recommends that this be removed from the Standard.
Florida Power and Light	No	Bus tie breakers are defined exclusively to straight bus configurations. They can be used for other breaker configurations. We do not see the need for a distinction between bus tie and non bus tie breakers.
Response: The SDT notes that a number of commenters disagreed with the definition. However, the number who indicate that the distinction should be eliminated is in the minority. Therefore, the SDT has retained the distinction while having made changes to provide a simpler and broader definition of bus-tie breaker.		
Dominion - Electric Transmission Planning	Yes	
City Water, Light & Power - Springfield, Illinois	Yes	

Organization	Question 8:	Question 8 Comments:
Los Angeles Department of Water and Power	Yes	
Tenaska, Inc.	Yes	
Gainesville Regional Utilities	Yes	
JEA	Yes	
PacifiCorp	Yes	We agree with the proposed format changes of the Tables.
ITC Holdings: ITC, METC, ITC Midwest	Yes	
Tacoma Power	Yes	
Lafayette Utilities System	Yes	
Black Hills Corporation	Yes	
Arizona Public Service Co.	Yes	We agree with the proposed definition change.
Exelon Transmission Planning	Yes	
Austin Energy	Yes	
Midwest ISO	Yes	This is a good definition.

Organization	Question 8:	Question 8 Comments:
Tri-State Generation and Transmission Association, Inc.	Yes	
AEP	Yes	
Lakeland Electric	Yes	
Southern Company Transmission	Yes	
LCRA TSC	Yes	
NERC and Regional Coordination	Yes	
IESO	Yes	
E.ON U.S. Transmission Planning	Yes	
ERCOT System Planning	Yes	
Oncor Electric Delivery	Yes	NA
FirstEnergy Corp.	Yes	
Response: The SDT thanks you for your response but the majority of commenters expressed a desire to change the definition.		

9. **Some commenters questioned why a Bus-tie Breaker would have a different performance requirement than a non-Bus-tie Breaker, stating that all breakers have the same probability for failure. It may be true that generally the probability for failure of any given breaker would not vary substantially among similar types of breakers, but the Bus-tie Breaker reduces exposure and consequences of bus faults. The different performance expectations in Tables 1 and 2 are based on promoting a higher level of reliability for the Transmission Systems operated above 300 kV.**

   It is recognized by the SDT that a straight bus design has some undesirable exposure to bus faults, but that Bus-tie Breakers can be utilized to improve reliability for bus faults and problems associated with exit breakers. As a result, the risk of an internal breaker fault was deemed to be significantly less than the benefit that is gained by reducing the exposure to a total bus failure. Therefore, provisions were built into the performance requirements that would not discourage their use.

   Do you agree that non-Bus-tie Breakers rated above 300 kV should have more stringent performance requirements than Bus-tie Breakers? If not, please explain why and/or suggest specific changes.

Summary Consideration:

While a significant number of parties commented negatively about the higher performance requirement for non-Bus-tie Breakers above 300 kV, higher performance requirements are encouraged by FERC Order No. 693 and the majority of the industry has indicated support for the higher performance requirement. Therefore, the SDT has kept the higher performance requirement for non-Bus-tie Breakers above 300 kV.

A number of commenters raised concerns with the less stringent requirement for DC systems. The SDT has removed the less stringent requirements for DC lines in the Table.

Due to industry comments, the SDT has changed/added the following:

Footnote 5 - When the conditions and/or event(s) being studied form the basis for conditional firm transmission service, curtailment of that conditional firm transmission service is allowed

Footnote #10 – Curtailment of firm transmission service, when coupled with the appropriate re-dispatch of resources obligated to re-dispatch, is allowed both as a System adjustment (as identified in the column titled 'Initial System Conditions') and a corrective action, where it can be demonstrated that Facilities remain within applicable Facility Ratings and those adjustments do not result in the shedding of any firm Load. Where limited options for re-dispatch exist, sensitivities associated with the availability of those resources must be considered. Where Facilities external to the Transmission Planner's planning region are relied upon, Facility Ratings in those regions must be considered.

Consequential Load Loss: ~~Load that is no longer connected to a source as a result of the event being studied or which is lost as a result of the load's response to the transient conditions of the event (other than through the action of UVLS or UFLS schemes). Although Load which is lost as a result of the Load's response to the transient conditions of the event is considered Consequential Load Loss and is permitted when Consequential Load Loss is allowed, Transmission planning entities are not allowed to rely upon the expectation of such Load loss to meet steady state performance requirements.~~ All Load that is no longer served by any Transmission Facilities as a result of the Facilities being removed from service by a planned Protection System operation to isolate fault conditions.

Non-Consequential Load Loss: Non-Interruptible Load loss other than Consequential Load Loss, Supplemental Load Loss, and Load Reduction.~~. For example, non-Interruptible Load loss that occurs through manual (operator initiated) or automatic operations such as under-voltage Load shedding, under frequency Load shedding, or Special Protection Systems would be considered Non-Consequential Load Loss~~

Load Reduction: Load that is still connected to the System, but is reduced due to lower voltage conditions following a Planning or Extreme Event.

Supplemental Load Loss: Load that is disconnected from the network by end-user equipment responding to post-Contingency System conditions.

Organization	Question 9:	Question 9 Comments:
TVA System Planning	No	Since an internal fault on any breaker is a low probability event, we believe that Non-consequential Load Loss should be allowed.
Alberta Electric System Operator	No	We believe that Non-Consequential Load Loss should be allowed for loss of either Bus-Tie or Non-Bus-Tie Breakers regardless of voltage class.
Response: While a significant number of parties commented negatively about the higher performance requirement for non-Bus-tie Breakers above 300 kV, higher performance requirements are encouraged by FERC Order No. 693 and the majority of the industry has indicated support for the higher performance requirement. Therefore, the SDT has kept the higher performance requirement for non-Bus-tie Breakers above 300 kV.		
BCTC	Yes	BCTC agrees with different performance levels. However, we have a different rationale. Our reasoning is that a bus fault has a lower probability than a line fault. Bus tie breakers are called on to interrupt faults less often than line breakers. The failure probably may be the same but the frequency of failure is lower (because they are not called on to operate as often). The explanation given above by the SDT appears to be more related to a WECC issue that bus breaker failure should be Category D.
Response: Thank you for your support of the SDT's position.		
Platte River Power Authority	No	I think the performance for non-bus-tie breakers should be the same for all BES voltages for the same reason I agree with the performance of P2.4 Internal Breaker Fault (bus tie) and P4.6 Stuck Breaker where the Stuck Breaker could be a bus-tie or "sectionalizing" breaker.

Organization	Question 9:	Question 9 Comments:
Manitoba Hydro	No	Based on industry outage statistics, event P4, the non-bus tie breaker failure has a lower probability of occurrence than event P7, the common structure event. Consequently, Manitoba Hydro recommends that the performance requirement for >300 kV should be the same as P7. Imposing a higher performance expectation on the >300 kV facilities will require significant bus reconfiguration costs to ensure compliance for existing stations. The additional cost can not be justified by the reliability gain given the low probability of the event.
Transmission Agency of Northern California	Yes and No	We interpret ?exit breakers? to mean a breaker on an element that comes in from outside the substation. We agree with applying less stringent performance requirements to bus tie breakers above 300 kV. Further, we believe that Non-Consequential Load Loss should be allowed for loss of either Bus-Tie or Non-Bus-Tie Breakers regardless of voltage class. The SDT has not presented evidence that the probabilities of failure for breakers within the same substation are significantly different for different voltage classes.
Pacific Gas and Electric Co.	Yes and No	We interpret “exit breakers” to mean a breaker on an element that comes in from outside the substation. We agree with applying less stringent performance requirements to bus tie breakers above 300 kV. Further, we believe that Non-Consequential Load Loss should be allowed for loss of either Bus-Tie or Non-Bus-Tie Breakers regardless of voltage class. The SDT has not presented evidence that the probabilities of failure for breakers within the same substation are significantly different for different voltage classes
Public Service Company of New Mexico	Yes and No	We interpret “exit breakers” to mean a breaker on an element that comes in from outside the substation. We agree with applying less stringent performance requirements to bus tie breakers above 300 kV. Further, we believe that Non-Consequential Load Loss should be allowed for loss of either Bus-Tie or Non-Bus-Tie Breakers regardless of voltage class. The SDT has not presented evidence that the probabilities of failure for breakers within the same substation are significantly different for different voltage classes.
PacifiCorp	No	We do not agree with the rationale for the requiring more stringent performance requirement levels for non-bus tie breakers above 300 kV. The SDT has not presented evidence that the probabilities of failure for breakers within the same substation are significantly different for different voltage classes.
Idaho Power Company	Yes and No	We interpret ?exit breakers? to mean a breaker on an element that comes in from outside the substation. We agree with the rationale for the requiring more stringent performance requirement levels for non-bus tie breakers above 300 kV. Further, we believe that Non-Consequential Load Loss should be allowed for loss of either Bus-Tie or Non-Bus-Tie Breakers regardless of voltage class. The SDT has not presented evidence that the probabilities of failure for breakers within the same substation are significantly different for different voltage classes

Organization	Question 9:	Question 9 Comments:
SMUD	Yes and No	We interpret ?exit breakers? to mean a breaker on an element that comes in from outside the substation. We agree with applying less stringent performance requirements to bus tie breakers above 300 kV. Further, we believe that Non-Consequential Load Loss should be allowed for loss of either Bus-Tie or Non-Bus-Tie Breakers regardless of voltage class. The SDT has not presented evidence that the probabilities of failure for breakers within the same substation are significantly different for different voltage classes
Sierra Pacific Power Company / Nevada Power Company	Yes	We interpret ?exit breakers? to mean a breaker on an element that comes in from outside the substation. We agree with the rationale for the requiring more stringent performance requirement levels for non-bus tie breakers above 300 kV. Further, we believe that Non-Consequential Load Loss should be allowed for loss of either Bus-Tie or Non-Bus-Tie Breakers regardless of voltage class. The SDT has not presented evidence that the probabilities of failure for breakers within the same substation are significantly different for different voltage classes
Black Hills Corporation	Yes and No	We interpret ?exit breakers? to mean a breaker on an element that comes in from outside the substation. We agree with applying less stringent performance requirements to bus tie breakers above 300 kV. Further, we believe that Non-Consequential Load Loss should be allowed for loss of either Bus-Tie or Non-Bus-Tie Breakers regardless of voltage class. The SDT has not presented evidence that the probabilities of failure for breakers within the same substation are significantly different for different voltage classes
Arizona Public Service Co.	No	We do not agree with the rationale for the requiring more stringent performance requirement levels for non-bus tie breakers above 300 kV. The SDT has not presented evidence that the probabilities of failure for breakers within the same substation are significantly different for different voltage classes.
SRP	Yes and No	We interpret ?exit breakers? to mean a breaker on an element that comes in from outside the substation. We agree with applying less stringent performance requirements to bus tie breakers above 300 kV. Further, we believe that Non-Consequential Load Loss should be allowed for loss of either Bus-Tie or Non-Bus-Tie Breakers regardless of voltage class. The SDT has not presented evidence that the probabilities of failure for breakers within the same substation are significantly different for different voltage classes
MidAmerican Energy Company	No	MEC recognizes that the addition of this requirement is an attempt to raise the bar above the existing standards. However, the more stringent non-bus-tie performance criteria should only be adopted if there is sufficient evidence to demonstrate the expected reliability risk (i.e. system impact x probability of occurrence) is high enough to warrant the cost of the system modifications that would be needed to meet the criteria. System modifications that involve the installation of line and substation facilities >300 kV will likely take years and cost tens to hundreds of millions to build. There should be a reliability risk analysis that justifies the application of this performance criteria before it is adopted.

Organization	Question 9:	Question 9 Comments:
Tucson Electric Power Company	Yes and No	We interpret “exit breakers” to mean a breaker on an element that comes in from outside the substation. We agree with applying less stringent performance requirements to bus tie breakers above 300 kV. Further, we believe that Non-Consequential Load Loss should be allowed for loss of either Bus-Tie or Non-Bus-Tie Breakers regardless of voltage class. The SDT has not presented evidence that the probabilities of failure for breakers within the same substation are significantly different for different voltage classes
MRO NERC Standards Review Subcommittee	No	The MRO recognizes that the addition of this requirement is an attempt top raise the bar above the existing standards. However, the more stringent non-bus-tie performance criteria should only be adopted if there is sufficient evidence to demonstrate the expected reliability risk (i.e. system impact x probability of occurrence) is high enough to warrant the cost of the system modifications that would be needed to meet the criteria. System modifications that involve the installation of line and substation facilities >300 kV will likely take years and cost tens to hundreds of millions to build. There should be a reliability risk analysis that justifies the application of this performance criteria before it is adopted.
Modesto Irrigation District	Yes and No	Comments: We interpret “exit breakers” to mean a breaker on an element that come in from outside the substation. We agree with applying less stringent performance requirements to bus tie breakers above 300 kV. Further, we believe that Non-Consequential Load Loss should be allowed for loss of either Bus-Tie or Non-Bus-Tie Breakers regardless of voltage class. The SDT has not presented evidence that the probabilities of failure for breakers within the same substation are significantly different for different voltage classes
Tri-State G&T	Yes and No	We interpret “exit breakers” to mean a breaker on an element that comes in from outside the substation. We agree with applying less stringent performance requirements to bus tie breakers above 300 kV. Further, we believe that Non-Consequential Load Loss should be allowed for loss of either Bus-Tie or Non-Bus-Tie Breakers regardless of voltage class. The SDT has not presented evidence that the probabilities of failure for breakers within the same substation are significantly different for different voltage classes
ColumbiaGrid	Yes	Please explain/define the term “exit breakers”. We agree with the rationale for the requiring more stringent performance requirement levels for non-bus tie breakers above 300 kV. Further, we believe that Non-Consequential Load Loss should be allowed for loss of either Bus-Tie or Non-Bus-Tie Breakers regardless of voltage class. The SDT has not presented evidence that the probabilities of failure for breakers within the same substation are significantly different for different voltage classes.
Southern California Edison	Yes and No	We interpret “exit breakers” to mean a breaker on an element that comes in from outside the substation. We agree with applying less stringent performance requirements to bus tie breakers above 300 kV. Further, we believe that Non-Consequential Load Loss should be allowed for loss of either Bus-Tie or Non-Bus-Tie Breakers regardless of voltage class. The SDT has not presented evidence that the probabilities of failure for breakers within the same substation are significantly

Organization	Question 9:	Question 9 Comments:
		different for different voltage classes
American Transmission Company	No	We recognize that the addition of this requirement is an attempt top raise the bar above the existing standards. However, the more stringent non-bus-tie performance criteria should only be adopted if there is sufficient evidence to demonstrate the expected reliability risk (i.e. system impact x probability of occurance) is high enough to warrant the cost of the system modifications that would be needed to meet the criteria. System modifications that involve the installation of line and substation facilities >300 kV will likely take years and cost tens to hundreds of millions to build. It would be helpful to have a reliability risk analysis that justifies the application of this performance criteria before it is adopted.
Entergy Services, Inc.	No	The probability of an EHV breaker failure is extremely low. Statistically, the probability of an internal breaker failure on any given day in our system is approximately 1 failure every 10,000 days. The probability of a stuck EHV breaker in our system is approximately 1 failure every 21,000 days. While the impact of such events can be severe, the significant cost to remedy such low probability events seems unlikely to pass any reasonable cost/benefit analysis.
US Bureau of Reclamation	No	We interpret “exit breakers” to mean a breaker on an element that come in from outside the substation. We agree with applying less stringent performance requirements to bus tie breakers above 300 kV. Further, we believe that Non-Consequential Load Loss should be allowed for loss of either Bus-Tie or Non-Bus-Tie Breakers regardless of voltage class. The SDT has not presented evidence that the probabilities of failure for breakers within the same substation are significantly different for different voltage classes
Response: The SDT feels the 300 kV and higher systems generally represent an extra-high-voltage (EHV) range that is considered the backbone of many systems in the various Interconnections. Systems operated at this range generally do not directly serve end-use Load customers but rather act as the medium for moving large amounts of power from production to various Load centers which then deliver the power among other Transmission or sub-Transmission Systems to end use customers. It is the desire of NERC and various stakeholders that the backbone of the electric power grid be robust and held to a higher degree of reliability. While a significant number of parties commented negatively about the higher performance requirement for non-Bus-tie Breakers above 300 kV, higher performance requirements are encouraged by FERC Order No. 693 and the majority of the industry has indicated support for the higher performance requirement. Therefore, the SDT has kept the higher performance requirement for non-Bus-tie Breakers above 300 kV.		
Los Angeles Department of Water and Power	No	The arbitrary separation based on voltage class is discriminatory and without any scientific or historical basis. The probability of breaker failure do not increase with voltage class. In fact, breaker failures are seldom heard of at above the 300kV classes. Most breaker failures occur in lower voltage classes such as 230kv, 115kv, etc. where the short circuit current tends to be higher and thus stressing breaker contacts more severely giving rise to breaker failures. Delete any separation of voltage classes.
Response: The SDT believes that the separation for a more stringent requirement at above 300 kV is not “arbitrary”. The SDT feels the 300 kV and higher systems generally represent an extra-high-voltage (EHV) range that is considered the backbone of many systems in the various Interconnections. Systems		

Organization	Question 9:	Question 9 Comments:
operated at this range generally do not directly serve end-use Load customers but rather act as the medium for moving large amounts of power from production to various Load centers which then deliver the power among other Transmission or sub-Transmission Systems to end use customers. It is the desire of NERC and various stakeholders that the backbone of the electric power grid be robust and held to a higher degree of reliability. The SDT believes that the separation above 300 kV is not "discriminatory" in that the standard is intended to be in place for all operators, owners, and users of the Transmission System. Finally, the SDT believes that there is scientific and historical basis in the sense that our representation of the differences between Systems above 300 kV as opposed to below 300 kV are a reasonable review of the uses of the NERC-wide Transmission System including scientific and historical considerations. While a significant number of parties commented negatively about the higher performance requirement for non-Bus-tie Breakers above 300 kV, higher performance requirements are encouraged by FERC Order No. 693 and the majority of the industry has indicated support for the higher performance requirement. Therefore, the SDT has kept the higher performance requirement for non-Bus-tie Breakers above 300 kV.		
National Grid	No	They should have the same performance requirements, however we understand that it is better to encourage bus-tie breakers in some applications than to hold them to the higher standard. Future station designs that need this differential treatment should be discouraged.
Central Maine Power Company	No	They should have the same performance requirements, however we understand that it is better to encourage bus-tie breakers in some applications than to hold them to the higher standard. Future station designs that need this differential treatment should be discouraged.
NSTAR Electric	No	They should have the same performance requirements. The performance standards should not encourage differential treatment for the same equipment.
FirstEnergy Corp.	Yes and No	Fundamentally, from a purest perspective, we believe that all breakers should be treated as having the same probability of failure. However, we understand the SDT's intent and agree to the higher performance expectations for the above 300kV transmission system. We also agree that without the exception provided for bus-tie breakers, some entities may take the approach to simply operate their bus-tie breakers open in order to meet the performance requirements, which would be counterproductive to the improved reliability sought by the team. The alternative would be back to back bus-tie breaker installations which may not even be feasible due to space limitations. On a going forward basis, future station designs at this voltage level should avoid straight bus designs.
ISO New England Inc.	No	They should have the same performance requirements, however we understand that it is better to encourage bus-tie breakers in some applications than to hold them to the higher standard. Future station designs that need this differential treatment should be discouraged.

Organization	Question 9:	Question 9 Comments:
Northeast Utilities	Yes	Northeast Utilities has participated with ISO-NE and NPCC and supports the comments filed by those organizations.
Response: The SDT understands your comment as being supportive of the more stringent requirement for non-Bus-tie Breakers above 300 kV and of a more stringent requirement for Bus-tie Breakers above 300 kV in new substations. While there are a significant number of parties that commented negatively about the higher system performance requirement for non-Bus-tie Breakers above 300 kV, higher performance requirements are encouraged by FERC Order No. 693 and the industry has indicated support for the higher performance requirement for non-Bus-tie Breakers above 300 kV and for a lower performance requirement for Bus-tie Breakers above 300 kV. Therefore, the SDT has not altered the higher system performance requirement for loss of non-Bus-tie Breakers above 300 kV and has not raised the system performance requirement for loss of Bus-tie Breakers above 300 kV for new substations.		
Tenaska, Inc.	Yes and No	Voltage is a questionable criteria for determining whether a breaker's performance requirements should be different. May want to consider a lower voltage cutoff (below 100 or below 200) as lower performance MAY have less of an impact.
Response: The SDT feels the 300 kV and higher systems generally represent an extra-high-voltage (EHV) range that is considered the backbone of many systems in the various Interconnections. Systems operated at this range generally do not directly serve end-use Load customers but rather act as the medium for moving large amounts of power from production to various Load centers which then deliver the power among other Transmission or sub-Transmission Systems to end use customers. It is the desire of NERC and various stakeholders that the backbone of the electric power grid be robust and held to a higher degree of reliability. While a significant number of parties commented negatively about the higher performance requirement for non-Bus-tie Breakers above 300 kV, higher performance requirements are encouraged by FERC Order No. 693 and the majority of the industry has indicated support for the higher performance requirement. Therefore, the SDT has kept the higher performance requirement for non-Bus-tie Breakers above 300 kV and has not raised the system performance requirement for loss of breakers at lower voltages.		
Gainesville Regional Utilities	Yes	Our control area operates at 138 kV. Does everyone think that holding the owners of above 300 kV operating voltage systems to a higher standard really increases the total BES reliability? Does giving the DC systems a pass on some of the requirements really make sense in the world of reliability?
Response: The SDT believes that holding the owners of above 300 kV operating voltage systems to a higher standard increases the total BES reliability. The SDT feels the 300 kV and higher systems generally represent an extra-high-voltage (EHV) range that is considered the backbone of many systems in the various Interconnections. Systems operated at this range generally do not directly serve end-use Load customers but rather act as the medium for moving large amounts of power from production to various Load centers which then deliver the power among other Transmission or sub-Transmission Systems to end use customers. It is the desire of NERC and various stakeholders that the backbone of the electric power grid be robust and held to a higher degree of reliability. While a significant number of parties commented negatively about the higher performance requirement for non-Bus-tie Breakers above 300 kV, higher performance requirements are encouraged by FERC Order No. 693 and the majority of the industry has indicated support for the higher performance requirement. Therefore, the SDT has kept the higher performance requirement for non-Bus-tie Breakers above 300 kV. A number of commenters raised concerns with the less stringent requirement for DC systems. The SDT has removed the less stringent requirements for DC lines.		

Organization	Question 9:	Question 9 Comments:
Progress Energy Florida, Inc.	No	PEF is opposed to distinction between non-Bus-tie breakers and Bus-tie breakers, and furthermore is opposed to the more stringent requirements for both in facilities above 300 kV. One primary reason has already been acknowledged by the SDT, that breakers have the same failure rate no matter the configuration in which they are placed. PEF can see two potential outcomes to the missteps being made regarding the breaker distinction: a) multiple redundancy of breakers for both Bus-tie and non-Bus-tie breaker schemes, which will require tearing down many Substations, acquiring additional property in many cases, and completely rebuilding the Substations to allow room for redundancy of breakers in series with one another; b) choosing to remove existing breakers for which a scenario of non-compliance is imminent, which could potentially pose a reliability risk to the system and possibly result in heightened risk for other Event categories.
Response: The SDT feels the 300 kV and higher systems generally represent an extra-high-voltage (EHV) range that is considered the backbone of many systems in the various Interconnections. Systems operated at this range generally do not directly serve end-use Load customers but rather act as the medium for moving large amounts of power from production to various Load centers which then deliver the power among other Transmission or sub-Transmission Systems to end use customers. It is the desire of NERC and various stakeholders that the backbone of the electric power grid be robust and held to a higher degree of reliability. Cost estimates were requested in other questions and were utilized by the SDT in determining a balance between such costs and reliability. While a significant number of parties commented negatively about the higher performance requirement for non-Bus-tie Breakers above 300 kV, higher performance requirements are encouraged by FERC Order No. 693 and the majority of the industry has indicated support for the higher performance requirement. Therefore, the SDT has kept the higher performance requirement for non-Bus-tie Breakers above 300 kV. The SDT understands your argument about discouraging the use of breakers with a higher breaker failure performance requirement. However, the SDT notes that the Transmission Planner has always needed to plan for breaker failure since it is an event that does occur. Any reliability risk that is created by taking a breaker out of service to respond to this new higher performance requirement should be covered by the responsible entity by conducting system analysis using the new standard. If the reliability risk created by eliminating a breaker results in a failure to meet the performance requirements as outlined in the new standard, then the responsible entity will be required to develop Corrective Action Plans to mitigate the risk.		
Lafayette Utilities System	No	See paragraph (b) in response to Question 15.
Response: Lafayette Utilities System indicated in paragraph b in response to Question 15 that “Adopting less stringent performance requirements for loss of elements below 300 kV may be discriminatory.” Lafayette Utilities System further indicated that this may be because more wholesale customer Load may be served at these lower voltages than Transmission Owner Load. The SDT believes that the separation above 300 kV is not “discriminatory” in that the standard is intended to be in place for all operators, owners, and users of the Transmission System. Further, the SDT disagrees with the notion that it may be discriminatory in that more wholesale Load is served from under 300 kV than the Transmission Owner’s Load. As indicated in the SDT’s responses to the comments of others, the SDT believes that systems operating above 300 kV generally do not directly serve end-use Load customers but rather act as the medium for moving large amounts of power from production to various Load centers which then deliver the power among other Transmission or sub-Transmission Systems to end use customers.		

Organization	Question 9:	Question 9 Comments:
Ameren	Yes and No	Yes: The installation of bus-tie circuit breakers in a straight bus configuration would reduce exposure to a) bus faults or to b) line faults with breaker failure without adding much risk for internal fault in the bus-tie breaker. Those entities that employ a straight bus substation design with bus-tie breakers have recognized that failure of the bus-tie breaker, a very low probability event, would result in the loss of multiple transmission elements and perhaps firm load for a short time until the bus sections can be restored, but bus-tie breakers are an investment worth the risk. Therefore, it is generally agreed that the outage of non-bus-tie circuit breakers should have higher performance requirements than the outage of bus-tie circuit breakers. The SDT should be commended for this change since the previous draft version. No: However, it is not clear that adopting a higher standard of performance for planning events involving transmission facilities 345 kV and above will improve overall system reliability. Some areas of the continent already have n-2 planning criteria, yet these systems have still experienced significant outages including blackouts. It is suggested that a review of the Transmission Availability Data System (TADS) data, when available, should be conducted to help assess what system performance requirements need to be strengthened before arbitrarily determining to "raise the bar" for certain voltage levels and system designs. The industry should not be forced to invest a great deal of capital to meet a new standard requirement when it would not have an immediate impact on system reliability. Some sort of cost/benefit analysis should be performed to justify any change from the present TPL-001 through 004 standard requirements. On the Ameren system, there is no indication that transmission system reliability has been degraded through the use of straight bus configurations. Also, further clarification is required to explain how to drop consequential load without cutting firm transmission service to those affected/outaged customers, and this needs to be added to the notes in Tables 1 and 2.
North Carolina Electric Membership Corp	Yes and No	The installation of bus-tie circuit breakers in a straight bus configuration would reduce exposure to a) bus faults or to b) line faults with breaker failure without adding much risk for internal fault in the bus-tie breaker. Those entities that employ a straight bus substation design with bus-tie breakers have recognized that failure of the bus-tie breaker, a very low probability event, would result in the loss of multiple transmission elements and perhaps firm load for a short time until the bus sections can be restored, but bus-tie breakers are an investment worth the risk. Therefore, it is generally agreed that the outage of non-bus-tie circuit breakers should have higher performance requirements than the outage of bus-tie circuit breakers. The SDT should be commended for this change since the previous draft version. However, it is not clear that adopting a higher standard of performance for planning events involving transmission facilities 345 kV and above will improve overall system reliability. Some areas of the continent already have n-2 planning criteria, yet these systems have still experienced significant outages including blackouts. It is suggested that a review of the Transmission Availability Data System (TADS) data, when available, should be conducted to help assess what system performance requirements need to be strengthened before arbitrarily determining to "raise the bar" for certain voltage levels and system designs. The industry should not be forced to invest a great deal of capital to meet a new standard requirement when it would not have an immediate impact on system reliability. Some sort of cost/benefit analysis should be performed to

Organization	Question 9:	Question 9 Comments:
		justify any change from the present TPL-001 through 004 standard requirements. Also, further clarification is required to explain how to drop consequential load without cutting firm transmission service to those affected/outaged customers, and this needs to be added to the notes in Tables 1 and 2.
SERC Reliability Review Subcommittee and Planning Standards Subcommittee	No	The installation of bus-tie circuit breakers in a straight bus configuration would reduce exposure to a) bus faults or to b) line faults with breaker failure without adding much risk for internal fault in the bus-tie breaker. Those entities that employ a straight bus substation design with bus-tie breakers have recognized that failure of the bus-tie breaker, a very low probability event, would result in the loss of multiple transmission elements and perhaps firm load for a short time until the bus sections can be restored, but bus-tie breakers are an investment worth the risk. Therefore, it is generally agreed that the outage of non-bus-tie circuit breakers should have higher performance requirements than the outage of bus-tie circuit breakers. The SDT should be commended for this change since the previous draft version. However, it is not clear that adopting a higher standard of performance for planning events involving transmission facilities 345 kV and above will improve overall system reliability. Some areas of the continent already have n-2 planning criteria, yet these systems have still experienced significant outages including blackouts. It is suggested that a review of the Transmission Availability Data System (TADS) data, when available, should be conducted to help assess what system performance requirements need to be strengthened before arbitrarily determining to "raise the bar" for certain voltage levels and system designs. The industry should not be forced to invest a great deal of capital to meet a new standard requirement when it would not have an immediate impact on system reliability. Some sort of cost/benefit analysis should be performed to justify any change from the present TPL-001 through 004 standard requirements. Also, further clarification is required to explain how to drop consequential load without cutting firm transmission service to those affected/outaged customers, and this needs to be added to the notes in Tables 1 and 2.

Response: The SDT thanks you for your support with regard to the reason for a less stringent requirement for Bus-tie breakers**.** The SDT feels the 300 kV and higher systems generally represent an extra-high-voltage (EHV) range that is considered the backbone of many systems in the various Interconnections. Systems operated at this range generally do not directly serve end-use Load customers but rather act as the medium for moving large amounts of power from production to various Load centers which then deliver the power among other Transmission or sub-Transmission Systems to end use customers. It is the desire of NERC and various stakeholders that the backbone of the electric power grid be robust and held to a higher degree of reliability. Cost estimates were requested in other questions and were utilized by the SDT in determining a balance between such costs and reliability. While a significant number of parties commented negatively about the higher performance requirement for non-Bus-tie Breakers above 300 kV, higher performance requirements are encouraged by FERC Order No. 693 and the majority of the industry has indicated support for the higher performance requirement. Therefore, the SDT has kept the higher performance requirement for non-Bus-tie Breakers above 300 kV.

The SDT understands your issue with regard to explaining the dropping of consequential Load without cutting Firm Transmission Service to those affected/outaged customers. The SDT has made changes to footnotes 5 and 10 in the table and revised the definition of Consequential Load Loss and Non-Consequential Load Loss to clarify the issue.

Footnote 5 - When the conditions and/or event(s) being studied form the basis for conditional firm transmission service, curtailment of that conditional firm

Organization	Question 9:	Question 9 Comments:
transmission service is allowed. **Footnote #10** – Curtailment of firm transmission service, when coupled with the appropriate re-dispatch of resources obligated to re-dispatch, is allowed both as a System adjustment (as identified in the column titled 'Initial System Conditions') and a corrective action, where it can be demonstrated that Facilities remain within applicable Facility Ratings and those adjustments do not result in the shedding of any firm Load. Where limited options for re-dispatch exist, sensitivities associated with the availability of those resources must be considered. Where Facilities external to the Transmission Planner's planning region are relied upon, Facility Ratings in those regions must be considered. **Consequential Load Loss:** ~~Load that is no longer connected to a source as a result of the event being studied or which is lost as a result of the load's response to the transient conditions of the event (other than through the action of UVLS or UFLS schemes). Although Load which is lost as a result of the Load's response to the transient conditions of the event is considered Consequential Load Loss and is permitted when Consequential Load Loss is allowed, Transmission planning entities are not allowed to rely upon the expectation of such Load loss to meet steady state performance requirements.~~ All Load that is no longer served by any Transmission Facilities as a result of the Facilities being removed from service by a planned Protection System operation to isolate fault conditions. **Non-Consequential Load Loss:** Non-Interruptible Load loss other than Consequential Load Loss, Supplemental Load Loss, and Load Reduction.~~. For example, non-Interruptible Load loss that occurs through manual (operator initiated) or automatic operations such as under-voltage Load shedding, under-frequency Load shedding, or Special Protection Systems would be considered Non-Consequential Load Loss~~ **Load Reduction:** Load that is still connected to the System, but is reduced due to lower voltage conditions following a Planning or Extreme Event. **Supplemental Load Loss:** Load that is disconnected from the network by end-user equipment responding to post-Contingency System conditions.		
Florida Power and Light	No	These provisions made to not discourage the use of bus tie breakers will also not discourage the use of the single breaker/single bus substation arrangement which can have very severe consequence when used on critical BES substations. The TPL-001-1 draft also sets a threshold of higher performance to facilities above 300 kV than previously established in the existing standard. We do not agree that such a threshold is necessary or warranted. Requirements which are more stringent for these facilities may wrongly influence decisions on project alternatives in favor of facilities with less stringent requirements. Related to the more stringent requirements for facilities above 300 kV, FPL also disagrees with the performance requirements contemplated by the proposed draft standard for DC lines. The SDT stated performance requirements for DC lines as currently drafted, is discriminatory as compared to AC line performance, and needs to be addressed. This could be viewed as an exemption for DC lines and violates FERC's comparability principle as it relates to reliability performance. The TPL-001-1 draft sets a lower performance requirement for the loss of a single pole of a DC line than in the existing standard by allowing interruption of firm transfer if the transfer is deemed to be dependent on the outaged line. Firm transfers are also dependent upon AC lines. The proposed standard does not distinguish between asynchronous DC ties and the more common parallel connected DC tie. With an asynchronous DC tie, the transfer is lost with the tie, which is analogous to Consequential Load Loss which is already allowed. With a parallel DC

Organization	Question 9:	Question 9 Comments:
		tie, the transfer will be shifted to the parallel AC system and should have the same performance requirements. We do not agree that such an exception for DC lines is necessary or warranted. The decision in selecting DC vs. AC in transmission lines has traditionally been based on the break-even cost and performance of the two alternatives. The lower performance requirement may wrongly influence decisions on project alternatives in favor of DC facilities because of the less stringent reliability performance requirements.
Response: The SDT understands that the standard as drafted does not discourage the use of straight bus arrangements below 300 kV by allowing interruption of Firm Transmission Service and Non-Consequential Load Loss for all P4 events below 300 kV. The SDT feels the 300 kV and higher systems generally represent an extra-high-voltage (EHV) range that is considered the backbone of many systems in the various Interconnections. Systems operated at this range generally do not directly serve end-use Load customers but rather act as the medium for moving large amounts of power from production to various Load centers which then deliver the power among other Transmission or sub-Transmission Systems to end use customers. It is the desire of NERC and various stakeholders that the backbone of the electric power grid be robust and held to a higher degree of reliability. While a significant number of parties commented negatively about the higher performance requirement for non-Bus-tie Breakers above 300 kV, higher performance requirements are encouraged by FERC Order No. 693 and the majority of the industry has indicated support for the higher performance requirement. Therefore, the SDT has kept the higher performance requirement for non-Bus-tie Breakers above 300 kV. A number of commenters raised concerns with the less stringent requirement for DC systems. The SDT has removed the less stringent requirements for DC lines.		
Tri-State Generatino and Transmission Association, Inc.	No	Performance requirements should depend on the potential loss of load impact of a breaker failure, not the voltage level.
Response: The SDT believes that while theoretically there would be potential merit in a loss of load impact approach to performance requirements for breaker failure; it would result in performance requirements that would be difficult to enforce. For example, such an approach would require completing estimates of the loss of Load for Contingencies for various conditions and then documenting it. The auditor would need to review these estimates as well as the documentation to become convinced that the correct performance requirement was used for each breaker. This review would need to be in addition to any other activity performed by the auditor to ensure compliance with the standard. The SDT feels the 300 kV and higher systems generally represent an extra-high-voltage (EHV) range that is considered the backbone of many systems in the various Interconnections. Systems operated at this range generally do not directly serve end-use Load customers but rather act as the medium for moving large amounts of power from production to various Load centers which then deliver the power among other Transmission or sub-Transmission Systems to end use customers. It is the desire of NERC and various stakeholders that the backbone of the electric power grid be robust and held to a higher degree of reliability. While a significant number of parties commented negatively about the higher performance requirement for non-Bus-tie Breakers above 300 kV, higher performance requirements are encouraged by FERC Order No. 693 and the majority of the industry has indicated support for the higher performance requirement. Therefore, the SDT has kept the higher performance requirement for non-Bus-tie Breakers above 300 kV.		

Organization	Question 9:	Question 9 Comments:
Brazos Electric Power Cooperative, Inc.	Yes	Yes but this seems to add another category of items to provide for in the assessment.
Response: Thank you for your support.		
IESO	No	We hold the view that all breakers can be exposed to the same types of event, i.e., they can have internal faults and can be "stuck" when attempting to open as instructed. As such, there should not be any difference in the expected system performance among them in response to system events, and regardless of the voltage levels. We suggest the SDT to revised Tables 1 and 2 such that their expected performance are identical.
Response: The SDT feels the 300 kV and higher systems generally represent an extra-high-voltage (EHV) range that is considered the backbone of many systems in the various Interconnections. Systems operated at this range generally do not directly serve end-use Load customers but rather act as the medium for moving large amounts of power from production to various Load centers which then deliver the power among other Transmission or sub-Transmission Systems to end use customers. It is the desire of NERC and various stakeholders that the backbone of the electric power grid be robust and held to a higher degree of reliability. While a significant number of parties commented negatively about the higher performance requirement for non-Bus-tie Breakers above 300 kV, higher performance requirements are encouraged by FERC Order No. 693 and the majority of the industry has indicated support for the higher performance requirement. Therefore, the SDT has kept the higher performance requirement for non-Bus-tie Breakers above 300 kV.		
Duke Energy	No	In Table 1, Category P4, Events 1 through 5 addressing a stuck non-bus tie breaker >300kV should allow Interruption of Firm Transmission Service and Non-Consequential Load Loss, because P4 addresses a multiple contingency.
Response: The SDT feels the 300 kV and higher systems generally represent an extra-high-voltage (EHV) range that is considered the backbone of many systems in the various Interconnections. Systems operated at this range generally do not directly serve end-use Load customers but rather act as the medium for moving large amounts of power from production to various Load centers which then deliver the power among other Transmission or sub-Transmission Systems to end use customers. It is the desire of NERC and various stakeholders that the backbone of the electric power grid be robust and held to a higher degree of reliability. While a significant number of parties commented negatively about the higher performance requirement for non-Bus-tie Breakers above 300 kV, higher performance requirements are encouraged by FERC Order No. 693 and the majority of the industry has indicated support for the higher performance requirement. Therefore, the SDT has kept the higher performance requirement for non-Bus-tie Breakers above 300 kV. The SDT recognizes that Duke Energy has indirectly brought up the issue as to how the interruption of Firm Transmission Service relates to the dropping of Load in its comment. The SDT has made changes to footnotes 5 and 10 in the table and revised the definition of Consequential Load Loss and Non-Consequential Load Loss to clarify the issue. **Footnote 5** - When the conditions and/or event(s) being studied form the basis for conditional firm transmission service, curtailment of that conditional firm		

Organization	Question 9:	Question 9 Comments:
transmission service is allowed. **Footnote #10** – Curtailment of firm transmission service, when coupled with the appropriate re-dispatch of resources obligated to re-dispatch, is allowed both as a System adjustment (as identified in the column titled 'Initial System Conditions') and a corrective action, where it can be demonstrated that Facilities remain within applicable Facility Ratings and those adjustments do not result in the shedding of any firm Load. Where limited options for re-dispatch exist, sensitivities associated with the availability of those resources must be considered. Where Facilities external to the Transmission Planner's planning region are relied upon, Facility Ratings in those regions must be considered. **Consequential Load Loss:** ~~Load that is no longer connected to a source as a result of the event being studied or which is lost as a result of the load's response to the transient conditions of the event (other than through the action of UVLS or UFLS schemes). Although Load which is lost as a result of the Load's response to the transient conditions of the event is considered Consequential Load Loss and is permitted when Consequential Load Loss is allowed, Transmission planning entities are not allowed to rely upon the expectation of such Load loss to meet steady state performance requirements.~~ All Load that is no longer served by any Transmission Facilities as a result of the Facilities being removed from service by a planned Protection System operation to isolate fault conditions. **Non-Consequential Load Loss:** Non-Interruptible Load loss other than Consequential Load Loss, Supplemental Load Loss, and Load Reduction.~~. For example, non-Interruptible Load loss that occurs through manual (operator initiated) or automatic operations such as under-voltage Load shedding, under-frequency Load shedding, or Special Protection Systems would be considered Non-Consequential Load Loss~~ **Load Reduction:** Load that is still connected to the System, but is reduced due to lower voltage conditions following a Planning or Extreme Event. **Supplemental Load Loss:** Load that is disconnected from the network by end-user equipment responding to post-Contingency System conditions.		
Orlando Utilities Commission	Yes and No	If they are going to be two classes of equipment with an arbitrary cut off 300 kV is a good cutoff. However I would prefer to see the decision on what is "super BES" and regular "BES" less arbitrary and more reliability driven, such as letting the regions define this cut off just as they define BES in a manner suitable to the design of their regional system.
Response: The SDT believes that the separation for a more stringent requirement above 300 kV is not "arbitrary". The SDT feels the 300 kV and higher systems generally represent an extra-high-voltage (EHV) range that is considered the backbone of many systems in the various Interconnections. Systems operated at this range generally do not directly serve end-use Load customers but rather act as the medium for moving large amounts of power from production to various Load centers which then deliver the power among other Transmission or sub-Transmission Systems to end use customers. It is the desire of NERC and various stakeholders that the backbone of the electric power grid be robust and held to a higher degree of reliability. The SDT is preparing a NERC-wide standard for which a region can submit a regional difference that is justified based upon physical differences in that region and/or to result in a regional difference that is a higher performance requirement than the NERC-wide standard. Therefore, if a region has good cause for a different "cutoff", then the region can submit a regional difference through the NERC standards development process. This regional difference could even be submitted as part of this standards writing effort. However, it should be noted that once the regional difference is approved through the NERC standards development process, then it will be submitted to FERC and other regulatory authorities for approval. While there are a significant number of parties that commented negatively about the higher system performance requirement for non-Bus-tie Breakers above 300		

Organization	Question 9:	Question 9 Comments:
kV, higher performance requirements are encouraged by FERC Order No. 693 and the industry has indicated support for the higher performance requirement. Therefore, the SDT has not altered the higher system performance requirement for loss of non-Bus-tie Breakers above 300 kV.		
BPA Transmission Reliability Program	Yes	In general, performance requirements should be more stringent for higher voltage systems. Therefore, we agree that non-bus-tie breakers above 300 kV should have more stringent requirements.
Dominion - Electric Transmission Planning	Yes	
NPCC	Yes	
City Water, Light & Power - Springfield, Illinois	Yes	
Progress Energy Carolinas	Yes	
JEA	Yes	
Puget Sound Energy, Inc.	Yes	We agree that the failure of non-bus tie breakers above 300 kV to operate can have much higher consequence.
ITC Holdings: ITC, METC, ITC Midwest	Yes	
Tacoma Power	Yes	
Hydro-Quebec TransEnergie	Yes	

Organization	Question 9:	Question 9 Comments:
(HQT)		
Exelon Transmission Planning	Yes	
SERC Dynamics Review Subcommittee	Yes	The logic and the proposal seem reasonable.
Austin Energy	Yes	
Arkansas Electric Coop. Corp.	Yes	
Midwest ISO	Yes	
AEP	Yes	
Lakeland Electric	Yes	
Southern Company Transmission	Yes	
LCRA TSC	Yes	
NERC and Regional Coordination	Yes	Comments: PJM supports the use of bus tie breakers.
E.ON U.S. Transmission Planning	Yes	

Organization	Question 9:	Question 9 Comments:
ERCOT System Planning	Yes	
Oncor Electric Delivery	Yes	NA
Response: Thank you for your response.		

10. The SDT made modifications in this second draft to the requirements relating to sensitivity cases. Do you concur with the modifications reflected in Requirements R2.1.3 and 2.1.4? If not, please state why and/or suggest specific changes.

Summary Consideration:

A number of commenters agreed with the concept of the sensitivity analysis but were concerned that there is a conflict with sensitivities already included in base studies, sensitivity details, explaining why sensitivities were not run and how they affected Corrective Actions. The SDT has made the following changes:

1 – Requirements R2.1.3 and R2.4.3 have been revised to make it clear that "sensitivity case(s) that are intended to stress the System with variations in one or more of the following conditions not already included in the studies shall be included in the Assessment". The standard expects that at least one more of those variances listed in Requirements R2.1.3 and R2.4.3 that have not been integrated into the required studies are at least considered as "sensitivities". In addition, as written, the standard is requiring at a minimum, one case run for each required year for steady state and Stability. The entity may run as many additional cases as it deems appropriate to understand how the System responds to the variances.

The revision also includes the removal of the requirement to explain why a sensitivity was not run since it would be necessary to run the study regardless to provide proof why it was not run. Since these are sensitivities, any and all variances provide some level of information as to how the System responds to such variances.

2 – The sensitivities listed in Requirement R2.1.3 were revised for clarity; however, the SDT did not want to be more prescriptive because of the huge number of possible variances that can occur. It is up to the planning entity to determine which and how much of a variance is appropriate for its studies.

3 – Requirements R2.1.4 and R2.4.4 that require explanation of performing additional sensitivities that are not listed in Requirement R2.1.3 have been deleted.

4 – Requirement R2.6 has been revised for clarity. The entity can use any sensitivity studies it has performed in conjunction with the required current and past studies to develop its Corrective Action Plan.

The following requirements were changed due to industry comments:

R2.1.3 For each of the studies described in Requirements R2.1.1 and ~~Requirement~~ R2.1.2, sensitivity case(s) that are intended to stress the System with ~~sensitivities~~ variations ~~that reflect~~ in one or more of the following conditions not already included in the studies shall be ~~run and documentation of the technical rationale for why each of the conditions was or was not selected shall be supplied~~ included in the Assessment:

R2.4.1 System peak Load for one of the five years. For peak System Load levels, a Load model shall be used which appropriately represents the dynamic behavior of Loads, including consideration of the behavior of induction motor Loads. An aggregate system Load model which represents the overall dynamic behavior of the Load is acceptable.

R2.4.3 For each of the studies described in Requirements R2.4.1 and ~~Requirement~~ R2.4.2, sensitivity case(s) that are intended to stress the System with variations ~~to reflect~~ in one or more of the following conditions not already included in the studies shall be ~~run and documentation of the technical rationale for why each of the conditions was or was not selected shall be supplied~~ included in the Assessment:

R2.7 (now R2.6) For Planning Events shown in Table 1 ~~– Steady State Performance and Table 2 – Stability Performance~~, when the analysis indicates an inability of the System to meet the performance requirements in the tables, the Planning Assessment shall include Corrective Action Plans addressing how the performance requirements will be met. Revisions to the Corrective Action Plans are allowed in subsequent assessments but the System shall continue to meet the performance requirements in the tables. Corrective Action Plans do not need to be developed solely to meet the performance requirements for sensitivities run in accordance with Requirements R2.1.3 and R2.4.3. The Corrective Action Plan shall:

Organization	Question 10:	Question 10 Comments:
Dominion - Electric Transmission Planning	No	We are of the opinion that the proof of a negative that is required for sensitivity cases (i.e. - that the sensitivity cases were more severe for those selected conditions vs. those not tested) is burdensome. The burden of proof lies on the transmission planner.
NPCC	No	If a TP/PC conducts the studies specified in R2.1.1 and R2.1.2 with one or more of the sensitivities which stress the system in the normal course of study are we to assume that fulfills the requirements of R2.1 completely, without additional studies of a less-stressed system?
Hydro-Qu?bec Trans?nergie (HQT)	No	If a TP/PC conducts the studies specified in R2.1.1 and R2.1.2 with one or more of the sensitivities which stress the system in the normal course of study, are we to assume that fulfills the requirements of R2.1 completely, without additional studies of a less-stressed system?
Northeast Utilities	No	Northeast Utilities has participated with ISO-NE and NPCC and supports the comments filed by those organizations.

Response: R2.1.3 and R2.4.3 have been revised to make it clear that "~~s~~ensitivity case(s) that are intended to stress the System with variations in one or more of the following conditions not already included in the studies shall be included in the Assessment".

R2.1.3 For each of the studies described in Requirements R2.1.1 and ~~Requirement~~ R2.1.2, sensitivity case(s) that are intended to stress the System with ~~sensitivities~~ variations ~~that reflect~~ in one or more of the following conditions not already included in the studies shall be ~~run and documentation of the technical rationale for why each of the conditions was or was not selected shall be supplied~~ included in the Assessment:

R2.4.3 For each of the studies described in Requirements R2.4.1 and ~~Requirement~~ R2.4.2, ~~s~~ensitivity case(s) that are intended to stress the System with variations ~~to reflect~~ in one or more of the following conditions not already included in the studies shall be ~~run and documentation of the technical rationale for why each of the conditions was or was not selected shall be supplied~~ included in the Assessment:

Organization	Question 10:	Question 10 Comments:
TVA System Planning	No	We recommend that sensitivity studies not be required for each of the near term years as required in R2.1.3 and R2.1.1. Sensitivities should only be required for only one year in the near term. These sensitivity study requirements are too prescriptive. Many examples of sensitivities are already inherent in the existing requirements. Sensitivity studies of load variation are inherent in the fact that several different study years and conditions are already being required. Outages of reactive sources and generation should already be included in studies of multiple contingencies. The process of planning new generation (system impact studies) will include studies of the future with and without the proposed new equipment. The TP and PC can better select the most appropriate sensitivities for their system.
Response: The standard is requiring at a minimum one case run for each required current year for steady state and Stability. This translates into three cases for steady state. The entity may run as many additional cases as it deems appropriate to understand how the System responds to the variances. Requirements R2.1.3 and R2.4.3 have been revised to make it clear that "~~s~~ensitivity case(s) that are intended to stress the System with variations in one or more of the following conditions not already included in the studies shall be included in the Assessment". The standard expects that at least one more of those variances listed in Requirements R2.1.3 and R2.4.3 that have not been integrated into the required studies are at least considered as "sensitivities". In addition, as written, the standard is requiring at a minimum, one case run for each required current year for steady state and Stability. This translates into three cases for steady state. The entity may run as many additional cases as it deems appropriate to understand how the System responds to the variances. **R2.1.3** For each of the studies described in Requirements R2.1.1 and ~~Requirement~~ R2.1.2, sensitivity case(s) that are intended to stress the System with ~~sensitivities~~ variations ~~that reflect~~ in one or more of the following conditions not already included in the studies shall be ~~run and documentation of the technical rationale for why each of the conditions was or was not selected shall be supplied~~ included in the Assessment: **R2.4.3** For each of the studies described in Requirements R2.4.1 and ~~Requirement~~ R2.4.2, ~~s~~ensitivity case(s) that are intended to stress the System with variations ~~to reflect~~ in one or more of the following conditions not already included in the studies shall be ~~run and documentation of the technical rationale for why each of the conditions was or was not selected shall be supplied~~ included in the Assessment:		
Progress Energy Carolinas	No	These requirements are overly prescriptive. Many examples of sensitivities are already inherent in the existing requirements. Some sensitivity studies are in effect adding an additional level of contingency (N-2 or N-3). Sensitivity studies of load variation are already inherent in the fact that several different study years and conditions are already being required. Outages of reactive sources and generation should already be included in studies of multiple contingencies. The process of planning new generation (system impact studies) will include studies of the future with and without the proposed new equipment. Proper consideration and selection of the most appropriate sensitivities is within the engineering judgment of the Transmission Planner and Planning Coordinator. Singling out and creating sub-requirements for the sensitivities listed in the current TPL draft creates a special focus on these specific sensitivities that may not be warranted for a given system. This could easily lead to an over focus on these particular issues to the detriment of overall system reliability. There should be no enumerated list of required sensitivities. Engineering judgment needs to be permitted.
Response: The SDT believes that sensitivities are necessary and consistent with the requirements of FERC Order 693. The draft standard includes the		

Organization	Question 10:	Question 10 Comments:
requirement, as specified in FERC Order 693, that planning decisions be based on a portfolio of analyses. In section 12.a.ii "Sensitivity studies and critical system conditions", FERC provided direction to consider a full range of variables considered to be significant that need to be assessed and documentation provided that explains the rationale for the selection of variables assessed. In addition to the firm obligation scenario, the portfolio of analyses should be supplemented to include information from sensitivity analysis. The sensitivity analysis should be developed using additional cases that simulate reasonably stressed System conditions. The SDT has included several parameters that can be varied to create the requisite sensitivity case(s). Requirements R2.1.3 and R2.4.3 have been revised to make it clear that "~~s~~ensitivity case(s) that are intended to stress the System with variations in one or more of the following conditions not already included in the studies shall be included in the Assessment". The standard expects that at least one more of those variances listed in Requirements R2.1.3 and R2.4.3 that have not been integrated into the required studies are at least considered as "sensitivities". In addition, as written, the standard is requiring at a minimum, one case run for each required current year for steady state and Stability. This translates into three cases for steady state. The entity may run as many additional cases as it deems appropriate to understand how the System responds to the variances. **R2.1.3** For each of the studies described in Requirements R2.1.1 and ~~Requirement~~ R2.1.2, sensitivity case(s) that are intended to stress the System with ~~sensitivities~~ variations ~~that reflect~~ in one or more of the following conditions not already included in the studies shall be ~~run and documentation of the technical rationale for why each of the conditions was or was not selected shall be supplied~~ included in the Assessment: **R2.4.3** For each of the studies described in Requirements R2.4.1 and ~~Requirement~~ R2.4.2, ~~s~~ensitivity case(s) that are intended to stress the System with variations ~~to reflect~~ in one or more of the following conditions not already included in the studies shall be ~~run and documentation of the technical rationale for why each of the conditions was or was not selected shall be supplied~~ included in the Assessment:		
Los Angeles Department of Water and Power	No	R2.1.3 and 2.1.4 deal with operating scenarios that need to be studied by operating engineers under TOP but is duplicative and serve no useful purpose when performed by planning engineers for the purpose of future expansions. Transmission planning is to ensure that future system is expanded to handle expected system growth. Mixing operating studies in the planning of future system shows a confused perspective on the different roles between operating studies and planning studies. A responsible utility must perform both types of studies but they should not be mixed together or be required under two different standards, the TOP and TPL. The consideration of load variations, different dispatching scenarios, planned or unplanned transmission outages, system expansion not coming in on schedule, etc., are operating issues that should be and must be addressed in operating studies, and the proper place is in TOP, not TPL.
Response: The SDT believes that planners must consider these possible variances and reinforce the System so that when it comes to Real-time operation, the TOP will have a System sufficiently robust to operate around any of the conditions. Commenters generally agree that these are the responsibility of planning.		
Transmission Agency of Northern	Yes and No	We generally agree with the concept of the sensitivity analysis since this is standard practice in understanding system performance risks and the effectiveness of improvements. It is ambiguous from a criteria perspective, however, what role is played by the sensitivities in developing Corrective Action Plans and what risks are created by misapplication of the intent of such sensitivity analyses. Clarification of the following is needed along with examples of applicable sensitivities and how

Organization	Question 10:	Question 10 Comments:
California		these would be factored into Corrective Action Plans. If a Transmission Planner performs studies on the ?base case? of which the loads represented are 1 in 10 year adverse weather condition (10% chance that the actual load may exceed the projected load), does this constitute a sensitivity analysis. If so, will the Transmission Planner have to then perform additional less stringent studies at the load levels representing 1 in 2 year adverse weather conditions (50% chance that the actual load may exceed the projected load) to demonstrate compliance? R2.1.4 requires explanation of performing additional sensitivities that are not listed in the R2.1.3. This would discourage entities from performing additional sensitivities. In addition, in the above example, the Transmission Planners should not have to explain why they feel that this higher level (1 in 10 year adverse weather) of load is the "base case" condition. R2.7 also states that "Corrective Action Plans do not need to be developed solely to meet the performance requirements for sensitivities". Consider a Transmission Planner that has built transmission based on the 1 in 10 year adverse weather load assumed in the ?base case?, will the judgment of the Transmission Planner be then questioned because the "base case" used is equivalent to a sensitivity case and not a 1 in 2 year adverse weather base case?
Pacific Gas and Electric Co.	Yes and No	We generally agree with the concept of the sensitivity analysis since this is standard practice in understanding system performance risks and the effectiveness of improvements. It is ambiguous from a criteria perspective, however, what role is played by the sensitivities in developing Corrective Action Plans and what risks are created by misapplication of the intent of such sensitivity analyses. Clarification of the following is needed along with examples of applicable sensitivities and how these would be factored into Corrective Action Plans. If a Transmission Planner performs studies on the ?base case? of which the loads represented are 1 in 10 year adverse weather condition (10% chance that the actual load may exceed the projected load), does this constitute a sensitivity analysis. If so, will the Transmission Planner have to then perform additional less stringent studies at the load levels representing 1 in 2 year adverse weather conditions (50% chance that the actual load may exceed the projected load) to demonstrate compliance? R2.1.4 requires explanation of performing additional sensitivities that are not listed in the R2.1.3. This would discourage entities from performing additional sensitivities. In addition, in the above example, the Transmission Planners should not have to explain why they feel that this higher level (1 in 10 year adverse weather) of load is the "base case" condition. R2.7 also states that ?Corrective Action Plans do not need to be developed solely to meet the performance requirements for sensitivities?. Consider a Transmission Planner that has built transmission based on the 1 in 10 year adverse weather load assumed in the ?base case?, will the judgment of the Transmission Planner be then questioned because the "base case" used is equivalent to a sensitivity case and not a 1 in 2 year adverse weather base case?
Public Service Company of New Mexico	Yes and No	We generally agree with the concept of the sensitivity analysis since this is standard practice in understanding system performance risks and the effectiveness of improvements. It is ambiguous from a criteria perspective, however, what role is played by the sensitivities in developing Corrective Action Plans and what risks are created by misapplication of the intent of such sensitivity analyses. Clarification of the following is needed along with examples of applicable sensitivities and how

Organization	Question 10:	Question 10 Comments:
		these would be factored into Corrective Action Plans. If a Transmission Planner performs studies on the ?base case? of which the loads represented are 1 in 10 year adverse weather condition (10% chance that the actual load may exceed the projected load), does this constitute a sensitivity analysis. If so, will the Transmission Planner have to then perform additional less stringent studies at the load levels representing 1 in 2 year adverse weather conditions (50% chance that the actual load may exceed the projected load) to demonstrate compliance? R2.1.4 requires explanation of performing additional sensitivities that are not listed in the R2.1.3. This would discourage entities from performing additional sensitivities. In addition, in the above example, the Transmission Planners should not have to explain why they feel that this higher level (1 in 10 year adverse weather) of load is the "base case" condition. R2.7 also states that ?Corrective Action Plans do not need to be developed solely to meet the performance requirements for sensitivities?. Consider a Transmission Planner that has built transmission based on the 1 in 10 year adverse weather load assumed in the "base case", will the judgment of the Transmission Planner be then questioned because the "base case" used is equivalent to a sensitivity case and not a 1 in 2 year adverse weather base case?
PacifiCorp	Yes and No	We generally agree with the concept of the sensitivity analysis. However, clarifications of the following is needed: For example, if a TP performs studies on the "base case" of which the loads are 90/10, does this constitute a sensitivity analysis. If so, will the TP have to then perform additional less stringent studies at the 50/50 load level to demonstrate compliance? R2.1.4 requires explanation of performing additional sensitivities that are not listed in the R2.1.3. This would discourage entities from performing additional sensitivities. In addition, in the above example, the TP should not have to explain why they feel that this higher level (90/10) of load is the "base case" condition.? R2.7 also states that Corrective Action Plans do not need to be developed solely to meet the performance requirements for sensitivities?. Consider a TP that has built transmission based on the 90/10 load assumed in the "base case", will the judgment of the TP be then questioned because of it's sensitivity "base case" and not a 50/50 base case?
Puget Sound Energy, Inc.	Yes and No	We generally agree with the concept of the sensitivity analysis since this is standard practice in understanding system performance risks and the effectiveness of improvements. It is ambiguous from a criteria perspective, however, what role is played by the sensitivities in developing Corrective Action Plans and what risks are created by misapplication of the intent of such sensitivity analyses. Clarification of the following is needed along with examples of applicable sensitivities and how these would be factored into Corrective Action Plans. If a Transmission Planner performs studies on the "base case" of which the loads represented are 1 in 10 year adverse weather condition (10% chance that the actual load may exceed the projected load), does this constitute a sensitivity analysis. If so, will the Transmission Planner have to then perform additional less stringent studies at the load levels representing 1 in 2 year adverse weather conditions (50% chance that the actual load may exceed the projected load) to demonstrate compliance?

Organization	Question 10:	Question 10 Comments:
		R2.1.4 requires explanation of performing additional sensitivities that are not listed in the R2.1.3. This would discourage entities from performing additional sensitivities. In addition, in the above example, the Transmission Planners should not have to explain why they feel that this higher level (1 in 10 year adverse weather) of load is the "base case" condition. R2.7 also states that "Corrective Action Plans do not need to be developed solely to meet the performance requirements for sensitivities". Consider a Transmission Planner that has built transmission based on the 1 in 10 year adverse weather load assumed in the "base case", will the judgment of the Transmission Planner be then questioned because the "base case" used is equivalent to a sensitivity case and not a 1 in 2 year adverse weather base case?
Idaho Power Company	Yes and No	We generally agree with the concept of the sensitivity analysis since this is standard practice in understanding system performance risks and the effectiveness of improvements. It is ambiguous from a criteria perspective, however, what role is played by the sensitivities in developing Corrective Action Plans and what risks are created by misapplication of the intent of such sensitivity analyses. Clarification of the following is needed along with examples of applicable sensitivities and how these would be factored into Corrective Action Plans.If a Transmission Planner performs studies on the "base case" of which the loads represented are 1 in 10 year adverse weather condition (10% chance that the actual load may exceed the projected load), does this constitute a sensitivity analysis. If so, will the Transmission Planner have to then perform additional less stringent studies at the load levels representing 1 in 2 year adverse weather conditions (50% chance that the actual load may exceed the projected load) to demonstrate compliance? R2.1.4 requires explanation of performing additional sensitivities that are not listed in the R2.1.3. This would discourage entities from performing additional sensitivities. In addition, in the above example, the Transmission Planners should not have to explain why they feel that this higher level (1 in 10 year adverse weather) of load is the "base case" condition. R2.7 also states that ?Corrective Action Plans do not need to be developed solely to meet the performance requirements for sensitivities?. Consider a Transmission Planner that has built transmission based on the 1 in 10 year adverse weather load assumed in the ?base case?, will the judgment of the Transmission Planner be then questioned because ?base case? used is equivalent to a sensitivity case and not a 1 in 2 year adverse weather base case?
Sierra Pacific Power Company / Nevada Power Company	Yes and No	We generally agree with the concept of the sensitivity analysis since this is standard practice in understanding system performance risks and the effectiveness of improvements. It is ambiguous from a criteria perspective, however, what role is played by the sensitivities in developing Corrective Action Plans and what risks are created by misapplication of the intent of such sensitivity analyses. Clarification of the following is needed along with examples of applicable sensitivities and how these would be factored into Corrective Action Plans. If a Transmission Planner performs studies on the ?base case? of which the loads represented are 1 in 10 year adverse weather condition (10% chance that the actual load may exceed the projected load), does this constitute a sensitivity analysis. If so, will the Transmission Planner have to then perform additional less stringent studies at the load levels representing 1 in 2 year adverse weather conditions (50% chance that the actual load may exceed the projected load) to demonstrate compliance? R2.1.4 requires explanation of performing additional sensitivities that are not listed in the R2.1.3. This would discourage

Organization	Question 10:	Question 10 Comments:
		entities from performing additional sensitivities. In addition, in the above example, the Transmission Planners should not have to explain why they feel that this higher level (1 in 10 year adverse weather) of load is the ?base case? condition. R2.7 also states that ?Corrective Action Plans do not need to be developed solely to meet the performance requirements for sensitivities?. Consider a Transmission Planner that has built transmission based on the 1 in 10 year adverse weather load assumed in the ?base case?, will the judgment of the Transmission Planner be then questioned because ?base case? used is equivalent to a sensitivity case and not a 1 in 2 year adverse weather base case?
Black Hills Corporation	Yes and No	We generally agree with the concept of the sensitivity analysis since this is standard practice in understanding system performance risks and the effectiveness of improvements. It is ambiguous from a criteria perspective, however, what role is played by the sensitivities in developing Corrective Action Plans and what risks are created by misapplication of the intent of such sensitivity analyses. Clarification of the following is needed along with examples of applicable sensitivities and how these would be factored into Corrective Action Plans. If a Transmission Planner performs studies on the ?base case? of which the loads represented are 1 in 10 year adverse weather condition (10% chance that the actual load may exceed the projected load), does this constitute a sensitivity analysis. If so, will the Transmission Planner have to then perform additional less stringent studies at the load levels representing 1 in 2 year adverse weather conditions (50% chance that the actual load may exceed the projected load) to demonstrate compliance? R2.1.4 requires explanation of performing additional sensitivities that are not listed in the R2.1.3. This would discourage entities from performing additional sensitivities. In addition, in the above example, the Transmission Planners should not have to explain why they feel that this higher level (1 in 10 year adverse weather) of load is the ?base case? condition. R2.7 also states that ?Corrective Action Plans do not need to be developed solely to meet the performance requirements for sensitivities?. Consider a Transmission Planner that has built transmission based on the 1 in 10 year adverse weather load assumed in the ?base case?, will the judgment of the Transmission Planner be then questioned because the “base case” used is equivalent to a sensitivity case and not a 1 in 2 year adverse weather base case?
Arizona Public Service Co.	Yes and No	We generally agrees with the concept of the sensitivity analysis. However, clarifications of the following is needed: For example, if a TP performs studies on the ?base case? of which the loads are 90/10, does this constitute a sensitivity analysis. If so, will the TP have to then perform additional less stringent studies at the 50/50 load level to demonstrate compliance? R2.1.4 requires explanation of performing additional sensitivities that are not listed in the R2.1.3. This would discourage entities from performing additional sensitivities. In addition, in the above example, the TP should not have to explain why they feel that this higher level (90/10) of load is the “base case” condition. R2.7 also states that

Organization	Question 10:	Question 10 Comments:
		Corrective Action Plans do not need to be developed solely to meet the performance requirements for sensitivities?. Consider a TP that has built transmission based on the 90/10 load assumed in the ?base case?, will the judgment of the TP be then questioned because of it's sensitivity "base case" and not a 50/50 base case?
SRP	Yes and No	We generally agree with the concept of the sensitivity analysis since this is standard practice in understanding system performance risks and the effectiveness of improvements. It is ambiguous from a criteria perspective, however, what role is played by the sensitivities in developing Corrective Action Plans and what risks are created by misapplication of the intent of such sensitivity analyses. Clarification of the following is needed along with examples of applicable sensitivities and how these would be factored into Corrective Action Plans. If a Transmission Planner performs studies on the ?base case? of which the loads represented are 1 in 10 year adverse weather condition (10% chance that the actual load may exceed the projected load), does this constitute a sensitivity analysis. If so, will the Transmission Planner have to then perform additional less stringent studies at the load levels representing 1 in 2 year adverse weather conditions (50% chance that the actual load may exceed the projected load) to demonstrate compliance? R2.1.4 requires explanation of performing additional sensitivities that are not listed in the R2.1.3. This would discourage entities from performing additional sensitivities. In addition, in the above example, the Transmission Planners should not have to explain why they feel that this higher level (1 in 10 year adverse weather) of load is the ?base case? condition. R2.7 also states that ?Corrective Action Plans do not need to be developed solely to meet the performance requirements for sensitivities?. Consider a Transmission Planner that has built transmission based on the 1 in 10 year adverse weather load assumed in the ?base case?, will the judgment of the Transmission Planner be then questioned because the "base case" used is equivalent to a sensitivity case and not a 1 in 2 year adverse weather base case?
Tucson Electric Power Company	Yes and No	We generally agree with the concept of the sensitivity analysis since this is standard practice in understanding system performance risks and the effectiveness of improvements. It is ambiguous from a criteria perspective, however, what role is played by the sensitivities in developing Corrective Action Plans and what risks are created by misapplication of the intent of such sensitivity analyses. Clarification of the following is needed along with examples of applicable sensitivities and how these would be factored into Corrective Action Plans. If a Transmission Planner performs studies on the ?base case? of which the loads represented are 1 in 10 year adverse weather condition (10% chance that the actual load may exceed the projected load), does this constitute a sensitivity analysis. If so, will the Transmission Planner have to then perform additional less stringent studies at the load levels representing 1 in 2 year adverse weather conditions (50% chance that the actual load may exceed the projected load) to demonstrate compliance? R2.1.4 requires explanation of performing additional sensitivities that are not listed in the R2.1.3. This would discourage entities from performing additional sensitivities. In addition, in the above example, the Transmission Planners should not have to explain why they feel that this higher level (1 in 10 year adverse weather) of load is the ?base case? condition. R2.7 also states that ?Corrective Action Plans do not need to be developed solely to meet the performance requirements for

Organization	Question 10:	Question 10 Comments:
		sensitivities?. Consider a Transmission Planner that has built transmission based on the 1 in 10 year adverse weather load assumed in the ?base case?, will the judgment of the Transmission Planner be then questioned because the “base case” used is equivalent to a sensitivity case and not a 1 in 2 year adverse weather base case?
Modesto Irrigation District	Yes and No	We generally agree with the concept of the sensitivity analysis since this is a standard practice in understanding system performance risks and the effectiveness of improvements. It is ambiguous from a criteria perspective, however, what role is played by the sensitivities in developing Corrective Action Plans and what risks are created by misapplication of the intent of such sensitivity analyses. Clarification of the following is needed along with examples of applicable sensitivities and how these would be factored into Corrective Action Plans. If a Transmission Planner performs studies on the “base case” of which the loads represented are 1 in 10 year adverse weather condition (10% chance that the actual load may exceed the projected load), does this constitute a sensitivity analysis. If so, will the Transmission Planner have to then perform additional less stringent studies at the load levels representing 1 in 2 year adverse weather conditions (50% chance that the actual load may exceed the projected load) to demonstrate compliance? R2.1.4 requires explanation of performing additional sensitivities that are not listed in the R2.1.3. This would discourage entities from performing additional sensitivities. In addition, in the above example, the Transmission Planners should not have to explain why they feel that this higher level (1 in 10 year adverse weather) of load is the “base case” condition. R2.7 also states that ?Corrective Action Plans do not need to be developed solely to meet the performance requirements for sensitivities?. Consider a Transmission Planner that has built transmission based on the 1 in 10 year adverse weather load assumed in the “base case”, will the judgment of the Transmission Planner be then questioned because the “base case” used is equivalent to a sensitivity case and not a 1 in 2 year adverse weather base case?
Tri-State G&T	Yes and No	e generally agree with the concept of the sensitivity analysis since this is standard practice in understanding system performance risks and the effectiveness of improvements. It is ambiguous from a criteria perspective, however, what role is played by the sensitivities in developing Corrective Action Plans and what risks are created by misapplication of the intent of such sensitivity analyses. Clarification of the following is needed along with examples of applicable sensitivities and how these would be factored into Corrective Action Plans. If a Transmission Planner performs studies on the ?base case? of which the loads represented are 1 in 10 year adverse weather condition (10% chance that the actual load may exceed the projected load), does this constitute a sensitivity analysis. If so, will the Transmission Planner have to then perform additional less stringent studies at the load levels representing 1 in 2 year adverse weather conditions (50% chance that the actual load may exceed the projected load) to demonstrate compliance? R2.1.4 requires explanation of performing additional sensitivities that are not listed in the R2.1.3. This would discourage entities from performing additional sensitivities. In addition, in the above example, the Transmission Planners should not have to explain why they feel that this higher level (1 in 10 year adverse weather) of load is the “base case” condition. R2.7 also states that ?Corrective Action Plans do not need to be developed solely to meet the performance requirements for

Organization	Question 10:	Question 10 Comments:
		sensitivities?. Consider a Transmission Planner that has built transmission based on the 1 in 10 year adverse weather load assumed in the "base case", will the judgment of the Transmission Planner be then questioned because the "base case" used is equivalent to a sensitivity case and not a 1 in 2 year adverse weather base case?
Southern California Edison	Yes and No	We generally agree with the concept of the sensitivity analysis since this is standard practice in understanding system performance risks and the effectiveness of improvements. It is ambiguous from a criteria perspective, however, what role is played by the sensitivities in developing Corrective Action Plans and what risks are created by misapplication of the intent of such sensitivity analyses. Clarification of the following is needed along with examples of applicable sensitivities and how these would be factored into Corrective Action Plans .If a Transmission Planner performs studies on the ?base case? of which the loads represented are 1 in 10 year adverse weather condition (10% chance that the actual load may exceed the projected load), does this constitute a sensitivity analysis. If so, will the Transmission Planner have to then perform additional less stringent studies at the load levels representing 1 in 2 year adverse weather conditions (50% chance that the actual load may exceed the projected load) to demonstrate compliance? R2.1.4 requires explanation of performing additional sensitivities that are not listed in the R2.1.3. This would discourage entities from performing additional sensitivities. In addition, in the above example, the Transmission Planners should not have to explain why they feel that this higher level (1 in 10 year adverse weather) of load is the "base case" condition. R2.7 also states that ?Corrective Action Plans do not need to be developed solely to meet the performance requirements for sensitivities?. Consider a Transmission Planner that has built transmission based on the 1 in 10 year adverse weather load assumed in the "base case", will the judgment of the Transmission Planner be then questioned because the "base case" used is equivalent to a sensitivity case and not a 1 in 2 year adverse weather base case?
Alberta Electric System Operator	No	We generally agree with the concept of the sensitivity analysis since this is standard practice in understanding system performance risks and the effectiveness of improvements. It is ambiguous from a criteria perspective, however, what role is played by the sensitivities in developing Corrective Action Plans and what risks are created by misapplication of the intent of such sensitivity analyses. Clarification of the following is needed along with examples of applicable sensitivities and how these would be factored into Corrective Action Plans. If a Transmission Planner performs studies on the ?base case? of which the loads represented are 1 in 10 year adverse weather condition (10% chance that the actual load may exceed the projected load), does this constitute a sensitivity analysis. If so, will the Transmission Planner have to then perform additional less stringent studies at the load levels representing 1 in 2 year adverse weather conditions (50% chance that the actual load may exceed the projected load) to demonstrate compliance? R2.1.4 requires explanation of performing additional sensitivities that are not listed in the R2.1.3. This would discourage entities from performing additional sensitivities. In addition, in the above example, the Transmission Planners should not have to explain why they feel that this higher level (1 in 10 year adverse weather) of load is the ?base case? condition. R2.7 also states that ?Corrective Action Plans do not need to be developed solely to meet the performance requirements for

Organization	Question 10:	Question 10 Comments:
		sensitivities?. Consider a Transmission Planner that has built transmission based on the 1 in 10 year adverse weather load assumed in the "base case", will the judgment of the Transmission Planner be then questioned because the "base case" used is equivalent to a sensitivity case and not a 1 in 2 year adverse weather base case?
US Bureau of Reclamation	No	We generally agree with the concept of the sensitivity analysis since this is standard practice in understanding system performance risks and the effectiveness of improvements. It is ambiguous from a criteria perspective, however, what role is played by the sensitivities in developing Corrective Action Plans and what risks are created by misapplication of the intent of such sensitivity analyses. Clarification of the following is needed along with examples of applicable sensitivities and how these would be factored into Corrective Action Plans. If a Transmission Planner performs studies on the ?base case? of which the loads represented are 1 in 10 year adverse weather condition (10% chance that the actual load may exceed the projected load), does this constitute a sensitivity analysis. If so, will the Transmission Planner have to then perform additional less stringent studies at the load levels representing 1 in 2 year adverse weather conditions (50% chance that the actual load may exceed the projected load) to demonstrate compliance? R2.1.4 requires explanation of performing additional sensitivities that are not listed in the R2.1.3. This would discourage entities from performing additional sensitivities. In addition, in the above example, the Transmission Planners should not have to explain Comment Form for 2nd Draft of Standard TPL-001-1Assess Transmission Future Needs (Project 2006-02) Page 9 of 12 why they feel that this higher level (1 in 10 year adverse weather) of load is the ?base case? condition. R2.7 also states that "Corrective Action Plans do not need to be developed solely to meet the performance requirements for sensitivities". Consider a Transmission Planner that has built transmission based on the 1 in 10 year adverse weather load assumed in the ?base case?, will the judgment of the Transmission Planner be then questioned because the ?base case? used is equivalent to a sensitivity case and not a 1 in 2 year adverse weather base case?

Response: Requirements R2.1.3 and R2.4.3 have been revised to make it clear that "~~s~~ensitivity case(s) that are intended to stress the System with variations in one or more of the following conditions not already included in the studies shall be included in the Assessment". The standard expects that at least one more of those variances listed in Requirements R2.1.3 and R2.4.3 that have not been integrated into the required studies are at least considered as "sensitivities".

R2.1.3 For each of the studies described in Requirements R2.1.1 and ~~Requirement~~ R2.1.2, sensitivity case(s) that are intended to stress the System with ~~sensitivities~~ variations ~~that reflect~~ in one or more of the following conditions not already included in the studies shall be ~~run and documentation of the technical rationale for why each of the conditions was or was not selected shall be supplied~~ included in the Assessment:

R2.4.3 For each of the studies described in Requirements R2.4.1 and ~~Requirement~~ R2.4.2, ~~s~~ensitivity case(s) that are intended to stress the System with variations ~~to reflect~~ in one or more of the following conditions not already included in the studies shall be ~~run and documentation of the technical rationale for why each of the conditions was or was not selected shall be supplied~~ included in the Assessment:

The SDT agrees and has deleted Requirement R2.1.4.

Requirement R2.7 (now R2.6) has been revised for clarity. The entity can use any sensitivities studies it has performed in conjunction with the required current and

Organization	Question 10:	Question 10 Comments:
past studies to develop its Corrective Action Plan. **R2.6** For Planning Events shown in Table 1 ~~– Steady State Performance and Table 2 – Stability Performance~~, when the analysis indicates an inability of the System to meet the performance requirements in the tables, the Planning Assessment shall include Corrective Action Plans addressing how the performance requirements will be met. Revisions to the Corrective Action Plans are allowed in subsequent assessments but the System shall continue to meet the performance requirements in the tables. Corrective Action Plans do not need to be developed solely to meet the performance requirements for sensitivities run in accordance with Requirements R2.1.3 and R2.4.3. The Corrective Action Plan shall:		
National Grid	No	a. With respect to R2.1.3., delete "... that Stress the System with sensitivities ...". b. R2.1.3 should be revised to clarify that if a TP/PC conducts the studies specified in R2.1.1 and R2.1.2 with one or more of the sensitivities which stress the system in the normal course of study, then additional studies of a less-stressed system are not required. c. The intention of Paragraph R2.1.4 is unclear and appears to be unnecessary; therefore, it should be removed.
Response: a. and b. Requirements R2.1.3 and R2.4.3 have been revised to make it clear that "sensitivity case(s) that are intended to stress the System with variations in one or more of the following conditions not already included in the studies shall be included in the Assessment". **R2.1.3** For each of the studies described in Requirements R2.1.1 and ~~Requirement~~ R2.1.2, sensitivity case(s) that are intended to stress the System with ~~sensitivities~~ variations ~~that reflect~~ in one or more of the following conditions not already included in the studies shall be ~~run and documentation of the technical rationale for why each of the conditions was or was not selected shall be supplied~~ included in the Assessment: **R2.4.3** For each of the studies described in Requirements R2.4.1 and ~~Requirement~~ R2.4.2, ~~s~~ensitivity case(s) that are intended to stress the System with variations ~~to reflect~~ in one or more of the following conditions not already included in the studies shall be ~~run and documentation of the technical rationale for why each of the conditions was or was not selected shall be supplied~~ included in the Assessment: c. Requirement R2.1.4 has been deleted.		
Gainesville Regional Utilities	No	If the RRO or the larger neighboring utilities agree, See Comment 1, it should be unnecessary for the smaller utility to performance any sensitivities except for those agreed to and performed by the RRO level. If the smaller utility has any of their elements that create issues in these regionally conducted sensitivities, then they could be accountable for providing potential remedies (most sensitivities do not necessarily require a remedy or project, per say). The variety of sensitivities suggested to be performed for a smaller utility probably will not add any reliability to the regional BES while the effort will take up a very large amount of the smaller utilities' manpower resources.
Response: All planning entities need to follow the same set of requirements. Smaller entities may not have the resources to perform some studies but can depend on and point to studies run by larger surrounding entities to satisfy their planning requirements.		

Organization	Question 10:	Question 10 Comments:
JEA	Yes and No	Will stress JEA resources to provide auditable evidence depending on the final measure applied.

Response: The SDT believes that sensitivities are necessary and consistent with the requirements in FERC Order 693. The draft standard includes the requirement, as specified in FERC Order 693, that planning decisions be based on a portfolio of analyses. In section 12.a.ii "Sensitivity studies and critical system conditions" FERC provided direction to consider a full range of variables considered to be significant that need to be assessed and documentation provided that explains the rationale for the selection of variables assessed.

The standard is requiring at a minimum one case run for each required current year for steady state and Stability. This translates into three cases for steady state. The entity may run as many additional cases as it deems appropriate to understand how the system responds to the variances.

ITC Holdings: ITC, METC, ITC Midwest	No	While we appreciate that the addition of sensitivity studies is commendable and agree with 2.1.3 and 2.1.4 per se, the later clarification in R2.7 that "Corrective Action Plans do not need to be developed solely to meet the performance requirements for sensitivities" negates project justification (to many) based on sensitivity studies. Explaining as per R2.4.3 the reasons why you did or did not run a sensitivity study is less important, in many respects, than why you did or did not provide a Corrective Action Plan for performance failures observed in sensitivity studies. I.e., the study is the "cart" and the CAP is the "horse". Hence, at a minimum some form of Corrective Action Plan should be required.
PPL EnergyPlus	Yes and No	All of the sensitivity requirements should be structured to keep sensitivities from forcing un-needed construction. R2.1.3 & 4 are a good step but the point about planning around the base case might be made even more forcefully.

Response: Requirements R2.1.3 and R2.4.3 have been revised to make it clear that "~~s~~ensitivity case(s) that are intended to stress the System with variations in one or more of the following conditions not already included in the studies shall be included in the Assessment". The standard expects that at least one more of those variances listed in Requirements R2.1.3 and R2.4.3 that have not been integrated into the required studies are at least considered as "sensitivities". Embedding the sensitivity in the "base case" will result in a CAP that addresses the particular "sensitivities".

R2.1.3 For each of the studies described in Requirements R2.1.1 and ~~Requirement~~ R2.1.2, sensitivity case(s) that are intended to stress the System with ~~sensitivities~~ variations ~~that reflect~~ in one or more of the following conditions not already included in the studies shall be ~~run and documentation of the technical rationale for why each of the conditions was or was not selected shall be supplied~~ included in the Assessment:

R2.4.3 For each of the studies described in Requirements R2.4.1 and ~~Requirement~~ R2.4.2, ~~s~~ensitivity case(s) that are intended to stress the System with variations ~~to reflect~~ in one or more of the following conditions not already included in the studies shall be ~~run and documentation of the technical rationale for why each of the conditions was or was not selected shall be supplied~~ included in the Assessment:

In addition, Requirement R2.7 (now R2.6) has been revised for clarity. The entity can use any sensitivities studies it has performed in conjunction with the required current and past studies to develop its Corrective Action Plan.

R2.6 For Planning Events shown in Table 1 ~~– Steady State Performance and Table 2 – Stability Performance~~, when the analysis indicates an inability of the System to meet the performance requirements in the tables, the Planning Assessment shall include Corrective Action Plans addressing how the performance

Organization	Question 10:	Question 10 Comments:
requirements will be met. Revisions to the Corrective Action Plans are allowed in subsequent assessments but the System shall continue to meet the performance requirements in the tables. Corrective Action Plans do not need to be developed solely to meet the performance requirements for sensitivities run in accordance with Requirements R2.1.3 and R2.4.3. The Corrective Action Plan shall:		
SMUD	Yes and No	We agree. However, the conditions listed in R3.5.1, R3.5.2 and R3.5.3 are applicable to the overall TPL Standard. Their specific listing in R3.5 gives the impression that these Requirements are only applied to R3.5 and not to the other Requirements in this Standard. In other words, are there any Requirements in this Standard that R3.5.1, R3.5.2 and R3.5.3 do not apply to? Therefore, we suggest TPL-001-1 be silent on this issue and move R3.5.1 through R3.5.3, (and the equivalent in the stability study R5.4.3.1 through R5.4.3.3) to a Requirement applicable to Assessment studies in general, such as the bullet points in the Performance Tables .Added Reference 3.5.1: In cases where an SPS is deployed to reduce thermal overloads such that flows are brought within established facility ratings, but, for a short duration (seconds) until it is fully executed, the facility flows exceed the established rating, is that considered a violation or an acceptable engineering judgment that facilities are judiciously being brought to operate within ratings? Or, should the facility owner ensure establishment of a documented rating even for the short duration of seconds? Q10:TSS response: We generally agree with the concept of the sensitivity analysis since this is standard practice in understanding system performance risks and the effectiveness of improvements. It is ambiguous from a criteria perspective, however, what role is played by the sensitivities in developing Corrective Action Plans and what risks are created by misapplication of the intent of such sensitivity analyses. Clarification of the following is needed along with examples of applicable sensitivities and how these would be factored into Corrective Action Plans. If a Transmission Planner performs studies on the ?base case? of which the loads represented are 1 in 10 year adverse weather condition (10% chance that the actual load may exceed the projected load), does this constitute a sensitivity analysis. If so, will the Transmission Planner have to then perform additional less stringent studies at the load levels representing 1 in 2 year adverse weather conditions (50% chance that the actual load may exceed the projected load) to demonstrate compliance? R2.1.4 requires explanation of performing additional sensitivities that are not listed in the R2.1.3. This would discourage entities from performing additional sensitivities. In addition, in the above example, the Transmission Planners should not have to explain why they feel that this higher level (1 in 10 year adverse weather) of load is the “base case” condition. R2.7 also states that ?Corrective Action Plans do not need to be developed solely to meet the performance requirements for sensitivities?. Consider a Transmission Planner that has built transmission based on the 1 in 10 year adverse weather load assumed in the ?base case?, will the judgment of the Transmission Planner be then questioned because the “base case” used is equivalent to a sensitivity case and not a 1 in 2 year adverse weather base case? Is some Non-Consequential Load Loss for an N-1 contingency on a sensitivity case using an extremely high load forecast acceptable as a Corrective Action Plan in the planning phase?
Response: The SDT agrees with your comment and has deleted Requirements R3.5.1, R3.5.2 and R3.5.3. Requirements R2.1.3 and R2.4.3 have been revised to make it clear that “sensitivity case(s) that are intended to stress the System with variations in one or more of the following conditions not already included in the		

Organization	Question 10:	Question 10 Comments:
studies shall be included in the Assessment". The standard expects that at least one more of those variances listed in Requirements R2.1.3 and R2.4.3 that have not been integrated into the required studies are at least considered as "sensitivities". **R2.1.3** For each of the studies described in Requirements R2.1.1 and ~~Requirement~~ R2.1.2, sensitivity case(s) that are intended to stress the System with ~~sensitivities~~ variations ~~that reflect~~ in one or more of the following conditions not already included in the studies shall be ~~run and documentation of the technical rationale for why each of the conditions was or was not selected shall be supplied~~ included in the Assessment: **R2.4.3** For each of the studies described in Requirements R2.4.1 and ~~Requirement~~ R2.4.2, ~~s~~ensitivity case(s) that are intended to stress the System with variations ~~to reflect~~ in one or more of the following conditions not already included in the studies shall be ~~run and documentation of the technical rationale for why each of the conditions was or was not selected shall be supplied~~ included in the Assessment: The SDT agrees and has deleted Requirement R2.1.4. Requirement R2.7 (now R2.6) has been revised for clarity. The entity can use any sensitivities studies it has performed in conjunction with the required current and past studies to develop its Corrective Action Plan. **R2.6** For Planning Events shown in Table 1 ~~– Steady State Performance and Table 2 – Stability Performance~~, when the analysis indicates an inability of the System to meet the performance requirements in the tables, the Planning Assessment shall include Corrective Action Plans addressing how the performance requirements will be met. Revisions to the Corrective Action Plans are allowed in subsequent assessments but the System shall continue to meet the performance requirements in the tables. Corrective Action Plans do not need to be developed solely to meet the performance requirements for sensitivities run in accordance with Requirements R2.1.3 and R2.4.3. The Corrective Action Plan shall:		
Progress Energy Florida, Inc.	No	PEF has significant concerns with each of the sub-Requirements listed in R2.1.3. Each is ambiguous, vague and open to variations in interpretation. It therefore makes no sense that "documentation of the technical rationale for why each of the conditions was or was not selected" is a requirement. Indeed, given that all of the sub-Requirements of R2.1.3 are vague, unspecific, unwieldy concepts, PEF is not sure how said documentation could be accomplished. Concerning R2.1.4, PEF has the same concerns that were expressed regarding the modified requirements mentioned in Question 2, and similarly here would suggest a substitute to the language in R2.1.4. Significant concerns with the previous sub-Requirements notwithstanding, PEF suggests either returning to the language in each existing Standard's R1.3.2, or adding an R2.1.3.8 that states "Other known critical system conditions specific to the system studied by the Transmission Planner or Planning Coordinator."
Response: The SDT did not want to be more prescriptive because of the huge number of possible variances that can occur. It is up to the planning entity to determine which and how much of a variance is appropriate for its studies. In addition, Requirements R2.1.3 and R2.4.3 have been revised to remove the requirement to explain why a sensitivity was not run since it would be necessary to run the study regardless to provide proof why it was not run. Since these are sensitivities, any and all variances provide some level of information as to how the System responds to such variances. **R2.1.3** For each of the studies described in Requirements R2.1.1 and ~~Requirement~~ R2.1.2, sensitivity case(s) that are intended to stress the System with ~~sensitivities~~ variations ~~that reflect~~ in one or more of the following conditions not already included in the studies shall be ~~run and documentation of the technical~~		

Organization	Question 10:	Question 10 Comments:
~~rationale for why each of the conditions was or was not selected shall be supplied~~ included in the Assessment: **R2.4.3** For each of the studies described in Requirements R2.4.1 and ~~Requirement~~ R2.4.2, ~~s~~ensitivity case(s) that are intended to stress the System with variations ~~to reflect~~ in one or more of the following conditions not already included in the studies shall be ~~run and documentation of the technical rationale for why each of the conditions was or was not selected shall be supplied~~ included in the Assessment:		
Lafayette Utilities System	No	As to the performance of sensitivity analyses under R2.1.3, Lafayette believes that insufficient detail is provided to define with clarity cases that involve ?modification of expected transfers? (per R2.1.3.2). For example, it is unclear whether the phrase ?modification of expected transfers? is intended to refer to a change in directional bias in the model, a reduction in flows due to variation between reservations and schedules, or something else. Additional definition should be provided to ensure that sensitivity cases performed pursuant to R2.1.3.2 are meaningful and useful.
Response: The SDT did not want to be more prescriptive because of the huge number of possible variances that can occur. It is up to the planning entity to determine which and how much of a variance is appropriate for its studies		
Ameren	No	Similar to our comment above for R2.4.3, there should not be a requirement to explain why sensitivities were not selected. Also, it is not clear if R2.1.4 is a requirement or an option. While we agree that the system cannot be adequately planned based on a single snapshot of expected system conditions, these items in R2.1.3.1-7 are too prescriptive and are inappropriate for inclusion here. The sensitivities listed appear to be options and not sub-requirements, and may result in over-focusing on the particular issues listed to the detriment of overall system reliability. Some sensitivity studies are in effect adding an additional level of contingency to the analysis work (n-2 or n-3). Outages of reactive sources and generation should already be included in studies of multiple contingencies. The process of planning new generation (system impact studies) will include studies of the future system with and without the proposed new equipment. Engineering judgment should be used to develop the sensitivity scenarios, and it should be encouraged that the same scenarios should not be performed every year so that a portfolio of sensitivity scenarios would be developed over time. The standard should not include an enumerated list of required sensitivities. If two sensitivities are required to be performed each year, then the standard should state so, but we believe that more than one sensitivity scenario for each peak and off-peak case per year for assessment is too burdensome to run complete contingency analyses. Proposed alternative wording for R2.1.3 which addresses above concerns is as follows:R2.1.3. "For each of the studies described in Requirement R2.1.1 and Requirement R2.1.2, sensitivity case(s) that stress the System to reflect one or more conditions such as variation in load assumptions, modification of expected transfers, variability and outages of reactive resources, generation additions, retirements, or other dispatch scenarios are integral to a thorough assessment of reliability. Document how and why appropriate sensitivities were selected."
Response: Requirements R2.1.3 and R2.4.4 have been revised to remove the requirement to explain why a sensitivity was not run since it would be necessary to run the study regardless to provide proof why it was not run.		

Organization	Question 10:	Question 10 Comments:
Requirements R2.1.3 and R2.4.3 have been revised to make it clear that "~~s~~ensitivity case(s) that are intended to stress the System with variations in one or more of the following conditions not already included in the studies shall be included in the Assessment". The standard expects that at least one more of those variances listed in Requirements R2.1.3 and R2.4.3 that have not been integrated into the required studies are at least considered as "sensitivities". In addition, as written, the standard is requiring at a minimum, one case run for each required current year for steady state and Stability. This translates into three cases for steady state. The entity may run as many additional cases as it deems appropriate to understand how the System responds to the variances. **R2.1.3** For each of the studies described in Requirements R2.1.1 and ~~Requirement~~ R2.1.2, sensitivity case(s) that are intended to stress the System with ~~sensitivities~~ variations ~~that reflect~~ in one or more of the following conditions not already included in the studies shall be ~~run and documentation of the technical rationale for why each of the conditions was or was not selected shall be supplied~~ included in the Assessment: **R2.4.3** For each of the studies described in Requirements R2.4.1 and ~~Requirement~~ R2.4.2, ~~s~~ensitivity case(s) that are intended to stress the System with variations ~~to reflect~~ in one or more of the following conditions not already included in the studies shall be ~~run and documentation of the technical rationale for why each of the conditions was or was not selected shall be supplied~~ included in the Assessment:		
Florida Power and Light	No	The words ?documentation of the technical rationale for why each of the conditions was or was not selected shall be supplied? should be removed from R2.4.3. The sensitivity selection is necessarily subjective and judgmental. It is not clear what constitutes a valid rationale document. Compliance assessment of such a document would be subjective and is not needed.
Response: Requirements R2.1.3 and R2.4.3 have been revised to remove the requirement to explain why a sensitivity was not run since it would be necessary to run the study regardless to provide proof why it was not run. The SDT believes that documentation of why a sensitivity was selected for study should be provided. **R2.1.3** For each of the studies described in Requirements R2.1.1 and ~~Requirement~~ R2.1.2, sensitivity case(s) that are intended to stress the System with ~~sensitivities~~ variations ~~that reflect~~ in one or more of the following conditions not already included in the studies shall be ~~run and documentation of the technical rationale for why each of the conditions was or was not selected shall be supplied~~ included in the Assessment: **R2.4.3** For each of the studies described in Requirements R2.4.1 and ~~Requirement~~ R2.4.2, ~~s~~ensitivity case(s) that are intended to stress the System with variations ~~to reflect~~ in one or more of the following conditions not already included in the studies shall be ~~run and documentation of the technical rationale for why each of the conditions was or was not selected shall be supplied~~ included in the Assessment:		
Exelon Transmission Planning	No	We support efforts to improve load and dynamic load modeling, however we have concerns in being able to do so in an accurate manner - See comments to question #2. The state of industry development is such that this is not ready for inclusion in a standard such as R2.4.1 and R2.4.3.1.
Response: As with all planning models, assumptions must be made that the entity feels are representative of how the system will respond and perform. Models can only attempt to simulate the System based on expected conditions. The standard has been modified to explain that "an aggregate System Load model which represents the overall dynamic behavior of the Load is acceptable".		

Organization	Question 10:	Question 10 Comments:
R2.4.1 System peak Load for one of the five years. For peak System Load levels, a Load model shall be used which appropriately represents the dynamic behavior of Loads, including consideration of the behavior of induction motor Loads. An aggregate system Load model which represents the overall dynamic behavior of the Load is acceptable		
CenterPoint Energy and CPS Energy	No	We believe R2.1.3 and R2.1.4 are overly prescriptive and should be deleted. It requires engineering judgment and experience to know whether a planning analysis is materially impacted by certain assumptions and, if so, which sensitivity analyses should be performed. Literally interpreted by an auditor, R2.1.3 would require at least one sensitivity analysis for each one of the contingencies shown in Tables 1 and 2 for each study specified in R2.1.1 and R2.1.2 and documentation for each contingency of each study why each sensitivity specified in R2.1.3 was or was not selected. The likely result is not value-added engineering analysis of actual reliability concerns. Instead, the likely outcome is unnecessary and burdensome additional analysis and documentation that is impractical, creating confusion and uncertainty as to what the practical interpretation of impractical requirements might ultimately be.
SERC Dynamics Review Subcommittee	No	These requirements are very prescriptive. Many examples of sensitivities are already inherent in the existing requirements. Some sensitivity studies are in effect adding an additional level of contingency (N-2 or N-3). Sensitivity studies of load variation are already inherent in the fact that several different study years and conditions are already being required. Outages of reactive sources and generation should already be included in studies of multiple contingencies. The process of planning new generation (system impact studies) will include studies of the future with and without the proposed new equipment. The TP and PC can better select the most appropriate sensitivities for their system. In general we believe that breaking these requirements into specific sub requirements, focusing on specific sensitivities, is too prescriptive and inappropriate. It will lead to over focus on these particular issues to the detriment of system reliability. There should be no enumerated list of required sensitivities. Engineering judgment needs to be permitted.
Response: Requirements R2.1.3 and R2.4.3 have been revised to make it clear that "~~s~~ensitivity case(s) that are intended to stress the System with variations in one or more of the following conditions not already included in the studies shall be included in the Assessment". The standard expects that at least one more of those variances listed in Requirements R2.1.3 and R2.4.3 that have not been integrated into the required studies are at least considered as "sensitivities". In addition, as written the standard is requiring at a minimum one case run for each required current year for steady state and Stability. This translates into three cases for steady state. The entity may run as many additional cases as it deems appropriate to understand how the system responds to the variances. In addition, Requirements R2.1.4 and R2.4.4 have been deleted. **R2.1.3** For each of the studies described in Requirements R2.1.1 and ~~Requirement~~ R2.1.2, sensitivity case(s) that are intended to stress the System with ~~sensitivities~~ variations ~~that reflect~~ in one or more of the following conditions not already included in the studies shall be ~~run and documentation of the technical rationale for why each of the conditions was or was not selected shall be supplied~~ included in the Assessment: **R2.4.3** For each of the studies described in Requirements R2.4.1 and ~~Requirement~~ R2.4.2, ~~s~~ensitivity case(s) that are intended to stress the System with variations ~~to reflect~~ in one or more of the following conditions not already included in the studies shall be ~~run and documentation of the technical rationale for why each of the~~		

Organization	Question 10:	Question 10 Comments:
~~conditions was or was not selected shall be supplied~~ included in the Assessment:		
MidAmerican Energy Company	No	a. MEC is not sure why R2.4.3.1 for sensitivities for Stability studies is a less definitive definition for load model variations then the steady state studies in R2.1.3.1. MEC recommends that R2.1.3.1 be changed to "Variations in Load model assumptions." b. MEC believes R2.1.4 and R2.4.4 should be deleted because its unnecessary to make a requirement of sensitivities that an entity chooses to do above and beyond the requirements in R2.1.3 and R2.4.3. If the SDT chooses not to delete these requirements, then MEC believes that R2.1.4 should be a subrequirement of R2.1.3 and R2.4.4 should be made a subrequirement of R2.4.3. The responsible entity should be allowed to select the appropriate sensitivity that should be performed. This is especially necessary given the need to perform each of these sensitivity analyses for six situations each year: peak and off-peak for two short-term years and one long-term year. Even with the requirement for one sensitivity for each case that amounts to six additional sets of analysis for steady-state and six for stability.
Response: a. As with all planning models, assumptions must be made that the entity feels are representative of how the System will respond and perform. Models can only attempt to simulate the System based on expected conditions. The standard has been modified to explain that "an aggregate system Load model which represents the overall dynamic behavior of the Load is acceptable". **R2.4.1** System peak Load for one of the five years. For peak System Load levels, a Load model shall be used which appropriately represents the dynamic behavior of Loads, including consideration of the behavior of induction motor Loads. An aggregate system Load model which represents the overall dynamic behavior of the Load is acceptable b. Requirements R2.1.3 and R2.4.3 have been revised to make it clear that "~~s~~ensitivity case(s) that are intended to stress the System with variations in one or more of the following conditions not already included in the studies shall be included in the Assessment". The standard expects that at least one more of those variances listed in Requirements R2.1.3 and R2.4.3 that have not been integrated into the required studies are at least considered as "sensitivities". In addition, as written, the standard is requiring at a minimum, one case run for each required current year for steady state and Stability. This translates into three cases for steady state. The entity may run as many additional cases as it deems appropriate to understand how the system responds to the variances. In addition, Requirements R2.1.4 and R2.4.4 have been deleted. **R2.1.3** For each of the studies described in Requirements R2.1.1 and ~~Requirement~~ R2.1.2, sensitivity case(s) that are intended to stress the System with ~~sensitivities~~ variations ~~that reflect~~ in one or more of the following conditions not already included in the studies shall be ~~run and documentation of the technical rationale for why each of the conditions was or was not selected shall be supplied~~ included in the Assessment: **R2.4.3** For each of the studies described in Requirements R2.4.1 and ~~Requirement~~ R2.4.2, ~~s~~ensitivity case(s) that are intended to stress the System with variations ~~to reflect~~ in one or more of the following conditions not already included in the studies shall be ~~run and documentation of the technical rationale for why each of the conditions was or was not selected shall be supplied~~ included in the Assessment:		
MRO NERC	No	a. The MRO is not sure why R2.4.3.1 for sensitivities for Stability studies is a less definitive definition for load model

Organization	Question 10:	Question 10 Comments:
Standards Review Subcommittee		variations then the steady state studies in R2.1.3.1. The MRO recommends that R2.1.3.1 be changed to "Variations in Load model assumptions." b. The MRO believes R2.1.4 and R2.4.4 should be deleted because its unnecessary to make a requirement of sensitivities that an entity chooses to do above and beyond the requirements in R2.1.3 and R2.4.3. If the SDT chooses not to delete these requirements, then MRO believes that R2.1.4 should be a subrequirement of R2.1.3 and R2.4.4 should be made a subrequirement of R2.4.3. The responsible entity should be allowed to select the appropriate sensitivity that should be performed. This is especially necessary given the need to perform each of these sensitivity analyses for six situations each year: peak and off-peak for two short-term years and one long-term year. Even with the requirement for one sensitivity for each case that amounts to six additional sets of analysis for steady-state and six for stability. c. For R2.1.4, we suspect that these analysis are similar to extreme event contingencies and do not have specific performance requirements. We would also like some explanation of what and how to provide the technical rationale for why each condition was or was not used.

Response: As with all planning models, assumptions must be made that the entity feels are representative of how the System will respond and perform. Models can only attempt to simulate the System based on expected conditions. The standard has been modified to explain that "an aggregate system Load model which represents the overall dynamic behavior of the Load is acceptable".

R2.4.1 System peak Load for one of the five years. For peak System Load levels, a Load model shall be used which appropriately represents the dynamic behavior of Loads, including consideration of the behavior of induction motor Loads. An aggregate system Load model which represents the overall dynamic behavior of the Load is acceptable.

b. Requirements R2.1.3 and R2.4.3 have been revised to make it clear that "~~s~~ensitivity case(s) that are intended to stress the System with variations in one or more of the following conditions not already included in the studies shall be included in the Assessment". The standard expects that at least one more of those variances listed in Requirements R2.1.3 and R2.4.3 that have not been integrated into the required studies are at least considered as "sensitivities". In addition, as written, the standard is requiring at a minimum, one case run for each required current year for steady state and Stability. This translates into three cases for steady state. The entity may run as many additional cases as it deems appropriate to understand how the system responds to the variances. In addition, Requirements R2.1.4 and R2.4.4 have been deleted.

R2.1.3 For each of the studies described in Requirements R2.1.1 and ~~Requirement~~ R2.1.2, sensitivity case(s) that are intended to stress the System with ~~sensitivities~~ variations ~~that reflect~~ in one or more of the following conditions not already included in the studies shall be ~~run and documentation of the technical rationale for why each of the conditions was or was not selected shall be supplied~~ included in the Assessment:

R2.4.3 For each of the studies described in Requirements R2.4.1 and ~~Requirement~~ R2.4.2, ~~s~~ensitivity case(s) that are intended to stress the System with variations ~~to reflect~~ in one or more of the following conditions not already included in the studies shall be ~~run and documentation of the technical rationale for why each of the conditions was or was not selected shall be supplied~~ included in the Assessment:

c. Requirement R2.1.4 has been deleted.

Organization	Question 10:	Question 10 Comments:
Austin Energy	No	Appropriate sensitivity analysis should be determined by the Transmission Planner and/or the Planning Coordinator (ISO or RTO) and not made a routine requirement. Therefore, R2.1.3 should be deleted.
SERC Reliability Review Subcommittee and Planning Standards Subcommittee	No	These requirements are very prescriptive. Many examples of sensitivities are already inherent in the existing requirements. Some sensitivity studies are in effect adding an additional level of contingency (N-2 or N-3). Sensitivity studies of load variation are already inherent in the fact that several different study years and conditions are already being required. Outages of reactive sources and generation should already be included in studies of multiple contingencies. The process of planning new generation (system impact studies) will include studies of the future with and without the proposed new equipment. The TP and PC can better select the most appropriate sensitivities for their system. In general we believe that breaking these requirements into specific sub requirements, focusing on specific sensitivities, is too prescriptive and inappropriate. It will lead to over focus on these particular issues to the detriment of system reliability. The standard should not include an enumerated list of required sensitivities Engineering judgment needs to be permitted.
Response: Requirements R2.1.3 and R2.4.3 have been revised to make it clear that "sensitivity case(s) that are intended to stress the System with variations in one or more of the following conditions not already included in the studies shall be included in the Assessment". The standard expects that at least one more of those variances listed in Requirements R2.1.3 and R2.4.3 that have not been integrated into the required studies are at least considered as "sensitivities". In addition, as written the standard is requiring at a minimum one case run for each required current year for steady state and Stability. This translates into three cases for steady state. The entity may run as many additional cases as it deems appropriate to understand how the system responds to the variances. **R2.1.3** For each of the studies described in Requirements R2.1.1 and ~~Requirement~~ R2.1.2, sensitivity case(s) that are intended to stress the System with ~~sensitivities~~ variations ~~that reflect~~ in one or more of the following conditions not already included in the studies shall be ~~run and documentation of the technical rationale for why each of the conditions was or was not selected shall be supplied~~ included in the Assessment: **R2.4.3** For each of the studies described in Requirements R2.4.1 and ~~Requirement~~ R2.4.2, sensitivity case(s) that are intended to stress the System with variations ~~to reflect~~ in one or more of the following conditions not already included in the studies shall be ~~run and documentation of the technical rationale for why each of the conditions was or was not selected shall be supplied~~ included in the Assessment:		
Midwest ISO	No	This reminds us of Category D from original table--requiring us to study something but take no action. Sensitivities are not appropriate nor effective in a planning world in which you require an array of sensitivity studies but require no action will be taken. While running sensitivities enables us to better understand system limits, why have it as a requirement if there is no action plan obligation.
Response: The requirement was added to ensure that the entities do run certain variances that would stress the System. Requirement R2 requires that such studies are documented as part of the Planning Assessment. The entity is to determine the risk associated with not modifying the Corrective Action Plan to consider these studies. The documentation puts the entity on record as stating that the variance was considered but may or may not have been incorporated in the Plan makes the entity liable for its decision.		

Organization	Question 10:	Question 10 Comments:
Tri-State Generation and Transmission Association, Inc.	No	We appreciate the extra detail describing sensitivity cases, but do not think it is reasonable to require explanations of why each condition suggested in R2.1.3.1-R2.1.3.7 was or was not studied. It should be sufficient that sensitivity studies are considered appropriate by the individual utility. R2.1.4 should be demoted to R2.1.3.8 (and the "shall include rationale" clause removed).
Response: Requirements R2.1.3 and R2.4.3 have been revised to remove the requirement to explain why a sensitivity was not run since it would be necessary to run the study regardless to provide proof why it was not run. The SDT believes that documentation of why a sensitivity was selected for study should be provided. Requirements R2.1.4 and R2.4.4 have been deleted. **R2.1.3** For each of the studies described in Requirements R2.1.1 and ~~Requirement~~ R2.1.2, sensitivity case(s) that are intended to stress the System with ~~sensitivities~~ variations ~~that reflect~~ in one or more of the following conditions not already included in the studies shall be ~~run and documentation of the technical rationale for why each of the conditions was or was not selected shall be supplied~~ included in the Assessment: **R2.4.3** For each of the studies described in Requirements R2.4.1 and ~~Requirement~~ R2.4.2, ~~s~~ensitivity case(s) that are intended to stress the System with variations ~~to reflect~~ in one or more of the following conditions not already included in the studies shall be ~~run and documentation of the technical rationale for why each of the conditions was or was not selected shall be supplied~~ included in the Assessment:		
Lakeland Electric	No	R2.1.3.1 requires other than peak sensitivity studies while R2.1.2 requires Off peak studies. Recommend further defining of R2.1.2 to specific load level or points on forecast demand curves to eliminate any overlap between two requirements.
Response: The SDT has used the defined term “Off-Peak” and believes that this is sufficient.		
Southern Company Transmission	No	R 2.1.3 One should only have to explain why sensitivity was performed, not why it was not performed. In general we believe that breaking these requirements into specific sub requirements focusing on specific sensitivities is too prescriptive and inappropriate. It will lead to over focus on these particular issues to the detriment of system reliability. There should be no list of sensitivities enumerated as subrequirements. Engineering judgment needs to be permitted. A specific proposal for R2.1.3 which addresses the above concerns is provided as follows:R2.1.3. For each of the studies described in Requirement R2.1.1 and Requirement R2.1.2, sensitivity case(s) shall be run and documented that stress the System to reflect one or more conditions such as higher or lower Load than forecasted with variability of Load/demand and Load power factors due to season, weather, or time of day; modification of expected transfers; unavailability of long lead time Facilities; variability and outages of reactive resources; generation additions, retirements, or other dispatch scenarios; decreased effectiveness of controllable Loads and Demand Side Management; modification of planned Transmission outages. Document why each sensitivity was selected.
Response: Requirements R2.1.3 and R2.4.4 have been revised to remove the requirement you reference. In addition, Requirements R2.1.3 and R2.4.3 have been		

Organization	Question 10:	Question 10 Comments:
revised to make it clear that "~~s~~ensitivity case(s) that are intended to stress the System with variations in one or more of the following conditions not already included in the studies shall be included in the Assessment". The standard expects that at least one more of those variances listed in Requirements R2.1.3 and R2.4.3 that have not been integrated into the required studies are at least considered as "sensitivities". **R2.1.3** For each of the studies described in Requirements R2.1.1 and ~~Requirement~~ R2.1.2, sensitivity case(s) that are intended to stress the System with ~~sensitivities~~ variations ~~that reflect~~ in one or more of the following conditions not already included in the studies shall be ~~run and documentation of the technical rationale for why each of the conditions was or was not selected shall be supplied~~ included in the Assessment: **R2.4.3** For each of the studies described in Requirements R2.4.1 and ~~Requirement~~ R2.4.2, sensitivity case(s) that are intended to stress the System with variations ~~to reflect~~ in one or more of the following conditions not already included in the studies shall be ~~run and documentation of the technical rationale for why each of the conditions was or was not selected shall be supplied~~ included in the Assessment:		
Brazos Electric Power Cooperative, Inc.	No	2.1.3 should have been left alone. We have a real problem with the addition of 'technical' and documenting why things were NOT selected. We would also like to see more leeway provided to the TP and PC by adding language similar to that mentioned above such as "as deemed necessary by the TP or PC".2.1.4 should be incorporated into 2.1.3 in a similar fashion as our suggested changes for 2.4.3.
Response: Requirements R2.1.3 and R2.4.4 have been revised to remove the requirement to explain why a sensitivity was not run since it would be necessary to run the study regardless to provide proof why it was not run. In addition, Requirements R2.1.3 and R2.4.3 have been revised to make it clear that "~~s~~ensitivity case(s) that are intended to stress the System with variations in one or more of the following conditions not already included in the studies shall be included in the Assessment". The standard expects that at least one more of those variances listed in Requirements R2.1.3 and R2.4.3 that have not been integrated into the required studies are at least considered as "sensitivities". In addition, Requirements R2.1.4 and R2.4.4 have been deleted. **R2.1.3** For each of the studies described in Requirements R2.1.1 and ~~Requirement~~ R2.1.2, sensitivity case(s) that are intended to stress the System with ~~sensitivities~~ variations ~~that reflect~~ in one or more of the following conditions not already included in the studies shall be ~~run and documentation of the technical rationale for why each of the conditions was or was not selected shall be supplied~~ included in the Assessment: **R2.4.3** For each of the studies described in Requirements R2.4.1 and ~~Requirement~~ R2.4.2, ~~s~~ensitivity case(s) that are intended to stress the System with variations ~~to reflect~~ in one or more of the following conditions not already included in the studies shall be ~~run and documentation of the technical rationale for why each of the conditions was or was not selected shall be supplied~~ included in the Assessment:		
NERC and Regional Coordination	No	The standard as worded:? Implies all tests are run for a given sensitivity the standard should be revised to read applicable testing for the applicable sensitivity.? Requires proof of negative o Why a sensitivity was not selected? Requires that expansion plans identify the impact of sensitivity o Many sensitivities may have varying impacts on an expansion plan. Suggested changes:R2.1.3 - For each of the studies described in Requirement R2.1.1 and Requirement R2.1.2, sensitivity case(s) that reflect one or more of the following conditions shall be incorporated into the assessment. Documentation of the

Organization	Question 10:	Question 10 Comments:
		technical rationale for why each of the conditions was selected and the portion of the assessment that included each selected sensitivity shall be supplied. R2.1.4, R2.4.3, and R2.4.4 - need to be modified accordingly. Delete R2.1.4 as it is superfluous. If a PC runs a sensitivity study and includes that analysis in its Plan, then why would NERC mandate that the PC explain why the non-mandated sensitivity study was run. If a study is required then it should be mandated. If a study is not mandated then he PC should not be held accountable for explaining the un-mandated study.R2.4.3.1 ? Variation in load model. Specific numbers should be included. R2.4.3.2 - Modification of expected transfers ? Be more specific. Firm or non-firm transfer and amount of MWR2.4.3.3 - Unavailability of long lead time Facilities. How many years out we are looking at and for how long it must be out of service.R2.4.3.4 - Variability of Reactive Source ? need to be more specific (give me MVARS). We already test this under FAC 010 for lost of shunt capacitor.R2.4.3.5 - This should already been taken into account when we do studies. So be more specific.R2.7.2 - Include a description of how results of the sensitivities selected in accordance with Requirements R2.1.3, R2.1.4, R2.4.3, and R2.4.4 impacted the list of actions developed in accordance with R2.7.1.R2.1 - Revise wording - The annual assessment of the of the NT Planning Horizon shall include: then go into the sub-bullets. The SDT must clarify exactly explicitly how many studies (in terms of numbers) must be done each planning horizon for short term and long term and how much sensitivity study for term.

Response: Requirements R2.1.3 and R2.4.3 have been revised to make it clear that "~~s~~ensitivity case(s) that are intended to stress the System with variations in one or more of the following conditions not already included in the studies shall be included in the Assessment". The standard expects that at least one more of those variances listed in Requirements R2.1.3 and R2.4.3 that have not been integrated into the required studies are at least considered as "sensitivities".

Also, Requirements R2.1.3 and R2.4.3 have been revised to remove the requirement to explain why a sensitivity was not run since it would be necessary to run the study regardless to provide proof why it was not run.

R2.1.3 For each of the studies described in Requirements R2.1.1 and ~~Requirement~~ R2.1.2, sensitivity case(s) that are intended to stress the System with ~~sensitivities~~ variations ~~that reflect~~ in one or more of the following conditions not already included in the studies shall be ~~run and documentation of the technical rationale for why each of the conditions was or was not selected shall be supplied~~ included in the Assessment:

R2.4.3 For each of the studies described in Requirements R2.4.1 and ~~Requirement~~ R2.4.2, ~~s~~ensitivity case(s) that are intended to stress the System with variations ~~to reflect~~ in one or more of the following conditions not already included in the studies shall be ~~run and documentation of the technical rationale for why each of the conditions was or was not selected shall be supplied~~ included in the Assessment:

The SDT agrees with the commenter and has deleted Requirements R2.1.4 and R2.4.4.

The SDT did not want to be more prescriptive and provide specific details and number for variances that the entity may select because of the huge number of possible variances that can occur. It is up to the planning entity to determine which and how much of a variance is appropriate for its studies.

Requirement R2, along with its sub-requirements, requires the sensitivities run are to be documented. Requirement R2.6 requires that the Corrective Actions be listed. The entity can add the details and further explanation of how the sensitivities were incorporated into the Plans.

Organization	Question 10:	Question 10 Comments:
Since the basis of the standard is to allow the entity to support the Planning Assessment using current and past studies, the standard cannot dictate the specific number of studies to be made. The standard does specify the current cases that must be run in Requirements R2.1.1, R2.1.2, R2.2, R2.4.1 and R2.4.2.		
IESO	No	As we commented on R2.4.3, we continue to express our disagreement to include sensitivity testing in R2.1.3 and R2.1.4. We are disappointed that despite disagreements by the majority of the commenters and their suggestions to leave sensitivity testing to the TP's and PC's discretion, the SDT continues to stipulate detailed requirements for sensitivity testing. The SDT in its summary response to comments indicates that these testing are intended as "?providing some guidance on what could be included in the sensitivity studies without being too prescriptive." If these are indeed intended as guidance rather than enforceable requirements, then they should be provided in a technical document or a reference document that supports the standard, not in the standard itself.
Response: Requirements R2.1.3 and R2.4.3 have been revised to make it clear that "sensitivity case(s) that are intended to stress the System with variations in one or more of the following conditions not already included in the studies shall be included in the Assessment". The standard expects that at least one more of those variances listed in Requirements R2.1.3 and R2.4.3 that have not been integrated into the required studies are at least considered as "sensitivities". In addition, as written, the standard is requiring at a minimum, one case run for each required current year for steady state and Stability. This translates into three cases for steady state. The entity may run as many additional cases as it deems appropriate to understand how the System responds to the variances.		
North Carolina Electric Membership Corp	Yes and No	Sensitivities to base assumptions for studies are always good utility practice. But we agree with others that these may be overly prescriptive in requiring each and every one. Allow the TP and PC to select the appropriate sensitivities for the annual assessments with input from customers and affected stakeholders. We are concerned that the requirement for every sensitivity each and every year would result in excessive burden to existing PCs and TPs doing this analysis with no resulting improvement to reliability.
Response: Requirements R2.1.3 and R2.4.3 have been revised to make it clear that "sensitivity case(s) that are intended to stress the System with variations in one or more of the following conditions not already included in the studies shall be included in the Assessment". The standard expects that at least one more of those variances listed in Requirements R2.1.3 and R2.4.3 that have not been integrated into the required studies are at least considered as "sensitivities". In addition, as written the standard is requiring at a minimum one case run for each required current year for steady state and Stability. This translates into three cases for steady state. The entity may run as many additional cases as it deems appropriate to understand how the System responds to the variances.		
E.ON U.S. Transmission Planning	Yes and No	2. R2.1.3.2 refers to modification of expected transfers as a sensitivity test. Does this include transfers across the system, such as a transfer from Cinergy to TVA?
Response: The SDT did not want to be more prescriptive because of the huge number of possible variances that can occur. It is up to the planning entity to determine which and how much of a variance is appropriate for its studies		

Organization	Question 10:	Question 10 Comments:
ERCOT System Planning		The sensitivity cases suggested are unnecessary and unfeasible. For example, generation additions to cases that can already meet the load under contingency conditions do not create a reliability problem as the new generator can always be turned off. On the other extreme, sensitivity analysis of possible, unknown and uncontrollable generation retirements along with the Table 1 requirements of P3 (Generator + 1) contingency analysis presents an overwhelming study and documentation burden that will not add a corresponding benefit to the study and the results would be meaningless.
Response: The SDT believes that planners must consider these possible variances and reinforce the System so that when it comes to Real-time operation, the TOP will have a system sufficiently robust to operate around any of the conditions. Commenters generally agree that these are the responsibility of planning. Requirements R2.1.3 and R2.4.3 have been revised to make it clear that "~~s~~ensitivity case(s) that are intended to stress the System with variations in one or more of the following conditions not already included in the studies shall be included in the Assessment". The standard expects that at least one more of those variances listed in Requirements R2.1.3 and R2.4.3 that have not been integrated into the required studies are at least considered as "sensitivities". **R2.1.3** For each of the studies described in Requirements R2.1.1 and ~~Requirement~~ R2.1.2, sensitivity case(s) that are intended to stress the System with ~~sensitivities~~ variations ~~that reflect~~ in one or more of the following conditions not already included in the studies shall be ~~run and documentation of the technical rationale for why each of the conditions was or was not selected shall be supplied~~ included in the Assessment: **R2.4.3** For each of the studies described in Requirements R2.4.1 and ~~Requirement~~ R2.4.2, ~~s~~ensitivity case(s) that are intended to stress the System with variations ~~to reflect~~ in one or more of the following conditions not already included in the studies shall be ~~run and documentation of the technical rationale for why each of the conditions was or was not selected shall be supplied~~ included in the Assessment:		
American Transmission Company	No	For R2.1.3, we would like further explanation of what technical rationale is expected and how it should be provided as to why each condition sensitivity was or was not used. In the subrequirements, we are unsure of what is exactly meant by "variability of load demand and load power factors", "modification of expected transfers", "long lead time Facilities", and "modification of planned outages". For R2.1.4, it is unclear what specific performance requirements must be met for these other sensitivities. We would also like some explanation of what technical rationale is expected and how it should be provided as to why each condition sensitivity was or was not used.
Response: Requirements R2.1.3 and R2.4.4 have been revised to remove the requirement to explain why a sensitivity was not run since it would be necessary to run the study regardless to provide proof why it was not run. Since these are sensitivities, any and all variances provide some level of information as to how the system responds to such variances. **R2.1.3** For each of the studies described in Requirements R2.1.1 and ~~Requirement~~ R2.1.2, sensitivity case(s) that are intended to stress the System with ~~sensitivities~~ variations ~~that reflect~~ in one or more of the following conditions not already included in the studies shall be ~~run and documentation of the technical rationale for why each of the conditions was or was not selected shall be supplied~~ included in the Assessment: **R2.4.3** For each of the studies described in Requirements R2.4.1 and ~~Requirement~~ R2.4.2, ~~s~~ensitivity case(s) that are intended to stress the System with variations ~~to reflect~~ in one or more of the following conditions not already included in the studies shall be ~~run and documentation of the technical rationale for why each of the~~		

Organization	Question 10:	Question 10 Comments:
~~conditions was or was not selected shall be supplied~~ included in the Assessment: The SDT did not want to be more prescriptive because of the huge number of possible variances that can occur. It is up to the planning entity to determine which and how much of a variance is appropriate for its studies. Also, Requirements R2.1.4 and R2.4.4 have been deleted.		
Duke Energy	No	Although we agree with the perceived intent of R2.1.3, we believe the wording should be revised to make it very clear that it is not necessary to perform studies to substantiate your technical rationale for choosing not to perform any particular sensitivity study. Documented engineering judgment to support the decision not to perform the particular sensitivity studies should be sufficient. Recommend renumbering R2.1.4 to R2.1.3.8 and reword as follows: Any other sensitivity, as deemed appropriate by the Transmission Planner or Planning Coordinator for their individual systems.
Florida Reliability Coordinating Council, inc	No	R2.1.3 and R2.1.4 as written can create issues during the compliance assessment. These requirements place the burden of justifying the inclusion / exclusion of the sensitivities on the TP or PC. Thus, only a sensitivity deem appropriate by the TP or PC and not performed can be found non-compliant. R2.1.4 can be eliminated by modifying the wording in R2.1.3 as follows:? For each of the studies described in Requirement R2.1.1 and Requirement R2.1.2, at least one sensitivity shall be performed that stress the system based on one or more of the following conditions, plus any additional conditions determined by the Transmission Planer and Planning Coordinator. The Planning Assessment will also include the technical rationale for why each of the conditions was or was not selected for study that year.?
Response: Requirements R2.1.3 and R2.4.4 have been revised to remove the requirement to explain why sensitivity was not run since it would be necessary to run the study regardless to provide proof why it was not run. Since these are sensitivities, any and all variances provide some level of information as to how the system responds to such variances. **R2.1.3** For each of the studies described in Requirements R2.1.1 and ~~Requirement~~ R2.1.2, sensitivity case(s) that are intended to stress the System with ~~sensitivities~~ variations ~~that reflect~~ in one or more of the following conditions not already included in the studies shall be ~~run and documentation of the technical rationale for why each of the conditions was or was not selected shall be supplied~~ included in the Assessment: **R2.4.3** For each of the studies described in Requirements R2.4.1 and ~~Requirement~~ R2.4.2, ~~s~~ensitivity case(s) that are intended to stress the System with variations ~~to reflect~~ in one or more of the following conditions not already included in the studies shall be ~~run and documentation of the technical rationale for why each of the conditions was or was not selected shall be supplied~~ included in the Assessment:		
Central Maine Power Company	No	a. With respect to R2.1.3 delete "that Stress the System with sensitivities". b. R2.1.3 should be revised to clarify that if a TP/PC conducts the studies specified in R2.1.1 and R2.1.2 with one or more of the sensitivities which stress the system in the normal course of study, then additional studies of a less-stressed system are not required.

Organization	Question 10:	Question 10 Comments:
		c. The intention of Paragraph R2.1.4 is unclear and appears to be unnecessary; therefore, it should be removed.
ISO New England Inc.	No	a. With respect to R2.1.3 delete " that Stress the System with sensitivities". b. R2.1.3 should be revised to clarify that if a TP/PC conducts the studies specified in R2.1.1 and R2.1.2 with one or more of the sensitivities which stress the system in the normal course of study, then additional studies of a less-stressed system are not required. c. The intention of Paragraph R2.1.4 is unclear and appears to be unnecessary; therefore, it should be removed.
ColumbiaGrid	Yes	We generally agree with the concept of the sensitivity analysis since this is standard practice in understanding system performance risks and the effectiveness of improvements. R2.1.4 requires explanation of performing additional sensitivities that are not listed in the R2.1.3. This would discourage entities from performing additional sensitivities. In addition, in the above example, the Transmission Planners should not have to explain why they feel that this higher level (1 in 10 year adverse weather) of load is the ?base case? condition.
Response: Requirements R2.1.3 and R2.4.3 have been revised to make it clear that "~~s~~ensitivity case(s) that are intended to stress the System with variations in one or more of the following conditions not already included in the studies shall be included in the Assessment". The standard expects that at least one more of those variances listed in Requirements R2.1.3 and R2.4.3 that have not been integrated into the required studies are at least considered as "sensitivities". **R2.1.3** For each of the studies described in Requirements R2.1.1 and ~~Requirement~~ R2.1.2, sensitivity case(s) that are intended to stress the System with ~~sensitivities~~ variations ~~that reflect~~ in one or more of the following conditions not already included in the studies shall be ~~run and documentation of the technical rationale for why each of the conditions was or was not selected shall be supplied~~ included in the Assessment: **R2.4.3** For each of the studies described in Requirements R2.4.1 and ~~Requirement~~ R2.4.2, ~~s~~ensitivity case(s) that are intended to stress the System with variations ~~to reflect~~ in one or more of the following conditions not already included in the studies shall be ~~run and documentation of the technical rationale for why each of the conditions was or was not selected shall be supplied~~ included in the Assessment: The SDT agrees and has deleted R2.1.4.		
NSTAR Electric	No	1. With respect to R2.1.3 delete "that Stress the System with sensitivities".2. R2.1.3 should be revised to clarify that if a TP/PC conducts the studies specified in R2.1.1 and R2.1.2 with one or more of the sensitivities which stress the system in the normal course of study, then additional studies of a less-stressed system are not required.3. The intention of Paragraph R2.1.4 is unclear and appears to be unnecessary; therefore, it should be removed.
Response: Requirements R2.1.3 and R2.4.3 have been revised to make it clear that "sensitivity case(s) that are intended to stress the System with variations in one or more of the following conditions not already included in the studies shall be included in the Assessment". **R2.1.3** For each of the studies described in Requirements R2.1.1 and ~~Requirement~~ R2.1.2, sensitivity case(s) that are intended to stress the System with		

Organization	Question 10:	Question 10 Comments:
~~sensitivities~~ variations ~~that reflect~~ in one or more of the following conditions not already included in the studies shall be ~~run and documentation of the technical rationale for why each of the conditions was or was not selected shall be supplied~~ included in the Assessment: **R2.4.3** For each of the studies described in Requirements R2.4.1 and ~~Requirement~~ R2.4.2, sensitivity case(s) that are intended to stress the System with variations ~~to reflect~~ in one or more of the following conditions not already included in the studies shall be ~~run and documentation of the technical rationale for why each of the conditions was or was not selected shall be supplied~~ included in the Assessment: Requirements R2.1.4 and R2.4.4 have been deleted.		
New York Independent System Operator	No	If a TP/PC conducts the studies specified in R2.1.1 and R2.1.2 with one or more of the sensitivities which stress the system in the normal course of study, we assume that fulfills the requirements of R2.1 completely, without additional studies of a less-stressed system. Is that correct?
Response: Requirements R2.1.3 and R2.4.3 have been revised to make it clear that "sensitivity case(s) that are intended to stress the System with variations in one or more of the following conditions not already included in the studies shall be included in the Assessment". **R2.1.3** For each of the studies described in Requirements R2.1.1 and ~~Requirement~~ R2.1.2, sensitivity case(s) that are intended to stress the System with ~~sensitivities~~ variations ~~that reflect~~ in one or more of the following conditions not already included in the studies shall be ~~run and documentation of the technical rationale for why each of the conditions was or was not selected shall be supplied~~ included in the Assessment: **R2.4.3** For each of the studies described in Requirements R2.4.1 and ~~Requirement~~ R2.4.2, ~~s~~ensitivity case(s) that are intended to stress the System with variations ~~to reflect~~ in one or more of the following conditions not already included in the studies shall be ~~run and documentation of the technical rationale for why each of the conditions was or was not selected shall be supplied~~ included in the Assessment: The standard expects that at least one more of those variances listed in Requirement R2.1.3 and R2.4.3 that have not been integrated into the required studies are at least considered as "sensitivities". In addition, as written the standard is requiring at a minimum one case run for each required current year for steady state and Stability. This translates into three cases for steady state. The entity may run as many additional cases as it deems appropriate to understand how the System responds to the variances.		
Oncor Electric Delivery	Yes	Generally agree with modifications although would again stress that detailed load modeling for stability analysis may be as revealing as some of the sensitivity studies recommended in R2.1.3 if they were only run with steady state analysis.
Response: As with all planning models, assumptions must be made that the entity feels are representative of how the System will respond and perform. Models can only attempt to simulate the System based on expected conditions. The standard has been modified to explain that "an aggregate system Load model which represents the overall dynamic behavior of the Load is acceptable". **R2.4.1** System peak Load for one of the five years. For peak System Load levels, a Load model shall be used which appropriately represents the dynamic behavior of Loads, including consideration of the behavior of induction motor Loads. An aggregate system Load model which represents the overall dynamic		

Organization	Question 10:	Question 10 Comments:
behavior of the Load is acceptable.		
FirstEnergy Corp.	No	The requirements related to sensitivity cases as written in draft 2 are an improvement over draft 1 as they now allow flexibility in choosing sensitivities, compared to what use to be a fixed list of options. However, we do not agree with the need to document the technical rationale for why each listed condition was or was not selected. This seems to create a needless paper trail from an auditing viewpoint. If any documentation is needed, it should be limited to why the sensitivity was selected and it should not be required to indicate why others were not selected. Therefore, we suggest rewording 2.3.1 as follows: "For each of the studies described in Requirement R2.1.1 and Requirement R2.1.2, sensitivity case(s) that stress the System with sensitivities that reflect one or more of the following conditions shall be run and documentation of the technical rationale for why each of the conditions was selected shall be supplied:"R2.1.4 - This is an optional requirement and should be worked into the list of options within 2.1.3. As a stand alone requirement, what type of measure or VSL would be applicable for this requirement? We suggest re-numbering this requirement as a new 2.1.3.8 and reword it as follows: "Any other sensitivities, as deemed appropriate by the Transmission Planner or Planning Coordinator for their individual systems".R2.1.3.3 ? This requirement indicates sensitivity is needed for "Unavailability of long lead time facilities." Why is this required in a near-term planning horizon? How long is long? Doesn't the N-1-1 (Planning Event P6) test already account for this related to the outage of existing equipment which may present long lead times? Same comments apply for R2.4.3 and R2.4.4 in the stability study section.
Response: Requirements R2.1.3 and R2.4.3 have been revised to remove the requirement to explain why a sensitivity was not run since it would be necessary to run the study regardless to provide proof why it was not run. **R2.1.3** For each of the studies described in Requirements R2.1.1 and ~~Requirement~~ R2.1.2, sensitivity case(s) that are intended to stress the System with ~~sensitivities~~ variations ~~that reflect~~ in one or more of the following conditions not already included in the studies shall be ~~run and documentation of the technical rationale for why each of the conditions was or was not selected shall be supplied~~ included in the Assessment: **R2.4.3** For each of the studies described in Requirements R2.4.1 and ~~Requirement~~ R2.4.2, ~~s~~ensitivity case(s) that are intended to stress the System with variations ~~to reflect~~ in one or more of the following conditions not already included in the studies shall be ~~run and documentation of the technical rationale for why each of the conditions was or was not selected shall be supplied~~ included in the Assessment: The STD agrees. Requirements R2.1.4 and R2.4.4 have been deleted. The near-term horizon extends from one to five years. Equipment scheduled for installation in five years requires ordering today. Requirements R2.1.3 and R2.4.3 have been revised to make it clear that "~~s~~ensitivity case(s) that are intended to stress the System with variations in one or more of the following conditions not already included in the studies shall be included in the Assessment". The standard expects that at least one more of those variances listed in Requirements R2.1.3 and R2.4.3 that have not been integrated into the required studies are at least considered as "sensitivities".		
Orlando Utilities	Yes and No	I generally agree with the intent of requiring studies beyond just one load level and system condition; however I have some

Organization	Question 10:	Question 10 Comments:
Commission		specific suggestions, questions and comments. R2.1.3: As worded I have several concerns: 1. This would make any study performed that did not include sensitivities useless for performing the assessment. I recommend identify sensitivities and studies separately, with sensitivities just being smaller versions of studies. (Our usual definition is that a study demonstrates specific solutions to problems identified, whereas a sensitivity merely comments on the presence or lack of problems and how they relate to what is seen in the more formal studies. Obviously a problem found in a sensitivity not seen in a regular study receives additional focus.) 2. This would force the study to look only at the sensitivities listed rather then allow one or more of the conditions, plus additional conditions all in one run. This would force an entity to run additional studies if they wished to exceed the requirements rather then a single study that meets and exceeds the requirements. I suggest the following wording instead to still require the sensitivities, but allow flexibility in how they are performed. "R 2.1.3: At least one sensitivity shall be performed that stress the system based on one or more of the following conditions, plus any additional conditions determined by the transmission planner and planning coordinator. The Planning Assessment will also include the technical rationale for why each of the conditions was or was not selected for study that year. R.2.1.3.1- Suggest adding system growth, for example "season, weather, unpredicted system growth, or time of day". As written it does not seem to allow a study based on the long range load growth prediction being off, but instead only on a change in season, weather or time of day. R2.1.4: What was intended by using the phrase "Documentation of the technical rationale" instead of simply saying "shall include technical rationale"? I suggest dropping the "documentation of the" as this could cause confusion on an audit as to what is the difference between the "technical rationale" and "documentation of the technical rationale" unless the drafting team plans to define what "documentation of technical rationale is" other then the rationale itself.

Response: Requirements R2.1.3 and R2.4.3 have been revised to make it clear that "~~s~~ensitivity case(s) that are intended to stress the System with variations in one or more of the following conditions not already included in the studies shall be included in the Assessment". The standard expects that at least one more of those variances listed in Requirements R2.1.3 and R2.4.3 that have not been integrated into the required studies are at least considered as "sensitivities". In addition, as written, the standard is requiring at a minimum, one case run for each required current year for steady state and Stability. This translates into three cases for steady state. The entity may run as many additional cases as it deems appropriate to understand how the system responds to the variances.

R2.1.3 For each of the studies described in Requirements R2.1.1 and ~~Requirement~~ R2.1.2, sensitivity case(s) that are intended to stress the System with ~~sensitivities~~ variations ~~that reflect~~ in one or more of the following conditions not already included in the studies shall be ~~run and documentation of the technical rationale for why each of the conditions was or was not selected shall be supplied~~ included in the Assessment:

R2.4.3 For each of the studies described in Requirements R2.4.1 and ~~Requirement~~ R2.4.2, ~~s~~ensitivity case(s) that are intended to stress the System with variations ~~to reflect~~ in one or more of the following conditions not already included in the studies shall be ~~run and documentation of the technical rationale for why each of the conditions was or was not selected shall be supplied~~ included in the Assessment:

The SDT did not want to be more prescriptive because of the huge number of possible variances that can occur. It is up to the planning entity to determine which

Organization	Question 10:	Question 10 Comments:
and how much of a variance is appropriate for its studies. Requirements R2.1.3 and R2.4.4 have been revised to remove the requirement to explain why a sensitivity was not run since it would be necessary to run the study regardless to provide proof why it was not run. Since these are sensitivities, any and all variances provide some level of information as to how the system responds to such variances. Requirements R2.1.4 and R2.4.4 have been deleted		
Entergy Services, Inc.	No	R2.1.3.2 - Modification of expected transfers: Modification of expected transfers infers that non-firm transmission use would be estimated based on historical data or perhaps an economic outlook. To plan the system for such non-firm use is an imprudent burden on rate payers. Economic tools are available to ascertain the benefits of system upgrades and prudently allocate the costs of such upgrades. Generation assets and the future plans of those assets is market sensitive information that could easily be extracted from such sensitivity analyses. Results of these sensitivity studies should be used to aid in reliably operating the system. They should not be a basis for constructing transmission facilities for reliability. These types of studies are aligned with the operating horizon. See also comments made above regarding 2.1.3.4 and 2.1.3.7.In general, we believe that breaking these requirements into specific sub requirements, focusing on specific sensitivities, is too prescriptive and inappropriate. It will lead to over focus on these particular issues to the detriment of system reliability. There should be no enumerated list of required sensitivities. Engineering judgment needs to be permitted. Many examples of sensitivities are already inherent in the existing requirements. Some sensitivity studies are in effect adding an additional level of contingency (N-2 or N-3). Sensitivity studies of load variation are already inherent in the fact that several different study years and conditions are already being required. Outages of reactive sources and generation should already be included in studies of multiple contingencies. The process of planning new generation (system impact studies) will include studies of the future with and without the proposed new equipment. The TP and PC can better select the most appropriate sensitivities for their system. We recommend that engineering judgment continue to be recognized as a vital component of planning.
Response: Requirements R2.1.3 and R2.4.3 have been revised to make it clear that "sensitivity case(s) that are intended to stress the System with variations in one or more of the following conditions not already included in the studies shall be included in the Assessment". The standard expects that at least one more of those variances listed in Requirements R2.1.3 and R2.4.3 that have not been integrated into the required studies are at least considered as "sensitivities". In addition, as written, the standard is requiring at a minimum, one case run for each required current year for steady state and Stability. This translates into three cases for steady state. The entity may run as many additional cases as it deems appropriate to understand how the system responds to the variances. **R2.1.3** For each of the studies described in Requirements R2.1.1 and ~~Requirement~~ R2.1.2, sensitivity case(s) that are intended to stress the System with ~~sensitivities~~ variations ~~that reflect~~ in one or more of the following conditions not already included in the studies shall be ~~run and documentation of the technical rationale for why each of the conditions was or was not selected shall be supplied~~ included in the Assessment: **R2.4.3** For each of the studies described in Requirements R2.4.1 and ~~Requirement~~ R2.4.2, sensitivity case(s) that are intended to stress the System with variations ~~to reflect~~ in one or more of the following conditions not already included in the studies shall be ~~run and documentation of the technical rationale for why each of the conditions was or was not selected shall be supplied~~ included in the Assessment:		

Organization	Question 10:	Question 10 Comments:
The SDT believes that planners must consider these possible variances and reinforce the System so that when it comes to Real-time operation, the TOP will have a System sufficiently robust to operate around any of the conditions. Commenters generally agree that these are the responsibility of planning. The SDT did not want to be more prescriptive because of the huge number of possible variances that can occur. It is up to the planning entity to determine which and how much of a variance is appropriate for its studies.		
BPA Transmission Reliability Program	No	For those conditions that are "not" studied, it makes sense to explain why that particular condition was not selected. However, we do not agree with R2.1.3 that a rationale needs to be provided for why a particular sensitivity "is" selected for study. Running additional sensitivities provides a better understanding of system performance and doesn't need further justification. Requirement R2.1.4 is not needed and should be removed. It should be up to the Transmission Provider's discretion whether they run additional sensitivity studies beyond what the standard requires in R2.1.3, and it should not be necessary to justify why they chose to run them. What a sensitivity study consists of, needs further clarification. For example, if a system assessment is performed using a case with transmission paths stressed near their limits, is this considered the baseline or a sensitivity? If it is considered the baseline, would a sensitivity be required at reduced stress levels and what purpose would this serve when the original case produced the more severe system impacts? This needs further clarification.
Response: Requirements R2.1.3 and R2.4.3 have been revised to remove the requirement to explain why sensitivity was not run since it would be necessary to run the study regardless to provide proof why it was not run. **R2.1.3** For each of the studies described in Requirements R2.1.1 and ~~Requirement~~ R2.1.2, sensitivity case(s) that are intended to stress the System with ~~sensitivities~~ variations ~~that reflect~~ in one or more of the following conditions not already included in the studies shall be ~~run and documentation of the technical rationale for why each of the conditions was or was not selected shall be supplied~~ included in the Assessment: **R2.4.3** For each of the studies described in Requirements R2.4.1 and ~~Requirement~~ R2.4.2, sensitivity case(s) that are intended to stress the System with variations ~~to reflect~~ in one or more of the following conditions not already included in the studies shall be ~~run and documentation of the technical rationale for why each of the conditions was or was not selected shall be supplied~~ included in the Assessment: Requirements R2.1.4 and R2.4.4 have been deleted. Requirements R2.1.3 and R2.4.3 have been revised to make it clear that “sensitivity case(s) that are intended to stress the System with variations in one or more of the following conditions not already included in the studies shall be included in the Assessment”. The standard expects that at least one more of those variances listed in Requirements R2.1.3 and R2.4.3 that have not been integrated into the required studies are at least considered as “sensitivities”.		
City Water, Light & Power - Springfield, Illinois	Yes	

Organization	Question 10:	Question 10 Comments:
Platte River Power Authority	Yes	
BCTC	Yes	
Manitoba Hydro	Yes	
Tenaska, Inc.	Yes	
Arkansas Electric Coop. Corp.	Yes	
AEP	Yes	
LCRA TSC	Yes	
Response: Thank you for your response.		

11. **In response to industry comments, the SDT modified Table 1 requirements for Planning Event P6. Planning Event P6 involves independent overlapping single contingencies (n-1-1) involving two Transmission Facilities excluding generators. This Planning Event generally correlates to P5 of the first draft and now includes shunt devices. The P6 event was also revised to permit loss of Non-Consequential Load to meet performance requirements for Systems above 300 kV.**

    Do you concur with the modifications? If not, please state why and/or suggest specific changes.

Summary Consideration:

A substantial majority of the industry respondents agree with the revision to permit loss of Non-Consequential Load to meet performance requirements for P6 Events involving systems above as well as below 300 kV, considering the low probability of such Events.

There are concerns that this change would make it difficult for scheduling maintenance outages because the existing TPL-003-0 allows shedding of Non-Consequential Load after the next outage . However, in the proposed standard, If a facility is scheduled out of service for maintenance, the next outage would be considered a single Contingency Event, and loss of Non-Consequential Load is not permitted.

There are concerns expressed by numerous respondents that after the first single Contingency and System adjustment, curtailment of Firm Transmission Services (or firm transfers) and shedding of firm Load would not be allowed in preparation for the second Contingency. The SDT added Footnote # 10 to the end of Table 1 to reflect that Curtailment or Interruption of Firm Transmission Service in preparation for the next Contingency will be allowed. However, until the next Contingency occurs, System performance will need to meet the requirements for a single Contingency Event. As such, the proposed standard will not allow loss of any firm Non-Consequential Load, except for contracted Interruptible Loads, in preparation for the next Contingency. Nonetheless, the SDT has provided an exception (Requirement R2.6.4) to address those situations, which may arise that are beyond the control of the Transmission Planner or Planning Coordinator, and, which can prevent the implementation of the relevant Corrective Action Plan in the required timeframe.

Some respondents requested that System adjustment be defined. The SDT believes that Header note ‘e’ and the new Footnote # 10 provides the description of the System adjustments allowed after a first Contingency Event.

There were also requests for clarification between a P1 Event, which occurred after another Facility has been out of service, for example, for scheduled maintenance, and a P6 Event, since the former will not allow loss of Non-Consequential Load, while the latter would allow it. The SDT believes that the difference between these two Events is whether the prior outage was planned (such as maintenance) or anticipated (such as extended outage). Therefore, if the Prior outage is planned or anticipated, then the next N-1 is a single Contingency Event, otherwise, it would be a P6 Event.

Concerns were also expressed that the TP and PC should have discretion on the Contingencies (for example, shunt devices) to study and analyze. One response suggests that the P6 Event to be studied should have a common reason to occur. The SDT modified Requirement R3.3 (now R3.4) to allow the PC and TP to determine the single and multiple Contingencies to be included in the planning analyses. This would give the TP and the PC the discretion to study the Contingency most suited to the area of study, and they can choose not to study loss of shunt devices, or those P6 Events that do not have a common reason to occur, if these are less severe than the Events studied.

Some responses suggest that there should be a specific limit to the amount of Load loss allowed. While the SDT does not disagree with having some specific limits below which Load loss would be allowed, arriving at such an amount may be too case-specific and too prescriptive for a Continent-wide Standard.

One response disagrees that the requirement should be so much more severe for an internal breaker fault as opposed to two single line outages for elements over 300 kV. The SDT believes that an internal breaker fault would remove from service all Facilities connecting to the faulted breaker simultaneously, which would likely be more severe than outage of two single lines.

As a result of industry comments, the following requirements were changed:

R3.3.3 (now R3.4) Those Planning Event Contingencies in Table 1 ~~– Steady State Performance~~ ~~not covered in Requirement R3.3.2~~ that are expected to produce more severe System impacts shall be identified~~,~~ and a list of those Contingencies to be evaluated for System performance in Requirement R3.1 created~~,~~. ~~and t~~The rationale for the Contingencies selected for evaluation shall be available as supporting information and shall ~~includ~~include~~e~~ an explanation of why the remaining Contingencies would produce less severe System results.

Header note 'e' - For all Planning Events, planned System adjustments such as Transmission configuration changes and redispatch of generation are allowed if such adjustments are executable within the time duration applicable to the Facility Ratings.

Footnote #10 – Curtailment of firm transmission service, when coupled with the appropriate re-dispatch of resources obligated to re-dispatch, is allowed both as a System adjustment (as identified in the column titled 'Initial System Conditions') and a corrective action, where it can be demonstrated that Facilities remain within applicable Facility Ratings and those adjustments do not result in the shedding of any firm Load. Where limited options for re-dispatch exist, sensitivities associated with the availability of those resources must be considered. Where Facilities external to the Transmission Planner's planning region are relied upon, Facility Ratings in those regions must be considered.

Organization	Question 11:	Question 11 Comments:
Dominion - Electric Transmission Planning	No	For Bulk Electric System (BES) Elements out of Service above 300 kV, interruption of Firm Transmission Service and Non-Consequential Load Loss should not be allowed. We favor the language proposed in the previous draft.
ITC Holdings: ITC, METC, ITC Midwest	No	Allowing load loss for shutdown plus contingency might seriously jeopardize maintenance outages when you actually encounter this situation in real-time. It's easy to say these things in the ?planning horizon? but it might be politically unacceptable for "real-time". This is particularly true for higher voltage systems above 300kV. We understand that there could be "load-pocket" situations at lower voltages where this might be allowed but EHV systems are back-bone systems. This would set a bad precedent if allowed.
Lafayette Utilities	No	Lafayette does not agree that the loss of Non-Consequential Load should be permitted as a corrective action. See also

Organization	Question 11:	Question 11 Comments:
System		paragraph (b) in response to Question 15.
Arkansas Electric Coop. Corp.	No	Non-Consequential Load Loss should not be allowed. See comments to question 7.
Response: Thank you for your comments but the majority of the industry respondents agree with the revision to permit loss of Non-Consequential Load to meet performance requirements for P6 Events involving Systems above as well as below 300 kV considering the low probability of such Events.		
City Water, Light & Power - Springfield, Illinois	Yes and No	Shunt devices should only need to be included in contingency analysis at the discretion of the TP or PC.
CenterPoint Energy and CPS Energy	No	We believe P6 should be deleted. As noted earlier, we believe credible multiple contingencies should be studied as planning events, with incredible multiple contingencies possibly considered as extreme events. If P6 is retained, we believe loss of shunt devices should not be studied and believes the ability to systematically study the contingency loss of every individual switched shunt device is not supported by commercially available PTI software because up to this point it has not generally been recognized as a necessary or desirable analysis to perform. Also, if P6 is retained, we believe loss of Non-Consequential Load should be permitted at any voltage level for this type of extreme event.
Response: Requirement R3.3.3 (now Requirement R3.4) was modified to allow the PC and TP to determine the single and multiple Contingencies to be included in the planning analyses. This would give the TP and the PC the discretion to study the Contingencies most suited to the study area, including whether to include shunt devices in the analyses. **R3.4** Those Planning Event Contingencies in Table 1 ~~– Steady State Performance~~ ~~not covered in Requirement R3.3.2~~ that are expected to produce more severe System impacts shall be identified~~,~~ and a list of those Contingencies to be evaluated for System performance in Requirement R3.1 created~~,~~. ~~and t~~The rationale for the Contingencies selected for evaluation shall be available as supporting information and shall ~~includ~~include~~e~~ an explanation of why the remaining Contingencies would produce less severe System results.		
Progress Energy Carolinas	No	While we agree interruption of firm transmission service and non-consequential load loss should not be allowed to meet the planning requirements for the first system contingency (defined as initial system condition in the table), these system adjustments should be allowed to prepare for the second event so that the system will meet the requirements following the second event. We recommend that clarifying changes be made to ensure that this is clearly understood. One suggestion would be to include the following footnote to P6 in both the Steady State and Stability Tables.? Foot note: Interruption of firm transmission service and/or non-consequential load loss is allowed after the first event as a System adjustment to prepare

Organization	Question 11:	Question 11 Comments:
		for and meet the requirements of the second event. See also our related response to question 15.
Gainesville Regional Utilities	Yes and No	I believe some clarification is needed to specify that you can or can not curtail firm transmission service prior to the next event, because as written it could lead to compliance audit issues. I don't believe the intend of order 693 was to cause a need for utilities to be exposed to large cost increases for their customers while very little to no improvement in reliability is provided as it deals with very low probability conditions which would yield no increase in transfer capability.
JEA	Yes and No	JEA agrees with the changes on the surface, but still does not agree with the concept that it can not curtail Firm Transmission Service after the first N-1 event in preparation for the second N-1 event. JEA's existing Firm Transmission Service customers understand the need to maintain these existing transmission loading relief procedures in order to maintain security of the BES. The only JEA system element that causes this concern has a very high availability and would have a very costly infrastructure improvement to meet this requirement resulting in all of JEA's Firm Transmission Service Customers experiencing increased service cost or in the worst case having their service opportunities permanently curtailed.
Florida Power and Light	No	The P6 Planning Event is not clearly defined. It appears that the Initial System Condition is the Planning Event of P1, with the ?System Adjustments? allowed under P1 to keep facilities within the applicable ratings. R3.5.3. requires that a sustainable, stable, operating condition is maintained. This does not state prepared for the next contingency?. Given FERC's interpretation of TPL-002-0 Category B (see paragraphs below for excerpts from Order 693) that the system is not required to be able to withstand another N-1 contingency, the proposed new standard appears to require that this state be "sustained" indefinitely after a P1 event, or until the P6 Event, which is loss of the second element, with no mention of the time duration between the initial system condition and the event. The performance criteria for a P1 event can be met as long as it does not contemplate another event that would change the event to a P6 event. However, a P6 event is a TPL-003-0 Category C event which must contemplate a second contingency after the first. The existing TPL standards accomplished this with footnote b) in the Tables for all of the TPL standards, allowing system adjustments including curtailment of contracted firm transfers to prepare for the next contingency. Since FERC clearly states that this is not a requirement under TPL-002-0, but that it is addressed in TPL-003-0, they directed the ERO to modify the footnote for TPL-002-0. In TPL-003-0 the Category C3 event refers to a "Category B contingency, manual system adjustments, followed by another Category B contingency", however since the footnote for Category B contained the "To prepare for the next contingency?." language, and it is contained in the Table for TPL-003-0, that language must apply to the C3 event. Further, in Order 693, on TPL-003-0, FERC (1) did not direct the ERO to modify the same footnote which is contained in TPL-003-0, (2) recognizes that these are low probability events, and (3) stated that it "does not intend to recommend action on this issue [the appropriateness and value of including the ability of the system to withstand two simultaneous Category B contingencies for major load pockets] at

Organization	Question 11:	Question 11 Comments:
		this time and, instead, directs the ERO to consider the comments in possible future revisions to the Reliability Standard.? The SDT has inappropriately applied the direction of FERC on TPL-002-0 to the P6 event (which is similar to TPL-003-0 C3) without regard to its implications on the industry, the ratepayers, or even its own standards, as the impact of the team's interpretation would require changes in the methods of determining TTC's, ATC's, and SOL's. The additional costs (both monetary and intangible) incurred by ratepayers for no gain in the ability to transfer firm electric power, far outweigh any gain in reliability benefits for these low probability events. Just to provide one example to illustrate this point, if the SDT's current interpretation for a P6 event is not modified, FPL would have to spend in excess of $ 1 Billion dollars, in order to meet this performance criteria for 500 kV facilities, for an event with a probability of less than 0.07 per hundred mile-years (based on FPL's 500 kV facilities), which would be passed on to its ratepayers. There are many other examples on the FPL system, as well as other systems. This interpretation is fatally flawed and makes no sense from a reliability or cost perspective, not to mention the intangible impacts of siting, right-of-way acquisition, EMF, NIMBY, etc. Further, assuming the SDT interpretation, how could one justify the need before state commissions, and exercise eminent domain in the courts to take someone's land for right-of-way, a process that could take as long as 8-10 years, for minimal increase in reliability, and no increase in transfer capability. In order to assist the SDT, these paragraphs are included with references to FERC Order 693, to show that it has misinterpreted Order 693. The following captions stated below should help clarify this point. Order 693 states: P.1788 ?Under TPL-002-0 the system is not required to be able to withstand another N-1 contingency. That N-1 requirement is a Category C contingency which is addressed by TPL-003-0.? Therefore, the end state of P1 is not a ?secure? state, but a ?normal operating state?, as stated in P. 1796 ?The Commission, therefore, directs the ERO to modify the second sentence of footnote (b) to clarify that manual system adjustments other than shedding of firm load or curtailment of firm transfers are permitted to return the system to a normal operating state after the first contingency, provided these adjustment can be accomplished within the time period allowed by the short term or emergency ratings.? These two determinations by FERC together show that their interpretation of normal operating state is not the secure, ready for the next contingency state, rather, it is the state in which the performance criteria have been met for that planning event. With regard to the FERC direction of Order 693 on TPL-003 and ?the appropriateness and value of including the ability of the system to withstand two simultaneous Category B contingencies for major load pockets?, FERC states in P. 1824, ?Many commenters indicated that this was a very low probability event and the costs for addressing such an event would be significant. As a result, EEI states that a dialogue must first be initiated within the industry and with state public utility commissions to identify such load pockets, to target the required potentially significant transmission investments and to develop plans for allocating the costs of such investments. In light of these comments, the Commission does not intend to recommend action on this issue at this time and, instead, directs the ERO to consider the comments in possible future revisions to the Reliability Standard.?FPL agrees with the increased performance requirement for the P3 multiple contingency event that assumes the loss of a generator as the first contingency. Firm transfers should not depend upon specific generators being on line, however firm transfers must depend upon transmission lines being in-service.
SERC Dynamics	Yes	The changes are more practical. If two or more 500kV lines are lost, it makes complete sense to allow loss of non-consequential load so long as cascading outages are not triggered. While we agree interruption of firm transmission service

Organization	Question 11:	Question 11 Comments:
Review Subcommittee		and non-consequential load loss should not be allowed to meet the planning requirements for the first system contingency (defined as initial system condition in the table), these system adjustments should be allowed to prepare for the second event so that the system will meet the requirements following the second event. We recommend that clarifying changes be made to incorporate this concept. We recommend that the statement above be included as modification or as a footnote for the P6 portion of the table as follows:Foot note: Interruption of firm transmission service and non-consequential load loss should be allowed after the first event as a system adjustment to prepare for the second event and meet the requirements following the second event.See our related response to question 15.
Southern Company Transmission	Yes and No	The requirements are more practical now. If two or more 500kV lines are lost, it makes complete sense to allow loss of non-consequential load so long as cascading outages are not triggered. While we agree interruption of firm transmission service and non-consequential load loss should not be allowed to meet the planning requirements for the first system contingency (to get loadings back within normal ratings), these system adjustments should be allowed to prepare for the second event so that the system will meet the requirements following the second event. We recommend that clarifying changes be made to incorporate this concept. We recommend that the statement below be included as modification or as a footnote for the P6 portion of the table as follows: Interruption of firm transmission service and non-consequential load loss are allowed after the first event as a system adjustment to prepare for the second event in order to meet the requirements following the second event.
Duke Energy	Yes	The changes are more practical. If two or more 500kV lines are lost, it makes complete sense to allow loss of non-consequential load so long as cascading outages are not triggered.? While we agree interruption of firm transmission service and non-consequential load loss should not be allowed to meet the planning requirements for the first system contingency (defined as initial system condition in the table), these system adjustments should be allowed to prepare for the second event so that the system will meet the requirements following the second event.? We recommend that clarifying changes be made to incorporate this concept. We recommend that the statement above be included as a modification or as a footnote for the P6 portion of the Steady State and Stability tables as follows: "For P6 multiple contingency events, Transmission configuration changes and redispatch of generation are allowed provided that all Facilities shall be operating within their Facility Ratings and within their thermal and voltage limits. Permissible Transmission configuration changes include dropping of load and firm transfers needed to prepare for the second contingency. See our related response to question 15.
SERC Reliability Review Subcommittee and Planning Standards	Yes	Since Event P6 is essentially a sub-set of the existing Category C.3 Contingency events, we support these modifications which make the system performance requirements for P6 consistent with what exist today for Category C.3. While we agree interruption of firm transmission service and non-consequential load loss should not be allowed to meet the planning requirements for the first system contingency, these system adjustments should be allowed to prepare for the second event so that the system will meet the requirements following the second event. We recommend that clarifying changes be made to incorporate this concept. We recommend that the statement below be included as modification or as a footnote for the P6 portion of the table as follows: Interruption of firm transmission service and non-consequential load loss are allowed after the

Organization	Question 11:	Question 11 Comments:
Subcommittee		first event as a system adjustment to prepare for the second event in order to meet the requirements following the second event.
Orlando Utilities Commission	Yes and No	As written the standard does not seem to forbid the adjustment of firm transfers and non-consequential load in preparation for the second part of an N-1-1, however that conflicts with the teams statements on the recent national call. If the intent is to forbid the adjustment of firm transfers and non-consequential load in preparation for the second part of an n-1-1 that needs to be made explicitly clear in the standard. This is especially important since one of the current understandings of the standards relating to Transmission Planning and System Operating Limits clearly allow such adjustments, and to not make it clear is building a compliance trap for the unwary. While I do not support the creation of this n-1-1 threshold if it is going to be established it needs to be abundantly clear.
Entergy Services, Inc.	Yes and No	Since Event P6 is essentially a sub-set of the existing Category C.3 Contingency events, we support these modifications which make the system performance requirements for P6 consistent with what exist today for Category C.3.While we agree interruption of firm transmission service and non-consequential load loss should not be allowed to meet the planning requirements for the first system contingency (to get loadings back within normal ratings), these system adjustments should be allowed to prepare for the second event so that the system will meet the requirements following the second event. We recommend that clarifying changes be made to incorporate this concept. We recommend that the statement below be included as modification or as a footnote for the P6 portion of the table as follows: Interruption of firm transmission service and non-consequential load loss are allowed after the first event as a system adjustment to prepare for the second event in order to meet the requirements following the second event. As the requirement is now implemented in the table, transmission service would need to be made available only if they can be accommodated for N-2 events. This would place these services on equal footing from a reliability perspective but would virtually eliminate the firm transmission market.
Response: Footnote #10 has been added to the end of Table 1 to reflect that curtailment or interruption of Firm Transmission Service will be allowed in preparation for the next Contingency. However, until the next Contingency occurs, System performance will need to meet the requirements for Event P1. As such, the proposed standard will not allow loss of any Non-Consequential Load, except for contracted Interruptible Loads, in preparation for the next Contingency. Nonetheless, the SDT has provided an exception (R2.6.4) to address those situations, which may arise that are beyond the control of the Transmission Planner or Planning Coordinator, and, which can prevent the implementation of the relevant Corrective Action Plan in the required timeframe. **Footnote #10** – Curtailment of firm transmission service, when coupled with the appropriate re-dispatch of resources obligated to re-dispatch, is allowed both as a System adjustment (as identified in the column titled 'Initial System Conditions') and a corrective action, where it can be demonstrated that Facilities remain within applicable Facility Ratings and those adjustments do not result in the shedding of any firm Load. Where limited options for re-dispatch exist, sensitivities associated with the availability of those resources must be considered. Where Facilities external to the Transmission Planner's planning region are relied upon, Facility Ratings in those regions must be considered.		
Transmission	Yes	We agree with revising P6 to permit loss of Non-Consequential Load to meet performance requirements for Systems above

Organization	Question 11:	Question 11 Comments:
Agency of Northern California		300kV. However, we are concerned that with the loss of the first N-1 in P6, curtailment of firm transmission service or firm transfers would not be allowed as part of system adjustment in preparation for the next N-1. Allowing curtailment of transmission service or firm transfers for such system adjustments should be added to R3.3.2.2. Otherwise, the power transfer under normal condition (before the first N-1) will have to be significantly curtailed in anticipation for meeting performance requirements after N-1-1, or transmission facilities, which would have otherwise been unnecessary, would have to be built. Either would adversely impact customers. We also have questions on Event P6 in both Performance Tables 1 and 2: We would like some clarification on the overlapping single contingencies as denoted in Event P6 (N-1-1), and one where a single contingency, say Event P1 (N-1), follows a prior "planned" outage of a Facility (N-1). The former would allow the Non-consequential Load Loss, while the latter would prohibit it.
Pacific Gas and Electric Co.	Yes	We agree with revising P6 to permit loss of Non-Consequential Load to meet performance requirements for Systems above 300kV. However, we are concerned that with the loss of the first N-1 in P6, curtailment of firm transmission service or firm transfers would not be allowed as part of system adjustment in preparation for the next N-1. Allowing curtailment of transmission service or firm transfers for such system adjustments should be added to R3.3.2.2. Otherwise, the power transfer under normal condition (before the first N-1) will have to be significantly curtailed in anticipation for meeting performance requirements after N-1-1, or transmission facilities, which would have otherwise been unnecessary, would have to be built. Either would adversely impact customers. We also have questions on Event P6 in both Performance Tables 1 and 2: We would like some clarification on the overlapping single contingencies as denoted in Event P6 (N-1-1), and one where a single contingency, say Event P1 (N-1), follows a prior "planned" outage of a Facility (N-1). The former would allow the Non-consequential Load Loss, while the latter would prohibit it.
Public Service Company of New Mexico	Yes	We agree with revising P6 to permit loss of Non-Consequential Load to meet performance requirements for Systems above 300kV. However, we are concerned that with the loss of the first N-1 in P6, curtailment of firm transmission service or firm transfers would not be allowed as part of system adjustment in preparation for the next N-1. Allowing curtailment of transmission service or firm transfers for such system adjustments should be added to R3.3.2.2. Otherwise, the power transfer under normal condition (before the first N-1) will have to be significantly curtailed in anticipation for meeting performance requirements after N-1-1, or transmission facilities, which would have otherwise been unnecessary, would have to be built. Either would adversely impact customers. We also have questions on Event P6 in both Performance Tables 1 and 2: We would like some clarification on the overlapping single contingencies as denoted in Event P6 (N-1-1), and one where a single contingency, say Event P1 (N-1), follows a prior "planned" outage of a Facility (N-1). The former would allow the Non-consequential Load Loss, while the latter would prohibit it.
Puget Sound Energy, Inc.	Yes	We agree with revising P6 to permit loss of Non-Consequential Load to meet performance requirements for Systems above 300 kV. However, we are concerned that with the loss of the first N-1 in P6, curtailment of firm transmission service or firm transfers would not be allowed as part of system adjustment in preparation for the next N-1. Allowing curtailment of transmission service or firm transfers for such system adjustments should be added to R3.3.2.2. Otherwise, the power

Organization	Question 11:	Question 11 Comments:
		transfer under normal condition (before the first N-1) will have to be significantly curtailed in anticipation for meeting performance requirements after N-1-1, or transmission facilities, which would have otherwise been unnecessary, would have to be built. Either would adversely impact customers. We also have questions on Event P6 in both Performance Tables 1 and 2: We would like some clarification on the overlapping single contingencies as denoted in Event P6 (N-1-1), and one where a single contingency, say Event P1 (N-1), follows a prior "planned" outage of a Facility (N-1). The former would allow the Non-consequential Load Loss, while the latter would prohibit it.
Idaho Power Company	Yes	We agree with revising P6 to permit loss of Non-Consequential Load to meet performance requirements for Systems above 300kV. However, we are concerned that with the loss of the first N-1 in P6, curtailment of firm transmission service or firm transfers would not allowed as part of system adjustment in preparation for the next N-1. Allowing curtailment of transmission service or firm transfers for such system adjustments should be added to R3.3.2.2. Otherwise, the power transfer under normal condition (before the first N-1) will have to be significantly curtailed in anticipation for meeting performance requirements after N-1-1, or transmission facilities, which would have otherwise been unnecessary, would have to be built. Either would adversely impact customers. We also have questions on Event P6 in both Performance Tables 1 and 2: We would like some clarification on the overlapping single contingencies as denoted in Event P6 (N-1-1), and one where a single contingency, say Event P1 (N-1), follows a prior "planned" outage of a Facility (N-1). The former would allow the Non-consequential Load Loss, while the latter would prohibit it.
SMUD	Yes	We agree with revising P6 to permit loss of Non-Consequential Load to meet performance requirements for Systems above 300kV. However, we are concerned that with the loss of the first N-1 in P6, curtailment of firm transmission service or firm transfers would not be allowed as part of system adjustment in preparation for the next N-1. Allowing curtailment of transmission service or firm transfers for such system adjustments should be added to R3.3.2.2. Otherwise, the power transfer under normal condition (before the first N-1) will have to be significantly curtailed in anticipation for meeting performance requirements after N-1-1, or transmission facilities, which would have otherwise been unnecessary, would have to be built. Either would adversely impact customers. We also have questions on Event P6 in both Performance Tables 1 and 2: We would like some clarification on the overlapping single contingencies as denoted in Event P6 (N-1-1), and one where a single contingency, say Event P1 (N-1), follows a prior "planned" outage of a Facility (N-1). The former would allow the Non-consequential Load Loss, while the latter would prohibit it.
Sierra Pacific Power Company / Nevada Power Company	Yes	We agree with revising P6 to permit loss of Non-Consequential Load to meet performance requirements for Systems above 300kV. However, we are concerned that with the loss of the first N-1 in P6, curtailment of firm transmission service or firm transfers would not allowed as part of system adjustment in preparation for the next N-1. Allowing curtailment of transmission service or firm transfers for such system adjustments should be added to R3.3.2.2. Otherwise, the power transfer under normal condition (before the first N-1) will have to be significantly curtailed in anticipation for meeting performance requirements after N-1-1, or transmission facilities, which would have otherwise been unnecessary, would have to be built. Either would adversely impact customers. We also have questions on Event P6 in both Performance Tables 1

Organization	Question 11:	Question 11 Comments:
		and 2: We would like some clarification on the overlapping single contingencies as denoted in Event P6 (N-1-1), and one where a single contingency, say Event P1 (N-1), follows a prior "planned" outage of a Facility (N-1). The former would allow the Non-consequential Load Loss, while the latter would prohibit it.
Black Hills Corporation	Yes	We agree with revising P6 to permit loss of Non-Consequential Load to meet performance requirements for Systems above 300kV. However, we are concerned that with the loss of the first N-1 in P6, curtailment of firm transmission service or firm transfers would not be allowed as part of system adjustment in preparation for the next N-1. Allowing curtailment of transmission service or firm transfers for such system adjustments should be added to R3.3.2.2. Otherwise, the power transfer under normal condition (before the first N-1) will have to be significantly curtailed in anticipation for meeting performance requirements after N-1-1, or transmission facilities, which would have otherwise been unnecessary, would have to be built. Either would adversely impact customers. We also have questions on Event P6 in both Performance Tables 1 and 2: We would like some clarification on the overlapping single contingencies as denoted in Event P6 (N-1-1), and one where a single contingency, say Event P1 (N-1), follows a prior "planned" outage of a Facility (N-1). The former would allow the Non-consequential Load Loss, while the latter would prohibit it.
SRP	Yes	We agree with revising P6 to permit loss of Non-Consequential Load to meet performance requirements for Systems above 300kV. However, we are concerned that with the loss of the first N-1 in P6, curtailment of firm transmission service or firm transfers would not be allowed as part of system adjustment in preparation for the next N-1. Allowing curtailment of transmission service or firm transfers for such system adjustments should be added to R3.3.2.2. Otherwise, the power transfer under normal condition (before the first N-1) will have to be significantly curtailed in anticipation for meeting performance requirements after N-1-1, or transmission facilities, which would have otherwise been unnecessary, would have to be built. Either would adversely impact customers. We also have questions on Event P6 in both Performance Tables 1 and 2: We would like some clarification on the overlapping single contingencies as denoted in Event P6 (N-1-1), and one where a single contingency, say Event P1 (N-1), follows a prior "planned" outage of a Facility (N-1). The former would allow the Non-consequential Load Loss, while the latter would prohibit it.
Tucson Electric Power Company	Yes	We agree with revising P6 to permit loss of Non-Consequential Load to meet performance requirements for Systems above 300kV. However, we are concerned that with the loss of the first N-1 in P6, curtailment of firm transmission service or firm transfers would not be allowed as part of system adjustment in preparation for the next N-1. Allowing curtailment of transmission service or firm transfers for such system adjustments should be added to R3.3.2.2. Otherwise, the power transfer under normal condition (before the first N-1) will have to be significantly curtailed in anticipation for meeting performance requirements after N-1-1, or transmission facilities, which would have otherwise been unnecessary, would have to be built. Either would adversely impact customers. We also have questions on Event P6 in both Performance Tables 1 and 2: We would like some clarification on the overlapping single contingencies as denoted in Event P6 (N-1-1), and one where a single contingency, say Event P1 (N-1), follows a prior "planned" outage of a Facility (N-1). The former would allow

Organization	Question 11:	Question 11 Comments:
		the Non-consequential Load Loss, while the latter would prohibit it.
Modesto Irrigation District	Yes	We agree with revising P6 to permit loss of Non-Consequential Load to meet performance requirements for Systems above 300kV. However, we are concerned that with the loss of the first N-1 in P6, curtailment of firm transmission service or firm transfers would not be allowed as part of system adjustment in preparation for the nextN-1. Allowing curtailment of transmission service or firm transfers for such system adjustments should be added to R3.3.2.2. Otherwise, the power transfer under normal condition (before the first N-1) will have to be significantly curtailed in anticipation for meeting performance requirements after N-1-1, or transmission facilities, which would have otherwise been unnecessary, would have to be built. Either would adversely impact customers. We also have questions on Event P6 in both Performance Tables 1 and 2: We would like some clarification on the overlapping single contingencies as denoted in Event P6 (N-1-1), and one where a single contingency, say Event P1 (N-1), follows a prior "planned" outage of a Facility (N-1). The former would allow the Non-consequential Load Loss, while the latter would prohibit it.
Tri-State G&T	Yes	We agree with revising P6 to permit loss of Non-Consequential Load to meet performance requirements for Systems above 300kV. However, we are concerned that with the loss of the first N-1 in P6, curtailment of firm transmission service or firm transfers would not be allowed as part of system adjustment in preparation for the next N-1. Allowing curtailment of transmission service or firm transfers for such system adjustments should be added to R3.3.2.2. Otherwise, the power transfer under normal condition (before the first N-1) will have to be significantly curtailed in anticipation for meeting performance requirements after N-1-1, or transmission facilities, which would have otherwise been unnecessary, would have to be built. Either would adversely impact customers. We also have questions on Event P6 in both Performance Tables 1 and 2: We would like some clarification on the overlapping single contingencies as denoted in Event P6 (N-1-1), and one where a single contingency, say Event P1 (N-1), follows a prior "planned" outage of a Facility (N-1). The former would allow the Non-consequential Load Loss, while the latter would prohibit it.
ColumbiaGrid	Yes	We agree with revising P6 to permit loss of Non-Consequential Load to meet performance requirements for Systems above 300kV. However, we are concerned that with the loss of the first N-1 in P6, curtailment of firm transmission service or firm transfers would not be allowed as part of system adjustment in preparation for the next N-1. Allowing curtailment of transmission service or firm transfers for such system adjustments should be added to R3.3.2.2. Otherwise, the power transfer under normal condition (before the first N-1) will have to be significantly curtailed in anticipation for meeting performance requirements after N-1-1, or transmission facilities, which would have otherwise been unnecessary, would have to be built. Either would adversely impact customers. We also have questions on Event P6 in both Performance Tables 1 and 2: We would like some clarification on the overlapping single contingencies as denoted in Event P6 (N-1-1), and one where a single contingency, say Event P1 (N-1), follows a prior "planned" outage of a Facility (N-1). The former would allow the Non-consequential Load Loss, while the latter would prohibit it.

Organization	Question 11:	Question 11 Comments:
Southern California Edison	Yes	We agree with revising P6 to permit loss of Non-Consequential Load to meet performance requirements for Systems above 300kV. However, we are concerned that with the loss of the first N-1 in P6, curtailment of firm transmission service or firm transfers would not be allowed as part of system adjustment in preparation for the next N-1. Allowing curtailment of transmission service or firm transfers for such system adjustments should be added to R3.3.2.2. Otherwise, the power transfer under normal condition (before the first N-1) will have to be significantly curtailed in anticipation for meeting performance requirements after N-1-1, or transmission facilities, which would have otherwise been unnecessary, would have to be built. Either would adversely impact customers. We also have questions on Event P6 in both Performance Tables 1 and 2: We would like some clarification on the overlapping single contingencies as denoted in Event P6 (N-1-1), and one where a single contingency, say Event P1 (N-1), follows a prior "planned" outage of a Facility (N-1). The former would allow the Non-consequential Load Loss, while the latter would prohibit it.
Alberta Electric System Operator	Yes	We agree with revising P6 to permit loss of Non-Consequential Load to meet performance requirements for Systems above 300kV. However, we are concerned that with the loss of the first N-1 in P6, curtailment of firm transmission service or firm transfers would not be allowed as part of system adjustment in preparation for the next N-1. Allowing curtailment of transmission service or firm transfers for such system adjustments should be added to R3.3.2.2. Otherwise, the power transfer under normal condition (before the first N-1) will have to be significantly curtailed in anticipation for meeting performance requirements after N-1-1, or transmission facilities, which would have otherwise been unnecessary, would have to be built. Either would adversely impact customers. We also have questions on Event P6 in both Performance Tables 1 and 2: We would like some clarification on the overlapping single contingencies as denoted in Event P6 (N-1-1), and one where a single contingency, say Event P1 (N-1), follows a prior "planned" outage of a Facility (N-1). The former would allow the Non-consequential Load Loss, while the latter would prohibit it.
US Bureau of Reclamation	Yes	We agree with revising P6 to permit loss of Non-Consequential Load to meet performance requirements for Systems above 300kV. However, we are concerned that with the loss of the first N-1 in P6, curtailment of firm transmission service or firm transfers would not be allowed as part of system adjustment in preparation for the nextN-1. Allowing curtailment of transmission service or firm transfers for such system adjustments should be added to R3.3.2.2. Otherwise, the power transfer under normal condition (before the first N-1) will have to be significantly curtailed in anticipation for meeting performance requirements after N-1-1, or transmission facilities, which would have otherwise been unnecessary, would have to be built. Either would adversely impact customers. We also have questions on Event P6 in both Performance Tables 1 and 2: We would like some clarification on the overlapping single contingencies as denoted in Event P6 (N-1-1), and one where a single contingency, say Event P1 (N-1), follows a prior "planned" outage of a Facility (N-1). The former would allow the Non-consequential Load Loss, while the latter would prohibit it.
BPA Transmission	Yes and No	We agree with the revision to permit the loss of Non-Consequential Load to meet performance requirements for Systems above 300 kV. However, a better definition is needed for "system adjustments". For example, are curtailments permitted as

Organization	Question 11:	Question 11 Comments:
Reliability Program		part of "system adjustments"? Within category P6, there needs to be a common reason for the overlapping outage to occur, such as lines on a common tower, and the appropriate reasons need to be clearly identified in the requirements. In general, we believe that performance category P6 should be part of the Operating Standards rather than the Planning Standards. For these types of events, it is the responsibility of Operations to determine the necessary system adjustments to prepare for the next contingency within the operating horizon prior to year one as defined in the Planning Standards. Therefore, the performance requirements for this category of contingencies, do not belong in the Planning Standards.
Response: Footnote # 10 has been added to the end of Table 1 to reflect that curtailment or interruption of Firm Transmission Service will be allowed in preparation for the next Contingency. **Footnote #10** – Curtailment of firm transmission service, when coupled with the appropriate re-dispatch of resources obligated to re-dispatch, is allowed both as a System adjustment (as identified in the column titled 'Initial System Conditions') and a corrective action, where it can be demonstrated that Facilities remain within applicable Facility Ratings and those adjustments do not result in the shedding of any firm Load. Where limited options for re-dispatch exist, sensitivities associated with the availability of those resources must be considered. Where Facilities external to the Transmission Planner's planning region are relied upon, Facility Ratings in those regions must be considered. Regarding the difference between overlapping single Contingencies as denoted in Event P6 (N-1-1), and one where a single Contingency, say Event P1 (N-1), follows a prior "planned" outage of a Facility (i.e., N-1), the difference would be whether the prior outage was planned (such as maintenance) or anticipated (such as extended outage). If the Prior outage is planned or anticipated, then the next N-1 is a P1 Event, otherwise, it is a P6 Event.		
Progress Energy Florida, Inc.	No	PEF is pleased that between the 1st and 2nd drafts, the "no" was changed to "yes" concerning allowance of curtailment of Firm Transmission Service or curtailment of Non-Consequential Load for Event P6. PEF has significant concerns, however, regarding the issue of "System Adjustments" associated with P6 and P6's direct association with P1, and thus must check "no" on this Question despite the improvements that have been made. A major misstep has been made with regard to development of P6. Every P1 event is by default the first half of a P6 event. Given that fact, PEF sees several concerns with this issue. First, for P1 events, neither curtailment of Firm Transmission Service nor curtailment of Non-Consequential Load are allowed, regardless of voltage. Both are allowed, however, for a P6 event. In order for the two events to not contradict each other, the conclusion that must be reached is that curtailment of Firm Transmission Service and curtailment of Non-Consequential Load are not allowed as part of System Adjustments, i.e. they are not allowed in between the two steps of P6, only after the 2nd step of P6 (Note: this is not clear partly due to the fact that the term "System Adjustments" is not defined anywhere in the Standard, and PEF therefore requests that the SDT define the term, and that the term should include the allowance of curtailment of Firm Transmission Service and the loss of Non-Consequential Load). PEF has two very serious concerns with that conclusion: a) FERC in its Order 693 stated that the BES is not required to have to withstand another N-1 contingency. Specifically, in Paragraph 1788 of Order 693 FERC states that ?Under TPL-002-0 the system is not required to be able to withstand another N-1 contingency. That N-1 requirement is a Category C contingency which is addressed by TPL-003-0.? Thus FERC clearly made a distinction between N-1 events for which a 2nd N-1 event never happens and N-1-1 events. The SDT, however, has

Organization	Question 11:	Question 11 Comments:
		not written the draft TPL Standard in such a way that Transmission Owners can reasonably and fairly plan for the 2nd N-1 event as TPL-003-0 has done. b) PEF has several 1st N-1 events on their 500 kV system for which "System Adjustments" are necessarily going to have to include either the curtailment of Firm Transmission Service or the curtailment of Non-Consequential Load in order to prepare for the 2nd N-1 event. The draft TPL Standard, while far from definitive on this matter, appears to allow neither as part of System Adjustments. PEF will thus be forced to i) construct redundant 500 kV facilities, at a cost to our ratepayers that will doubtless run into the range of billions of dollars, or ii) significantly reduce the posted levels of ATC/TTC of the various transmission paths available. Option (ii) is not a better option than option (i), for two main reasons: reducing ATC/TTC essentially puts marketing entities out of business, and forces utilities to build more generation sites to compensate for the loss of energy brought in using the previously higher ATC values. Either option results in prohibitively high costs to be passed on to the ratepayers for no measurable increase in BES reliability. This discussion also brings up additional concerns that include the lack of consideration of State government jurisdiction, the lack of public involvement, and ultimately, the lack of sufficient reason to construct such redundancy. PEF has never had a 500 kV N-1-1 event on its system. For this draft Standard to require redundancy projects costing billions of dollars for events that to date have never occurred is preposterous (note: additional comments concerning public outreach, no State government involvement, etc., are contained in the response to Question 15).
Response: Footnote # 10 has been added to the end of Table 1 to reflect that curtailment or interruption of Firm Transmission Service will be allowed in preparation for the next Contingency. However, until the next Contingency occurs, System performance will need to meet the requirements for a single Contingency Event. As such, the proposed standard will not allow loss of any Non-Consequential Load, except for contracted Interruptible Loads, in preparation for the next Contingency. Header note 'e' provides the System adjustments allowed after a first Contingency Event. **Header note 'e'** -- For all Planning Events, planned System adjustments such as Transmission configuration changes and redispatch of generation are allowed if such adjustments are executable within the time duration applicable to the Facility Ratings. **Footnote #10** – Curtailment of firm transmission service, when coupled with the appropriate re-dispatch of resources obligated to re-dispatch, is allowed both as a System adjustment (as identified in the column titled 'Initial System Conditions') and a corrective action, where it can be demonstrated that Facilities remain within applicable Facility Ratings and those adjustments do not result in the shedding of any firm Load. Where limited options for re-dispatch exist, sensitivities associated with the availability of those resources must be considered. Where Facilities external to the Transmission Planner's planning region are relied upon, Facility Ratings in those regions must be considered.		
Ameren	No	Please clarify that the shunt devices to be considered for outage are those that are directly connected to the transmission system. For the P6 events involving a transmission facility and a shunt device, local voltage instability issues may result in dropping of load in the vicinity of the outaged facilities, but the concern should be that the load dropped is not wide-spread. The words "Voltage instability" should be removed from Header Note 3 of Table 1 so that it becomes "Cascading outages and uncontrolled islanding shall not occur."

Organization	Question 11:	Question 11 Comments:
Response: Requirement R3.3.3 (now Requirement R3.4) was modified to allow the PC and TP to determine the single and multiple Contingencies to be included in the planning analyses. This would give the TP and the PC the discretion to study the Contingency most suited to the study area. **R3.4** Those Planning Event Contingencies in Table 1 ~~– Steady State Performance not covered in Requirement R3.3.2~~ that are expected to produce more severe System impacts shall be identified~~,~~ and a list of those Contingencies to be evaluated for System performance in Requirement R3.1 created~~,~~. ~~and t~~The rationale for the Contingencies selected for evaluation shall be available as supporting information and shall ~~includ~~include~~e~~ an explanation of why the remaining Contingencies would produce less severe System results. However, "voltage instability" has not been removed from the Header Note 3 (now Note a) because voltage instability in a local area can spread to the rest of the System if not arrested in time, and a planning analysis is needed to ascertain if there is a voltage stability problem, and, if so, the corrective actions needed.		
Exelon Transmission Planning	No	We do not agree that the requirement should be so much more severe for an internal breaker fault as opposed to two single line outages for elements over 300 kV.
Response: An internal breaker fault is a single event covered in FERC Order 693. In addition, an internal breaker fault would remove from service all Facilities connecting to the faulted breaker simultaneously, which would likely be more severe than the outage of two single lines.		
MidAmerican Energy Company	No	MEC suggests that there be more explanation of what system adjustments are permitted. There should be some specific limit like 100MW below which load loss is allowed. Otherwise, very high cost solutions will be required for very low probability events.
MRO NERC Standards Review Subcommittee	No	The MRO suggests that there be more explanation of what system adjustments are permitted. There should be some specific limit like 100MW below which load loss is allowed. Otherwise, very high cost solutions will be required for very low probability events.
Response: Footnote # 10 has been added to the end of Table 1 to reflect that curtailment or interruption of Firm Transmission Service will be allowed in preparation for the next Contingency. While the SDT does not disagree with having some specific limits below which load loss would be allowed, arriving at such an amount may be too case-specific and too descriptive for a Continent-wide Standard. **Footnote #10** – Curtailment of firm transmission service, when coupled with the appropriate re-dispatch of resources obligated to re-dispatch, is allowed both as a System adjustment (as identified in the column titled 'Initial System Conditions') and a corrective action, where it can be demonstrated that Facilities remain within applicable Facility Ratings and those adjustments do not result in the shedding of any firm Load. Where limited options for re-dispatch exist, sensitivities associated with the availability of those resources must be considered. Where Facilities external to the Transmission Planner's planning region are relied upon, Facility Ratings in those regions must be considered.		

Organization	Question 11:	Question 11 Comments:
Austin Energy	No	It should be left to the Transmission Planner and/or Planning Coordinator (ISO or RTO) to select the credible multiple contingencies to be studied as planning events. Therefore P6 should be deleted.
Brazos Electric Power Cooperative, Inc.	No	P6 should be incorporated back into P5. Up to this point, studying all shunt devices has not been considered to have a significant impact on the BES. In addition these are picked up when studying other contingencies. Certain type devices should be reviewed individually, FACTS devices, etc? but this should be at the discretion of the TP or PC. Currently adding shunt devices as a category would require modification to case data or software to be able to automatically run through them all and we are not convinced this is worth the effort.
Response: Requirement R3.3.3 (now Requirement R3.4) was modified to allow the PC and TP to determine the single and multiple Contingencies to be included in the planning analyses. This would give the TP and the PC the discretion to study the Contingency most suited to the study area, and can choose not to study P6 Events if they are less severe than the Events studied. Therefore, P6 is not deleted. **R3.4** Those Planning Event Contingencies in Table 1 ~~– Steady State Performance~~ ~~not covered in Requirement R3.3.2~~ that are expected to produce more severe System impacts shall be identified~~,~~ and a list of those Contingencies to be evaluated for System performance in Requirement R3.1 created~~,~~. ~~and t~~The rationale for the Contingencies selected for evaluation shall be available as supporting information and shall ~~includ~~include~~e~~ an explanation of why the remaining Contingencies would produce less severe System results.		
AEP	Yes	Table 1 does not specify a maximum amount of allowable non-consequential load loss for those categories (including P6) that have a "Yes" listed under the "Non-Consequential Load Loss Allowed" (last) column. See load loss definition under Attachment D of PJM Manual 14B for an example of a maximum amount specification.
Response: While the SDT does not disagree with having some specific maximum amount of allowable Non-Consequential Load loss for these events, arriving at such an amount may be too case-specific and too descriptive for a Continent-wide Standard		
ERCOT System Planning	No	The former P5 of the first draft only required transmission circuits of 300 kV and above to be simulated out of service followed by loss of transmission circuit or transformer. P6 of the second draft requires all BES (100 kV and above) transmission circuits, transformers, dc lines, and shunt devices in combination of another BES circuit, transformer, dc line, and shunt device. The number of contingencies that have to be simulated increased dramatically to an impractical level and would require days of uninterrupted computer run time to complete. This, in combination with other contingencies and sensitivities required in this draft of the standard, is not feasible for large entities. ERCOT recommends that this planning event P6 retain the verbiage regarding transmission lines and transformer low side windings above 300kV.
Response: The previous draft P5 set requirements for N-1-1 300 kV and above; P8 sets requirements for N-1-1 below 300 kV. P6 in this draft combines both P5 and P8 from the previous draft. So, the work load for both drafts would be the same. In addition, Requirement R3.3.3 (now Requirement R3.4) was modified to allow the PC and TP to determine the single and multiple Contingencies to be included in the planning analyses. This would give the TP and the PC the discretion		

Organization	Question 11:	Question 11 Comments:
to study the Contingency most suited to the study area, and can choose not to study P6 Events if they are less severe than the events studied. **R3.4 T**hose Planning Event Contingencies in Table 1 ~~– Steady State Performance~~ ~~not covered in Requirement R3.3.2~~ that are expected to produce more severe System impacts shall be identified~~,~~ and a list of those Contingencies to be evaluated for System performance in Requirement R3.1 created~~,~~. ~~and t~~The rationale for the Contingencies selected for evaluation shall be available as supporting information and shall ~~includ~~include~~e~~ an explanation of why the remaining Contingencies would produce less severe System results.		
American Transmission Company	Yes	We suggest that there be more explanation of what system adjustments are permitted. We understand that the revised P6 allows loss of Non-Consequential Load for Systems below 300 kV as well.
Response: Header note 'e' provides the System adjustments allowed after a first Contingency Event. In addition, Footnote # 10 has been added to the end of Table 1 to reflect that curtailment or interruption of firm Transmission Service will be allowed in preparation for the next Contingency. **Header note 'e'** -- For all Planning Events, planned System adjustments such as Transmission configuration changes and redispatch of generation are allowed if such adjustments are executable within the time duration applicable to the Facility Ratings. **Footnote #10** – Curtailment of firm transmission service, when coupled with the appropriate re-dispatch of resources obligated to re-dispatch, is allowed both as a System adjustment (as identified in the column titled 'Initial System Conditions') and a corrective action, where it can be demonstrated that Facilities remain within applicable Facility Ratings and those adjustments do not result in the shedding of any firm Load. Where limited options for re-dispatch exist, sensitivities associated with the availability of those resources must be considered. Where Facilities external to the Transmission Planner's planning region are relied upon, Facility Ratings in those regions must be considered.		
Florida Reliability Coordinating Council, inc	No	For P6 events (and all other events that allow system adjustments after the loss of a transmission device), this draft does not clearly define when the requirements in the columns marked as ?Interruption of Firm Transmission Service? or ?Non-consequential Load Loss Allowed? apply. The SDT should clearly state that the requirements in these columns are only applicable after the Event occurs from the Initial System Condition. In addition, the SDT should make it clear whether Interruption of Firm Transmission Service and Non-consequential Load Loss is allowed in preparation for the 2nd Event. On the NERC conference call for the 2nd draft, the SDT chair indicated that Interruption of Firm Transmission Service and Non-consequential Load Loss is not acceptable in preparation for the next event. In Order 693, Para. 1788 - Para. 1796, FERC distinguished between ?preparing for the next contingency? and returning to a system normal state. The SDT removed the allowance that was made in footnote c of TPL-003-0 to ?To prepare for the next contingency, system adjustments are permitted, including curtailments of contracted Firm (non-recallable reserved) electric power Transfers.? (emphasis added) for Category C3 events (now P6 for facilities greater than 300kV). This change in the standard is not directed by the FERC Order 693 and is not a reliability improvement that is cost justified. Forced outage rates for equipment greater than 300kV is very low and the impact on markets is very large. Many utilities have granted long term transmission service to entities with the expectation that the service can be curtailed if required in preparation for the next event. If this is not allowed, entities

Organization	Question 11:	Question 11 Comments:
		within FRCC will have to greatly reduce the long term firm imports into FRCC or construct additional EHV transmission lines from a location well into Georgia down to a point in the southeastern portion of FRCC. While an in-depth cost has not been completed for a project of this size in many years, it is reasonable to expect that a cost in excess of $1.5 - $2.0 Billion. This investment will only slightly increase the amount of firm imports into FRCC (and replace the imports allowed before this change) for an event that may only occur only once every 20+ years. If this event happens, the Transmission Owners will re-dispatch their own generation to curtail their transactions in addition to curtailing the firm transmission service of others, per their OATT. The SDT should clearly state for these Planning Events, all system adjustments including Interruption of Firm Transmission Service and Non-consequential Load Loss is acceptable in preparation for the second Event where system adjustments are allowed between events.
Response: The SDT believes that Table 1 is clear that the events occur from P0 as the starting condition. Footnote # 10 has been added to the end of Table 1 to reflect that curtailment or interruption of Firm Transmission Service will be allowed in preparation for the next Contingency. However, until the next Contingency occurs, System performance will need to meet the requirements for event P1. As such, the proposed standard will not allow loss of any Non-Consequential Load, except for contracted Interruptible Loads, in preparation for the next Contingency. **Footnote #10** – Curtailment of firm transmission service, when coupled with the appropriate re-dispatch of resources obligated to re-dispatch, is allowed both as a System adjustment (as identified in the column titled 'Initial System Conditions') and a corrective action, where it can be demonstrated that Facilities remain within applicable Facility Ratings and those adjustments do not result in the shedding of any firm Load. Where limited options for re-dispatch exist, sensitivities associated with the availability of those resources must be considered. Where Facilities external to the Transmission Planner's planning region are relied upon, Facility Ratings in those regions must be considered.		
FirstEnergy Corp.	Yes	We agree with the change that now permits the loss of Non-Consequential Load for N-1-1 to meet performance requirements regardless of the voltage level studied. It is well understood that following a single contingency (N-1) that no Non-Consequential Load loss or interruption of Firm Transmission service is permitted. The SDT needs to clarify for industry if interruption of Firm Transfers is permitted pre-contingency to prepare for the 2nd (over-lapping) contingency. This is presently permissible in the existing TPL standards as Table 1 footnote 'b' reads ?? To prepare for the next contingency, system adjustments are permitted, including curtailments of contracted Firm (non-recallable reserved) electric power Transfers.?
Response: Footnote # 10 has been added to the end of Table 1 to reflect that curtailment or interruption of Firm Transmission Service will be allowed in preparation for the next Contingency. **Footnote #10** – Curtailment of firm transmission service, when coupled with the appropriate re-dispatch of resources obligated to re-dispatch, is allowed both as a System adjustment (as identified in the column titled 'Initial System Conditions') and a corrective action, where it can be demonstrated that Facilities remain within applicable Facility Ratings and those adjustments do not result in the shedding of any firm Load. Where limited options for re-dispatch exist, sensitivities associated with the availability of those resources must be considered. Where Facilities external to the Transmission Planner's planning region are relied upon, Facility Ratings		

Organization	Question 11:	Question 11 Comments:
in those regions must be considered.		
PPL EnergyPlus	Yes	
NPCC	Yes	
Northeast Utilities	Yes	Northeast Utilities has participated with ISO-NE and NPCC and supports the comments filed by those organizations.
TVA System Planning	Yes	
Platte River Power Authority	Yes	
BCTC	Yes	
National Grid	Yes	
Tenaska, Inc.	Yes	
OPUC	Yes	
PacifiCorp	Yes	We agree with revising P6 to permit loss of Non-Consequential Load to meet performance requirements for Systems above 300kV.
Hydro-Quebec TransEnergie (HQT)	Yes	
Arizona Public Service Co.	Yes	We agree with revising P6 to permit loss of Non-Consequential Load to meet performance requirements for Systems above 300kV.

Organization	Question 11:	Question 11 Comments:
Midwest ISO	Yes	
Tri-State Generation and Transmission Association, Inc.	Yes	
Lakeland Electric	Yes	
LCRA TSC	Yes	
NERC and Regional Coordination	Yes	
North Carolina Electric Membership Corp	Yes	
E.ON U.S. Transmission Planning	Yes	
Central Maine Power Company	Yes	
NSTAR Electric	Yes	

Organization	Question 11:	Question 11 Comments:
New York Independent System Operator	Yes	
Oncor Electric Delivery	Yes	NA
ISO New England Inc.	Yes	
Manitoba Hydro	Yes	Considering the very low probability of such an event (based on industry data), Manitoba Hydro agrees that Interruption of Firm Transmission Service and Non-consequential Load Loss is acceptable.
Los Angeles Department of Water and Power	Yes	yes, only because there is no discrimination among different and arbitrary voltage classes.
IESO	Yes	We concur with the need to test N-1-1 contingencies involving transmission facilities allowing interruptions to firm transmission services and non-consequential load loss to meet performance requirements, for any voltage levels as long as adverse reliability impacts on the BES are exhibited.
Response: Thank you for your response.		

12. **Comments from some entities received from the posting of the 1st draft standard indicated that significant additional costs will be required to meet the proposed requirements and performance tables. Commenters also indicated that it would take several years to install the additional facilities needed to meet the change in requirements. The SDT has attempted to adjust and clarify the proposed requirements and performance in light of these initial comments; however, the SDT needs more specific information on these concerns so that it can put the proposed requirements in perspective and make more adjustments as appropriate. Questions 12, 13 & 14 address these concerns.**

    What do you estimate will be your additional approximate costs, if any, to support the proposed requirements and performance tables over and above what you are currently doing for the following: Analysis:

    One time cost to supplement past study portfolio and analyze the supplemental studies (depending on the extent of supplemental work needed, this may be an accumulated cost over more than one year):

    How many years do you estimate that it will take to complete supplemental studies and associated analysis?

    On-going additional cost for expanded studies and analysis:

Summary Consideration:

The SDT has reviewed the responses and will use the data as background information in making any further decisions with regard to this standard. No direct changes were made to any of the requirements at this time based on this information.

Organization	1 - Question 12 Comments:	2 - Question 12 Comments:	3 - Question 12 Comments:
Dominion - Electric Transmission Planning	It is extremely difficult, if not impossible, to accurately determine the costs required to perform supplemental studies in order to become compliant with these proposed standards. It will take time to just become familiar with the proposed changes as well as developing the necessary documentation to show compliance. What is obvious is that increased staffing levels will be required to perform the assessments. Furthermore, it will take significant time to become fully compliant. Therefore, a grace	As stated above, this is difficult to predict but a grace period of 2 to 3 years should be considered.	At this point we are estimating at least 2 to 3 additional resources may be required to perform the additional studies on an ongoing basis. For Dominion, three (3) additional engineers to perform this analysis is approximately $500,000 per year (including benefits and overheads).

Organization	1 - Question 12 Comments:	2 - Question 12 Comments:	3 - Question 12 Comments:
	period of 2 to 3 years should be granted in order to perform the required assessments and become compliant.		
NPCC	NPCC Participating Members believe some additional cost for analysis and study may be required in order to meet the final requirements of the standard and the associated performance tables. However, the ability to accurately estimate the costs of these studies, how long the analysis may take and how much additional effort may need to be made to compile the documentation is not possible at this time. Many believe posing this question is premature and cannot be quantified at this time, and it may hold questionable value without a better understanding of the complete final requirements of the standard. Many believed that the sensitivity language, although currently being performed to some extent within NPCC, that now appears in the standard, could have a drastic effect on the extent to which this additional analysis is conducted and the associated costs.		
TVA System Planning	One component of these costs is based on modification to the load flow database. A massive effort would need to be undertaken to model bus sections and breaker codes in order to simulate the planning events needed to stay current with the proposed standards. Also, man-power to perform the extra analysis was considered. Additional man-power of 5 engineers (2 years) would	The majority of the time would be spent modifying the load flow database so that the new planning event simulations could be analyzed. ? Time duration estimate of 2 years would be required.	Additional man-power of 4 engineers at costs of $400,000 per year would be required.

Organization	1 - Question 12 Comments:	2 - Question 12 Comments:	3 - Question 12 Comments:
	be required at cost of $1,000,000		
Progress Energy Carolinas	$150,000	3 Years	$50,000/year
BCTC	We estimate an initial one time cost of up to $50,000 for BCTC planners to become familiar with the new format and requirements of the standards and make changes to their assessment process. In addition, additional study costs for sensitivity studies (many stability studies) may cost an additional $50,000. Many segments of the BCTC system are stability limited and we have significant experience with the needs and timelines for doing stability studies. Stability studies identify the need for RAS for multiple contingencies, which is fairly short lead time. We are currently satisfied with the amount of stability studies we do for the near and long term planning horizons. We do not need to do sensitivity studies. We do not expect any significant additional costs for studying Extreme Events because most of the wide area events listed are not applicable to the BCTC system.	1 Year	The additional cost could be from $50,000 to $100,000 per year. We will incur additional study costs for sensitivity studies and expect additional planning administration costs for reconciling between reinforcements required to meet the CLL/NCLL definitions and P3 requirements vs. what we actually propose as doable projects.
Manitoba Hydro	$500,000	2 to 3 person years years	$300,000
Los Angeles Department of Water and Power	I do not object to added studies serving useful purposes; however, duplicative studies are a waste of resources. Mixing operating studies and requiring such studies in the planning of future system shows a confused perspective on the	Please be more specific as to what additional studies are being referred here.	

Organization	1 - Question 12 Comments:	2 - Question 12 Comments:	3 - Question 12 Comments:
	purpose of planning studies verses operating studies.		
National Grid	The comment period was not long enough to develop a thoughtful response to the impact that the new standards might have. Therefore costs can be speculated to be incrementally hundreds of thousands per year.	The comment period was not long enough to develop a thoughtful response to the impact that the new standards might have on the planning studies, but a very rough thought would be that any additional needs would be captured within the normal planning studies, which would likely occur within two study cycles of the effective date of the standard.	If the new requirements are included in the normal study cycle and the costs are the incremental costs required by additional study requirements, then the annual costs will be less than the first year costs, but we still will need additional staffing, which will cost hundreds of thousands per year. In addition to cost, there is a significant concern over whether or not the labor market can provide enough qualified staff to complete the required work.
Pacific Gas and Electric Co.	We expect supplemental studies to be needed for the entire 500 kV system and most of the 230 kV system. We estimate the one time cost for supplemental studies to be around $100,000.	Assuming that the supplemental studies would be added to the on-going work, we estimate the time to complete the supplemental studies to be about 2 to 3 years.	We estimate that the additional cost for the expanded studies and analysis would be about $50,000/year.
Gainesville Regional Utilities	$50,000. I don't feel this is needed for smaller utilities.	3 years. Again, I don't feel this is needed for smaller utilities.	$60,000. Again, I don't feel this is needed for smaller utilities.
JEA	$80,000 per year.	3 years	$80,000 per year.
PacifiCorp	$500,000 (approx)	three years	$250,000
Puget Sound Energy, Inc.	$1,000,000 for the STD in its current form. The recovery of firm transmission following N-1 will be the largest cost for PSE	10 years.	$300,000
ITC Holdings: ITC, METC, ITC Midwest	While we recognize that the standards might require us to garner a little more manpower and will take a little more time, we believe that running these studies is	While we recognize that the standards might require us to garner a little more manpower and will take a little more time, we believe that running these studies is	While we recognize that the standards might require us to garner a little more manpower and will take a little more time, we believe that running these studies is

Organization	1 - Question 12 Comments:	2 - Question 12 Comments:	3 - Question 12 Comments:
	important.	important.	important.
Idaho Power Company	Appx $50k	2 to 3 years	Appx $50k
SMUD		Three study cycles would be my guess. Related matters: Since the definition for “Year One” allows for the start of each assessment to be up to 18 month from the “completion” of the previous Planning Assessment, using the term ?annual?, “annually” in the definition and in various sections of the standard is confusing. An alternate word or dropping the words annual/annually would make more sense. What is considered as “completion” of an assessment (in definition of Year One)?	
Hydro-Québec TransÉnergie (HQT)	HQT believe some additional cost for analysis and study may be required in order to meet the final requirements of the standard and the associated performance tables, however the ability to accurately estimate the costs of these studies, how long the analysis may take and how much additional effort may need to be made to compile the documentation is not possible at this time. Many believe posing this question is premature and cannot be quantified at this time and it may hold questionable value without a better understanding of the complete final requirements of the standard. Many believed that the sensitivity language, although currently being performed to some extent within NPCC, that now appears in		

Organization	1 - Question 12 Comments:	2 - Question 12 Comments:	3 - Question 12 Comments:
	the standard, could have a drastic affect on the extent to which this additional analysis is conducted and the associated costs		
Progress Energy Florida, Inc.	Given that a) PEF has never performed analysis to the extent that the draft TPL Standard is requiring and b) the draft is going through an iterative process and is at present considered a "moving target", a reasonably accurate estimate, or even a wild guess, cannot be provided for this answer. Having said that, it can be reasonably said that any estimate that could safely claim a reasonable degree of accuracy would require analysis performed full-time by several individuals over a period of several months (or possibly a period greater than one year). Just the cost of the assessment analysis alone would present an O&M challenge to PEF's Transmission department.	PEF has assessed this question and determined that any period of time less than 10 years would be inadequate to assess the supplemental nature of the requirements of the draft TPL Standard, to say nothing of the time required to construct the required facilities.	PEF, again stating that this cannot be considered an accurate estimate for the reasons stated in 12a, would estimate the burdened labor cost to perform such supplemental analysis on an ongoing basis to be at least $1M annually.
Sierra Pacific Power Comapny / Nevada Power Company	$400,000	2 Man Years	$250,000/year
Lafayette Utilities System	Lafayette has not analyzed in any detail the resource requirements addressed in this question. Based on available information, we estimate that supplementing existing studies would require at least 1 FTE familiar with stability analysis to be able to complete this portion of TPL. The new steady-state analysis will require the addition of 1 FTE to be able to complete the additional P5-P7	See response to part 1 of Question 12.	See response to part 1 of Question 12.

Organization	1 - Question 12 Comments:	2 - Question 12 Comments:	3 - Question 12 Comments:
	requirements. These will be ongoing expenses whether accomplished by hiring new staff or relying on external service providers.		
Arizona Public Service Co.	Two person-year.	2-years.	one person year.
Ameren	One component of cost is to model in more detail all straight busses and bus-tie breakers at all transmission voltage levels. Contingency scenarios would also need to be developed and/or modified to correspond with the new powerflow models. The sensitivities presently specified will greatly increase the cost and time needed for updating all plant stability studies.	One-time costs to provide additional modeling detail and modify and test the revised contingency lists would be approximately 1 man-month or about $8000. Updating all plant stability studies would take approximately 5 man-years, at an estimated cost of approximately $500,000 (including benefits). Given existing regional requirements to complete the annual assessment by July 1 of the calendar year, additional staffing would likely be needed to complete this work, unless compliance were phased in over a number of years, similar to the MOD-024 and MOD-025 standards with respect to generator testing.	A review of the studies required for R2.1 indicates that at least 6 powerflow modeling scenarios would need to be completed to cover the base cases and sensitivities, which would be a 50% increase in the amount of work presently performed to meet the existing TPL-001 through 004 requirements for the near-term assessment. A review of the studies required for R2.4 indicates that at least 4 stability scenario models would need to be completed, which would be a 100% increase in the amount of work presently performed. Our present compliance performance and analyses activities take approximately 30 man-months to complete. We would expect the additional study analyses to add an additional 20 man-months of work and require 4-5 additional engineers at an annual cost of $400,000 to $500,000 (including benefits), given the regional requirement to complete the annual assessment by July 1.
City of Tallahassee, FL	we estimate a cost of $100,000 minimum since the City would likely have to outsource some of this analysis in addition to the work done by in-house system	hard to give a good estimate since the full ramifications of the required studies is not clear in the current draft. I would estimate 2 years at least.	similar costs to what was estimated above for the supplemental study cost, since staffing level is such that much of this ongoing work will likely be outsourced.

Organization	1 - Question 12 Comments:	2 - Question 12 Comments:	3 - Question 12 Comments:
	planning staff.		
Florida Power and Light	These costs cannot be determined without having experience with the new standard and its analysis requirements. Analysis of existing studies will undoubtedly uncover substantial additional study that would need to be performed, but the costs of such analysis and studies could not be reasonably estimated beyond stating that the costs would be significant resulting from 1000's of man-hours spent on supplemental work that would only determine if we were in compliance, not including any work necessary to determine what would be necessary to bring deficiencies in to compliance.	It would not be unreasonable to find that it takes one full planning horizon (10 years) to complete supplemental studies and analysis for the draft standard, because it is so prescriptive. Requirements such as R2.2.1 that requires that the planning assessment be extended for longer lead time projects (such as the multiple new nuclear projects being considered across the U.S.) and R2.4.1 that specifies "...including the behavior of induction motor loads" will likely invalidate past studies that took considerable time to perform and would have to be reproduced with the newly required considerations. Requirements such as R2.6 (and subrequirenments) invalidate many existing studies, because of subjective terms such as "material changes" and "would impact the study area" without definitions of "material" or "impact". Re-analyzing all existing studies and re-writing the results and conclusions using the new terminology (P0, P1, P5 etc. instead of Category A, B or C2, C3, C5 etc.) used in the new performance tables will also add substantially to the effort needed to insure compliance and make the information auditable.	$ 5 million dollars annually is perhaps very conservative.
CenterPoint Energy and CPS Energy	We have no analysis to support an answer to this question, and we believe any such analysis would be speculative. We believe the reality of the situation is that the requirements are not practically achievable	3-4 years, assuming reasonably practical interpretation of the impractical requirements.	

Organization	1 - Question 12 Comments:	2 - Question 12 Comments:	3 - Question 12 Comments:
	at any cost, so the ultimate cost would depend on practical interpretations of impractical requirements. Even if the cost could be reasonably estimated, we oppose detracting valuable expertise away from necessary, value-added analyses to unnecessary, over-reaching theoretical analyses and documentation for audit purposes.		
SRP	The additional study work associated with this Standard could cost up to SRP $100k.	1 to 2 years to complete these additional studies.	Estimate addition on-going costs of $50k.
MidAmerican Energy Company	MEC estimates that the total cost for one-time software licenses would be about $100,000.	MEC estimates that the lead time to perform supplemental studies and analyses to meet the new requirements would be 2 years.	MEC estimates that the on-going additional cost of expanded studies and analyses to meet the new requirements would be about $150,000 to $200,000 for additional staff and continuing software fees.
Tucson Electric Power Company	$200,000	6 month study performed by consultant	1 man-year
SERC Dynamics Review Subcommittee	The sensitivities will greatly increase the cost and time need for planning because the work is directly proportional to the number of sensitivities.		
MRO NERC Standards Review Subcommittee	The MRO estimates that the additional one-time costs of supplemental studies and analysis to meet the new requirements might be spread over five years because some analysis only has to be updated every five years. The MRO estimates that the total cost over five years for additional staff, consulting services, or software fees would be about $200,000 to $300,000 per	The MRO estimates that the lead time to perform supplemental studies and analysis to meet the new requirements would be up to 5 years.	The MRO estimates that the on-going additional cost of expanded studies and analysis to meet the new requirements would be about $150,000 to $200,000 for additional staff and continuing software fees per responsible entity.

Organization	1 - Question 12 Comments:	2 - Question 12 Comments:	3 - Question 12 Comments:
	responsible entity.		
Modesto Irrigation District	Unknown at this time.		
Midwest ISO	Some additional costs will be required to comply with all the requirements. This is difficult to quantify at this time.	This is difficult to quantify at this time, but any increased requirements should be clearly identified by the SDT and a transition period should be developed if the standards are intended to be more restrictive.	There will be an increase in ongoing cost for expanded studies and analysis. A transition period for staffing and process development will be required.
Tri-State Generation and Transmission Association, Inc.	Scenario assessments will significantly increase workload. Development of dynamic load models is ongoing, and will need a much longer implementation period than the steady state portions of the standard. As much as $500,000 may be required to address all of R2.1.3 scenario requirements.	It would take as much as two years for the initial supplemental studies with existing staff.	Ongoing additional sensitivity and dynamic studies would cost approximately $300,000 per year.
AEP	Additional one-time cost of 33 man-months	2 years	Additional ongoing cost of 12 man-months
Lakeland Electric	Unknown	Unknown	Unknown
Brazos Electric Power Cooperative, Inc.	We have no real way to estimate this or determine these costs.	Again, we have no real feel for making an estimate but it would be safe to say that the studies would take longer than the planning window. In other words, the results would not be completed before we would have to start them over again.	
NERC and Regional Coordination	Clarity about the exact number of supplemental studies required needs to be added to the standard before this question can bee addressed. The requirements		

Organization	1 - Question 12 Comments:	2 - Question 12 Comments:	3 - Question 12 Comments:
	contained within the standard are nebulous. The requirements need to clearly state the depth of the studies required for each time horizon.		
ColumbiaGrid	The new TPL Standard raises the bar of transmission system performance. This can be expected to require significant additional analysis, documentation and system reinforcements (or reduced firm transfers allowed on the system if system reinforcements are not made). We will defer to our members to provide quantification of those elements.		
IESO	Minimal, if any, since the IESO has been conducting and documenting planning studies that meet events and performance criteria that are very similar to those specified in the draft TPL-001 standard. However, this is speculative at this time since we are not sure what the eventual standard will be like. Another uncertain area is the extent to which additional studies are required if sensitivity testing is mandated. Please see our comments under Q2 and Q10 on sensitivity testing. If sensitivity testing should become a requirement, then the scope is very wide and we are unable to have a good handle on the incremental time and cost to supplement past study portfolio.	Minimal, if any, for the reasons indicated above, other than for meeting the sensitivity testing requirements (if mandated) which cannot be quantified.	Minimal, if any, for the reasons indicated above, other than for meeting the sensitivity testing requirements (if mandated) which cannot be quantified.
Northeast Utilities	Northeast Utilities has participated with ISO-NE and NPCC and supports the comments filed by those organizations.	Northeast Utilities has participated with ISO-NE and NPCC and supports the comments filed by those organizations.	Northeast Utilities has participated with ISO-NE and NPCC and supports the comments filed by those organizations.

Organization	1 - Question 12 Comments:	2 - Question 12 Comments:	3 - Question 12 Comments:
North Carolina Electric Membership Corp	N/A	N/A	N/A
ERCOT System Planning		At least 4 years. It will take as long as the largest entity in our system which has estimated about 4 years. We are totally dependent on them for all data needed for these studies.	he workload to support the existing TPL-001 to TPL-004 has already consumed two full-time senior positions. Add to that the new requirements for steady state studies necessary in this standard would take at least another full time position. The new stability study requirements and short circuit requirement added would double the number of people necessary for a total of approximately six full time positions with moderate to high experience levels. (Four incremental FTEs with estimated annual cost of $650,000). Purchasing additional licenses for study software is an additional expense.
American Transmission Company	We estimate that the additional one-time costs of supplemental studies and analyses to meet the new requirements might be spread over five years because some analysis only has to be updated every five years. So, we estimate that the total cost over five years for additional staff or consulting services may about $200,000 to $300,000.	We estimate that the lead time to perform supplemental studies and analyses to meet the new requirements might be up to 5 years.	We estimate that the on-going additional cost of expanded studies and analyses to meet the new requirements might be about $150,000 to $200,000 for additional staff.
New York Independent System Operator	A very preliminary estimate would be potentially millions of dollars.	Again, a very preliminary estimate would be two years.	Preliminary estimate is on the order of hundreds of thousands of dollars In addition to cost, there is a significant concern over whether or not there will be

Organization	1 - Question 12 Comments:	2 - Question 12 Comments:	3 - Question 12 Comments:
			enough staff to complete the required work.
SERC Reliability Review Subcommittee and Planning Standards Subcommittee	One component of these costs is based on modification to the loadflow database. A massive effort would need to be undertaken to model bus sections and breaker codes in order to simulate the planning events needed to stay current with the new standards. Also, man-power to perform the extra analysis was considered. Additional man-power: 5 engineers (2 years) Cost: $1,000,000	The majority of the time would be spent modifying the loadflow database so that the new planning event simulations could be analyzed. Time: 2 years	Additional man-power: 4 engineers Costs: $400,000 / year The following analysis was performed by one large integrated utility in SERC. The results are not representative of all utilities in the SERC region, but would be multiplied many times over to fully represent the SERC region as a whole. A comprehensive study of the impact of these proposed and incomplete standards is not feasible until they are finalized. Regarding manpower, aside from the estimated costs there is the very real situation that the number of qualified engineers available in the industry is nowhere near what would be necessary to carry out the studies (including sensitivities) called for by the proposed standard. This reality needs to be taken into consideration by the Standards Drafting Team when it makes its implementation plan recommendations.
Oncor Electric Delivery	Cost to supplement past study portfolio would be between $250,000 to 750,000.	3 to 5 years with added resources (staff)	$500,000 annually
ISO New England Inc.	The comment period was not long enough to develop a thoughtful response to the impact that the new standards might have. Therefore cost can not be reasonably speculated.	The comment period was not long enough to develop a thoughtful response to the impact that the new standards might have on the planning studies, but a very rough thought would be that any additional needs would be captured within the normal planning studies, which would likely occur within two study cycles of the effective date of the standard.	The comment period was not long enough to develop a thoughtful response to the impact that the new standards might have on study effort and the associated cost. In addition to cost, there is a significant concern over whether or not there will be enough staff to complete the required work.

Organization	1 - Question 12 Comments:	2 - Question 12 Comments:	3 - Question 12 Comments:
Orlando Utilities Commission	$75,000 to supplement past study portfolio. (We have a fairly small system, only 1400 MW)	Two years, one year to recruit additional planner, the second to perform the baseline studies. This assumes there are sufficient trained personnel in the industry and they can be recruited.	$75,000 each year.
Entergy Services, Inc.	Cost will be covered by the on-going study costs as indicated below.	18 to 24 months	$1,200,000 / year
BPA Transmission Reliability Program	This information is not available.	This information is not available.	This information is not available.
Response: The SDT thanks all who responded to this survey question.			

13. **Documentation: One time cost to prepare reporting documentation associated with studies needed to supplement past study portfolio (depending on the time required to complete the supplemental work, this may be an accumulated cost over more than one year) – and on-going additional cost for documentation of expanded studies and analysis:**

Summary Consideration:

The SDT has reviewed the responses and will use the data as background information in making any further decisions with regard to this standard. No direct changes were made to any of the requirements at this time based on this information.

Organization	1 - Question 13 Comments:	2 - Question 13 Comments:
Dominion - Electric Transmission Planning	The initial process development and documentation will be the most difficult and time consuming portion. Dominion - Electric Transmission recommends a period of 3 to 5 years be given for this initial period of becoming compliant and preparing the documentation. As noted above, it is difficult to provide cost estimates, but we expect at least 2 to 3 additional resources will be required, at a minimum.	See response above.
NPCC	See above	
TVA System Planning	Additional man-power of 1 engineer (1 year) would be required at cost of $100,000	Additional man-power of 1 engineer at costs of $100,000 / year
Progress Energy Carolinas	$60,000	$20,000/year
BCTC	Included in the above. We do not do analysis without documentation.	Included in the above. We do not do studies without documenting them
Manitoba Hydro	$200,000	$100,000
Los Angeles Department of Water and Power	This assumes that past studies are inadequate and supplemental studies are needed. The standard does add a lot of duplicative and unnecessary operating scenarios that are already required	

Organization	1 - Question 13 Comments:	2 - Question 13 Comments:
	under TOP and MOD; but they should be deleted because they serve no useful purpose under TPL, why even spend an extra penny if it is for naught.	
National Grid	See response to question 12.	See response to question 12.
Pacific Gas and Electric Co.	This cost would be included in the cost of performing the supplemental studies.	This cost would be included in the cost of performing the expanded studies and analysis
Gainesville Regional Utilities	Probably would be covered in the previously provided annual cost. Again, I don't feel this is needed for smaller utilities.	Probably would be covered in the previously provided annual cost. Again, I don't feel this is needed for smaller utilities.
JEA	Included in Question 12 estimates.	Included in Question 12 estimates.
PacifiCorp	$250,000 over two years	$125,00
Puget Sound Energy, Inc.	$150,000 for the STD in its current form.	$50,000
ITC Holdings: ITC, METC, ITC Midwest	While we recognize that the standards might require us to garner a little more manpower and will take a little more time, we believe that running these studies is important.	While we recognize that the standards might require us to garner a little more manpower and will take a little more time, we believe that running these studies is important.
Idaho Power Company	Appx $50k	Appx $50k
Hydro-Quebec TransEnergie (HQT)	See Q12	
Progress Energy Florida, Inc.	Again, these costs cannot be reasonably estimated given the difficulties stated in the answer to Question 12a. It would reasonable to expect that the number of individuals in PEF's Transmission Planning group would have to dramatically increase, at least doubling in size or possibly significantly more	Documentation cannot be separated from the actual analysis itself, and thus would be included as part of the $1M estimate stated in the answer to Question 12b above.

Organization	1 - Question 13 Comments:	2 - Question 13 Comments:
	than doubling.	
Sierra Pacific Power Comapny / Nevada Power Company	$100,000	$50,000
Lafayette Utilities System	See response to part 1 of Question 12.	See response to part 1 of Question 12.
Arizona Public Service Co.	$200,000.00	$100,000.00
Ameren	Documentation preparation to include the short-circuit assessment, the amount of consequential load dropped for single contingencies, the expanded requirements of the Corrective Action Plan, and how the sensitivities affect the Corrective Action Plan would take a man-week or two at most (no significant cost increase or manpower increase).	Our present documentation activities to develop the assessment and the corrective action plan take approximately 2 man-months to complete. We would expect the documentation to cover the additional study analyses to add an additional 2 man-months of work. The additional documentation for the Consequential Load Loss, short-circuit analysis, expanded requirements of the Corrective Action Plan, and documentation of how the sensitivities studied affect the corrective plan are estimated to double the existing reporting requirements, resulting in an increase of 3.5 man-months and require 2 additional engineers at an annual cost of $200,000 (including benefits), given the regional requirement to complete the assessment by July 1.
City of Tallahassee, FL	documentation cost was included in the cost estimates for #12, since development of the documentation is part of the study work scope.	
Florida Power and Light	These costs cannot be determined without having experience with the new standard and its documentation requirements. Analysis of existing studies will undoubtedly uncover substantial additional documentation that would need to be produced, but the costs of such document production could not be reasonably estimated beyond stating that the costs would be significant resulting from 1000's of man-hours spent on supplemental work	This would be included in the $5 million dollar estimate provided above.

Organization	1 - Question 13 Comments:	2 - Question 13 Comments:
	that would only serve to meet audit requirements.	
CenterPoint Energy and CPS Energy	As with our response to question 12, we believe the answer depends upon the ultimate practical interpretation of the impractical requirements.	
SRP	Estimate $30k to prepare documentation.	Estimate $15k each additional year documentation.
MidAmerican Energy Company	Included in amounts for 12.	Included in amounts in 12.
Tucson Electric Power Company	included in previous question	included in previous question
MRO NERC Standards Review Subcommittee	Included in amounts for 12.	Included in amounts for 12.
Midwest ISO	We agree some additional costs will be incurred for expanded documentation.	ore requirements and more studies will increase documentation costs.
Tri-State Generatino and Transmission Association, Inc.	An additional $100,000 would be required to document studies for compliance purposes.	Perhaps $50,000/year - half of the initial amount required.
AEP	Additional one-time cost of 15 man-months	Additional ongoing cost of 7 man-months
Lakeland Electric	Unknown	Unknown
NERC and Regional Coordination	Clarity about the required documentation and coordination needs to be added to the standard before this question can bee addressed. As written, our interpretation is the increase in documentation requirements is substantial.	

Organization	1 - Question 13 Comments:	2 - Question 13 Comments:
ColumbiaGrid	The new TPL Standard raises the bar of transmission system performance. This can be expected to require significant additional analysis, documentation and system reinforcements (or reduced firm transfers allowed on the system if system reinforcements are not made). We will defer to our members to provide quantification of those elements.	
IESO	Minimal, if any, for the reasons indicated above, other than for meeting the sensitivity testing requirements (if mandated) which cannot be quantified.	Minimal, if any, for the reasons indicated above, other than for meeting the sensitivity testing requirements (if mandated) which cannot be quantified.
Northeast Utilities	Northeast Utilities has participated with ISO-NE and NPCC and supports the comments filed by those organizations.	Northeast Utilities has participated with ISO-NE and NPCC and supports the comments filed by those organizations.
North Carolina Electric Membership Corp	N/A	N/A
American Transmission Company	We estimate that the one time cost for expanded studies and analysis documentation to meet the new requirements might be about $20,000.	We estimate that the on-going cost for expanded studies and analysis documentation to meet the new requirements might be about $10,000.
New York Independent System Operator	included above	included above
SERC Reliability Review Subcommittee and Planning Standards Subcommittee	Additional man-power: 1 engineer (1 year)Costs: $100,000	Additional man-power: 1 engineer Costs: $100,000 / year. The following analysis was performed by one large integrated utility in SERC. The results are not representative of all utilities in the SERC region, but would be multiplied many times over to fully represent the SERC region as a whole. A comprehensive study of the impact of these proposed and incomplete standards is not feasible until they are finalized. Regarding manpower, aside from the estimated costs there is the very real situation that the number of qualified engineers available in the industry is nowhere

Organization	1 - Question 13 Comments:	2 - Question 13 Comments:
		near what would be necessary to carry out the studies (including sensitivities) called for by the proposed standard. This reality needs to be taken into consideration by the Standards Drafting Team when it makes its implementation plan recommendations.
Oncor Electric Delivery	$250,000	$100,000
ISO New England Inc.	See response to question 12.	See response to question 12.
Orlando Utilities Commission	$25,000	$25,000
Entergy Services, Inc.	$150,000	$100,000 / year
BPA Transmission Reliability Program	This information is not available.	This information is not available.
Response: The SDT thanks all who responded to this survey question.		

14. System Reinforcement: One time cost, capital investment, to expand your system reinforcement program (due to lead times associated with different types of facilities, this will probably be an accumulated cost over several years). How many years do you estimate that it will take to complete this initial expanded system reinforcement program:

Summary Consideration:

The SDT has reviewed the responses and will use the data as background information in making any further decisions with regard to this standard. No direct changes were made to any of the requirements at this time based on this information.

Organization	1 - Question 14 Comments:	2 - Question 14 Comments:
Dominion - Electric Transmission Planning	Difficult to estimate the investment required, but it will be in the millions if not hundreds of millions of dollars.	Siting new transmission in Virginia can take a minimum of 5 to 7 years if new right-of-way acquisition is required. It is difficult to provide an estimate of time, but it will be quite extensive.
NPCC	NPCC participating members have expressed compliance concerns that this standard, and in particular this question, imply NERC has the ability to "force" transmission reinforcements and construction. It should be emphasized and clarified that the standard should require transmission studies only, and per the Energy Policy Act, NERC does not have this authority as the ERO as granted by FERC in the US and NO authority allowing this in Canada. Also NPCC participating members expressed concern that a validly conducted assessment which shows that criteria are not met (in the 5 or 10 year horizon) could result in non-compliance with the Standard. If NERC believes that it can issue monetary penalties for 5 or 10 year assessments that show that performance criteria will not be met under future system conditions, there is a key question that requires explanation: What behavior is NERC attempting to incent through fining parties for conducting assessments which identify problems in a 5 to 10 year horizon? Also, NERC should further explain how it would view the relevance of a State or Provincial decision not to permit new facilities when issuing such a potential penalty such as preclusive siting issues with Generating Plants.	See above

Organization	1 - Question 14 Comments:	2 - Question 14 Comments:
TVA System Planning	Costs would include the implementation of redundant protection schemes for the P5 planning event (fault + failure of protection scheme), additional 500-kV facilities for P2.2 (single contingency - bus section outage) and P4 (fault + stuck breaker) events, and additional 161-kV facilities for the P3 (Generator +1) events. Estimated cost of $1 billion	Time duration of 10 years would be required
Progress Energy Carolinas	$100,000,000	10 years
BCTC	We do not believe that this cost is not relevant for determining the applicable standards and have not estimated it. The reinforcement costs are orders of magnitude greater that the costs of alternatives the changes in this standard propose to prohibit (e.g. use of RAS, curtailment in anticipation of the next contingency). We believe it is very unlikely that we would get approval for the projects that would be required to meet the proposed changes.	It is highly unlikely that we would be able to get funding approval for the system reinforcements required to meet the proposed changes in these standards.
Manitoba Hydro	An estimate of the cost to Manitoba Hydro is $1.0 Billion.	The licensing and construction of facilities to achieve compliance will require at least 10 years.
Los Angeles Department of Water and Power	If this question is referring to discriminatory treatment between different voltage classes that is arbitrary; the effort should be directed to either treat all the voltage classes equally or do come up with a scientific or historical basis to support the requirement. This is an engineering standard, all the criteria should have some scientific/engineering rationale that can be supported either by physics or historical data.	
National Grid	The comment period was not long enough to develop a thoughtful response to the impact that the new standards might have on the construction requirements. Therefore cost can not be reasonably speculated.	At least 5 beyond the study period. Lines requiring new Rights-of-Way may require 10.
Pacific Gas and	The capital investments would be dependent on the system	Any transmission facilities that would require a certification of

Organization	1 - Question 14 Comments:	2 - Question 14 Comments:
Electric Co.	reinforcements needed due to the added requirements. For example, if after the first contingency, redispatch to curtail firm transfers is not allowed in anticipation of the next single contingency, the system reinforcements could easily include more 500 kV lines and related facilities. The costs of such reinforcements could be a few Billion dollars.	public convenience and necessity could take more that five years for permitting, engineering and construction. Transmission Planning could take a few more years depending on the transmission reinforcements to be constructed.
Gainesville Regional Utilities	$50 Million. Again, I don't feel this is needed for smaller utilities.	7 years. Again, I don't feel this is needed for smaller utilities.
Public Service Company of New Mexico	This ultimately depends on the degree to which the local area issues addressed by footnote b of Table 1 of the existing TPL are maintained. Without the local area concepts of the existing TPL, costs could run into the hundreds of millions of dollars.	This ultimately depends on the degree to which the local area issues addressed by footnote b of Table 1 of the existing TPL are maintained. Without the local area concepts of the existing TPL, permitting requirements would result in some projects exceeding 10-years.
JEA	Could be up to $1 Billion and would depend on the physical ability to terminate at existing 500 kV substations and the ability to acquire 500 kV ROW outside of JEA's and Florida's jurisdiction.	Minimum of 7 years if DOE declares a Corridor of National Interest. Otherwise it could be longer and more costly.
PacifiCorp	$100,000,000 + Will not be able to estimate the total cost until after the studies are complete.	10 years
Puget Sound Energy, Inc.	$800,000,000 to recover Firm Transmission capacity with no adjustment following N-1.	15 years
ITC Holdings: ITC, METC, ITC Midwest	Since we have been following the NERC Planning Standards, at this point we do not expect an additional one time system reinforcement cost.	Since we have been following the NERC Planning Standards, at this point we do not expect an additional time-frame for a system reinforcement program.
Idaho Power Company	Not sure	5 years
SMUD	A field test of the revised standard would be the appropriate way to arrive at the approximate costs to support the new/modified	A field test would be the time to get an educated estimate.

Organization	1 - Question 14 Comments:	2 - Question 14 Comments:
	requirements.	
Hydro-Quebec Transenergie (HQT)	HQT and NPCC participating members have expressed compliance concerns that this standard, and in particular this question, imply NERC has the ability to "force" transmission reinforcements and construction. It should be emphasized and clarified that the standard should require transmission studies only, and per the Energy Policy Act, NERC does not have this authority as the ERO as granted by FERC in the US and NO authority allowing this in Canada. Also HQT and NPCC participating members expressed concern that a validly-conducted assessment which shows that criteria are not met (in the 5 or 10 year horizon) could result in non-compliance with the Standard. If NERC believes that it can issue monetary penalties for 5 or 10 year assessments that show that performance criteria will not be met under future system conditions, there is a key question that requires explanation: What behavior is NERC attempting to incent through fining parties for conducting assessments which identify problems in a 5 to 10 year horizon? Also, NERC should further explain how it would view the relevance of a State or Provincial decision not to permit new facilities when issuing such a potential penalty such as preclusive siting issues with Generating Plants.	
Progress Energy Florida, Inc.	Again, due to the difficulties described in the answer to Question 12a, given that the amount of analysis cannot be reasonably estimated, neither can the one-time capital cost. PEF did state in the answer to Question 11 that the cost to our 500 kV system alone would easily run in to the range of costing billions of dollars. How many billions, we are not sure, but we have sufficient experience through presently planned 500 kV projects on our system to know that the cost for such expansion is in the range of billions of dollars. Given that PEF has not been able to comprehensively assess the costs to its 230 kV and 115 kV system, it is likely that the total cost of implementing the draft TPL Standard would be many, many billions of dollars. As stated earlier, this concern is reinforced in the answer to Question 15, but	PEF does not believe the undertaking required in the present draft of the TPL Standard, questionably described here as an "initial" program, could reasonably be implemented in our lifetime. As stated in our answers to Questions 12 and 13, the planning time would run at least 10 years, or one complete long-term planning cycle. Implementation, particularly given the scope of 500 kV projects and challenges with operating the existing system while constructing such large projects, will take an additional 10 years. An estimate of 20 years, however, assumes that the industry is in place to make such projects feasible continent-wide. Just a cursory assessment of the limited resources of the Transmission Construction industry, combined with the global demand for concrete and steel, leads us to conclude that implementation of

Organization	1 - Question 14 Comments:	2 - Question 14 Comments:
	we are extremely concerned that our ratepayers will potentially be burdened with such exorbitant cost for so little benefit, and are certain that our PSC and our ratepayers will agree.	the draft Standard's requirements is not feasible short of a World War II-scale re-tooling of our entire economy. Given the significant challenges the U.S. economy is already facing, the prudency of such a colossal undertaking with minimal benefit becomes even more questionable.
Sierra Pacific Power Company / Nevada Power Company	$800 Million	10 years
Lafayette Utilities System	See response to part 1 of Question 12.	See response to part 1 of Question 12.
Arizona Public Service Co.	Hard to quantify without studying.	5 years
Ameren	Our present interpretation is that the proposed revised standard would have a minimum impact on the reinforcement of the Ameren system. The modification to remove the requirement that bus-tie circuit breakers must have the same performance requirements as non-bus-tie breakers significantly reduces our issues of non-compliance, and particularly for circuit breakers 300 kV and above.	Our present interpretation is that the proposed revised standard would have a minimum impact on the reinforcement of the Ameren system.
City of Tallahassee, FL	depending on the interpretation of the standard as currently drafted, this cost could be substantial (at least $20M) over a 5-year capital budget period (consistent with the City's current practice). It's doubtful this level of funding could be achieved/maintained given other financial pressures for local governments.	Unable to develop an answer to this question, since it depends on the ability to successfully site and permit generation and transmission facilities (which is becoming increasingly harder to complete), and the requirements of any successful siting effort may make the costs prohibitive (ie, underground transmission facilities and/or stringent controls on generating facilities).
Florida Power and Light	These costs cannot be determined without having experience with the new standard and its performance requirements. The costs of such investment could be in the 10's of billions of dollars for FPL because of the increased level of performance contemplated by the draft standard.	If we knew what was needed today, it could conceivably take up to 10 years to complete, if the projects are all feasible. Without knowing what is necessary, a fair estimate would be 20 years. This does not take into consideration that the entire industry would be competing for the same limited resources of material and manpower to complete this reinforcement. Justification would be

Organization	1 - Question 14 Comments:	2 - Question 14 Comments:
		problematic and eminent domain may not be enforceable due to the remote low probability of an N-1-1 event, and lack of a true reliability need.
Exelon Transmission Planning		Analysis has not been completed at this time to determine the extent of the additional burden, but significant expenditures, in terms of personnel, tools and transmission upgrades, are anticipated if this draft were implemented.
CenterPoint Energy and CPS Energy	We believe the proposed requirements may not impose additional capital investment for system re-enforcements for our companies. We believe we are already achieving the reliability goals embodied in the proposed requirements but in a much more efficient and cost-effective way than the overly prescriptive approach proposed in these requirements.	
SRP	Unknown costs, there are numerous raise the bar Standards, hard to determine the additional cost to SRP until the complete studies are performed and evaluated.	Unknown until the reinforcements are determined.
MidAmerican Energy Company	The additional one-time costs of system reinforcements to meet the new requirements would depend on the results of the new studies and be hard to forecast. However, if they involved just a few 345 kV substation modifications and 345 kV line additions, then MEC estimates that it would cost in the range of hundreds of millions of dollars per responsible entity.	The lead time to build new system projects would depend on the results of new studies and be hard to forecast. However, if they involved a 345 kV substation modification or a 345 kV line addition, MEC estimates that it would take 5 to 7 years to complete the new projects.
Tucson Electric Power Company	unable to determine without actual studies	10+ years5 year budget and 10 year plans have been approved. Proposed projects in the 5-10 year time frame would need revised and accelerated and new projects would be proposed following the completion of these proposed projects.
SERC Dynamics Review Subcommittee		The lead time for new line construction is at least 7 years.

Organization	1 - Question 14 Comments:	2 - Question 14 Comments:
MRO NERC Standards Review Subcommittee	The additional one-time costs of system reinforcements to meet the new requirements would depend on the results of the new studies and be hard to forecast. However, if they involved just a few 345 kV substation modifications and 345 kV line additions, then we estimate that it would cost in the range of hundreds of millions of dollars per responsible entity.	The lead time to build new system projects would depend on the results of new studies and be hard to forecast. However, if they involved a 345 kV substation modification or a 345 kV line addition, we estimate that it would take 5 to 7 years to complete the substation project and 8 to 12 years (or more) to complete the new transmission line project.
Midwest ISO	This is difficult to quantify at this time.	This is difficult to quantify at this time.
Tri-State Generatino and Transmission Association, Inc.	We do not anticipate additional investment beyond currently planned facilities.	Transmission projects generally take between 3 and 6 years to complete.
Tri-State G&T		10-Jun
Lakeland Electric	Unknown	Unknown
Southern Company Transmission	These costs cannot be determined without having experience with the new standard and its performance requirements.	
NERC and Regional Coordination	Clarity needs to be added throughout the requirements. Our interpretation of the standards as written will not result in substantial capitol investment. These standards will not have a substantial impact on improved system reliability, however; the requirements do significantly increase the manpower investment in study documentation and efforts associated with reporting study results.	
ColumbiaGrid	The new TPL Standard raises the bar of transmission system performance. This can be expected to require significant additional analysis, documentation and system reinforcements (or reduced firm transfers allowed on the system if system reinforcements are not made). We will defer to our members to provide quantification of those elements.	

Organization	1 - Question 14 Comments:	2 - Question 14 Comments:
IESO	None expected at this time.	None expected at this time.
Northeast Utilities	Northeast Utilities has participated with ISO-NE and NPCC and supports the comments filed by those organizations.	Northeast Utilities has participated with ISO-NE and NPCC and supports the comments filed by those organizations.
North Carolina Electric Membership Corp	N/A	N/A
American Transmission Company	The additional one-time costs of system reinforcements to meet the new requirements would depend on the results of the new studies and be hard to forecast. However, if they involved just a few 345 kV substation modifications and 345 kV line additions, then we would estimate that it costs may be in the range of hundreds of millions of dollars.	The lead time to build new system projects would depend on the results of new studies and be hard to forecast. However, if they involved a 345 kV substation modification or a 345 kV line addition, we estimate that it might take 5 to 7 years to complete the substation project and 8 to 12 years (or more) to complete the new transmission line project.
New York Independent System Operator	Depending on facilities covered by the standard, it is estimated that the cost to bring facilities into compliance potentially could be on the order of billions of dollars.	A preliminary estimate is that it would take at least five but potentially up to ten years to bring facilities into compliance.
SERC Reliability Review Subcommittee and Planning Standards Subcommittee	Typical costs for a large utility in SERC would include the implementation of redundant protection schemes for the P5 planning event (fault + failure of protection scheme), additional 500-kV facilities for P2.2 (single contingency - bus section outage) and P4 (fault + stuck breaker) events, and additional 161-kV facilities for the P3 (Generator +1) events. Cost: $1 billion	Time: 10 years The following analysis was performed by one large integrated utility in SERC. The results are not representative of all utilities in the SERC region, but would be multiplied many times over to fully represent the SERC region as a whole. A comprehensive study of the impact of these proposed and incomplete standards is not feasible until they are finalized. Regarding manpower, aside from the estimated costs there is the very real situation that the number of qualified engineers available in the industry is nowhere near what would be necessary to carry out the studies (including sensitivities) called for by the proposed standard. This reality needs to be taken into consideration by the Standards Drafting Team when it makes its implementation plan recommendations.
Oncor Electric	Unknown, dependent on results of analysis and solutions	Unknown, dependent on results of analysis and solutions

Organization	1 - Question 14 Comments:	2 - Question 14 Comments:
Delivery	implemented	implemented
ISO New England Inc.	See response to question 12.	See response to question 12.
Orlando Utilities Commission	$0.00 if system adjustment in preparation for the second part of N-1-1 can include firm transfer and non-consequential load adjustments when necessary. $500 Million if n-1-1 conditions must be met without firm transfer and non-consequential load - adjustments before the second event, at 230 kV and above$1 Billion if n-1-1 conditions above are met on load serving systems below 230 kV.	10 Years to meet n-1-1 without curtailment/reduction prior to the second n-1. A significant portion of the work would be in either downtown, established residential or highly sensitive environmental areas, all of which may require extensive legal proceedings to build the projects. There would also be a large amount of simultaneous work going on nationwide that would result in a shortage in construction & design personnel as well a scarcity in needed materials.
Entergy Services, Inc.	Without performing the requisite analyses, Entergy does not know definitively how much it will cost to comply with these revised standards. However, Entergy expects the cost could be up to $1 billion to become fully compliant.	15 - 20 years The time required for construction will be elongated due to the need for significant numbers of new construction projects. This will require that projects be queued by the TPs because of constraints in available materials, labor and other resources.
BPA Transmission Reliability Program	This information is not available.	This information is not available.
Response: The SDT thanks all who responded to this survey question.		

15. (A) Do you generally support the revised standard? (B) Are you unsure whether you generally support the revised standard? or (C) Do you definitely not support the revised standard? Please check the appropriate box below. If your response is either (B) or (C), please explain your single biggest concern with the revised standard, including which specific requirement or set of requirements causes you the most concern and why.

A – Generally support the revised standard
B – Unsure about supporting the revised standard
C – Definitely do not support the revised standard

Summary Consideration: 50% of the commenters voted that they did NOT support the revised standard at this time. 35% are unsure. Some of the major issues that were raised by the industry for Question 15 include:

1. System Adjustment in event P6 - Many commenters believe that after the first N-1 in P6, curtailment of Firm Transmission Service or firm transfers should be allowed as part of System adjustment in preparation for the next N-1, citing that this is presently allowed in footnote b in existing Table 1. Otherwise, the Firm Transmission Service under normal System intact condition (before the first N-1) will have to be significantly curtailed in anticipation for meeting performance requirements after N-1-1. Many believe this would in effect be imposing an N-2 criterion for offering Firm Transmission Service.

SDT response: The SDT agrees that clarification regarding treatment of Firm Transmission Service and Non-Consequential Load Loss during adjustment is necessary. Footnote 10 in Revision 3 of the Standard provides clarification.

2. Dropping local load - Many commenters opposed not being able to drop some local network Load for a single Contingency event as long as Bulk Electric System reliability was not impacted. This is presently allowed in footnote b of the existing TPL-002. However, there is no such allowance any longer for losing Non-Consequential Load for a single Contingency in the proposed draft. Many commenters suggested that orderly dropping of local network Load could limit the spread of the disturbance beyond the local area and allow BES reliability to be maintained. Some local network customer curtailments or local area Load loss has been allowed by local regulatory authorities as long as the overall reliability of the interconnected System was not impacted. This is a result of tradeoffs between providing a higher level of reliability in a local area and the cost and environmental impacts of providing that service.

SDT response: Some commenters expressed concern with the inability to shed Non-Consequential Load in response to a single Contingency event. It was indicated that some stakeholders rely on an SPS to drop local area network Load in response to some single Contingency events and that these System designs are permissible under the presently approved TPL-002-0 standard. FERC in Order 693 was clear in paragraph 1794 that that interruption of Non-Consequential Load is not permitted for single Contingency events. This position was vetted in draft 1 of the TPL-001-1

and most stakeholders and the SDT support this position. The use of an SPS design would be permitted for a single Contingency event if the SPS design interrupts service to customers involved in an interruptible Load contract arrangement. As an alternative, an entity could seek an Entity Variance for the situation described through their Regional Entity organization. In paragraph 1794 FERC clarified that "…an entity may seek a regional difference to the Reliability Standard from the ERO for case-specific circumstances". The process described by FERC as a regional difference is described in detail in the "NERC Standards Development Procedure" document under the subsection titled "Variances to NERC Reliability Standards".

3. Raising the bar for 300 kV and above - Many commenters believe that the SDT has not yet justified raising the bar on Facilities above 300 kV. Some pointed out that the higher performance requirements for Facilities >300 kV are tied to very low probability events, so the enhanced reliability is not worth the cost. Some also pointed out that disruptions on lower voltage circuits can cause real and reactive power flow fluctuations across, and eventual separation of, higher-voltage networks. Many believe that there should be no distinction in voltage classes for allowing or not allowing controlled Load shed for applicable events.

SDT response: The SAR for this standard recognized FERC orders which indicated a need to "raise the bar" for the industry. The SDT agrees and is attempting to do this in a reasonable fashion. There is significant flexibility in the Corrective Action Plans allowed for any additional performance requirements which must be met. Industry consensus, through approval of the SAR, is that revision of the existing TPL standards is appropriate.

4. Load modeling for dynamics - Many commenters believe that Load modeling is a significant open issue, such as the models for dynamic studies have yet to be developed and the data is not yet in hand. Many find this conflicting with implementation of the TPL standards due to modeling details being a gating item to completing some System studies.

SDT response: The SDT agrees and believes that industry guidance is needed to capture the appropriate dynamic behavior of Loads. In response to comments, the SDT has removed Requirements R9-R14 and enhanced Requirement R1 to more clearly specify the modeling information needed to support accurate Planning Assessments. Any comments received from the industry on MOD standards will be forwarded to NERC for inclusion into NERC Reliability Standards Development Projects 2010-04 Modeling Data and 2010-05 Demand Data. Requirement R2.4.1 has been modified to include the following: "An aggregate system Load model which represents the overall dynamic behavior of the Load is acceptable."

5. Sensitivity analysis - Another concern of commenters is the prescriptive nature of sensitivity scenarios, listed within Requirement R2.1.3 for steady-state and Requirement R2.4.3 for Stability, and the volume of associated study work. Some commenters feel that the Transmission Planner and Planning Coordinator can better select the most appropriate sensitivities for their System. Commenters also feel that examples of sensitivities are already inherent in the existing requirements, such that some sensitivity studies are in effect adding an additional level of Contingency (N-2 or N-3). Many commenters feel that the additional analyses proposed by the revised standard are not warranted and are already covered adequately in the existing studies and TPL standards.

SDT response: The intent of the SDT in requiring performance of sensitivity studies is to identify critical System conditions and to expand the planners' portfolio of knowledge about vulnerabilities on their System. This is also an expectation from FERC Order 693 paragraphs 1704 - 1706.

As a result of industry comments, the following changes have been made to TPL-001-1:

Consequential Load Loss: ~~Load that is no longer connected to a source as a result of the event being studied or which is lost as a result of the load's response to the transient conditions of the event (other than through the action of UVLS or UFLS schemes). Although Load which is lost as a result of the Load's response to the transient conditions of the event is considered Consequential Load Loss and is permitted when Consequential Load Loss is allowed, Transmission planning entities are not allowed to rely upon the expectation of such Load loss to meet steady state performance requirements.~~ All Load that is no longer served by any Transmission Facilities as a result of the Facilities being removed from service by a planned Protection System operation to isolate fault conditions.

Non-Consequential Load Loss: Non-Interruptible Load loss other than Consequential Load Loss, Supplemental Load Loss, and Load Reduction.~~.~~ ~~For example, non-Interruptible Load loss that occurs through manual (operator initiated) or automatic operations such as under-voltage Load shedding, under-frequency Load shedding, or Special Protection Systems would be considered Non-Consequential Load Loss~~.

Year One: The first year that a Transmission Planner is responsible for assessing. This is further defined as the planning window that begins 12-18 months from the ~~completion of the previous annual Planning Assessment~~ current calendar year.

R1 Each Transmission Planner and Planning Coordinator shall maintain System models for performing the studies needed to complete their Planning Assessment. The models shall use data consistent with the data provided in accordance with ~~Requirements R9 through R14,~~ the MOD-010 and MOD-012 standards~~,~~ and other data sources,~~.~~ and shall simulate projected System conditions including requirements of regulatory authorities and other legal obligations.

R1.1.1 Planned outages of generation and Transmission Facilities, if specifically known.

R2 Each Transmission Planner and Planning Coordinator shall ~~conduct and document the results of~~ prepare ~~its~~an annual Planning Assessment of its portion of the BES. This Planning Assessment shall use current or past studies, document assumptions, document results, and shall cover steady state analyses, short circuit analyses, and Stability analyses ~~including both System and Generating Unit Stability~~.

R2.1.3 For each of the studies described in Requirements R2.1.1 and ~~Requirement~~ R2.1.2, sensitivity case(s) that are intended to stress the System with ~~sensitivities~~ variations ~~that reflect~~ in one or more of the following conditions not already included in the studies shall be ~~run and documentation of the technical rationale for why each of the conditions was or was not selected shall be supplied~~ included in the Assessment:

- ~~Variability and outages of r~~Reactive resource~~s~~ capability

R2.1.4 When an entity's spare equipment strategy could result in the unavailability of major Transmission equipment that has a lead time of one year or more (such as a transformer), an analysis of the impact on System performance shall be assessed. The analysis shall reflect the Contingencies identified in Table 1 during the conditions that the System is expected to experience due to the unavailability of the long lead time equipment.

R2.4.1 System peak Load for one of the five years. For peak System Load levels, a Load model shall be used which appropriately represents the dynamic behavior of Loads, including consideration of the behavior of induction motor Loads. An aggregate system Load model which represents the overall dynamic behavior of the Load is acceptable.

R2.4.3 For each of the studies described in Requirements R2.4.1 and ~~Requirement~~ R2.4.2, ~~s~~ensitivity case(s) that are intended to stress the System with variations ~~to reflect~~ in one or more of the following conditions not already included in the studies shall be ~~run and documentation of the technical rationale for why each of the conditions was or was not selected shall be supplied~~ included in the Assessment:

R2.6.1 (now R2.5.1) For steady state, short circuit, or ~~System~~ Stability analysis: the study shall be five calendar years old or less.

R2.6.2 (now R2.5.2) For steady state, short circuit, ~~Generating Plant Stability,~~ or ~~System~~ Stability analysis: the ~~study~~ present System model shall not include any material changes, such as, generation or Transmission additions/removals, or topology changes that have occurred in the intervening period and would impact the study area. Material generation changes could include:

R2.7 (now R2.6) For Planning Events shown in Table 1~~ – Steady State Performance and Table 2 – Stability Performance~~, when the analysis indicates an inability of the System to meet the performance requirements in ~~the t~~Table~~s~~ 1, the Planning Assessment shall include Corrective Action Plans addressing how the performance requirements will be met. Revisions to the Corrective Action Plans are allowed in subsequent assessments but the System shall continue to meet the performance requirements in the tables. Corrective Action Plans do not need to be developed solely to meet the performance requirements for sensitivities run in accordance with Requirements R2.1.3 and R2.4.3. The Corrective Action Plan shall:

Under Requirement R2.6.1:

- Installation or modification of Protection Systems or Special Protection Systems
- Installation or modification of automatic generation tripping as a response to a single or multiple Contingency to mitigate Stability performance violations.
- Installation or modification of manual and automatic generation runback/tripping as a response to a single or multiple Contingency to mitigate Steady State performance violations.

R2.8 The Planning Assessment shall provide the largest Consequential Load Loss (megawatt Demand) and the associated event caused by any P1 event and any P2 event in Table 1.

R3. For the steady state portion of the Planning Assessment, each Transmission Planner and Planning Coordinator shall perform analysis for the Near-Term and Long-Term Transmission Planning Horizon studies in Requirement R2.1 and Requirement R2.2. ~~The studies shall be based on computer power flow simulations that analyze BES normal performance (n-0) and System response to c~~Contingencies in Table 1 ~~– Steady State Performance.~~ The studies shall be based on computer simulations using models utilizing data provided in Requirement R1.

R3.1 Studies shall be performed to determine whether the BES meets the performance requirements in Table 1~~ – Steady State Performance.~~ based on the lists created in Requirement R3.4.

R3.3.2 For all generators, studies shall consider the minimum steady state voltage limitations ~~of all generators~~ and identify how the generators are ~~treated~~ analyzed in the steady state simulation

R3.3.3 For all Transmission lines, studies shall consider relay loadability and identify how loadability is ~~treated~~ analyzed in the steady state simulation.

R3.4 Those Planning Event Contingencies in Table 1 ~~– Steady State Performance~~ ~~not covered in Requirement R3.3.2~~ that are expected to produce more severe System impacts shall be identified~~,~~ and a list of those Contingencies to be evaluated for System performance in Requirement R3.1 created~~,~~. ~~and t~~The rationale for the Contingencies selected for evaluation shall be available as supporting information and shall ~~includ~~include~~e~~ an explanation of why the remaining Contingencies would produce less severe System results.

R4 For the Stability portion of the Planning Assessment, as described in Requirement R2.4~~ and Requirement R2.5~~, each Transmission Planner and Planning Coordinator shall perform the Contingency analyses listed in Table ~~2~~1 ~~– Stability Performance~~. The studies shall be based on computer simulations using models utilizing data provided in Requirement R1. ~~The studies shall be based on computer simulations using models utilizing data provided in Requirements R9 through R14, the MOD-010 and MOD-012 standards, and other data sources, to include known planned and long term outages of Transmission or generation equipment. The studies shall cover both System Stability and Generating Unit Stability. The following requirements apply to both System Stability and Generating Unit Stability studies unless otherwise noted.~~

R4.3.2 ~~Studies shall consider~~ Simulate generator performance under anticipated conditions including how the voltage ride through capability ~~of all generators and identify how the generators are treated~~ is analyzed~~in the simulation~~.

R4.4 ~~At a minimum, t~~Those Planning Event Contingencies in Table ~~2~~1 – ~~Stability Performance~~ that ~~would~~are expected to produce more severe System impacts shall be identified, and a list of those Contingencies to be evaluated for System performance in Requirement R4.1 created~~,~~. ~~and t~~The rationale for the Contingencies selected for evaluation shall be available as supporting information with an explanation of why the remaining Contingencies would produce less severe System results.

R7. Each Planning Coordinator shall coordinate the distribution of Planning Assessment results among~~ neighboring systems~~ adjacent Planning Coordinators and any functional entity who has indicated a reliability need, coordinating analysis of these results through an open and transparent peer review process such as described in FERC Order 890.

Header note 'e' - For all Planning Events, planned System adjustments such as Transmission configuration changes and redispatch of generation are allowed if such adjustments are executable within the time duration applicable to the Facility Ratings.

Extreme Event 2b (steady state) - Loss of all Transmission lines on a common ~~r~~Right-of-~~w~~Way.

Footnote 1.a.ii - For all other Planning Events: No generating unit or units totaling more than the Contingency ~~r~~Reserve of the Balancing Authority (or Reserve Sharing Group if applicable) shall be allowed to pull out of synchronism. Generators that pull out of synchronism must have out-of-step protection or some other means to trip the generator for this condition and the resulting apparent impedance swings must not pass through relay characteristics that would result in the tripping of any Transmission System elements other than the generating unit and its direct connection Facilities.

Footnote 3 - Unless specified otherwise, simulate Normal Clearing faults. Single line to ground (SLG) or three phase (3Ø) are the fault types, that must be evaluated in Stability simulations for the event described. A 3Ø fault study indicating criteria are being met shall provide sufficient evidence that a SLG condition would also meet criteria.

Footnote 5 - When the conditions and/or event(s) being studied form the basis for conditional Firm Transmission Service, curtailment of that conditional Firm Transmission Service is allowed.

Footnote #10 – Curtailment of firm transmission service, when coupled with the appropriate re-dispatch of resources obligated to re-dispatch, is allowed both as a System adjustment (as identified in the column titled 'Initial System Conditions') and a corrective action, where it can be demonstrated that Facilities remain within applicable Facility Ratings and those adjustments do not result in the shedding of any firm Load. Where limited options for re-dispatch exist, sensitivities associated with the availability of those resources must be considered. Where Facilities external to the Transmission Planner's planning region are relied upon, Facility Ratings in those regions must be considered.

Footnote #12 - Excludes circuits that share a common structure for 1 mile or less.

Organization	Question 15:	Question 15 Comments:
El Paso Electric Company	B — Unsure about supporting the revised standard	While this 2nd draft TPL standard has some positive changes, notably: The allowance to use RAS to trip generation for N-1 (see R3.5 Manual and automatic generation run-back/tripping is allowed as a response to a single or multiple Contingency ...) with some rather generic conditions. The allowance for Non-consequential Load Loss for loss of a transmission Facility, followed by system adjustment, followed by loss of a second transmission Facility (see P6 in draft performance Tables 1 and 2). This is the same as Category C3 in the existing TPL-003-0.On the down side, as proposed, Standard TPL-001-1:1. Will not allow curtailment of firm transfer (or firm transmission service) after the first N-1, in preparation for the next N-1 regardless of transmission voltage level. This is a major issue. Curtailment of firm transfer after the first N-1 has always been a part of system adjustment in preparation for the next N-1 as stated in foot note b of the existing TPL-002-0:"b. Planned or controlled interruption of electric supply to radial customers or some local Network customers, connected to or supplied by the Faulted element or by the affected area, may occur in certain areas without impacting the overall reliability of the interconnected transmission systems. To prepare for the next contingency, system adjustments are permitted, including curtailments of contracted Firm (non-recallable reserved) electric power Transfers." Not allowing this could mean reduction of firm transfer capability pre-contingency unless new circuits are built.2. The existing standard (http://www.nerc.com/files/TPL-003-0.pdf) does not distinguish between voltage classes, curtailment of firm transfer and, planned and controlled load shedding are allowed regardless of voltage class for Category C events. The proposed standard will not allow curtailment of firm transmission service, or planned and controlled load shedding for loss of Facilities with operating voltage above 300 kV involving the following in the proposed Performance Tables 1 and 2:P2-2: Bus Section fault (Category C1) P2-3: Breaker fault (Category C2) P4: SLG Fault + stuck breaker (Categories C6 - C9) P5: SLG Fault + protection system failure (Categories C6 - C9)The number of Facilities lost would depend on the bus configuration for above 300 kV. If you have a ring-bus, breaker and a half or double breaker double bus, you would lose at the most 2 Facilities. But if you have Main-Aux or single breaker double bus, you will lose all Facilities connecting to the faulted Facility.
Response: In response to your comment and those of others in the industry on allowing curtailment of Firm Transmission Service as System adjustment after		

Organization	Question 15:	Question 15 Comments:
an N-1 Contingency, the SDT has added footnotes 5 and 10 to Table 1 - Steady State & Stability Performance. **Footnote 5** - When the conditions and/or event(s) being studied form the basis for conditional Firm Transmission Service, curtailment of that conditional Firm Transmission Service is allowed. **Footnote 10** – Curtailment of firm transmission service, when coupled with the appropriate re-dispatch of resources obligated to re-dispatch, is allowed both as a System adjustment (as identified in the column titled 'Initial System Conditions') and a corrective action, where it can be demonstrated that Facilities remain within applicable Facility Ratings and those adjustments do not result in the shedding of any firm Load. Where limited options for re-dispatch exist, sensitivities associated with the availability of those resources must be considered. Where Facilities external to the Transmission Planner's planning region are relied upon, Facility Ratings in those regions must be considered.		
Dominion - Electric Transmission Planning	B — Unsure about supporting the revised standard	(1) Unsure about cost/effort necessary to meet requirements (2) Uncertain that compliance with the proposed requirements in this standard would significantly improve reliability (3) R2.6.2: The entire sentence is confusing as it is modified. The original sentence in the previous draft made more sense. Please check and correct accordingly. (4) R 5.3: This requirement considers voltage ride-through capability of all generators. Nowhere in this TPL standard or in the MOD standards are Generator Owners specifically required to provide such data to Transmission Planners and Planning Coordinators. Stating the requirements for generator dynamics data and dynamic load characteristics in general terms, as listed below (from the MOD Standards), are vague. (a) shall provide appropriate equipment characteristics (b) shall provide dynamics system modeling and simulation data (c) Shall develop comprehensive dynamics data requirements .... to model and analyze the dynamic behavior... (5) In Table-2 Stability Performance, several places refer to "SLG or 3-phase Faults" . Since it states "or", does this mean we can get by with studying only SLG faults? We do not think that is the intent of this phrase; thus, a clarification is warranted. (6) One of our comments on the previous draft was with respect to a second-zone fault clearing due to protection system failure for a fault beyond zone 1 coverage of primary relies. The SDT's response was (Specific 1): "The SDT agrees with your concern and is working on a solution for a future draft." The question is repeated below, as a pending "to do" item, using the revised 'Table-2 Stability Performance' as reference: Category 5 in 'Table-2 Stability Performance' refers to a protection system failure event. We interpret this as, among other things, having a fault beyond the first-zone coverage of the primary protection scheme with the carrier equipment failure (or the carrier cut-off switch left in "OFF" position by a technician - a human error) resulting in a second-zone trip of the faulted line. The second-zone trip time is generally in the range of 30-35 cycles. This may be critical from the stability aspect for the terminal end at a generating plant even though only one element will be lost. Also, the second-zone trips may need to be studied for transmission lines out of next terminal from the generator end if the next terminal is connected to the generator terminal via a short line. We think that an

Organization	Question 15:	Question 15 Comments:
		additional single contingency Category should be added to this Table to cover the "Event" of second-zone trip scenario.

Response: 1. The SDT is striving to develop a standard that appropriately supports BES reliability and has industry consensus. The SDT is cognizant of the cost factors and additional efforts involved and has taken them into consideration in its deliberations in the development of this draft.

2. The SAR for this standard recognized FERC orders which indicated a need to "raise the bar" for the industry. The SDT agrees and is attempting to do this in a reasonable fashion. There is significant flexibility in the Corrective Action Plans allowed for any additional performance requirements which must be met. Industry consensus, through approval of the SAR, is that revision of the existing TPL standards is appropriate.

3. The SDT has revised the language of Requirement R2.6.2 (now R2.5.2).

R2.5.2 For steady state, short circuit, ~~Generating Plant Stability,~~ or ~~System~~ Stability analysis: the ~~study~~ present System model shall not include any material changes, such as, generation or Transmission additions/removals, or topology changes that have occurred in the intervening period and would impact the study area. Material generation changes could include:

4. The SDT understands that the Transmission Planner and the Planning Coordinator need data from the Generator Owners. However, revising the MOD standards is beyond the scope of this standard revision. Further, we note that one of the requirements of FERC Order 890 for long-term Transmission planning involves formal data exchange between stakeholders and the Transmission Planner and the Planning Coordinator. It is our understanding that these data exchange processes have been successful in providing better planning information about stakeholders such as independent Generator Owners. Also, we note that there is an ongoing standards development project, Generation Verification Project 2007-2009. You may wish to submit your comment to that SDT about the need for the Generator Owner providing this information to the Transmission Planner and the Planning Coordinator.

5. The SDT has combined the tables into a single table and clarified the "SLG or 3 phase" designations. In addition, the SDT has added footnote 3 to provide clarity.

Footnote 3 - Unless specified otherwise, simulate Normal Clearing faults. Single line to ground (SLG) or three phase (3Ø) are the fault types, that must be evaluated in Stability simulations for the event described. A 3Ø fault study indicating criteria are being met shall provide sufficient evidence that a SLG condition would also meet criteria.

6. The SDT has revised the language in the P5 category to clearly identify the required performance for an event with a Protection System failure. The current draft requires the planner to recognize the equipment that will be removed from service and the timing (including delays with back-up Protection Systems if the primary is out of service) during their Stability studies. The scenario you described is therefore covered by P5. The SDT does not see a need to have a separate event for that scenario.

NPCC	C — Definitely do not support the revised standard	This standard as drafted does not allow exceptions for small parts of the system as long as interconnected system reliability is maintained, which is allowed in the existing TPL standards in footnotes b) and c) in Table 1. Unless such exceptions are allowed significant transfer restrictions or large reinforcements must be made. The applicable TPL footnotes are: Planned or controlled interruption of electric supply to radial customers or some local Network customers, connected to or supplied by the Faulted element or by the affected area, may occur in certain areas without impacting the overall

Organization	Question 15:	Question 15 Comments:
		reliability of the interconnected transmission systems. To prepare for the next contingency, system adjustments are permitted, including curtailments of contracted Firm (non-recallable reserved) electric power Transfers. Depending on system design and expected system impacts, the controlled interruption of electric supply to customers (load shedding), the planned removal from service of certain generators, and/or the curtailment of contracted Firm (nonrecallable reserved) electric power Transfers may be necessary to maintain the overall reliability of the interconnected transmission systems. This comment form did not allow for the following items to be addressed: a. Definition of the Long-Term Planning Horizon. The planning horizon, for assessment purposes should be limited to 10 years. Such an assessment should be sufficient to identify requirements that may take an extended time to implement. b. Definition of Planning Coordinator is part of the NERC Functional Model, For consistency it should be removed from the Standard. c. Put headings on each section to identify requirements of section. Add headings to the tops of the subsequent pages in the performance tables. Headings only appear on the first page at the beginning of the Table. d. With respect to R2.2 - Delete "current" from the phrase "current System Peak Load study" and replace "study" with "assessment." e. Remove R2.2.1, the requirement to extend the assessment beyond 10 years. What does the length of the project have to do with the assessment? If it takes 15 years to build something, why does this require a review of year 15? What is the purpose of this assessment? f. R3.3.2 requires clarification - This standard needs to permit discretion regarding the single contingencies that need to be tested, similar to R 3.3.3 and R3.4. It is unnecessary to test all events. For example, contingencies may be limited to relevant disturbances that are contained within or directly impact the studied system. g. With respect to R3.2.1 - Clarify whether the intent of the standard is to address station service minimum voltage limitation, maximum leading VAR absorption capability or both at steady state. h. Remove R3.2.2 - Relay loadability is addressed in PRC-023 standard. i. With respect to R3.3.2.1 - Recommend the removal of the requirement to assess the expected duration of Consequential Load loss. It's not considered anywhere else in the standard. j. With respect to R3.3.3 - The paragraph refers to Table 1 Contingencies P3 through P7; this should be explicitly stated. Rationale for inclusion of testing should not be required; should only need to explain why certain Contingencies were not tested. This discretion should be applicable to all contingencies. k. With respect to section R5 - The concept of planned and long-term outages should apply to the general Planning Assessment, or not at all. It should not be specific to the Stability Assessment.

Organization	Question 15:	Question 15 Comments:
		l. The provisions of Section R.5.3 should have a corresponding MOD standard apply a requirement to provide information regarding all direct and indirect protective and control actions that could result in the inadvertant trip of the generator. Such a provision should include "other equipment (e.g. HVDC, SVC's, Statcoms)", and identify how these devices are treated in the simulation. m. Planned outages should be addressed in the operating horizon unless otherwise defined in the planning horizon.
New York Independent System Operator	C — Definitely do not support the revised standard	This standard as drafted does not allow exceptions for small parts of the system as long as interconnected system reliability is maintained, which is allowed in the existing TPL standards in footnotes b) and c) in Table 1. Unless such exceptions are allowed significant transfer restrictions or large reinforcements must be made. The applicable TPL footnotes are:? b) Planned or controlled interruption of electric supply to radial customers or some local Network customers, connected to or supplied by the Faulted element or by the affected area, may occur in certain areas without impacting the overall reliability of the interconnected transmission systems. To prepare for the next contingency, system adjustments are permitted, including curtailments of contracted Firm (non-recallable reserved) electric power Transfers.? c) Depending on system design and expected system impacts, the controlled interruption of electric supply to customers (load shedding), the planned removal from service of certain generators, and/or the curtailment of contracted Firm (nonrecallable reserved) electric power Transfers may be necessary to maintain the overall reliability of the interconnected transmission systems. This comment form did not allow for the following items to be addressed: a. Definition of the Long-Term Planning Horizion. The planning horizon, for assessment purposes should be limited to 10 years. Such an assessment should be sufficient to identify requirements that may take an extended time to implement. b. Definition of Planning Coordinator is part of the NERC Functional Model, Remove from Standard. c. Put headings on each section to identify requirements of section. d. With respect to R2.2 - Delete "current" from the phrase "current System Peak Load study" and replace "study" with "assessment." e. Remove R2.2.1, the requirement to extend the assessment beyond 10 years. What does the length of the project have to do with the assessment? If it takes 15 years to build something, why does this require a review of year 15? What is the purpose of this assessment? f. R3.3.2 requires clarification - This standard needs to permit discretion regarding the single contingencies that need to be tested, similar to R 3.3.3 and R3.4. It is completely unnecessary to test all events. For example, contingencies may be limited to relevant disturbances that are contained within or directly impact the studied system. g. With respect to R3.2.1 - Clarify whether the intent of the standard is to address station service minimum voltage limitation, maximum leading VAR absorption capability or both at steady state. h. Remove R3.2.2 - Relay loadability is addressed in PRC-023 standard. i. With respect to R3.3.2.1 - Recommend the removal of the requirement to assess the expected duration of

Organization	Question 15:	Question 15 Comments:
		Consequential Load loss. It's not considered anywhere else in the standard. j. With respect to R3.3.3 - The paragraph refers to Table 1 Contingencies P3 through P7; this should be explicitly stated. Rationale for inclusion of testing should not be required; should only need to explain why certain Contingencies were not tested. This discretion should be applicable to all contingencies. k. With respect to section R5 - The concept of planned and long-term outages should apply to the general Planning Assessment, or not at all. It should not be specific to the Stability Assessment. l. The provisions of Section R.5.3 should have a corresponding MOD standard apply a requirement to provide information regarding all direct and indirect protective and control actions that could result in the inadvertant trip of the generator. Such a provision should include "other equipment (e.g. HVDC, SVC's, Statcoms)", and identify how these devices are treated in the simulation. m. Planned outages should be addressed in the operating horizon unless otherwise defined in the planning horizion.
Northeast Utilities	C — Definitely do not support the revised standard	Northeast Utilities has participated with ISO-NE and NPCC and supports the comments filed by those organizations.

Response: Some commenters expressed concern with the inability to shed Non-Consequential Load in response to a single Contingency event. It was indicated that some stakeholders rely on an SPS to drop local area network Load in response to some single Contingency events and that these System designs are permissible under the presently approved TPL-002-0 standard. FERC in Order 693 was clear in paragraph 1794 that that interruption of Non-Consequential Load is not permitted for single Contingency events. This position was vetted in draft 1 of the TPL-001-1 and most stakeholders and the SDT support this position. The use of an SPS design would be permitted for a single Contingency event if the SPS design interrupts service to customers involved in an interruptible Load contract arrangement. As an alternative, an entity could seek an Entity Variance for the situation described through their Regional Entity organization. In paragraph 1794 FERC clarified that "…an entity may seek a regional difference to the Reliability Standard from the ERO for case-specific circumstances". The process described by FERC as a regional difference is described in detail in the "NERC Standards Development Procedure" document under the subsection titled "Variances to NERC Reliability Standards".

A. The SDT believes that a review of System conditions beyond the 10-year horizon is warranted. FERC Order 693 requires that the planning horizon take into account the lead times for siting and permitting of new long-distance Transmission lines and other long lead time solutions. The SDT has received industry comments regarding the need to exceed a 10-year horizon to account for longer lead time projects. Establishing planning horizons that are shorter than Transmission lead times may create gaps where the identification of a reliability need to which Transmission may be the best solution occurs too late to avert the identified reliability violation. Further, Operating Procedures or alternative short-term capital projects may be needed to limit the impact of the planning event until the planned Facilities can be completed. This information needs to be included in the Assessment.

Organization	Question 15:	Question 15 Comments:

B. Planning Coordinator has been defined in another project and as such has been deleted here.

C. The SDT also feels that the Tables need to be as clear and concise as possible. To that end, this version combined Tables 1 and 2 into one table with a revised format. The Planning Events are shown on one page so repeating the headings will not be needed.

D. The SDT believes that the existing language is appropriate. No change made.

E The SDT believes that a review of System conditions beyond the 10-year horizon is warranted under some circumstances. For example, if it takes 15 years to build a Transmission line, then the need for that line would have to be determined 15 years ahead of the in-service date. Therefore, Requirement R2.2.1 requires you to perform an Assessment on year 15 if it takes you 15 years to build a line.

F. The SDT has removed Requirement R3.3.2 and replaced it with additional language in Requirement R3.1. The SDT agrees with your interpretation that it does not require evaluation of all single Contingencies. Rather, the SDT specifically states in Requirement R3.4 that those Contingencies that are expected to produce the more severe System impacts shall be identified, evaluated for System performance, and the rationale for the Contingencies selected for evaluation shall be available as supporting information and shall include an explanation of why the remaining Contingencies would produce less severe results.

R3.1 Studies shall be performed to determine whether the BES meets the performance requirements in Table 1~~ – Steady State Performance.~~ based on the lists created in Requirement R3.5.

G. The SDT has not limited the purpose of this requirement to either minimum acceptable station service voltages or maximum Mvar absorption. The SDT believes that the purpose of Requirement R3.2.1 (now R3.3.2) is to determine if generators will be able to operate or trip off following the Contingency.

H. The SDT believes that relay load limits or loadability needs to be considered in the Contingency analyses. The studies should determine if Transmission line loadings could reach the relay loadability level which may add to the existing Contingency and perhaps, result in an unbounded cascading event. No change made.

I. By definition, Consequential Load Loss is allowed. To meet industry concern as well as FERC Order 693, the SDT has added Requirement R2.~~-~~8 to identify the event causing the single largest Consequential Load Loss Demand and its value and eliminate the reporting of the expected duration. Requirement R3.3.2.1 has been deleted in favor of new Requirement R2.8.

R2.8 The Planning Assessment shall provide the largest Consequential Load Loss (megawatt Demand) and the associated event caused by any P1 event and any P2 event in Table 1.

J. The SDT agrees that the rationale should be for all Planning Events but not for Extreme Events.

K. The SDT agrees and has moved this concept within Requirement R1 (see Requirement R1.1.1) so that it is applicable to all planning assessments. Further, both Requirements R3 and R5 (now R4) have been revised to make reference to Requirement R1**.**

R1.1.1 Planned outages of generation and Transmission Facilities, if specifically known.

R3. For the steady state portion of the Planning Assessment, each Transmission Planner and Planning Coordinator shall perform analysis for the Near-Term and Long-Term Transmission Planning Horizon studies in Requirement R2.1 and Requirement R2.2. ~~The studies shall be based on computer power flow simulations that analyze BES normal performance (n-0) and System response to c~~Contingencies in Table 1 – Steady State Performance. The studies shall be

Organization	Question 15:	Question 15 Comments:
based on computer simulations using models utilizing data provided in Requirement R1. **R4** For the Stability portion of the Planning Assessment, as described in Requirement R2.4 ~~and Requirement R2.5~~, each Transmission Planner and Planning Coordinator shall perform the Contingency analyses listed in Table ~~2~~1 ~~– Stability Performance~~. The studies shall be based on computer simulations using models utilizing data provided in Requirement R1. ~~The studies shall be based on computer simulations using models utilizing data provided in Requirements R9 through R14, the MOD-010 and MOD-012 standards, and other data sources, to include known planned and long term outages of Transmission or generation equipment. The studies shall cover both System Stability and Generating Unit Stability. The following requirements apply to both System Stability and Generating Unit Stability studies unless otherwise noted.~~ L. Requirement R5.3. has been modified (now R4.3.2) to address simulation of how generators perform under conditions being studied to address these concerns. "Other equipment" is addressed in Requirement R5.4. **R4.3.2** ~~Studies shall consider~~ Simulate generator performance under anticipated conditions including how the voltage ride through capability ~~of all generators and identify how the generators are treated~~ is analyzed~~in the simulation~~ M. While planned outages are addressed in the operating horizon, it is important that a Transmission Planner review the ability of its System to accommodate planned (maintenance) outages. Additionally, any specific known Facility outages need to be appropriately modeled for the planning horizon studied.		
TVA System Planning	C — Definitely do not support the revised standard	TVA's main concern is that no technical justification for "raising the bar" on facilities above 300-kV has yet been demonstrated such as required on P2, P4, and P5 for 300 kV and above. TVA is very concerned that "raising the bar" would be a financial burden on TVA's ratepayers. TVA would also like to provide the following additional comments to this second draft as follows: 1. In R2.4.1, load models that appropriately represent the dynamic behavior of motor loads are required. TVA believes that industry guidance is needed on how to properly model these loads. Does this requirement mandate the use of specific load models for each bus, or would an aggregate load model which represents the system as a whole be sufficient? It should be clearly stated whether the load model in R2.4.3.1 refers to system load or the dynamic load model at individual busses. 2. In R3.2.1 and R5.3, need industry guidance on how to actually determine the minimum steady state voltage limitations of generators. Is there a MOD or FAC requirement for generation owners to provide this information? 3. Which single contingency events should be included in calculations for Available Transfer Capacity? Should P2 events be included in addition to P1 events since P2 events are also defined as single contingency events in Tables? 4. Would like further clarification from the team on what does P5 exactly includes? For instance, does it include battery failures, CT failures, etc? 5. The existing TPL 002-0 allows for some local load to be dropped for a single contingency event as long as the Bulk system reliability was not impacted. However there is no such allowance any longer for losing such load for a single contingency in the proposed draft. It would be very expensive for TVA to fix all such events in several remote areas that

Organization	Question 15:	Question 15 Comments:
		would have very little impact on the overall reliability of the TVA bulk system. TVA believes that the capital spent for these fixes could be used to better strengthen the overall bulk system in much better ways. 6. Suggest rewording R2.2.1 from "To accommodate any known longer lead time projects" to "To identify any potential longer lead time projects". 7. Can operational guides be used indefinitely in R2.7.1 or does the team propose a limit on how long operational guides can be used until a capital fix is implemented? 8. In R3.3.2.1, what is the purpose for needing the expected duration of consequential load loss? There is a concern that this requirement will be very burdensome to keep track of the quantity of consequential load loss as well as expected duration. Who is requesting this info? It appears that this may be a local regulatory issue, not a reliability issue. 9. Suggest changing definition of "Planning Events" in the Definitions to say "Events that have a higher probability of occurrence and require Transmission system performance requirements to be met." 10. Should the proposed standard mention that utilities should run contingencies outside their system that could impact their own internal system? TVA believes that additional documentation be included in the new standard to address this. 11. Functional entity in 4.1.4 should be "LSE" instead of "DP" 12. In the Definitions for "Year One", suggest replacing "previous" with "most recent" to help clarify when the planning window should begin. 13. Should "peak" in R2.1.1 be replaced with "On Peak" as shown in the NERC glossary of terms? Also the requirements in this requirement are too prescriptive - should allow some flexibility to allow the TP which years to study as long as a minimum number of cases are studied. 14. Suggest replacing "Plant" in R2.6.2 with "Unit" to match terms used in Definitions. 15. In R2.7.1.1, what is meant by "project initiation date"? Is it when engineering starts, construction starts, etc? 16. Suggest rewording requirements R3.3.3 and R3.4 to be more clear - such as breaking each of these into several sentences each. Existing wording is very confusing. 17. There is a concern with R5.6.1 with the requirement to perform simulation on 20 MW generators (to be consistent with the Registration Criteria). We recommend a 75 MW generator cutoff for required simulations. Also in R5.6.2, should last word in sentence be "greater" or "lesser"? 18. In the Tables under Extreme Events, is 3.b. (loss of two TLs on different ROWs actually already covered under 1 (loss of two elements prior to system adjustments)? Also in the Tables under Extreme Events, it may be difficult for a TP to know enough about nuclear plant design to perform studies mentioned under 3.a.vi.

Organization	Question 15:	Question 15 Comments:
		19. In the notes under Extreme Events, we suggest that notes #2 and #3 be combined together since they are very similar in nature. 20. Should the P3 planning event descriptor (G+1) in the performance tables be (G+N-1) or (G-1, N-1)? The existing descriptor (G+1) tends to note that an element is being added to the system instead of being removed. 21. Should the new standard address specific voltage limit requirements that must be maintained during these planning events? Since different utilities have different voltage limits on their buses, should there be some consolidation to ensure the standard is applied equally at all utilities? 22. The note for Planning Event P1 states that “No generating unit or units shall be allowed to pull out of synchronism. A generator being disconnected from the System by Fault clearing action or by a Special Protection System is not considered pulling out of synchronism.” The standard does not allow consideration for small units with a Zone 2 fault. It is not practical to add pilot relaying on all lines from a plant with a small unit that would be stable for close-in three phase faults, and could be adequately protected when a Zone-2 fault would cause a small generator to trip off with out-of-step (OOS) protection. The table for P1 should allow small units (<75 MW) to trip using SPS or OOS protection.

Response: The SDT is attempting to raise the bar by developing a standard that appropriately supports BES reliability and has industry consensus. The majority of the SDT believes that 300 kV is an appropriate cutoff and that Transmission Systems above this level represent backbone Systems and are part of regional "grids". The SDT is cognizant of the cost factors involved here and is taking them into consideration in its deliberations and has provided for flexibility in Corrective Action Plans. FERC has noted in their orders that many of the concerns about raising the bar show more concern about economics than reliability (examples, Order 890, paragraph 423; Order 693, paragraph 1792, etc.).

1. The SDT agrees and believes that industry guidance is needed to capture the appropriate dynamic behavior of Loads. In response to comments, the SDT has removed Requirements R9-R14 and enhanced Requirement R1 to more clearly specify the modeling information needed to support accurate Planning Assessments. Any comments received from the industry on MOD standards will be forwarded to NERC for inclusion into NERC Reliability Standards Development Projects 2010-04 Modeling Data and 2010-05 Demand Data. Requirement R2.4.1 has been modified to include the following: "An aggregate system Load model which represents the overall dynamic behavior of the Load is acceptable."

2. The SDT believes that FAC-009-1, Requirements R1 and R2 require that generators provide these low voltage limitations as part of their Facility Ratings. Also, PRC-024, which is under development, will attempt to require generators to meet voltage ride-through criteria.

FERC Order 693, paragraph 1773 regarding FERC Commission directed changes to TPL-002 states "...requires all generators to ride through the same set of Category B and C contingencies as required by wind generators in Order No. 661, or to simulate those generators that cannot ride through as tripping".

The current MOD standards that address steady-state and dynamic simulation data requirements do not explicitly require the Generator Operators to provide voltage ride-through capability. These standards are set to be addressed by Project 2010-04 within NERC's Standards Development Work Plan. Based on the proposed TPL requirement, Requirement R5.3 (now R4.3.2), it is expected that the Transmission Planner would contact Generator Operators applicable to their System to obtain such data. If the data is not provided, it would be expected that a Transmission Planner state its assumption on the Vmin used for a generator

Organization	Question 15:	Question 15 Comments:

terminal voltage for assessing ride-through capability. It's likely such information could be obtained through generator manufacturers.

3. Questions related to ATC calculations are beyond the scope of this standard. Please see NERC Reliability Standard MOD 001-1, Requirement R7 & Measure M7 for additional information on ATC calculations.

4. The description of the P5 event has been clarified in this Revision of the Standard.

5. Some commenters expressed concern with the inability to shed Non-Consequential Load in response to a single Contingency event. It was indicated that some stakeholders rely on an SPS to drop local area network Load in response to some single Contingency events and that these System designs are permissible under the presently approved TPL-002-0 standard. FERC in Order 693 was clear in paragraph 1794 that that interruption of Non-Consequential Load is not permitted for single Contingency events. This position was vetted in draft 1 of the TPL-001-1 and most stakeholders and the SDT support this position. The use of an SPS design would be permitted for a single Contingency event if the SPS design interrupts service to customers involved in an interruptible Load contract arrangement.

6. The SDT believes that the existing language is appropriate. An assessment of year 15 would be needed to accommodate a Transmission line if it takes 15 years to build a line.

7. The SDT has not established a limit as to how long Operating Procedures may be used to meet System performance requirements and has left that decision for the Transmission Planner/Planning Coordinator.

8. By definition, Consequential Load Loss is allowed. To meet industry concern, as well as FERC Order 693, the SDT has added Requirement R2.8 to identify the event causing the single largest Consequential Load Loss Demand and its value and eliminate the reporting of the expected duration. Requirement R3.3.2.1 has been deleted in favor of new Requirement R2.8.

R2.8 The Planning Assessment shall provide the largest Consequential Load Loss (megawatt Demand) and the associated event caused by any P1 event and any P2 event in Table 1.

9. The definition of Extreme Events already states that these events have a lower probability of occurrence than Planning Events. The SDT did not make the change suggested by the commenter as there was no industry consensus to alter the definition.

10. The list of Contingencies is expected to cover the Transmission Planner's or Planning Coordinator's System for which they are responsible, including any tie-lines to adjacent Transmission Systems. The standard does not preclude the Transmission Planner or Planning Coordinator to expand the list of Contingencies to include some Contingencies of interest or known impact for adjacent System(s). It is expected that through peer reviews, the Transmission Planner or Planning Coordinator may initially learn of any new event within an adjacent System that impacts their own System.

11. Applicability 4.1.4 has been deleted due to the deletion of Requirements R9 – 14.

12. The SDT believes that it is not necessary to replace "previous" with "most recent" since Planning Assessments are required on an annual basis.

13. The SDT believes that the term "System peak Load" is appropriate. The SDT does not believe that Requirement R2.1.1 is too prescriptive, but is the minimum needed to gauge the timing for System reinforcements in the near-term horizon.

14. This draft of standard has been revised to remove word "plant" from Requirement R2.6.2 (now R2.5.2). Requirement R2.5.2 from the last draft of the

Organization	Question 15:	Question 15 Comments:
standard has been deleted. **R2.5.2** For steady state, short circuit, ~~Generating Plant Stability,~~ or ~~System~~ Stability analysis: the ~~study~~ present System model shall not include any material changes, such as, generation or Transmission additions/removals, or topology changes that have occurred in the intervening period and would impact the study area. Material generation changes could include: 15. The SDT has not defined a project initiation date and will leave that definition to be determined by the Transmission Planner and/or Planning Coordinator. 16. Most of the industry did not seem to find Requirements R3.3.3 and R3.4 unclear or confusing. Therefore, the SDT has decided to not undertake any rewording. Requirements R3.3.3 and R3.4 have been relabeled as Requirements R4.4 and R4.5 respectively. 17. The requirement for study has been changed to 20 MW for a single generator or for an aggregate of generators. This language is now in Requirement R2.5.2. Requirement R5.5.2 was deleted. 18. The SDT agrees and has removed the redundancy found with Extreme Event 3.b. Having multiple nuclear units out of service simultaneously is an Extreme Event, but it has occurred. The SDT recommends that the Transmission Planner consider sensitivities with different combinations of nuclear plants being out of service, including the possibility that they are all shut down simultaneously. To reinforce the more apparent combinations, the Transmission Planner may discuss the operational requirements and the equipment and design similarities of the nuclear plants with the appropriate Resource Planner or Generator Operator to determine credible scenarios which could commonly affect the nuclear plants. 19. The SDT discussed the combining of notes 2 & 3 but felt they wanted them separate for clarity. Note 2 is focusing on interruptions of Firm Transmission Service and Non-Consequential Load and Note 3 refers to transformer outage events. 20. The SDT has deleted the parenthetical to provide clarity. 21. The SDT has addressed this issue by the Header note 'b' for Steady State Only in Table 1 - Steady State & Stability Performance, where the Planning Coordinator sets the acceptable voltage deviations. The SDT believes that adjacent Planning Coordinators can adequately address this concern. 22. The SDT believes that any unit that is tripped by out of synchronism protection is actually in an "out of synchronism" condition and this should not occur for a P1 event regardless of generator size.		
City Water, Light & Power - Springfield, Illinois	A — Generally support the revised standard	
Response: Thank you for your response.		
Omaha Public	B — Unsure	Event 1 of Category P2 in Tables 1 and 2 addresses events consisting of "Breaker(s) opening without a Fault resulting in a

Organization	Question 15:	Question 15 Comments:
Power District	about supporting the revised standard	single ended line." Category P2 is labeled as a "single contingency" category, yet it seems like an event consisting of the opening of more than one breaker would actually be a multiple contingency. Please consider whether the "(s)" should be removed after the word "breaker" in the event description so that it addresses only a single breaker opening without a Fault. Table 1 does not address multiple contingencies consisting of loss of a transmission circuit, transformer, single pole of a DC line, or shunt device, followed by System adjustments, followed by the loss of a generator. It seems like Table 1 should be modified to address this type of multiple contingency. In the description of Event 1 of Category P2 in Table 1, remove the text "Loss of one of the following:". In the description of Event 2 of Category P2 in Table 1, replace "Bus section" by "Loss of a bus section". Assuming that this does not change the intent of the drafting team, in R3.3.2.2, R3.5.1, R5.4.3.1, change "shall be operating" to "are operating". In R3.3.2.2, consider removing the phrase "and within their thermal and voltage limits", because it seems like it may be redundant given the definition of the term "Facility Rating". In the event descriptions of Categories P1, P3, and P6 of Table 2, does the term "3-phase fault" apply to DC lines? If not, consider using a separate introductory phrase with the event descriptions of Categories P1, P3, and P6 of Table 2 that involve DC lines. Also consider removing the words "Loss of" in the description of Event 4 of Category P6 in Table 2. Since a definition was developed for "Bus-tie Breaker", capitalize the terms "bus-tie" and "bus tie" wherever they appear in the standard.

Response: The SDT believes that events which can result in a single line or line section being fed radially from one end must be analyzed to ensure that Load served from the line can be reliably served from either end regardless of station configuration.

The SDT expanded the existing Table 1 description to include the requirement to study the loss of any generator followed by the loss of a transmission element. The SDT made this decision based on the fact that generator outages are more probable and in many cases have longer outage durations than transmission element outages. The SDT considered a requirement to study any outage of a transmission element followed by a generator outage but decided that this would be very burdensome for a lower probability event and therefore, decided not to add it in Table 1 of the draft standard.

P2 - The tables have been combined and the words "Loss of" have been removed.

The SDT agrees. Event 2 in P2 has been modified for clarity.

Requirement R3.3.2.2 has been deleted in favor of Header note ‘e’ in the Table. Please note that the two tables in the second draft have been reduced to one table in the third draft. Requirements R3.5.1 and R5.4.3.1 have been deleted from the Standard.

Organization	Question 15:	Question 15 Comments:
The "3-phase faults" does not apply to DC lines. The SDT has revised the Table accordingly. P6 - The tables have been combined and the words "Loss of" have been removed. The final draft will have all defined terms capitalized.		
Progress Energy Carolinas	C — Definitely do not support the revised standard	While be believe that in many ways the proposed draft standard represents an improvement of the current standard, we have a number of significant concerns that preclude our endorsement for the proposed standard as currently drafted. These include those discussed in the comments to above questions and the below additional comments.1) In both the Steady State and Stability Tables, Category P6 is the loss of a system element, following system adjustments, followed by the loss of another element. The table columns for this category say that interruption of firm transmission service is allowed. The table, however, is not clear whether the interruption of firm service is allowed as part of the system adjustment (between the outages) or whether it is only allowed after the second outage. It was stated in the NERC TPL SDT WebEx that the interruption is not allowed as part of the system adjustment. If this is the interpretation, this would be a dramatic change from the existing standard and would result in the unintended consequence of significantly reducing transfer capability of interfaces to a fraction of their currently reported capability. This would in effect be imposing an n-2 criteria for offering firm transmission service. This would not be an acceptable situation for the users, owners and operators of the bulk power system. 2) The proposed sensitivities create significant amount of additional work for the sole purpose of demonstrating compliance to this standard without any demonstratable benefit towards improving system reliability. While sensitivities should be appropriately considered in studies, this standard should not be overly prescriptive with respect to specific sensitivities or study methodologies.
Response: 1. The SDT agrees that clarification regarding treatment of Firm Transmission Service and Non-Consequential Load Loss during adjustment is necessary. Footnote 10 in Draft 3 of the Standard provides this clarification. **Footnote #10** – Curtailment of firm transmission service, when coupled with the appropriate re-dispatch of resources obligated to re-dispatch, is allowed both as a System adjustment (as identified in the column titled 'Initial System Conditions') and a corrective action, where it can be demonstrated that Facilities remain within applicable Facility Ratings and those adjustments do not result in the shedding of any firm Load. Where limited options for re-dispatch exist, sensitivities associated with the availability of those resources must be considered. Where Facilities external to the Transmission Planner's planning region are relied upon, Facility Ratings in those regions must be considered. 2. The SDT agrees with the respondent that the sensitivities evaluated should be based on the individual situations and therefore, the SDT has not required specific sensitivities, but rather, required that at least one sensitivity should be evaluated for an Assessment to be complete.		
Platte River Power	A — Generally	In Tables 1 and 2, Categories P1 and P3, under the column heading "Interruption of Firm Transmission Service Allowed," change the note in the performance box to read "Yes, if transfer is dependent on the outaged Element." (Not just for a DC

Organization	Question 15:	Question 15 Comments:
Authority	support the revised standard	line Element.) This conditional statement applies to most Firm Point-To-Point Transmission Service (Firm PTP) applications where an outaged Element reduces the Transfer Capability of the PTP service if the Element cannot be restored to service after an allowable time frame (30 minutes or so) and the Transfer Capability is reduced to a Prior Outage System Conditions level. This "extended Contingency situation" could cause an interruption or curtailment to the firm service. The interruption and curtailment responses to a Contingency might be different between Firm PTP and Network Integration Transmission Service.
Response: The SDT has removed the "Yes if transfer is dependent on the outaged DC line" comments from the Table to ensure that AC and DC lines are treated equally. The draft standard does not allow interruption of Firm Transmission Service as a System response to Event P1. However, the SDT added Footnotes # 5 and 10 to the end of Table 1 to reflect that curtailment or interruption of Firm Transmission Service in preparation for the next Contingency will be allowed provided there is no shedding of firm Load. **Footnote 5** - When the conditions and/or event(s) being studied form the basis for conditional Firm Transmission Service, curtailment of that conditional Firm Transmission Service is allowed. **Footnote #10** – Curtailment of firm transmission service, when coupled with the appropriate re-dispatch of resources obligated to re-dispatch, is allowed both as a System adjustment (as identified in the column titled 'Initial System Conditions') and a corrective action, where it can be demonstrated that Facilities remain within applicable Facility Ratings and those adjustments do not result in the shedding of any firm Load. Where limited options for re-dispatch exist, sensitivities associated with the availability of those resources must be considered. Where Facilities external to the Transmission Planner's planning region are relied upon, Facility Ratings in those regions must be considered.		
BCTC	C — Definitely do not support the revised standard	BCTC appreciates the efforts of the SDT to explore ways to improve our planning standards. We understand that some of the proposed enhancements may assist Transmission Planners with justifying the need for system reinforcements. Many areas of our system already meet the proposed improvements, for example, most (but not all) of our 500 kV system already meets the proposed standards for systems above 300 kV. We have planned our system without support from a standard. The proposed changes do not really help us in any way and have a number of undesirable consequences. Consequently, BCTC does not support a number of the proposed additions and is uncertain about supporting some of the other changes. Our concerns are summarized below under headings of System Issues and Study Issues. System Issues:1. BCTC plans, manages and operates 18,000 km of transmission in British Columbia. This includes 5700 km of 500 kV transmission lines. For the BCTC system, the proposed definitions for Consequential Load Loss and Non-consequential Load Loss, specifically that load loss due to RAS/SPS is Non-Consequential Load Loss, will provide no reliability benefits for our 500 kV transmission backbone system providing wholesale open access service and interconnecting to the rest of the western interconnection relative to what we have today. No reinforcements of this 500 kV transmission will be required as a result of these more stringent definitions. Any potential reliability benefits of any additional facilities built to comply with these definitions would be at the local service level, primarily in rural areas currently served by radial lines. The possible benefits would be small. There is a very low probability that we would get funding approval for these facilities. For most of our system including most of our backbone 500 kV and local networks in

Organization	Question 15:	Question 15 Comments:
		metropolitan and urban areas BCTC already meets the requirements for these definitions. As noted in our comments at item 3, a portion of the BCTC system above 300 kV cannot meet the proposed P1(A) > 300 kV. We require further clarification of these definitions such as allowing load shedding in local networks. Otherwise, we will not be planning a doable/plausible set of actions, but rather just generating a list of projects that will not be approved. Our resulting subsequent corrective plan will be to use load shedding RAS, which will conflict with the definitions. Order 693 does not require NERC to prohibit load shedding, only clarify the amount and duration of load shedding that is permitted (paragraphs 1795 and 1797). BCTC's concerns can be addressed by including the local network component of Footnote (b) - modify the definition of Consequential Load Loss to permit the use of RAS in local networks (including local networks interconnecting generation), by allowing Non-Consequential Load Loss for local networks in Tables 1 and 2, or by modifying the definition of BES to exempt local networks from the definition of BES. BCTC could also consider a limit on load shedding if the industry would develop one. BCTC raised these issues in our comments on the first draft. The SDT response (page 332) does not address our concerns. We also note FPL comment 7 (page 359) regarding removal of localized load reduction provided in Footnote (b). We do not believe that the SDT has addressed FPL's issue. Unless the local network component of Footnote (b) is included and we can get a clarification to address our concern with P1 (A), the proposed standard is not suitable for the BCTC system and we do not support the standard. 2. Contingency P1 needs to permit curtailment of firm service for flow through firm transmission service to prepare for the next contingency. If it does not, some flow through open access transmission customers may have less ATC available if RAS is not available to meet the new restrictions on the P6 contingency, while this ATC will be available for services sourcing or sinking within the transmission provider's system. P6 allows the use of RAS in response to the second contingency (Event). For firm service originating or sinking in our system, we can use RAS and have many RAS systems already in place. However, for flow throughs it may not be possible to implement RAS or there may be a time delay until RAS can be installed. If RAS cannot be implemented, it would be preferable to provide the firm service and curtail in preparation for the second contingency rather than deny the firm service (or require that the system be built for N-2 capability, which also may not be possible), which is what we will have to do to adhere to the new standard. The result is that flow through transactions will have to use non-firm service while non-flow-through may use exactly the same transmission for firm. Also keep in mind that while P4 and P5 are only those multiple contingencies initiated by a common mode failure, P6 is any two elements not necessarily common mode. Therefore, P6 can be more limiting than P4 or P5. For P4 and P5 contingencies the BCTC system has less dependence on RAS than does the second event of a P6. Consequently P6 will be more limiting on flow throughs than P4 and P5. Order 693 contains direction to NERC to address Footnote (b). Some commenters have taken issue with the SDT interpretation of Order 693 (e.g. FRCC item 2, page 365). Given the different interpretations and the potential for impacts on ATC, we suggest that the SDT review this issue with FERC and find out if what the SDT is proposing is what they really want. Without this change or clarification we do not support the standard. 3. Regarding Q30 in the Comments on First Draft, BCTC believes that DC and AC lines should have the same performance requirements with respect to interruption of firm transmission service. This relates to our concern above

Organization	Question 15:	Question 15 Comments:
		regarding flow through transactions. We do not understand why interruption of firm service would be an acceptable response to the loss of a single pole of a DC line (i.e. response to the contingency) but not an acceptable step to prepare for the next contingency of an AC line. We would ask that the SDT provide further explanation of its response that "many of the transfers over DC lines are automatically curtailed when the DC line is outaged" (page 220). We can do the same with AC lines for transfers sinking or sourcing within our system. Is the SDT assuming that RAS/SPS is used? We agree with the comments of FPL, FRCC, Southern Transmission and Manitoba Hydro (pages 219 and 221) and FPL (page 360, item 11). We disagree with the SDT decision to allow different performance for DC than AC lines. We do not support this element of this standard. 4. Contingency P3 should have the same performance requirement as P6. In two recent CPCN approvals for reinforcements of the BCTC backbone system, approval was granted based on generator contingencies being treated the same as transmission contingencies. We believe it highly unlikely that we would have received funding to approval to meet contingency P3. In our local service areas relying on generation for firm supply and for our bulk system, we consider dependable generator capacity on a case by case basis. We do not arbitrary assume a generator N-1 as a preexisting planning condition. We consider firm generator capability as a sensitivity case, not a planning criteria. We disagree with requiring a generator initial system condition having a more stringent performance requirement than other initial conditions. Without this change we do not support this standard. 5. BCTC is concerned that including the generator runback/tripping requirement in this standard will encourage more use of generator runback and tripping and will make it more difficult to get regulatory approval for transmission reinforcements. If retained, there needs to be a tie into reserves requirements. While we agree with permitting generator runback/tripping, at this time we are unsure about supporting this standard with this permissive requirement included. Study Issues:6. R2.5 and R5.5 on Generating Unit Stability studies are adequately addressed by FAC-001 and 002. Triggering events such as increased output or new existers need to go through our generator interconnection process and be paid for by the customer. In fact, we would not be aware of any of these triggering events unless a request comes from a customer. Without clarification of which generator studies are addressed through FAC-001 first, we do not support this standard. 7. We request that the SDT provide an explanation of why it believes it is important to maintain a distinction between system and generating unit stability studies. 8. Table 1 Steady State Performance lists 6 items above the Planning Events title. Should these be listed below the Planning Events title?
Response: 1. The SDT has added footnote 10 and clarified that for a P1 event, Transmission service could be interrupted as long as all of the Non-Consequential Load continued to be served. This draft does not allow “local network” Load to be shed for a P1 event, however, the conditions that you describe could warrant a regional difference.		

Organization	Question 15:	Question 15 Comments:
Footnote #10 – Curtailment of firm transmission service, when coupled with the appropriate re-dispatch of resources obligated to re-dispatch, is allowed both as a System adjustment (as identified in the column titled 'Initial System Conditions') and a corrective action, where it can be demonstrated that Facilities remain within applicable Facility Ratings and those adjustments do not result in the shedding of any firm Load. Where limited options for re-dispatch exist, sensitivities associated with the availability of those resources must be considered. Where Facilities external to the Transmission Planner's planning region are relied upon, Facility Ratings in those regions must be considered. 2. Footnote # 10 has been added to the end of Table 1 to reflect that curtailment or interruption of Firm Transmission Service will be allowed in preparation for the next Contingency. However, until the next Contingency occurs, System performance will need to meet the requirements for Event P1. As such, the proposed standard will not allow loss of any Non-Consequential Load, except for contracted interruptible Loads, in preparation for the next Contingency. 3. The SDT has removed this differentiation in the Table such that AC and DC lines will be treated equally. See footnote #10. 4. The SDT believes that the loss of a generator unit is a much more likely to occur than the loss of other major BES elements and thus the P3 event warrants more stringent performance requirements than the P6 event. The performance requirements for P3 have been clarified by addition of footnote 10 in Revision 3 of the Standard. 5. By a nearly unanimous response the Industry favors manual and automatic generation run-back and tripping as a response to a single or multiple Contingency. The SDT has eliminated the conditions in Sub-requirements R3.5.1, R3.5.2, and R3.5.3 for Contingency events as well as similar conditions in Sub-requirements R5.4.3.1, R5.4.3.2, and R5.4.3.3 for Stability events in the third draft. Accordingly, the SDT has modified Sub-requirement R3.5 for Contingency events and relocated it under Requirement R2.6.1. Likewise, the SDT has modified Sub-requirement R5.4.3 for Stability events and relocated it to become a bullet under R2.6.1. The resource adequacy issues are not directly included in this standard. In addition, with the creation of P3, the SDT has addressed the issue of the reduction of generation resources by treating the loss of one generator unit, followed by System adjustment, as the initial condition for all other single Contingencies. Therefore, the SDT does not believe that generation tripping as a corrective action needs to be tied to resource adequacy issues. Installation or modification of manual and automatic generation runback/tripping as a response to a single or multiple Contingency to mitigate Steady State performance violations. Installation or modification of automatic generation tripping as a response to a single or multiple Contingency to mitigate Stability performance violations 6. Both Requirement R2.5 and Requirement R5.5 have been deleted since, in response to industry comments, Generating Unit Stability is no longer separately addressed in the standard. 7. Based on comments from others, the SDT has removed the requirements for separate Generating Unit Stability analysis and System Stability analysis. 8. The SDT has reformatted and combined the two Tables into a single Table for this draft to address these types of problems.		
Manitoba Hydro	C — Definitely do	Manitoba Hydro can not accept the standard due to the requirements imposed on Firm Transmission Service and on facilities >300 kV. The standard would have to allow Firm Transmission Service to be curtailed in situations where Non-

Organization	Question 15:	Question 15 Comments:
	not support the revised standard	consequential Load is not lost. The higher performance requirements for facilities >300 kV are tied to very low probability events, so the enhanced reliability is not worth the cost. TPL-001-1 Other Comment Action Plan: Schedule of Anticipated Actions needs to be revised. - Action 3 shows rev 3 out for ballot in 2Q09. TPL-00101 Purpose: Is the purpose to ?Establish Transmission System planning performance requirements? or to ?Establish planned Transmission System performance requirements? The term ?probable contingencies? is not defined or used in the standard ? use of the term may cause confusion. R7: The TP and PC are required to determine the responsibilities for performing the assessment. Are the responsibilities to be documented as part of the assessment? R8: This requirement should avoid reference to a FERC order as the order does not apply to all entities. The requirement should just require the planner to demonstrate that the assessment was distributed to potentially impacted stakeholders. The last sentence is incomplete.

Response: In response to your comment and those of others in the industry on allowing curtailment of Firm Transmission Service as a System adjustment after an N-1 Contingency, the SDT has added footnotes 5 and 10 to Table 1 - Steady State & Stability Performance.

Footnote 5 - When the conditions and/or event(s) being studied form the basis for conditional Firm Transmission Service, curtailment of that conditional Firm Transmission Service is allowed.

Footnote #10 – Curtailment of firm transmission service, when coupled with the appropriate re-dispatch of resources obligated to re-dispatch, is allowed both as a System adjustment (as identified in the column titled 'Initial System Conditions') and a corrective action, where it can be demonstrated that Facilities remain within applicable Facility Ratings and those adjustments do not result in the shedding of any firm Load. Where limited options for re-dispatch exist, sensitivities associated with the availability of those resources must be considered. Where Facilities external to the Transmission Planner's planning region are relied upon, Facility Ratings in those regions must be considered.

The schedule has been updated.

The SDT believes the Purpose is accurate as written because it defines planning practices and conditions to be studied. As per A.3, the purpose of Standard TPL-001-1 is to "Establish Transmission System planning performance requirements within the planning horizon to develop a Bulk Electric System (BES) that will operate reliably over a broad spectrum of System conditions and following a wide range of probable Contingencies." In this definition, the word probable is left up to the Transmission Planner/Planning Coordinator to determine so that they can set System performance requirements locally based on experience.

R7 (now R6). There is no requirement to document the responsibilities as part of the Assessment but Measure M6 in the new draft clearly states that a document must be produced as evidence that Requirement R6 has been successfully completed. This could be a standalone document or part of the Assessment at the discretion of the responsible entity.

Organization	Question 15:	Question 15 Comments:
R8 (now R7): The SDT believes the addition of the reference to the FERC Order 890 adds clarity to the expectations of the requirement without making the requirements of the Order applicable to all NERC entities. The incomplete sentence has been deleted.		
Los Angeles Department of Water and Power	C — Definitely do not support the revised standard	I do not support the standard as currently written. There are too many requirements that are discriminatory, duplicative, and arbitrary/punitive. The unintended consequence of this standard would be forcing companies and planners to plan the system to take advantage of some requirements that will result in a future system that is less robust (a single line serving multiple radial loads instead of network, for example) if not to entiely discourage any further expansion of the transmission system above 300kV (the discriminatory treatment of two classes without any rational justification).
Response: The SDT believes that the appropriate justifications have been made. The SDT changes made after the first draft were due to industry consensus. The SDT believes that these changes are justified by the various comments received from industry.		
Transmission Agency of Northern California	B — Unsure about supporting the revised standard	- We agree that the Standard as presented is clearer, but there are numerous issues that still need resolution, Measures, VSLs, Implementation Plan, etc., before we can give a full approval of this Standard. - There is no mention in the purpose of the Sta
Response: Measures, VSL's and the Implementation Plan have been addressed in the third draft of the standard.		
National Grid	B — Unsure about supporting the revised standard	Aside from the comments to the prior questions, there are several issues of concern that prevent us from supporting the present draft of the revised standard. We offer the following constructive comments in an effort to support the worthwhile effort that is being pursued so that we can reach a point of satisfaction that we could vote to support the revised standard. Our concerns are listed in a rough order of priority. a. This standard as drafted does not allow exceptions for small parts of the system as long as interconnected system reliability is maintained, which is allowed in the existing TPL standards in footnotes b) and c) in Table 1. Unless such exceptions are allowed significant transfer restrictions or large reinforcements must be made. The applicable TPL footnotes are: Existing TPL footnote b) Planned or controlled interruption of electric supply to radial customers or some local Network customers, connected to or supplied by the Faulted element or by the affected area, may occur in certain areas without impacting the overall reliability of the interconnected transmission systems. To prepare for the next contingency, system adjustments are permitted, including curtailments of contracted Firm (non-recallable reserved) electric power Transfers. Existing TPL footnote c) Depending on system design and expected system impacts, the controlled interruption of electric supply to customers (load shedding), the planned removal from service of certain generators, and/or the curtailment of contracted Firm (nonrecallable reserved) electric power Transfers may be necessary to maintain the overall reliability of the interconnected transmission systems.

Organization	Question 15:	Question 15 Comments:
		b. This standard does not address base conditions. Without defining base conditions the initial status of generation dispatch and transfers across the system is ill defined. Therefore the contingency analysis doesn't have a predictable basis for a consistent and repeatable study. c. The reference to Special Protection Systems is completely permissive. Although there are good applications for Special Protection Systems, their use must be constrained to have a reliable system and to promote construction of needed infrastructure. d. This standard does not provide flexibility to shed load, which restricts the ability to control post contingency response for low impact events. This may result in advancing need for upgrades in response to low impact events. This is in conflict with FERC's directive to have the Transmission Provider waiting for market response to transmission needs and having the Transmission Provider provide a role to back stop the market. e. Definition of the Long-Term Planning Horizion. The planning horizon, for assessment purposes should be limited to 10 years. Such an assessment should be sufficient to identify requirements that may take an extended time to implement. f. Definition of Planning Coordinator is part of the NERC Functional Model, Remove from Standard. g. Put headings on each section to identify requirements of section. h. With respect to R2.2 - Delete "current" from the phrase"current System Peak Load study" and replace "study" with "assessment." i. Remove R2.2.1, the requirement to extend the assessment beyond 10 years. What does the length of the project have to do with the assessment? If it takes 15 years to build something, why does this require a review of year 15? What is the purpose of this assessment? j. R3.3.2 requires clarification - This standard needs to permit discretion regarding the single contingencies that need to be tested, similar to R 3.3.3 and R3.4. It is completely unnecessary to test all events. For example, contingencies may be limited to relevant disturbances that are contained within or directly impact the studied system. k. With respect to R3.2.1 - Clarify whether the intent of the standard is to address station service minimum voltage limitation, maximum leading VAR absorption capability or both at steady state. l. Remove R3.2.2 - Relay loadability is addressed in PRC-023 standard. m. With respect to R3.3.2.1 - Recommend the removal of the requirement to assess the expected duration of Consequential Load loss. It's not considered anywhere else in the standard. n. With respect to R3.3.3 - The paragraph refers to Table 1 Contingencies P3 through P7; this should be explicitly stated. Rationale for inclusion of testing should not be required; should only need to explain why certain Contingencies were not tested. This discretion should be applicable to all contingencies.

Organization	Question 15:	Question 15 Comments:
		o. With respect to section R5 - The concept of planned and long-term outages should apply to the general Planning Assessment, or not at all. It should not be specific to the Stability Assessment. p. The provisions of Section R.5.3 should have a corresponding MOD standard apply a requirement to provide information regarding all direct and indirect protective and control actions that could result in the inadvertent trip of the generator. Such a provision should include "other equipment (e.g. HVDC, SVC's, Statcoms)", and identify how these devices are treated in the simulation. q. Planned outages should be addressed in the operating horizon unless otherwise defined in the planning horizon. r. What is a "current" study?

Response: A. Some commenters expressed concern with the inability to shed Non-Consequential Load in response to a single Contingency event. It was indicated that some stakeholders rely on an SPS to drop local area network Load in response to some single Contingency events and that these System designs are permissible under the presently approved TPL-002-0 standard. FERC in Order 693 was clear in paragraph 1794 that that interruption of Non-Consequential Load is not permitted for single Contingency events. This position was vetted in draft 1 of TPL-001-1 and most stakeholders and the SDT support this position. The use of an SPS design would be permitted for a single Contingency event if the SPS design interrupts service to customers involved in an interruptible Load contract arrangement. As an alternative, an entity could seek an Entity Variance for the situation described through their Regional Entity organization. In paragraph 1794, FERC clarified that "…an entity may seek a regional difference to the Reliability Standard from the ERO for case-specific circumstances". The process described by FERC as a regional difference is described in detail in the "NERC Standards Development Procedure" document under the subsection titled "Variances to NERC Reliability Standards".

B. The SDT has modified Requirement R1 to include additional details on what should be modeled in the cases. However, the SDT intentionally provides flexibility for the Transmission Planner/Planning Coordinator to decide which "base case" to use since initial conditions for a System will vary from region to region and will need to be established on a local level, not via a national standard. The required studies and sensitivity analysis ensures that sufficient study is performed to cover an appropriate range of System conditions.

C. The SDT does not believe that it would be appropriate to attempt to specify limitations to the use of Special Protection Systems in this standard. The proposed TPL-001-1 and existing standards provide adequate guidance to the industry on application of Special Protection Systems.

D. The SDT has made clarifications regarding Firm Transmission Service and Non-Consequential Load Loss. Footnote # 10 has been added to the end of Table 1. The standard does not preclude the possibility of obtaining contractually interruptible load. It is the general opinion of the SDT that dropping of Non-Consequential Load should not be allowed for the Planning Events involving only one element as described in Table 1 of the proposed Standard, and to meet the intent of FERC Order 693. Further, this Standard is proposed to "raise the bar" to improve System reliability, which would require responses (Corrective Action Plans) to address those so-called low-impact events that may have been overlooked or ignored with the existing Standard TPL-002-0.

Footnote #10 – Curtailment of firm transmission service, when coupled with the appropriate re-dispatch of resources obligated to re-dispatch, is allowed both as a System adjustment (as identified in the column titled 'Initial System Conditions') and a corrective action, where it can be demonstrated that Facilities remain within applicable Facility Ratings and those adjustments do not result in the shedding of any firm Load. Where limited options for re-dispatch exist, sensitivities associated with the availability of those resources must be considered. Where Facilities external to the Transmission Planner's planning region are relied upon,

Organization	Question 15:	Question 15 Comments:

Facility Ratings in those regions must be considered.

E. The SDT believes that a review of System conditions beyond the 10-year horizon is warranted. FERC Order 693 requires that the planning horizon take into account the lead times for siting and permitting of new long-distance Transmission lines and other long lead time solutions. The SDT has received industry comments regarding the need to exceed a 10-year horizon to account for longer lead time projects. Establishing planning horizons that are shorter than Transmission lead times may create gaps where the identification of a reliability need to which Transmission may be the best solution occurs too late to avert the identified reliability violation. Further, Operating Procedures or alternative short-term capital projects may be needed to limit the impact of the Planning Event until the planned facilities can be completed. This information needs to be included in the Assessment.

F. The definition for Planning Coordinator was deleted because the term has already been defined and added to the NERC Glossary by another SDT.

G. The SDT also feels that the Tables need to be as clear and concise as possible. To that end, the next version will combine Tables 1 and 2 into one table with a revised format.

H. The SDT believes that the existing language is appropriate.

I. The SDT believes that a review of System conditions beyond the 10-year horizon is warranted under some circumstances. For example, if it takes 15 years to build a Transmission line, then the need for that line would have to be determined 15 years ahead of the in-service date. Therefore, Requirement R2.2.1 requires you to perform an Assessment on year 15 if it takes you 15 years to build a line.

J. The SDT has removed Requirement R3.3.2 and replaced it with additional language in Requirement R3.1. The SDT does agree with your interpretation that it does not require evaluation of all single Contingencies. The SDT specifically states in Requirement R3.4 that those Contingencies that are expected to produce the more severe System impacts shall be identified, evaluated for System performance, and the rationale for the Contingencies selected for evaluation shall be available as supporting information and shall include an explanation of why the remaining Contingencies would produce less severe results.

R3.1 Studies shall be performed to determine whether the BES meets the performance requirements in Table 1~~ Steady State Performance.~~ based on the lists created in Requirement R3.4.

K. The SDT has not limited the purpose of this requirement to either minimum acceptable station service voltages or maximum Mvar absorption. The SDT believes that the purpose of Requirement R3.2.1 (now R3.3.2) is to determine if generators could continue to operate or if they would trip off following the Contingency.

L. The SDT believes that relay load limits or loadability need to be considered in the Contingency analyses. The studies should determine if Transmission line loadings could reach the relay loadability level, which may add to the existing Contingency and perhaps, result in an unbounded cascading event.

M. To meet industry concern as well as FERC Order 693, the SDT has added Requirement R 2.8 to identify the event causing the single largest Consequential Load Loss Demand and its value and eliminate the reporting of the expected duration. Requirement R3.3.2.1 has been deleted in favor of new Requirement R2.8.

R2.8 The Planning Assessment shall provide the largest Consequential Load Loss (megawatt Demand) and the associated event caused by any P1 event and any P2 event in Table 1.

Organization	Question 15:	Question 15 Comments:

N. The SDT has re-written Requirement R3.3 (now Requirement R3.4) to address your initial concern. Although the language and format of the proposed Standard have been revised from earlier versions, the SDT continues to believe that the Transmission Planners should evaluate the System performance for the events that are expected to produce the more severe System impacts, including both single and multi-Contingency events. The wording of new Requirement R3.4 (the old Requirement R3.3.3) now requires a listing of the Contingencies to be evaluated, the rationale for their selection and why the remaining Contingencies would be expected to produce less severe results. This will provide a complete evaluation of the potential Contingencies to be studied – those selected and those excluded.

R3.4 Those Planning Event Contingencies in Table 1 ~~– Steady State Performance not covered in Requirement R3.3.2~~ that are expected to produce more severe System impacts shall be identified~~,~~ and a list of those Contingencies to be evaluated for System performance in Requirement R3.1 created~~,~~. ~~and t~~The rationale for the Contingencies selected for evaluation shall be available as supporting information and shall ~~includ~~include~~e~~ an explanation of why the remaining Contingencies would produce less severe System results.

O. The SDT agrees and has moved this concept within Requirement R1 (see Requirement R1.1.1) so that it is applicable to all planning Assessments. Further, both Requirement R3 and Requirement R5 (now R4) have been revised to make reference to Requirement R1.

R1.1.1 Planned outages of generation and Transmission Facilities, if specifically known.

R3. For the steady state portion of the Planning Assessment, each Transmission Planner and Planning Coordinator shall perform analysis for the Near-Term and Long-Term Transmission Planning Horizon studies in Requirement R2.1 and Requirement R2.2. ~~The studies shall be based on computer power flow simulations that analyze BES normal performance (n-0) and System response to c~~Contingencies ~~in Table 1 – Steady State Performance.~~ The studies shall be based on computer simulations using models utilizing data provided in Requirement R1.

R4 For the Stability portion of the Planning Assessment, as described in Requirement R2.4 ~~and Requirement R2.5~~, each Transmission Planner and Planning Coordinator shall perform the Contingency analyses listed in Table ~~2~~1 ~~– Stability Performance~~. The studies shall be based on computer simulations using models utilizing data provided in Requirement R1. ~~The studies shall be based on computer simulations using models utilizing data provided in Requirements R9 through R14, the MOD-010 and MOD-012 standards, and other data sources, to include known planned and long term outages of Transmission or generation equipment. The studies shall cover both System Stability and Generating Unit Stability. The following requirements apply to both System Stability and Generating Unit Stability studies unless otherwise noted.~~

P. Requirement R5.3 (now R 4.3.2) has been modified to address simulation of how generators perform under conditions being studied. The current MOD standards that address steady-state and dynamic simulation data requirements do not explicitly require the Generator Operators to provide voltage ride-through capability. These standards are set to be addressed by Project 2010-04 within NERC's Standards Development Work Plan. It is expected that the Transmission Planner would contact Generator Operators applicable to their System to obtain such data. If the data is not provided, it would be expected that a Transmission Planner state its assumption on the Vmin used for a generator terminal voltage for assessing ride-through capability. It's likely such information could be obtained through generator manufacturers. The "Other equipment" is addressed in the revised Requirement R4.3.3.

Q. The SDT agrees and therefore has changed R1.1.1 to state "if specifically known."

R. The SDT believes that a current study is a study that has been completed for the latest Assessment, as opposed to a past study that may have been completed up to five years ago.

Organization	Question 15:	Question 15 Comments:
Tenaska, Inc.	A — Generally support the revised standard	A few issues that may need some thought include: Are reactive power devices a responsibility of Resource Planners in R13? On the Extreme Events description for local area, what is a load center? Does the loss of a large body of water as a cooling source result in the immediate loss of generation such that it is a contingency which affects steady state, stability, or short circuit studies?
Response: In response to industry comments, the SDT has removed Requirements R9-R14 and thus eliminated the responsibility of a Resource Planner. The SDT believes that a Load center is a location where energy is delivered by Transmission or sub-Transmission Systems to end-use customers. The loss of a large body of water as a cooling source could cause an immediate loss of generation or could only cause some generation reduction. The Transmission Planner or Planning Coordinator would need to analyze their System in order to determine the proper simulation(s).		
Pacific Gas and Electric Co.	B — Unsure about supporting the revised standard	We agree that the Standard as presented is clearer, but there are numerous issues that still need resolution, Measures, VSLs, Implementation Plan, etc., before WECC can give a full approval of this Standard. ? There is no mention in the purpose of the Standard about minimizing loss of load for more probable unplanned contingencies. Maybe there needs to be some definition around what is meant by reliability. ? We believe that with the loss of the first N-1 in P6, curtailment of firm transmission service or firm transfers should be allowed as part of system adjustment in preparation for the next N-1. This should be added to R3.3.2.2. Otherwise, the power transfer under normal condition (before the first N-1) will have to be significantly curtailed in anticipation for meeting performance requirements after N-1-1. This will unnecessarily impede commerce. Or, to maintain the same firm power transfer under normal conditions, construction of transmission facilities will be required. Either way, this would impose a much stricter standard than exists today resulting in very costly unnecessary system improvements and invalidate terms of many transmission service contracts that allow for implementation of pro-rate curtailments of firm transmission rights during forced and planned outage conditions.? We disagree with the application of the proposed definitions of Consequential Load Loss and Non-Consequential Load Loss in conjunction with “raising the bar”. Local Network load should be included in Consequential Load and the loss should be allowed for single contingencies. The TPL standard is to maintain reliability of the BES. Under certain conditions orderly dropping of local network load could limit the spread of the disturbance beyond the local area and allow BES reliability to be maintained. This would minimize the total amount of load loss and allow for quicker load restoration. The proposed definitions for Consequential Load Loss and Non-consequential Load Loss will provide no reliability benefits for high voltage (>300 kV) transmission backbone system providing wholesale open access service and interconnecting to the rest of the western interconnection. Any potential reliability benefits of any additional facilities built to comply with these definitions would be at the local service level. As mention in comments to Q3 above, some local network customer

Organization	Question 15:	Question 15 Comments:
		curtailments or local area load loss has been allowed by local regulatory authorities as long as the overall reliability of the interconnected system was not impacted. This is a result of tradeoffs between providing a higher level of reliability in a local area and the cost and environmental impacts of providing that service. Such tradeoffs are subject to local regulatory authority or contract negotiated between the transmission provider and its transmission customers. Regarding the terms interruption of firm transmission service?, there needs be clarification on what Interruption means. Since it is referring to firm transmission service, we would interpret this to mean curtailment needed after a particular contingency and adjustments. There also needs to be clarification on what Firm Transmission Service? means. Two points, 1) the NERC definition states ?highest quality service offered to customers under a filed rate schedule that anticipates no planned interruption.? The Standard implies anticipation of ?unplanned? interruption for certain contingencies. 2) Is this referring to a transmission product as defined in FERC Order 890, or firm transfers modeled for the conditions being studied? One way to interpret the intent is the firm transfers being modeled for the conditions in the powerflow to meet demand that would result in load not being served if that firm transfer were curtailed. If there is other generation in the system that could increase to meet the load if the transfer being modeled is interrupted, then interruption of firm transmission service should also be allowed for P1 through P5 contingencies in the table. In addition, we believe that DC and AC lines should have the same performance requirements with respect to interruption of firm transmission service. We do not understand why interruption of firm service would be an acceptable response to the loss of a single pole of a DC line (i.e. response to the contingency) but not an acceptable response to prepare for the next contingency of an AC line. The transfers over both AC and DC lines can automatically be curtailed when the line is outaged.
Public Service Company of New Mexico	C — Definitely do not support the revised standard	We agree that the Standard as presented is clearer, but there are numerous issues that still need resolution, Measures, VSLs, Implementation Plan, etc., before WECC can give a full approval of this Standard. ? There is no mention in the purpose of the Standard about minimizing loss of load for more probable unplanned contingencies. Maybe there needs to be some definition around what is meant by reliability. ? We believe that with the loss of the first N-1 in P6, curtailment of firm transmission service or firm transfers should be allowed as part of system adjustment in preparation for the next N-1. This should be added to R3.3.2.2. Otherwise, the power transfer under normal condition (before the first N-1) will have to be significantly curtailed in anticipation for meeting performance requirements after N-1-1. This will unnecessarily impede commerce. Or, to maintain the same firm power transfer under normal conditions, construction of transmission facilities will be required. Either way, this would impose a much stricter standard than exists today resulting in very costly unnecessary system improvements and invalidate terms of many transmission service contracts that allow for implementation of pro-rate curtailments of firm transmission rights during forced and planned outage conditions.? We disagree with the application of the proposed definitions of Consequential Load Loss and Non-Consequential Load Loss in conjunction with ?raising the bar?. Local Network load should be included in Consequential Load and the loss

Organization	Question 15:	Question 15 Comments:
		should be allowed for single contingencies. The TPL standard is to maintain reliability of the BES. Under certain conditions orderly dropping of local network load could limit the spread of the disturbance beyond the local area and allow BES reliability to be maintained. This would minimize the total amount of load loss and allow for quicker load restoration. The proposed definitions for Consequential Load Loss and Non-consequential Load Loss will provide no reliability benefits for high voltage (>300 kV) transmission backbone system providing wholesale open access service and interconnecting to the rest of the western interconnection. Any potential reliability benefits of any additional facilities built to comply with these definitions would be at the local service level. ? As mention in comments to Q3 above, some local network customer curtailments or local area load loss has been allowed by local regulatory authorities as long as the overall reliability of the interconnected system was not impacted. This is a result of tradeoffs between providing a higher level of reliability in a local area and the cost and environmental impacts of providing that service. Such tradeoffs are subject to local regulatory authority or contract negotiated between the transmission provider and its transmission customers. Regarding the terms ?interruption of firm transmission service?, there needs be clarification on what Interruption means. Since it is referring to firm transmission service, we would interpret this to mean curtailment needed after a particular contingency and adjustments. There also needs to be clarification on what “Firm Transmission Service” means. Two points, 1) the NERC definition states ?highest quality service offered to customers under a filed rate schedule that anticipates no planned interruption.? The Standard implies anticipation of “unplanned” interruption for certain contingencies. 2) Is this referring to a transmission product as defined in FERC Order 890, or firm transfers modeled for the conditions being studied? One way to interpret the intent is the firm transfers being modeled for the conditions in the powerflow to meet demand that would result in load not being served if that firm transfer were curtailed. If there is other generation in the system that could increase to meet the load if the transfer being modeled is interrupted, then interruption of firm transmission service should also be allowed for P1 through P5 contingencies in the table. In addition, we believe that DC and AC lines should have the same performance requirements with respect to interruption of firm transmission service. We do not understand why interruption of firm service would be an acceptable response to the loss of a single pole of a DC line (i.e. response to the contingency) but not an acceptable response to prepare for the next contingency of an AC line. The transfers over both AC and DC lines can automatically be curtailed when the line is outaged.
Puget Sound Energy, Inc.	C — Definitely do not support the revised standard	We agree that the Standard as presented is clearer, but there are numerous issues that still need resolution, Measures, VSLs, Implementation Plan, etc., before PSE can give a full approval of this Standard. There is no mention in the purpose of the Standard about minimizing loss of load for more probable unplanned contingencies. Maybe there needs to be some definition around what is meant by reliability. We believe that with the loss of the first N-1 in P6, curtailment of firm transmission service or firm transfers should be allowed as part of system adjustment in preparation for the next N-1. This should be added to R3.3.2.2. Otherwise, the power transfer under normal condition (before the first N-1) will have to be significantly curtailed in anticipation for meeting

Organization	Question 15:	Question 15 Comments:
		performance requirements after N-1-1. This will unnecessarily impede commerce. Or, to maintain the same firm power transfer under normal conditions, construction of transmission facilities will be required. Either way, this would impose a much stricter standard than exists today resulting in very costly unnecessary system improvements and invalidate terms of many transmission service contracts that allow for implementation of pro-rate curtailments of firm transmission rights during forced and planned outage conditions. We disagree with the application of the proposed definitions of Consequential Load Loss and Non-Consequential Load Loss in conjunction with "raising the bar". Local Network load should be included in Consequential Load and the loss should be allowed for single contingencies. The TPL standard is to maintain reliability of the BES. Under certain conditions orderly dropping of local network load could limit the spread of the disturbance beyond the local area and allow BES reliability to be maintained. This would minimize the total amount of load loss and allow for quicker load restoration. The proposed definitions for Consequential Load Loss and Non-consequential Load Loss will provide no reliability benefits for high voltage (>300 kV) transmission backbone system providing wholesale open access service and interconnecting to the rest of the western interconnection. Any potential reliability benefits of any additional facilities built to comply with these definitions would be at the local service level. As mention in comments to Q3 above, some local network customer curtailments or local area load loss has been allowed by local regulatory authorities as long as the overall reliability of the interconnected system was not impacted. This is a result of tradeoffs between providing a higher level of reliability in a local area and the cost and environmental impacts of providing that service. Such tradeoffs are subject to local regulatory authority or contract negotiated between the transmission provider and its transmission customers. Regarding the terms "interruption of firm transmission service", there needs be clarification on what Interruption means. Since it is referring to firm transmission service, we would interpret this to mean curtailment needed after a particular contingency and adjustments. There also needs to be clarification on what "Firm Transmission Service" means. Two points, 1) the NERC definition states "highest quality service offered to customers under a filed rate schedule that anticipates no planned interruption." The Standard implies anticipation of "unplanned" interruption for certain contingencies. 2) Is this referring to a transmission product as defined in FERC Order 890, or firm transfers modeled for the conditions being studied? One way to interpret the intent is the firm transfers being modeled for the conditions in the power flow to meet demand that would result in load not being served if that firm transfer were curtailed. If there is other generation in the system that could increase to meet the load if the transfer being modeled is interrupted, then interruption of firm transmission service should also be allowed for P1 through P5 contingencies in the table. In addition, we believe that DC and AC lines should have the same performance requirements with respect to interruption of firm transmission service. We do not understand why interruption of firm service would be an acceptable response to the loss of a single pole of a DC line (i.e. response to the contingency) but not an acceptable response to prepare for the next contingency of an AC line. The transfers over both AC and DC lines can automatically be curtailed when the line is out of service.
Idaho Power	B — Unsure	We agree that the Standard as presented is clearer, but there are numerous issues that still need resolution, Measures,

Organization	Question 15:	Question 15 Comments:
Company	about supporting the revised standard	VSLs, Implementation Plan, etc., before WECC can give a full approval of this Standard.? There is no mention in the purpose of the Standard about minimizing loss of load for more probable unplanned contingencies. Maybe there needs to be some definition around what is meant by reliability.? We believe that with the loss of the first N-1 in P6, curtailment of firm transmission service or firm transfers should be allowed as part of system adjustment in preparation for the next N-1. This should be added to R3.3.2.2. Otherwise, the power transfer under normal condition (before the first N-1) will have to be significantly curtailed in anticipation for meeting performance requirements after N-1-1. This will unnecessarily impede commerce. Or, to maintain the same firm power transfer under normal conditions, construction of transmission facilities will be required. Either way, this would impose a much stricter standard than exists today resulting in very costly unnecessary system improvements and invalidate terms of many transmission service contracts that allow for implementation of pro-rate curtailments of firm transmission rights during forced and planned outage conditions.? We disagree with the application of the proposed definitions of Consequential Load Loss and Non-Consequential Load Loss in conjunction with ?raising the bar?. Local Network load should be included in Consequential Load and the loss should be allowed for single contingencies. The TPL standard is to maintain reliability of the BES. Under certain conditions orderly dropping of local network load could limit the spread of the disturbance beyond the local area and allow BES reliability to be maintained. This would minimize the total amount of load loss and allow for quicker load restoration. The proposed definitions for Consequential Load Loss and Non-consequential Load Loss will provide no reliability benefits for high voltage (>300 kV) transmission backbone system providing wholesale open access service and interconnecting to the rest of the western interconnection. Any potential reliability benefits of any additional facilities built to comply with these definitions would be at the local service level.? As mention in comments to Q3 above, some local network customer curtailments or local area load loss has been allowed by local regulatory authorities as long as the overall reliability of the interconnected system was not impacted. This is a result of tradeoffs between providing a higher level of reliability in a local area and the cost and environmental impacts of providing that service. Such tradeoffs are subject to local regulatory authority or contract negotiated between the transmission provider and its transmission customers. Regarding the terms ?interruption of firm transmission service?, there needs be clarification on what Interruption means. Since it is referring to firm transmission service, we would interpret this to mean curtailment needed after a particular contingency and adjustments. There also needs to be clarification on what “Firm Transmission Service” means. Two points, 1) the NERC definition states ?highest quality service offered to customers under a filed rate schedule that anticipates no planned interruption.? The Standard implies anticipation of “unplanned” interruption for certain contingencies. 2) Is this referring to a transmission product as defined in FERC Order 890, or firm transfers modeled for the conditions being studied? One way Comment Form for 2nd Draft of Standard TPL-001-1Assess Transmission Future Needs (Project 2006-02)Page 12 of 12to interpret the intent is the firm transfers being modeled for the conditions in the powerflow to meet demand that would result in load not being served if that firm transfer were curtailed. If there is other generation in the system that could increase to meet the load if the transfer being modeled is interrupted, then interruption

Organization	Question 15:	Question 15 Comments:
		of firm transmission service should also be allowed for P1 through P5 contingencies in the table. In addition, we believe that DC and AC lines should have the same performance requirements with respect to interruption of firm transmission service. We do not understand why interruption of firm service would be an acceptable response to the loss of a single pole of a DC line (i.e. response to the contingency) but not an acceptable response to prepare for the next contingency of an AC line. The transfers over both AC and DC lines can automatically be curtailed when the line is outaged.
SMUD	C — Definitely do not support the revised standard	We agree that the Standard as presented is clearer, but there are numerous issues that still need resolution, Measures, VSLs, Implementation Plan, etc., before giving a full approval of this Standard. ? There is no mention in the purpose of the Standard about minimizing loss of load for more probable unplanned contingencies. Maybe there needs to be some definition around what is meant by reliability. ? We believe that with the loss of the first N-1 in P6, curtailment of firm transmission service or firm transfers should be allowed as part of system adjustment in preparation for the next N-1. This should be added to R3.3.2.2. Otherwise, the power transfer under normal condition (before the first N-1) will have to be significantly curtailed in anticipation for meeting performance requirements after N-1-1. This will unnecessarily impede commerce. Or, to maintain the same firm power transfer under normal conditions, construction of transmission facilities will be required. Either way, this would impose a much stricter standard than exists today resulting in very costly unnecessary system improvements and invalidate terms of many transmission service contracts that allow for implementation of pro-rata curtailments of firm transmission rights during forced and planned outage conditions.? We disagree with the application of the proposed definitions of Consequential Load Loss and Non-Consequential Load Loss in conjunction with ?raising the bar?. Local Network load should be included in Consequential Load and the loss should be allowed for single contingencies. The TPL standard is to maintain reliability of the BES. Under certain conditions orderly dropping of local network load could limit the spread of the disturbance beyond the local area and allow BES reliability to be maintained. This would minimize the total amount of load loss and allow for quicker load restoration. The proposed definitions for Consequential Load Loss and Non-consequential Load Loss will provide no reliability benefits for high voltage (>300 kV) transmission backbone system providing wholesale open access service and interconnecting to the rest of the western interconnection. Any potential reliability benefits of any additional facilities built to comply with these definitions would be at the local service level. ? As mention in comments to Q3 above, some local network customer curtailments or local area load loss has been allowed by local regulatory authorities as long as the overall reliability of the interconnected system was not impacted. This is a result of trade offs between providing a higher level of reliability in a local area and the cost and environmental impacts of providing that service. Such tradeoffs are subject to local regulatory authority or contract negotiated between the transmission provider and its transmission customers. Regarding the terms ?interruption of firm transmission service?, there needs be clarification on what Interruption means. Since it is referring to firm transmission service, we would interpret this to mean curtailment needed after a particular

Organization	Question 15:	Question 15 Comments:
		contingency and adjustments. There also needs to be clarification on what ?Firm Transmission Service? means. Two points, 1) the NERC definition states ?highest quality service offered to customers under a filed rate schedule that anticipates no planned interruption.? The Standard implies anticipation of ?unplanned? interruption for certain contingencies. 2) Is this referring to a transmission product as defined in FERC Order 890, or firm transfers modeled for the conditions being studied? One way to interpret the intent is the firm transfers being modeled for the conditions in the powerflow to meet demand that would result in load not being served if that firm transfer were curtailed. If there is other generation in the system that could increase to meet the load if the transfer being modeled is interrupted, then interruption of firm transmission service should also be allowed for P1 through P5 contingencies in the table. In addition, we believe that DC and AC lines should have the same performance requirements with respect to interruption of firm transmission service. We do not understand why interruption of firm service would be an acceptable response to the loss of a single pole of a DC line (i.e. response to the contingency) but not an acceptable response to prepare for the next contingency of an AC line. The transfers over both AC and DC lines can automatically be curtailed when the line is outaged.
Sierra Pacific Power Company / Nevada Power Company	B — Unsure about supporting the revised standard	We agree that the Standard as presented is clearer, but there are numerous issues that still need resolution, Measures, VSLs, Implementation Plan, etc., before WECC can give a full approval of this Standard. There is no mention in the purpose of the Standard about minimizing loss of load for more probable unplanned contingencies. Maybe there needs to be some definition around what is meant by reliability. We believe that with the loss of the first N-1 in P6, curtailment of firm transmission service or firm transfers should be allowed as part of system adjustment in preparation for the next N-1. This should be added to R3.3.2.2. Otherwise, the power transfer under normal condition (before the first N-1) will have to be significantly curtailed in anticipation for meeting performance requirements after N-1-1. This will unnecessarily impede commerce. Or, to maintain the same firm power transfer under normal conditions, construction of transmission facilities will be required. Either way, this would impose a much stricter standard than exists today resulting in very costly unnecessary system improvements and invalidate terms of many transmission service contracts that allow for implementation of pro-rate curtailments of firm transmission rights during forced and planned outage conditions. We disagree with the application of the proposed definitions of Consequential Load Loss and Non-Consequential Load Loss in conjunction with ?raising the bar?. Local Network load should be included in Consequential Load and the loss should be allowed for single contingencies. The TPL standard is to maintain reliability of the BES. Under certain conditions orderly dropping of local network load could limit the spread of the disturbance beyond the local area and allow BES reliability to be maintained. This would minimize the total amount of load loss and allow for quicker load restoration. The proposed definitions for Consequential Load Loss and Non-consequential Load Loss will provide no reliability benefits for high voltage (>300 kV) transmission backbone system providing wholesale open access service and interconnecting to the rest of the western interconnection. Any potential reliability benefits of any additional facilities built to comply with these

Organization	Question 15:	Question 15 Comments:
		definitions would be at the local service level. As mention in comments to Q3 above, some local network customer curtailments or local area load loss has been allowed by local regulatory authorities as long as the overall reliability of the interconnected system was not impacted. This is a result of tradeoffs between providing a higher level of reliability in a local area and the cost and environmental impacts of providing that service. Such tradeoffs are subject to local regulatory authority or contract negotiated between the transmission provider and its transmission customers. Regarding the terms ?interruption of firm transmission service?, there needs be clarification on what Interruption means. Since it is referring to firm transmission service, we would interpret this to mean curtailment needed after a particular contingency and adjustments. There also needs to be clarification on what ?Firm Transmission Service? means. Two points, 1) the NERC definition states ?highest quality service offered to customers under a filed rate schedule that anticipates no planned interruption.? The Standard implies anticipation of ?unplanned? interruption for certain contingencies. 2) Is this referring to a transmission product as defined in FERC Order 890, or firm transfers modeled for the conditions being studied? One way to interpret the intent is the firm transfers being modeled for the conditions in the powerflow to meet demand that would result in load not being served if that firm transfer were curtailed. If there is other generation in the system that could increase to meet the load if the transfer being modeled is interrupted, then interruption of firm transmission service should also be allowed for P1 through P5 contingencies in the table. In addition, we believe that DC and AC lines should have the same performance requirements with respect to interruption of firm transmission service. We do not understand why interruption of firm service would be an acceptable response to the loss of a single pole of a DC line (i.e. response to the contingency) but not an acceptable response to prepare for the next contingency of an AC line. The transfers over both AC and DC lines can automatically be curtailed when the line is outaged.
Black Hills Corporation	B — Unsure about supporting the revised standard	We agree that the Standard as presented is clearer, but there are numerous issues that still need resolution, Measures, VSLs, Implementation Plan, etc., before a full approval of this Standard can be given. There is no mention in the purpose of the Standard about minimizing loss of load for more probable unplanned contingencies. Maybe there needs to be some definition around what is meant by reliability. We believe that with the loss of the first N-1 in P6, curtailment of firm transmission service or firm transfers should be allowed as part of system adjustment in preparation for the next N-1. This should be added to R3.3.2.2. Otherwise, the power transfer under normal condition (before the first N-1) will have to be significantly curtailed in anticipation for meeting performance requirements after N-1-1. This will unnecessarily impede commerce. Or, to maintain the same firm power transfer under normal conditions, construction of transmission facilities will be required. Either way, this would impose a much stricter standard than exists today resulting in very costly unnecessary system improvements and invalidate terms of many transmission service contracts that allow for implementation of pro-rate curtailments of firm transmission rights during forced and planned outage conditions. We disagree with the application of the proposed definitions of Consequential Load Loss and Non-Consequential Load

Organization	Question 15:	Question 15 Comments:
		Loss in conjunction with ?raising the bar?. Local Network load should be included in Consequential Load and the loss should be allowed for single contingencies. The TPL standard is to maintain reliability of the BES. Under certain conditions orderly dropping of local network load could limit the spread of the disturbance beyond the local area and allow BES reliability to be maintained. This would minimize the total amount of load loss and allow for quicker load restoration. The proposed definitions for Consequential Load Loss and Non-consequential Load Loss will provide no reliability benefits for high voltage (>300 kV) transmission backbone system providing wholesale open access service and interconnecting to the rest of the western interconnection. Any potential reliability benefits of any additional facilities built to comply with these definitions would be at the local service level. As mention in comments to Q3 above, some local network customer curtailments or local area load loss has been allowed by local regulatory authorities as long as the overall reliability of the interconnected system was not impacted. This is a result of tradeoffs between providing a higher level of reliability in a local area and the cost and environmental impacts of providing that service. Such tradeoffs are subject to local regulatory authority or contract negotiated between the transmission provider and its transmission customers. Regarding the terms ?interruption of firm transmission service?, there needs be clarification on what Interruption means. Since it is referring to firm transmission service, we would interpret this to mean curtailment needed after a particular contingency and adjustments. There also needs to be clarification on what “Firm Transmission Service” means. Two points, 1) the NERC definition states ?highest quality service offered to customers under a filed rate schedule that anticipates no planned interruption.? The Standard implies anticipation of “unplanned” interruption for certain contingencies. 2) Is this referring to a transmission product as defined in FERC Order 890, or firm transfers modeled for the conditions being studied? One way to interpret the intent is the firm transfers being modeled for the conditions in the powerflow to meet demand that would result in load not being served if that firm transfer were curtailed. If there is other generation in the system that could increase to meet the load if the transfer being modeled is interrupted, then interruption of firm transmission service should also be allowed for P1 through P5 contingencies in the table. In addition, we believe that DC and AC lines should have the same performance requirements with respect to interruption of firm transmission service. We do not understand why interruption of firm service would be an acceptable response to the loss of a single pole of a DC line (i.e. response to the contingency) but not an acceptable response to prepare for the next contingency of an AC line. The transfers over both AC and DC lines can automatically be curtailed when the line is outaged.
Tucson Electric Power Company	C — Definitely do not support the revised standard	The Standard as presented is clearer, but there are numerous issues that still need resolution. There should be no distinction in voltage classes for allowing or not allowing controlled load shed for applicable events. We support the use of load shed for events at voltages greater than 300 kV where load shed is allowed for the same type of event for voltages below 300 kV. We agree that the Standard as presented is clearer, but there are numerous issues that still need resolution, Measures, VSLs, Implementation Plan, etc., before WECC can give a full approval of this Standard. ?

Organization	Question 15:	Question 15 Comments:
		There is no mention in the purpose of the Standard about minimizing loss of load for more probable unplanned contingencies. Maybe there needs to be some definition around what is meant by reliability. ? We believe that with the loss of the first N-1 in P6, curtailment of firm transmission service or firm transfers should be allowed as part of system adjustment in preparation for the next N-1. This should be added to R3.3.2.2. Otherwise, the power transfer under normal condition (before the first N-1) will have to be significantly curtailed in anticipation for meeting performance requirements after N-1-1. This will unnecessarily impede commerce. Or, to maintain the same firm power transfer under normal conditions, construction of transmission facilities will be required. Either way, this would impose a much stricter standard than exists today resulting in very costly unnecessary system improvements and invalidate terms of many transmission service contracts that allow for implementation of pro-rate curtailments of firm transmission rights during forced and planned outage conditions.? We disagree with the application of the proposed definitions of Consequential Load Loss and Non-Consequential Load Loss in conjunction with ?raising the bar?. Local Network load should be included in Consequential Load and the loss should be allowed for single contingencies. The TPL standard is to maintain reliability of the BES. Under certain conditions orderly dropping of local network load could limit the spread of the disturbance beyond the local area and allow BES reliability to be maintained. This would minimize the total amount of load loss and allow for quicker load restoration. The proposed definitions for Consequential Load Loss and Non-consequential Load Loss will provide no reliability benefits for high voltage (>300 kV) transmission backbone system providing wholesale open access service and interconnecting to the rest of the western interconnection. Any potential reliability benefits of any additional facilities built to comply with these definitions would be at the local service level. ? As mention in comments to Q3 above, some local network customer curtailments or local area load loss has been allowed by local regulatory authorities as long as the overall reliability of the interconnected system was not impacted. This is a result of tradeoffs between providing a higher level of reliability in a local area and the cost and environmental impacts of providing that service. Such tradeoffs are subject to local regulatory authority or contract negotiated between the transmission provider and its transmission customers. Regarding the terms ?interruption of firm transmission service?, there needs be clarification on what Interruption means. Since it is referring to firm transmission service, we would interpret this to mean curtailment needed after a particular contingency and adjustments. There also needs to be clarification on what ?Firm Transmission Service? means. Two points, 1) the NERC definition states ?highest quality service offered to customers under a filed rate schedule that anticipates no planned interruption.? The Standard implies anticipation of ?unplanned? interruption for certain contingencies. 2) Is this referring to a transmission product as defined in FERC Order 890, or firm transfers modeled for the conditions being studied? One way to interpret the intent is the firm transfers being modeled for the conditions in the powerflow to meet demand that would result in load not being served if that firm transfer were curtailed. If there is other generation in the system that could increase to meet the load if the transfer being modeled is interrupted, then interruption of firm transmission service should also be allowed for P1 through P5 contingencies in the table. In addition, we believe that DC and AC lines should have the same performance requirements with respect to interruption

Organization	Question 15:	Question 15 Comments:
		of firm transmission service. We do not understand why interruption of firm service would be an acceptable response to the loss of a single pole of a DC line (i.e. response to the contingency) but not an acceptable response to prepare for the next contingency of an AC line. The transfers over both AC and DC lines can automatically be curtailed when the line is outaged.
Tri-State G&T	C — Definitely do not support the revised standard	We agree that the Standard as presented is clearer, but there are numerous issues that still need resolution, Measures, VSLs, Implementation Plan, etc., before WECC can give a full approval of this Standard. ? There is no mention in the purpose of the Standard about minimizing loss of load for more probable unplanned contingencies. Maybe there needs to be some definition around what is meant by reliability. ? We believe that with the loss of the first N-1 in P6, curtailment of firm transmission service or firm transfers should be allowed as part of system adjustment in preparation for the next N-1. This should be added to R3.3.2.2. Otherwise, the power transfer under normal condition (before the first N-1) will have to be significantly curtailed in anticipation for meeting performance requirements after N-1-1. This will unnecessarily impede commerce. Or, to maintain the same firm power transfer under normal conditions, construction of transmission facilities will be required. Either way, this would impose a much stricter standard than exists today resulting in very costly unnecessary system improvements and invalidate terms of many transmission service contracts that allow for implementation of pro-rate curtailments of firm transmission rights during forced and planned outage conditions.? We disagree with the application of the proposed definitions of Consequential Load Loss and Non-Consequential Load Loss in conjunction with ?raising the bar?. Local Network load should be included in Consequential Load and the loss should be allowed for single contingencies. The TPL standard is to maintain reliability of the BES. Under certain conditions orderly dropping of local network load could limit the spread of the disturbance beyond the local area and allow BES reliability to be maintained. This would minimize the total amount of load loss and allow for quicker load restoration. The proposed definitions for Consequential Load Loss and Non-consequential Load Loss will provide no reliability benefits for high voltage (>300 kV) transmission backbone system providing wholesale open access service and interconnecting to the rest of the western interconnection. Any potential reliability benefits of any additional facilities built to comply with these definitions would be at the local service level. ? As mention in comments to Q3 above, some local network customer curtailments or local area load loss has been allowed by local regulatory authorities as long as the overall reliability of the interconnected system was not impacted. This is a result of tradeoffs between providing a higher level of reliability in a local area and the cost and environmental impacts of providing that service. Such tradeoffs are subject to local regulatory authority or contract negotiated between the transmission provider and its transmission customers. Regarding the terms ?interruption of firm transmission service?, there needs be clarification on what Interruption means. Since it is referring to firm transmission service, we would interpret this to mean curtailment needed after a particular contingency and adjustments. There also needs to be clarification on what “Firm Transmission Service” means. Two points, 1) the NERC definition states ?highest quality service offered to customers under a filed rate schedule that

Organization	Question 15:	Question 15 Comments:
		anticipates no planned interruption.? The Standard implies anticipation of "unplanned" interruption for certain contingencies. 2) Is this referring to a transmission product as defined in FERC Order 890, or firm transfers modeled for the conditions being studied? One way to interpret the intent is the firm transfers being modeled for the conditions in the powerflow to meet demand that would result in load not being served if that firm transfer were curtailed. If there is other generation in the system that could increase to meet the load if the transfer being modeled is interrupted, then interruption of firm transmission service should also be allowed for P1 through P5 contingencies in the table. In addition, we believe that DC and AC lines should have the same performance requirements with respect to interruption of firm transmission service. We do not understand why interruption of firm service would be an acceptable response to the loss of a single pole of a DC line (i.e. response to the contingency) but not an acceptable response to prepare for the next contingency of an AC line. The transfers over both AC and DC lines can automatically be curtailed when the line is outaged.
ColumbiaGrid	A — Generally support the revised standard	We agree that the Standard as presented is clearer, but there are numerous issues that still need resolution. There is no mention in the purpose of the Standard about minimizing loss of load for more probable unplanned contingencies. Maybe there needs to be some definition around what is meant by reliability. We believe that with the loss of the first N-1 in P6, curtailment of firm transmission service or firm transfers should be allowed as part of system adjustment in preparation for the next N-1. This should be added to R3.3.2.2. Otherwise, the power transfer under normal condition (before the first N-1) will have to be significantly curtailed in anticipation for meeting performance requirements after N-1-1. This will unnecessarily impede commerce. Or, to maintain the same firm power transfer under normal conditions, construction of transmission facilities will be required. Either way, this would impose a much stricter standard than exists today resulting in very costly unnecessary system improvements and invalidate terms of many transmission service contracts that allow for implementation of pro-rate curtailments of firm transmission rights during forced and planned outage conditions. We disagree with the application of the proposed definitions of Consequential Load Loss and Non-Consequential Load Loss in conjunction with "raising the bar". Local Network load should be included in Consequential Load and the loss should be allowed for single contingencies. The TPL standard is to maintain reliability of the BES. Under certain conditions orderly dropping of local network load could limit the spread of the disturbance beyond the local area and allow BES reliability to be maintained. This would minimize the total amount of load loss and allow for quicker load restoration. The proposed definitions for Consequential Load Loss and Non-consequential Load Loss will provide no reliability benefits for high voltage (>300 kV) transmission backbone system providing wholesale open access service and interconnecting to the rest of the western interconnection. Any potential reliability benefits of any additional facilities built to comply with these definitions would be at the local service level. As mention in comments to Q3 above, some local network customer curtailments or local area load loss has been allowed by local regulatory authorities as long as the overall reliability of the interconnected system was not impacted. This is a result of tradeoffs between providing a higher level of reliability in a

Organization	Question 15:	Question 15 Comments:
		local area and the cost and environmental impacts of providing that service. Such tradeoffs are subject to local regulatory authority or contract negotiated between the transmission provider and its transmission customers. Interruption of firm transmission service does not mean that firm load is not served. If there is other generation in the system that could increase to meet the firm load requirements if the firm transfer being modeled is interrupted, then interruption of firm transmission service should be allowed for P1 through P5 contingencies in the table. In addition, we believe that DC and AC lines should have the same performance requirements with respect to interruption of firm transmission service. We do not understand why interruption of firm service would be an acceptable response to the loss of a single pole of a DC line (i.e. response to the contingency) but not an acceptable response to prepare for the next contingency of an AC line. The transfers over both AC and DC lines should be allowed to be curtailed when the line is outaged.
Southern California Edison	B — Unsure about supporting the revised standard	Our Response is (B) and (C).We agree that the Standard as presented is clearer, but there are numerous issues that still need resolution, Measures, VSLs, Implementation Plan, etc., before WECC can give a full approval of this Standard. There is no mention in the purpose of the Standard about minimizing loss of load for more probable unplanned contingencies. Maybe there needs to be some definition around what is meant by reliability. We believe that with the loss of the first N-1 in P6, curtailment of firm transmission service or firm transfers should be allowed as part of system adjustment in preparation for the next N-1. This should be added to R3.3.2.2. Otherwise, the power transfer under normal condition (before the first N-1) will have to be significantly curtailed in anticipation for meeting performance requirements after N-1-1. This will unnecessarily impede commerce. Or, to maintain the same firm power transfer under normal conditions, construction of transmission facilities will be required. Either way, this would impose a much stricter standard than exists today resulting in very costly unnecessary system improvements and invalidate terms of many transmission service contracts that allow for implementation of pro-rate curtailments of firm transmission rights during forced and planned outage conditions. We disagree with the application of the proposed definitions of Consequential Load Loss and Non-Consequential Load Loss in conjunction with “raising the bar”. Local Network load should be included in Consequential Load and the loss should be allowed for single contingencies. The TPL standard is to maintain reliability of the BES. Under certain conditions orderly dropping of local network load could limit the spread of the disturbance beyond the local area and allow BES reliability to be maintained. This would minimize the total amount of load loss and allow for quicker load restoration. The proposed definitions for Consequential Load Loss and Non-consequential Load Loss will provide no reliability benefits for high voltage (>300 kV) transmission backbone system providing wholesale open access service and interconnecting to the rest of the western interconnection. Any potential reliability benefits of any additional facilities built to comply with these definitions would be at the local service level. As mention in comments to Q3 above, some local network customer curtailments or local area load loss has been allowed by local regulatory authorities as long as the overall reliability of the interconnected system was not impacted. This is a

Organization	Question 15:	Question 15 Comments:
		result of tradeoffs between providing a higher level of reliability in a local area and the cost and environmental impacts of providing that service. Such tradeoffs are subject to local regulatory authority or contract negotiated between the transmission provider and its transmission customers. Regarding the terms “interruption of firm transmission service”, there needs be clarification on what Interruption means. Since it is referring to firm transmission service, we would interpret this to mean curtailment needed after a particular contingency and adjustments. There also needs to be clarification on what “Firm Transmission Service” means. Two points, 1) the NERC definition states ?highest quality service offered to customers under a filed rate schedule that anticipates no planned interruption.? The Standard implies anticipation of “unplanned” interruption for certain contingencies. 2) Is this referring to a transmission product as defined in FERC Order 890, or firm transfers modeled for the conditions being studied? One way to interpret the intent is the firm transfers being modeled for the conditions in the powerflow to meet demand that would result in load not being served if that firm transfer were curtailed. If there is other generation in the system that could increase to meet the load if the transfer being modeled is interrupted, then interruption of firm transmission service should also be allowed for P1 through P5 contingencies in the table. In addition, we believe that DC and AC lines should have the same performance requirements with respect to interruption of firm transmission service. We do not understand why interruption of firm service would be an acceptable response to the loss of a single pole of a DC line (i.e. response to the contingency) but not an acceptable response to prepare for the next contingency of an AC line. The transfers over both AC and DC lines can automatically be curtailed when the line is outaged.
Alberta Electric System Operator	C — Definitely do not support the revised standard	We agree that the Standard as presented is clearer, but there are numerous identified issues that still need resolution, in addition to the Measures, VSLs, Implementation Plan, etc., before AESO could give a full approval of this Standard. – There is no mention in the purpose of the Standard about minimizing loss of load for more probable unplanned contingencies. Maybe there needs to be some definition around what is meant by reliability. – We believe that with the loss of the first N-1 in P6, curtailment of firm transmission service or firm transfers should be allowed as part of system adjustment in preparation for the next N-1. This should be added to R3.3.2.2. Otherwise, the power transfer under normal condition (before the first N-1) will have to be significantly curtailed in anticipation for meeting performance requirements after N-1-1. This will unnecessarily impede commerce. Or, to maintain the same firm power transfer under normal conditions, construction of transmission facilities will be required. Either way, this would impose a much stricter standard than exists today resulting in very costly unnecessary system improvements and invalidate terms of many transmission service contracts that allow for implementation of pro-rate curtailments of firm transmission rights during forced and planned outage conditions.- We disagree with the application of the proposed definitions of Consequential Load Loss and Non-Consequential Load Loss in conjunction with ?raising the bar? for loss of Facilities with operating voltages 300 kV or higher (P2, P4, and P5 in the Performance Tables). We believe there should be no distinction between the voltage classes.-

Organization	Question 15:	Question 15 Comments:
		Regarding the terms ?interruption of firm transmission service?, there needs be clarification on what Interruption means. Since it is referring to firm transmission service, we would interpret this to mean curtailment needed after a particular contingency and adjustments. There also needs to be clarification on what ?Firm Transmission Service? means. Two points, 1) the NERC definition states ?highest quality service offered to customers under a filed rate schedule that anticipates no planned interruption.? The Standard implies anticipation of ?unplanned? interruption for certain contingencies. 2) Is this referring to a transmission product, or firm transfers modeled for the conditions being studied? One way to interpret the intent is the firm transfers being modeled for the conditions in the powerflow to meet demand that would result in load not being served if that firm transfer were curtailed. If there is other generation in the system that could increase to meet the load if the transfer being modeled is interrupted, then interruption of firm transmission service should also be allowed for P1 through P5 contingencies in the table.- In addition, we believe that DC and AC lines should have the same performance requirements with respect to interruption of firm transmission service. We do not understand why interruption of firm service would be an acceptable response to the loss of a single pole of a DC line (i.e. response to the contingency) but not an acceptable response to prepare for the next contingency of an AC line. The transfers over both AC and DC lines can automatically be curtailed when the line is outaged.
US Bureau of Reclamation	C ? Definitely do not support the revised standard	We agree that the Standard as presented is clearer, but there are numerous issues that still need resolution, Measures, VSLs, Implementation Plan, etc., before WECC can give a full approval of this Standard.? There is no mention in the purpose of the Standard about minimizing loss of load for more probable unplanned contingencies. Maybe there needs to be some definition around what is meant by reliability.? We believe that with the loss of the first N-1 in P6, curtailment of firm transmission service or firm transfers should be allowed as part of system adjustment in preparation for the next N-1. This should be added to R3.3.2.2. Otherwise, the power transfer under normal condition (before the first N-1) will have to be significantly curtailed in anticipation for meeting performance requirements after N-1-1. This will unnecessarily impede commerce. Or, to maintain the same firm power transfer under normal conditions, construction of transmission facilities will be required. Either way, this would impose a much stricter standard than exists today resulting in very costly unnecessary system improvements and invalidate terms of many transmission service contracts that allow for implementation of pro-rate curtailments of firm transmission rights during forced and planned outage conditions.? We disagree with the application of the proposed definitions of Consequential Load Loss and Non-Consequential Load Loss in conjunction with ?raising the bar?. Local Network load should be included in Consequential Load and the loss should be allowed for single contingencies. The TPL standard is to maintain reliability of the BES. Under certain conditions orderly dropping of local network load could limit the spread of the disturbance beyond the local area and allow BES reliability to be maintained. This would minimize the total amount of load loss and allow for quicker load restoration. The proposed definitions for Consequential Load Loss and Non-consequential Load Loss will provide no reliability benefits for

Organization	Question 15:	Question 15 Comments:
		high voltage (>300 kV) transmission backbone system providing wholesale open access service and interconnecting to the rest of the western interconnection. Any potential reliability benefits of any additional facilities built to comply with these definitions would be at the local service level.? As mention in comments to Q3 above, some local network customer curtailments or local area load loss has been allowed by local regulatory authorities as long as the overall reliability of the interconnected system was not impacted. This is a result of tradeoffs between providing a higher level of reliability in a local area and the cost and environmental impacts of providing that service. Such tradeoffs are subject to local regulatory authority or contract negotiated between the transmission provider and its transmission customers. Regarding the terms ?interruption of firm transmission service?, there needs be clarification on what Interruption means. Since it is referring to firm transmission service, we would interpret this to mean curtailment needed after a particular contingency and adjustments. There also needs to be clarification on what “Firm Transmission Service” means. Two points, 1) the NERC definition states ?highest quality service offered to customers under a filed rate schedule that anticipates no planned interruption.? The Standard implies anticipation of ?unplanned? interruption for certain contingencies. 2) Is this referring to a transmission product as defined in FERC Order 890, or firm transfers modeled for the conditions being studied? One way Comment Form for 2nd Draft of Standard TPL-001-1Assess Transmission Future Needs (Project 2006-02) Page 12 of 12to interpret the intent is the firm transfers being modeled for the conditions in the powerflow to meet demand that would result in load not being served if that firm transfer were curtailed. If there is other generation in the system that could increase to meet the load if the transfer being modeled is interrupted, then interruption of firm transmission service should also be allowed for P1 through P5 contingencies in the table. In addition, we believe that DC and AC lines should have the same performance requirements with respect to interruption of firm transmission service. We do not understand why interruption of firm service would be an acceptable response to the loss of a single pole of a DC line (i.e. response to the contingency) but not an acceptable response to prepare for the next contingency of an AC line. The transfers over both AC and DC lines can automatically be curtailed when the line is outaged.

Response: Measures, VSL's, and the Implementation Plan will be addressed in the next draft of the standard.

The NERC standards are based on deterministic principles. Probability is considered in a high level perspective as a means of rationalizing the inclusion of various deterministic events; however it is difficult to discuss probability in this context without creating misunderstandings. The SDT recommends that you review the NERC definition of Adequate Level of Reliability (ALR), which is the reliability goal for all NERC standards. In response to your comment and those of others in the industry, the SDT has proposed differentiating between loss of firm Load and loss of Firm Transmission Service. This differentiation is provided in footnotes 5 and 10 to Table 1 - Steady State & Stability Performance. In the event that loss of Firm Transmission Service is inadequate, the SDT believes that there are alternatives to loss of Load or construction. For example, companies may contract with interruptible Load and shed customers voluntarily.

Some commenters expressed concern with the inability to shed Non-Consequential Load in response to a single Contingency event. It was indicated that some stakeholders rely on an SPS to drop local area network Load in response to some single Contingency events and that these System designs are permissible under the presently approved TPL-002-0 standard. FERC in Order 693 was clear in paragraph 1794 that that interruption of Non-Consequential Load is not

Organization	Question 15:	Question 15 Comments:
permitted for single Contingency events. This position was vetted in draft 1 of TPL-001-1 and most stakeholders and the SDT support this position. The use of an SPS design would be permitted for a single Contingency event if the SPS design interrupts service to customers involved in an interruptible Load contract arrangement. Footnote # 10 has been added to the end of Table 1 to reflect that curtailment or interruption of Firm Transmission Service will be allowed in preparation for the next Contingency. However, until the next Contingency occurs, System performance will need to meet the requirements for Event P1. As such, the proposed standard will not allow loss of any Non-Consequential Load, except for contracted interruptible Loads, in preparation for the next Contingency. "Firm Transmission Service" is a NERC defined term and is also addressed by FERC in OATT. **Footnote #10** – Curtailment of firm transmission service, when coupled with the appropriate re-dispatch of resources obligated to re-dispatch, is allowed both as a System adjustment (as identified in the column titled 'Initial System Conditions') and a corrective action, where it can be demonstrated that Facilities remain within applicable Facility Ratings and those adjustments do not result in the shedding of any firm Load. Where limited options for re-dispatch exist, sensitivities associated with the availability of those resources must be considered. Where Facilities external to the Transmission Planner's planning region are relied upon, Facility Ratings in those regions must be considered. The SDT has removed this differentiation in the Table such that AC and DC lines will be treated equally.		
Gainesville Regional Utilities	C — Definitely do not support the revised standard	First, a starting point for the study process (base case) needs to be better defined even if the intent was to allow the TP's & PC's to make the decision. The standard should describe the rules to properly conduct a base case study within each region. This should support any following analysis studies and their finding since you will be starting from the same set of system elements operating at a base condition. Secondly, this standard should focus on what is best for the customer considering 1) the probability of the contingency events, 2) the potential expense to the customer for practically NO improvement in BES reliability, and 3)the extraordinary added burden on the smaller utilities to run additional, no added value studies with documentation to meet an exhausted detailed audit with the potential for penalties probably not proportioned to the utilities revenue stream.
Response: The SDT has modified Requirement R1 to include additional details on what should be modeled in the cases. However, the SDT intentionally provides flexibility for the Transmission Planner/Planning Coordinator to decide which "base case" to use since initial conditions for a system will vary from region to region and will need to be established on a local level, not via a national standard. The required studies and sensitivity analysis ensures that sufficient study is performed to cover an appropriate range of System conditions. **R1** Each Transmission Planner and Planning Coordinator shall maintain System models for performing the studies needed to complete their Planning Assessment. The models shall use data consistent with the data provided in accordance with ~~Requirements R9 through R14,~~ the MOD-010 and MOD-012 standards~~,~~ and other data sources,~~.~~ and shall simulate projected System conditions including requirements of regulatory authorities and other legal obligations. The SDT has retained the basis of the previous standard and raised the bar in some respects. While the performance requirements must be met, they do not necessarily mandate a solution. Considerable flexibility in Corrective Action Plans allows for economic considerations. The SDT is striving to develop a standard that appropriately supports BES reliability and has industry consensus. The SDT is cognizant of the cost factors (including ROW) involved here and is		

Organization	Question 15:	Question 15 Comments:
taking them into consideration in its deliberations.		
Lakeland electric	B — Unsure about supporting the revised standard	Suggested changes listed below to more directly address what I think is the intent of the item: Planning Events: Events that require Transmission system performance requirements to be met. Comment: I think that this suggested revision better defines a Planning Event and how they may be used in a study or assessment. Revision to: Planning Events Planning Events: Simulated events that are modeled to test the Transmission system's ability to meet performance requirements. R2.6.2. For steady state, short circuit, Generating Plant Stability, or System Stability analysis: the study shall not include any material changes, such as, generation or Transmission additions/removals, or topology changes that have occurred in the intervening period and would impact the study area. Comment: the requirement as stated leaves one guessing about the usability of a study that may have included the changes that occurred in the intervening period. Changes that were studied but not implemented could also invalidate a study they were included in. Revision to R2.6.2R2.6.2. For steady state, short circuit, Generating Plant Stability, or System Stability analysis: the study shall not include any material changes, such as, generation or Transmission additions/removals, or topology changes that were not included in the original study but have occurred in the intervening period and would impact the study area results.
Response: The SDT did not incorporate the commenter's suggested change and the Planning Event definition remains the same as in Draft 2. The SDT believes the stated definition more correctly indicates the intent that for Planning Events the performance requirements must be met, not simply that simulations need to be completed to indicate if the performance requirements are met or not. The SDT does not agree with your comment and believes that the cancellation of a planned Facility that was included in prior models would be a material change to the network model and therefore would not allow the past study to support the Planning Assessment. The key phrase within the requirement is "the study", therefore, the intent is model simulation changes and not limited only to real physical System changes. Therefore, the SDT believes the instance raised by the commenter is adequately covered.		
JEA	C — Definitely do not support the revised standard	The inability to curtail Firm Transmission Service under P6 assessments in preparation for the next N-1 event. Also, under P1 and lower probability contingency events, JEA recommends a standard requirement that allows for the loss of Non-Consequential load during short term periods (suggest allowing up to 3 year minimum) where the system load growth has caused post-contingency remedial action plans to not be completely affective in bringing the Facility(ies) within normal operating limits. As a specific theoretical example, lets say a 10 year assessment shows load growth causing this situation in year 5, but in year 7 generators are added to the area of concern and the issue is resolved, but in year 6, Non-consequential load is required to be shed, do we still need to propose a capital improvement project?
Response: The SDT agrees that clarification regarding treatment of Firm Transmission Service and Non-Consequential Load Loss during adjustment is		

Organization	Question 15:	Question 15 Comments:
necessary. Footnote 10 in the Revision 3 of the Standard provides clarification. **Footnote #10** – Curtailment of firm transmission service, when coupled with the appropriate re-dispatch of resources obligated to re-dispatch, is allowed both as a System adjustment (as identified in the column titled 'Initial System Conditions') and a corrective action, where it can be demonstrated that Facilities remain within applicable Facility Ratings and those adjustments do not result in the shedding of any firm Load. Where limited options for re-dispatch exist, sensitivities associated with the availability of those resources must be considered. Where Facilities external to the Transmission Planner's planning region are relied upon, Facility Ratings in those regions must be considered. The proposed standard does not require capital improvements, but it does require the performance metrics to be achieved. Certainly there will be circumstances where the addition of Transmission or generation facilities may be the only practical solution. For the specific example that you described, if there were no acceptable Operating Procedures to bridge the time period before the generator comes on line, entering into interruptible Load contracts would be another option. The standard does not preclude such actions.		
PacifiCorp	A — Generally support the revised standard	We generally agree with the Standard as presented so far, but there are numerous issues that still need resolution, Measures, VSLs, Implementation Plan, etc., before WECC can give a full approval of this Standard. We believe that with the loss of the first N-1 in P6, curtailment of firm transmission service or firm transfers should be allowed as part of system adjustment in preparation for the next N-1. This should be added to R3.3.2.2. Otherwise, the power transfer under normal condition (before the first N-1) will have to be significantly curtailed in anticipation for meeting performance requirements after N-1-1. This will unnecessarily impede commerce.
Response: Measures, VSL's, and the Implementation Plan will be addressed in the next draft of the standard. The SDT agrees that clarification regarding treatment of Firm Transmission Service and Non-Consequential Load Loss during adjustment is necessary. Footnote 10 in the Revision 3 of the Standard provides clarification. Requirement R3.3.2.2 has been deleted in favor of Header note 'e' in the Table. **Footnote #10** – Curtailment of firm transmission service, when coupled with the appropriate re-dispatch of resources obligated to re-dispatch, is allowed both as a System adjustment (as identified in the column titled 'Initial System Conditions') and a corrective action, where it can be demonstrated that Facilities remain within applicable Facility Ratings and those adjustments do not result in the shedding of any firm Load. Where limited options for re-dispatch exist, sensitivities associated with the availability of those resources must be considered. Where Facilities external to the Transmission Planner's planning region are relied upon, Facility Ratings in those regions must be considered.		
ITC Holdings: ITC, METC, ITC Midwest	B — Unsure about supporting the revised standard	ITC and ITC Midwest biggest concerns are some missed opportunities to "raise the bar". We believe the draft standard is a significant improvement over existing standards which are largely fill-in-the-blank. However, we have some concerns regarding some of the language wherein CAPs are not required, even though a performance requirement has been violated. For example, providing for a bare minimum sensitivity study and not requiring a CAP based on a performance violation may increase operational awareness but does not ?raise the bar? or improve transmission performance. Allowing for non-consequential load loss following a shutdown and contingency might be an acceptable real time operating

Organization	Question 15:	Question 15 Comments:
		procedure but is not a significant advancement on a transmission planning basis. Frequently, operating procedures like this should lead to a planning solution, particularly above 300kV
Response: The SDT translated the existing TPL standards, added clarity, and "raised the bar" in areas where the SDT believes are merited. Even though the existing TPL standards do not address sensitivities, the SDT has added a requirement to complete at least one additional sensitivity. The SDT believes that it is important and valuable for the Transmission Planner and Planning Coordinator to run significant sensitivities and share the results with their neighbors. The SDT did not limit when Operating Procedures, other than Non-Consequential Load loss, could be utilized. The SDT believes that it is important for the Transmission Planner and Planning Coordinator to determine when an Operating Procedure can be utilized and when new Facilities need to be constructed. A Corrective Action Plan is required for all performance violations of all Planning Events in Table 1, except, as you have noted for sensitivity study performance violations. The SDT concurred with the FERC orders that sensitivity study results do not necessarily result in a Corrective Action Plan. From paragraph 1704 of Order 693: "The Commission notes that it is not the purpose of sensitivity studies to identify remedial actions, but, as stated in the NOPR, if different scenarios that lead to criteria violations are probable they require mitigation plans…… In any case, we are not requiring the construction of additional facilities." While the standard does not "require" a Corrective Action Plan, it does not preclude a Corrective Action Plan, particularly if it meets FERC requirements for a "mitigation" plan if the Planning Events are "probable". The majority of the SDT, based on industry comments, did not feel that Non-Consequential Load loss should be precluded from N-1-1 events. A Corrective Action Plan is not required if Non-Consequential Load loss is allowed under local criteria but the standard does not prevent local criteria from prohibiting Non-Consequential Load loss for N-1-1 events.		
Hydro-Quebec Transenergie (HQT)	C — Definitely do not support the revised standard	This standard as drafted does not allow exceptions for small parts of the system as long as interconnected system reliability is maintained, which is allowed in the existing TPL standards in footnotes b) and c) in Table 1. Unless such exceptions are allowed significant transfer restrictions or large reinforcements must be made. The applicable TPL footnotes are:? Planned or controlled interruption of electric supply to radial customers or some local Network customers, connected to or supplied by the Faulted element or by the affected area, may occur in certain areas without impacting the overall reliability of the interconnected transmission systems. To prepare for the next contingency, system adjustments are permitted, including curtailments of contracted Firm (non-recallable reserved) electric power Transfers.? Depending on system design and expected system impacts, the controlled interruption of electric supply to customers (load shedding), the planned removal from service of certain generators, and/or the curtailment of contracted Firm (nonrecallable reserved) electric power Transfers may be necessary to maintain the overall reliability of the interconnected transmission systems.? This comment form did not allow for the following items to be addressed:? a. Definition of the Long-Term Planning Horizon. The planning horizon, for assessment purposes should be limited to 10 years. Such an assessment should be sufficient to identify requirements that may take an extended time to implement.? b. Definition of Planning Coordinator is part of the NERC Functional Model, For consistency it should be removed from the Standard.? c. We propose that the Standard be subdivided by subjects into 4 different Standards : ? TPL-001-1: Modeling and System Assessment (R1, R2, R9 to R14)? TPL-002-1: Short circuit and Steady State Performance (R3, R4)? TPL-003-1: Stability Performance (R5)? TPL-004-1: Coordination (R6, R7, R8)? If the previous proposition is not retained, at least the Standard

Organization	Question 15:	Question 15 Comments:
		Requirements should be organized by topics (Modeling, Assessment, Coordination, etc.) and headings put on each section to identify requirements of section. Add headings to the tops of the subsequent pages in the performance tables. Headings only appear on the first page at the beginning of the Table.? d. With respect to R2.2 - Delete "current" from the phrase" current System Peak Load study" and replace "study" with "assessment."? e. Remove R2.2.1, the requirement to extend the assessment beyond 10 years. What does the length of the project have to do with the assessment? If it takes 15 years to build something, why does this require a review of year 15? What is the purpose of this assessment?? f. R3.3.2 requires clarification - This standard needs to permit discretion regarding the single contingencies that need to be tested, similar to R 3.3.3 and R3.4. It is unnecessary to test all events. For example, contingencies may be limited to relevant disturbances that are contained within or directly impact the studied system.? g. With respect to R3.2.1 - Clarify whether the intent of the standard is to address station service minimum voltage limitation, maximum leading VAR absorption capability or both at steady state.? h. Remove R3.2.2 - Relay loadability is addressed in PRC-023 standard.? i. With respect to R3.3.2.1 - Recommend the removal of the requirement to assess the expected duration of Consequential Load loss. It's not considered anywhere else in the standard.? j. With respect to R3.3.3 - The paragraph refers to Table 1 Contingencies P3 through P7; this should be explicitly stated. Rationale for inclusion of testing should not be required; should only need to explain why certain Contingencies were not tested. This discretion should be applicable to all contingencies.? k. With respect to section R5 - The concept of planned and long-term outages should apply to the general Planning Assessment, or not at all. It should not be specific to the Stability Assessment. ? l. The provisions of Section R.5.3 should have a corresponding MOD standard apply a requirement to provide information regarding all direct and indirect protective and control actions that could result in the inadvertent trip of the generator. Such a provision should include "other equipment (e.g. HVDC, SVC's, Statcoms)", and identify how these devices are treated in the simulation.? m. Planned outages should be addressed in the operating horizon unless otherwise defined in the planning horizon. ? n. In both Table 1 and Table 2, note 3, "variable frequency transformers" should be removed from the last sentence. A new sentence should be added for reference voltage as it applies to "variable frequency transformers" and "back-to-back" facilities.

Organization	Question 15:	Question 15 Comments:

Response: Some commenters expressed concern with the inability to shed Non-Consequential Load in response to a single Contingency event. It was indicated that some stakeholders rely on an SPS to drop local area network Load in response to some single Contingency events and that these System designs are permissible under the presently approved TPL-002-0 standard. FERC in Order 693 was clear in paragraph 1794 that that interruption of Non-Consequential Load is not permitted for single Contingency events. This position was vetted in draft 1 of the TPL-001-1 and most stakeholders and the SDT support this position. The use of an SPS design would be permitted for a single Contingency event if the SPS design interrupts service to customers involved in an interruptible Load contract arrangement.

A. The SDT believes that a review of System conditions beyond the 10-year horizon is warranted. FERC Order 693 requires that the planning horizon take into account the lead times for siting and permitting of new long-distance Transmission lines and other long lead time solutions. The SDT has received industry comments regarding the need to exceed a 10-year horizon to account for longer lead time projects. Establishing planning horizons that are shorter than Transmission lead times may create gaps where the identification of a reliability need to which Transmission may be the best solution occurs too late to avert the identified reliability violation. Further, Operating Procedures or alternative short-term capital projects may be needed to limit the impact of the planning event until the planned Facilities can be completed. This information needs to be included in the Assessment.

B. The definition for Planning Coordinator was deleted because the term has already been defined and added to the NERC Glossary by another SDT.

C. The SDT agrees with FERC Order 693 in aggregating all of the planning requirements into a single standard. The SDT also feels that the Tables need to be as clear and concise as possible. To that end, this version combined Tables 1 and 2 into one table with a revised format. The Planning Events are shown on one page so repeating the headings will not be needed.

D. The SDT believes that the existing language is appropriate. No change made.

E The SDT believes that a review of System conditions beyond the 10-year horizon is warranted under some circumstances. For example, if it takes 15 years to build a Transmission line, then the need for that line would have to be determined 15 years ahead of the in-service date. Therefore, Requirement R2.2.1 requires you to perform an Assessment on year 15 if it takes you 15 years to build a line.

F. The SDT has removed Requirement R3.3.2 and replaced it with additional language in Requirement R3.1. The SDT agrees with your interpretation that it does not require evaluation of all single Contingencies. Rather, the SDT specifically states in Requirement R3.4 that those Contingencies that are expected to produce the more severe System impacts shall be identified, evaluated for System performance, and the rationale for the Contingencies selected for evaluation shall be available as supporting information and shall include an explanation of why the remaining Contingencies would produce less severe results.

R3.1 Studies shall be performed to determine whether the BES meets the performance requirements in Table 1~~ Steady State Performance.~~ based on the lists created in Requirement R3.5.

G. The SDT has not limited the purpose of this requirement to either minimum acceptable station service voltages or maximum Mvar absorption. The SDT believes that the purpose of Requirement R3.2.1 (now R3.3.2) is to determine if generators will be able to operate or trip off following the Contingency.

H. The SDT believes that relay load limits or loadability needs to be considered in the Contingency analyses. The studies should determine if Transmission line loadings could reach the relay loadability level which may add to the existing Contingency and perhaps, result in an unbounded cascading event. No change made.

Organization	Question 15:	Question 15 Comments:
I. By definition, Consequential Load Loss is allowed. To meet industry concern as well as FERC Order 693, the SDT has added Requirement R2.~~-~~8 to identify the event causing the single largest Consequential Load Loss Demand and its value and eliminate the reporting of the expected duration. Requirement R3.3.2.1 has been deleted in favor of new Requirement R2.8. **R2.8** The Planning Assessment shall provide the largest Consequential Load Loss (megawatt Demand) and the associated event caused by any P1 event and any P2 event in Table 1. J. The SDT agrees that the rationale should be for all Planning Events but not for Extreme Events. K. The SDT agrees and has moved this concept within Requirement R1 (see Requirement R1.1.1) so that it is applicable to all planning assessments. Further, both Requirements R3 and R5 (now R4) have been revised to make reference to Requirement R1**.** **R1.1.1** Planned outages of generation and Transmission Facilities, if specifically known. **R3**. For the steady state portion of the Planning Assessment, each Transmission Planner and Planning Coordinator shall perform analysis for the Near-Term and Long-Term Transmission Planning Horizon studies in Requirement R2.1 and Requirement R2.2. ~~The studies shall be based on computer power flow simulations that analyze BES normal performance (n-0) and System response to c~~Contingencies in Table 1 ~~– Steady State Performance.~~ The studies shall be based on computer simulations using models utilizing data provided in Requirement R1. **R4** For the Stability portion of the Planning Assessment, as described in Requirement R2.4 ~~and Requirement R2.5~~, each Transmission Planner and Planning Coordinator shall perform the Contingency analyses listed in Table ~~2~~1 ~~– Stability Performance~~. The studies shall be based on computer simulations using models utilizing data provided in Requirement R1. ~~The studies shall be based on computer simulations using models utilizing data provided in Requirements R9 through R14, the MOD-010 and MOD-012 standards, and other data sources, to include known planned and long term outages of Transmission or generation equipment. The studies shall cover both System Stability and Generating Unit Stability. The following requirements apply to both System Stability and Generating Unit Stability studies unless otherwise noted.~~ L. Requirement R5.3 (now R4.3.2) has been modified to address simulation of how generators perform under conditions being studied. "Other equipment" is addressed in Requirement R5.4. **R4.3.2** ~~Studies shall consider~~ Simulate generator performance under anticipated conditions including how the voltage ride through capability ~~of all generators and identify how the generators are treated~~ is analyzed~~in the simulation~~ M. While planned outages are addressed in the operating horizon, it is important that a Transmission Planner review the ability of its System to accommodate planned (maintenance) outages. Additionally, any specific known Facility outages need to be appropriately modeled for the planning horizon studied. N. Tables 1 and 2 have been combined into one table for the next posting. The SDT believes that it has adequately addressed "variable frequency transformers" as well as "back-to-back" facilities by including it in the same note as other transformers (Note #3).		
Progress Energy Florida, Inc.	C — Definitely do not support the revised	PEF considers the draft TPL Standard in its present state to be infeasible, unnecessary, burdensome and inferior to the existing Standards. The basic approach to equate reliability of the BES to whether or not Firm Transmission Service and/or Non-Consequential Load Loss can be sustained is an erroneous approach, is not justifiable, infringes upon

Organization	Question 15:	Question 15 Comments:
	standard	regulation already in place as part of dealings with the Florida Public Service Commission (PSC), and infringes upon requirements in the OATT. Given the numerous concerns PEF has with the revised draft Standard, expounding on those concerns requires extensive documentation. We therefore cannot reduce our concerns down to a single issue, nor can we single out a single requirement or set of requirements as the top concern, other than to say that the entire Standard development process either needs to be discontinued or the SDT should provide detail as to how much consideration would be given to transmission systems with historically excellent reliability via a variance process. The following is a list of PEF's primary concerns with the revised draft Standard and explanation as to why the Standard development process should be discontinued: 1. PEF has planned to, and demonstrated compliance with, the existing TPL Standards for several years now. PEF is intimately familiar with the existing Standards, and has done an excellent job in planning the PEF system, in conjunction with the other Transmission Owner members of FRCC, non-FRCC adjacent Transmission Owners, and all requestors of Transmission or Generator Interconnection Service using the existing TPL Standards. PEF thus believes that history has shown, particularly within the realm of PEF's Transmission Planning boundaries, that the existing four TPL Standards are not inadequate or inferior in any way. Statements in recent months alluding to the existing Standards? inferiority, confusing language or language subject to opposing interpretations, do not hold up when applied to the PEF and FRCC systems. PEF thus does not believe the Standards require modification. 2. PEF, through its aforementioned participation with FRCC and through its interaction and compliance with regulation by the Florida PSC, has historically demonstrated excellent Transmission Reliability, and can provide documentation to that effect through FRCC and Florida PSC channels. PEF therefore again asserts that modification or increased stringency in the TPL Standards is not merited. 3. The development of TPL-001-1 stems from a fundamental misinterpretation of the intent of FERC Order 693. NERC for the most part, rather than "clarify" or "consider" various matters raised by FERC, chose to accept all suggestions. Specifically, PEF notes the following misinterpretations regarding Order 693:a) In Paragraph 1692, the Commission agreed with one particular utility's assertion that integrating the four existing TPL Standards into a single standard would be an improvement, and directed NERC to "consider" this. NERC, rather than considering this, formed the SDT, which appears to have spent little considering the issue but rather have deemed it a foregone conclusion that the four existing TPL standards must be abolished and a new standard must be written. b) In Paragraphs 1694 and 1706, the Commission recognizes the significant differences in the various transmission systems, and the impossibility of developing a standardized list of "sensitivities" of critical operating conditions that every Transmission Planner and Planning Coordinator must analyze, regardless of their applicability. The Commission therefore stated that it is reasonable for planning entities to have a means to identify an appropriate range of critical operating conditions, without having to anticipate ?every conceivable critical operating condition.? They furthermore state that their conclusion on the whole matter is that ?only those deemed to be significant need to be assessed?. PEF agrees, and thus is perplexed by the erroneous developments in Requirements R2.4, R2.5, R5.4, R5.5, R2.1.3 and R2.1.4. PEF has

Organization	Question 15:	Question 15 Comments:
		addressed the inadequacies of these Requirements in the answers to Questions 2 and 10. c) In Paragraph 1704, the Commission, amongst other statements, states that they ?are not requiring the construction of additional facilities?. This general statement made by the Commission is demonstrated to be untrue upon examining the realities of the Standard development process. FERC, by directing NERC to consider various clarifications and/or improvements to the TPL Standards, has set in motion a process which will prohibit either Interruption of Firm Transmission Service or the loss of Non-Consequential Load for various outage scenarios, effectively necessitating the construction of redundant facilities. FERC's statement conflicts with the ongoing process in a major way, and PEF respectfully requests that the SDT confer with appropriate FERC personnel to get clarification on this matter. d) In Paragraph 1725, the Commission directs the ERO to modify the planning Reliability Standards to require the assessment of planned outages consistent with the entity's spare equipment strategy. PEF does not disagree with the specifics of analyzing events with respect to spare equipment, except to the extent that the Commission appears to think that such analysis is not adequately covered in the existing TPL Standards. PEF believes that the existing TPL Standards adequately address this issue and all other issues pertaining to the planning of a transmission system. Furthermore, the process is to be followed ?consistent with the entity's spare equipment strategy?, thus deferring to the processes and judgment of the individual Transmission Owners, which calls into question the need to include it in the draft Standard. For additional discussion on this issue, see the answer to Question 5 with regard to Requirement R11. e) In Paragraph 1782, PG&E points out the contradiction that FERC creates in Paragraph 1796 by directing NERC to remove the 2nd sentence of footnote (b). The contradiction also involves key statements made by the Commission in Paragraph 1788. For a more detailed explanation of this contradiction, see the answer to Question 11. f) Paragraph 1794 is part of the Commission Determination section. The Commission states its belief that no TPL Standard should allow an entity to plan for the loss of non-consequential load in the event of a single contingency. The Commission then directs NERC to "clarify the Reliability Standard.", and furthermore state that any Transmission Planners or Planning Coordinators seeking to plan for the loss of non-consequential load in the event of a single contingency can make their comments known through a) filing comments in the standards development process, or b) filing for a regional difference for case-specific circumstances. PEF points out that the Commission merely stated their belief and directed NERC to clarify the Standard. They did not order NERC to change the Standard to reflect its beliefs. NERC, while having the leeway to question FERC's approach in this Paragraph, did not question the approach, but rather deferred to the suggestion in Paragraph 1794 (as well as nearly every other suggestion or request for clarification) that FERC made. PEF is concerned that NERC and the SDT appear to be limiting the extent to which they question or make suggestions to FERC. PEF at present will take the approach of stating the prudency and need to plan for the curtailment of Firm Transmission Service and loss of non-consequential load in the event of a single contingency through the comments process. PEF, however, reserves the right to consider the variance approach or legal approaches, depending on further iterations in the development of the Standard. g) In Paragraph 1795, "The Commission" suggests that the ERO consider developing a ceiling on the amount and duration

Organization	Question 15:	Question 15 Comments:
		of consequential load loss that will be acceptable. If the ERO determines that such a ceiling is appropriate, it should be developed through the ERO's Reliability Standards development process.? To this effect, the SDT drafted Requirement R.3.3.2.1, which at present states ?Consequential Load loss (expected maximum demand and expected duration) following a single Contingency shall be identified in the Planning Assessment.? PEF asserts that this issue is under the jurisdiction of the State Public Service Commissions, who are already doing an excellent job in regulating Consequential Load Loss as part of SAIDI/CMI requirements. FERC and NERC are overstepping their bounds of jurisdiction by attempting to essentially ?double-regulate? an issue that is already adequately regulated via the States. PEF furthermore objects to Requirement R.3.3.2.1 on the grounds that duration of events cannot be estimated with any reasonable degree of accuracy. To handle the challenges of this issue by stating a long-duration worst-case scenario for each outage would be inaccurate, and would tend to foster needless scrutiny and concern on any and all outages associated with Consequential Load Loss. h) In Paragraph 1796, "The Commission" directs the ERO to modify the second sentence of footnote (b) to clarify that manual system adjustments other than shedding of firm load or curtailment of firm transfers are permitted to return the system to a normal operating state after the first contingency, provided these adjustment can be accomplished within the time period allowed by the short term or emergency ratings.? The Commission directed the ERO only to make modifications on the 2nd sentence of footnote (b). The SDT in the draft TPL Standard has eliminated footnote (b) altogether. PEF is surprised and disappointed at the response by FERC to PG&E's very correct assertion that eliminating the allowance of shedding of firm load or curtailment of firm transfers from footnote (b) contradicts the allowance made in footnote (c) regarding C.3 events. FERC's only response was to state that ?manual adjustments referred to in both cases [i.e. Category B and Category C.3 events] apply after the first N-1 contingency?. The fallacy of this statement is that shedding of firm load or curtailment of firm transfers is allowed by footnote (c) for C.3 events, and that every Category B event is by default the first part of a Category C.3 event. PEF asserts that FERC, and consequently the NERC SDT, has created a draft Standard that contradicts direction and suggestion in Order 693 regarding this issue. PEF furthermore asserts that curtailment of Firm Transmission Service or Non-Consequential Load are not valid benchmarks for assessing the reliability of the BES. For additional comments on this issue, see the answer to Question 11. i) Regarding Paragraph 1833, the paragraph in its entirety states: ?MidAmerican states that it supports the proposal to modify TPL-004-0 to require identification of options for reducing the probability or impacts of extreme events that cause cascading. Accordingly, for the reasons cited in the NOPR, the Commission directs the ERO to modify the Reliability Standard to make this modification to the Reliability Standard.? PEF does not understand what FERC has directed on this matter. Furthermore, PEF does not understand the meaning or requirements behind the entire ?Extreme Events? section in the draft Standard, which appears to have resulted from the direction in this particular Paragraph. FERC wants NERC to modify the Standard to ?require identification of options for reducing the probability or impacts of extreme events that cause cascading.? This statement is vague, confusing and does not appear to mandate anything. PEF therefore requests that language in TPL-001-1 to this effect be removed. Furthermore, in Paragraph 1834, the Commission, regarding its preference to expand TPL-004-0 to include analysis of more events such as hurricanes, ice storms, successful cyber

Organization	Question 15:	Question 15 Comments:
		attacks, etc., directs NERC to ?expand the list of events with examples of such events identified above.? This request, similar to Paragraph 1833, does not appear to direct NERC to make specific directions in a Standard. If it was FERC's intent that TPL-004 or its successor be modified to include some or all of FERC's suggested events, and to expand the list further, PEF has many concerns concerning this. The direction in Paragraph 1834 has resulted in the aforementioned Extreme Events section, which contains a note 1 referring to Requirement R3.4. PEF has multiple questions and concerns with the language in this Requirement. The Requirement as worded appears to mandate that Transmission Planners and Planning Coordinators must find the most severe Extreme Event scenarios that can be conceived. Such wording would define any reasonable limit as to which Extreme Events are likely and worthy of analysis, and which are not. Furthermore, many of the events suggested by FERC, such as loss of a large gas pipeline, wildfires, hurricanes, tornadoes, cyber attacks, etc., cannot reasonably be studied. To make any assessment of these events that even approached a level of thoroughness is infeasible, and furthermore has no significant benefit. PEF requests that the SDT point out to FERC that these events cannot be studied, and therefore need to be excluded from any TPL Standard. 4. The main approach of the draft TPL Standard consists of whether to allow or disallow load loss for certain outage scenarios (the most problematic Event categories being P1, P2.2, P2.3, P3, P4, P5 and P6), an approach to which PEF is opposed, and furthermore believes that level of service to retail load is not an issue that NERC/FERC should be regulating. The local utility commissions (the Florida PSC, etc.) have already set in place processes for reviewing/approving the level of transmission built to support the level of service to load, and thus FERC and NERC inappropriately attempt to regulate an issue which the States already adequately regulate. PEF can, and has demonstrated in its internal planning assessments and in assessments performed with FRCC that load curtailment and/or Firm Transmission Service curtailment do not adversely impact the reliability of the BES. In fact, certain post-contingency scenarios can be shown to demonstrate that such curtailments actually promote reliability and a speedier, safer, more efficient recovery of the BES after an event. 5. Several Event categories as presently defined in the draft TPL Standard present outage scenarios on the PEF system for which implementation of redundant transmission facilities would be required, at an exorbitant cost to ratepayers. The redundancy requirements at PEF's 500 kV, 230 kV and 115 kV Substations are numerous, and have not yet been comprehensively quantified, although this analysis is underway. One scenario for which PEF is already certain that redundancy of the 500 kV system would be required is the apparent disallowance of curtailment of Firm Transmission Service or Non-Consequential Load as part of ?System Adjustments? in between the two events of P6. PEF again would point out that no definition of ?System Adjustments? exists at present, and the SDT therefore must define it if compliance is expected. Be that as it may, PEF's 500 kV redundancy projects would clearly cost many billions of dollars, with extremely little benefit. PEF would furthermore point out that this is but one example requiring unnecessary Transmission upgrades, and that further analysis will potentially reveal several more Event categories in Tables 1 and 2 for which additional cost-prohibitive and unneeded projects would be mandated. 6. PEF is surprised and disappointed that neither FERC nor NERC have accepted any responsibility to alert the public or the State and local governments to this process. The public have not been involved in the development of the draft

Organization	Question 15:	Question 15 Comments:
		standard, nor have they been informed that they would bear the financial impact of the increased stringency. In fact, The SDT on p. 369 of the 1st draft Comments Document has stated that ?This is a performance based reliability standard and does not and should not consider economics.? PEF considers this statement to be reckless and irresponsible, and does not accept FERC's and NERC's apparent position that they have no responsibility in this matter. The fact that the draft Standard and FERC Order 693 can be downloaded by anyone from FERC's and NERC's websites does not constitute a sufficient good-faith notice of this process to the public. PEF requests that FERC and NERC specifically address this issue by explaining their failure to involve and inform the public. Assigning this responsibility to each Transmission Planner and Planning Coordinator is not acceptable. FERC and NERC have set this process in motion, and as creators of the process owe an explanation to those who would "foot the bill" for the process. 7. The low voltage threshold of jurisdiction of the draft Standard, previously defined in NERC's definition of the BES as 100 kV, is not specified in the draft Standard. This is a significant misstep by NERC in that a change to NERC's Glossary Definition of the BES, which would ostensibly be done outside the boundaries of this Standard, could profoundly change the requirement for complying with TPL-001-1 without changing a single word of the Standard. PEF is particularly concerned that this Standard must never have jurisdiction over local load-serving transmission systems, regardless of voltage. Any TPL Standard, existing or future, must focus on the reliability of the BES, i.e. the bulk grid, NOT the local load-serving portions of the transmission system. The draft Standard at present does not address this issue at all and leaves Transmission Planners and Planning Coordinators vulnerable to non-compliance with a mere change in the wording of a Definition outside of the Standard. 8. PEF strenuously objects to the allowance of interruption of Firm Transmission Service in Events P1 and P3 for DC lines, while disallowing the same for AC lines. PEF asserts that the determination should be "Yes" for both, and that disallowance for AC lines a) puts DC systems into an elite class of transmission for no explicable reason and b) encourages owners of AC Transmission Systems to replace them with DC, cost concerns notwithstanding. Furthermore, this differentiation fails to recognize or give consideration to the fact that AC systems support Firm Transmission Service; some areas of the AC transmission system carry significant amounts of Firm Transmission Service, and thus a "No" determination for P1 and P3 essentially mandates either implementing redundancy for those parts of the AC system carrying significant amounts of Firm Transmission Service, or severely curtailing Firm Transmission Service on the existing AC systems.

Response: The SAR for this standard recognized FERC orders which indicated a need to "raise the bar" for the industry. The SDT is attempting to do this in a reasonable fashion. There is significant flexibility in the Corrective Action Plans allowed for any additional performance requirements which must be met. Industry consensus, through approval of the SAR, is that revision of the existing TPL standards is appropriate.

1 & 2. Industry consensus, through approval of the SAR, is that revision of the existing TPL standards is appropriate.

3A. The SDT and industry consensus, at this point in the development process, is that consolidation in a single standard is the best course of action. The SDT did not start out with a preconceived idea that there should only be one TPL standard. The SDT started the drafting process by reviewing all of the available

Organization	Question 15:	Question 15 Comments:
documents. This included the existing TPL standards, the SAR, FERC Order 693, and other NERC documents. After reviewing this material, the SDT determined that the majority of the language in the individual standards was in all four of the standards. After much discussion, the SDT determined that the industry would be better served with a single standard instead of staying with four individual standards. B. Please see the responses provided in questions 2 and 10. C. The revised TPL-001-1 standard itself does not require construction of additional Facilities although that may be a consequence of application of the standard. Additional operating guides or changes in dispatch are other possible consequences. Footnotes 5 and 10 have been added that provide further clarification regarding interruption of Firm Transmission Service. FERC staff has been available to the SDT for consultation throughout the process. **Footnote 5** - When the conditions and/or event(s) being studied form the basis for conditional Firm Transmission Service, curtailment of that conditional Firm Transmission Service is allowed. **Footnote #10** – Curtailment of firm transmission service, when coupled with the appropriate re-dispatch of resources obligated to re-dispatch, is allowed both as a System adjustment (as identified in the column titled 'Initial System Conditions') and a corrective action, where it can be demonstrated that Facilities remain within applicable Facility Ratings and those adjustments do not result in the shedding of any firm Load. Where limited options for re-dispatch exist, sensitivities associated with the availability of those resources must be considered. Where Facilities external to the Transmission Planner's planning region are relied upon, Facility Ratings in those regions must be considered. D The SDT has removed Requirement R11 from the proposed standard and Requirement R2.1.4 has been included to help clarify the spare equipment strategy issue. **R2.1.4** When an entity's spare equipment strategy could result in the unavailability of major Transmission equipment that has a lead time of one year or more (such as a transformer), an analysis of the impact on System performance shall be assessed. The analysis shall reflect the Contingencies identified in Table 1 during the conditions that the System is expected to experience due to the unavailability of the long lead time equipment. E. Please see response to your comments on question 11. F. FERC direction provided in Order 693, SDT expertise, and industry input are all being considered in development of the standard. G. To meet industry concern as well as FERC Order 693, the SDT has added Requirement R 2.8 to identify the event causing the single largest Consequential Load Loss Demand and its value and eliminate the reporting of the expected duration. Requirement R3.3.2.1 has been removed from the draft. **R2.8** The Planning Assessment shall provide the largest Consequential Load Loss (megawatt Demand) and the associated event caused by any P1 event and any P2 event in Table 1. H. The SDT is being responsive to FERC direction in paragraph 1796 and agrees that clarification regarding Non-Consequential Load Loss and Firm Transmission Service requirements is necessary. Table 1 specifies the specific events when Loss of Non-Consequential Load is allowed. Footnotes #5 & 10 have been added to the end of Table 1 to explain Firm Transmission Service requirements. Also, please see response to your comments on question 11. I The SDT believes that the requirement to study Extreme Events in the existing TPL-004-0 must remain in this standard. The SDT has not expanded the number of Extreme Events that must be studied but rather gave examples of how the events may occur. The only significant change in the analysis of Extreme		

Organization	Question 15:	Question 15 Comments:
Events is the new requirement for the Transmission Planner or Planning Coordinator to evaluate whether there are cost effective ways to reduce the likelihood or the impact of a particular event and document those findings. The SDT believes that this is a very reasonable approach to ensuring that these major events, even with a small probability, are reviewed and prudent decisions are made. 4. The issues raised on NERC/FERC regulations are beyond the scope of the SDT. However, changes have been made to the 3rd draft of the standard to further clarify the SDT's position on curtailments and service to Loads. Also, Load curtailments are allowed if those customers have signed an Interruptible Load contract arrangement. **Footnote 5** - the conditions and/or event(s) being studied form the basis for conditional Firm Transmission Service, curtailment of that conditional Firm Transmission Service is allowed. **Footnote #10** – Curtailment of firm transmission service, when coupled with the appropriate re-dispatch of resources obligated to re-dispatch, is allowed both as a System adjustment (as identified in the column titled 'Initial System Conditions') and a corrective action, where it can be demonstrated that Facilities remain within applicable Facility Ratings and those adjustments do not result in the shedding of any firm Load. Where limited options for re-dispatch exist, sensitivities associated with the availability of those resources must be considered. Where Facilities external to the Transmission Planner's planning region are relied upon, Facility Ratings in those regions must be considered. 5. The SDT has made the following changes to address the concerns raised by you and others: 1) Added Header note 'e' to the table to show that System adjustments can be made following a single Contingency event, in preparation for the next event; 2) Added footnote 5 to address conditional firm issues, and 3) Added footnote 10 to address re-dispatching resources while continuing to serve firm Load. **Header note 'e' -** For all Planning Events, planned System adjustments such as Transmission configuration changes and redispatch of generation are allowed if such adjustments are executable within the time duration applicable to the Facility Ratings. **Footnote 5** - When the conditions and/or event(s) being studied form the basis for conditional Firm Transmission Service, curtailment of that conditional Firm Transmission Service is allowed. **Footnote #10** – Curtailment of firm transmission service, when coupled with the appropriate re-dispatch of resources obligated to re-dispatch, is allowed both as a System adjustment (as identified in the column titled 'Initial System Conditions') and a corrective action, where it can be demonstrated that Facilities remain within applicable Facility Ratings and those adjustments do not result in the shedding of any firm Load. Where limited options for re-dispatch exist, sensitivities associated with the availability of those resources must be considered. Where Facilities external to the Transmission Planner's planning region are relied upon, Facility Ratings in those regions must be considered. 6. NERC is following the officially sanctioned standards development process with regard to this project just as it follows the process for all standards development work. This is an open, transparent process which has been approved by FERC. Any member of the public is free to participate and/or comment. State regulators are included in the process (Segment 9) and comments are welcome from them just as they are from any other segment of the public or industry. Comments are frequently received from state agencies during the lifetime of a project and two regulatory agencies did provide comments on the second posting. As for the comments on economics, it was not reckless but a statement of fact. However, costs are being considered as should be evident by the questions raised (Q12 thru Q14) in the second posting. The SDT is cognizant of the cost factors involved here and is taking them into consideration in its deliberations.		

Organization	Question 15:	Question 15 Comments:
7. Revisions to definitions in the NERC Glossary of Terms must be approved in accordance with the standards process and issues with application to existing standards would be considered. In addition, each Regional Entity has the ability to establish its own unique definition of the BES. 8 The SDT has removed this differentiation in the Table such that AC and DC lines will be treated equally.		
Lafayette Utilities System	C — Definitely do not support the revised standard	Lafayette's single biggest concern is that the second draft version of TPL-001 imposes performance requirements that are less stringent than those imposed in the previous draft. As the SDT stated in its response to comments on Draft 1: ?The SDT modified the performance requirements relative to Non-Consequential Loss of Load and revised Tables 1 & 2 to add greater detail and provide for more situations where it is acceptable to lose Non-Consequential Load.? This ?watering down? of the standard appears to result from complaints about the costs that certain commenting parties claimed would be necessary to achieve compliance with the performance requirements set forth in Draft 1. This is evident from the SDT's statement in the foreword to the comments form for Draft 2 that the SDT has ?attempted to adjust and clarify the proposed requirements and performance in light of these initial comments,? and that the SDT needs additional information about cost and other compliance issues so that it can ?make more adjustments as appropriate.? Lafayette questions whether it is appropriate for the SDT to shape the performance standards to alleviate certain commenters? cost concerns. The SDT should be focused on developing performance requirements that are judged to be optimal from the standpoint of protecting reliability consistent with sound engineering and planning. Striking a balance between reliability and cost is a policy determination for which responsibility lies elsewhere than in the SDT. Claims that the standards would impose excessive costs are more properly addressed to FERC when the revised TPL-001 is filed for approval because Congress assigned to FERC the responsibility to make judgments of this sort. The SDT should not be ?adjusting? (that is, watering down) the performance requirements in response to transmission owner arguments about the costs of compliance. The dilution of the performance requirements is manifest in a number of elements contained in the proposed draft, including (but not limited to) the following: a) Table 1 (Steady State Performance) would permit the interruption of Firm Transmission Service and the loss of Non-Consequential Load in three P1 (Single Contingency) scenarios involving AC lines. In Order 693 (at paragraph 1794), however, FERC emphasized that loss of Non-Consequential Load in single contingency situations is not permissible. b) Adopting less stringent performance requirements for loss of elements below 300kV may be discriminatory. Most wholesale customer loads are served from delivery facilities that operate at voltages lower than 300kV. The outage of facilities operating at less than 300kV therefore may encompass 100% of a wholesale customer's load, while it is likely to impact a much smaller portion of the total load served by the owner of the affected transmission facilities. Therefore, adopting less stringent performance requirements for facilities operating at less than 300kV would impose a disproportionate burden on affected wholesale customers, as compared to the transmission owner. c) In addition to its potentially discriminatory effect, the notion of imposing difference performance standards based on operating voltage would incent transmission owners to scrimp on needed improvements to lower voltage facilities. Presumably, the distinction originates from a belief that outages on 300kV and lower facilities will have less impact on the

Organization	Question 15:	Question 15 Comments:
		Bulk Electric System. As the August 2003 blackout demonstrated, however, disruptions on lower voltage circuits can cause real and reactive power flow fluctuations across, and eventual separation of, higher-voltage networks. d) Regarding the SDT's elimination of the requirement to re-test cases to ascertain the efficacy of additions included in a Corrective Action Plan (sub-requirement 2.7.2 in Draft 1), it is unclear why this requirement was deleted since very few commenters complained that it would be burdensome. It is hard to see how such a re-testing obligation would impose a significant burden, at least insofar as the steady state analysis is concerned. Eliminating the re-testing requirement seems likely to provide minimal savings, but could be important to verifying that appropriate Corrective Action Plan decisions are made.
Response: There are no intentions by the SDT to "water down" reliability. In fact the SDT has raised the bar in many places; e.g., above 300 kV requirements. Resources and expenditures versus adequate level of reliability are being given due consideration throughout the process and will ultimately be determined by the industry through the ballot process. a Table 1 does *not* permit the interruption of Firm Transmission Service or the loss of Non-Consequential Load in three P1 (Single Contingency) scenarios involving AC lines. b & c. The majority of the SDT believed the 300 kV and higher Systems (EHV) generally represent the backbone of many Systems in the various Interconnections and that the more stringent requirements were appropriate when considering N-1-1 Contingencies of two EHV Facilities. Systems operated above 300 kV generally do not directly serve end-use Load customers but rather act as the medium for moving large amounts of power from production to various Load centers where the energy is then delivered by other Transmission or sub-Transmission Systems to end use customers. It is the desire of NERC and various stakeholders that the backbone of the electric power grid be robust and held to a higher degree of reliability. d. The retesting of the cases was deleted due to the SDT believing that this requirement was too burdensome; however, any utility may exceed the requirements listed and perform this retesting if they so desire.		
Arizona Public Service Co.	A —Generally support the revised standard	We generally agree with the Standard as presented so far, but there are numerous issues that still need resolution, Measures, VSLs, Implementation Plan, etc., before WECC can give a full approval of this Standard.
Compliance Elements Development Resource Pool (CEDRP)		With regard to Violation Severity Levels for this standard, the CEDRP doesn't believe the version that has be posted for comment can be commented on from a VSL perspective for two reasons 1) it does not have any measures listed and 2) there are so many "sub-requirements" the VSLs would be quite unmanageable, unless each sub-requirement is of equal importance to fulfilling the objective of the standard. Because there are no measures we can't achieve any insight into importance. The SDT may want to consider trimming the standard down to its most basic elements and providing the details (sub-requirements) in a reference document.

Organization	Question 15:	Question 15 Comments:
Response: Measures, VSL's, and the Implementation plan will be addressed in the next draft of the standard.		
Ameren	C — Definitely do not support the revised standard	From an engineering perspective, the biggest concerns are the additional requirements, including prescribed sensitivity studies, associated with R2 for both steady-state and stability scenarios. We believe that we already cover the needs of our system with the existing NERC standards and Ameren Transmission Planning Criteria & Guidelines. The additional analyses proposed by the revised standard are not warranted and any upgrades indentified by the additional analyses will not provide any significant increase in system reliability. For 2008 compliance, Ameren performed the following steady-state contingency analyses on each of four near-term models and one long-term model:617 Category B single contingencies involving lines and transformers.30 Category B single contingencies involving generators 50 MW and above.1699 Category B single branch outages.135 Category C-1 bus faults. 260 Category C-2 breaker failures.112,575 Category C-3 double contingencies involving lines and transformers.18,510 Category C3 contingencies involving 617 lines and transformers and 30 generating units.73 Category C-5 double-circuit tower outages. For 2008 compliance, Ameren performed 496 stability scenarios of four near-term models and one long-term model: Assuming that we can acquire the qualified manpower, which is presently not available, we estimate that proposed new requirements will increase our compliance activity time by approximately 24 man-months or 2 man-years in a six-month window (January-June) to produce the same quality studies that we produce now. Consequently, we view these proposed additional study efforts as excessively burdensome. Further, we do not see how the additional study work and documentation required by the proposed standard will lead to any significant improvements in reliability. Additional comments: The question of expected Consequential Load Loss magnitude and duration, as specified in R3.3.2.1, is not germane to the reliability of the Bulk Electric System, and is a matter for Distribution Planners and local regulatory authority and is not needed in this reliability standard.
Response: The SDT has received many comments regarding the increased planning requirements to meet the proposed standard. The SDT has reviewed the study work required to comply with the proposed standard as compared to the existing TPL standards. The SDT believes that we have added some additional study work and asked a question about the additional man-hours required to complete any new analysis. However, after this review, the SDT still believes that the requirements for sensitivity studies must remain to document the selection of critical System conditions and study years used in assessing System conditions (see paragraph 1704 of Order 693) and that System conditions are as important as Contingencies in evaluating the performance of present and future Systems (paragraph 1705). The SDT is striving to develop a standard that appropriately supports BES reliability and has industry consensus. The SDT is cognizant of the cost factors involved here and is taking them into consideration in its deliberations. To meet industry concern as well as FERC Order 693, the SDT has added Requirement R 2.8 to identify the event causing the single largest Consequential Load Loss Demand and its value and eliminate the reporting of the expected duration. Requirement R3.3.2.1 has been deleted in favor of new Requirement R2.8. **R2.8** The Planning Assessment shall provide the largest Consequential Load Loss (megawatt Demand) and the associated event caused by any P1 event and any P2 event in Table 1.		

Organization	Question 15:	Question 15 Comments:
City of Tallahassee, FL	C — Definitely do not support the revised standard	The requirement regarding non-interruption of firm transmission service in the steady state performance table for Category P1 events does not properly take into consideration the flexibility necessary for utilities with limited interconnections or interconnections with limited transfer capability. This flexibility, which currently exists in the TPL-001 standard (footnote b in the table), allows a utility to curtail firm transactions to prepare for the next contingency. As drafted, in the circumstance where the single element outage in Category P1 was a tie line, even if this line were critical to supporting the transaction (or were required to be in service by the terms of the power contract), interruption of firm service would be a violation of the proposed standard even though such interruption would be either required or appropriate to ensure the reliability of the bulk electric system. For utilities where tie line capacity is constrained or limited, this requirement for Category P1 will require substantial investment in duplicate facilities to ensure that firm transfers would not be interrupted, and the cost of that investment would likely not offer ratepayers a commensurate benefit (presuming such a duplicate facility could even be sited and permitted).For utilities with just a few large generating units (such as a small municipal utility), the requirements for Category P3 in Table 1 set a threshold for compliance that may not be achievable without substantial investment in additional/duplicate transmission facilities and possibly generating units. The concern relates to the restriction about limiting interruption of firm transmission service or non-consequential load following a G-1/N-1 event; the particular scenario is outlined in the bullets below:? Presume a utility with only two large units and some small gas turbines? Under P3, one of these large units is forced out of service? Reserves are called for and delivered along with replacement power using available import capability? Then presume that the N-1 outage in P3 is a major tie line that is critical to the support of the firm power imports? Under the proposed standard, the utility would be unable to curtail the firm purchase or shed any non-consequential load and remain compliant, even though there would be a significant generation/load imbalance & the appropriate response for the reliability of the grid in the region would be to interrupt the transaction and possibly shed load.The flexibility afforded in the existing TPL-001 standard would in fact allow the utility to respond to this event in a more appropriate way while avoiding a very expensive expansion/duplication of facilities (notwithstanding the considerable challenges that the utility would face for siting and permitting of the necessary facilities).
Response: The SDT has made clarifications regarding Firm Transmission Service and Non-Consequential Load Loss. Footnote # 10 has been added to the end of Table 1. The standard does not preclude the possibility of obtaining contractually interruptible load in lieu of system upgrades in the scenario described. **Footnote #10** – Curtailment of firm transmission service, when coupled with the appropriate re-dispatch of resources obligated to re-dispatch, is allowed both as a System adjustment (as identified in the column titled 'Initial System Conditions') and a corrective action, where it can be demonstrated that Facilities remain within applicable Facility Ratings and those adjustments do not result in the shedding of any firm Load. Where limited options for re-dispatch exist, sensitivities associated with the availability of those resources must be considered. Where Facilities external to the Transmission Planner's planning region are relied upon, Facility Ratings in those regions must be considered.		
Florida Power and Light	C — Definitely do not support the revised	The standard, as currently drafted, is unacceptable. Without the ability to curtail firm transfers to prepare for a next contingency, a "super-firm" priority of transmission service is created for non-native load customers. This goes contrary to the intent of the Open Access Transmission Tariff (OATT) that curtailments be comparable and non-discriminatory. – From

Organization	Question 15:	Question 15 Comments:
	standard	the OATT: – Curtailment of Firm Transmission Service: In the event that a Curtailment on the Transmission Provider's Transmission System, or a portion thereof, is required to maintain reliable operation of such system, Curtailments will be made on a non-discriminatory basis to the transaction(s) that effectively relieve the constraint. If multiple transactions require Curtailment, to the extent practicable and consistent with Good Utility Practice, the Transmission Provider will curtail service to Network Customers and Transmission Customers taking Firm Point-To-Point Transmission Service on a basis comparable to the curtailment of service to the Transmission Provider's Native Load Customers. All Curtailments will be made on a non-discriminatory basis, however, Non-Firm Point-To-Point Transmission Service shall be subordinate to Firm Transmission Service. When the Transmission Provider determines that an electrical emergency exists on its Transmission System and implements emergency procedures to Curtail Firm Transmission Service, the Transmission Customer shall make the required reductions upon request of the Transmission Provider. However, the Transmission Provider reserves the right to Curtail, in whole or in part, any Firm Transmission Service provided under the Tariff when, in the Transmission Provider's sole discretion, an emergency or other unforeseen condition impairs or degrades the reliability of its Transmission System. The Transmission Provider will notify all affected Transmission Customers in a timely manner of any scheduled Curtailments. The SDT has drafted language contrary to FERC specific requirements on comparability. The FERC has consistently directed Transmission Providers to treat all firm transaction on a comparable basis, yet the SDT, in its latest draft is creating a "super-firm" category for only firm transmission service. By creating a higher priority ("super-firm", non-comparable service) for non-native load customers than for native load, native load customers bear a higher cost burden. This and the costs to the ratepayers for negligible increase in already high reliability due to the performance requirements of the standard makes this draft completely unacceptable for FPL to support. FPL will vote against acceptance of this draft standard unless significant changes are made to comport what FPL believes was the intent of FERC Order 693 with regard to the TPL standards.
Response: The SDT agrees that clarification regarding Firm Transmission Service and Non-Consequential Load Loss is necessary. Footnote # 10 has been added to the end of Table 1: **Footnote #10** – Curtailment of firm transmission service, when coupled with the appropriate re-dispatch of resources obligated to re-dispatch, is allowed both as a System adjustment (as identified in the column titled 'Initial System Conditions') and a corrective action, where it can be demonstrated that Facilities remain within applicable Facility Ratings and those adjustments do not result in the shedding of any firm Load. Where limited options for re-dispatch exist, sensitivities associated with the availability of those resources must be considered. Where Facilities external to the Transmission Planner's planning region are relied upon, Facility Ratings in those regions must be considered.		
Exelon Transmission Planning	C — Definitely do not support the revised standard	We appreciate the effort involved in improving this planning standard, and believe in this goal. We are not yet able to support this revised at this time due to the concerns expressed above.

Organization	Question 15:	Question 15 Comments:
Response: Thank you for your comments.		
CenterPoint Energy and CPS Energy	C — Definitely do not support the revised standard	Without re-iterating previous comments, we will summarize that we find this proposed standard to be an overly prescriptive and unrealistic paper chase that does not add value to the planning process. We also are concerned that this standard demonstrates an unhealthy, one sided approach to planning that does not balance reliability goals against other public policy goals, such as cost and landowner impact.
Austin Energy	C — Definitely do not support the revised standard	The proposed standard is overly burdensome and too prescriptive. It will only result in a marginal improvement in reliability and its primary effect will be to devolve into a paper-chase for auditors.
Response: The SDT is striving to develop a standard that appropriately supports BES reliability and has industry consensus.		
SRP	B — Unsure about supporting the revised standard	SRP is concerned about what actions will be allowed to meet the higher performance requirements in the transition period and how long will these transition periods last for the different Requirements?
Response: The SDT has developed the Implementation Plan which is included in the 3rd draft of the standard.		
MidAmerican Energy Company	C — Definitely do not support the revised standard	MEC commends the SDT for significantly improving the standard, MEC believes that the standard still must be improved significantly. Probably the most important improvement would be to completely reformat the standard to provide for more organization and clearer VSLs. MEC recognizes that this may result in some initial confusion during the standard writing process, but if such organization results in less confusion over the next decade of applying the standard, the reorganization is well worth it. If the SDT does nothing else, it should reorganize the standard. Here are some suggestions for improvement: R1.1 is not clear. What does this mean? Surely the SDT does not expect that any time the data is modified a rationale is required. Shouldn't this data be updated as necessary? Wouldn't a requirement for providing a rationale each time such changes are made potentially discourage improvements to the models? This requirement should be clarified and limited to a few specific cases that were there are real reliability concerns R2.5.2 - the SDT should revise the material transmission system changes. Addition of a new substation in one of the transmission lines connected to the plant should be revised to specifically refer to a switching station or to a non-

Organization	Question 15:	Question 15 Comments:
		distribution substation. A substation directly serving load is not a good example of a material transmission system change in the context of Generation Unit Stability studies. R2.6.2 - The SDT should revise the material transmission system changes because as presently defined, studies will need to be conducted every year for every year in the assessment period. This is because apparently the SDT has defined any system change as a material change. Since it is rare for there to be a system that does not exhibit some system change from year to year, this will mean ten-year and more studies every year. MEC recommends that the SDT revise this requirement to make clear that only significant system changes are material changes. R2.7.1 - The SDT has written this requirement to include a requirement that the responsible entity must indicate how long Operating Procedures apply. This implies that Operating Procedures should be interim measures. MEC believes that reliability can be maintained with permanent Operating Procedures and recommends that the need to indicate "how long the Operating Procedures will be needed" be deleted from this requirement. R3.3.2.1 - The SDT should delete the need to provide the expected duration of the Consequential Load Loss in this requirement because this requirements a probabilistic calculation and probabilistic planning is not the state-of-the art of the industry. This is reflected in the standard which has been written to continue deterministic planning criteria. As a result, it is a contradiction to require this probabilistic quantity in the middle of this deterministic planning standard. R3.3.2.2 - clarify that the single contingency events are the events in the tab le. R3.4 and R5.4.4 - MEC urges that the SDT delete or revise the words "why the remaining Contingencies would produce less severe System results." Given the expansive nature of the Extreme events it is virtually impossible to comply with this requirement. It is more likely that the responsible entity could show that the more likely and more severe Extreme events were studied. It would be better yet if the SDT would merely require that the responsible entity provide the rationale for the selection of Extreme Events that were studied. R5.5.1 provides an exclusion for changes in individual generating units that require study. Yet R2.6.2 has a broader definition of when Generating Plant Stability is required. These definitions need to be consistent. The definition in R5.5.1 seems to narrow to be a good definition for "material changes." MEC believes that the R5.5.1 should be expanded. Year One definition - MEC suggests that the Standards Drafting Team's (SDT's) Year One definition unnecessarily constrains the time between the completion of assessments as compared to the study period to begin no more or no less than 12 to 18 months. There is no reliability benefits derived by constraining the period between the completion of an assessment and the study period for the next study period. In fact, this may encourage a Transmission Planner to unnecessarily delay "completing" a study just to ensure that the 12 to 18 month requirement is met. For example, lets assume that a Transmission Planner's 2008 Assessment is complete as of May 2008. By the definition of Year One, then the study period for the 2009 Assessment will need to begin from May 2009 through November 2009. This means that the 2009 Assessment must include the 2009-2010 Winter Peak and cannot start with the 2010 Calendar Year. Why??? If a Transmission Planner wants to have a study period that begins with the calendar year, then the Transmission Planner

Organization	Question 15:	Question 15 Comments:
		would need to delay completing the study until July 2009. Why??? What is the reliability benefits for delay??? MidAmerican suggests that the definition of Year One be changed to allow the study period to begin no later than 24 months after the completion of the previous year's study.? Accountability: We suggest that Transmission Service Provider be added because we also suggest that the Transmission Service Provider be responsible for R10.? R2.1 - We suggest that this requirement involves too much study work and we ask that the SDT reduce the number of current studies needed for all subrequirements. ? R2.7.1 - We agree with the requirement, but suggest a slight text change replace "? or Special Protection Schemes,?" with " . . . or Special Protection Systems, . . ."? R2.7.1.1 - We disagree with the "include project initiation date" portion of this requirement. The initiation date is often uncertain and subject to change, which may add considerable work to investigate, monitor and update the date. In addition, we do not know why this information is required to assure BES reliability.? R3.3.2.1 - We agree with the requirement, but suggest a slight text change of: ". . . shall be allowed in the Planning Assessment".? R3.3.2.2 - We agree with the requirement, but suggest a slight text change of: ". . . within their Facility Ratings and within the time period allowed by the applicable time limited ratings.".? R5.4.3.1 - We agree with the requirement, but suggest a slight text change of: ". . . within their Facility Ratings and within the time period allowed by the applicable time limited ratings.".? Table 1? Planning Events ? Header: We suggest that the header be repeated on every applicable page to be more reader-friendly.? Superscripts: The superscripts do not refer clearly to the respective notes (e.g. there are number notes in the beginning of the table, in the extreme events evaluation requirements section, in extreme event description section, and at the end of the table). Perhaps the notes at the end of the table should have unique numbering to make the superscript references clearer.? Shunt device: To avoid the need for future interpretation or clarification, we suggest that the meaning of shunt device be explained or defined somewhere in the standard (e.g. cap bank, inductor bank, SVC, STATCOM, etc.). We need to find out how shunt device outages can (or could in the future) be automatically included in the ACCC routine. We interpret that if each stage of a capacitor bank has a circuit switcher, then the outage would be of the largest cap bank stage.? Extreme Event Evaluation Requirements? 3 Extreme Event Descriptions? 2b & 3b - We agree with the descriptions, but suggest referring to the defined term: "Right-of-Way."?

Organization	Question 15:	Question 15 Comments:
		Note 4 - We agree with the description, but the acronym FACTS should be explained in the standard or a definition be added for "FACTS". Table 2 Header: We suggest that the header be repeated on every applicable page to be more reader-friendly. Other numbering and format changes suggested for Table 1 should also be considered for Table 2.

Response: A. The SDT agrees and has removed the need for documentation of the technical rationale for modification of any data.

B Requirement R2.5 and its sub-requirements have been removed from the proposed standard. Guidelines for the use of past studies to support the Planning Assessment have been added to what is now Requirement R2.5.2. The SDT did not want to be overly prescriptive when describing the type of changes that could be considered material and has left the text general. It is up to the Transmission Planner and Planning Coordinator to provide specificity as to what type of topology changes constitutes a change sufficient to warrant re-evaluation.

R2.5.2 For steady state, short circuit, ~~Generating Plant Stability,~~ or ~~System~~ Stability analysis: the ~~study~~ present System model shall not include any material changes, such as, generation or Transmission additions/removals, or topology changes that have occurred in the intervening period and would impact the study area. Material generation changes could include:

C The SDT does not agree that studies are required for every year of the Assessment period. However, please note that Requirement R2.5 and its sub-requirements have been removed from the proposed standard. Guidelines for the use of past studies to support the Planning Assessment have been added to what is now Requirement R2.5.2. The SDT did not want to be overly prescriptive when describing the type of changes that could be considered material and has left the text general. It is up to the Transmission Planner and Planning Coordinator to provide specificity as to what type of topology changes constitutes a change sufficient to warrant re-evaluation.

D The SDT has retained this requirement and believes that this information should be included in the Planning Assessment.

E To meet industry concern as well as FERC Order 693, the SDT has added Requirement R 2.8 to identify the event causing the single largest Consequential Load Loss Demand and its value and eliminate the reporting of the expected duration. Requirement R3.3.2.1 has been removed from the draft.

R2.8 The Planning Assessment shall provide the largest Consequential Load Loss (megawatt Demand) and the associated event caused by any P1 event and any P2 event in Table 1.

F The SDT has deleted Requirement R3.3.2 and has replaced it with additional language in Requirement R3.1 which will hopefully clarify things.

R3.1 Studies shall be performed to determine whether the BES meets the performance requirements in Table 1 ~~– Steady State Performance.~~ based on the lists created in Requirement R3.4.

G. The SDT disagrees with your comment. The SDT believes that this language is needed to ensure that the worst possible situation is studied based on engineering judgment and knowledge of the System.

H. To address industry comments such as yours, Generating Unit Stability is no longer explicitly addressed in the standard and the definitions of Consequential and Non-Consequential Load Loss have been modified.

Consequential Load Loss: ~~Load that is no longer connected to a source as a result of the event being studied or which is lost as a result of the load's response to the transient conditions of the event (other than through the action of UVLS or UFLS schemes). Although Load which is lost as a result of the Load's~~

Organization	Question 15:	Question 15 Comments:

~~response to the transient conditions of the event is considered Consequential Load Loss and is permitted when Consequential Load Loss is allowed, Transmission planning entities are not allowed to rely upon the expectation of such Load loss to meet steady state performance requirements.~~ All Load that is no longer served by any Transmission Facilities as a result of the Facilities being removed from service by a planned Protection System operation to isolate fault conditions.

Non-Consequential Load Loss: Non-Interruptible Load loss other than Consequential Load Loss, Supplemental Load Loss, and Load Reduction.~~. For example, non-Interruptible Load loss that occurs through manual (operator initiated) or automatic operations such as under-voltage Load shedding, under-frequency Load shedding, or Special Protection Systems would be considered Non-Consequential Load Loss~~.

I. The SDT has changed the definition for Year One to accommodate industry concerns.

Year One: The first year that a Transmission Planner is responsible for assessing. This is further defined as the planning window that begins 12-18 months from the ~~completion of the previous annual Planning Assessment~~ current calendar year.

In response to industry comments, the SDT has removed Requirements R9-R14.

R2.1 – The SDT has received many comments regarding the increased planning requirements to meet the proposed standard. However, the SDT believes that the requirements for sensitivity studies must remain to satisfy FERC Order 693. FERC has stated that the sensitivity studies would be used to document the selection of critical System conditions and study years used in assessing System conditions (see paragraph 1704) and that System conditions are as important as Contingencies in evaluating the performance of present and future Systems (paragraph 1705).

R2.7.1 (now R2.6.1) – The SDT agrees and had replaced "schemes" with "systems".

Installation or modification of Protection Systems or Special Protection Systems

R2.7.1.1 (now R2.6.2) - The SDT believes that a project initiation date is an effective measure to track a functional entity's planning and engineering activities and its efforts to provide and maintain a reliable BES.

R3.3.2.1 - To meet industry concern as well as FERC Order 693, the SDT has added Requirement R 2.8 to identify the event causing the single largest Consequential Load Loss Demand and its value and eliminate the reporting of the expected duration. Requirement R3.3.2.1 has been deleted in favor of new Requirement R2.8.

R3.3.2.2 - Based on your comment, the SDT has addressed the applicable time-limited rating in what was Header note 'a' for Steady State Only in Table 1 - Steady State & Stability Performance. Requirement R3.3.2.2 has been deleted in favor of Header note 'e' in the revised Table. Please note that the two tables in the second draft have been reduced to one table in the third draft.

Header note 'e' - For all Planning Events, planned System adjustments such as Transmission configuration changes and redispatch of generation are allowed if such adjustments are executable within the time duration applicable to the Facility Ratings.

R5.4.3.1 - The SDT has deleted Requirement R5.4.3.1.

Headers - The SDT also feels that the Tables need to be as clear and concise as possible. To that end, Tables 1 and 2 have been combined into one table with

Organization	Question 15:	Question 15 Comments:
a revised format. The Planning Events are shown on one page so repeating the headings will not be needed. Superscripts – As part of the change to a single table, the SDT has attempted to clean up various items such as superscripts. Shunt device - The SDT believes that shunt devices are commonly used in the electric utility industry and does not require any further explanation. The SDT recommends contacting the software manufacturer for additional information about the ACCC routine. The SDT believes that the cap bank outage would be based on what elements would need to trip in order to clear the simulated fault condition. Extreme Events - The SDT agrees with your comments and has made the change. The SDT has removed item 3.b. from Extreme Events since this was already covered in Extreme Event 1. **Extreme Event 2b -** Loss of all Transmission lines on a common ~~r~~Right-of-~~w~~Way. Note 4 - The SDT believes that "FACTS" is commonly used in the electric utility industry and does not require any further explanation.		
SERC Dynamics Review Subcommittee	B — Unsure about supporting the revised standard	SERC is in category BA ? Generally support the revised standard ? B ? Unsure about supporting the revised standard ? See three specific concerns below C ? Definitely do not support the revised standard ? 1) Load Modeling is a significant open issue. The models for dynamic studies have yet to be developed and the data is not in hand. This is conflicting with implementation of the TPL standards because modeling details are a gating item to completing some system studies. 2) The proposed sensitivities create significant amount of additional work making the compliance aspect more burdensome and less clear. 3) Category P6 is the loss of a system element, following system adjustments, followed by the loss of another element. The table columns for this category say that interruption of firm transmission service is allowed. The table, however, is not clear whether the interruption of firm service is allowed as part of the system adjustment (between the outages) or whether it is only allowed after the second outage. It was stated in the NERC TPL SDT WebEx that the interruption is not allowed as part of the system adjustment. If this is the interpretation, this will cause many SERC members to not support the revised standard. This would be a dramatic change from the existing standard and would result in the unintended consequence of significantly reducing transfer capability of interfaces to a fraction of their currently reported capability. This would in effect be imposing an n-2 criteria for offering firm transmission service. This would not be an acceptable situation for the users, owners and operators of the bulk power system.
Response: 1. The SDT agrees and believes that industry guidance is needed to capture the appropriate dynamic behavior of Loads. In response to comments from you and others in the industry, the SDT has removed Requirements R9-R14 and enhanced Requirement R1 to more clearly specify the modeling information needed to support accurate Planning Assessments. Any comments received from the industry on MOD standards will be forwarded to NERC for inclusion into NERC Reliability Standards Development Projects 2010-04, Modeling Data and 2010-05, Demand Data. Requirement R2.4.1 has been modified		

Organization	Question 15:	Question 15 Comments:
to clarify expectations regarding load modeling for dynamics studies. **R1** Each Transmission Planner and Planning Coordinator shall maintain System models for performing the studies needed to complete their Planning Assessment. The models shall use data consistent with the data provided in accordance with ~~Requirements R9 through R14,~~ the MOD-010 and MOD-012 standards~~,~~ and other data sources,~~.~~ and shall simulate projected System conditions including requirements of regulatory authorities and other legal obligations. **R2.4.1** System peak Load for one of the five years. For peak System Load levels, a Load model shall be used which appropriately represents the dynamic behavior of Loads, including consideration of the behavior of induction motor Loads. An aggregate system Load model which represents the overall dynamic behavior of the Load is acceptable. 2. The intent of the SDT in requiring performance of sensitivity studies is to identify critical System conditions and to expand planners' portfolio of knowledge about vulnerabilities on their System. This is also an expectation from FERC Order 693 paragraphs 1704 - 1706. Requirement R2.1.3 has been reworded to account for sensitivity studies already performed by the planner. **R2.1.3** For each of the studies described in Requirements R2.1.1 and ~~Requirement~~ R2.1.2, sensitivity case(s) that are intended to stress the System with ~~sensitivities~~ variations ~~that reflect~~ in one or more of the following conditions not already included in the studies shall be ~~run and documentation of the technical rationale for why each of the conditions was or was not selected shall be supplied~~ included in the Assessment: 3. The SDT agrees that clarification regarding treatment of Firm Transmission Service and Non-Consequential Load Loss during adjustment is necessary. Footnote 10 in the Revision 3 of the Standard provides clarification. **Footnote #10** – Curtailment of firm transmission service, when coupled with the appropriate re-dispatch of resources obligated to re-dispatch, is allowed both as a System adjustment (as identified in the column titled 'Initial System Conditions') and a corrective action, where it can be demonstrated that Facilities remain within applicable Facility Ratings and those adjustments do not result in the shedding of any firm Load. Where limited options for re-dispatch exist, sensitivities associated with the availability of those resources must be considered. Where Facilities external to the Transmission Planner's planning region are relied upon, Facility Ratings in those regions must be considered.		
MRO NERC Standards Review Subcommittee	C — Definitely do not support the revised standard	While the MRO commends the SDT for significantly improving the standard, the MRO believes that the standard still must be improved significantly. Here are some suggestions for improvement: a. R1.1 is not clear. What does this mean? Surely the SDT does not expect that any time the data is modified a rationale is required. Shouldn't this data be updated as necessary? Wouldn't a requirement for providing a rationale each time such changes are made potentially discourage improvements to the models? This requirement should be clarified and limited to a few specific cases that were there are real reliability concerns. b. R2.5.2 - the SDT should revise the material transmission system changes. Addition of a new substation in one of the transmission lines connected to the plant should be revised to specifically refer to a switching station or to a non-distribution substation. A substation directly serving load is not a good example of a material transmission system change in the context of Generation Unit Stability studies. c. R2.6.2 - The SDT should revise the material transmission system changes because as presently defined, studies will

Organization	Question 15:	Question 15 Comments:
		need to be conducted every year for every year in the assessment period. This is because apparently the SDT has defined any system change as a material change. Since it is rare for there to be a system that does not exhibit some system change from year to year, this will mean ten-year and more studies every year. The MRO recommends that the SDT revise this requirement to make clear that only significant system changes are material changes. d. R2.7.1 - The SDT has written this requirement to include a requirement that the responsible entity must indicate how long Operating Procedures apply. This implies that Operating Procedures should be interim measures. The MRO believes that reliability can be maintained with permanent Operating Procedures and recommends that the need to indicate "how long the Operating Procedures will be needed" be deleted from this requirement. e. R3.3.2.1 - The SDT should delete the need to provide the expected duration of the Consequential Load Loss in this requirement because this requirements a probabilistic calculation and probabilistic planning is not the state-of-the art of the industry. This is reflected in the standard which has been written to continue deterministic planning criteria. As a result, it is a contradiction to require this probabilistic quantity in the middle of this deterministic planning standard. f. R3.3.2.2 - clarify that the single contingency events are the events in the table. g. R3.4 and R5.4.4 - the MRO urges that the SDT delete or revise the words "why the remaining Contingencies would produce less severe System results." Given the expansive nature of the Extreme events it is virtually impossible to comply with this requirement. It is more likely that the responsible entity could show that the more likely and more severe Extreme events were studied. It would be better yet if the SDT would merely require that the responsible entity provide the rationale for the selection of Extreme Events that were studied. h. R5.5.1 provides an exclusion for changes in individual generating units that require study. Yet R2.6.2 has a broader definition of when Generating Plant Stability is required. These definitions need to be consistent. The definition in R5.5.1 seems to narrow to be a good definition for "material changes." The MRO believes that the R5.5.1 should be expanded. i. Year One definition - The MRO suggests that the Standards Drafting Team's (SDT's) Year One definition unnecessarily constrains the time between the completion of assessments as compared to the study period to begin no more or no less than 12 to 18 months. There are no reliability benefits derived by constraining the period between the completion of an assessment and the study period for the next study period. In fact, this may encourage a Transmission Planner to unnecessarily delay "completing" a study just to ensure that the 12 to 18 month requirement is met. For example, let's assume that a Transmission Planner's 2008 Assessment is complete as of May 2008. By the definition of Year One, then the study period for the 2009 Assessment will need to begin from May 2009 through November 2009. This means that the 2009 Assessment must include the 2009-2010 Winter Peak and cannot start with the 2010 Calendar Year. Why? If a Transmission Planner wants to have a study period that begins with the calendar year, then the Transmission Planner would need to delay completing the study until July 2009. Why? What are the reliability benefits for delay? The MRO suggests that the definition of Year One be changed to allow the study period to begin no later than 24 months after the completion of the previous year's study.? Definitions: The MRO agrees with the removal of the "Base Case" definition and

Organization	Question 15:	Question 15 Comments:
		the revisions to the other definitions, except as noted below or elsewhere.? Long Term Planning Horizon definition: The MRO suggests a slight text change of: "Transmission planning period that covers years six through ten. Studies beyond ten years are required to accommodate . . .".? Accountability: The MRO suggests that Transmission Service Provider be added because we also suggest that the Transmission Service Provider be responsible for R10.? Requirements: The MRO agrees with the revisions to the Requirements, except as noted below or elsewhere.? R1.1 - The MRO agrees with the requirement, but would like more description of what to provide in the technical rationale.? R2.1 - The MRO suggests that this requirement involves too much study work and we ask that the SDT reduce the number of current studies needed for all subrequirements. ? R2.6.2 - The MRO agrees with the requirement, but suggest a slight text change of: " . . . short circuit, Generating Unit Stability or System Stability analysis . . .".? R2.7 - The MRO agrees with the requirement, as long as it is really required by FERC Order 693 paragraph 1704.? R2.7.1 - The MRO agrees with the requirement, but suggest a slight text change replace "? or Special Protection Schemes,?" with " . . . or Special Protection Systems, . . ."? R2.7.1.1 - The MRO disagrees with the "include project initiation date" portion of this requirement. The initiation date is often uncertain and subject to change, which may add considerable work to investigate, monitor and update the date. In addition, we do not know why this information is required to assure BES reliability.? R2.7.2 - The MRO agrees with the requirement, as long as it is really required by FERC Order 693 paragraph 1704.? R3.2.2 - The MRO agrees with the requirement, but suggest a slight text change of: "For all BES Transmission lines . . .". ? R3.3.2.1 - The MRO agrees with the requirement, but suggest a slight text change of: ". . . shall be allowed in the Planning Assessment".? R3.3.2.2 - The MRO agrees with the requirement, but suggest a slight text change of: ". . . within their Facility Ratings and within the time period allowed by the applicable time limited ratings.".? R5.1 - The MRO agrees with the requirement, but suggest a slight text change of: ". . . the response of the applicable portion of the BES".? R5.2 - This clarifying requirement should also be included in the steady state and short circuit analysis sections.? R5.3 - The MRO agrees with the requirement, but suggest a slight text change of: ". . . capability of all generators that may have a significant adverse effect on the BES."?

Organization	Question 15:	Question 15 Comments:
		R5.4.3.1 - The MRO agrees with the requirement, but suggest a slight text change of: ". . . within their Facility Ratings and within the time period allowed by the applicable time limited ratings.".? R6 - The MRO agrees with the requirement, but suggest a slight text change of: ". . . shall provide the rationale for and document . . .".? R8 - The MRO disagrees with the requirement, but suggest a text change of: "Each Planning Coordinator shall establish a list of neighboring system and coordinate the distribution of Planning Assessment results among affected entities the listed neighboring systems, coordinating analysis of these results through an open and transparent peer review process."? Table 1? Planning Events ? Header: The MRO suggests that the header be repeated on every applicable page to be more reader-friendly.? Superscripts: The superscripts do not refer clearly to the respective notes (e.g. there are number notes in the beginning of the table, in the extreme events evaluation requirements section, in extreme event description section, and at the end of the table). Perhaps the notes at the end of the table should have unique numbering to make the superscript references clearer.? Shunt device: To avoid the need for future interpretation or clarification, we suggest that the meaning of shunt device be explained or defined somewhere in the standard (e.g. cap bank, inductor bank, SVC, STATCOM, etc.). We need to find out how shunt device outages can (or could in the future) be automatically included in the ACCC routine. We interpret that if each stage of a capacitor bank has a circuit switcher, then the outage would be of the largest cap bank stage.? P2.2 (>300 kV), P2.3(>300 kV), P3 (>300 kV), P4 (>300 kV), P5 (>300 kV), P6 (>300 kV) - This requirement is raising the bar above the existing standards. In the existing standards, this is a Category C event in which load shedding was allowed. A higher criteria for >300 kV may not be appropriate at this time. The new requirement may require the installation of facilities that are costly and have a very long implementation timeframe. We should consider what the cost of this higher requirement might be for ATC and other utilities. If the new >300 kV requirement is not reduced, then we would want the implementation timeframe to be long enough to allow reasonable time to transition from a system built to the old requirement to a system built for the new requirement. The time needed for planning, design engineering, regulatory approvals, and construction of >300 kV facilities can be very long (e.g. up to 10 or more years).? P6 - Why isn't the generator listed as a one of the possible subsequent element outages?? P7 - The MRO disagrees with this requirement. Wisconsin statues require giving preference to using existing ROW for new transmission circuits, but this requirement discourages building multiple circuits on common ROW. Should there be an exclusion in this standard similar to the TLP-503-MRO-1 standard (e.g. could be slightly more than 1 mile due to review?.? Extreme Event Evaluation Requirements? 2 - The MRO agrees with the requirement, but perhaps a definition be added for "System Controls", since one exists for "System Protection".?

Organization	Question 15:	Question 15 Comments:
		3 - The MRO agrees with the requirement, but suggest a slight text change of: "Simulate Normal Clearing unless otherwise specified in the Extreme Event Descriptions."? Extreme Event Descriptions? 2a - The MRO agrees with the description, but suggest a slight text change of: "Loss of a structure or tower line with three or more circuits.."? 2b & 3b - The MRO agrees with the descriptions, but suggest referring to the defined term: "Right-of-Way."? 2e, 3.a.i, & 3.a.ii - The MRO agrees with the descriptions, but how large is "large" and how major is "major"?? 3.a.v - What is meant by successful cyber attack? Is it a type of cyber attack that is documented to have been successful? ? 3c - The MRO agrees with the description, but suggest a slight text change of: "Other events based upon actual operating experience such as:" ? Note 4 - The MRO agrees with the description, but the acronym FACTS should be explained in the standard or a definition be added for "FACTS".? Table 2? 1 - The MRO disagrees with this note. We suggest that it be expanded to include the applicable part as Table 1. "The System shall remain stable. In addition, Facility Equipment Ratings shall not be exceeded. Planned System adjustments are allowed, unless precluded in the Requirements, to keep Facilities within the Facility Ratings, if such adjustments are executable within the time duration applicable to the Facility Ratings."? 3 - The MRO disagrees with this note. We suggest that it be expanded to include the applicable part as Table 1. "Dynamic voltage instability, Cascading outages, and uncontrolled islanding shall not occur."? Between 3 & 4 - The MRO disagrees with omitting Note 4 of Table 1 from Table 2. We suggest including: "Consequential Load and consequential generation loss is allowed for all events shown."? Planning Events? Same comments on Header, Superscripts, and Shunt Device as in Table 1.? Same comments about stricter requirements for P2.2 (>300 kV), P2.3(>300 kV), P3 (>300 kV), P4 (>300 kV), P5 (>300 kV), P6 (>300 kV) as in Table 1.? Same comment about P7 as in Table 1.? Extreme Event Evaluation Requirements? Same comment about Requirement 2 and 3 as in Table 1.? 3 - The MRO agrees with the requirement, but suggest a slight text change of: "Simulate Normal Clearing unless otherwise specified in the Extreme Event Descriptions."?

Organization	Question 15:	Question 15 Comments:
		Notes5 - The MRO disagrees with limiting this requirement to just Category P1 category. We suggest that the synchronism requirement be applied to more categories.

Response: A. The SDT agrees and has removed the need for documentation of the technical rationale for modification of any data.

B Requirement R2.5 and its sub-requirements have been removed from the proposed standard. Guidelines for the use of past studies to support the Planning Assessment have been added to Requirement R2.6.2 (now R2.5.2). The SDT did not want to be overly prescriptive when describing the type of changes that could be considered material and has left the text general. It is up to the Transmission Planner and Planning Coordinator to provide specificity as to what type of topology changes constitutes a change sufficient to warrant re-evaluation.

R2.5.2 For steady state, short circuit, ~~Generating Plant Stability,~~ or ~~System~~ Stability analysis: the ~~study~~ present System model shall not include any material changes, such as, generation or Transmission additions/removals, or topology changes that have occurred in the intervening period and would impact the study area. Material generation changes could include:

C The SDT does not agree that studies are required for every year of the Assessment period. However, please note that Requirement R2.5 and its sub-requirements have been removed from the proposed standard. Guidelines for the use of past studies to support the Planning Assessment have been added to what is now Requirement R2.5.2. The SDT did not want to be overly prescriptive when describing the type of changes that could be considered material and has left the text general. It is up to the Transmission Planner and Planning Coordinator to provide specificity as to what type of topology changes constitutes a change sufficient to warrant re-evaluation.

D The SDT has retained this requirement and believes that this information should be included in the Planning Assessment.

E To meet industry concern as well as FERC Order 693, the SDT has added Requirement R 2.8 to identify the event causing the single largest Consequential Load Loss Demand and its value and eliminate the reporting of the expected duration. Requirement R3.3.2.1 has been removed from the draft.

R2.8 The Planning Assessment shall provide the largest Consequential Load Loss (megawatt Demand) and the associated event caused by any P1 event and any P2 event in Table 1.

F The SDT has deleted Requirement R3.3.2 and has replaced it with additional language in Requirement R3.1 while adding Header note 'e' and deleting the reference to single Contingencies which will hopefully clarify things.

R3.1 Studies shall be performed to determine whether the BES meets the performance requirements in Table 1 ~~– Steady State Performance.~~ based on the lists created in Requirement R3.4.

Header note 'e' - For all Planning Events, planned System adjustments such as Transmission configuration changes and redispatch of generation are allowed if such adjustments are executable within the time duration applicable to the Facility Ratings.

G. The SDT disagrees with your comment. The SDT believes that this language is needed to ensure that the worst possible situation is studied based on engineering judgment and knowledge of the System.

H. To address industry comments such as yours, Generating Unit Stability is no longer explicitly addressed in the standard and the definitions of Consequential

Organization	Question 15:	Question 15 Comments:

and Non-Consequential Load Loss have been modified.

Consequential Load Loss: ~~Load that is no longer connected to a source as a result of the event being studied or which is lost as a result of the load's response to the transient conditions of the event (other than through the action of UVLS or UFLS schemes). Although Load which is lost as a result of the Load's response to the transient conditions of the event is considered Consequential Load Loss and is permitted when Consequential Load Loss is allowed, Transmission planning entities are not allowed to rely upon the expectation of such Load loss to meet steady state performance requirements.~~ All Load that is no longer served by any Transmission Facilities as a result of the Facilities being removed from service by a planned Protection System operation to isolate fault conditions.

Non-Consequential Load Loss: Non-Interruptible Load loss other than Consequential Load Loss, Supplemental Load Loss, and Load Reduction.~~. For example, non-Interruptible Load loss that occurs through manual (operator initiated) or automatic operations such as under-voltage Load shedding, under-frequency Load shedding, or Special Protection Systems would be considered Non-Consequential Load Loss~~.

I. The SDT has changed the definition for Year One to accommodate industry concerns.

Year One: The first year that a Transmission Planner is responsible for assessing. This is further defined as the planning window that begins 12-18 months from the ~~completion of the previous annual Planning Assessment~~ current calendar year.

Accountability - In response to industry comments, the SDT has removed Requirements R9-R14 and enhanced Requirement R1 to more clearly specify the modeling information needed to support accurate Planning Assessments.

R1 Each Transmission Planner and Planning Coordinator shall maintain System models for performing the studies needed to complete their Planning Assessment. The models shall use data consistent with the data provided in accordance with ~~Requirements R9 through R14,~~ the MOD-010 and MOD-012 standards~~,~~ and other data sources,~~.~~ and shall simulate projected System conditions including requirements of regulatory authorities and other legal obligations.

R1.1 – The SDT agrees and has removed the need for documentation of the technical rationale for modification of any data.

R2.1 – The SDT has received many comments regarding the increased planning requirements to meet the proposed standard. However, the SDT believes that the requirements for sensitivity studies must remain to satisfy FERC Order 693. FERC has stated that the sensitivity studies would be used to document the selection of critical System conditions and study years used in assessing System conditions (see paragraph 1704) and that System conditions are as important as Contingencies in evaluating the performance of present and future Systems (paragraph 1705).

R2.6.2 – Based on comments from others, the SDT has removed the requirements for separate Generating Unit Stability analysis and System Stability analysis.

R2.7.1 (now R2.6.1) – The SDT agrees and had replaced "schemes" with "systems".

Installation or modification of Protection Systems or Special Protection Systems

R2.7.1.1 (now 2.6.2) - The SDT believes that a project initiation date is an effective measure to track a functional entities' planning and engineering activities and their efforts to provide and maintain a reliable BES.

R2.7.2 – The old Requirement R2.7.2 has been deleted.

Organization	Question 15:	Question 15 Comments:

R3.2.2 – The Purpose section of the Standard states that this Standard is to develop requirements for the Bulk Electric System, BES.

R3.3.2.1 - To meet industry concern as well as FERC Order 693, the SDT has added Requirement R 2.8 to identify the event causing the single largest Consequential Load Loss Demand and its value and eliminate the reporting of the expected duration. Requirement R3.3.2.1 has been deleted in favor of new Requirement R2.8.

R3.3.2.2 - Based on your comment, the SDT has addressed the applicable time-limited rating in what was Header note 'a' for Steady State Only in Table 1 - Steady State & Stability Performance. Requirement R3.3.2.2 has been deleted in favor of Header note 'e' in the revised Table. Please note that the two tables in the second draft have been reduced to one table in the third draft.

Header note 'e' - For all Planning Events, planned System adjustments such as Transmission configuration changes and redispatch of generation are allowed if such adjustments are executable within the time duration applicable to the Facility Ratings.

R5.1 & R5.2 (now R4.1 and R4.2) – Most of the industry did not have difficulty understanding that the analysis is limited to the Transmission Planner's or Planning Coordinator's portion of the BES. Therefore, the SDT is not persuaded by your comment to add extra wording.

R5.3 (now R4.3) – The SDT disagrees with the suggested change due to the additional studies that would be required to determine which generators would have an adverse impact.

R5.4.3.1 - The SDT has deleted Requirement R5.4.3.1.

R6 – The SDT believes "define and document" as written are more appropriate than "rationale for and document". The SDT did not revise Requirement R6 (now R5) as proposed – but did make other modifications to this requirement based on other stakeholder comments..

R8 – The SDT has clarified this in a revised Requirement R7.

R7 Each Planning Coordinator shall coordinate the distribution of Planning Assessment results among ~~neighboring systems~~ adjacent Planning Coordinators and any functional entity who has indicated a reliability need, coordinating analysis of these results through an open and transparent peer review process such as described in FERC Order 890.

Headers - The SDT also feels that the Tables need to be as clear and concise as possible. To that end, Tables 1 and 2 have been combined into one table with a revised format. The headings are repeated on subsequent pages.

Superscripts – As part of the change to a single table, the SDT has attempted to clean up various items such as superscripts.

Shunt device - The SDT believes that shunt devices are commonly used in the electric utility industry and does not require any further explanation. The SDT recommends contacting the software manufacturer for additional information about the ACCC routine. The SDT believes that the cap bank outage would be based on what elements would need to trip in order to clear the simulated fault condition.

P2.2 – The majority of the SDT believed the 300 kV and higher Systems (EHV) generally represent the backbone of many Systems in the various Interconnections and that the more stringent requirements were appropriate when considering N-1-1 Contingencies of two EHV Facilities. Systems operated above 300 kV generally do not directly serve end-use Load customers but rather act as the medium for moving large amounts of power from production to various Load centers where the energy is then delivered by other Transmission or sub-Transmission Systems to end use customers. It is the desire of NERC

Organization	Question 15:	Question 15 Comments:
and various stakeholders that the backbone of the electric power grid be robust and held to a higher degree of reliability. The Implementation Plan will address any need for transition and will be included in the next revision. P6 – This is already covered in P3. P7 – The SDT is cognizant of the concerns surrounding the construction of new Transmission lines, including the desire by many to fully utilize existing Right-of-Ways. In its consideration of Footnote 12 (exclusion for common structures less than 1 mile), the SDT considered the impact that this requirement could have on construction of new Facilities. However, after deliberations the SDT believes that the 1 mile exclusion should be maintained for the reliability of the BES and that individual exceptions can be addressed within the NERC process. Extreme Events 2 - The SDT agrees that "Protection System" is defined in the Glossary of Terms Used In Reliability Standards. However, the SDT believes that these "System Control" issues should be addressed by the NERC SPCTF drafting team. Extreme Events 3 – The SDT has already included "For all Extreme Events Evaluated" at the beginning of the Evaluation Requirements under Extreme Events. Extreme Events 2a – The SDT believes that the Extreme Events #2.a. is already sufficient. Extreme Events 2b & 3b - The SDT agrees with your comments and has made the change. The SDT has removed item 3.b. from Extreme Events since this was already covered in Extreme Event 1. **Extreme Event 2b -** Loss of all Transmission lines on a common ~~r~~Right-of-~~w~~Way. Extreme Event 2e – The SDT suggests that the terms "large", "major", and "successful" be defined between the TP and PC. Extreme Event 3a – A successful cyber attack would be any attack where an unauthorized person gained access to the systems described in the event. Extreme Event 3c – The SDT believes that the wording of 3b (was 3c) is already sufficient. Note 4 - The SDT believes that "FACTS" is commonly used in the electric utility industry and does not require any further explanation. Tables 2 – As part of the 3rd draft of the revised standard, the 2 tables have been merged into a single table and a general clean-up of the text has been made. Table 2, note 1 – The SDT has reviewed your comment and feels that your request to add "Facility Equipment Ratings shall not be exceeded. Planned System adjustments are allowed, unless precluded in the Requirements, to keep Facilities within the Facility Ratings, if such adjustments are executable within the time duration applicable to the Facility Ratings." apply to Stability is not appropriate. For the purposes of this standard, Facility Equipment ratings refer to steady state calculated values and planned System adjustments refer to the time frame associated with returning the thermal flow within the applicable steady state Facility Rating. Table 2, note 3 – The SDT agrees with your comment on making general note 3, located at the beginning of Table 1, "Voltage instability, cascading outages, and uncontrolled islanding shall not occur" applicable to both Steady State and Stability and has made that change in the next version. Note 4 – The SDT also agrees that the general note 4, at the beginning of Table 1, applicable to both Steady State and Stability and has made that change in the next version.		

Organization	Question 15:	Question 15 Comments:
Note 3 – The SDT has already included "For all Extreme Events Evaluated" at the beginning of the Evaluation Requirements under Extreme Events. Note 5 – The SDT also feels that the synchronism requirement should apply to more than just the P1 Category but under certain conditions. As stated in Note 1.a.ii, for planning events other than P1, no generating unit or units totaling more than the Contingency reserve of the Balancing Authority shall be allowed to pull out of synchronism. If less than the Contingency reserve, then the resulting apparent impedance swings must not pass through relay characteristics that would result in the tripping of any Transmission System elements other than the generating unit and its direct connection Facilities		
Modesto Irrigation District	B — Unsure about supporting the revised standard	Concerns about the following: attempt to introduce interconnection stability studies into TPL studies, and redefinition of Consequential and Non-Consequential Load Loss.
Response: The SDT believes that there is no significant distinction between generator and System Stability and has modified the definitions and Requirements R2, R2.6.1 (now R2.5.1), R2.6.2 (now R2.5.2), R5 (now R4), and R5.5 (now R4.4) in the third draft. **R2** Each Transmission Planner and Planning Coordinator shall ~~conduct and document the results of~~ prepare ~~its~~an annual Planning Assessment of its portion of the BES. This Planning Assessment shall use current or past studies, document assumptions, document results, and shall cover steady state analyses, short circuit analyses, and Stability analyses ~~including both System and Generating Unit Stability~~. **R2.5.1** For steady state, short circuit, or ~~System~~ Stability analysis: the study shall be five calendar years old or less. **R2.5.2** For steady state, short circuit, ~~Generating Plant Stability,~~ or ~~System~~ Stability analysis: the ~~study~~ present System model shall not include any material changes, such as, generation or Transmission additions/removals, or topology changes that have occurred in the intervening period and would impact the study area. Material generation changes could include: **R4.** For the Stability portion of the Planning Assessment, as described in Requirement R2.4 ~~and Requirement R2.5~~, each Transmission Planner and Planning Coordinator shall perform the Contingency analyses listed in Table ~~2~~1 ~~– Stability Performance~~. The studies shall be based on computer simulations using models utilizing data provided in Requirement R1. ~~The studies shall be based on computer simulations using models utilizing data provided in Requirements R9 through R14, the MOD-010 and MOD-012 standards, and other data sources, to include known planned and long term outages of Transmission or generation equipment. The studies shall cover both System Stability and Generating Unit Stability. The following requirements apply to both System Stability and Generating Unit Stability studies unless otherwise noted.~~ **R4.4** ~~At a minimum, t~~Those Planning Event Contingencies in Table ~~2~~1 – ~~Stability Performance~~ that ~~would~~are expected to produce more severe System impacts shall be identified, and a list of those Contingencies to be evaluated for System performance in Requirement R4.1 created~~,~~. ~~and t~~The rationale for the Contingencies selected for evaluation shall be available as supporting information with an explanation of why the remaining Contingencies would produce less severe System results. In response to numerous concerns, the following changes were made to the draft standard regarding Consequential and Non-Consequential Load Loss		

Organization	Question 15:	Question 15 Comments:
definitions. **Consequential Load Loss:** ~~Load that is no longer connected to a source as a result of the event being studied or which is lost as a result of the load's response to the transient conditions of the event (other than through the action of UVLS or UFLS schemes). Although Load which is lost as a result of the Load's response to the transient conditions of the event is considered Consequential Load Loss and is permitted when Consequential Load Loss is allowed, Transmission planning entities are not allowed to rely upon the expectation of such Load loss to meet steady state performance requirements.~~ All Load that is no longer served by any Transmission Facilities as a result of the Facilities being removed from service by a planned Protection System operation to isolate fault conditions. **Non-Consequential Load Loss:** Non-Interruptible Load loss other than Consequential Load Loss, Supplemental Load Loss, and Load Reduction.~~.~~ ~~For example, non-Interruptible Load loss that occurs through manual (operator initiated) or automatic operations such as under-voltage Load shedding, under-frequency Load shedding, or Special Protection Systems would be considered Non-Consequential Load Loss~~.		
Arkansas Electric Coop. Corp.	B — Unsure about supporting the revised standard	I have a growing concern that the NERC Reliability Standards are not going far enough to ensure adequate and reliable service to customers and users of the BES. Each revision of the standards seem to be driven by the need to preserve the integrity of the grid and preventing cascading blackouts but stop short of ensuring that load continues to be served under contingency conditions and adequate grid capacity is available. For the customers and end users of the system if their load is allowed to be dropped or can not be served because of the lack of capacity then the BES is not reliable. The definitions of Consequential Load Loss and Non-Consequential Load Loss concern me the most. How these definitions are then applied in the tables is also a great concern. Hopefully my previous comments to the other questions in the comment form provide explanation. Another concern I have is the fact that I tried to provide comments last fall to draft 1 of the standards and they were not allowed. After following the instructions provided I provided my comments before the deadline. I later discovered they were not posted. After repeated attempts asking NERC to determine why my comments were not received and posted and showing evidence that they had been provided by the deadline, the only response I received was pretty much "sorry Charlie". Mistakes happen. NERC should be big enough to admit when they make a mistake instead of just blowing them off. I have no way of knowing if or how many times this may have happened before. I am not trying to say that anything malicious was intended, however it does leaves me with concern that fair treatment is being given to all comments and cast a shadow over confidence in the standards approval process.
Response: The SDT is striving to develop a standard that appropriately supports BES reliability and has industry consensus. The SDT believes that your concerns are mostly addressed by the revised Table 1 - Steady State and Stability Performance, along with the revised definitions of Non-Consequential Load Loss and Consequential Load Loss in the updated draft of TPL-001 standard. **Consequential Load Loss:** ~~Load that is no longer connected to a source as a result of the event being studied or which is lost as a result of the load's response to the transient conditions of the event (other than through the action of UVLS or UFLS schemes). Although Load which is lost as a result of the Load's response to the transient conditions of the event is considered Consequential Load Loss and is permitted when Consequential Load Loss is allowed,~~		

Organization	Question 15:	Question 15 Comments:
~~Transmission planning entities are not allowed to rely upon the expectation of such Load loss to meet steady state performance requirements.~~ All Load that is no longer served by any Transmission Facilities as a result of the Facilities being removed from service by a planned Protection System operation to isolate fault conditions. **Non-Consequential Load Loss:** Non-Interruptible Load loss other than Consequential Load Loss, Supplemental Load Loss, and Load Reduction.~~. For example, non-Interruptible Load loss that occurs through manual (operator initiated) or automatic operations such as under-voltage Load shedding, under-frequency Load shedding, or Special Protection Systems would be considered Non-Consequential Load Loss~~. Comments from AECI were included in the responses to the comments from the first posting. Please go back and review the posted comment form.		
Midwest ISO	C — Definitely do not support the revised standard	We appreciate the hard work of the SDT and understand the difficulty of this task. We applaud the efforts to improve the standard. However, in its present state, in general the revised standard fails in one if its primary stated goals: create a "clear and concise standard". While some of the ideas are an improvement, overall the standard is very meandering and it makes it difficult to figure out what the requirements are for a particular analysis type without flipping back and forth between the scattered requirements. For example R2 addresses various aspects of both Near and long term studies, steady state, short circuit, stability, on peak, off peak and other topics. Then there are separate sections (R3, 4, 5) that speak to the various analysis types again. It probably makes sense to the SDT that has evolved with the drafts and discussions, but when you pick it up it is very confusing. One thing that would help greatly would be to label the major Requirements sections to convey the organization of the document. If the SDT made a topical outline of the standard by major Requirement this could help the team organize the standard better. Resulting topical headers may look something like the following for example, R1: ModelingR2: Study Types and Assessment RequirementsR3: Steady State Analysis MethodsR4: Short Circuit Analysis Methods?R5: Stability Analysis Methods Etc. If it has not been done (and it looks like it has not), the SDT should consider having the language reviewed by the NERC or other legal team. Language that seems clear to experienced engineers may not be precise as is critical for standards that carry monetary penalties. An independent review by a non-engineer lawyer would help greatly. Of course, the SDT would then have to undo some damage that would undoubtedly be done to context by the lawyers - but the pass through legal would be a good step.? ? Other concerns:? P5 requires testing for a single component failure within a Protection System. What is this referencing? How can a PC/TP be expected to be intricately aware of protection systems and effects of single component failures? Under 2.7.2, there is a generic requirement to expand a list of possible corrective actions under 2.7.1 for any sensitivities under R2.1.3, 2.1.4, 2.4.3 and 2.4.4. This is very open ended and subject to interpretation. How can an auditor review such requirements with consistency?
Response: The SDT has attempted to make the latest draft more clear and concise - such as condensing Table 1 and 2 into a single table. The SDT has considered having headers/labels in the document and these are strongly discouraged by NERC's legal staff. The overall format of the tables has been modified to make it more reader friendly. NERC is following the officially sanctioned standards development process with regard to this project just as it follows the process for all standards development		

Organization	Question 15:	Question 15 Comments:
work. This is an open, transparent process which has been approved by FERC. Review and comment by any entity's legal staff is welcome, but not a required part of the process. The description of the P5 event has been clarified in draft 3 to address your concern. Requirement R2.7.2 has been removed. The SDT has modified Requirement R2.7 (now R2.6) to clarify that Correction Action Plans do not need to be developed solely to meet the performance requirements for sensitivities run in accordance with Requirements R2.1.3 and R2.4.3. **R2.6** For Planning Events shown in Table 1~~ – Steady State Performance and Table 2 – Stability Performance~~, when the analysis indicates an inability of the System to meet the performance requirements in ~~the t~~Table~~s~~ 1, the Planning Assessment shall include Corrective Action Plans addressing how the performance requirements will be met. Revisions to the Corrective Action Plans are allowed in subsequent assessments but the System shall continue to meet the performance requirements in the tables. Corrective Action Plans do not need to be developed solely to meet the performance requirements for sensitivities run in accordance with Requirements R2.1.3 and R2.4.3. The Corrective Action Plan shall:		
Tri-State Generation and Transmission Association, Inc.	A — Generally support the revised standard	We appreciate the efforts of the SDT, considering the difficulty of the task that was and is before them. Our biggest concern is potential confusion regarding sensitivity studies. Secondly, we absolutely must make the Performance Table completely clear and concise. Additional work now will pay big dividends later. Thirdly, there is some ambiguity of several terms used in the Standard that prevents exact interpretation of significant portions of the Standard. Here are a few additional comments we hope the SDT will find helpful: It may simplify considerations of assessments and modeling work to define ?assessment? as including written documentation. Then the Standard would not need to separately include "and shall include written documentation" in the body of the standard titles. Also, the SDT should make it clear that "assessment" is what is required; that annual re-study analysis may not necessarily be required. Thanks to the SDT for keeping this feature. It will greatly simplify our work, and should speed the audit process as well. There seems to be some ambiguity between either 1) requiring specific years to be studied and 2) leaving timeframe selection to the TP. Assessment for year One or Two (R2.1.1) may be performed by either the TOP or the TP. Studies of year One or year Two are generally considered to be operating studies and should probably not be required in TPL-001-1. Also in R2.1.1, year Five is specified as a required study year. No matter what the requirement says, the TP will need to assess performance for critical timeframes. This would lead to additional study if year four were the critical year for example. And for sensitivity studies of delayed facilities (R2.1.3.3) additional study years might be required. Perhaps a reasonable compromise would be to require something in the 2 to 5-year timeframe, and something in the 6 to 10-year timeframe. For coordination with regional study groups in our area, one would logically choose year 5 and year 10, but the specific choice should be up to the TP (and PC if any). Sole-Customers on radial service who are responsible for facility upgrades should be allowed to elect a lower reliability

Organization	Question 15:	Question 15 Comments:
		than the rest of the system. It seems that operating scenarios required to be studied by TOP should not need study in the planning horizon by the TP, and should be excluded from this standard. Specific comments concerning other sections of the draft standard: 1. In the definition of Generating Stability Study, we suggest "the lack of damping" be changed to "damping" 2. In R2.1 title, please move listed requirements in the second sentence to sub-requirements (they are already there). 3. In R2.1 title sentence, the term "annual current" presents two additional requirements. We suggest those words be deleted. 4. In R2.1, delete the end of the title sentence, ending the sentence with "the following studies" 5. In R2.1.3.2, the meaning of "transfer" is not clear. 6. In R2.1.3.4, the term "variability" is not clear. do you mean "Operating Capability"? 7. In R2.1, R2.2 and 2.4, the phrase "Near Term (or Long Term) Transmission Planning Horizon portion of the" could be omitted. "Near Term" and "Long Term" study horizons should just be specified as sub-requirements of Steady State, Stability, and Short Circuit 8. In R2.7.3, the term "identified System Facilities" is not clear. System Additions? 9. Heading R3.3 is not needed. Renumber section sub headings to 3.2.3, etc.

Response: In response to industry comments regarding sensitivity studies, the SDT has made changes to Requirements R2.1.3 and R2.4.3 and each of their sub-requirements to clarify expectations related to sensitivity studies.

R2.1.3 For each of the studies described in Requirements R2.1.1 and ~~Requirement~~ R2.1.2, sensitivity case(s) that are intended to stress the System with ~~sensitivities~~ variations ~~that reflect~~ in one or more of the following conditions not already included in the studies shall be ~~run and documentation of the technical rationale for why each of the conditions was or was not selected shall be supplied~~ included in the Assessment:

R2.4.3 For each of the studies described in Requirements R2.4.1 and ~~Requirement~~ R2.4.2, ~~s~~ensitivity case(s) that are intended to stress the System with variations ~~to reflect~~ in one or more of the following conditions not already included in the studies shall be ~~run and documentation of the technical rationale for why each of the conditions was or was not selected shall be supplied~~ included in the Assessment:

The SDT also feels that the Tables need to be as clear and concise as possible. To that end, the next version will combine Tables 1 and 2 into one table with a revised format.

The SDT crafted the definition of Planning Assessment using the term "documented" instead of "written" such that an assessment can be either in written or

Organization	Question 15:	Question 15 Comments:
electronic format. Requirement R2 states that the assessment is to be performed annually. The SDT chose the Year One definition such that this would be out of the operational planning horizon and into the planning horizon. The SDT chose the years to be studied such that both the Near-Term and Long-Term Planning Horizons would be adequately studied and has not seen a sufficient number of comments to warrant changing the requirements. . Sole-customers who are responsible for facility upgrades are allowed to elect lower reliability than the rest of the system if those customers have signed an Interruptible Load contract arrangement. The SDT believes that all significant probable Contingencies over a wide range of operating conditions should be studied. 1. The definitions for both Generating Unit Stability Study and System Stability Study have both been removed and these Stability areas have been combined into just one Stability area. 2, 3, and 4. The SDT disagrees with the proposed changes and believes that compliance with Requirement R2.1 can be shown through the use of both current and past studies. 5. The SDT believes that "transfers" is generally understood to mean electric power that is transferred or moved from one area to another, and as such, has not added a definition of transfers. 6. The SDT has revised the language to replace "variability" with reactive resources "capability". ~~Variability and outages of r~~Reactive resource~~s~~ capability. 7. The SDT believes that the format and the language of these requirements are appropriate and no additional changes are needed. 8.,The SDT received only a single comment regarding use of the terms "identified System Facilities" and therefore believes the proposed language is clear and appropriate. "Identified System Facilities" are those new or modified facilities which were identified in previous Corrective Action Plans. 9. Requirement R3.3 has been removed and replaced with additional language in Requirement R3.1. **R3.1** Studies shall be performed to determine whether the BES meets the performance requirements in Table 1~~— Steady State Performance.~~ based on the lists created in Requirement R3.5.		
Lakeland Electric	B — Unsure about supporting the revised standard	Curtailing firm transmission should explicitly be a viable option when preparing for the next contingency if the previous contingency and a credible next contingency call for curtailing firm transactions for reliabilities sake. Not allowing for firm transmission curtailment in this case seems to be a market requirement driving a reliability requirement. Determining the duration of consequential load loss (R3.3.2.1) is impractical as the root cause of the event vice the defined event type (e.g. - loss of line) determines the duration of the outage. A line can be outaged by a temporary lock out of protection device or 15 spans of a line might be destroyed by fire. The difference between the two make determination of duration impractical.

Organization	Question 15:	Question 15 Comments:
		System peak Load (R2.1.1) needs to specify if it is the specific year, season or historical peak demand. Forecasting methodologies affect the system peak load that is projected. Differences between a 50/50 and 80/20 case will result in different forecast peak data.
Response: Footnote # 10 has been added to the end of Table 1 to reflect that curtailment or interruption of Firm Transmission Service will be allowed in preparation for the next Contingency. However, until the next Contingency occurs, System performance will need to meet the requirements for Event P1. As such, the proposed standard will not allow loss of any Non-Consequential Load, except for contracted Interruptible Loads, in preparation for the next Contingency. **Footnote #10** – Curtailment of firm transmission service, when coupled with the appropriate re-dispatch of resources obligated to re-dispatch, is allowed both as a System adjustment (as identified in the column titled 'Initial System Conditions') and a corrective action, where it can be demonstrated that Facilities remain within applicable Facility Ratings and those adjustments do not result in the shedding of any firm Load. Where limited options for re-dispatch exist, sensitivities associated with the availability of those resources must be considered. Where Facilities external to the Transmission Planner's planning region are relied upon, Facility Ratings in those regions must be considered. To meet industry concern as well as FERC Order 693, the SDT has added Requirement R2.8 to identify the event causing the single largest Consequential Load Loss Demand and its value and eliminate the reporting of the expected duration. Requirement R3.3.2.1 has been removed from the draft. **R2.8** The Planning Assessment shall provide the largest Consequential Load Loss (megawatt Demand) and the associated event caused by any P1 event and any P2 event in Table 1. The SDT intentionally provides flexibility for the Transmission Planner/Planning Coordinator to decide which Load forecasting methodology to use. The required studies and sensitivity analysis ensures that sufficient study is performed to cover an appropriate range of System conditions.		
Southern Company Transmission	C — Definitely do not support the revised standard	Category P6 is the loss of a system element, followed by system adjustments, followed by the loss of another element. The table columns for this category say that interruption of firm transmission service is allowed. The table, however, is not clear whether the interruption of firm service is allowed as part of the system adjustment (between the outages) or whether it is only allowed after the second outage. It was stated in the NERC TPL SDT WebEx (August 26, 2008) that the interruption is not allowed as part of the system adjustment. If this is the interpretation, this will cause Southern Company to not support the revised standard. This would be a dramatic change from the existing standard and would result in the unintended consequence of significantly reducing transmission system capability to accommodate firm transmission service including reduction of transfer capability of interfaces to a fraction of their currently reported capability. This would in effect be imposing an n-2 criteria for offering firm transmission service. This would not be an acceptable situation for the users, owners and operators of the bulk power system. In addition, the standard should clarify the accommodation of Conditional Firm Service as defined by FERC Order 890.
Response: The SDT agrees that clarification regarding treatment of Firm Transmission Service and Non-Consequential Load Loss during adjustment is		

Organization	Question 15:	Question 15 Comments:
necessary. Footnote 10 in draft 3 of the Standard provides clarification. **Footnote #10** – Curtailment of firm transmission service, when coupled with the appropriate re-dispatch of resources obligated to re-dispatch, is allowed both as a System adjustment (as identified in the column titled 'Initial System Conditions') and a corrective action, where it can be demonstrated that Facilities remain within applicable Facility Ratings and those adjustments do not result in the shedding of any firm Load. Where limited options for re-dispatch exist, sensitivities associated with the availability of those resources must be considered. Where Facilities external to the Transmission Planner's planning region are relied upon, Facility Ratings in those regions must be considered.		
Brazos Electric Power Cooperative, Inc.	C — Definitely do not support the revised standard	Our biggest concern is the apparent lack of experience or understanding in the repercussions of including so many required studies and detailed documentation. And to what end? The amount of data that would be required to be saved will be so voluminous no one could go through it all to make any meaningful determination in a timely fashion. It's one thing to study every possible combination of outage but you then have to do something with the results, not just record them somewhere because a standard requires it. On the other hand some progress is being made in removing some of the more ambiguous or useless items so we are getting there to some degree. Deleting 1.1.2, 1.1.3, 2.7.3, 2.7.4, and 5.4 are good starts. However it appears some things were added that are just confusing or are unnecessary. 5.5.2 seems to simply restate the obvious intent of the section, to meet the performance requirements so its not really needed. Phrases such as "document why categories were NOT selected" are intuitively obvious. Categories were not selected because, in the judgment of the TP or PC, they were not deemed useful to study so why document this each time. R6 is also a confusing addition to this Standard and we aren't sure what it's intended to require. Use of the word "proxies" is probably not the best substitute for what was intended. We suggest R6 be deleted as well.
Response: The SDT has received many comments regarding the increased planning requirements to meet the proposed standard. However, the SDT believes that the requirements for sensitivity studies must remain to satisfy FERC Order 693. FERC has stated that the sensitivity studies would be used to document the selection of critical System conditions and study years used in assessing System conditions (see paragraph 1704) and that System conditions are as important as Contingencies in evaluating the performance of present and future Systems (paragraph 1705). Neither FERC, nor the SDT, believes that every possible combination outage needs to be analyzed for every System condition, but FERC expects those that produce the most severe reliability impacts should be documented (paragraph 1706). In response to industry comments, Requirement R5.5 has been deleted since Generating Unit Stability is no longer explicitly addressed in the standard. The SDT agrees and has deleted the phrase from Requirements R2.1.3 and R2.4.3. **R2.1.3** For each of the studies described in Requirements R2.1.1 and ~~Requirement~~ R2.1.2, sensitivity case(s) that are intended to stress the System with ~~sensitivities~~ variations ~~that reflect~~ in one or more of the following conditions not already included in the studies shall be ~~run and documentation of the technical~~		

Organization	Question 15:	Question 15 Comments:
~~rationale for why each of the conditions was or was not selected shall be supplied~~ included in the Assessment: **R2.4.3** For each of the studies described in Requirements R2.4.1 and ~~Requirement~~ R2.4.2, ~~s~~ensitivity case(s) that are intended to stress the System with variations ~~to reflect~~ in one or more of the following conditions not already included in the studies shall be ~~run and documentation of the technical rationale for why each of the conditions was or was not selected shall be supplied~~ included in the Assessment: The industry did not seem to find usage of "proxies" in Requirement R6 (now R5) unclear or confusing. Therefore, the SDT has determined that no change to Requirement R6 is needed with regard to the use of proxies.		
LCRA TSC	A — Generally support the revised standard	LCRA had a comment on the first posting stating that the loss of any two Transmission circuits on a common structure should be viewed as a single contingency as a single component failure (tower, shield wire, conductor, hardware) could in-fact lead to the loss of two circuits. In the second draft, this outage is still being viewed as a Multiple Contingency (P7). At the same time, the loss of a tower line with three or more circuits is being viewed as an Extreme Event, when the same single failure could lead to the loss of multiple circuits. So, even if a double circuit outage is viewed as a Multiple Contingency, shouldn't a multiple circuit outage be viewed the same. In the Definitions of Terms Used in Standard, Extreme Event is defined as Events which are more severe and have a lower probability of occurrence than Planning Events. What is a "lower probability of occurrence"? Is this to be determined by each TP or TO? How is this probability determined? Are we to assume from this definition that we can use probabilistic planning to determine which Events should be studies even at the N-1 level?
Response: The SDT does not believe that the loss of a tower line with three or more circuits is similar in probability to two circuits on a common structure. Therefore, it is appropriate to classify the events differently. The SDT views "lower probability of occurrence" events as those events that occur much less often than Planning Events. The SDT does not intend for this probability to be determined by each utility. The SDT desires that Extreme Events be studied - but do not necessarily have to have Corrective Action Plans.		
NERC and Regional Coordination	C — Definitely do not support the revised standard	Changes should be made to the sensitivity analysis. See question 10 above. R2.6 - The need to restudy previously studied years should be left to the transmission planner when in their judgment there is a material change. Based on the material change the TP should be responsible for determining what aspects of the performance requirements need to be proven
Response: Please see the response to question 10. The SDT believes that past studies must be five calendar years old or less to be relevant and the associated models should not have had material changes. Requirement R2.5 and its sub-requirements have been removed from the proposed standard. Guidelines for the use of past studies to support the Planning Assessment have been added to what is now Requirement R2.5.2. The SDT did not want to be overly prescriptive when describing the type of changes that could be considered material and has left the text general. It is up to the Transmission Planner and Planning Coordinator to provide specificity as to what type of		

Organization	Question 15:	Question 15 Comments:
topology changes constitutes changes sufficient to warrant re-evaluation. **R2.5.2** For steady state, short circuit, ~~Generating Plant Stability,~~ or ~~System~~ Stability analysis: the ~~study~~ present System model shall not include any material changes, such as, generation or Transmission additions/removals, or topology changes that have occurred in the intervening period and would impact the study area. Material generation changes could include:		
IESO	A — Generally support the revised standard	(i) We generally support the direction and principle of the revised standard. It is a step in the right direction to more clearly stipulate the types of events and expected performance requirements with inclusion of multiple element contingencies and multiple single contingencies, and allowance for interruptions to firm transmission services and non-consequential load loss. (ii) More details and refinements are expected to be provided that address the issue of sensitivity testing, reduce the number of layers in the subrequirements (to facilitate ease of developing Measures and Violation Severity Levels), more clearly specify the responsible entities, etc. We look forward to seeing these improvements in the next revision, along with the first draft of Violation Risk Factors, Time Horizons, Measures, Data Retention Periods, and Violation Risk Factors when the requirements approach their near final draft form. (iii) We suggest the SDT review the development plan with the Standard Process Manager, especially the timing for posting the standard for balloting, responding to comments and conducting recalculating ballot. The timing between the initial ballot and recirculation ballot is usually short, and the balloted standard is not supposed to change. The proposed development plan appears to allow a long lead time between the two ballots, and for making changes to the standard between them.
Response: i. Thank you for your comments. ii. The SDT has streamlined the document and the tables to add clarity and has added the elements that were missing from the previous drafts. VRF, tec., have been added to the 3rd draft. iii. All development plans are reviewed with the Process Manager prior to finalization as per established procedure.		
North Carolina Electric Membership Corp	B — Unsure about supporting the revised standard	While we are satisfied that the changes are moving in the right direction, we share concerns that are being expressed by other SERC TPs and PCs that the standard may be overly prescriptive in some areas such as the sensitivities being required.
Response: The SDT agrees and has clarified the language to allow the Transmission Planner and Planning Coordinator to choose the sensitivities (Requirements R2.1.3 & R2.4.3).		

Organization	Question 15:	Question 15 Comments:
R2.1.3 For each of the studies described in Requirements R2.1.1 and ~~Requirement~~ R2.1.2, sensitivity case(s) that are intended to stress the System with ~~sensitivities~~ variations ~~that reflect~~ in one or more of the following conditions not already included in the studies shall be ~~run and documentation of the technical rationale for why each of the conditions was or was not selected shall be supplied~~ included in the Assessment: **R2.4.3** For each of the studies described in Requirements R2.4.1 and ~~Requirement~~ R2.4.2, ~~s~~ensitivity case(s) that are intended to stress the System with variations ~~to reflect~~ in one or more of the following conditions not already included in the studies shall be ~~run and documentation of the technical rationale for why each of the conditions was or was not selected shall be supplied~~ included in the Assessment:		
E.ON U.S. Transmission Planning	C — Definitely do not support the revised standard	It is confusing that single Contingency and multiple Contingency are used throughout the document when the Categories in Tables 1 and 2 are Single Contingency and Multiple Contingency. Also System normal, normal conditions and Normal System are spread throughout the document. If they all mean the same, use the same wording. If not, explain the difference. R2.4.1. - Does this apply only to motors directly connected to the BES? Is there a size (hp/MW) limit? Who is responsible to provide this data to the Planning Coordinator? I would think it would both the Distribution Providers or the Generator Owners but R9 & R12 do not mention this. R2.4.1 refers to ?the dynamic behavior of Loads? and induction motor loads. How would this model data be developed, and by who? R2.5.2. - Define “Material”. Is an addition of a load tap point material? R2.6.2. ? Define ?study area?. Does a topology change over 300 miles away trigger a stability study for a generating plant? R2.7.1.1. ? Define ?project initiation date?. Would this include going to the PSC to get approval or just when construction begins? R3.2.1 states ?? and identify how the generators are treated in the steady state simulation.? What is meant by ?treated?? I request the use of more descriptive wording. R3.2.2 states ?? and identify how loadability is treated in the steady state simulation.? What is meant by ?treated?? I request the use of more descriptive wording. R3.3.1 “System normal” is a Planning Event included in Table 1. R3.3.2 capitalize ?Single? if you referring to P1 and P2 events. If not, this is confusing. R3.3.2.1 states ?Consequential Load loss (expected maximum demand and expected duration) following a single Contingency shall be identified in the Planning Assessment.? Quantification of expected duration requires a probability analysis of load cycles, repair time, and potentially of other factors that will be difficult, if not impossible, to develop with any confidence. The Planning Assessment is based on a deterministic evaluation. Requiring the expected duration is

Organization	Question 15:	Question 15 Comments:
		inconsistent and useless. R3.3.2.2 Is this the intent? ? Following Single Contingency events, Transmission configuration changes and redispatch of generation can be simulated to return the system to Normal Rating provided that all Facilities shall be operating within their Emergency Rating. R5.3 states ?? and identify how the generators are treated in the simulation.? What is meant by "treated"? I request the use of more descriptive wording. R5.5.1 and R5.5.2 should be moved to 2.5. These requirements outline the generators and the sensitivities to be analyzed. R5 appears to focus on Tables 1 and 2. R5.5.2 states ?Shall be performed for changes in the real power output?? What types of ?changes?, or ?changes? due to what? Is intention of the requirement, that Generating Unit Stability be assessed at two levels of real power output that differ by more than 10% of the existing capability or more than 20 MW, whichever is greater? R6 states ?? and document the proxies used in the simulation?.? What is meant by ?proxies?? I request the use of more descriptive wording. R8 ends with ?This distribution shall include:? Include what? Table 1 There used to be limits on multiple circuit towers and common ROW greater than 1 mile. Is this left to the Transmission Planner and Planning Coordinator ? Extreme Events ? Item 3b is the same as Item 1, this should be removed. Table 2 Note 5.a.ii How can this be applied when the largest unit in the Balancing Authority Area is larger than the contingency reserve of the Balancing Authority. This requirement is excessive. At some level, subsequent trips of generators and/or lines should be allowed as long as Cascading does not occur.

Response: The row headers are capitalized in the Table. Please note that the two Tables have been changed to just one Table in this draft.

R2.4.1 – The SDT does not believe the requirement applies only to motors directly connected to the BES, nor is there a specific hp/MW limit. In response to comments from you and others in the industry, the SDT has removed Requirements R9-R14 and enhanced Requirement R1 to more clearly specify the modeling information needed to support accurate Planning Assessments.

R1 Each Transmission Planner and Planning Coordinator shall maintain System models for performing the studies needed to complete their Planning Assessment. The models shall use data consistent with the data provided in accordance with ~~Requirements R9 through R14,~~ the MOD-010 and MOD-012 standards~~,~~ and other data sources,~~.~~ and shall simulate projected System conditions including requirements of regulatory authorities and other legal obligations.

R2.4.1 – Requirement R2.4.1 has been modified to clarify expectations regarding load modeling for dynamics studies.

R2.4.1 System peak Load for one of the five years. For peak System Load levels, a Load model shall be used which appropriately represents the dynamic behavior of Loads, including consideration of the behavior of induction motor Loads. An aggregate system Load model which represents the overall dynamic

Organization	Question 15:	Question 15 Comments:

behavior of the Load is acceptable.

R2.5.2 – Requirement R2.5 and its sub-requirements have been removed from the proposed standard.

R2.6.2 (now R2.5.2) –The SDT believes that it is up to the Planning Coordinator and Transmission Planner to define the study area and to determine which System changes could impact the study area

R2.7.1.1 (now R2.6.2)– The SDT has not defined a project initiation date and will leave that definition to be determined by the Transmission Planner and Planning Coordinator.

R3.2.1 – "Identify how generators are treated" means that you identify at what voltage you would believe that the generator would trip. Any time you run a dynamic simulation or a steady state simulation and you don't trip the generator, you are implicitly assuming that it will ride through the voltage excursion obtained in the simulation. The requirement is to identify what you are assuming for voltage ride-through criteria for the generators you have modeled.

R3.2.2 – The SDT has changed 'treated' to analyzed'. .

R3.3.2 For all generators, studies shall consider the minimum steady state voltage limitations ~~of all generators~~ and identify how the generators are ~~treated~~ analyzed in the steady state simulation.

Requirement R3.3.1 has been removed and replaced with additional language in Requirement R3.1.

R3.1 Studies shall be performed to determine whether the BES meets the performance requirements in Table 1~~ – Steady State Performance.~~ based on the lists created in Requirement R3.5.

R3.3.2 – This requirement was deleted.

R3.3.2.1 **-** To meet industry concern as well as FERC Order 693, the SDT has added Requirement R2.8 to identify the event causing the single largest Consequential Load Loss Demand and its value and eliminate the reporting of the expected duration. Requirement R3.3.2.1 has been deleted in favor of new Requirement R2.8.

R2.8 The Planning Assessment shall provide the largest Consequential Load Loss (megawatt Demand) and the associated event caused by any P1 event and any P2 event in Table 1.

R3.3.2.2 - Based on your comment, the SDT has addressed the applicable time-limited rating in what was Header note 'a' for Steady State Only in Table 1 - Steady State & Stability Performance. Requirement R3.3.2.2 has been deleted in favor of Header note 'e' in the revised Table. Please note that the two tables in the second draft have been reduced to one table in the third draft.

Header note 'e' - For all Planning Events, planned System adjustments such as Transmission configuration changes and redispatch of generation are allowed if such adjustments are executable within the time duration applicable to the Facility Ratings.

R5.3 - The SDT agrees that the word "treated" is vague and has revised Requirement R5.3 (now Requirement R4.3.2) and Requirement R3.2.2 (now R3.3.3) to clarify the requirement.

Organization	Question 15:	Question 15 Comments:
R3.3.3 For all Transmission lines, studies shall consider relay loadability and identify how loadability is ~~treated~~ analyzed in the steady state simulation. **R4.3.2** ~~Studies shall consider~~ Simulate generator performance under anticipated conditions including how the voltage ride through capability ~~of all generators and identify how the generators are treated~~ is analyzed~~in the simulation~~. R5.5.1 & R5.5.2 - In response to industry comments, both Requirement R2.5 and Requirement R5.5 have been deleted since Generating Unit Stability is no longer explicitly addressed in the standard. R6 (now R5) - Most of the industry did not find usage of "proxies" in Requirement R6 unclear or confusing. Therefore, the SDT has determined that no change to Requirement R6 is needed with regard to proxies. R8 - The incomplete sentence was a typo and has been deleted from Requirement R8. Footnote 12 has been added to Table 1 to address your comment on the exclusion criterion for multiple circuit towers. **Footnote 12** - Excludes circuits that share a common structure for 1 mile or less. The SDT agrees with removing the redundancy found with Extreme Event 3.b. Please see footnote 1.a.ii for clarification. **Footnote 1.a.ii -** For all other Planning Events: No generating unit or units totaling more than the Contingency ~~r~~Reserve of the Balancing Authority (or Reserve Sharing Group if applicable) shall be allowed to pull out of synchronism. Generators that pull out of synchronism must have out-of-step protection or some other means to trip the generator for this condition and the resulting apparent impedance swings must not pass through relay characteristics that would result in the tripping of any Transmission System elements other than the generating unit and its direct connection Facilities.		
ERCOT System Planning	C — Definitely do not support the revised standard	The NERC reliability standard requirements should represent the minimum studies necessary to achieve reliability given the broad range of entities of various sizes and capabilities. Instead, the standards seem to represent the gold standard of the kind of studies that could be accomplished (steady-state, short circuit, and stability) given infinite time and resources with the number and variety of contingencies and sensitivities necessary. This level of steady state and stability studies can only be undertaken by the larger entities with a deep and experienced engineering staff. Why are most of the requirements applicable to a Transmission Planner and Planning Coordinator? Unless they are the same entity, this is an unnecessary duplication of effort. If a Planning Coordinator has a number of Transmission Planners in its region, then these requirements have to be fulfilled by each Transmission Planner for its individual area and the Planning Coordinator for the region made up of the individual areas? What is the Planning Coordinator coordinating if it is duplicating the work of the Transmission Planner?
Response: The SDT is striving to develop a standard that appropriately supports BES reliability and has industry consensus. The SDT is cognizant of the cost factors involved here and is taking them into consideration in its deliberations. This standard does not represent the gold standard, but rather the SDT is developing a standard based on consensus industry support.		

Organization	Question 15:	Question 15 Comments:
The SDT recognizes that the Transmission Planner and Planning Coordinator must work closely together as defined in the NERC functional model. The Transmission Planner and Planning Coordinator should closely coordinate all work to avoid any unnecessary duplication. Requirement R6 has been included in the standard to ensure that Planning Assessments are complete and coordinated in situations where the Transmission Planner and Planning Coordinator are not the same entity**.**		
American Transmission Company	B — Unsure about supporting the revised standard	We agree with most of the requirements of revised standard. However, the following list of suggestions and comments are given for consideration. Definitions: We agree with the removal of the "Base Case" definition and the revisions to the other definitions, except as noted above or below. Long Term Planning Horizon definition: We suggest a slight text change of: "Transmission planning period that covers years six through ten. Studies beyond ten years are required to accommodate . . .". Accountability: We suggest that Transmission Service Provider be added because we also suggest that the Transmission Service Provider be the responsible entity for R10. Requirements: We agree with the revisions to the Requirements, except as noted above or below. R1.1 - We agree with the requirement, but would like more description of what to provide in the technical rationale. R2.1 - We agree with the requirement, but suggest this text change, ". . . by the following annual studies . . .". R2.6.1 - We agree with the requirement, but suggest a slight text change of: " . . . short circuit, Generating Unit Stability or System Stability analysis . . .". R2.6.2 - We agree with the requirement, but suggest a slight text change of: " . . . short circuit, Generating Unit Stability or System Stability analysis . . .". R2.7 - We agree with the requirement, as long as it is really required by FERC Order 693 paragraph 1704. R2.7.1 - We agree with the requirement, but suggest a slight text change of: " . . . or Special Protection Systems, . . ." R2.7.1.1 - We disagree with the "include project initiation date" portion of this requirement. The initiation date is often uncertain and subject to change, which may add considerable work to investigate, monitor and update the date. In addition, we do not know why this information is required to assure BES reliability. R2.7.2 - We agree with the requirement, as long as it is really required by FERC Order 693 paragraph 1704. R3.2.2 - We agree with the requirement, but suggest a slight text change of: "For all BES Transmission lines . . .". R3.3.2.1 - We agree with the requirement, but suggest a slight text change of: ". . . shall be allowed in the Planning

Organization	Question 15:	Question 15 Comments:
		Assessment". R3.3.2.2 - We agree with the requirement, but suggest a slight text change of: ". . . within their Facility Ratings and within the time period allowed by the applicable time limited ratings.". R5 - Is the text referring to "known planned outages" and "known long term outages"? What is the distinction that is meant to be made between the two specified types of outages? R5.1 - We agree with the requirement, but suggest a slight text change of: ". . . the response of the applicable portion of the BES". R5.2 - This clarifying requirement should also be included in the short circuit analysis section. R5.3 - We agree with the requirement, but suggest a slight text change of: ". . . capability of all generators that may have a significant adverse effect on the BES." R5.4.3.1 - We agree with the requirement, but suggest a slight text change of: ". . . within their Facility Ratings and within the time period allowed by the applicable time limited ratings.". R8 - We disagree with the requirement, but suggest a text change of: "Each Planning Coordinator shall establish a list of neighboring system and coordinate the distribution of Planning Assessment results among affected entities the listed neighboring systems, coordinating analysis of these results through an open and transparent peer review process." Table 1Planning Events Header: We suggest that the header be repeated on every applicable page to be more reader-friendly. Superscripts: The superscripts do not refer clearly to the respective notes (e.g. there are number notes in the beginning of the table, in the extreme events evaluation requirements section, in extreme event description section, and at the end of the table). Perhaps the notes at the end of the table should have unique numbering to make the superscript references clearer. Shunt device: To avoid the need for future interpretation or clarification, we suggest that the meaning of shunt device be explained or defined somewhere in the standard (e.g. cap bank, inductor bank, SVC, STATCOM, etc.). We need to find out how shunt device outages can (or could in the future) be automatically included in the ACCC routine. We interpret that if each stage of a capacitor bank has a circuit switcher, then the outage would be of the largest cap bank stage. P2.2 (>300 kV), P2.3(>300 kV), P3 (>300 kV), P4 (>300 kV), P5 (>300 kV) - We recognize that the addition of this requirement is an attempt top raise the bar above the existing standards. However, the more stringent performance criteria should only be adopted if there is sufficient evidence to demonstrate the expected reliability risk (i.e. system impact x probability of occurrence) is high enough to warrant the cost of the system modifications that would be needed to meet the criteria. System modifications that involve the installation of line and substation facilities >300 kV will likely take years and cost tens to hundreds of millions to build. It would be helpful to have a reliability risk analysis that justifies the application of

Organization	Question 15:	Question 15 Comments:
		this performance criteria before it is adopted. If the proposed >300 kV performance requirement is retained, then we would want the implementation timeframe to be long enough to allow reasonable time to transition from a system built to the old requirement to a system built for the new requirement. The time needed for planning, design engineering, regulatory approvals, and construction of >300 kV facilities can be very long (e.g. up to 10 or more years). P7 - We disagree with this requirement. Wisconsin statues require giving preference to using existing ROW for new transmission circuits, but this requirement discourages building multiple circuits on common ROW. Should there be a waiver in this standard similar to the TLP-503-MRO-1 standard for lines slightly more than 1 mile based on a review? Extreme Event Evaluation Requirements2 - We agree with the requirement, but perhaps a definition be added for "System Controls", since one exists for "System Protection". 3 - We agree with the requirement, but suggest a slight text change of: "Simulate Normal Clearing unless otherwise specified in the Extreme Event Descriptions." Extreme Event Descriptions2a - We agree with the description, but suggest a slight text change of: "Loss of a structure or tower line with three or more circuits.." 2b & 3b - We agree with the descriptions, but suggest referring to the defined term: "Right-of-Way." 2e, 3.a.i, & 3.a.ii - We agree with the description a, but how large is "large" and how major is "major"? 3.a.v - What is meant by successful cyber attack? Is it a type of cyber attack that is documented to have been successful? 3c - We agree with the description, but suggest a slight text change of: "Other events based upon actual operating experience such as:" Note 4 - We agree with the description, but the acronym FACTS should be explained in the standard or a definition be added for "FACTS". Table 21 - We disagree with this note. We suggest that it be expanded to include the applicable part as Table 1. "The System shall remain stable. In addition, Facility Equipment Ratings shall not be exceeded. Planned System adjustments are allowed, unless precluded in the Requirements, to keep Facilities within the Facility Ratings, if such adjustments are executable within the time duration applicable to the Facility Ratings." 3 - We disagree with this note. We suggest that it be expanded to include the applicable part as Table 1. "Dynamic voltage instability, Cascading outages, and uncontrolled islanding shall not occur." Between 3 & 4 - We disagree with omitting Note 4 of Table 1 from Table 2. We suggest including: "Consequential Load and consequential generation loss is allowed for all events shown." Planning Events Same comments on Header, Superscripts, and Shunt Device as in Table 1.Same comments about stricter requirements for P2.2 (>300 kV), P2.3 (>300 kV), P3 (>300 kV), P4 (>300 kV), P5 (>300 kV) as in Table 1.Same comment

Organization	Question 15:	Question 15 Comments:
		about P7 as in Table 1.Extreme Event Evaluation Requirements Same comment about Requirement 2 and 3 as in Table 1. 3 - We agree with the requirement, but suggest a slight text change of: "Simulate Normal Clearing unless otherwise specified in the Extreme Event Descriptions." Notes5 - We disagree with limiting this requirement to just Category P1 category. We suggest that the synchronism requirement be applied to more categories.

Response: The SDT believes that a review of system conditions beyond the 10-year horizon is warranted. FERC Order 693 requires that the planning horizon take into account the lead times for siting and permitting of new long-distance Transmission lines and other long lead time solutions. The SDT has received industry comments regarding the need to exceed a 10-year horizon to account for longer lead time projects. Establishing planning horizons that are shorter than Transmission lead times may create gaps where the identification of a reliability need to which Transmission may be the best solution occurs too late to avert the identified reliability violation. Further, Operating Procedures or alternative short-term capital projects may be needed to limit the impact of the Planning Event until the planned Facilities can be completed. This information needs to be included in the Assessment.

In response to industry comments, the SDT has removed Requirements R9-R14 thus eliminating any need to add the Transmission Service Provider.

R1.1 - The SDT agrees and has removed the need for documentation of the technical rationale for modification of any data.

R2.1 - The SDT believes that the existing language is appropriate and there needs to be a distinction between current and past studies that would allow both to support compliance with the requirement.

R2.6.1 & R2.6.2 - Based on comments from others, the SDT has removed the requirements for separate Generating Unit Stability analysis and System Stability analysis.

R2.7 (now R2.6) – The SDT believes that it is.

R2.7.1 (now R2.6.1) - The SDT agrees with the proposed change.

Installation or modification of Protection Systems or Special Protection Systems.

R2.7.1.1 (now R2.6.2) - The SDT believes that a project initiation date is an effective measure to track a functional entity's planning and engineering activities and their efforts to provide and maintain a reliable BES.

R2.7.2 – Requirement R2.7.2 has been deleted.

R3.2.2 - The Purpose section of the Standard states that this Standard is to develop requirements for the Bulk Electric System, BES. No change required.

R3.3.2.1 – Requirement R3.3.2.1 has been deleted in favor of new Requirement R2.8 which includes the term 'Planning Assessment'.

R2.8 The Planning Assessment shall provide the largest Consequential Load Loss (megawatt Demand) and the associated event caused by any P1 event and any P2 event in Table 1.

Organization	Question 15:	Question 15 Comments:

R3.3.2.2 - Based on your comment, the SDT has addressed the applicable time-limited rating in what was Header note 'a' for Steady State Only in Table 1 - Steady State & Stability Performance. Requirement R3.3.2.2 has been deleted in favor of Header note 'e' in the revised Table. Please note that the two tables in the second draft have been reduced to one table in the third draft.

Header note 'e' - For all Planning Events, planned System adjustments such as Transmission configuration changes and redispatch of generation are allowed if such adjustments are executable within the time duration applicable to the Facility Ratings.

R5 - The SDT agrees and has moved this concept within Requirement R1 (see Requirement R1.1.1) so that it is applicable to all Planning Assessments. Further, both Requirements R3 and R5 (now R4) have been revised to make reference to Requirement R1.

R1 Each Transmission Planner and Planning Coordinator shall maintain System models for performing the studies needed to complete their Planning Assessment. The models shall use data consistent with the data provided in accordance with ~~Requirements R9 through R14,~~ the MOD-010 and MOD-012 standards~~,~~ and other data sources.~~.~~ and shall simulate projected System conditions including requirements of regulatory authorities and other legal obligations.

R3. For the steady state portion of the Planning Assessment, each Transmission Planner and Planning Coordinator shall perform analysis for the Near-Term and Long-Term Transmission Planning Horizon studies in Requirement R2.1 and Requirement R2.2. ~~The studies shall be based on computer power flow simulations that analyze BES normal performance (n-0) and System response to c~~Contingencies in Table 1 ~~– Steady State Performance.~~ The studies shall be based on computer simulations using models utilizing data provided in Requirement R1.

R4. For the Stability portion of the Planning Assessment, as described in Requirement R2.4 ~~and Requirement R2.5~~, each Transmission Planner and Planning Coordinator shall perform the Contingency analyses listed in Table ~~2~~1 ~~– Stability Performance~~. The studies shall be based on computer simulations using models utilizing data provided in Requirement R1. ~~The studies shall be based on computer simulations using models utilizing data provided in Requirements R9 through R14, the MOD-010 and MOD-012 standards, and other data sources, to include known planned and long term outages of Transmission or generation equipment. The studies shall cover both System Stability and Generating Unit Stability. The following requirements apply to both System Stability and Generating Unit Stability studies unless otherwise noted.~~

R5.1 - Most of the industry did not have difficulty understanding that the analysis is limited to the Transmission Planner's or Planning Coordinator's portion of the BES. Therefore, the SDT is not persuaded by your comment to add extra wording.

R5.2 - The SDT has moved the short circuit analysis from Requirement R4 to Requirement R2.7 and R2 already references BES.

R5.3 - The SDT disagrees with the suggested change due to the additional studies that would be required to determine which generators would have an adverse impact.

The SDT has deleted R5.4.3.1.

The SDT has clarified this issue in Requirement R8 (now R7).

R7 Each Planning Coordinator shall coordinate the distribution of Planning Assessment results among ~~neighboring systems~~ adjacent Planning Coordinators and any functional entity who has indicated a reliability need, coordinating analysis of these results through an open and transparent peer review process such as described in FERC Order 890.

Organization	Question 15:	Question 15 Comments:
Header - The SDT also feels that the Tables need to be as clear and concise as possible. To that end, the next version will combine Tables 1 and 2 into one table with a revised format. The Planning Events are shown on one page so repeating the headings will not be needed. Superscripts - All the notes from both tables have been combined and listed numerically. Shunt device - The SDT believes that shunt device is commonly used in the electric utility industry and does not require any further explanation. The SDT recommends contacting the software manufacturer for additional information about the ACCC routine. The SDT believes that the cap bank outage would be based on what elements would need to trip in order to clear the simulated fault condition. P2 - The SDT is attempting to raise the bar by developing a standard that appropriately supports BES reliability and has industry consensus. The majority of the SDT believes that 300 kV is an appropriate cutoff and that Transmission Systems above this level represent backbone Systems and are part of regional "grids". The SDT is cognizant of the cost factors involved here and is taking them into consideration in its deliberations and has provided for flexibility in Corrective Action Plans. The Implementation Plan will be addressed in the next posting of the standard. P7 - The SDT is cognizant of the concerns surrounding the construction of new Transmission lines, including the desire by many to fully utilize existing Right-of-Ways. In its consideration of Footnote 12 (exclusion for common structures less than 1 mile), the SDT considered the impact that this requirement could have on construction of new Facilities. However, after deliberations, the SDT believes that the 1 mile exclusion should be maintained for the reliability of the BES and that individual exceptions can be addressed within the NERC process. Extreme Events 2 - The SDT agrees that "Protection System" is defined in the Glossary of Terms Used In Reliability Standards. However, the SDT believes that this issue should be more properly addressed by the NERC SPCTF drafting team. 3 - The SDT has previously included "For all Extreme Events evaluated" at the beginning of the Evaluation Requirements for Extreme Events. No change required. 2a - The SDT believes that the Extreme Events #2.a. is already sufficient. 2b - The SDT will use the defined term of "Right-of-Way" as suggested (see 2b steady state and 2 g Stability). 2e et al - The SDT suggests that the terms "large", "major", and "successful" be defined between the Transmission Planner and Planning Coordinator. 3a - The SDT believes that the wording (was 3c) is already sufficient. No change required. Note 4 - The SDT believes that "FACTS" is commonly used in the electric utility industry and does not require any further explanation. Table 21 - The SDT has reviewed your comment and feels that your request to add "Facility Equipment Ratings shall not be exceeded. Planned System adjustments are allowed, unless precluded in the Requirements, to keep Facilities within the Facility Ratings, if such adjustments are executable within the time duration applicable to the Facility Ratings." apply to Stability is not appropriate. For the purposes of this standard, Facility Equipment Ratings refer to steady state calculated values and planned System adjustments refer to the time frame associated with returning the thermal flow within the applicable steady state Facility Rating. 3 - The SDT agrees with your comment and has made that change in Header note ‘a’ in the next version. Also, the next version will combine Tables 1 and 2			

Organization	Question 15:	Question 15 Comments:
into one table with a revised format. 3 & 4 - The SDT has reformatted and combined the two Tables into a single Table for the next draft. 3 – The SDT has already included "For all Extreme Events Evaluated" at the beginning of the Evaluation Requirements for Extreme Events. 5 - The SDT also feels that the synchronism requirement should apply to more than just P1 Category but under certain conditions and has adjusted the notes accordingly. **Footnote 1.a.ii -** For all other Planning Events: No generating unit or units totaling more than the Contingency ~~r~~Reserve of the Balancing Authority (or Reserve Sharing Group if applicable) shall be allowed to pull out of synchronism. Generators that pull out of synchronism must have out-of-step protection or some other means to trip the generator for this condition and the resulting apparent impedance swings must not pass through relay characteristics that would result in the tripping of any Transmission System elements other than the generating unit and its direct connection Facilities.		
Duke Energy	B — Unsure about supporting the revised standard	While we generally support the revised standard, we are unsure of the total cost impact, and whether the additional costs are justified by increased reliability. 1) Load Modeling is a significant open issue. The models for dynamic studies have yet to be developed and the data is not in hand. This standard should allow for the use of the best available information. 2) Category P6 is the loss of a system element, following system adjustments, followed by the loss of another element. The table columns for this category say that interruption of firm transmission service and non-consequential load loss is allowed. The table, however, is not clear whether the interruption of firm service and non-consequential load loss is allowed as part of the system adjustment (between the outages) or whether it is only allowed after the second outage. It was stated in the NERC TPL SDT WebEx that the interruption is not allowed as part of the system adjustment. This would be a dramatic change from the existing standard and would result in the unintended consequence of significantly reducing transfer capability of interfaces to a fraction of their currently reported capability. This would in effect be imposing an n-2 criteria for offering firm transmission service. Duke Energy does not believe this would be an acceptable situation for the users, owners and operators of the bulk power system. 3) The statement in R2.7 "Corrective Action Plans do not need to be developed solely to meet the performance requirements for sensitivities," implies that there are performance requirements for sensitivity studies. Recommend rewording to clarify that there are no performance requirements for sensitivity studies. 4) Recommend rewording R3.3.2.1 as follows: "The single highest consequential load loss and its expected duration following a single contingency shall be documented in the Planning Assessment." 5) In R5.3 the statement, ?and identify how the generators are treated in the simulation,? should be deleted. The word "treated" is vague and typically specific equipment modeling is not identified in studies. The implementation schedule should also take into account the Standard to develop and provide this data is not approved. Since this data is not yet available, please revise the statement as follows: ?Studies shall use the best available information to consider the voltage

Organization	Question 15:	Question 15 Comments:
		ride through capability of all generators." 6) In Table 1, Category P2 Event 1 needs to be revised to recognize the impact of this event on Bulk Electric System reliability for events on the system that are > 300 kV vs. events on the system that are <= 300 kV. P2.1 should not allow for interruption of firm transmission service or loss of non-consequential load for > 300kV; however, it should allow for interruption of firm transmission service or loss of non-consequential load for <= 300 kV. The requirement as currently written would require expenditures for the <= 300 KV system where such an event has minimal impact on Bulk Electric System reliability. In addition, the likelihood of events needs to be considered as requirements are developed. A review of Duke Energy Carolinas data shows that the likelihood of a P2.1 event on Duke's 100 kV system is an order of magnitude less than for a P1 event on the same 100 kV system. This is another indicator that the requirement as written would result in the need for expenditures that provide minimal value to enhancing the reliability of the Bulk Electric System.

Response: The SDT is striving to develop a standard that appropriately supports BES reliability and has industry consensus. The SDT is cognizant of the cost factors involved here and has taken them into consideration in its deliberations in the development of this draft.

1. The SDT agrees and believes that industry guidance is needed to capture the appropriate dynamic behavior of loads. In response to comments from you and others in the industry, the SDT has removed Requirements R9-R14 and enhanced Requirement R1 to more clearly specify the modeling information needed to support accurate Planning Assessments. Requirement R2.4.1 has been modified to clarify expectations regarding Load modeling for dynamics studies.

R1 Each Transmission Planner and Planning Coordinator shall maintain System models for performing the studies needed to complete their Planning Assessment. The models shall use data consistent with the data provided in accordance with ~~Requirements R9 through R14,~~ the MOD-010 and MOD-012 standards~~,~~ and other data sources,~~.~~ and shall simulate projected System conditions including requirements of regulatory authorities and other legal obligations.

R2.4.1 System peak Load for one of the five years. For peak System Load levels, a Load model shall be used which appropriately represents the dynamic behavior of Loads, including consideration of the behavior of induction motor Loads. An aggregate system Load model which represents the overall dynamic behavior of the Load is acceptable.

2. The SDT agrees that clarification regarding treatment of Firm Transmission Service and Non-Consequential Load Loss during adjustment is necessary. Footnote 10 in the Revision 3 of the Standard provides clarification.

Footnote #10 – Curtailment of firm transmission service, when coupled with the appropriate re-dispatch of resources obligated to re-dispatch, is allowed both as a System adjustment (as identified in the column titled 'Initial System Conditions') and a corrective action, where it can be demonstrated that Facilities remain within applicable Facility Ratings and those adjustments do not result in the shedding of any firm Load. Where limited options for re-dispatch exist, sensitivities associated with the availability of those resources must be considered. Where Facilities external to the Transmission Planner's planning region are relied upon, Facility Ratings in those regions must be considered.

3. The SDT has modified the language dealing with the sensitivities in Requirement R2.7 (now R2.6) and added the phrase "run in accordance with Requirements R2.1.3 and R2.4.3." However, the performance requirements for sensitivity studies are the same as the performance requirements for the base study. The difference is that a Corrective Action Plan is required when performance requirements are not met in the base study. A Corrective Action Plan is not

Organization	Question 15:	Question 15 Comments:
necessarily required when the performance requirements are not met for a sensitivity study. **R2.6** For Planning Events shown in Table 1~~— Steady State Performance and Table 2 — Stability Performance~~, when the analysis indicates an inability of the System to meet the performance requirements in ~~the t~~Table~~s~~ 1, the Planning Assessment shall include Corrective Action Plans addressing how the performance requirements will be met. Revisions to the Corrective Action Plans are allowed in subsequent assessments but the System shall continue to meet the performance requirements in the tables. Corrective Action Plans do not need to be developed solely to meet the performance requirements for sensitivities run in accordance with Requirements R2.1.3 and R2.4.3. The Corrective Action Plan shall: 4. To meet industry concern as well as FERC Order 693, the SDT has added Requirement R2.8 to identify the event causing the single largest Consequential Load Loss Demand and its value and eliminate the reporting of the expected duration. Requirement R3.3.2.1 has been removed from the draft. **R2.8** The Planning Assessment shall provide the largest Consequential Load Loss (megawatt Demand) and the associated event caused by any P1 event and any P2 event in Table 1. 5. The SDT has revised Requirement R5.3 (now R4.3.2) to provide clarification in this area. **R4.3.2** ~~Studies shall consider~~ Simulate generator performance under anticipated conditions including how the voltage ride through capability ~~of all generators and identify how the generators are treated~~ is analyzed~~in the simulation~~ 6. The SDT feels that for this event (explained in detail in footnote 8 of draft 3 of this Standard) interruption of neither firm nor Non-Consequential Load should be allowed for any BES voltage level, i.e., above or below 300 kV. This is consistent with FERC Order 693 that does not allow dropping of Non-Consequential firm Load following any single Contingency.		
Florida Reliability Coordinating Council, inc	C — Definitely do not support the revised standard	The SDT should consider and allow, for all planning events, , loss of Non-Consequential load as an interim measure for a period of up to 5 years in the situation where system load growth has caused post-contingency action plans to not effectively bring Facilities within normal operating limits due to unexpected or unforeseen regulatory requirements, equipment capability* and/or the installation of large industrial/commercial customers. *Equipment Capability is added to address unforeseen industry changes in the methodology used to calculating the rating of equipment.
Response: Some commenters expressed concern with the inability to shed Non-Consequential Load in response to a single Contingency event. It was indicated that some stakeholders rely on an SPS to drop local area network Load in response to some single Contingency events and that these System designs are permissible under the presently approved TPL-002-0 standard. FERC in Order 693 was clear in paragraph 1794 that that interruption of Non-Consequential Load is not permitted for single Contingency events. This position was vetted in draft 1 of TPL-001-1 and most stakeholders and the SDT support this position. The use of an SPS design would be permitted for a single Contingency event if the SPS design interrupts service to customers involved in an Interruptible Load contract arrangement.		
Central Maine Power	B —Unsure about supporting the	Aside from the comments to the prior questions, there are several issues of concern that prevent us from supporting the present draft of the revised standard. We offer the following constructive comments in an effort to support the worthwhile effort that is being pursued so that we can reach a point of satisfaction that we could vote to support the revised standard.

Organization	Question 15:	Question 15 Comments:
Company	revised standard	Our concerns are listed in a rough order of priority. a. This standard as drafted does not allow exceptions for small parts of the system as long as interconnected system reliability is maintained, which is allowed in the existing TPL standards in footnotes b) and c) in Table 1. Unless such exceptions are allowed significant transfer restrictions or large reinforcements must be made. The applicable TPL footnotes are: Existing TPL footnote b) Planned or controlled interruption of electric supply to radial customers or some local Network customers, connected to or supplied by the Faulted element or by the affected area, may occur in certain areas without impacting the overall reliability of the interconnected transmission systems. To prepare for the next contingency, system adjustments are permitted, including curtailments of contracted Firm (non-recallable reserved) electric power Transfers. Existing TPL footnote c) Depending on system design and expected system impacts, the controlled interruption of electric supply to customers (load shedding), the planned removal from service of certain generators, and/or the curtailment of contracted Firm (nonrecallable reserved) electric power Transfers may be necessary to maintain the overall reliability of the interconnected transmission systems. b. This standard does no address base conditions. Without defining base conditions the initial status of generation dispatch and transfers across the system is ill defined. Therefore the contingency analysis doesn't have a predictable basis for a consistent and repeatable study. c. The reference to Special Protection Systems is completely permissive. Although there are good applications for Special Protection Systems, their use must be constrained to have a reliable system and to promote construction of needed infrastructure. d. This standard does not provide flexibility to shed load, which restricts the ability to control post contingency response for low impact events. This may result in advancing need for upgrades in response to low impact events. This may result in advancing need for upgrades in response to low impact events. This is in conflict with FERC's directive to have the Transmission Provider waiting for market response to transmission needs and having the Transmission Provider provide a role to back stop the market. e. Definition of the Long-Term Planning Horizion. The planning horizion, for assessment purposes should be limited to 10 years. Such an assessment should be sufficient to identify requirements that may take an extended time to implement. f. Definition of Planning Coordinator is part of the NERC Functional Model, Remove from the standard. g. Put headings on each section to identify the requirements of the section. h. With respect to R2.2 - Delete "current" from the phrase "current System Peak Load Study" and replace "study" with "assessment." i. Remove R2.2.1, the requirement to extend the assessment beyond 10 years. What does the length of the project have to do with the assessment? If it takes 15 years to build something, why does this require a review of year 15? What is the

Organization	Question 15:	Question 15 Comments:
		purpose of this assessment? j. R3.3.2 requires clarification - This standard needs to permit discretion regarding the single contingencies that need to be tested, similar to R3.3.3 and R3.4. It is completely unnecessary to test all events. For example, contingencies may be limited to relevant disturbances that are contained within or directly impact the studied system. k. With respect to R3.2.1 - Clarify whether the intent of the standard is to address station service minimum voltage limitation, maximum leading VAR absorption capability or both at steady state. l. Remove R3.2.2 - Relay loadibility is addressed in the PRC-023 Standard. m. With respect to R3.3.2.1 - Recommend the removal of the requirement to assess the expected duration of Consequential Load loss. It's not considered anywhere else in the standard. n. With respect to R3.3.3 - The paragraph refers to Table 1 Contingencies P3 through P7; this should be explicitly stated. Rationale for inclusion of testing should not be required; should only need to explain why certain Contingencies were not tested. This discretion should be applicable to all contingencies. o. With respect to section R5 - The concept of planned and long-term outages should apply to the general Planning Assessment, or not at all. It should not be specific to the Stability Assessment. p. The provisions of Section R5.3 should have a corresponding MOD standard apply a requirement to provide information regarding all direct and indirect protective and control actions that could result in the inadvertent trip of the generator. Such a provision should include "other equipment (e.g. HVDC, SVC's, Statcoms)", and identify how those devices are treated in the simulation. q. Planned outages should be addressed in the operating horizon unless otherwise defined in the planning horizon. r. Recommend allowing the same non-consequential interruption for >300kV as for <300kV. Distinctions and acceptability should be based on consequence, not voltage class. s. What is a "current" study?
ISO New England Inc.	B — Unsure about supporting the revised standard	Aside from the comments to the prior questions, there are several issues of concern that prevent us from supporting the present draft of the revised standard. We offer the following constructive comments in an effort to support the worthwhile effort that is being pursued so that we can reach a point of satisfaction that we could vote to support the revised standard. Our concerns are listed in a rough order of priority. a. This standard as drafted does not allow exceptions for small parts of the system as long as interconnected system reliability is maintained, which is allowed in the existing TPL standards in footnotes b) and c) in Table 1. Unless such exceptions are allowed significant transfer restrictions or large reinforcements must be made. The applicable TPL footnotes

Organization	Question 15:	Question 15 Comments:
		are: Existing TPL footnote b) Planned or controlled interruption of electric supply to radial customers or some local Network customers, connected to or supplied by the Faulted element or by the affected area, may occur in certain areas without impacting the overall reliability of the interconnected transmission systems. To prepare for the next contingency, system adjustments are permitted, including curtailments of contracted Firm (non-recallable reserved) electric power Transfers. Existing TPL footnote c) Depending on system design and expected system impacts, the controlled interruption of electric supply to customers (load shedding), the planned removal from service of certain generators, and/or the curtailment of contracted Firm (nonrecallable reserved) electric power Transfers may be necessary to maintain the overall reliability of the interconnected transmission systems. b. This standard does no address base conditions. Without defining base conditions the initial status of generation dispatch and transfers across the system is ill defined. Therefore the contingency analysis doesn't have a predictable basis for a consistent and repeatable study. c. The reference to Special Protection Systems is completely permissive. Although there are good applications for Special Protection Systems, their use must be constrained to have a reliable system and to promote construction of needed infrastructure. d. This standard does not provide flexibility to shed load, which restricts the ability to control post contingency response for low impact events. This may result in advancing need for upgrades in response to low impact events. This may result in advancing need for upgrades in response to low impact events. This is in conflict with FERC's directive to have the Transmission Provider waiting for market response to transmission needs and having the Transmission Provider provide a role to back stop the market. e. Definition of the Long-Term Planning Horizion. The planning horizion, for assessment purposes should be limited to 10 years. Such an assessment should be sufficient to identify requirements that may take an extended time to implement. f. Definition of Planning Coordinator is part of the NERC Functional Model, Remove from the standard. g. Put headings on each section to identify the requirements of the section. h. With respect to R2.2 - Delete "current" from the phrase "current System Peak Load Study" and replace "study" with "assessment." i. Remove R2.2.1, the requirement to extend the assessment beyond 10 years. What does the length of the project have to do with the assessment? If it takes 15 years to build something, why does this require a review of year 15? What is the purpose of this assessment? j. R3.3.2 requires clarification - This standard needs to permit discretion regarding the single contingencies that need to be tested, similar to R3.3.3 and R3.4. It is completely unnecessary to test all events. For example, contingencies may be limited to relevant disturbances that are contained within or directly impact the studied system.

Organization	Question 15:	Question 15 Comments:
		k. With respect to R3.2.1 - Clarify whether the intent of the standard is to address station service minimum voltage limitation, maximum leading VAR absorption capability or both at steady state. l. Remove R3.2.2 - Relay loadibility is addressed in the PRC-023 Standard. m. With respect to R3.3.2.1 - Recommend the removal of the requirement to assess the expected duration of Consequential Load loss. It's not considered anywhere else in the standard. n. With respect to R3.3.3 - The paragraph refers to Table 1 Contingencies P3 through P7; this should be explicitly stated. Rationale for inclusion of testing should not be required; should only need to explain why certain Contingencies were not tested. This discretion should be applicable to all contingencies. o. With respect to section R5 - The concept of planned and long-term outages should apply to the general Planning Assessment, or not at all. It should not be specific to the Stability Assessment. p. The provisions of Section R5.3 should have a corresponding MOD standard apply a requirement to provide information regarding all direct and indirect protective and control actions that could result in the inadvertant trip of the generator. Such a provision should include "other equipment (e.g. HVDC, SVC's, Statcoms)", and identify how those devices are treated in the simulation. q. Planned outages should be addressed in the operating horizion unless otherwise defined in the planning horizion. r. Recommend allowing the same non-consequential interruption for >300kV as for <300kV. Distinctions and acceptability should be based on consequence, not voltage class. s. What is a "current" study?

Response: A. Some commenters expressed concern with the inability to shed Non-Consequential Load in response to a single Contingency event. It was indicated that some stakeholders rely on an SPS to drop local area network Load in response to some single Contingency events and that these System designs are permissible under the presently approved TPL-002-0 standard. FERC in Order 693 was clear in paragraph 1794 that that interruption of Non-Consequential Load is not permitted for single Contingency events. This position was vetted in draft 1 of TPL-001-1 and most stakeholders and the SDT support this position. The use of an SPS design would be permitted for a single Contingency event if the SPS design interrupts service to customers involved in an interruptible Load contract arrangement.

B. The SDT has modified Requirement R1 to include additional details on what should be modeled in the cases. However, the SDT intentionally provides flexibility for the Transmission Planner/Planning Coordinator to decide which "base case" to use since initial conditions for a System will vary from region to region and will need to be established on a local level, not via a national standard. The required studies and sensitivity analysis ensures that sufficient study is performed to cover an appropriate range of System conditions.

C. The SDT does not believe that it would be appropriate to attempt to specify limitations to the use of Special Protection Systems in this standard. The proposed TPL-001-1 and existing standards provide adequate guidance to the industry on application of Special Protection Systems.

Organization	Question 15:	Question 15 Comments:

D. The SDT has made clarifications regarding Firm Transmission Service and Non-Consequential Load Loss. Footnote # 10 has been added to the end of Table 1. The standard does not preclude the possibility of obtaining contractually interruptible load. It is the general opinion of the SDT that dropping of Non-Consequential Load should not be allowed for the Planning Events involving only one element as described in Table 1 of the proposed Standard, and to meet the intent of FERC Order 693. Further, this Standard is proposed to "raise the bar" to improve System reliability, which would require responses (Corrective Action Plans) to address those so-called low-impact events that may have been overlooked or ignored with the existing Standard TPL-002-0.

Footnote #10 – Curtailment of firm transmission service, when coupled with the appropriate re-dispatch of resources obligated to re-dispatch, is allowed both as a System adjustment (as identified in the column titled 'Initial System Conditions') and a corrective action, where it can be demonstrated that Facilities remain within applicable Facility Ratings and those adjustments do not result in the shedding of any firm Load. Where limited options for re-dispatch exist, sensitivities associated with the availability of those resources must be considered. Where Facilities external to the Transmission Planner's planning region are relied upon, Facility Ratings in those regions must be considered.

E. The SDT believes that a review of System conditions beyond the 10-year horizon is warranted. FERC Order 693 requires that the planning horizon take into account the lead times for siting and permitting of new long-distance Transmission lines and other long lead time solutions. The SDT has received industry comments regarding the need to exceed a 10-year horizon to account for longer lead time projects. Establishing planning horizons that are shorter than Transmission lead times may create gaps where the identification of a reliability need to which Transmission may be the best solution occurs too late to avert the identified reliability violation. Further, Operating Procedures or alternative short-term capital projects may be needed to limit the impact of the Planning Event until the planned facilities can be completed. This information needs to be included in the Assessment.

F. The definition for Planning Coordinator was deleted because the term has already been defined and added to the NERC Glossary by another SDT.

G. The SDT also feels that the Tables need to be as clear and concise as possible. To that end, the next version will combine Tables 1 and 2 into one table with a revised format.

H. The SDT believes that the existing language is appropriate.

I. The SDT believes that a review of System conditions beyond the 10-year horizon is warranted under some circumstances. For example, if it takes 15 years to build a Transmission line, then the need for that line would have to be determined 15 years ahead of the in-service date. Therefore, Requirement R2.2.1 requires you to perform an Assessment on year 15 if it takes you 15 years to build a line.

J. The SDT has removed Requirement R3.3.2 and replaced it with additional language in Requirement R3.1. The SDT does agree with your interpretation that it does not require evaluation of all single Contingencies. The SDT specifically states in **R**equirement R3.4 that those Contingencies that are expected to produce the more severe System impacts shall be identified, evaluated for System performance, and the rationale for the Contingencies selected for evaluation shall be available as supporting information and shall include an explanation of why the remaining Contingencies would produce less severe results.

R3.1 Studies shall be performed to determine whether the BES meets the performance requirements in Table 1~~ – Steady State Performance.~~ based on the lists created in Requirement R3.5.

K. The SDT has not limited the purpose of this requirement to either minimum acceptable station service voltages or maximum Mvar absorption. The SDT believes that the purpose of Requirement R3.2.1 is to determine if generators could continue to operate or if they would trip off following the Contingency.

Organization	Question 15:	Question 15 Comments:

L. The SDT believes that relay load limits or loadability need to be considered in the Contingency analyses. The studies should determine if Transmission line loadings could reach the relay loadability level, which may add to the existing Contingency and perhaps, result in an unbounded cascading event.

M. To meet industry concern as well as FERC Order 693, the SDT has added Requirement R 2.9 to identify the event causing the single largest Consequential Load Loss Demand and its value and eliminate the reporting of the expected duration. Requirement R3.3.2.1 has been deleted in favor of new Requirement R2.9.

R2.9 The Planning Assessment shall provide the largest Consequential Load Loss (megawatt Demand) and the associated event caused by any P1 event and any P2 event in Table 1.

N. The SDT has re-written Requirement R3.3 (now Requirement R3.5) to address your initial concern. Although the language and format of the proposed Standard have been revised from earlier versions, the SDT continues to believe that the Transmission Planners should evaluate the System performance for the events that are expected to produce the more severe System impacts, including both single and multi-Contingency events. The wording of new Requirement R3.5 (the old Requirement R3.3.3) now requires a listing of the Contingencies to be evaluated, the rationale for their selection and why the remaining Contingencies would be expected to produce less severe results. This will provide a complete evaluation of the potential Contingencies to be studied – those selected and those excluded.

R3.5 Those Planning Event Contingencies in Table 1 ~~– Steady State Performance not covered in Requirement R3.3.2~~ that are expected to produce more severe System impacts shall be identified~~,~~ and a list of those Contingencies to be evaluated for System performance in Requirement R3.1 created~~,~~. ~~and t~~The rationale for the Contingencies selected for evaluation shall be available as supporting information and shall ~~includ~~include~~e~~ an explanation of why the remaining Contingencies would produce less severe System results.

O. The SDT agrees and has moved this concept within Requirement R1 (see Requirement R1.1.1) so that it is applicable to all planning Assessments. Further, both Requirement R3 and Requirement R5 have been revised to make reference to Requirement R1.

R1.1.1 Planned outages of generation and Transmission Facilities, if specifically known.

R3. For the steady state portion of the Planning Assessment, each Transmission Planner and Planning Coordinator shall perform analysis for the Near-Term and Long-Term Transmission Planning Horizon studies in Requirement R2.1 and Requirement R2.2. ~~The studies shall be based on computer power flow simulations that analyze BES normal performance (n-0) and System response to c~~Contingencies ~~in Table 1 – Steady State Performance.~~ The studies shall be based on computer simulations using models utilizing data provided in Requirement R1.

R5 For the Stability portion of the Planning Assessment, as described in Requirement R2.4~~ and Requirement R2.5~~, each Transmission Planner and Planning Coordinator shall perform the Contingency analyses listed in Table ~~2~~1 ~~– Stability Performance~~. The studies shall be based on computer simulations using models utilizing data provided in Requirement R1. ~~The studies shall be based on computer simulations using models utilizing data provided in Requirements R9 through R14, the MOD-010 and MOD-012 standards, and other data sources, to include known planned and long term outages of Transmission or generation equipment. The studies shall cover both System Stability and Generating Unit Stability. The following requirements apply to both System Stability and Generating Unit Stability studies unless otherwise noted.~~

P. Requirement R5.3 has been modified to address simulation of how generators perform under conditions being studied. The current MOD standards that address steady-state and dynamic simulation data requirements do not explicitly require the Generator Operators to provide voltage ride-through capability.

Organization	Question 15:	Question 15 Comments:
These standards are set to be addressed by Project 2010-04 within NERC's Standards Development Work Plan. It is expected that the Transmission Planner would contact Generator Operators applicable to their System to obtain such data. If the data is not provided, it would be expected that a Transmission Planner state its assumption on the Vmin used for a generator terminal voltage for assessing ride-through capability. It's likely such information could be obtained through generator manufacturers. The "Other equipment" is addressed in the revised R5.4. Q. The SDT agrees and therefore has changed R1.1.1 to state "if specifically known." R. FERC order 693 (see paragraphs 342, 1792, 1794) suggests that Non-Consequential Load loss for single Contingencies is unacceptable. Note from paragraph 1792 of order 693: "We view these arguments as based largely on the matter of economics, not reliability, with the underlying premise that it is not economically feasible to invest in the bulk electric system to the point that it can continue service to all firm load customers under some specific N-1 scenarios." The fact that the table allows Load loss for some "lower probability" N-1 events (some P2 events) for any Transmission voltage is recognition by the SDT that probability impacts both costs and practicality. S. The SDT believes that a current study is a study that has been completed for the latest Assessment, as opposed to a past study that may have been completed up to five years ago.		
NSTAR Electric	B — Unsure about supporting the revised standard	Aside from the comments to the prior questions, listed below are several others issues: 1. This standard does not address base conditions regarding generation dispatch and transfers across the system. Initial condition guidelines would be very important to establishing consistent application of the performance standards. 2. This standard should allow exceptions for loss of small parts of the system as long as reliability is maintained on the interconnected BES. There is such an allowance in the existing TPL standards in Table 1, footnotes b) and c). 3. The reference to Special Protection Systems is too permissive. The use of Special Protection Systems and their inherent complexity should be restricted to ensure a reliable system and to promote construction of needed infrastructure. 4. The Long-Term Planning Horizon should be limited to 10 years, a sufficient timeframe to identify requirements that may take an extended time to implement. 5. Definition of Planning Coordinator is part of the NERC Functional Model. It should be removed from the TPL standard. 6. Put headings on each section to identify the requirements of the section. 7. With respect to R2.2, delete "current" from the phrase "current System Peak Load Study" and replace "Study" with "Assessment." 8. R3.3.2 should be changed to permit discretion regarding the single contingencies that need to be tested, similar to R3.3.3 and R3.4. It is unnecessary to test all possible events. 9. R3.2.1 should be clarified as to whether the intent of the standard is to address station service minimum voltage

Organization	Question 15:	Question 15 Comments:
		limitation, maximum leading VAR absorption capability or both. 10. Remove R3.2.2. Relay loadibility is addressed in the PRC-023 Standard. 11. In R3.3.2.1, remove the requirement to assess the expected duration of Consequential Load loss. This requirement is unnecessary and not considered anywhere else in the standard. 12. With respect to R3.3.3, the paragraph refers to Table 1 Contingencies P3 through P7; this should be explicitly stated. Also, the rationale for inclusion of testing should not be required. It only makes sense to explain why certain Contingencies were not tested. This discretion should be applicable to all contingencies in all sections of the standard.

Response: 1. The SDT has modified Requirement R1 to include additional details on what should be modeled in the cases. However, the SDT intentionally provides flexibility for the Transmission Planner/Planning Coordinator to decide which "base case" to use since initial conditions for a System will vary from region to region and will need to be established on a local level, not via a national standard. The required studies and sensitivity analysis ensures that sufficient study is performed to cover an appropriate range of System conditions.

2. Some commenters expressed concern with the inability to shed Non-Consequential Load in response to a single Contingency event. It was indicated that some stakeholders rely on an SPS to drop local area network Load in response to some single Contingency events and that these System designs are permissible under the presently approved TPL-002-0 standard. FERC in Order 693 was clear in paragraph 1794 that that interruption of Non-Consequential Load is not permitted for single Contingency events. This position was vetted in draft 1 of TPL-001-1 and most stakeholders and the SDT support this position. The use of an SPS design would be permitted for a single Contingency event if the SPS design interrupts service to customers involved in an Interruptible Load contract arrangement. As an alternative, an entity could seek an Entity Variance for the situation described through their Regional Entity organization. In paragraph 1794 FERC clarified that "…an entity may seek a regional difference to the Reliability Standard from the ERO for case-specific circumstances". The process described by FERC as a regional difference is described in detail in the "NERC Standards Development Procedure" document under the subsection titled "Variances to NERC Reliability Standards".

3. The SDT does not believe that it would be appropriate to attempt to specify limitations to the use of Special Protection Systems in this standard. The proposed TPL-001-1 and existing standards provide adequate guidance to the industry on application of Special Protection Systems.

4. The SDT believes that a review of System conditions beyond the 10-year horizon is warranted. FERC Order 693 requires that the planning horizon take into account the lead times for siting and permitting of new long-distance Transmission lines and other long lead time solutions. The SDT has received industry comments regarding the need to exceed a 10-year horizon to account for longer lead time projects. Establishing planning horizons that are shorter than Transmission lead times may create gaps where the identification of a reliability need to which Transmission may be the best solution occurs too late to avert the identified reliability violation. Further, Operating Procedures or alternative short-term capital projects may be needed to limit the impact of the Planning Event until the planned Facilities can be completed. This information needs to be included in the Assessment.

5. The definition for Planning Coordinator was deleted because the term has already been defined and added to the NERC Glossary by another SDT.

6. The SDT has considered this action but NERC's legal staff advised against using headings in the body of standards.

Organization	Question 15:	Question 15 Comments:
7. The SDT believes that the existing language is appropriate. 8. The SDT has removed the Requirement R3.3.2 and replaced it with additional language in Requirement R3.1. The SDT does agree with your interpretation that it does not require evaluation of all single Contingencies. The SDT specifically states in Requirement R3.4 that those Contingencies that are expected to produce the more severe System impacts shall be identified, evaluated for System performance, and the rationale for the Contingencies selected for evaluation shall be available as supporting information and shall include an explanation of why the remaining Contingencies would produce less severe results. **R3.1** Studies shall be performed to determine whether the BES meets the performance requirements in Table 1~~ – Steady State Performance.~~ based on the lists created in Requirement R3.4. 9. The SDT has not limited the purpose of this requirement to either minimum acceptable station service voltages or maximum Mvar absorption. The SDT believes that the purpose of Requirement R3.2.1 (now R3.3.2) is to determine if generators could continue to operate or if they would trip off following the contingency. 10. The SDT believes that relay load limits or loadability need to be considered in the Contingency analyses. The studies should determine if Transmission line loadings could reach the relay loadability limits, which may add to the existing Contingency and perhaps, result in an unbounded cascading event. 11. To meet industry concern as well as FERC Order 693, the SDT has added Requirement R2.8 to identify the event causing the single largest Consequential Load Loss Demand and its value and eliminate the reporting of the expected duration. Requirement R3.3.2.1 has been removed from the draft. **R2.8** The Planning Assessment shall provide the largest Consequential Load Loss (megawatt Demand) and the associated event caused by any P1 event and any P2 event in Table 1. 12. Although the implied assumption that the more severe impacts would be identified in the P3 through P7 Contingencies, there may be exceptions and the SDT does not believe it necessary to modify the language in this regard. The wording of new Requirement R3.~~5~~ 4 (the old Requirement R3.3.3) now requires a listing of the Contingencies to be evaluated, the rationale for their selection and why the remaining Contingencies would be expected to produce less severe results. This will provide a complete evaluation of the potential Contingencies to be studied – those selected and those excluded. **R3.4** Those Planning Event Contingencies in Table 1 ~~– Steady State Performance not covered in Requirement R3.3.2~~ that are expected to produce more severe System impacts shall be identified~~,~~ and a list of those Contingencies to be evaluated for System performance in Requirement R3.1 created~~,~~. ~~and t~~The rationale for the Contingencies selected for evaluation shall be available as supporting information and shall ~~includ~~include~~e~~ an explanation of why the remaining Contingencies would produce less severe System results.		
SERC Reliability Review Subcommittee and Planning Standards Subcommittee		C. Definitely do not support the revised standard. A majority of SERC technical experts do not support the revised standard. The primary concern is that the need for additional requirements for planning 300kV systems and above has not been demonstrated. We do not believe that a sufficient case for ?raising the bar? has been provided and that this requirement can have a huge impact on utilities and ratepayers. R2.1.3 and R2.4.3 requirements are very prescriptive. Many examples of sensitivities are already inherent in the existing requirements. Some sensitivity studies are in effect adding an additional level of contingency (N-2 or N-3). Sensitivity studies of load variation are already inherent in the fact that several different study years and conditions are already being

Organization	Question 15:	Question 15 Comments:
		required. Outages of reactive sources and generation should already be included in studies of multiple contingencies. The process of planning new generation (system impact studies) will include studies of the future with and without the proposed new equipment. The TP and PC can better select the most appropriate sensitivities for their system. We recommend that engineering judgment continue to be recognized as a vital component of planning. Category P6 is the loss of a system element, followed by system adjustments, followed by the loss of another element. The table columns for this category say that interruption of firm transmission service is allowed. The table, however, is not clear whether the interruption of firm service is allowed as part of the system adjustment (between the outages) or whether it is only allowed after the second outage. It was stated in the NERC TPL SDT WebEx (August 26, 2008) that the interruption is not allowed as part of the system adjustment. This would be a dramatic change from the existing standard and would result in the unintended consequence of significantly reducing transmission system capability to accommodate firm transmission service including reduction of transfer capability of interfaces to a fraction of their currently reported capability. This would in effect be imposing an n-2 criteria for offering firm transmission service. This would not be an acceptable situation for the users, owners and operators of the bulk power system. Additional Comments: There is concern with load modeling requirements (use of word ?appropriately? in R2.4.1). Does this requirement mandate the use of specific load models for each bus, or would an aggregate load model which represents the system as a whole be sufficient? Does the use of the PSS/E CONL function satisfy the requirements for a load model? There is a concern that R3.3.2.1 is burdensome regarding the need to keep track of the quantity of consequential load loss and expected duration. Who is collecting this information and why is it needed? It appears that this is a local regulatory issue, not a reliability issue. There is a concern with R5.6.1 with the requirement to perform simulations on 20 MW generators (to be consistent with the Registration Criteria). We recommend a 75 MW generator cutoff for required simulations.

Response: The SDT is attempting to raise the bar by developing a standard that appropriately supports BES reliability and has industry consensus. The majority of the SDT believes that 300 kV is an appropriate cutoff and that Transmission Systems above this level represent backbone Systems and are part of regional "grids". The SDT is cognizant of the cost factors involved here and is taking them into consideration in its deliberations and has provided for flexibility in corrective action plans. FERC has noted in their orders that many of the concerns about raising the bar show more concern about economics than reliability (examples, Order 890, paragraph 423; Order 693, paragraph 1792, etc.).

The SDT agrees and have clarified the language to allow the Transmission Planner and Planning Coordinator to chose the sensitivities (Requirements R2.1.3 & R2.4.3)

R2.1.3 For each of the studies described in Requirements R2.1.1 and ~~Requirement~~ R2.1.2, sensitivity case(s) that are intended to stress the System with ~~sensitivities~~ variations ~~that reflect~~ in one or more of the following conditions not already included in the studies shall be ~~run and documentation of the technical rationale for why each of the conditions was or was not selected shall be supplied~~ included in the Assessment:

Organization	Question 15:	Question 15 Comments:
R2.4.3 For each of the studies described in Requirements R2.4.1 and ~~Requirement~~ R2.4.2, ~~s~~ensitivity case(s) that are intended to stress the System with variations ~~to reflect~~ in one or more of the following conditions not already included in the studies shall be ~~run and documentation of the technical rationale for why each of the conditions was or was not selected shall be supplied~~ included in the Assessment: The SDT agrees that clarification regarding treatment of Firm Transmission Service and Non-Consequential Load Loss during adjustment is necessary. Footnote 10 in the Revision 3 of the Standard provides clarification. **Footnote #10** – Curtailment of firm transmission service, when coupled with the appropriate re-dispatch of resources obligated to re-dispatch, is allowed both as a System adjustment (as identified in the column titled 'Initial System Conditions') and a corrective action, where it can be demonstrated that Facilities remain within applicable Facility Ratings and those adjustments do not result in the shedding of any firm Load. Where limited options for re-dispatch exist, sensitivities associated with the availability of those resources must be considered. Where Facilities external to the Transmission Planner's planning region are relied upon, Facility Ratings in those regions must be considered. The SDT does not believe that specific Load models for each bus are necessary. An aggregate Load model which represents the System behavior as a whole may be used. Requirement R2.4.1 has been revised. The SDT does not believe that the use of PSS/E Activity CONL by itself provides the appropriate representation for dynamic Loads. For example, the SDT believes that using PSS/E Activity CONL is not sufficiently robust to appropriately model summer peak Loads with high concentrations of induction motors during for low voltage/motor stall conditions. A dynamic Load model such as CLOD, in conjunction with Activity CONL to model the non-induction motor load would be required to more accurately assess the system for FIDVR - Fault Induced Delayed Voltage Recovery. **R2.4.1** System peak Load for one of the five years. For peak System Load levels, a Load model shall be used which appropriately represents the dynamic behavior of Loads, including consideration of the behavior of induction motor Loads. An aggregate system Load model which represents the overall dynamic behavior of the Load is acceptable. To meet industry concern as well as FERC Order 693, the SDT has deleted Requirement R3.3.2.1 and replaced it with Requirement R 2.8. The SDT believes that quantifying the single largest Consequential Load Loss and identifying the event causing it provides a useful metric for system performance and reliability. **R2.8** The Planning Assessment shall provide the largest Consequential Load Loss (megawatt Demand) and the associated event caused by any P1 event and any P2 event in Table 1. The requirement for study has been changed to 20 MW for a single generator or for an aggregate of generators. This language is now in Requirement R2.5.2. **R2.5.2** For steady state, short circuit, ~~Generating Plant Stability,~~ or ~~System~~ Stability analysis: the ~~study~~ present System model shall not include any material changes, such as, generation or Transmission additions/removals, or topology changes that have occurred in the intervening period and would impact the study area. Material generation changes could include:		
Oncor Electric Delivery	B — Unsure about supporting the revised	Initially performing outstanding tasks as well as annual maintenance of documentation and regular updates would require extreme significant resources both personal and financial. Transmission Planning to this level requires high level subject matter experts with both specific transmission system knowledge as well as overall industry experience. Considerable expense would also be required to train personal and track activities. The procurement documents necessary to interface

Organization	Question 15:	Question 15 Comments:
	standard	with consultants in this area where "in house" expertise is not available would also be required. Time would also be spent on evaluating new software and analysis tools such as EPRI dynamic models. A phased in approach would be taken to complete the tasks while still performing essential Oncor and ERCOT related activities associated with System Planning.
Response: The SDT has received many comments regarding the increased planning requirements to meet the proposed standard. However, the SDT believes that the requirements for sensitivity studies must remain to satisfy FERC Order 693. FERC has stated that the sensitivity studies would be used to document the selection of critical System conditions and study years used in assessing System conditions (see paragraph 1704) and that System conditions are as important as Contingencies in evaluating the performance of present and future Systems (paragraph 1705). The SDT is striving to develop a standard that appropriately supports BES reliability and has industry consensus. The SDT is cognizant of the cost factors involved and has considered them in its deliberations. The SDT is developing the Implementation Plan and will include it in the next draft of the standard		
FirstEnergy Corp.	A — Generally support the revised standard	1) For this standard, "Protection System" failure should be limited to only relay event failures. 2) R1 ? As stated in our response to Question 5, FE does not support the modeling requirements within the TPL standard and suggest that the SDT remove these requirements. This standard should be viewed on a premise that a valid and appropriate system model exist so that the fundamental focus of the standard is as stated in its purpose statement "Establish Transmission System planning performance requirements... to develop a Bulk Electric System that will operate reliably over a broad spectrum of System conditions." If R1 remains, the phrase "and other data sources" should be removed. 3) R1.1 ? this requirement requires the documentation of ANY data modification. Do you really mean ANY? How much detail is needed in the documentation? Is a line by line comparison of all data values before/after needed or is a general overview discussion sufficient? For instance, FE replaces its system model as shown in the MMWG representation with a more detailed system representation model when performing planning studies. This can included many differences from the MMWG system equivalent. How much documentation is needed in this situation? 4) R2.6 ? This is not a requirement and should be removed and shown as explanatory text (footnote). 5) R3 - Requirement R3.1 is redundant to statements in the text of R3 and R3.3 and R3.4. We suggest that R3.1 be removed. It is suggested that R3.4 be indented and become a R3.3 sub-requirement. R3.5 would be better placed ahead of R3.3 along with the existing R3.2.
Response: 1. The SDT believes that these protection issues will be further clarified by the NERC SPCTF drafting team. The spirit of the TPL standard will remain that Load loss must not be planned for any single failure. 2. The SDT has removed Requirements R9-R14 and enhanced Requirement R1 to more clearly specify the modeling information needed to support accurate Planning Assessments. **R1** Each Transmission Planner and Planning Coordinator shall maintain System models for performing the studies needed to complete their Planning		

Organization	Question 15:	Question 15 Comments:
Assessment. The models shall use data consistent with the data provided in accordance with ~~Requirements R9 through R14,~~ the MOD-010 and MOD-012 standards~~,~~ and other data sources,~~.~~ and shall simulate projected System conditions including requirements of regulatory authorities and other legal obligations. 3. The SDT agrees and has removed the need for documentation of the technical rationale for modification of any data. 4. The SDT disagrees and believes that the format and language of Requirement R2.6 (now R2.5) and its new sub-requirements are appropriate. 5. The SDT has modified the language of Requirement R3.1 and deleted Requirement R3.3 to eliminate the redundancy. **R3.1** Studies shall be performed to determine whether the BES meets the performance requirements in Table 1~~— Steady State Performance.~~ based on the lists created in Requirement R3.5.		
Orlando Utilities Commission	C — Definitely do not support the revised standard	This standard is a definite improvement over the current set of standards. The majority of my comments are on details rather then the overall concept. My single biggest concern is the handling of n-1-1. This represents a significant expense to transmission customers and serious restriction on making firm transmission available, but due to the low probability of these events it would represent little if any practical improvement in customer reliability or grid security.
Response: Please see footnote #10 with regard to N-1-1. The SDT is striving to develop a standard that appropriately supports BES reliability and has industry consensus. The SDT is cognizant of the cost factors involved here and is taking them into consideration in its deliberations. **Footnote #10** – Curtailment of firm transmission service, when coupled with the appropriate re-dispatch of resources obligated to re-dispatch, is allowed both as a System adjustment (as identified in the column titled 'Initial System Conditions') and a corrective action, where it can be demonstrated that Facilities remain within applicable Facility Ratings and those adjustments do not result in the shedding of any firm Load. Where limited options for re-dispatch exist, sensitivities associated with the availability of those resources must be considered. Where Facilities external to the Transmission Planner's planning region are relied upon, Facility Ratings in those regions must be considered.		
Entergy Services, Inc.	C — Definitely do not support the revised standard	No cost-benefit studies have been completed to justify the significant investment and no detailed analysis of the expected reliability impact has been conducted for the Eastern Interconnection. Some research suggests that infrastructure expansion will reduce the number of large BES events, but that each event would impact larger areas with longer restoration times. http://eceserv0.ece.wisc.edu/~dobson/PAPERS/complexsystemsresearch.html Additionally, there is a fatal disconnect between the enhanced reliability standard and the FERC's current standard for selling firm transmission service. A utility cannot be required to build to an N-1-1 standard to satisfy reliability requirements and also be required to sell additional firm transmission service using a lower N-1 reliability standard. Such a situation would create an untenable situation where reliability standards force construction that the utility is then required to make available for sale pursuant to the provisions of the OATT and, once sold in accordance with the OATT, results in the utility being out of compliance with the reliability requirement. Requirement P2.1 in the table will have direct impact on local load reliability but not grid reliability. For example, a long line

Organization	Question 15:	Question 15 Comments:
		in a radial configuration due to a single contingency would only impact the reliability in a local area. Any implementation plan should consider all aspects of obstacles that Transmission owners will encounter including, ROW and land acquisition delays, inflationary impact on raw materials and other resources, capital funding constraints and associated regulatory lag, etc. Category P6 prescribes what is effectively an n-2 criteria for offering firm transmission service by not allowing the curtailment of firm transmission service as a system adjustment. Many areas are limited in how much local generation is available for re-dispatch as a system adjustment and thus compliance would be realized only by costly transmission construction by TPs.
Response: The SDT is striving to develop a standard that appropriately supports BES reliability and has industry consensus. The SDT is cognizant of the cost factors involved here and is taking them into consideration in its deliberations. The SDT agrees that clarification regarding Firm Transmission Service and Non-Consequential Load Loss is necessary. Footnote # 10 has been added to the end of Table 1: **Footnote #10** – Curtailment of firm transmission service, when coupled with the appropriate re-dispatch of resources obligated to re-dispatch, is allowed both as a System adjustment (as identified in the column titled 'Initial System Conditions') and a corrective action, where it can be demonstrated that Facilities remain within applicable Facility Ratings and those adjustments do not result in the shedding of any firm Load. Where limited options for re-dispatch exist, sensitivities associated with the availability of those resources must be considered. Where Facilities external to the Transmission Planner's planning region are relied upon, Facility Ratings in those regions must be considered. The SDT agrees that the Implementation Plan should consider matters you have listed. Nevertheless, the SDT feels that for this event (explained in detail in the footnote 8 of draft 3 of this Standard) interruption of neither firm nor Non-Consequential Load should be allowed for any BES voltage level, i.e., above or below 300 kV. This is consistent with FERC Order 693 that does not allow dropping Non-Consequential firm Load following any single Contingency. The SDT agrees that clarification regarding treatment of Firm Transmission Service and Non-Consequential Load Loss during adjustment is necessary. Footnote 10 in draft 3 of the Standard provides clarification.		
BPA Transmission Reliability Program	B — Unsure about supporting the revised standard	We are unsure about supporting the revised standard. A couple of additional concerns are described below. The purpose of the Standard is not clearly defined. There should be more clarity given to what reliability means in the context of these standards (e.g. minimize load loss for more probable contingencies, etc.). Regarding the terms "interruption of firm transmission service", there needs to be clarification of what "Interruption" means. Does it include curtailment needed after a particular contingency and adjustments? There also needs to be clarification on what "Firm Transmission Service" means. Two points: 1) the NERC definition states "highest quality of service offered to customers under a filed rate schedule that anticipates no planned interruption." The Standard implies anticipation of "unplanned' interruption for certain contingencies. 2) Is this referring to a transmission product as defined in FERC Order

Organization	Question 15:	Question 15 Comments:
		890, or firm transfers modeled for the conditions being studied? One way to interpret the intent, is the firm transfers being modeled for the conditions in the powerflow, to meet demand that would result in load not being served if that firm transfer were curtailed. If there is other generation in the system that could increase to meet the load, if the transfer being modeled is interrupted, then interruption of firm transmission service should be allowed for P1 through P5 contingencies in the table.
Response: The SDT believes that the Purpose under A.3 adequately captures the main intent which is to develop a "Bulk Electric System (BES) that will operate reliably over a broad spectrum of System conditions and following a wide range of probable Contingencies." Footnote # 10 has been added to the end of Table 1 to reflect that curtailment or interruption of Firm Transmission Service will be allowed in preparation for the next Contingency. However, until the next Contingency occurs, System performance will need to meet the requirements for Event P1. As such, the proposed standard will not allow loss of any Non-Consequential Load, except for contracted Interruptible Loads, in preparation for the next Contingency. "Firm Transmission Service" is a NERC defined term and is also addressed by FERC in OATT. **Footnote #10** – Curtailment of firm transmission service, when coupled with the appropriate re-dispatch of resources obligated to re-dispatch, is allowed both as a System adjustment (as identified in the column titled 'Initial System Conditions') and a corrective action, where it can be demonstrated that Facilities remain within applicable Facility Ratings and those adjustments do not result in the shedding of any firm Load. Where limited options for re-dispatch exist, sensitivities associated with the availability of those resources must be considered. Where Facilities external to the Transmission Planner's planning region are relied upon, Facility Ratings in those regions must be considered.		
PPL EnergyPlus	A — Generally support the revised standard	
Response: Thank you for your support.		

Implementation Plan for TPL-001-1

Prerequisite Approvals

There are no other Reliability Standards or Standard Authorization Requests (SARs), in progress or approved, that must be implemented before this standard can be implemented.

TPL-001-1 – Transmission System Planning Performance Requirements

Revision to Sections of Approved Standards and Definitions

There are multiple new definitions in the proposed standard.

Bus-tie Breaker: A circuit breaker that is positioned to connect two individual substation bus configurations.

Consequential Load Loss: All Load that is no longer served by any Transmission Facilities as a result of the Facilities being removed from service by a planned Protection System operation to isolate fault conditions.

Extreme Events: Events which are more severe and have a lower probability of occurrence than Planning Events.

Load Reduction: Load that is still connected to the System, but is reduced due to lower voltage conditions following a Planning or Extreme Event.

Long-Term Transmission Planning Horizon: Transmission planning period that covers years six through ten or beyond when required to accommodate any known longer lead time projects that may take longer than ten years to complete.

Near-Term Transmission Planning Horizon: Transmission planning period that covers Years One through five.

Non-Consequential Load Loss: Non-Interruptible Load loss other than Consequential Load Loss, Supplemental Load Loss, and Load Reduction.

Planning Assessment: Documented evaluation of future Transmission System performance and Corrective Action Plans to remedy identified deficiencies.

Planning Events: Events that require Transmission system performance requirements to be met.

Supplemental Load Loss: Load that is disconnected from the network by end-user equipment responding to post-Contingency System conditions.

Year One: The first year that a Transmission Planner is responsible for assessing. This is further defined as the planning window that begins 12-18 months from the current calendar year.

Compliance with Standards

Standard	Functions That Must Comply With the Associated Requirements	
TPL-001-1 – Transmission System Planning Performance Requirements	Transmission Planner	Planning Coordinator
	X	X

Effective Dates

The effective date is the date entities are expected to meet the performance identified in this standard.

Except as indicated below**,** all Requirements and associated sub-requirements shall become effective 24 months after the first day of the first calendar quarter following applicable regulatory approval. In those jurisdictions where no regulatory approval is required, all requirements go into effect 24 months after Board of Trustees adoption.

TPL-001-0, TPL-002-0a, TPL-003-0a, and TPL-004-0 are being retired as they are replaced in their entirety by TPL-001-1. TPL-005-0 and TPL-006-0 are being retired because their requirements are adequately covered by the revised TPL-001-1 and NERC's Rules of Procedure, Section 800. However, during this 24-month period, all aspects of TPL-001-0 through TPL-006-0 shall remain in effect for compliance monitoring. This 24 month period is to allow entities to develop, perform and/or validate new and/or modified studies, methodologies, assessments, procedures, etc. necessary to implement and meet the TPL-001-1 requirements. The specified effective dates are expected to allow sufficient time for proper assessment of the available options necessary to create a viable Corrective Action Plan that is compliant with the new Standard.

R1. This Requirement is related to maintaining System models and the data needed to do so. This requirement shall become effective 12 months after the first day of the first calendar quarter following applicable regulatory approval. In those jurisdictions where no regulatory approval is required, this requirement goes into effect 12 months after Board of Trustees adoption.

R7. This Requirement identifies an obligation to determine individual and joint responsibilities for performing studies needed to do the Planning Assessment. This requirement shall become effective 12 months after the first day of the first calendar quarter following applicable regulatory approval. In those jurisdictions where no regulatory approval is required, this requirement goes into effect 12 months after Board of Trustees adoption.

TPL-001-1 'raises the bar' in several areas where performance requirements have been changed in the new Standard versus those in existing TPL-001-0, TPL-002-0a, TPL-003-0a and TPL-004-0 because loss of Non-Consequential Load or interruption of firm transfers is no longer allowed for certain events, whereas the existing Standards were interpreted by many to allow such

actions. As shown in Table 1 of TPL-001-1, the performance requirements associated with the following events represent "raising the bar":

- P2-1
- P2-2 (above 300 kV)
- P2-3 (above 300 kV)
- P3-1 through P3-5
- P4-1 through P4-5 (above 300 kV)
- P5 (above 300 kV)

This "raising the bar" is beyond the control of the Transmission Planner and Planning Coordinator and may have significant budget, siting, permitting, and construction impacts on many Transmission Owners. The SDT requested input from industry on the amount of time required to implement the Corrective Action Plans needed to address the 'raise the bar' issues. The SDT has studied the responses and determined that a timeframe coincident with the end of the Near-Term Transmission Planning Horizon would be the appropriate amount of time to implement the changes. Therefore, for 60 months after the first day of the first calendar quarter following applicable approval, Corrective Action Plans applying to performance elements P2-1, P2-2 (above 300 kV), P2-3 (above 300 kV), P3-1 through P3-5, P4-1 through P4-5 (above 300 kV), and P5 (above 300 kV) are allowed to include tripping of Non-Consequential Load or curtailment of Firm Transmission Service (in accordance with Requirement R2.7.4) that would not otherwise be permitted by the requirements of TPL-001-1.

Any entity that cannot fully implement its Corrective Action Plan to eliminate the need to trip Non-Consequential Load or curtail Firm Transmission Service for these performance elements by that date shall self report itself as being unable to meet the performance requirements of the Reliability Standard. The entity will submit a mitigation plan to its Regional Entity outlining the steps it will take to become compliant and the date it anticipates becoming compliant. The Regional Entity and NERC will review the mitigation plan and the Regional Entity/NERC will either approve it or remand it back for changes (this could include dates, steps, etc.). If the mitigation plan is approved by the Regional Entity and NERC and the entity completes the mitigation plan by the date contained within the mitigation plan, no penalties will be assessed. Those entities that do not meet the date outlined in the mitigation plan will begin settlement proceedings at that date.

NERC
NORTH AMERICAN ELECTRIC RELIABILITY CORPORATION

Please **DO NOT** use this form to submit comments. Please use the electronic form located at the site below to submit comments on the 3rd draft of the TPL-001-1 standard for Assess Transmission Future Needs (Project 2006-02). This comment form must be completed by **July 9, 2009.**

http://www.nerc.com/filez/standards/Assess-Transmission-Future-Needs.html

If you have questions please contact Ed Dobrowolski at ed.dobrowolski@nerc.net or by telephone at 609-947-3673.

Background Information

TPL-001-1 Transmission System Planning Performance Requirements

Comments on the second draft of the TPL-001-1 Transmission System Planning Performance Requirements standard were received from the industry through September 29, 2008. The Drafting Team sought and received feedback to 15 questions, and the team appreciates the tremendous industry participation that generated over 500 pages of comments from over 100 organizations. Below is a brief overview of the 3rd draft of the standard highlighting areas where the SDT made changes based on stakeholder feedback from the second posting. The SDT is presenting several new questions to seek the industry's position related to the changes made and to obtain clarifying data that will provide further direction for improvements. The team's objectives remain unchanged - to create a single Transmission planning standard: 1) with clear, concise requirements set at an appropriate level to ensure reliability, and 2) that fully addresses all issues raised by FERC Orders 693 and 890, and industry inputs, including the SAR scope document.

3rd Draft Overview:

1. At first glance the third draft of the standard seems to have been substantially changed; however, this is not the case as the SDT has maintained its vision throughout the process and the changes shown are primarily clarifying in nature.
2. The flow and organization of the standard remain similar to the 2nd draft. However, some changes are noteworthy:
    a. Several definitions were revised or deleted based on industry feedback.
    b. Requirement R1 has been re-constituted to include all modeling/data issues needed for the assessment of Transmission System performance issues within this single Requirement. This change eliminates the need for Requirements R9 through R14.
    c. Assessment of spare equipment strategy has been clarified and merged into Requirement R2.
    d. The short circuit analysis has been moved back into Requirement R2.
    e. The use of an aggregate system Load model has been clarified in Requirement R2.4.1.
    f. How sensitivity studies fit into the overall assessment has been clarified in Requirement R2.4.3.
    g. The separate requirements for generating plant and System Stability have been consolidated into one Stability section.

   h. Qualifications for "past" studies have been further refined.
   i. Requirement R2.6.4 has been added to address situations beyond the control of the planner.
   j. Performance Tables – In response to industry comments, there is now one consolidated Table.

3. Violation Risk Factors (VRF) and Time Horizons were added to the requirements.
4. Measures have been added.
5. Data retention requirements have been added.
6. Violation Severity Levels (VSLs) have been added.
7. An Implementation Plan has been provided.

To facilitate the ability of industry respondents to comment in an orderly fashion and to ease the coordination burden on the SDT in responding to comments, the SDT is asking an all encompassing question for each requirement. This question solicits comments on the requirement text, VRF, Time Horizon, measure associated with the requirement, data retention associated with the requirement, and the VSL associated with the requirement. Please note the numbering below refers to the clean copy of the third posting.

1. Requirement R1 — Please provide any specific comments on the requirement text, VRF, Time Horizon, measure associated with the requirement, data retention associated with the requirement, and/or the VSL associated with the requirement.

   Comments:

2. Requirement R2 — Please provide any specific comments on the requirement text, VRF, Time Horizon, measure associated with the requirement, data retention associated with the requirement, and/or the VSL associated with the requirement.

   Comments:

3. Requirement R3 – Please provide any specific comments on the requirement text, VRF, Time Horizon, measure associated with the requirement, data retention associated with the requirement, and/or the VSL associated with the requirement.

   Comments:

4. Requirement R4 – Please provide any specific comments on the requirement text, VRF, Time Horizon, measure associated with the requirement, data retention associated with the requirement, and/or the VSL associated with the requirement.

   Comments:

5. Requirement R5 – Please provide any specific comments on the requirement text, VRF, Time Horizon, measure associated with the requirement, data retention associated with the requirement, and/or the VSL associated with the requirement.

   Comments:

6. Requirement R6 – Please provide any specific comments on the requirement text, VRF, Time Horizon, measure associated with the requirement, data retention associated with the requirement, and/or the VSL associated with the requirement.

   Comments:

7. Requirement R7 – Please provide any specific comments on the requirement text, VRF, Time Horizon, measure associated with the requirement, data retention associated with the requirement, and/or the VSL associated with the requirement.

   Comments:

The SDT is posing several other questions for industry consideration not related to the specific requirement questions above.

8. The SDT changed several definitions in response to industry comments to the second posting. Do you agree with these changes? If not, please clearly indicate which definition you disagree with and provide specific comments.

   ☐ Yes
   ☐ No

   Comments:

9. Do you agree with the changes in the performance elements and notes in Table 1? If not, please provide specific comments by note number, note alpha character, or performance category. Please note that footnotes 5 and 10 are handled separately in question 10.

   ☐ Yes
   ☐ No

   Comments:

10. The changes to the Table include the addition/revision of footnotes 5 and 10 that address curtailment of Firm Transmission Service and conditional Firm Transmission Service. Do you agree with the footnotes? If not, please provide specific comments.

    ☐ Yes
    ☐ No

    Comments:

11. The SDT has provided an Implementation Plan as part of this posting. The plan includes the retirement of TPL-005-0 and TPL-006-0. Do you agree with the elements of the Plan? If not, please provide specific comments.

    ☐ Yes
    ☐ No

    Comments:

Standard Development Roadmap

This section is maintained by the drafting team during the development of the standard and will be removed when the standard becomes effective.

Development Steps Completed:

1. Version 1 of SAR posted for comment from April 2, 2002 through May 3, 2002.
2. Version 2 of SAR posted for comment from May 5, 2004 through June 5, 2004.
3. Version 3 of SAR posted on November 18, 2005.
4. SAR approved on April 30, 2006.
5. Version 1 of Supplemental SAR posted for comment from February 15, 2007 through March 16, 2007.
6. Version 2 of Supplemental SAR posted on April 9, 2007.
7. Version 1 of revised standard(s) posted for comment on September 17, 2007.
8. Version 2 of the revised standards posted for comment on August 15, 2008.

Proposed Action Plan and Description of Current Draft:

The SDT has established a schedule of meetings and conference calls that allows for steady progress through the standards development process in anticipation of completing their assignment in 1Q10. The current draft is the second iteration of the revision of existing standards TPL-001 through TPL-006 and includes one revised standard, TPL-001-1, replacing TPL-001-0, TPL-002-0, TPL-003-0 and TPL-004-0. TPL-005 & -006 will be addressed later in the project.

Future Development Plan:

Anticipated Actions	Anticipated Date
1. Respond to comments from second posting of standard(s) and submit revision 3 of the standard(s).	4Q08
2. Respond to comments from third posting and submit revision 4 of the standard.	2Q09
3. Submit standard(s) for balloting.	3Q09
4. Submit standard(s) to BOT.	4Q09
5. Submit to regulatory authorities for approval.	1Q10

Definitions of Terms Used in Standard

This section includes all newly defined or revised terms used in the proposed standard. Terms already defined in the Reliability Standards Glossary of Terms are not repeated here. New or revised definitions listed below become approved when the proposed standard is approved. When the standard becomes effective, these defined terms will be removed from the individual standard and added to the Glossary.

Bus-tie Breaker: A circuit breaker that is positioned to connect two individual substation bus configurations.

Consequential Load Loss: All Load that is no longer served by any Transmission Facilities as a result of the Facilities being removed from service by a planned Protection System operation to isolate fault conditions.

Extreme Events: Events which are more severe and have a lower probability of occurrence than Planning Events.

Load Reduction: Load that is still connected to the System, but is reduced due to lower voltage conditions following a Planning or Extreme Event.

Long-Term Transmission Planning Horizon: Transmission planning period that covers years six through ten or beyond when required to accommodate any known longer lead time projects that may take longer than ten years to complete.

Near-Term Transmission Planning Horizon: Transmission planning period that covers Years One through five.

Non-Consequential Load Loss: Non-Interruptible Load loss other than Consequential Load Loss, Supplemental Load Loss, and Load Reduction. .

Planning Assessment: Documented evaluation of future Transmission System performance and Corrective Action Plans to remedy identified deficiencies.

Planning Events: Events that require Transmission system performance requirements to be met.

Supplemental Load Loss: Load that is disconnected from the network by end-user equipment responding to post-Contingency System conditions.

Year One: The first year that a Transmission Planner is responsible for assessing. This is further defined as the planning window that begins 12-18 months from the current calendar year.

A. Introduction

1. **Title:** **Transmission System Planning Performance Requirements**

2. **Number:** **TPL-001-1**

3. **Purpose:** Establish Transmission System planning performance requirements within the planning horizon to develop a Bulk Electric System (BES) that will operate reliably over a broad spectrum of System conditions and following a wide range of probable Contingencies.

4. **Applicability:**

   4.1. Functional Entity

   4.1.1. Planning Coordinator.

   4.1.2. Transmission Planner.

5. **Effective Date:** Requirements R1 and R7 shall become effective on the first day of the first calendar quarter, 12 months after applicable regulatory approval. In those jurisdictions where no regulatory approval is required, Requirements R1 and R7 become effective on the first day of the first calendar quarter, 12 months after Board of Trustees adoption.

   Except as indicated below, Requirements R2 through R6 shall become effective on the first day of the first calendar quarter, 24 months after applicable regulatory approval. In those jurisdictions where no regulatory approval is required, all requirements, except as noted below, go into effect on the first day of the first calendar quarter, 24 months after Board of Trustees adoption.

   - For 60 calendar months after the first day of the first calendar quarter following applicable regulatory approval, Corrective Action Plans applying to the following categories of Contingencies and events identified in TPL-001-1, Table 1 are allowed to include tripping of Non-Consequential Load or curtailment of Firm Transmission Service (in accordance with Requirement R2.6.4) that would not otherwise be permitted by the requirements of TPL-001-1:

     - P2-1, P2-2 (above 300 kV)
     - P2-3 (above 300 kV)
     - P3-1 through P3-5
     - P4-1 through P4-5 (above 300 kV)
     - P5 (above 300 kV)

     Any entity that cannot fully implement its Corrective Action Plan to eliminate the need to trip Non-Consequential Load or curtail Firm Transmission Service for the above listed performance elements within 60 calendar months of the compliance date for Requirements R2 through R4 shall self report itself as being unable to meet performance requirements of this Reliability Standard. Any such entity shall submit a mitigation plan to its Regional Entity outlining the steps it will take to become compliant and the date it anticipates becoming compliant. The Regional Entity and NERC shall review the mitigation plan and the Regional Entity/NERC will either approve it or remand it for changes (this could include dates, steps,

etc.). If the mitigation plan is approved by the Regional Entity and NERC and the entity completes the mitigation plan by the date contained within the mitigation plan, no penalties will be assessed. Those entities that do not meet the date outlined in an approved mitigation plan will begin settlement proceedings at that date.

B. Requirements

R1. Each Transmission Planner and Planning Coordinator shall maintain System models for performing the studies needed to complete their Planning Assessment. The models shall use data consistent with the data provided in accordance with the MOD-010 and MOD-012 standards and other data sources, and shall simulate projected System conditions including requirements of regulatory authorities and other legal obligations. *[Violation Risk Factor: Medium] [Time Horizon: Long-term Planning]*

R1.1. Models for the Planning Assessment shall represent:

R1.1.1. Planned outages of generation and Transmission Facilities, if specifically known.

R1.1.2. New planned Facilities and changes to existing Facilities for each year of the Near-Term and Long-Term Transmission Planning Horizon, such as:

- Transmission Lines
- Generators
- Circuit breakers
- Reactive Power devices
- Protection System equipment
- Control devices
- New technologies.

R1.1.3. Real and reactive Demand of Load

R1.1.4. Firm Transmission Service

R1.1.5. Interchange

R1.1.6. Network resources required to supply Load

R2. Each Transmission Planner and Planning Coordinator shall prepare an annual Planning Assessment of its portion of the BES. This Planning Assessment shall use current or past studies, document assumptions, document results, and shall cover steady state analyses, short circuit analyses, and Stability analyses. *[Violation Risk Factor: Medium] [Time Horizon: Long-term Planning]*

R2.1. The Near-Term Transmission Planning Horizon portion of the steady state analysis shall be assessed annually and be supported by the following annual current studies, supplemented with qualified past studies as indicated in Requirement R2.6:

R2.1.1. System peak Load for either Year One or year two, and for year five.

R2.1.2. System Off-Peak Load for one of the five years.

R2.1.3. For each of the studies described in Requirements R2.1.1 and R2.1.2, sensitivity case(s) that are intended to stress the System with variations in one or more of the following conditions not already included in the studies shall be included in the Assessment:

- Forecasted Load and power factor.
- Expected transfers.
- Timing of the installation of new or modified Facilities.
- Reactive resource capability.
- Generation additions, retirements, or other dispatch scenarios.
- Controllable Loads and Demand Side Management.
- Planned duration or timing of Transmission outages.

R2.1.4. When an entity's spare equipment strategy could result in the unavailability of major Transmission equipment that has a lead time of one year or more (such as a transformer), an analysis of the impact on System performance shall be assessed. The analysis shall reflect the Contingencies identified in Table 1 during the conditions that the System is expected to experience due to the unavailability of the long lead time equipment.

R2.2. For the Long-Term Transmission Planning Horizon portion of the steady state analysis, a current System peak Load study is required annually for one of the years in the assessment period to support the annual Planning Assessment.

R2.2.1. To accommodate any known longer lead time projects that may take longer than ten years to complete, the Planning Assessment shall be extended accordingly.

R2.3. The short circuit analysis portion of the Planning Assessment shall be conducted annually addressing the Near-Term Transmission Planning Horizon and can be supported by current or past studies. The analysis shall determine the maximum short circuit interruption duty on fault interrupting devices using the System short circuit model with any generation and Transmission Facilities in service which could impact the study area.

R2.4. The Near-Term Transmission Planning Horizon portion of the Stability analysis shall be assessed annually and be supported by current or past studies. The following studies are required:

R2.4.1. System peak Load for one of the five years. For peak System Load levels, a Load model shall be used which appropriately represents the dynamic behavior of Loads, including consideration of the behavior of induction motor Loads. An aggregate System Load model which represents the overall dynamic behavior of the Load is acceptable.

R2.4.2. System Off-Peak Load for one of the five years.

R2.4.3. For each of the studies described in Requirements R2.4.1 and R2.4.2, ~~s~~ensitivity case(s) that are intended to stress the System with variations in one or more of the following conditions not already included in the studies shall be included in the Assessment:

- Load model assumptions.
- Expected transfers.
- Timing of the installation of new or modified Facilities.
- Reactive resource capability.
- Generation additions, retirements, or other dispatch scenarios.

R2.5. Past studies may be used to support the Planning Assessment if they meet the following requirements:

R2.5.1. For steady state, short circuit, or Stability analysis: the study shall be five calendar years old or less.

R2.5.2. For steady state, short circuit, or Stability analysis: the present System model shall not include any material changes, such as, generation or Transmission additions/removals, or topology changes that have occurred in the intervening period and would impact the study area. Material generation changes could include:

- The addition/deletion/change of individual generating unit capability of 20 MW or greater.
- An aggregated addition/deletion/change to a group of generating units directly connected through their step-up transformer(s) to the BES which total 20 MW or greater.

R2.6. For Planning Events shown in Table 1, when the analysis indicates an inability of the System to meet the performance requirements in Table 1, the Planning Assessment shall include Corrective Action Plans addressing how the performance requirements will be met. Revisions to the Corrective Action Plans are allowed in subsequent assessments but the System shall continue to meet the performance requirements in the tables. Corrective Action Plans do not need to be developed solely to meet the performance requirements for sensitivities run in accordance with Requirements R2.1.3 and R2.4.3. The Corrective Action Plan shall:

R2.6.1. List System deficiencies and the associated actions needed to achieve required System performance. Such actions may include:

- Installation, modification, retirement, or removal of Transmission and generation Facilities and any associated equipment.
- Installation or modification of Protection Systems or Special Protection Systems
- Installation or modification of automatic generation tripping as a response to a single or multiple Contingency to mitigate Stability performance violations.

- Installation or modification of manual and automatic generation runback/tripping as a response to a single or multiple Contingency to mitigate Steady State performance violations.
- Use of Operating Procedures specifying how long they will be needed as part of the Corrective Action Plan.
- Use of rate applications, DSM, new technologies, or other initiatives.

R2.6.2. For the Near-Term Transmission Planning Horizon, include both a project initiation date as well as an in-service date.

R2.6.3. For the Long-Term Transmission Planning Horizon, provide an in-service year.

R2.6.4. If situations arise that are beyond the control of the Transmission Planner or Planning Coordinator that prevent the implementation of a Corrective Action Plan in the required timeframe, then the Transmission Planner or Planning Coordinator is permitted to utilize Non-Consequential Load Loss and curtailment of Firm Transmission Service to correct the situation that would normally not be permitted in Table 1, provided that the Transmission Planner or Planning Coordinator documents that they are taking prudent actions to resolve the situation. The Transmission Planner or Planning Coordinator shall document the situation causing the problem, alternatives evaluated, and the use of Non-Consequential Load Loss or curtailment of Firm Transmission Service.

R2.6.5. Be reviewed in subsequent annual Planning Assessments as to implementation status of identified System Facilities and Operating Procedures.

R2.7. For short circuit analysis, if the short circuit current interruption duty on fault interrupting devices determined in Requirement R2.3 exceeds their Equipment Rating, the Planning Assessment shall include a Corrective Action Plan to address the Equipment Rating violations. The Corrective Action Plan shall:

R2.7.1. List System deficiencies and the associated actions needed to achieve required System performance.

R2.7.2. Be reviewed in subsequent annual Planning Assessments as to implementation status.

R2.8. The Planning Assessment shall provide the largest Consequential Load Loss (megawatt Demand) and the associated event caused by any P1 event and any P2 event in Table 1.

R2.9. The Planning Assessment shall identify the maximum permissible Non-Consequential Load Loss (megawatt Demand) for those Planning Events where Non-Consequential Load Loss is allowed in Table 1.

R3. For the steady state portion of the Planning Assessment, each Transmission Planner and Planning Coordinator shall perform analysis for the Near-Term and Long-Term Transmission Planning Horizon studies in Requirement R2.1 and Requirement R2.2. The studies shall be based on computer simulations using models utilizing data

provided in Requirement R1. *[Violation Risk Factor: Medium] [Time Horizon: Long-term Planning]*

R3.1. Studies shall be performed to determine whether the BES meets the performance requirements in Table 1 based on the lists created in Requirement R3.4.

R3.2. Studies shall be performed to assess the impact of the Extreme Events identified in Requirement R3.5.

R3.3. Contingency analyses shall:

R3.3.1. Simulate the removal of all elements that the Protection System and other automatic controls are expected to disconnect for each Contingency without operator intervention.

R3.3.2. For all generators, studies shall consider the minimum steady state voltage limitations and identify how the generators are analyzed in the steady state simulation.

R3.3.3. For all Transmission lines, studies shall consider relay loadability and identify how loadability is analyzed in the steady state simulation.

R3.3.4. Simulate the expected operation of existing and planned devices designed to provide Steady State control of electrical system quantities. These devices include equipment such as phase-shifting transformers, load tap changing transformers, capacitors, and inductors.

R3.4. Those Planning Event Contingencies in Table 1 that are expected to produce more severe System impacts shall be identified and a list of those Contingencies to be evaluated for System performance in Requirement R3.1 created. The rationale for the Contingencies selected for evaluation shall be available as supporting information and shall include an explanation of why the remaining Contingencies would produce less severe System results.

R3.5. Those Extreme Events in Table 1 that are expected to produce more severe System impacts shall be identified and a list of those events to be evaluated for System performance in Requirement R3.2 created. The rationale for the Contingencies selected for evaluation shall be available as supporting information and shall include an explanation of why the remaining Contingencies would produce less severe System results. If the analysis concludes there are cascading outages caused by the occurrence of Extreme Events, an evaluation of possible actions designed to reduce the likelihood or mitigate the consequences and adverse impacts of the event(s) shall be conducted.

R4. For the Stability portion of the Planning Assessment, as described in Requirement R2.4, each Transmission Planner and Planning Coordinator shall perform the Contingency analyses listed in Table 1. The studies shall be based on computer simulations using models utilizing data provided in Requirement R1. *[Violation Risk Factor: Medium] [Time Horizon: Long-term Planning]*

R4.1. Studies shall be performed to determine whether the BES meets the performance requirements in Table 1 based on the lists created in RequirementR4.4.

R4.2. Studies shall be performed to assess the impact of the Extreme Events identified in Requirement R4.5.

R4.3. Contingency analyses shall:

R4.3.1. Simulate the removal of all elements that the Protection System and other automatic controls are expected to disconnect for each Contingency without operator intervention.

R4.3.2. Simulate generator performance under anticipated conditions including how the voltage ride through capability is analyzed.

R4.3.3. Simulate the expected operation of existing and planned devices designed to provide dynamic control of electrical system quantities. These devices include equipment such as generation exciter control and power system stabilizers, static VAR compensators, power flow controllers, and DC Transmission controllers.

R4.4. Those Planning Event Contingencies in Table 1 – that are expected to produce more severe System impacts shall be identified, and a list of those Contingencies to be evaluated for System performance in Requirement R4.1 created. The rationale for the Contingencies selected for evaluation shall be available as supporting information with an explanation of why the remaining Contingencies would produce less severe System results.

R4.5. Those Extreme Events in Table 1 that are expected to produce more severe System impacts shall be identified and a list of those events to be evaluated for System performance in Requirement R4.2 created. The rationale for the Contingencies selected for evaluation shall be available as supporting information and shall include an explanation of why the remaining Contingencies would produce less severe System results. If the analysis concludes there are cascading outages caused by the occurrence of Extreme Events, an evaluation of possible actions designed to reduce the likelihood or mitigate the consequences of the event(s) shall be conducted.

R5. Each Transmission Planner and Planning Coordinator shall define and document, within their Planning Assessment, any proxies used in the analysis to identify System instability for conditions such as cascading outages, voltage instability, or uncontrolled islanding. *[Violation Risk Factor: Low] [Time Horizon: Long-term Planning]*

R6. Each Transmission Planner and Planning Coordinator shall determine and identify individual and joint responsibilities for performing the required studies for the Planning Assessment. *[Violation Risk Factor: Low] [Time Horizon: Long-term Planning]*

R7. Each Planning Coordinator shall coordinate the distribution of Planning Assessment results among adjacent Planning Coordinators and any functional entity who has indicated a reliability need, coordinating analysis of these results through an open and

transparent peer review process such as described in FERC Order 890. *[Violation Risk Factor: Low] [Time Horizon: Long-term Planning]*

C. Measures

M1. Each Transmission Planner and Planning Coordinator shall provide evidence, such as the System model with the specified data in electronic or hard copy format, that it is maintaining System models, using data consistent with MOD-010 and MOD-012, simulating projected System conditions, and that the models represent the required information in accordance with Requirement R1.

M2. Each Transmission Planner and Planning Coordinator shall provide evidence, such as electronic or hard copies of its annual Planning Assessment, that it has prepared an annual Planning Assessment of its portion of the BES in accordance with Requirement R2.

M3. Each Transmission Planner and Planning Coordinator shall provide evidence, such as electronic or hard copies, of the studies utilized in preparing the Planning Assessment, in accordance with Requirement R3.

M4. Each Transmission Planner and Planning Coordinator shall provide evidence, such as electronic or hard copies, of the studies utilized in preparing the Planning Assessment in accordance with Requirement R4.

M5. Each Transmission Planner and Planning Coordinator shall provide evidence, such as electronic or hard copies, of the studies utilized in preparing the Planning Assessment in accordance with Requirement R5.

M6. Each Transmission Planner and Planning Coordinator shall provide evidence, such as a dated document, that identifies that agreement has been reached on individual and joint responsibilities for performing the required studies for the Planning Assessment in accordance with Requirement R6.

M7. Each Planning Coordinator shall provide evidence, such as email notices, documentation of updated web pages, postal receipts showing recipient, date, and contents, or a demonstration of a public posting, that it has coordinated the distribution of Planning Assessment results among adjacent Planning Coordinators and any functional entity who has indicated a reliability need, coordinating analysis of these results through an open and transparent peer review process such as described in FERC Order 890 in accordance with Requirement R7.

D. Compliance

1. Compliance Monitoring Process

1.1 Compliance Enforcement Authority

Regional Entity.

1.2 Compliance Monitoring Period and Reset Timeframe

Not applicable.

1.3 Compliance Monitoring and Enforcement Processes:

Compliance Audits

Self-Certifications

Spot Checking

Compliance Violation Investigations

Self-Reporting

Complaints

1.4 Data Retention

The Transmission Planner and Planning Coordinator shall each retain data or evidence to show compliance as identified unless directed by its Compliance Enforcement Authority to retain specific evidence for a longer period of time as part of an investigation:

- The models utilized in the current Planning Assessment and one previous Planning Assessment in accordance with Requirement R1.and Measure M1.
- All Planning Assessments performed since the last compliance audit in accordance with Requirement R2 and Measure M2.
- All studies performed in support of its Planning Assessments since the last compliance audit in accordance with Requirement R3 and Measure M3.
- All studies performed in support of its Planning Assessment since the last compliance audit in accordance with Requirement R4 and Measure M4.
- All studies performed in support of its Planning Assessments since the last compliance audit in accordance with Requirement R5 and Measure M5.
- The current, in force agreement on identified responsibilities, as well as all such agreements in force since the last compliance audit, in accordance with Requirement R6 and Measure M6.

The Planning Coordinator shall retain data or evidence to show compliance as identified unless directed by its Compliance Enforcement Authority to retain specific evidence for a longer period of time as part of an investigation:

- Three calendar years of the notifications employed in accordance with Requirement R7 and Measure M7.

1.5 Additional Compliance Information

None.

2 Violation Severity Levels

	Lower VSL	Moderate VSL	High VSL	Severe VSL
R1	The Transmission Planner or Planning Coordinator's System model failed to represent one of the sub-requirements R1.1.1 through R1.1.6.	The Transmission Planner or Planning Coordinator's System model failed to represent two of the sub-requirements R1.1.1 through R1.1.6. OR The System model did not use data consistent with the data provided in accordance with the MOD-010 and MOD-012 standards and other data sources.	The Transmission Planner or Planning Coordinator's System model failed to represent three of the sub-requirements R1.1.1 through R1.1.6.	The Transmission Planner or Planning Coordinator's System model failed to represent four or more of the sub-requirements R1.1.1 through R1.1.6. OR The System model did not simulate projected System conditions as described in Requirement R1.
R2	The Transmission Planner or Planning Coordinator failed to comply with one or both of the following sub-requirements: R2.8 or R2.9.	The Transmission Planner or Planning Coordinator failed to comply with one of the sub-requirements: R2.3 or R2.7.	The Transmission Planner or Planning Coordinator failed to comply with one of the sub-requirements: R2.1, R2.2, R2.4, or R2.6.	The Transmission Planner or Planning Coordinator failed to comply with two or more of the sub-requirements: R2.1, R2.2, R2.4, or R2.6.
R3	The Transmission Planner or Planning Coordinator did not identify Planning Events as described in Requirement R3.4 or Extreme Events as described in Requirement R3.5.	The Transmission Planner or Planning Coordinator did not perform studies as specified in Requirement R3.1 to determine that the BES meets the performance requirements for one of the categories (P2 through P7) in Table 1. OR The Transmission Planner or Planning Coordinator did not perform studies as specified in Requirement R3.2 to assess the	The Transmission Planner or Planning Coordinator did not perform studies as specified in Requirement R3.1 to determine that the BES meets the performance requirements for two of the categories (P2 through P7) in Table 1. OR The Transmission Planner or Planning Coordinator did not perform Contingency analysis as	The Transmission Planner or Planning Coordinator did not perform studies as specified in Requirement R3.1 to determine that the BES meets the performance requirements for three or more of the categories (P2 through P7) in Table 1. OR The Transmission Planner or Planning Coordinator did not perform studies to determine that the BES meets the performance requirements for the P0 or

	Lower VSL	Moderate VSL	High VSL	Severe VSL
		impact of Extreme Events. OR The Transmission Planner or Planning Coordinator did not base its studies on computer simulations using models utilizing data provided in Requirement R1.	described in Requirement R3.3.	P1 categories in Table 1.
R4	The Transmission Planner or Planning Coordinator did not identify Planning Events as described in Requirement R4.4 or Extreme Events as described in Requirement R4.5.	The Transmission Planner or Planning Coordinator did not perform studies as specified in Requirement R4.1 to determine that the BES meets the performance requirements for one of the categories (P1 through P7) in Table 1. OR The Transmission Planner or Planning Coordinator did not perform studies as specified in Requirement R4.2 to assess the impact of Extreme Events. OR The Transmission Planner or Planning Coordinator did not base its studies on computer simulations using models utilizing data provided in Requirement R1.	The Transmission Planner or Planning Coordinator did not perform studies as specified in Requirement R4.1 to determine that the BES meets the performance requirements for two of the categories (P1 through P7) in Table 1. OR The Transmission Planner or Planning Coordinator did not perform Contingency analysis as described in Requirement R4.3.	The Transmission Planner or Planning Coordinator did not perform studies as specified in Requirement R4.1 to determine that the BES meets the performance requirements for three or more of the categories (P1 through P7) in Table 1.
R5	N/A	N/A	N/A	The Transmission Planner or Planning Coordinator failed to define and

	Lower VSL	Moderate VSL	High VSL	Severe VSL
				document the proxies for System instability used within their analysis as described in Requirement R5.
R6	N/A	N/A	N/A	The Transmission Planner or Planning Coordinator failed to determine and identify individual or joint responsibilities for performing required studies.
R7	N/A	N/A	The Planning Coordinator failed to coordinate the analysis of its Planning Assessment results through an open and transparent peer review process.	The Planning Coordinator failed to distribute the results of its Planning Assessment.

E. Regional Variances

None.

Table 1 – Steady State & Stability Performance
Planning Events

Steady State & Stability:

a. Voltage instability, cascading outages, and uncontrolled islanding shall not occur.

b. Consequential Load Loss, Supplemental Load Loss, Load Reduction, and consequential generation loss are acceptable as a consequence of any Planning or Extreme Event excluding P0. However, Supplemental Load Loss associated with an event shall not be used to meet steady state performance requirements.

c. Simulate the removal of all elements that Protection Systems and controls are expected to disconnect for each event.

d. Simulate Normal Clearing unless otherwise specified.

e. For all Planning Events, planned System adjustments such as Transmission configuration changes and redispatch of generation are allowed if such adjustments are executable within the time duration applicable to the Facility Ratings.

Steady State Only:

f. System steady state voltages and post-Contingency voltage deviations shall be within acceptable limits as established by the Planning Coordinator (or Transmission Planner if more restrictive).

g. Planning Event P0 is applicable to steady state only.

Stability Only:

h. The System shall remain stable. [1]

i. Transient voltage response shall be within acceptable limits established by the Planning Coordinator (or Transmission Planner if more restrictive).

Category	Initial System Condition	Event [2]	Fault Type [3]	BES Level [4]	Interruption of Firm Transmission Service Allowed [5]	Non-Consequential Load Loss Allowed
P0 No Contingency	Normal System	None	N/A	EHV, HV	No	No
P1 Single Contingency	Normal System	Loss of one of the following: 1. Generator 2. Transmission Circuit 3. Transformer [6] 4. Shunt Device [7]	3Ø	EHV, HV	No	No
		5. Single Pole of a DC line	SLG			
P2 Single Contingency	Normal System	1. Opening of Breaker(s) w/o fault [8]	N/A	EHV, HV	No	No
		2. Bus Section Fault	SLG	EHV	No	No
				HV	Yes	Yes
		3. Internal Breaker Fault [9]	SLG	EHV	No	No

		(Non bus-tie)	SLG	HV	Yes	Yes
		4. Internal Breaker Fault (bus-tie) [9]	SLG	EHV, HV	Yes	Yes

Table 1 — Steady State & Stability Performance Planning Events						
Category	**Initial System Condition**	**Event [2]**	**Fault Type [3]**	**BES Level [4]**	**Interruption of Firm Transmission Service Allowed [5]**	**Non-Consequential Load Loss Allowed**
P3 Multiple Contingency	Loss of generator unit followed by System adjustments[10]	Loss of one of the following: 1. Generator 2. Transmission Circuit 3. Transformer [6] 4. Shunt Device [7]	3Ø	EHV, HV	No[10]	No
		5. Single pole of a DC line	SLG	EHV, HV	No[10]	No
P4 Multiple Contingency *(Fault plus stuck breaker [11])*	Normal System	Stuck breaker [11](non-bus-tie) attempting to clear a Fault on one of the following: 1. Generator 2. Transmission Circuit 3. Transformer [6] 4. Shunt Device [7] 5. Bus Section	SLG	EHV	No[10]	No
			SLG	HV	Yes	Yes
		6. Stuck breaker (bus-tie) attempting to clear a Fault on the associated bus	SLG	EHV, HV	Yes	Yes
P5 Multiple Contingency *(Fault plus Protection System failure)*	Normal System	Loss of multiple elements caused by the failure of a single Protection System while clearing a fault on one of the following: 1. Generator 2. Transmission Circuit 3. Transformer [6] 4. Shunt Device [7] 5. Bus Section	SLG	EHV	No[10]	No
			SLG	HV	Yes	Yes
P6 Multiple Contingency *(Two overlapping*	Loss of one of the following followed by System adj.[10]: 1. Transmission Circuit 2. Transformer [6]	Loss of one of the following: 1. Transmission Circuit 2. Transformer [6] 3. Shunt Device [7]	3Ø	EHV, HV	Yes	Yes

singles)	3. Shunt Device [7] 4. Single pole of a DC line	4. Single pole of a DC line	SLG	EHV, HV	Yes	Yes
P7 Multiple Contingency *(Common Structure)*	Normal System	The loss of: 1. Any two circuits on common structure [12] 2. Loss of a bipolar DC line	SLG	EHV, HV	Yes	Yes

Table 1 — Steady State & Stability Performance
Extreme Events

Steady State & Stability

For all Extreme Events evaluated:

1. Simulate the removal of all elements that Protection Systems and controls are expected to disconnect for each Contingency.
2. Simulate Normal Clearing unless otherwise specified.

Steady State

1. Loss of a single generator, Transmission Circuit, DC Line, shunt device, or transformer forced out of service followed by another single generator, Transmission Circuit, DC Line, shunt device, or transformer forced out of service prior to System adjustments.
2. Local area events affecting the Transmission System such as:
   a. Loss of a tower line with three or more circuits.[12]
   b. Loss of all Transmission lines on a common Right-of-Way.
   c. Loss of a switching station or substation (loss of one voltage level plus transformers).
   d. Loss of all generating units at a station.
   e. Loss of a large Load or major Load center.
3. Wide area events affecting the Transmission System based on System topology such as:
   a. Loss of two generating plants resulting from conditions such as:
      i. Loss of a large gas pipeline into a region or multiple regions that have significant gas-fired generation.
      ii. Loss of the use of a large body of water as the cooling source for generation.
      iii. Wildfires.
      iv. Severe weather, e.g., hurricanes, tornadoes, etc.
      v. A successful cyber attack.
      vi. Shutdown of a nuclear power plant(s) and related facilities for a day or more for common causes such as problems with similarly designed plants.
   b. Other events based upon operating experience that may result in wide area disturbances.

Stability

1. With an initial condition of a single generator, Transmission circuit, DC line, shunt device, or transformer forced out of service, apply a 3Ø fault on another single generator, Transmission circuit, DC line, shunt device, or transformer prior to System adjustments.
2. Local or wide area events affecting the Transmission System such as:
   a. 3Ø fault on generator with stuck breaker[11] or a Protection System failure resulting in Delayed Fault Clearing.
   b. 3Ø fault on Transmission circuit with stuck breaker[11] or a Protection System failure resulting in Delayed Fault Clearing.
   c. 3Ø fault on transformer with stuck breaker[11]or a Protection System failure resulting in Delayed Fault Clearing.
   d. 3Ø fault on bus section with stuck breaker[11] or a Protection System failure resulting in Delayed Fault Clearing.
   e. 3Ø internal breaker fault[11].
   f. 3Ø fault on two or more circuits on a common structure[12].
   g. SLG fault on all Transmission lines on a common Right-of-Way.
   h. 3Ø fault on switching station or substation (loss of one voltage level plus transformers)
   i. Other events based upon operating experience, such as consideration of initiating events that experience suggests may result in wide area disturbances

Table 1 — Steady State & Stability Performance
Footnotes
(Planning Events and Extreme Events)

1. System stable means:
   a. Angular Stability:
      i. For Planning Event P1: No generating unit or units shall be allowed to pull out of synchronism. A generator being disconnected from the System by fault clearing action or by a Special Protection System is not considered pulling out of synchronism.
      ii. For all other Planning Events: No generating unit or units totaling more than the Contingency Reserve of the Balancing Authority (or Reserve Sharing Group if applicable) shall be allowed to pull out of synchronism. Generators that pull out of synchronism must have out-of-step protection or some other means to trip the generator for this condition and the resulting apparent impedance swings must not pass through relay characteristics that would result in the tripping of any Transmission System elements other than the generating unit and its direct connection Facilities.
   b. For all Planning Events evaluated: Power oscillations shall exhibit acceptable damping as established by the Planning Coordinator (or Transmission Planner if more restrictive).
2. If the event analyzed involves BES elements at multiple System voltage levels, the lowest System voltage level for stated performance criteria applies regarding allowances for interruptions of Firm Transmission Service and loss of Non-Consequential Load.
3. Unless specified otherwise, simulate Normal Clearing faults. Single line to ground (SLG) or three phase (3Ø) are the fault types, that must be evaluated in Stability simulations for the event described. A 3Ø fault study indicating criteria are being met shall provide sufficient evidence that a SLG condition would also meet criteria.
4. Bulk Electric System (BES) level references include extra-high voltage (EHV) Facilities defined as greater than 300kV and high voltage (HV) Facilities defined as the 300kV and lower voltage Systems. The designation of EHV and HV is used to distinguish between stated performance criteria allowances for interruptions of Firm Transmission Service and Non-Consequential Load.
5. When the conditions and/or event(s) being studied form the basis for conditional Firm Transmission Service, curtailment of that conditional Firm Transmission Service is allowed.
6. For non-Generator Step Up transformer outage events, the reference voltage applies to the low-side winding (excluding tertiary windings). For generator and generator Step Up transformer outage events, the reference voltage applies to the BES connected voltage (high-side of the Generator Step Up transformer). Requirements which are applicable to transformers also apply to variable frequency transformers and phase shifting transformers.
7. Requirements which are applicable to shunt devices also apply to FACTS devices that are connected to ground.
8. Inadvertent tripping of breakers on one end of a normally networked Transmission circuit such that the line is now open at that end and possibly serving Load radial from a single source point.
9. An internal breaker fault means a breaker failing internally, thus creating a System fault which must be cleared by protection on both sides of the breaker.
10. Curtailment of firm transmission service , when coupled with the appropriate re-dispatch of resources obligated to re-dispatch, is allowed both as a System adjustment (as identified in the column titled 'Initial System Conditions') and a corrective action, where it can be demonstrated that Facilities remain within applicable Facility Ratings and those adjustments do not result in the shedding of any firm Load. Where limited options for re-dispatch exist, sensitivities associated with the availability of those resources must be considered. Where Facilities external to the Transmission Planner's planning region are relied upon, Facility Ratings in those regions must be considered.
11. A stuck breaker means that for a gang-operated breaker, all three phases of the breaker have remained closed. For an independent pole operated (IPO) breaker,

Table 1 — Steady State & Stability Performance Footnotes (Planning Events and Extreme Events)
only one pole is assumed to remain closed. A stuck breaker introduces a delayed clearing mode. 12. Excludes circuits that share a common structure for 1 mile or less.

Version History

Version	Date	Action	Change Tracking
1	TBD	Revision of TPL-001-0 as per Project 2006-02; includes merging requirements of TPL-001-0, TPL-002-0, TPL-003-0, and TPL-004-0 into one, single, comprehensive, coordinated standard: TPL-001-1	Not employed due to scope of revision

Standard Development Roadmap

This section is maintained by the drafting team during the development of the standard and will be removed when the standard becomes effective.

Development Steps Completed:

1. Version 1 of SAR posted for comment from April 2, 2002 through May 3, 2002.
2. Version 2 of SAR posted for comment from May 5, 2004 through June 5, 2004.
3. Version 3 of SAR posted on November 18, 2005.
4. SAR approved on April 30, 2006.
5. Version 1 of Supplemental SAR posted for comment from February 15, 2007 through March 16, 2007.
6. Version 2 of Supplemental SAR posted on April 9, 2007.
7. Version 1 of revised standard(s) posted for comment on September 17, 2007.
8. Version 2 of the revised standards posted for comment on August 15, 2008.

Proposed Action Plan and Description of Current Draft:

The SDT has established a schedule of meetings and conference calls that allows for steady progress through the standards development process in anticipation of completing their assignment in 1Q10. The current draft is the second iteration of the revision of existing standards TPL-001 through TPL-006 and includes one revised standard, TPL-001-1, replacing TPL-001-0, TPL-002-0, TPL-003-0 and TPL-004-0. TPL-005 & -006 will be addressed later in the project.

Future Development Plan:

Anticipated Actions	Anticipated Date
1. Respond to comments from third posting and submit revision 4 of the standard.	2Q09
2. Submit standard(s) for balloting.	3Q09
3. Submit standard(s) to BOT.	4Q09
4. Submit to regulatory authorities for approval.	1Q10

Definitions of Terms Used in Standard

This section includes all newly defined or revised terms used in the proposed standard. Terms already defined in the Reliability Standards Glossary of Terms are not repeated here. New or revised definitions listed below become approved when the proposed standard is approved. When the standard becomes effective, these defined terms will be removed from the individual standard and added to the Glossary.

Bus-tie Breaker: A circuit breaker that is positioned to connect two individual ~~straight bus~~ substation bus configurations. ~~(Substation configurations such as ring-bus, breaker-and-a-half, or double bus-double breaker protection schemes do not use bus-tie breakers.)~~

Consequential Load Loss: ~~Load that is no longer connected to a source as a result of the event being studied or which is lost as a result of the load's response to the transient conditions of the event (other than through the action of UVLS or UFLS schemes). Although Load which is lost as a result of the Load's response to the transient conditions of the event is considered Consequential Load Loss and is permitted when Consequential Load Loss is allowed, Transmission planning entities are not allowed to rely upon the expectation of such Load loss to meet steady state performance requirements.~~ All Load that is no longer served by any Transmission Facilities as a result of the Facilities being removed from service by a planned Protection System operation to isolate fault conditions.

Extreme Events: Events which are more severe and have a lower probability of occurrence than Planning Events.

~~**Generating Unit Stability Study:** Study that focuses on an individual generating unit's or electrically-closely-coupled generating units' Stability for various Contingencies on the Transmission Facilities connected to that generating unit(s) point(s) of interconnection or one bus away from that point. This study is concerned with the loss of synchronism and the lack of damping of the generating units' power oscillations.~~

Load Reduction: Load that is still connected to the System, but is reduced due to lower voltage conditions following a Planning or Extreme Event.

Long-Term Transmission Planning Horizon: Transmission planning period that covers years six through ten or beyond when required to accommodate any known longer lead time projects that may take longer than ten years to complete.

Near-Term Transmission Planning Horizon: Transmission planning period that covers Years One through five.

Non-Consequential Load Loss: Non-Interruptible Load loss other than Consequential Load Loss, Supplemental Load Loss, and Load Reduction.~~. For example, non-Interruptible Load loss that occurs through manual (operator initiated) or automatic operations such as under-voltage Load shedding, under-frequency Load shedding, or Special Protection Systems would be considered Non-Consequential Load Loss~~.

Planning Assessment: Documented evaluation of future Transmission System performance and Corrective Action Plans to remedy identified deficiencies.

Planning Events: Events that require Transmission system performance requirements to be met.

~~**Planning Coordinator:** The responsible entity that coordinates and integrates transmission facility and service plans, resource plans, and protection systems.~~

Supplemental Load Loss: Load that is disconnected from the network by end-user equipment responding to post-Contingency System conditions.

~~**System Stability Study:** Study that focuses on portions of the System, which may include many generating units, to determine whether angular Stability is maintained, inter-area power oscillations are damped, and voltages during the dynamic simulation stay within acceptable performance limits.~~

Year One: The first year that a Transmission Planner is responsible for assessing. This is further defined as the planning window that begins 12-18 months from the ~~completion of the previous annual Planning Assessment~~ current calendar year.

A. Introduction

1. **Title:** **Transmission System Planning Performance Requirements**

2. **Number:** **TPL-001-1**

3. **Purpose:** Establish Transmission System planning performance requirements within the planning horizon to develop a Bulk Electric System (BES) that will operate reliably over a broad spectrum of System conditions and following a wide range of probable Contingencies.

4. **Applicability:**

   4.1. Functional Entity

   4.1.1. Planning Coordinator.

   4.1.2. Transmission Planner.

5. **Effective Date:** ~~As per Implementation Plan (to be supplied later).~~ Requirements R1 and R7 shall become effective on the first day of the first calendar quarter, 12 months after applicable regulatory approval. In those jurisdictions where no regulatory approval is required, Requirements R1 and R7 become effective on the first day of the first calendar quarter, 12 months after Board of Trustees adoption.

   Except as indicated below, Requirements R2 through R6 shall become effective on the first day of the first calendar quarter, 24 months after applicable regulatory approval. In those jurisdictions where no regulatory approval is required, all requirements, except as noted below, go into effect on the first day of the first calendar quarter, 24 months after Board of Trustees adoption.

   - For 60 calendar months after the first day of the first calendar quarter following applicable regulatory approval, Corrective Action Plans applying to the following categories of Contingencies and events identified in TPL-001-1, Table 1 are allowed to include tripping of Non-Consequential Load or curtailment of Firm Transmission Service (in accordance with Requirement R2.6.4) that would not otherwise be permitted by the requirements of TPL-001-1:
     - P2-1, P2-2 (above 300 kV)
     - P2-3 (above 300 kV)
     - P3-1 through P3-5
     - P4-1 through P4-5 (above 300 kV)
     - P5 (above 300 kV)

     ~~5.~~Any entity that cannot fully implement its Corrective Action Plan to eliminate the need to trip Non-Consequential Load or curtail Firm Transmission Service for the above listed performance elements within 60 calendar months of the compliance date for Requirements R2 through R4 shall self report itself as being unable to meet performance requirements of this Reliability Standard. Any such entity shall submit a mitigation plan to its Regional Entity outlining the steps it will take to become compliant and the date it anticipates becoming compliant. The Regional Entity and NERC shall review the mitigation plan and the Regional Entity/NERC will either approve it or remand it for changes (this could include dates, steps, etc.). If the mitigation plan is approved by the Regional Entity and

NERC and the entity completes the mitigation plan by the date contained within the mitigation plan, no penalties will be assessed. Those entities that do not meet the date outlined in an approved mitigation plan will begin settlement proceedings at that date.

B. Requirements

R1. Each Transmission Planner and Planning Coordinator shall maintain System models for performing the studies needed to complete their Planning Assessment. The models shall use data consistent with the data provided in accordance with ~~Requirements R9 through R14,~~ the MOD-010 and MOD-012 standards~~,~~ and other data sources,~~.~~ and shall simulate projected System conditions including requirements of regulatory authorities and other legal obligations. *[Violation Risk Factor: ~~TBD~~Medium] [Time Horizon: ~~TBD~~Long-term Planning]*

~~**R1.1.**~~

~~The Planning Assessment shall include documentation of the technical rationale for modification of any data that was provided in Requirement R9 through R14, MOD-010, and MOD-012~~.

R1.1. Models for the Planning Assessment shall represent:

R1.1.1. Planned outages of generation and Transmission Facilities, if specifically known.

R1.1.2. New planned Facilities and changes to existing Facilities for each year of the Near-Term and Long-Term Transmission Planning Horizon, such as:

- ~~-~~Transmission Lines
- ~~-~~Generators
- ~~-~~Circuit breakers
- ~~-~~Reactive Power devices
- ~~-~~Protection System equipment
- ~~-~~Control devices
- ~~-~~New technologies.

R1.1.3. Real and reactive Demand of Load

R1.1.4. Firm Transmission Service

R1.1.5. Interchange

R1.1.6. Network resources required to supply Load

R2. Each Transmission Planner and Planning Coordinator shall ~~conduct and document the results of~~ prepare ~~its~~an annual Planning Assessment of its portion of the BES. This Planning Assessment shall use current or past studies, document assumptions, document results, and shall cover steady state analyses, short circuit analyses, and Stability analyses~~ including both System and Generating Unit Stability~~. *[Violation Risk Factor: ~~TBD~~Medium] [Time Horizon: ~~TBD~~Long-term Planning]*

R2.1. The Near-Term Transmission Planning Horizon portion of the steady state analysis shall be assessed annually and be supported ~~at a minimum~~ by the following annual current studies, supplemented with qualified past studies as indicated in Requirement R2.6:

R2.1.1. System peak Load for either Year One or year two, and for year five.

R2.1.2. System Off-Peak Load for one of the five years.

R2.1.3. For each of the studies described in Requirements R2.1.1 and ~~Requirement~~ R2.1.2, sensitivity case(s) that are intended to stress the System with ~~sensitivities~~ variations ~~that reflect~~ in one or more of the following conditions not already included in the studies shall be ~~run and documentation of the technical rationale for why each of the conditions was or was not selected shall be supplied~~ included in the Assessment:

- ~~P.2.1.3.1.~~ ~~Higher or lower Load than forecasted with variability of Load/demand and Load power factors due to season, weather, or time of day~~ Forecasted Load and power factor.
- ~~P.2.1.3.2.~~ ~~Modification of e~~Expected transfers.
- ~~P.2.1.3.3.~~ ~~Unavailability of long lead time Facilities~~ Timing of the installation of new or modified Facilities.
- ~~P.2.1.3.4.~~ ~~Variability and outages of r~~Reactive resource~~s~~ capability.
- ~~P.2.1.3.5.~~ Generation additions, retirements, or other dispatch scenarios.
- ~~P.2.1.3.6.~~ ~~Decreased effectiveness of c~~Controllable Loads and Demand Side Management.
- ~~P.2.1.3.7.~~ ~~Modification of p~~Planned duration or timing of Transmission outages.

R2.1.4. ~~In addition to those sensitivities mentioned in Requirement R2.1.3, any other sensitivities, as deemed appropriate by the Transmission Planner or Planning Coordinator for their individual systems, shall be run and the Planning Assessment shall include documentation of the technical rationale for why each was selected shall be supplied.~~When an entity's spare equipment strategy could result in the unavailability of major Transmission equipment that has a lead time of one year or more (such as a transformer), an analysis of the impact on System performance shall be assessed. The analysis shall reflect the Contingencies identified in Table 1 during the conditions that the System is expected to experience due to the unavailability of the long lead time equipment.

R2.2. For the Long-Term Transmission Planning Horizon portion of the steady state analysis, ~~at a minimum,~~ a current System peak Load study is required annually for one of the years in the assessment period to support the annual Planning Assessment.

R2.2.1. To accommodate any known longer lead time projects that may take longer than ten years to complete, the Planning Assessment shall be extended accordingly.

R2.3. The short circuit analysis portion of the Planning Assessment shall be conducted annually addressing the Near-Term Transmission Planning Horizon and can be supported by current or past studies. The analysis shall determine the maximum short circuit interruption duty on fault interrupting devices using the System short circuit model with any generation and Transmission Facilities in service which could impact the study area.

R2.4. The Near-Term Transmission Planning Horizon portion of the Stability analysis shall be assessed annually and be supported by current or past studies. The following studies are required:

R2.4.1. System peak Load for one of the five years. For peak System Load levels, a Load model shall be used which appropriately represents the dynamic behavior of Loads, including consideration of the behavior of induction motor Loads. An aggregate System Load model which represents the overall dynamic behavior of the Load is acceptable.

R2.4.2. System Off-Peak Load for one of the five years.

R2.4.3. For each of the studies described in Requirements R2.4.1 and ~~Requirement~~ R2.4.2, ~~s~~ensitivity case(s) that are intended to stress the System with variations ~~to reflect~~ in one or more of the following conditions not already included in the studies shall be ~~run and documentation of the technical rationale for why each of the conditions was or was not selected shall be supplied~~ included in the Assessment:

- ~~Variations in~~ Load model assumptions.
- ~~Modification of e~~Expected transfers.
- ~~Unavailability of long lead time Facilities~~ Timing of the installation of new or modified Facilities.
- ~~Variability and outages of r~~Reactive resource~~s~~ capability.
- Generation additions, retirements, or other dispatch scenarios.

~~**R2.4.4.**In addition to those sensitivities mentioned in Requirement 2.4.3, any other sensitivity, as deemed appropriate by the Transmission Planner or Planning Coordinator for their individual systems, shall be run and the Planning Assessment shall include documentation of the technical rationale for why each was selected shall be supplied.~~

~~**R2.5.**The Generating Unit Stability analysis portion of the Planning Assessment shall be analyzed consistent with Requirement R5.5 with studies for the year when the following changes that could affect stability margins occur:~~

~~**R2.5.1.**New generator(s) are added or generation modifications are made such as changes in generation capability or replacing the exciter.~~

~~**R2.5.2.**Material Transmission System changes are made at or near the point of Interconnection of existing Generation such as the removal of a~~

~~Transmission Line or the addition of a new substation in one of the Transmission Lines connected to the plant.~~

~~R2.6.~~R2.5. Past studies may be used to support the Planning Assessment if they meet the following requirements:

~~R2.6.1.~~R2.5.1. For steady state, short circuit, or ~~System~~ Stability analysis: the study shall be five calendar years old or less.

~~R2.6.2.~~R2.5.2. For steady state, short circuit, ~~Generating Plant Stability,~~ or ~~System~~ Stability analysis: the ~~study~~ present System model shall not include any material changes, such as, generation or Transmission additions/removals, or topology changes that have occurred in the intervening period and would impact the study area. Material generation changes could include:

- ~~-~~The addition/deletion/change of individual generating unit capability of 20 MW or greater.
- ~~-~~An aggregated addition/deletion/change to a group of generating units directly connected through their step-up transformer(s) to the BES which total 20 MW or greater.

~~R2.7.~~R2.6. For Planning Events shown in Table 1~~— Steady State Performance and Table 2 – Stability Performance~~, when the analysis indicates an inability of the System to meet the performance requirements in ~~the t~~Table~~s~~ 1, the Planning Assessment shall include Corrective Action Plans addressing how the performance requirements will be met. Revisions to the Corrective Action Plans are allowed in subsequent assessments but the System shall continue to meet the performance requirements in the tables. Corrective Action Plans do not need to be developed solely to meet the performance requirements for sensitivities run in accordance with Requirements R2.1.3 and R2.4.3. The Corrective Action Plan shall:

~~R2.7.1.~~R2.6.1. List System deficiencies and the associated actions needed to achieve required System performance. Such actions may include: ~~installation, modification, retirement, or removal of Transmission and generation Facilities and any associated equipment such as protective or Special Protection Schemes, rate applications, DSM, or other initiatives, new technologies, or Operating Procedures including how long the Operating Procedures will be needed as part of the Corrective Action Plan.~~

- Installation, modification, retirement, or removal of Transmission and generation Facilities and any associated equipment.
- Installation or modification of Protection Systems or Special Protection Systems
- Installation or modification of automatic generation tripping as a response to a single or multiple Contingency to mitigate Stability performance violations.

- -Installation or modification of manual and automatic generation runback/tripping as a response to a single or multiple Contingency to mitigate Steady State performance violations.
- -Use of Operating Procedures specifying how long they will be needed as part of the Corrective Action Plan.
- -Use of rate applications, DSM, new technologies, or other initiatives.

~~R.2.7.1.1.~~R2.6.2. For the Near-Term Transmission Planning Horizon, include both a project initiation date as well as an in-service date.

~~R.2.7.1.2.~~R2.6.3. For the Long-Term Transmission Planning Horizon, provide an in-service year.

~~R2.7.4.~~~~Contain a description of how and why the consideration of the sensitivities selected in accordance with Requirements R2.1.3, R2.1.4, R2.4.3, and R2.4.4 in the Planning Assessment did or did not result in a modification or expansion of the list of actions developed in accordance with Requirement R2.7.1.~~

R2.6.4. If situations arise that are beyond the control of the Transmission Planner or Planning Coordinator that prevent the implementation of a Corrective Action Plan in the required timeframe, then the Transmission Planner or Planning Coordinator is permitted to utilize Non-Consequential Load Loss and curtailment of Firm Transmission Service to correct the situation that would normally not be permitted in Table 1, provided that the Transmission Planner or Planning Coordinator documents that they are taking prudent actions to resolve the situation. The Transmission Planner or Planning Coordinator shall document the situation causing the problem, alternatives evaluated, and the use of Non-Consequential Load Loss or curtailment of Firm Transmission Service.

~~R2.7.3.~~R2.6.5. Be reviewed in subsequent annual Planning Assessments as to implementation status of identified System Facilities and Operating Procedures.

~~R2.8.1.~~R2.7. For short circuit analysis, if the short circuit current interruption duty on fault interrupting devices determined in Requirement R2.3 exceeds their Equipment Rating, the Planning Assessment shall include a Corrective Action Plan to address the Equipment Rating violations. The Corrective Action Plan shall:

R2.7.1. List System deficiencies and the associated actions needed to achieve required System performance.

R2.7.2. Be reviewed in subsequent annual Planning Assessments as to implementation status.

~~R2.7.~~R2.8. The Planning Assessment shall provide the largest Consequential Load Loss (megawatt Demand) and the associated event caused by any P1 event and any P2 event in Table 1.

R2.9. The Planning Assessment shall identify the maximum permissible Non-Consequential Load Loss (megawatt Demand) for those Planning Events where Non-Consequential Load Loss is allowed in Table 1.

R3. For the steady state portion of the Planning Assessment, each Transmission Planner and Planning Coordinator shall perform analysis for the Near-Term and Long-Term Transmission Planning Horizon studies in Requirement R2.1 and Requirement R2.2. ~~The studies shall be based on computer power flow simulations that analyze BES normal performance (n-0) and System response to c~~Contingencies ~~in Table 1 – Steady State Performance.~~ The studies shall be based on computer simulations using models utilizing data provided in Requirement R1. *[Violation Risk Factor: ~~TBD~~Medium]* *[Time Horizon: ~~TBD~~Long-term Planning]*

R3.1. Studies shall be performed to determine whether the BES meets the performance requirements in Table 1~~– Steady State Performance.~~ based on the lists created in Requirement R3.4.

R3.2. Studies shall be performed to assess the impact of the Extreme Events identified in Requirement R3.5.

~~**R3.2.**~~**R3.3.** Contingency analyses shall: ~~simulate the removal of all elements including those that System protection is expected to disconnect for each Contingency without operator intervention.~~

R3.3.1. Simulate the removal of all elements that the Protection System and other automatic controls are expected to disconnect for each Contingency without operator intervention.

~~**R3.2.1.**~~**R3.3.2.** For all generators, studies shall consider the minimum steady state voltage limitations ~~of all generators~~ and identify how the generators are ~~treated~~ analyzed in the steady state simulation.

~~**R3.2.2.**~~**R3.3.3.** For all Transmission lines, studies shall consider relay loadability and identify how loadability is ~~treated~~ analyzed in the steady state simulation.

R3.3.4. Simulate the expected operation of existing and planned devices designed to provide Steady State control of electrical system quantities. These devices include equipment such as phase-shifting transformers, load tap changing transformers, capacitors, and inductors.

~~**R3.2.**For Steady State studies:~~

~~**R3.2.1.**Performance criteria for System normal conditions and for Planning Events in Table 1 – Steady State Performance shall be met.~~

~~**R3.2.2.**Evaluations shall be performed for single Contingencies (identified in Table 1 – Steady State Performance).~~

~~**R.3.2.2.1.** Consequential Load loss (expected maximum demand and expected duration) following a single Contingency shall be identified in the Planning Assessment.~~

R.3.2.2.2. Following single Contingency events, Transmission configuration changes and redispatch of generation are allowed provided that all Facilities shall be operating within their Facility Ratings and within their thermal and voltage limits.

R3.3.3.R3.4. Those Planning Event Contingencies in Table 1 — Steady State Performance not covered in Requirement R3.3.2 that are expected to produce more severe System impacts shall be identified, and a list of those Contingencies to be evaluated for System performance in Requirement R3.1 created,. and tThe rationale for the Contingencies selected for evaluation shall be available as supporting information and shall includinclude an explanation of why the remaining Contingencies would produce less severe System results.

R3.4.R3.5. Those Extreme Events in Table 1 — Steady State Performance that are expected to produce more severe System impacts shall be identified, and a list of those events to be evaluated for System performance in Requirement R3.2 created,. and tThe rationale for the Contingencies selected for evaluation shall be available as supporting information and shall includinclude an explanation of why the remaining Contingencies would produce less severe System results. If the Extreme Events analysis concludes there are cascading outages caused by the occurrence of Extreme Events, an evaluation of implementing a change possible actions designed to reduce or mitigate the likelihood or mitigate of suchthe consequences and adverse impacts of the event(s) shall be conducted.

R3.5.Manual and automatic generation run-back/tripping is allowed as a response to a single or multiple Contingency if the following conditions are met:

R3.5.1. All Facilities shall be operating within their Facility Ratings.

R3.4.1. Such action would not violate safety, equipment, regulatory or statutory requirements.

R3.4.2.A sustainable, stable, operating condition is maintained.

R4. For the short circuit portion of the Planning Assessment, as described in Requirement R2.3, each Transmission Planner and Planning Coordinator shall assess the short-circuit capability of its equipment under normal conditions and following any single Contingency condition that would result in greater circuit breaker interrupting duties. *[Violation Risk Factor: TBD] [Time Horizon: TBD]*

R5.R4. For the Stability portion of the Planning Assessment, as described in Requirement R2.4 and Requirement R2.5, each Transmission Planner and Planning Coordinator shall perform the Contingency analyses listed in Table 21 — Stability Performance. The studies shall be based on computer simulations using models utilizing data provided in Requirement R1. The studies shall be based on computer simulations using models utilizing data provided in Requirements R9 through R14, the MOD-010 and MOD-012 standards, and other data sources, to include known planned and long term outages of Transmission or generation equipment. The studies shall cover both System Stability and Generating Unit Stability. The following requirements apply to both System Stability and Generating Unit Stability studies unless otherwise

~~noted.~~ *[Violation Risk Factor: ~~TBD~~Medium] [Time Horizon: ~~TBD~~Long-term Planning]*

R4.1. Studies shall be performed to determine whether the BES meets the performance requirements in Table ~~2~~1 ~~– Stability Performance~~ based on the lists created in Requirement R4.4~~shall use computer Stability simulations that analyze the response of the BES~~.

R4.2. Studies shall be performed to assess the impact of the Extreme Events identified in Requirement R4.5.

R4.3. Contingency analyses shall:

R4.3.1. ~~s~~Simulate the removal of all elements ~~including those~~ that the Protection System ~~protection~~ and other automatic controls are expected to disconnect for each Contingency without operator intervention.

~~**R5.3.**~~**R4.3.2.** ~~Studies shall consider~~ Simulate generator performance under anticipated conditions including how the voltage ride through capability ~~of all generators and identify how the generators are treated~~ is analyzed ~~in the simulation~~.

R4.3.3. Simulate the expected operation of existing and planned devices designed to provide dynamic control of electrical system quantities. These devices include equipment such as generation exciter control and power system stabilizers, static VAR compensators, power flow controllers, and DC Transmission controllers.

~~**R5.2.**For the System Stability study:~~

~~**R5.4.1.**~~**R4.4.** ~~At a minimum, t~~Those Planning Event Contingencies in Table ~~2~~1 – ~~Stability Performance~~ that ~~would~~are expected to produce more severe System impacts shall be identified, and a list of those Contingencies to be evaluated for System performance in Requirement R4.1 created~~,~~. ~~and t~~The rationale for the Contingencies selected for evaluation shall be available as supporting information with an explanation of why the remaining Contingencies would produce less severe System results.

~~**R5.3.1.**Performance shall meet the requirements for Planning Events in Table 2 – Stability Performance.~~

~~**R5.3.2.**Automatic generation tripping is allowed to mitigate Stability violations if the following conditions are met:~~

~~**R.5.3.2.1.** All Facilities shall be operating within their Facility Ratings.~~

~~**R.5.3.2.2.**Such action would not violate safety, equipment, regulatory or statutory requirements.~~

~~R.5.4.3.3.A sustainable, stable, operating condition is maintained.~~

~~**R5.4.4.**~~**R4.5.** ~~At a minimum, t~~Those Extreme Events in Table ~~2~~1 ~~– Stability Performance~~ that ~~would~~are expected to produce more severe System impacts shall be identified and a list of those events to be~~,~~ evaluated for System performance in Requirement R4.2 created~~,~~. ~~and t~~The rationale for the

Contingencies selected for evaluation shall be available as supporting information and shall include~~e~~ an explanation of why the remaining Contingencies would produce less severe System results. If the ~~Extreme Events~~ analysis concludes there are cascading outages caused by the occurrence of Extreme Events, an evaluation of ~~implementing a change~~ possible actions designed to reduce ~~or mitigate~~ the likelihood or mitigate ~~of such~~the consequences of the event(s) shall be conducted.

~~**R5.5.**For the Generating Unit Stability studies:~~

~~**R5.5.1.**Shall be performed for individual generating units 20 MW or greater directly connected through a step-up transformer to the BES and for generating units at the same location which total 75 MW or greater, directly connected through their step-up transformer(s) to the BES.~~

~~**R5.5.2.**Shall be performed for changes in the real power output of a generating unit by more than 10% of the existing capability or more than 20 MW whichever is greater.~~

~~**R5.5.3.**Shall be performed and evaluated for those Planning Events that would produce more severe System impacts and the rationale for the Contingencies selected for evaluation shall be available as supporting information and shall include an explanation of why the remaining Contingencies would produce less severe System results.~~

~~**R5.5.4.**Shall meet Performance requirements for Planning Events in Table 2 – Stability Performance.~~

~~**R6.**~~**R5.** Each Transmission Planner and Planning Coordinator shall define and document, within their Planning Assessment, ~~the~~any proxies used in ~~simulation studies~~ the analysis to identify System instability for conditions such as cascading outages, voltage instability, or uncontrolled islanding. *[Violation Risk Factor: ~~TBD~~Low] [Time Horizon: ~~TBD~~Long-term Planning]*

~~**R7.**~~**R6.** Each Transmission Planner and Planning Coordinator shall determine and identify individual and joint responsibilities for performing the required studies for the Planning Assessment. *[Violation Risk Factor: ~~TBD~~Low] [Time Horizon: ~~TBD~~Long-term Planning]*

~~**R8.**~~**R7.** Each Planning Coordinator shall coordinate the distribution of Planning Assessment results among ~~neighboring systems~~ adjacent Planning Coordinators and any functional entity who has indicated a reliability need, coordinating analysis of these results through an open and transparent peer review process such as described in FERC Order 890. *[Violation Risk Factor: ~~TBD~~Low] [Time Horizon: ~~TBD~~Long-term Planning]* ~~This distribution shall include:~~

~~**R9.**Each Distribution Provider shall provide its respective Planning Coordinator with modeling information for real and reactive load forecast data for each year of the Transmission planning horizon at Transmission nodes based on expected or historical System performance including the expected mix of industrial, commercial, and residential Loads, within ninety days of a request for such information. *[Violation Risk Factor: TBD] [Time Horizon: TBD]*~~

~~**R10.**Each Transmission Planner shall provide its respective Planning Coordinator with modeling information for Firm Transmission Service data, Interchange Schedules and resources required to supply Load for each of its Balancing Authorities for each year of the Transmission planning horizon, within ninety days of a request for such information. *[Violation Risk Factor: TBD] [Time Horizon: TBD]*~~

~~**R11.**Each Transmission Owner shall provide its respective Planning Coordinator with modeling information for known planned outages and long-term outages for Transmission equipment for each year of the Transmission planning horizon with consideration given to spare equipment strategy, within ninety days of a request for such information. *[Violation Risk Factor: TBD] [Time Horizon: TBD]*~~

~~**R12.**Each Generator Owner shall provide its respective Planning Coordinator with modeling information for known planned outages and long-term outages for generation equipment for each year of the Transmission planning horizon, within ninety days of a request for such information. *[Violation Risk Factor: TBD] [Time Horizon: TBD]*~~

~~**R13.**Each Resource Planner shall provide its respective Planning Coordinator with the modeling information for new planned facilities for each year of the Transmission planning horizon including but not limited to generators, Reactive Power devices, and new technologies, within ninety days of a request for such information. *[Violation Risk Factor: TBD] [Time Horizon: TBD]*~~

~~**R14.**Each Transmission Planner shall provide its respective Planning Coordinator with modeling information for new planned facilities for each year of the Transmission planning horizon including but not limited to Transmission Lines, circuit breakers, Reactive Power devices, Protection System equipment and control devices, and new technologies, within ninety days of a request for such information. *[Violation Risk Factor: TBD] [Time Horizon: TBD]*~~

C. Measures

M1. Each Transmission Planner and Planning Coordinator shall provide evidence, such as the System model with the specified data in electronic or hard copy format, that ~~they~~it ~~are~~is maintaining System models, using data consistent with MOD-010 and MOD-012, simulating projected System conditions, and that the models represent the required information in accordance with Requirement R1.

M2. Each Transmission Planner and Planning Coordinator shall provide evidence, such as electronic or hard copies of its annual Planning Assessment, that it has prepared an annual Planning Assessment of its portion of the BES in accordance with Requirement R2.

M3. Each Transmission Planner and Planning Coordinator shall provide evidence, such as electronic or hard copies, of the studies utilized in preparing the Planning Assessment, in accordance with Requirement R3.

~~**M1.**Requirement R4 to be deleted.~~

~~**M5.**~~**M4.** Each Transmission Planner and Planning Coordinator shall provide evidence, such as electronic or hard copies, of the studies utilized in preparing the Planning Assessment in accordance with Requirement R~~5~~4.

M5. Each Transmission Planner and Planning Coordinator shall provide evidence, such as electronic or hard copies, of the studies utilized in preparing the Planning Assessment in accordance with Requirement R~~6~~5.

~~**M7.**~~**M6.** Each Transmission Planner and Planning Coordinator shall provide evidence, such as a dated document, that identifies that agreement has been reached on individual and joint responsibilities for performing the required studies for the Planning Assessment in accordance with Requirement R~~7~~6.

M7. Each Planning Coordinator shall provide evidence, such as email notices, documentation of updated web pages, postal receipts showing recipient, date, and contents, or a demonstration of a public posting, that it has coordinated the distribution of Planning Assessment results among adjacent Planning Coordinators and any functional entity who has indicated a reliability need, coordinating analysis of these results through an open and transparent peer review process such as described in FERC Order 890 in accordance with Requirement R~~8~~7.

D. Compliance

1. Compliance Monitoring Process

1.1 Compliance Enforcement Authority

Regional Entity.

1.2 Compliance Monitoring Period and Reset Timeframe

Not applicable.

1.3 Compliance Monitoring and Enforcement Processes:

Compliance Audits

Self-Certifications

Spot Checking

Compliance Violation Investigations

Self-Reporting

Complaints

1.4 Data Retention

The Transmission Planner and Planning Coordinator shall each retain data or evidence to show compliance as identified unless directed by its Compliance Enforcement Authority to retain specific evidence for a longer period of time as part of an investigation:

- The models utilized in the current Planning Assessment and one previous Planning Assessment in accordance with Requirement R1.and Measure M1.
- All Planning Assessments performed since the last compliance audit in accordance with Requirement R2 and Measure M2.
- All studies performed in support of its Planning Assessments since the last compliance audit in accordance with Requirement R3 and Measure M3.

- All studies performed in support of its Planning Assessment since the last compliance audit in accordance with Requirement R4 and Measure M4.
- All studies performed in support of its Planning Assessments since the last compliance audit in accordance with Requirement R5 and Measure M5.
- The current, in force agreement on identified responsibilities, as well as all such agreements in force since the last compliance audit, in accordance with Requirement R6 and Measure M6.

The Planning Coordinator shall retain data or evidence to show compliance as identified unless directed by its Compliance Enforcement Authority to retain specific evidence for a longer period of time as part of an investigation:

- Three calendar years of the notifications employed in accordance with Requirement R7 and Measure M7.

1.5 Additional Compliance Information

None.

2 Violation Severity Levels

	Lower VSL	Moderate VSL	High VSL	Severe VSL
R1	The Transmission Planner or Planning Coordinator's System model failed to represent one of the sub-requirements R1.1.1 through R1.1.6.	The Transmission Planner or Planning Coordinator's System model failed to represent two of the sub-requirements R1.1.1 through R1.1.6. OR, The System model did not use data consistent with the data provided in accordance with the MOD-010 and MOD-012 standards and other data sources.	The Transmission Planner or Planning Coordinator's System model failed to represent three of the sub-requirements R1.1.1 through R1.1.6.	The Transmission Planner or Planning Coordinator's System model failed to represent four or more of the sub-requirements R1.1.1 through R1.1.6. OR, The System model did not simulate projected System conditions as described in Requirement R1.
R2	The Transmission Planner or Planning Coordinator failed to comply with one or both of the following sub-requirements: R2.8 or R2.9.	The Transmission Planner or Planning Coordinator failed to comply with one of the sub-requirements: R2.3 or R2.7.	The Transmission Planner or Planning Coordinator failed to comply with one of the sub-requirements: R2.1, R2.2, R2.4, or R2.6.	The Transmission Planner or Planning Coordinator failed to comply with two or more of the sub-requirements: R2.1, R2.2, R2.4, or R2.6.
R3	The Transmission Planner or Planning Coordinator did not identify Planning Events as described in Requirement R3.4 or Extreme Events as described in Requirement R3.5.	The Transmission Planner or Planning Coordinator did not perform studies as specified in Requirement R3.1 to determine that the BES meets the performance requirements for one of the categories (P2 through P7) in Table 1. OR, The Transmission Planner or Planning Coordinator did not perform studies as specified in	The Transmission Planner or Planning Coordinator did not perform studies as specified in Requirement R3.1 to determine that the BES meets the performance requirements for two of the categories (P2 through P7) in Table 1. OR, The Transmission Planner or Planning Coordinator did not perform Contingency analysis as	The Transmission Planner or Planning Coordinator did not perform studies as specified in Requirement R3.1 to determine that the BES meets the performance requirements for three or more of the categories (P2 through P7) in Table 1. OR, The Transmission Planner or Planning Coordinator did not perform studies to determine that

	Lower VSL	Moderate VSL	High VSL	Severe VSL
		Requirement R3.2 to assess the impact of Extreme Events. OR, The Transmission Planner or Planning Coordinator did not base its studies on computer simulations using models utilizing data provided in Requirement R1.	described in Requirement R3.3.	the BES meets the performance requirements for the P0 or P1 categories in Table 1.
R4	The Transmission Planner or Planning Coordinator did not identify Planning Events as described in Requirement R4.4 or Extreme Events as described in Requirement R4.5.	The Transmission Planner or Planning Coordinator did not perform studies as specified in Requirement R4.1 to determine that the BES meets the performance requirements for one of the categories (P1 through P7) in Table 1. OR, The Transmission Planner or Planning Coordinator did not perform studies as specified in Requirement R4.2 to assess the impact of Extreme Events. OR, The Transmission Planner or Planning Coordinator did not base its studies on computer simulations using models utilizing data provided in Requirement R1.	The Transmission Planner or Planning Coordinator did not perform studies as specified in Requirement R4.1 to determine that the BES meets the performance requirements for two of the categories (P1 through P7) in Table 1. OR, The Transmission Planner or Planning Coordinator did not perform Contingency analysis as described in Requirement R4.3.	The Transmission Planner or Planning Coordinator did not perform studies as specified in Requirement R4.1 to determine that the BES meets the performance requirements for three or more of the categories (P1 through P7) in Table 1.

	Lower VSL	Moderate VSL	High VSL	Severe VSL
R5	N/A	N/A	N/A	The Transmission Planner or Planning Coordinator failed to define and document the proxies for System instability used within their analysis as described in Requirement R5.
R6	N/A	N/A	N/A	The Transmission Planner or Planning Coordinator failed to determine and identify individual or joint responsibilities for performing required studies.
R7	N/A	N/A	The Planning Coordinator failed to coordinate the analysis of its Planning Assessment results through an open and transparent peer review process.	The Planning Coordinator failed to distribute the results of its Planning Assessment.

E. Regional Variances

None.

Table 1 – Steady State & Stability Performance
Planning Events

Steady State & Stability:

a. Voltage instability, cascading outages, and uncontrolled islanding shall not occur.

b. Consequential Load Loss, Supplemental Load Loss, Load Reduction, and consequential generation loss ~~is allowed for all events shown.~~are acceptable as a consequence of any Planning or Extreme Event excluding P0. However, Supplemental Load Loss associated with an event shall not be used to meet steady state performance requirements.

c. Simulate the removal of all elements that Protection Systems and controls are expected to disconnect for each event.

d. Simulate Normal Clearing unless otherwise specified.

e. For all Planning Events, planned System adjustments such as Transmission configuration changes and redispatch of generation are allowed if such adjustments are executable within the time duration applicable to the Facility Ratings.

Steady State Only:

~~b.~~f. ~~Facility Ratings shall not be exceeded. Unless precluded in the Requirements, planned System adjustments are allowed, unless precluded in the Requirements, to keep Facilities within the Facility Ratings, if such adjustments are executable within the time duration applicable to the Facility Ratings.~~System steady state voltages and post-~~transient~~ Contingency voltage deviations shall be within acceptable limits as established by the Planning Coordinator (or Transmission Planner if more restrictive).

g. Planning Event P0 is applicable to steady state only.

Stability Only:

h. The System shall remain stable. [1]

~~f.Dynamic voltages~~Transient voltage response shall be within acceptable limits established by the Planning Coordinator (or Transmission Planner if more restrictive).

i. ~~Simulate Normal Clearing unless otherwise specified.~~

Category	Initial System Condition	Event [3]~~[2]~~	Fault Type [3]	BES Level [4]	Interruption of Firm Transmission Service Allowed [5]	Non-Consequential Load Loss Allowed
P0 No Contingency~~Normal System Conditions~~	Normal System	None	N/A	EHV, HV	No	No
P1 Single Contingency	Normal System	Loss of one of the following: 1. Generator 2. Transmission Circuit 3. Transformer [6] 4. Shunt Device [7]	3Ø	EHV, HV	No	No
		5. Single Pole of a DC line	SLG			
P2 Single Contingency	Normal System	~~Loss of one of the following:~~ 1. Opening of Breaker(s) w/o fault [8]	N/A	EHV, HV	No	No
		2. Bus Section Fault	SLG	EHV	No	No
				HV	Yes	Yes
		3. Internal Breaker Fault [9]	SLG	EHV	No	No

		(Non bus-tie)	SLG	HV	Yes	Yes
		4. Internal Breaker Fault (bus-tie) [9]	SLG	EHV, HV	Yes	Yes
P3 Multiple Contingency ~~*(Generator + 1)*~~	Loss of generator unit followed by System adjustments[10]~~[5]~~	Loss of one of the following: 1. Generator 2. Transmission Circuit 3. Transformer [6] 4. Shunt Device [7] 5. ~~Single pole of a DC Line~~	~~SLG~~ 3Ø	EHV, HV	No[10]	No
		5. Single pole of a DC line	SLG	EHV, HV	No[10]	No
P4 Multiple Contingency *(Fault plus stuck breaker [11])*	Normal System	Stuck breaker [11](non-bus-tie) attempting to clear a Fault on one of the following: 1. Generator 2. Transmission Circuit 3. Transformer [6] 4. Shunt Device [7] 5. Bus Section	SLG	EHV	No[10]	No
			SLG	HV	Yes	Yes
		6. Stuck breaker (bus-tie) attempting to clear a Fault on the associated bus	SLG	EHV, HV	Yes	Yes

Table 1 – Steady State & Stability Performance Planning Events, Continued						
Category	**Initial System Condition**	**Event** [2]	**Fault Type** [3]	**BES Level** [4]	**Interruption of Firm Transmission Service Allowed** [5]	**Non-Consequential Load Loss Allowed**
P5 Multiple Contingency *(Fault plus Protection System failure)*	Normal System	Loss of multiple elements ~~due to a single component~~caused by the failure ~~within~~ of a single Protection System ~~associated with~~ while clearing a ~~F~~fault on one of the following: 1. Generator 2. Transmission Circuit 3. Transformer [6] 4. Shunt Device [7] 5. Bus Section	SLG	EHV	No[10]	No
			SLG	HV	Yes	Yes
P6 Multiple Contingency *(Two overlapping singles)*	Loss of one of the following followed by System adj.[10~~5~~]: 1. Transmission Circuit 2. Transformer [6] 3. Shunt Device [7] 4. Single pole of a DC line	Loss of one of the following ~~followed by System adjustments~~: 1. Transmission Circuit 2. Transformer [6] 3. Shunt Device [7] 4. ~~Single pole of a DC line~~	~~SLG~~ 3Ø	EHV, HV	Yes	Yes
		4. Single pole of a DC line	SLG	EHV, HV	Yes	Yes
P7 Multiple Contingency *(Common Structure)*	Normal System	The loss of: 1. Any two circuits on common structure [12] 2. Loss of a bipolar DC line	SLG	EHV, HV	Yes	Yes

Table 1 – Steady State & Stability Performance
Extreme Events

Steady State & Stability

For all Extreme Events evaluated:

1. Simulate the removal of all elements that Protection Systems and controls are expected to disconnect for each Contingency.

~~2.~~Simulate Normal Clearing unless otherwise specified.

~~3.See Requirement R3.4~~

~~4.~~2. ~~See Requirement R5.5.4~~

Steady State

1. Loss of a single generator, Transmission Circuit, DC Line, shunt device, or transformer forced out of service followed by another single generator, Transmission Circuit, DC Line, shunt device, or transformer forced out of service prior to System adjustments.
2. Local area events affecting the Transmission System such as:
   a. Loss of a tower line with three or more circuits.[12]
   b. Loss of all Transmission lines on a common ~~r~~Right-of-~~w~~Way.
   c. Loss of a switching station or substation (loss of one voltage level plus transformers).
   d. Loss of all generating units at a station.
   e. Loss of a large Load or major Load center.
3. Wide area events affecting the Transmission System based on System topology such as:
   a. Loss of two generating plants resulting from conditions such as:
      i. Loss of a large gas pipeline into a region or multiple regions that have significant gas-fired generation.
      ii. Loss of the use of a large body of water as the cooling source for generation.
      iii. Wildfires.
      iv. Severe weather, e.g., hurricanes, tornadoes, etc.
      v. A successful cyber attack.
      vi. Shutdown of a nuclear power plant(s) and related facilities for a day or more for common causes such as problems with similarly designed plants.

   ~~b.Loss of two Transmission lines in different rights-of-way prior to System adjustments for conditions such as:~~
      ~~i.Wildfires.~~
      ~~ii.Severe weather, e.g., hurricanes, tornadoes, etc.~~

   ~~c.~~b. Other events based upon operating experience that may result in wide area disturbances.

Stability

1. With an initial condition of a single generator, Transmission circuit, DC line, shunt device, or transformer forced out of service, apply a 3Ø fault on another single generator, Transmission circuit, DC line, shunt device, or transformer prior to System adjustments.
2. Local or wide area events affecting the Transmission System such as:
   a. 3Ø fault on generator with stuck ~~breaker~~breaker[11] or a Protection System failure ~~due to a single component failure within the protection system~~resulting in Delayed Fault Clearing.
   b. 3Ø fault on Transmission circuit with stuck ~~breaker~~breaker[11] or a Protection System failure ~~due to a single component failure within the protection system~~resulting in Delayed Fault Clearing.
   ~~c. 3Ø fault on transformer with stuck breaker or a protection system failure due to a single component failure within the protection system.~~
   c. ~~3Ø fault on bus section with stuck breaker or a protection system failure due to a single component failure within the protection system.~~3Ø fault on transformer with stuck breaker[11]or a Protection System failure resulting in Delayed Fault Clearing.
   d. 3Ø fault on bus section with stuck breaker[11] or a Protection System failure resulting in Delayed Fault Clearing.
   e. 3Ø internal breaker fault[11].
   f. 3Ø fault on two or more circuits on a common structure[12].
   g. SLG ~~or 3Ø~~ fault on all Transmission lines on a common Right-of-Way~~right-of-way~~.
   h. 3Ø fault on switching station or substation (loss of one voltage level plus transformers)
   i. Other events based upon operating experience, such as consideration of initiating events that experience suggests may result in wide area disturbances~~.~~

Table 1 – Steady State & Stability Performance
Footnotes
(Planning Events and Extreme Events)

1. System stable means:
   a. Angular Stability:
      i. For Planning Event P1: No generating unit or units shall be allowed to pull out of synchronism. A generator being disconnected from the System by fault clearing action or by a Special Protection System is not considered pulling out of synchronism.
      ii. For all other Planning Events: No generating unit or units totaling more than the Contingency ~~r~~Reserve of the Balancing Authority (or Reserve Sharing Group if applicable) shall be allowed to pull out of synchronism. Generators that pull out of synchronism must have out-of-step protection or some other means to trip the generator for this condition and the resulting apparent impedance swings must not pass through relay characteristics that would result in the tripping of any Transmission System elements other than the generating unit and its direct connection Facilities.
   b. For all Planning Events evaluated: Power oscillations shall exhibit acceptable damping as established by the Planning Coordinator (or Transmission Planner if more restrictive).
2. If the event analyzed involves BES elements at multiple System voltage levels, the lowest System voltage level for stated performance criteria applies regarding allowances for interruptions of Firm Transmission Service and loss of Non-Consequential Load.
3. Unless specified otherwise, simulate Normal Clearing faults. Single line to ground (SLG) or three phase (3Ø) are the fault types, that must be evaluated in Stability simulations for the event described. A 3Ø fault study indicating criteria are being met shall provide sufficient evidence that a SLG condition would also meet criteria.
4. Bulk Electric System (BES) level references include extra-high voltage (EHV) Facilities defined as greater than 300kV and high voltage (HV) Facilities defined as the 300kV and lower voltage Systems. The designation of EHV and HV is used to distinguish between stated performance criteria allowances for interruptions of Firm Transmission Service and Non-Consequential Load.
5. When the conditions and/or event(s) being studied form the basis for conditional Firm Transmission Service, curtailment of that conditional Firm Transmission Service is allowed.
6. For non-Generator Step Up transformer outage events, the reference voltage applies to the low-side winding (excluding tertiary windings) ~~and excluding generator step-up transformers~~. For generator and generator Step Up transformer outage events, the reference voltage ~~apply~~applies to the BES connected voltage (high-side of the Generator Step Up transformer). Requirements which are applicable to transformers also apply to variable frequency transformers and phase shifting transformers.
7. Requirements which are applicable to shunt devices also apply to FACTS devices that are connected to ground.
8. Inadvertent tripping of breakers on one end of a normally networked Transmission circuit such that the line is now open at that end and possibly serving Load radial from a single source point.
9. An internal breaker fault means a breaker failing internally, thus creating a System fault which must be cleared by protection on both sides of the breaker.
10. Curtailment of firm transmission service , when coupled with the appropriate re-dispatch of resources obligated to re-dispatch, is allowed both as a System adjustment (as identified in the column titled 'Initial System Conditions') and a corrective action, where it can be demonstrated that Facilities remain within applicable Facility Ratings and those adjustments do not result in the shedding of any firm Load. Where limited options for re-dispatch exist, sensitivities associated with the availability of those resources must be considered. Where Facilities external to the Transmission Planner's planning region are relied upon, Facility Ratings in those regions must be considered.
11. A stuck breaker means that for a gang-operated breaker, all three phases of the breaker have remained closed. For an independent pole operated

(IPO) breaker, only one pole is assumed to remain closed. ~~The~~A stuck breaker ~~event~~ introduces a delayed clearing mode. ~~Normal Clearing is when the Protection System operates as designed and the Fault is cleared in the time normally expected with proper functioning of the installed protection systems. Breaker fail relay operation is a predetermined time that occurs after the Protection System operates and the breaker has failed. Breaker fail relaying will also isolate a predetermined portion of the electric system to isolate the failed breaker. Delayed clearing of a Fault is due to failure of any Protection System component that prevents the Protection System from operating normally.~~

12. Excludes circuits that share a common structure for 1 mile or less.

~~Table 1 — Steady State Performance~~

~~h.Facility Ratings shall not be exceeded. Planned System adjustments are allowed, unless precluded in the Requirements, to keep Facilities within the Facility Ratings, if such adjustments are executable within the time duration applicable to the Facility Ratings.~~

~~i.System steady state voltages and post-transient voltage deviations shall be within acceptable limits as established by the Planning Coordinator (or Transmission Planner if more restrictive).~~

~~j.Voltage instability, cascading outages, and uncontrolled islanding shall not occur.~~

~~k.Consequential Load and consequential generation loss is allowed for all events shown.~~

~~l.Simulate the removal of all elements that Protection Systems and controls are expected to disconnect for each event.~~

~~m.Simulate Normal Clearing unless otherwise specified.~~

~~Planning Events~~						
~~Category~~	~~Initial System Condition~~	~~Event[3]~~	~~BES Elements out of Service[2, 3]~~		~~Interruption of Firm Transmission Service Allowed~~	~~Non-Consequential Load Loss Allowed~~
			~~(A) > 300 KV~~	~~(B) <= 300 KV~~		
~~P0~~ ~~Normal System conditions~~	~~Normal System~~	~~None~~	~~X~~	~~X~~	~~No~~	~~No~~
~~P1~~ ~~Single Contingency~~	~~Normal System~~	~~Loss of one of the following:~~ ~~1.Generator~~ ~~2.Transmission circuit~~ ~~3.Transformer~~ ~~4.Shunt device~~ ~~5.Single pole of a DC line~~	~~X~~	~~X~~	~~No~~ ~~Yes, if transfer is dependent on the outaged DC line.~~	~~No~~

Version History

Version	Date	Action	Change Tracking
1	TBD	Revision of TPL-001-0 as per Project 2006-02; includes merging requirements of TPL-001-0, TPL-002-0, TPL-003-0, and TPL-004-0 into one, single, comprehensive, coordinated standard: TPL-001-1	Not employed due to scope of revision

NERC
NORTH AMERICAN ELECTRIC RELIABILITY CORPORATION

Standards Announcement

Comment Period Open
May 26–July 9, 2009

Now available at: http://www.nerc.com/filez/standards/Assess-Transmission-Future-Needs.html

Project Name:
2006-02 — Assess Transmission Future Needs

Due Date and Submittal Information:
The comment period is open **until 8 p.m. EDT on July 9, 2009**. Please use this electronic form to submit comments. If you experience any difficulties in using the electronic form, please contact Lauren Koller at Lauren.Koller@nerc.net. An off-line, unofficial copy of the comment form is posted on the project page: http://www.nerc.com/filez/standards/Assess-Transmission-Future-Needs.html

Content for Comment Period:

- Draft three of TPL-001-1 — Transmission System Planning Performance Requirements
- A revised implementation plan

TPL-001-1 is designed to be a single, comprehensive, and coordinated standard that merges the requirements of four existing standards: TPL-001-0, TPL-002-0, TPL-003-0, and TPL-004-0. The proposed standard includes several new definitions.

Other Materials Posted:

- The drafting team's consideration of industry comments received during the second comment period

Project Background:
The purpose of the proposed standard is to establish transmission system planning performance requirements within the planning horizon to develop a bulk electric system that will operate reliably over a broad spectrum of system conditions and following a wide range of probable contingencies. The project includes updating and consolidating the following standards:

- TPL-001-0 — System Performance under Normal Conditions
- TPL-002-0 — System Performance Following Loss of a Single BES Element
- TPL-003-0 — System Performance Following Loss of Two or More BES Elements
- TPL-004-0 — System Performance Following Extreme BES Events
- TPL-005-0 — Regional and Interregional Self-Assessment Reliability Reports

- TPL-006-0 — Data from the Regional Reliability Organization Needed to Assess Reliability

This part of the project addresses TPL-001-0 through TPL-004-0. TPL-005 and TPL-006 will be addressed later in the project.

Applicability of Standards in Project:

- Transmission Planner
- Planning Coordinator

Standards Development Process

The Reliability Standards Development Procedure contains all the procedures governing the standards development process. The success of the NERC standards development process depends on stakeholder participation. We extend our thanks to all those who participate.

For more information or assistance,
please contact Shaun Streeter at shaun.streeter@nerc.net or at 609.452.8060.

Individual or group. (83 Responses)
Name (57 Responses)
Organization (57 Responses)
Group Name (26 Responses)
Question 1 (0 Responses)
Question 1 Comments (83 Responses)
Question 2 (0 Responses)
Question 2 Comments (83 Responses)
Question 3 (0 Responses)
Question 3 Comments (83 Responses)
Question 4 (0 Responses)
Question 4 Comments (83 Responses)
Question 5 (0 Responses)
Question 5 Comments (83 Responses)
Question 6 (0 Responses)
Question 6 Comments (83 Responses)
Question 7 (0 Responses)
Question 7 Comments (83 Responses)
Question 8 (67 Responses)
Question 8 Comments (83 Responses)
Question 9 (69 Responses)
Question 9 Comments (83 Responses)
Question 10 (51 Responses)
Question 10 Comments (83 Responses)
Question 11 (50 Responses)
Question 11 Comments (83 Responses)

Individual
John Allen
City Utilities of Springfield, MO
No
City Utilities of Springfield, Missouri does not agree with the restrictions placed on the Category P3 contingencies. Since this will simulate a multiple contingency similar to a Category P4, loss of firm transmission service and/or loss of non-consequential load should be allowed. We suggest that the drafting team expand the allowable mitigating measures for a Category P3 to be consistent with a Category P4, where loss of firm transmission service and/or loss of non-consequential load is allowed for HV levels.
Group
Dominion - Electric Transmission
R1 – Dominion questions the legal authority NERC has to include the recently inserted language “including requirements of regulatory authorities and other legal obligations.” This language is

too broad and far exceeds the jurisdiction of NERC's mission. R1.1.5 - Dominion has seen base case models built by other transmission entities which do not include area interchanges for all areas and must be solved with area interchange "turned off". Would these base case models be in violation of R.1.1.5?

R2.1.3 - Dominion suggests that SDT needs to be more specific on which of the variations to include. Also for the last bullet, the SDT needs to clarify the duration or timing of planned transmission outages (in relation to Planning horizon). R2.4.1 - While we appreciate the intent of introducing induction motor modeling in simulations, this is a difficult proposal in actual practice. The question of how much of the load is comprised of induction motors and what is a reasonable/practical model has been around now for over twenty years yet is still not resolved satisfactorily. For example, we have heard several experts declare the CLOAD model is inadequate for study. NERC needs to take the lead in developing appropriate models for the widely used simulation software and a methodology for determining load composition prior to requiring induction Load modeling in dynamic simulation studies. Additionally, this requirement states that Aggregate System Load model is acceptable to represent the dynamic behavior of induction motor Loads. Our interpretation is that such aggregate models shall be inserted by the Planners at the time of study, over a specific study area as determined by TP, and these models are not to be represented in the interconnection-wide (i.e. ERAG/MMWG) dynamics base cases. If ERAG/MMWG dynamics base cases are populated with such aggregate load models, the dynamic simulation cases could become very difficult to solve, if not impossible. R2.8 - Dominion does not see any purpose in reporting largest consequential load loss. This is not easily calculated, and would vary from year by year, season by season. R2.9 - Dominion requests further clarification. Is the intent of this requirement to develop criteria for maximum allowable non-consequential load loss prior to requiring a corrective action plan or to just calculate such a load loss where it is permitted in Table 1?

No comments.

R4.4 - Dominion believes that creating a master list of all contingencies a planner must take is burdensome and provides no planning value. In addition the contingencies will vary based on the loading configuration and the specific study case. In general, we start out with the very worst contingencies. If these cause hard rotor swings, we know we will probably have to do most of the possible contingencies in the station until we get down to contingencies that do not swing the generator much. But if the swings are light, then that particular load/topology situation probably does not need in-depth exploration. Creating a master list could create unnecessary study. However, we do support a list of the extreme contingencies in R4.5.

R.5 - What is meant by proxies?

No comments.

No comments.

Yes

Yes

No

Table 1 – Interruption of Firm Transmission Service is not allowed for many of the events listed. Doesn't this imply that firm point-to-point service can't be interrupted even when the service is provided across points that are connected only by a radial facility? If so, does NERC have the authority to determine how transmission service providers calculate firm ATC? Dominion is also concerned that transmission service providers appear subject to 'double jeopardy' I.E, NERC fine for violations of applicable reliability standard and FERC sanctions if OATT is violated.

No

Dominion agrees with the retirement of TPL-005-0 and TPL-006-0. However, Dominion has some concern over the implementation period and believes that 60 months to implement corrective action plans may not be enough. This standard has more stringent requirements ("raising the bar") than the current TPL standards. Having to assess the system for these new standards as well as implementing corrective action plans within 60 months could be difficult to get approval to site and construct new transmission. Dominion suggests that an additional 12 to 24 months be given to allow time for the assessments to determine violations, solicit input from all stakeholders through RTO process (As required by FERC 890) to determine the most appropriate corrective action plans.

Group

Northeast Power Coordinating Council

R1--There needs to be some direction provided on the initial conditions used in the assessment. This guidance should include discussion as to whether or not representations of generator forced outages are to be represented in the base case or if they are addressed through the sensitivity testing (Could add R1.1.7 Reasonable representations of unplanned generator outages.) Additionally, the standard is also silent on the treatment of system transfers, both internal and

external, as to how they should be modeled in the base case. For some areas, their current practice is to include heavy system stresses in their base case, which leaves little for sensitivity testing. It is unclear if this practice works within the purview of this standard. Guidance is needed on how to treat base case generation dispatch and system transfers. The inclusion of "requirements of regulatory authorities and other legal obligations" is not understood. Even if some version of this language is kept in the final standard, it seems to belong in R2 rather than R1. "Simulate" should be changed to "incorporate". R1.1.1 Priority comment – Only known long-term outages of generation and transmission should be required to be modeled. R1.1.2 comment - Do we need to have the list of equipment to model? How are circuit breakers, and other equipment modeled? Also, what should be the level of detail and the form that Protection System Equipment and Control Devices be modeled? We recommend deleting the list. Make R1.1.2 simply read as follows: R1.1.2--Projected system configuration, taking into account new planned Facilities and changes to existing Facilities, for each year of the Near-Term and Long-Term Transmission Planning Horizon. R1.1.5 comment – What specifically needs to be modeled under Interchange? R1.1.6 comment – This needs further definition or it should be deleted. It is not clear what a "network resource required to supply load" is. Does this refer to Network Resource per FERC LGIP?

It is recommended to replace the phrase "prepare" with "conduct and document" in the first sentence. R2.1.1 Comment – The requirement to evaluate year one or year two should be removed. This is not consistent with the time horizon identified in R2. R2.1.3 Comment - The emphasis on sensitivity testing in the existing section appears misdirected and should be focused on reasonable risk. The assessment should have to include a discussion of reasonable risk. The sensitivity list can be used to select sensitivities to assess risk. Having a requirement to perform one sensitivity just to meet the requirement of the standard does not add value to the assessment. R2.1.4 – With respect to spare equipment strategy, this requirement imposes severe testing requirements upon the system. However, there is no discussion on the generation dispatch or system transfers that are to be used for this portion of the assessment. The expectations for changes in system stresses need to be clear as part of the standard. Additionally, this section does not contemplate changing the acceptability of load loss. After experiencing a major contingency such as this, some change in the acceptability of load loss should be expected. The standard should consider allowing Non-Consequential load loss for P1 & P2 events. The standard needs to allow Non-Consequential load loss for P3 & P4 events. Remove the wording "(such as a transformer)". What constitutes "spare equipment strategy"? Would a strategy that involves out-of-merit dispatch or operational restrictions be considered a valid "spare equipment strategy". If a transformer is lost, could a reconfiguration of the transmission system constitute a valid "spare equipment strategy"? R2.2 Comment – We suggest replacing the phrase "a current System peak Load study" with "a valid System peak Load study" in the first sentence. The word current is confusing as some read the word current to mean "today's" rather than "valid". R2.3 Comment – Please provide guidance as to what year should be represented when performing short circuit studies. R2.4.1 Comment – Change to read: "For peak System Load levels, a Load model shall be used which appropriately represents the dynamic behavior of Loads, including consideration of the behavior of induction motor Loads or an aggregate System Load model which represents the overall dynamic behavior of the Load." R2.5.1 Comment – We suggest deleting this requirement, and incorporating it into R2.5.2. R2.5.2 Comment – To incorporate R.2.5.1 into R2.5.2; please modify the section as follows: For steady state, short circuit, or Stability analysis the study shall be less than five calendar years old or less: the latest Transmission Planning Horizon System model shall not include any material changes, such as, generation or Transmission additions/removals, or topology changes that have occurred in the intervening period and would impact the study area. Material generation changes could include: • The addition/deletion/change of individual generating unit capability determined to be material by the Planning Coordinator or Transmission Planner. [A 20 MVA generator is fairly small in a 30,000 MW system and system concerns would already be addressed though the System Impact Study] • An aggregated addition/deletion/change to a group of generating units directly connected through their step-up transformer(s) to the BES determined to be material by the Planning Coordinator or Transmission Planner. R2.6 Priority Comment – As written, this section undermines the value of the sensitivity testing. This section should require a corrective action plan to fix problems determined in sensitivity analysis if there is a reasonable risk of occurrence. We suggest making the standard read "Provide documentation that explains the reasoning for the sensitivities considered and selected." R2.6 Comment – At the end of the second sentence, the phrase "in the tables" is used. We suggest using more definitive language such as "in Table 1". R2.6.2 Comment – The phrase "Project Initiation Date" needs to be defined. It is unclear if this is this the date of ground breaking, purchase orders being issued, solution study initiation, etc. Additionally, in the second sentence the phrase "as well as an in-service date" should be modified to read "as well as a target in-service date". R2.6.3 Comment – Plans can provide a target in-service year but not an actual in-service year. R2.6.4 Priority Comment – There should be a cutoff point when changes occur beyond a certain date. When that date occurs, further changes will be evaluated in the next year's assessment. Otherwise, if a state makes a decision not to site a project a few weeks prior to the end of the assessment period, there will not be sufficient time to incorporate this into that year's assessment and develop corrective actions.

R2.8 Comment –Largest consequential load loss is not factored into the Planning Assessment and should therefore be deleted. R2.9 Comment – This requirement is unclear. Is this requirement asking for each transmission planner to list their criteria for non-consequential load loss, or is it asking how much non-consequential load loss was being relied upon in the assessment? We recommend that the requirement be modified to require documentation of the maximum amount of non-consequential load loss that was relied upon during the assessment. It is strongly recommended that the standard should consider not allow non-consequential load loss to resolve any violation arising from the planning events in Table 1. Therefore, this requirement would then be deleted. The use of "System Off-Peak Load" is too general. Is the intention to have the system minimum load used here? Because of the seasonal differences in equipment ratings, seasonal peak and off peak (minimum) loads should be analyzed.
R3.3.2 – Traditionally transmission planners have used their judgment about the minimum steady state voltage limitations of generators. If this standard is going to require its incorporation into the assessments, there should be an MOD standard developed requiring the generators to provide the necessary information prior to its inclusion as a requirement in this standard. R3.3.3 – PRC-023 requires relay loadability to be reflected in facility ratings. Therefore this additional requirement is unnecessary and should be deleted. R3.5 – We recommend that the requirement for Extreme Event testing be removed from this standard as there is no requirement to develop a Corrective Action Plan to address unacceptable consequences. Otherwise we recommend the following: - Extreme Event performance should be a consideration when developing Corrective Action Plans to address Planning Events - It should be clear that an evaluation does not require solution development for all Extreme Events - Change "an evaluation of possible actions…" to "where appropriate, reasonably practicable actions designed to reduce the likelihood or mitigate the consequences and adverse impacts of the event(s) shall be considered." For Requirements R3.4 and R3.5, what defines "more severe System impacts"?
R4.3.2 - Traditionally transmission planners have assumed that generators would ride through low voltages associated with Planning Events which is generally adequate for non-wind generators. If this standard is going to require its incorporation into the assessments, there should be an MOD standard developed requiring the generators to provide the necessary information prior to its inclusion as a requirement in this standard. R4.5 Priority Comment – We recommend that the requirement for Extreme Event testing be removed from this standard as there is no requirement to develop a Corrective Action Plan to address unacceptable consequences. Otherwise we recommend the following: - Extreme Event performance should be a consideration when developing Corrective Action Plans to address Planning Events - It should be clear that an evaluation does not require solution development for all Extreme Events - Change "an evaluation of possible actions…" to "where appropriate, reasonably practicable actions designed to reduce the likelihood or mitigate the consequences and adverse impacts of the event(s) shall be considered." For Requirements R4.4 and R4.5, what defines "more severe System impacts"?
It is unclear as to what is meant by the term "proxy used in the analysis" used in this requirement. Does this mean Planning Coordinator established practices, thresholds or guidelines used to gauge when simulations suggest an event such as cascading outages occurs? If so the Requirement should be revised to read: R5. Each Transmission Planner and Planning Coordinator shall define and document, within their Planning Assessment, when established practices, thresholds or guidelines identify System instability for conditions such as cascading outages, voltage instability, or uncontrolled islanding. The VRF should be "Medium".
We do not feel that this requirement belongs in this standard and it should be deleted. The standard defines requirements for the assessment not who does what.
This standard should not be reiterating FERC Order 890. We do not feel that this requirement belongs in this standard and it should be deleted.
No
Revise the Load Reduction and Non-Consequential Load Loss definitions as follows. Load Reduction: Load that is still connected to the System, but is reduced due to lower voltage conditions resulting from following a Planning or Extreme Event. Non-Consequential Load Loss: Non-Interruptible Load loss other than Consequential Load Loss, Supplemental Load Loss, and Load Reduction. Intended post contingency loss of load (other than Interruptible Load, Supplemental Load or Load Reduction) caused by operator or SPS (RAS) action. (Priority Comment) For Drafting Team consideration: What types of non-interruptible load loss would be considered non-consequential load loss--manual load shedding for example? With this in mind, can the definition be simplified, maybe to read: Non-Consequential Load Loss: Operator action taken to deliberately remove load from service in response to adverse system conditions.
No
For Steady State & Stability: Steady State & Stability: a. Transmission voltage instability, cascading outages, and uncontrolled islanding shall not occur. b. Consequential Load Loss, Supplemental Load Loss, Load Reduction, and consequential generation loss are acceptable as a consequence of any Planning or Extreme Event excluding P0. However, Supplemental Load Loss and Load Reduction associated with an event shall not be used to meet steady state performance

requirements P5 Priority Comment – As written, this requirement is overly severe. This would require the simulation of a “dead” station if only one battery is present (use of NERC Glossary Protective System definition is too broad). The failure of the single protection system should be limited to certain aspects of the protection system. P7 Priority Comment – Event 1 - This requirement requires the evaluation of the loss of two circuits on a multiple circuit tower. We recommend that this be modified so that only the loss of two adjacent (vertically or horizontally) circuits need be evaluated. We also recommend that the Planning Coordinator be allowed to evaluate and if appropriate exempt specific locations from this contingency based on acceptable risk. Comments on Extreme Events – Table 1- We recommend renumbering the Extreme Events table to be Table 2. Stability Condition 2 Note a - Priority Comment - As written, this requirement is overly severe. This would require the simulation of a “dead” station if only one battery is present (use of NERC Glossary’s Protective System definition is too broad). The failure of the single protection system should be limited to certain aspects of the protection system. Stability Condition 2 Note h – Eliminate this requirement or change to loss of station following three-phase fault. This note is confusing. Without providing a better defined scenario, it is unclear as to what clearing times should be used in this simulation. Comments on Footnotes – Table 1- We recommend renumbering the Footnotes table to be Table 3. Footnote 1.a.i – Should clarify that this requirement refers to generator units that are connected to the BES system. Footnote 1.a.ii – Contingency Reserve is dependent on the generation on-line. We suggest changing the first sentence to say that you can’t lose more than that permissible by the Planning Coordinator. Also change “pull out of synchronism” to “lose synchronism” in this sentence and in the second sentence. (Is “Lose synchronism” a more commonly used term?). Footnote 1.a.i, states "For Planning Event P1: No generating unit or units shall be allowed to pull out of synchronism." There is the potential for this requirement to be taken too far. Does this mean that someone's 4 kW generator at home needs to remain synchronized? Therefore, there needs to be some sort of qualifier on this requirement. Suggested wording: "For Planning Event P1: No generating unit or units greater than 20 MW and directly interconnected at 100 kV or above shall be allowed to lose synchronism. Note that synchronism applies to conventional synchronous generators and may not apply to other generation technology." Footnote 3 – We recommend revising the wording of the last sentence to “A three phase fault study indicating criteria are being met is sufficient evidence that a SLG condition would also meet criteria.” Footnote 4 – We recommend that a lower bound be put on the HV electric systems (such as 100 kV), rather than just saying “and lower”. As has been commented on in a previous draft, the Drafting Team should also consider not having a prescribed voltage definition of BES, be it called EHV or HV. Studies should determine what facilities should be part of the BES because of their impact on reliability. A proposal is to modify Footnote 4 to replace the phrase “…(EHV) Facilities defined as greater than 300 kV…” with “…(EHV) Facilities defined as having a significant impact on the reliability of the System, generally at voltages greater than 300 kV as determined by the Planning Coordinator…” In using such language, the more stringent requirements could apply to BES/EHV but not globally for Facilities operating at voltages greater than 300 kV. Using this methodology the extra investment required would go towards real improvement of the reliability of the System. EHV and HV should be added to the Definitions of Terms Used in Standard. Footnote 12 – We recommend adding an alternative modifier to the end of the sentence, “or for 5 towers or less.” This is consistent with NPCC criteria.

No

Capitalize Firm Transmission Service in footnote 10 and instead of saying firm Load use Firm Demand to be consistent with the NERC Glossary.

No

Please clarify, since R2 through R6 should become effective before results could be distributed to adjacent Planning Coordinators and any functional entity. However, by the wording of the effective date of R1 and R7 it appears R7 becomes effective before R2 to R6. That is, 24 months are allowed by the standard to complete the planning assessments after regulatory approval. The results may not be ready for distribution by the planning coordinator after the first twelve months. The term “Planning Coordinator” is not defined in the NERC Glossary of Terms used in Reliability Standards and, therefore, this standard should indicate whether this term is the same as the “Planning Authority” defined in the glossary. Otherwise the definition of the Planning Coordinator should be included in the NERC Glossary of Terms used in Reliability Standards. With regard to the many changes/modifications from the previous draft and from the previous TPL standards being replaced by TPL-001-1, another posting of this Standard will be necessary to fully evaluate the impact (on reliability and also cost of implementation) of such changes. The decision to allow the use of all type of RAS or SPS (particularly generator tripping and run-back) as a common practice for single contingency does not “raise the bar” in the planning standard, and should be reviewed. How can higher system performance be required that involves substantial infrastructure investment to prevent events with a very low probability of occurrence, and allow use of a less reliable measure (SPS failure or misoperation having a higher probability of occurrence) to reduce the investment for more probable events?

Group

TVA System Planning

The phrase, “for each year of the Near-Term and Long-Term Transmission Planning Horizon”, should be revised to remove “each year” because there may not be studies actually required in each year. The SDT stated during its June 30th Webinar that protection system equipment need not be explicitly represented in models, but had difficulty in determining adequate wording for the proposed sub-requirement. Because protection system action is described in R3.3.1, R3.3.4, R4.3.1, and R4.3.3 we suggest that protection system equipment be removed from the list in R1.1.2. If R1.1.2 is not removed, TVA is concerned about the level of resources that will be required to model these additional relay requirements in the one year allowed in the Implementation Plan. In bullet three of R1.1.2, are bus-tie circuit breakers to be represented in the models? Typically circuit breakers are included in the contingency definitions along with the protection system equipment used in the powerflow models. In bullet seven of Requirement R1.1.2, what "new technologies" are to be represented in the models?
Do not understand the rationale for being so prescriptive in requiring specific years to be studied in R2.1.1. Why not allow the TP and/or PC to decide on the three years to be studied in the Near Term? Since R2.3 short circuit analysis is a new “raising the bar” requirement, should the implementation plan for this be for 5 years like the other new “raising the bar” requirements? Further clarification is needed in R2.4.1 concerning load models that appropriately represent the dynamic behavior of loads. Is a NERC drafting team addressing these issues to determine an industry standard? If contingencies occur inside one utility that affect facilities in another utility, which utility is responsible for running these studies during the annual assessments? In R2.6.1, is there any limit to the time duration that a SPS and/or operating procedures can be used in the CAP? In Posting #2, undervoltage load shed, underfrequency load shed, and Special Protection Schemes were considered to be Non-Consequential Load Loss. In R2.6.1, installation or modification of Protection Systems or Special Protection Systems are now allowed as part of the Corrective Action Plan. Should undervoltage and underfrequency load shed also be allowed in the Corrective Action Plan? In R2.9, does the requirement require the maximum non-consequential load that can occur for contingencies in Table 1 or does it require just the maximum that a utility will allow on its system? Suggest clarifying “permissible” or perhaps using similar language as found in R2.8. Please explain the reason why Requirement R2.9 is needed in the Assessment. Reporting the largest Non-Consequential Load Loss doe not impact reliability. In R2.1, change the reference to requirement R2.6 (at the end of the last line) to R2.5. With the elimination of the distinction between system and generating plant stability studies, the blanket requirement in R2.5.1 that all stability analyses be five calendar years old or less, regardless of any material changes to the system, would cause needless work to be performed on those plants or areas of the system where no changes are occurring. Recommend add the following to the end of R2.5.1: “unless justification can be provided to demonstrate that the results of an older study are still valid.” In Requirement R2.6.2, what constitutes a "project initiation date," and how will it be used? Please clarify. Please explain the reason why Requirement R2.8 is needed in the Assessment. Reporting the largest Consequential Load Loss does not impact reliability. R2.1 – What’s the value in being able to use “qualified past studies” if you have to use “annual current studies”? Strike the words “supplemented with” and insert the word “or”. R2.3 – Insert the phrase “one year of” after the word “addressing”. In the subrequirements of 2.1.3 and 2.4.3, the use of the word “timing” is unclear. Consider using “in service date” or “schedule for”. In R2.6, does the Corrective Action Plan need to show all possible alternatives to fix a problem that has been identified - or does only one solution need to be shown for a problem?
In R3.3.2, need guidance on how to consider minimum steady state voltage limitations. Is there a NERC team addressing this? It is not clear if it is referring to the ability of plants to meet their voltage schedule, or to their ability to stay connected during post contingencies. In R3, should the “and” in the first sentence actually be “or”? especially for same footprint? Perhaps the “and” should be replaced by “and/or”. Can the PC satisfy this requirement by reviewing studies performed by differing TPs or is separate analysis really required especially when the TP and PC have the same footprint? In the VSL for R3, a severe VSL is listed as failing to meet performance requirement for P0 or P1. We do not understand why a severe VSL would be applied to an all ties closed event which should have little if any problems. We believe that this should be a lower or moderate VSL instead of severe. In R3.3.3 is the relay loadability required for all HV and EHV voltage levels? Previously NERC had required this for 230-kV and above only. This would be massive requirement for our TLs between 100 and 200-kV.
In R4, should the “and” in the first sentence actually be “or”? R4.3.2 requires that voltage ride through capability be analyzed. It is not clear what should be analyzed (e.g. auxiliary loads, generator protection, generator capability, etc.) This requirement needs more clarity. By in large, the industry does not have the input data or the methods to do this. It would seem necessary to have PRC-024 approved before this can be met.
In the VSL associated with R5, we believe that failure to define and document one of the proxies should be a moderate VSL, failure to define and document two proxies should me a high VSL, while failure to define and document three proxies should be a severe VSL. Otherwise failing to document only one proxy would result in a severe VSL. The word “proxies” in this context is confusing and subject to various interpretations. Recommend changing the word “proxies” to “criteria.” There is no requirement that the Planning Coordinator (PC) must use the same proxies

as the Transmission Planner (TP). Since differences in proxy assumptions may lead to different study results, R5 should be revised to require the PC and TP to coordinate the use of proxies.

In the VSL associated with R6, we believe that failure to determine and identify one responsibility should be a moderate VSL, failure to determine and identify two responsibilities should me a high VSL, while failure to determine and identify three responsibilities should be a severe VSL. Otherwise failing to document only one responsibility would result in a severe VSL.

In the VSL associated with R7, we believe that the PC failing to coordinate analysis should be a moderate VSL, the PC failing to distribute should be a high VSL, and failing to do both of these tasks should be a severe VSL.

No

TVA suggests adding back the following to the Bus-tie breaker definition that was contained in Posting #2: “Substations configurations such as ring bus, breaker and a half, or double bus double breaker protection schemes do not use bus tie breakers”. TVA believes that this additional wording helps explain this definition much more clearly. In Posting #2, undervoltage load shed, underfrequency load shed, and Special Protection Schemes were considered to be Non-Consequential Load Loss. Are these now no longer considered to be Non-Consequential Load Loss but instead now considered to be Load Reduction, Supplemental Load Loss, or something else? Should Supplemental Load Loss be further defined as load that is disconnected from the network by end-user equipment responding during duration of the fault as well as to post contingency system conditions? Also the definition of Supplemental Load Loss may benefit from some examples in the definition to further help clarify. Please clarify how Supplemental Load Loss would be included in the stability analysis. The second sentence in the Year One definition is rather confusing. We would suggest changing “calendar year” to “date”. Otherwise it may be interpreted that Year One would begin 12 to 18 months from the end of the current calendar year. Suggest from “beginning”. Load Reduction – Please clarify whether this includes both load response and operator initiated action, such as in changes to transformer LTC. Should definition also include that this load is continuing to be served? Consequential Load Loss must include load that is lost due to the inherent response of the particular type of load. Some motors, lighting and processes will naturally trip during an event, although not as a result of the protection system. It may have been the intent of the SDT to include this phenomenon in the Supplemental Load Loss defintion. However, this definition includes the phrase, "by end-user equipment", and that makes one think that there are devices at the end-user location that is removing this equipment (and conversely, load that is not disconneted "by" end-user equipment cannot be included). Also, the term "post-Contingency" can be confusing because in the case of faults, this phrase is not clear if it means conditions after the fault initiation itself or only after the clearing of the fault. Revise Supplemental Load Loss to read, "End-user Load that inherently disconnects from the System as a consequence of (or "in response") to the conditions created by the System event."

No

The existing TPL 002-0 allows for some local load to be dropped for a single contingency event as long as the Bulk system reliability was not impacted. However there is no such allowance any longer for losing such load for a single contingency in the proposed draft. It would be very expensive for TVA to fix all such events in several remote areas that would have very little impact on the overall reliability of the TVA bulk system. TVA believes that the capital spent for these fixes could be used to better strengthen the overall bulk system in much better ways. P5 should not be a planning event. PRC standards address protection system failures. The complexity associated with identifying and simulating such events is unknown and the defense of assumptions made and events simulated will lead to inconsistency in compliance and enforcement. Industry accepted proxies for such events could be developed that would allow for efficient identification of areas needing further study. Attempting to intermingle protection system operation with BES performance will be nearly impossible to implement given current technologies. Stability Extreme 2.g, and Steady State 2.b. both need a note like footnote number 12 that excludes short distances. Suggest footnote #12 be modified to include right-of-way in addition to structures.

Yes

No

TVA is concerned that the 5 year window for meeting the “raising the bar” requirements is still not adequate. For instance, it typically takes TVA 7 to 10 years to build a new 500-kV transmission line - including time required for such processes as federally mandated NEPA environmental reviews. Strongly suggest increasing this time window to 10 years. Also trying to construct enough facilities within the 5 year implementation period will result in multiple outages at same time - possibly affecting TVA’s bulk reliability during this construction period. Also TVA is concerned that EHV equipment manufacturers will not be able to meet all the equipment orders that will be required to meet the “raising the bar” requirements. Thus TVA believes that these additional concerns strengthen the need to have a 10 year implementation period. Since breaker duty is a new “raising the bar” issue - should there also be a 5 year implementation plan for this as well? TVA is also concerned that the costs to meet the new requirements contained in this TPL

will amount to between $1 billion to $2 billion with very little impact overall on the reliability of the Bulk transmission system. TVA is also very concerned about the increase in rates that will be required to support these new facilities. When will the Implementation Plan be removed from the standard after it is officially approved? Will a revised TPL standard need to be prepared to omit this implementation language? If contingencies in one utility's system results in issues within another utility, who is responsible for studying the contingencies and who would be responsible for documenting the CAP? More time is needed for entities to determine the appropriate dynamic load model required by R2.4.1. We recommend at least 36 months before this requirement becomes effective.

Individual

Blake Williams

CPS Energy

As written, is it the intent of Requirement R2.1.4. to escalate the contingencies in Table 1 from "N-1" to "N-2" and "N-2" to N-3" for long lead-time replacement equipment, such as autotransformers and GSUs? If so, we feel that this requirement is overly burdensome that will result in unnecessary expense to the customers. In Requirement R2.4.1., what is the intent of the second sentence if an aggregate system load model is acceptable? We feel that the second sentence should be removed. In Requirement R2.6.2., we feel that statement of the project initiation date has no benefit and should be removed as a requirement. The required in-service date should be adequate. We do not believe that there is any benefit to reliability by documenting the Consequential and Non-Consequential Load Loss data required by Requirements R2.8. and R2.9.

Requirement R3.3.2. needs clarification.

Yes

Yes

Individual

Tom Mielnik

MidAmerican Energy Company

MidAmerican commends the SDT for all its hard work on this standard. MidAmerican offers the following comments on R2: • MidAmerican believes that the second sentence of R2.3 as written will result in unnecessary modeling for the required short circuit analysis. MidAmerican recommends that the sentence "The analysis shall determine the maximum short circuit interruption duty on fault interrupting devices using the System short circuit model with any generation and Transmission Facilities in service which could impact the study area." MidAmerican recommends that R2.3 be changed by deleting the words "any" and "could" and replace with the words "materially". In this way, the sentence would read, "They analysis shall determine the maximum short circuit interruption duty on fault interrupting devices using the System short circuit model with generation and Transmission Facilities in service which materially impact the study area." • Requirement 2.5 is too confining and is complicated and unnecessary. MidAmerican asks that the requirement be deleted in its entirety. Alternatively, if the SDT does not agree with deleting all of R2.5, then MidAmerican asks that the SDT consider deleting the R2.5.1. MidAmerican believes R2.4 will ensure that analysis is fresh by requiring a certain number of studies be conducted for certain years in the planning horizon. Why add the requirement for no older than 5 calander years? With the R2.4 and the material requirements in R2.5.2 shouldn't that be more than enough to ensure that the analysis is fresh enough to support the assessment? • If R2.5.2 is not deleted, the words "and interconnected to the Bulk Electric System" should be added behind 20 MW or greater. • Requirement 2.6.2 requires the "project initiation date". MidAmerican recommends that the SDT delete the requirement to provide this date as an initiation date is not related to system reliability. If the SDT believes it is critical to get this date, then the SDT should define it. Does it mean when engineering starts, when it is decided to proceed, or something else? • At a minimum, MidAmerican believes that the SDT should add the word "expected" behind largest to avoid unnecessary compliance issues for an unexpected event, and clarify that R2.8 and R2.9 are not required for sensitivity cases.

MidAmerican commends the SDT for it hard wok on this standard and specifically its R3.3.1

wording. MidAmerican has suggestions for the following parts of R3: • . • R3.3.2 – delete the words “For all generators” at the beginning. It is unnecessary in that later in the requirement it states specifically that the responsible entity is to “identify how the generators are analyzed in the steady state limitation”. • R3.3.3 – use a similar construction to R3.3.2 but delete the words “For all transmission lines”. In other words, replace “For all Transmission lines, studies shall consider relay loadability and identify how loadability is analyzed in the steady state limitations.” With “Studies shall consider relay loadability and identify how loadability for transmission lines is analyzed in the steady state simulations.” • R3.4 and R3.5 – change “remaining Contingencies” to “remaining unselected Contingencies”.
MidAmerican commends the SDT for its hard work on this standard. MidAmerican suggests that R4.5 be revised by changing “remaining Contingencies” to “remaining unselected Contingencies.”
MidAmerican commends the SDT for its hard work on this standard. MidAmerican recommends changing R7 by changing “FERC Order 890” to “FERC Order No. 890”.
No
MidAmerican commends the SDT for its hard work on this standard. MidAmerican believes the SDT improved several of the definitions and believes additional changes are needed: • For the bus-tie definition, what does “individual substation bus configurations” mean? • The consequential load loss states that it is load that “removed from service by a planned Protection System operation to isolate fault conditions”. This implies that a contingency that does not involve a fault could never have consequential load loss. MidAmerican suggests that the words “to isolate fault conditions” be replaced with “in response to a contingency event”. Alternatively, consider using the words in R3.3.1 which defines the same information but without referring to fault conditions. • The definition of Long-Term Transmission Planning Horizon is confusing because it is not clear which term the words “when required to accommodate any known longer lead time projects that may take longer than ten years to complete” are meant to modify. MidAmerican believes the intent is that these words only apply to the years ten or beyond and not the entire period years six to ten and beyond. Therefore, we recommend that the words be changed by starting a new sentence in the definition and putting it in parentheses “(Years beyond ten years are required to accommodate any known longer lead time projects that may take longer than ten years to complete.) • MidAmerican commends the SDT for improving the Year One definition. MidAmerican still believes the Year One definition is too confining. It indicates that the first year is defined as the planning window that begins 12-18 months from the current calendar year. This means if the regional entity provides models during the current calendar year in April, the responsible entity cannot use those models in conducting planning until a year that begins in May of the next year. Why delay the start of Year One? What is gained by this delay? MidAmerican recommends that Year One NOT be a defined term. This definition clarifies a term that does NOT need to be clarified for any reason. MidAmerican believe this is a fix for a problem that does not exist. Does the SDT have evidence of lack of compliance in this regard? • Modify the Planning Assessment definition to more explicitly apply to the BES and the TPL-001 requirements. We suggest text of: “Planning Assessment: Documented evaluation of future Transmission System performance and Corrective Action Plans to remedy identified deficiencies in the BES from the steady state and stability performance requirements set forth in the TPL-001 standard.” • Modify the Planning Events definition more explicitly apply to the TPL-001 requirements. We suggest text of: “Planning Events: Events that are identified in the steady state and stability performance requirements set forth in the TPL-001 standard.”
No
MidAmerican commends the SDT for its hard work on this standard. MidAmerican commends the SDT for most of the changes to Table 1. MidAmerican does have a few comments: • MidAmerican suggests that Footnote 11 be added to the sixth item under P4. The note 11 clarifies the meaning of a stuck breaker yet this footnote isn’t applied to item 6 under P4 which is a stuck-breaker item. • MidAmerican believes that it is confusing having a set of explanations for Extreme Events that are 1 through 3 under Steady State and 1 and 2 under Stability and yet have later footnotes listed that are 1 through 11. MidAmerican suggests that the items 1 through 3 under Steady State and 1 and 2 under Stability for Extreme Events be changed to some other designation such as bullets or letters so that it is easy to see that the numerical footnotes start after these explanations of the extreme events. • Further clarify the applicable shunt devices in Footnote 7 with the suggested text “7. Requirements which are applicable to shunt devices also apply to FACTS devices that are connected to ground, but not instrument voltage transformers or surge arrestors.”
Yes
No
MidAmerican commends the SDT for its hard work on this standard. MidAmerican does not support the paragraph that states “Any entity that cannot fully implement its Corrective Action

Plan….shall self report itself…" MidAmerican believes that the Energy Policy Act of 2005 does not provide NERC or FERC the authority to require construction of facilities. Therefore, MidAmerican believes that this paragraph should be deleted in its entirety from the implementation plan as requiring responsibility to build facilities or else self report non-compliance. This is in direct contradiction to federal law.

Individual

James Tucker

Deseret Generation & Transmission

Comments: The language in R1.1.2 needs to be clarified. Many of these facilities are not explicitly included in the models in the base cases (circuit breakers, protection system equipment, control devices). The language should be clarified to require modeling the effect of the devices or the effect of the removal of the devices where it is expected to impact the study outcome. Clarity is needed to explain the difference between R1.1.4 and R1.1.5. Expected interchange can be reasonably projected, but information on Firm Transmission Service is not always known or reasonably projected for future cases. For consistency with the 2nd bullet under R2.1.3, R1.1.4 should refer to expected transfers rather than Firm Transmission Service. With this change, R1.1.4 and R1.1.5 would be redundant and one should be deleted. I disagree with the inclusion of the words "including requirements of regulatory authorities and other legal obligations" at the end of R1. Entities already are required to do this. It does not need to be included in the standard.

R2.5.2 For Past studies to be used in the Planning Assessment, the suggestion that the addition of a 20 MW generator would disqualify those past studies is way too restrictive. It should be left up to the Transmission Planner to evaluate the applicabililty of past studies and the two sub bullets should be removed and replace with a general statement about past studies should adequately represent the present system to be used in the Planning Assessment. Short circuit analyses is a local phenomenon and should not be required as part of a transmission planning assessment of the BES. In any case, the effects of failure of over-stressed breakers are already included in the Events to be assessed in Table 1. For example, P2-3 and P2-4 (Internal Breaker Fault), and P4 (Stuck Breaker while attempting to clear a fault). Clarity is needed in R2.1.4. The requirement to assess the Contingencies identified in Table 1 is too burdensome. This requirement does not specify any limits on the equipment for which an analysis must be conducted. As currently drafted, this could require a separate analysis for each transformer (or any long lead-time equipment) for which a spare is not available. A separate initial case would need to be developed to assess the Contingencies identified in Table 1 for each transformer. This could result in a countless number of additional cases. We recommend a threshold be established, such as all transformers with a low side voltage above 200 kV. We also recommend changing this from a separate sub-Requirement to one of the sensitivities to be considered under 2.1.3. We also believe that the statement at the end of R2.6 that indicates corrective action plans are not required solely to meet the performance requirements for sensitivities should also apply to the spare equipment requirement. R2.8 should be deleted. It is not necessary for reliability. What will be done with this information on the "largest Consequential Load Loss and the associated event caused by any P1 event and any P2 event" if it is documented? R2.9 should be deleted. It is not necessary for reliability. It will be difficult to determine the maximum permissible Non-Consequential Load value. It will end up being based on cost (monetary, societal, environmental, etc.), which is dependent, among other things, on the types of load being served. It very well may be a case by case situation.

As currently drafted, R3.3 is not a requirement. Without the statements in R3.3.1-R3.3.4, R3.3 is simply a phrase. Sub-Sub-Requirements R3.3.1 through R3.3.4 should be bullets under R3.3, with the language in R3.3 modified so that it becomes the requirement to conduct contingency analyses that address the four resulting bullets R3.3.2 is unclear as drafted. The minimum steady state voltage limitation for synchronous generators is not a very meaningful value. All generators with an automatic voltage regulator will maintain the set point voltage until the VAR capability of the generator is exceeded, and then the voltage will deteriorate. R3.5 – We disagree with the requirement to explain why remaining Extreme Contingencies would produce less severe System results than the ones selected for study. The first part of the requirement requires identification of events that produce more severe System impacts. The reason the others were not selected is because they were less severe or non-credible. In any case, theoretically, there can always be a more severe Extreme Contingencies than the one selected for study. For example, if the Extreme Contingency studied were simultaneous loss of 3 transmission lines with failure of redundant RAS, then simultaneous loss of 4 lines with failure of 2 sets of redundant RAS would be more severe. Listing all possible extreme events could result in a limitless list.

As currently drafted, R4.3 is not a requirement. Without the statements in R4.3.1-R4.3.3, R4.3 is simply a phrase. Sub-Sub-Requirements R4.3.1 through R4.3.3 should be bullets under R4.3, with the language in R4.3 modified so that it becomes the requirement to conduct contingency analyses that address the three resulting bullets. R4.3.2 – it is not clear what is required to be modeled. Typically a generator may have 10 or more protective relays. Is the intent to model all relay protection? The existing commercial programs do not have sufficient models or capacity to do that for all generators in the system. R4.5 – We disagree with the requirement to explain why

remaining Extreme Contingencies would produce less severe System results than the ones selected for study. The first part of the requirement requires identification of events that produce more severe System impacts. The reason the others were not selected is because they were less severe or non-credible. In any case, theoretically, there can always be a more severe Extreme Contingency than the one selected for study. For example, if the Extreme Contingency studied were simultaneous loss of 3 transmission lines with failure of redundant RAS, then simultaneous loss of 4 lines with failure of 2 sets of redundant RAS would be more severe. Listing all possible extreme events could result in a limitless list.
The term proxy is unclear. Please provide an example or an explanation of proxy.
I believe that references to FERC Orders should not be included in requirements of standards. This comment also applies to M7.
No
Claification is needed on the use of UVLS. Is it acceptable or not. Typically UVLS relays are modeled in the study. Not allowing any load shedding as a result of UVLS relays could result in very costly fixes for a very small amount of remote load. If the Non-Consequential Load Loss Allowed column is No, is load disconnecetd from the system by UVLS a violation? What about Supplemental Load Loss or UFLS?
No
P4: Under the event column it should clarify and state language similar to that of P5 (Loss of multiple elements caused by a stuck breaker). In addition, this is a multiple contingency condition and may result in loss of more than 2 elements. As such, this is a low probability condition and loss of Non-Consequential load should be allowed for EHV. We disagree with raising the bar for EHV for P4.
Yes
No
I agree that TPL-005 and TPL-006 appear to have been adequately covered in the draft TPL-001-1 as currently written. However, we will need to review this assessment after TPL-001-1 is finalized. In addition, there is no place to state our concerns for Section D. so we added it here. I question the "not applicable" entry under Section D 1.1.2. What does it mean when the reset period is not applicable? Does it mean there is no reset period, so all non-compliance in all prior years will be counted as prior violations when considering non-compliance in future years?
Individual
Michael R. Lombardi
Northeast Utilities
R1 Priority Comment- There needs to be some direction provided on the initial conditions used in the assessment. This guidance should include discussion as to whether or not representations of generator forced outages are to be represented in the base case or if they are addressed through the sensitivity testing (Could add R1.1.7 Reasonable representations of unplanned generator outages.) Additionally, the standard is also silent on the treatment of system transfers, both internal and external, as to how they should be modeled in the base case. For some areas, their current practice is to include heavy system stresses in their base case, which leaves little for sensitivity testing. It is unclear if this practice works within the purview of this standard. Guidance is needed on how to treat base case generation dispatch and system transfers. R1 Comment – We do not understand what it means to include “requirements of regulatory authorities and other legal obligations”. Even if some version of this language is kept in the final standard, it seems to belong in R2 rather than R1. R1.1.1 Priority comment – R1.1.1 should be removed. It seems like there is an overlap between the requirements of this standard and Operational Planning studies with respect to known outages. Planned outages are addressed by our Operational Planning processes and Transmission Operating Procedures removing the need for this to be incorporated into Planning Assessments. In addition, outages are not generally known years in advance R1.1.2 comment - Do we need to have the list of equipment to model? How do we model circuit breakers, etc? Also, what should be the level of detail and the form that Protection System Equipment and Control Devices be modeled? We recommend deleting the list. Make R1.1.2 simply read as follows: R1.1.2 Projected system configuration, taking into account new planned Facilities and changes to existing Facilities, for each year of the Near-Term and Long-Term Transmission Planning Horizon. R1.1.5 comment – What specifically needs to be modeled under Interchange? R1.1.6 comment – This needs further definition or it should be deleted. It is not clear what a “network resource required to supply load” is. Does this refer to Network Resource per FERC LGIP?
R2 Comment – We recommend replacing the phrase “prepare” with “conduct and document” in the first sentence. R2.1.1 Comment – The requirement to evaluate year one or year two should be removed. This is not consistent with the time horizon identified in R2. R2.1.2 Comment – The requirement should be removed. With no description of the system stresses and generator outages to be applied when assessing the off-peak load, it is difficult to imagine any issues which

would arise which are not revealed in the peak load evaluation that could not be addressed through generation dispatch adjustments. R2.1.3 Comment - The emphasis on sensitivity testing in the existing section appears misdirected and should be focused on reasonable risk. The assessment should have to include a discussion of reasonable risk. The sensitivity list can be used to select sensitivities to assess risk. Having a requirement to perform one sensitivity study just to meet the requirement of the standard does not add value to the assessment. R2.1.3 Comment - What should be the time duration for the bullet that reads “Planned duration or timing of Transmission outages” R2.1.4 Priority Comment – With respect to spare equipment strategy, this requirement imposes severe testing requirements upon the system. However, there is no discussion on the generation dispatch or system transfers that are to be used for this portion of the assessment. The expectations for changes in system stresses need to be clear as part of the standard. Additionally, this section does not contemplate changing the acceptability of load loss. After experiencing a major contingency such as this, some change in the acceptability of load loss should be expected. The standard needs to allow Non-Consequential load loss for P3 & P6 events when spare equipment strategy is incorporated in the testing. An example of such an event, that non-consequential load loss should be acceptable, would be a long-term outage of one transformer at a station which would be modeled in the base, followed by event P6 testing on initial system condition of a transformer out of service then followed by a 2nd transformer outage. This would be three transformers out at the same station and this could approach Extreme Events Contingency. R2.2 Comment – We suggest replacing the phrase “a current System peak Load study” with “a valid System peak Load study” in the first sentence. The word current is confusing, as some read the word current to mean “today’s” rather than “valid”. R2.3 Comment – Please provide guidance as to what year should be represented when performing short circuit studies. R2.4.1 Comment – Change to read: “For peak System Load levels, a Load model shall be used which appropriately represents the dynamic behavior of Loads, including consideration of the behavior of induction motor Loads or an aggregate System Load model which represents the overall dynamic behavior of the Load.” R2.5.1 Comment– We suggest deleting this requirement, and incorporating it into R2.5.2. R2.5.2 Comment – To incorporate R.2.5.1 into R2.5.2; please modify the section as follows: For steady state, short circuit, or Stability analysis the study shall be less than five calendar years old or less: the present System model shall not include any material changes, such as, generation or Transmission additions/removals, or topology changes that have occurred in the intervening period and would impact the study area. Material generation changes could include: •The addition/deletion/change of individual generating unit capability determined to be material by the Planning Coordinator or Transmission Planner. [A 20 MW generator is fairly small in a 30,000 MW system and system concerns would already be addressed through the System Impact Study] •An aggregated addition/deletion/change to a group of generating units directly connected through their step-up transformer(s) to the BES determined to be material by the Planning Coordinator or Transmission Planner. R2.6 Priority Comment – As written, this section undermines the value of the sensitivity testing. This section should require a corrective action plan to fix problems determined in sensitivity analysis if there is a reasonable risk of occurrence. We suggest making the standard read “Provide documentation that explains the reasoning for the sensitivities considered and selected.” R2.6 Comment – At the end of the second sentence, the phrase “in the tables” is used. We suggest using more definitive language such as “in Table 1”. R2.6.2 Comment – The phrase “Project Initiation Date” needs to be defined. It is unclear if this is the date of ground breaking, purchase orders being issued, solution study initiation, etc. Additionally, in the second sentence the phrase “as well as an in-service date” should be modified to read “as well as a target in-service date”. R2.6.3 Comment – Plans can provide a target in-service year but not an actual in-service year. R2.6.4 Priority Comment – There should be a cutoff point when changes occur beyond a certain date. When that date occurs, further changes will be evaluated in the next year’s assessment. Otherwise, if a state makes a decision not to site a project a few weeks prior to the end of the assessment period, there will not be sufficient time to incorporate this into that year’s assessment and develop corrective actions. R2.8 Comment –Largest consequential load loss is not factored into the Planning Assessment and should therefore be deleted. R2.9 Priority Comment – We highly recommend that the standard should not allow non-consequential load loss to resolve any violation arising from the planning events in Table 1. Therefore, this requirement should be deleted.

R3.3.2 Comment – Traditionally transmission planners have used their judgment about the minimum steady state voltage limitations of generators. If this standard is going to require its incorporation into the assessments, there should be an MOD standard developed requiring the generators to provide the necessary information prior to inclusion of R3.3.2 as a requirement in this standard. R3.3.3 Comment – PRC-023 requires relay loadability to be reflected in facility ratings. Therefore this additional requirement is unnecessary and should be deleted. R3.5 Priority Comment – We recommend that the requirement for Extreme Event testing be removed from this standard as there is no requirement to develop a Corrective Action Plan to address unacceptable consequences. Otherwise we recommend the following: -Extreme Event performance should be a consideration when developing Corrective Action Plans to address Planning Events -It should be clear that an evaluation does not require solution development for all Extreme Events -Change “an evaluation of possible actions…” to “where appropriate,

reasonably practicable actions designed to reduce the likelihood or mitigate the consequences and adverse impacts of the event(s) shall be considered."

R4.3.2 Priority Comment – Traditionally, transmission planners have assumed that generators would ride through low voltages associated with Planning Events, which is generally adequate for non-wind generators. If this standard is going to require its incorporation into the assessments, there should be an MOD standard developed requiring the generators to provide the necessary information prior to its inclusion as a requirement in this standard. R4.5 Priority Comment – We recommend that the requirement for Extreme Event testing be removed from this standard as there is no requirement to develop a Corrective Action Plan to address unacceptable consequences. Otherwise we recommend the following: -Extreme Event performance should be a consideration when developing Corrective Action Plans to address Planning Events -It should be clear that an evaluation does not require solution development for all Extreme Events -Change "an evaluation of possible actions…" to "where appropriate, reasonably practicable actions designed to reduce the likelihood or mitigate the consequences and adverse impacts of the event(s) shall be considered."

Comments: It is unclear as to what is meant by the term "proxy used in the analysis" as it is used in this requirement. Does this mean Planning Coordinator established practices, thresholds, or guidelines used to gauge when simulations suggest an event such as cascading outages occurs? If so the language should state: R5. Each Transmission Planner and Planning Coordinator shall define and document, within their Planning Assessment, when established practices, thresholds or guidelines identify System instability for conditions such as cascading outages, voltage instability, or uncontrolled islanding.

We do not believe that this requirement belongs in this standard and it should be deleted. The standard defines requirements for the assessment not who does what.

This standard should not be reiterating FERC Order 890. We do not believe that this requirement belongs in this standard and it should be deleted.

No

Refine load loss definitions as follows. Load Reduction: Load that is still connected to the System, but is reduced due to lower voltage conditions resulting from a Planning or Extreme Event. Non-Consequential Load Loss: Intended post contingency loss of load (other than Interruptible Load, Supplemental Load or Load Reduction) caused by operator or SPS (RAS) action. (Priority Comment)

No

Steady State & Stability are as follows: Steady State & Stability: a. Transmission voltage instability, cascading outages, and uncontrolled islanding shall not occur. b. Consequential Load Loss, Supplemental Load Loss, Load Reduction, and consequential generation loss are acceptable as a consequence of any Planning or Extreme Event excluding P0. However, Supplemental Load Loss and Load Reduction associated with an event shall not be used to meet steady state performance requirements Non-Consequential Load Loss Allowed Comment (priority comment): We highly recommend that the standard as written should not allow non-consequential load loss to resolve any violation arising from the planning events in Table 1 (except when considering spare equipment strategy together with events P3 or P6). We believe that planning for reliable power should discourage load loss mitigation. Therefore, the column for the "Non-Consequential Load Loss Allowed" in Table 1 should all have entries of "No". P5 Priority Comment – As written, this requirement is overly severe. This would require the simulation of a "dead" station if only one battery is present (use of NERC Glossary's Protective System definition is too broad). The failure of the single protection system should be limited to certain aspects of the protection system. P7 Priority Comment – Event 1 - This requirement requires the evaluation of the loss of two circuits on a multiple circuit tower. We recommend that this be modified so that only the loss of two adjacent (vertically or horizontally) circuits need be evaluated. We also recommend that the Planning Coordinator be allowed to evaluate and, if appropriate, exempt specific locations from this contingency based on acceptable risk. Comments on Extreme Events – Table 1- We recommend renumbering the Extreme Events table to be Table 2. Stability Condition 2 Note a - Priority Comment - As written, this requirement is overly severe. This would require the simulation of a "dead" station if only one battery is present (use of NERC Glossary's Protective System definition is too broad). The failure of the single protection system should be limited to certain aspects of the protection system. Stability Condition 2 Note h – Eliminate this requirement or change to loss of station following three-phase fault. This note is confusing. Without providing a better defined scenario, it is unclear as to what clearing times should be used in this simulation. Comments on Footnotes – Table 1- We recommend renumbering the Footnotes table to be Table 3. Note 1.a.i – Should clarify that this requirement refers to generator units that are connected to the BES system. Note 1.a.ii – Contingency Reserve is dependent on the generation on-line. We suggest changing the first sentence to say that you can't lose more than that permissible by the Planning Coordinator. Also change "pull out of synchronism" to "lose synchronism" in this sentence and in the second sentence. (Is "Lose synchronism" a more commonly used term?). Note 3 – We recommend revising the wording of the last sentence to "A three-phase fault study indicating criteria are being met is sufficient

evidence that a SLG fault condition would also meet criteria." Note 4 – We recommend that a lower bound be put on the HV electric systems (such as 100 kV), rather than just saying "and lower".

Yes

Capitalize Firm Transmission Service in footnote 10 and instead of saying firm Load use Firm Demand to be consistent with the NERC Glossary.

Yes

Other Comments: Comment 1 – Please clarify, since R2 through R6 should become effective before results could be distributed to adjacent Planning Coordinators and any functional entity. However, by the wording of the effective date of R1 and R7 it appears R7 becomes effective before R2 to R6. That is, 24 months are allowed by the standard to complete the planning assessments after regulatory approval. The results may not be ready for distribution by the planning coordinator after the first twelve months. Comment 2 – The term "Planning Coordinator" is not defined in the NERC Glossary of Terms used in Reliability Standards and, therefore, this standard should indicate whether this term is the same as the "Planning Authority" defined in the glossary. Otherwise the definition of the Planning Coordinator should be included in the NERC Glossary of Terms used in Reliability Standards.

Individual

Brian Keel

SRP

The language in R1.1.2 needs to be clarified. Many of these facilities are not explicitly included in the models in the base cases (circuit breakers, protection system equipment, control devices). The language should be clarified to require modeling the effect of the devices or the effect of the removal of the devices where it is expected to impact the study outcome. Clarity is needed to explain the difference between R1.1.4 and R1.1.5. Expected interchange can be reasonably projected, but information on Firm Transmission Service is not always known or reasonably projected for future cases. For consistency with the 2nd bullet under R2.1.3, R1.1.4 should refer to expected transfers rather than Firm Transmission Service. With this change, R1.1.4 and R1.1.5 would be redundant and one should be deleted. We disagree with the inclusion of the words "including requirements of regulatory authorities and other legal obligations" at the end of R1. Entities already are required to do this. It does not need to be included in the standard.

Short circuit analyses is a local phenomenon and should not be required as part of a transmission planning assessment of the BES. In any case, the effects of failure of over-stressed breakers are already included in the Events to be assessed in Table 1. For example, P2-3 and P2-4 (Internal Breaker Fault), and P4 (Stuck Breaker while attempting to clear a fault). Clarity is needed in R2.1.4. The requirement to assess the Contingencies identified in Table 1 is too burdensome. This requirement does not specify any limits on the equipment for which an analysis must be conducted. As currently drafted, this could require a separate analysis for each transformer (or any long lead-time equipment) for which a spare is not available. A separate initial case would need to be developed to assess the Contingencies identified in Table 1 for each transformer. This could result in a countless number of additional cases. We recommend a threshold be established, such as all transformers with a low side voltage above 200 kV. We also recommend changing this from a separate sub-Requirement to one of the sensitivities to be considered under 2.1.3. We also believe that the statement at the end of R2.6 that indicates corrective action plans are not required solely to meet the performance requirements for sensitivities should also apply to the spare equipment requirement. The 20 MW threshold identified as "material change" for generation in R2.5 is too small. The limit should be raised or based on a percentage of the study area's installed generating capacity. R2.8 should be deleted. It is not necessary for reliability. What will be done with this information on the "largest Consequential Load Loss and the associated event caused by any P1 event and any P2 event" if it is documented? R2.9 should be deleted. It is not necessary for reliability. It will be difficult to determine the maximum permissible Non-Consequential Load value. It will end up being based on cost (monetary, societal, environmental, etc.), which is dependent, among other things, on the types of load being served. It very well may be a case by case situation.

As currently drafted, R3.3 is not a requirement. Without the statements in R3.3.1-R3.3.4, R3.3 is simply a phrase. Sub-Sub-Requirements R3.3.1 through R3.3.4 should be bullets under R3.3, with the language in R3.3 modified so that it becomes the requirement to conduct contingency analyses that address the four resulting bullets R3.3.2 is unclear as drafted. The minimum steady state voltage limitation for synchronous generators is not a very meaningful value. All generators with an automatic voltage regulator will maintain the set point voltage until the VAR capability of the generator is exceeded, and then the voltage will deteriorate. R3.5 – We disagree with the requirement to explain why remaining Extreme Contingencies would produce less severe System results than the ones selected for study. The first part of the requirement requires identification of events that produce more severe System impacts. The reason the others were not selected is because they were less severe or non-credible. In any case, theoretically, there can always be a more severe Extreme Contingencies than the one selected for study. For example, if the Extreme Contingency studied were simultaneous loss of 3 transmission lines with failure of redundant

RAS, then simultaneous loss of 4 lines with failure of 2 sets of redundant RAS would be more severe. Listing all possible extreme events could result in a limitless list.
As currently drafted, R4.3 is not a requirement. Without the statements in R4.3.1-R4.3.3, R4.3 is simply a phrase. Sub-Sub-Requirements R4.3.1 through R4.3.3 should be bullets under R4.3, with the language in R4.3 modified so that it becomes the requirement to conduct contingency analyses that address the three resulting bullets. R4.3.2 – it is not clear what is required to be modeled. Typically a generator may have 10 or more protective relays. Is the intent to model all relay protection? The existing commercial programs do not have sufficient models or capacity to do that for all generators in the system. R4.5 – We disagree with the requirement to explain why remaining Extreme Contingencies would produce less severe System results than the ones selected for study. The first part of the requirement requires identification of events that produce more severe System impacts. The reason the others were not selected is because they were less severe or non-credible. In any case, theoretically, there can always be a more severe Extreme Contingency than the one selected for study. For example, if the Extreme Contingency studied were simultaneous loss of 3 transmission lines with failure of redundant RAS, then simultaneous loss of 4 lines with failure of 2 sets of redundant RAS would be more severe. Listing all possible extreme events could result in a limitless list.
The term proxy is unclear. Please provide an example or an explanation of proxy.
We believe that references to FERC Orders should not be included in requirements of standards. This comment also applies to M7.
No
Claification is needed on the use of UVLS. Is it acceptable or not? Typically UVLS relays are modeled in the study. Not allowing any load shedding as a result of UVLS relays could result in very costly fixes for a very small amount of remote load. If the Non-Consequential Load Loss Allowed column is No, is load disconnecetd from the system by UVLS a violation? What about Supplemental Load Loss or UFLS?
No
P4: Under the event column it should clarify and state language similar to that of P5 (Loss of multiple elements caused by a stuck breaker). In addition, this is a multiple contingency condition and may result in loss of more than 2 elements. As such, this is a low probability condition and loss of Non-Consequential load should be allowed for EHV. We disagree with raising the bar for EHV for P4.
We agree that TPL-005 and TPL-006 appear to have been adequately covered in the draft TPL-001-1 as currently written. However, we will need to review this assessment after TPL-001-1 is finalized. In addition, there is no place to state our concerns for Section D. so we added it here. We question the "not applicable" entry under Section D 1.1.2. What does it mean when the reset period is not applicable? Does it mean there is no reset period, so all non-compliance in all prior years will be counted as prior violations when considering non-compliance in future years?
Individual
L. Earl Fair
Gainesville Regional Utilities
Concerning the effective dates of R1 & R7, I suggest that you move them to be effective at the same time as R2 through R6 so you will not have to try to meet two standards during the same time period. Effective Date: Clarify how the effective date impacts which version of the standard (and it reference numbering) is to be used in an assessment just before (in cycle) a scheduled compliance audit. Suggest that the term "Corrective Action Plan" be retitled to "Improvement Action Plan" because the first implies that the situation is "wrong or incorrect" which may not be the case.
R2.1.1- References a "system peak Load" for each of the referenced years. Some utilities are summer peaking and some are winter peaking and others may have a history of having one or the other in any given year. So can you clarify which peak you are referring to or change to statement to perform studies involving both seasonal peaks? R.2.4.1- I suggest quantifying the reference to the behavior of induction motor loads to single motors greater than 1000 hp or multi motors at one bus totalling more that 2000 hp or so, since smaller induction motors probably will not have any significant impact of the BES. I feel this is best handled as a sensitivity issue determined by the PC who is familiar with this area. R2.5.1- If the system has not had any significant changes of the last ten years, then a study going back to that change should be acceptable for the assessment. R2.5.2- Should the "shall not include" really read as "shall include"? R2.6- The reference to "tables" in line 6 should be "table" since there is only a Table 1 in the standard. R2.6.1-R2.6.3- Question-- Why is the font size of the bullet text smaller that the other bullet segments?

Please provide a definition of "cascading outages" since the FERC and NERC removed their approval of the definition. Or use the definition of "cascading" found in the NERC Glossary of Terms. This term is also used in R3.5, R4.5, and Table 1.a. without any definition provided. NOTE: On December 27,2007, the Federal Energy Regulatory Commission remanded the definition of “Cascading Outage” to NERC. On February 12, 2008, the NERC Board of Trustees withdrew its November 1, 2006 approval of that definition, without prejudice to the ongoing work of the FAC standards drafting team and the revised standards that are developed through the standards development process. Therefore, the definition is no longer in effect. Please provide a definition of "voltage instability" since the NERC Glossary of Terms does not provide one. This term is also used in Table 1.a. without any definition provided. Please provide a definition of "uncontrolled islanding" since the NERC Glossary of Terms does not provide one. This term is also used in Table 1.a. without any definition provided.

Yes

But as referenced in question 5, I believe you need a good definition for the following terms; "cascading outages", "voltage instability", and "uncontrolled islanding".

Yes

Yes

Yes, Yes

Individual

Don Gilbert

JEA

Reword R1.1.2. New planned Facilities and changes to existing and old planned Facilities for each year of the Near-Term and Long-Term Transmission Planning Horizon where such Facilities affect the electric connectivity and topology of the system or affects the accurate simulation of system disturbance response where practical. [Delete bulleted list] Add R1.2. Where it is not practical to model all Facilities composing the electric system connectivity and topology, consideration of those Facilities and their affect on the model simulations shall be documented in detail in the annual Planning Assessment where appropriate. This addition may not be necessary with rewording of R3.

R2.1.4 It is not clear if this spare equipment strategy excludes Generator Owner's obligations for their generation plant equipment and only includes Transmission Owner's equipment. It is also not clear what Measurable document is required to back up a position of no vulnerabilities. I recommend that we limit the spare equipment strategy to TO equipment and not include GO equipment which excludes step-up transformers, turbines, generators, rotors, etc. Also, it does seem unreasonable to assess the long-term loss of a transformer to the "Extreme Events" of Table 1 or any other event other than the P3 events unless substituted in the assessment by a more extreme and probable event. An event from P3 alone should be sufficient to expose a weakness of a spare equipment strategy based on historical industry statistics for such likelihood. Propose changing "The analysis shall reflect the Contingencies identified in Table 1..." to "An analysis shall be performed that as a minimum assesses the impact of the long term outage of Transmission Owner equipment under either a P3 event that could occur in the absence of the subject equipment" or a more stressful event as deemed appropriate by the Functional Entity performing the assessment. R2.6.4 First of all, some level of expected Non-consequential load loss is always prudent to balance customer expectations on cost and reliability subject to Local and State Authority's guidance. Second, load development and gneration development are the major drivers for transmission development needs. Generation plans are more dependable and manageable as to timing and impact. Load development is not very dependable and manageable relative to transmission system improvement needs. It is not unusual for new load forecast to either expose a transmission weakness or on the other hand to eradicate a transmission weakness in the Near Term horizon. Without guidance, it could be assumed that affects from load forecast are beyond the control of the Transmission Planner and Transmission Coordinator. In addition, it is not unusual to have the load forecast lead the generation plan by a few years causing a need for Non-Consequential Load Loss until such time the additional generation is in-service providing generation balance to the load area and mitigating the transmission improvement needs. This occurs frequently as generation development lags load development in fast growing communities. Propose establishing a cap on Non-Consequential Load Loss for all Corrective Action Plans where the Table 1 events currently do not allow at all. An additional option for the SDT to consider could be to add an allowance of lag time (maybe 4-5 years) to cover the gap while the generation addition is being developed.

R3. Change wording from "The studies shall be based on computer simulations using models utilizing data provided in Requirement R1." to "The studies shall be based on computer simulations using models that are the best representation of the future planned system and its associated use as provided by Requirement R1. The studies shall detail the effects of all future equipment connectivity and topology arrangements and their associated Protection system responses to Contingency events regardless of model details." R3.3.2. I assume the concern here is on voltage ride through of generators and generator auxillary equipment. Propose changing language from "For all generators..." to "Include analysis of how generator and generator auxillary equipment over and under voltage protection and ride through capability were considered for the post-contingency steady state bus voltage levels." R3.3.3. I assume the concern here is ensuring consideration is given to how system protection relays could respond to post-contingency circuit emergency loadings. Protection systems that could limit the emergency ratings of transmission circuits should be considered in the Facitility Rating standard and therefore not necessary to include in the TPL standard. However, if requirement does remain in the TPL standard, propose changing language from: "For all transmission lines..." to "Include analysis of how implemented relay protection systems and their potential automatic response prior to timely corrective actions are considered for the post-contingency steady state circuit loadings".

Yes

No

Footnote 8 relative to P2.1 seems to imply that all of the single contingency assessments for circuits should include assessment of (1) both ends of the circuit disconnecting as in P1 and (2) either end of the circuit disconnceting as in P2. This results in 3 seperate single contingency assessments for the one circuit. I am not sure of the benefit other than trying to identify a high voltage situation or in the case of tap loads, a thermal loading issue. Recommend changing Footnote 8 to "For circuits with tapped load, a seperate analysis shall be performed for an outage of each end of the circuit where the load is tapped."

No

Footnote 10: First of all, the term firm Load is used instead of the term Non-Consequential load. Are these the same? If so, maybe we need to be consistent here. Assuming they are the same and in reference to previous comment on use of Non-Consequential load shedding: "Propose establishing a cap on Non-Consequential Load Loss for all Corrective Action Plans where the Table 1 events currently do not allow at all. The cap could also be accompanied by an allowance of lag time (maybe 4-5 years)." To be consistent, some level of Non-Consequential load shedding should be allowed where Generation redispatch falls short for a few years until new planned generation is added to the system.

Group

Transmission Planning

R1.1. COMMENT: Should read: “Models for performing the studies needed to complete the Planning Assessment shall represent:” instead of “Models for the Planning Assessment shall represent:” R1.1.1. COMMENT: Should the requirement specify which known outages should be modeled? For example, would it be considered incomplete and therefore a violation if a known generator maintenance outage with a one week duration is not included (not modeled off-line) in a case that represents a full summer season at peak conditions? Please provide guidelines as to what duration outages should be modeled in representative planning horizon cases. (i.e. one day, several days, one week, one month, in a case that represents a significantly longer time period.) R1.1.2. COMMENT: Should add Transformers to this list; COMMENT: What is meant by “represent” - Planning models do not typically include explicit Circuit breaker modeling. The planning models used for power flow, dynamics and short circuit analysis represent the power system with busses and branches. The effect of circuit breakers is taken into account as part of contingency modeling. Including circuit breakers as a sub-requirement is likely to result in transmission planners being required to demonstrate that circuit breakers are modeled. Explicit representation of circuit breakers with existing software would result in major convergence problems due to large number of low impedance branches. COMMENT: Should clarify "Protection System equipment" to apply only to system stability models. Does this mean all relays on the system must be included in the dynamics modeling? While a certain limited number of protective relays can be modeled with the software used for dynamics, it is not practical to model more than a very small percentage of the protection systems used in the BES. Including protective relays as a sub-requirement is likely to result in transmission planners being required to demonstrate that all protective relays are modeled which is an impossible task. The modeling of

protective relays should be caveated with “as deemed appropriate.” COMMENT: "Control devices" Should be specific. Is this for Phase Angle Regulators (PAR), Synchronous Condensers, Static Var Compensators (SVC), exciters, governors etc? Control devices should be specifically defined as the following: PAR, SVC, HVDC. COMMENT: "New technologies" seems too broad. Needs to be better defined. Planning models may not have the capability to adequately model “new technologies”. R1.1.4. Firm Transmission Service COMMENT: Should add “that is expected to be utilized in the study case scenario” because not all Firm Transmission Service can be included in every study case model. Some firm transmission reservations (Network Resources that could be Reserves)are used optionally depending upon the availability of other Network resources. The following apply to all VRF, Time Horizon, Measure, Data Retention, and VSL for all requirements in the standard. VRF: Agree. No comment. Time Horizon: COMMENT: Long-Term Planning – This is confusing. Is it only the newly defined Long-Term Transmission Planning Horizon? Shouldn’t it include the Near-Term Transmission Planning Horizon? Suggest “Long-Term and Near-Term Transmission Planning Horizon” as used in definitions. Measure: Agree. No comment. Data Retention: Agree. No comment. VSL: Are bullets in requirements all required? (i.e. If circuit breakers are not explicitly modeled, as the bullet list in R1.1.2 seems to indicate, is it a violation?) What is meant by “…did not simulate projected System conditions as described in R1. …” How are projected System conditions criteria described in R1?

R2.1.4. COMMENT: For the analysis to reflect the contingencies in Table 1 (P0 through P7 plus Extreme Events) is excessive. R2.5.2. COMMENT: The 20 MW change listed in bullet items are extremely small to larger transmission systems and by themselves would be unlikely to change BES response. As drafted, requirement 2.5 may be interpreted to preclude the use of any previous study in which the base case is not identical to the current planning case. It is recommended 2.5.2 be rewritten as follows; “For steady state, short circuit, or Stability analysis: the present System model shall not include any material changes, such as, generation or Transmission additions/removals, or topology changes that have occurred in the intervening period that would impact the study area.” R2.6.2. COMMENT: What is considered a project initiation date … is it implying a construction start date, or the first time that it was identified as a mitigation plan? Additionally, R2.6.2 and R2.6.3 are not necessary because a Corrective Action Plan, by definition, includes an "associated timetable for implementation". Recommend deleting this requirement. R2.8. COMMENT: Why is this data collection a requirement? The effort required to determine this data is substantial and the value of this data is questionable. Recommend deleting this requirement. R2.9. COMMENT: Why is this data collection a requirement? The effort required to determine this data is substantial and the value of this data is questionable. Recommend deleting this requirement.

R3.3.1. COMMENT: This would make sense for 3-terminal lines which we are including in contingency files, but for normal 2-terminal lines, very unnecessary. Suggested language at the end would say “Simulation of individual element outages is allowed if it produces an effect more severe that the entire circuit outage”. This implies that by modeling individual branch outages would represent more severe conditions than entire circuit outages due to the fact that there would be consequential load loss. R3.4. COMMENT: Table 1 as drafted is very confusing and could be interpreted incorrectly. Recommend revising the header for “Table 1 – Steady State & Stability Performance Extreme Events” Should be changed to “Table 2 - Steady State & Stability Performance Extreme Events” because the expected performance requirements associated with Planning Events could be interpreted to be applicable to Extreme Events as well. Alternatively, the performance requirements at the top of Table 1 need to include a statement that they are applicable to Planning Events only.

R4.3.2. COMMENT: The inability to survive a given low voltage transient is often dependent on motor performance within the generating facility’s auxiliary load distribution system and is not a specific relay setting. Determination of specific generating plant low voltage ride through capability requires extensive modeling of the plant distribution system and is outside the scope of this standard.

Yes

No

COMMENT: P2-1. Opening of Breaker(s) w/o fault Event: Does the modeling of this event require that the line remains energized up to the breakers? This will require adding a bus at each end with a zero impedance branch connection to “open” representation of breakers. Explicit modeling of a circuit breaker opening would require a substantial modeling effort and would not produce results more adverse than any of the other P2 contingencies. Why is this necessary? Recommend deletion of this planning event. The threshold of higher performance for facilities above 300 kV may wrongly influence decisions on project alternatives in favor of facilities with less stringent requirements. We do not agree that such a threshold is necessary or warranted.

No

It appears that the reference callout to footnote 5 should be placed on every “No” in the “Interruption of Firm Transmission Service column instead of in the header, as was done with reference callouts to footnote 10. In footnote 5 “conditional” should be capitalized since it refers to a specific product defined under the OATT. Also, this only covers the specific condition form of the product, but does not address the specified number of hours form of the product. If the second form of the product is the basis for the service and the transaction is modeled in the case, and curtailment will mitigate an overload, it should also be allowed. Footnote 10 is too long and subjective. There is no purpose in adding the phrase “when coupled with the appropriate re-dispatch of resources obligated to re-dispatch” because if there is an obligation to re-dispatch, it is done, and if there is no obligation to do so, then curtailment is the only alternative – no coupling necessary, therefore, this phrase should be deleted. In addition, the last two sentences end in “must be considered”. What is the appropriate amount of “consideration” and what defines whether the consideration is acceptable or not? The last sentence should be a stand alone performance requirement in the Steady State and Stability notes at the top of Table 1 (in the list a through e) and should end in “must be adhered to” instead of “must be considered”. Suggested revision: 10. Curtailment of firm transmission service is allowed both as a System adjustment (as identified in the column titled ‘Initial System Conditions’) and a corrective action, where it can be demonstrated that Facilities remain within applicable Facility Ratings and those adjustments do not result in the shedding of any firm Load.

Yes

Individual

Catherine Mathews

NorthWestern Corporation NorthWestern Energy (NWE) (NWMT)

The system models that are described in MOD-010 Requirement1, MOD-011 Requirement 1, MOD-012 Requirement 1, and MOD-013 Requirement 1 do not address all the bulleted items under R.1.2. Circuit breakers, protection system equipment and control devices are not modeled. Rather, the effect of these devices, such as circuit breaker misoperation, thermal overload, etc., on the transmission system are modeled. The wording of these bullets should be corrected to match what is actually modeled. Firm Transmission Service, listed in R.1.1.4, is not specifically addressed in MOD-010. Requirement 1 of MOD-010 states “existing and future Interchange Schedules” as data requirements for steady-state modeling and simulation. Models in the West do not model Firm Transmission Service as such. It is difficult to know what the Firm Transmission Service will be in the future. This is particularly true in regions where there is a predominance of merchant generation and proposals for the interconnection of new merchant generation. It is more reasonable to estimate the expected interchanges. The definition for Interchange – “Energy transfers that cross Balancing Authority boundaries” describes the modeling requirement better that the definition of Firm Transmission Service – “The highest quality (priority) service offered to customers under a filed rate schedule that anticipates no planned interruptions”. The wording “Expected Transfers” is used in R2.1.3 and R2.4.3. To maintain consistency, this term could be used in R.1.1.4 and could also be substituted in Table 1 for ” Firm Transmission”. From a Planning perspective, since Firm Transmission cannot be determined from a study model. R1.1.4 and R1.1.5 should be deleted and replaced with a requirement to model expected transfers on interconnections with neighboring Balancing Authorities. For study purposes R.1.1.6 is not needed either. In the models, the load represented is served by the generators modeled. Network Resources are more in tune with local area studies that ensure that the network load can be served by the network resources over available transmission. The words “including requirements of regulatory authorities and other legal obligations” at the end of R1. does not need to be in the standard.

Short circuit analysis is a local issue. The reliability of the BES does not depend on the regular assessment of short circuit duty. Therefore, we believe short circuit analysis should be deleted from R2. R2.1.4 needs more clarification as to what constitutes major Transmission equipment. This would require a separate analysis (study) for each transformer (or any long lead-time equipment) for which a spare is not available, which could result in numerous additional cases. Major Transmission equipment could be limited to voltage levels greater than 200 kV. An exception should be made for phase-shifting transformers. As the system changes, with new generation and transmission lines being added, these analyses could become outdated very quickly. If a transformer were to fail, the Planning Department would immediately study the current system with this transformer removed. As stated in R2.4.1, the requirement to include induction motor loads is too prescriptive. At this time, with all of the unknown or estimated variables in the system model, accuracy of the model would not be improved. If a highly industrialized section were to develop within the NWE footprint, induction motor load could be added to the system model. The 20 MW threshold identified as “material change” for generation in R2.5 is too small. A better number for material generation changes would be 100 MW or a limit based on a percentage of the study area’s installed generating capacity. Also, an aggregate of 20 MW addition/deletion generation would depend on the location of the individual generators to determine whether the overall system would be affected or not. The statement at the end of

R2.6 that indicates corrective action plans are not required solely to meet the performance requirements for sensitivities should also apply to the spare equipment requirement. R2.8 should be deleted. It is not necessary for reliability. R2.9 should be deleted. It is not necessary for reliability.
R3.3 is unclear. Requirements R3.3.1 through R3.3.4 should be bullets under R3.3, with R3.3 modified so that it becomes the requirement to conduct contingency analyses that address the four resulting bullets R3.3.2 is unclear. The minimum steady state voltage limitation for synchronous generators is not a very meaningful value. All generators with an automatic voltage regulator will maintain the set point voltage until the VAR capability of the generator is exceeded, and then the voltage will deteriorate. In R3.3.3 the term “loadability” needs to be defined. R3.5 needs to be modified. It would be better to combine R3.2 with R3.5. The first part of the requirement requires identification of events that produce more severe System impacts. The presumed reason that the other contingencies were not selected is because they were deemed to be less severe or non-credible. In any case, theoretically, there can always be examples of more severe Extreme Contingencies than the one selected for study. This can be achieved by simply choosing events that are even less credible. For example, if the Extreme Contingency studied was a simultaneous loss of 3 transmission lines with the failure of a redundant RAS (SPS), then an event resulting in the simultaneous loss of 4 lines with the failure of 2 sets of redundant RASs would be even more severe. Listing all possible extreme events could result in a limitless list.
R4.3 is unclear. Requirements R4.3.1 through R4.3.3 should be bullets under R4.3, with R4.3 modified so that it becomes the requirement to conduct contingency analyses that address the three resulting bullets R4.3.2 is unclear. It appears to be a broken sentence. Typically a generator may have 10 or more protective relays. Is the intent to model all relay protection? The existing commercial programs do not have sufficient models or capacity to do that for all generators in the system. It is our understanding that the voltage ride through standard is not complete at this time. R4.5 needs to be modified. It would be better to combine R4.2 and R4.5. The first part of the requirement requires identification of events that produce more severe System impacts. The presumed reason that the other contingencies were not selected is because they were less severe or non-credible. In any case, theoretically, there can always be examples of more severe Extreme Contingencies than the one selected for study. This can be achieved by simply choosing events that are even less credible. For example, if the Extreme Contingency studied was a simultaneous loss of 3 transmission lines with the failure of redundant RAS (SPS), then an event resulting in the simultaneous loss of 4 lines with the failure of 2 sets of redundant RASs would be even more severe. Listing all possible extreme events could result in a limitless list.
In R5 the term “proxy” needs to be defined. In addition, an example of a proxy should be given.
No comment.
In R7 the references to FERC Orders should not be included in requirements of standards. This comment also applies to M7.
No
In R7 the references to FERC Orders should not be included in requirements of standards. This comment also applies to M7
No
P6 on the table seems to be less severe than either P4 or P5, yet it allows loss of Firm Transmission Service and Non-consequential Load which are not allowed for EHV in P4 or P5. Interruption of Firm Transmission Service and Non-Consequential Load Loss should be allowed for P4, P5, and P6. Transmission lines should have the same requirements regardless of the voltage. Also, if not able to model Firm Transmission Service, how will one know if it is interrupted? The column labeled “Interruption of Firm Transmission Service Allowed” should be eliminated since it is not a clearly defined test of performance. It is not clear how to use the present definition of “Firm Transmission Service” for a planning horizon study. P4: Under the event column it should clarify and state language similar to that of P5 (Loss of multiple elements caused by a stuck breaker). In addition, this is a multiple contingency condition and may result in loss of more than 2 elements. As such, this is a low probability condition and loss of Non-Consequential load should be allowed for EHV.
No
NWE has provided comments above concerning Firm Transmission Service and the foot notes should address the issues that we have raised above.
No Comment
Group
Exelon Transmission Planning
There are large amounts of resources required to perform the volume of studies required, including the dynamic and steady state sensitivities, extreme studies, and one-year lead time equipment spares. Many of these studies ultimately do not require additional consideration or reinforcement and have low threshold triggers, such as a 20 MW generation change. Performing

these studies will be very burdensome to many TPs and result in few, if any, reliability benefits. We believe that the TP should be given more flexibility to allocate planning resources to areas of maximum benefit. The Spare Strategy in R2.1.4 is still not well defined. What types of equipment are included? How would a one-year lead time element be determined for consideration in this requirement? In R2.4.1, we recommend changing 'appropriately represents' to 'a dynamic model appropriate for the type of stability study being performed' The TP should be allowed to perform only those specific stability studies needed and pertinent to its system. The same can be said about the dynamic load model. Differing interpretations are possible. We suggest changing the last sentence in R2.4.1 to – "….., a Load model shall be used which appropriately represents…..An aggregate System "Dynamic" Load model which represents the overall dynamic behavior of the Load is acceptable." In 2.1.3 and 2.4.3 strike 'Expected' from the phrase 'Expected transfers'. Expected transfers should already be in the base case. In R2.5.2, the determination of a 'Material change' is an engineering judgment issue and it should not be categorically defined here. There may be more significant material changes than a 20 MW increase in generation that would be better to study. In the phrase, "For steady state…such as generation or transmission additions/removals, or topology changes… and would impact the study area", it is suggested to change 'would' to 'could' and 'impact the study area' to 'significantly change the previous study results'. The term should not be 'Corrective Action Plan', which implies a violation of a requirement. Suggest changing this term to 'Future Reliability Plan'. What is the intended use for reporting the largest consequential and maximum non-consequential load loss amount and event? This would be a potential security concern if made public. There is a similar concern with the extreme event analysis. In 2.6.2 please define 'Initiation Date'. While we appreciate your previous consideration of this comment, it is still not clear what this means. Is this the date of mitigation identification, regulatory approval date, construction start date, equipment procurement date, etc? If this is a commonly understood term not requiring a formal definition, could you then please provide that definition in your response? If there is going to be a requirement to report on each contingency that results in non-consequential load loss it should be specified.

In R3.3.2 it should be clear that the TP / TO is not required to provide whatever voltage that the unit desires and that the intent of this requirement is to ensure that if a generator is going to trip due to low voltage that the simulation will include the generator tripping. 3.3.2 and 3.3.3. are somewhat redundant with 3.3.1 – suggest rewording 3.3.1 to say including transmission lines with respect to relay loadability and generators with respect to minimum operating voltage. If 3.3.3 is targeting the low voltage ride through capability of the wind generators it should be clear.

See comment in response to question 9 regarding the lack of definition related to the failure of a 'single Protection System'.

The determination of a failure to document a single proxy should not be categorized as 'severe'.

Yes

No

Table 1 comments in general: Even after modification from the previous version, it is still not clear if the 'BES Voltage Level' applies to the contingency element voltage level or to the monitored element voltage level. For example, If there is a 345 kV bus section fault that causes an overload on a 138 kV line, is non-consequential load loss allowed on the 138 kV system? There is a concern about the lack of definition related to the failure of a 'single Protection System' – this could be widely interpreted. Would over tripping for line faults fall into this definition?

Yes

Yes

Group

SERC Engineering Committee Planning Standards Subcommittee

R1.1.2: In bullet three of R1.1.2, are bus-tie circuit breakers to be represented in the models? Typically circuit breakers are included in the contingency definitions along with the protection system equipment used in the power flow models. The number of zero impedance branches which can presently be modeled using PSS/E software is limited to 4000. Also, the number of buses included in the power flow models would increase with additional breaker modeling. Protection System Equipment: The SDT stated during its June 30th Webinar that protection system equipment need not be explicitly represented in models, but had difficulty in determining adequate wording for the proposed sub-requirement. Because protection system action is described in R3.3.1, R3.3.4, R4.3.1, and R4.3.3 we suggest that protection system equipment be removed from the list in R1.1.2.

R2.1: In R2.1, change the reference to requirement R2.6 (at the end of the last line) to R2.5. R2.1.4: In Requirement R2.1.4, recommend that the requirement be revised as follows: “When an entity’s spare equipment strategy could result in the unavailability of major Transmission equipment that has a lead time of one year or more (such as a transformer), an analysis of the impact of this possible unavailability on System performance shall be assessed. The analysis shall reflect the Contingencies identified in Table 1 during the conditions that the System is expected to experience the possible unavailability of the long lead time equipment.” R2.4.1: In Requirement R2.4.1, it is suggested that it be reworded to the following: “System peak Load for one of the five years, including Load models which appropriately represents the dynamic behavior of Loads, considering the behavior of induction motor Loads. An aggregate System Load model which represents the overall dynamic behavior of the Load is acceptable.” R2.5.1: With the elimination of the distinction between system and generating plant stability studies, the blanket requirement in R2.5.1 that all stability analyses be five calendar years old or less, regardless of any material changes to the system, would cause needless work to be performed on those plants or areas of the system where no changes are occurring. Recommend add the following to the end of R2.5.1: “unless justification can be provided to demonstrate that the results of an older study are still valid.” R2.6.2: In Requirement R2.6.2, what constitutes a "project initiation date," and how will it be used? Please clarify. R2.8: Please explain the reason why Requirement R2.8 is needed in the Assessment. Reporting the largest Consequential Load Loss does not impact reliability. R2.9: Please explain the reason why Requirement R2.9 is needed in the Assessment. Reporting the largest Non-Consequential Load Loss does not impact reliability.
R3.1: In Requirement R3.1, it is suggested that the word "contingency" be added to describe the lists created in R3.4.: “Studies shall be performed to determine whether the BES meets the performance requirements in Table 1 based on the contingency lists created in Requirement R3.4.” R3.3.1: Recommend that it be clarified that simulation of the more conservative case of a single branch (bus-to-bus) outage is acceptable, as opposed to always simulating the full breaker-to-breaker outage. R3.3.2 The requirement needs to be clarified. It is not clear if it is referring to the ability of plants to meet their voltage schedule, or to their ability to stay connected during post contingencies. R3.3.4: In Requirement R3.3.4, it is suggested adding the words "and switched" to capacitors and reactors: “Simulate the expected operation of existing and planned devices designed to provide Steady State control of electrical system quantities. These devices include equipment such as phase-shifting transformers, load tap changing transformers, and switched capacitors and inductors.”
R4.1: In Requirement R4.1, it is suggested that the word "contingency" be added to describe the lists created in R4.4 “Studies shall be performed to determine whether the BES meets the performance requirements in Table 1 based on the contingency lists created in Requirement R4.4.” R4.4: Regarding Requirement R4.4, it is suggested that a rewording be considered such as described below: “For each category of the Planning Events in Table 1, those Planning Event Contingencies that are expected to produce more severe System impacts shall be identified, and a list of those Contingencies to be evaluated for System performance in Requirement R4.1 shall be created. The rationale for the Contingencies selected for evaluation shall be available as supporting information with an explanation of why the remaining Contingencies would produce less severe System results.” R4.3.2: R4.3.2 requires that voltage ride through capability be analyzed. It is not clear what should be analyzed (e.g. auxiliary loads, generator protection, generator capability, etc.) This requirement needs more clarity. Footnote #3: Footnote #3 needs to be revised to include 2LG faults in addition to 3-Phase faults indicating that the SLG criteria is met.
Use of Proxies: There is no requirement that the Planning Coordinator (PC) must use the same proxies as the Transmission Planner (TP). Since differences in proxy assumptions may lead to different study results, R5 should be revised to require the PC and TP to coordinate the use of proxies.
no comments on this question
FERC Order 890: The reference to FERC Order 890 as it is currently written makes it seem like a suggestion to follow Order 890. If Order 890 explicitly describes this process then the sentence should read “as described in FERC Order 890.” If not, this should not be mentioned at all.
No
Definitions: Revised Definitions are generally better than those from the previous version, but additional clarity could be provided. Load Reduction – Please clarify whether this includes both load response and operator initiated action, such as in changes to transformer LTC. Supplemental Load Loss - From a utility perspective, this would be considered as load response. Please clarify how Supplemental Load Loss would be included in the stability analysis. Bus tie breaker – A statement in the previous version which listed examples was removed from this version of the definition. The statement was helpful and should be re-inserted. The statement was: “Substation configurations such as ring bus, breaker and a half, or double-bus double-breaker do not use bus tie breakers.”
No

Table 1 titles: The word "Requirements" needs to be added to the Table 1 titles in the existing tables. Table 1 – Steady State & Stability Performance Requirements Planning Events Table 1 — Steady State & Stability Performance Requirements Extreme Events Table 1 — Steady State & Stability Performance Requirements Footnotes (Planning Events and Extreme Events) Steady-state vs. stability analysis: We recommend that Table 1 be split back as was done in the previous draft to handle the 1) steady-state and 2) stability performance requirements. This is needed to provide clarity on which contingencies apply to steady-state and which apply to stability analysis. Table I, P7.1: It would not be likely to lose the two outside circuits on a vertically configured structure and not lose the middle circuit. Change the wording to: “Any two adjacent circuits on a common structure.”

No

Footnote 5: Suggest rewording of footnote 5 to: Curtailment of conditional Firm Transmission Service is allowed when the conditions and/or events being studied formed the basis for the conditional Firm Transmission Service. Footnote 10: Footnote 10 is definitely an improvement from previous versions. It is suggested that the word "also" be added to the last line: “Curtailment of firm transmission service, when coupled with the appropriate re-dispatch of resources obligated to re-dispatch, is allowed both as a System adjustment (as identified in the column titled ‘Initial System Conditions’) and a corrective action, where it can be demonstrated that Facilities remain within applicable Facility Ratings and those adjustments do not result in the shedding of any firm Load. Where limited options for re-dispatch exist, sensitivities associated with the availability of those resources must be considered. Where Facilities external to the Transmission Planner’s planning region are relied upon, Facility Ratings in those regions must also be considered.”

No

Construction activities: 60 months effective date seems acceptable for planning activities, but may not adequate for all construction activities. Typical times to construct a transmission line in various areas of SERC can range between 7 to 10 years. Accordingly, we recommend the effective date for construction projects be changed to at least 84 months. Dynamic load models: More time is needed for entities to determine the appropriate dynamic load model required by R2.4.1. We recommend at least 36 months before this requirement becomes effective.

Individual

Dilip Mahendra

SMUD

R1: The requirement should end after the words "…shall simulate projected System conditions.". The following words should be deleted as it results in a clause that is overly broad and does not specify clear and concise reliability requirements: "…including requirements of regulatory authorities and other legal obligations".

R2.1.3 and R2.4.3 The sentence, "…sensitivity case(s) that are intended to stress the System with variations in one or more of the following conditions not already included in the studies shall be included in the Assessment: …", should be modified by changing the second 'included' to 'considered'. R2.1.4 Since there is no NERC reliability standard requirement for a 'spare equipment strategy', what is the standing of a requirement that is based on having one? R2.5.2 There is no example given for 'Transmission additions/removals' ? Recommend that the wording of this requirement be made more discretionary with a requirement that the Transmission Planner include language explaining the reasons for using past studies.

R3.5 Listing all possible scenarios for studying extreme contingencies will result in a limitless list. Discretion should be given to the transmission planner on the selection of the contingencies without a requirement to list why other extreme contingencies have not been included. R3.3.2: When the word, 'consider' is used, it can be read as a guidance and not a requirement. The requirement is unclear.

R4.3: R4.3.2 – The requirement is unclear. If it is to cover modeling issues, then it should be under MOD series. If it is to cover voltage ride through performance, then performance metrics should be provided. R4.5 Listing all possible scenarios for studying extreme contingencies will result in a limitless list. Discretion should be given to the transmission planner on the selection of the contingencies without a requirement to list why other extreme contingencies have not been included.

R5: Guidelines for identifying proxies for unstable conditions would be helpful.

Requirement R7 should end after the words '....who has indicated a reliability need'. R7: The requirement should not invoke another document for compliance. The words, ", coordinating analysis of these results through an open and transparent peer review process such as described in FERC Order 890', should be deleted. This comment also applies to M7.

No

The allowed corrective actions in Table 1 to meet performance standards do not explicitly state

how DSM solutions should be treated [there is a potential for 20% of national peak demand to be met by "demand response"] . If it is allowed to be used, and since this is a fairly significant amount, it would help if it is explicitly addressed in Table 1.

No

The allowed corrective actions in Table 1 to meet performance standards do not explicitly state how DSM solutions should be treated [there is a potential for 20% of national peak demand to be met by "demand response"] . If it is allowed to be used, and since this is a fairly significant amount, it would help if it is explicitly addressed in Table 1.

Group

Southern Company

The VSLs for Requirement R1 incorporates several sub-requirements but neglects one of the three components of the main requirement. Consider that R1 requires the TP and RC to (a) maintain System models, (b) use data consistent with certain MOD standards, and (c) simulate projected System conditions. Because the first component is not a part of the proposed VSL and the purpose of this standard mentions a “broad spectrum of System conditions,” the recommendation is to add maintaining the system model into the VSLs for R1. R1.1.3 uses the terminology real and reactive “Demand” of Load. We suggest striking the word "Demand" because it refers only to real power. We recommend the the SDT limit R1 to load flow and stability models. Does R1 apply to short circuit models? If so does this imply that the short circuit model must be the same as the load flow model?

The Lower VSL describes a scenario where the TP or PC fails “one or both” of two particular sub-requirements. This language does not reconcile how failure of two sub-requirements is consistent with failure of only one of the same requirements. The recommendation is to restructure the VSL such that it is invoked when “either” sub-requirement is violated (not when both are violated). Generating unit stability has now been combined with system stability to be just one category - Stability. Previously, the shelf life of generating unit stability studies was indefinite -only needed to be restudied when system changes required it. Now the maximum shelf life of Stability studies is five years. Does this mean that generating unit stability studies must be repeated every five years whether system changes make it necessary or not? Requirement 2.3 stating that “the short circuit analysis portion of the Planning Assessment shall be conducted annually addressing the Near-Term Transmission Planning Horizon.” It is not clear if the intent of the requirement is to study every year within Year One and year five. A statement similar to R2.1.1 Year One or two and year five for steady state analysis would be helpful. Some clarification is needed for R2.3 on the term “Near-Term.” Requirement 2.3 stating that “the analysis shall determine the maximum short circuit interruption duty on fault interrupting devices using the System short circuit model with any generation and Transmission Facilities in service which could impact the study area.” What interrupting devices are included? Would the circuit breakers be enough? Moreover, the term “System short circuit model” is used for the first time (and the only time) here for the entire document. It is very common to use a different short circuit model for short circuit analysis while the steady state and stability analysis use different System models (power flow models). Some clarification is needed. R2.8 and R2.9 use the term megawatt "Demand”. This is redundant. We suggest striking the word demand.

R3.3.3 applies to “all Transmission lines.” To be consistent with the relay loadability standard, this should only apply to lines above 230 kV and lines between 100 kV and 230 kV identified as critical. R3.2 and R3.5 are both addressing the Extreme Events. However, R3.2 is referring to R3.5 while R3.5 is referring to R3.2. We suggest deleting the reference back to R3.2 which is in R3.5. A similar situation exists for R3.1 and R3.4. R3 seems to use the words studies and analyses interchangeably. Did the SDT intend for them to be the same? Using one term or the other would be better understood. There are two tables labeled table 1. It would be much clearer to mark them table 1 Planning Events and table 2 Extreme Events.

Generating unit stability should be separated from system stability like in previous drafts. R4.2 and R4.5 are both addressing the Extreme Events. However, R4.2 is referring to R4.5 while R4.5 is referring to R4.2. We suggest deleting the reference back to R4.2 which is in R4.5. A similar situation exists for R4.1 and R4.4.

We recommend using an alternate term for proxies such as criteria, guidelines, etc. to clarify what is meant.

We recommend the following wording for R7. Each Planning Coordinator shall coordinate the distribution of Planning Assessment results among adjacent Planning Coordinators and any functional entity who has indicated a reliability need. Each Planning Coordinator shall coordinate analysis of these results through an open and transparent peer review process such as described in FERC Order 890.

No

We disagree with deleting the definition of system stability and generating unit stability. The proposed definition for Year One reads as follows – Year One: The first year that a Transmission

Planner is responsible for assessing. This is further defined as the planning window that begins 12-18 months from the current year. Please clarify if this refers to the first “calendar” year when a Transmission Planner becomes responsible for assessments. If so, then add the word “Calendar” so that it reads “Year One: The first calendar year .....”.

Yes

No

Footnote 10 should not be applied to P3. The curtailment of firm service should not be allowed for a unit out / line out contingency.

No

More time is needed for entities to determine the appropriate dynamic load model required by R2.4.1. We recommend at least 36 months before this requirement becomes effective. Other than that, the SDT has done a good job in allowing time for entities to get into compliance with the requirements where the bar has been raised.

Group

Modesto Irrigation District

Comment: Are all bullets under R1.1.2 required to be explicitly modeled or are the effect of the devices or the effect of the removal of the devices to be modeled? We don’t explicitly model circuit breakers or explicitly model protection system equipment in the steady state model. R1.1.4 should refer to expected transfers to be consistent with the bullet under R2.1.3. Please explain the difference between R1.1.4 and R1.1.5

On pages 6 and 7 under sections R2.1.3 and R2.4.3, I think the magnitude of the “variations” in the conditions asked for in the sensitivity cases, should be defined and not left to the analyst to decide. On page 8 under Section R2.5.2, examples of “material changes” for generation are given, but no examples for transmission changes. Shouldn’t we include examples of material transmission changes, too ? Comments: Short circuit analyses is a local phenomenon and should not be required as part of a transmission planning assessment of the BES R2.8 and R2.9 load loss comment. We don’t agree with R2.8 & R2.9. What reliability purpose is served by these requirements?

On page 10 under Section R3.3.3, I believe more specifics on what is meant by “relay loadability” need to be given in regard to the requirement of “identify how loadability is analyzed in the steady state simulation”. For example, does the analyst need to state that the maximum loading allowed on any system element is less than or equal to 150% of the element’s maximum seasonal rating ? We believe that R3.3.1-R3.3.4 should be bullets under R3.3

Comments: We believe that R4.3.1-R4.3.3 should be bullets under R4.3

On page 13 under Section R5, can the term “proxies” be defined and clarified, and examples given, in this context ?

No

On page 2 under “Definitions of Terms Used in Standard”, the red-lined out example used to clarify the definition of “Non-Consequential Load Loss” seems valuable to me, and I think they should not remove it but leave it in.

No

On page 20 under Table 1, why are “SLG” (i.e., single line to ground) type faults still specified when footnote 3 on page 24 indicates that analyzing three phase faults is sufficient ? On page 20 under Table 1 part f, changing “post transient” to “post Contingency” may be confusing to most analysts as post-transient is a well defined term that has been in use for many years, and is even referenced in Table W-1 of the WECC supplemental planning standard TPL - (001 thru 004) – WECC – 1 - CR. On page 20 under Table 1 part g, does that mean that for Planning Event P0 the analyst is not required to simulate a fault with normal clearing without a loss of any system element, in order to demonstrate system stability ? On page 24 under Footnote 1 a ii, I would like to suggest that we add the phrase “(unless the relays are equipped with blinders and timers)” right after the phrase “...must not pass through relay characteristics...”. This is because the blinders (i.e., straight line characteristic of a distance relay) and timers can be used to prevent distance relays from tripping when power angle swings cause the apparent impedance the distance relays see to cross into the distance relay’s zone of protection.

Individual

Bart White

Progress Energy Florida, Inc.

For R1.1.2, PEF has the following comments: T-T Transformers, as major components of the BES, should be on this list. PEF does not object to the inclusion of Circuit Breakers on this list,

provided that representation is not required in steady state load flow cases. Breaker failure scenarios can be extensively studied in the steady state and stability realms by removing from service the transmission facilities that such a breaker event would initiate. PEF assumes that the inclusion of Protection System Equipment applies only to Stability Analysis. As for breakers, relay failure scenarios can be extensively studied in the steady state realm by removing from service the transmission facilities that such a relay event would initiate. Additionally, PEF also assumes that a comprehensive modeling of all Protection System Equipment (e.g. Transformer Sudden Pressure Relays, Bus Diff Relays, etc.) in Stability Analysis is not required, since only a limited amount of relaying in dynamic modeling is needed to adequately model the system with respect to what transmission/generation components would trip for a given event. A lack of specificity on the term “Control devices” leaves it open to wide interpretation. The SDT should, in detail and/or with examples, state what is intended. The term “New technologies” is only acceptable for inclusion if provision is made for the fact that Planning analysis software often lags behind the design industry in getting new technologies modeled such that Planners can analyze them. For R1.1.4 on Firm Transmission Service: PEF assumes that the SDT understands that some firm transmission service is not always modeled in every case, depending upon the economics and availability of alternate resources.

Concerning R2.1.4, this sub-requirement is overly burdensome for two primary reasons: a) It amounts to a system-wide N-2 and N-3 analysis, which goes against FERC’s policy of separation and distinction between types of events as stated in Paragraph 1788 of Order 693: “Under TPL-002-0 the system is not required to be able to withstand another N-1 contingency. That N-1 requirement is a Category C contingency which is addressed by TPL-003-0.” b) The requirement to perform system-wide analysis for such a scenario is a significant workload issue, and will take time away from analysis of more probable events. Concerning the issue of material changes in past studies in sub-requirement R2.5.2, PEF objects to the specification of changes in units “of 20 MW or greater”, due to the fact that a change (or even deletion) of a 20 MW unit in a case modeling a large BES does not truly constitute a material change. The SDT in its response to Question 15 in the comments for draft 2 stated that “The SDT did not want to be overly prescriptive when describing the type of changes that could be considered material and has left the text general.” PEF suggests that the SDT take its own advice, making the language in R2.5.2 more general in nature and leaving such modeling details to the discretion of the Transmission Owner. In R2.6.2, PEF assumes that the term “project initiation date” is intended to mean the Construction Move-In date. If the term means the first date at which Planners had identified it as a mitigation, PEF would object to this as it would appear to preclude the right to develop superior mitigations, or to cancel a project if it can be demonstrated as no longer needed. Concerning R2.8 and R2.9, PEF strenuously objects to such requirements. These requirements have no bearing on demonstrating the reliability (or lack thereof) of the BES, and therefore should be removed from the Standard.

Concerning R3.3.1, PEF believes that, in virtually every conceivable scenario, contingency analyses show that analysis of individual elements will reveal overloading or undervoltages, whereas the same event modeled according to protection system design (i.e. simulating the event as the actual “breaker-to-breaker” operation would occur) may not. Analysis of individual elements is therefore a more conservative method for studying the BES. PEF is not opposed to analysis of entire circuit outages; PEF therefore suggests that in addition to the existing language of R3.3.1, an additional sentence be added as follows: “Simulation of the loss of individual elements is acceptable in lieu of simulating the loss of all elements in a protection zone if it produces greater overloads or lower voltages.” This approach would allow for more efficient coordination with Transmission Operators as they schedule planned outages or make system adjustments in outage scenarios.

For R4.3.2, PEF assumes that the SDT understands that the extent of analyzing generation voltage ride-through capability does not extend to modeling of individual inductive loads on the Distribution side, as this does not fit the definition of the BES. Motor loads on the Distribution system do have an effect on generation voltage ride-through capability, however, and PEF therefore is perplexed as to what extent the SDT expects concerning analysis for this sub-requirement.

PEF does not presently have any concerns with R5.

PEF does not presently have any concerns with R6.

PEF does not presently have any concerns with R7.

No

PEF continues to disagree strenuously with differentiating between Consequential Load Loss and Non-Consequential Load Loss. PEF does not believe that load loss has anything whatsoever to do with demonstrating the robustness of the BES. The approach the SDT is taking with TPL-001-1 is essentially “Feeder Reliability”, rather than BES Reliability. Should the SDT decide that they must continue with this approach, PEF will explore options for expressing concern about this at the FERC level. PEF is perplexed by the definition of Supplemental Load Loss. PEF, as a Transmission Owner, considers its “end-user” to be the Distribution System. PEF would therefore use this definition to design Distribution-side controlled load curtailment schemes that essentially qualify

as Consequential Load Loss. If this is not the intent of the SDT, PEF suggests that the SDT modify this definition to make its meaning clearer.

No

PEF has multiple concerns with Table 1, the most fundamental of these concerns being that the existing Table in the existing TPL Standards is far superior to the new table. PEF suspects that the large blackout/brownout events in the Northeast and West have been the primary impetus behind devising a new Standard that will allegedly improve BES reliability. PEF strongly feels that proper planning, operation and maintenance under existing NERC Standards could have prevented all of the aforementioned events, and thus a new TPL Standard and a new Table 1 is not necessary. PEF's specific concerns with Table 1 as it exists in this 3rd draft of TPL-001-1 are as follows: As a general concern, PEF, as has been stated already, does not believe that organizing a Reliability table according to whether or not loss of Firm Transmission Service or loss of Non-Consequential Load can occur is appropriate. The BES can be demonstrated to be robust and can even be continually improved under the existing TPL Standards. PEF fails to see how FERC's and NERC's desire to eliminate Footnote (b) as stated in the existing TPL Standards has anything to do with the desire to improve the reliability of the BES. Indeed, as TPL-001-1 exists at present, PEF suspects that many Transmission Owners will a) reduce posted ATC values to reduce risk of loss of Firm Transmission Service or b) remove breakers to convert Non-Consequential Load into Consequential Load. Both of these actions fly in the face of what FERC desires for the BES of the future. FERC certainly desires for power markets to open up further and thereby encourage lower energy prices, but at present TPL-001-1 and the accompanying Table 1 is in opposition to enhancing the power marketing industry. In addition, removing breakers is in opposition to reliability and customer service. An additional general concern involves the continued differentiation between HV and EHV. EHV by its very nature carries significantly larger amounts of power than HV, and therefore an EHV event inherently causes a greater disparity between Generation and Load than a HV event, making the loss of Firm Transmission Service or loss of Non-Consequential Load necessary for even a single contingency. Should all utilities be therefore required to make their EHV systems redundant? Such a suggestion is preposterous. Given this fact, and the fact that EHV events hardly ever occur (and, as outlined in the draft Table 1, have never occurred on PEF's system), PEF believes holding EHV to a higher standard is inappropriate, and will result in no more than a negligible reliability improvement at tremendous cost. Based on the above concerns, PEF believes for all event scenarios (P0 – P7), analysis according to whether or not loss of Firm Transmission Service or loss of Non-Consequential Load can occur is inappropriate and should be deleted from the Standard. Concerning event P2-1, PEF assumes that "opening of breaker w/o fault" means opening breakers from both sides of the circuit. PEF therefore does not understand the difference between event P2-1 and events P1-1 through P1-4, and therefore suggests deleting P2-1 and combining the remainder of P2 with P1. Given the concerns above, voicing additional concerns about the Footnotes, short of reinstating the existing Footnote (b), is irrelevant.

No

Again, given the fundamental concerns that PEF has stated in previous Questions, PEF sees voicing detailed concerns for these footnotes as irrelevant, short of suggesting the reinstatement of the existing Footnote (b).

No

While the Implementation Plan is extremely vague at present, making a specific enforcement date impossible to determine, PEF is concerned that the language at present will not allow enough time for Transmission Owners to prepare for the increased stringency.

Individual

Alice Murdock

Xcel Energy

R1 states that the models used in these studies shall be consistent with data provided through MOD-010 and MOD-012. The data submitted for these are updated on a schedule provided by the RRO and not necessarily reflective of any emerging changes that may have occurred between the MOD data collection cycle. The requirement should allow for exceptions to allow the most recent information to be included in the TPL studies.

R2.1.3 – is this indicating that only one of the variations need to be studied? ("…in one or more of the following conditions…"). Recommend having the planner work with the load to determine what sensitivity studies to perform. R2.1.4 – it is unclear as to what should be done with the analysis that incorporates the company's spare equipment strategy. Is this requirement inferring that a company's spare equipment strategy need to ensure that it can still operate to within the requirements for contingencies of Table 1 without the component? R2.2.1 – is the intent to have the study for the 10 year horizon or to include any project that is started within the next 10 years and thus the study must be extended to the forecasted completion of the project (conceivably as long as 20 years or more?) R2.6.4 – recommend clarifying how "situations beyond the control of the TP or PC" are determined. It is unclear if this is to imply that if something is outside of the control of the department who conducts the planning studies or if it is outside the control of the registered function's legal entity (i.e. corporation). R2.8 – appears to

be nonessential information for reliability; for what purpose does this requirement exist? R2.9 - appears to be nonessential information for reliability; for what purpose does this requirement exist?

R3.3.3: Relay loadability has no bearing beyond the near term horizon. Loadability is not determined several years out. R3.5 – does this imply that mitigation plans must be implemented? If not, then this is highly subjective and the last sentence of this requirement should be deleted.

R4.3 – requires very labor intensive and detailed studies to be conducted; there are concerns about being able to accomplish the required studies within the 24 month implementation period; additionally, while there may be some reliability benefit to requiring these studies, have the costs of this requirement been studied?; an alternative could be some sort of phased implementation (x% completed by 24months, etc.) R4.3.3 – to what degree is generator relaying factored into the model/study?

The term “proxies” is somewhat confusing; recommend the use of “assumptions” if that is an acceptable substitute.

Why is this needed if both entities must comply with the standard? At a minimum the requirement should include language to state that the one party must provide to the other with enough notice to comply with a required study if there is a shift or assignment of a responsibility.

Recommend deleting the portion of the requirement that states: “coordinating analysis of these results through an open and transparent review process such as described in FERC Order 890.”

No

Clarification is needed on the use of UVLS. Is it acceptable or not. Typically UVLS relays are modeled in the study. Not allowing any load shedding as a result of UVLS relays could result in very costly fixes for a very small amount of remote load. If the Non-Consequential Load Loss Allowed column is No, is load disconnecetd from the system by UVLS a violation? What about Supplemental Load Loss or UFLS?

No

P4: Under the event column it should clarify and state language similar to that of P5 (Loss of multiple elements caused by a stuck breaker). In addition, this is a multiple contingency condition and may result in loss of more than 2 elements.

Individual

Kathleen Goodman

ISO New England, Inc.

R1 Priority Comment- There needs to be some direction provided on the initial conditions used in the assessment. This guidance should include discussion as to whether or not representations of generator forced outages are to be represented in the base case or if they are addressed through the sensitivity testing (Could add R1.1.7 Reasonable representations of unplanned generator outages.) Additionally, the standard is also silent on the treatment of system transfers, both internal and external, as to how they should be modeled in the base case. For some areas, their current practice is to include heavy system stresses in their base case, which leaves little for sensitivity testing. It is unclear if this practice works within this standard. R1.1.1 Priority comment – R1.1.1 should be removed. It seems like there is an overlap between the requirements of this standard and Operational Planning studies with respect to known outages. Planned outages are addressed by our Operational Planning processes and Transmission Operating Procedures removing the need for this to be incorporated into Planning Assessments. In addition, outages are not generally known years in advance R1 Comment – We do not understand what it means to include “requirements of regulatory authorities and other legal obligations”. Even if some version of this language is kept in the final standard, it seems to belong in R2 rather than R1. R1.1.2 comment - Do we need to have the list of equipment to model? How do we model circuit breakers, etc? We recommend deleting the list. Make R1.1.2 simply read: R1.1.2 New planned Facilities and changes to existing Facilities for each year of the Near-Term and Long-Term Transmission Planning Horizon. R1.1.5 comment – What specifically needs to be modeled under Interchange? R1.1.6 comment – This needs further definition or it should be deleted. It is not clear what a “network resource required to supply load” is. Does this refer to Network Resource per FERC LGIP?

R2 Comment – We recommend replacing the phrase “prepare” with “conduct and document” in the first sentence. R2.1.1 Comment – The requirement to evaluate year one or year two should be removed. This is not consistent with the time horizon identified in R2. R2.1.2 Comment – The requirement should be removed. With no description of the system stresses and generator outages to be applied when assessing the off-peak load, it is difficult to imagine any issues which would arise which are not revealed in the peak load evaluation that could not be addressed through generation dispatch adjustments. R2.1.3 Comment - The emphasis on sensitivity testing in the existing section appears misdirected and should be focused on reasonable risk. The assessment should have to include a discussion of reasonable risk. The sensitivity list can be

used to select sensitivities to assess risk. Having a requirement to perform one sensitivity just to meet the requirement of the standard does not add value to the assessment. R2.1.4 Priority Comment – With respect to spare equipment strategy, this requirement imposes severe testing requirements upon the system. However, there is no discussion on the generation dispatch or system transfers that are to be used for this portion of the assessment. The expectations for changes in system stresses need to be clear as part of the standard. Additionally, this section does not contemplate changing the acceptability of load loss. After experiencing a major contingency such as this, some change in the acceptability of load loss should be expected. The standard should consider allowing Non-Consequential load loss for P1 & P2 events. The standard needs to allow Non-Consequential load loss for P3 & P4 events. Why doesn't the standard state "(such as a transformer, generator or power electronic device)" and not just "(such as a transformer)". R2.2 Comment – We suggest replacing the phrase "a current System peak Load study" with "a valid System peak Load study" in the first sentence. The word current is confusing as some read the word current to mean "today's" rather than "valid". R2.3 Comment – Please provide guidance as to what year should be represented when performing short circuit studies. R2.4.1 Comment – Change to read: "For peak System Load levels, a Load model shall be used which appropriately represents the dynamic behavior of Loads, including consideration of the behavior of induction motor Loads or an aggregate System Load model which represents the overall dynamic behavior of the Load." R2.5.1 Comment– We suggest deleting this requirement, and incorporating it into R2.5.2. R2.5.2 Comment – To incorporate R.2.5.1 into R2.5.2; please modify the section as follows: For steady state, short circuit, or Stability analysis the study shall be less than five calendar years old or less: the present System model shall not include any material changes, such as, generation or Transmission additions/removals, or topology changes that have occurred in the intervening period and would impact the study area. Material generation changes could include: • The addition/deletion/change of individual generating unit capability determined to be material by the Planning Coordinator or Transmission Planner. [A 20 MVA generator is fairly small in a 30,000 MW system and system concerns would already be addressed though the System Impact Study] • An aggregated addition/deletion/change to a group of generating units directly connected through their step-up transformer(s) to the BES determined to be material by the Planning Coordinator or Transmission Planner. R2.6 Priority Comment – As written, this section undermines the value of the sensitivity testing. This section should require a corrective action plan to fix problems determined in sensitivity analysis if there is a reasonable risk of occurrence. We suggest making the standard read "Provide documentation that explains the reasoning for the sensitivities considered and selected." R2.6 Comment – At the end of the second sentence, the phrase "in the tables" is used. We suggest using more definitive language such as "in Table 1". R2.6.2 Comment – The phrase "Project Initiation Date" needs to be defined. It is unclear if this is this the date of ground breaking, purchase orders being issued, solution study initiation, etc. Additionally, in the second sentence the phrase "as well as an in-service date" should be modified to read "as well as a target in-service date". R2.6.3 Comment – Plans can provide a target in-service year but not an actual in-service year. R2.6.4 Priority Comment – There should be a cutoff point when changes occur beyond a certain date. When that date occurs, further changes will be evaluated in the next year's assessment. Otherwise, if a state makes a decision not to site a project a few weeks prior to the end of the assessment period, there will not be sufficient time to incorporate this into that year's assessment and develop corrective actions. R2.8 Comment –Largest consequential load loss is not factored into the Planning Assessment and should therefore be deleted. R2.9 Comment – This requirement is unclear. Is this requirement asking for each transmission planner to list their criteria for non-consequential load loss, or is it asking how much non-consequential load loss was being relied upon in the assessment? We recommend that the requirement be modified to require documentation of the maximum amount of non-consequential load loss that was relied upon during the assessment.

R3.3.2 Comment – Traditionally transmission planners have used their judgment about the minimum steady state voltage limitations of generators. If this standard is going to require its incorporation into the assessments, there should be an MOD standard developed requiring the generators to provide the necessary information prior to its inclusion as a requirement in this standard. R3.3.3 Comment – PRC-023 requires relay loadability to be reflected in facility ratings. Therefore this additional requirement is unnecessary and should be deleted. R3.5 Priority Comment – We recommend that the requirement for Extreme Event testing be removed from this standard as there is no requirement to develop a Corrective Action Plan to address unacceptable consequences. Otherwise we recommend the following: - Extreme Event performance should be a consideration when developing Corrective Action Plans to address Planning Events - It should be clear that an evaluation does not require solution development for all Extreme Events - Change "an evaluation of possible actions…" to "where appropriate, reasonably practicable actions designed to reduce the likelihood or mitigate the consequences and adverse impacts of the event(s) shall be considered."

R4.3.2 Priority Comment - Traditionally transmission planners have assumed that generators would ride through low voltages associated with Planning Events which is generally adequate for non-wind generators. If this standard is going to require its incorporation into the assessments, there should be an MOD standard developed requiring the generators to provide the necessary

information prior to its inclusion as a requirement in this standard. R4.5 Priority Comment – We recommend that the requirement for Extreme Event testing be removed from this standard as there is no requirement to develop a Corrective Action Plan to address unacceptable consequences. Otherwise we recommend the following: - Extreme Event performance should be a consideration when developing Corrective Action Plans to address Planning Events - It should be clear that an evaluation does not require solution development for all Extreme Events - Change “an evaluation of possible actions…” to “where appropriate, reasonably practicable actions designed to reduce the likelihood or mitigate the consequences and adverse impacts of the event(s) shall be considered.”
It is unclear as to what is meant by the term “proxy used in the analysis” used in this requirement. Does this mean Planning Coordinator established practices, thresholds or guidelines used to gauge when simulations suggest an event such as cascading outages occurs? If so the language should state: R5. Each Transmission Planner and Planning Coordinator shall define and document, within their Planning Assessment, when established practices, thresholds or guidelines identify System instability for conditions such as cascading outages, voltage instability, or uncontrolled islanding.
We do not feel that this requirement belongs in this standard and it should be deleted. The standard defines requirements for the assessment not who does what.
This standard should not be reiterating FERC Order 890. We do not feel that this requirement belongs in this standard and it should be deleted.
No
Refine load loss definitions as follows. Load Reduction: Load that is still connected to the System, but is reduced due to lower voltage conditions resulting from following a Planning or Extreme Event. Non-Consequential Load Loss: Non-Interruptible Load loss other than Consequential Load Loss, Supplemental Load Loss, and Load Reduction. Intended post contingency loss of load (other than Interruptible Load, Supplemental Load or Load Reduction) caused by operator or SPS (RAS) action. (Priority Comment)
No
Priority Comment – As written, this requirement is overly severe. This would require the simulation of a “dead” station if only one battery is present (use of NERC Glossary Protective System definition is too broad). The failure of the single protection system should be limited to certain aspects of the protection system. Priority Comment – Event 1 - This requirement requires the evaluation of the loss of two circuits on a multiple circuit tower. We recommend that this be modified so that only the loss of two adjacent (vertically or horizontally) circuits need be evaluated. We also recommend that the Planning Coordinator be allowed to evaluate and if appropriate exempt specific locations from this contingency based on acceptable risk. Comments on Extreme Events – Table 1- We recommend renumbering the Extreme Events table to be Table 2. Stability Condition 2 Note h – Eliminate this requirement or change to loss of station following three phase fault. This note is confusing. Without providing a better defined scenario, it is unclear as to what clearing times should be used in this simulation. Note 1.a.ii – Contingency Reserve is dependent on the generation on-line. We suggest changing the first sentence to say that you can’t lose more than that permissible by the Planning Coordinator. Also change “pull out of synchronism” to “lose synchronism” in this sentence and in the second sentence. (Is “Lose synchronism” a more commonly used term?). Note 3 – We recommend revising the wording of the last sentence to “A 3 phase fault study indicating criteria are being met is sufficient evidence that a SLG condition would also meet criteria.” Note 4 – We recommend that a lower bound be put on the HV electric systems (such as 100 kV), rather than just saying “and lower”.
Yes
Yes
Group
United Illuminating
R1 Priority Comment- There needs to be some direction provided on the initial conditions used in the assessment. This guidance should include discussion as to whether or not representations of generator forced outages are to be represented in the base case or if they are addressed through the sensitivity testing (Could add R1.1.7 Reasonable representations of unplanned generator outages.) Additionally, the standard is also silent on the treatment of system transfers, both internal and external, as to how they should be modeled in the base case. For some areas, their current practice is to include heavy system stresses in their base case, which leaves little for sensitivity testing. It is unclear if this practice works within this standard. R1.1.1 Priority comment – R1.1.1 should be removed. It seems like there is an overlap between the requirements of this standard and Operational Planning studies with respect to known outages. Planned outages are addressed by our Operational Planning processes and Transmission Operating Procedures removing the need for this to be incorporated into Planning Assessments. In addition, outages are not generally known years in advance R1 Comment – We do not

understand what it means to include “requirements of regulatory authorities and other legal obligations”. Even if some version of this language is kept in the final standard, it seems to belong in R2 rather than R1. R1.1.2 comment - Do we need to have the list of equipment to model? How do we model circuit breakers, etc? We recommend deleting the list. Make R1.1.2 simply read: R1.1.2 New planned Facilities and changes to existing Facilities for each year of the Near-Term and Long-Term Transmission Planning Horizon. R1.1.5 comment – What specifically needs to be modeled under Interchange? R1.1.6 comment – This needs further definition or it should be deleted. It is not clear what a “network resource required to supply load” is. Does this refer to Network Resource per FERC LGIP?

R2 Comment – We recommend replacing the phrase “prepare” with “conduct and document” in the first sentence. R2.1.1 Comment – The requirement to evaluate year one or year two should be removed. This is not consistent with the time horizon identified in R2. R2.1.2 Comment – The requirement should be removed. With no description of the system stresses and generator outages to be applied when assessing the off-peak load, it is difficult to imagine any issues which would arise which are not revealed in the peak load evaluation that could not be addressed through generation dispatch adjustments. R2.1.3 Comment - The emphasis on sensitivity testing in the existing section appears misdirected and should be focused on reasonable risk. The assessment should have to include a discussion of reasonable risk. The sensitivity list can be used to select sensitivities to assess risk. Having a requirement to perform one sensitivity just to meet the requirement of the standard does not add value to the assessment. R2.1.4 Priority Comment – With respect to spare equipment strategy, this requirement imposes severe testing requirements upon the system. However, there is no discussion on the generation dispatch or system transfers that are to be used for this portion of the assessment. The expectations for changes in system stresses need to be clear as part of the standard. Additionally, this section does not contemplate changing the acceptability of load loss. After experiencing a major contingency such as this, some change in the acceptability of load loss should be expected. The standard should consider allowing Non-Consequential load loss for P1 & P2 events. The standard needs to allow Non-Consequential load loss for P3 & P4 events. Why doesn’t the standard state “(such as a transformer, generator or power electronic device)” and not just “(such as a transformer)”. R2.2 Comment – We suggest replacing the phrase “a current System peak Load study” with “a valid System peak Load study” in the first sentence. The word current is confusing as some read the word current to mean “today’s” rather than “valid”. R2.3 Comment – Please provide guidance as to what year should be represented when performing short circuit studies. R2.4.1 Comment – Change to read: “For peak System Load levels, a Load model shall be used which appropriately represents the dynamic behavior of Loads, including consideration of the behavior of induction motor Loads or an aggregate System Load model which represents the overall dynamic behavior of the Load.” R2.5.1 Comment– We suggest deleting this requirement, and incorporating it into R2.5.2. R2.5.2 Comment – To incorporate R.2.5.1 into R2.5.2; please modify the section as follows: For steady state, short circuit, or Stability analysis the study shall be less than five calendar years old or less: the present System model shall not include any material changes, such as, generation or Transmission additions/removals, or topology changes that have occurred in the intervening period and would impact the study area. Material generation changes could include: • The addition/deletion/change of individual generating unit capability determined to be material by the Planning Coordinator or Transmission Planner. [A 20 MVA generator is fairly small in a 30,000 MW system and system concerns would already be addressed though the System Impact Study] • An aggregated addition/deletion/change to a group of generating units directly connected through their step-up transformer(s) to the BES determined to be material by the Planning Coordinator or Transmission Planner. R2.6 Priority Comment – As written, this section undermines the value of the sensitivity testing. This section should require a corrective action plan to fix problems determined in sensitivity analysis if there is a reasonable risk of occurrence. We suggest making the standard read “Provide documentation that explains the reasoning for the sensitivities considered and selected.” R2.6 Comment – At the end of the second sentence, the phrase “in the tables” is used. We suggest using more definitive language such as “in Table 1”. R2.6.2 Comment – The phrase “Project Initiation Date” needs to be defined. It is unclear if this is this the date of ground breaking, purchase orders being issued, solution study initiation, etc. Additionally, in the second sentence the phrase “as well as an in-service date” should be modified to read “as well as a target in-service date”. R2.6.3 Comment – Plans can provide a target in-service year but not an actual in-service year. R2.6.4 Priority Comment – There should be a cutoff point when changes occur beyond a certain date. When that date occurs, further changes will be evaluated in the next year’s assessment. Otherwise, if a state makes a decision not to site a project a few weeks prior to the end of the assessment period, there will not be sufficient time to incorporate this into that year’s assessment and develop corrective actions. R2.8 Comment –Largest consequential load loss is not factored into the Planning Assessment and should therefore be deleted. R2.9 Comment – This requirement is unclear. Is this requirement asking for each transmission planner to list their criteria for non-consequential load loss, or is it asking how much non-consequential load loss was being relied upon in the assessment? We recommend that the requirement be modified to require documentation of the maximum amount of non-consequential load loss that was relied upon during the assessment.

R3.3.2 Comment – Traditionally transmission planners have used their judgment about the minimum steady state voltage limitations of generators. If this standard is going to require its incorporation into the assessments, there should be an MOD standard developed requiring the generators to provide the necessary information prior to its inclusion as a requirement in this standard. R3.3.3 Comment – PRC-023 requires relay loadability to be reflected in facility ratings. Therefore this additional requirement is unnecessary and should be deleted. R3.5 Priority Comment – We recommend that the requirement for Extreme Event testing be removed from this standard as there is no requirement to develop a Corrective Action Plan to address unacceptable consequences. Otherwise we recommend the following: - Extreme Event performance should be a consideration when developing Corrective Action Plans to address Planning Events - It should be clear that an evaluation does not require solution development for all Extreme Events - Change “an evaluation of possible actions…” to “where appropriate, reasonably practicable actions designed to reduce the likelihood or mitigate the consequences and adverse impacts of the event(s) shall be considered.”

R4.3.2 Priority Comment - Traditionally transmission planners have assumed that generators would ride through low voltages associated with Planning Events which is generally adequate for non-wind generators. If this standard is going to require its incorporation into the assessments, there should be an MOD standard developed requiring the generators to provide the necessary information prior to its inclusion as a requirement in this standard. R4.5 Priority Comment – We recommend that the requirement for Extreme Event testing be removed from this standard as there is no requirement to develop a Corrective Action Plan to address unacceptable consequences. Otherwise we recommend the following: - Extreme Event performance should be a consideration when developing Corrective Action Plans to address Planning Events - It should be clear that an evaluation does not require solution development for all Extreme Events - Change “an evaluation of possible actions…” to “where appropriate, reasonably practicable actions designed to reduce the likelihood or mitigate the consequences and adverse impacts of the event(s) shall be considered.”

It is unclear as to what is meant by the term “proxy used in the analysis” used in this requirement. Does this mean Planning Coordinator established practices, thresholds or guidelines used to gauge when simulations suggest an event such as cascading outages occurs? If so the language should state: R5. Each Transmission Planner and Planning Coordinator shall define and document, within their Planning Assessment, when established practices, thresholds or guidelines identify System instability for conditions such as cascading outages, voltage instability, or uncontrolled islanding.

We do not feel that this requirement belongs in this standard and it should be deleted. The standard defines requirements for the assessment not who does what.

This standard should not be reiterating FERC Order 890. We do not feel that this requirement belongs in this standard and it should be deleted.

No

Load Reduction: Load that is still connected to the System, but is reduced due to lower voltage conditions resulting from a Planning or Extreme Event. Non-Consequential Load Loss: Non-Interruptible Load loss other than Consequential Load Loss, Supplemental Load Loss, and Load Reduction. Intended post contingency loss of load (other than Interruptible Load, Supplemental Load or Load Reduction) caused by operator or SPS (RAS) action. (Priority Comment)

No

Steady State & Stability comments as follows: Steady State & Stability: a. Transmission voltage instability, cascading outages, and uncontrolled islanding shall not occur. b. Consequential Load Loss, Supplemental Load Loss, Load Reduction, and consequential generation loss are acceptable as a consequence of any Planning or Extreme Event excluding P0. However, Supplemental Load Loss and Load Reduction associated with an event shall not be used to meet steady state performance requirements P5 Priority Comment – As written, this requirement is overly severe. This would require the simulation of a “dead” station if only one battery is present (use of NERC Glossary Protective System definition is too broad). The failure of the single protection system should be limited to certain aspects of the protection system. P7 Priority Comment – Event 1 - This requirement requires the evaluation of the loss of two circuits on a multiple circuit tower. We recommend that this be modified so that only the loss of two adjacent (vertically or horizontally) circuits need be evaluated. We also recommend that the Planning Coordinator be allowed to evaluate and if appropriate exempt specific locations from this contingency based on acceptable risk. Comments on Extreme Events – Table 1- We recommend renumbering the Extreme Events table to be Table 2. Stability Condition 2 Note a - Priority Comment - As written, this requirement is overly severe. This would require the simulation of a “dead” station if only one battery is present (use of NERC Glossary Protective System definition is too broad). The failure of the single protection system should be limited to certain aspects of the protection system. Stability Condition 2 Note h – Eliminate this requirement or change to loss of station following three phase fault. This note is confusing. Without providing a better defined scenario, it is unclear as to what clearing times should be used in this simulation. Note 1.a.ii – Contingency Reserve is dependent on the generation on-line. We suggest changing the first sentence to say

that you can't lose more than that permissible by the Planning Coordinator. Also change "pull out of synchronism" to "lose synchronism" in this sentence and in the second sentence. (Is "Lose synchronism" a more commonly used term?). Note 3 – We recommend revising the wording of the last sentence to "A 3 phase fault study indicating criteria are being met is sufficient evidence that a SLG condition would also meet criteria." Note 4 – We recommend that a lower bound be put on the HV electric systems (such as 100 kV), rather than just saying "and lower".

Yes

Yes

Individual

Baj Agrawal

Arizona Public Service Co

The language in R1.1.2 needs to be clarified. Many of these facilities are not explicitly included in the models in the base cases (circuit breakers, protection system equipment, control devices). The language should be clarified to require modeling the effect of the devices or the effect of the removal of the devices only where it is expected to impact the study outcome. Clarity is needed to explain the difference between R1.1.4 and R1.1.5. Expected interchange can be reasonably projected, but information on Firm Transmission Service is not always known or reasonably projected for future cases. For consistency with the 2nd bullet under R2.1.3, R1.1.4 should refer to expected transfers rather than Firm Transmission Service. With this change, R1.1.4 and R1.1.5 would be redundant and one should be deleted. We disagree with the inclusion of the words "including requirements of regulatory authorities and other legal obligations" at the end of R1. Entities already are required to do this. It does not need to be included in the standard. VSL: Under Severe VSL Column: The last sentence "The System model did not simulate projected System Conditions as described in Requirement R1" is vague and should be clarified. What is meant by "did not simulate." Is it referring to gross errors or something else? We recommend that Sever VSL be assigned only if the Transmission Planner failed to do the planning assessment. Hence it should not apply to R1 at all since R1 is only related to modeling accuracy.

Short circuit analyses is a local phenomenon and should not be required as part of a transmission planning assessment of the BES. In any case, the effects of failure of over-stressed breakers are already included in the Events to be assessed in Table 1. For example, P2-3 and P2-4 (Internal Breaker Fault), and P4 (Stuck Breaker while attempting to clear a fault). Clarity is needed in R2.1.4. The requirement to assess the Contingencies identified in Table 1 is too burdensome. This requirement does not specify any limits on the equipment for which an analysis must be conducted. As currently drafted, this could require a separate analysis for each transformer (or any long lead-time equipment) for which a spare is not available. A separate initial case would need to be developed to assess the Contingencies identified in Table 1 for each transformer. This could result in a countless number of additional cases. We recommend a threshold be established, such as all transformers with a low side voltage above 200 kV. We also recommend changing this from a separate sub-Requirement to one of the sensitivities to be considered under 2.1.3. We also believe that the statement at the end of R2.6 that indicates corrective action plans are not required solely to meet the performance requirements for sensitivities should also apply to the spare equipment requirement. The 20 MW threshold identified as "material change" for generation in R2.5 is too small. The limit should be raised or based on a percentage of the study area's installed generating capacity with a minimum of 100 MW change. R2.8 should be deleted. It is not necessary for reliability. What will be done with this information on the "largest Consequential Load Loss and the associated event caused by any P1 event and any P2 event" if it is documented? R2.9 should be deleted. It is not necessary for reliability. It will be difficult to determine the maximum permissible Non-Consequential Load value. It will end up being based on cost (monetary, societal, environmental, etc.), which is dependent, among other things, on the types of load being served. It very well may be a case by case situation.

As currently drafted, R3.3 is not a requirement. Without the statements in R3.3.1-R3.3.4, R3.3 is simply a phrase. Sub-Sub-Requirements R3.3.1 through R3.3.4 should be bullets under R3.3, with the language in R3.3 modified so that it becomes the requirement to conduct contingency analyses that address the four resulting bullets R3.3.2 is unclear as drafted. The minimum steady state voltage limitation for synchronous generators is not a very meaningful value. All generators with an automotive voltage regulator will maintain the set point voltage until the VAR capability of the generator is exceeded, and then the voltage will deteriorate. R3.5 – We disagree with the requirement to explain why remaining Extreme Contingencies would produce less severe System results than the ones selected for study. The first part of the requirement requires identification of events that produce more severe System impacts. The reason the others were not selected is because they were less severe or non-credible. In any case, theoretically, there can always be a more severe Extreme Contingencies than the one selected for study. For example, if the Extreme Contingency studied were simultaneous loss of 3 transmission lines with failure of redundant RAS, then simultaneous loss of 4 lines with failure of 2 sets of redundant RAS would be more

severe. Listing all possible extreme events could result in a limitless list.

As currently drafted, R4.3 is not a requirement. Without the statements in R4.3.1-R4.3.3, R4.3 is simply a phrase. Sub-Sub-Requirements R4.3.1 through R4.3.3 should be bullets under R4.3, with the language in R4.3 modified so that it becomes the requirement to conduct contingency analyses that address the three resulting bullets. R4.3.2 – it is not clear what is required to be modeled. Typically a generator may have 10 or more protective relays. Is the intent to model all relay protection? The existing commercial programs do not have sufficient models or capacity to do that for all generators in the system. R4.5 – We disagree with the requirement to explain why remaining Extreme Contingencies would produce less severe System results than the ones selected for study. The first part of the requirement requires identification of events that produce more severe System impacts. The reason the others were not selected is because they were less severe or non-credible. In any case, theoretically, there can always be a more severe Extreme Contingency than the one selected for study. For example, if the Extreme Contingency studied were simultaneous loss of 3 transmission lines with failure of redundant RAS, then simultaneous loss of 4 lines with failure of 2 sets of redundant RAS would be more severe. Listing all possible extreme events could result in a limitless list.

The term proxy is unclear. Please provide an example or an explanation of proxy. If this is related to Note “i” in Table 1, it should be so stated. If it is related to assumptions or criteria, please state so.

We believe that references to FERC Orders should not be included in requirements of standards. This comment also applies to M7.

No

Claification is needed on the use of UVLS. Is it acceptable or not. Typically UVLS relays are modeled in the study. Not allowing any load shedding as a result of UVLS relays could result in very costly fixes for a very small amount of remote load. If the Non-Consequential Load Loss Allowed column has a No entry, is load disconnecetd from the system by UVLS a violation? What about Supplemental Load Loss or UFLS?

No

P4: Under the event column it should clarify and state language similar to that of P5 (Loss of multiple elements caused by a stuck breaker). In addition, this is a multiple contingency condition and may result in loss of more than 2 elements. As such, this is a low probability condition and loss of Non-Consequential load should be allowed for EHV. We disagree with raising the bar for EHV for P4. We do not agree with Note “i” which requires establishing transient voltage response limits. There is no solid basis for such limits. In the past such limits were used as proxies for VAR margin and are not needed anymore. This will also result into non-uniform criteria throughout the interconnection. If such a limit were to be established, it should be based upon quantifiable reliably impact and should be supported by firm technical basis. Note 1b: Acceptable damping should not be defined by Planning coordinator and should be left to the Transmission Planner. Otherwise it would result into non-uniform criteria for the interconnections.

Group

Louisiana Energy and Power Authority

R2.5. This basic requirement intends, as we understand it, to require that earlier studies not be used for a current assessment if they are no longer accurate. But the phrasing is potentially confusing, and would be clearer if revised. Since the requirement deals with the use of past studies, we suggest that R2.5.2 be revised to state that “the study may be used only if there have been no material changes,” so that R2.5 reads in full: “R2.5. Past studies may be used to support the Planning Assessment if they meet the following requirements: “R2.5.1. For steady state, short circuit, or Stability analysis: the study shall be five calendar years old or less. “R2.5.2. For steady state, short circuit, or Stability analysis: the study may be used only if there have been no material changes, such as generation or Transmission additions/removals, or topology changes that have occurred in the intervening period and would impact the study area. Material generation changes could include: “The addition/deletion/change of individual generating unit capability of 20 MW or greater. “An aggregated addition/deletion/change to a group of generating units directly connected through their step-up transformer(s) to the BES which total 20 MW or greater.” With respect to footnote 10 to Table 1, we fear that the flexibility suggested by those provisions may be excessive for a planning standard. The ambiguity occasioned by stating emergency actions that can properly be taken in a planning standard can be utilized by those who plan the system in a manner which plans to drop non-consequential loads just as footnote b has been used in the past. If this is intended to “raise the bar” as stated these provisions do not belong in a planning standard, at least as now stated. It may be appropriate to remove the reference to footnote 10, at least in the Initial System Condition entry in P3, where it

suggests that it can be invoked after loss of a single generator, and we request the SDT to review that footnote to assure that it is appropriate in the other entries to which it is applied.

No

LEPA is in the area which is impacted by Entergy transmission planning. Entergy is one of the few NERC transmission owners which has for some years now relied upon its interpretation of "footnote b" in the previous TPL-001-0, TPL-002-0a, TPL-003-0a and TPL-004-0 as permitting planning for the loss of Non-Consequential Load or interruption of firm transfers as a way of planning and building less transmission than other utilities would have considered themselves obligated to build for reliability. That Entergy interpretation, and the consequent lower investment in transmission planning and construction, has been a matter of some concern among Entergy regulators at both State and Federal levels, as well as Entergy transmission customers, and has been rejected by the SPP, which has been given the authority to develop the base plan for transmission additions on the Entergy system. It was the Entergy rejection of that base plan that most recently led to a day long technical conference among regulators at the recent SEARUC conference in Charleston, SC. The proposed Implementation Plan for TPL-001-1 is drafted to make the new standard, which the proposed Implementation Plan describes as one that "raises the bar in several areas," effective only after the passage of 60 months from the first day of the first calendar quarter following applicable approval. That time for implementation is also embodied in A.5 of the proposed standard. This time lag is chosen, according to the proposed Implementation Plan, because of the "significant budget, siting, permitting, and construction impacts on many transmission owners." There are significant problems and costs for those whose electric service is dependent upon an inadequate transmission system, which would argue for a lesser period of time to reach compliance. This is especially true when the existing system is planned on an assumption as to the meaning of footnote b which assumption was clearly recognized as being controversial and a minority view. In recent years there have been repeated Entergy TLRs at quite high levels, which have repeatedly required emergency EEA-3s to keep firm load on line. And there has been an ongoing dispute between Entergy and the ICT as to footnote b and whether there should be limits on consequential load to be shed which has led the SPP (as the Entergy ICT) to have a complete base case for Entergy transmission construction already developed which is, by FERC direction, the basis for the Entergy construction plan. In its construction plan, however, Entergy dropped some 20 of the projects in the ICT base plan because of the Entergy view that it could go ahead and plan to drop non-consequential load as a means of remaining in compliance with Standards rather than building the transmission projects that would have been required in accordance with the ICT base plan. While not all of the proposed changes embodied in TPL-001-1 may have been incorporated in the SPP base plan development, certainly the footnote b issues were. The costs of the failure of reliability and congestion resulting from the Entergy failure have been quite high, for Entergy retail customers as well as for others, and will continue to be high so long as there is no obligation to comply. Firm transmission obligations are simply not met while there is no obligation to comply. While it is certainly true that transmission cannot be planned and constructed overnight, it is also true that those who relied upon the minority interpretation of footnote b have been on notice for years both that that interpretation was challenged, and also that it was a minority viewpoint, as NERC itself advised FERC in its response to the NOPR that preceded Order 693. In 2007 FERC directed that NERC clarify the intended meaning of footnote b in its Order 693, and pointed out at that time that the interpretation permitting loss of load was "based largely on the matter of economics, not reliability." Id., P 1792. At that time, only Entergy and NIPSCO would even admit to this less reliable interpretation of footnote b. NERC agreed that such an interpretation was incorrect in its filings leading up to Order 693. In its June 26, 2006 Comments of North American Electric Reliability Council and North American Electric Reliability Corporation on Staff Preliminary Assessment, at p. 57-58, NERC noted that load shedding in a single contingency event is not acceptable: "footnote b to TPL-002-0 is intended to provide a limited exception to the general rule for serving load from a radial transmission line and should only be applied in unique circumstances, as described above. NERC recognizes that looped configurations are key to the reliable operation of the interconnection, and to meet reasonable expectations for reliable service to loads. . . . NERC standards, including footnote b, are not intended to endorse or approve planning the interconnection using radial configurations as a preferred method for reliably serving load, nor do NERC standards consider load shedding acceptable for single contingency events." Hence, those recalcitrant transmission owners who intentionally failed to expend the money and effort that the responsible transmission owners did expend, have been rewarded at the expense

of those who rely on the transmission system to do its basic job. Order 693, P 1794, “strongly discourage[d] an approach that reflects the lowest common denominator.” Many of those transmission owners and planners for whom this change constitutes “raising the bar” presumably had plenty of time to consider what their options would be if their interpretation was incorrect, and should be expected to have reserve plans on hand pretty close to being ready to go when the dispute was lost. In the Entergy case, the plan has been in its hands for some time, and it has chosen to reject the ICT plan based on its own minority interpretation of footnote b. LEPA asks that at least as to the changes tied to footnote b interpretation, and other excuses for dropping non-consequential load, the time for compliance be shortened to no more than two years following regulatory approval of the standard. R2.6 already provides for the development of a Corrective Action Plan, and it would not encourage reliability if five years were taken to develop a Corrective Action Plan, as opposed to complying with the standard. Second, LEPA suggests that, whether or not NERC chooses to stick with its 5-year time period to permit those entities which may have used a similar interpretation of footnote b, it not try to influence FERC and the courts as to legal questions that may develop during that period. We recognize that the changes made in what will be TPL-001-1 go well beyond the clarification of footnote b, so that for some changes there may be a reason for the 5 year phase in. But whether or not the 5 year phase in is going to be applicable to all of those changes, we suggest that it would be improper to mischaracterize what is being done in a way that appears to have been drafted to influence legal questions that may come up. Specifically, as currently drafted, the descriptive modifier “many” should not be used in describing the entities which had chosen to use the lower bar interpretation of footnote b. While we recognize that a number of commenters have looked to one interpretation or another of footnote b in a few extreme situations, a review of comments does not show other transmission owners who have relied on the extreme interpretation used by Entergy on a systematic basis, And we think it inappropriate for the description in the paragraph beginning at the bottom of p.1 of that draft Implementation Plan to focus on the footnote b issue, as it now does. We suggest a modification which makes the description accurate, and which avoids the kind of misinterpretation which led to the footnote b controversy in the first place. We suggest that that first part of that paragraph be revised to read as follows: “TPL-001-1 ‘raises the bar’ in several areas where performance requirements have been changed in the new Standard versus those in existing TPL-001-0, TPL-002-0a, TPL-003-0a and TPL-004-0. Among other things, loss of Non-Consequential Load or interruption of firm transfers is no longer allowed for certain events, whereas the existing Standards were interpreted by some to allow such actions. As shown in Table 1 of TPL-001-1, the performance requirements associated with the following events represent ‘raising the bar’…”

Individual

Randy MacDonald

New Brunswick System Operator

It is not clear how TP and PC are to coordinate activities. If R6 provided direction on individual and joint responsibilities then R6 should be referred to in each of the requirements which require TP and PC coordination. The VSL and Measurement for requirement R1 appears focused the number of subrequirements represented in the model. Ideally the focus should be the impacts or error of the results if something is not properly represented. This shift in thinking will allow the planner to assess and focus on those subrequirements which are important to the study results. R1.1.1 Planned outage duration needs to be defined. For example, a planned outage for a year or more should be included in the Near term assessment.

R2.1.4 Major transmission element needs to be defined. For example, what about sync condenser, or generator step up transformer? R2.2 Clearity required. Example: What is meant by "current System peak load" It is not clear what supplemental load loss is. Would load tripped due to undervoltage or SPS as a result of a contingency be considered supplemental load? As a follow up what then is Non-consequential load (provide examples). How would this load be lost? The requirements appear the same regardless of the amount of Non-consequential load loss. Is there any consideration of applying thresholds both on suppmental and non-consequential load loss where these loads are defined as (or applied as) "…exceeding xxx amount of MW". Regarding Table 1 b, what does the following mean: "However, Supplemental Load Loss associated with an event shall not be used to meet steady state performance requirements." Please clearify the definition of Year One. This definition also does not include Planning coordinator. Was that intentional?

No comment

No comment

Please clearify "Proxies"

No comment

No comment

No comment

No comment

No comment

No comment

Individual

Dana Cabbell

Southern California Edison Company

The language in R1.1.2 needs to be clarified. Many of these facilities are not explicitly included in the models in the base cases (circuit breakers, protection system equipment, control devices). The language should be clarified to require modeling the effect of the devices or the effect of the removal of the devices where it is expected to impact the study outcome. Clarity is needed to explain the difference between R1.1.4 and R1.1.5. Expected interchange can be reasonably projected, but information on Firm Transmission Service is not always known or reasonably projected for future cases. For consistency with the 2nd bullet under R2.1.3, R1.1.4 should refer to expected transfers rather than Firm Transmission Service. With this change, R1.1.4 and R1.1.5 would be redundant and one should be deleted. We disagree with the inclusion of the words "including requirements of regulatory authorities and other legal obligations" at the end of R1. Entities already are required to do this. It does not need to be included in the standard.

Short circuit analyses is a local phenomenon and should not be required as part of a transmission planning assessment of the BES. In any case, the effects of failure of over-stressed breakers are already included in the Events to be assessed in Table 1. For example, P2-3 and P2-4 (Internal Breaker Fault), and P4 (Stuck Breaker while attempting to clear a fault). Clarity is needed in R2.1.4. The requirement to assess the Contingencies identified in Table 1 is too burdensome. This requirement does not specify any limits on the equipment for which an analysis must be conducted. As currently drafted, this could require a separate analysis for each transformer (or any long lead-time equipment) for which a spare is not available. A separate initial case would need to be developed to assess the Contingencies identified in Table 1 for each transformer. This could result in a countless number of additional cases. We recommend a threshold be established, such as all transformers with a low side voltage above 200 kV. We also recommend changing this from a separate sub-Requirement to one of the sensitivities to be considered under 2.1.3. We also believe that the statement at the end of R2.6 that indicates corrective action plans are not required solely to meet the performance requirements for sensitivities should also apply to the spare equipment requirement. The 20 MW threshold identified as "material change" for generation in R2.5 is too small. The limit should be raised or based on a percentage of the study area's installed generating capacity. R2.8 should be deleted. It is not necessary for reliability. What will be done with this information on the "largest Consequential Load Loss and the associated event caused by any P1 event and any P2 event" if it is documented? R2.9 should be deleted. It is not necessary for reliability. It will be difficult to determine the maximum permissible Non-Consequential Load value. It will end up being based on cost (monetary, societal, environmental, etc.), which is dependent, among other things, on the types of load being served. It very well may be a case by case situation.

As currently drafted, R3.3 is not a requirement. Without the statements in R3.3.1-R3.3.4, R3.3 is simply a phrase. Sub-Sub-Requirements R3.3.1 through R3.3.4 should be bullets under R3.3, with the language in R3.3 modified so that it becomes the requirement to conduct contingency analyses that address the four resulting bullets R3.3.2 is unclear as drafted. The minimum steady state voltage limitation for synchronous generators is not a very meaningful value. All generators with an automatic voltage regulator will maintain the set point voltage until the VAR capability of the generator is exceeded, and then the voltage will deteriorate. R3.5 – We disagree with the requirement to explain why remaining Extreme Contingencies would produce less severe System results than the ones selected for study. The first part of the requirement requires identification of events that produce more severe System impacts. The reason the others were not selected is because they were less severe or non-credible. In any case, theoretically, there can always be a more severe Extreme Contingencies than the one selected for study. For example, if the Extreme Contingency studied were simultaneous loss of 3 transmission lines with failure of redundant RAS, then simultaneous loss of 4 lines with failure of 2 sets of redundant RAS would be more severe. Listing all possible extreme events could result in a limitless list.

As currently drafted, R4.3 is not a requirement. Without the statements in R4.3.1-R4.3.3, R4.3 is simply a phrase. Sub-Sub-Requirements R4.3.1 through R4.3.3 should be bullets under R4.3, with the language in R4.3 modified so that it becomes the requirement to conduct contingency analyses that address the three resulting bullets. R4.3.2 – it is not clear what is required to be modeled. Typically a generator may have 10 or more protective relays. Is the intent to model all relay protection? The existing commercial programs do not have sufficient models or capacity to do that for all generators in the system. R4.5 – We disagree with the requirement to explain why remaining Extreme Contingencies would produce less severe System results than the ones selected for study. The first part of the requirement requires identification of events that produce more severe System impacts. The reason the others were not selected is because they were less severe or non-credible. In any case, theoretically, there can always be a more severe Extreme Contingency than the one selected for study. For example, if the Extreme Contingency studied were simultaneous loss of 3 transmission lines with failure of redundant RAS, then simultaneous loss of 4 lines with failure of 2 sets of redundant RAS would be more severe. Listing all possible extreme events could result in a limitless list.

The term proxy is unclear. Please provide an example or an explanation of proxy.

We believe that references to FERC Orders should not be included in requirements of standards. This comment also applies to M7.

No

Claification is needed on the use of UVLS. Is it acceptable or not. Typically UVLS relays are modeled in the study. Not allowing any load shedding as a result of UVLS relays could result in very costly fixes for a very small amount of remote load. If the Non-Consequential Load Loss Allowed column is No, is load disconnecetd from the system by UVLS a violation? What about Supplemental Load Loss or UFLS?

No

P4: Under the event column it should clarify and state language similar to that of P5 (Loss of multiple elements caused by a stuck breaker). In addition, this is a multiple contingency condition and may result in loss of more than 2 elements. As such, this is a low probability condition and loss of Non-Consequential load should be allowed for EHV. We disagree with raising the bar for EHV for P4.

Yes

We agree that TPL-005 and TPL-006 appear to have been adequately covered in the draft TPL-001-1 as currently written. However, we will need to review this assessment after TPL-001-1 is finalized. In addition, there is no place to state our concerns for Section D. so we added it here. We question the "not applicable" entry under Section D 1.1.2. What does it mean when the reset period is not applicable? Does it mean there is no reset period, so all non-compliance in all prior years will be counted as prior violations when considering non-compliance in future years?

Individual

Terry Huval

Lafayette Utilities System

R2.5. This basic requirement intends, as we understand it, to require that earlier studies not be used for a current assessment if they are no longer accurate. But the phrasing is potentially confusing, and would be clearer if revised. Since the requirement deals with the use of past studies, we suggest that R2.5.2 be revised to state that “the study may be used only if there have been no material changes,” so that R2.5 reads in full: “R2.5. Past studies may be used to support the Planning Assessment if they meet the following requirements: “R2.5.1. For steady state, short circuit, or Stability analysis: the study shall be five calendar years old or less. “R2.5.2. For steady state, short circuit, or Stability analysis: the study may be used only if there have been no material changes, such as generation or Transmission additions/removals, or topology changes that have occurred in the intervening period and would impact the study area. Material generation changes could include: “The addition/deletion/change of individual generating unit capability of 20 MW or greater. “An aggregated addition/deletion/change to a group of generating units directly connected through their step-up transformer(s) to the BES which total 20 MW or greater.” With respect to footnote 10 to Table 1, we fear that the flexibility suggested by those provisions may be excessive for a planning standard. The ambiguity occasioned by stating emergency actions that can properly be taken in a planning standard can be utilized by those who plan the system in a manner which plans to drop non-consequential loads just as footnote b has been used in the past. If this is intended to “raise the bar” as stated these provisions do not belong in a planning standard, at least as now stated. It may be appropriate to remove the reference to footnote 10, at least in the Initial System Condition entry in P3, where it suggests that it can be invoked after loss of a single generator, and we request the SDT to review that footnote to assure that it is appropriate in the other entries to which it is applied. In addition to the foregoing, we are concerned that the language of footnote 10 to Table 1 is unclear and subject to at least one interpretation that would seriously undermine reliability. Specifically, the first sentence of footnote 10 permits "[c]urtailment of firm transmission service, when coupled with the appropriate re-dispatch of resources obligated to re-dispatch …." The reference to an "obligat[ion] to re-dispatch" is ambiguous at best and should be clarified. For example, footnote 10 should not be read as permitting Balancing Authority A to rely on curtailment of firm transmission service coupled with re-dispatch of generation by adjacent Balancing Authority B during a Level 5 TLR event, based on the theory that, if a Level 5 TLR is declared and the Reliability Coordinator assigns to Balancing Authority B an NNL reduction responsibility that compels it to reload its resources, Balancing Authority B is therefore "obligated to re-dispatch" within the meaning of footnote 10. We suspect the intent of the first sentence of footnote 10 was to recognize and give effect to arrangements in which (following the example) Balancing Authority A has made a prior contractual arrangement with Balancing Authority B (or another generation owner) to provide redispatch services when requested by Balancing Authority A. In that circumstance, Balancing Authority A would be allowed to couple the curtailment of firm transmission with redispatch provided by Balancing Authority B (or another generation owner)

pursuant to its contractual obligation. We suggest that this limitation be reflected by revising the first sentence of footnote 10 to read as follows: “Curtailment of firm transmission service, when coupled with the appropriate re-dispatch of resources subject to a contractual obligation to provide re-dispatch service to the operator of the system for which the Transmission Planner is responsible, is allowed both as a System adjustment (as identified in the column titled ‘Initial System Conditions’) and a corrective action, where it can be demonstrated that Facilities remain within applicable Facility Ratings and those adjustments do not result in the shedding of any firm Load.” Without the limitation reflected in the foregoing revision, an entity could interpret footnote 10 as allowing it to rely on the redispatch of generation by other systems that may be (in effect) mandated by a Reliability Coordinator during a Level 5 TLR event. That sort of "leaning" on adjacent systems should not be permitted as a System adjustment or corrective action under TPL-001, especially where it imposes uncompensated burdens and costs on the system(s) forced to redispatch under these circumstances.

No

Lafayette is in the area which is impacted by Entergy transmission planning. Entergy is one of the few NERC transmission owners which has for some years now relied upon its interpretation of “footnote b” in the previous TPL-001-0, TPL-002-0a, TPL-003-0a and TPL-004-0 as permitting planning for the loss of Non-Consequential Load or interruption of firm transfers as a way of planning and building less transmission than other utilities would have considered themselves obligated to build for reliability. That Entergy interpretation, and the consequent lower investment in transmission planning and construction, has been a matter of some concern among Entergy regulators at both State and Federal levels, as well as Entergy transmission customers, and has been rejected by the SPP, which has been given the authority to develop the base plan for transmission additions on the Entergy system. It was the Entergy rejection of that base plan that most recently led to a day long technical conference among regulators at the recent SEARUC conference in Charleston, SC. The proposed Implementation Plan for TPL-001-1 is drafted to make the new standard, which the proposed Implementation Plan describes as one that “raises the bar in several areas,” effective only after the passage of 60 months from the first day of the first calendar quarter following applicable approval. That time for implementation is also embodied in A.5 of the proposed standard. This time lag is chosen, according to the proposed Implementation Plan, because of the “significant budget, siting, permitting, and construction impacts on many transmission owners.” There are significant problems and costs for those whose electric service is dependent upon an inadequate transmission system, which would argue for a lesser period of time to reach compliance. This is especially true when the existing system is planned on an assumption as to the meaning of footnote b which assumption was clearly recognized as being controversial and a minority view. In recent years there have been repeated Entergy TLRs at quite high levels, which have repeatedly required emergency EEA-3s to keep firm load on line. And there has been an ongoing dispute between Entergy and the SPP as to footnote b and whether there should be limits on consequential load to be shed which has led the SPP (as the Entergy ICT) to have a complete base case for Entergy transmission construction already developed which is, by FERC direction, the basis for the Entergy construction plan. In its construction plan, however, Entergy dropped some 20 of the projects in the SPP base plan because of the Entergy view that it could go ahead and plan to drop non-consequential load as a means of remaining in compliance with Standards rather than building the transmission projects that would have been required in accordance with the SPP base plan. While not all of the proposed changes embodied in TPL-001-1 may have been incorporated in the SPP base plan development, certainly the footnote b issues were. The costs of the failure of reliability and congestion resulting from the Entergy failure have been quite high, for Entergy retail customers as well as for others, and will continue to be high so long as there is no obligation to comply. Firm transmission obligations are simply not met while there is no obligation to comply. While it is certainly true that transmission cannot be planned and constructed overnight, it is also true that those who relied upon the minority interpretation of footnote b have been on notice for years both that that interpretation was challenged, and also that it was a minority viewpoint, as NERC itself advised FERC in its response to the NOPR that preceded Order 693. In 2007 FERC directed that NERC clarify the intended meaning of footnote b in its Order 693, and pointed out at that time that the interpretation permitting loss of load was “based largely on the matter of economics, not reliability.” Id., P 1792. At that time, only Entergy and NIPSCO (certainly not “many” Transmission Owners– a word that appears twice in the draft Implementation Plan) would even admit to their interpretation of footnote b to weaken the grid. NERC agreed that such

an interpretation was incorrect in its filings leading up to Order 693. In its June 26, 2006 Comments of North American Electric Reliability Council and North American Electric Reliability Corporation on Staff Preliminary Assessment, at p. 57-58, NERC noted that load shedding in a single contingency event is not acceptable: "footnote b to TPL-002-0 is intended to provide a limited exception to the general rule for serving load from a radial transmission line and should only be applied in unique circumstances, as described above. NERC recognizes that looped configurations are key to the reliable operation of the interconnection, and to meet reasonable expectations for reliable service to loads. . . . NERC standards, including footnote b, are not intended to endorse or approve planning the interconnection using radial configurations as a preferred method for reliably serving load, nor do NERC standards consider load shedding acceptable for single contingency events." It thus seems strange for NERC, an organization whose very existence was intended to assure the reliability of the grid, to reward those recalcitrant transmission owners who intentionally failed to expend the money and effort that the responsible transmission owners did expend, and at the expense of those who rely on the transmission system to do its basic job. Order 693, P 1794, "strongly discourage[d] an approach that reflects the lowest common denominator." Many of those transmission owners and planners for whom this change constitutes "raising the bar" presumably had plenty of time to consider what their options would be if their interpretation was incorrect, and should be expected to have reserve plans on hand pretty close to being ready to go when the dispute was lost. In the Entergy case, the plan has been in its hands for some time, and the fact that it has chosen to reject the SPP plan based on its own minority interpretation of footnote b is no one's fault but its own. And it certainly does not have to start from scratch to develop the plan; it consciously chose to reject the plan that the ICT developed for it. Lafayette asks that at least as to the changes tied to footnote b interpretation, and other excuses for dropping non-consequential load, the time for compliance be shortened to no more than two years following regulatory approval of the standard. R2.6 already provides for the development of a Corrective Action Plan, and it would not encourage reliability if five years were taken to develop a Corrective Action Plan, as opposed to complying with the standard. Second, Lafayette suggests that, whether or not NERC chooses to stick with its 5-year "lowering of the bar" to permit those entities which may have used a similar interpretation of footnote b to avoid building a sturdy grid, it not try to influence FERC and the courts as to legal questions that may develop during that period. We recognize that the changes made in what will be TPL-001-1 go well beyond the clarification of footnote b, so that for some changes there may be a reason for the 5 year phase in. But whether or not the 5 year phase in is going to be applicable to all of those changes, we suggest that it would be improper to mischaracterize what is being done in a way that appears to have been drafted to influence legal questions that may come up. Specifically, as currently drafted, the descriptive modifier "many" should not be used in describing the entities which had chosen to use the lower bar interpretation of footnote b. While we recognize that a number of commenters have looked to one interpretation or another of footnote b in a few extreme situations, a review of comments does not show other transmission owners who have relied on the extreme interpretation used by Entergy on a systematic basis, And we think it inappropriate for the description in the paragraph beginning at the bottom of p.1 of that draft Implementation Plan to focus on the footnote b issue, as it now does. We suggest a modification which makes the description accurate, and which avoids the kind of misinterpretation which led to the footnote b controversy in the first place. We suggest that that first part of that paragraph be revised to read as follows: "TPL-001-1 'raises the bar' in several areas where performance requirements have been changed in the new Standard versus those in existing TPL-001-0, TPL-002-0a, TPL-003-0a and TPL-004-0. Among other things, loss of Non-Consequential Load or interruption of firm transfers is no longer allowed for certain events, whereas the existing Standards were interpreted by some to allow such actions. As shown in Table 1 of TPL-001-1, the performance requirements associated with the following events represent 'raising the bar'..."

Individual

Robert Easton

Western Area Power Administration

General, all-encompassing comment: The change in TPL Standards, while well intended, will be difficult to administer since it has taken a simple Performance Table and translated it into a legal-type document that is very complex to relate to the physical system for the planning and operations staff. The performance requirements must be related to the physical response characteristics of the interconnected system operation without depending on a legal advise for training my new transmission system planning staff. The language in R1.1.2 needs to be clarified. Many of these facilities are not explicitly included in the models in the base cases (circuit breakers, protection system equipment, control devices). The language should be clarified to require modeling the effect of the devices or the effect of the removal of the devices where it is expected to impact the study outcome. Clarity is needed to explain the difference between R1.1.4 and R1.1.5. Expected interchange can be reasonably projected, but information on Firm Transmission Service is not always known or reasonably projected for future cases. For consistency with the 2nd bullet under R2.1.3, R1.1.4 should refer to expected transfers rather than Firm Transmission Service. With this change, R1.1.4 and R1.1.5 would be redundant and

one should be deleted. I disagree with the inclusion of the words “including requirements of regulatory authorities and other legal obligations” at the end of R1. Entities already are required to do this. It does not need to be included in the standard.

Short circuit analyses is a local phenomenon and should not be required as part of a transmission planning assessment of the BES. In any case, the effects of failure of over-stressed breakers are already included in the Events to be assessed in Table 1. For example, P2-3 and P2-4 (Internal Breaker Fault), and P4 (Stuck Breaker while attempting to clear a fault). The last bullet under R2.1.3 - "Planned duration or timing of Transmission Outages." does not belong in a long-term planning standard. These-type of seasonal outages are studied and implemetation plans are derived as part of the TOP Standard requirements. In the WECC - this is also covered by the seasonal studies carried out by the Operating Transfer Capability Policy Committee (OTCPC) study groups. Clarity is needed in R2.1.4. The requirement to assess the Contingencies identified in Table 1 is too burdensome. This requirement does not specify any limits on the equipment for which an analysis must be conducted. As currently drafted, this could require a separate analysis for each transformer (or any long lead-time equipment) for which a spare is not available. A separate initial case would need to be developed to assess the Contingencies identified in Table 1 for each transformer. This could result in a countless number of additional cases. We recommend a threshold be established, such as all transformers with a low side voltage above 200 kV. We also recommend changing this from a separate sub-Requirement to one of the sensitivities to be considered under 2.1.3. We also believe that the statement at the end of R2.6 that indicates corrective action plans are not required solely to meet the performance requirements for sensitivities should also apply to the spare equipment requirement - OR simply delete this spare equipment requirement. The 20 MW threshold identified as “material change” for generation in R2.5 is too small. The limit should be raised or based on a percentage of the study area’s installed generating capacity. R2.8 should be deleted. It is not necessary for reliability. What will be done with this information on the “largest Consequential Load Loss and the associated event caused by any P1 event and any P2 event” if it is documented? R2.9 should be deleted. This requirement is not necessary for reliability. It will be difficult to determine the maximum permissible Non-Consequential Load value. It will end up being based on cost (monetary, societal, environmental, etc.), which is dependent, among other things, on the types of load being served. It very well may be a case by case situation.

As currently drafted, R3.3 is not a requirement. Without the statements in R3.3.1-R3.3.4, R3.3 is simply a phrase. Sub-Sub-Requirements R3.3.1 through R3.3.4 should be bullets under R3.3, with the language in R3.3 modified so that it becomes the requirement to conduct contingency analyses that address the four resulting bullets. R3.3.2 is unclear as drafted. The minimum steady state voltage limitation for synchronous generators is not a very meaningful value. All generators with an automotive voltage regulator will maintain the set point voltage until the VAR capability of the generator is exceeded, and then the voltage will deteriorate. R3.5 – I disagree with the requirement to explain why remaining Extreme Contingencies would produce less severe System results than the ones selected for study. The first part of the requirement requires identification of events that produce more severe System impacts. The reason the others were not selected is because they were less severe or non-credible. In any case, theoretically, there can always be a more severe Extreme Contingency than the one selected for study. For example, if the Extreme Contingency studied were simultaneous loss of 3 transmission lines with failure of redundant RAS, then simultaneous loss of 4 lines with failure of 2 sets of redundant RAS would be more severe. Listing all possible extreme events could result in a limitless list.

As currently drafted, R4.3 is not a requirement. Without the statements in R4.3.1-R4.3.3, R4.3 is simply a phrase. Sub-Sub-Requirements R4.3.1 through R4.3.3 should be bullets under R4.3, with the language in R4.3 modified so that it becomes the requirement to conduct contingency analyses that address the three resulting bullets. R4.3.2 – It is not clear what is required to be modeled. Typically a generator may have 10 or more protective relays. Is the intent to model all relay protection? The existing commercial programs do not have sufficient models or capacity to do that for all generators in the system. R4.5 – I disagree with the requirement to explain why remaining Extreme Contingencies would produce less severe System results than the ones selected for study. The first part of the requirement requires identification of events that produce more severe System impacts. The reason the others were not selected is because they were less severe or non-credible. In any case, theoretically, there can always be a more severe Extreme Contingency than the one selected for study. For example, if the Extreme Contingency studied were simultaneous loss of 3 transmission lines with failure of redundant RAS, then simultaneous loss of 4 lines with failure of 2 sets of redundant RAS would be more severe. Listing all possible extreme events could result in a limitless list.

The term "proxy" is unclear. Please provide an example or an explanation of proxy.

None.

I believe that references to FERC Orders should not be included in requirements of standards. This comment also applies to M7.

No

Claification is needed on the use of UVLS. Is it acceptable or not? Typically UVLS relays are

modeled in the study. Not allowing any load shedding as a result of UVLS relays could result in very costly fixes for a very small amount of remote load. If the Non-Consequential Load Loss Allowed column is No, is load disconneced from the system by UVLS a violation? What about Supplemental Load Loss or UFLS?

No

P4: Under the event column, it should clarify and state language similar to that of P5 (Loss of multiple elements caused by a stuck breaker). In addition, this is a multiple contingency condition and may result in loss of more than 2 elements. As such, this is a low probability condition and loss of Non-Consequential Load should be allowed for EHV. I disagree with raising the bar for EHV for P4.

Yes

I agree that TPL-005 and TPL-006 appear to have been adequately covered in the draft TPL-001-1 as currently written. However, we will need to review this assessment after TPL-001-1 is finalized. In addition, there is no place to state our concerns for Section D. so it is added here. I question the "not applicable" entry under Section D 1.1.2. What does it mean when the reset period is not applicable? Does it mean there is no reset period, so all non-compliance in all prior years will be counted as prior violations when considering non-compliance in future years?

Individual

Robert Priest

Mississippi Delta Energy Agency

R2.5. This basic requirement intends, as we understand it, to require that earlier studies not be used for a current assessment if they are no longer accurate. But the phrasing is potentially confusing, and would be clearer if revised. Since the requirement deals with the use of past studies, we suggest that R2.5.2 be revised to state that “the study may be used only if there have been no material changes,” so that R2.5 reads in full: “R2.5. Past studies may be used to support the Planning Assessment if they meet the following requirements: “R2.5.1. For steady state, short circuit, or Stability analysis: the study shall be five calendar years old or less. “R2.5.2. For steady state, short circuit, or Stability analysis: the study may be used only if there have been no material changes, such as generation or Transmission additions/removals, or topology changes that have occurred in the intervening period and would impact the study area. Material generation changes could include: “The addition/deletion/change of individual generating unit capability of 20 MW or greater. “An aggregated addition/deletion/change to a group of generating units directly connected through their step-up transformer(s) to the BES which total 20 MW or greater.” With respect to footnote 10 to Table 1, we fear that the flexibility suggested by those provisions may be excessive for a planning standard. The ambiguity occasioned by stating emergency actions that can properly be taken in a planning standard can be utilized by those who plan the system in a manner which plans to drop non-consequential loads just as footnote b has been used in the past. If this is intended to “raise the bar” as stated these provisions do not belong in a planning standard, at least as now stated. It may be appropriate to remove the reference to footnote 10, at least in the Initial System Condition entry in P3, where it suggests that it can be invoked after loss of a single generator, and we request the SDT to review that footnote to assure that it is appropriate in the other entries to which it is applied.

No

MDEA is in the area which is impacted by Entergy transmission planning. Entergy is one of the few NERC transmission owners which has for some years now relied upon its interpretation of “footnote b” in the previous TPL-001-0, TPL-002-0a, TPL-003-0a and TPL-004-0 as permitting planning for the loss of Non-Consequential Load or interruption of firm transfers as a way of planning and building less transmission than other utilities would have considered themselves obligated to build for reliability. That Entergy interpretation, and the consequent lower investment in transmission planning and construction, has been a matter of some concern among Entergy regulators at both State and Federal levels, as well as Entergy transmission customers, and has been rejected by the SPP, which has been given the authority to develop the base plan for transmission additions on the Entergy system. It was the Entergy rejection of that base plan that most recently led to a day long technical conference among regulators at the recent SEARUC conference in Charleston, SC. The proposed Implementation Plan for TPL-001-1 is

drafted to make the new standard, which the proposed Implementation Plan describes as one that "raises the bar in several areas," effective only after the passage of 60 months from the first day of the first calendar quarter following applicable approval. That time for implementation is also embodied in A.5 of the proposed standard. This time lag is chosen, according to the proposed Implementation Plan, because of the "significant budget, siting, permitting, and construction impacts on many transmission owners." There are significant problems and costs for those whose electric service is dependent upon an inadequate transmission system, which would argue for a lesser period of time to reach compliance. This is especially true when the existing system is planned on an assumption as to the meaning of footnote b which assumption was clearly recognized as being controversial and a minority view. In recent years there have been repeated Entergy TLRs at quite high levels, which have repeatedly required emergency EEA-3s to keep firm load on line. And there has been an ongoing dispute between Entergy and the SPP as to footnote b and whether there should be limits on consequential load to be shed which has led the SPP (as the Entergy ICT) to have a complete base case for Entergy transmission construction already developed which is, by FERC direction, the basis for the Entergy construction plan. In its construction plan, however, Entergy dropped some 20 of the projects in the SPP base plan because of the Entergy view that it could go ahead and plan to drop non-consequential load as a means of remaining in compliance with Standards rather than building the transmission projects that would have been required in accordance with the SPP base plan. While not all of the proposed changes embodied in TPL-001-1 may have been incorporated in the SPP base plan development, certainly the footnote b issues were. The costs of the failure of reliability and congestion resulting from the Entergy failure have been quite high, for Entergy retail customers as well as for others, and will continue to be high so long as there is no obligation to comply. Firm transmission obligations are simply not met while there is no obligation to comply. While it is certainly true that transmission cannot be planned and constructed overnight, it is also true that those who relied upon the minority interpretation of footnote b have been on notice for years both that that interpretation was challenged, and also that it was a minority viewpoint, as NERC itself advised FERC in its response to the NOPR that preceded Order 693. In 2007 FERC directed that NERC clarify the intended meaning of footnote b in its Order 693, and pointed out at that time that the interpretation permitting loss of load was "based largely on the matter of economics, not reliability." Id., P 1792. At that time, only Entergy and NIPSCO (certainly not "many" Transmission Owners– a word that appears twice in the draft Implementation Plan) would even admit to their interpretation of footnote b to weaken the grid. NERC agreed that such an interpretation was incorrect in its filings leading up to Order 693. In its June 26, 2006 Comments of North American Electric Reliability Council and North American Electric Reliability Corporation on Staff Preliminary Assessment, at p. 57-58, NERC noted that load shedding in a single contingency event is not acceptable: "footnote b to TPL-002-0 is intended to provide a limited exception to the general rule for serving load from a radial transmission line and should only be applied in unique circumstances, as described above. NERC recognizes that looped configurations are key to the reliable operation of the interconnection, and to meet reasonable expectations for reliable service to loads. . . . NERC standards, including footnote b, are not intended to endorse or approve planning the interconnection using radial configurations as a preferred method for reliably serving load, nor do NERC standards consider load shedding acceptable for single contingency events." It thus seems strange for NERC, an organization whose very existence was intended to assure the reliability of the grid, to reward those recalcitrant transmission owners who intentionally failed to expend the money and effort that the responsible transmission owners did expend, and at the expense of those who rely on the transmission system to do its basic job. Order 693, P 1794, "strongly discourage[d] an approach that reflects the lowest common denominator." Many of those transmission owners and planners for whom this change constitutes "raising the bar" presumably had plenty of time to consider what their options would be if their interpretation was incorrect, and should be expected to have reserve plans on hand pretty close to being ready to go when the dispute was lost. In the Entergy case, the plan has been in its hands for some time, and the fact that it has chosen to reject the SPP plan based on its own minority interpretation of footnote b is no one's fault but its own. And it certainly does not have to start from scratch to develop the plan; it consciously chose to reject the plan that the ICT developed for it. MDEA asks that at least as to the changes tied to footnote b interpretation, and other excuses for dropping non-consequential load, the time for compliance be shortened to no more than two years following regulatory approval of the standard. R2.6 already provides for the development of a Corrective Action Plan, and it would not encourage reliability if five years were taken to develop a Corrective Action Plan, as opposed to complying with the standard. Second, MDEA suggests that, whether or not NERC chooses to stick with its 5-year "lowering of the bar" to permit those entities which may have used a similar interpretation of footnote b to avoid building a sturdy grid, it not try to influence FERC and the courts as to legal questions that may develop during that period. We recognize that the changes made in what will be TPL-001-1 go well beyond the clarification of footnote b, so that for some changes there may be a reason for the 5 year phase in. But whether or not the 5 year phase in is going to be applicable to all of those changes, we suggest that it would be improper to mischaracterize what is being done in a way that appears to have been drafted to influence legal questions that may come up. Specifically, as currently drafted, the descriptive modifier "many"

should not be used in describing the entities which had chosen to use the lower bar interpretation of footnote b. While we recognize that a number of commenters have looked to one interpretation or another of footnote b in a few extreme situations, a review of comments does not show other transmission owners who have relied on the extreme interpretation used by Entergy on a systematic basis, And we think it inappropriate for the description in the paragraph beginning at the bottom of p.1 of that draft Implementation Plan to focus on the footnote b issue, as it now does. We suggest a modification which makes the description accurate, and which avoids the kind of misinterpretation which led to the footnote b controversy in the first place. We suggest that that first part of that paragraph be revised to read as follows: "TPL-001-1 'raises the bar' in several areas where performance requirements have been changed in the new Standard versus those in existing TPL-001-0, TPL-002-0a, TPL-003-0a and TPL-004-0. Among other things, loss of Non-Consequential Load or interruption of firm transfers is no longer allowed for certain events, whereas the existing Standards were interpreted by some to allow such actions. As shown in Table 1 of TPL-001-1, the performance requirements associated with the following events represent 'raising the bar'..."

Individual

Roger Champagne

Hydro-Québec TransÉnergie (HQT)

No

Footnote 4 – We recommend that a lower bound be put on the HV electric systems (such as 100 kV), rather than just saying "and lower". As has been commented on in a previous draft, the Drafting Team should also consider not having a prescribed voltage definition of BES, be it called EHV or HV. Studies should determine what facilities should be part of the BES because of their impact on reliability. A proposal is to modify Footnote 4 to replace the phrase "...(EHV) Facilities defined as greater than 300 kV..." with "...(EHV) Facilities defined as having a significant impact on the reliability of the System, generally at voltages greater than 300 kV as determined by the Planning Coordinator..." In using such language, the more stringent requirements could apply to BES/EHV but not globally for Facilities operating at voltages greater than 300 kV. Using this methodology the extra investment required would go towards real improvement of the reliability of the System. EHV and HV should be added to the Definitions of Terms Used in Standard.
Footnote 12 – We recommend adding an alternative modifier to the end of the sentence, "or for 5 towers or less." This is consistent with NPCC criteria.

No

With regard to the many changes/modifications from the previous draft and from the previous TPL standards being replaced by TPL-001-1, another posting of this Standard will be necessary to fully evaluate the impact (on reliability and also cost of implementation) of such changes. The decision to allow the use of all type of RAS or SPS (particularly generator tripping and run-back) as a common practice for single contingency does not "raise the bar" in the planning standard, and should be reviewed. How can higher system performance be required that involves substantial infrastructure investment to prevent events with a very low probability of occurrence, and allow use of a less reliable measure (SPS failure or misoperation having a higher probability of occurrence) to reduce the investment for more probable events?

Individual

Phil Sanchez

Western Area Power Administration

General Comment: The Change in TPL Standards, while well intended, will be difficult to administer since it has taken a simple Performance table and translated it into a legal-type document that is very complex to relate to the physical system for the planning and operations staff. The performance requirements must be related to the physical response characteristics of the interconnected system operation without depending on legal advice for training my new transmission system planning staff. The language in R1.1.2 needs to be clarified. Many of these facilities are not explicitly included in the models in the base cases (circuit breakers, protection system equipment, control devices). The language should be clarified to require modeling the effect of the devices or the effect of the removal of the devices where it is expected to impact the study outcome. Clarity is needed to explain the difference between R1.1.4 and R1.1.5. Expected interchange can be reasonably projected, but information on Firm Transmission Service

is not always known or reasonably projected for future cases. For consistency with the 2nd bullet under R2.1.3, R1.1.4 should refer to expected transfers rather than Firm Transmission Service. With this change, R1.1.4 and R1.1.5 would be redundant and one should be deleted. I disagree with the inclusion of the words “including requirements of regulatory authorities and other legal obligations” at the end of R1. Entities already are required to do this. It does not need to be included in the standard.

Short circuit analyses is a local phenomenon and should not be required as part of a transmission planning assessment of the BES. In any case, the effects of failure of over-stressed breakers are already included in the Events to be assessed in Table 1. For example, P2-3 and P2-4 (Internal Breaker Fault), and P4 (Stuck Breaker while attempting to clear a fault). Clarity is needed in R2.1.4. The requirement to assess the Contingencies identified in Table 1 is too burdensome. This requirement does not specify any limits on the equipment for which an analysis must be conducted. As currently drafted, this could require a separate analysis for each transformer (or any long lead-time equipment) for which a spare is not available. A separate initial case would need to be developed to assess the Contingencies identified in Table 1 for each transformer. This could result in a countless number of additional cases. We recommend a threshold be established, such as all transformers with a low side voltage above 200 kV. We also recommend changing this from a separate sub-Requirement to one of the sensitivities to be considered under 2.1.3. We also believe that the statement at the end of R2.6 that indicates corrective action plans are not required solely to meet the performance requirements for sensitivities should also apply to the spare equipment requirement. The 20 MW threshold identified as “material change” for generation in R2.5 is too small. The limit should be raised or based on a percentage of the study area’s installed generating capacity. R2.8 should be deleted. It is not necessary for reliability. What will be done with this information on the “largest Consequential Load Loss and the associated event caused by any P1 event and any P2 event” if it is documented? R2.9 should be deleted. It is not necessary for reliability. It will be difficult to determine the maximum permissible Non-Consequential Load value. It will end up being based on cost (monetary, societal, environmental, etc.), which is dependent, among other things, on the types of load being served. It very well may be a case by case situation.

As currently drafted, R3.3 is not a requirement. Without the statements in R3.3.1-R3.3.4, R3.3 is simply a phrase. Sub-Sub-Requirements R3.3.1 through R3.3.4 should be bullets under R3.3, with the language in R3.3 modified so that it becomes the requirement to conduct contingency analyses that address the four resulting bullets R3.3.2 is unclear as drafted. The minimum steady state voltage limitation for synchronous generators is not a very meaningful value. All generators with an automotive voltage regulator will maintain the set point voltage until the VAR capability of the generator is exceeded, and then the voltage will deteriorate. R3.5 – We disagree with the requirement to explain why remaining Extreme Contingencies would produce less severe System results than the ones selected for study. The first part of the requirement requires identification of events that produce more severe System impacts. The reason the others were not selected is because they were less severe or non-credible. In any case, theoretically, there can always be a more severe Extreme Contingencies than the one selected for study. For example, if the Extreme Contingency studied were simultaneous loss of 3 transmission lines with failure of redundant RAS, then simultaneous loss of 4 lines with failure of 2 sets of redundant RAS would be more severe. Listing all possible extreme events could result in a limitless list.

As currently drafted, R4.3 is not a requirement. Without the statements in R4.3.1-R4.3.3, R4.3 is simply a phrase. Sub-Sub-Requirements R4.3.1 through R4.3.3 should be bullets under R4.3, with the language in R4.3 modified so that it becomes the requirement to conduct contingency analyses that address the three resulting bullets. R4.3.2 – it is not clear what is required to be modeled. Typically a generator may have 10 or more protective relays. Is the intent to model all relay protection? The existing commercial programs do not have sufficient models or capacity to do that for all generators in the system. R4.5 – We disagree with the requirement to explain why remaining Extreme Contingencies would produce less severe System results than the ones selected for study. The first part of the requirement requires identification of events that produce more severe System impacts. The reason the others were not selected is because they were less severe or non-credible. In any case, theoretically, there can always be a more severe Extreme Contingency than the one selected for study. For example, if the Extreme Contingency studied were simultaneous loss of 3 transmission lines with failure of redundant RAS, then simultaneous loss of 4 lines with failure of 2 sets of redundant RAS would be more severe. Listing all possible extreme events could result in a limitless list.

The term proxy is unclear. Please provide an example or an explanation of proxy.

no comment.

I believe that references to FERC Orders should not be included in requirements of standards. This comment also applies to M7.

No

Claification is needed on the use of UVLS. Is it acceptable or not. Typically UVLS relays are modeled in the study. Not allowing any load shedding as a result of UVLS relays could result in very costly fixes for a very small amount of remote load. If the Non-Consequential Load Loss

Allowed column is No, is load disconnecetd from the system by UVLS a violation? What about Supplemental Load Loss or UFLS?

No

P4: Under the event column it should clarify and state language similar to that of P5 (Loss of multiple elements caused by a stuck breaker). In addition, this is a multiple contingency condition and may result in loss of more than 2 elements. As such, this is a low probability condition and loss of Non-Consequential load should be allowed for EHV. We disagree with raising the bar for EHV for P4.

I agree that TPL-005 and TPL-006 appear to have been adequately covered in the draft TPL-001-1 as currently written. However, I will need to review this assessment after TPL-001-1 is finalized. In addition, there is no place to state our concerns for Section D. so we added it here. I question the "not applicable" entry under Section D 1.1.2. What does it mean when the reset period is not applicable? Does it mean there is no reset period, so all non-compliance in all prior years will be counted as prior violations when considering non-compliance in future years?

Group

System Protection and Transmission Planning Department

R1 the requirement to maintain System models for performing the studies is redundant with MOD-010, and should be moved to MOD-010. The phrase that requires model data used in Studies used for Annual Assessments be consistent with data submitted under MOD-010 seems OK. R1.1.2, a sub-requirement of R1.1, states that models for Planning Assessments shall represent “new planned Facilities and changes to existing Facilities for each year of the Near-Term and Long-Term Transmission Planning Horizon”. Is this a requirement for maintaining a case representing every year of the near-term and long-term planning horizons (i.e. 10 cases)? We do not think that is what the SDT had in mind. If all that is required to remain cognizant of Facility In-Service dates so that topology is reliable, please so state. To make this read clearer, we suggest you take out the phrase “for each year”. Regarding bullet 5 of R1.1.2, does inclusion of Protection System equipment require modeling of all relays in dynamic studies? The NERC definition of Facility pertains to equipment energized at primary voltages, not Protective System equipment. We suggest the Protective Systems be eliminated from this list. To make this read clearer, we suggest you delete text and bullet items following “Transmission Planning Horizon”. Regarding R1.1.2 bullet items: The bullets list examples of Facilities. This list is not needed, since the term Facility is already defined in the NERC Glossary. If you do not remove all bullets, then we warn you that the bullet "New Technologies" can be interpreted to cover a broad range of topics by an auditor and is not clearly defined by NERC, so we cannot visualize measurable documentation.

R2 - The term "Stability Analysis" is used frequently in the standard, but is not clearly defined. Based on an IEEE paper ("Definition and Classification of Power System Stability," Kundar, et al) there are 5 different categories of stability analysis: 1)small signal angle stability; 2) transient angle stability; 3) frequency stability; 4) large disturbance voltage stability; and 5) small disturbance voltage stability. Does the writing committee intend to make the analysis of all these types of stability issues mandatory? I recommend inserting a new definition into the standard for stability as follows: "Stability Analysis - The study of the bulk electric power system's ability, for a given initial operating condition, to regain a state of operating equilibrium after being subjected to a physical disturbance.” There are 5 accepted categories of power system stability: 1) small signal angle stability; 2) transient angle stability; 3) frequency stability; 4) large disturbance voltage stability; and 5) small disturbance voltage stability. While there are situations that exist that require small signal angle and voltage stability analysis, only transient angle stability, frequency stability, and large disturbance voltage stability analysis are generally relevant to system planning performance assessments. R2.1.4 is a new requirement directing studies to consider impacts of spare equipment strategy. Does this require the TP to run scenario analysis without certain transformers? It is not clear what is required. How many spare transformers are required? What reliability level is acceptable? R2.1.4 The one year cut-off seems arbitrary. One MONTH may be unacceptably long in some cases. Instead of “one year or more”, we suggest the requirement state “an extended time period”. R2.2. The wording on this requirement is not clear. Is it trying to say that a long-term (5-10 year) peak loading study is required to be performed annually? R2.2: What is meant by the term “current System peak Load study “? A powerflow study performed under expected peak-load conditions? Or a forecast of peak loads? R2.3 A short circuit analysis requirement is now added to Planning Assessment requirements. Short circuit analysis appears to be in the standard to document adequate ratings for interrupting equipment. That would be the purpose of short circuit studies we perform. If there are other intended meanings, then additional detail is needed. R2.3 We do not agree that a short circuit analysis needs to be conducted annually. The requirement for a new short circuit duty study should be driven by changes in the system, as is done for powerflow study work. In short, until system changes are made, we would not anticipate higher fault duties, and there would be no reason to rerun studies. R2.4.1 requires dynamic load models. Development of dynamic load models is ongoing, and therefore will need a much longer implementation period

than the steady state portions of the standard. We are not sure two years will be enough. It depends partly on pending work that is not under our control. R1.1.2, R2.1.4, R2.5.2, R3.3.4, R4.3.3, R5 – When text of a Standard Requirement includes the phrase “such as” or “could include”, then gives a list of possible choices, we take it to mean “just one of these items, or none of these, or something not listed here”. In other words, “such as” lists are really non-required, non-interpretable, non-measurable options. They should not be included in requirements. Lists “such as” these belong in transmittal notes and associated SDT commentary, not in Compliance Standard Requirements. R2.5.2 Limits such as “addition/deletion/change to a group of generating units . . . which total 20 MW or greater.” are not always appropriate. Appropriateness of Generation netting with load should depend on system size and engineering judgment, not artificial limits. The suggestion list following “generation changes could include:” should be eliminated. R2.6.2. “For the Near-Term Transmission Planning Horizon, include both a project initiation date as well as an in-service date” – The assessment report should not require a full project development – just a description of what is required to provide adequate service within specified operating criteria. The term “project initiation” is not clear. Requirement R2.6.2 should be eliminated. R2.8. “The Planning Assessment shall provide the largest Consequential Load Loss (megawatt Demand) and the associated event caused by any P1 event and any P2 event in Table 1. “ is complicated, and may require new modeling software capability to comply. Software vendors would develop this capability. Why is this required? What is the expected benefit to system reliability?
R3 appears to require redundant studies by TP and PC. If the TP and PC participate in the same studies, would this meet the intent of this requirement? This would include studies that are RRO sponsored, or performed by sub-regional planning groups.
Comments under R1 apply here as well. The requirement to "utiliz[e] data provided in Requirement R1" is redundant with MOD-012, and should be moved to MOD-012. To conform with R1, we suggest a phrase be inserted that requires model data used in Stability Studies used for Annual Assessments be consistent with data submitted under MOD-012.
“Proxies” is not defined. We take “proxy” to mean a procedure used to model system response that is outside the capability of system modeling tools used in the analysis. For example, a powerflow model might not be able to model cascading events with built-in capabilities. As a proxy, the engineer would run follow-up studies that would mimic expected system response. Please define the term "proxy".
no comment
The phrase "coordinating analysis of these results" seems to indicate potential second-guessing by other entities. We suggest "coordinating REVIEW of these results" may be clearer. The term "such as described in FERC Order 890" allows non-jurisdictional utilities to establish an appropriate process. This is good. However, we still have the same misgivings about the term "such as" used here.
Yes
We appreciate the effort of the SDT to clarify “Consequential load loss”, and think references to this term are clearer in this draft. “Proxies”, used in R5, should be defined. See R5 comments for our suggestion.
No
The order of scenarios listed in the table should reflect the relative probability of events. Did the SDT intend to order listed contingencies by relative severity? Could it do so? Planning Events - SLG fault simulation should not be required. They should only be performed if more severe than 3-phase faults. A SLG fault with delayed breaker clearing could have more system impact than a 3-phase fault. The “Extreme Events” portion of the table is confusing – partly because the form differs from the Planning Event portion. The difference between contingencies in the Planning portion and the Extreme portion is not clear. Perhaps the Extreme Event portion could be a separate Table. Extreme Events / Stability section - Why specifically require “g. SLG fault on all Transmission lines on a common Right-of-Way.”?
Yes
These concepts seem too important to relegate to footnotes. Could this discussion of how to handle Firm transactions and redispatch be moved to a more prominent place? Perhaps these concepts should be removed from this standard entirely. A more appropriate place for these concepts would be in ATC standards.
Yes
We concur with SDT intent to retire TPL-005 and TPL-006. As there is no comment form entry to accept comments on MEASURES, we add one note here, related to "such as" lists - as noted above for R1.1.2, R2.1.4, R2.5.2, R3.3.4, R4.3.3, and R5. As written now, all measures include “such as” lists. We strongly suggest you remove “such as electronic or hard copies” from all measure statements.
Group
PPL Energy Plus
PPL agrees with the requirement that regulatory and legal requirements need to be respected in

planning studies. Also, Requirement R1.1.6 appears to conflict with FERC Pro-forma OATT Section 30.4 in that Network Resource output should not be limited as this Requirement states.
The standard appropriately recognizes that the planning horizon must be as long as the longest lead-time system upgrade, typically 8+ years for a new line. However, while Requirement 2.2.1 states this, it could be more clearly stated. Requirement R2.5.2 should be clarified to point out if the TP has discretion or if the 20 MW is binding. Requirement R2.6.4 should require TP's and PC's to post on an OASIS to assure easy access by affected parties to information on what is "beyond the control" of these organizations. Please retain Requirements 2.8 and 2.9 as these are good measures of the quality of the plan produced by the planners.
It appears there is a 24 month grace period to allow modeling updates to meet R 3.3.1. This is a good idea since the powerflow computer models may not include the required data and will need to be updated.
It should be pointed out that Breaker Failure (i.e. fail to open) and Breaker Fault (internal fault in breaker) are two different events.
Please clarify how the term "Proxies" is used in this requirement.
Please continue to mention relevant FERC Orders (such as 890) in the standards since the FERC orders are the source of many of the planning standards. Planners need to acknowledge, respect, and design processes and systems around the FERC rulings.
No
The WECC suggests P4 penalizes EHV and if this is true, please re-write P4 to eliminate the penalty.
Group
OPUC
1. Requirement R1 — Please provide any specific comments on the requirement text, VRF, Time Horizon, measure associated with the requirement, data retention associated with the requirement, and/or the VSL associated with the requirement. Comments: A: Language in R1.1.2 still needs further clarification. Base case models do not clarify modeling required for the effect or absence of circuit breakers, protection system equipment and control devices. B: Clarity would be increased were R1.1.4 to refer to expected transfers rather than Firm Transmission Service, permitting the elimination of then redundant R1.1.5 C: Removing "including requirements of regulatory authorities and other legal obligations" at the end of R1 would also eliminate redundant text.
2. Requirement R2 — Please provide any specific comments on the requirement text, VRF, Time Horizon, measure associated with the requirement, data retention associated with the requirement, and/or the VSL associated with the requirement. Comments: A: Short circuit of over-stressed breakers is already addressed in Table 1. Ex1: P2-3,4 (Internal Breaker Fault), Ex2: P4 (Stuck Breaker while attempting to clear a fault). B: In R2.1.4 Table 1, it is unclear how transformer contingency analysis can be aggregated or batched. It is also still unclear whether corrective action plans are required solely to meet performance requirements for sensitivities.
3. Requirement R3 – Please provide any specific comments on the requirement text, VRF, Time Horizon, measure associated with the requirement, data retention associated with the requirement, and/or the VSL associated with the requirement. Comments: A: R3.3 should be modified to become the requirement to conduct contingency analyses with R3.3.1 thru 4 presented as bullets there-under.
4. Requirement R4 – Please provide any specific comments on the requirement text, VRF, Time Horizon, measure associated with the requirement, data retention associated with the requirement, and/or the VSL associated with the requirement. Comments: A: R4.3 should be modified to become the requirement to conduct contingency analyses with R4.3.1 thru 3 presented as bullets there-under. B: R4.3.2 should clarify whether all relay protection must be modeled
5. Requirement R5 – Please provide any specific comments on the requirement text, VRF, Time Horizon, measure associated with the requirement, data retention associated with the requirement, and/or the VSL associated with the requirement. Comments: A: An example should be added for proxy use.

Individual
Chifong Thomas
Pacific Gas and Electric Co,
The language in R1.1.2 needs to be clarified. Many of these facilities are not explicitly included in the models in the base cases (circuit breakers, protection system equipment, control devices). The language should be clarified to require modeling the effect of the devices or the effect of the removal of the devices where it is expected to impact the study outcome. Clarity is needed to explain the difference between R1.1.4 and R1.1.5. Expected interchange can be reasonably projected, but information on Firm Transmission Service is not always known or reasonably projected for future cases. For consistency with the 2nd bullet under R2.1.3, R1.1.4 should refer to expected transfers rather than Firm Transmission Service. With this change, R1.1.4 and R1.1.5 would be redundant and one should be deleted. We disagree with the inclusion of the words “including requirements of regulatory authorities and other legal obligations” at the end of R1. Entities already are required to do this. It does not need to be included in the standard.
Short circuit analyses is a local phenomenon and should not be required as part of a transmission planning assessment of the BES. In any case, the effects of failure of over-stressed breakers are already included in the Events to be assessed in Table 1. For example, P2-3 and P2-4 (Internal Breaker Fault), and P4 (Stuck Breaker while attempting to clear a fault). Clarity is needed in R2.1.4. The requirement to assess the Contingencies identified in Table 1 is too burdensome. This requirement does not specify any limits on the equipment for which an analysis must be conducted. As currently drafted, this could require a separate analysis for each transformer (or any long lead-time equipment) for which a spare is not available. A separate initial case would need to be developed to assess the Contingencies identified in Table 1 for each transformer. This could result in a countless number of additional cases. We recommend a threshold be established, such as all transformers with a low side voltage above 200 kV. We also recommend changing this from a separate sub-Requirement to one of the sensitivities to be considered under 2.1.3. We also believe that the statement at the end of R2.6 that indicates corrective action plans are not required solely to meet the performance requirements for sensitivities should also apply to the spare equipment requirement. The 20 MW threshold identified as “material change” for generation in R2.5 is too small. The limit should be raised or based on a percentage of the study area’s installed generating capacity. R2.8 should be deleted. It is not necessary for reliability. What will be done with this information on the “largest Consequential Load Loss and the associated event caused by any P1 event and any P2 event” if it is documented? R2.9 should be deleted. It is not necessary for reliability. It will be difficult to determine the maximum permissible Non-Consequential Load value. It will end up being based on cost (monetary, societal, environmental, etc.), which is dependent, among other things, on the types of load being served. It very well may be a case by case situation.
As currently drafted, R3.3 is not a requirement. Without the statements in R3.3.1-R3.3.4, R3.3 is simply a phrase. Sub-Sub-Requirements R3.3.1 through R3.3.4 should be bullets under R3.3, with the language in R3.3 modified so that it becomes the requirement to conduct contingency analyses that address the four resulting bullets R3.3.2 is unclear as drafted. The minimum steady state voltage limitation for synchronous generators is not a very meaningful value. All generators with an automatic voltage regulator will maintain the set point voltage until the VAR capability of the generator is exceeded, and then the voltage will deteriorate. R3.5 – We disagree with the requirement to explain why remaining Extreme Contingencies would produce less severe System results than the ones selected for study. The first part of the requirement requires identification of events that produce more severe System impacts. The reason the others were not selected is because they were less severe or non-credible. In any case, theoretically, there can always be a more severe Extreme Contingency than the one selected for study. For example, if the Extreme Contingency studied were simultaneous loss of 3 transmission lines with failure of redundant RAS, then simultaneous loss of 4 lines with failure of 2 sets of redundant RAS would be more severe. Listing all possible extreme events could result in a limitless list.
As currently drafted, R4.3 is not a requirement. Without the statements in R4.3.1-R4.3.3, R4.3 is simply a phrase. Sub-Sub-Requirements R4.3.1 through R4.3.3 should be bullets under R4.3, with the language in R4.3 modified so that it becomes the requirement to conduct contingency analyses that address the three resulting bullets. R4.3.2 – it is not clear what is required to be modeled. Typically a generator may have 10 or more protective relays. Is the intent to model all relay protection? The existing commercial programs do not have sufficient models or capacity to do that for all generators in the system. R4.5 – We disagree with the requirement to explain why remaining Extreme Contingencies would produce less severe System results than the ones selected for study. The first part of the requirement requires identification of events that produce more severe System impacts. The reason the others were not selected is because they were less severe or non-credible. In any case, theoretically, there can always be a more severe Extreme Contingency than the one selected for study. For example, if the Extreme Contingency studied were simultaneous loss of 3 transmission lines with failure of redundant RAS, then simultaneous loss of 4 lines with failure of 2 sets of redundant RAS would be more severe. Listing all possible extreme events could result in a limitless list.
The term proxy is unclear. Please provide an example or an explanation of proxy. Perhaps a

different term, such as metric, may better describe this requirement to more people.

We believe that references to FERC Orders should not be included in requirements of standards. This comment also applies to M7.

No

Claification is needed on the use of UVLS. Is it acceptable or not? We understand from the discussion in the webinar that in the proposed TPL-001-1, Table 1, if there is a “no” in the column for allowable load loss, you are still allowed to have UVLS set up to drop the load, but cannot plan on meeting the standard with the load shedding. Therefore, if the Non-Consequential Load Loss Allowed column is No, is load disconnecetd from the system by UVLS a violation, given that you can lose the load but cannot plan on it? Typically UVLS relays are modeled in the study. Not allowing any load shedding as a result of UVLS relays could result in very costly fixes for a very small amount of remote load. What about the treatment of Supplemental Load Loss or UFLS?

No

P4: Under the event column it should clarify and state language similar to that of P5 (Loss of multiple elements caused by a stuck breaker). In addition, this is a multiple contingency condition and may result in loss of more than 2 elements. As such, this is a low probability condition and loss of Non-Consequential load should be allowed for EHV. We disagree with raising the bar for EHV for P4.

Yes

We support the concept. However, we are unclear about the last sentence of Footnote 10, which reads “where Facilities external to the Transmission Planner’s planning region are relied upon, Facility Ratings in those regions must be considered.” For resources from areas external to the Transmission Planner’s planning regions, would identification of the need to, for example, increase System Operating Limits into the his/her Transmission Planning Area as part of the Corrective Action Plan be counted as having “considered” the “Facility Ratings in those impacted regions”? Otherwise, it may be difficult for the Transmission Planner to assess and identify all the Facility Ratings that may be impacted in a region external to his/her Transmission Planning Area.

Yes

We agree that TPL-005 and TPL-006 appear to have been adequately covered in the draft TPL-001-1 as currently written. However, we will need to review this assessment after TPL-001-1 is finalized. In addition, there is no place to state our concerns for Section D. so we added it here. We question the "not applicable" entry under Section D 1.1.2. What does it mean when the reset period is not applicable? Does it mean there is no reset period, so all non-compliance in all prior years will be counted as prior violations when considering non-compliance in future years?

Individual

Kirit Shah

Ameren

There may be a potential conflict between MOD-010 and MOD-012 and legal documents such as Interconnection Agreements e.g. IA may specify a capacity level that exceeds the reported test levels. In the case of such conflicts, it is not clear which one should rule. Suggest replacing ‘circuit breakers’ in R1.1.2 with ‘terminal equipment’ since circuit breakers are covered by Protection System Equipment. Consider adding a reference in R1 to NERC Reliability Assessment Guidebook version 1.2, pp 17-18 for use of a particular load forecast level for inclusion in the planning models. In R1.1.2, revise the language to show that we need to also represent the existing transmission system, and not just changes to the existing system. In R1.1.2, Clarification is needed for the phrase ‘for each year’ should signify only those years for which assessment work was performed, rather than each year of the Near-Term and Long-Term Transmission Planning Horizon. There typically is not a model built for each year of the Near-Term and Long-Term Transmission Planning Horizon. In bullet three of R1.1.2, it is not clear whether bus-tie circuit breakers to be represented in the models. Typically circuit breakers are included in the contingency definitions along with the protection system equipment used in the powerflow models. The number of zero impedance branches which can presently be modeled using PSS/E software is limited to 4000. Also, the number of buses included in the powerflow models would increase with additional breaker modeling. In bullet seven of Requirement R1.1.2, what "new technologies" are to be represented in the models? R1.1.4 Firm Transmission Service - a single source can have transmission service to multiple sinks, and can be associated with transmission service in excess of the capacity of the source. There is a lack of clarity regarding the means by which Firm Transmission Service, a marketing term, is to be included in planning models. For example, should the standard define how to model wind farms (100% - off-peak and 20% on-peak, based on firm capacity from the wind generators, or other dispatch levels)?

In R2, The phrase “document results” should be changed to “summarize results”. While results will be documented, the Planning Assessment should just include a summary. In R2.1, the reference to requirement R2.6 (at the end of the last line) should be changed to R2.5. In R2.1.3, it is suggested that the studies be referred to as the "base studies" to avoid confusion with the

sensitivity studies. Also it is suggested that another phrase be added at the end for clarity. The entire R2.1.3 would then be as follows: For each of the base studies described in Requirements R2.1.1 and R2.1.2, sensitivity case(s) that are intended to stress the System with variations in one or more of the following conditions not already included in the studies shall be included in the Assessment. Sensitivity studies would include changes to: In Requirement R2.1.4, it is suggested that language be added to reflect the possible unavailability of the equipment, such as: When an entity's spare equipment strategy could result in the unavailability of major Transmission equipment that has a lead time of one year or more (such as a transformer), an analysis of the impact of this possible unavailability on System performance shall be assessed. The analysis shall reflect the Contingencies identified in Table 1 during the conditions that the System is expected to experience the possible unavailability of the long lead time equipment. It is not clear how adequate lead times for equipment would be determined. In Requirements R2.3 and R2.4, consider adding a reference to Requirement R2.5 for the past studies. In Requirement R2.4.1, it is suggested that it be reworded to the following: System peak Load for one of the five years, including Load models which appropriately represents the dynamic behavior of Loads, considering the behavior of induction motor Loads. An aggregate System Load model which represents the overall dynamic behavior of the Load is acceptable. Load models referenced in R2.4.1 should be confined to the consideration of transient stability study work. With the elimination of the distinction between system and generating plant stability studies, the blanket requirement in R2.5.1 that all stability analyses be five calendar years old or less, regardless of any material changes to the system, would cause needless work to be performed on those plants or areas of the system where no changes are occurring. We suggest adding the following to the end of R2.5.1: "unless justification can be provided to demonstrate that the results of an older study are still valid." In Requirement R2.4.3, it is suggested that this sub-requirement be reworded to the following: For each of the base studies described in Requirements R2.4.1 and R2.4.2, sensitivity case(s) that are intended to stress the System with variations in one or more of the following conditions not already included in the base studies shall be included in the Assessment. Sensitivity studies would include changes to: In bullet three of Requirement R2.6.1, would we allow automatic generation tripping for a single (P1) event if it is not consequential? It seems that tripping of generation should be restricted to P2 events 2 or 3 at a minimum. In bullet five of Requirement R2.6.1, is there a maximum duration that operating procedures can be used before a capital project must be included (or completed) in the Corrective Action Plan? In Requirement R2.6.2, it is not clear what constitutes a "project initiation date". Please clarify. Please explain the reason why Requirement R2.8 is needed in the Assessment. Reporting the largest Consequential Load Loss does not impact reliability. Please explain the reason why Requirement R2.9 is needed in the Assessment. Reporting the largest Non-Consequential Load Loss doe not impact reliability. The proposed standard not only raises the bar for system performance requirements, but also raises the bar for reporting and documentation. We need to employ almost as many librarians and technical writers as engineers to develop and keep track of the documentation. Engineers need to spend more time performing the studies and spend less time documenting studies keeping track of documentation for multiple years.

In Requirement R3.1, it is suggested that the word "contingency" be added to describe the lists created in R3.4. Studies shall be performed to determine whether the BES meets the performance requirements in Table 1 based on the contingency lists created in Requirement R3.4. R3.3.2 "For all generators, studies shall consider the minimum steady state voltage limitations and identify how the generators are analyzed in the steady state simulation." The above wording needs to be changed, as the intent of this sentence is unclear. It is not clear whether Transmission Planners need to ensure that generating plants can meet their voltage schedule under Base Case (N-0) conditions, or whether this would be the same as the generator underexcited operation limit. R3.3.3 "For all Transmission lines, studies shall consider relay loadability and identify how loadability is analyzed in the steady state simulation." The above wording needs to be changed, as the intent of this sentence is unclear, whether the intent is that Transmission Planners ensure that relay loading limits are included in the facility ratings, or whether this reflect some rule of thumb, such as 130% of conductor rating. In Requirement R3.3.4, it is suggested adding the words "and switched" to capacitors and reactors: Simulate the expected operation of existing and planned devices designed to provide Steady State control of electrical system quantities. These devices include equipment such as phase-shifting transformers, load tap changing transformers, and switched capacitors and inductors.

In Requirement R4.1, it is suggested that the word "contingency" be added to describe the lists created in R4.4 Studies shall be performed to determine whether the BES meets the performance requirements in Table 1 based on the contingency lists created in Requirement R4.4. Regarding Requirement R4.4, it is suggested that a rewording be considered such as described below: For each category of the Planning Events in Table 1, those Planning Event Contingencies that are expected to produce more severe System impacts shall be identified, and a list of those Contingencies to be evaluated for System performance in Requirement R4.1 shall be created. The rationale for the Contingencies selected for evaluation shall be available as supporting information with an explanation of why the remaining Contingencies would produce less severe System results. R4.3.2 requires that voltage ride through capability be analyzed. It is not clear what should be analyzed. e.g. auxiliary loads, generator protection, generator capability, etc. We

would like to see more clarity on this requirement. It seems that the stuck breaker scenarios would always be more severe than the internal breaker failure scenario since they would be clearing in delayed clearing time and thus make P2.3 redundant. Are there is some question on whether P3 contingencies would be necessary for stability analysis. Revise wording in VSL from “categories” to “applicable categories”. e.g. some entities may not have common tower facilities and thus there would be no P7 category contingencies to evaluate. Footnote #3 needs to be revised to include Double-Line-To-Ground faults in addition to Three-Phase faults indicating that the SLG criteria is met.
There is no requirement that the Planning Coordinator must use the same proxies as the Transmission Planner. Differences in proxy assumptions may lead to different study results. R5 needs to be modified to require coordination of proxies between Planning Coordinators and Transmission Planners.
In absence of these agreements, it is assumed that both Transmission Planners and Planning Coordinators would be responsible for performing the studies. It is not clear how the Corrective Action Plans get resolved between these entities if there is no agreement on the study results.
Requirement R7 describes that the Planning Coordinator is to share Planning Assessments with adjacent Planning Coordinators. It is not clear whether this needs to be expanded for the Transmission Planners to share their Planning Assessments with the Planning Coordinators. The reference to FERC Order 890 as it is currently written makes it seem like a suggestion to follow Order 890. If Order 890 explicitly describes this process then the sentence should read “as described in FERC Order 890.” If not, maybe this should not be mentioned at all.
No
Extreme Events definition references severity and probability. These terms should be included in the definition of Planning Events. Add a definition of Planned and Proposed facilities. Planned facilities address the near term deficiencies and have been approved with a financial commitment while proposed facilities address long term deficiencies for which no commitment is required today since they may change based on future evaluation. Revised Definitions are generally better than those from the previous version, but additional clarity could be provided. Consequential Load Loss – Would an SPS to trip load qualify as a planned protection system? Load Reduction – Please clarify whether this includes both load response and operator initiated action, as in changes to transformer LTC. Supplemental Load Loss - From a utility perspective, this would be considered as load response. Please clarify how Supplemental Load Loss would be included in the stability analysis. Table 1 suggests that it cannot be included to meet steady-state performance. Suggest that the following be added to the definition: Supplemental Load Loss associated with an event shall not be used to meet steady state performance requirements.
No
The word "Requirements” needs to be added to the Table 1 titles in the existing tables. Table 1 – Steady State & Stability Performance Requirements Planning Events Table 1 — Steady State & Stability Performance Requirements Extreme Events Table 1 — Steady State & Stability Performance Requirements Footnotes (Planning Events and Extreme Events) Since it appears that the Table 1 cannot fit on a single page, it is suggested that multiple tables be developed to handle the 1) steady-state and 2) stability performance requirements. Footnotes may be included on a second page if needed. Comments were provided in early versions regarding the issues associated with raising the bar, and it was suggested that the marginal reliability benefits associated with these changes were not worth the marginal costs. We have not seen any significant changes from the earlier performance requirements. The question still remains, are we directing the resources where they need to be allocated to address and improve system reliability? So far the answer is believed to be "No".
No
Suggest rewording of footnote 5, though we do not use conditional firm service: Curtailment of conditional Firm Transmission Service is allowed when the conditions and/or events being studied formed the basis for the conditional Firm Transmission Service. Footnote 10 is definitely an improvement from previous versions. It is suggested that the word "also" be added to the last line: Curtailment of firm transmission service, when coupled with the appropriate re-dispatch of resources obligated to re-dispatch, is allowed both as a System adjustment (as identified in the column titled ‘Initial System Conditions’) and a corrective action, where it can be demonstrated that Facilities remain within applicable Facility Ratings and those adjustments do not result in the shedding of any firm Load. Where limited options for re-dispatch exist, sensitivities associated with the availability of those resources must be considered. Where Facilities external to the Transmission Planner’s planning region are relied upon, Facility Ratings in those regions must also be considered.
No
At least 36 months would be needed for R1 compliance, should inclusion of explicit modeling of protection system equipment be required in dynamic model representations, and if all breakers would need to be explicitly modeled. More time is needed for entities to determine the appropriate dynamic load model required by R2.4.1. We recommend at least 36 months before this requirement becomes effective. 60 months effective date seems acceptable for planning

activities, but may not adequate for all construction activities. Typical times to construct a transmission line in various areas of SERC can range between 7 to 10 years. Accordingly, we recommend the effective date for construction projects be changed to at least 84 months. 12 months appears reasonable for R7.

Individual

Joe Seabrook

Puget Sound Energy, Inc.

The language in R1.1.2 needs to be clarified. Many of these facilities are not explicitly included in the models in the base cases (circuit breakers, protection system equipment, control devices). The language should be clarified to require modeling the effect of the devices or the effect of the removal of the devices where it is expected to impact the study outcome. Clarity is needed to explain the difference between R1.1.4 and R1.1.5. Expected interchange can be reasonably projected, but information on Firm Transmission Service is not always known or reasonably projected for future cases. For consistency with the 2nd bullet under R2.1.3, R1.1.4 should refer to expected transfers rather than Firm Transmission Service. With this change, R1.1.4 and R1.1.5 would be redundant and one should be deleted.

Short circuit analyses is a local phenomenon and should not be required as part of a transmission planning assessment of the BES. In any case, the effects of failure of over-stressed breakers are already included in the Events to be assessed in Table 1. For example, P2-3 and P2-4 (Internal Breaker Fault), and P4 (Stuck Breaker while attempting to clear a fault). Clarity is needed in R2.1.4. The requirement to assess the Contingencies identified in Table 1 is too burdensome. This requirement does not specify any limits on the equipment for which an analysis must be conducted. As currently drafted, this could require a separate analysis for each transformer (or any long lead-time equipment) for which a spare is not available. A separate initial case would need to be developed to assess the Contingencies identified in Table 1 for each transformer. This could result in a countless number of additional cases. We recommend a threshold be established, such as all transformers with a low side voltage above 200 kV. The 20 MW threshold identified as “material change” for generation in R2.5 is too small. The limit should be raised or based on a percentage of the study area’s installed generating capacity. R2.7 should be deleted, see comment on R2 above. R2.8 should be deleted. It is not necessary for reliability. What will be done with this information on the “largest Consequential Load Loss and the associated event caused by any P1 event and any P2 event” if it is documented? R2.9 should be deleted. It is not necessary for reliability. It will be difficult to determine the maximum permissible Non-Consequential Load value. It will end up being based on cost (monetary, societal, environmental, etc.), which is dependent, among other things, on the types of load being served. It very well may be a case by case situation.

As currently drafted, R3.3 is not a requirement. Without the statements in R3.3.1-R3.3.4, R3.3 is simply a phrase. Sub-Sub-Requirements R3.3.1 through R3.3.4 should be bullets under R3.3, with the language in R3.3 modified so that it becomes the requirement to conduct contingency analyses that address the four resulting bullets R3.3.2 is unclear as drafted. The minimum steady state voltage limitation for synchronous generators is not a very meaningful value. All generators with an automatic voltage regulator will maintain the set point voltage until the VAR capability of the generator is exceeded, and then the voltage will deteriorate. R3.5 – We disagree with the requirement to explain why remaining Extreme Contingencies would produce less severe System results than the ones selected for study. The first part of the requirement requires identification of events that produce more severe System impacts. The reason the others were not selected is because they were less severe or non-credible. In any case, theoretically, there can always be a more severe Extreme Contingencies than the one selected for study. For example, if the Extreme Contingency studied were simultaneous loss of 3 transmission lines with failure of redundant RAS, then simultaneous loss of 4 lines with failure of 2 sets of redundant RAS would be more severe. Listing all possible extreme events could result in a limitless list.

As currently drafted, R4.3 is not a requirement. Without the statements in R4.3.1-R4.3.3, R4.3 is simply a phrase. Sub-Sub-Requirements R4.3.1 through R4.3.3 should be bullets under R4.3, with the language in R4.3 modified so that it becomes the requirement to conduct contingency analyses that address the three resulting bullets. R4.3.2 – it is not clear what is required to be modeled. Typically a generator may have 10 or more protective relays. Is the intent to model all relay protection? The existing commercial programs do not have sufficient models or capacity to do that for all generators in the system. R4.5 – We disagree with the requirement to explain why remaining Extreme Contingencies would produce less severe System results than the ones selected for study. The first part of the requirement requires identification of events that produce more severe System impacts. The reason the others were not selected is because they were less severe or non-credible. In any case, theoretically, there can always be a more severe Extreme Contingency than the one selected for study. For example, if the Extreme Contingency studied were simultaneous loss of 3 transmission lines with failure of redundant RAS, then simultaneous loss of 4 lines with failure of 2 sets of redundant RAS would be more severe. Listing all possible extreme events could result in a limitless list.

The term proxy is unclear. Please provide an example or an explanation of proxy.

We believe that references to FERC Orders should not be included in requirements of standards. This comment also applies to M7.

No

Claification is needed on the use of UVLS. Is it acceptable or not. Typically UVLS relays are modeled in the study. Not allowing any load shedding as a result of UVLS relays could result in very costly fixes for a very small amount of remote load. If the Non-Consequential Load Loss Allowed column is No, is load disconnecetd from the system by UVLS a violation? What about Supplemental Load Loss or UFLS? Provide clear explanations of the load definitions.

No

P4: Under the event column it should clarify and state language similar to that of P5 (Loss of multiple elements caused by a stuck breaker).

We agree that TPL-005 and TPL-006 appear to have been adequately covered in the draft TPL-001-1 as currently written. However, we will need to review this assessment after TPL-001-1 is finalized. In addition, there is no place to state our concerns for Section D. so we added it here. We question the "not applicable" entry under Section D 1.1.2. What does it mean when the reset period is not applicable? Does it mean there is no reset period, so all non-compliance in all prior years will be counted as prior violations when considering non-compliance in future years?

Individual

Eric Bryant

Maine Public Advocate

No

P2, P3, P4, and P5 - The change allowing no load shedding or interruption of firm transmission service for the types of events and faults listed will lead to the construction and installation of more transmission plant. These expensive plant additions have not, however, been preceded or justified by any evidence that the reliability of the current system - using current planning standards which allow load shedding and interruption of firm transmission service - is lacking. The August 2003 blackout, to the extent utilities and other industry stakeholders have cited it for this purpose, was not caused by the lack of such planning standards; it was an event that should not have occured and would not have but for the utter failure of First Energy to pay attention to operations and vegetation management. The Joint US/Canada Report makes this clear. These proposed changes are not needed and will cause unreasonable increases in rates that are not justified by the putative increases in reliability. There is currently too much emphasis on reliability and not enough emphasis on costs. Utilities are spurred, of course, by the FERC's ROE incentive. NERC should not allow this incentive to influence the reasonalbeness of any of its standards, particularly this one which can only lead to unneeded redundancy in the high voltage transmission system and resulting higher costs.

Group

Pepco Holings, Inc. - Affiliates

Yes

Yes

PHI does not disagree with the performance elements, but suggests that the table would be improved if a leading sentence were added to the definition section at the beginning of the table.

Yes

Yes

Individual

Scott Helyer

Tenaska, Inc.

It is not clear that Requirement R1 requires ALL existing generators, substations, transmission line, transformers, etc. to be explicitly modeled for steady state and stability studies. In fact, Requirement 1.1.6 could be interpreted to exclude various generators from the models if they are not contracted to supply load. A suggestion is to re-word R1.1 to read as follows: R1.1 Models for the Planning Assessment shall represent all existing generators, substations (including specific busses within a substation), transmission lines, loads, capacitors, reactors, and other equipment connected to the transmission system and shall further represent the following: (continue with R1.1.1 through R1.1.6) A further refinement to R1.1.6 should also be considered as follows: R1.1.6 Committment and dispatch schedules of resources expected to serve Load for the specific model.

Individual

Kasia Mihalchuk

Manitoba Hydro

Requirement Text: R1: What is meant by “including requirements of regulatory authorities and other legal obligations”? This phase should be deleted. Can NERC make it an obligation in a standard to follow regulatory authority and other legal obligations? The planner has scope to determine the “projected system conditions”, and if a local regulator mandated a requirement, the planner would be able to include it without this statement. R1.1.1: Only long duration known planned or scheduled outages that are expected to last over a system peak should be included in the scope of this standard. Known planned or scheduled maintenance outages should not be a part of the planning scope as they are short duration and are planned to be taken when system conditions allow. Suggest wording change to “Planned outages of generation and Transmission Facilities with an expected duration of 6 months or longer, if specifically known.” R1.1.2: Suggest deleting new technologies as it is unknown as to what this is. If the SDT wants to make the list all inclusive, add words such as “shall include but not be limited to” in the requirement wording. Circuit breakers are not specifically represented in the planning models in order to keep the number of buses within the program capabilities. However, the effect of the circuit breaker configuration is normally considered in the creation of contingency files. Can the drafting team confirm that circuit breakers do not have to be specifically represented in the model? The same comment can be said about protection system equipment. Some generic zone 1 modeling may be included but in general the effect of protection equipment is included in contingency files. R1.1.4 & R1.1.5: Firm Transmission Service represents a contract that the planner is obligated to include. Based on the NERC definition, Interchange is defined as “Energy transfers that cross Balancing Authority boundaries”. Including it as a requirement mandates system expansion for non-firm system usage. Interchange is already covered in the sensitivities (Expected Transfers) and should not be a specific sub requirement of R1.1.2. Perhaps simply documenting the value of the Interchange used in the Model is sufficient. This value may change in the sensitivity analysis conducted in R2.1.3 and the TP/PA will decide the level that they will plan on protecting. Measure: The measure requires the planner to provide evidence such as the System model. What further evidence is required to ensure the planner is using data consistent with the MOD standards, is simulating projected system conditions, and that the models represent the “required information in accordance with Requirement R1? It is suggested to remove “and shall simulate projected System conditions” from the main paragraph of R1 and reword R1.1 to “System models and contingency files for the Planning Assessment shall represent projected System Conditions including:” Requirement R1 is very vague, and the Measure refers back to R1. The MOD standards deal with the building of the model. Most planners provide data in accordance with the MOD standards for a regional model building process. These models form

the basis for the models the TPs and the PC use. The R1could be more specific by requiring the PC/TP to provide rationale for the projected system conditions used, which might include the generation schedule assumed, the transfer conditions, why peak or off-peak is important, etc.. VSLs: The requirement is very generic in nature and leans on the MOD requirements. Verification of compliance to this requirement will be problematic. What will be required to prove that the data "is consistent with the data provided in accordance with the MOD-010 and MOD-012 and other data sources"? What are these other data sources"? R1 only stipulates that the planner shall "simulate expected system conditions", so how does one decided that the "model did not simulate projected System Conditions as described in R1" (severe VSL)?

Requirement Text: R2.1: Reference of past studies should be to R2.5, not R2.6 (typo). R2.1.3: The sensitivity to "Planned duration or timing of Transmission Outages" should be modified to only include "Planned long duration Transmission outages that span multiple seasons, if known". Short duration planned maintenance outages should not be included in a planning assessment. R2.1.4 - The second sentence doesn't read right - the sentence should be changed to read: "The analysis shall reflect the Contingencies identified in Table 1 under the conditions that the System is expected to experience during the unavailability of the long lead time equipment." R2.2.1 - This sub-requirement should be deleted. Why do extra assessments beyond the 10 year period? Any items beyond 10 years will be covered when they fall into the 10 year period. For example, if we assess the 10 year horizon, then the project due to be complete in 12 years will be part of the assessment in 2 years when it is 10 years out. We will have to show every year how our system meets compliance regardless of this extra analysis, so what's the point. Every year we have to show how we comply in the short and long term so what difference does it make when each project is completed as long as we are in compliance or identify Corrective Action Plans (CAPs) along the way. R2.4.1: The statement "a Load model shall be used which appropriately represents the dynamic behavior of Loads" is not very crisp. What will "appropriate" be interpreted to mean by the NERC auditor? Does an MOD standard exist that covers gathering data and validating loads models? This should be a first step. The SDT should add a statement that the application of detailed induction motor modeling can be limited to areas where poor voltage recovery is expected due to a high concentration of such load. The requirement should be modified to require the PC/TP to provide a rationale for the load models used in its specific planning area. R2.5: A "Past Study" is a definition and should be moved to the definition section. The definition only identifies power changes as possible material changes, but should also include machine control (exciters/governors) changes. We suggest the bulleted list of "Material Generation changes" be expanded. R2.6.1: Can the SDT clarify how a rate application qualifies as a CAP action? R2.9 - The sentence should refer to "maximum Non-Consequential Load Loss" not "maximum permissible Non-Consequential Load Loss".

R3.1: The requirement text should be changed to read "studies shall be performed for Planning Events to determine whether the BES meets the performance requirements in Table 1 based on the contingency list of events created in Requirement R3.4.". R3.2: Requirement wording should be similar to R3.4 for consistency. R3.4 & R3.5: The selection of the contingency list is based on the knowledge of the PC/TP. How do you produce "an explanation of why the remaining Contingencies would produce less severe System results." without proving this with a study? If the explanation is "that based on engineering judgment, the remaining contingencies would produce less severe system results" then the explanation is implied and not necessary. VSLs: Under the moderate to severe VSL, the performance requirements currently refer to P2 through P7. We believe this is a typo and should be P1 through P7.

R4.1: The requirement text should be changed to read "studies shall be performed for Planning Events to determine whether the BES meets the performance requirements in Table 1 based on the contingency lists of events created in Requirement R4.4.". R4.2: Requirement wording should be similar to R4.4 for consistency. R4.3: We agree that consideration of generator voltage ride through is important. However, we also suggest that frequency ride through capability be analyzed. R4.4 & R4.5: The selection of the contingency list is based on the knowledge of the PC/TP. How do you produce "an explanation of why the remaining Contingencies would produce less severe System results." without proving this with a study? If the explanation is "that based on engineering judgment, the remaining contingencies would produce less severe system results" then the explanation is implied and not necessary.

Data Retention: The 5th bullet should refer to "proxies" instead of "studies".

None

It is unclear as to what is meant by "coordinating analysis of these results"? Does this imply an obligation to conduct joint studies or just an obligation to distribute the assessment and respond to feedback? We suggest that the wording "such as described in FERC Order 890" be replaced with "such as may be required by a regulator in its PC/TP area". The SDT is posing several other questions for industry consideration not related to the specific requirement questions above.

No

Consequential Load Loss: the wording "by a planned Protection System operation to isolate fault conditions" is awkward wording. The wording should be changed to "by a Protection System operation designed to isolate fault conditions". Load Reduction: This definition is not needed and

load reduction is not prohibited in the standard. It will take some effort to even measure such a load reduction in simulation. Given that there are four load related definitions, the standard would be simplified by deleting this term. Any voltage dependent load will be reduced for a low voltage condition. In steady state (P0), load is normally modeled as constant MVA load so load is constant. In the steady state period after a contingency, transformer taps and voltage control devices will restore voltage, and consequently, any load modeled as voltage dependent will be restored to pre-contingency level. The term is not used anywhere in the requirements of the standard - it is only included in Table 1 Note b in the definition of Non-Consequential Load Loss. We do not think it is needed. Supplemental Load Loss: Why did the drafting team decide to include Supplemental load loss? In Table 1, it is stated under "note b" that Supplemental Load Loss cannot be used to meet steady state performance requirements. Does this imply that it is acceptable for "non-consequential" induction motor load to trip off as a result of undervoltage during the disturbance due to its protection setting? It is possible that this load loss during a stability simulation may avoid the need to add dynamic reactive support. Can the drafting team clarify the intent of the standard or delete Supplemental Load Loss. At minimum, the TP/PA should identify the minimum transient voltage that they are planning the system for. In that way, any load loss for unplanned events that cause lower transient voltages or load loss that occurs at a higher transient voltage wouldn't be a violation. Also, unless the end-user load is modeled in detail, or a proxy is used, the planner will not know if such load exists or would be lost in the simulation.

No

Note b should be reworded to "However, Supplemental Load Loss associated with a P2 through P5 event shall not be used to meet post-contingency steady-state performance requirements." Also we do not see a need for Load Reduction (see Q8 comment) Note b also implies that voltage dependent load is not permitted to be modeled for P0. This in turn means that the model must have all load represented as constant MVA. The load representation can change for categories P1 through P7. Is this the intent of the language? Note e: Are the planned System adjustments and redispatch allowed following all Planning Events if they result in curtailment of Firm Transmission Service? Should Note 10 also be referenced here? Footnote 7 applies to FACTS devices that are connected to ground. It is possible to have an ungrounded FACTS device (eg. Delta connected) or a series connected FACTS device (UPFC, SSSC, etc.). I would recommend deleting "that are connected to ground" so that the note is more general. Series connected FACTS will likely be separated via circuit breakers in a similar way as a transformer or phase shifter. Other series FACTS device, like a TCSC also typically self protect via a bypass breaker and should be considered as a separate element. Extreme Events: Steady State 1: Does the loss of a DC line refer to a bipole line? Steady State 2e: The loss of a large load could result from a Planning Event, perhaps even a P1 or P2 event - likely not an extreme event - compared to the loss of a major load center.

Yes

Note 10: The drafting team is to be congratulated for including the ability to curtail Firm Transmission Service as long as generation is available to redispatch to prevent firm load loss. Note 5: Firm transmission service can also be curtailed when the service is conditioned on the element is being available (note 5). It is recommended to add note 10 to contingencies P1 and P2. This would allow for curtailment of Firm Transmission Service via redispatch without dropping load when re-adjusting the system following these single contingency events, or automatically adjusting the system via an SPS action initiated by the P1 or P2 event, consistent with note b of the existing TPL standards. The consequence of not including Note 10 could mean extensive new transmission line construction without any increase in transfer capability. In Note 10, the SDT is assuming that the Firm transmission Service is Network Service to load. Does Note 10 also apply if the Firm Transmission Service is firm point-to-point service?

No

TPL-005-0 is a Regional and Interregional Self-Assessment Reliability Report. Such an assessment is beyond the capability of an individual PC or TP. While the new TPL-001-1 can and should include a requirement on the PC and TP to include in their assessments the interconnections with their adjacent systems, it does not make sense to mandate an individual TP or PC to conduct an interregional assessment. Consequently, TPL-005-0 should be retained and mandated on the regions via the NERC delegation agreements with the regions.

Group

PacifiCorp

The language in R1.1.2 needs to be clarified. Many of these facilities are not explicitly included in the models in the base cases (circuit breakers, protection system equipment, control devices). The language should be clarified to require modeling the effect of the devices or the effect of the removal of the devices where it is expected to impact the study outcome. Clarity is needed to explain the difference between R1.1.4 and R1.1.5. Expected interchange can be reasonably projected, but information on Firm Transmission Service is not always known or reasonably projected for future cases. For consistency with the 2nd bullet under R2.1.3, R1.1.4 should refer to expected transfers rather than Firm Transmission Service. With this change, R1.1.4 and R1.1.5

would be redundant and one should be deleted. We disagree with the inclusion of the words "including requirements of regulatory authorities and other legal obligations" at the end of R1. Entities already are required to do this. It does not need to be included in the standard.
Short circuit analyses is a local phenomenon and should not be required as part of a transmission planning assessment of the BES. In any case, the effects of failure of over-stressed breakers are already included in the Events to be assessed in Table 1. For example, P2-3 and P2-4 (Internal Breaker Fault), and P4 (Stuck Breaker while attempting to clear a fault). Clarity is needed in R2.1.4. The requirement to assess the Contingencies identified in Table 1 is too burdensome. This requirement does not specify any limits on the equipment for which an analysis must be conducted. As currently drafted, this could require a separate analysis for each transformer (or any long lead-time equipment) for which a spare is not available. A separate initial case would need to be developed to assess the Contingencies identified in Table 1 for each transformer. This could result in a countless number of additional cases. We recommend a threshold be established, such as all transformers with a low side voltage above 200 kV. We also recommend changing this from a separate sub-Requirement to one of the sensitivities to be considered under 2.1.3. We also believe that the statement at the end of R2.6 that indicates corrective action plans are not required solely to meet the performance requirements for sensitivities should also apply to the spare equipment requirement. The 20 MW threshold identified as "material change" for generation in R2.5 is too small. The limit should be raised or based on a percentage of the study area's installed generating capacity. R2.8 should be deleted. It is not necessary for reliability. What will be done with this information on the "largest Consequential Load Loss and the associated event caused by any P1 event and any P2 event" if it is documented? R2.9 should be deleted. It is not necessary for reliability. It will be difficult to determine the maximum permissible Non-Consequential Load value. It will end up being based on cost (monetary, societal, environmental, etc.), which is dependent, among other things, on the types of load being served. It very well may be a case by case situation.
As currently drafted, R3.3 is not a requirement. Without the statements in R3.3.1-R3.3.4, R3.3 is simply a phrase. Sub-Sub-Requirements R3.3.1 through R3.3.4 should be bullets under R3.3, with the language in R3.3 modified so that it becomes the requirement to conduct contingency analyses that address the four resulting bullets R3.3.2 is unclear as drafted. The minimum steady state voltage limitation for synchronous generators is not a very meaningful value. All generators with an automotive voltage regulator will maintain the set point voltage until the VAR capability of the generator is exceeded, and then the voltage will deteriorate. R3.5 – We disagree with the requirement to explain why remaining Extreme Contingencies would produce less severe System results than the ones selected for study. The first part of the requirement requires identification of events that produce more severe System impacts. The reason the others were not selected is because they were less severe or non-credible. In any case, theoretically, there can always be a more severe Extreme Contingencies than the one selected for study. For example, if the Extreme Contingency studied were simultaneous loss of 3 transmission lines with failure of redundant RAS, then simultaneous loss of 4 lines with failure of 2 sets of redundant RAS would be more severe. Listing all possible extreme events could result in a limitless list.
As currently drafted, R4.3 is not a requirement. Without the statements in R4.3.1-R4.3.3, R4.3 is simply a phrase. Sub-Sub-Requirements R4.3.1 through R4.3.3 should be bullets under R4.3, with the language in R4.3 modified so that it becomes the requirement to conduct contingency analyses that address the three resulting bullets. R4.3.2 – it is not clear what is required to be modeled. Typically a generator may have 10 or more protective relays. Is the intent to model all relay protection? The existing commercial programs do not have sufficient models or capacity to do that for all generators in the system. R4.5 – We disagree with the requirement to explain why remaining Extreme Contingencies would produce less severe System results than the ones selected for study. The first part of the requirement requires identification of events that produce more severe System impacts. The reason the others were not selected is because they were less severe or non-credible. In any case, theoretically, there can always be a more severe Extreme Contingency than the one selected for study. For example, if the Extreme Contingency studied were simultaneous loss of 3 transmission lines with failure of redundant RAS, then simultaneous loss of 4 lines with failure of 2 sets of redundant RAS would be more severe. Listing all possible extreme events could result in a limitless list.
The term proxy is unclear. Please provide an example or an explanation of proxy.
We believe that references to FERC Orders should not be included in requirements of standards. This comment also applies to M7.
No
: Claification is needed on the use of UVLS. Is it acceptable or not. Typically UVLS relays are modeled in the study. Not allowing any load shedding as a result of UVLS relays could result in very costly fixes for a very small amount of remote load. If the Non-Consequential Load Loss Allowed column is No, is load disconnecetd from the system by UVLS a violation? What about Supplemental Load Loss or UFLS?
No

P4: Under the event column it should clarify and state language similar to that of P5 (Loss of multiple elements caused by a stuck breaker). In addition, this is a multiple contingency condition and may result in loss of more than 2 elements. As such, this is a low probability condition and loss of Non-Consequential load should be allowed for EHV. We disagree with raising the bar for EHV for P4.

: We agree that TPL-005 and TPL-006 appear to have been adequately covered in the draft TPL-001-1 as currently written. However, we will need to review this assessment after TPL-001-1 is finalized. In addition, there is no place to state our concerns for Section D. so we added it here. We question the "not applicable" entry under Section D 1.1.2. What does it mean when the reset period is not applicable? Does it mean there is no reset period, so all non-compliance in all prior years will be counted as prior violations when considering non-compliance in future years?

Individual

Brent Ingebrigtson

E.ON U.S.

R1. Delete “and other data sources”. Consistency with MOD-010 and MOD-012 standards is measurable and should suffice. Delete “including requirements of regulatory authorities and other legal obligations”. The term: “shall simulate projected System conditions” does not exclude the above. If there is some significance to this statement it should be an item in R1.1. R1.1.4. Firm Transmission Service is often sold for less than one year on an as available basis. Also, Firm Transmission Service may be sold on one system without a complete path. As stated, it appears necessary to include these examples in the Planning models. E.ON U.S. believes that there should be some limitations put on this requirement such as Long-Term Firm Transmission Service for a period of 5 or more years.

R2.1.3 Change “For each of the studies …” to “For at least one of the studies” R2.1.1 and R2.1.2 require that 3 studies be performed each year. As written, the requirement indicates that the transmission planner has to perform at least one sensitivity study for the 3 studies required by R2.1.1 and R2.1.2. This means that the transmission planner would also have to perform 3 or more sensitivity studies each year. One sensitivity study for one of the 3 studies required by R2.1.1 and R2.1.2 should suffice. R2.1.4. Delete “The analysis shall reflect the Contingencies identified in Table 1 during the conditions that the System is expected to experience due to the unavailability of the long lead time equipment.” This statement is redundant since R3 requires this analysis for all of R2.1. Including this statement in R2.1.4 and not in R2.1.1 and R2.1.2 makes it appear that this requirement has different performance requirements. R2.4.3 R2.4 does not require studies annually. However, if the transmission planner chooses to study a System Peak Load or a System Off-Peak Load condition R2.4.3 requires that the planner also study sensitivity to that same condition in the current year. E.ON U.S. believes it sufficient that the assessment include a sensitivity study for some System Peak Load and some System Off-Peak Load condition. R2.6 The third sentence should be modified to include R2.1.4., so that it reads “Corrective Action Plans do not need to be developed solely to meet the performance requirements for sensitivities run in accordance with Requirements R2.1.3, R2.1.4 and R2.4.3.” The annual studies performed for Category P6 alert the Transmission Planner to the risks of transformer failure. The Transmission Planner is required to design the system to limit those risks. If the delivery time for a piece of equipment is 11 months, then P6 allows Interruption of Firm Transmission Service and Non-Consequential Load Loss. If the delivery time for a piece of equipment is 12 months, then P1 requires that the system be designed for no Interruption of Firm Transmission Service and Non-Consequential Load Loss. This is a significant increase in performance requirements for an event that will most likely not extend beyond to a second System Peak Load period. If R2.1.4 is not included in the requirement the transmission planners would essentially be designing for an Extreme Event, i.e., events which are more severe and have a lower probability of occurrence than Planning Events. R2.6.1 Operating Procedures, by NERC definition, require significantly more detail than is appropriate for a Corrective Action Plan. It is not appropriate that Transmission Planners write Operating Procedures to be used by NERC Certified System Operators. E.ON U.S. suggests that “Operating Procedures” be changed to “mitigation plans”. R2.6.5 Planning Assessments and System Facilities are not NERC defined terms. Operating Procedures, by NERC definition, require significantly more detail than is appropriate for a Corrective Action Plan. It is not appropriate that Transmission Planners write Operating Procedures to be used by NERC Certified System Operators. E.ON U.S. suggests that “Operating Procedures” be changed to “mitigation plans”. R2.8 There are no requirements to limit Consequential Load Loss. Impacted customers are typically aware of the customary level of service and have chosen not to pay for extraordinary levels of service. E ON US questions the purpose and benefit of this requirement. While continuity of service to end use customers is an important measure of service reliability for which utilities answer to state authorities, BES reliability requires that the system remain balanced and that local failures not result in cascading BES events NERC standards should, pursuant to FPA Section 215, focus solely on BES reliability

No

Year One: The calendar year contains 12 months. As written, Year One could start as early as January 2010 (1/1/2009 plus 12 months) or as late as July 2011 (12/31/2009 plus 18 months). E.ON U.S. believes that the statement should be modified to: read " … that begins 12-18 months from the beginning of the current calendar year". This would limit the beginning of the current window to be January 2010 or July 2010.

Table 1 Extreme Events Comments Steady State 2.b Right-of-Way should include a reference to footnote 12. 2.d. Item 2.d. references loss of all generating units at a "station" but Item 3 references generating plants and nuclear power plants. It is unclear whether Item 2.d requires an outage of all generating units connected to a single transmission station (all voltages) or an outage of all generating units at a generating plant (although they may be connected to multiple transmission stations). 2.g Right-of-Way should include a reference to footnote 12. Footnotes 12 E ON U.S. suggests the definition be expanded to: Exclude circuits that share common structure for 1 mile or less and Transmission lines that share common Right-of-Way for 1 mile or less.

Individual

Sergio Garza

LCRA Transmission Services Corporation

In R2.6.2, it is stated that a project initiation date is required as well as an in-service date. What is considered the project initiation date, the point at which the project plan is approved or the time at which construction is to begin? If it is the time at which construction is to begin, then LCRA TSC believes this requirement does not belong in the TPL-001-1 standard as the construction timeframe for a project is developed by groups outside of Planning based on resources and outage availability.

In R3.3.4, what is meant by the term "electrical system quantities"? Quantities is typically an amount and its use here would indicate that a term such as parameters would be better suited.

In R4.3.3, what is meant by the term "electrical system quantities"? Quantities is typically an amount and its use here would indicate that a term such as parameters would be better suited.

In R5, what is meant by the term "any proxies"? Please clarify. This comment also pertains to this terms use in the VSL as well.

Individual

Carol Sedewitz

National Grid

Comments: R1: A. Priority Comment- There needs to be some direction provided on the initial conditions used in the assessment. This guidance should encourage the use of initial conditions that reasonably stress transfers across interfaces between companies, areas, regions, into load pockets, and out of constrained areas. The expectation that transfers are reasonably stressed for a variety of interface conditions will require the consideration of different generation dispatches, which goes beyond the single generator out of service requirement of the standard. If initial conditions consider reasonably stressed conditions, then sensitivity analysis is embedded in the process. If sensitivity is embedded in the process, it is unclear if additional sensitivity is still required by the standard. B. In the reference to regulatory authorities and other legal obligations it is suggested that the phrase be changed from "simulate projected System conditions including requirements of regulatory authorities and other legal obligations" to "include projected System conditions and requirements of regulatory authorities and other legal obligation." In common usage of terms, models are used to simulate system response, but models alone do not simulate the system. Violation Severity Levels: R1 – Suggest changing the phrase "simulate projected System conditions as described in Requirement R1" to "include projected System as described in Requirement R1," consistent with the recommended change to Requirement R1. Errata: Delete the period after "R1" in the first bullet in the Data Retention section. R1.1.1 Priority comment – R1.1.1 should be removed. - Planned outages are addressed by Operational Planning processes and Transmission Operating Procedures for up to two years ahead removing the need for this to be incorporated into Planning Assessments. - If outages are planned, but Operations can not

accommodate them in real time, then the outages are cancelled. - Outages are not generally known beyond one to two years in advance. R1.1.2 Comment - We recommend deleting the list of facilities: - Circuit breakers are not modeled as elements in a power flow nor are Control Devices and Protection Systems - The list of facilities is not consistent with the definition of 'Facilities' in the NERC Glossary R1.1.2 should simply read: R1.1.2 New planned Facilities and changes to existing Facilities for each year of the Near-Term and Long-Term Transmission Planning Horizon. R1.1.3 Comment - The use of "real and reactive power" is prevalent within the industry, but R1.1.3 should be changed to "Active and reactive Demand of Load." When load is expressed as a complex quantity, active power is the real portion and reactive power is the imaginary portion. Thus for consistency, we should refer to active and reactive. R1.1.5 Comment – What specifically needs to be modeled under Interchange? R1.1.6 Comment – This needs further definition or it should be deleted. It is not clear what a "network resource required to supply load" is. Does this refer to Network Resource per FERC LGIP?

R2 Comment – In the first sentence, replace the phrase "prepare" with "conduct and document" and in the second sentence replace "This Planning Assessment shall use current or past studies, document assumptions, document results, and shall cover steady state analyses, short circuit analyses, and Stability analyses" with "The Planning Assessment shall review assumptions of current or past studies and assess the continuing validity of the steady state, short circuit, and stability results. The review of assumptions, supplemental analysis, and updated results shall be documented." R2.1 Comment – A. The terms assess and annual study are referenced in the same requirement. It is unclear what constitutes either. Is an annual study required for every area or is an annual assessment required for every area, which may include some supporting study to address changes to the conditions? B. Requirement R2.1 should refer to R2.5 rather than R2.6 R2.1.1 Comment – A. Year One and year two do not provide enough time to implement Corrective Action Plans and are better suited for Operations studies. The requirement to evaluate Year One or year two should be removed. B. Is a year 5 study required annually for every area of a system? R2.1.2 Comment – The requirement should be removed. With no description of the system stresses and generator outages to be applied when assessing the off-peak load, it is difficult to imagine any issues which would arise which are not revealed in the peak load evaluation that could not be addressed through generation dispatch adjustments. Need to define conditions for assessment. R2.1.3 Comment – A. The emphasis on sensitivity testing in the existing section appears misdirected and should be focused on the expected accuracy of the assumptions. The assessment should have to include a discussion of accuracy of the assumptions. Having a requirement to perform one more sensitivity not already included is vague and does not add value to the assessment or the standard. B. Planned Transmission Outages are not known in the Planning horizon. Also the release of the outage on any given day is controlled by operations based on the conditions. The conditions are not known for the Planning assessment. The last bullet referring to Planned Transmission Outages should be deleted. C. Delete the phrase "are intended to." It is difficult to measure intent and what is important is whether the system has been stressed, not whether the responsible entity intended to stress the system. D. What is expected from a sensitivity analysis? Is it to change the base case and see how the case responded, is it to create a new base case and rerun all of the events, or is it to change the base case and rerun a select number of events. It is anticipated that the answer will vary based on what is changed. R2.1.4 Priority Comment – With respect to spare equipment strategy, this requirement potentially imposes a requirement to plan for three events, which is overly severe. After experiencing a major contingency of a long lead time facility, there should be some change in the acceptability of risk. This change in risk could include an allowance for the loss of non-consequential load or some of the multiple events from Table 1 should be evaluated as Extreme Contingency events. R2.2 Comment – We suggest replacing the phrase "a current System peak Load study" with "a valid System peak Load study" in the first sentence. The word current is confusing as some read the word current to mean "today's" rather than "valid". R2.3 Comment – A. The requirement to "conduct annually" isn't consistent with "support". We suggest "Conducted annually" should be replaced with the phrase "assessed annually". B. "Interruption duty" should be changed to "interrupting duty." All terms in the IEEE dictionary related to breaker opening use the word "interrupting," while terms related to loss of supply to customers use the word "interruption." R2.4.1 Comment – A. The two sentences are describing an 'or' condition and they should be merged to read: "For peak System Load levels, a Load model shall be used which appropriately represents the dynamic behavior of Loads, including consideration of the behavior of induction motor Loads or an aggregate System Load model which represents the overall dynamic behavior of the Load." R2.4.3 Comment - Delete the phrase "are intended to." It is difficult to measure intent and what is important is whether the system has been stressed, not whether the responsible entity intended to stress the system. R2.5 Comment – If past studies only support, then a new study is still required. We suggest changing "Past studies may be used to support the Planning Assessment if they meet the following requirements:" to "Past studies may be used to fulfill all or a portion of the Planning Assessment provided they meet the following requirements:" Violation Severity Levels: R2 - There is no VSL associated with R2.5. A VSL should be added, perhaps under Moderate, that "past studies were utilized to fulfill all or a portion of the requirement, but the studies did not meet the requirements in R2.5." R2.5.1 Comment– We suggest deleting this requirement, and

incorporating it into R2.5.2. R2.5.2 Comment – To incorporate R.2.5.1 into R2.5.2; please modify the section as follows: For steady state, short circuit, or stability analysis the study shall be less than five calendar years old from the date of completion. The present System model shall not include any material changes, such as, generation or Transmission additions/removals, or topology changes that have occurred in the intervening period and would impact the study area. A material change does not require the whole study to be redone. It only requires that the affected portion of the study be reassessed. Material generation changes include: • The addition/deletion/change of individual generating unit capability determined to be material by the Planning Coordinator or Transmission Planner. • An aggregated addition/deletion/change to a group of generating units directly connected to the BES at one point of interconnection through one or more transformers and determined to be material by the Planning Coordinator or Transmission Planner. The reference to the step-up transformer may not capture a wind farm that could have transformers to step-up to a collection voltage and transformer that wouldn't be labeled a GSU to connect to the system. R2.6 Priority Comment – A. As written, this section undermines the value of the sensitivity testing. This section should require a corrective action plan to fix problems determined in sensitivity analysis if there is a reasonable risk of occurrence. We suggest making the standard read "Provide documentation that explains the reasoning for the sensitivities considered and selected." B. At the end of the second sentence, the phrase "in the tables" is used. We suggest using more definitive language such as "in Table 1". R2.6.1 Comment -In the last bullet, the reference to "rate application" is unclear. R2.6.2 Comment – The phrase "Project Initiation Date" needs to be defined. It is unclear if this is the date of ground breaking, purchase orders being issued, solution study initiation, etc. Additionally, in the second sentence the phrase "as well as an in-service date" should be modified to read "as well as a target in-service date". R2.6.3 Comment – Plans can provide a target in-service year, but not an actual in-service year. R2.6.4 Priority Comment – There should be a cutoff point when changes occur beyond a certain date. When that date occurs, further changes will be evaluated in the next year's assessment. Otherwise, if a state makes a decision not to site a project a few weeks prior to the end of the assessment period, there will not be sufficient time to incorporate this into that year's assessment and develop corrective actions. R2.7 Comment – A. "Interruption duty" should be changed to "interrupting duty." All terms in the IEEE dictionary related to breaker opening use the word "interrupting," while terms related to loss of supply to customers use the word "interruption." B. The requirement would be clearer if it we restructured as follows: "For short circuit analysis, if the short circuit interrupting duty determined in Requirement R2.3 exceeds the Equipment Rating of fault interrupting devices, the Planning Authority . . ." R2.8 Comment – A. Largest consequential load loss is not factored into the Planning Assessment and should therefore be deleted. B. If it is not deleted, do we have to prepare one number for P1 and a separate number for P2? The phrase "any P1 event and any P2 event in Table 1" could also be read as the worst loading for each event within P1 and P2, which could be hundreds of values depending on how many events are analyzed. We recommend that the requirement be modified to require documentation of the maximum amount of consequential load loss that was relied upon during the assessment of the P1 and P2 events. C. If it is not deleted, "shall provide" should be changed to "shall identify" for consistency with R2.9 R2.9 Comment – A. Largest consequential load loss is not factored into the Planning Assessment and should therefore be deleted. B. If it is not deleted, this requirement is unclear. Is this requirement asking for each transmission planner to list their criteria for non-consequential load loss, or is it asking how much non-consequential load loss was being relied upon in the assessment? Including the word "permissible" implies the responsible entity must decide how much Non-Consequential Load Loss is allowed. We recommend that the requirement be modified to require documentation of the maximum amount of non-consequential load loss that was relied upon during the assessment of the P1 and P2 events.

R3 Comment – "Planning Assessment" and "shall perform analysis" are contradictory. R3 and its sub-requirements then reference study requirements. If this is an assessment, then the standard shouldn't be requiring a study. R3.1 Comment – A. It is not clear what should be included in the list related to R3.4. Events P0 through P4 should include analysis of all BES facilities for which the Transmission Planner is responsible. Events P5 and higher should be limited to contingency events that are deemed the most significant by the Transmission Planner. B. R3.1 refers to 'lists'. Is R3.4 creating one list or multiple lists? Suggest changing 'lists' to 'list' R3.2 Comment - Since R3.4 and R3.5 both require the responsible entity to create a list, the words in R3.2 be should be revised to be more similar to the words in R3.1. Suggest changing "Studies shall be performed to assess the impact of the Extreme Events identified in Requirement R3.5. to "Studies shall be performed to assess the impact of the Extreme Events, which are identified by the list created in Requirement R3.5." R3.3.2 Comment – A. Traditionally transmission planners have used their judgment about the minimum steady state voltage limitations of generators. If this standard is going to require its incorporation into the assessments, there should be an MOD standard developed requiring the generators to provide the necessary information prior to its inclusion as a requirement in this standard. B. Voltage limitations are for both minimum and maximum. If this requirement is kept, then "minimum" should be deleted. C. Is this requirement really looking at "voltage limits" or generator "reactive capability"? R3.3.3 - This requirement should be deleted. Each reliability issue should be addressed in one standard and relay loadability is

addressed in PRC-023. If requirements of PRC-023 are met, the relay loadability does not constitute a limitation. If this requirement is intended to apply to modeling relay characteristics in stability simulations, which is not addressed by PRC-023, then the requirement should be more explicit. However, as written it appears that the intent was to be in-line with Blackout Recommendation 8a which relates to steady-state loadability, which is covered by PRC-023. R3.4 Comment - Table 1 includes both Steady State and Stability events. R3.4 needs to indicate that it only applies to the Steady State portion of the Table. R3.5 Priority Comment – It is recommended that the requirement for Extreme Event testing be removed from this standard as there is no requirement to develop a Corrective Action Plan to address unacceptable consequences and the requirements are too vague to have auditable value. If the requirement is not deleted, the following is recommended: - Extreme Event performance should be a consideration when developing Corrective Action Plans to address Planning Events. If not, it will be difficult to utilize the results to obtain projects approvals. - It should be clear that an evaluation does not require solution development for all Extreme Events - Change “an evaluation of possible actions…” to “where appropriate, reasonably practicable actions designed to reduce the likelihood or mitigate the consequences and adverse impacts of the event(s) shall be considered.” - The statement “and shall include an explanation of why the remaining Contingencies would produce less severe System results” is too open and should be deleted. Violation Severity Levels: R3.4 Since this is a binary requirement, should this have a Severe VSL? R3.5 Since this is a binary requirement, should this have a Severe VSL?

R4 Comment – “Planning Assessment” and “shall perform analysis” are contradictory. R4 and its sub-requirements, then reference study requirements. If this is an assessment, then the standard shouldn’t be requiring a study. R4.1 Comment – A. It is not clear what should be included in the list related to R4.4. Events P0 through P4 should include analysis of all facilities BES facilities for which the Transmission Planner is responsible. Events P5 and higher should be limited to contingency events that are deemed the most significant by the Transmission Planner. B. R4.1 refers to ‘lists’. Is R4.4 creating one list or multiple lists? Suggest changing ‘lists’ to ‘list’ R4.2 Comment - Since R4.4 and R4.5 both require the responsible entity to create a list, the words in R4.2 be should be revised to be more similar to the words in R4.1. Suggest changing “Studies shall be performed to assess the impact of the Extreme Events identified in Requirement R4.5. “ to “Studies shall be performed to assess the impact of the Extreme Events, which are identified by the list created in Requirement R4.5.” R4.3.2 Priority Comment - Traditionally transmission planners have assumed that generators would ride through low voltages associated with Planning Events which is generally adequate for non-wind generators. If this standard is going to require its incorporation into the assessments, there should be an MOD standard developed requiring the generators to provide the necessary information prior to its inclusion as a requirement in this standard. R4.5 Priority Comment – It is recommended that the requirement for Extreme Event testing be removed from this standard as there is no requirement to develop a Corrective Action Plan to address unacceptable consequences. If the requirement is not deleted, the following is recommended: - Extreme Event performance should be a consideration when developing Corrective Action Plans to address Planning Events. If not, it will be difficult to utilize the results to obtain projects approvals. - It should be clear that an evaluation does not require solution development for all Extreme Events - Change “an evaluation of possible actions…” to “where appropriate, reasonably practicable actions designed to reduce the likelihood or mitigate the consequences and adverse impacts of the event(s) shall be considered.” - The statement “and shall include an explanation of why the remaining Contingencies would produce less severe System results” is too open and should be deleted. Violation Severity Levels: R4.4 Since this is a binary requirement, should this have a Severe VSL? R4.5 Since this is a binary requirement, should this have a Severe VSL?

It is unclear as to what is meant by the term “proxy used in the analysis” used in this requirement. Is a ‘proxy’ a ‘criteria’?

None

This standard should not be reiterating FERC Order 890. We do not feel that this requirement belongs in this standard and it should be deleted.

No

Comments: Can the definitions of the ‘Planning Horizon’ in the FAC, the ‘Long-term Planning’ Time Horizon (italicized and in parentheses next to the Violation Risk Factor), and the ‘Near-Term’ and ‘Long-Term Transmission Planning’ be included in the definitions section to avoid confusion? Refine load loss definitions as follows. Consequential Load Loss: All Load that is no longer served by any Transmission Facilities as a result of the Facilities being removed from service by a planned Protection System operation to isolate fault conditions. Comment – It is not clear if Consequential load includes load that is connected to transmission within an island. Suggest revising the definition to "..load no longer served by the Transmission System (or perhaps by the BES?) as a result of Transmission Facilities being removed…" Load Reduction: Quantity of Load that is reduced due to lower voltage conditions resulting from a Planning or Extreme Event. Comment – ‘Load Reduction’ as written is the load remaining after the reduction. This should be rewritten to indicate it is the change in load from the previous value to that still connected. Also, the defined term ‘Load Reduction’ is counter to what most engineers consider to

be a load reduction and as written it does not seem necessary to define this term. Most engineers associate Load Reduction as a manual or automatic action by a customer to reduce demand. As defined it appears that Load Reduction refers only to the voltage sensitivity of load which should be captured in the system model if it is necessary to model this effect. Therefore the reference should be changed from “Load Reduction” to “Voltage Sensitive Load Loss”. Non-Consequential Load Loss: Non-Interruptible Load loss other than Consequential Load Loss, Supplemental Load Loss, and Load Reduction. Comment – The definition is indirect. Suggest to revise the definition to be direct by stating “Intended post contingency loss of load (other than Interruptible Load, Supplemental Load or Load Reduction) caused by operator or SPS (RAS) action.” Planning Events: Events that require Transmission system performance requirements to be met. Comment - Suggest "Events for which Transmission system performance requirements shall be met". Supplemental Load Loss: Load that is disconnected from the network by end-user equipment responding to post-Contingency System conditions. Comment - Suggest rewording last phrase to "..responding to System Contingency conditions." - or perhaps just "..responding to System conditions." Year One: The first year that a Transmission Planner is responsible for assessing. This is further defined as the planning window that begins 12-18 months from the current calendar year. Comment - Suggest rewording second sentence to "This is further defined as beginning 12-18 months from the current calendar year." - This avoids the awkwardness in present draft of seeming to define Year One as a planning window as well as a particular year.

No

Steady State & Stability comments are as follows: Steady State & Stability: a. Transmission voltage instability, cascading outages, and uncontrolled islanding shall not occur. How does this apply to Steady State testing? b. Consequential Load Loss, Supplemental Load Loss, Load Reduction, and consequential generation loss are acceptable as a consequence of any Planning or Extreme Event excluding P0. However, Supplemental Load Loss and Load Reduction associated with an event shall not be used to meet steady state performance requirements The second sentence re: Supplemental Load Loss implies need to test without end-user's actions and then assess whether action of separating end-user needs to be taken by Transmission system? B. Event P2-3 and P4 have the same impact; also events P2-4 and P4-6 have the same impact. Can these be consolidated? P5 Priority Comment – As written, this requirement is overly severe. This would require the simulation of a “dead” station if only one battery is present (use of NERC Glossary Protective System definition is too broad). The failure of the single protection system should be limited to certain aspects of the protection system. P7 Priority Comment – Event 1 - This requirement requires the evaluation of the loss of two circuits on a multiple circuit tower. We recommend that this be modified so that only the loss of two adjacent (vertically or horizontally) circuits need be evaluated. Or allow the Planning Coordinator to evaluate and if appropriate exempt specific locations from this contingency based on acceptable risk. Comments on Extreme Events – Table 1- We recommend renumbering the Extreme Events table to be Table 2. Stability Condition 2 Note a - Priority Comment - As written, this requirement is overly severe. This would require the simulation of a “dead” station if only one battery is present (use of NERC Glossary Protective System definition is too broad). The failure of the single protection system should be limited to certain aspects of the protection system. Stability Condition 2 Note h – Eliminate this requirement or change to loss of station following three phase fault. This note is confusing. Without providing a better defined scenario, it is unclear as to what clearing times should be used in this simulation. Note 1.a.i - For Planning Event P1: No generating unit or units shall be allowed to pull out of synchronism." There needs to be some sort of qualifier on this requirement. We suggest the following, "For Planning Event P1: No generating unit or units, directly interconnected at 100 kV or above, shall be allowed to lose synchronism." Note 1.a.ii – Contingency Reserve is dependent on the generation on-line. We suggest changing the first sentence to say that you can’t lose more than that permissible by the Planning Coordinator. Also change “pull out of synchronism” to “lose synchronism” in this sentence and in the second sentence. (Is “Lose synchronism” a more commonly used term?). Note 3 – We recommend revising the wording of the last sentence to “A 3 phase fault study indicating criteria are being met is sufficient evidence that a SLG condition would also meet criteria.” Note 11. Reference is made to Independent Pole Operation (IPO) – Can this be clarified by referencing it as IPO or Independent Pole Trip (IPT) as opposed to single-pole switching. Note 4 – We recommend that a lower bound be put on the HV electric systems (such as 100 kV), rather than just saying “and lower”. Extreme Events: Steady State 3a - loss of two generating plants - This can be considered in two ways - one which results in loss of source (e.g. from fuel, cooling water, or nuke design shutdown) OR the second which could result in loss of stations including lines and breakers (e.g. from wildfires, weather, cyber attack, etc) - which is meant here? Both?

Yes

Capitalize “Firm Transmission Service” in footnote 10 and instead of saying firm Load use Firm Demand to be consistent with the NERC Glossary

Yes

Group

Bonneville Power Administration
The language in R1.1.2 needs to be clarified. Many of these facilities are not explicitly included in the models in the base cases (circuit breakers, protection system equipment, control devices). The language should be clarified to require modeling the effect of the devices or the effect of the removal of the devices where it is expected to impact the study outcome. Clarity is needed to explain the difference between R1.1.4 and R1.1.5. Expected interchange can be reasonably projected, but information on Firm Transmission Service is not always known or reasonably projected for future cases. For consistency with the 2nd bullet under R2.1.3, R1.1.4 should refer to expected transfers rather than Firm Transmission Service. With this change, R1.1.4 and R1.1.5 would be redundant and one should be deleted. We disagree with the inclusion of the words “including requirements of regulatory authorities and other legal obligations” at the end of R1. Entities already are required to do this. It does not need to be included in the standard.
Short circuit analyses is a local phenomenon and should not be required as part of a transmission planning assessment of the BES. In any case, the effects of failure of over-stressed breakers are already included in the Events to be assessed in Table 1. For example, P2-3 and P2-4 (Internal Breaker Fault), and P4 (Stuck Breaker while attempting to clear a fault). R2.1.1: Peak load modeled for the near term planning horizon may not be Year one or year two. Therefore, R2.1.1 should be revised to say “System peak load for one of the five years”. Clarity is needed in R2.1.4. The requirement to assess the Contingencies identified in Table 1 is too burdensome. This requirement does not specify any limits on the equipment for which an analysis must be conducted. As currently drafted, this could require a separate analysis for each transformer (or any long lead-time equipment) for which a spare is not available. A separate initial case would need to be developed to assess the Contingencies identified in Table 1 for each transformer. This could result in a countless number of additional cases. We recommend a threshold be established, such as all transformers with a low side voltage above 200 kV. We also recommend changing this from a separate sub-Requirement to one of the sensitivities to be considered under 2.1.3. We also believe that the statement at the end of R2.6 that indicates corrective action plans are not required solely to meet the performance requirements for sensitivities should also apply to the spare equipment requirement. The 20 MW threshold identified as “material change” for generation in R2.5 is too small. The limit should be raised or based on a percentage of the study area’s installed generating capacity. R2.8 should be deleted. It is not necessary for reliability. What will be done with this information on the “largest Consequential Load Loss and the associated event caused by any P1 event and any P2 event” if it is documented? R2.9 should be deleted. It is not necessary for reliability. It will be difficult to determine the maximum permissible Non-Consequential Load value. It will end up being based on cost (monetary, societal, environmental, etc.), which is dependent, among other things, on the types of load being served. It very well may be a case by case situation.
R3.1 should be clarified. Suggested clarification: R3.1 - "Studies shall be performed to determine whether the BES meets the performance requirements in Table 1. A reduced set of contingencies can be simulated based on a list created in requirement R3.4." As currently drafted, R3.3 is not a requirement. Without the statements in R3.3.1-R3.3.4, R3.3 is simply a phrase. Sub-Sub-Requirements R3.3.1 through R3.3.4 should be bullets under R3.3, with the language in R3.3 modified so that it becomes the requirement to conduct contingency analyses that address the four resulting bullets R3.3.2 is unclear as drafted. The minimum steady state voltage limitation for synchronous generators is not a very meaningful value. All generators with an automatic voltage regulator will maintain the set point voltage until the VAR capability of the generator is exceeded, and then the voltage will deteriorate. Requirement R3.4 also needs to be clarified as follows: R3.4 - "A reduced list of Contingencies can be developed for System Performance evaluation in Requirement R3.1 that includes those Planning Event Contingencies that are expected to produce more severe System impacts based on system performance as required in Table 1. “ The Statement at the end of R3.4 and R4.4 says “rationale for the Contingencies selected for evaluation shall be available as supporting information and shall include an explanation of why the remaining Contingencies would exhibit better system performance." The statement does not make sense and should be deleted since the contingencies selected are those to produce more sever system performance. R3.5 – We disagree with the requirement to explain why remaining Extreme Contingencies would produce less severe System results than the ones selected for study. The first part of the requirement requires identification of events that produce more severe System impacts. The reason the others were not selected is because they were less severe or non-credible. In any case, theoretically, there can always be a more severe Extreme Contingencies than the one selected for study. For example, if the Extreme Contingency studied were simultaneous loss of 3 transmission lines with failure of redundant RAS, then simultaneous loss of 4 lines with failure of 2 sets of redundant RAS would be more severe. Listing all possible extreme events could result in a limitless list.
Requirement R4 should be consistent with R3. Suggested edit for R4. - "For the Stability portion of the Planning Assessment, each Transmission Planner and Planning Coordinator shall perform analysis for the Near-Term Transmission Planning Horizon studies in Requirement R2.4. The studies shall be based on computer simulations using models developed from the data provided in Requirement R1." R4.1 should be clarified consistent with comments to R3.1. Suggested

clarification for R4.1 - "Studies shall be performed to determine whether the BES meets the performance requirements in Table 1. A reduced set of contingencies can be simulated based on a list created in requirement R4.4." As currently drafted, R4.3 is not a requirement. Without the statements in R4.3.1-R4.3.3, R4.3 is simply a phrase. Sub-Sub-Requirements R4.3.1 through R4.3.3 should be bullets under R4.3, with the language in R4.3 modified so that it becomes the requirement to conduct contingency analyses that address the three resulting bullets. R4.3.2 – it is not clear what is required to be modeled. Typically a generator may have 10 or more protective relays. Is the intent to model all relay protection? The existing commercial programs do not have sufficient models or capacity to do that for all generators in the system. Requirement R4.4 also needs to be clarified as follows: R4.4 - "A reduced list of Contingencies can be developed for System Performance evaluation in Requirement R4.1 that includes those Planning Event Contingencies that are expected to produce more severe System impacts based on system performance as required in Table 1. R4.5 – We disagree with the requirement to explain why remaining Extreme Contingencies would produce less severe System results than the ones selected for study. The first part of the requirement requires identification of events that produce more severe System impacts. The reason the others were not selected is because they were less severe or non-credible. In any case, theoretically, there can always be a more severe Extreme Contingency than the one selected for study. For example, if the Extreme Contingency studied were simultaneous loss of 3 transmission lines with failure of redundant RAS, then simultaneous loss of 4 lines with failure of 2 sets of redundant RAS would be more severe. Listing all possible extreme events could result in a limitless list.

The term proxy is unclear. Please provide an example or an explanation of proxy.

We believe that references to FERC Orders should not be included in requirements of standards. This comment also applies to M7.

No

Clarification is needed on the use of UVLS. Is it acceptable or not. Typically UVLS relays are modeled in the study. Not allowing any load shedding as a result of UVLS relays could result in very costly fixes for a very small amount of remote load. If the Non-Consequential Load Loss Allowed column is No, is load disconnecetd from the system by UVLS a violation? What about Supplemental Load Loss or UFLS?

No

P4: Under the event column it should clarify and state language similar to that of P5 (Loss of multiple elements caused by a stuck breaker). In addition, this is a multiple contingency condition and may result in loss of more than 2 elements. As such, this is a low probability condition and loss of Non-Consequential load should be allowed for EHV. We disagree with raising the bar for EHV for P4.

We agree that TPL-005 and TPL-006 appear to have been adequately covered in the draft TPL-001-1 as currently written. However, we will need to review this assessment after TPL-001-1 is finalized. In addition, there is no place to state our concerns for Section D. so we've added it here. We question the "not applicable" entry under Section D 1.1.2. What does it mean when the reset period is not applicable? Does it mean there is no reset period, so all non-compliance in all prior years will be counted as prior violations when considering non-compliance in future years? OTHER COMMENTS: Would like to see TPL-001-1 more specifically address system performance required for radial load areas served by multiple transmission circuits (unequal capacity) from a single source substation. For example, a radial load served by a single circuit 115-kV line and a single circuit 230-kV line. For a single contingency loss of the 230-kV circuit, cannot serve peak load area demand. Is this situation meant to be covered by Category P1 in TPL-001-1? I don't see anything similar to TPL-002-0a, Category B, Note b under Loss of Demand.

Group

Western Area Power Administration

Since the modeling data used for the Planning Assessment is initially created and governed per Mod-10 & Mod-12 Standards, this requirement should be clarified to include “maintain revisions of the modeling data required to perform the Planning Assessment” and not just "maintain system models for performing the studies needed to complete their Planning Assessment”.

Short-circuit studies as related to maintaining adequate protection devices and systems are normally performed either by a specific System Protection Group/Department or System Maintenance Department and should not be in this requirement, but Post-Transient Analysis to mitigate voltage collapse scenarios should be included (includes R2.5.1 & R2.5.2). Also, System Protection including mitigation of short-circuit duty above installed facilities capabilities or for new planned facilities are already covered by the PRC Standards and need not be included and duplicated in the TPL Planning Standard such as in R2.3 & R2.7.

R3.3.3 should be covered in the PRC Standards. While R3.3 is labeled as “Contingency analysis”, R3.3.4 is related to Steady State control and therefore should not be within R3.3.

R4.3.3 need not include the operation of exciters and power system stabilizers as modeling of

these parts of a generation system is already covered in Mod-12 & Mod-13 Standards and therefore are inherent in the dynamic analysis conducted using a program such as the GE PSLF or PTI power system simulation programs.

Yes

Yes

There is information within the notes that is not required to correctly understand and apply the TPL Standard. Examples are: 1. Note 1.a.i – the 2nd sentence is not needed to say what is not an out-of-step occurrence. 2. Note 9 is not needed to clarify what “internal” means.

Yes

Yes

Individual

Edward J Davis

Entergy Services, Inc

• Planned facilities and planned changes to existing facilitiesshould be further defined to ensure facilities or changes that are unlikely to be constructed are not included in the models. See the proposed definition of “planned facilities” in the comments provided to question #8. Facilities included in the models should be only those projects that are committed to by the Transmission Owner or other users of the transmission grid. Consistent with the standard’s requirement to include only “firm transmission service”(R1.1.4), uncommitted facilites should not be included because an oversubscription of the grid could occur. • R1.1: Please clarify what the SDT means by “models for the Planning Assessment shall present”, expecially for facilities such as circuit breakers, protection system equipment, and new technologies. Models also need to represent existing facilities. • R1.1.2: The phrase, “for each year of the Near-Term and Long-Term Transmission Planning Horizon”, should be revised to remove “each year” because there may not be studies in each year. • R1.1.4: Firm Transmission Service - a single source can have transmission service to multiple sinks, and can be associated with transmission service in excess of the capacity of the source. There is a lack of clarity regarding the means by which Firm Transmission Service, a marketing term, is to be included in planning models. Not sure if this is applicable to Requirement 1 or 2.

• The "study area" referred to in R2.3 should be defined. Does it mean external contingency events should be evaluated, or, the effects of internal contingency events on external parties. • It should be clarified that generating facilities are not included in R2.1.4. The strategy may include agreements to share spare equipment among facilities, generation owners, and transmission owners. • In R2.6.4 what is "prudent"? Who decides what is prudent? Recommend that the word be stricken. • R2.6.4 is in conflict with the Implementation Plan. The Implementation plan omits P1 as an event where the “bar has been raised” but R2.6.4 allows the use of non-consequential load and firm transmission service curtailment. Clearly, the bar has been raised for any event, including P1, which allowed the curtailment of non-consequential load or firm transmission service in the existing standard. • In R2.9 is the team requiring that a criteria be set by each Transmission Owner to set a maximum level of non-consequential load loss allowed by that Transmission Owner, or, that the amount of non-consequential load curtailment needed to meet the requirement be documented? • What is the rationale for being so prescriptive in requiring specific years to be studied in R2.1.1? Why not allow the TP and/or PC to decide on the three years to be studied in the Near Term? • In the subrequirements of R2.1.3 and R2.4.3, the use of the word “timing” is unclear. Consider using “in service date” or “schedule for”. • R2.1.4: The spare equipment strategy is too severe. The requirement should take into consideration the probability of occurrence of the events. Losing a transformer followed by the loss of a generator and a second transmission element is very unlikely. Non-consequential load loss should be allowed for this type of analysis. • With the elimination of the distinction between system and generating plant stability studies, the blanket requirement in R2.5.1 that all stability analyses be five calendar years old or less, regardless of any material changes to the system, would cause needless work to be performed on those plants or areas of the system where no changes are occurring. Recommend adding the following to the end of R2.5.1: “unless justification can be provided to demonstrate that the results of an older study are still valid.” • In R.2.4.1 it is mentioned that an aggregate System Load model that represents dynamic behavior of the load is acceptable. Does it mean that load at every bus in the study area has to be represented with an aggregate load model? This could be very cumbersome effort and we are not sure whether the software program can handle this magnitude of dynamic data. To help address this, revise “Load” to be “Load that could impact the study area is acceptable. • In Requirement R2.6.2, please clarify the definition of "project initiation date". • Please explain the reason why Requirement

R2.8 is needed in the Assessment and how does reporting the largest Consequential Load Loss impact reliability? • Please explain the reason why Requirement R2.9 is needed in the Assessment and how does reporting the largest Non-Consequential Load Loss impact reliability? • Please clarify the use of the word “permissible” in the phrase “maximum permissible Non Consequential Load Loss”.
• In R3.5 what would constitute "an evaluation of possible actions designed to reduce…" R3 should be broken into two pieces where the near term portion could be a Medium VRF but the long term section should be a Low VRF. Violations occuring in the longer term horizon are subjective and assumptions concerning future plans too broad to justify a Medium VRF. • In Requirement R3.1, it is suggested that the word "contingency" be added to describe the lists created in R3.4.
• In R4.5 what would constitute "an evaluation of possible actions designed to reduce…" • R4.3.2 requires that voltage ride through capability be analyzed. It is not clear what should be analyzed (e.g. auxiliary loads, generator protection, generator capability, etc.) This requirement needs more clarity. • R4.3.2 – By in large, the industry does not have the input data or the methods to do this. It would seem necessary to have PRC-024 approved before this can be met.
• M5 doesn’t make any sense. Need to revise this Measure so that it fits the Requirement R5. Also need to revise the Data Retention discussion in Section 1.4 to align with R5. • In the VSL associated with R5, we believe that failure to define and document the proxies should be a moderate VSL.
No comments.
• This requirement is addressed through FERC Order No. 890 (9 principles of transmission planning).
No
• Include a definition of “planned facilities”: Facilities that address the near-term deficiencies and have been approved with a financial commitment. • In Posting #2, undervoltage load shed, underfrequency load shed, and Special Protection Schemes were considered to be Non-Consequential Load Loss. Are these now no longer considered to be Non-Consequential Load Loss but instead now considered to be Load Reduction, Supplemental Load Loss, or something else?
No
• P2.1 should allow the shedding of load along the line that would be served radially to mitigate overloads or undervoltages on the radial line. Doing so would clearly not result in degradations to the BES but only the local area served by the radial line. • P4.5 is an extremely unlikely occurrence and should be equivalent to P4.6. • P5 should not be a planning event. PRC standards address Protection systems. The complexity associated with identifying and simulating such events is unknown and the defense of assumptions made and events simulated will lead to inconsistency in compliance and enforcement. Industry accepted proxies for such events could be developed that would allow for efficient identification of areas needing further detailed study. Attempting to intermingle protection system operation with BES performance will be nearly impossible to implement given current technologies. • In general, the entire table should be reconciled, one way or another, with MOD standards governing ATC/AFC. If multiple contingencies, protection system failures, breaker failures, and other less likely events must be planned for, then ATC/AFC processes should be equally limited, at least for long term service. Any service granted on a simple N-1 basis should be Conditional Firm. Anything less than interconnection-wide application of more stringent AFC/ATC evaluation processes commensurate with the long term planning standards will result in the shifting of costs and risks from wholesale users to retail rate payers.
Yes
• Units obligated to re-dispatch must include all Network Resources
No
• P1 events needs to be correctly classified as “raising the bar”: P1 events should be included in the bulleted list of areas where the “bar was raised”. The paragraph beginning at the bottom of page 2 of the Implementation Plan clearly states that the bar was raised “because loss of Non-Consequential Load or interruption of firm transfers is no longer allowed”. Since P1 events in the existing standard allow this, the revised P1 events should be categorized as a raising of the bar. • Effective date needs to be extended: Additionally, in the areas where the bar has been raised, the effective date needs to be extended to at least 7 years. Siting (environment assessment and permitting, right-of-way acquition, regulatory approvals) alone for many of the facilities likely needed can take 3 years or more in some areas. Likely delays due to litigation and affected stakeholder intervention must be considered. In addition, while the SDT has collected some cursory estimates of the costs which may be passed on to end-use customers, no discussion of the intended or expected increase in reliability has been published. Other considerations that will have an impact on the effective date are construction outages on the bulk transmission system and competition of resources (human and material). • Effect on reliability is not adequately quantified: Since one of the SDT’s objectives is to ensure that “requirements set at an appropriate level to ensure reliability,”what reliability metrics are expected to be impacted? By

how much? What will the billions of dollars spent on transmission procure in terms of reliability to ratepayers? To what degree would the proposed standard decrease the probability of a blackout? If a blackout were to occur, would the proposed standard tend to decrease or increase the size and magnitude of the event? • More time is needed for entities to determine the appropriate dynamic load model required by R2.4.1. We recommend at least 36 months before this requirement becomes effective. • Since breaker duty is a new “raising the bar” issue - should there also be a 5 or more year implementation plan for this as well? • If a Transmission Planner has a Corrective Action Plan identified within the accepted time limitations but the facilities identified in the CAP cannot be implemented in time, would the TP be found non-compliant on the TPL-001-1? • If contingencies in one utility’s system results in issues within another utility, who is responsible for studying the contingencies and who would be responsible for documenting the CAP?

Individual

Joe Knight

Great River Energy

R1.1 is just repeating what should already be in the MOD-010 and MOD-012 requirements. Why re-iterate this in the TPL standard? The planners are expecting that the model building process will already include these components listed in R1.1 otherwise there wouldn't be a functional model. R1.1.1 may be the only thing that needs to be identified in R1 as any known long-term outage or retirement of a facility may have happened after the model building process. If R1.1 is kept I would suggest removing "Models for" so that R1.1 reads "The Planning Assessment shall represent: R 1.1.1 says the assessment shall represent planned outages if specifically known. It does not however distinguish the length of the outage to be considered. Should a 1 week maintenance outage in Year five be included? Should a 2 year complete rebuild outage lasting through year two and three be included? It is GRE's opinion that the SDT needs to add a comment about the length of the planned outage and its relevance to the assessment. In the Violation Severity Levels, R1 seems to be weak since any solved model should meet this requirement. Again this would seem to be more related to the MOD010 and MOD012 process. R1 should focus on documenting changes that are being preformed against the data that was submitted in MOD-010 and MOD-012 process.

R 2.1, 2.3, and 2.4 need consistency. 2.1 says "The Near-Term Transmission Planning portion of the Steady State analysis..." 2.3 says "The short circuit portion of the Planning Assessment ... addressing the Near-Term Planning Horizon..." 2.4 says "The Near-Term Transmission Planning portion of the Stability analysis..." These three sentences confuse the order. As I understand the Planning Assessment has two parts, a Near-Term portion and a Long-Term portion. Each of those parts has three components, a Steady state component, a Short Circuit component, and a Stability component. I believe the standard's language should be structured as such. R2.1.3- The last bullet would seem to indicate that planners have the capability of predicting the future. The statement would seem to fit more in an operating standard. A suggested revision would be: Known long-term transmission outages with duration greater than one year R 2.1.4 addresses the spare equipment strategy. What is the scope of this sensitivity? Is the intent to do only a full steady state analysis with regard to long lead time spares? R2.6.2 would seem to be placing the planner again in the capability of predicting the future. Coming up with specific dates based on budgets, projected growth rates, potential permitting issues, and material delivery schedules would make it difficult to define an initiating date and an in-service date. An in-service season and year may be more applicable in a planning study for near-term projects. GRE is not sure why an initiating date is of relevance in an assessment.

R3.3.3 The relay loadability section needs better definition. Is this identifying that: if the relay load limit is the most Limiting Element of a transmission line how it would be handled if it is overloaded considering that there may be some margin before opening the line and/or if the line reaches a certain overload level based on a non-Relay Load Limit being the Most Limiting Element that the relay load limit should be analyzed to see if it will actually activate an opening of the transmission line or the planners need to review all of the relays associated with all transmission lines within the model and indicate if loadability is a concern for each contingency analyzed. There are a lot of lines, (probably the majority), that have not defined a relay capability within the rating fields of the model! This would seem to be a FAC-009 issue. As a discussion point on R3.3.3, it would seem that relay loadability should be addressed in FAC-009 and the Model Building process. Putting this burden in the planning assessment will be difficult to determine if the Most Limiting Element within the model is not a relay load limit as those parameters typically are not the Most Limiting Element. Every line in the model may need to be defined as to what its relay loadability is to meet this requirement. Our regional model build reports a Most Limiting Element, a short term emergency level, and a long-term emergency for the three ratings available within the model. It would seem that the long-term emergency field should be replaced with a Relay Load Limit value such that the R3.3.3 would not be as great of a burden on the planner.

No

Why is the P needed in defining the category? They all have a P. Top note f and i should reference the Planning criteria established by the Planning Coordinator (or the Transmission Owner if more restrictive). The Transmission Owner is typically the one that sets the limits on their facilities. The Planner just works for the Owner.

Individual

Pat Harrington

BC Hydro

Comments: Consider just referring to the MOD series of standards, not specific individual MOD standards because the numbering of the MOD standards could change and additional relevant MOD standards could be added. Consider rewording the second sentence to read, “The data and models shall meet all requirements of the MOD series of standards.” The MOD standards should include the requirements of regulatory authorities and other legal obligations and need not be repeated in the TBL standard(s). R1.1.2: Consider changing to, “New planned Facilities and planned changes to existing…” and changing the fifth bullet to read, “Normal actions of Protection System equipment” R1.1.3: Consider changing to, “End-use customer loads and generators” [how small loads are aggregated should be covered in the MOD standards. A key point is that large industrial customers with significant generation that reduces their net peak demand should not be represented simply as a net load since that would not properly model the dynamic impacts of the load and generation components]. R1.1.4: Consider changing to, “Worst-case transfers on Firm Transmission Service Reservations”. R1.1.5: Consider removing this requirement. It should be covered by R1.1.4 R1.1.6: Consider changing to, “Generating units” [the MOD standards should specify the details like how exciters, governors and associated control equipment must be modeled] Comment on M1: Consider changing to, “…using data consistent with the MOD series of standards, simulating ….” Consider just referring to the entire series of a particular standard, not specific individual standards because the numbering of the standards being referenced could change and additional relevant individual standards could be added.

Comments: Consider changing the second sentence to read, “This Planning Assessment shall use current or past studies, document assumptions, document results and shall cover all analyses needed to clearly demonstrate that the proposed system expansion plan meets all planning criteria and standards.” This standard should not limit the studies to only “steady state analyses, short circuit analyses and Stability analyses” none of which seem to be defined anywhere. In some cases it would be appropriate for planning studies to cover analyses of such phenomenon as electromagnetic transients, sub-synchronous resonance, ferroresonance and harmonics. The fact that “Stability” is capitalized suggests that it refers to the definition of “Stability” in the NERC glossary, but that definition reads just, “The ability of an electric system to maintain a state of equilibrium during normal and abnormal conditions or disturbances”, but stability analyses (often more properly termed “dynamic simulation studies”) usually encompass more than simply electromechanical or voltage stability. Usually voltage and frequency excursions are also analyzed and perhaps temporary overcurrent also (eg, assessing temporary overvoltage levels across series capacitor banks).

R3.3.3: Consider changing it to read, “Demonstrate that, for all Transmission lines, relay loadability standards are met in accordance with the PRC series of standards”

Comments: Consider changing R4.3.2 to, “Confirm proper generator performance under anticipated conditions including low voltage ride-through capability” In R4.3.3, change “VAR” to “var”. The IEC has adopted the name var, var (volt ampere reactive power), for the coherent SI unit volt ampere for reactive power. (see: http://www.iec.ch/zone/si/si_elecmag.htm#si_rpo). Is there an overlap between R4.3.3 and the MOD standards? If so, perhaps R4.3.3 should be deleted. If not, perhaps the MOD standard should be expanded to include this. Consider adding R4.3.4, “not simulate any operator intervention”

Comments: The meaning of the word “proxies” in this context seems uncommon making the requirement unclear. Perhaps “proxies” should be replaced with “criteria” or “criteria or proxies”.

No

Comments: In almost all instances, the word “horizon” should be changed to “period” in both the definitions and throughout the standard. The word horizon refers to the end of the period; it literally means, “the limit of one’s mental outlook” and the horizon is normally the furthest we can see. A long-term horizon-year study would be a study of conditions expected in the last year of the long-term planning period (often the 10th or 20th year). A long-term horizon-year study

would not be expected to refer to a series of studies of each year in the long-term planning period.

No

Comments: Note “d”: The term “Normal Clearing” is not well defined. Consider adding a definition in this standard or changing the NERC Glossary definition of “Normal Clearing” to read, “A protection system operates as designed and the fault is cleared in the maximum time that a properly functioning protection system would be expected to take to clear the fault, considering tolerances in normal protection operating times and circuit breaker interrupting times” No generating unit or units totaling more than the Contingency Reserve of the Balancing Authority (or Reserve Sharing Group if applicable) shall be disconnected from the System by a Special Protection System Note “e”: Consider changing to, “For all Planning Events, planned System adjustments such as Transmission configuration changes and redispatch of generation are allowed if such adjustments are automatic (ie, implemented by a NERC-certified Special Protection System, SPS) and executable within the time duration applicable to the Facility Ratings. For P1 and P2 events, (a) generation shedding shall be limited to the normal level of Contingency Reserve of the Balancing Authority (or Reserve Sharing Group if applicable) that would be carried in the control area under the system conditions being studied and (b) no manual operator actions should be necessary to ensure Facility Ratings are not exceeded. Note that, in the operating time frame, the operator would immediately take whatever actions and system adjustments are needed to prepare for the next set of possible contingencies”. It should be recognized that this will result in a higher transmission planning standard than the previous wording and that should be seen as a desirable outcome of updating the NERC standards since transmission system reliability (or lack of it) is the impetus for the whole Mandatory Reliability Standards (MRS) process. It should also be emphasized that PLANNING standards are necessarily conservative, simple and easy to apply since in the planning time frame all possible circumstances that might be encountered in the operating timeframe cannot be assessed or nothing would ever get built. If operator action is permitted “if such adjustments are executable within the time duration applicable to the Facility Ratings”, how will that be measured consistently to ensure the standard is met? One planner might count on five operators having nothing to distract them from adjusting the output levels of 10 plants to reduce the load on a line to below its 10-minute overload rating, whereas another might be more conservative and assume some of the operators may be busy with other things and be more conservative in estimating how much can be accomplished in 10 minutes. If no operator action is permitted, the standard is easily measured and a more secure system results, one of the main objectives of the MRS. The addition of the requirement that criteria are met without operator action is consistent with R3.3.1 that states “[Contingency analysis shall] simulate the removal of all elements that the Protection System and other automatic controls are expected to disconnect for each Contingency without operator intervention [emphasis added]”. Performance Category P7: Consider changing the first event to, “All circuits on common structures” and consider changing the fault type to 3-phase. Extreme Events (Steady State): Consider changing item 1 to read, “With an initial condition of a single generator, Transmission Circuit, DC Line (one pole), shunt device or transformer forced out of service and prior to System adjustments, a second generator, Transmission Circuit, DC Line (one pole), shunt device or transformer is forced out of service.” Extreme Events (Stability): Change item 1 to read, “With an initial condition of a single generator, Transmission Circuit, DC Line (one pole), shunt device or transformer forced out of service and prior to System adjustments, apply a 3Ø fault on a second generator, Transmission Circuit, DC Line (one pole), shunt device or transformer.” Change item 2.g to read, “3Ø fault on all Transmission lines on a common Right-of-Way. Simultaneous 3Ø faults on all lines on a common right of way seems more likely (plane crash, avalanche, earth quake, wildfire) than simultaneous SLG faults. Footnote 1: Consider changing Item 1.a.I to read, “For Planning Events P1 and P2: No generating unit or units….” And consider adding the following sentence, “No generating unit or units totaling more than the Contingency Reserve of the Balancing Authority (or Reserve Sharing Group if applicable) shall be disconnected from the System by a Special Protection System”. Footnote 8: Consider changing to, “Opening of Breaker(s) w/o fault in category P2 includes the situation in which one end of a normally networked Transmission circuit becomes open-ended, possibly resulting in voltage deviations outside acceptable limits especially at the open end of the line”. Using the phrase “Opening of Breaker(s) w/o fault” that is used in the “event” column of category P2 will help people make the connection to the footnote.

No

Comments: Consider changing Footnote 10 to read, “Curtailment of firm Transmission Service, when coupled with the appropriate re-dispatch of resources obligated to re-dispatch, is allowed both as a System adjustment (as identified in the column entitled [“title” is a noun, not a verb and “titled” is an adjective meaning having a title, esp. of nobility] ‘Initial System Conditions’) and a corrective action provided both are accomplished automatically by a NERC-certified SPS, where it can be demonstrated that Facilities remain within applicable Facility Ratings and those adjustments do not result in the shedding of any firm Load. Where limited options for re-dispatch exist, sensitivities associated with the availability of those resources must be considered. Where Facilities external to the Transmission Planner’s planning region are relied upon, Facility Ratings

in those regions must be considered.

Individual

Marie Knox

Midwest ISO

Generally the Midwest ISO agrees with FirstEnergy's comments regarding this requirement. However, if the SDT insists on keeping this requirement as is then we propose the following corrections specific to each requirement. Specific Comments for Requirement 1: A) Under R1 there is language that references "other data sources"; can the SDT please offer some clarification on what "other data sources" are to be? Could other data sources be Tariff requirements? B) Again under R1, the Time Horizon of the TPL standards is intended for years one through 10; However the Time Horizon shown in R1 only says "Long-term Planning". By definition of Long-Term Transmission Planning Horizon this covers years 6 through 10 and beyond. Suggestion to change the Time Horizon to read: "Near-Term and Long-Term Transmission Planning". C) Under R1.1.1 it is required that models represent planned outages of generation and transmission facilities, if specifically known. This does not allow or require a Transmission Planner or Planning Coordinator to include outages due to maintenance and/or due to construction programs where certain facilities are out of service during various phases of construction, as part of the Assessment. For this reason, we believe the following language for R1.1.1 would improve this requirement: Planned outages of generation and Transmission Facilities if specifically scheduled or planned for. D) Under R1.1.1 we suggest adding sub-requirement R1.1.7 Generation dispatch patterns deemed appropriate by the Transmission Planner and Planning Coordinator. This clarifies that when building System models, generation dispatch is part of the model building process. E) Under R1.1.2 there is uncertainty around the language of "New planned Facilities". We offer the following definition for Planned Facilities to be added to the definition section of this standard and further added to the NERC Glossary of Terms: Planned Facilities – Generation and Transmission Facilities that are expected to be implemented with an in service date prior to the plan year being studied. F) Under R1.1.2 a bullet should be added for "Relay Loadability Limitations". The standard requirements for relay loadability are included in PRC-023-1.

Opening Remarks. Specific Comments for Requirement 2: A) Under R2, the Time Horizon of the TPL standards is intended for years one through 10; However the Time Horizon shown in R2 only says "Long-term Planning". By definition of Long-Term Transmission Planning Horizon this covers years 6 through 10 and beyond. Suggestion to change the Time Horizon to read: "Near-Term and Long-Term Transmission Planning". B) Under R2.1 there is a reference to qualified past studies in R2.6. We believe that this reference should be pointing to R2.5 not R2.6. C) Under R2.1.3 there is ambiguity in the third bullet language "…new or modified Facilities…" and we believe that this language should mimic that of R1.1.2 in order to improve this requirement. The third bullet should read: Timing of the installation of new Planned Facilities or changes to existing Facilities. D) Under R2.1.3 there is ambiguity in the fourth bullet language "…capability…" and we believe that this language should read: Reactive resource capability (Generator, STATCOM, SVC, other…etc). We believe that this language addition improves this requirement. E) Under R2.1.3 there is ambiguity in the seventh bullet language "…Transmission outages…" and we believe that this language should read: Planned duration or timing of specifically scheduled or planned for Transmission outages. This language mimics similar language suggested above in R1.1.1 (letter C on page 3 of 9) F) When a spare equipment strategy does not cover the long lead time unavailability as stated in 2.1.4, will the system be treated as "normal system condition" and Table 1 requirements or as having a contingency from which system adjustments are to be made prior to subsequent events. We believe that this task will be burdensome for large entities such as RTOs and we are not clear on the benefit that this requirement brings. For example: If in an RTO system where a party has spare equipment, how can the RTO ensure that a spare part from one asset owner can be made available to other asset owners? G) Under R2.2 a System peak load study is required annually for one of the years in the assessment period. R2.2.1 requires the assessing entity to extend their planning assessment to accommodate any known longer lead time projects that may take longer than ten years to complete. It does not make sense to study the ten year horizon, find a problem in year ten which has a solution that required twelve years to build. For compliance with this standard, you would need to find another solution that can be built within ten years as opposed to the suggested language in R2.2.1 of extending the planning assessment beyond ten years to accommodate the solution that falls outside of the Long-Term Planning Horizon. No project solution greater than 10 years should be acceptable because it falls outside the Long-Term Transmission Planning Horizon. Suggestion to strike sub-requirement R2.2.1 from this standard. H) Under R2.3 the second sentence requires that "The analysis shall determine the maximum short circuit interruption duty on fault interrupting devices using the System short circuit model with any generation and Transmission Facilities in service which could impact the study year". We suggest changing the language to read: "The analysis shall determine the maximum short circuit interruption duty on fault interrupting devices using the System short circuit model with Planned Facilities in service which could impact the study year". The definition of Planned Facilities was suggested to be added in the comment above in R1.1.2

under letter (E). I) Under R2.4 the second sentence requires states “The following studies are required”. We suggest changing the language to read: “The following current studies are required”. We believe that this language addition improves this requirement. J) Under R2.4.1 the first sentence leaves to much ambiguity as to who determines whether severity of system peak or off peak as well as whether the system load levels appropriately represents the dynamic behavior of loads. If the monitoring agency wishes to make this determination than it should be explicitly written here in this requirement. If the assessing entity is to make this determination than we offer the following language suggestion that we feel will improve this requirement. “For one of the five years, the more severe System peak or off peak System load level, as judged by the assessing entity, shall be used which in the judgment of the assessing entity appropriately represents the dynamic behavior of Loads including consideration of the behavior of induction motors”. K) For R2.4.2, we suggest striking this requirement altogether and add System Off-Peak to R2.4.1 above in R2.4.1 under letter (I). L) Under R2.4.3 there is ambiguity in the third bullet language “…new or modified Facilities…” and we believe that this language should mimic that of R1.1.2 in order to improve this requirement. The third bullet should read: Timing of the installation of new Planned Facilities or changes to existing Facilities. M) Under R2.4.3 there is ambiguity in the fourth bullet language “…capability…” and we believe that this language should read: Reactive resource capability (Generator, STATCOM, SVC, other…etc). We believe that this language addition improves this requirement. N) The sub requirement R2.5.2 states that for steady state, short circuit, or stability analysis; the “present System model” shall not include any material changes, such as…..etc. The present language in this section is vague and requires discretion on the part of both the Transmission Planner and the Planning Coordinator performing the assessment. For example, new transmission enhancements may have been added since the previous System model was developed. In general, such topology enhancements will only improve reliability and would not necessitate re-assessment with a newly updated System model. In addition, any significant generator additions would have been evaluated with a full separate generator interconnection study at which the full reliability of the System would have been taken into consideration. For this reason, we believe the following language for R2.5.2 would improve this requirement: For steady state, short circuit, or Stability analysis: the current System model of the assessed plan year shall not include any changes material to the assessment, as judged by the entity performing the assessment, such as, generation or Transmission additions/removals, or topology changes that have occurred in the intervening period and would impact the study year. Material generation changes could include: O) Under R2.6.1 the fifth bullet regarding the use of Operating Procedures needs to be made clearer. We believe that the following language will improve this requirement: Use of Operating Procedures specifying how long they will be needed as part of the Corrective Action Plan. Operating Procedures may not include Non-Consequential Load Loss when not permitted in Table 1. P) Under R2.6.1 the sixth bullet regarding the use of rate applications, DSM, new technologies or other initiatives can be improved with the following language additions: Use of rate applications, DSM, new technologies or other demand side initiatives can be improved with the following language additions. Q) Under R2.6.2 the language regarding project initiation date is vague. We suggest the following definition to be added to this standard and further added to the NERC Glossary of Terms: Project Initiation Date – A date in which Planned Facilities are expected to break ground. R) Under R2.8 please add a coma between the words event and caused. A PC/TP would study multiple P1 and P2 events involving consequential load loss not just the largest. Unless the SDT has a measure in mind for consequential load loss, this requirement should be removed. S) Under R2.9 please strike the word permissible and replace with necessary. It is not clear what the SDT is requesting with this requirement.

Opening Remarks. Specific Comments for Requirement 3: A) Under R3, the Time Horizon of the TPL standards is intended for years one through 10; However the Time Horizon shown in R3 only says “Long-term Planning”. By definition of Long-Term Transmission Planning Horizon this covers years 6 through 10 and beyond. Suggestion to change the Time Horizon to read: “Near-Term and Long-Term Transmission Planning”. B) Under R3.1 the “Studies shall be performed to determine whether the BES meets the performance requirements in Table 1 based on the lists created in the Requirement 3.4”. We believe that the following language will improve this requirement: Studies shall be performed to determine whether the BES meets the performance requirements in Table 1 based on the more severe contingency lists created in the Requirement 3.4. C) Under R3.3.2 the Midwest ISO generally agrees with FirstEnergy’s comments on this. D) Under R3.3.3 the Midwest ISO feels that this sub-requirement is redundant with PRC-023-2 and therefore we feel that this sub-requirement needs to be removed and replaced with our suggested bullet language under R1.1.2 – Relay Loadability Limitation (see F on page 3 of 9 above) E) Under R3.4 to make this requirement clearer, please add the following language between the words “expected to” in the first sentence: …expected by the assessing entity to… We believe that this language addition improves the clarity of this requirement. The first sentence would then read: Those Planning Event Contingencies in Table 1 that are expected by the assessing entity to produce more severe System impacts shall be identified and a list of those Contingencies to be evaluated for System performance in Requirement R3.1 created. F) Under R3.5 to make this requirement clearer, please add the following language between the words “expected to” in the first sentence: …expected by the assessing entity to… We believe that this

language addition improves the clarity of this requirement. The first sentence would then read: Those Extreme Events in Table 1 that are expected by the assessing entity to produce more severe System impacts shall be identified and a list of those events to be evaluated for System performance in Requirement R3.2 created.
Opening Remarks. Specific Comments for Requirement 4: A) Under R4, the Time Horizon of the TPL standards is intended for years one through 10; However the Time Horizon shown in R4 only says “Long-term Planning”. By definition of Long-Term Transmission Planning Horizon this covers years 6 through 10 and beyond. Suggestion to change the Time Horizon to read: “Near-Term and Long-Term Transmission Planning”.
Under R5, the Time Horizon of the TPL standards is intended for years one through 10; However the Time Horizon shown in R5 only says “Long-term Planning”. By definition of Long-Term Transmission Planning Horizon this covers years 6 through 10 and beyond. Suggestion to change the Time Horizon to read: “Near-Term and Long-Term Transmission Planning”.
A) Under R6, the Time Horizon of the TPL standards is intended for years one through 10; However the Time Horizon shown in R6 only says “Long-term Planning”. By definition of Long-Term Transmission Planning Horizon this covers years 6 through 10 and beyond. Suggestion to change the Time Horizon to read: “Near-Term and Long-Term Transmission Planning”.
A) Under R7, the Time Horizon of the TPL standards is intended for years one through 10; However the Time Horizon shown in R7 only says “Long-term Planning”. By definition of Long-Term Transmission Planning Horizon this covers years 6 through 10 and beyond. Suggestion to change the Time Horizon to read: “Near-Term and Long-Term Transmission Planning”. B) The coordination of analysis of results through an open and transparent process is already a FERC requirement thus producing a double jeopardy for those entities that fall under the jurisdiction of FERC Order 890. We recommend striking the following language in the last sentence: ...coordinating analysis of these results through an open and transparent peer review process such as described in FERC Order 890. C) Under R7 only the Planning Coordinator is required to coordinate the distribution of Planning Assessment results among adjacent PCs and any functional entity who has indicated a reliability need, coordinating analysis of these results through an open and transparent peer review process such as described in FERC Order 890. Should the TP be added to this requirement? We propose the suggested language change: Each Transmission Planner and Planning Coordinator shall coordinate the distribution of Planning Assessment results among adjacent Transmission Planners and Planning Coordinators, respectfully, and to any functional entity who has indicated a reliability need, coordinating analysis of these results through an open and transparent peer review process such as described in FERC Order 890. D) Based on the comments above in (B) and (C), our suggested requirement language is as follows: Each Transmission Planner and Planning Coordinator shall coordinate analysis in support of assessments in accordance with applicable regulatory requirements. Each Planning Coordinator shall distribute its completed planning assessment results among adjacent Planning Coordinators and any functional entity who indicated in writing a reliability related need.
No
Year One: At a minimum the SDT needs to address the applicability of this definition to include both the Transmission Planner and Planning Coordinator. The Year One definition needs additional clarification with the current calendar year. According to the definition, Year One can start any time between 12 and 18 months from a current calendar year. Suggested definition for Year One: The first year that each Transmission Planner and Planning Coordinator is responsible for conducting a Planning Assessment. This is further defined as the planning window that begins at least 12-18 months from the end of the current calendar year.
Yes
The stability studies require significantly more computer time and a more detailed model. The standard should allow the PC/TP to use judgment to manage size and complexity of the study.
Yes
Yes
The 3rd draft states that this will be addressed later in the project. Removal of these standards would not affect NERC and the RE’s obligations to perform assessments. Will the PC/TP be obligated under NERC Rules of Procedure to provide Assessments to NERC and the Regions upon request?
Group
NERC Standards Review Subcommittee
N/A
MRO NSRS proposes the following comments for R2: Modify R2.6.2 to remove the obligation to include the project initiation date. The inclusion of this date would add unnecessary work that is not needed to assure adequate BES reliability In addition, it is not clear whether “initiation” refers to the commencement of engineering, design, construction, etc. Augment R2.6.5 to include annual verification of the continued validity of the Corrective Action Plan because the value of implementation status is dependent on the status of continued validity. MRO NSRS

suggests this text: “Be reviewed in subsequent annual Planning Assessments for continued validity and implementation status . . .” Augment R2.7.2 to include annual verification of the continued validity of the Corrective Action Plan because the value of implementation status is dependent on the status of continued validity. MRO NSRS suggests this text that is similar to R2.6.5: “Be reviewed in subsequent annual Planning Assessments for continued validity and implementation status.” Remove R2.8., MRO NSRS does not know of any reason why the investigation and inclusion of the largest Consequential Load Loss caused by any P1 or any P2 events is needed to assure adequate BES reliability. In addition, all events involving Consequential Load Loss are studied, not just the largest load loss (see R3.3.1).
MRO NSRS proposes the following comments for R3. Revise the R3.3.2 text to clarify that subsequent analysis is performed on generators whose voltages are expected to fall below the minimum voltage limits. MRO NSRS suggests this text: “Consider the minimum steady state voltage limitations of all generators and identify how generators with bus voltages below its minimum voltage limits are analyzed in the subsequent steady state simulations.” Revise the R3.3.3 text to more clearly relate to the specific requirements in PRC-023. MRO NSRS suggests this text: “Incorporate relay loadability per PRC-023 and identify how relay loadability is analyzed in the steady state simulation.”
MRO NSRS proposes the following comments for R4: Add R4.3.3 text include relay loadability in the R4 (Stability) requirements to parallel R3.3.3 in the R3 (Steady State) requirement which would more clearly relate to the specific requirements in PRC-023. MRO NSRS suggests this text: “Incorporate relay loadability per PRC-023 and identify how relay loadability is analyzed in the dynamic simulation.” In R4.3.4, MRO NSRS proposes limiting the scope to automatic devices and adding the notion of “including but not limited to”. MRO NSRS suggests R4.3.4 text of: “Simulate the expected automatic operation of existing and planned control devices including but not limited to generation exciter control and power system stabilizers, static VAR compensators, power flow controllers, and DC Transmission controllers.”
MRO NSRS proposes specifying that the proxy documentation be included in the Planning Assessment and add the rationale for the proxy. MRO NSRS suggests this text: “Each Transmission Planner and Planning Coordinator shall document within the Planning Assessment any proxies used in the analysis to identify System instability for conditions such as cascading outages, voltage instability, or uncontrolled islanding. The documentation will consist of the definition of each proxy used and the rationale for the proxies.
MRO NSRS is not clear if: 1) Each Transmission Planner is to meet all the requirements including doing all the studies and all Planning coordinators are to meet the requirements including doing all the studies. Or 2) If the Transmission Planner and Planning Coordinator are to work as a team to meet all the requirements including doing all the studies. Either one of them could do various parts of the required studies. For example, maybe the PC could do the stability part so all TP's would not necessarily have to buy that software if they did not need it for other planning purposes. In the first read of this standard, it appears that the intention was number 1, which sounds awfully duplicative. But then take a look at Requirement 6. R6. Each Transmission Planner and Planning Coordinator shall determine and identify individual and joint responsibilities for performing the required studies for the Planning Assessment. [Violation Risk Factor: Low] [Time Horizon: Long-term Planning] After reading R6, it appears that number 2 was intended. Perhaps R6 should be the very first requirement in the standard. The MRO NSRS requests that the NERC SDT clarify the responsibility of the requirements of this standard.
MRO NSRS proposes expanding the scope of entities to consider, limit it to those entities that indicate a reliability need for coordination, and eliminate the direct reference to Order 890. MRO NSRS suggests this text: “Each Planning Coordinator shall establish a list of adjacent Planning Coordinators and any functional entity who has indicated a reliability need, distribute its Planning Assessment results to the listed entities and consider comments on the assumptions and results through an open and transparent peer review process.”
No
MRO NSRS suggests the following comments: Add a Consequential Generation Loss definition because both load and generation loss can be considered, but there is only Consequential Load Loss definition. MRO NSRS suggests text of: “Consequential Generation Loss: All Generation that is no longer delivered to any Transmission Facilities as a result of the Transmission Facilities removal from service by the operation of the installed Protection Systems designed to isolate fault conditions or otherwise protect the Transmission Facilities from abnormal operating conditions.” Expand the Consequential Load Loss definition to include protection for abnormal operating conditions. MRO NSRS suggests text of: “Consequential Load Loss: All Load that is no longer served by any Transmission Facilities as a result of the Transmission Facilities removal from service by the operation of the installed Protection Systems designed to isolate fault conditions or otherwise protect the Transmission Facilities from abnormal operating conditions.” Expand the Load Reduction definition to include consideration of TOP judgment and established protection schemes. MRO NSRS suggests text of: “Load Reduction: The reduction of Load that is still connected to the System, but in the judgment of the Transmission Operator or through the previous established Special Protection Systems, Under-Frequency Load Shedding programs, Over-Frequency Load Shedding program, should be reduced to overcome to lower voltage

conditions following a Planning or Extreme Event." Modify the Planning Assessment definition to more explicitly apply to the BES and the TPL-001 requirements. MRO NSRS suggests text of: "Planning Assessment: Documented evaluation of future Transmission System performance and Corrective Action Plans to remedy identified deficiencies in the BES from the steady state and stability performance requirements set forth in the TPL-001 standard." Modify the Planning Events definition more explicitly apply to the TPL-001 requirements. MRO NSRS suggests text of: "Planning Events: Events that are identified in the steady state and stability performance requirements set forth in the TPL-001 standard." Expand the Year One definition to include the PC, refer to the Planning Assessment, and refer to the current calendar year. MRO NSRS suggests text of: "Year One: The first year that each Transmission Planner and Planning Coordinator is responsible for conducting a Planning Assessment. This is further defined as the planning window that begins 12-18 months from the current calendar year." MRO NSRS would like to delete the definition of "Year One". This is already being done and adding a planning window opens entities to noncompliance for conditions i.e. Model building outside of entities control.

No

MRO NSRS suggests the following changes: MRO NSRS believes reference to the use of Load Reduction to meet steady state performance requirement was omitted in Planning Events, Steady State and Stability, Item b. MRO NSRS suggests modifying the last sentence in Item b: "However, Supplemental Load Loss and Load Reduction associated with an event shall not be used to meet steady state performance requirements." MRO NSRS proposes limiting the scope to automatic devices in Planning Events, Steady State and Stability, Item c. MRO NSRS suggests text of: "c. Simulate the removal of all elements that Protection Systems and other Controls are expected to disconnect automatically for each Contingency". Modify the P3 Category performance criteria to apply only to the loss of two generators because probability of the loss of two base load generators is an order of magnitude higher than the loss of a generator and any other transmission element. MRO NSRS suggests the listing of: the loss of transmission circuit, transformer, shunt device, and single pole of DC line be removed from the P3 Events column. The corresponding events be moved to the P6 Category by "1. Generator" to the listing in the Initial System Condition (Loss of . . .) column. Limit the scope of the simulations in Item 1 of the Extreme Events, Steady State and Stability section to automatic systems and controls. MRO NSRS suggests this text: "1. Simulate the removal of all elements that Protection Systems and controls are expected to disconnect automatically for each Contingency." Clarify the meaning of the loss of multiple circuits in Item 2.a of the Extreme Events, Steady State section by using wording similar to P7. MRO NSRS suggests this text: "a. Loss of three or more circuits that share a common structure." Clarify the reference to actual, historical operating experience in Item 3.b of the Extreme Events, Steady State section. MRO NSRS suggests this text: "b. Other events based upon actual operating experience that may result in wide area disturbances." Clarify the reference to actual, historical operating experience in Item 2.i of the Extreme Events, Stability State section. MRO NSRS suggests this text that is similar to Steady State, Item 3.b: "i. Other events based upon actual operating experience that may result in wide area disturbances." Further clarify the applicable shunt devices in Footnote 7 with this suggested text: "7. Requirements which are applicable to shunt devices, also apply to FACTS devices that are connected to ground, but not instrument voltage transformers or surge arresters."

Yes

N/A

No

MRO NSRS offers the following comments. The last paragraph should be removed from the Effective Date section. This paragraph contains requirements and describes compliance procedures, rather than stating effective date details. If any requirements regarding Corrective Action Plans are included, then they should be placed in the R2 section. If descriptions of compliance procedures related to Corrective Action Plan implementation are deemed to be necessary, then they should be placed in NERC procedure documents. This standard should not contain any requirements regarding the implementation of Corrective Action Plans. The implementation of transmission system action plans depends on the actions (e.g. financing, regulatory approval, legal services, engineering, construction, commissioning) of many different entities, other than PCs or TPs. So, PCs and TPs should not be held responsible for the implementation of action plans since they have little or no control over the activities related to implementation. The standard could include requirements that obligate PCs and TPs to develop Corrective Action Plans that are executable (i.e. plans that are based on lead times that provide reasonable assurance that the planned facilities can be placed in service by the time that they are needed) or devise revised Corrective Action Plans when they learn that the actions plans are not expected to be implemented by the intended in-service date. The standard could also include requirements that obligate PCs and TPs to establish and apply project implementation lead time assumptions that are derived from historical experience and the implementation lead time projections from the applicable TOs, GOs, and DPs. Remove or modify the 60 month effective date statement because it's impractical and unreasonable. The effective date for performing analyses and developing subsequent Corrective Action Plans is 24 months. This leaves only 36

months to expect that the more stringent Corrective Action Plans would be implemented. It is improbable that all action plans related to BES facilities, especially above 300 kV could be implemented. Some EHV projects can take 5 to 10 years to implement depending on the size, complexity, and controversial nature of the project. MRO NSRS suggests that the effective date be stated in a more “implementation dependent” rather than a “fixed timeframe” manner. Consider wording such as “tripping of Non-Consequential Load or curtailment of Firm Transmission Service (in accordance with Requirement R2.6.4) is allowed until Corrective Action Plans based on TPL-001-1 analyses are implemented”.

Individual

Jessica Rice

NV Energy

The language in R1.1.2 needs to be clarified. Many of these facilities are not explicitly included in the models in the base cases (circuit breakers, protection system equipment, control devices). The language should be clarified to require modeling the effect of the devices or the effect of the removal of the devices where it is expected to impact the study outcome. Clarity is needed to explain the difference between R1.1.4 and R1.1.5. Expected interchange can be reasonably projected, but information on Firm Transmission Service is not always known or reasonably projected for future cases. For consistency with the 2nd bullet under R2.1.3, R1.1.4 should refer to expected transfers rather than Firm Transmission Service. With this change, R1.1.4 and R1.1.5 would be redundant and one should be deleted. We disagree with the inclusion of the words “including requirements of regulatory authorities and other legal obligations” at the end of R1. Entities already are required to do this. It does not need to be included in the standard.

Short circuit analyses is a local phenomenon and should not be required as part of a transmission planning assessment of the BES. In any case, the effects of failure of over-stressed breakers are already included in the Events to be assessed in Table 1. For example, P2-3 and P2-4 (Internal Breaker Fault), and P4 (Stuck Breaker while attempting to clear a fault). R2.1.3 should be modified to remove the last bullet point. Transmission outages should be a part of operational study work not planning study work. Clarity is needed in R2.1.4. The requirement to assess the Contingencies identified in Table 1 is too burdensome. This requirement does not specify any limits on the equipment for which an analysis must be conducted. As currently drafted, this could require a separate analysis for each transformer (or any long lead-time equipment) for which a spare is not available. A separate initial case would need to be developed to assess the Contingencies identified in Table 1 for each transformer. This could result in a countless number of additional cases. We recommend a threshold be established, such as all transformers with a low side voltage above 200 kV. We also recommend changing this from a separate sub-Requirement to one of the sensitivities to be considered under 2.1.3. We also believe that the statement at the end of R2.6 that indicates corrective action plans are not required solely to meet the performance requirements for sensitivities should also apply to the spare equipment requirement. The 20 MW threshold identified as “material change” for generation in R2.5 is too small. The limit should be based on a percentage of the study area’s installed generating capacity. R2.8 should be deleted. It is not necessary for reliability. What will be done with this information on the “largest Consequential Load Loss and the associated event caused by any P1 event and any P2 event” if it is documented? R2.9 should be deleted. It is not necessary for reliability. It will be difficult to determine the maximum permissible Non-Consequential Load value. It will end up being based on cost (monetary, societal, environmental, etc.), which is dependent, among other things, on the types of load being served. It very well may be a case by case situation.

As currently drafted, R3.3 is not a requirement. Without the statements in R3.3.1-R3.3.4, R3.3 is simply a phrase. Sub-Sub-Requirements R3.3.1 through R3.3.4 should be bullets under R3.3, with the language in R3.3 modified so that it becomes the requirement to conduct contingency analyses that address the four resulting bullets R3.3.2 is unclear as drafted. The minimum steady state voltage limitation for synchronous generators is not a very meaningful value. All generators with an automatic voltage regulator will maintain the set point voltage until the VAR capability of the generator is exceeded, and then the voltage will deteriorate. R3.5 – We disagree with the requirement to explain why remaining Extreme Contingencies would produce less severe System results than the ones selected for study. The first part of the requirement requires identification of events that produce more severe System impacts. The reason the others were not selected is because they were less severe or non-credible. In any case, theoretically, there can always be a more severe Extreme Contingencies than the one selected for study. For example, if the Extreme Contingency studied were simultaneous loss of 3 transmission lines with failure of redundant RAS, then simultaneous loss of 4 lines with failure of 2 sets of redundant RAS would be more severe. Listing all possible extreme events could result in a limitless list.

As currently drafted, R4.3 is not a requirement. Without the statements in R4.3.1-R4.3.3, R4.3 is simply a phrase. Sub-Sub-Requirements R4.3.1 through R4.3.3 should be bullets under R4.3, with the language in R4.3 modified so that it becomes the requirement to conduct contingency analyses that address the three resulting bullets. R4.3.2 – it is not clear what is required to be modeled. Typically a generator may have 10 or more protective relays. Is the intent to model all relay protection? The existing commercial programs do not have sufficient models or capacity to

do that for all generators in the system. R4.5 – We disagree with the requirement to explain why remaining Extreme Contingencies would produce less severe System results than the ones selected for study. The first part of the requirement requires identification of events that produce more severe System impacts. The reason the others were not selected is because they were less severe or non-credible. In any case, theoretically, there can always be a more severe Extreme Contingency than the one selected for study. For example, if the Extreme Contingency studied were simultaneous loss of 3 transmission lines with failure of redundant RAS, then simultaneous loss of 4 lines with failure of 2 sets of redundant RAS would be more severe. Listing all possible extreme events could result in a limitless list.
The term proxy is unclear. Please provide an example or an explanation of proxy.
No Comments
We believe that references to FERC Orders should not be included in requirements of standards. This comment also applies to M7.
No
Claification is needed on the use of UVLS. Is it acceptable or not. Typically UVLS relays are modeled in the study. Not allowing any load shedding as a result of UVLS relays could result in very costly fixes for a very small amount of remote load. If the Non-Consequential Load Loss Allowed column is No, is load disconnecetd from the system by UVLS a violation? What about Supplemental Load Loss or UFLS? We are also wondering how loads that have interruptible rates should be handled.
No
P4: Under the event column it should clarify and state language similar to that of P5 (Loss of multiple elements caused by a stuck breaker). In addition, this is a multiple contingency condition and may result in loss of more than 2 elements. As such, this is a low probability condition and loss of Non-Consequential load should be allowed for EHV. We disagree with raising the bar for EHV for P4.
Yes
No
We agree that TPL-005 and TPL-006 appear to have been adequately covered in the draft TPL-001-1 as currently written. However, we will need to review this assessment after TPL-001-1 is finalized. In addition, there is no place to state our concerns for Section D. so we added it here. We question the "not applicable" entry under Section D 1.1.2. What does it mean when the reset period is not applicable? Does it mean there is no reset period, so all non-compliance in all prior years will be counted as prior violations when considering non-compliance in future years? Why is this changing from an annual reset period in the current standards?
Individual
Mark Kuras
PJM
In R1, why require a Planning Coordinator AND a Transmission Planner to maintain models for the same area? Concern with the words –- for each year—in R1.1.2. Does this mean that a case for each year, at least, will need to be produced? Will five, one for each season and a light load, each year need to be produced? R1.1.5 is not clear. Is the Interchange exclusive of Firm Transmission Service as mentioned in R1.1.4? Maybe –-non-firm transmission service-- is clearer.
In R2, why require a Planning Coordinator AND a Transmission Planner to perform this analysis? Isn't this a duplication of effort? In R2, I have always heard that dynamics studies are performed to determine Stability. In R2.1, need to update reference to R2.6 from R2.5. In 2.1.1 and R2.1.2, is this annual peak or seasonal peak? Summer peak for summer peaking entities and winter peak for winter peaking entities or both summer and winter peak for all entities. R2.1.1 year one or two studies should be only required as operating studies. By their nature, the upgrades or fixes that could be accomplished in this time frame are limited to short lead time fixes. These analyses are needed to determine how to accommodate construction schedule deviations and near term system issues that may cause issues. Traditional Planning studies will be of no benefit in this timeframe. Change the requirement to be a study for year 3,4 or 5 with updates for material changes that occur when a previous year study is still within this time frame. R2.1.2 and R2.1.1 should be combined and the TP should assess and justify its choice of the critical load scenarios to analyze. Concerned about the extent of variations required in R2.1.3. Like would I have to vary all proposed generator in-service dates? Just a couple? One? Requirements need to be clear or compliance will assume the largest scope possible. Also in R2.1.3, first bullet words should align with the words of R1.1.3. Also in R2.1.3, second bullet words should align with words of R1.1.4 and R1.1.5. Also in R2.1.3, third bullet, modified facilities are not installed, suggest changing –-installation— to –-availability--. Also in R2.1.3, fifth bullet, suggest moving –retirements-- up to third bullet and dropping -- Generation additions, retirements, or other…-- leaving just –dispatch scenarios— R2.1.4 should be deleted. There are no NERC requirements on spare equipment availability and this requirement seems like

a backhanded way to include such a requirement. R2.2.1 should be reworded because it now requires everyone to extend their studies. Suggest –If planned projects will take longer than ten years to complete, the Planning Assessment shall be extended accordingly- R2.4.1 – Not sure I understand. The second sentence and the third sentence seem to be in conflict R2.4.2. This requirement has lost significance with the deletion of unit stability. Off-Peak scenarios are critical for unit stability and analysis of pockets of known light load stability sensitivity. This requirement should not be worded to require a general system off-peak stability study since this will not provide useful information. The requirement should be reworded to clarify that the TP should identify its critical off-peak stability sensitivities and provide annual stability analyses that address the system's off peak stability issues. R.2.4.3 should only refer to R2.4.1 since R2.4.2 are sensitivities themselves. In R2.4.3, first bullet, how would load model assumptions be varied? Same comments on bullets here as R2.1.3 above. R2.5.2 is impossible to judge. Material changes needs to be defined. The word –could— in the sentence before the bullets makes them useless as a definition. By trying to define material changes the SDT has created a situation where, for large interconnection, it would be virtually impossible to use a past study. The addition of a 100 MW generator two states removed from the study area would not be considered material but by the guidelines in this requirement it can be interpreted as such. R2.5.2 Add that retools of past studies that address the local impacts of specific cumulative material changes that occur are sufficient to continue to support current planning assessment. R2.6 has a mixing sigular and plural tenses. What if only one problem is found and therefore only one Corrective Action Plan is needed. Or can one Plan cover all the problems found? Responses to R2.8 and R2.9 would be considered Critical Energy Infrastructure Information (CEII) and that should be noted so it can be protected. R2.8 and 2.9 change to read that the Planning Coordinator will provide its criteria for load loss that is adheared to for all events.

In R3, why require a Planning Coordinator AND a Transmission Planner to perform this analysis? Isn't this a duplication of effort? R3.4 should come before R3.1. You should never reference down in a standard. Please present the items in the order in which they should be performed/considered. R3.5 should come before R3.2. You should never reference down in a standard. Please present the items in the order in which they should be performed/considered. R3.3.2 should be broken into two requirements since two separate tasks need to be performed. R3.3.3 should be broken into two requirements since two separate tasks need to be performed. Also in R3.3.3, analysis of relay loadability will require the inclusion of all relay models 200 kV and above. This information is not presently gathered by the ERAG MMWG for the Eastern Interconnection. To help with compliance, questions R3.3.4 needs more specificity. Maybe define a minimum percentage of total possible contingencies as a bright line whether you have performed enough more severe contingencies. Would expect a number between 10 and 25 percent. R3.4 should be broken into two requirements since two separate tasks need to be performed. To help with compliance questions, R3.3.5 needs more specificity. Maybe define a minimum percentage of total possible contingencies as a bright line whether you have performed enough more severe extreme contingencies. Would expect a number between 10 and 25 percent. R3.5 should be broken into three requirements since three separate tasks need to be performed.

In R4, why require a Planning Coordinator AND a Transmission Planner to perform this analysis? Isn't this a duplication of effort? R4.4 should come before R4.1. You should never reference down in a standard. Please present the items in the order in which they should be performed/considered. Also in R4.1, a space is needed between –Requirement— and -R4.4-. R4.5 should come before R4.2. You should never reference down in a standard. Please present the items in the order in which they should be performed/considered. In R4.2.3, I question whether the existing dynamics models can evaluate voltage ride through. If you are just talking about modeling voltage protection of generators then maybe, but this protection information is presently not collected by the ERAG MMWG for the Eastern Interconnection. R4.4 should be broken into two requirements since two separate tasks need to be performed. R4.5 should be broken into three requirements since three separate tasks need to be performed.

R7 needs to be broken into two parts. First establish the list of entities that need to get the assessment results. Second would be to coordinate the results as mentioned. Are the results mentioned in R7 different from the Planning Assessment?

No

Planning Events and Extreme Events should refer to the lists in the tables since there is no other way to understand which contingency falls into what definition. The designation is deterministic and somewhat arbitrary but commonly accepted.

No

Table 1, Lead in Note I. The industry has not yet reached a consensus on appropriate Transient Voltage Limits. It's not clear that reliability will be enhanced by requiring each entity to establish a Transient Voltage Limit. Table 1 footnote 1 - System stable means: a. Angular Stability: i. For Planning Event P1: No generating unit or units shall be allowed to pull out of synchronism. A

generator being disconnected from the System by fault clearing action or by a Special Protection System is not considered pulling out of synchronism. This is not consistent with Loss of load whereby load can be lost due to a first contingency within contractual arrangements made with the load. This definition should be modified to read -A generator being disconnected from the System by fault clearing action or by a Special Protection System or prior arrangement…- as long as no other cascading outages occur. In Table 1, Extreme Events, Item 3a, i, ii, iii, iv and vi seem like events that would occur over long periods of time not in contingency simulation time frames. They seem more like sensitivities. Table 1 Delete P5 is the preferred option. If not deleted need to clarify that so that related or additional -faults in the vicinity of- are considered. As currently worded it can require all simultaneous N-2 combinations within some number of substation radius for which overtrips could occur. You would have to do all combinations since they are unpredictable. If the SDT means for the relay failure to be located at or very near to the initiating event, then perhaps the combinations are more manageable but still extremely burdensome.

Yes

No

Removal of these standards will not affect NERC and the Regional Entity's obligations to perform assessments. Will the PC/TP be obligated under NERC Rules of Procedure to provide Assessments to NERC and the Regions upon request?

Group

SERC Engineering Committee Dynamics Review Subcommittee (DRS)

There may be a potential conflict between MOD-010 and MOD-012 and legal documents such as Interconnection Agreements e.g. IA may specify a capacity level that exceeds the reported test levels. In the case of such conflicts, which one should rule? An order of precedence is needed as part of this requirement. Suggest adding terminal equipment to the list of planned facilities. The phrase, "for each year of the Near-Term and Long-Term Transmission Planning Horizon", should be revised to remove "each year" because there may not be studies in each year.

1. R2.1.4 –Loss of 2 transformers is itself a very severe contingency. However, when it is combined with R2.1.4 (spare equipment strategy) it can lead to a triple contingenecy which is unnecessarily severe and has an extremely low probability of occurrence. We recommend that the requirement be deleted from the standard. In the subrequirements of 2.1.3 and 2.4.3, the use of the word "timing" is unclear. Consider using "in service date" or "schedule for". With the elimination of the distinction between system and generating plant stability studies, the blanket requirement in R2.5.1 that all stability analyses be five calendar years old or less, regardless of any material changes to the system, would cause needless work to be performed on those plants or areas of the system where no changes are occurring. Recommend add the following to the end of R2.5.1: "unless justification can be provided to demonstrate that the results of an older study are still valid."

R3.3.3 applies to "all Transmission lines." Should this only apply to lines above 230 kV and lines identified as critical below 230 kV? At least this should be limited to BES lines. R3.3.4 says "Simulate the expected operation of existing and planned devices designed to provide Steady State control of electrical system quantities." This should say, "Simulate the expected operation of existing and planned BES devices designed to provide Steady State control of BES electrical system quantities."

None.

We recommend that the word "proxies" be changed to "criteria".

None.

None.

No

There is a need to add definitions to discriminate between planned and proposed projects. We propose the following definitions: Planned Facilities: Facilities that address the near-term deficiencies and have been approved with a financial commitment. Proposed Facilities: Facilities that address long-term deficiencies for which no commitment is required today since they may change based on future evaluation. We propose the following definitions for events: Planning Events: Events which are listed as Planning in Table 1 in Standard TPL-001-1. Extreme Events: Events which are listed as Extreme in Table 1 in Standard TPL-001-1. Bus-tie Breaker definition still seems somewhat generic and the use of 'configurations' causes uncertainty. We propose the following definition: Bus-tie Breaker: A circuit breaker whose intended purpose is to connect two individual substation buses. The definition of Supplemental Load Loss includes the phrase, "by end-user equipment", which could be understood to mean there are devices at the end-user location that remove this equipment (and conversely, load that is not disconnected "by" end-user equipment cannot be included). Also, the term "post-Contingency" can be confusing because in the case of faults, this phrase is not clear if it means conditions after the fault initiation itself or only after the clearing of the fault. We propose the following definition: Supplemental Load Loss: End-user Load that inherently disconnects from the System as a consequence of (or "in

response") to the conditions created by the System event. Load Reduction: A decrease in the amount of connected Load caused by lower voltage conditions following a Planning or Extreme Event.

No

P5 should not be a Planning Event. PRC Standards address protection system failures. The complexity associated with identifying and simulating such events is unknown and the defense of assumptions made and events simulated will lead to inconsistency in compliance and enforcement. Industry-accepted proxies for such events could be developed that would allow for efficient identification of areas needing further detailed study. Attempting to intermingle protection system operation with BES performance will be nearly impossible to implement given current technologies Stability Extreme 2g needs a note like number 12 that excludes short distances. Stability Extreme 2h: Is this meant to be an event initiated by a 3LG fault or is it a catastrophic event that leaves all the elements at a station with a 3LG fault. If it is the former, then 2h needs a note to limit this to locations where actual events could lead to the loss of the entire station. There is no need to study this if there are no protection system events that lead to loss of the whole station (there would be no scenario to model). If 2h is meant to represent some catastrophe that causes all the elements at the site to experience a fault, then some clarification is needed to get consistent studies. Possibly rewrite 2h as, “Assume all the buses at a single voltage level (one voltage level plus transformers) experience an event that results in a 3LG fault and disables local protection (fault must clear from remote stations or other side of transformer).”

Yes

None.

No

More time is needed for entities to determine the appropriate dynamic load model required by R2.4.1. We recommend at least 36 months before this requirement becomes effective. A 60 month effective date seems acceptable for planning activities, but may not adequate for all construction activities. Typical times to construct a transmission line in various areas of SERC can range between 7 to 10 years. Accordingly, we recommend the effective date for construction projects be changed to at least 84 months.

Individual

David Albers

Brazos Electric Cooperative

no comment

In R2.1, end of paragraph i believe you mean Requirement 2.5, not 2.6. In R2.6.2 we believe maintaining a 'project initiation date' serves no purpose and should be deleted. These dates are wildly variable given the nature of each project and the numerous issues that can affect these dates. 2.6.2 and 2.6.3 should be combined to simply require an in-service year/date and allow the owners to work as needed to meet these dates. We think R2.9 should be deleted as it is vague in nature, seems to serve no purpose and would be hard to verify the accuracy of the value in an audit. 2.8 is direct and can be easily detailed for an audit.

R3.4 and 3.5 give us a concern. Table 1 identifies a number of events that are to be assessed but requiring an explanation of why certain events would produce less severe results seems to be open ended thus making it hard to audit. If all the events in Table 1 are studied or have been studied in the past then what is one supposed to document? we understand this is to allow the planner a certain amount of flexibility in their analysis but it seems counter to the idea of requiring a review of all the events in Table 1. We don't have any suggested wording changes, just passing along a general idea.

Same general comment in 4.4 and 4.5 about the requirement to maintain documentation on why certain events would produce less severe results.

no comment

is there any other way to identify responsibilities between the parties than having an agreement? R6 seems to indicate an agreement of some sort must be in place. if that is the case then it could simply say an agreement must be in place.

no comment

Yes

No

For the most part Table 1 is acceptable but not entirely. The general 'feel' is that more studies are required. Requiring more studies is not going to provide additional reliability benefit but Brazos does not own many miles of transmission above 300 kV so the impact will be less for us than other larger TOs. We do not see the purpose of studying events where all forms of load loss is allowed. We understand upgrading the transmission system for these events is not required and is unneeded so why study certain events other than to insure that cascading outages don't occur? Without running a full set of studies it is a little hard to determine if Table 1 can be

readily assessed or the true value of the additional studies.
Yes
no comment
Yes
no comment at this time
Individual
James H. Sorrels, Jr.
American Electric Power
Under R1.1.2., Add “Transformers”, otherwise, revise “Transmission Lines” to read “Transmission Facilities”. Also under R1.1.2., add “Series Reactors and Capacitors” as a distinct category of facilities from “Reactive Power devices” that include shunt capacitors and reactors, and “Control devices” that include phase angle regulating and variable frequency transformers, FACTS devices, and other power electronics. These additions would further clarify the types of facilities that should be included, and these comments are made in full recognition that the introductory sentence to R1.1.2. contains the wording “such as”.
AEP agrees with R2.3., but should note that the planning horizon short circuit models are not presently developed in any systematic fashion, since, unlike the development of steady-state (power flow) and stability models that are mandated under MOD-010 and MOD-012, respectively, there are no NERC Standards that mandate the development of short circuit models in a similar fashion. As to R2.4., requiring study of both peak and off-peak conditions in every stability assessment removes the possibility in this regard that stability study scopes may be defined most appropriately by engineering judgment. We believe system load level is often important, but not necessarily more important than any of the other sensitivity variables listed under R2.4.3. We suggest listing system load level along with these and removing R2.4.1. and R2.4.2. The text in R2.4.1., referring to dynamic load modeling, may still be retained somewhere, and since this falls in the category of modeling and data, we suggest including this under R1.1. With regard to R2.5., a 20 MW increase in generation may well be construed as a material generation change, but it is questionable whether a 20 MW decrease would be for transmission planning purposes. Also, the validity of many studies, particularly plant oriented stability studies, may well extend beyond five years if there have been no transmission modifications in the vicinity of the plant or to the plant itself. In these instances, it would seem counter-productive to disqualify a study after five years. The duration of the validity of certain types of past studies is better determined by the occurrence of significant transmission or generation changes. Please note, under R2.6.2., to define “project initiation date” [Changed sequence to keep in numerical order].
With regard to R3.3.3., please include transformers as relay loadability also applies to transformers.
The cross-referencing between R4.1 and R4.4, and between R4.2 and R4.5, seems to add unnecessary complexity and could be eliminated by merging each of these pairs of sub-requirements. Under the event column of Table 1 of the proposed TPL standard, considering entries P3 and P6, the option to apply either SLG or 3-phase fault types should be retained to be consistent with the existing TPL standards, which permit either SLG or 3-phase faults (see existing Table 1, Category B and Category C3). If the SDT decides not to make the requested change, then the SDT should give recognition to the unique characteristics of 765 kV lines where permanent 3-phase faults are virtually non-existent. AEP’s 765 kV transmission facilities have been successfully planned and operated with only a SLG fault criterion. Therefore, Table 1 Planning Events P3 and P6 should permit application of SLG faults.
No comments.
No comments.
No comments.
No
“Load Reduction” does not need to be retained as a defined term; in fact it only appears once in the draft standard at the top of Table 1. In addition, it is well understood that load is sensitive to voltage, so it seems unnecessary to call attention to it. Furthermore, the “Supplemental Load Loss” definition should also be removed. These definitions are not generally relevant to planning studies. Neither steady-state nor stability planning studies should acknowledge or rely on “Supplemental Load Loss” because it is simply unpredictable without detailed load device protection data. In fact, properly set minimum voltage limits should ensure that no appreciable load is tripped by customer equipment response as long as that equipment meets generally accepted equipment and design standards. For the same reason, steady-state planning studies should not rely on “Load Reduction” because the planning function is supposed to ensure that a designated forecasted load can be served under credible contingencies. However, it is okay that stability studies acknowledge and rely on load voltage sensitivity (“Load Reduction”), and in fact this is required due to the nature of the analysis and cannot be otherwise. Therefore, there is no need to call attention to it. Given the above comments, the remaining two load loss definitions should be further clarified, though not changed substantively, to read as noted below.

Consequential Load Loss: All Load that is no longer served by any Transmission Facilities as a result of the Facilities being removed from service by a planned Protection System operation to isolate fault conditions. It excludes Load that is disconnected from the network by load internal protection or end-user equipment responding to post-Contingency System conditions. Also, it excludes Load that remains connected to the System, but that may be reduced due to lower voltage conditions as a consequence of a Planning or Extreme Event. Non-Consequential Load Loss: Any Load loss intentionally caused due to automatic system protective functions such as UVLS, special protection systems, or as the result of operating procedures. Finally, the lettered bullets at the top of Table 1 need to be modified as appropriate to reflect the above comments that load loss due to internal load protection or end-user equipment, what was called “Supplemental Load Loss”, should NOT be permitted in complying with either steady-state or stability performance criteria. Load that remains connected to the System, but that may be reduced due to lower voltage, should NOT be permitted in complying with steady-state performance criteria, but should be allowed, by necessity, in complying with stability performance criteria.
No
Consider adding a Planning Event defined to address common mode outages of two generating units. The language could parallel that of P7, substituting “common system” for “common structure”. In the present draft, Planning Events P4 and P5 address single faults that may result in multiple contingencies. Most of these events can be expected to involve either multiple transmission facilities or a mix of generating units and transmission facilities. P7 covers common mode (structure) outages of transmission lines. There are no common mode generator contingencies specified. Define the term “common Right-of-Way” and/or modify the term to “common or adjacent Right(s)-of-Way”. In the absence of a definition, if two lines are built on opposite sides of some geographic boundary (such as a two-lane road) they may legally be completely separate, potentially with no overlap in the agreements between the Transmission Owner and landowners. However, from the standpoint of BES exposure to weather related outages, the lines clearly will simultaneously be exposed to similar conditions. Lines that follow geographically parallel routes for more than a minimum distance and are within some minimum separation should be considered to be on a common Right-of-Way. Suggestion for the minimum parallel distance would be 1 mile (based on footnote 12).
Yes
Yes
Group
Tampa Electric
R1 Ensure that statement reflects that TP and PC are only responsible for their planning area. R1.1.2 Add transformers to list and clarify modeling of circuit breakers and protection system equipment. Models should reflect the effect of this equipment, not the actual equipment. R1.1.4 Models should only reflect firm transmission service that is expected to be utilized in the study case. Consider changing effective dates of all requirements to be the same date so that you do not have to meet two standards during the same time period.
R2.1 should state R2.5 at the end of requirement instead of R2.6 R2.1.4 Consider revising to only include P0-P2 contingencies. R2.5.1 please clarify whether the 5 years is from the beginning of the assessment or end of the assessment. R2.6 Consider changing the terminology for "Corrective Action Plan" to "Transmission Plan" R2.8 Please clarify the reason for this requirement. This is not necessary for reliability and the effort to collect this information is substantial and does not benefit the BES. R2.9 Please clarify the reason for this requirement. This is not necessary for reliability and the effort to collect this information is substantial.
Consider revising standard for clarity. Subrequirements are not clear as written. Consider moving subrequirements R3.3.1 - R3.3.4 under other requirements for clarification. R3.5 Including an explanation of why remaining contingencies would produce less severe system results could be a limitless effort. Listing all "possible" extreme events seems unrealistic.
Clarification needed on modeling of protection system equipment.
Please define the term "proxies".
none
none
Yes
Yes
Yes

Yes
Consider having all requirements go into effect at the same time.
Individual
Michael Ayotte
ITC Holdings
Comments: We question the value of R1.1.1, which requires the inclusion of transmission or generator outages “if..known”, in a planning standard. If an “outage” puts you in a compliance deficiency for the duration of any outage, would you be “fined” for such an instance? Category P6 contingencies should cover these outages and not require a separate requirement such as R1.1.1. This requirement could also make an entity subject to fines for long term outages needed to upgrade or replace equipment as part of a CAP for other category violations. If this requirement is kept, it should be restricted to very long term outages and exclude those outages needed to complete CAPs for other violations. R1.1.6 requires the use of “Network Resources” to supply load. For many planning studies, particularly beyond the five year window, the capacity additions needed to supply load are frequently unknown. Since there are no requirements or guidelines for assuming what and where these resources will be, “assumptions” will have to be made regarding the needed resources. Additionally, existing “network resources” could be retired or re-designated to serve other load. It is unclear as written exactly what would be a violation of this requirement if known network resources are not sufficient to serve projected load. Finally, with the advent of market power, would a dispatch utilizing this type of dispatch be considered a violation of this standard.
Comments: In R2.1, there is a reference to “R2. 6”. Based on the posted red-line version, we believe this reference should be changed to “R2.5”. Should this same reference be included in R2.4”? In R2.3, it is stated that the short circuit analysis should be supported by either current or past studies. Should a reference be added to R2.5? In R2.6 it is stated: “Corrective Action Plans do not need to be developed solely to meet the performance requirements for sensitivities run in accordance with Requirements R2.1.3 and R2.4.3. “ While we recognize that this conforms to FERC orders, it would still seem that this statement might be interpreted to mean that CAPs intended to cover a number of sensitivities go beyond standards and be used by interveners to block such CAPs. A revision to the standard to the standard to encourage CAP when needed for numerous sensitivities might be appropriate. R 2.6.4, as written, is very subjective. While we understand the need for R2.6.4, who is the ultimate judge of what “situations” are “beyond the control” of the TP or PC responsible for the mitigation plan and if they “are taking prudent actions to resolve the situation”? As written, it is the auditor. This will be difficult to prove compliance and might provide significant discrepancies in compliance with standards.
Comments: If the SDT feels that a requirement such as R3.3.4 is necessary, it may also be necessary to identify further limitations on the use of the control devices referred to. For example, a manually controlled phase shifter would require a time period, or loading limits, to readjust flows to limit a post-contingency flow if not pre-set in the pre-contingency state. Similarly, a tap-changing transformer also requires an adjust period for voltage control. We suggest adding a statement to this requirement (or somewhere in performance requirements) that “all post-contingency flows/voltages must remain within the applicable facility ratings before, during, and after the use of such control devices.”
Comments: In R2.5.1, a limitation is identified for stability studies that are used to support the annual assessment be less than five calendar years old. Should this reference be included in R4”?
None
Comments: Should this requirement state that ”The Transmission Planner in conjunction with their Planning Coordinator shall determine and identify individual and joint responsibilities for performing the required studies for the Planning Assessment.”
None
Yes
None
Yes
None
Yes
Comments: We concur that footnote 10 should not apply to P0, P1 or P2 events.
Yes
Comments: We generally concur. However, it would appear that there is no incentive to submit a mitigation plan for less than 60 months for the new requirements that raise the bar (those listed as bullet points). If “circumstances are within your control” to mitigate in less than 60 months, why not require it?
Group
SERC Engineering Committee Reliability Review Subcommittee (RRS)
•In bullet three of R1.1.2, are bus-tie circuit breakers to be represented in the models? Typically

circuit breakers are included in the contingency definitions along with the protection system equipment used in the powerflow models. The number of zero impedance branches which can presently be modeled using PSS/E software is limited to 4000. Also, the number of buses included in the powerflow models would increase with additional breaker modeling. •In R1.1.2, don't we need to also represent the existing transmission system, and not just changes to the existing system? •In R1.1.2, does the phrase 'for each year' signify each year for which assessment work was performed, or each year of the Near-Term and Long-Term Transmission Planning Horizon? The phrase, "for each year of the Near-Term and Long-Term Transmission Planning Horizon", should be revised to remove "each year" because there may not be studies in each year. •In bullet five of R1.1.2, what protection system equipment is to be included in the stability models? •In bullet seven of Requirement R1.1.2, what "new technologies" are to be represented in the models? •Concerned about only having one year to implement all new modeling requirements - especially the additional relay requirements noted in R1.1.2. •The SDT stated during its June 30th Webinar that protection system equipment need not be explicitly represented in models, but had difficulty in determining adequate wording for the proposed sub-requirement. Because protection system action is described in R3.3.1, R3.3.4, R4.3.1, and R4.3.3 we suggest that protection system equipment be removed from the list in R1.1.2. •There may be a potential conflict between MOD-010 and MOD-012 and legal documents such as Interconnection Agreements e.g. IA may specify a capacity level that exceeds the reported test levels. In the case of such conflicts, which one should rule? There may be a need to add definitions to discern the difference between planned and proposed projects. Suggest replacing 'circuit breakers' in R1.1.2 with 'terminal equipment' since circuit breakers are covered by Protection System Equipment. •Does there need to be a reference in R1 to NERC Reliability Assessment Guidebook version 1.2 on pp 17-18 for everyone to use a 50/50 load forecast for inclusion in the planning models? •R1.1.4 Firm Transmission Service - a single source can have transmission service to multiple sinks, and can be associated with transmission service in excess of the capacity of the source. There is a lack of clarity regarding the means by which Firm Transmission Service, a marketing term, is to be included in planning models. For example, should the standard define how to model wind farms (100% - off-peak and 20% on-peak, based on firm capacity from the wind generators, or other dispatch levels)? Not sure if this is applicable to Requirement 1 or 2.

•The proposed standard not only raises the bar for system performance requirements, but also raises the bar for reporting and documentation. We need to employ almost as many librarians and technical writers as engineers to develop and keep track of the documentation. Engineers need to spend more time performing the studies and spend less time documenting studies keeping track of documentation for multiple years. •R2 – Instead of "document results" the requirement should be to "summarize results". While results will be documented, the Planning Assessment should just include a summary. •R2.1 – What's the value in being able to use "qualified past studies" if you have to use "annual current studies"? Strike the words "supplemented with" and insert the word "or". •In R2.1, change the reference to requirement R2.6 (at the end of the last line) to R2.5. •Do not understand the rationale for being so prescriptive in requiring specific years to be studied in R2.1.1. Why not allow the TP and/or PC to decide on the three years to be studied in the Near Term? •In the subrequirements of R2.1.3 and R2.4.3, the use of the word "timing" is unclear. Consider using "in service date" or "schedule for". •In R2.1.3, it is suggested that the studies be referred to as the "base studies" to avoid confusion with the sensitivity studies. Also suggest that another phrase be added at the end for clarity. The entire R2.1.3 would then be as follows: For each of the base studies described in Requirements R2.1.1 and R2.1.2, sensitivity case(s) that are intended to stress the System with variations in one or more of the following conditions not already included in the studies shall be included in the Assessment. Sensitivity studies would include changes to: oIn Requirement R2.1.4, it is suggested that language be added to reflect the possible unavailability of the equipment, such as: •When an entity's spare equipment strategy could result in the unavailability of major Transmission equipment that has a lead time of one year or more (such as a transformer), an analysis of the impact of this possible unavailability on System performance shall be assessed. The analysis shall reflect the Contingencies identified in Table 1 during the conditions that the System is expected to experience the possible unavailability of the long lead time equipment. •How would adequate lead times be determined? •In Requirement R2.1.4, recommend that the requirement be revised as follows: When an entity's spare equipment strategy could result in the unavailability of major Transmission equipment that has a lead time of one year or more (such as a transformer), an analysis of the impact of this possible unavailability on System performance shall be assessed. The analysis shall reflect the Contingencies identified in Table 1 during the conditions that the System is expected to experience the possible unavailability of the long lead time equipment. •Since R2.3 short circuit analysis is a new "raising the bar" requirement, should the implementation plan for this be for 5 years like the other new requirements? •R2.3 – Insert the phrase "one year of" after the word "addressing". •In Requirements R2.3 and R2.4, do we need a reference to Requirement R2.5 for the past studies? •Further clarification is needed in R2.4.1 concerning load models that appropriately represent the dynamic behavior of loads. •In Requirement R2.4.1, it is suggested that it be reworded to the following: System peak Load for one of the five years, including Load

models which appropriately represents the dynamic behavior of Loads, considering the behavior of induction motor Loads. An aggregate System Load model which represents the overall dynamic behavior of the Load is acceptable. •R2.4.1: It is not clear how much Load must have a dynamic model. Likely, it must still be proven that the analysis software can accommodate every load in the model having a load model that includes induction motor models. To help address this, revise “Load” to be “Load that could impact the study area is acceptable. Is a NERC drafting team addressing these issues to determine an industry standard? •Load models referenced in R2.4.1 should be confined to the consideration of transient stability study work. •In Requirement R2.4.3, it is suggested that this sub-requirement be reworded to the following: For each of the base studies described in Requirements R2.4.1 and R2.4.2, sensitivity case(s) that are intended to stress the System with variations in one or more of the following conditions not already included in the base studies shall be included in the Assessment. Sensitivity studies would include changes to: oRegarding Requirement R2.6, it is suggested that the word "modeled" be added as follows: For Planning Events shown in Table 1, when the analysis indicates an inability of the System to meet the performance requirements in Table 1, the Planning Assessment shall include Corrective Action Plans addressing how the performance requirements will be met. Revisions to the Corrective Action Plans are allowed in subsequent assessments but the System modeled shall continue to meet the performance requirements in the tables. Corrective Action Plans do not need to be developed solely to meet the performance requirements for sensitivities run in accordance with Requirements R2.1.3 and R2.4.3. The Corrective Action Plan shall: •In bullet three of Requirement R2.6.1, would we allow automatic generation tripping for a single (P1) event if it is not consequential? It seems that tripping of generation should be restricted to P2 events 2 or 3 at a minimum. •In bullet five of Requirement R2.6.1, is there a maximum duration that operating procedures can be used before a capital project must be included (or completed) in the Corrective Action Plan? •With the elimination of the distinction between system and generating plant stability studies, the blanket requirement in R2.5.1 that all stability analyses be five calendar years old or less, regardless of any material changes to the system, would cause needless work to be performed on those plants or areas of the system where no changes are occurring. Similar to the draft MOD-026-1 standard, this period should be 10 years. •With the elimination of the distinction between system and generating plant stability studies, the blanket requirement in R2.5.1 that all stability analyses be five calendar years old or less, regardless of any material changes to the system, would cause needless work to be performed on those plants or areas of the system where no changes are occurring. Recommend add the following to the end of R2.5.1: “unless justification can be provided to demonstrate that the results of an older study are still valid.” •R2.5.2 – Suggest deleting the phrase “Material generation changes could include:” and the two accompanying bullets. A change of 20 MW on a large system may not always be material. •In Posting #2, undervoltage load shed, underfrequency load shed, and Special Protection Schemes were considered to be Non-Consequential Load Loss. In R2.6.1, installation or modification of Protection Systems or Special Protection Systems are now allowed as part of the Corrective Action Plan. Should undervoltage and underfrequency load shed also be allowed in the Corrective Action Plan? •In Requirement R2.6.2, what constitutes a "project initiation date," and how will it be used? Please clarify. •Please explain the reason why Requirement R2.8 is needed in the Assessment and how does reporting the largest Consequential Load Loss impact reliability? •Please explain the reason why Requirement R2.9 is needed in the Assessment and how does reporting the largest Non-Consequential Load Loss impact reliability? •If contingencies occur inside one utility that affect facilities in another utility, which utility is responsible for running these studies during the annual assessments? •R2.8 and R2.9 should be deleted. We don’t see a reliability-related need for these requirements. •In R2.9, does the requirement require the maximum non-consequential load that can occur for contingencies in Table 1 or does it require just the maximum that a utility will allow on its system? Suggest clarifying “permissible” or perhaps using similar language as found in R2.8. •R2.9: One cannot determine the “maximum permissible Non-Consequential Load Loss” for every Planning Event. First of all, this should not be a requirement, as it is, for those events that do not even cause Non-Consequential Load Loss. Secondly, to obtain the “maximum permissible” value, one would have to stress the system in some way until one of the performance requirements are violated. That is an unreasonable stipulation and cumbersome to perform such an analysis.

•In R3, should the “and” in the first sentence actually be “or”? especially for same footprint? Perhaps the “and” should be replaced by “and/or”. Can the PC satisfy this requirement by reviewing studies performed by differing TPs or is separate analysis really required especially when the TP and PC have the same footprint? •In Requirement R3.1, it is suggested that the word "contingency" be added to describe the lists created in R3.4. •R3.3.1. Recommend that it be clarified that simulation of the more conservative case of a single branch (bus-to-bus) outage is acceptable, as opposed to always simulating the full breaker-to-breaker outage. •R3.3.2 The requirement needs to be clarified. It is not clear if it is referring to the ability of plants to meet their voltage schedule, or to their ability to stay connected during post contingencies. •Studies shall be performed to determine whether the BES meets the performance requirements in Table 1 based on the contingency lists created in Requirement R3.4. •R3.3.2 “For all generators, studies shall consider the minimum steady state voltage limitations and identify how the generators are analyzed in the steady state simulation.” The above wording needs to be

changed, as the intent of this sentence is unclear. Is the intent that Transmission Planners need to ensure that generating plants can meet their voltage schedule under Base Case (N-0) conditions? Is this the same as the generator underexcited operation limit? •In R3.3.2, need guidance on how to consider minimum steady state voltage limitations. Is there a NERC team addressing this? •R3.3.3 “For all Transmission lines, studies shall consider relay loadability and identify how loadability is analyzed in the steady state simulation.” The above wording needs to be changed, as the intent of this sentence is unclear. Is the intent that Transmission Planners need to ensure that relay loading limits are included in the facility ratings? Is this the 130% of conductor rating limit? •Revise M3 to include a reference to R6, since the allocation of responsibilities will directly affect the evidence which is to be provided. •In the VSL for R3, a severe VSL is listed as failing to meet performance requirement for P0 or P1. We do not understand why a severe VSL would be applied to an all ties closed event which should have little if any problems. We believe that this should be a lower or moderate VSL instead of severe. •In R3.3.3 is the relay loadability required for all HV and EHV voltage levels? Previously NERC had required this for 230-kV and above only. This would be massive requirement for our Transmission Lines between 100 and 200-kV. •Studies shall be performed to determine whether the BES meets the performance requirements in Table 1 based on the contingency lists created in Requirement R3.4. •In Requirement R3.3.4, it is suggested adding the words "and switched" to capacitors and reactors: Simulate the expected operation of existing and planned devices designed to provide Steady State control of electrical system quantities. These devices include equipment such as phase-shifting transformers, load tap changing transformers, and switched capacitors and inductors.
•In R4, should the “and” in the first sentence actually be “or”? •Footnote #3 needs to be revised to include 2LG faults in addition to 3Phase faults indicating that the SLG criteria is met. •In Requirement R4.1, it is suggested that the word "contingency" be added to describe the lists created in R4.4 •Studies shall be performed to determine whether the BES meets the performance requirements in Table 1 based on the contingency lists created in Requirement R4.4. •Regarding Requirement R4.4, it is suggested that a rewording be considered such as the following: For each category of the Planning Events in Table 1, those Planning Event Contingencies that are expected to produce more severe System impacts shall be identified, and a list of those Contingencies to be evaluated for System performance in Requirement R4.1 shall be created. The rationale for the Contingencies selected for evaluation shall be available as supporting information with an explanation of why the remaining Contingencies would produce less severe System results. •R4.3.2 requires that voltage ride through capability be analyzed. It is not clear what should be analyzed (e.g. auxiliary loads, generator protection, generator capability, etc.) This requirement needs more clarity. •R4.3.2 – By in large, the industry does not have the input data or the methods to do this. It would seem necessary to have PRC-024 approved before this can be met. •In R4.3.2, need guidance on how to consider minimum steady state voltage limitations.
•There is no requirement that the Planning Coordinator (PC) must use the same proxies as the Transmission Planner (TP). Since differences in proxy assumptions may lead to different study results, R5 should be revised to require the PC and TP to coordinate the use of proxies. •M5 doesn’t make any sense. Need to revise this Measure so that it fits the Requirement R5. Also need to revise the Data Retention discussion in Section 1.4 to align with R5. •In the VSL associated with R5, we believe that failure to define and document one of the proxies should be a moderate VSL, failure to define and document two proxies should me a high VSL, while failure to define and document three proxies should be a severe VSL. Otherwise failing to document only one proxy would result in a severe VSL.
•In absence of these agreements, it is assumed that both Transmission Planners and Planning Coordinators would be responsible for performing the studies. How do the Corrective Action Plans get resolved between these entities if there is no agreement on the study results? •Requirements R1, R2, R3, R4 and R5 should all be revised to include a reference to R6 regarding the determination of individual and joint responsibilities for performing the required studies. •In the VSL associated with R6, we believe that failure to determine and identify one responsibility should be a moderate VSL, failure to determine and identify two responsibilities should me a high VSL, while failure to determine and identify three responsibilities should be a severe VSL. Otherwise failing to document only one responsibility would result in a severe VSL.
•The reference to FERC Order 890 as it is currently written makes it seem like a suggestion to follow Order 890. If Order 890 explicitly describes this process then the sentence should read “as described in FERC Order 890.” If not, this should not be mentioned at all. •Requirement R7 describes that the Planning Coordinator is to share Planning Assessments with adjacent Planning Coordinators. Does this need to be expanded for the Transmission Planners to share their Planning Assessments with the Planning Coordinators? •In the VSL associated with R7, we believe that the PC failing to coordinate analysis should be a moderate VSL, the PC failing to distribute should be a high VSL, and failing to do both of these tasks should be a severe VSL.
No
•Revised Definitions are generally better than those from the previous version, but additional clarity could be provided. •Load Reduction – Please clarify whether this includes both load

response and operator initiated action, such as in changes to transformer LTC. •Supplemental Load Loss - From a utility perspective, this would be considered as load response. Please clarify how Supplemental Load Loss would be included in the stability analysis. •Bus tie breaker – A statement in the previous version which listed examples was removed from this version of the definition. The statement was helpful and should be re-inserted. The statement was: “Substation configurations such as ring bus, breaker and a half, or double-bus double-breaker do not use bus tie breakers.” •Extreme Events definition references severity and probability. These terms should be included in the definition of Planning Events. Add a definition of Planned and Proposed facilities. Planned facilities address the near term deficiencies and have been approved with a financial commitment while proposed facilities address long term deficiencies for which no commitment is required today since they may change based on future evaluation. •Revised Definitions are generally better than those from the previous version, but additional clarity could be provided. •Consequential Load Loss - Is an SPS to trip load qualify as a planned protection system? •Load Reduction - Is this automatic as in a load response or is it operator initiated as in changes to transformer LTC? •Supplemental Load Loss - From a utility perspective, this would be considered as load response. How would Supplemental Load Loss be included in the stability analysis? Table 1 suggests that it cannot be included to meet steady-state performance. Suggest that the following be added to the definition: Supplemental Load Loss associated with an event shall not be used to meet steady state performance requirements. •Where would interruptible load be included in these definitions? •Bus-tie Breaker definitions still seems somewhat generic and the use of 'configurations' causes uncertainty. Revise Bus-tie Breaker to read, "A circuit breaker whose intended purpose is to connect two individual substation buses." "Bus-tie" is not capitalized in the Table. •Consequential Load Loss must include load that is lost due to the inherent response of the particular type of load. Some motors, lighting and processes will naturally trip during an event, although not as a result of the protection system. It may have been the intent of the SDT to include this phenomenon in the Supplemental Load Loss defintion. However, this definition includes the phrase, "by end-user equipment", and that makes one think that there are devices at the end-user location that is removing this equipment (and conversely, load that is not disconneted "by" end-user equipment cannot be included). Also, the term "post-Contingency" can be confusing because in the case of faults, this phrase is not clear if it means conditions after the fault initiation itself or only after the clearing of the fault. Revise Supplemental Load Loss to read, "End-user Load that inherently disconnects from the System as a consequence of (or "in response") to the conditions created by the System event." •SERC RRS suggests adding back the following to the Bus-tie breaker definition that was contained in Posting #2: “Substations configurations such as ring bus, breaker and a half, or double bus double breaker protection schemes do not use bus tie breakers”. SERC Members believe that this additional wording helps explain this definition much more clearly. •In Posting #2, undervoltage load shed, underfrequency load shed, and Special Protection Schemes were considered to be Non-Consequential Load Loss. Are these now no longer considered to be Non-Consequential Load Loss but instead now considered to be Load Reduction, Supplemental Load Loss, or something else? •Should Supplemental Load Loss be further defined as load that is disconnected from the network by end-user equipment responding during duration of the fault as well as to post contingency system conditions? Also the definition of Supplemental Load Loss may benefit from some examples in the definition to further help clarify. •The second sentence in the Year One definition is rather confusing. We would suggest changing “calendar year” to “date”. Otherwise it may be interpreted that Year One would begin 12 to 18 months from the end of the current calendar year. Suggest from “beginning”.

No

•The word "Requirements” needs to be added to the Table 1 titles in the existing tables. oTable 1 – Steady State & Stability Performance Requirements oPlanning Events Table 1 — Steady State & Stability Performance Requirements oExtreme Events Table 1 — Steady State & Stability Performance Requirements •Footnotes (Planning Events and Extreme Events) •We recommend that Table 1 be split back as was done in the previous draft to handle the 1) steady-state and 2) stability performance requirements. This is needed to provide clarity on which contingencies apply to steady-state and which apply to stability analysis. •Table I, P7.1: It would not be likely to lose the two outside circuits on a vertically configured structure and not lose the middle circuit. Change the wording to: “Any two adjacent circuits on a common structure.” •The word "Requirements” needs to be added to the Table 1 titles in the existing tables. oTable 1 – Steady State & Stability Performance Requirements oPlanning Events Table 1 — Steady State & Stability Performance Requirements oExtreme Events Table 1 — Steady State & Stability Performance Requirements •Since it appears that the Table 1 cannot fit on a single page, it is suggested that multiple tables be developed to handle the 1) steady-state and 2) stability performance requirements. Footnotes may be included on a second page if needed. •Comments were provided in early versions regarding the issues associated with raising the bar, and it was suggested that the marginal reliability benefits associated with these changes were not worth the marginal costs. We have not seen any significant changes from the earlier performance requirements. The question still remains, are we directing the resources where they need to be allocated to address and improve system reliability? So far the answer is believed to be "No". •The existing TPL 002-0 allows for some local load to be dropped for a single contingency event

as long as the Bulk system reliability was not impacted. However there is no such allowance any longer for losing such load for a single contingency in the proposed draft. It would be very expensive for SERC Members to fix all such events in several remote areas that would have very little impact on the overall reliability of the SERC Members' bulk system. SERC Members believe that the capital spent for these fixes could be used to better strengthen the overall bulk system in much better ways. •P5 should not be a planning event. PRC standards address protection system failures. The complexity associated with identifying and simulating such events is unknown and the defense of assumptions made and events simulated will lead to inconsistency in compliance and enforcement. Industry accepted proxies for such events could be developed that would allow for efficient identification of areas needing further study. Attempting to intermingle protection system operation with BES performance will be nearly impossible to implement given current technologies.

No

•Suggest rewording of footnote 5 to: Curtailment of conditional Firm Transmission Service is allowed when the conditions and/or events being studied formed the basis for the conditional Firm Transmission Service. •Footnote 10 is definitely an improvement from previous versions. It is suggested that the word "also" be added to the last line: •Curtailment of firm transmission service, when coupled with the appropriate re-dispatch of resources obligated to re-dispatch, is allowed both as a System adjustment (as identified in the column titled 'Initial System Conditions') and a corrective action, where it can be demonstrated that Facilities remain within applicable Facility Ratings and those adjustments do not result in the shedding of any firm Load. Where limited options for re-dispatch exist, sensitivities associated with the availability of those resources must be considered. Where Facilities external to the Transmission Planner's planning region are relied upon, Facility Ratings in those regions must also be considered. •Stability Extreme 2g needs a note like number 12 that excludes short distances. •Stability Extreme 2h: Is this meant to be an event initiated by a 3LG fault or is it a catastrophic event that leaves all the elements at a station with a 3LG fault. If it is the former, then 2h needs a note to limit this to locations where actual events could lead to the loss of the entire station. There is no need to study this if there are no protection system events that lead to loss of the whole station (there would be no scenario to model). If 2h is meant to represent some catastrophe that causes all the elements at the site to experience a fault, then some clarification is needed to get consistent studies. Possibly rewrite 2h as, "Assume all the buses at a single voltage level (one voltage level plus transformers) experience an event that results in a 3LG fault and disables local protection (fault must clear from remote stations or other side of transformer)."

No

•60 months after effective date seems generally acceptable for planning activities, but may not adequate for all construction activities. Typical times to construct a transmission line in various areas of SERC can range between 7 to 10 years. Accordingly, we recommend the effective date for construction projects be changed to at least 84 months. •More time is needed for entities to determine the appropriate dynamic load model required by R2.4.1. We recommend at least 36 months before this requirement becomes effective. •Since breaker duty is a new "raising the bar" issue - should there also be a 5 or more year implementation plan for this as well? •Also trying to construct enough facilities within the 5 year implementation period will result in multiple outages at same time - possibly affecting SERC member's bulk reliability during this construction period. Also SERC members are concerned that EHV equipment manufacturers will not be able to meet all the equipment orders that will be required to meet the "raising the bar" requirements. •SERC members are also concerned that the costs to meet the new requirements contained in this TPL will amount to many billions of dollars with very little impact overall on the reliability of the Bulk transmission system. •When will the Implementation Plan be removed from the standard after it is officially approved? Will a revised TPL standard need to be prepared to omit this implementation language? •If contingencies in one utility's system results in issues within another utility, who is responsible for studying the contingencies and who would be responsible for documenting the CAP?

Individual

Mary Ann Groszek

Northern Indiana Public Service Company

Under R1.1, insert, "as applicable" after "represent". Since R1 covers steady state, short circuit and dynamic models, data requirements should be applicable to the specific model. Representation of circuits breakers, protection system equipment and control devices is not typical of steady state model inputs.

R2.3: Clarify the requirement. Does the short circuit study examine topology for a single year, the topology in years studied using the steady state models or each year of the near term planning horizon?

R3.3.3: Evaluation of loadability should be triggered only for those circuits with new protection settings issued since the last assessment; evaluation of circuits that have not been newly assigned or re-assign protection settings is a misuse of resources.

No

The definitions need clarification, especially if they will be extracted from the standard when approved and included in the NERC Glossary. The SDT should include a Technical Writer to clarify the proposed language.

No

In A5, text appearing under "Effective Date" is not clear regarding application of the phrase, "(above 300 kV)", for the first and fourth dot points.

Individual

Wang, Yu (David)

San Diego Gas and Electric Co

The language in R1.1.2 needs to be clarified. Many of these facilities are not explicitly included in the models in the base cases (circuit breakers, protection system equipment, control devices). The language should be clarified to require modeling the effect of the devices or the effect of the removal of the devices where it is expected to impact the study outcome. Clarity is needed to explain the difference between R1.1.4 and R1.1.5. Expected interchange can be reasonably projected, but information on Firm Transmission Service is not always known or reasonably projected for future cases. For consistency with the 2nd bullet under R2.1.3, R1.1.4 should refer to expected transfers rather than Firm Transmission Service. With this change, R1.1.4 and R1.1.5 would be redundant and one should be deleted. We disagree with the inclusion of the words “including requirements of regulatory authorities and other legal obligations” at the end of R1. Entities already are required to do this. It does not need to be included in the standard.

Short circuit analyses is a local phenomenon and should not be required as part of a transmission planning assessment of the BES. In any case, the effects of failure of over-stressed breakers are already included in the Events to be assessed in Table 1. For example, P2-3 and P2-4 (Internal Breaker Fault), and P4 (Stuck Breaker while attempting to clear a fault). Clarity is needed in R2.1.4. The requirement to assess the Contingencies identified in Table 1 is too burdensome. This requirement does not specify any limits on the equipment for which an analysis must be conducted. As currently drafted, this could require a separate analysis for each transformer (or any long lead-time equipment) for which a spare is not available. A separate initial case would need to be developed to assess the Contingencies identified in Table 1 for each transformer. This could result in a countless number of additional cases. We recommend a threshold be established, such as all transformers with a low side voltage above 200 kV. We also recommend changing this from a separate sub-Requirement to one of the sensitivities to be considered under 2.1.3. We also believe that the statement at the end of R2.6 that indicates corrective action plans are not required solely to meet the performance requirements for sensitivities should also apply to the spare equipment requirement. The 20 MW threshold identified as “material change” for generation in R2.5 is too small. The limit should be raised or based on a percentage of the study area’s installed generating capacity. R2.8 should be deleted. It is not necessary for reliability. What will be done with this information on the “largest Consequential Load Loss and the associated event caused by any P1 event and any P2 event” if it is documented? R2.9 should be deleted. It is not necessary for reliability. It will be difficult to determine the maximum permissible Non-Consequential Load value. It will end up being based on cost (monetary, societal, environmental, etc.), which is dependent, among other things, on the types of load being served. It very well may be a case by case situation.

As currently drafted, R3.3 is not a requirement. Without the statements in R3.3.1-R3.3.4, R3.3 is simply a phrase. Sub-Sub-Requirements R3.3.1 through R3.3.4 should be bullets under R3.3, with the language in R3.3 modified so that it becomes the requirement to conduct contingency analyses that address the four resulting bullets R3.3.2 is unclear as drafted. The minimum steady state voltage limitation for synchronous generators is not a very meaningful value. All generators with an automatic voltage regulator will maintain the set point voltage until the VAR capability of the generator is exceeded, and then the voltage will deteriorate. R3.5 – We disagree with the requirement to explain why remaining Extreme Contingencies would produce less severe System results than the ones selected for study. The first part of the requirement requires identification of events that produce more severe System impacts. The reason the others were not selected is because they were less severe or non-credible. In any case, theoretically, there can always be a more severe Extreme Contingencies than the one selected for study. For example, if the Extreme Contingency studied were simultaneous loss of 3 transmission lines with failure of redundant RAS, then simultaneous loss of 4 lines with failure of 2 sets of redundant RAS would be more severe. Listing all possible extreme events could result in a limitless list.

As currently drafted, R4.3 is not a requirement. Without the statements in R4.3.1-R4.3.3, R4.3 is simply a phrase. Sub-Sub-Requirements R4.3.1 through R4.3.3 should be bullets under R4.3,

with the language in R4.3 modified so that it becomes the requirement to conduct contingency analyses that address the three resulting bullets. R4.3.2 – it is not clear what is required to be modeled. Typically a generator may have 10 or more protective relays. Is the intent to model all relay protection? The existing commercial programs do not have sufficient models or capacity to do that for all generators in the system. R4.5 – We disagree with the requirement to explain why remaining Extreme Contingencies would produce less severe System results than the ones selected for study. The first part of the requirement requires identification of events that produce more severe System impacts. The reason the others were not selected is because they were less severe or non-credible. In any case, theoretically, there can always be a more severe Extreme Contingency than the one selected for study. For example, if the Extreme Contingency studied were simultaneous loss of 3 transmission lines with failure of redundant RAS, then simultaneous loss of 4 lines with failure of 2 sets of redundant RAS would be more severe. Listing all possible extreme events could result in a limitless list.

The term proxy is unclear. Please provide an example or an explanation of proxy.

We believe that references to FERC Orders should not be included in requirements of standards. This comment also applies to M7.

No

Claification is needed on the use of UVLS. Is it acceptable or not. Typically UVLS relays are modeled in the study. Not allowing any load shedding as a result of UVLS relays could result in very costly fixes for a very small amount of remote load. If the Non-Consequential Load Loss Allowed column is No, is load disconnecetd from the system by UVLS a violation? What about Supplemental Load Loss or UFLS?

No

P4: Under the event column it should clarify and state language similar to that of P5 (Loss of multiple elements caused by a stuck breaker). In addition, this is a multiple contingency condition and may result in loss of more than 2 elements. As such, this is a low probability condition and loss of Non-Consequential load should be allowed for EHV. We disagree with raising the bar for EHV for P4.

We agree that TPL-005 and TPL-006 appear to have been adequately covered in the draft TPL-001-1 as currently written. However, we will need to review this assessment after TPL-001-1 is finalized. In addition, there is no place to state our concerns for Section D. so we added it here. We question the "not applicable" entry under Section D 1.1.2. What does it mean when the reset period is not applicable? Does it mean there is no reset period, so all non-compliance in all prior years will be counted as prior violations when considering non-compliance in future years?

Group

Florida Reliability Coordinating Council, Inc - Transmission Working Group

R1 and M1: Consider clarifying that it is not the TP or PC responsibility to independently verify the consistency of the System models for portions of the Bulk Electric System outside of the TP or PC planning area (related to not using data consistent with data submitted as part of MOD-010 and MOD-012, each TP and PC should not have to review the data submitted by those outside of its planning area, but only its own planning area). Please Clarify the phrase “Models shall use data consistent with ….MOD-010” – is the intent for the data to be “identical” to the data provided under MOD-10 and MOD-12, or “consistent” meaning that the data might be older or newer depending on when the assessment took place vs when the data was submitted. R1.1 Consider changing Assessment (which does not include models) or re-wording to “Models for performing the studies needed to complete the Planning Assessment shall represent:” R1.1.1 Brings clarity to the question regarding planned outages. R1.1.2: Consider adding “Transformers” to the list of facilities. R1.1.2, please clarify what the drafting team intentions are for Circuit Breakers. Planning models used for power flow, dynamics and short circuit do not include circuit breakers. Modeling circuit breakers would cause convergence problems in the models due to that large number of zero impedance line sections. We sugges eliminating circuit breaker from the bullet list. R1.1.2 “Protection System equipment” this should be clarified to only apply to system stability models. The modeling of protective relays should be caveated with “as deemed appropriate”. We suggest eliminating “Protection System equiptment” from the bullet list. R1.1.4 Consider adding “that is expected to be utilized in the study case scenario” not all Firm Transmission can be included in all studies and are only used upon the availability of other resources . Consider changing the effective dates of R1 and R7 to take effect at the same time as R2 through R6 so you do not have to meet two standards during the same time period. Otherwise, clarify how the effective date impacts which version of the standard is to be used in an assessment before a scheduled compliance audit.

Incorrect reference shown at the end of R2.1. The appropriate reference should be R2.5. The end of the first sentence of R2.3 should have a reference to R2.5. The end of the first sentence of R2.4 should have a reference to R2.5. R2.1.4 - Please consider revising this for the analysis to include only Contingencies P0-P2 in Table 1. Alternatively we suggest moving this requirement to

be under sections 2.1.3 and 2.4.3 and treated as a sensitivity. R2.5 – This requirement is very valuable in clarifying that past studies can be used and what criteria needs to be met for them to be used. However it is not clear if all new studies could be met using past studies (e.g. a small system with very few changes year to year) of if some sub-requirements require a new study every year, with past studies only used as supporting information. If the intent is that some sub-requirements can not be met with past studies, then consider making that clear through a foot note or a list under Section 2.5 listing which study requirements may depend only past studies that are still current. R2.5.1 – Please clarify if the 5 calendar years is from the date the assessment is "finished" or the date the study process for the assessment begins. R2.5.2 – the identified 20 MW threshold is extremely small and would be doubtful to change the response of the BES. This requirement could also be interpreted that a previous study where the base case is not identical to the current planning case could be used. Please consider the following proposed language: "For steady state, short circuit, or Stability analysis: the present System model shall not include any material changes, such as, generation or Transmission additions/removals, or topology changes that have occurred in the intervening period that would impact the study area." (not show the list) R2.6 - Requiring sensitivities but not requiring that they meet specific performance requirements is a sound approach. R2.6 requires a corrective action plan when performance will not be met in the simulations. However, if an entity has already planned a needed facility and/or operation steps for a given conditions, the simulations will not show any deficiencies and therefore no corrective action plan is required. The term "Corrective Action Plan" implies that the situation is "wrong or incorrect", consider changing the approach to be to require an entity to have a "planning and Operations plan", "Improvement Action Plan", or simply a "Transmission Plan" that includes all facilities planned for the BES and descriptions of conditions where an operational process is being used. R2.6.1 – (Bullet 2) This requirement should also account for the removal of a Special Protection Systems: "Installation, modification or removal of Protection Systems or Special Protection Systems". R2.6.4 – This is an excellent addition R2.8 – Please explain the reason for this requirement. The effort required to collect this data is substantial and does not have any benefit to the BES. R2.9 – Please explain the reason for this requirement. It seems to cause Entities to develop performance criteria for themselves for Multiple and Extreme Contingencies that are not in Table 1. The effort required to collect this data to compare against any self-imposed criteria is substantial and does not have any benefit to the BES. The requirement will result in inconsistency across North America. There is also no discussion of what happens if a Multiple or Extreme contingency is shown to exceed the Entity's self-imposed criteria, is the Entity then non-compliant? If so, what if the Entity simply changes the self-imposed criteria? We suggest eliminating this requirement.

R3.3.1 & 3.3.4 – Consider adding language that the entity should not be held responsible for simulating "the removal of all elements that the Protection System and other automatic controls are expected to disconnect for each Contingency without operator intervention" on neighboring systems, only on the entity's own system. Also, consider moving R3.3.1 and R3.3.4 under R3.1 as sub-requirements and require that the overall studies take into account the effect of protection systems and control devices in the performance of the BES and it's ability to meet the table 1 requirements. R3.3.1 – This seems unnecessary for normal 2-terminal lines, consider adding language to the effect of: "Simulation of individual element outages is allowed if it produces an effect more severe than the entire circuit outage". R3.4 – Consider changing the header for table 1 – "Steady State & Stability Performance Extreme Events" to Table 2 – "Steady State & Stability Performance Events". As is, it could be interpreted that the expected performance requirements associated with Planning Events apply to Extreme Events also.

R4.3.1 – Please clarify, is the intent of this requirement to have every relay modeled? We suggest clarifying that the intent is that Protection System Equipment would be incorporated into the contingency list, and that modeling the Protection System equipment settings and logic would only be done for Protection Systems that could significantly impact stability response (e.g., out-of-step relaying) as deemed appropriate through engineering judgment, and that the intent would be to do this only for the Region under study and not the entire Interconnection (e.g., studies in Florida should not need to include relays in Canada). R4.4 & R4.5 – Does the intent of allowing this "More severe events" to establish actual study parameter extend between the planned events and extreme events (e.g. if a range of extreme events establishes that planning events performance requirements are met, would a redundant analysis of the planning events still be required)

None - no concerns identified by the TWG

Please clarify that the phrase "individual and joint responsibilities" applies to entities (e.g., the TPs and PCs) and not specific individuals. R6 – Please clarify if this requirement is intended for cases where a TP is not a PC and therefore is working "under" a PC? Or if this is intended to apply across neighboring PC's?

The requirement as written requires that the results of the assessment are shared on a post assessment basis between entities in a manner similar to the Attachment K process. Please clarify whether: -Is this intended to be the end results? Or does this require the inviting of entities in at the very beginning and facilitating their participation throughout the process? -Is it intended that the process described in order 890 become essentially a NERC Standard that every

sentence must be met in the most literal of sense? Or is this referencing the order as a general guideline on what should be expected but not as a literal checkmark of the process? Consider adding a footnote or other clarifications that failure of others to participate in the process is not a non compliance by the entity inviting them to the process. Otherwise non-responsiveness of a neighboring PC who may not have reliability need to participate and whose participation is beyond the control of the PC that initiated the process could trigger non-compliance.

Yes

Excellent changes

The table is significantly improved from the prior versions and provides superior clarification over the existing standards. However, please explain why there is a performance difference between P2.3 (breaker failure), P4 (stuck breaker) and P7 (2 circuits on a common tower) for EHV. We recommend consistant critera between P2.3, P4 and P7 that allow curtailment of firm service and loss of non-consequential load.

Yes

Excellent addition Footnote 10 is long and subjective. There is no purpose in adding the phrase "when coupled with the appropriate re-dispatch of resources obligated to re-dispatch" because if there is an obligation to re-dispatch, it is done, and if there is no obligation to do so, then curtailment is the only alternative – no coupling necessary. Suggested revision: 10. Curtailment of firm transmission service is allowed both as a System adjustment (as identified in the column titled 'Initial System Conditions') and as a corrective action, providing those adjustments do not result in the shedding of any firm Load.

Overall the plan is an improvement! Allowing for a 60 month phase in of the more restrictive performance requirements is useful, however consider applying the 60 month phase in (or some timeframe) to P1 events for extenuating circumstances, e.g. unable to obtain ROW, etc. Having R1 and R7 going into effect first do raise the concern of what TPL standards are in effect during the time frame. The implementation should also be more specific on what "going into effect" means. Assessments are not a one day event but are a year long effort that culminates in a final "report" that is the assessment. Most NERC standards effect ongoing activities, and the day they go into effect the utilities functions are expected to be compliant. In this case that rationale would require that in the prior year two assessments where performed, one compliant with the current standard and one compliant with then new standard, however we don't believe that was the intent. Perhaps a statement below the paragraph regarding the 60 month implementation plan for Corrective Action Plans to the effect of: "Once effective all future assessments shall upon completion be compliant with this standard. Assessments completed prior to the effective date shall be based on the TPL standards in effect at the time. The standard is not intended to require a retroactively compliant assessment be in effect when the standard becomes active, but instead that the next assessment be compliant with the revised standard"

Individual

Peter S. Schommer

Minnesota Power

A) Under R1 there is language that references "other data sources"; can the SDT please offer some clarification on what "other data sources" are to be? Could other data sources be Tariff requirements? B) Again under R1, the Time Horizon of the TPL standards is intended for years one through 10; However the Time Horizon shown in R1 only says "Long-term Planning". By definition of Long-Term Transmission Planning Horizon this covers years 6 through 10 and beyond. Suggestion to change the Time Horizon to read: "Near-Term and Long-Term Transmission Planning". C) Under R1.1.1 it is required that models represent planned outages of generation and transmission facilities, if specifically known. However, the requirement does not distinguish the length of the outage to be considered. Should a one week maintenance outage in Year Five be included? Should a two-year complete rebuild outage lasting through the entire years 2 and 3 be included? The SDT team needs to add a comment about the length of the planned outage and its relevance to the assessment. D) R1.1 is repeating what should already be in the MOD-010 and MOD-012 requirements. Is the inclusion of these elements in the TPL standard redundant? The planners expect the model building process will already included the components listed in R1.1, otherwise there would not be a functional model. If R1.1 is kept, we suggest removing the "Models for" so that R1.1 reads "The Planning Assessment shall represent:"

A) Under R2, the Time Horizon of the TPL standards is intended for years one through 10; However the Time Horizon shown in R2 only says "Long-term Planning". By definition of Long-Term Transmission Planning Horizon this covers years 6 through 10 and beyond. Suggestion to change the Time Horizon to read: "Near-Term and Long-Term Transmission Planning". B) Under R2.1 there is a reference to qualified past studies in R2.6. We believe that this reference should be pointing to R2.5 not R2.6. C) R2.1.4 addresses the spare equipment strategy. What is the scope of this sensitivity? Is the intent only to do a steady state analysis on equipment with long lead time spares? D) Under R2.2 a System peak load study is required annually for one of the years in the assessment period. R2.2.1 requires the assessing entity to extend their planning assessment to accommodate any known longer lead time projects that may take longer than ten

years to complete. It does not make sense to study the ten year horizon, then find a problem in year ten which has a solution that requires twelve years to build. For compliance with this standard, you would need to find another solution that can be built within ten years as opposed to the suggested language in R2.2.1 of extending the planning assessment beyond ten years to accommodate the solution that falls outside of the Long-Term Planning Horizon. No project solution greater than 10 years should be acceptable because it falls outside the Long-Term Transmission Planning Horizon. Suggestion to strike sub-requirement R2.2.1 from this standard. E) Requirements R2.1, R2.3, and R2.4 are written inconsistently. 2.1 says "The Near-Term Transmission Planning portion of the Steady State analysis…" 2.3 says "The short circuit portion of the Planning Assessment … addressing the Near-Term Planning Horizon…" 2.4 says "The Near-Term Transmission Planning portion of the Stability Analysis…" These three sentences confuse the order. As we understand, the Planning assessment has two parts: a Near-Term portion and a Long-Term portion. Each of those parts has three components: a Steady State component, a Short Circuit component, and a Stability component. We suggest the language in the standard should be structured consistently and appropriately as such. F) Under R2.4.3 there is ambiguity in the third bullet language "…new or modified Facilities…" and we believe that this language should mimic that of R1.1.2 in order to improve this requirement. The third bullet should read: Timing of the installation of new Facilities or changes to existing Facilities. G) The sub requirement R2.5.2 states that for steady state, short circuit, or stability analysis; the "present System model" shall not include any material changes, such as…..etc. The present language in this section is vague and requires discretion on the part of both the Transmission Planner and the Planning Coordinator performing the assessment. For example, new transmission enhancements may have been added since the previous System model was developed. In general, such topology enhancements will only improve reliability and would not necessitate re-assessment with a newly updated System model. In addition, any significant generator additions would have been evaluated with a full separate generator interconnection study at which the full reliability of the System would have been taken into consideration. For this reason, we believe the following language for R2.5.2 would improve this requirement: "For steady state, short circuit, or Stability analysis: the current System model of the assessed plan year shall not include any changes material to the assessment, as judged by the entity performing the assessment, such as, generation or Transmission additions/removals, or topology changes that have occurred in the intervening period and would impact the study year. Material generation changes could include:" H) Modify R2.6.2 to remove the obligation to include the project initiation date. The inclusion of this date would add unnecessary work that is not needed to assure adequate BES reliability In addition, it is not clear whether "initiation" refers to the commencement of engineering, design, construction, etc.

A) Under R3, the Time Horizon of the TPL standards is intended for years one through 10; however, the Time Horizon shown in R3 only says "Long-term Planning". By definition of Long-Term Transmission Planning Horizon this covers years 6 through 10 and beyond. Suggestion to change the Time Horizon to read: "Near-Term and Long-Term Transmission Planning". B) R3.3.3 Is this sub-requirement redundant with PRC-023-2? Is it covered in FAC-009? We believe the SDT should review these standards and if it is a redundant requirement, then this sub-requirement needs to be removed. C) Under R3.4 to make this requirement clearer, please add the following language between the words "expected to" in the first sentence: …expected by the assessing entity to…" We believe that this language addition improves the clarity of this requirement. The first sentence would then read: "Those Planning Event Contingencies in Table 1 that are expected by the assessing entity to produce more severe System impacts shall be identified and a list of those Contingencies to be evaluated for System performance in Requirement R3.1 created." D) Under R3.5 to make this requirement clearer, please add the following language between the words "expected to" in the first sentence so that the phrase reads: "…expected by the assessing entity to…" We believe that this language addition improves the clarity of this requirement. The first sentence would then read: "Those Extreme Events in Table 1 that are expected by the assessing entity to produce more severe System impacts shall be identified and a list of those events to be evaluated for System performance in Requirement R3.2 created."

Under R4, the Time Horizon of the TPL standards is intended for years one through 10; however, the Time Horizon shown in R4 only says "Long-term Planning". By definition of Long-Term Transmission Planning Horizon this covers years 6 through 10 and beyond. Suggestion to change the Time Horizon to read: "Near-Term and Long-Term Transmission Planning".

Under R5, the Time Horizon of the TPL standards is intended for years one through 10; however, the Time Horizon shown in R5 only says "Long-term Planning". By definition of Long-Term Transmission Planning Horizon this covers years 6 through 10 and beyond. Suggestion to change the Time Horizon to read: "Near-Term and Long-Term Transmission Planning".

Under R6, the Time Horizon of the TPL standards is intended for years one through 10; however, the Time Horizon shown in R6 only says "Long-term Planning". By definition of Long-Term Transmission Planning Horizon this covers years 6 through 10 and beyond. Suggestion to change the Time Horizon to read: "Near-Term and Long-Term Transmission Planning".

Under R7, the Time Horizon of the TPL standards is intended for years one through 10; however,

the Time Horizon shown in R7 only says “Long-term Planning”. By definition of Long-Term Transmission Planning Horizon this covers years 6 through 10 and beyond. Suggestion to change the Time Horizon to read: “Near-Term and Long-Term Transmission Planning”.
Yes
Yes
The stability studies require significantly more computer time and a more detailed model. The standard should allow the PC/TP to use judgment to manage size and complexity of the study.
Yes
Yes
Group
FMPA, and it's All-Requirements Project Participants, as follows: Lakeland Electric; Fort Pierce Utilities Authority; Keys Energy Services; City of Vero Beach; Beaches Energy Services; Kissimmee Utility Authority; and Lake Worth Utilities
R1, consider clarifying that it is not the TP or PC responsibility to independently verify the consistency of the System models for portions of the Bulk Electric System outside of the TP or PC planning area (related to not using data consistent with data submitted as part of MOD-010 and MOD-012, each TP and PC should not have to review the data submitted by those outside of its planning area, but only its own planning area). R1.1.2: Consider adding “Transformers” to the list of facilities. R1.1.2, please clarify what the SDTs intentions are for Circuit Breakers. Planning models used for power flow, dynamics and short circuit do not include circuit breakers. Modeling circuit breakers would cause convergence problems in the models due to that large number of zero impedance line sections. We suggest clarifying that the intent is to develop “planned” Facility Ratings in the models to reflect new Circuit Breakers, and to reflect the location and timing of circuit breakers in contingency lists, and not to model the actual circuit breakers. R1.1.2 “Protection System equipment” should be clarified to only apply to system stability models. The modeling of protective relays should be caveated with “as deemed appropriate”. We suggest clarifying that the intent is, for power flow and short circuit studies, Protection System Equipment would be incorporated into Facility Ratings and the contingency list. And we suggest further clarifying that the intent is the same for Stability Studies, with the addition of modeling Protection System equipment that could significantly impact stability response (e.g., out-of-step relaying) as deemed appropriate through engineering judgment. R1.1.4 Consider adding “that is expected to be utilized in the study case scenario” not all Firm Transmission can be included in all studies and are only used upon the availability of other resources (for instance, if there are two firm point-to-point contracts in opposite directions across the same Interchange, both probably ought not to be modeled at the same time). Consider changing the effective dates of R1 and R7 to take effect at the same time as R2 through R6 so you do not have to meet two standards during the same time period. Otherwise, clarify how the effective date impacts which version of the standard is to be used in an assessment before a scheduled compliance audit.
Incorrect reference shown at the end of R2.1. The appropriate reference should be R2.5. The end of the first sentence of R2.3 should have a reference to R2.5. The end of the first sentence of R2.4 should have a reference to R2.5. R2.1.4, what does “(t)he analysis shall reflect the Contingencies identified in Table 1” mean? Is the intention similar to sensitivities, where there is no direct requirement to meet the performance standards of Table 1? If so, why not include loss of a long lead time Facility followed by other contingencies one of the Sensitivities and not have a separate sub-requirement for it? Or, is the intention that the TP and PC must meet the performance requirements of Table 1 considering the outage of a long lead time Facility? We hope that the intent is not to require Entities to be able to meet the performance requirements of Table 1 assuming a long lead time Facility out of service. If that is the intent, then we believe that only Contingencies P0- P2 in Table 1 ought to apply to Requirement R2.1.4. Otherwise, Requirement R2.1.4 would require building transmission to triple contingency (N-3) criteria. Contingency P3 requires building transmission to a single contingency plus a generator outage (a double contingency that has the same performance criteria requirements as single contingencies). Since generators are long term lead Facilities that no one that we know of carries spares for, R2.1.4 as written would mean that Contingency P3 becomes two generators out of service with system adjustments followed by another contingency (N-3). This would have the (possibly unintended) consequences of significantly reducing long-term firm ATC since utilities will likely use TRM to account for the potential for long-term outages. If meeting the criteria of Table 1 is the intent of the SDT, then a potential way to address this is to restate R2.1.4 to state that only P0 through P2 (zero and single contingency) apply to R2.1.4. If meeting the performance criteria of Table 1 is the intent of the SDT for R2.1.4, then we also believe that R2.1.4 should also only apply to the EHV and not the HV system. Yes, when a major piece of equipment such as a transformer fails, it could be out for a long period of time; however, a transformer failure is far less probable than an over-head transmission line failure (e.g., a

transformer failure is in the range of a once in 50 year event, whereas a transmission line fails probably once a year or once every other year, almost two orders of magnitude difference). A major 500 kV/230 kV autotransformer failure will have a far larger radius of impact than a 230 kV/138 kV autotransformer meant to serve the local area, giving additional support to purchasing a spare transformer for the 500/230 kV auto (EHV system). A small utility with only one or two 230 / 138 kV autos does not have sufficient justification to purchase a spare autotransformer due to the very low failure rate and the much more localized purpose of the transformer. If the intent of the SDT is to meet the performance requirements of Table 1 for R2.1.4, then the standard would essentially cause many small utilities who cannot justify spare autos to plan to serve only load and significantly reduce ATC in the planning horizon. Based on the lesser impact of HV connected autos as compared to EHV connected autos, and if the intent of the SDT is to meet the performance requirements of Table 1 for R2.1.4, then we would recommend that, for auto-transformers, R2.1.4 should only be applicable to EHV connected auto-transformers. R2.8 – Please explain the reason for this requirement. The effort required to collect this data is substantial and does not have any benefit to the BES. R2.9 – Please explain the reason for this requirement. It seems to cause Entities to develop performance criteria for themselves for Multiple and Extreme Contingencies that are not in Table 1. The effort required to collect this data to compare against any self-imposed criteria is substantial and does not have any benefit to the BES. The requirement will result in inconsistency across North America. There is also no discussion of what happens if a Multiple or Extreme contingency is shown to exceed the Entity's self-imposed criteria, is the Entity then non-compliant? If so, what if the Entity simply changes the self-imposed criteria?

R3.1, The criteria in Table 1 do not allow load shedding following a single contingency (e.g., the old footnote "b" was removed). While we agree this ought to be the case for the EHV system, we believe that there are cases where for the HV system, which often acts more like a distribution system, the costs to meet this standard would be prohibitive and unfair to the consumers served by those utilities. For instance, the Florida Keys served by the Florida Keys Electric Coop (FKEC) and Keys Energy Services (KEYS) is connected to the mainland by two 138 kV lines down to Tavernier Key (about 1/3rd the distance from the mainland to Key West). Currently, the system is planned and operated under single contingency to allow non consequential load shedding automatically via Under-Voltage Load Shedding, and to meet thermal limits by manual load shedding, all load shed is in the Florida Keys following the single contingency with no impact to the Bulk Electric System. The standard, as written, would force one of two things: 1) the construction of a third line in this environmentally pristine area at a very high cost that might increase rates to customers in the Florida Keys by 20% for a level of reliability that much of the Keys would not even experience since 2/3rds of the Keys is fed by a radial line with consequential load loss; or 2) separate the two lines such that both are operated radially with resultant consequential load loss, compliant with the standards, but actually causing consumers to have a lower level of reliability. We propose to reinstate footnote "b" for the HV system, allowing non-consequential load loss for lower voltage system that have little to no impact on the Bulk Electric System and limit the elimination of non-consequential load loss to be applicable to only the EHV. Alternatively, but less appealing and more of an administrative challenge would be to establish a Regional Entity administered process for application for exception to this criteria. FERC's Order 693 at paragraph 1794 states that: "(t)he Commission also clarifies that an entity may seek a regional difference to the Reliability Standard from the ERO for case-specific circumstances". We interpret this as meaning the Regional Entity can allow exceptions under certain criteria such as a significant increase in costs to consumers with little discernable benefit as is the case with the Florida Keys. For R3.2, we are at a loss of how a hurricane event can be modeled, and why such an evaluation is needed. Albeit, many contingencies can occur during a hurricane event, it is not likely that multiple contingencies will happen within the same < 1 minute window it takes to go from transient stability conditions to steady state conditions, and then it is unlikely that multiple significant contingency events will occur within the 30 minutes it takes operators to adjust the system to prepare for the next contingency. Therefore, we do not understand the significance of modeling a hurricane event. In addition, a hurricane can have an infinite number of different scenarios and time-lines of contingencies and picking one or two would be a meaningless exercise since an actual hurricane will be completely different than what is modeled. At least an earthquake has a fault line that makes it relatively easier to identify which facilities might be affected, but a hurricane has an infinite number of possibilities. We suggest eliminating hurricanes from extreme events and model potential results of a hurricane, such as loss of a ROW, loss of a substation or plant, and loss of a major load center. R3.3, the list ought to consider contingencies on neighboring systems that could impact the TP's / PC's system (this comment would not carry over to R4.3 since stability is more a protection system / clearing time issue). R3.3.1, the entity should not be held responsible for simulating "the removal of all elements that the Protection System and other automatic controls are expected to disconnect for each Contingency without operator intervention" on neighboring systems, only on the Entity's own system. R3.4 and the first part of R3.5 ought to be combined, e.g., both require justification for why a limited set of worst case contingencies are studied for N-1, N-2 and extreme contingencies. The latter part of R3.5 concerning cascading outages for an extreme contingency should become the only requirement of R3.5 (there are currently two requirements

embedded within R3.5).

R4.2, see comment on R3.3 concerning how to model a hurricane event or other weather event. R4.3, contingency analysis ought to specifically exclude studying contingencies on neighboring systems since stability is more related to protection system and clearing times. R4.3.1, please clarify, is the intent of this requirement to have every distance relay in each Interconnect modeled? We suggest clarifying that the intent is that Protection System Equipment would be incorporated into Facility Ratings and the contingency list, and that modeling the Protection System equipment settings and logic would only be done for Protection Systems that could significantly impact stability response (e.g., out-of-step relaying) as deemed appropriate through engineering judgment, and that the intent would be to do this only for the Region under study and not the entire Interconnection (e.g., studies in Florida should not need to include relay models in Canada). R4.3.2, we assume that the intent of this requirement would be to help establish the magnitude and duration of acceptable post-transient voltage dips, presumable to meet the curve published in the PRC-023 standard under draft. Is this a correct assumption? We assume the drafting team does not expect models to be written for every generator to actually model potential loss of station service due to voltage dips and automatically model potential generator trips. R4.4 and R4.5, see comments on R3.4 and R3.5 about re-arranging these requirements.

No comments

Please clarify that the phrase “individual and joint responsibilities” applies to entities (e.g., the TPs and PCs) and not specific individuals.

No comments

Yes

No

Table 1 seems to have lost the requirement to be within Facility Ratings for single and double contingencies (e.g., the change in note “f” of Table 1). Are we missing something? If not, is this change intentional? Footnote 10 does not seem to adequately highlight that Facilities should be within applicable ratings for single and credible double contingencies. The table is significantly improved from the prior versions and provides superior clarification over the existing standards. However, please explain why there is a performance difference between P2.3 (breaker failure), P4 (stuck breaker) and P7 (2 circuits on a common tower) for EHV. Considering the frequency of these events in actual experience, it would seem that 2 circuits on a common tower should have a more restrictive or equal performance to a stuck breaker performance, yet the performance requirements are just the opposite. We recommend allowing curtailment of firm service and loss of non-consequential load for a stuck breaker or failed breaker.

Yes

We disagree with how the performance criteria is applied to different contingencies, but agree that firm transmission can be curtailed post-contingency as a system adjustment, and especially as preparation for the next contingency.

No

We suggest that the 60 month calendar apply to the HV system as well for all Categories. It is just as difficult, if not more difficult, to build a new 138 kV line in the Florida Keys as it is to build a 300+ kV line. The same time frame should apply to both. Also, as highlighted in the comments above to R2.1.4, P3 essentially causes utilities to build upgrades to N-3 planning criteria which may necessitate significant transmission upgrades if left unchanged. Hence, if left unchanged, P3 ought to have at least 5 years as well. The implementation plan ought to include an “out” for extenuating circumstances, e.g., unable to obtain ROW, etc. For instance, it is doubtful that another line in the Keys could ever get built without significant intervention and utilities that are unable to obtain ROW should not receive sanctions for something outside of their control. Consider changing the effective dates of R1 and R7 to take effect at the same time as R2 through R6 so you do not have to meet two standards during the same time period. Otherwise, clarify how the effective date impacts which version of the standard is to be used in an assessment before a scheduled compliance audit. The implementation should also be more specific on what “going into effect” means. Assessments are not a one day event but are a year long effort that culminates in a final “report” that is the assessment. Most NERC standards effect ongoing activities, and the day they go into effect the utilities functions are expected to be compliant. In this case that rationale would require that in the prior year two assessments were performed, one compliant with the current standard and one compliant with then new standard, however we don’t believe that was the intent. Perhaps a statement below the paragraph regarding the 60 month implementation plan for Corrective Action Plans to the effect of: “Once effective all future assessments shall upon completion be compliant with this standard. Assessments completed prior to the effective date shall be based on the TPL standards in effect at the time. The standard is not intended to require a retroactively compliant assessment be in effect when the standard becomes active, but instead that the next assessment be compliant with the revised standard”

Individual
Tim Wu
LADWP
For R1.1.4 the requirements should be based on "expected transfer" instead of "firm transmission service". When projecting into future, the term "firm transmission service" is meaningless because transmission service contracts can be changed overnight. Using "firm transmission service" as a base would also exclude any new contract that are not considered in the study. It is very short-sighted to plan new transmssion facilities only based on "firmed transmission services". R1.1.2 is very confusing. What is a new technology? Is it something we don't know? If we know what it is, is it still a new tchnology? If we don't know, how do we model it? Also, we do not model individual circuit breaker but the effect of the circuit breakers; same apply with control devices or protective system equipment. Need more clarity. In general, a laundry list of items to be represented is a bad idea because it gives the impression that anything not on the list does not need to be modeled.
R2.3 There is no value to conduct short circuit analysis on an annual basis. Short circuit contribution is location constrained. Maximum short circuit interrupting duty cannot be determined by any planning cases; so putting this requirement in TPL will cause only confusion and will creat misleading information. If there is a need to develop a standard on how to evaluate maximum short circuit interrupting duty, the more appropriate place would be FAC. R2.1.3 Controllable Loads and DWM: DSM should not be a stand alone item in planning studies because DSM already is imbedded in load forecasts. Not sure what controllable loads are. R2.1.4 Any requirment dealing with spare parts should be handled in TOP, not TPL. TOP is the forum to develop operating procedures,"work-arounds", and so on when the non-availability of spare forced a company to develop temporary mitigations and it would be a mistake to suggest that planners should be able to consider such temporary fixes as acceptable planning solutions. R 2.5.2 The 20 MW threshold, at best, is "noise" for us. We would not be concerned with generation chnages that is 10 times this threshold. What is the rationale for requiring a new study just because there is a change in generation capability? R2.8 and 2.9 What measurements would this required information be measured against? I can't find any and if there is no measurement, it really does not belong. R2.6.2 Project initiation date is hard to define. Is it the date the project is budgeted? or the date the management approved the budget and at what level? or is it the date when engineering design is initiated? For both short term and long term planning horizons, the project in service date should be sufficient. there are too many variables to define "project initiation date" not to mention there is no measurable to benchmark such a requirement.
R3.4 This requirement is very strange. If there is a known planning event that is more severe than those listed in Table 1, it should be so identified in Table 1. It is not fair to ask every planner to search for more severe contingencies without any specifics. R3.4 should be deleted. R3.5 This is similar to R3.4; this requires proving of null set. The only way this requirement can be met is to perform an exhaustive and unlimited list of extreme event, real or imaginery, before a rationale can be rendered. This requirement should be deleted with the exception of the last sentence regarding "cascading outages.
R4.5 See coments on R3.4 and 3.5
What is a proxy as related to transmission planning? The drafting team should not introduce "non-standard" terms in a Standard document.
R6: Does this requirement requires authors of the planning assessment report should be identified? If so, can we use plain English like "The authors of the Planning Assessment report shall be identified". If not, please explain what this requirement is all about.
FERC 890 stands on its own, why should a planning standard refers to a FERC Order? Does this imply that if a FERC Order is not referenced in the planning standard, we can ignor the order?
No
UVLS should be an allowed mitigation for multiple contingencies, P3 and above. UVLS is an effective measure against voltage collapse, a system condition that if not mitigated in a timely fashion could lead to cascading events. Saqme with UFLS.
No
Table 1 continues with discriminatory performance criteria required of 300kV and above facilities. This new "higher" criteria could lead to endless argument and litigations as to who did what to whom if implemented. Currently, all transmission facilities have same performance criteria; the impacts of each new facility are carefully evaluated and mitigations are included as part of the Plan of Service. This new, discriminatory requirement would force everyone with EHV facilities to re-do its palnning studies and mitigate the impacts. Unfortunately, the real world is quite messy. For example, Company A has put in a 500KV line twenty years ago and since then, Companies B, C, and D have put in several underlying 230 kV, 115 kV lines. Is company A on hook now to mitigate all the problems for lines that came in later? Or is it required to re-create the conditions 20 years ago and mitigate only what would have been required. This is a very simplistic example to illustrate potential disagreements that would arise by this discriminatory criteria. If there is

any engineering evidence to support this arbitrary requiremnts, it has yet to be presented. As I commented in the past, the last two major cyctme wide cascading event, both in WECC AND THE Eastern Interconnect, were both caused by 230kV systems.

No

The use of the term"Firm Transmission Service" is problematic at best. See my comments on R1. The proper term is "Expected Transfer Level"

No

Cannot agree to something when this is not final.

Individual

John Collins

Platte River Power Authority

R1.1.2. "....for each year of the Near-Term and Long-Term..." Models for each year of the 10 years in the planning horizons are not developed in our Region. Please clarify your intention. R1.1.2. 3rd bullet - "Circuit breakers (or the effects of)" R1.1.2. 4th bullet - "Protection System equipment (or the effects of)" R1.1.2. 5th bullet - "Control devices (or the effects of)" R1.1.2. 6th bullet - "New techonologies (or the effects of)" R1.1.4. "Firm Transmission Service (or expected transfers)

R2.6.2. Expand on the meaning of the "initiation date." R2.8. I don't understand the relevance of this requirement. May your intention be explained differently? R2.9. I don't understand the relevance of this requirement. May your intention be explained differently?

R3.3.3. Zone 3 type relay loadability studies (single and multiple contingency analyses) should be performed in the OPERATING HORIZON to provide results flagged for possible problems to the Relay Engineers who will evaluate a relay setting change on an Facility or a modification to a relay setting for a new Facility about to be put in-service. I do not see the value of Zone 3 relay loadability checks in the Planning Horizon.

R4.3.2. Delete this requirement as it is covered under MOD-013-1, R1.2 for RRO Dynamics Data requirements. When the generator is modeled accordingly the generator's performance will be simulated and analyzed in the stability studies. R4.3.3. Delete this requirement as it is covered under MOD-013-1, R1.2 and R1.3 for RRO Dynamics Data requirements. When the generator is modeled accordingly the generator's performance will be simulated and analyzed in the stability studies.

R5. For clarification, please list examples of "proxies" that might be used.

R7. Delete this requirement as it is the responsibility of the Transmission Provider under FERC Order 890.

No

Non-Consequential Loss of Load - It is not clear in all the Load Loss definitions where planned load shedding or "controlled interruption of electric supply" belong. However, the NERC Webinar on June 30 was very helpful, and I make the following comment in line with the answer I heard to my question. A "Yes" in the last column of Table 1 means that planned load shedding or "controlled interruption of electric supply" is allowed for that Category of Contingencies. (For a P2.2 Bus Section Fault, SLG, HV, "Yes", one could choose to implement a planned load shedding procedure or scheme to meet system performance requirements.) Planned load shedding may be manual load shedding or automatic actions such as direct load tripping or UVLS for example. Therefore, please add mention of the planned load shedding or the "controlled interruption of electric supply" and list specific examples in the definition for "Non-Consequential Loss of Load."

No

At the top of Table 1 Planning Events, under "Stability Only:" regarding Note "i": Suggest deleting everything from "established" on to the end. (WECC establishes acceptable limits for transient voltage response.)

Yes

Individual

Larry Brusseau

MAPPCOR

R1 - what it means to include “requirements of regulatory authorities and other legal obligations”. Even if some version of this language is kept in the final standard, it seems to belong in R2 rather than R1. R1.1.1 - should remove the word “specifically” since it means nothing. Only known long-term outages of generation and transmission should be required to be modeled. R1.1.2 in the first line should have the word “studied” to avoid confusion, to read “New planned Facilities and changes to existing Facilities for each year studied of the ...” R1 states that the models used in these studies shall be consistent with data provided through MOD-010 and MOD-012. The data submitted for these are updated on a schedule provided by the RRO and not

necessarily reflective of any emerging changes that may have occurred between the MOD data collection cycle. The requirement should allow for exceptions to allow the most recent information to be included in the TPL studies.
R2.1.1 –Consider calling this “Near Term years” instead of specifically naming certain years. R2.1.3 – eliminate the last bullet. Planned duration or timing of Transmission outages is part of R1.1.1 which already specifies that models will include planned outages of generation and transmission facilities. R2.1.4 – the second line is unclear. There is a reference to “…lead time of one year or more…” Is the intent for that to mean “… outage duration of one year or more…”? If so, it should be written that way. Also, in the 3rd line, eliminate the words “… an analysis of…” (otherwise it would direct one to assess an analysis.) This in essence is an N-3 study. This risk that a TO or GO takes will show up in the operations of the BES. Also some states assess a penalty for equipment that is sitting idle that cost the taxpayers, so you could be penalize for not have spare equipment or if you do have it. R2.2.1 – does this mean, for example, that entities may be doing 12 year or 15 year assessments? It should be written to say what it means. R2.4.1 – Change to read: “For peak System Load levels, a Load model shall be used which appropriately represents the dynamic behavior of Loads, including consideration of the behavior of induction motor Loads or an aggregate System Load model which represents the overall dynamic behavior of the Load.” R2.5.1 – Suggest deleting this requirement, and incorporating it into R2.5.2. R2.5.2 – Incorporate R.2.5.1 into R2.5.2; please modify the section as follows: For steady state, short circuit, or Stability analysis the study shall be less than five calendar years old or less: the latest Transmission Planning Horizon System model shall not include any material changes, such as, generation or Transmission additions/removals, or topology changes that have occurred in the intervening period and would impact the study area. Material generation changes could include: • The addition/deletion/change of individual generating unit capability determined to be material by the Planning Coordinator or Transmission Planner. • An aggregated addition/deletion/change to a group of generating units directly connected through their step-up transformer(s) to the BES determined to be material by the Planning Coordinator or Transmission Planner. R2.6 – The creation of hard and fast Corrective Action Plans for the LTRA is not a good use of resources. The reason for planning studies is to uncover possible weak spots in the system for some number of years into the future, and then pursue additional studies to examine the issues. Planning studies include many assumptions, and the issues may not even arise on the real system. If they do, there may be many possible remedies. Creating CAPs with milestones and other firm dates for potential problems uncovered in assessments of future years is simply not practical, and the PC (PA) may have little or no influence on what remedy is selected even if a problem appears to be real. R2.6.2 – The phrase “Project Initiation Date” needs to be defined. It is unclear if this is this the date of ground breaking, purchase orders being issued, solution study initiation, etc. Additionally, in the second sentence the phrase “as well as an in-service date” should be modified to read “as well as a target in-service date”. R2.6.3 – Plans can provide a target in-service year but not an actual in-service year. R2.6.4 – recommend clarifying how “situations beyond the control of the TP or PC” are determined. It is unclear if this is to imply that if something is outside of the control of the department who conducts the planning studies or if it is outside the control of the registered function’s legal entity (i.e. corporation). There should be a cutoff point when changes occur beyond a certain date. When that date occurs, further changes will be evaluated in the next year’s assessment. Otherwise, if a state makes a decision not to site a project a few weeks prior to the end of the assessment period, there will not be sufficient time to incorporate this into that year’s assessment and develop corrective actions. R2.8 – appears to be nonessential information for reliability; for what purpose does this requirement exist? R2.9 - appears to be nonessential information for reliability; for what purpose does this requirement exist?
R3.3.2 – Traditionally transmission planners have used their judgment about the minimum steady state voltage limitations of generators. If this standard is going to require its incorporation into the assessments, there should be an MOD standard developed requiring the generators to provide the necessary information prior to its inclusion as a requirement in this standard. R3.3.3 – PRC-023 requires relay loadability to be reflected in facility ratings. Therefore this additional requirement is unnecessary and should be deleted. R3.4 – is there a measure for what is a “more severe system impact”? R3.5 – Recommend that the requirement for Extreme Event testing be removed from this standard as there is no requirement to develop a Corrective Action Plan to address unacceptable consequences. Otherwise we recommend the following: -Extreme Event performance should be a consideration when developing Corrective Action Plans to address Planning Events -It should be clear that an evaluation does not require solution development for all Extreme Events -Change “an evaluation of possible actions…” to “where appropriate, reasonably practicable actions designed to reduce the likelihood or mitigate the consequences and adverse impacts of the event(s) shall be considered.”
R4.3.2 - Traditionally transmission planners have assumed that generators would ride through low voltages associated with Planning Events which is generally adequate for non-wind generators. If this standard is going to require its incorporation into the assessments, there should be an MOD standard developed requiring the generators to provide the necessary information prior to its inclusion as a requirement in this standard. R4.5 -Recommend that the

requirement for Extreme Event testing be removed from this standard as there is no requirement to develop a Corrective Action Plan to address unacceptable consequences. Otherwise we recommend the following: -Extreme Event performance should be a consideration when developing Corrective Action Plans to address Planning Events -It should be clear that an evaluation does not require solution development for all Extreme Events -Change “an evaluation of possible actions…” to “where appropriate, reasonably practicable actions designed to reduce the likelihood or mitigate the consequences and adverse impacts of the event(s) shall be considered.”

an example of proxy may be helpful, not all entities use proxies.

Propose expanding the scope of entities to consider, limit it to those entities that indicate a reliability need for coordination, and eliminate the direct reference to Order 890. Suggest this text: “Each Planning Coordinator shall establish a list of adjacent Planning Coordinators and any functional entity who has indicated a reliability need, distribute its Planning Assessment results to the listed entities and consider comments on the assumptions and results through an open and transparent peer review process.”

Individual

Aaron Staley

Orlando Utlities Commission

-This section is very clear. Section R1.1.1 brings clarity to the question regarding planned outages. -The phrase “Models shall use data consistent with ….MOD-010”, is the intent for the data to be “identical” to the data provided under MOD-10 and -12, or just “consistent.” For example does the data in the study have to be the same or can the studies be based on older or more up to date data depending on when the studies took place?

-I think R2.1 has a typo and should reference requirement R2.5, not R2.6. -R2 Does the phrase “System Peak Load” require true system peak be tested, or a peak condition. As an example, FRCC experience a two peak loads, a summer peak that occurs regularly on summer afternoons, and a slightly higher winter peak that occurs only every few years. While the load is lower, the summer condition is more critical since it is coincident with high ambient temperatures resulting in line and generator capabilities lower then those in the winter. -Overall I think Section R2.5 is very valuable in clarifying that past studies can be used and what criteria needs to be met for them to be used. However in reading through all the requirements I am unclear if all the studies could be met using past studies of if some require a new study every year. If the intent is that some sub requirements can not be met with a past study, that should be made clearer through a foot note or a list under Section 2.5 showing which study requirements may depend only on past studies that are still current. -R2.5.1: Is 5 calendar years from the date the assessment is “final” or the date the study process for the assessment begins? -R2.5.2: I believe this requirement is a sound approach to establishing the validity of past studies. From the structure it appears that the list of material changes is intended as an example not a prescribed list? -R2.6: This requirement as written is a sound approach to building a reliable system. -R2.6: Requires a corrective action plan when performance will not be met in simulations. Is this just plan that covers the gap between simulation performance and desired performance? To take this example further, in application it would seem a project need may be identified in the current set of studies and added to the corrective plan, but once that project was added to the simulation model (in subsequent years studies) then the project would not longer appear in the corrective plan. As a minor issue, if the actual intent is for this plan to cover all planned projects, not just the gap between current plan and current study, could the name be changed to something like “Transmission improvement and operational plan”, the name “corrective action plan” always implies to me that you’ve actually violated something and are trying to correct it rather then the natural evolution of transmission plans. The section of this requirement addressing sensitivities and the corrective action plan is excellent. -R2.6.4: This is an excellent addition. There are certainly cases where a utility that is closely interconnected can be affected by a change of a neighbor’s transmission plan. Requiring documentation of the steps being taken to resolve the issue is the appropriate requirement to place on utilities in that position. -R2.9: Is this the largest actual Non Consequential load loss that could occur for those events based on simulation (like R2.8), or is it an overall criteria that the utility sets and applies to itself during studies to determine when a Non Consequential load loss is large enough to require further action?

For Requirement 3.3.1 and 3.3.4 I suggest adding language similar to 3.3.2 and 3.3.3 establishing that “studies shall consider” rather then requiring every simulation precisely recreate this usually minor part of system performance. These devices generally do not respond except for a nearby event, and even then their response is rarely such that it would make the situation “worse”. The effect of these devices must be considered, but mandating that every simulation

faithfully reproduce the response of every device is not only an efficient way to do this, it actually provides a counter incentive to going above and beyond the standard requirements. Any simulation used to meet this standard that failed to precisely reproduce the performance of this equipment would be a violation of this requirement (as currently written). As such there is no incentive for an entity to include anything but the absolute minimum number of simulations required to meet the standard, since each extra simulation represents an opportunity to miss this requirement. Good planning is based on running a broad range of events against a broad range of conditions and evaluating those responses against a set of performance criteria. This is encouraged by requiring that studies consider the response of equipment to these events rather then mandating their precise reproduction in simulation.

For Requirement 4.3.1 and 4.3.3 I suggest adding language similar to 3.3.2 and 3.3.3 establishing that “studies shall consider” rather then requiring every simulation precisely recreate this usually minor part of system performance. These devices generally do not respond except for a nearby event, and even then their response is rarely such that it would make the situation “worse”. The effect of these devices must be considered, but mandating that every simulation faithfully reproduce the response of every device is not only an efficient way to do this, it actually provides a counter incentive to going above and beyond the standard requirements. Any simulation used to meet this standard that failed to precisely reproduce the performance of this equipment would be a violation of this requirement (as currently written). As such there is no incentive for an entity to include anything but the absolute minimum number of simulations required to meet the standard, since each extra simulation represents an opportunity to miss this requirement. Good planning is based on running a broad range of events against a broad range of conditions and evaluating those responses against a set of performance criteria. This is encouraged by requiring that studies consider the response of equipment to these events rather then mandating their precise reproduction in simulation. Requirement 4.4 and 4.5 establish that only those events that would cause the most severe system impacts should be studied. This is an excellent requirement since it focuses the large resource requirement in performing these studies on the events that will provide the best information. Does the intent of the “More severe events” to establish actual study parameter extend between the planned events (R4.4) and extreme events (R4.5)? Or phrased another way, if an entity selects a proper range of extreme events and establishes that planning event performance requirements are met, could that be used as evidence that R4.4 is met as well, or would R4.4 require the same conditions be reproduced in their less severe configuration.

R6: Is this requirement intended for cases where the TP is not also their PC, or is this between adjacent PC’s?

The term “results of the assessment”, is this is the final end result that is shared and analyzed? A requirement should not reference an order or another non NERC document. All the requirements and measures for performance should be covered in the standard or through reference to another NERC approved standard. The language used in other standards would be more appropriate and directly auditable. Require that the PC/TP to share assessment and support material with those requesting entities and respond to any of their specific comments. This will insure openness and transparency in a manner and can be directly audited.

Yes

Good Job.

Yes

Comments: The table is significantly improved from the prior versions and provides superior clarification over the existing standards. In areas where an entity is the TSP and the PC, it is obvious that the Firm Service provided by the TSP falls within the performance requirements of the standard regarding curtailment. However if the firm service is provided by another TSP (a different PC) and causes a problem, who is responsible for insuring it does not have to be curtailed. As an example if System A has a firm transmission service agreement that under contingency causes a problem on System C, is system C in violation if the service has to be cut to protect their system, or is System A that granted and is responsible for the service?

Yes

Overall the plan is excellent! Allowing for a 60 month phase in of the more restrictive performance requirements and an exception for those who need longer to meet them is an equitable and reliable practice. Having R1 and R7 go into effect first though raises the question of what TPL standard is in effect during that time frame? I recommend having the entire standard go into effect at the same time and avoid that issue. There is limited benefit to R1 and R7 going into effect early. The implementation should also be more specific on what “going into effect” means. Assessments are not a one day event but are a year long effort that culminates in a final “report” that is the assessment. Most NERC standards affect ongoing activities, and the day they go into effect the utilities functions are expected to be compliant, this is not however so clear when the “function” is the culmination of a year long effort. Perhaps a statement below the paragraph regarding the 60 month carve out to the effect of: “Once this standard becomes

effective all future assessments shall be compliant with this standard. Assessments completed prior to the effective date shall be judged by their compliance with TPL standards in effect at the time."

Group

Progress Energy Carolina (PEC)

PEC would like clarification on the following: "Models for the Planning Assessment shall represent: Circuit Breakers, Protection System Equipment, etc." The clarification should state that the models do not have to explicitly include these elements as long as their effect can be modeled.

PEC believes that "R2.1.1. System peak Load for either Year One or year two, and for year five" is unneccesarily prescriptive. PEC recommends eliminating the Year One or year two addition. PEC believes that R2.1.4. concerning an entity's spare equipment strategy is overly conservative. The standard should only require N-2 deep planning and not N-3. PEC believes that for R2.4.1 "a Load model shall be used which appropriately represents the dynamic behavior of Loads, including consideration of the behavior of induction motor Loads" should be clarified to include "as appropriate" clause. Induction motor load modeling should not be required for all dynamic studies. PEC believes that for R2.5.2. The language "For steady state, short circuit, or Stability analysis: the present System model shall not include any material changes, such as, generation or Transmission additions/removals, or topology changes that have occurred in the intervening period and would impact the study area" needs to be made more clear. The important point is that material changes must be modeled if they have occurred. Also the 20MW threshold is far too small to be material. PEC believes that R2.8. and P2.9 are unnecessary and should be removed.

No comments

No comment

No comment

No comment

No comment

No

In this definition: "Year One: The first year that a Transmission Planner is responsible for assessing. This is further defined as the planning window that begins 12-18 months from the current calendar year" recommend that the '12-18 months' specification be removed. It is confusing.

PEC prefers having separate tables for steady-state and dynamic analyses. PEC believes the requirements were more clear in that format.

No

PEC believes that Footnote 10 should be clarified. The proposed wording "Where Facilities external to the Transmission Planner's planning region are relied upon, Facility Ratings in those regions must be considered" is unclear. It is not clear what "relied upon" means. Also, thermal overloads on neighboring systems are generally the neighboring system's responsibility to mitigate.

No

More time than 12 months is needed for modeling the complete effects of Relay Protection Systems and the effects of Relay Loadability. PEC suggests that this period of time be extended to 24 months or longer.

Individual

Jason Shaver

American Transmission Company

We propose the following comments for R2: In sections R2.1.3 and R2.4.3 please explain the reference to "expected transfers" and how that differs from R1.1.5 "interchange." If these are analogous, then change the references to "interchange." Modify R2.5.2 second bullet to clarify that this addresses "an aggregated addition/deletion/change to a group of generating units directly connected through a shared step-up transformer . . . ." Modify R2.6.2 to remove the obligation to include the project initiation date. The inclusion of this date would add unnecessary work that is not needed to assure adequate BES reliability. In addition, it is not clear whether "initiation" refers to the commencement of engineering, design, construction, etc. ATC agrees that the Transmission Planner should be responsible for a corrective action plan (R 2.6) and its associated sub-requirements, but we do not agree that the Planning Coordinator should also be listed. Unlike a Transmission Planner, a Planning Coordinator does not have the ability or responsibility to implement a corrective action plan. Requirement 2.6 and its associated sub-requirements should be limited to only the Transmission Planner. Remove the R2.8 requirement. The activity of identifying and including the largest Consequential Load Loss caused by any P1 or any P2 events in the Planning Assessment may not assure adequate BES reliability. A P1 or P2 event with the largest Consequential Load Loss could occur at a location on the system that is

strong enough to not result in any performance violation. The amount of Consequential Load Loss may not have a relevant correlation to system performance and reliability. Remove the R2.9 requirement. The activity of identifying and including the maximum permissible Non-Consequential Load Loss caused by selected Table 1 Planning Events may not assure adequate BES reliability. The maximum permissible Non-Consequential Load Loss could occur at a location on the system that is strong enough to not result in any performance violation. The maximum amount of Non-Consequential Load Loss may not have a relevant correlation to system performance and reliability. Add R2.10. The obligation to identify and observe applicable steady state voltage and post-Contingency voltage deviations should be a Requirement, rather than performance note “a” in the Planning Events, Steady State Only section of Table 1. And the obligation to identify and observe applicable transient voltage response limits should be a Requirement, rather than performance note “b” in the Planning Events, Stability Only section of Table 1. In addition, due to the system limit requirements of FAC-010 and FAC-014 the reference to the PC and TP is unnecessary. We suggest this text: “The Planning Assessment shall identify the applicable steady state voltage, post-Contingency voltage deviations, and transient voltage response limits.”

We propose the following comments for R3. Revise the R3.3.2 text to clarify that subsequent analysis is performed on generators whose voltages are expected to fall below the minimum voltage limits. We suggest this text: “Consider the minimum steady state voltage limitations of all generators and identify how generators with bus voltages below its minimum voltage limits are analyzed in the subsequent steady state simulations.” Revise the R3.3.3 text to more clearly relate to the specific requirements in PRC-023. We suggest this text: “Incorporate relay loadability per PRC-023 and identify how relay loadability is analyzed in the steady state simulation.” Add R3.3.5. The obligation to consider only planned System adjustments that are executable should be a Requirement, rather than performance note “e” in the Planning Events, Steady State & Stability section of Table 1. We suggest this text: “Consider planned System adjustments, such as Transmission configuration changes and redispatch of generation, that are executable within the time duration of the applicable Facility Ratings.”

We propose the following comments for R4: Add R4.3.3 text to include relay loadability in the R4 (Stability) requirements to parallel R3.3.3 in the R3 (Steady State) requirement which would more clearly relate to the specific requirements in PRC-023. We suggest this text: “Incorporate relay loadability per PRC-023 and identify how relay loadability is analyzed in the dynamic simulation.” In R4.3.4, we propose limiting the scope to automatic devices and adding the notion of ”including but not limited to”. We suggest R4.3.4 text of: “Simulate the expected automatic operation of existing and planned control devices including but not limited to generation exciter control and power system stabilizers, static VAR compensators, power flow controllers, and DC Transmission controllers.” Add R4.3.5. The obligation to consider only planned System adjustments that are executable should be a Requirement, rather than performance note “e” in the Planning Events, Steady State & Stability section of Table 1. We suggest this text that matches R3.3.5: “Consider planned System adjustments, such as Transmission configuration changes and redispatch of generation, that are executable within the time duration of the applicable Facility Ratings.”

We propose specifying that the proxy documentation be included in the Planning Assessment and add the rationale for the proxy. We suggest this text: “Each Transmission Planner and Planning Coordinator shall document within the Planning Assessment any proxies used in the analysis to identify System instability for conditions such as cascading outages, voltage instability, or uncontrolled islanding. The documentation will consist of the definition of each proxy used and the rationale for the proxies.

We agree with the revisions to R6.

We propose expanding the scope of entities to consider, limit it to those entities that indicate a reliability need for coordination, and eliminate the direct reference to FERC Order 890 and peer review. We suggest this text: “Each Planning Coordinator shall establish a list of adjacent Planning Coordinators and any functional entity who has indicated a reliability need, and distribute its Planning Assessment results to the listed entities and consider comments on the assumptions and results.”

No

We suggest the following comments: Add a Consequential Generation Loss definition because both load and generation loss can be considered, but there is only Consequential Load Loss definition. We suggest text of: “Consequential Generation Loss: All Generation that is no longer delivered to any Transmission Facilities as a result of the Transmission Facilities removal from service by the operation of the installed Protection Systems designed to isolate fault conditions or otherwise protect the Transmission Facilities from abnormal operating conditions.” Expand the Consequential Load Loss definition to include protection for abnormal operating conditions. We suggest text of: “Consequential Load Loss: All Load that is no longer served by any Transmission Facilities as a result of the Transmission Facilities removal from service by the operation of the installed Protection Systems designed to isolate fault conditions or otherwise protect the Transmission Facilities from abnormal operating conditions.” Expand the Load Reduction definition to include consideration of TOP judgment and established protection schemes. We

suggest text of: “Load Reduction: The reduction of Load that is still connected to the System, but in the judgment of the Transmission Operator or through the previous established Special Protection Systems, Under-frequency Load Shedding programs, Over-frequency Load Shedding program, should be reduced to overcome to lower voltage conditions following a Planning or Extreme Event.” Modify the Planning Assessment definition to more explicitly apply to the BES and the TPL-001 requirements. We suggest text of: “Planning Assessment: Documented evaluation of future Transmission System performance and Corrective Action Plans to remedy identified deficiencies in the BES from the steady state and stability performance requirements set forth in the TPL-001 standard.” Modify the Planning Events definition to more explicitly apply to the TPL-001 requirements. We suggest text of: “Planning Events: Events that are identified in the steady state and stability performance requirements set forth in the TPL-001 standard.” Expand the Year One definition to include the PC, refer to the Planning Assessment, and refer to the current calendar year. We suggest text of: “Year One: The first year that each Transmission Planner and Planning Coordinator is responsible for conducting a Planning Assessment. This is further defined as the planning window that begins 12-18 months from the current calendar year.”

No

We suggest the following changes: We believe reference to the use of Load Reduction to meet steady state performance requirement was omitted in Planning Events, Steady State and Stability, Item b. We suggest modifying the last sentence in Item b: “However, Supplemental Load Loss and Load Reduction associated with an event shall not be used to meet steady state performance requirements.” We propose limiting the scope to automatic devices in Planning Events, Steady State and Stability, Item c. We suggest text of: “c. Simulate the removal of all elements that Protection Systems and other Controls are expected to disconnect automatically for each Contingency”. Remove performance note “e” in the Planning Events, Steady State & Stability section and replace it with R3.3.5 and R4.3.5, as suggested in the comments for R3 and R4. The qualification of allowable planned System adjustments should be a Requirement, rather than a performance note. Remove performance note “a” in the Planning Events, Steady State Only section, and replace it with R2.10, as suggested in the comments for R2. The obligation to identify and observe applicable steady state voltage and post-Contingency voltage deviations should be a Requirement, rather than a performance note. Remove performance note “b” in the Planning Events, Stability Only section and replace it with R2.10, as suggested in the comment for R2. The obligation to identify and observe applicable transient voltage response limits should be a Requirement, rather a performance note. Modify the P3 Category performance criteria to apply only to the loss of two generators because the probability of the loss of two base load generators is an order of magnitude greater than the loss of a generator and any other transmission element. We suggest the listing of: the loss of transmission circuit, transformer, shunt device, and single pole of DC line be removed from the P3 Events column. The corresponding events be moved to the P6 Category by “1. Generator” to the listing in the Initial System Condition (Loss of . . .) column. Limit the scope of the simulations in Item 1 of the Extreme Events, Steady State and Stability section to automatic systems and controls. We suggest this text: “1. Simulate the removal of all elements that Protection Systems and controls are expected to disconnect automatically for each Contingency.” Clarify the meaning of the loss of multiple circuits in Item 2.a of the Extreme Events, Steady State section by using wording similar to P7. We suggest this text: “a. Loss of three or more circuits that share a common structure.” Clarify the reference to actual, historical operating experience in Item 3.b of the Extreme Events, Steady State section. We suggest this text: “b. Other events based upon actual operating experience that may result in wide area disturbances.” Clarify the reference to actual, historical operating experience in Item 2.i of the Extreme Events, Stability State section. We suggest this text that is similar to Steady State, Item 3.b: “i. Other events based upon actual operating experience that may result in wide area disturbances.” Further clarify the applicable shunt devices in Footnote 7 with this suggested text: “7. Requirements which are applicable to shunt devices, also apply to FACTS devices that are connected to ground, but not instrument voltage transformers or surge arresters.” ATC suggest that following change to Table 1, footnote 4. Existing language: "Bulk Electric System (BES) level references include extra-high voltage (EHV) Facilities defined as greater than 300kV and high voltage (HV) Facilities defined as the 300kV and lower voltage Systems." Suggested Modification: "Bulk Electric System (BES) level references include extra-high voltage (EHV) Facilities defined as greater than 300kV and high voltage (HV) Facilities defined as the 100kV through the 300kV Systems."

Yes

No

We offer the following comments. The proposed standard implies that the 24 and 60 month periods run in parallel rather than sequentially. As currently proposed, the effective date for performing analyses and developing subsequent Corrective Action Plans is 24 months. If the identification of new needs and action plans take 24 months, then only 36 months would be left to implement the new action plans. It may not be feasible to install some BES facilities, especially above 300 kV in less than 3 years. Some EHV projects can take 5 to 10 years to

implement depending on the size, complexity, and controversial nature of the project. We suggest that the effective date be stated in a more “implementation dependent” rather than a “fixed timeframe” manner. Consider wording such as “tripping of Non-Consequential Load or curtailment of Firm Transmission Service (in accordance with Requirement R2.6.4) is allowed until Corrective Action Plans that are based on TPL-001-1 analyses can be implemented”.

Individual

John Mayhan

Omaha Public Power District

No

Header note 'f' under Planning Events: The redline version shows that the sentence “Facility Ratings shall not be exceeded” was removed from the beginning of header note ‘f’ (header note ‘b’ in the previous draft). This sentence needs to be reinserted at the beginning of header note ‘f’. The requirement that Facility Ratings not be exceeded is a core principle of steady-state transmission-system assessment and needs to be explicitly stated somewhere in the standard. If this sentence is not reinserted, it could lead to a situation where different regions come up with different interpretations of the manner in which Facility Ratings need to be respected. Category P2: In the third column of the table, there is a dotted line that appears to be separating two parts of the description for event type P2.3. It appears that this dotted line should be removed. Category P3: In the fifth, sixth, and seventh columns of the table, there is one set of cells for event types P3.1 through P3.4 and another set of cells for event type P3.5. Since these two sets of cells are identical, they can be merged into one set that applies to event types P3.1 through P3.5. This would make the presentation of requirements for Category P3 consistent with that of Category P1. Category P7: Category P7 requires analyzing SLG faults on any two circuits on common structures. Add language to clarify whether SLG faults on both the same and different phases of the two circuits need to be considered or whether it is sufficient to assume that the SLG faults occur on the same phase of the two circuits.

Individual

David Angell

Idaho Power

The language in R1.1.2 needs to be clarified. Many of these facilities are not explicitly included in the models in the base cases (circuit breakers, protection system equipment, control devices). The language should be clarified to require modeling the effect of the devices or the effect of the removal of the devices where it is expected to impact the study outcome. Clarity is needed to explain the difference between R1.1.4 and R1.1.5. Expected interchange can be reasonably projected, but information on Firm Transmission Service is not always known or reasonably projected for future cases. For consistency with the 2nd bullet under R2.1.3, R1.1.4 should refer to expected transfers rather than Firm Transmission Service. With this change, R1.1.4 and R1.1.5 would be redundant and one should be deleted.

Short circuit analyses is a local phenomenon and should not be required as part of a transmission planning assessment of the BES. In any case, the effects of failure of over-stressed breakers are already included in the Events to be assessed in Table 1. For example, P2-3 and P2-4 (Internal Breaker Fault), and P4 (Stuck Breaker while attempting to clear a fault). Clarity is needed in R2.1.4. The requirement to assess the Contingencies identified in Table 1 is too burdensome. This requirement does not specify any limits on the equipment for which an analysis must be conducted. As currently drafted, this could require a separate analysis for each transformer (or any long lead-time equipment) for which a spare is not available. A separate initial case would need to be developed to assess the Contingencies identified in Table 1 for each transformer. This could result in a countless number of additional cases. We recommend a threshold be established, such as all transformers with a low side voltage above 200 kV. We also recommend changing this from a separate sub-Requirement to one of the sensitivities to be considered under 2.1.3. We also believe that the statement at the end of R2.6 that indicates corrective action plans are not required solely to meet the performance requirements for sensitivities should also apply to the spare equipment requirement. R2.5 "20 MW threshold is too small. The limit should be based on a percentage of the study area’s installed generating capacity. R2.8 should be deleted. It is not necessary for reliability. What will be done with this

information on the “largest Consequential Load Loss and the associated event caused by any P1 event and any P2 event” if it is documented? R2.9 should be deleted. It is not necessary for reliability. It will be difficult to determine the maximum permissible Non-Consequential Load value. It will end up being based on cost (monetary, societal, environmental, etc.), which is dependent, among other things, on the types of load being served. It very well may be a case by case situation.
R3.3.2 is unclear as drafted. The minimum steady state voltage limitation for synchronous generators is not a very meaningful value. All generators with an automatic voltage regulator will maintain the set point voltage until the VAR capability of the generator is exceeded, and then the voltage will deteriorate. R3.5 – The requirement to explain why remaining Extreme Contingencies would produce less severe System results than the ones selected for study is overly burdensome. The first part of the requirement requires identification of events that produce more severe System impacts. The reason the others were not selected is because they were less severe or non-credible. Listing all possible extreme events could result in a limitless list.
R4.3.2 – Generation protection system contain up to a dozen tripping functions functions. Is the intent to model all relay protection? The existing commercial programs do not have sufficient models or capacity to do that for all generators in the system. R4.5 – Again I disagree with this requirement. It is the same as R3.5 and overly burdensome.
No
Claification is needed on the use of UVLS. Is it acceptable or not. Typically UVLS relays are modeled in the study. Not allowing any load shedding as a result of UVLS relays could result in very costly fixes for a very small amount of remote load. If the Non-Consequential Load Loss Allowed column is No, is load disconnecetd from the system by UVLS a violation? What about Supplemental Load Loss or UFLS?
No
P4: Under the event column it should clarify and state language similar to that of P5 (Loss of multiple elements caused by a stuck breaker). In addition, this is a multiple contingency condition and may result in loss of more than 2 elements. As such, this is a low probability condition and loss of Non-Consequential load should be allowed for EHV. We disagree with raising the bar for EHV for P4.
Yes
No
I would like to review this after completion of the standard.
Individual
Casey Hashimoto
Turlock Irrigation District
TPL 001-1 R1 could potentially result in a WECC auditor having to determine compliance with “requirements of regulatory authorities and other legal obligations,” beyond the scope of its expertise. TID proposes that if that language is to be retained, it shall be assumed that the requirements of regulatory authorities and other legal obligations are being simulated unless those other entities have formally found the member to be in violation of their requirements or obligations.
TID expresses concern that the planning extension of R2.2.1 could lead to a scenario where a single member’s long term project (beyond 10 years) could then require all neighboring members to extend their own planning horizons (similar to a “lowest common denominator” issue) and face unnecessary technical issues.
In light of the fact that FERC has determined not to apply the Order No. 890 transmission planning processes requirement to non-public utilities, TID expresses concern over the reference to Order No. 890 in R7. TID recommends that this reference be replaced with a more direct instruction that details what exactly is meant by the requirement of “an open and transparent peer review process.” R7 makes reference to the peer review process laid out in FERC Order No. 890. This reference to Order No. 890 is duplicative and vague and must be clarified. The peer review process set forth in Attachment K of Order No. 890, lays out nine different principles (Coordination, Openness, Transparency, Information Exchange, Comparability, Dispute Resolution, Regional Participation, Economic Planning Studies, and Cost Allocation for New

Projects). Most of these principles are inapplicable when placed in the context of NERC Reliability Standards. Subjecting NERC members to all of these vague and broad principles without specific guidance as to their application would be a significant burden. TID proposes that the reference to Order No. 890 be removed from R7 and replaced with a provision that expressly details the principles of openness and transparency that are contemplated in R7. Such an express provision would bring clarity to the requirement so that entities subject to R7 would know exactly what they are expected to do to comply with the requirements of R7. As it is now written, the broad reference to Order No. 890 is vague and confusing. TID is also concerned with the fact that the Violation Severity Levels for R7 now appear to run from High to Severe, with the potential of significant penalties being assessed on noncompliant entities. The High and Severe Violation Severity Levels for TLP-001-1 R7 are inappropriate given the already vague and conflicting guidance of R7, especially as R7 merely duplicates the Order No. 890 requirements. Once the reference to Order No. 890 is replaced with a provision that expressly provides specific guidance as to what is meant by the "open and transparent peer review process," the appropriate Violation Severity Level for R7 would be Low to Moderate.

Individual

Gregory Campoli

New York Independent System Operator

R1.1.1 requires that models shall represent planned outages of generation and transmission facilities, if specifically known. The standard should be clarified to state whether it allows or requires a PC/TP to include as part of the Assessment outages due to maintenance and due to construction programs where certain facilities are out of service during phases of construction. Such maintenance and construction schedules are established but may not be finalized over the planning horizon. Further, the standard is not clear whether planned outages are to be treated as creating a "normal system condition" or as a contingency from which system adjustments are made prior to subsequent events? MOD 10 and 12 are based on requirements determined by the RRO in MOD 11 and 13 respectively. Is this appropriate? Further, the PC is not an applicable entity in MOD 10 and 12. Moreover, the standard should define "other data sources". R1.1.2. states that models for facilities such as circuit breakers and protection systems should be represented. Comment - The list of facilities should be deleted for the following reasons: - it is not needed; - the NYISO does not model circuit breakers, Control Devices, and Protection Systems; - it is not consistent with the definition of 'Facilities' in the NERC Glossary.

R2.1.2 - System off-peak is more likely a stability issue than a steady state issue. If system off-peak becomes a steady state issue, it can be mitigated through generation redispatch. Accordingly, it appears that this requirement is not necessary for steady state analysis. R2.1.4 - With respect to spare equipment strategy, this requirement potentially imposes a requirement to plan for three events, which is overly severe. As previously stated in R1, the system model should be a model of the projected system, which would include a long term actual forced outage. If this requirement is not referring to actual outages, then it is suggesting an N-1-1-1 analysis, which is a requirement that would require significant additional work with little value added for reliability because such contingencies have a very low probability. Under R2.5 - "Past Studies may be used to support the Planning Assessment if they meet the following requirements" and the sub-requirement R2.5.2 states that for SS, SC, or stability analysis "the PRESENT (emphasis added) System model shall not include any material changes, such as, …." The NYISO interprets this language to mean that past studies may be used to support planning assessments as long as there are no material changes to the LATEST PLANNING HORIZON system model. The Standards Drafting Team should clarify whether this interpretation is correct. The standard should further state whether, if there was a material change such as a 20 MW generator, the past study may be used if the impact of this small change is assessed. Finally, the regional entity should have a process to determine whether changes are material that is similar to the NPCC's process for determining what level of annual transmission review should be conducted each year.

R3.5. - The Extreme Events testing in Table 1 should be removed from this standard since there is no requirement to develop a Corrective Action Plan to address unacceptable consequences and the requirements are very general or vague. At a minimum, testing should only be required for EHV facilities or facilities specified by the Regional Entity – for example, NPCC designates facilities that can have consequences outside an area as bulk power system facilities.

The Standards Drafting Team should clarify the standard as to whether the PC will be expected to distribute the TP Planning Assessments as part of its coordination requirement?

No

The Year One definition is confusing. According to the definition, “Year One” can start any time between 12 and 18 months from a current calendar year. Is that January 1 of the current calendar year? Further, when does year 2, year 3, etc… start? Is this definition only applicable to the TP?

The stability studies require significantly more computer time and a more detailed model. The standard should allow the PC/TP to use judgment to manage size and complexity of the study.

The 3rd draft states the Plan will be addressed later in the project. Removal of these standards would not affect NERC and the RE’s obligations to perform assessments. The Standards Drafting Team should clarify whether the PC/TP will be obligated under NERC Rules of Procedure to provide Assessments to NERC and the Regions upon request.

Group

FirstEnergy Corp

As stated in prior comment periods, we hold the opinion that the TPL-001-1 standard should start from the premise that a valid system model exist based on MOD-010, MOD-012 and other FERC approved MOD standards that are not referenced by this TPL-001-1 standard. The inclusion of R1 introduces an overlap and potential for double jeopardy violations that need not occur. The TPL-001-1 standard should not delve into model building and keep to its core purpose of assessing future performance of the BES. Specific comments, Requirements of R1 A. R1.1.2: The last bullet "New Technologies" is too vague and should be struck from the requirement. B. R1.1.4: It is not well understood how "Firm Transmission Service" would be evaluated by a compliance auditor when reviewing a simulation model. The models contain agreed upon Interchange Transactions between BA areas, but no details are provided to reflect individual Firm Transmission Service arrangements. In reality only the net-Interchange values between BA areas are reflected in the simulation models. C. R1.1.6: FE believes this requirement would be more accurately assigned to the Resource Planner or Load Serving Entity and not the Transmission Planner. We agree with the stated Measures, VRF, Time-Horizon, Data Retention and VSL of requirement R1

The standard provides prescriptive language in requirement R2.4.1 regarding dynamic stability load models but is silent on steady-state load modeling. Most transmission planners use a conservative approach of simulating constant power loads in the steady-state environment, but other steady-state load modeling assumptions such as constant impedance load and constant current load can be utilized. At a minimum, the standard should require the transmission planner to document its load modeling assumptions for steady-state simulations. To this end, we suggest a new sub-requirement R2.1.1 be placed ahead of the existing R2.1.1 that parallels R2.4.1 and indicates the TP should document its load modeling assumptions for steady-state simulations. Specific comments, Requirements of R2 A. R2.1: The requirement incorrectly references R2.6 which should be a reference to R2.5. B. R2.1.1: We propose that the SDT adjust requirement R2.1.1 to annually require one current year Near-Term and one Long-Term study, with the Long-Term study required to alternate between year six and year ten every other assessment year. This would reduce the workload on the industry and cover the mid-point transition period between the Near-term and Long-Term horizons that the standard team believes needs some attention. We find the requirement to perform two Near-Term studies and one Long-Term study each year overly burdensome, in light of the increased workload caused by sensitivity analysis for each steady-state and stability review that is required. FE believes that one current year study within each time period should suffice in being able to interpolate and extrapolate results to cover the entire assessment range; especially when supplemented with qualified past study results. C. We offer the following comments related to requirement R2.4.1: 1. In the last round of comments we made the following comment "This requirement should be separated into two requirements as it covers two distinct topics; a) peak load study for one of the near-term years and b) dynamic load modeling." The SDT responded "...This Requirement is to make you properly represent the dynamic behavior of Loads at high System Load levels." Apparently, the SDT did not agree with our recommendation to split the requirement as no change was made in this regard. Therefore, as written the standard in R2.4.2 (stability study of the Off-Peak Load level) seems to imply that the appropriate modeling of dynamic behavior of loads, including consideration of induction motor loads, is NOT required for the Off-Peak Load stability study. Please clarify or confirm this view of R2.4.2. 2. R2.4.1: We are still of the opinion that the word "appropriately" is vague and only serves to add confusion within this requirement. It’s recommended that "appropriately" be struck from the requirement. 3. R2.4.1: In Draft 3, the SDT added text to this requirement that states "An aggregate System Load model which represents the overall dynamic behavior of the Load is acceptable" to clarify that a detailed dynamic Load model is not required at each bus. We understand this to mean that the model is not expected to try and replicate the dynamic behavior of individual end-user Load characteristics and that general approximations for a customer class(es) (residential, commercial or industrial) simulated at a given load bus is acceptable. 4. Based on our comments C.1 through C.3 we propose the following requirement language: R2.4.1. System peak Load for one of the

five years. R2.4.2. System Off-Peak Load for on of the five years. R2.4.3. Load models used for stability analysis shall represent the dynamic behavior of Loads, including the behavior of induction motor Loads. The study shall document assumptions made for representing the dynamic behavior of Loads, based on the following load classes - residential, commercial and industrial. D. R2.5.2: For clarity and readability we propose to insert the word "that" between the words "and would" so the requirement reads "...intervening period and that would impact ...". E. R2.6.1: This requirement indicates that an entity's Corrective Action Plans list situations where Table 1 Performance Criteria are not met and the associated actions needed to achieve required System performance. What if the actions and plans associated with newly identified deficiencies (current year studies) are not yet fully known and require further analysis and a more detailed study of various options. Would it be acceptable for a TP to indicate that the planned solution is To Be Determined? This could be a likely scenario for a long-term planning horizon study which may identify a number of deficiencies which require more detailed analysis to determine the appropriate solution. F. R2.6.2: We believe this requirement is overly prescriptive in requiring a project initiate date. The standard should not question an entity's project management but stay focused on whether or not the Correct Action Plan was put in place in a timely fashion. We propose that the team strike from this requirement the reference to project initiation date and focus on whether or not Corrective Action Plans were completed in a timely manner to ensure Table 1 Performance Criteria is met. Additionally, project initiation date is pertinent to a operating procedure solution that is allowed by the standard. R2.6.4: We support requirement R2.6.4 but suggest the word "prudent" be struck from the text of the requirement as it can be subjective and open for debate. G. R2.7: This requirement introduces additional Corrective Action Plan requirements beyond what is stated in R2.6. FE proposes that the SDT restructure the two requirements into a single requirement (and sub-requirements) focused on Corrective Action Plans. H. R2.8: Does this requirement apply to sensitivity simulations? If so, it has limited applications to only those sensitivity analyses that consider variations in load such as a higher forecast (90/10), or increased reactive load (sensitivity to poor power-factor loads), etc. The SDT should consider clarifying the intent of the requirement if each current year study as well as their corresponding sensitivity simulation model(s) is intended to have this information documented within the assessment report. I. R2.9: We ask the SDT to confirm or correct our understanding that the requirement is asking about a TP's criteria for maximum allowable non-consequential load drop and NOT the maximum non-consequential load shed required to meet performance criteria for a particular contingency evaluation. We agree with the stated Measures, VRF, Time-Horizon, Data Retention and VSL of requirement R2

Specific comments, Requirements of R3: A. R3: For readability revise "computer simulations using models utilizing data" to "computer simulation models utilizing data" B. R3.3.2: The intent of this requirement is not clear. What is the voltage limitation sought? Vmin at the generator terminals, high-side of the GSU, low-side GSU, etc.? Also the requirement text "identify how the generators are analyzed in the steady state simulation" does not drive a particular reliability goal. If the objective is to require tripping of units during a contingency simulation that are identified to be below their stated Vmin then the requirement should clearly state that the unit should be tripped and solution resolved. C. R3.3.3: This requirement should be removed as it is redundant with facility rating requirements stated in PRC-023, FAC-008 and FAC-009. D. R3.3.4: For readability we suggest inserting the word "may" in between "devices include". We agree with the stated Measures, VRF, Time-Horizon, Data Retention and VSL of requirement R3

Specific comments, Requirements of R4: A. R4.1: A space is needed between the text "Requirement and R4.4" which are run together in the requirement. B. R4.3.3: For readability we suggest inserting the word "may" in between "devices include". We agree with the stated Measures, VRF, Time-Horizon, Data Retention and VSL of requirement R4

We agree with the stated Requirement, Measure, VRF, Time-Horizon, Data Retention and VSL of requirement R5.

We agree with the stated Requirement, Measure, VRF, Time-Horizon, Data Retention and VSL of requirement R6.

We agree with the stated Requirement, Measure, VRF, Time-Horizon, Data Retention and VSL of requirement R7.

No

A. Supplemental Load Loss: We disagree with newly proposed definition for "Supplemental Load Loss" which is introduced to address some stakeholders concerns related to a Load's response to transient conditions. Table 1 note "b" causes confusion indicating that Supplemental Load Loss is an acceptable consequence of a Planning Event or an Extreme Event but then goes on to say that Supplemental Load Loss can not be relied upon to meet steady state performance requirements. This seems to imply that it is permissible to use Supplemental Load Loss for stability analysis. It is not logical to allow its use in one time frame but not the other. The inclusion of the Supplemental Load Loss definition enters into a power quality issue at the end-user delivery point which is not the focus of the TPL-001-1 standard. FE suggests that this definition be removed. B. Load Reduction: The new proposed definition of "Load Reduction" while technically written correctly may not align with its common use throughout industry. Load Reduction is often thought of as an operator initiated response, rather than a natural system

response to a contingency event. If the definition remains, the SDT should consider striking the text "following a Planning or Extreme Event" so that the definition can more generally apply to other areas of the standards if needed. However, as stated in question 9, we believe Load Reduction was inadvertently omitted in note "b" of the Table 1. If so, we would have similar concerns with the occasional use of Load Reduction in that it would be allowed in stability and excluded in steady-state FE suggests that this definition be removed. The "Load Reduction" definitional term brings into question what is an acceptable steady-state load model within the TPL-001-1 standard. The standard provides some prescriptive language in requirement R2.4.1 regarding dynamic stability load models but is silent on steady-state load modeling. Most transmission planners use a conservative approach of simulating constant power loads in the steady-state environment and therefore the "Load Reduction" definition would not apply. However, if a constant impedance load model were used, Load Reduction would be reflected and less conservative outcomes would result. At a minimum, the standard should require the transmission planner to document its load modeling assumptions for steady-state simulations. [See above comment on Question 2 regarding a proposed new R2.1.1 requirement] C. Year One: We continue to oppose the Year One definition developed by the SDT. In our Draft 2 comments, FirstEnergy proposed a Year One definition of "The planning year that begins with the upcoming annual period under study". During the last comment period we indicated: "We believe the attempt to try and delineate between the near-term planning horizon and operational planning horizon is not needed within the TPL standard and that the near-term period should account for the upcoming annual study periods. If not revised, the need for two near-term studies on an annual basis is overly burdensome as many transmission planning organizations perform upcoming annual seasonal assessments for seasonal peak (summer/winter) periods. Requiring an additional two studies near-term does not provide significant benefit. Further reasoning for making the change is the allowance of operating procedures as part of Corrective Action plans. Operating procedures can easily be developed and implemented to mitigate projected performance violations prior to an upcoming seasonal period." The SDT's response from the Draft 2 comment period indicated "The standard does not require that studies are duplicated. If an operating study can be used to demonstrate an assessment for planning purposes, then the operating study would be sufficient." Since "Year One" is defined as "...a planning window that begins 12-18 months from the current calendar year" we would appreciate the SDT reconciling their Draft 2 response to the Year One definition and confirm whether or not it intends that a study of the next occurring seasonal peak period would suffice for meeting one of the current year Near-Term studies as required in requirement R2.1.1. A secondary concern with the Year One definition is its reference to the Transmission Planner with no mention of the Planning Coordinator. D. Planning Assessment: We suggest that the team consider an enhancement to the definition of "Planning Assessment". When read independently within the NERC Glossary of Terms a lay person should have a better understanding of the transmission Planning Assessment and it should set the foundational understanding that a Planning Assessment is not equivalent to a single study but rather a collection of studies. Additionally, the definition should more explicitly apply to the TPL-001-1 intended purpose. We propose a new definition based largely on the verbiage in requirement R2. "Planning Assessment: An annual documented evaluation of future Transmission System performance predicted over a minimum 10-year period, based on new or previously completed simulation studies and the Corrective Action Plans needed to satisfy steady-state, stability and short circuit performance requirements." E. Planning Event: We propose that the definition of "Planning Event" more explicitly apply to the TPL-001-1 standard and read as follows: "Planning Event: A contingency condition evaluated for its steady-state and stability impacts on the BES transmission System, requiring Corrective Action plans to remedy identified deficiencies" F. Consequential Load Loss: We suggest that the definition be revised to more closely align with the text stated in requirement R3.3.1. The proposed definition would read "Consequential Load Loss: All Load that is no longer served by any Transmission Facilities as a result of the removal of all elements that the Protection System and other automatic controls are expected to disconnect for a transmission System Contingency without operator intervention." If our proposed new definition is not acceptable, we suggest that the word "automatically" be added between "being removed" and replace "a planned" with "as designed".

No

A. Note b: Please see comments in our response to Question #8 related to note b and the Supplemental Load definition. B. Note b: We believe the SDT inadvertently allowed the used of Load Reduction to meet Steady State performance requirements. We suggest text of: "However, Supplemental Load Loss and Load Reduction associated with an event shall not be used to meet steady state performance requirements." C. Note b: If our assumption is correct on item B above, we fail to see the need to define two terms Load Reduction and Supplemental Load Loss which are not permitted within the Table 1 performance requirements for steady-state nor mentioned and used within the requirement language. It appears that the Load Reduction and Supplemental Load Loss are permissible within the stability timeframe. It is not understood why it would be valid to account for these in the stability timeframe but not steady-state. D. Note i: What if the TP or PC has no criteria for transient voltage response? The standard should have a requirement that ensures that such a criteria is documented by the entity if it is intended to be used within the TPL-001-1 standard. E. P2-3: It seems that footnote 10 should apply to the EHV

criteria stated in the column titled "Interruption of Firm Transmission Service Allowed" since it applies for the P5-1 through P5-5 EHV criterion. F. P5: We agree with the change made in Draft 3 to remove the reference to "single component" of the Protection System. Additionally, the SDT clarified its intended purpose of the P5 event as stated in the Draft 2, Q7 Summary Considerations: "A number of commenters expressed concern related to Planning Event P5 Protection System Failure and the need to evaluate a single component failure of a BES Protection System; particularly a failure of a station battery. The SDT has revised the P5 Planning Event description to remove the reference to single component failure and the event description was changed to match what is stated in the currently approved TPL standards under Category C6 through C9. The intent of P5 is to evaluate a failure of a single Protection System design that introduces a delayed clearing mode that may also include additional electrical Facilities being removed when compared to normal fault clearing. A Protection System failure resulting in loss of the substation (one voltage level plus transformers) would not qualify as a P5 Planning Event since that event is considered an Extreme Event. A Standard Authorization Request (SAR) has been issued for industry comment (1/20/2009 through 2/18/2009) based on work completed by the System Protection and Controls Task Force (SPCTF). The proposed project will address the need for Protection System redundancy, based on an n-1 failure of individual components of the Protection System." It is suggested that a footnote be added the text Protection System as stated in the P5 Event Description. The footnote should read "Failure of a single Protection System design that introduces a delayed clearing mode that may also include additional electrical Facilities being removed when compared to normal fault clearing. This contingency is NOT based on failure of any particular single component of the Protection System design." This footnote will help clarify the intent without having to rely on the Comment record established during this standard development project. In the Extreme Event table we suggest event identifiers that are similar to those used in the Planning Events table. For Extreme Steady State we suggest ESS1, ESS2-1, ESS2-1... ESS2-5, ESS3-1 and ESS3-2. For the Extreme Stability we suggest ES1, ES2-1...ES2-9. This will provide a short-cut reference for industry when referring to a particular event.
Yes
We presently agree with the Footnote 5 and Footnote 10 text.
No
We disagree with the proposed Implementation Plan. The implementation period for the TPL-001-1 transmission planning standard should be limited to the time needed to transition to the new study requirements. The proposed 5-year implementation for the "raise the bar" aspects of this standard delves into project management and review of capital construction progress which should remain outside the scope of this standard. The standard should only consider if an entity has completed the required studies and has developed Corrective Action Plans to ensure performance criteria is being maintained. The last paragraph of the Implementation Plan is not appropriate for the Implementation Plan as it discusses compliance enforcement information. This paragraph should be srtuck.
Individual
Greg Rowland
Duke Energy
Revise R1.1.2 to include the phrase “to be studied” as follows: “New planned Facilities and changes to existing Facilities for each year to be studied of the Near-Term and Long-Term Transmission Planning Horizon, such as :”
R2 – Instead of “document results” the requirement should be to “summarize results”. While results will be documented, the Planning Assessment should just include a summary. R2.1 – What’s the value in being able to use “qualified past studies” if you have to use “annual current studies”? Strike the words “supplemented with” and insert the word “or”. R2.5.2 – Suggest deleting the phrase “Material generation changes could include:” and the two accompanying bullets. A change of 20 MW on a large system may not always be material. R2.8 and R2.9 should be deleted. We don’t see a reliability-related need for these requirements. In the sub-requirements of 2.1.3 and 2.4.3, the use of the word “timing” is unclear. Consider using “in service date” or “schedule for”. R2.4.1: It is not clear how much Load a dynamic model must have. Likely, it must still be proven that the analysis software can accommodate every load in the model having a load model that includes induction motor models. To help address this, revise “Load” to be “Load that could impact the study area is acceptable.”
Revise M3 to include a reference to R6, since the allocation of responsibilities will directly affect the evidence which is to be provided.
Revise M4 to include a reference to R6, since the allocation of responsibilities will directly affect the evidence which is to be provided.
M5 doesn’t make any sense. Need to revise this Measure so that it fits the Requirement R5. Also need to revise the Data Retention discussion in Section 1.4 to align with R5.
Requirements R1, R2, R3, R4 and R5 should all be revised to include a reference to R6 regarding the determination of individual and joint responsibilities for performing the required studies.

No

Bus-tie Breaker definitions still seems somewhat generic and the use of 'configurations' causes uncertainty. Revise Bus-tie Breaker to read, "A circuit breaker whose intended purpose is to connect two individual substation buses." "Bus-tie" is not capitalized in the Table. Consequential Load Loss must include load that is lost due to the inherent response of the particular type of load. Some motors, lighting and processes will naturally trip during an event, although not as a result of the protection system. It may have been the intent of the SDT to include this phenomenon in the Supplemental Load Loss definition. However, this definition includes the phrase, "by end-user equipment", and that makes one think that there are devices at the end-user location that are removing this equipment (and conversely, load that is not disconnected "by" end-user equipment cannot be included). Also, the term "post-Contingency" can be confusing because in the case of faults, this phrase is not clear if it means conditions after the fault initiation itself or only after the clearing of the fault. Revise Supplemental Load Loss to read, "End-user Load that, due to its characteristics, disconnects from the System in response to the conditions created by the System event."

Yes

No

Stability Extreme 2g needs a note like number 12 that excludes short distances. Stability Extreme 2h: Is this meant to be an event initiated by a 3LG fault or is it a catastrophic event that leaves all the elements at a station with a 3LG fault. If it is the former, then 2h needs a note to limit this to locations where actual events could lead to the loss of the entire station. There is no need to study this if there are no protection system events that lead to loss of the whole station (there would be no scenario to model). If 2h is meant to represent some catastrophe that causes all the elements at the site to experience a fault, then some clarification is needed to get consistent studies. Possibly rewrite 2h as, “Assume all the buses at a single voltage level (one voltage level plus transformers) experience an event that results in a 3LG fault and disables local protection (fault must clear from remote stations or other side of transformer).”

No

Requirements R2 through R6 are proposed to become effective the first day of the first calendar quarter 24 months after applicable regulatory approval, and we agree with that. However, the standard also provides that for 60 months following the first day of the first calendar quarter following applicable regulatory approval, Corrective Action Plans applying to performance elements P2-1, P2-2 (above 300 kV), P2-3 (above 300 kV), P3-1 through P3-5, P4-1 through P4-5 (above 300 kV), and P5 (above 300 kV) are allowed to include tripping of Non-Consequential Load or curtailment of Firm Transmission Service (in accordance with Requirement R2.6.4) that would not otherwise be permitted by the requirements of TPL-001-1. Since the first 24 months following regulatory approval will be spent developing and validating new studies and methodologies needed to meet TPL-001-1, that would only leave 36 months to implement corrective actions. We propose that the 60 month clock start with the effective dates of Requirements R2 through R6, to allow sufficient time to implement corrective actions that are determined within the 24 month period, which could include system modifications that require long lead times. Also, the implementation plan contains the following wording regarding retirement of the existing TPL standards: “TPL-001-0, TPL-002-0a, TPL-003-0a, and TPL-004-0 are being retired as they are replaced in their entirety by TPL-001-1. TPL-005-0 and TPL-006-0 are being retired because their requirements are adequately covered by the revised TPL-001-1 and NERC’s Rules of Procedure, Section 800.” TPL-001-1 should not be used as a vehicle for fulfilling any of the TPL-005-0 and 006-0 requirements because of the difference in focus and entities involved. In reality, the new TPL-001-1 does not appear to have incorporated any of the requirements of TPL-005-0 and 006-0. TPL-001-1 appropriately focuses on how PC’s and TP’s should perform studies and document assessments of their transmission facilities’ impact on BES reliability. TPL-005-0 and 006-0 focus on assessments of regional and inter-regional BES reliability, including other non-transmission issues as well. The NERC Rules of Procedure and existing FERC Order 890 efforts appear to be sufficient to cover the requirements of TPL-005-0 and 006-0. Therefore, retirement of TPL-005-0 and 006-0 is still appropriate.

Individual

David M. Conroy

Central Maine Power Company

R1 Priority Comment- There needs to be some direction provided on the initial conditions used in the assessment. This guidance should include discussion as to whether or not representations of generator forced outages are to be represented in the base case or if they are addressed through the sensitivity testing (Could add R1.1.7 Reasonable representations of unplanned generator outages.) Additionally, the standard is also silent on the treatment of system transfers, both internal and external, as to how they should be modeled in the base case. For some areas, their

current practice is to include heavy system stresses in their base case, which leaves little for sensitivity testing. It is unclear if this practice works within this standard. R1.1.1 Priority comment – R1.1.1 should be removed. It seems like there is an overlap between the requirements of this standard and Operational Planning studies with respect to known outages. Planned outages are addressed by our Operational Planning processes and Transmission Operating Procedures removing the need for this to be incorporated into Planning Assessments. In addition, outages are not generally known years in advance R1 Comment – We do not understand what it means to include "requirements of regulatory authorities and other legal obligations". Even if some version of this language is kept in the final standard, it seems to belong in R2 rather than R1. R1.1.2 comment - Do we need to have the list of equipment to model? How do we model circuit breakers, etc? We recommend deleting the list. Make R1.1.2 simply read: R1.1.2 New planned Facilities and changes to existing Facilities for each year of the Near-Term and Long-Term Transmission Planning Horizon. R1.1.5 comment – What specifically needs to be modeled under Interchange? R1.1.6 comment – This needs further definition or it should be deleted. It is not clear what a "network resource required to supply load" is. Does this refer to Network Resource per FERC LGIP?

R2 Comment – We recommend replacing the phrase "prepare" with "conduct and document" in the first sentence. R2.1.1 Comment – The requirement to evaluate year one or year two should be removed. This is not consistent with the time horizon identified in R2. R2.1.2 Comment – The requirement should be removed. With no description of the system stresses and generator outages to be applied when assessing the off-peak load, it is difficult to imagine any issues which would arise which are not revealed in the peak load evaluation that could not be addressed through generation dispatch adjustments. R2.1.3 Comment - The emphasis on sensitivity testing in the existing section appears misdirected and should be focused on reasonable risk. The assessment should have to include a discussion of reasonable risk. The sensitivity list can be used to select sensitivities to assess risk. Having a requirement to perform one sensitivity just to meet the requirement of the standard does not add value to the assessment. R2.1.4 Priority Comment – With respect to spare equipment strategy, this requirement imposes severe testing requirements upon the system. However, there is no discussion on the generation dispatch or system transfers that are to be used for this portion of the assessment. The expectations for changes in system stresses need to be clear as part of the standard. Additionally, this section does not contemplate changing the acceptability of load loss. After experiencing a major contingency such as this, some change in the acceptability of load loss should be expected. The standard should consider allowing Non-Consequential load loss for P1 & P2 events. The standard needs to allow Non-Consequential load loss for P3 & P4 events. Why doesn't the standard state "(such as a transformer, generator or power electronic device)" and not just "(such as a transformer)". What constitutes "spare equipment strategy"? Would a strategy that involves out-of-merit dispatch or operational restrictions be considered a valid "spare equipment strategy". If a transformer is lost, could a reconfiguration of transmission constitute a valid "spare equipment strategy"? R2.2 Comment – We suggest replacing the phrase "a current System peak Load study" with "a valid System peak Load study" in the first sentence. The word current is confusing as some read the word current to mean "today's" rather than "valid". R2.3 Comment – Please provide guidance as to what year should be represented when performing short circuit studies. R2.4.1 Comment – Change to read: "For peak System Load levels, a Load model shall be used which appropriately represents the dynamic behavior of Loads, including consideration of the behavior of induction motor Loads or an aggregate System Load model which represents the overall dynamic behavior of the Load." R2.5.1 Comment– We suggest deleting this requirement, and incorporating it into R2.5.2. R2.5.2 Comment – To incorporate R.2.5.1 into R2.5.2; please modify the section as follows: For steady state, short circuit, or Stability analysis the study shall be less than five calendar years old or less: the present System model shall not include any material changes, such as, generation or Transmission additions/removals, or topology changes that have occurred in the intervening period and would impact the study area. Material generation changes could include: • The addition/deletion/change of individual generating unit capability determined to be material by the Planning Coordinator or Transmission Planner. [A 20 MVA generator is fairly small in a 30,000 MW system and system concerns would already be addressed though the System Impact Study] • An aggregated addition/deletion/change to a group of generating units directly connected through their step-up transformer(s) to the BES determined to be material by the Planning Coordinator or Transmission Planner. R2.6 Priority Comment – As written, this section undermines the value of the sensitivity testing. This section should require a corrective action plan to fix problems determined in sensitivity analysis if there is a reasonable risk of occurrence. We suggest making the standard read "Provide documentation that explains the reasoning for the sensitivities considered and selected." R2.6 Comment – At the end of the second sentence, the phrase "in the tables" is used. We suggest using more definitive language such as "in Table 1". R2.6.2 Comment – The phrase "Project Initiation Date" needs to be defined. It is unclear if this is this the date of ground breaking, purchase orders being issued, solution study initiation, etc. Additionally, in the second sentence the phrase "as well as an in-service date" should be modified to read "as well as a target in-service date". R2.6.3 Comment – Plans can provide a target in-service year but not an actual in-service year. R2.6.4 Priority Comment – There should be a cutoff point when changes occur beyond a certain date. When

that date occurs, further changes will be evaluated in the next year's assessment. Otherwise, if a state makes a decision not to site a project a few weeks prior to the end of the assessment period, there will not be sufficient time to incorporate this into that year's assessment and develop corrective actions. R2.8 Comment –Largest consequential load loss is not factored into the Planning Assessment and should therefore be deleted. R2.9 Comment – This requirement is unclear. Is this requirement asking for each transmission planner to list their criteria for non-consequential load loss, or is it asking how much non-consequential load loss was being relied upon in the assessment? We recommend that the requirement be modified to require documentation of the maximum amount of non-consequential load loss that was relied upon during the assessment.

R3.3.2 Comment – Traditionally transmission planners have used their judgment about the minimum steady state voltage limitations of generators. If this standard is going to require its incorporation into the assessments, there should be an MOD standard developed requiring the generators to provide the necessary information prior to its inclusion as a requirement in this standard. R3.3.3 Comment – PRC-023 requires relay loadability to be reflected in facility ratings. Therefore this additional requirement is unnecessary and should be deleted. R3.5 Priority Comment – We recommend that the requirement for Extreme Event testing be removed from this standard as there is no requirement to develop a Corrective Action Plan to address unacceptable consequences. Otherwise we recommend the following: - Extreme Event performance should be a consideration when developing Corrective Action Plans to address Planning Events - It should be clear that an evaluation does not require solution development for all Extreme Events Change "an evaluation of possible actions…" to "where appropriate, reasonably practicable actions designed to reduce the likelihood or mitigate the consequences and adverse impacts of the event(s) shall be considered."

R4.3.2 Priority Comment - Traditionally transmission planners have assumed that generators would ride through low voltages associated with Planning Events which is generally adequate for non-wind generators. If this standard is going to require its incorporation into the assessments, there should be an MOD standard developed requiring the generators to provide the necessary information prior to its inclusion as a requirement in this standard. R4.5 Priority Comment – We recommend that the requirement for Extreme Event testing be removed from this standard as there is no requirement to develop a Corrective Action Plan to address unacceptable consequences. Otherwise we recommend the following: - Extreme Event performance should be a consideration when developing Corrective Action Plans to address Planning Events - It should be clear that an evaluation does not require solution development for all Extreme Events Change "an evaluation of possible actions…" to "where appropriate, reasonably practicable actions designed to reduce the likelihood or mitigate the consequences and adverse impacts of the event(s) shall be considered."

Comments: It is unclear as to what is meant by the term "proxy used in the analysis" used in this requirement. Does this mean Planning Coordinator established practices, thresholds or guidelines used to gauge when simulations suggest an event such as cascading outages occurs? If so the language should state: R5. Each Transmission Planner and Planning Coordinator shall define and document, within their Planning Assessment, when established practices, thresholds or guidelines identify System instability for conditions such as cascading outages, voltage instability, or uncontrolled islanding.

We do not feel that this requirement belongs in this standard and it should be deleted. The standard defines requirements for the assessment not who does what.

This standard should not be reiterating FERC Order 890. We do not feel that this requirement belongs in this standard and it should be deleted.

No

Refine load loss definitions as follows. Load Reduction: Load that is still connected to the System, but is reduced due to lower voltage conditions resulting from a Planning or Extreme Event. Non-Consequential Load Loss: Intended post contingency loss of load (other than Interruptible Load, Supplemental Load or Load Reduction) caused by operator or SPS (RAS) action. (Priority Comment)

No

Steady State & Stability comments as follows: Steady State & Stability: a. Transmission voltage instability, cascading outages, and uncontrolled islanding shall not occur. b. Consequential Load Loss, Supplemental Load Loss, Load Reduction, and consequential generation loss are acceptable as a consequence of any Planning or Extreme Event excluding P0. However, Supplemental Load Loss and Load Reduction associated with an event shall not be used to meet steady state performance requirements P5 Priority Comment – As written, this requirement is overly severe. This would require the simulation of a "dead" station if only one battery is present (use of NERC Glossary Protective System definition is too broad). The failure of the single protection system should be limited to certain aspects of the protection system. P7 Priority Comment – Event 1 - This requirement requires the evaluation of the loss of two circuits on a multiple circuit tower. We recommend that this be modified so that only the loss of two adjacent (vertically or horizontally) circuits need be evaluated. We also recommend that the Planning Coordinator be

allowed to evaluate and if appropriate exempt specific locations from this contingency based on acceptable risk. Comments on Extreme Events – Table 1- We recommend renumbering the Extreme Events table to be Table 2. Extreme Event Stability Condition 2 Note a - Priority Comment - As written, this requirement is overly severe. This would require the simulation of a "dead" station if only one battery is present (use of NERC Glossary Protective System definition is too broad). The failure of the single protection system should be limited to certain aspects of the protection system. Extreme Event Stability Condition 2 Note h – Eliminate this requirement or change to loss of station following three phase fault. This note is confusing. Without providing a better defined scenario, it is unclear as to what clearing times should be used in this simulation. Footnote 1.a.ii – Contingency Reserve is dependent on the generation on-line. We suggest changing the first sentence to say that you can't lose more than that permissible by the Planning Coordinator. Also change "pull out of synchronism" to "lose synchronism" in this sentence and in the second sentence. (Is "Lose synchronism" a more commonly used term?). Footnote 1.a.i, states "For Planning Event P1: No generating unit or units shall be allowed to pull out of synchronism." There is the potential for this requirement to be taken too far. Does this mean that someone's 4 kW generator at home needs to remain synchronized? Therefore, there needs to be some sort of qualifier on this requirement. Suggested wording: "For Planning Event P1: No generating unit or units greater than 20 MW and directly interconnected at 100 kV or above shall be allowed to lose synchronism. Note that synchronism applies to conventional synchronous generators and may not apply to other generation technology." Footnote 3 – We recommend revising the wording of the last sentence to "A three phase fault study indicating criteria are being met is sufficient evidence that a SLG condition would also meet criteria." Footnote 4 – We recommend that a lower bound be put on the HV electric systems (such as 100 kV), rather than just saying "and lower". Footnote 12 – We recommend adding an alternative modifier to the end of the sentence, "or for 5 towers or less." This is consistent with NPCC criteria.

Yes

Yes

Individual

Darcy O'Connell

California ISO

The language in R1.1.2 needs to be clarified. Many of these facilities are not explicitly included in the models in the base cases (circuit breakers, protection system equipment, control devices). The language should be clarified to require modeling the effect of the devices or the effect of the removal of the devices where it is expected to impact the study outcome. Clarity is needed to explain the difference between R1.1.4 and R1.1.5. Expected interchange can be reasonably projected, but information on Firm Transmission Service is not always known or reasonably projected for future cases. For consistency with the 2nd bullet under R2.1.3, R1.1.4 should refer to expected transfers rather than Firm Transmission Service. With this change, R1.1.4 and R1.1.5 would be redundant and one should be deleted. We disagree with the inclusion of the words "including requirements of regulatory authorities and other legal obligations" at the end of R1. Entities already are required to do this. It does not need to be included in the standard.

Short circuit analyses is a local phenomenon and should not be required as part of a transmission planning assessment of the BES. In any case, the effects of failure of over-stressed breakers are already included in the Events to be assessed in Table 1. For example, P2-3 and P2-4 (Internal Breaker Fault), and P4 (Stuck Breaker while attempting to clear a fault). Clarity is needed in R2.1.4. The requirement to assess the Contingencies identified in Table 1 is too burdensome. This requirement does not specify any limits on the equipment for which an analysis must be conducted. As currently drafted, this could require a separate analysis for each transformer (or any long lead-time equipment) for which a spare is not available. A separate initial case would need to be developed to assess the Contingencies identified in Table 1 for each transformer. This could result in a countless number of additional cases. We recommend a threshold be established, such as all transformers with a low side voltage above 200 kV. We also recommend changing this from a separate sub-Requirement to one of the sensitivities to be considered under 2.1.3. We also believe that the statement at the end of R2.6 that indicates corrective action plans are not required solely to meet the performance requirements for sensitivities should also apply to the spare equipment requirement. The 20 MW threshold identified as "material change" for generation in R2.5 is too small. The limit should be raised or based on a percentage of the study area's installed generating capacity. R2.8 should be deleted. It is not necessary for reliability. What will be done with this information on the "largest Consequential Load Loss and the associated event caused by any P1 event and any P2 event" if it is documented? R2.9 should be deleted. It is not necessary for reliability. It will be difficult to determine the maximum permissible Non-Consequential Load value. It will end up being based on cost (monetary, societal, environmental, etc.), which is dependent, among other things, on the types of load being served. It very well may be a case by case situation.

As currently drafted, R3.3 is not a requirement. Without the statements in R3.3.1-R3.3.4, R3.3 is simply a phrase. Sub-Sub-Requirements R3.3.1 through R3.3.4 should be bullets under R3.3, with the language in R3.3 modified so that it becomes the requirement to conduct contingency analyses that address the four resulting bullets R3.3.2 is unclear as drafted. The minimum steady state voltage limitation for synchronous generators is not a very meaningful value. All generators with an automatic voltage regulator will maintain the set point voltage until the VAR capability of the generator is exceeded, and then the voltage will deteriorate. R3.5 – We disagree with the requirement to explain why remaining Extreme Contingencies would produce less severe System results than the ones selected for study. The first part of the requirement requires identification of events that produce more severe System impacts. The reason the others were not selected is because they were less severe or non-credible. In any case, theoretically, there can always be a more severe Extreme Contingencies than the one selected for study. For example, if the Extreme Contingency studied were simultaneous loss of 3 transmission lines with failure of redundant RAS, then simultaneous loss of 4 lines with failure of 2 sets of redundant RAS would be more severe. Listing all possible extreme events could result in a limitless list.
As currently drafted, R4.3 is not a requirement. Without the statements in R4.3.1-R4.3.3, R4.3 is simply a phrase. Sub-Sub-Requirements R4.3.1 through R4.3.3 should be bullets under R4.3, with the language in R4.3 modified so that it becomes the requirement to conduct contingency analyses that address the three resulting bullets. R4.3.2 – it is not clear what is required to be modeled. Typically a generator may have 10 or more protective relays. Is the intent to model all relay protection? The existing commercial programs do not have sufficient models or capacity to do that for all generators in the system. R4.5 – We disagree with the requirement to explain why remaining Extreme Contingencies would produce less severe System results than the ones selected for study. The first part of the requirement requires identification of events that produce more severe System impacts. The reason the others were not selected is because they were less severe or non-credible. In any case, theoretically, there can always be a more severe Extreme Contingency than the one selected for study. For example, if the Extreme Contingency studied were simultaneous loss of 3 transmission lines with failure of redundant RAS, then simultaneous loss of 4 lines with failure of 2 sets of redundant RAS would be more severe. Listing all possible extreme events could result in a limitless list.
The term proxy is unclear. Please provide an example or an explanation of proxy.
We believe that references to FERC Orders should not be included in requirements of standards. This comment also applies to M7.
No
Claification is needed on the use of UVLS. Is it acceptable or not. Typically UVLS relays are modeled in the study. Not allowing any load shedding as a result of UVLS relays could result in very costly fixes for a very small amount of remote load. If the Non-Consequential Load Loss Allowed column is No, is load disconnecetd from the system by UVLS a violation? What about Supplemental Load Loss or UFLS?
No
P4: Under the event column it should clarify and state language similar to that of P5 (Loss of multiple elements caused by a stuck breaker). In addition, this is a multiple contingency condition and may result in loss of more than 2 elements. As such, this is a low probability condition and loss of Non-Consequential load should be allowed for EHV. We disagree with raising the bar for EHV for P4.
We agree that TPL-005 and TPL-006 appear to have been adequately covered in the draft TPL-001-1 as currently written. However, we will need to review this assessment after TPL-001-1 is finalized. In addition, there is no place to state our concerns for Section D. so we added it here. We question the "not applicable" entry under Section D 1.1.2. What does it mean when the reset period is not applicable? Does it mean there is no reset period, so all non-compliance in all prior years will be counted as prior violations when considering non-compliance in future years?
Individual
Gary Trent
Tucson Electric Power Company
The language in R1.1.2 needs to be clarified. Many of these facilities are not explicitly included in the models in the base cases (circuit breakers, protection system equipment, control devices). The language should be clarified to require modeling the effect of the devices or the effect of the removal of the devices where it is expected to impact the study outcome. An alternative, instead of specifically listing elements, make a general statement that the models should include those elements required in MOD-010 through MOD-013. If an element is missing, double jeopardy could result due to a violation of the applicable MOD standard and this TPL standard. Clarity is needed to explain the difference between R1.1.4 and R1.1.5. Expected interchange can be reasonably projected, but information on Firm Transmission Service is not always known or reasonably projected for future cases. For consistency with the 2nd bullet under R2.1.3, R1.1.4

should refer to expected transfers rather than Firm Transmission Service. With this change, R1.1.4 and R1.1.5 would be redundant and one should be deleted. We disagree with the inclusion of the words “including requirements of regulatory authorities and other legal obligations” at the end of R1. Entities already are required to do this. It does not need to be included in the standard.
Short circuit analyses is a local phenomenon and should not be required as part of a transmission planning assessment of the BES. In any case, the effects of failure of over-stressed breakers are already included in the Events to be assessed in Table 1. For example, P2-3 and P2-4 (Internal Breaker Fault), and P4 (Stuck Breaker while attempting to clear a fault). In R2.1, we believe the reference for past studies should be Requirement R2.5 not Requirement R2.6. Also, we suggest removing the phrase “supplemented with” and replacing it with the word “or”. This phrase indicates that previous studies cannot be a primary source for the assessment, which contradicts section 2.5. Remove the phrase “not already included in the studies” in R2.1.3. With this phrase included, you cannot use a previous sensitivity study to support the current assessment and Requirement R2.5 allows the use of previous studies if the conditions are met. Clarity is needed in R2.1.4. The requirement to assess the Contingencies identified in Table 1 is too burdensome. This requirement does not specify any limits on the equipment for which an analysis must be conducted. As currently drafted, this could require a separate analysis for each transformer (or any long lead-time equipment) for which a spare is not available. A separate initial case would need to be developed to assess the Contingencies identified in Table 1 for each transformer. This could result in a countless number of additional cases. We recommend a threshold be established, such as all transformers with a low side voltage above 200 kV. We also recommend changing this from a separate sub-Requirement to one of the sensitivities to be considered under 2.1.3. We also believe that the statement at the end of R2.6 that indicates corrective action plans are not required solely to meet the performance requirements for sensitivities should also apply to the spare equipment requirement. Remove the phrase “not already included in the studies” in R2.4.3. With this phrase included, you cannot use a previous sensitivity study to support the current assessment and Requirement R2.5 allows the use of previous studies if the conditions are met. The 20 MW threshold identified as “material change” for generation in R2.5 is too small. The limit should be raised or based on a percentage of the study area’s installed generating capacity. R2.8 should be deleted. It is not necessary for reliability. What will be done with this information on the “largest Consequential Load Loss and the associated event caused by any P1 event and any P2 event” if it is documented? R2.9 should be deleted. It is not necessary for reliability. It will be difficult to determine the maximum permissible Non-Consequential Load value. It will end up being based on cost (monetary, societal, environmental, etc.), which is dependent, among other things, on the types of load being served. It very well may be a case by case situation.
As currently drafted, R3.3 is not a requirement. Without the statements in R3.3.1-R3.3.4, R3.3 is simply a phrase. Sub-Sub-Requirements R3.3.1 through R3.3.4 should be bullets under R3.3, with the language in R3.3 modified so that it becomes the requirement to conduct contingency analyses that address the four resulting bullets R3.3.2 is unclear as drafted. The minimum steady state voltage limitation for synchronous generators is not a very meaningful value. All generators with an automatic voltage regulator will maintain the set point voltage until the VAR capability of the generator is exceeded, and then the voltage will deteriorate. R3.5 – We disagree with the requirement to explain why remaining Extreme Contingencies would produce less severe System results than the ones selected for study. The first part of the requirement requires identification of events that produce more severe System impacts. The reason the others were not selected is because they were less severe or non-credible. In any case, theoretically, there can always be a more severe Extreme Contingencies than the one selected for study. For example, if the Extreme Contingency studied were simultaneous loss of 3 transmission lines with failure of redundant RAS, then simultaneous loss of 4 lines with failure of 2 sets of redundant RAS would be more severe. Listing all possible extreme events could result in a limitless list.
As currently drafted, R4.3 is not a requirement. Without the statements in R4.3.1-R4.3.3, R4.3 is simply a phrase. Sub-Sub-Requirements R4.3.1 through R4.3.3 should be bullets under R4.3, with the language in R4.3 modified so that it becomes the requirement to conduct contingency analyses that address the three resulting bullets. R4.3.2 – it is not clear what is required to be modeled. Typically a generator may have 10 or more protective relays. Is the intent to model all relay protection? The existing commercial programs do not have sufficient models or capacity to do that for all generators in the system. R4.5 – We disagree with the requirement to explain why remaining Extreme Contingencies would produce less severe System results than the ones selected for study. The first part of the requirement requires identification of events that produce more severe System impacts. The reason the others were not selected is because they were less severe or non-credible. In any case, theoretically, there can always be a more severe Extreme Contingency than the one selected for study. For example, if the Extreme Contingency studied were simultaneous loss of 3 transmission lines with failure of redundant RAS, then simultaneous loss of 4 lines with failure of 2 sets of redundant RAS would be more severe. Listing all possible extreme events could result in a limitless list.
The term proxy is unclear. Please provide an example or an explanation of proxy.

We believe that references to FERC Orders should not be included in requirements of standards. This comment also applies to M7.

No

Claification is needed on the use of UVLS. Is it acceptable or not? Typically UVLS relays are modeled in the study. Not allowing any load shedding as a result of UVLS relays could result in very costly fixes for a very small amount of remote load. If the Non-Consequential Load Loss Allowed column is No, is load disconnecetd from the system by UVLS a violation? What about Supplemental Load Loss or UFLS? Year One – The use of calendar year is confusing. When does the 12-18 month window begin? We suggest "The year 18 months beyond the present month."

No

Clarify use of the term "single contingency" in P2 as P2-2 and P2-3 are labeled as single contingencies but multiple elements are effected. In the past loss of a branch or shunt element has been considered a single contingency but loss of a bus element could involve the loss of multiple branch or shunt elements. P4: Under the event column it should clarify and state language similar to that of P5 (Loss of multiple elements caused by a stuck breaker). In addition, this is a multiple contingency condition and may result in loss of more than 2 elements. As such, this is a low probability condition and loss of Non-Consequential load should be allowed for EHV. We disagree with raising the bar for EHV for P4. We also disagree with raising the bar for P5. This is a multiple contingency condition and may result in loss of more than 2 elements. We strongly disagree with elimination of load shed (of non-consequential load) for loss of multiple branch or shunt elements >300 kV.

We agree that TPL-005 and TPL-006 appear to have been adequately covered in the draft TPL-001-1 as currently written. However, we will need to review this assessment after TPL-001-1 is finalized. In addition, there is no place to state our concerns for Section D. so we added it here. We question the "not applicable" entry under Section D 1.1.2. What does it mean when the reset period is not applicable? Does it mean there is no reset period, so all non-compliance in all prior years will be counted as prior violations when considering non-compliance in future years? We believe that 60 months is not sufficient to implement the Corrective Action Plan for the "raise the bar" requirements. Siting transmission lines can take longer than this window. We strongly recommend increasing the window to 120 months which is a more realistic estimate of the time required to bring an EHV transmission project from conception to construction.

Individual

Dan Rochester

Independent Electricity System Operator

1. R1: What modeling/simulation is envisaged by the phrase "requirements of regulatory authorities and other legal obligations"? Note that this condition is not included in the measure or the VSL, making its compliance (whatever it is) irrelevant. If it is indeed a needed condition, then it should be measured and included in the VSL language under the Severe condition. Further, we suggest replacing "simulate" with "incorporate" since R1 deals with building of the system model that will be used to perform simulations governed by Requirement R2. Moreover, we do not think this requirement (to simulate projected System conditions including requirements of regulatory authorities and other legal obligations) belongs to R1, which is a requirement to develop the system model. R2 is the requirement for conducting Planning Assessments which include simulation using the model. We suggest moving this requirement to R2 upon making appropriate changes, where necessary to address our comments on the wording. 2. We recommend introducing "applicable" before "regulatory authorities". 3. R1.1.2: suggest to add Transformers. 4. R1.1.5: suggest to change "Interchange" to "Interchange Schedules" or "Interchange Transactions". 5. We agree with the VRF, Time Horizon, Measures and VSLs, other than the "requirements of regulatory authorities and other legal obligations" noted above.

1. We think "conduct and document" is more appropriate than "prepare". Suggest to make this change. 2. We understand the reason for introducing the spare equipment strategy in R2.1.4 is to address comments raised on planned and long-term outages. However, this is not the only cause of unavailability of major Transmission equipment for more than 12 months. Construction or line upgrade program may also require certain transmission facilities be taken out of service for a protracted period. We suggest that R2.1.4 be revised to "……When an entity's spare equipment strategy or transmission project construction plan could result in the unavailability of….." 3. When would PCs and TPs be expected to perform the analysis referred to in R2.1.4 – in anticipation of the possibility of unavailability of major transmission equipment of after such unavailability has occurred or is planned? 4. R2.3: The first sentence is unclear and the wording "can be supported" is misleading. We suggest the first sentence be revised to: "The short circuit analysis portion of the Planning Assessment addressing the Near-Term Transmission Planning Horizon shall be conducted annually and be supported by current or past studies." Alternatively, language similar to R2.4 may be considered: "The Near-Term Transmission Planning Horizon portion of the short circuit analysis shall be assessed annually and be supported by current or

past studies." 5. R2.4 stipulates the details of the study for Near-Term Transmission Planning horizon for the stability analysis. Unlike its steady state analysis counterpart, there is no requirement stipulated for the Long-Term Transmission Planning horizon for the stability analysis. Is this intentional, or do the same conditions apply to the Long-Term stability analysis? 6. R2.6: Suggest to change "in the tables" to "Table 1" at the end of the second sentence. 7. We agree with the VRFs, Mitigation Horizons and Measures. We also agree with the VSLs except R2.5 is not included. However, If R2.5 is meant to be explanatory (to illustrate the conditions under which past studies may be used), then the conditions should be provided in those requirements (e.g. R2.3) that allow for the use of past studies. If, however, these conditions are meant to be requirements, then their VSLs should be developed.

1. In our opinion, R3 as drafted is rather convoluted as it attempts to cover several objectives. Firstly, we recommend replacing "utilizing data in Requirement R1" with "developed in accordance with Requirement R1" both in the requirement and the VSLs. Secondly, is the main objective of R3 to ensure studies are conducted based on computer simulation utilizing data provided in Requirement R1? Or is it to ensure that this is done, and that all the other objectives are also fulfilled, for example: assessment of system performance (R3.1 and R3.5), conducting the analysis as specified in R3.2 and R3.3, identification of critical Planning Event contingencies (R3.4), etc. If it is the former, then not conducting studies based on computer simulation utilizing data provided in Requirement R1 alone should have a VSL of Severe. If it is the latter, then the requirement should be either: (a) Revised to place all supporting conditions in the subrequirements. As an example, R3 could be revised as follows: R3. The steady state analyses of the Near-Term and Long-Term Planning Assessment as stipulated in R2.1 and R2.2 shall be performed as follows: R3.1. Studies are conducted based on computer simulation utilizing data provided in Requirement R1; R3.2. Studies shall be performed to determine…. (the rest of the existing R3.1) R3.2. The existing R3.3, and so on. This way, not conducting studies based on computer simulation utilizing data provided in Requirement R1 will be "rolled up" to the VSLs for the main requirement, as is currently stated in the VSL table. Or (b) Restructure, if there are multiple main objectives in R3, to clearly have the main objectives in the main requirement, or split it into more than one main requirement. 2. Based on the way R3 is written, we agree with the VRF, Time Horizon and Measure. However, we do have a difficulty with the VSL based on our comments above on the requirement, especially on the Moderate VSL for "The Transmission Planner or Planning Coordinator did not base its studies on computer simulations using models utilizing data provided in Requirement R1."

. Same comments as in R3, above, except our proposed wording on R4 will read: R4. The Stability analyses of the Near-Term Planning Assessment as stipulated in R2.4.2 shall be performed as follows:…. since there are no detailed requirements stipulated for Stability analysis portion for the Long-Term Planning Assessment. However, the main requirement contains a condition for performing the Contingency analyses listed in Table 1. First of all, there are no VSLs for failing to meet this condition. Secondly, this duplicates with some of the subrequirements, e.g. R4.4, R4.5. Suggest to remove this condition from the main requirement. If the main requirement is to be revised in a similar fashion as suggested for R3, then this will become a non-issue. 2. Similar to R3, we agree with the VRF, Time Horizon and Measure for R4. However, we do have the same difficulty with the VSL based on our comments on the convoluted nature of the requirement as indicated above, especially on the Moderate VSL for "The Transmission Planner or Planning Coordinator did not base its studies on computer simulations using models utilizing data provided in Requirement R1."

We agree with the requirement, the VRF, Time Horizon, Measure and VSLs.

We agree with the requirement, the VRF, Time Horizon, Measure and VSLs.

1. We question the need to mention FERC 890. If this meant to be an example for the US entities, we suggest this to be put into a footnote with indication that it is an example for the US entities only. 2. We agree with the requirement, the VRF, Time Horizon, Measure and VSLs.

No

Is Year One intended to coincide with a calendar year or can it start in any month of the year? We suggest the following change to the definition. Insert "calendar" before "first" and "within" before "12" and change "from" to "of". NERC should seek to reinstate a definition of "cascading outages" and create one for "uncontrolled islanding".

No

"Single-phase-to-ground" faults should replace all occurrences of "single-line-to-ground" faults. Events in P6 and P7 need more clarity for back to back installation where no DC line exists. In note footnote 11 we propose the following change. 11. A stuck breaker means that for a gang-operated breaker, all three phases of the breaker have remained closed. For an independent pole operated (IPO) breaker, only one pole is assumed to remain closed. A stuck breaker results in Delayed Fault Clearing. We do not agree with the removal of the provision to allow load rejection for 1 and 2 elements out of service under certain defined conditions as indicated in footnote "b" of Table I of the current TPL standards.

Yes

Group
IRC Standards Review Committee
(1) R1.1.1 requires that models shall represent planned outages of generation and transmission facilities, if specifically known. Does this allow or require a PC/TP to include outages due to maintenance and due to construction programs where certain facilities are out of service during phases of construction as part of the Assessment? Such maintenance and construction schedules are made but may not be finalized over the planning horizon. Further, are planned outages to be treated as creating a "normal system condition" or is the planned outage a contingency from which system adjustments are made prior to subsequent events? (2) MOD 10 and 12 are based on requirements determined by the RRO in MOD 11 and 13 respectively. Is this appropriate? Further, the PC is not an applicable entity in MOD 10 and 12. (3)What are "other data sources"?
(1) When a spare equipment strategy does not cover the long lead time unavailability as stated in 2.1.4, will the system be treated as "normal system condition" or as having a contingency from which system adjustments are to be made prior to subsequent events. (2) Under R2.5 "Past Studies may be used to support the Planning Assessment if they meet the following requirements" and the sub requirement R2.5.2 states that for SS, SC, or stability analysis; the PRESENT system model shall not include any material changes, such as …. Does this mean that past studies may be used to support planning assessments as long as there are no material changes to the present system model? If so, that would be an impossible scenario to recreate.
No comment.
No comment.
No comment
No comment.
Is the PC expected to distribute the TP Planning Assessments as part of its coordination requirement?
No
The Year One definition is confusing. According to the definition, Year One can start any time between 12 and 18 months from a current calendar year. Is that January 1 of the current calendar year? Further, when does year 2, year 3, etc… start? Is this definition only applicable to the TP?
Yes
The stability studies require significantly more computer time and a more detailed model. The standard should allow the PC/TP to use judgment to manage size and complexity of the study.
Yes
Yes
The 3rd draft states this will be addressed later in the project. Removal of these standards would not affect NERC and the RE's obligations to perform assessments. Will the PC/TP be obligated under NERC Rules of Procedure to provide Assessments to NERC and the Regions upon request?
Individual
Harold Wyble
Kansas City Power & Light
R1 states that the models used in these studies shall be consistent with data provided through MOD-010 and MOD-012. The data submitted for these are updated on a schedule provided by the RRO and not necessarily reflective of any emerging changes that may have occurred between the MOD data collection cycle. The requirement should allow for exceptions to allow the most recent information to be included in the TPL studies.
R2.1.3 – is this indicating that only one of the variations need to be studied? ("…in one or more of the following conditions…"). Recommend having the planner work with the load to determine what sensitivity studies to perform. R2.1.4 – it is unclear as to what should be done with the analysis that incorporates the company's spare equipment strategy. Is this requirement inferring that a company's spare equipment strategy need to ensure that it can still operate to within the requirements for contingencies of Table 1 without the component? R2.2.1 – is the intent to have the study for the 10 year horizon or to include any project that is started within the next 10 years and thus the study must be extended to the forecasted completion of the project (conceivably as long as 20 years or more?) R2.5.2 - Remove the word "intervening" and this requirement must be more specific about what this requirement is trying to communicate and acccomplish. R2.6.4 – recommend clarifying how "situations beyond the control of the TP or PC" are determined. It is unclear if this is to imply that if something is outside of the control of the department who conducts the planning studies or if it is outside the control of the registered function's legal entity (i.e. corporation). R2.8 – appears to be nonessential information for reliability; for what purpose does this requirement exist? R2.9 - appears to be nonessential information for reliability; for what purpose does this requirement exist?

R3.3.3: Relay loadability has no bearing beyond the near term horizon. Loadability is not determined several years out. R3.5 – does this imply that mitigation plans must be implemented? If not, then this is highly subjective and the last sentence of this requirement should be deleted.
R4.3 – requires very labor intensive and detailed studies to be conducted; there are concerns about being able to accomplish the required studies within the 24 month implementation period; additionally, while there may be some reliability benefit to requiring these studies have the costs of this reliability increase been studied?; an alternative could be some sort of phased implementation (x% completed by 24months, etc.) R4.3.3 – to what degree is generator relaying factored into the model/study?
The term “proxies” is somewhat confusing; recommend the use of “assumptions” if that is an acceptable substitute.
Why is this needed if both entities must comply with the standard? At a minimum the requirement should include language to state that the one party must provide to the other with enough notice to comply with a required study if there is a shift or assignment of a responsibility.
Recommend deleting the portion of the requirement that states: “coordinating analysis of these results through an open and transparent review process such as described in FERC Order 890.”
Yes
Yes
Yes
No
Regional areas may be made up of multiple Planning Coordinators. It is important to maintain an assessment of an entire Regional Reliability Organizations area. TPL-005 and TPL-006 should not be replaced with this proposed TPL-001.

Consideration of Comments on Third Draft of Standard TPL-001-1 — Project 2006-02

The Assess Transmission Future Needs Standard Drafting Team thanks all commenters who submitted comments on the third draft of the TPL-001-1 standard. This standard was posted for a 45-day public comment period from May 26, 2009 through July 9, 2009. The stakeholders were asked to provide feedback on the standards through a special Electronic Comment Form. There were 85 sets of comments, including comments from more than 170 different people from over 85 companies representing 9 of the 10 Industry Segments as shown in the table on the following pages.

http://www.nerc.com/filez/standards/Assess-Transmission-Future-Needs.html

Due to industry comments and continuing review of Order 693 directives applicable to TPL, changes have been made to the following:

Definitions: Consequential Load Loss, Non-Consequential Load Loss, and Year One

Requirements: R1 and parts 1.1, 1.1.1, 1.1.2, 1.1.3, 1.1.4, 1.1.5, and 1.1.6; R2 and parts 2.1, 2.1.3, 2.1.4 (and bullets 1, 3, and 7), 2.1.5, 2.1.6, 2.2, 2.2.1, 2.3, 2.4, 2.4.1, 2.4.3 (and bullets 1 and 3), 2.5, 2.6.1, 2.6.2, 2.7, 2.7.1 bullet 2, 2.7.2, 2.7.5, 2.7.6, 2.8, 2.8.2, 2.9; R3 and parts 3.1, 3.2, 3.3, 3.3.2, 3.3.3, 3.3.4, 3.4, 3.4.1, 3.5, 3.6; R4 and parts 4.1, 4.1.1, 4.1.2, 4.1.3, 4.2, 4.3, 4.3.2, 4.3.3, 4.3.4, 4.4, 4.4.1, 4.5; R5, R6, R7; R8 and part 8.1.

Measures: M1, M5, M7, and M8.

VSLs: R1, R2, R3, R4, R5, R6, R7, and R8.

Table elements: Header notes 'a', 'c', 'f', and 'k'; P4, P7; extreme event 'a', steady state 1, Stability 1; footnotes: 2, 3, 4, 7, 9, 10, and 11

Implementation Plan

In addition, the SDT has reformatted the standard to meet the latest guidelines.

The SDT feels that the volume and scope of these changes warrants a fourth posting of this standard.

If you feel that your comment has been overlooked, please let us know immediately. Our goal is to give every comment serious consideration in this process! If you feel there has been an error or omission, you can contact the Vice President and Director of Standards, Gerry Adamski, at 609-452-8060 or at gerry.adamski@nerc.net. In addition, there is a NERC Reliability Standards Appeals Process.[1]

[1] The appeals process is in the Reliability Standards Development Procedures: http://www.nerc.com/standards/newstandardsprocess.html.

Index to Questions, Comments, and Responses

1. Requirement R1 — Please provide any specific comments on the requirement text, VRF, Time Horizon, measure associated with the requirement, data retention associated with the requirement, and/or the VSL associated with the requirement. 12

2. Requirement R2 — Please provide any specific comments on the requirement text, VRF, Time Horizon, measure associated with the requirement, data retention associated with the requirement, and/or the VSL associated with the requirement. 59

3. Requirement R3 – Please provide any specific comments on the requirement text, VRF, Time Horizon, measure associated with the requirement, data retention associated with the requirement, and/or the VSL associated with the requirement. 176

4. Requirement R4 – Please provide any specific comments on the requirement text, VRF, Time Horizon, measure associated with the requirement, data retention associated with the requirement, and/or the VSL associated with the requirement. 211

5. Requirement R5 – Please provide any specific comments on the requirement text, VRF, Time Horizon, measure associated with the requirement, data retention associated with the requirement, and/or the VSL associated with the requirement. 238

6. Requirement R6 – Please provide any specific comments on the requirement text, VRF, Time Horizon, measure associated with the requirement, data retention associated with the requirement, and/or the VSL associated with the requirement. 245

7. Requirement R7 – Please provide any specific comments on the requirement text, VRF, Time Horizon, measure associated with the requirement, data retention associated with the requirement, and/or the VSL associated with the requirement. 250

8. The SDT changed several definitions in response to industry comments to the second posting. Do you agree with these changes? If not, please clearly indicate which definition you disagree with and provide specific comments. 263

9. Do you agree with the changes in the performance elements and notes in Table 1? If not, please provide specific comments by note number, note alpha character, or performance category. Please note that footnotes 5 and 10 are handled separately in question 10. 289

10. The changes to the Table include the addition/revision of footnotes 5 and 10 that address curtailment of Firm Transmission Service and conditional Firm Transmission Service. Do you agree with the footnotes? If not, please provide specific comments.332

11. The SDT has provided an Implementation Plan as part of this posting. The plan includes the retirement of TPL-005-0 and TPL-006-0. Do you agree with the elements of the Plan? If not, please provide specific comments. 343

The Industry Segments are:

1 — Transmission Owners
2 — RTOs, ISOs
3 — Load-serving Entities
4 — Transmission-dependent Utilities
5 — Electric Generators
6 — Electricity Brokers, Aggregators, and Marketers
7 — Large Electricity End Users
8 — Small Electricity End Users
9 — Federal, State, Provincial Regulatory or other Government Entities
10 — Regional Reliability Organizations, Regional Entities

		Commenter	Organization	Industry Segment									
				1	2	3	4	5	6	7	8	9	10
1.	Group	William Bigdely	Dominion - Electric Transmission	X									

	Additional Member	Additional Organization	Region	Segment Selection
1.	J. Ronnie Bailey	Dominion - Electric Transmission Planning	SERC	
2.	Kirit Doshi	Dominion - Electric Transmission Planning	SERC	
3.	Craig Crider	Dominion - Electric Transmission Planning	SERC	
4.	Mehdi Shakibafar	Dominion - Electric Transmission Planning	SERC	
5.	Dennis Kaminsky	Dominion - Electric Transmission Planning	SERC	
6.	Solomon Yirga	Dominion - Electric Transmission Planning	SERC	
7.	Michael Gildea	Dominion - Electric Market Policy	SERC	
8.	Louis Slade, Jr.	Dominion - Electric Market Policy	SERC	
9.	Jalal Babik	Dominion - Electric Market Policy	SERC	

2.	Group	Guy Zito	Northeast Power Coordinating Council										X

	Additional Member	Additional Organization	Region	Segment Selection
1.	Ralph Rufrano	New York Power Authority	NPCC	5
2.	Alan Adamson	New York State Reliability Council	NPCC	10
3.	Gregory Campoli	New York Independent System Operator	NPCC	2
4.	Roger Champagne	Hydro-Quebec TransEnergie	NPCC	2

	Commenter	Organization	Industry Segment									
			1	2	3	4	5	6	7	8	9	10
5. Kurtis Chong	Independent Electricity System Operator	NPCC 2										
6. Sylvain Clermont	Hydro-Quebec TransEnergie	NPCC 1										
7. Manuel Couto	National Grid	NPCC 1										
8. Chris de Graffenried	Consolidated Edison Co. of New York, Inc.	NPCC 1										
9. Peter Yost	Consolidated Edison Co. of New York, Inc.	NPCC 3										
10. Mike Garton	Dominion Resources Services, Inc.	NPCC 5										
11. Brian L. Gooder	Ontario Power Generation Incorporated	NPCC 5										
12. Kathleen Goodman	ISO - New England	NPCC 2										
13. David Kiguel	Hydro One Networks Inc.	NPCC 1										
14. Michael R. Lombardi	Northeast Utilities	NPCC 1										
15. Michael Schiavone	National Grid	NPCC 1										
16. Bruce Metruck	New York Power Authority	NPCC 6										
17. Chris Orzel	FPL Energy/NextEra Energy	NPCC 5										
18. Robert Pellegrini	The United Illuminating Company	NPCC 1										
19. Gerry Dunbar	Northeast Power Coordinating Council	NPCC 10										
20. Lee Pedowicz	Northeast Power Coordinating Council	NPCC 10										
3. Group	W. R. Schoneck	Transmission Planning	X		X							

Additional Member	Additional Organization	Region	Segment Selection
1. John Shaffer	FPL	FRCC	
2. Pedro Modia	FPL	FRCC	
3. Carlos Candelaria	FPL	FRCC	
4. Kiko Barredo	FPL	FRCC	

4. Group	Phillip R. Kleckley	SERC Engineering Committee Planning Standards Subcommittee			X							

Additional Member	Additional Organization	Region	Segment Selection
1. John Sullivan	Ameren	SERC	1
2. Jim Kelley	PowerSouth Energy Coop	SERC	1
3. Pat Huntley	SERC Reliability Corp	SERC	10
4. Bob Jones	Southern Co. Services	SERC	1
5. David Marler	TVA	SERC	1

		Commenter	Organization	Industry Segment									
				1	2	3	4	5	6	7	8	9	10
5.	Group	Steve Hill	Modesto Irrigation District	X		X		X					

	Additional Member	Additional Organization	Region	Segment Selection
1.	Spencer Tacke	Modesto Irrigation	WECC	

6.	Group	Matt Muldoon	OPUC									X	

	Additional Member	Additional Organization	Region	Segment Selection
1.	Jerry Murray	OPUC	WECC	9

7.	Group	Richard Kafka	Pepco Holdings, Inc. - Affiliates	X		X		X	X				

	Additional Member	Additional Organization	Region	Segment Selection
1.	Bill Mitchell	Delmarva Power & Light	RFC	1
2.	John Radman	Potomac Electric Power Co.	RFC	1
3.	Jim Summers	Atlantic City Electric	RFC	1
4.	Brian Willis	Potomac Electric Power Co.	RFC	1
5.	Lisa Fairchild	Potomac Electric Power Co.	RFC	1

8.	Group	Denise Koehn	Bonneville Power Administration	X				X	X				

	Additional Member	Additional Organization	Region	Segment Selection
1.	Berhanu Tesema	Transmission Planning	WECC	1
2.	Chuck Matthews	Transmission Planning	WECC	1
3.	Kyle Kohne	Transmission Planning	WECC	1
4.	Melivin Rodrigues	Transmission Planning	WECC	1
5.	Kendall Rydell	Transmission Planning	WECC	1
6.	Larry Furumasu	Transmission Planning	WECC	1

9.	Group	Carol Gerou	MRO MRO NERC Standards Review Subcommittee										X

	Additional Member	Additional Organization	Region	Segment Selection
1.	Neal Balu	Wisconsin Public Service	MRO	3, 4, 5, 6
2.	Terry Bilke	Midwest ISO Inc.	MRO	2
3.	Ken Goldsmith	Alliant Energy	MRO	4

		Commenter	Organization	Industry Segment									
				1	2	3	4	5	6	7	8	9	10
4.	Jim Haigh	Western Area Power Administration	MRO 1, 6										
5.	Joseph Knight	Great River Energy	MRO 1, 3, 5, 6										
6.	Alice Murdock	Xcel Energy	MRO 1, 3, 5, 6										
7.	Scott Nickels	Rochester Public Utilities	MRO 1, 3, 5, 6										
8.	Dave Rudolph	Basin Electric Power Cooperative	MRO 1, 3, 5, 6										
9.	Eric Ruskamp	Lincoln Electric System	MRO 1, 3, 5, 6										
10.	Joe DePoorter	Madison Gas & Electric	MRO 3, 4, 5, 6										
10.	Group	Rick Foster	SERC Engineering Committee Dynamics Review Subcommittee (DRS)	X									X

	Additional Member	Additional Organization	Region	Segment Selection
1.	John Sullivan	Ameren Services Company	SERC	1
2.	Anthony Williams	Duke Energy Carolinas	SERC	1
3.	Sujit Mandal	Entergy	SERC	1
4.	Venkat Kolluri	Entergy	SERC	1
5.	John O'Connor	Progress Energy Carolinas	SERC	1
6.	Bob Jones	Southern Company Services, Inc. - Trans	SERC	1
7.	Lee Taylor	Southern Company Services, Inc. - Trans	SERC	1
8.	Robbie Bottoms	Tennessee Valley Authority	SERC	1
9.	Tom Cain	Tennessee Valley Authority	SERC	1
10.	Herb Schrayshuen	SERC Reliability Corporation	SERC	10

11.	Group	Ian Grant	SERC Engineering Committee Reliability Review Subcommittee (RRS)	X									X

	Additional Member	Additional Organization	Region	Segment Selection
1.	Curtis Stepanek	Ameren Services Company	SERC	1
2.	Eugene Warnecke	Ameren Services Company	SERC	1
3.	Kevin Hopper	Associated Electric Cooperative, Inc.	SERC	1
4.	Karl Kohlrus	City of Springfield, IL - CWLP	SERC	1
5.	Brian D. Moss	Duke Energy Carolinas	SERC	1
6.	Julia Tucker	East Kentucky Power Cooperative	SERC	1
7.	Kham Vongkhamchanh	Entergy	SERC	1

		Commenter	Organization	Industry Segment									
				1	2	3	4	5	6	7	8	9	10
8. Ken Wofford	Georgia Transmission Corporation	SERC	1										
9. Mark Kuras	PJM Interconnection, LLC	SERC	1										
10. Mark Byrd	Progress Energy Carolinas	SERC	1										
11. Clay Young	South Carolina Electric & Gas Company	SERC	1										
12. Rod Hardiman	Southern Company Services, Inc. - Trans	SERC	1										
13. Timothy Smith	Tennessee Valley Authority	SERC	1										
14. Herb Schrayshuen	SERC Reliability Corporation	SERC	10										
12.	Group	Doug Hohlbaugh	FirstEnergy Corp	X		X	X	X	X				
Additional Member	**Additional Organization**	**Region**	**Segment Selection**										
1. John Stephens	FE	RFC	1										
2. Jeff Mackauer	FE	RFC	1										
13.	Group	Ben Li	IRC Standards Review Committee		X								
Additional Member	**Additional Organization**	**Region**	**Segment Selection**										
1. Matt Goldberg	ISO-NE	NPCC	2										
2. Bill Phillips	MISO	MRO	2										
3. Anita Lee	AESO	WECC	2										
4. James Castle	NYISO	NPCC	2										
5. Charles Yeung	SPP	SPP	2										
6. Steve Myers	ERCOT	ERCOT	2										
7. Lourdes Estrada-Salinero	CAISO	WECC	2										
8. Pat Brown	PJM	RFC	2										
14.	Individual	Tim Ponseti, VP	TVA System Planning	X									
15.	Individual	Eric Mortenson	Exelon Transmission Planning	X		X		X					
16.	Individual	Hugh Francis	Southern Company	X		X		X					
17.	Individual	David Bradt	United Illuminating	X									
18.	Individual	Cordell Grand	Louisiana Energy and Power Authority			X							

		Commenter	Organization	Industry Segment									
				1	2	3	4	5	6	7	8	9	10
19.	Individual	Mark Graham	System Protection and Transmission Planning Department	X									
20.	Individual	John Cummings	PPL Energy Plus						X				
21.	Individual	Sandra Shaffer	PacifiCorp	X		X		X	X				
22.	Individual	Brandy A. Dunn	Western Area Power Administration	X									
23.	Individual	Min Tra	Tampa Electric	X				X					
24.	Individual	Richard Becker	Florida Reliability Coordinating Council, Inc - Transmission Working Group	X			X	X					X
25.	Group	Frank Gaffney, Regulatory Compliance Officer	FMPA, and it's All-Requirements Project Participants, as follows: Lakeland Electric; Fort Pierce Utilities Authority; Keys Energy Services; City of Vero Beach; Beaches Energy Services; Kissimmee Utility Authority; and Lake Worth Utilities	X		X			X				
26.	Individual	Mark Byrd	Progress Energy Carolina (PEC)	X									
27.	Individual	John Allen	City Utilities of Springfield, MO	X									
28.	Individual	Blake Williams	CPS Energy	X				X					
29.	Individual	Tom Mielnik	MidAmerican Energy Company	X		X		X	X				
30.	Individual	James Tucker	Deseret Generation & Transmission	X		X		X					
31.	Individual	Michael R. Lombardi	Northeast Utilities	X		X	X	X					
32.	Individual	Brian Keel	SRP	X									
33.	Individual	L. Earl Fair	Gainesville Regional Utilities	X									

		Commenter	Organization	Industry Segment									
				1	2	3	4	5	6	7	8	9	10
34.	Individual	Don Gilbert	JEA	X		X		X					
35.	Individual	Catherine Mathews	NorthWestern Corporation NorthWestern Energy (NWE) (NWMT)	X		X		X					
36.	Individual	Dilip Mahendra	SMUD	X		X	X	X	X				
37.	Individual	Bart White	Progress Energy Florida, Inc.	X		X							
38.	Individual	Alice Murdock	Xcel Energy	X		X			X				
39.	Individual	Kathleen Goodman	ISO New England, Inc.		X								
40.	Individual	Baj Agrawal	Arizona Public Service Co	X		X							
41.	Individual	Randy MacDonald	New Brunswick System Operator		X								
42.	Individual	Dana Cabbell	Southern California Edison Company	X		X							
43.	Individual	Terry Huval	Lafayette Utilities System										
44.	Individual	Robert Easton	Western Area Power Administration	X								X	
45.	Individual	Robert Priest	Mississippi Delta Energy Agency										
46.	Individual	Roger Champagne	Hydro-Québec TransEnergie (HQT)	X									
47.	Individual	Phil Sanchez	Western Area Power Administration	X								X	
48.	Individual	Chifong Thomas	Pacific Gas and Electric Co,	X		X		X					
49.	Individual	Kirit Shah	Ameren	X		X		X	X				
50.	Individual	Joe Seabrook	Puget Sound Energy, Inc.	X									
51.	Individual	Eric Bryant	Maine Public Advocate								X	X	

		Commenter	Organization	Industry Segment									
				1	2	3	4	5	6	7	8	9	10
52.	Individual	Scott Helyer	Tenaska, Inc.					X					
53.	Individual	Kasia Mihalchuk	Manitoba Hydro	X		X		X	X				
54.	Individual	Brent Ingebrigtson	E.ON U.S.	X		X		X	X				
55.	Individual	Sergio Garza	LCRA Transmission Services Corporation	X									
56.	Individual	Carol Sedewitz	National Grid	X									
57.	Individual	Edward J Davis	Entergy Services, Inc	X		X		X	X				
58.	Individual	Joe Knight	Great River Energy	X		X		X	X				
59.	Individual	Pat Harrington	BC Hydro			X		X	X				
60.	Individual	Marie Knox	Midwest ISO		X								
61.	Individual	Jessica Rice	NV Energy	X									
62.	Individual	Mark Kuras	PJM		X								
63.	Individual	David Albers	Brazos Electric Cooperative	X									
64.	Individual	James H. Sorrels, Jr.	American Electric Power	X		X		X	X				
65.	Individual	Michael Ayotte	ITC Holdings	X									
66.	Individual	Mary Ann Groszek	Northern Indiana Public Service Company	X									
67.	Individual	Wang, Yu (David)	San Diego Gas and Electric Co	X									
68.	Individual	Peter S. Schommer	Minnesota Power			X		X	X				
69.	Individual	Tim Wu	LADWP	X		X		X					

		Commenter	Organization	Industry Segment									
				1	2	3	4	5	6	7	8	9	10
70.	Individual	John Collins	Platte River Power Authority	X									
71.	Individual	Larry Brusseau	MAPPCOR			X							
72.	Individual	Aaron Staley	Orlando Utilities Commission	X				X					
73.	Individual	Jason Shaver	American Transmission Company	X									
74.	Individual	John Mayhan	Omaha Public Power District	X		X		X	X				
75.	Individual	David Angell	Idaho Power	X									
76.	Individual	Casey Hashimoto	Turlock Irrigation District			X							
77.	Individual	Gregory Campoli	New York Independent System Operator		X								
78.	Individual	Greg Rowland	Duke Energy	X		X			X				
79.	Individual	David M. Conroy	Central Maine Power Company	X									
80.	Individual	Darcy O'Connell	California ISO		X								
81.	Individual	Gary Trent	Tucson Electric Power Company	X		X		X					
82.	Individual	Dan Rochester	Independent Electricity System Operator		X								
83.	Individual	Harold Wyble	Kansas City Power & Light	X		X		X	X				
84.	Individual	Rao Somayajula	ReliabilityFirst Corporation										
85.	Individual	Vivian Wang	British Columbia Transmission Corporation										

1. **Requirement R1 — Please provide any specific comments on the requirement text, VRF, Time Horizon, measure associated with the requirement, data retention associated with the requirement, and/or the VSL associated with the requirement.**

Summary Consideration: The SDT has made several clarifying changes to Requirement R1 and its various parts based on industry comments. The major changes made were to delete the phrase "including requirements of regulatory authorities and other legal obligations" from Requirement R1, the addition of "existing facilities' to the parts of Requirement R1, changing 'planned' outages to 'known' outages, combining the part calling for Firm Transmission Service and Interchange, and clarifying the final part as to the use of resources. Measure M1 was revised to provide greater clarity. The VSLs for Requirement R1 have been revised to match the new wording in the requirement.

R1 Each Transmission Planner and Planning Coordinator shall maintain System models within its respective area for performing the studies needed to complete its Planning Assessment. The models shall use the latest data consistent with that provided in accordance with the MOD-010 and MOD-012 standards, supplemented by other sources as needed, including items represented in the Corrective Action Plan, and shall represent projected System conditions.

1.1 System models shall represent:

1.1.1 Existing Facilities

1.1.2 Known outage(s) of generation or Transmission Facility(ies) with a duration of at least six months.

1.1.3 New planned Facilities and changes to existing Facilities

1.1.4 Real and reactive Load forecasts

1.1.5 Known commitments for Firm Transmission Service and Interchange

1.1.6 Resources required to supply Load

M1 Each Transmission Planner and Planning Coordinator shall provide evidence, in electronic or hard copy format, that it is maintaining System models, using the latest data consistent with MOD-010 and MOD-012, including items represented in the Corrective Action Plan, representing projected System conditions, and that the models represent the required information in accordance with Requirement R1.

R1 VSL	The responsible entity's System model failed to represent one of the Requirement R1, parts 1.1.1 through 1.1.6	The responsible entity's System model failed to represent two of the Requirement R1, parts 1.1.1 through 1.1.6. OR The System model did not use the latest data consistent with the data provided in accordance with the MOD-010 and	The responsible entity's System model failed to represent three of the Requirement R1, parts 1.1.1 through 1.1.6.	The responsible entity's System model failed to represent four or more of the Requirement R1, parts 1.1.1 through 1.1.6. OR The System model did not represent projected System conditions as described in Requirement

		MOD-012 standards and other sources, including items represented in the Corrective Action Plan.		R1.

Organization	Question 1 Comment
Dominion - Electric Transmission	R1 - Dominion questions the legal authority NERC has to include the recently inserted language "including requirements of regulatory authorities and other legal obligations." This language is too broad and far exceeds the jurisdiction of NERC's mission. R1.1.5 - Dominion has seen base case models built by other transmission entities which do not include area interchanges for all areas and must be solved with area interchange "turned off". Would these base case models be in violation of R.1.1.5?
Response: The goal is for the responsible entity to build a realistic simulation, and the entity has to comply not only with the criteria in the TPL standard's tables, but also with other non-NERC regulations. However, the SDT has removed "including requirements of regulatory authorities and other legal obligations" since utilities already have to abide by such requirements. **R1** Each Transmission Planner and Planning Coordinator shall maintain System models within its respective area for performing the studies needed to complete its Planning Assessment. The models shall use the latest data consistent with that provided in accordance with the MOD-010 and MOD-012 standards, supplemented by other sources as needed, including items represented in the Corrective Action Plan, and shall represent projected System conditions. The SDT believes that the base cases should include any area interchange that is planned between utilities. Requirement R1, part 1.1.5 has been revised to include known commitments for Firm Transmission Service and Interchange. **1.1.5** Known commitments for Firm Transmission Service and Interchange	
Northeast Power Coordinating Council	R1--There needs to be some direction provided on the initial conditions used in the assessment. This guidance should include discussion as to whether or not representations of generator forced outages are to be represented in the base case or if they are addressed through the sensitivity testing (Could add R1.1.7 Reasonable representations of unplanned generator outages.) Additionally, the standard is also silent on the treatment of system transfers, both internal and external, as to how they should be modeled in the base case. For some areas, their current practice is to include heavy system stresses in their base case, which leaves little for sensitivity testing. It is unclear if this practice works within the purview of this standard. Guidance is needed on how to treat base case generation dispatch and system transfers. The inclusion of "requirements of regulatory authorities and other legal obligations" is not understood. Even if some version of this language is kept in the final standard, it seems to belong in R2 rather than R1. "Simulate" should be changed to "incorporate". R1.1.1 Priority comment. Only known long-term outages of generation and transmission should be required to be modeled.

Organization	Question 1 Comment
	R1.1.2 comment - Do we need to have the list of equipment to model? How are circuit breakers, and other equipment modeled? Also, what should be the level of detail and the form that Protection System Equipment and Control Devices be modeled? We recommend deleting the list. Make R1.1.2 simply read as follows: R1.1.2--Projected system configuration, taking into account new planned Facilities and changes to existing Facilities, for each year of the Near-Term and Long-Term Transmission Planning Horizon. R1.1.5 comment What specifically needs to be modeled under Interchange "R1.1.6 comment " This needs further definition or it should be deleted. It is not clear what a network resource required to supply load is. Does this refer to Network Resource per FERC LGIP?

Response: The SDT believes that the outages should be modeled to insure the System reliability during the outage durations. If a Transmission element outage occurs during a specified time, then the new base case for that time period would result with that element out of service pre-Contingency. All performance criteria would then apply to that new base case. Requirement R1, part 1.1.2 has been revised to include known outages of generation or Transmission Facilities with a minimum duration of 6 months.

> **1.1.2** Known outage(s) of generation or Transmission Facility(ies) with a duration of at least six months.

Requirement R1, part 1.1.5 has been revised to include known commitments for Firm Transmission Service and Interchange.

> **1.1.5** Known commitments for Firm Transmission Service and Interchange

The goal is for the responsible entity to build a realistic simulation, and the entity has to comply not only with the criteria in the TPL standard's tables, but also with other non-NERC regulations. However, the SDT has removed "including requirements of regulatory authorities and other legal obligations" since utilities already have to abide by such requirements.

> **R1** Each Transmission Planner and Planning Coordinator shall maintain System models within their respective areas for performing the studies needed to complete their Planning Assessment. The models shall use the latest data consistent with that provided in accordance with the MOD-010 and MOD-012 standards, supplemented by other sources as needed, including items represented in the Corrective Action Plan, and shall represent projected System conditions.

The SDT has changed the word "simulate" to "represent" in Requirement R1.

Requirement R1, part 1.1.2 has been revised to include known outages of generation or Transmission Facilities with a minimum duration of 6 months.

The SDT has removed the equipment list under Requirement R1, part 1.1.2 (now part 1.1.3). Transmission lines, generators, and reactive power devices are already included in MOD standards. Circuit breakers, Protection System equipment, and control devices are not typically modeled - the impact of these devices is typically simulated and thus these are already included in Requirement R3, part 3.3, Requirement R4, part 4.3, and in header note 'c' in Table 1. New technologies were removed from the list as they are already covered in the Corrective Action Plan under Requirement R2, part 2.7. Existing Facilities are now shown under Requirement R1, part 1.1.1.

> **1.1.1** Existing Facilities

Interchange is defined in the NERC glossary as "energy transfers that cross Balancing Authority boundaries" while Firm Transmission Service is "the highest quality (priority) service offered to customers under a filed rate schedule that anticipates no planned interruption." Requirement R1, part 1.1.5 has been revised to include

Organization	Question 1 Comment
known commitments for Firm Transmission Service and Interchange. The intent of the SDT was that this includes network resource as per the FERC LGIP but that it is not limited to that. The SDT has clarified the wording for Requirement R1, part 1.1.6. **1.1.6** Resources required to supply Load	
Transmission Planning	R1.1. COMMENT: Should read: Models for performing the studies needed to complete the Planning Assessment shall represent: instead of Models for the Planning Assessment shall represent: R1.1.1. COMMENT: Should the requirement specify which known outages should be modeled? For example, would it be considered incomplete and therefore a violation if a known generator maintenance outage with a one week duration is not included (not modeled off-line) in a case that represents a full summer season at peak conditions? Please provide guidelines as to what duration outages should be modeled in representative planning horizon cases. (i.e. one day, several days, one week, one month, in a case that represents a significantly longer time period.) R1.1.2. COMMENT: Should add Transformers to this list; COMMENT: What is meant by “represent” - Planning models do not typically include explicit Circuit breaker modeling. The planning models used for power flow, dynamics and short circuit analysis represent the power system with busses and branches. The effect of circuit breakers is taken into account as part of contingency modeling. Including circuit breakers as a sub-requirement is likely to result in transmission planners being required to demonstrate that circuit breakers are modeled. Explicit representation of circuit breakers with existing software would result in major convergence problems due to large number of low impedance branches. COMMENT: Should clarify "Protection System equipment" to apply only to system stability models. Does this mean all relays on the system must be included in the dynamics modeling? While a certain limited number of protective relays can be modeled with the software used for dynamics, it is not practical to model more than a very small percentage of the protection systems used in the BES. Including protective relays as a sub-requirement is likely to result in transmission planners being required to demonstrate that all protective relays are modeled which is an impossible task. The modeling of protective relays should be caveated with as deemed appropriate. COMMENT: "Control devices" Should be specific. Is this for Phase Angle Regulators (PAR), Synchronous Condensers, Static Var Compensators (SVC), exciters, governors etc? Control devices should be specifically defined as the following: PAR, SVC, HVDC. COMMENT: "New technologies" seems too broad. Needs to be better defined. Planning models may not have the capability to adequately model new technologies. R1.1.4. Firm Transmission Service COMMENT: Should add that is expected to be utilized in the study case scenario because not all Firm Transmission Service can be included in every study case model. Some firm transmission reservations (Network Resources that could be Reserves) are used optionally depending upon the availability of other Network resources. The following apply to all VRF, Time Horizon, Measure, Data Retention, and VSL for all requirements in the standard.VRF: Agree. No comment.

Organization	Question 1 Comment
	Time Horizon: COMMENT: Long-Term Planning This is confusing. Is it only the newly defined Long-Term Transmission Planning Horizon? Shouldn't it include the Near-Term Transmission Planning Horizon Suggest Long-Term and Near-Term Transmission Planning Horizon as used in definitions. Measure: Agree. No comment. Data Retention: Agree. No comment. VSL: Are bullets in requirements all required? (I.e. If circuit breakers are not explicitly modeled, as the bullet list in R1.1.2 seems to indicate, is it a violation?) What is meant by did not simulate projected System conditions as described in R1. How are projected System conditions criteria described in R1?

Response: The SDT has reworded the requirement.

1.1 System models shall represent:

Requirement R1, part 1.1.2 has been revised to include known outages of generation or Transmission Facilities with a minimum duration of 6 months.

1.1.2 Known outage(s) of generation or Transmission Facility(ies) with a duration of at least six months.

The SDT has removed the equipment list under Requirement R1, part 1.1.2 (now part 1.1.3). Transmission lines, generators, and reactive power devices are already included in MOD standards. Circuit breakers, Protection System equipment, and control devices are not typically modeled - the impact of these devices are typically simulated and thus these are already included in Requirement R3, part 3.3, Requirement R4, part 4.3, and in header note 'c' in Table 1. New technologies were removed from the list as they are already covered in the Corrective Action Plan under Requirement R2, part 2.7.

The SDT has revised Requirement R1, part 1.1.2 to provide clarity.

New technologies include any technology that is not currently in use on the electric power System that helps improve efficiency (i.e., energy storage/production technologies, low sag conductors, solid state interrupters, etc.). New technologies were removed from the equipment list under Requirement R1, part 1.1.2 since these are already covered in the Corrective Action Plan under Requirement R2, part 2.7

Models are only specific to the case study. Requirement R1, part 1.1.5 has been revised to include known commitments for Firm Transmission Service and Interchange.

1.1.5 Known commitments for Firm Transmission Service and Interchange

The *Time Horizon* term at the end of the requirement deals with mitigation time periods (as shown below) and is not connected to the assessment time frames. Time Horizons are a consideration when there is a violation of a requirement – the impact to the BES of violating a requirement with a long-term planning horizon is not expected to be as severe as the impact associated with violating a requirement with a real-time operations time horizon. No change made.

Mitigation Time Horizon - The time horizons available for mitigating a violation to a requirement include the following::

- **Long-term Planning** — a planning horizon of one year or longer.

Organization	Question 1 Comment

- **Operations Planning** — operating and resource plans from day-ahead up to and including seasonal.
- **Same-day Operations** — routine actions required within the timeframe of a day, but not real-time.
- **Real-time Operations** — actions required within one hour or less to preserve the reliability of the bulk electric system.
- **Operations Assessment** — follow-up evaluations and reporting of real time operations.

Thank you for your response on Measures and Data Retention.

The SDT has removed the equipment list. Transmission lines, generators, and reactive power devices were removed from the equipment list due to already being included in MOD standards. Circuit breakers, Protection System equipment, and control devices were removed from the equipment list since these items are already included in Requirement R3, part 3.3, Requirement R4, part 4.3, and in header note c in Table 1. New technologies were removed from the list as they are already covered in the Corrective Action Plan under Requirement R2, part 2.7.

The SDT has deleted the equipment list.

The SDT has replaced "simulate" with "represent" under the Severe VSL category for R1.

R1 VSL	The responsible entity's System model failed to represent one of the Requirement R1, parts 1.1.1 through 1.1.6	The responsible entity's System model failed to represent two of the Requirement R1, parts 1.1.1 through 1.1.6. OR The System model did not use the latest data consistent with the data provided in accordance with the MOD-010 and MOD-012 standards and other sources, including items represented in the Corrective Action Plan.	The responsible entity's System model failed to represent three of the Requirement R1, parts 1.1.1 through 1.1.6.	The responsible entity's System model failed to represent four or more of the Requirement R1, parts 1.1.1 through 1.1.6. OR The System model did not represent projected System conditions as described in Requirement R1.

Requirement R1 contains the requirements needed for creating proper base cases.

SERC Engineering Committee Planning Standards	R1.1.2: In bullet three of R1.1.2, are bus-tie circuit breakers to be represented in the models? Typically circuit breakers are included in the contingency definitions along with the protection system equipment used in the power flow models. The number of zero impedance branches which can presently be modeled using PSS/E software is limited to 4000. Also, the number of buses

Organization	Question 1 Comment
Subcommittee	included in the power flow models would increase with additional breaker modeling. Protection System Equipment: The SDT stated during its June 30th Webinar that protection system equipment need not be explicitly represented in models, but had difficulty in determining adequate wording for the proposed sub-requirement. Because protection system action is described in R3.3.1, R3.3.4, R4.3.1, and R4.3.3 we suggest that protection system equipment be removed from the list in R1.1.2.
Response: The SDT has removed the equipment list under Requirement R1, part 1.1.2 (now part 1.1.3). Transmission lines, generators, and reactive power devices are already included in MOD standards. Circuit breakers, Protection System equipment, and control devices are not typically modeled - the impact of these devices are typically simulated and thus these are already included in Requirement R3, part 3.3, Requirement R4, part 4.3, and in header note 'c' in Table 1. New technologies were removed from the list and are already covered in the Corrective Action Plan under Requirement R2, part 2.7.1 in the revised standard.	
Modesto Irrigation District	Comment: Are all bullets under R1.1.2 required to be explicitly modeled or are the effect of the devices or the effect of the removal of the devices to be modeled? We don't explicitly model circuit breakers or explicitly model protection system equipment in the steady state model. R1.1.4 should refer to expected transfers to be consistent with the bullet under R2.1.3. Please explain the difference between R1.1.4 and R1.1.5
Response: The SDT has removed the equipment list under Requirement R1, part 1.1.2 (now part 1.1.3). Transmission lines, generators, and reactive power devices are already included in MOD standards. Circuit breakers, Protection System equipment, and control devices are not typically modeled - the impact of these devices are typically simulated and thus these are already included in Requirement R3, part R3.3, Requirement R4, part 4.3, and in header note 'c' in Table 1. New technologies were removed from the list and are already covered in the Corrective Action Plan under Requirement R2, part 2.7.1 in the revised standard. Requirement R1.1.5 has been revised to include known commitments for Firm Transmission Service and Interchange. **1.1.5** Known commitments for Firm Transmission Service and Interchange Interchange is defined in the NERC glossary as "energy transfers that cross Balancing Authority boundaries" while Firm Transmission Service is "the highest quality (priority) service offered to customers under a filed rate schedule that anticipates no planned interruption."	
OPUC	1. Requirement R1 Please provide any specific comments on the requirement text, VRF, Time Horizon, measure associated with the requirement, data retention associated with the requirement, and/or the VSL associated with the requirement.Comments: A: Language in R1.1.2 still needs further clarification. Base case models do not clarify modeling required for the effect or absence of circuit breakers, protection system equipment and control devices. B: Clarity would be increased were R1.1.4 to refer to expected transfers rather than Firm Transmission Service, permitting the elimination of then redundant R1.1.5 C: Removing "including requirements of regulatory authorities and other legal obligations" at the end of R1 would also eliminate redundant text.
Response: The SDT has removed the equipment list under Requirement R1, part 1.1.2 (now part 1.1.3). Transmission lines, generators, and reactive power devices	

Organization	Question 1 Comment
are already included in MOD standards. Circuit breakers, Protection System equipment, and control devices are not typically modeled - the impact of these devices are typically simulated and thus these are already included in Requirement R3, part R3.3, Requirement R4, part 4.3, and in header note 'c' in Table 1. New technologies were removed from the list and are already covered in the Corrective Action Plan under Requirement R2, part 2.7.1 in the revised standard. **1.1.3** New planned Facilities and changes to existing Facilities Requirement R1, part 1.1.5 has been revised to include known commitments for Firm Transmission Service and Interchange. **1.1.5** Known commitments for Firm Transmission Service and Interchange The goal is for the responsible entity to build a realistic simulation, and the entity has to comply not only with the criteria in the TPL standard's tables, but also with other non-NERC regulations. However, the SDT has removed "including requirements of regulatory authorities and other legal obligations" since utilities already have to abide by such requirements. **R1** Each Transmission Planner and Planning Coordinator shall maintain System models within its respective areas for performing the studies needed to complete its Planning Assessment. The models shall use the latest data consistent with that provided in accordance with the MOD-010 and MOD-012 standards, supplemented by other sources as needed, including items represented in the Corrective Action Plan, and shall represent projected System conditions.	
Bonneville Power Administration PacifiCorp Deseret Generation & Transmission SRP Southern California Edison Company Pacific Gas and Electric Co, NV Energy San Diego Gas and Electric Co California ISO	The language in R1.1.2 needs to be clarified. Many of these facilities are not explicitly included in the models in the base cases (circuit breakers, protection system equipment, control devices). The language should be clarified to require modeling the effect of the devices or the effect of the removal of the devices where it is expected to impact the study outcome. Clarity is needed to explain the difference between R1.1.4 and R1.1.5. Expected interchange can be reasonably projected, but information on Firm Transmission Service is not always known or reasonably projected for future cases. For consistency with the 2nd bullet under R2.1.3, R1.1.4 should refer to expected transfers rather than Firm Transmission Service. With this change, R1.1.4 and R1.1.5 would be redundant and one should be deleted. We disagree with the inclusion of the words including requirements of regulatory authorities and other legal obligations at the end of R1. Entities already are required to do this. It does not need to be included in the standard.
Response: The SDT has removed the equipment list under Requirement R1, part 1.1.2 (now part 1.1.3). Transmission lines, generators, and reactive power devices are already included in MOD standards. Circuit breakers, Protection System equipment, and control devices are not typically modeled - the impact of these devices are typically simulated and thus these are already included in Requirement R3, part R3.3, Requirement R4, part 4.3, and in header note 'c' in Table 1. New technologies were removed from the list and are already covered in the Corrective Action Plan under Requirement R2, part 2.7.1 in the revised standard. Interchange is defined in the NERC glossary as "energy transfers that cross Balancing Authority boundaries" while Firm Transmission Service is "the highest quality (priority) service offered to customers under a filed rate schedule that anticipates no planned interruption." Requirement R1, part 1.1.5 has been revised to include	

Organization	Question 1 Comment
known commitments for Firm Transmission Service and Interchange. **1.1.5** Known commitments for Firm Transmission Service and Interchange The goal is for the responsible entity to build a realistic simulation, and the entity has to comply not only with the criteria in the TPL standard's tables, but also with other non-NERC regulations. However, the SDT has removed "including requirements of regulatory authorities and other legal obligations" since utilities already have to abide by such requirements. **R1** Each Transmission Planner and Planning Coordinator shall maintain System models within its respective area for performing the studies needed to complete its Planning Assessment. The models shall use the latest data consistent with that provided in accordance with the MOD-010 and MOD-012 standards, supplemented by other sources as needed, including items represented in the Corrective Action Plan, and shall represent projected System conditions.	
SERC Engineering Committee Dynamics Review Subcommittee (DRS)	There may be a potential conflict between MOD-010 and MOD-012 and legal documents such as Interconnection Agreements e.g. IA may specify a capacity level that exceeds the reported test levels. In the case of such conflicts, which one should rule? An order of precedence is needed as part of this requirement. Suggest adding terminal equipment to the list of planned facilities. The phrase, for each year of the Near-Term and Long-Term Transmission Planning Horizon, should be revised to remove each year because there may not be studies in each year.
Response: The SDT believes that additional modeling requirements not presently contained in the MOD standards are necessary for Transmission Planning purposes. The SDT has removed "including requirements of regulatory authorities and other legal obligations" since utilities already have to abide by such requirements. **R1** Each Transmission Planner and Planning Coordinator shall maintain System models within its respective areas for performing the studies needed to complete its Planning Assessment. The models shall use the latest data consistent with that provided in accordance with the MOD-010 and MOD-012 standards, supplemented by other sources as needed, including items represented in the Corrective Action Plan, and shall represent projected System conditions. The SDT has removed the equipment list under Requirement R1, part 1.1.2. Transmission lines, generators, and reactive power devices are already included in MOD standards. Circuit breakers, Protection System equipment, and control devices are not typically modeled - the impact of these devices are typically simulated and thus these are already included in Requirement R3, part R3.3, Requirement R4, part 4.3, and in header note 'c' in Table 1. New technologies were removed from the list and are already covered in the Corrective Action Plan under Requirement R2, part 2.7.1 in the revised standard. The reference to "year" has been removed from Requirement R1, part 1.1.2 (now part 1.1.3). **1.1.3** New planned Facilities and changes to existing Facilities	
SERC Engineering Committee Reliability Review Subcommittee (RRS)	In bullet three of R1.1.2, are bus-tie circuit breakers to be represented in the models? Typically circuit breakers are included in the contingency definitions along with the protection system equipment used in the powerflow models. The number of zero impedance branches which can presently be modeled using PSS/E software is limited to 4000. Also, the number of buses included in the

Organization	Question 1 Comment
	powerflow models would increase with additional breaker modeling. In R1.1.2, don't we need to also represent the existing transmission system, and not just changes to the existing system In R1.1.2, does the phrase for each year signify each year for which assessment work was performed, or each year of the Near-Term and Long-Term Transmission Planning Horizon? The phrase, for each year of the Near-Term and Long-Term Transmission Planning Horizon, should be revised to remove each year because there may not be studies in each year. In bullet five of R1.1.2, what protection system equipment is to be included in the stability models In bullet seven of Requirement R1.1.2, what "new technologies" are to be represented in the models Concerned about only having one year to implement all new modeling requirements - especially the additional relay requirements noted in R1.1.2. The SDT stated during its June 30th Webinar that protection system equipment need not be explicitly represented in models, but had difficulty in determining adequate wording for the proposed sub-requirement. Because protection system action is described in R3.3.1, R3.3.4, R4.3.1, and R4.3.3 we suggest that protection system equipment be removed from the list in R1.1.2. There may be a potential conflict between MOD-010 and MOD-012 and legal documents such as Interconnection Agreements e.g. IA may specify a capacity level that exceeds the reported test levels. In the case of such conflicts, which one should rule? There may be a need to add definitions to discern the difference between planned and proposed projects. Suggest replacing circuit breakers in R1.1.2 with terminal equipment since circuit breakers are covered by Protection System Equipment. Does there need to be a reference in R1 to NERC Reliability Assessment Guidebook version 1.2 on pp 17-18 for everyone to use a 50/50 load forecast for inclusion in the planning models?? R1.1.4 Firm Transmission Service - a single source can have transmission service to multiple sinks, and can be associated with transmission service in excess of the capacity of the source. There is a lack of clarity regarding the means by which Firm Transmission Service, a marketing term, is to be included in planning models. For example, should the standard define how to model wind farms (100% - off-peak and 20% on-peak, based on firm capacity from the wind generators, or other dispatch levels)? Not sure if this is applicable to Requirement 1 or 2.

Response: The SDT has removed the equipment list under Requirement R1, part 1.1.2. Transmission lines, generators, and reactive power devices are already included in MOD standards. Circuit breakers, Protection System equipment, and control devices are not typically modeled - the impact of these devices are typically simulated and thus these are already included in Requirement R3, part 3.3, Requirement R4, part 4.3, and in header note 'c' in Table 1. New technologies were removed from the list and are already covered in the Corrective Action Plan under Requirement R2, part 2.7.

The SDT has revised Requirement R1, part 1.1.1 to include "existing system".

1.1.1 Existing Facilities

The reference to "year" has been removed from Requirement R1, part 1.1.2 (now part 1.1.3)

Organization	Question 1 Comment
	1.1.3 New planned Facilities and changes to existing Facilities Requirement R1, part 1.1.2 (now part1.1.3) has been revised as described above. New technologies include any technology that is not currently in use on the electric power System that helps improve efficiency (i.e., energy storage/production technologies, low sag conductors, solid state interrupters, etc.). New technologies were removed from the equipment list in Requirement R1, part 1.1.2 (now part 1.1.3) since these are already covered in the Corrective Action Plan under Requirement R2, part 2.7.1 in the revised standard. The SDT believes that additional modeling requirements not presently contained in the MOD standards are necessary for Transmission Planning purposes. However, the SDT has removed "including requirements of regulatory authorities and other legal obligations" since utilities already have to abide by such requirements. **R1** Each Transmission Planner and Planning Coordinator shall maintain System models within its respective area for performing the studies needed to complete its Planning Assessment. The models shall use the latest data consistent with that provided in accordance with the MOD-010 and MOD-012 standards, supplemented by other sources as needed, including items represented in the Corrective Action Plan, and shall represent projected System conditions. In Draft 1, the SDT proposed using the terms "planned" and "committed" (similar to your proposal of proposed and planned) to distinguish the "firmness" of projects. Based on industry comments, the SDT eliminated the terms from Draft 2. No change made. Requirement R1, part 1.1.2 (now part1.1.3) has been revised as described above. The SDT does not believe that a reference is needed to the NERC Reliability Assessment Guidebook since most utilities are using at least a 50/50 Load forecast as a minimum. No change made. The SDT believes that all firm Transmission contracts should be modeled. Requirement R1, part 1.1.5 has been revised to include known commitments for Firm Transmission Service and Interchange. **1.1.5** Known commitments for Firm Transmission Service and Interchange
FirstEnergy Corp	As stated in prior comment periods, we hold the opinion that the TPL-001-1 standard should start from the premise that a valid system model exist based on MOD-010, MOD-012 and other FERC approved MOD standards that are not referenced by this TPL-001-1 standard. The inclusion of R1 introduces an overlap and potential for double jeopardy violations that need not occur. The TPL-001-1 standard should not delve into model building and keep to its core purpose of assessing future performance of the BES.Specific comments, Requirements of R1A. R1.1.2: The last bullet "New Technologies" is too vague and should be struck from the requirement. B. R1.1.4: It is not well understood how "Firm Transmission Service" would be evaluated by a compliance auditor when reviewing a simulation model. The models contain agreed upon Interchange Transactions between BA areas, but no details are provided to reflect individual Firm Transmission Service arrangements. In reality only the net-Interchange values between BA areas are reflected in the simulation models. C. R1.1.6: FE believes this requirement would be more accurately assigned to the Resource Planner or Load Serving Entity and not the Transmission Planner.

Organization	Question 1 Comment
	We agree with the stated Measures, VRF, Time-Horizon, Data Retention and VSL of requirement R1

Response: The SDT believes that additional modeling requirements not presently contained in the MOD standards are necessary for Transmission Planning purposes. However, the SDT has removed "including requirements of regulatory authorities and other legal obligations" since utilities already have to abide by such requirements.

> **R1** Each Transmission Planner and Planning Coordinator shall maintain System models within its respective area for performing the studies needed to complete its Planning Assessment. The models shall use the latest data consistent with that provided in accordance with the MOD-010 and MOD-012 standards, supplemented by other sources as needed, including items represented in the Corrective Action Plan, and shall represent projected System conditions.

New technologies include any technology that is not currently in use on the electric power System that helps improve efficiency (i.e., energy storage/production technologies, low sag conductors, solid state interrupters, etc.). The SDT has removed the equipment list under Requirement R1, part 1.1.2 (now part 1.1.3). Transmission lines, generators, and reactive power devices are already included in MOD standards. Circuit breakers, Protection System equipment, and control devices are not typically modeled - the impact of these devices are typically simulated and thus these are already included in Requirement R3, part 3.3, Requirement R4, part 4.3, and in header note 'c' in Table 1. New technologies were removed from the list and are already covered in the Corrective Action Plan under Requirement R2, part 2.7.1 in the revised standard.

Requirement R1, part 1.1.5 has been revised to include known commitments for Firm Transmission Service and Interchange.

> **1.1.5** Known commitments for Firm Transmission Service and Interchange

The SDT believes that the Transmission Planner/Planning Coordinator is responsible for incorporating this information into the System models. No change made.

Thank you for your response on Measures et al.

IRC Standards Review Committee	(1) R1.1.1 requires that models shall represent planned outages of generation and transmission facilities, if specifically known. Does this allow or require a PC/TP to include outages due to maintenance and due to construction programs where certain facilities are out of service during phases of construction as part of the Assessment? Such maintenance and construction schedules are made but may not be finalized over the planning horizon. Further, are planned outages to be treated as creating a "normal system condition" or is the planned outage a contingency from which system adjustments are made prior to subsequent events" (2) MOD 10 and 12 are based on requirements determined by the RRO in MOD 11 and 13 respectively. Is this appropriate? Further, the PC is not an applicable entity in MOD 10 and 12. (3)What are "other data sources"?

Response: The SDT believes that the outages (if known) should be modeled to insure the System reliability during the outage durations. If a Transmission element outage occurs during a specified time, then the new base case for that time period would result with that element out of service pre-contingency. All performance criteria would then apply to that new base case. Requirement R1, part 1.1.2 (now part 1.1.3) has been revised to include known outages of generation or Transmission Facilities with a minimum duration of 6 months.

Organization	Question 1 Comment
1.1.2 Known outage(s) of generation or Transmission Facility(ies) with a duration of at least six months. The SDT understands that MOD-010 and -012 are impacted by MOD-011 and -013. The Planning Coordinator is not applicable - but has to utilize data provided by others such as in MOD-010 and -012.No change made. The SDT had removed the reference to "other data sources" under Requirement R1. **R1** Each Transmission Planner and Planning Coordinator shall maintain System models within its respective area for performing the studies needed to complete its Planning Assessment. The models shall use the latest data consistent with that provided in accordance with the MOD-010 and MOD-012 standards, supplemented by other sources as needed, including items represented in the Corrective Action Plan, and shall represent projected System conditions.	
TVA System Planning	The phrase, for each year of the Near-Term and Long-Term Transmission Planning Horizon, should be revised to remove each year because there may not be studies actually required in each year. The SDT stated during its June 30th Webinar that protection system equipment need not be explicitly represented in models, but had difficulty in determining adequate wording for the proposed sub-requirement. Because protection system action is described in R3.3.1, R3.3.4, R4.3.1, and R4.3.3 we suggest that protection system equipment be removed from the list in R1.1.2. If R1.1.2 is not removed, TVA is concerned about the level of resources that will be required to model these additional relay requirements in the one year allowed in the Implementation Plan. In bullet three of R1.1.2, are bus-tie circuit breakers to be represented in the models? Typically circuit breakers are included in the contingency definitions along with the protection system equipment used in the powerflow models. In bullet seven of Requirement R1.1.2, what "new technologies" are to be represented in the models?
Response: The reference to "year" has been removed from Requirement R1, part 1.1.2 (now part 1.1.3). **1.1.3** New planned Facilities and changes to existing Facilities The SDT has removed the equipment list under Requirement R1, part 1.1.2 (now part 1.1.3). Transmission lines, generators, and reactive power devices are already included in MOD standards. Circuit breakers, Protection System equipment, and control devices are not typically modeled - the impact of these devices are typically simulated and thus these are already included in Requirement R3, part 3.3, Requirement R4, part 4.3, and in header note 'c' in Table 1. New technologies were removed from the list and are already covered in the Corrective Action Plan under Requirement R2, part 2.7.1 in the revised standard. See Requirement R1, part 1.1.2 comment above New technologies include any technology that is not currently in use on the electric power System that helps improve efficiency (i.e., energy storage/production technologies, low sag conductors, solid state interrupters, etc.). New technologies were removed from the Requirement R1, part 1.1.2 list (now part 1.1.3) and are already covered in the Corrective Action Plan under Requirement R2, part 2.7.1 in the revised standard.	
Southern Company	The VSLs for Requirement R1 incorporates several sub-requirements but neglects one of the three components of the main requirement. Consider that R1 requires the TP and RC to (a) maintain System models, (b) use data consistent with certain MOD standards, and (c) simulate projected System conditions. Because the first component is not a part of the proposed VSL and the

Organization	Question 1 Comment
	purpose of this standard mentions a broad spectrum of System conditions, the recommendation is to add maintaining the system model into the VSLs for R1. R1.1.3 uses the terminology real and reactive Demand of Load. We suggest striking the word "Demand" because it refers only to real power. We recommend the the SDT limit R1 to load flow and stability models. Does R1 apply to short circuit models? If so does this imply that the short circuit model must be the same as the load flow model?
Response: The SDT revised the VSLs for Requirement R1 to align with the changes made to the requirement – note that the revised R1 does not use the word, "simulate." The SDT has modified Requirement R1, part 1.1.3 (now part 1.1.4). **1.1.4** Real and reactive Load forecasts The SDT believes that Requirement R1 also contains some requirements that are necessary for short circuit cases but R1 does not require the models to be the same, since different software applications may be used. No change made.	
United Illuminating Northeast Utilities ISO New England, Inc. Central Maine Power Company	R1 Priority Comment- There needs to be some direction provided on the initial conditions used in the assessment. This guidance should include discussion as to whether or not representations of generator forced outages are to be represented in the base case or if they are addressed through the sensitivity testing (Could add R1.1.7 Reasonable representations of unplanned generator outages.) Additionally, the standard is also silent on the treatment of system transfers, both internal and external, as to how they should be modeled in the base case. For some areas, their current practice is to include heavy system stresses in their base case, which leaves little for sensitivity testing. It is unclear if this practice works within this standard. R1.1.1 Priority comment R1.1.1 should be removed. It seems like there is an overlap between the requirements of this standard and Operational Planning studies with respect to known outages. Planned outages are addressed by our Operational Planning processes and Transmission Operating Procedures removing the need for this to be incorporated into Planning Assessments. In addition, outages are not generally known years in advance R1 Comment We do not understand what it means to include requirements of regulatory authorities and other legal obligations. Even if some version of this language is kept in the final standard, it seems to belong in R2 rather than R1. R1.1.2 comment - Do we need to have the list of equipment to model? How do we model circuit breakers, etc? We recommend deleting the list. Make R1.1.2 simply read: R1.1.2 New planned Facilities and changes to existing Facilities for each year of the Near-Term and Long-Term Transmission Planning Horizon. R1.1.5 comment What specifically needs to be modeled under Interchange R1.1.6 comment This needs further definition or it should be deleted. It is not clear what a network resource required to supply load is. Does this refer to Network Resource per FERC LGIP?

Organization	Question 1 Comment
Response: The SDT believes that the outages should be modeled to insure the System reliability during the outage durations. If a Transmission element outage occurs during a specified time, then the new base case for that time period would result with that element out of service pre-contingency. All performance criteria would then apply to that new base case. Requirement R1, part 1.1.2 (now part 1.1.3) has been revised to include known outages of generation or Transmission Facilities with a minimum duration of 6 months. **1.1.3** New planned Facilities and changes to existing Facilities Requirement R1, part 1.1.5 has been revised to include known commitments for Firm Transmission Service and Interchange. **1.1.5** Known commitments for Firm Transmission Service and Interchange The goal is for the responsible entity to build a realistic simulation, and the entity has to comply not only with the criteria in the TPL standard's tables, but also with other non-NERC regulations. However, the SDT has removed "including requirements of regulatory authorities and other legal obligations" since utilities already have to abide by such requirements. Requirement R1, part 1.1.2 has been revised to include known outages of generation or Transmission Facilities with a minimum duration of 6 months. **1.1.2** Known outage(s) of generation or Transmission Facility(ies) with a duration of at least six months. The SDT has removed the equipment list under Requirement R1, part 1.1.2 (now part1.1.3). Transmission lines, generators, and reactive power devices are already included in MOD standards. Circuit breakers, Protection System equipment, and control devices are not typically modeled - the impact of these devices are typically simulated and thus these are already included in Requirement R3, part 3.3, Requirement R4, part 4.3, and in header note 'c' in Table 1. New technologies were removed from the list and are already covered in the Corrective Action Plan under Requirement R2, part 2.7.1 in the revised standard. Interchange is defined in the NERC glossary as "energy transfers that cross Balancing Authority boundaries" while Firm Transmission Service is "the highest quality (priority) service offered to customers under a filed rate schedule that anticipates no planned interruption." Requirement R1, part 1.1.6 has been broadened while still incorporating Network Resources. **1.1.6** Resources required to supply Load	
System Protection and Transmission Planning Department	R1 the requirement to maintain System models for performing the studies is redundant with MOD-010, and should be moved to MOD-010. The phrase that requires model data used in Studies used for Annual Assessments be consistent with data submitted under MOD-010 seems OK. R1.1.2, a sub-requirement of R1.1, states that models for Planning Assessments shall represent "new planned Facilities and changes to existing Facilities for each year of the Near-Term and Long-Term Transmission Planning Horizon". Is this a requirement for maintaining a case representing every year of the near-term and long-term planning horizons (i.e. 10 cases)? We do not think that is what the SDT had in mind. If all that is required to remain cognizant of Facility In-Service dates so that topology is reliable, please so state. To make this read clearer, we suggest you take out the phrase for each year . Regarding bullet 5 of R1.1.2, does inclusion of Protection System equipment require modeling of all relays in dynamic studies? The NERC definition of Facility pertains to equipment energized at primary voltages, not Protective System equipment. We

Organization	Question 1 Comment
	suggest the Protective Systems be eliminated from this list. To make this read clearer, we suggest you delete text and bullet items following Transmission Planning Horizon. Regarding R1.1.2 bullet items: The bullets list examples of Facilities. This list is not needed, since the term Facility is already defined in the NERC Glossary. If you do not remove all bullets, then we warn you that the bullet "New Technologies" can be interpreted to cover a broad range of topics by an auditor and is not clearly defined by NERC, so we cannot visualize measurable documentation.
Response: The SDT believes that additional modeling requirements not presently contained in the MOD standards are necessary for Transmission Planning purposes. No change made. Thank you for your response. The reference to "year" has been removed from Requirement R1, part 1.1.2 (now part 1.1.3). **1.1.3** New planned Facilities and changes to existing Facilities The SDT has removed the equipment list under Requirement R1, part 1.1.2 (now part1.1.3). Transmission lines, generators, and reactive power devices are already included in MOD standards. Circuit breakers, Protection System equipment, and control devices are not typically modeled - the impact of these devices are typically simulated and thus these are already included in Requirement R3, part 3.3, Requirement R4, part 4.3, and in header note 'c' in Table 1. New technologies were removed from the list and are already covered in the Corrective Action Plan under Requirement R2, part 2.7.1 in the revised standard. The bulleted list has been deleted.	
PPL Energy Plus	PPL agrees with the requirement that regulatory and legal requirements need to be respected in planning studies. Also, Requirement R1.1.6 appears to conflict with FERC Pro-forma OATT Section 30.4 in that Network Resource output should not be limited as this Requirement states.
Response: The SDT has removed "including requirements of regulatory authorities and other legal obligations" since utilities already have to abide by such requirements. **R1** Each Transmission Planner and Planning Coordinator shall maintain System models within its respective area for performing the studies needed to complete its Planning Assessment. The models shall use the latest data consistent with that provided in accordance with the MOD-010 and MOD-012 standards, supplemented by other sources as needed, including items represented in the Corrective Action Plan, and shall represent projected System conditions. Requirement R1, part 1.1.6 has been broadened while still incorporating Network Resources. **1.1.6** Resources required to supply Load	
Western Area Power Administration	Since the modeling data used for the Planning Assessment is initially created and governed per Mod-10 & Mod-12 Standards, this requirement should be clarified to include maintain revisions of the modeling data required to perform the Planning Assessment

Organization	Question 1 Comment
	and not just "maintain system models for performing the studies needed to complete their Planning Assessment?.
Orlando Utilities Commission	-This section is very clear. Section R1.1.1 brings clarity to the question regarding planned outages.-The phrase Models shall use data consistent with MOD-010?, is the intent for the data to be "identical" to the data provided under MOD-10 and -12, or
Kansas City Power & Light	R1 states that the models used in these studies shall be consistent with data provided through MOD-010 and MOD-012. The data submitted for these are updated on a schedule provided by the RRO and not necessarily reflective of any emerging changes that may have occurred between the MOD data collection cycle. The requirement should allow for exceptions to allow the most recent information to be included in the TPL studies.
Response: The SDT has modified Measure M1 to use the latest data available. **M1** Each Transmission Planner and Planning Coordinator shall provide evidence, in electronic or hard copy format, that it is maintaining System models, using the latest data consistent with MOD-010 and MOD-012, including items represented in the Corrective Action Plan, representing projected System conditions, and that the models represent the required information in accordance with Requirement R1.	
Tampa Electric	R1 Ensure that statement reflects that TP and PC are only responsible for their planning area. R1.1.2 Add transformers to list and clarify modeling of circuit breakers and protection system equipment. Models should reflect the effect of this equipment, not the actual equipment. R1.1.4 Models should only reflect firm transmission service that is expected to be utilized in the study case. Consider changing effective dates of all requirements to be the same date so that you do not have to meet two standards during the same time period.
Response: The SDT had modified Requirement R1 to state that the Transmission Planner/Planning Coordinator are each responsible for maintaining System models for its respective area. **R1** Each Transmission Planner and Planning Coordinator shall maintain System models within its respective area for performing the studies needed to complete its Planning Assessment. The models shall use the latest data consistent with that provided in accordance with the MOD-010 and MOD-012 standards, supplemented by other sources as needed, including items represented in the Corrective Action Plan, and shall represent projected System conditions. The SDT has removed the equipment list under Requirement R1, part 1.1.2 (now part 1.1.3). Transmission lines, generators, and reactive power devices are already included in MOD standards. Circuit breakers, Protection System equipment, and control devices are not typically modeled - the impact of these devices are typically simulated and thus these are already included in Requirement R3, part 3.3, Requirement r4, part 4.3, and in header note 'c' in Table 1. New technologies were removed from the list and are already covered in the Corrective Action Plan under Requirement R2, part 2.7.1 in the revised standard. The SDT believes that all firm Transmission should be modeled. Requirement R1, part 1.1.5 has been revised to include known commitments for Firm Transmission Service and Interchange.	

Organization	Question 1 Comment
1.1.5 Known commitments for Firm Transmission Service and Interchange The SDT believes that certain steps need to be taken in succession to allow utilities to progress toward meeting the new requirements - while not placing an undue burden for utilities to meet all the new requirements at the same time. Also additional time is needed for many utilities to meet "raising the bar" requirements that may be required and which could take considerable lead time. No change made.	
Florida Reliability Coordinating Council, Inc - Transmission Working Group	R1 and M1: Consider clarifying that it is not the TP or PC responsibility to independently verify the consistency of the System models for portions of the Bulk Electric System outside of the TP or PC planning area (related to not using data consistent with data submitted as part of MOD-010 and MOD-012, each TP and PC should not have to review the data submitted by those outside of its planning area, but only its own planning area). Please Clarify the phrase Models shall use data consistent with .MOD-010 is the intent for the data to be identical to the data provided under MOD-10 and MOD-12, or consistent meaning that the data might be older or newer depending on when the assessment took place vs when the data was submitted. R1.1 Consider changing Assessment (which does not include models) or re-wording to Models for performing the studies needed to complete the Planning Assessment shall represent:?R1.1.1 Brings clarity to the question regarding planned outages. R1.1.2: Consider adding “Transformers” to the list of facilities. R1.1.2, please clarify what the drafting team intentions are for Circuit Breakers. Planning models used for power flow, dynamics and short circuit do not include circuit breakers. Modeling circuit breakers would cause convergence problems in the models due to that large number of zero impedance line sections. We sugges eliminating circuit breaker from the bullet list. R1.1.2 Protection System equipment this should be clarified to only apply to system stability models. The modeling of protective relays should be caveated with as deemed appropriate. We suggest eliminating Protection System equiptment from the bullet list. R1.1.4 Consider adding that is expected to be utilized in the study case scenario not all Firm Transmission can be included in all studies and are only used upon the availability of other resources . Consider changing the effective dates of R1 and R7 to take effect at the same time as R2 through R6 so you do not have to meet two standards during the same time period. Otherwise, clarify how the effective date impacts which version of the standard is to be used in an assessment before a scheduled compliance audit.
Response: The SDT has modified Requirement R1 to state that the Transmission Planner and Planning Coordinator are each responsible for maintaining System models for its respective area. **R1** Each Transmission Planner and Planning Coordinator shall maintain System models within its respective area for performing the studies needed to complete its Planning Assessment. The models shall use the latest data consistent with that provided in accordance with the MOD-010 and MOD-012 standards, supplemented by other sources as needed, including items represented in the Corrective Action Plan, and shall represent projected System conditions. The SDT believes that additional modeling requirements not presently contained in the MOD standards are necessary for Transmission Planning purposes. The SDT has incorporated these additional requirements with the intent that they will be removed from the TPL standard when they are incorporated into the MOD standards at a	

Organization	Question 1 Comment
later date. The SDT has modified Measure M1 to use the latest data available. **M1** Each Transmission Planner and Planning Coordinator shall provide evidence, in electronic or hard copy format, that it is maintaining System models, using the latest data consistent with MOD-010 and MOD-012, including items represented in the Corrective Action Plan, representing projected System conditions, and that the models represent the required information in accordance with Requirement R1. The SDT agrees and has reworded Requirement R1, part 1.1. **1.1** System models shall represent: The SDT has removed the equipment list under Requirement R1, part 1.1.2 (now part 1.1.3). Transmission lines, generators, and reactive power devices are already included in MOD standards. Circuit breakers, Protection System equipment, and control devices are not typically modeled - the impact of these devices are typically simulated and thus these are already included in Requirement R3, part 3.3, Requirement R4, part 4.3, and in header note 'c' in Table 1. New technologies were removed from the list and are already covered in the Corrective Action Plan under Requirement R2, part 2.7.1 in the revised standard. Requirement R1, part 1.1.5 has been revised to include known commitments for Firm Transmission Service and Interchange. **1.1.5** Known commitments for Firm Transmission Service and Interchange The SDT believes that certain steps need to be taken in succession to allow utilities to progress toward meeting the new requirements - while not placing an undue burden for utilities to meet all the new requirements at the same time. Also additional time is needed for many utilities to meet "raising the bar" requirements that may be required and which could take considerable lead time. No change made.	
FMPA	R1, consider clarifying that it is not the TP or PC responsibility to independently verify the consistency of the System models for portions of the Bulk Electric System outside of the TP or PC planning area (related to not using data consistent with data submitted as part of MOD-010 and MOD-012, each TP and PC should not have to review the data submitted by those outside of its planning area, but only its own planning area). R1.1.2: Consider adding Transformers to the list of facilities. R1.1.2, please clarify what the SDTs intentions are for Circuit Breakers. Planning models used for power flow, dynamics and short circuit do not include circuit breakers. Modeling circuit breakers would cause convergence problems in the models due to that large number of zero impedance line sections. We suggest clarifying that the intent is to develop planned Facility Ratings in the models to reflect new Circuit Breakers, and to reflect the location and timing of circuit breakers in contingency lists, and not to model the actual circuit breakers. R1.1.2 "Protection System equipment should be clarified to only apply to system stability models. The modeling of protective relays should be caveated with as deemed appropriate. We suggest clarifying that the intent is, for power flow and short circuit studies, Protection System Equipment would be incorporated into Facility Ratings and the contingency list. And we suggest further clarifying that the intent is the same for Stability Studies, with the addition of modeling Protection System equipment that could significantly impact stability response (e.g., out-of-step relaying) as deemed appropriate through engineering judgment. R1.1.4 Consider adding "that is expected to be utilized in the study case scenario" not all Firm Transmission can be included in all studies and are only used upon the availability of other resources (for instance, if there are two firm point-to-point contracts in opposite directions across the same Interchange, both probably ought not to be modeled at the same time). Consider changing the effective dates of R1 and R7 to take effect at the same time as R2 through R6 so you do not have to meet

Organization	Question 1 Comment
	two standards during the same time period. Otherwise, clarify how the effective date impacts which version of the standard is to be used in an assessment before a scheduled compliance audit.
Response: The SDT had modified Requirement R1 to state that the Transmission Planner/Planning Coordinator are each responsible for maintaining System models for its respective area. **R1** Each Transmission Planner and Planning Coordinator shall maintain System models within its respective area for performing the studies needed to complete its Planning Assessment. The models shall use the latest data consistent with that provided in accordance with the MOD-010 and MOD-012 standards, supplemented by other sources as needed, including items represented in the Corrective Action Plan, and shall represent projected System conditions. The SDT has removed the equipment list under Requirement R1, part 1.1.2 (now part 1.1.3). Transmission lines, generators, and reactive power devices are already included in MOD standards. Circuit breakers, Protection System equipment, and control devices are not typically modeled - the impact of these devices are typically simulated and thus these are already included in Requirement R3, part R3.3, Requirement r4, part 4.3, and in header note 'c' in Table 1. New technologies were removed from the list and are already covered in the Corrective Action Plan under Requirement R2, part 2.7.1 in the revised standard. The SDT believes that all firm Transmission should be modeled. Requirement R1, part 1.1.5 has been revised to include known commitments for Firm Transmission Service and Interchange. **1.1.5** Known commitments for Firm Transmission Service and Interchange The SDT believes that certain steps need to be taken in succession to allow utilities to progress toward meeting the new requirements - while not placing an undue burden for utilities to meet all the new requirements at the same time. Also additional time is needed for many utilities to meet "raising the bar" requirements that may be required and which could take considerable lead time. No change made.	
Progress Energy Carolina (PEC)	PEC would like clarification on the following: "Models for the Planning Assessment shall represent: Circuit Breakers, Protection System Equipment, etc." The clarification should state that the models do not have to explicitly include these elements as long as their effect can be modeled.
Response: The SDT has removed the equipment list under Requirement R1, part 1.1.2 (now part 1.1.3). Transmission lines, generators, and reactive power devices are already included in MOD standards. Circuit breakers, Protection System equipment, and control devices are not typically modeled - the impact of these devices are typically simulated and thus these are already included in Requirement R3, part R3.3, Requirement R4, part 4.3, and in header note 'c' in Table 1. New technologies were removed from the list and are already covered in the Corrective Action Plan under Requirement R2, part 2.7.1 in the revised standard.	
Gainesville Regional Utilities	Concerning the effective dates of R1 & R7, I suggest that you move them to be effective at the same time as R2 through R6 so you will not have to try to meet two standards during the same time period. Effective Date: Clarify how the effective date impacts which version of the standard (and it reference numbering) is to be used in an assessment just before (in cycle) a scheduled compliance audit. Suggest that the term "Corrective Action Plan" be retitled to "Improvement Action Plan" because the first implies that the situation is "wrong or incorrect" which may not be the case.

Organization	Question 1 Comment
Response: The SDT believes that certain steps need to be taken in succession to allow utilities to progress toward meeting the new requirements - while not placing an undue burden for utilities to meet all the new requirements at the same time. Also additional time is needed for many utilities to meet "raising the bar" requirements that may be required and which could take considerable lead time. No change made. The Effective Date of the requirements in force at the time the Planning Assessment is completed will dictate which requirements are the governing requirements. The SDT believes that the term "Corrective Action Plan" (a defined term) is sufficient due to lack of comments received from industry requesting this change. No change made.	
JEA	Reword R1.1.2. New planned Facilities and changes to existing and old planned Facilities for each year of the Near-Term and Long-Term Transmission Planning Horizon where such Facilities affect the electric connectivity and topology of the system or affects the accurate simulation of system disturbance response where practical. [Delete bulleted list]Add R1.2. Where it is not practical to model all Facilities composing the electric system connectivity and topology, consideration of those Facilities and their affect on the model simulations shall be documented in detail in the annual Planning Assessment where appropriate. This addition may not be necessary with rewording of R3.
Response: The SDT has removed the equipment list under Requirement R1, part 1.1.2 (now part 1.1.3). Transmission lines, generators, and reactive power devices are already included in MOD standards. Circuit breakers, Protection System equipment, and control devices are not typically modeled - the impact of these devices are typically simulated and thus these are already included in Requirement R3, part R3.3, Requirement R4, part 4.3, and in header note 'c' in Table 1. New technologies were removed from the list and are already covered in the Corrective Action Plan under Requirement R2, part 2.7.1 in the revised standard.	
NorthWestern Corporation NorthWestern Energy (NWE) (NWMT)	The system models that are described in MOD-010 Requirement1, MOD-011 Requirement 1, MOD-012 Requirement 1, and MOD-013 Requirement 1 do not address all the bulleted items under R.1.2. Circuit breakers, protection system equipment and control devices are not modeled. Rather, the effect of these devices, such as circuit breaker misoperation, thermal overload, etc., on the transmission system are modeled. The wording of these bullets should be corrected to match what is actually modeled. Firm Transmission Service, listed in R.1.1.4, is not specifically addressed in MOD-010. Requirement 1 of MOD-010 states existing and future Interchange Schedules as data requirements for steady-state modeling and simulation. Models in the West do not model Firm Transmission Service as such. It is difficult to know what the Firm Transmission Service will be in the future. This is particularly true in regions where there is a predominance of merchant generation and proposals for the interconnection of new merchant generation. It is more reasonable to estimate the expected interchanges. The definition for Interchange Energy transfers that cross Balancing Authority boundaries describes the modeling requirement better that the definition of Firm Transmission Service The highest quality (priority) service offered to customers under a filed rate schedule that anticipates no planned interruptions. The wording Expected Transfers" is used in R2.1.3 and R2.4.3. To maintain consistency, this term could be used in R.1.1.4 and could also be substituted in Table 1 for Firm Transmission. From a Planning perspective, since Firm Transmission cannot be determined from a study model. R1.1.4 and R1.1.5 should be deleted and replaced with a requirement to model expected transfers on interconnections with neighboring Balancing Authorities. For study purposes R.1.1.6 is not needed either. In the models, the load represented is served by the generators modeled. Network Resources are more in tune with local area studies that ensure that the network load can be served by the network

Organization	Question 1 Comment
	resources over available transmission. The words "including requirements of regulatory authorities and other legal obligations at the end of R1. does not need to be in the standard.
Response: The SDT believes that additional modeling requirements not presently contained in the MOD standards are necessary for Transmission Planning purposes. The SDT has removed the equipment list under Requirement R1, part 1.1.2 (now part 1.1.3). Transmission lines, generators, and reactive power devices are already included in MOD standards. Circuit breakers, Protection System equipment, and control devices are not typically modeled - the impact of these devices are typically simulated and thus these are already included in Requirement R3, part 3.3, Requirement R4, part 4.3, and in header note 'c' in Table 1. New technologies were removed from the list and are already covered in the Corrective Action Plan under Requirement R2, part 2.7.1 in the revised standard. Interchange is defined in the NERC glossary as "energy transfers that cross Balancing Authority boundaries" while Firm Transmission Service is "the highest quality (priority) service offered to customers under a filed rate schedule that anticipates no planned interruption." Requirement R1, part 1.1.5 has been revised to include known commitments for Firm Transmission Service and Interchange. **1.1.5** Known commitments for Firm Transmission Service and Interchange The SDT believes that Requirement R1, part 1.1.6 is still required but it has been broadened. **1.1.6** Resources required to supply Load The SDT has removed "including requirements of regulatory authorities and other legal obligations" since utilities already have to abide by such requirements. **R1** Each Transmission Planner and Planning Coordinator shall maintain System models within its respective area for performing the studies needed to complete its Planning Assessment. The models shall use the latest data consistent with that provided in accordance with the MOD-010 and MOD-012 standards, supplemented by other sources as needed, including items represented in the Corrective Action Plan, and shall represent projected System conditions	
SMUD	R1: The requirement should end after the words "shall simulate projected System conditions.". The following words should be deleted as it results in a clause that is overly broad and does not specify clear and concise reliability requirements: "including requirements of regulatory authorities and other legal obligations".
Response: The SDT agrees and has changed Requirement R1 accordingly. **R1** Each Transmission Planner and Planning Coordinator shall maintain System models within its respective area for performing the studies needed to complete its Planning Assessment. The models shall use the latest data consistent with that provided in accordance with the MOD-010 and MOD-012 standards, supplemented by other sources as needed, including items represented in the Corrective Action Plan, and shall represent projected System conditions.	
Progress Energy Florida, Inc.	For R1.1.2, PEF has the following comments:T-T Transformers, as major components of the BES, should be on this list.PEF does not object to the inclusion of Circuit Breakers on this list, provided that representation is not required in steady state load flow

Organization	Question 1 Comment
	cases. Breaker failure scenarios can be extensively studied in the steady state and stability realms by removing from service the transmission facilities that such a breaker event would initiate.PEF assumes that the inclusion of Protection System Equipment applies only to Stability Analysis. As for breakers, relay failure scenarios can be extensively studied in the steady state realm by removing from service the transmission facilities that such a relay event would initiate. Additionally, PEF also assumes that a comprehensive modeling of all Protection System Equipment (e.g. Transformer Sudden Pressure Relays, Bus Diff Relays, etc.) in Stability Analysis is not required, since only a limited amount of relaying in dynamic modeling is needed to adequately model the system with respect to what transmission/generation components would trip for a given event.A lack of specificity on the term Control devices leaves it open to wide interpretation. The SDT should, in detail and/or with examples, state what is intended. The term New technologies is only acceptable for inclusion if provision is made for the fact that Planning analysis software often lags behind the design industry in getting new technologies modeled such that Planners can analyze them. For R1.1.4 on Firm Transmission Service: PEF assumes that the SDT understands that some firm transmission service is not always modeled in every case, depending upon the economics and availability of alternate resources.
Response: The SDT has removed the equipment list under Requirement R1, part 1.1.2 (now part 1.1.3). Transmission lines, generators, and reactive power devices are already included in MOD standards. Circuit breakers, Protection System equipment, and control devices are not typically modeled - the impact of these devices are typically simulated and thus these are already included in Requirement R3, part R3.3, Requirement R4, part 4.3, and in header note 'c' in Table 1. New technologies were removed from the list and are already covered in the Corrective Action Plan under Requirement R2, part 2.7.1 in the revised standard. New technologies include any technology that is not currently in use on the electric power System that helps improve efficiency (i.e., energy storage/production technologies, low sag conductors, solid state interrupters, etc.). New technologies were removed from the list and are already covered in the Corrective Action Plan under Requirement R2, part 2.7.1 in the revised standard. The SDT believes that all firm Transmission should be modeled. Requirement R1, part 1.1.5 has been revised to include known commitments for Firm Transmission Service and Interchange. **1.1.5** Known commitments for Firm Transmission Service and Interchange	
Xcel Energy	R1 states that the models used in these studies shall be consistent with data provided through MOD-010 and MOD-012. The data submitted for these are updated on a schedule provided by the RRO and not necessarily reflective of any emerging changes that may have occurred between the MOD data collection cycle. The requirement should allow for exceptions to allow the most recent information to be included in the TPL studies.
Response: The SDT has modified Measure M1 to use the latest data available. **M1** Each Transmission Planner and Planning Coordinator shall provide evidence, in electronic or hard copy format, that it is maintaining System models, using the latest data consistent with MOD-010 and MOD-012, including items represented in the Corrective Action Plan, representing projected System conditions, and that the models represent the required information in accordance with Requirement R1.	
Arizona Public Service Co	The language in R1.1.2 needs to be clarified. Many of these facilities are not explicitly included in the models in the base cases (circuit breakers, protection system equipment, control devices). The language should be clarified to require modeling the effect of

Organization	Question 1 Comment
	the devices or the effect of the removal of the devices only where it is expected to impact the study outcome. Clarity is needed to explain the difference between R1.1.4 and R1.1.5. Expected interchange can be reasonably projected, but information on Firm Transmission Service is not always known or reasonably projected for future cases. For consistency with the 2nd bullet under R2.1.3, R1.1.4 should refer to expected transfers rather than Firm Transmission Service. With this change, R1.1.4 and R1.1.5 would be redundant and one should be deleted. We disagree with the inclusion of the words including requirements of regulatory authorities and other legal obligations at the end of R1. Entities already are required to do this. It does not need to be included in the standard. VSL: Under Severe VSL Column: The last sentence The System model did not simulate projected System Conditions as described in Requirement R1 is vague and should be clarified. What is meant by did not simulate. Is it referring to gross errors or something else? We recommend that Sever VSL be assigned only if the Transmission Planner failed to do the planning assessment. Hence it should not apply to R1 at all since R1 is only related to modeling accuracy.
Response: The SDT has removed the equipment list under Requirement R1, part 1.1.2 (now part 1.1.3). Transmission lines, generators, and reactive power devices are already included in MOD standards. Circuit breakers, Protection System equipment, and control devices are not typically modeled - the impact of these devices are typically simulated and thus these are already included in Requirement R3, part R3.3, Requirement R4, part 4.3, and in header note 'c' in Table 1. New technologies were removed from the list and are already covered in the Corrective Action Plan under Requirement R2, part 2.7.1 in the revised standard. The SDT believes that transfers and Firm Transmission Service can actually be two separate items since Firm Transmission Service is "the highest quality (priority) service offered to customers under a filed rate schedule that anticipates no planned interruption." Requirement R1, part 1.1.5 has been revised to include known commitments for Firm Transmission Service and Interchange. **1.1.5** Known commitments for Firm Transmission Service and Interchange The SDT has removed "including requirements of regulatory authorities and other legal obligations" since utilities already have to abide by such requirements. **R1** Each Transmission Planner and Planning Coordinator shall maintain System models within its respective area for performing the studies needed to complete its Planning Assessment. The models shall use the latest data consistent with that provided in accordance with the MOD-010 and MOD-012 standards, supplemented by other sources as needed, including items represented in the Corrective Action Plan, and shall represent projected System conditions. The SDT has replaced "simulate" with "represent" in the requirement, measure and under the Severe VSL category for Requirement R1. The SDT believes that the Severe level should be applied as noted in the VSL table since these cases are the basis for having an accurate planning assessment.	
New Brunswick System Operator	It is not clear how TP and PC are to coordinate activities. If R6 provided direction on individual and joint responsibilities then R6 should be referred to in each of the requirements which require TP and PC coordination. The VSL and Measurement for requirement R1 appears focused the number of subrequirements represented in the model. Ideally the focus should be the impacts or error of the results if something is not properly represented. This shift in thinking will allow the planner to assess and focus on those subrequirements which are important to the study results. R1.1.1 Planned outage duration needs to be defined. For example, a planned outage for a year or more should be included in the

Organization	Question 1 Comment
	Near term assessment.

Response: Requirement R7 (formerly Requirement R6) requires the Transmission Planner and Planning Coordinator to determine and identify joint responsibilities. The SDT believes that having this as a separate requirement is sufficient. No change made.

The SDT believes that the VSLs for Requirement R1 are already sufficient based on lack of industry comments. Note that the VSLs were modified to conform to the changes made to the requirement. Violation Risk Factors assess the impact to the BES of violating a requirement – not VSLs.

Requirement R1, part 1.1.2 has been revised to include known outages of generation or Transmission Facilities with a minimum duration of 6 months.

1.1.2 Known outage(s) of generation or Transmission Facility(ies) with a duration of at least six months.

Western Area Power Administration	General, all-encompassing comment: The change in TPL Standards, while well intended, will be difficult to administer since it has taken a simple Performance Table and translated it into a legal-type document that is very complex to relate to the physical system for the planning and operations staff. The performance requirements must be related to the physical response characteristics of the interconnected system operation without depending on a legal advise for training my new transmission system planning staff. The language in R1.1.2 needs to be clarified. Many of these facilities are not explicitly included in the models in the base cases (circuit breakers, protection system equipment, control devices). The language should be clarified to require modeling the effect of the devices or the effect of the removal of the devices where it is expected to impact the study outcome. Clarity is needed to explain the difference between R1.1.4 and R1.1.5. Expected interchange can be reasonably projected, but information on Firm Transmission Service is not always known or reasonably projected for future cases. For consistency with the 2nd bullet under R2.1.3, R1.1.4 should refer to expected transfers rather than Firm Transmission Service. With this change, R1.1.4 and R1.1.5 would be redundant and one should be deleted. I disagree with the inclusion of the words including requirements of regulatory authorities and other legal obligations at the end of R1. Entities already are required to do this. It does not need to be included in the standard.

Response: The SDT believes that it is following the intent of FERC and NERC in creating a reliable Bulk Electric System by following the requirements in TPL 001-1.

The SDT has removed the equipment list under Requirement R1, part 1.1.2 (now part 1.1.3). Transmission lines, generators, and reactive power devices are already included in MOD standards. Circuit breakers, Protection System equipment, and control devices are not typically modeled - the impact of these devices are typically simulated and thus these are already included in Requirement R3, part R3.3, Requirement R4, part 4.3, and in header note 'c' in Table 1. New technologies were removed from the list and are already covered in the Corrective Action Plan under Requirement R2, part 2.7.1 in the revised standard.

The SDT believes that transfers and Firm Transmission Service are actually two separate items since Firm Transmission Service is "the highest quality (priority) service offered to customers under a filed rate schedule that anticipates no planned interruption." Requirement R1, part 1.1.5 has been revised to include known commitments for Firm Transmission Service and Interchange.

1.1.5 Known commitments for Firm Transmission Service and Interchange

The SDT has removed "including requirements of regulatory authorities and other legal obligations" since utilities already have to abide by such requirements.

Organization	Question 1 Comment
R1 Each Transmission Planner and Planning Coordinator shall maintain System models within its respective area for performing the studies needed to complete its Planning Assessment. The models shall use the latest data consistent with that provided in accordance with the MOD-010 and MOD-012 standards, supplemented by other sources as needed, including items represented in the Corrective Action Plan, and shall represent projected System conditions.	
Ameren	There may be a potential conflict between MOD-010 and MOD-012 and legal documents such as Interconnection Agreements e.g. IA may specify a capacity level that exceeds the reported test levels. In the case of such conflicts, it is not clear which one should rule. Suggest replacing circuit breakers in R1.1.2 with terminal equipment since circuit breakers are covered by Protection System Equipment. Consider adding a reference in R1 to NERC Reliability Assessment Guidebook version 1.2, pp 17-18 for use of a particular load forecast level for inclusion in the planning models. I n R1.1.2, revise the language to show that we need to also represent the existing transmission system, and not just changes to the existing system. In R1.1.2, Clarification is needed for the phrase for each year should signify only those years for which assessment work was performed, rather than each year of the Near-Term and Long-Term Transmission Planning Horizon. There typically is not a model built for each year of the Near-Term and Long-Term Transmission Planning Horizon. In bullet three of R1.1.2, it is not clear whether bus-tie circuit breakers to be represented in the models. Typically circuit breakers are included in the contingency definitions along with the protection system equipment used in the powerflow models. The number of zero impedance branches which can presently be modeled using PSS/E software is limited to 4000. Also, the number of buses included in the powerflow models would increase with additional breaker modeling. In bullet seven of Requirement R1.1.2, what "new technologies" are to be represented in the models" R1.1.4 Firm Transmission Service - a single source can have transmission service to multiple sinks, and can be associated with transmission service in excess of the capacity of the source. There is a lack of clarity regarding the means by which Firm Transmission Service, a marketing term, is to be included in planning models. For example, should the standard define how to model wind farms (100% - off-peak and 20% on-peak, based on firm capacity from the wind generators, or other dispatch levels)?

Response: The SDT believes that additional modeling requirements not presently contained in the MOD standards are necessary for Transmission Planning purposes.

The SDT has removed the equipment list under Requirement R1, part 1.1.2 (now part 1.1.3). Transmission lines, generators, and reactive power devices are already included in MOD standards. Circuit breakers, Protection System equipment, and control devices are not typically modeled - the impact of these devices are typically simulated and thus these are already included in Requirement R3, part R3.3, Requirement R4, part 4.3, and in header note 'c' in Table 1. New technologies were removed from the list and are already covered in the Corrective Action Plan under Requirement R2, part 2.7.1 in the revised standard.

The SDT does not believe that a reference is needed to the NERC Reliability Assessment Guidebook since most utilities are using at least a 50/50 Load forecast as a minimum. No change made.

Organization	Question 1 Comment
The SDT has revised Requirement R1, part 1.1.1 to include "existing Facilities". **1.1.1** Existing Facilities The SDT has deleted the reference to year. **1.1.3** New planned Facilities and changes to existing Facilities See response to Requirement R1, part 1.1.2 above. . New technologies include any technology that is not currently in use on the electric power System that helps improve efficiency (i.e., energy storage/production technologies, low sag conductors, solid state interrupters, etc.). New technologies were removed from the list in Requirement R1, part 1.1.2 (now part 1.1.3) and are already covered in the Corrective Action Plan under Requirement R2, part 2.7.1 in the revised standard. The SDT believes that all firm Transmission contracts should be modeled. Requirement R1, part 1.1.5 has been revised to include known commitments for Firm Transmission Service and Interchange. **1.1.5** Known commitments for Firm Transmission Service and Interchange	
Puget Sound Energy, Inc.	The language in R1.1.2 needs to be clarified. Many of these facilities are not explicitly included in the models in the base cases (circuit breakers, protection system equipment, control devices). The language should be clarified to require modeling the effect of the devices or the effect of the removal of the devices where it is expected to impact the study outcome. Clarity is needed to explain the difference between R1.1.4 and R1.1.5. Expected interchange can be reasonably projected, but information on Firm Transmission Service is not always known or reasonably projected for future cases. For consistency with the 2nd bullet under R2.1.3, R1.1.4 should refer to expected transfers rather than Firm Transmission Service. With this change, R1.1.4 and R1.1.5 would be redundant and one should be deleted.
Response: The SDT has removed the equipment list under Requirement R1, part 1.1.2 (now part 1.1.3). Transmission lines, generators, and reactive power devices are already included in MOD standards. Circuit breakers, Protection System equipment, and control devices are not typically modeled - the impact of these devices are typically simulated and thus these are already included in Requirement R3, part R3.3, Requirement R4, part 4.3, and in header note 'c' in Table 1. New technologies were removed from the list and are already covered in the Corrective Action Plan under Requirement R2, part 2.7.1 in the revised standard. The SDT believes that transfers and Firm Transmission Service are actually two separate items since Firm Transmission Service is "the highest quality (priority) service offered to customers under a filed rate schedule that anticipates no planned interruption." Requirement R1, part 1.1.5 has been revised to include known commitments for Firm Transmission Service and Interchange. **1.1.5** Known commitments for Firm Transmission Service and Interchange	
Tenaska, Inc.	It is not clear that Requirement R1 requires ALL existing generators, substations, transmission line, transformers, etc. to be explicitly modeled for steady state and stability studies. In fact, Requirement 1.1.6 could be interpreted to exclude various generators from the models if they are not contracted to supply load. A suggestion is to re-word R1.1 to read as follows:R1.1 Models for the Planning Assessment shall represent all existing generators, substations (including specific busses within a substation), transmission lines, loads, capacitors, reactors, and other equipment connected to the transmission system and shall

Organization	Question 1 Comment
	further represent the following:(continue with R1.1.1 through R1.1.6) A further refinement to R1.1.6 should also be considered as follows:R1.1.6 Committment and dispatch schedules of resources expected to serve Load for the specific model.
Response: The intent of the SDT is to model all bulk electric Transmission Facilities depending on the model used - whether for load flow, Stability, or short circuit. The SDT has modified Requirement R1, part 1.1 to provide better clarity on these models. **1.1** System models shall represent: Requirement R1, part 1.1.6 has been broadened while still incorporating Network Resources. **1.1.6** Resources required to supply Load	
Manitoba Hydro	Requirement Text: R1: What is meant by including requirements of regulatory authorities and other legal obligations? This phase should be deleted. Can NERC make it an obligation in a standard to follow regulatory authority and other legal obligations? The planner has scope to determine the projected system conditions, and if a local regulator mandated a requirement, the planner would be able to include it without this statement. R1.1.1: Only long duration known planned or scheduled outages that are expected to last over a system peak should be included in the scope of this standard. Known planned or scheduled maintenance outages should not be a part of the planning scope as they are short duration and are planned to be taken when system conditions allow. Suggest wording change to Planned outages of generation and Transmission Facilities with an expected duration of 6 months or longer, if specifically known. R1.1.2: Suggest deleting new technologies as it is unknown as to what this is. If the SDT wants to make the list all inclusive, add words such as shall include but not be limited to in the requirement wording. Circuit breakers are not specifically represented in the planning models in order to keep the number of buses within the program capabilities. However, the effect of the circuit breaker configuration is normally considered in the creation of contingency files. Can the drafting team confirm that circuit breakers do not have to be specifically represented in the model? The same comment can be said about protection system equipment. Some generic zone 1 modeling may be included but in general the effect of protection equipment is included in contingency files. R1.1.4 & R1.1.5: Firm Transmission Service represents a contract that the planner is obligated to include. Based on the NERC definition, Interchange is defined as Energy transfers that cross Balancing Authority boundaries. Including it as a requirement mandates system expansion for non-firm system usage. Interchange is already covered in the sensitivities (Expected Transfers) and should not be a specific sub requirement of R1.1.2. Perhaps simply documenting the value of the Interchange used in the Model is sufficient. This value may change in the sensitivity analysis conducted in R2.1.3 and the TP/PA will decide the level that they will plan on protecting.Measure: The measure requires the planner to provide evidence such as the System model. What further evidence is required to ensure the planner is using data consistent with the MOD standards, is simulating projected system conditions, and that the models represent the required information in accordance with Requirement R1? It is suggested to remove and shall simulate projected System conditions from the main paragraph of R1 and reword R1.1 to System models and contingency files for the Planning Assessment shall represent projected System Conditions including:

Organization	Question 1 Comment
	Requirement R1 is very vague, and the Measure refers back to R1. The MOD standards deal with the building of the model. Most planners provide data in accordance with the MOD standards for a regional model building process. These models form the basis for the models the TPs and the PC use. The R1could be more specific by requiring the PC/TP to provide rationale for the projected system conditions used, which might include the generation schedule assumed, the transfer conditions, why peak or off-peak is important, etc.. VSLs: The requirement is very generic in nature and leans on the MOD requirements. Verification of compliance to this requirement will be problematic. What will be required to prove that the data "is consistent with the data provided in accordance with the MOD-010 and MOD-012 and other data sources"? What are these other data sources?? R1 only stipulates that the planner shall "simulate expected system conditions", so how does one decided that the "model did not simulate projected System Conditions as described in R1" (severe VSL)?

Response: The goal is for the responsible entity to build a realistic simulation, and the entity has to comply not only with the criteria in the TPL standard's tables, but also with other non-NERC regulations. However, the SDT has removed "including requirements of regulatory authorities and other legal obligations" since utilities already have to abide by such requirements.

> **R1** Each Transmission Planner and Planning Coordinator shall maintain System models within its respective area for performing the studies needed to complete its Planning Assessment. The models shall use the latest data consistent with that provided in accordance with the MOD-010 and MOD-012 standards, supplemented by other sources as needed, including items represented in the Corrective Action Plan, and shall represent projected System conditions.

Requirement R1, part 1.1.2 has been revised to include known outages of generation or Transmission Facilities with a minimum duration of 6 months**.**

> **1.1.2** Known outage(s) of generation or Transmission Facility(ies) with a duration of at least six months

New technologies include any technology that is not currently in use on the electric power System that helps improve efficiency (i.e., energy storage/production technologies, low sag conductors, solid state interrupters, etc.). New technologies were removed from the equipment list in Requirement R1.1.2 since these are already covered in the Corrective Action Plan under Requirement R2, part 2.7.1 in the revised standard.

The SDT has removed the equipment list under Requirement R1, part 1.1.2. Transmission lines, generators, and reactive power devices are already included in MOD standards. Circuit breakers, Protection System equipment, and control devices are not typically modeled - the impact of these devices are typically simulated and thus these are already included in Requirement R3, part 3.3, Requirement R4, part 4.3, and in header note 'c' in Table 1. New technologies were removed from the list and are already covered in the Corrective Action Plan under Requirement R2, part 2.7.

Requirement R1, part 1.1.5 has been revised to include known commitments for Firm Transmission Service and Interchange.

> **1.1.5** Known commitments for Firm Transmission Service and Interchange

Requirement R1 has been revised to replace "simulate" with "represent".

> **R1** Each Transmission Planner and Planning Coordinator shall maintain System models within its respective area for performing the studies needed to complete its Planning Assessment. The models shall use the latest data consistent with that provided in accordance with the MOD-010 and MOD-012 standards, supplemented by other sources as needed, including items represented in the Corrective Action Plan, and shall represent projected System

Organization	Question 1 Comment

conditions.

The SDT believes that additional modeling requirements not presently contained in the MOD standards are necessary for Transmission Planning purposes. The SDT has incorporated these additional requirements with the intent that they will be removed from the TPL standard when they are incorporated into the MOD standards at a later date.

The SDT has removed “and other date sources” from Requirement R1.

The SDT has replaced "simulate" with "represent" under the Severe VSL category for Requirement R1.

R1 VSL	The responsible entity’s System model failed to represent one of the Requirement R1, parts 1.1.1 through 1.1.6	The responsible entity’s System model failed to represent two of the Requirement R1, parts 1.1.1 through 1.1.6. OR The System model did not use the latest data consistent with the data provided in accordance with the MOD-010 and MOD-012 standards and other sources, including items represented in the Corrective Action Plan.	The responsible entity’s System model failed to represent three of the Requirement R1, parts 1.1.1 through 1.1.6.	The responsible entity’s System model failed to represent four or more of the Requirement R1, parts 1.1.1 through 1.1.6. OR The System model did not represent projected System conditions as described in Requirement R1.

E.ON U.S.	R1.Delete and other data sources. Consistency with MOD-010 and MOD-012 standards is measurable and should suffice. Delete including requirements of regulatory authorities and other legal obligations. The term: shall simulate projected System conditions does not exclude the above. If there is some significance to this statement it should be an item in R1.1. R1.1.4.Firm Transmission Service is often sold for less than one year on an as available basis. Also, Firm Transmission Service may be sold on one system without a complete path. As stated, it appears necessary to include these examples in the Planning models. E.ON U.S. believes that there should be some limitations put on this requirement such as Long-Term Firm Transmission Service for a period of 5 or more years.

Response: The SDT believes that additional modeling requirements not presently contained in the MOD standards are necessary for Transmission Planning purposes. The SDT has removed “and other data sources”.

R1 Each Transmission Planner and Planning Coordinator shall maintain System models within its respective area for performing the studies needed to complete its Planning Assessment. The models shall use the latest data consistent with that provided in accordance with the MOD-010 and MOD-012 standards, supplemented by other sources as needed, including items represented in the Corrective Action Plan, and shall represent projected System

Organization	Question 1 Comment
	conditions. The goal is for the responsible entity to build a realistic simulation, and the entity has to comply not only with the criteria in the TPL standard's tables, but also with other non-NERC regulations. However, the SDT has removed “including requirements of regulatory authorities and other legal obligations” since utilities already have to abide by such requirements. Requirement R1, part 1.1.5 has been revised to include known commitments for Firm Transmission Service and Interchange. **1.1.5** Known commitments for Firm Transmission Service and Interchange
National Grid	Comments: R1: A. Priority Comment- There needs to be some direction provided on the initial conditions used in the assessment. This guidance should encourage the use of initial conditions that reasonably stress transfers across interfaces between companies, areas, regions, into load pockets, and out of constrained areas. The expectation that transfers are reasonably stressed for a variety of interface conditions will require the consideration of different generation dispatches, which goes beyond the single generator out of service requirement of the standard. If initial conditions consider reasonably stressed conditions, then sensitivity analysis is embedded in the process. If sensitivity is embedded in the process, it is unclear if additional sensitivity is still required by the standard. B. In the reference to regulatory authorities and other legal obligations it is suggested that the phrase be changed from "simulate projected System conditions including requirements of regulatory authorities and other legal obligations" to "include projected System conditions and requirements of regulatory authorities and other legal obligation." In common usage of terms, models are used to simulate system response, but models alone do not simulate the system. Violation Severity Levels:R1 Suggest changing the phrase "simulate projected System conditions as described in Requirement R1" to "include projected System as described in Requirement R1," consistent with the recommended change to Requirement R1. Errata:Delete the period after "R1" in the first bullet in the Data Retention section. R1.1.1 Priority comment ? R1.1.1 should be removed. - Planned outages are addressed by Operational Planning processes and Transmission Operating Procedures for up to two years ahead removing the need for this to be incorporated into Planning Assessments. - If outages are planned, but Operations can not accommodate them in real time, then the outages are cancelled. - Outages are not generally known beyond one to two years in advance. R1.1.2 Comment - We recommend deleting the list of facilities:- Circuit breakers are not modeled as elements in a power flow nor are Control Devices and Protection Systems - The list of facilities is not consistent with the definition of “Facilities” in the NERC GlossaryR1.1.2 should simply read:R1.1.2New planned Facilities and changes to existing Facilities for each year of the Near-Term and Long-Term Transmission Planning Horizon. R1.1.3 Comment - The use of "real and reactive power" is prevalent within the industry, but R1.1.3 should be changed to "Active and reactive Demand of Load." When load is expressed as a complex quantity, active power is the real portion and reactive power is the imaginary portion. Thus for consistency, we should refer to active and reactive. R1.1.5 Comment What specifically needs to be modeled under Interchange” R1.1.6 Comment “This needs further definition or it should be deleted. It is not clear what a “network resource required to supply

Organization	Question 1 Comment
	load" is. Does this refer to Network Resource per FERC LGIP?

Response: Requirement R1, part 1.1.5 has been revised to include known commitments for Firm Transmission Service and Interchange. However the expected transfers under Requirement R2, part 2.1.3 are to further stress the system as a possible sensitivity analysis.

1.1.5 Known commitments for Firm Transmission Service and Interchange

The SDT has removed "including requirements of regulatory authorities and other legal obligations" since utilities already have to abide by such requirements.

R1 Each Transmission Planner and Planning Coordinator shall maintain System models within its respective area for performing the studies needed to complete its Planning Assessment. The models shall use the latest data consistent with that provided in accordance with the MOD-010 and MOD-012 standards, supplemented by other sources as needed, including items represented in the Corrective Action Plan, and shall represent projected System conditions.

The SDT has replaced "simulate" with "represent" under the Severe VSL category for Requirement R1.

R1 VSL	The responsible entity's System model failed to represent one of the Requirement R1, parts 1.1.1 through 1.1.6	The responsible entity's System model failed to represent two of the Requirement R1, parts 1.1.1 through 1.1.6. OR The System model did not use the latest data consistent with the data provided in accordance with the MOD-010 and MOD-012 standards and other sources, including items represented in the Corrective Action Plan.	The responsible entity's System model failed to represent three of the Requirement R1, parts 1.1.1 through 1.1.6.	The responsible entity's System model failed to represent four or more of the Requirement R1, parts 1.1.1 through 1.1.6. OR The System model did not represent projected System conditions as described in Requirement R1.

The SDT agrees and had made this change under Data Retention.

Requirement R1, part 1.1.2 has been revised to include known outages of generation or Transmission Facilities with a minimum duration of 6 months.

1.1.2 Known outage(s) of generation or Transmission Facility(ies) with a duration of at least six months.

The SDT believes that additional modeling requirements not presently contained in the MOD standards are necessary for Transmission Planning purposes. The SDT has removed the equipment list under Requirement R1, part 1.1.2 (now part 1.1.3). Transmission lines, generators, and reactive power devices are already included in

Organization	Question 1 Comment
MOD standards. Circuit breakers, Protection System equipment, and control devices are not typically modeled - the impact of these devices are typically simulated and thus these are already included in Requirement R3, part R3.3, Requirement R4, part 4.3, and in header note 'c' in Table 1. New technologies were removed from the list and are already covered in the Corrective Action Plan under Requirement R2, part 2.7.1 in the revised standard. The SDT has modified Requirement R1, part 1.1.4 (former part 1.1.3). **1.1.4** Real and reactive Load forecasts Interchange is defined in the NERC glossary as "energy transfers that cross Balancing Authority boundaries" while Firm Transmission Service is "the highest quality (priority) service offered to customers under a filed rate schedule that anticipates no planned interruption." The intent is to include, but not be limited to these requirements. The SDT has revised Requirement R1, part 1.1.6. **1.1.6** Resources required to supply Load	
Entergy Services, Inc	Planned facilities and planned changes to existing facilities should be further defined to ensure facilities or changes that are unlikely to be constructed are not included in the models. See the proposed definition of planned facilities in the comments provided to question #8. Facilities included in the models should be only those projects that are committed to by the Transmission Owner or other users of the transmission grid. Consistent with the standards requirement to include only firm transmission service (R1.1.4), uncommitted facilites should not be included because an oversubscription of the grid could occur. R1.1: Please clarify what the SDT means by models for the Planning Assessment shall present, expecially for facilities such as circuit breakers, protection system equipment, and new technologies. Models also need to represent existing facilities R1.1.2: The phrase, for each year of the Near-Term and Long-Term Transmission Planning Horizon, should be revised to remove each year because there may not be studies in each year. R1.1.4: Firm Transmission Service - a single source can have transmission service to multiple sinks, and can be associated with transmission service in excess of the capacity of the source. There is a lack of clarity regarding the means by which Firm Transmission Service, a marketing term, is to be included in planning models. Not sure if this is applicable to Requirement 1 or 2.
Response: The projects that get included under the Corrective Action Plans are presumed to be the utility's best alternatives at that time in order to achieve compliance. The SDT understands that these alternatives may change over time - but these changes must be addressed under Requirement R2, part 2.7.6 in the revised standard. The SDT has removed the equipment list under Requirement R1, part 1.1.2 (now part 1.1.3). Transmission lines, generators, and reactive power devices are already included in MOD standards. Circuit breakers, Protection System equipment, and control devices are not typically modeled - the impact of these devices are typically simulated and thus these are already included in Requirement R3, part 3.3, Requirement R4, part 4.3, and in header note 'c' in Table 1. New technologies were removed from the list and are already covered in the Corrective Action Plan under Requirement r2, part 2.7.1 in the revised standard. The reference to year has been deleted. The SDT believes that all firm Transmission contracts should be modeled. Requirement R1, part 1.1.5 has been revised to include known commitments for Firm Transmission Service and Interchange.	

Organization	Question 1 Comment
1.1.5 Known commitments for Firm Transmission Service and Interchange	
Great River Energy	R1.1 is just repeating what should already be in the MOD-010 and MOD-012 requirements. Why re-iterate this in the TPL standard? The planners are expecting that the model building process will already include these components listed in R1.1 otherwise there wouldn't be a functional model. R1.1.1 may be the only thing that needs to be identified in R1 as any known long-term outage or retirement of a facility may have happened after the model building process. If R1.1 is kept I would suggest removing "Models for" so that R1.1 reads "The Planning Assessment shall represent: R 1.1.1 says the assessment shall represent planned outages if specifically known. It does not however distinguish the length of the outage to be considered. Should a 1 week maintenance outage in Year five be included? Should a 2 year complete rebuild outage lasting through year two and three be included? It is GRE's opinion that the SDT needs to add a comment about the length of the planned outage and its relevance to the assessment. In the Violation Severity Levels, R1 seems to be weak since any solved model should meet this requirement. Again this would seem to be more related to the MOD010 and MOD012 process. R1 should focus on documenting changes that are being preformed against the data that was submitted in MOD-010 and MOD-012 process.
Response: The SDT believes that additional modeling requirements not presently contained in the MOD standards are necessary for Transmission Planning purposes. The SDT has incorporated these additional requirements with the intent that they will be removed from the TPL standard when they are incorporated into the MOD standards at a later date. The SDT has removed the equipment list under Requirement R1, part 1.1.2 (now part 1.1.3). Transmission lines, generators, and reactive power devices are already included in MOD standards. Circuit breakers, Protection System equipment, and control devices are not typically modeled - the impact of these devices are typically simulated and thus these are already included in Requirement R3, part R3.3, Requirement R4, part 4.3, and in header note 'c' in Table 1. New technologies were removed from the list and are already covered in the Corrective Action Plan under Requirement R2, part 2.7.1 in the revised standard. The SDT has revised the language in Requirement R1, part 1.1 (now part 1.1.2) based on industry comments. . **1.1.2** Known outage(s) of generation or Transmission Facility(ies) with a duration of at least six months. The SDT believes that the Severe level should be applied as noted in the VSL table since these cases are the basis for having an accurate Planning Assessment. No change made.	
BC Hydro	Comments: Consider just referring to the MOD series of standards, not specific individual MOD standards because the numbering of the MOD standards could change and additional relevant MOD standards could be added. Consider rewording the second sentence to read, The data and models shall meet all requirements of the MOD series of standards. The MOD standards should include the requirements of regulatory authorities and other legal obligations and need not be repeated in the TBL standard(s). R1.1.2: Consider changing to, New planned Facilities and planned changes to existing and changing the fifth bullet to read, Normal actions of Protection System equipment R1.1.3: Consider changing to, "End-use customer loads and generators [how small loads are aggregated should be covered in the MOD standards. A key point is that large industrial customers with significant generation that reduces their net peak demand should not be represented simply as a net load since that would not properly model the dynamic impacts of the load and

Organization	Question 1 Comment
	generation components]. R1.1.4: Consider changing to, Worst-case transfers on Firm Transmission Service Reservations. R1.1.5: Consider removing this requirement. It should be covered by R1.1.4 R1.1.6: Consider changing to, Generating units [the MOD standards should specify the details like how exciters, governors and associated control equipment must be modeled] Comment on M1: Consider changing to, using data consistent with the MOD series of standards, simulating. Consider just referring to the entire series of a particular standard, not specific individual standards because the numbering of the standards being referenced could change and additional relevant individual standards could be added.

Response: The SDT believes that additional modeling requirements not presently contained in the MOD standards are necessary for Transmission Planning purposes. The SDT referenced the specific MOD standards to ensure that the requirements were limited to those needed to complete the Planning Assessment. When the MOD standards are revised, this standard will be reviewed for conforming changes. The SDT has removed "including requirements of regulatory authorities and other legal obligations" since utilities already have to abide by such requirements.

> **R1** Each Transmission Planner and Planning Coordinator shall maintain System models within its respective area for performing the studies needed to complete its Planning Assessment. The models shall use the latest data consistent with that provided in accordance with the MOD-010 and MOD-012 standards, supplemented by other sources as needed, including items represented in the Corrective Action Plan, and shall represent projected System conditions.

The SDT has reworded Requirement R1, part 1.1.1 to include existing Facilities.

> **1.1.1** Existing Facilities

The SDT has removed the equipment list under Requirement R1, part 1.1.2 (now part 1.1.3). Transmission lines, generators, and reactive power devices are already included in MOD standards. Circuit breakers, Protection System equipment, and control devices are not typically modeled - the impact of these devices are typically simulated and thus these are already included in Requirement R3, part R3.3, Requirement r4, part 4.3, and in header note 'c' in Table 1. New technologies were removed from the list and are already covered in the Corrective Action Plan under Requirement R2, part 2.7.1 in the revised standard.

The SDT has modified Requirement R1, part 1.1.4 (now part 1.1.5) to state "Real and reactive Load Forecasts. Note that the generator modeling is addressed in the MOD standards.

> **1.1.4** Real and reactive Load forecasts

The SDT believes that all contracted firm Transmission should be modeled. Requirement R1, part 1.1.5 has been revised to include known commitments for Firm Transmission Service and Interchange.

> **1.1.5** Known commitments for Firm Transmission Service and Interchange

See response for Requirement R1, part 1.1.2 above.

The SDT believes that the specific MOD standards should be addressed in this TPL 001-1 draft since they deal directly with the modeling requirements necessary for creating base cases. No change made.

Organization	Question 1 Comment
Midwest ISO	Generally the Midwest ISO agrees with FirstEnergy's comments regarding this requirement. However, if the SDT insists on keeping this requirement as is then we propose the following corrections specific to each requirement. Specific Comments for Requirement 1: A) Under R1 there is language that references "other data sources; can the SDT please offer some clarification on what "other data sources are to be Could other data sources be Tariff requirements" B) Again under R1, the Time Horizon of the TPL standards is intended for years one through 10; However the Time Horizon shown in R1 only says "Long-term Planning". By definition of Long-Term Transmission Planning Horizon this covers years 6 through 10 and beyond. Suggestion to change the Time Horizon to read: Near-Term and Long-Term Transmission Planning. C) Under R1.1.1 it is required that models represent planned outages of generation and transmission facilities, if specifically known. This does not allow or require a Transmission Planner or Planning Coordinator to include outages due to maintenance and/or due to construction programs where certain facilities are out of service during various phases of construction, as part of the Assessment. For this reason, we believe the following language for R1.1.1 would improve this requirement: Planned outages of generation and Transmission Facilities if specifically scheduled or planned for. D) Under R1.1.1 we suggest adding sub-requirement R1.1.7 Generation dispatch patterns deemed appropriate by the Transmission Planner and Planning Coordinator. This clarifies that when building System models, generation dispatch is part of the model building process. E) Under R1.1.2 there is uncertainty around the language of New planned Facilities. We offer the following definition for Planned Facilities to be added to the definition section of this standard and further added to the NERC Glossary of Terms: Planned Facilities Generation and Transmission Facilities that are expected to be implemented with an in service date prior to the plan year being studied. F) Under R1.1.2 a bullet should be added for Relay Loadability Limitations. The standard requirements for relay loadability are included in PRC-023-1.

Response: The SDT has removed the language "and other data sources".

> **R1** Each Transmission Planner and Planning Coordinator shall maintain System models within its respective area for performing the studies needed to complete its Planning Assessment. The models shall use the latest data consistent with that provided in accordance with the MOD-010 and MOD-012 standards, supplemented by other sources as needed, including items represented in the Corrective Action Plan, and shall represent projected System conditions.

The *Time Horizon* term at the end of the requirement deals with mitigation time periods (as shown below) and is not connected to the assessment time frames. No change made. Time Horizons are a consideration when there is a violation of a requirement – the impact to the BES of violating a requirement with a long-term planning horizon is not expected to be as severe as the impact associated with violating a requirement with a real-time operations time horizon.

Mitigation Time Horizon

The time horizons available for mitigating a violation to a requirement include the following:

- **Long-term Planning** — a planning horizon of one year or longer.

Organization	Question 1 Comment
	• **Operations Planning** — operating and resource plans from day-ahead up to and including seasonal. • **Same-day Operations** — routine actions required within the timeframe of a day, but not real-time. • **Real-time Operations** — actions required within one hour or less to preserve the reliability of the bulk electric system. • **Operations Assessment** — follow-up evaluations and reporting of real time operations. If a transmission element outage occurs during a specified time, then the new base case for that time period would result with that element out of service pre-contingency. Requirement R1, part 1.1.2 has been revised to include known outages of generation or Transmission Facilities with a minimum duration of 6 months. **1.1.2** Known outage(s) of generation or Transmission Facility(ies) with a duration of at least six months. Requirement R1, part 1.1.6 now states Resources required to supply Load. **1.1.6** Resources required to supply Load Requirement R1, part 1.1.3 covers new planned Facilities and changes to existing Facilities. **1.1.3** New planned Facilities and changes to existing Facilities The SDT has removed the equipment list under Requirement R1, part 1.1.2. Transmission lines, generators, and reactive power devices are already included in MOD standards. Circuit breakers, Protection System equipment, and control devices are not typically modeled - the impact of these devices are typically simulated and thus these are already included in Requirement R3, part 3.3, Requirement R4, part 4.3, and in header note 'c' in Table 1. New technologies were removed from the list and are already covered in the Corrective Action Plan under Requirement R2, part 2.7. Relay loadability is covered under Requirement R3, part 3.3.3. No change made.
PJM	In R1, why require a Planning Coordinator AND a Transmission Planner to maintain models for the same area Concern with the words - for each yearin R1.1.2. Does this mean that a case for each year, at least, will need to be produced? Will five, one for each season and a light load, each year need to be produced R1.1.5 is not clear. Is the Interchange exclusive of Firm Transmission Service as mentioned in R1.1.4 Maybe -non-firm transmission service-- is clearer.
Response: Requirement R7 requires the Transmission Planner and Planning Coordinator to determine and identify joint responsibilities. The SDT has modified Requirement R1 to state that the Transmission Planner and Planning Coordinator are responsible for maintaining System models for their respective areas. **R1** Each Transmission Planner and Planning Coordinator shall maintain System models within their respective areas for performing the studies needed to complete their Planning Assessment. The models shall use the latest data consistent with that provided in accordance with the MOD-010 and MOD-012 standards, supplemented by other sources as needed, including items represented in the Corrective Action Plan, and shall represent projected System conditions. The SDT has revised Requirement R1, part 1.1.2 (now part 1.1.3) to delete the reference to "year".	

Organization	Question 1 Comment
1.1.3 New planned Facilities and changes to existing Facilities The SDT believes that transfers and Firm Transmission Service are actually two separate items since Firm Transmission Service is "the highest quality (priority) service offered to customers under a filed rate schedule that anticipates no planned interruption." Requirement R1, part 1.1.5 has been revised to include known commitments for Firm Transmission Service and Interchange. **1.1.5** Known commitments for Firm Transmission Service and Interchange	
American Electric Power	Under R1.1.2. Add Transformers, otherwise, revise Transmission Lines to read Transmission Facilities. Also under R1.1.2., add Series Reactors and Capacitors as a distinct category of facilities from Reactive Power devices that include shunt capacitors and reactors, and Control devices that include phase angle regulating and variable frequency transformers, FACTS devices, and other power electronics. These additions would further clarify the types of facilities that should be included, and these comments are made in full recognition that the introductory sentence to R1.1.2. contains the wording such as.
Response: The SDT has removed the equipment list under Requirement R1, part 1.1.2 (now part 1.1.3). Transmission lines, generators, and reactive power devices are already included in MOD standards. Circuit breakers, Protection System equipment, and control devices are not typically modeled - the impact of these devices are typically simulated and thus these are already included in Requirement R3, part 3.3, requirement R4, part 4.3, and in header note 'c' in Table 1. New technologies were removed from the list and are already covered in the Corrective Action Plan under Requirement R2, part 2.7. The SDT has also revised this requirement to remove 'such as'.	
ITC Holdings	Comments: We question the value of R1.1.1, which requires the inclusion of transmission or generator outages if..known, in a planning standard. If an outage puts you in a compliance deficiency for the duration of any outage, would you be fined for such an instance? Category P6 contingencies should cover these outages and not require a separate requirement such as R1.1.1. This requirement could also make an entity subject to fines for long term outages needed to upgrade or replace equipment as part of a CAP for other category violations. If this requirement is kept, it should be restricted to very long term outages and exclude those outages needed to complete CAPs for other violations. R1.1.6 requires the use of Network Resources to supply load. For many planning studies, particularly beyond the five year window, the capacity additions needed to supply load are frequently unknown. Since there are no requirements or guidelines for assuming what and where these resources will be, assumptions will have to be made regarding the needed resources. Additionally, existing network resources could be retired or re-designated to serve other load. It is unclear as written exactly what would be a violation of this requirement if known network resources are not sufficient to serve projected load. Finally, with the advent of market power, would a dispatch utilizing this type of dispatch be considered a violation of this standard.
Response: The SDT believes that the outages should be modeled to insure the system reliability during the outage durations. Requirement R1, part 1.1.2 has been revised to include known outages of generation or Transmission Facilities with a minimum duration of 6 months. If a transmission element outage occurs during a specified time, then the new base case for that time period would result with that element out of service pre-contingency. All performance criteria would then apply to that new base case. **1.1.2** Known outage(s) of generation or Transmission Facility(ies) with a duration of at least six months.	

Organization	Question 1 Comment
The SDT has revised Requirement R1, part 1.1.6. to include Resources required to supply Load. **1.1.6** Resources required to supply Load	
Northern Indiana Public Service Company	Under R1.1, insert, "as applicable" after "represent". Since R1 covers steady state, short circuit and dynamic models, data requirements should be applicable to the specific model. Representation of circuits breakers, protection system equipment and control devices is not typical of steady state model inputs.
Response: The SDT has removed the equipment list under Requirement R1, part 1.1.2. Transmission lines, generators, and reactive power devices are already included in MOD standards. Circuit breakers, Protection System equipment, and control devices are not typically modeled - the impact of these devices are typically simulated and thus these are already included in Requirement R3, part 3.3, Requirement R4, part 4.3, and in header note 'c' in Table 1. New technologies were removed from the list and are already covered in the Corrective Action Plan under Requirement R2, part 2.7.	
Minnesota Power	A) Under R1 there is language that references other data sources; can the SDT please offer some clarification on what other data sources are to be? Could other data sources be Tariff requirements? B) Again under R1, the Time Horizon of the TPL standards is intended for years one through 10; However the Time Horizon shown in R1 only says Long-term Planning. By definition of Long-Term Transmission Planning Horizon this covers years 6 through 10 and beyond. Suggestion to change the Time Horizon to read: Near-Term and Long-Term Transmission Planning. C) Under R1.1.1 it is required that models represent planned outages of generation and transmission facilities, if specifically known. However, the requirement does not distinguish the length of the outage to be considered. Should a one week maintenance outage in Year Five be included? Should a two-year complete rebuild outage lasting through the entire years 2 and 3 be included? The SDT team needs to add a comment about the length of the planned outage and its relevance to the assessment. D) R1.1 is repeating what should already be in the MOD-010 and MOD-012 requirements. Is the inclusion of these elements in the TPL standard redundant? The planners expect the model building process will already included the components listed in R1.1, otherwise there would not be a functional model. If R1.1 is kept, we suggest removing the "Models for" so that R1.1 reads "The Planning Assessment shall represent:"
Response: The goal is for the responsible entity to build a realistic simulation, and the entity has to comply not only with the criteria in the TPL standard's tables, but also with other non-NERC regulations. The SDT has deleted the language "and other data sources". **R1** Each Transmission Planner and Planning Coordinator shall maintain System models within their respective areas for performing the studies needed to complete their Planning Assessment. The models shall use the latest data consistent with that provided in accordance with the MOD-010 and MOD-012 standards, supplemented by other sources as needed, including items represented in the Corrective Action Plan, and shall represent projected System conditions. The *Time Horizon* term at the end of the requirement deals with mitigation time periods (as shown below) and is not connected to the assessment time frames. Time Horizons are a consideration when there is a violation of a requirement – the impact to the BES of violating a requirement with a long-term planning horizon is not expected to be as severe as the impact associated with violating a requirement with a real-time operations time horizon. No change made.	

Organization	Question 1 Comment
Mitigation Time Horizon The time horizons available for mitigating a violation to a requirement include the following: • **Long-term Planning** — a planning horizon of one year or longer. • **Operations Planning** — operating and resource plans from day-ahead up to and including seasonal. • **Same-day Operations** — routine actions required within the timeframe of a day, but not real-time. • **Real-time Operations** — actions required within one hour or less to preserve the reliability of the bulk electric system. • **Operations Assessment** — follow-up evaluations and reporting of real time operations. The SDT believes that the outages should be modeled to insure the system reliability during the outage durations. If a transmission element outage occurs during a specified time, then the new base case for that time period would result with that element out of service pre-contingency. All performance criteria would then apply to that new base case. Requirement R1, part 1.1.2 has been revised to include known outages of generation or Transmission Facilities with a minimum duration of 6 months. **1.1.2** Known outage(s) of generation or Transmission Facility(ies) with a duration of at least six months. The SDT believes that additional modeling requirements not presently contained in the MOD standards are necessary for Transmission Planning purposes. The SDT has incorporated these additional requirements with the intent that they will be removed from the TPL standard when they are incorporated into the MOD standards at a later date. The SDT has reworded Requirement R1, part 1.1. **1.1** System models shall represent:	
LADWP	For R1.1.4 the requirements should be based on "expected transfer" instead of "firm transmission service". When projecting into future, the term "firm transmission service" is meaningless because transmission service contracts can be changed overnight. Using "firm transmission service" as a base would also exclude any new contract that are not considered in the study. It is very short-sighted to plan new transmssion facilities only based on "firmed transmission services". R1.1.2 is very confusing. What is a new technology? Is it something we don't know? If we know what it is, is it still a new tchnology? If we don't know, how do we model it? Also, we do not model individual circuit breaker but the effect of the circuit breakers; same apply with control devices or protective system equipment. Need more clarity. In general, a laundry list of items to be represented is a bad idea because it gives the impression that anything not on the list does not need to be modeled.
Response: The SDT believes that transfers and Firm Transmission Service are actually two separate items since Firm Transmission Service is “the highest quality (priority) service offered to customers under a filed rate schedule that anticipates no planned interruption.” Requirement R1, part 1.1.5 has been revised to include known commitments for Firm Transmission Service and Interchange. **1.1.5** Known commitments for Firm Transmission Service and Interchange	

Organization	Question 1 Comment
New technologies include any technology that is not currently in use on the electric power System that helps improve efficiency (i.e., energy storage/production technologies, low sag conductors, solid state interrupters, etc.). New technologies were removed from the list in Requirement R1, part 1.1.2 and are already covered in the Corrective Action Plan under Requirement R2, part 2.7.1 in the revised standard. The SDT has removed the equipment list under Requirement R1, part 1.1.2. Transmission lines, generators, and reactive power devices are already included in MOD standards. Circuit breakers, Protection System equipment, and control devices are not typically modeled - the impact of these devices are typically simulated and thus these are already included in Requirement R3, part 3.3, Requirement R4, part 4.3, and in header note 'c' in Table 1. New technologies were removed from the list and are already covered in the Corrective Action Plan under Requirement R2, part 2.7.1 in the revised standard.	
Platte River Power Authority	R1.1.2. "....for each year of the Near-Term and Long-Term..." Models for each year of the 10 years in the planning horizons are not developed in our Region. Please clarify your intention. R1.1.2. 3rd bullet - "Circuit breakers (or the effects of)" R1.1.2. 4th bullet - "Protection System equipment (or the effects of)" R1.1.2. 5th bullet - "Control devices (or the effects of)" R1.1.2. 6th bullet - "New techonologies (or the effects of)" R1.1.4. "Firm Transmission Service (or expected transfers)
Response: The SDT has deleted "year". **1.1.3** New planned Facilities and changes to existing Facilities The SDT has removed the equipment list under Requirement R1, part 1.1.2 (now part 1.1.3). Transmission lines, generators, and reactive power devices are already included in MOD standards. Circuit breakers, Protection System equipment, and control devices are not typically modeled - the impact of these devices are typically simulated and thus these are already included in Requirement R3, part 3.3, Requirement R4, part 4.3, and in header note 'c' in Table 1. New technologies were removed from the list and are already covered in the Corrective Action Plan under Requirement R2, part 2.7.1 in the revised standard. The SDT believes that transfers and Firm Transmission Service are actually two separate items since Firm Transmission Service is "the highest quality (priority) service offered to customers under a filed rate schedule that anticipates no planned interruption." Requirement R1, part 1.1.5 has been revised to include known commitments for Firm Transmission Service and Interchange. **1.1.5** Known commitments for Firm Transmission Service and Interchange	
MAPPCOR	R1 - what it means to include requirements of regulatory authorities and other legal obligations. Even if some version of this language is kept in the final standard, it seems to belong in R2 rather than R1. R1.1.1 - should remove the word specifically since it means nothing. Only known long-term outages of generation and transmission should be required to be modeled. R1.1.2 in the first line should have the word studied to avoid confusion, to read "New planned Facilities and changes to existing Facilities for each year studied of the "?

Organization	Question 1 Comment
	R1 states that the models used in these studies shall be consistent with data provided through MOD-010 and MOD-012. The data submitted for these are updated on a schedule provided by the RRO and not necessarily reflective of any emerging changes that may have occurred between the MOD data collection cycle. The requirement should allow for exceptions to allow the most recent information to be included in the TPL studies.

Response: : The goal is for the responsible entity to build a realistic simulation, and the entity has to comply not only with the criteria in the TPL standard's tables, but also with other non-NERC regulations. However, the SDT has removed "including requirements of regulatory authorities and other legal obligations" since utilities already have to abide by such requirements.

> **R1** Each Transmission Planner and Planning Coordinator shall maintain System models within their respective areas for performing the studies needed to complete their Planning Assessment. The models shall use the latest data consistent with that provided in accordance with the MOD-010 and MOD-012 standards, supplemented by other sources as needed, including items represented in the Corrective Action Plan, and shall represent projected System conditions.

The SDT has deleted 'if specifically known'.

> **1.1.2** Known outage(s) of generation or Transmission Facility(ies) with a duration of at least six months.

The SDT has deleted "year".

The SDT has modified Measure M1 to use the latest data available.

> **M1** Each Transmission Planner and Planning Coordinator shall provide evidence, in electronic or hard copy format, that it is maintaining System models, using the latest data consistent with MOD-010 and MOD-012, including items represented in the Corrective Action Plan, representing projected System conditions, and that the models represent the required information in accordance with Requirement R1.

Idaho Power	The language in R1.1.2 needs to be clarified. Many of these facilities are not explicitly included in the models in the base cases (circuit breakers, protection system equipment, control devices). The language should be clarified to require modeling the effect of the devices or the effect of the removal of the devices where it is expected to impact the study outcome. Clarity is needed to explain the difference between R1.1.4 and R1.1.5. Expected interchange can be reasonably projected, but information on Firm Transmission Service is not always known or reasonably projected for future cases. For consistency with the 2nd bullet under R2.1.3, R1.1.4 should refer to expected transfers rather than Firm Transmission Service. With this change, R1.1.4 and R1.1.5 would be redundant and one should be deleted.

Response: The SDT has removed the equipment list under Requirement R1, part 1.1.2. Transmission lines, generators, and reactive power devices are already included in MOD standards. Circuit breakers, Protection System equipment, and control devices are not typically modeled - the impact of these devices are typically simulated and thus these are already included in Requirement r3, part 3.3, Requirement r4, part 4.3, and in header note 'c' in Table 1. New technologies were removed from the list and are already covered in the Corrective Action Plan under Requirement R2, part 2.7.1 in the revised standard.

The SDT believes that transfers and Firm Transmission Service are actually two separate items since Firm Transmission Service is "the highest quality (priority) service offered to customers under a filed rate schedule that anticipates no planned interruption." Requirement R1, part 1.1.5 has been revised to include known commitments for Firm Transmission Service and Interchange.

Organization	Question 1 Comment
1.1.5 Known commitments for Firm Transmission Service and Interchange	
Turlock Irrigation District	TPL 001-1 R1 could potentially result in a WECC auditor having to determine compliance with requirements of regulatory authorities and other legal obligations, beyond the scope of its expertise. TID proposes that if that language is to be retained, it shall be assumed that the requirements of regulatory authorities and other legal obligations are being simulated unless those other entities have formally found the member to be in violation of their requirements or obligations.
Response: The goal is for the responsible entity to build a realistic simulation, and the entity has to comply not only with the criteria in the TPL standard's tables, but also with other non-NERC regulations. However, the SDT has removed "including requirements of regulatory authorities and other legal obligations" since utilities already have to abide by such requirements. **R1** Each Transmission Planner and Planning Coordinator shall maintain System models within its respective area for performing the studies needed to complete its Planning Assessment. The models shall use the latest data consistent with that provided in accordance with the MOD-010 and MOD-012 standards, supplemented by other sources as needed, including items represented in the Corrective Action Plan, and shall represent projected System conditions.	
New York Independent System Operator	R1.1.1 requires that models shall represent planned outages of generation and transmission facilities, if specifically known. The standard should be clarified to state whether it allows or requires a PC/TP to include as part of the Assessment outages due to maintenance and due to construction programs where certain facilities are out of service during phases of construction. Such maintenance and construction schedules are established but may not be finalized over the planning horizon. Further, the standard is not clear whether planned outages are to be treated as creating a normal system condition or as a contingency from which system adjustments are made prior to subsequent eventsMOD 10 and 12 are based on requirements determined by the RRO in MOD 11 and 13 respectively. Is this appropriate? Further, the PC is not an applicable entity in MOD 10 and 12. Moreover, the standard should define other data sources. R1.1.2. states that models for facilities such as circuit breakers and protection systems should be represented. Comment - The list of facilities should be deleted for the following reasons:- it is not needed;- the NYISO does not model circuit breakers, Control Devices, and Protection Systems;- it is not consistent with the definition of Facilities in the NERC Glossary.
Response: The SDT believes that the outages should be modeled to insure the System reliability during the outage durations. If a Transmission element outage occurs during a specified time, then the new base case for that time period would result with that element out of service pre-contingency. Requirement R1, part 1.1.2 has been revised to include known outages of generation or Transmission Facilities with a minimum duration of 6 months. **1.1.2** Known outage(s) of generation or Transmission Facility(ies) with a duration of at least six months. The Planning Coordinator is to still use the information provided under MOD-010 and -012. The SDT has removed "and other data sources". **R1** Each Transmission Planner and Planning Coordinator shall maintain System models within its respective area for performing the studies needed to	

Organization	Question 1 Comment
complete its Planning Assessment. The models shall use the latest data consistent with that provided in accordance with the MOD-010 and MOD-012 standards, supplemented by other sources as needed, including items represented in the Corrective Action Plan, and shall represent projected System conditions. The SDT has removed the equipment list under Requirement R1, part 1.1.2. Transmission lines, generators, and reactive power devices are already included in MOD standards. Circuit breakers, Protection System equipment, and control devices are not typically modeled - the impact of these devices are typically simulated and thus these are already included in Requirement R3, part 3.3, Requirement R4, part 4.3, and in header note 'c' in Table 1. New technologies were removed from the list and are already covered in the Corrective Action Plan under Requirement R2, part 2.7.1 in the revised standard.	
Duke Energy	Revise R1.1.2 to include the phrase to be studied as follows: New planned Facilities and changes to existing Facilities for each year to be studied of the Near-Term and Long-Term Transmission Planning Horizon, such as :
Response: The SDT has deleted "year". **1.1.3** New planned Facilities and changes to existing Facilities Existing Facilities are now shown under Requirement R1, part 1.1.1. **1.1.1** Existing Facilities	
Tucson Electric Power Company	The language in R1.1.2 needs to be clarified. Many of these facilities are not explicitly included in the models in the base cases (circuit breakers, protection system equipment, control devices). The language should be clarified to require modeling the effect of the devices or the effect of the removal of the devices where it is expected to impact the study outcome. An alternative, instead of specifically listing elements, make a general statement that the models should include those elements required in MOD-010 through MOD-013. If an element is missing, double jeopardy could result due to a violation of the applicable MOD standard and this TPL standard. Clarity is needed to explain the difference between R1.1.4 and R1.1.5. Expected interchange can be reasonably projected, but information on Firm Transmission Service is not always known or reasonably projected for future cases. For consistency with the 2nd bullet under R2.1.3, R1.1.4 should refer to expected transfers rather than Firm Transmission Service. With this change, R1.1.4 and R1.1.5 would be redundant and one should be deleted. We disagree with the inclusion of the words including requirements of regulatory authorities and other legal obligations at the end of R1. Entities already are required to do this. It does not need to be included in the standard.
Response: The SDT has removed the equipment list under Requirement R1, part 1.1.2. Transmission lines, generators, and reactive power devices are already included in MOD standards. Circuit breakers, Protection System equipment, and control devices are not typically modeled - the impact of these devices are typically simulated and thus these are already included in Requirement R3, part 3.3, Requirement R4, part 4.3, and in header note 'c' in Table 1. New technologies were removed from the list and are already covered in the Corrective Action Plan under Requirement R2, part 2.7.1 in the revised standard. The SDT believes that additional modeling requirements not presently contained in the MOD standards are necessary for Transmission Planning purposes. The SDT has incorporated these additional requirements with the intent that they will be removed from the TPL standard when they are incorporated into the MOD standards at a later date.	

Organization	Question 1 Comment
The SDT believes that transfers and Firm Transmission Service are actually two separate items since Firm Transmission Service is "the highest quality (priority) service offered to customers under a filed rate schedule that anticipates no planned interruption." Requirement R1, part 1.1.5 has been revised to include known commitments for Firm Transmission Service and Interchange. **1.1.5** Known commitments for Firm Transmission Service and Interchange The goal is for the responsible entity to build a realistic simulation, and the entity has to comply not only with the criteria in the TPL standard's tables, but also with other non-NERC regulations. However, the SDT has removed "including requirements of regulatory authorities and other legal obligations" since utilities already have to abide by such requirements. **R1** Each Transmission Planner and Planning Coordinator shall maintain System models within its respective area for performing the studies needed to complete its Planning Assessment. The models shall use the latest data consistent with that provided in accordance with the MOD-010 and MOD-012 standards, supplemented by other sources as needed, including items represented in the Corrective Action Plan, and shall represent projected System conditions.	
Independent Electricity System Operator	1. R1: What modeling/simulation is envisaged by the phrase requirements of regulatory authorities and other legal obligations? Note that this condition is not included in the measure or the VSL, making its compliance (whatever it is) irrelevant. If it is indeed a needed condition, then it should be measured and included in the VSL language under the Severe condition. Further, we suggest replacing simulate with incorporate since R1 deals with building of the system model that will be used to perform simulations governed by Requirement R2. Moreover, we do not think this requirement (to simulate projected System conditions including requirements of regulatory authorities and other legal obligations) belongs to R1, which is a requirement to develop the system model. R2 is the requirement for conducting Planning Assessments which include simulation using the model. We suggest moving this requirement to R2 upon making appropriate changes, where necessary to address our comments on the wording. 2. We recommend introducing applicable before regulatory authorities. 3. R1.1.2: suggest to add Transformers. 4. R1.1.5: suggest to change Interchange to Interchange Schedules or Interchange Transactions. 5. We agree with the VRF, Time Horizon, Measures and VSLs, other than the requirements of regulatory authorities and other legal obligations noted above.
Response: The goal is for the responsible entity to build a realistic simulation, and the entity has to comply not only with the criteria in the TPL standard's tables, but also with other non-NERC regulations. However, the SDT has removed "including requirements of regulatory authorities and other legal obligations" since utilities already have to abide by such requirements. **R1** Each Transmission Planner and Planning Coordinator shall maintain System models within its respective area for performing the studies needed to complete its Planning Assessment. The models shall use the latest data consistent with that provided in accordance with the MOD-010 and MOD-012 standards, supplemented by other sources as needed, including items represented in the Corrective Action Plan, and shall represent projected System conditions.	

Organization	Question 1 Comment
The SDT has changed the word "simulate" to "represent" in Requirement R1. The SDT has removed the equipment list under Requirement R1, part 1.1.2. Transmission lines, generators, and reactive power devices are already included in MOD standards. Circuit breakers, Protection System equipment, and control devices are not typically modeled - the impact of these devices are typically simulated and thus these are already included in Requirement R3, part 3.3, Requirement R4, part 4.3, and in header note 'c' in Table 1. New technologies were removed from the list and are already covered in the Corrective Action Plan under Requirement R2, part 2.7.1 in the revised standard. Requirement R1, part 1.1.5 has been revised to include known commitments for Firm Transmission Service and Interchange. **1.1.5** Known commitments for Firm Transmission Service and Interchange Thank you for your response on VRF et al.	
Kansas City Power & Light	R1 states that the models used in these studies shall be consistent with data provided through MOD-010 and MOD-012. The data submitted for these are updated on a schedule provided by the RRO and not necessarily reflective of any emerging changes that may have occurred between the MOD data collection cycle. The requirement should allow for exceptions to allow the most recent information to be included in the TPL studies.
Response: The SDT has modified Measure M1 to use the latest data available. **M1** Each Transmission Planner and Planning Coordinator shall provide evidence, in electronic or hard copy format, that it is maintaining System models, using the latest data consistent with MOD-010 and MOD-012, including items represented in the Corrective Action Plan, representing projected System conditions, and that the models represent the required information in accordance with Requirement R1.	
ReliabilityFirst Corporation	R1.1.1 requires to include Planned outages of generation and Transmission Facilities, "if specifically known" Should the generation be capitalized? Suggest changing it to "All planned Generation and Transmission facilities should be modeled. R1.1.2 Use of the word "such as" is not very clear and may not be enforceable. There are some size limitations in the study tools and it may not be possible to model all circuit breakers. Last three bullets are very hard to model and these are not consistent with MOD-010 and MOD-012. I am not sure what "New Technologies" mean. Does this require a model for each year? This contradicts the requirements in Sections R2.1-R2.1.1, R2.1.2 and R2.2. Suggest changing this to read "New planned Facilities and changes to existing Facilities for Near-Term and Long-Term Transmission Planning Horizon as described in Sections R2.1-R2.1.1, R2.1.2 and R2.2." Modeling of Protection Systems, Control Systems requires new data collection effort and falls under Section 1600 of NERC Rules of Procedure. The list does not include Transformers.Suggest removing Protection System equipment and Control devices from the list and adding another sub-section which states "Models should reflect the limitations imposed by Protective Devices and Control systems characteristics. Define "New Technologies"

Organization	Question 1 Comment
	R1.1.3 Here it is better to include the Type of Forecast (50/50 or 90/10). A reference NERC Reliability Assessment Guidebook can be included here.

Response: Generation is not a defined term itself in the NERC glossary - thus it does not need to be capitalized in Requirement R1.1.1. Requirement R1, part 1.1.2 has been revised to include known outages of generation or Transmission Facilities with a minimum duration of 6 months.

1.1.2 Known outage(s) of generation or Transmission Facility(ies) with a duration of at least six months.

The SDT has revised R1.1.2 to remove "such as". The SDT has removed the equipment list under Requirement R1, part 1.1.2. Transmission lines, generators, and reactive power devices are already included in MOD standards. Circuit breakers, Protection System equipment, and control devices are not typically modeled - the impact of these devices are typically simulated and thus these are already included in Requirement R3, part 3.3, Requirement R4, part 4.3, and in header note 'c' in Table 1. New technologies were removed from the list and are already covered in the Corrective Action Plan under Requirement R2, part 2.7.1 in the revised standard.

New technologies include any technology that is not currently in use on the electric power System that helps improve efficiency (i.e., energy storage/production technologies, low sag conductors, solid state interrupters, etc.).

The SDT has deleted "year".

1.1.3 New planned Facilities and changes to existing Facilities

The SDT does not believe that a reference is needed to the NERC Reliability Assessment Guidebook since most utilities are using at least a 50/50 Load forecast as a minimum. No change made.

2. Requirement R2 — Please provide any specific comments on the requirement text, VRF, Time Horizon, measure associated with the requirement, data retention associated with the requirement, and/or the VSL associated with the requirement.

Summary Consideration: The industry had many comments on Requirement R2 but for the most part, the questions were requesting clarification. The SDT has changed a number of the parts of this requirement with the major changes being: part 2.1.4 and part 2.4.3 on sensitivities, additional clarification on part 2.2 for the Long-Term Transmission Planning Horizon and the addition of a new part 2.7.2 on multiple sensitivity deficiencies. The full list of changes is:

Year One: The first year that a Planning Coordinator or a Transmission Planner is responsible for assessing. This is further defined as the planning window that begins 12-18 months from the end of the current calendar year.

R2. Each Transmission Planner and Planning Coordinator shall prepare an annual Planning Assessment of its portion of the BES. This Planning Assessment shall use current or past studies, document assumptions, summarize documented results, and cover steady state analyses, short circuit analyses, and Stability analyses.

2.1.4 (previously 2.1.3) For each of the studies described in Requirement R2, parts 2.1.1 and 2.1.2, sensitivity case(s) shall be utilized to demonstrate the impact of changes to the basic assumptions used in the model for the list of items shown below. To accomplish this, the sensitivity analysis in the Planning Assessment must vary one or more of the following conditions not already included in the studies by a sufficient amount to stress the System within a range of credible conditions that demonstrate a measurable change in performance.

- Real and reactive forecasted Load.
- Expected transfers.
- Expected in service dates of new or modified Transmission Facilities.
- Reactive resource capability.
- Generation additions, retirements, or other dispatch scenarios.
- Controllable Loads and Demand Side Management.
- Duration or timing of planned Transmission outages.

2.1.5 (previously 2.1.4) When an entity's spare equipment strategy could result in the unavailability of major Transmission equipment that has a lead time of one year or more (such as a transformer), an analysis of the impact of this possible unavailability on System performance shall be assessed. The Planning Assessment shall reflect the P0, P1, and P2 categories identified in Table 1 during the conditions that the System is expected to experience due to the possible unavailability of the long lead time equipment.

2.2 The Long-Term Transmission Planning Horizon portion of the steady state analysis shall be assessed annually and be supported by the following annual current study, supplemented with qualified past studies as indicated in Requirement R2, part 2.6:

2.2.1 A current study assessing expected System peak Load conditions for one of the years in the Long-Term Transmission Planning Horizon and the rationale for why that year was selected.

2.3 The short circuit analysis portion of the Planning Assessment shall be conducted annually addressing the Near-Term Transmission Planning Horizon and can be supported by current or past studies as indicated in Requirement R2, part 2.6. The analysis shall be used to determine whether circuit breakers have interrupting capability for Faults that they will be expected to interrupt using the System short circuit model with any planned generation and Transmission Facilities in service which could impact the study area.

2.4 The Near-Term Transmission Planning Horizon portion of the Stability analysis shall be assessed annually and be supported by current or past studies as indicated in Requirement R2, part2.6. The following studies are required.

2.4.1 System peak Load for one of the five years. System peak Load levels shall include a Load model which represents the dynamic behavior of Loads that could impact the study area, considering the behavior of induction motor Loads. An aggregate System Load model which represents the overall dynamic behavior of the Load is acceptable.

2.4.3 For each of the studies described in Requirement R2, parts 2.4.1 and 2.4.2, sensitivity case(s) shall be utilized to demonstrate the impact of changes to the basic assumptions used in the model for the list of items shown below. To accomplish this, the sensitivity analysis in the Planning Assessment must vary one or more of the following conditions not already included in the studies by a sufficient amount to stress the System within a range of credible conditions that demonstrate a measurable change in performance.

- Load level, Load forecast, or dynamic model assumptions.
- Expected transfers.
- Expected in service dates of new or modified Facilities.
- Reactive resource capability.
- Generation additions, retirements, or other dispatch scenarios.

2.5 (new) The Long-Term Transmission Planning Horizon portion of the Stability analysis shall be assessed to address the impact of proposed generation additions or changes in that timeframe and be supported by current or past studies.

2.6.1 (previously 2.5.1) For steady state, short circuit, or Stability analysis: the study shall be five calendar years old or less, unless a technical rationale can be provided to demonstrate that the results of an older study are still valid.

2.6.2 (previously 2.5.2) For steady state, short circuit, or Stability analysis: the study shall not include any material changes unless a technical rationale can be provided to demonstrate that System changes do not impact the performance results in the study area.

2.7 (previously 2.6) For planning events shown in Table 1, when the analysis indicates an inability of the System to meet the performance requirements in Table 1, the Planning Assessment shall include Corrective Action Plan(s) addressing how the performance requirements will be met. Revisions to the Corrective Action Plan(s) are allowed in subsequent Planning Assessments but the planned System shall continue to meet the performance requirements in Table 1. Corrective Action Plan(s) do not need to be developed solely to meet the performance requirements for a single sensitivity run in accordance with Requirements R2, parts 2.1.4 and 2.4.3. The Corrective Action Plan(s) shall:

2.7 (previously 2.6) bullet 2: Installation, modification, or removal of Protection Systems or Special Protection Systems

2.7.2 (new) Include actions to resolve performance deficiencies identified in multiple sensitivity studies or provide a rationale for why actions were not necessary.

2.7.5 (previously 2.6.4) If situations arise that are beyond the control of the Transmission Planner or Planning Coordinator that prevent the implementation of a Corrective Action Plan in the required timeframe, then the Transmission Planner or Planning Coordinator is permitted to utilize Non-Consequential Load Loss and curtailment of Firm Transmission Service to correct the situation that would normally not be permitted in Table 1, provided that the Transmission Planner or Planning Coordinator documents that they are taking actions to resolve the situation. The

Transmission Planner or Planning Coordinator shall document the situation causing the problem, alternatives evaluated, and the use of Non-Consequential Load Loss or curtailment of Firm Transmission Service.

2.7.6 (previously 2.6.5) Be reviewed in subsequent annual Planning Assessments for continued validity and implementation status of identified System Facilities and Operating Procedures.

2.8 (previously 2.7) For short circuit analysis, if the short circuit current interrupting duty on circuit breakers determined in Requirement R2, part 2.3 exceeds their Equipment Rating, the Planning Assessment shall include a Corrective Action Plan to address the Equipment Rating violations. The Corrective Action Plan shall:

2.8.2 (previously 2.7.2) Be reviewed in subsequent annual Planning Assessments for continued validity and implementation status.

2.9 (previously 2.8) The Planning Assessment shall provide the expected largest Consequential Load Loss (megawatt Demand) identified by the analysis of P1 and P2 events in Table 1.

R2 VSL	The responsible entity failed to comply with Requirement R2, part 2.9 or Requirement R2, part 2.6.	The responsible entity failed to comply withRequirement R2, part 2.3 or part 2.8.	The responsible entity failed to comply with one of the following parts of Requirement R2: part 2.1, part 2.2, part 2.4, part 2.5, or part 2.7	The responsible entity failed to comply with two or more of thefollowing parts of Requirement R2: part 2.1, part 2.2, part 2.4, or part 2.7.

Organization	Question 2 Comment
Dominion - Electric Transmission	R2.1.3 - Dominion suggests that SDT needs to be more specific on which of thevariations to include. Also for the last bullet, the SDT needs to clarify the duration ortiming of planned transmission outages (in relation to Planning horizon). R2.4.1 - While we appreciate the intent of introducing induction motor modeling in simulations, this is a difficult proposal in actual practice. The question of how much of the load is comprised of induction motors and what is a reasonable/practical model has been around now for over twenty years yet is still not resolved satisfactorily. For example, we have heard several experts declare the CLOAD model is inadequate for study. NERC needs to take the lead in developing appropriate models for the widely used simulation software and a methodology for determining load composition prior to requiring induction Load modeling in dynamic simulation studies. Additionally, this requirement states that Aggregate System Load model is acceptable to represent the dynamic behavior of induction motor Loads. Our interpretation is that such aggregate models shall be inserted by the Planners at the time of study, over a specific study area as determined by TP, and these models are not to be represented in the interconnection-wide (i.e. ERAG/MMWG) dynamics base cases. If ERAG/MMWG dynamics base cases are populated with such aggregate load models, the dynamic simulation cases could become very difficult to solve, if not impossible. R2.8 - Dominion does not see any purpose in reporting largest consequential load loss. This is not easily calculated, and

Organization	Question 2 Comment
	would vary from year by year, season by season. R2.9 - Dominion requests further clarification. Is the intent of this requirement to develop criteria for maximum allowable non-consequential load loss prior to requiring a corrective action plan or to just calculate such a load loss where it is permitted in Table 1?

Response: Part 2.1.3 (now Part 2.1.4) has been revised to provide greater clarification. It is intended that the Planning Coordinator or the Transmission Planner will select the variation to include in the sensitivity studies.

2.1.4 For each of the studies described in Requirement R2, parts 2.1.1 and 2.1.2, sensitivity case(s) shall be utilized to demonstrate the impact of changes to the basic assumptions used in the model for the list of items shown below. To accomplish this, the sensitivity analysis in the Planning Assessment must vary one or more of the following conditions not already included in the studies by a sufficient amount to stress the System within a range of credible conditions that demonstrate a measurable change in performance.

- Real and reactive forecasted Load.
- Expected transfers.
- Expected in service dates of new or modified Transmission Facilities.
- Reactive resource capability.
- Generation additions, retirements, or other dispatch scenarios.
- Controllable Loads and Demand Side Management.
- Duration or timing of planned Transmission outages.

The last bullet in Part R2.1.3 (now Part 2.1.4) is intended to cover planned outages of Facilities in sensitivity studies if such planned outages are known at the time the planning studies are performed, for example, nuclear power plant refueling, generating unit maintenance, etc.

Part 2.4.1 is intended to allow the Planning Coordinator and Transmission Planner the discretion in the use of aggregated System Load models in Stability Studies, if specific models are not available. However, it does not dictate the methodology or the process on how the studies are to be done.

Parts 2.8 and 2.9 were intended to contribute to open and transparent transmission planning for peer review. The SDT reviewed both requirements and agrees that as written, they were unclear. Part 2.9 has been deleted. Part 2.8 has been revised and included as Part 2.9 in the new version to require that the Planning Assessment provides the expected largest Consequential Load Loss identified by the analysis of P1 and P2 events in Table 1 only.

2.9 The Planning Assessment shall provide the expected largest Consequential Load Loss (megawatt Demand) identified by the analysis of P1 and P2 events in Table 1.

Northeast Power Coordinating Council	It is recommended to replace the phrase prepare with conduct and document in the first sentence.R2.1.1 Comment The requirement to evaluate year one or year two should be removed. This is not consistent with the time horizon

Organization	Question 2 Comment
	identified in R2. R2.1.3 Comment - The emphasis on sensitivity testing in the existing section appears misdirected and should be focused on reasonable risk. The assessment should have to include a discussion of reasonable risk. The sensitivity list can be used to select sensitivities to assess risk. Having a requirement to perform one sensitivity just to meet the requirement of the standard does not add value to the assessment. R2.1.4 With respect to spare equipment strategy; this requirement imposes severe testing requirements upon the system. However, there is no discussion on the generation dispatch or system transfers that are to be used for this portion of the assessment. The expectations for changes in system stresses need to be clear as part of the standard. Additionally, this section does not contemplate changing the acceptability of load loss. After experiencing a major contingency such as this, some change in the acceptability of load loss should be expected. The standard should consider allowing Non-Consequential load loss for P1 & P2 events. The standard needs to allow Non-Consequential load loss for P3 & P4 events. Remove the wording (such as a transformer). What constitutes "spare equipment strategy"? Would a strategy that involves out-of-merit dispatch or operational restrictions be considered a valid "spare equipment strategy". If a transformer is lost, could a reconfiguration of the transmission system constitute a valid "spare equipment strategy" R2.2 Comment We suggest replacing the phrase a current System peak Load study with a valid System peak Load study in the first sentence. The word current is confusing as some read the word current to mean today's rather than valid. R2.3 Comment Please provide guidance as to what year should be represented when performing short circuit studies. R2.4.1 Comment ? Change to read: "For peak System Load levels, a Load model shall be used which appropriately represents the dynamic behavior of Loads, including consideration of the behavior of induction motor Loads or an aggregate System Load model which represents the overall dynamic behavior of the Load. R2.5.1 Comment We suggest deleting this requirement, and incorporating it into R2.5.2. R2.5.2 Comment To incorporate R.2.5.1 into R2.5.2; please modify the section as follows: For steady state, short circuit, or Stability analysis the study shall be less than five calendar years old or less: the latest Transmission Planning Horizon System model shall not include any material changes, such as, generation or Transmission additions/removals, or topology changes that have occurred in the intervening period and would impact the study area. Material generation changes could include: The addition/deletion/change of individual generating unit capability determined to be material by the Planning Coordinator or Transmission Planner. [A 20 MVA generator is fairly small in a 30,000 MW system and system concerns would already be addressed though the System Impact Study]" An aggregated addition/deletion/change to a group of generating units directly connected through their step-up transformer(s) to the BES determined to be material by the Planning Coordinator or Transmission Planner. R2.6 Priority Comment As written, this section undermines the value of the sensitivity testing. This section should require a corrective action plan to fix problems determined in sensitivity analysis if there is a reasonable risk of occurrence. We suggest making the standard read Provide documentation that explains the reasoning for the sensitivities considered and selected. R2.6 Comment At the end of the second sentence, the phrase in the tables is used. We suggest using more definitive

Organization	Question 2 Comment
	language such as in Table 1. R2.6.2 Comment The phrase Project Initiation Date needs to be defined. It is unclear if this is this the date of ground breaking, purchase orders being issued, solution study initiation, etc. Additionally, in the second sentence the phrase as well as an in-service date should be modified to read as well as a target in-service date. R2.6.3 Comment Plans can provide a target in-service year but not an actual in-service year. R2.6.4 Priority Comment There should be a cutoff point when changes occur beyond a certain date. When that date occurs, further changes will be evaluated in the next year's assessment. Otherwise, if a state makes a decision not to site a project a few weeks prior to the end of the assessment period, there will not be sufficient time to incorporate this into that year's assessment and develop corrective actions. R2.8 Comment Largest consequential load loss is not factored into the Planning Assessment and should therefore be deleted. R2.9 Comment This requirement is unclear. Is this requirement asking for each transmission planner to list their criteria for non-consequential load loss, or is it asking how much non-consequential load loss was being relied upon in the assessment? We recommend that the requirement be modified to require documentation of the maximum amount of non-consequential load loss that was relied upon during the assessment. It is strongly recommended that the standard should consider not allow non-consequential load loss to resolve any violation arising from the planning events in Table 1. Therefore, this requirement would then be deleted. The use of System Off-Peak Load is too general. Is the intention to have the system minimum load used here? Because of the seasonal differences in equipment ratings, seasonal peak and off peak (minimum) loads should be analyzed.

Response: The SDT was not able to locate the word "prepare" in the first sentence of Part 2.1.1. However, Requirement R2 states, "Each Transmission Planner and Planning Coordinator shall prepare an annual Planning Assessment of its portion of the BES. This Planning Assessment shall use current or past studies, document assumptions, document results, and shall cover steady state analyses, short circuit analyses, and Stability analyses". The SDT assumes that the comment was meant for this sentence. The SDT does not think that replacing "prepare" with "conduct and document" would add clarity, since Requirement R2 includes the requirement to document assumptions and results. No change made.

The SDT disagrees that the requirement to evaluate Year One and year two is inconsistent with the Time Horizon in R2. The new definition defines Year One as the first year that the planner is responsible for assessing. No change made.

Part 2.1.3 (now Part 2.1.4) has been rewritten to clarify the intent of the requirement. The Planning Coordinator or Transmission Planner can include a discussion of risk in response to the new Part 2.7.2 on the actions to resolve performance deficiencies identified in multiple sensitivity studies or provide a rationale for why actions were not necessary. No change made.

In Part 2.1.4 (now Part 2.1.5) when a piece of long lead-time Equipment is unavailable, System adjustments will need to be made. The System, after it is adjusted to accommodate that piece of Equipment out of service will be treated as the "normal" (P0) condition in Table 1 and the rest of Table 1 will be applied as stated. Part 2.1.4 is intended for the Planning Coordinator and/or Transmission Planner to take into account their spare equipment strategy for long lead time Equipment when assessing the performance of their System. If the loss of a piece of major Equipment can be replaced within a reasonable period of time, planning studies for the following year can assume that that piece of Equipment will be replaced. If not, its impact of unavailability would need to be assessed. Actions such as out of

Organization	Question 2 Comment
	merit dispatch, operational restrictions, System reconfiguration can be part of a Corrective Action Plan if the System cannot meet performance requirements without the Facility in service. Part 2.1.5 has been revised to require that the assessment reflect the P0, P1, and P2 categories identified in Table 1 during the conditions that the System is expected to experience due to the possible unavailability of the long lead time Equipment. **2.1.5** When an entity's spare equipment strategy could result in the unavailability of major Transmission equipment that has a lead time of one year or more (such as a transformer), an analysis of the impact of this possible unavailability on System performance shall be assessed. The Planning Assessment shall reflect the P0, P1, and P2 categories identified in Table 1 during the conditions that the System is expected to experience due to the possible unavailability of the long lead time equipment. Part 2.2 is intended to require a study performed in the current year, as opposed to studies performed in the past years. Part 2.2 has been revised to provide greater clarity. **2.2** The Long-Term Transmission Planning Horizon portion of the steady state analysis shall be assessed annually and be supported by the following annual current study, supplemented with qualified past studies as indicated in Requirement R2, part 2.6: For Part 2.3 the decision on the year to be represented in the study is left to the discretion of the Planning Coordinator or Transmission Planner. Part 2.3 only requires it to be either a study that was performed during the current year or in the past. For example, this year is 2009 and a study performed in 2009 is a current study, the study can investigate the System in a future year, which is at the discretion of the Planning Coordinator or Transmission Planner performing the study. Part 2.3 has been revised to provide greater clarity. **2.3** The short circuit analysis portion of the Planning Assessment shall be conducted annually addressing the Near-Term Transmission Planning Horizon and can be supported by current or past studies as indicated in Requirement R2, part 2.6. The analysis shall be used to determine whether circuit breakers have interrupting capability for Faults that they will be expected to interrupt using the System short circuit model with any planned generation and Transmission Facilities in service which could impact the study area. Part 2.4.1 was not changed as suggested because the intent of the last sentence is to allow the use of an aggregated System Load model as an appropriate Load representation. The suggested change could be read to mean that an aggregated System Load model would not appropriately represent the dynamic behavior of Loads. However, Part 2.4.1 has been revised to provide greater clarity. **2.4.1** System peak Load for one of the five years. System peak Load levels shall include a Load model which represents the dynamic behavior of Loads that could impact the study area, considering the behavior of induction motor Loads. An aggregate System Load model which represents the overall dynamic behavior of the Load is acceptable. Parts 2.5 .1 and 2.5.2 (new Parts 2.6.1 and 2.6.2) were not combined. While the SDT appreciates the concern that a 20 MW generation addition can be small compared to a large System, a NERC standard needs to be clear as to the applicability. A requirement, which contains "determined to be material by the Planning Coordinator or Transmission Planner", is not clear. Therefore, changing from 20 MW to "material" will also have to require justification from the Planning Coordinator or Transmission Planner on what is "material". Material has been deleted from the requirement. Part 2.6.2 and 2.6.3 have been removed. Part 2.6 has been modified and included as new Part 2.7. The intent is to allow discretion for the Planning Coordinator or Transmission Planner to correct those deficiencies if they are prevalent (i.e., occur in more than one sensitivity). Although not required, the standard does not preclude the Planning Coordinator or Transmission Planner to develop Corrective Action Plans for high risk scenarios. However, if the scenario is high risk, then it should have been included in the base assumptions in the assessment and the Corrective Action Plan would have been required. The end of the second sentence has been changed to refer to

Organization	Question 2 Comment
Table 1 as suggested. **2.7** For planning events shown in Table 1, when the analysis indicates an inability of the System to meet the performance requirements in Table 1, the Planning Assessment shall include Corrective Action Plan(s) addressing how the performance requirements will be met. Revisions to the Corrective Action Plan(s) are allowed in subsequent Planning Assessments but the planned System shall continue to meet the performance requirements in Table 1. Corrective Action Plan(s) do not need to be developed solely to meet the performance requirements for a single sensitivity run in accordance with Requirements R2, parts 2.1.4 and 2.4.3. The Corrective Action Plan(s) shall: Part 2.6.4 (now 2.7.5) allows the Planning Coordinator or Transmission Planner to address situations that are beyond its control by utilizing Non-Consequential Load Loss and/or curtailment of Firm Transmission Service, which are normally not permitted. Depending on the urgency of the need, the Corrective Action Plan may be developed outside the normal Assessment cycle at the discretion of the Planning Coordinator or Transmission Planner involved. No change made. Parts 2.8 and 2.9 were intended to contribute to open and transparent transmission planning for peer review. The SDT reviewed both requirements and agrees that as written, they were unclear. Part 2.9 has been deleted. Part 2.8 has been revised and included as Part 2.9 in the new version to require that the Planning Assessment provides the expected largest Consequential Load Loss identified by the analysis of P1 and P2 events in Table 1 only. **2.9** The Planning Assessment shall provide the expected largest Consequential Load Loss (megawatt Demand) identified by the analysis of P1 and P2 events in Table 1. The recommendation that "the standard should consider not allow non-consequential load loss to resolve any violation arising from the planning events in Table 1" will include also the multiple Contingencies, for which loss of Non-Consequential Load is allowed in the existing TPL Standards. While the sentiment is laudable, it may not be practical. No change made. The use of System Off-Peak Load is intended to be general to allow the Planning Coordinator or the Transmission Planner to use their best judgment suited to the study area, since the System must be able to meet performance requirements over all demand levels. The Planning Coordinator or Transmission Planner is not precluded from investigating more System conditions than are required in this standard. No change made.	
Transmission Planning	R2.1.4. COMMENT: For the analysis to reflect the contingencies in Table 1 (P0 through P7 plus Extreme Events) is excessive. R2.5.2. COMMENT: The 20 MW change listed in bullet items are extremely small to larger transmission systems and by themselves would be unlikely to change BES response. As drafted, requirement 2.5 may be interpreted to preclude the use of any previous study in which the base case is not identical to the current planning case. It is recommended 2.5.2 be rewritten as follows; For steady state, short circuit, or Stability analysis: the present System model shall not include any material changes, such as, generation or Transmission additions/removals, or topology changes that have occurred in the intervening period that would impact the study area. R2.6.2. COMMENT: What is considered a project initiation date is it implying a construction start date, or the first time that it was identified as a mitigation plan? Additionally, R2.6.2 and R2.6.3 are not necessary because a Corrective Action Plan, by definition, includes an "associated timetable for implementation". Recommend deleting this requirement. R2.8. COMMENT: Why is this data collection a requirement? The effort required to determine this data is substantial and the value of this data is questionable. Recommend deleting this requirement. R2.9. COMMENT: Why is this data collection a requirement? The effort required to determine this data is substantial and

Organization	Question 2 Comment
	the value of this data is questionable. Recommend deleting this requirement.

Response: Part 2.1.4 (now Part 2.1.5) has been revised to require that the assessment reflect the P0, P1, and P2 categories identified in Table 1 during the conditions that the System is expected to experience due to the possible unavailability of the long lead time equipment.

> **2.1.5** When an entity's spare equipment strategy could result in the unavailability of major Transmission equipment that has a lead time of one year or more (such as a transformer), an analysis of the impact of this possible unavailability on System performance shall be assessed. The Planning Assessment shall reflect the P0, P1, and P2 categories identified in Table 1 during the conditions that the System is expected to experience due to the possible unavailability of the long lead time equipment.

While the SDT appreciates the concern, the proposed revision could be interpreted as removing the threshold for minimum change in generation. Part 2.5.2 has been revised as Part 2.6.2 to include an alternative threshold to be based on the study area's installed generation capacity.

> **2.6.2** For steady state, short circuit, or Stability analysis: the study shall not include any material changes unless a technical rationale can be provided to demonstrate that System changes do not impact the performance results in the study area.

In our last meeting the SDT agreed to revise Part 2.6 (and included it as Part 2.7) and project initiation date is no longer required.

> **2.7** For planning events shown in Table 1, when the analysis indicates an inability of the System to meet the performance requirements in Table 1, the Planning Assessment shall include Corrective Action Plan(s) addressing how the performance requirements will be met. Revisions to the Corrective Action Plan(s) are allowed in subsequent Planning Assessments but the planned System shall continue to meet the performance requirements in Table 1. Corrective Action Plan(s) do not need to be developed solely to meet the performance requirements for a single sensitivity run in accordance with Requirements R2, parts 2.1.4 and 2.4.3. The Corrective Action Plan(s) shall:

Parts 2.8 and 2.9 were intended to contribute to open and transparent transmission planning for peer review. The SDT reviewed both requirements and agrees that as written, they were unclear. Part 2.9 has been deleted. Part 2.8 has been revised and included as Part 2.9 in the new version to require that the Planning Assessment provides the expected largest Consequential Load Loss identified by the analysis of P1 and P2 events in Table 1 only.

> **2.9** The Planning Assessment shall provide the expected largest Consequential Load Loss (megawatt Demand) identified by the analysis of P1 and P2 events in Table 1.

SERC Engineering Committee Planning Standards Subcommittee	R2.1: In R2.1, change the reference to requirement R2.6 (at the end of the last line) to R2.5. R2.1.4: In Requirement R2.1.4, recommend that the requirement be revised as follows: "When an entity's spare equipment strategy could result in the unavailability of major Transmission equipment that has a lead time of one year or more (such as a transformer), an analysis of the impact of this possible unavailability on System performance shall be assessed. The analysis shall reflect the Contingencies identified in Table 1 during the conditions that the System is expected to experience the possible unavailability of the long lead time equipment. R2.4.1: In Requirement R2.4.1, it is suggested that it be reworded to the following: "System peak Load for one of the five years, including Load models which appropriately represents the dynamic behavior of Loads, considering the behavior of induction motor Loads. An aggregate System Load model which represents the overall dynamic behavior of the Load is acceptable.

Organization	Question 2 Comment
	R2.5.1:With the elimination of the distinction between system and generating plant stability studies, the blanket requirement in R2.5.1 that all stability analyses be five calendar years old or less, regardless of any material changes to the system, would cause needless work to be performed on those plants or areas of the system where no changes are occurring. Recommend add the following to the end of R2.5.1: unless justification can be provided to demonstrate that the results of an older study are still valid. R2.6.2: In Requirement R2.6.2, what constitutes a "project initiation date," and how will it be used? Please clarify. R2.8: Please explain the reason why Requirement R2.8 is needed in the Assessment. Reporting the largest Consequential Load Loss does not impact reliability. R2.9: Please explain the reason why Requirement R2.9 is needed in the Assessment. Reporting the largest Non-Consequential Load Loss does not impact reliability.

Response: In the new version, Part.2.6 now contains the requirement for the use of past studies, so Part 2.1 now has the correct reference. No change made.

Part 2.1.4 (now Part 2.1.5) has been revised to require that the assessment reflect the P0, P1, and P2 categories identified in Table 1 during the conditions that the System is expected to experience due to the possible unavailability of the long lead time Equipment.

> **2.1.5** When an entity's spare equipment strategy could result in the unavailability of major Transmission equipment that has a lead time of one year or more (such as a transformer), an analysis of the impact of this possible unavailability on System performance shall be assessed. The Planning Assessment shall reflect the P0, P1, and P2 categories identified in Table 1 during the conditions that the System is expected to experience due to the possible unavailability of the long lead time equipment.

Part 2.4.1 has been revised to reflect your suggestion.

> **2.4.1** System peak Load for one of the five years. System peak Load levels shall include a Load model which represents the dynamic behavior of Loads that could impact the study area, considering the behavior of induction motor Loads. An aggregate System Load model which represents the overall dynamic behavior of the Load is acceptable.

Part 2.5.1 has been revised and included as Part 2.6.1 to address your concerns.

> **2.6.1** For steady state, short circuit, or Stability analysis: the study shall be five calendar years old or less, unless a technical rationale can be provided to demonstrate that the results of an older study are still valid.

In our last meeting the SDT agreed to revise Part 2.6 (and included it as Part 2.7) and project initiation date is no longer required.

> **2.7** For planning events shown in Table 1, when the analysis indicates an inability of the System to meet the performance requirements in Table 1, the Planning Assessment shall include Corrective Action Plan(s) addressing how the performance requirements will be met. Revisions to the Corrective Action Plan(s) are allowed in subsequent Planning Assessments but the planned System shall continue to meet the performance requirements in Table 1. Corrective Action Plan(s) do not need to be developed solely to meet the performance requirements for a single sensitivity run in accordance with Requirements R2, parts 2.1.4 and 2.4.3. The Corrective Action Plan(s) shall:

Parts 2.8 and 2.9 were intended to contribute to open and transparent transmission planning for peer review. The SDT reviewed both requirements and agrees that as written, they were unclear. Part 2.9 has been deleted. Part 2.8 has been revised and included as Part 2.9 in the new version to require that the Planning

Organization	Question 2 Comment
Assessment provides the expected largest Consequential Load Loss identified by the analysis of P1 and P2 events in Table 1 only. **2.9** The Planning Assessment shall provide the expected largest Consequential Load Loss (megawatt Demand) identified by the analysis of P1 and P2 events in Table 1.	
Modesto Irrigation District	On pages 6 and 7 under sections R2.1.3 and R2.4.3, I think the magnitude of the variations in the conditions asked for in the sensitivity cases, should be defined and not left to the analyst to decide. On page 8 under Section R2.5.2, examples of material changes for generation are given, but no examples for transmission changes. Shouldn't we include examples of material transmission changes, too Comments: Short circuit analyses is a local phenomenon and should not be required as part of a transmission planning assessment of the BES R2.8 and R2.9 load loss comment. We don't agree with R2.8 & R2.9. What reliability purpose is served by these requirements?
Response: The items in Parts R2.1.3 (now Part 2.1.4) and 2.4.3 are intended for use as guides. NERC Standards must allow room for discretion of the Planning Coordinator and/or Transmission Planner who are closer to the issues in their respective areas. In Part 2.5.2 the SDT removed the examples related to the generation changes and therefore have not added examples of transmission changes. Part 2.3 is intended for the Planning Coordinator and/or Transmission Planner to assess whether circuit breakers supporting the BES have interrupting capability for Faults that they will be expected to interrupt and is not specifically related to new planned Facilities. Part 2.3 has been revised to provide greater clarity. **2.3** The short circuit analysis portion of the Planning Assessment shall be conducted annually addressing the Near-Term Transmission Planning Horizon and can be supported by current or past studies as indicated in Requirement R2, part 2.6. The analysis shall be used to determine whether circuit breakers have interrupting capability for Faults that they will be expected to interrupt using the System short circuit model with any planned generation and Transmission Facilities in service which could impact the study area. Parts 2.8 and R2.9 were intended to contribute to open and transparent transmission planning for peer review. The SDT reviewed both requirements and agrees that as written, they were unclear. Part 2.9 has been deleted. Part 2.8 has been revised and included as Part 2.9 in the new version to require that the Planning Assessment provides the expected largest Consequential Load Loss identified by the analysis of P1 and P2 events in Table 1 only. **2.9** The Planning Assessment shall provide the expected largest Consequential Load Loss (megawatt Demand) identified by the analysis of P1 and P2 events in Table 1.	
OPUC	2. Requirement R2 Please provide any specific comments on the requirement text, VRF, Time Horizon, measure associated with the requirement, data retention associated with the requirement, and/or the VSL associated with the requirement.Comments: A: Short circuit of over-stressed breakers is already addressed in Table 1.Ex1: P2-3,4 (Internal Breaker Fault),Ex2: P4 (Stuck Breaker while attempting to clear a fault). B: In R2.1.4 Table 1, it is unclear how transformer contingency analysis can be aggregated or batched. It is also still unclear

Organization	Question 2 Comment
	whether corrective action plans are required solely to meet performance requirements for sensitivities.

Response: Part 2.3 is intended for the Planning Coordinator and/or Transmission Planner to assess the whether circuit breakers supporting the BES have interrupting capability for Faults that they will be expected to interrupt and is not specifically related to new planned Facilities. This is not the same as the examples cited. Part 2.3 has been revised to provide greater clarity.

> **2.3** The short circuit analysis portion of the Planning Assessment shall be conducted annually addressing the Near-Term Transmission Planning Horizon and can be supported by current or past studies as indicated in Requirement R2, part 2.6. The analysis shall be used to determine whether circuit breakers have interrupting capability for Faults that they will be expected to interrupt using the System short circuit model with any planned generation and Transmission Facilities in service which could impact the study area.

Part 2.1.4 (now Part 2.1.5) has been revised to require that the assessment reflect the P0, P1, and P2 categories identified in Table 1 during the conditions that the System is expected to experience due to the possible unavailability of the long lead time Equipment.

> **2.1.5** When an entity's spare equipment strategy could result in the unavailability of major Transmission equipment that has a lead time of one year or more (such as a transformer), an analysis of the impact of this possible unavailability on System performance shall be assessed. The Planning Assessment shall reflect the P0, P1, and P2 categories identified in Table 1 during the conditions that the System is expected to experience due to the possible unavailability of the long lead time equipment.

Part 2.6 has been revised and included as Part 2.7 to state that Corrective Action Plans do not need to be developed solely to meet the performance requirements for a single sensitivity run. Part 2.7.2 has also been added to require that the Corrective Action Plan include actions to resolve performance deficiencies identified in multiple sensitivity studies or provide a rationale for why actions were not necessary. The intent is to allow discretion for the Planning Coordinator or Transmission Planner to correct those deficiencies if they are prevalent (i.e., occur is more than one sensitivity).

> **2.7** For planning events shown in Table 1, when the analysis indicates an inability of the System to meet the performance requirements in Table 1, the Planning Assessment shall include Corrective Action Plan(s) addressing how the performance requirements will be met. Revisions to the Corrective Action Plan(s) are allowed in subsequent Planning Assessments but the planned System shall continue to meet the performance requirements in Table 1. Corrective Action Plan(s) do not need to be developed solely to meet the performance requirements for a single sensitivity run in accordance with Requirements R2, parts 2.1.4 and 2.4.3. The Corrective Action Plan(s) shall:
>
> **2.7.2** Include actions to resolve performance deficiencies identified in multiple sensitivity studies or provide a rationale for why actions were not necessary.

Bonneville Power Administration	Short circuit analyses is a local phenomenon and should not be required as part of a transmission planning assessment of the BES. In any case, the effects of failure of over-stressed breakers are already included in the Events to be assessed in Table 1. For example, P2-3 and P2-4 (Internal Breaker Fault), and P4 (Stuck Breaker while attempting to clear a fault). R2.1.1: Peak load modeled for the near term planning horizon may not be Year one or year two. Therefore, R2.1.1 should be revised to say System peak load for one of the five years. Clarity is needed in R2.1.4. The requirement to assess the Contingencies identified in Table 1 is too burdensome. This requirement does not specify any limits on the equipment for which an analysis must be conducted. As currently drafted, this could require a separate analysis for each transformer (or any long lead-time equipment) for which a spare is not available. A separate initial case would need to be developed to assess the Contingencies identified in Table 1 for each transformer.

Organization	Question 2 Comment
	This could result in a countless number of additional cases. We recommend a threshold be established, such as all transformers with a low side voltage above 200 kV. We also recommend changing this from a separate sub-Requirement to one of the sensitivities to be considered under 2.1.3. We also believe that the statement at the end of R2.6 that indicates corrective action plans are not required solely to meet the performance requirements for sensitivities should also apply to the spare equipment requirement. The 20 MW threshold identified as material change for generation in R2.5 is too small. The limit should be raised or based on a percentage of the study area's installed generating capacity. R2.8 should be deleted. It is not necessary for reliability. What will be done with this information on the largest Consequential Load Loss and the associated event caused by any P1 event and any P2 event? if it is documented? R2.9 should be deleted. It is not necessary for reliability. It will be difficult to determine the maximum permissible Non-Consequential Load value. It will end up being based on cost (monetary, societal, environmental, etc.), which is dependent, among other things, on the types of load being served. It very well may be a case by case situation.

Response: Part 2.3 is intended for the Planning Coordinator and/or Transmission Planner to assess the whether circuit breakers supporting the BES have interrupting capability for Faults that they will be expected to interrupt and is not specifically related to new planned Facilities. Part 2.3 has been revised to provide greater clarity.

> **2.3** The short circuit analysis portion of the Planning Assessment shall be conducted annually addressing the Near-Term Transmission Planning Horizon and can be supported by current or past studies as indicated in Requirement R2, part 2.6. The analysis shall be used to determine whether circuit breakers have interrupting capability for Faults that they will be expected to interrupt using the System short circuit model with any planned generation and Transmission Facilities in service which could impact the study area.

Part 2.1.1 is intended to require studies for System Peak Load Conditions for 2 of the years in the near-term planning horizon: 1) A Year five case to identify potential problem that can be addressed if the planned projects proceed as scheduled. 2) A Year one or Year two case to identify any potential problems unanticipated in the five-year case, which if not addressed, could impact operations as time progresses. Therefore, the SDT declines to make the change as suggested.

Part 2.1.4 (now Part 2.1.5) has been revised to require that the assessment reflect the P0, P1, and P2 categories identified in Table 1 during the conditions that the System is expected to experience due to the possible unavailability of the long lead time Equipment.

> **2.1.5** When an entity's spare equipment strategy could result in the unavailability of major Transmission equipment that has a lead time of one year or more (such as a transformer), an analysis of the impact of this possible unavailability on System performance shall be assessed. The Planning Assessment shall reflect the P0, P1, and P2 categories identified in Table 1 during the conditions that the System is expected to experience due to the possible unavailability of the long lead time equipment.

Part 2.5 has been revised and references to the 20 MW change have been deleted.

> **2.5** The Long-Term Transmission Planning Horizon portion of the Stability analysis shall be assessed to address the impact of proposed generation additions or changes in that timeframe and be supported by current or past studies.

Parts 2.8 and 2.9 were intended to contribute to open and transparent transmission planning for peer review. The SDT reviewed both requirements and agrees

Organization	Question 2 Comment
that as written, they were unclear. Part 2.9 has been deleted. Part 2.8 has been revised and included as Part 2.9 in the new version to require that the Planning Assessment provides the expected largest Consequential Load Loss identified by the analysis of P1 and P2 events in Table 1 only. **2.9** The Planning Assessment shall provide the expected largest Consequential Load Loss (megawatt Demand) identified by the analysis of P1 and P2 events in Table 1.	
MRO NERC Standards Review Subcommittee	MRO NSRS proposes the following comments for R2: Modify R2.6.2 to remove the obligation to include the project initiation date. The inclusion of this date would add unnecessary work that is not needed to assure adequate BES reliability In addition, it is not clear whether initiation refers to the commencement of engineering, design, construction, etc.Augment R2.6.5 to include annual verification of the continued validity of the Corrective Action Plan because the value of implementation status is dependent on the status of continued validity. MRO NSRS suggests this text: Be reviewed in subsequent annual Planning Assessments for continued validity and implementation status . . . Augment R2.7.2 to include annual verification of the continued validity of the Corrective Action Plan because the value of implementation status is dependent on the status of continued validity. MRO NSRS suggests this text that is similar to R2.6.5: Be reviewed in subsequent annual Planning Assessments for continued validity and implementation status. Remove R2.8. MRO NSRS does not know of any reason why the investigation and inclusion of the largest Consequential Load Loss caused by any P1 or any P2 events is needed to assure adequate BES reliability. In addition, all events involving Consequential Load Loss are studied, not just the largest load loss (see R3.3.1).
Response: In our last meeting the SDT agreed to revise Part 2.6 (and included it as Part 2.7) and project initiation date is no longer required. **2.7** For planning events shown in Table 1, when the analysis indicates an inability of the System to meet the performance requirements in Table 1, the Planning Assessment shall include Corrective Action Plan(s) addressing how the performance requirements will be met. Revisions to the Corrective Action Plan(s) are allowed in subsequent Planning Assessments but the planned System shall continue to meet the performance requirements in Table 1. Corrective Action Plan(s) do not need to be developed solely to meet the performance requirements for a single sensitivity run in accordance with Requirements R2, parts 2.1.4 and 2.4.3. The Corrective Action Plan(s) shall: Parts 2.6.5 and 2.7.2 have been revised and included as Parts 2.7.6 and 2.8.2 respectively to reflect your suggestion. **2.7.6** Be reviewed in subsequent annual Planning Assessments for continued validity and implementation status of identified System Facilities and Operating Procedures. **2.8.2** Be reviewed in subsequent annual Planning Assessments for continued validity and implementation status. Part 2.8 is intended to contribute to open and transparent transmission planning for peer review. The SDT reviewed the requirement and agrees that as written, it was unclear. Part 2.8 has been revised and included as Part 2.9 in the new version to require that the Planning Assessment provides the expected largest Consequential Load Loss identified by the analysis of P1 and P2 events in Table 1 only. **2.9** The Planning Assessment shall provide the expected largest Consequential Load Loss (megawatt Demand) identified by the analysis of P1 and P2 events in Table 1.	

Organization	Question 2 Comment
SERC Engineering Committee Dynamics Review Subcommittee (DRS)	1. R2.1.4 Loss of 2 transformers is itself a very severe contingency. However, when it is combined with R2.1.4 (spare equipment strategy) it can lead to a triple contingenecy which is unnecessarily severe and has an extremely low probability of occurrence. We recommend that the requirement be deleted from the standard. In the subrequirements of 2.1.3 and 2.4.3, the use of the word timing is unclear. Consider using in service date or schedule for. With the elimination of the distinction between system and generating plant stability studies, the blanket requirement in R2.5.1 that all stability analyses be five calendar years old or less, regardless of any material changes to the system, would cause needless work to be performed on those plants or areas of the system where no changes are occurring. Recommend add the following to the end of R2.5.1: unless justification can be provided to demonstrate that the results of an older study are still valid.

Response: Part 2.1.4 (now Part 2.1.5) is intended for the Planning Coordinator and/or Transmission Planner to take into account their spare Equipment strategy for long lead time Equipment when assessing the performance of their System. If the loss of a piece of major Equipment can be replaced within a reasonable period of time, planning studies for the following year can assume that that piece of Equipment will be replaced. If not, its impact of unavailability would need to be assessed. Part 2.1.5 has been revised to require that the assessment reflect the P0, P1, and P2 categories identified in Table 1 during the conditions that the System is expected to experience due to the possible unavailability of the long lead time Equipment.

> **2.1.5** When an entity's spare equipment strategy could result in the unavailability of major Transmission equipment that has a lead time of one year or more (such as a transformer), an analysis of the impact of this possible unavailability on System performance shall be assessed. The Planning Assessment shall reflect the P0, P1, and P2 categories identified in Table 1 during the conditions that the System is expected to experience due to the possible unavailability of the long lead time equipment.

Parts 2.1.3 (now Part 2.1.4) and 2.4.3 have been revised to reflect your suggestion.

> **2.1.4** For each of the studies described in Requirement R2, parts 2.1.1 and 2.1.2, sensitivity case(s) shall be utilized to demonstrate the impact of changes to the basic assumptions used in the model for the list of items shown below. To accomplish this, the sensitivity analysis in the Planning Assessment must vary one or more of the following conditions not already included in the studies by a sufficient amount to stress the System within a range of credible conditions that demonstrate a measurable change in performance.
>
> - Real and reactive forecasted Load.
> - Expected transfers.
> - Expected in service dates of new or modified Transmission Facilities.
> - Reactive resource capability.
> - Generation additions, retirements, or other dispatch scenarios.
> - Controllable Loads and Demand Side Management.
> - Duration or timing of planned Transmission outages.

Organization	Question 2 Comment
	2.4.3 For each of the studies described in Requirement R2, parts 2.4.1 and 2.4.2, sensitivity case(s) shall be utilized to demonstrate the impact of changes to the basic assumptions used in the model for the list of items shown below. To accomplish this, the sensitivity analysis in the Planning Assessment must vary one or more of the following conditions not already included in the studies by a sufficient amount to stress the System within a range of credible conditions that demonstrate a measurable change in performance. • Load level, Load forecast, or dynamic model assumptions. • Expected transfers. • Expected in service dates of new or modified Facilities. • Reactive resource capability. • Generation additions, retirements, or other dispatch scenarios. Part 2.5.1 has been revised and included as Part 2.6.1 to address your concerns. **2.6.1** For steady state, short circuit, or Stability analysis: the study shall be five calendar years old or less, unless a technical rationale can be provided to demonstrate that the results of an older study are still valid.
SERC Engineering Committee Reliability Review Subcommittee (RRS)	The proposed standard not only raises the bar for system performance requirements, but also raises the bar for reporting and documentation. We need to employ almost as many librarians and technical writers as engineers to develop and keep track of the documentation. Engineers need to spend more time performing the studies and spend less time documenting studies keeping track of documentation for multiple years. R2 Instead of document results the requirement should be to summarize results. While results will be documented, the Planning Assessment should just include a summary. R2.1 What's the value in being able to use qualified past studies if you have to use annual current studies? Strike the words supplemented with and insert the word or. In R2.1, change the reference to requirement R2.6 (at the end of the last line) to R2.5. Do not understand the rationale for being so prescriptive in requiring specific years to be studied in R2.1.1. Why not allow the TP and/or PC to decide on the three years to be studied in the Near Term? In the subrequirements of R2.1.3 and R2.4.3, the use of the word "timing" is unclear. Consider using in service date or schedule for. " In R2.1.3, it is suggested that the studies be referred to as the "base studies" to avoid confusion with the sensitivity studies. Also suggest that another phrase be added at the end for clarity. The entire R2.1.3 would then be as follows: For each of the base studies described in Requirements R2.1.1 and R2.1.2, sensitivity case(s) that are intended to stress the System with variations in one or more of the following conditions not already included in the studies shall be included in the Assessment. Sensitivity studies would include changes to:oIn Requirement R2.1.4, it is suggested that language be added to reflect the possible unavailability of the equipment, such as: When an entity's spare equipment strategy could result in the unavailability of major Transmission equipment that has a lead

Organization	Question 2 Comment
	time of one year or more (such as a transformer), an analysis of the impact of this possible unavailability on System performance shall be assessed. The analysis shall reflect the Contingencies identified in Table 1 during the conditions that the System is expected to experience the possible unavailability of the long lead time equipment. How would adequate lead times be determined" In Requirement R2.1.4, recommend that the requirement be revised as follows: When an entity's spare equipment strategy could result in the unavailability of major Transmission equipment that has a lead time of one year or more (such as a transformer), an analysis of the impact of this possible unavailability on System performance shall be assessed. The analysis shall reflect the Contingencies identified in Table 1 during the conditions that the System is expected to experience the possible unavailability of the long lead time equipment. Since R2.3 short circuit analysis is a new raising the bar requirement, should the implementation plan for this be for 5 years like the other new requirements? R2.3 Insert the phrase "one year of after the word addressing. In Requirements R2.3 and R2.4, do we need a reference to Requirement R2.5 for the past studies" Further clarification is needed in R2.4.1 concerning load models that appropriately represent the dynamic behavior of loads. In Requirement R2.4.1, it is suggested that it be reworded to the following: System peak Load for one of the five years, including Load models which appropriately represents the dynamic behavior of Loads, considering the behavior of induction motor Loads. An aggregate System Load model which represents the overall dynamic behavior of the Load is acceptable. R2.4.1: It is not clear how much Load must have a dynamic model. Likely, it must still be proven that the analysis software can accommodate every load in the model having a load model that includes induction motor models. To help address this, revise Load to be Load that could impact the study area is acceptable. Is a NERC drafting team addressing these issues to determine an industry standard? Load models referenced in R2.4.1 should be confined to the consideration of transient stability study work. In Requirement R2.4.3, it is suggested that this sub-requirement be reworded to the following: For each of the base studies described in Requirements R2.4.1 and R2.4.2, sensitivity case(s) that are intended to stress the System with variations in one or more of the following conditions not already included in the base studies shall be included in the Assessment. Sensitivity studies would include changes to: Regarding Requirement R2.6, it is suggested that the word "modeled" be added as follows: For Planning Events shown in Table 1, when the analysis indicates an inability of the System to meet the performance requirements in Table 1, the Planning Assessment shall include Corrective Action Plans addressing how the performance requirements will be met. Revisions to the Corrective Action Plans are allowed in subsequent assessments but the System modeled shall continue to meet the performance requirements in the tables. Corrective Action Plans do not need to be developed solely to meet the performance requirements for sensitivities run in accordance with Requirements R2.1.3 and R2.4.3. The Corrective Action Plan shall: In bullet three of Requirement R2.6.1, would we allow automatic generation tripping for a single (P1) event if it is not consequential? It seems that tripping of generation should be restricted to P2 events 2 or 3 at a minimum. In bullet five of Requirement R2.6.1, is there a maximum duration that operating procedures can be used before a capital

Organization	Question 2 Comment
	project must be included (or completed) in the Corrective Action Plan? With the elimination of the distinction between system and generating plant stability studies, the blanket requirement in R2.5.1 that all stability analyses be five calendar years old or less, regardless of any material changes to the system, would cause needless work to be performed on those plants or areas of the system where no changes are occurring. Similar to the draft MOD-026-1 standard, this period should be 10 years. With the elimination of the distinction between system and generating plant stability studies, the blanket requirement in R2.5.1 that all stability analyses be five calendar years old or less, regardless of any material changes to the system, would cause needless work to be performed on those plants or areas of the system where no changes are occurring. Recommend add the following to the end of R2.5.1: unless justification can be provided to demonstrate that the results of an older study are still valid. R2.5.2 Suggest deleting the phrase Material generation changes could include: and the two accompanying bullets. A change of 20 MW on a large system may not always be material. In Posting #2, undervoltage load shed, underfrequency load shed, and Special Protection Schemes were considered to be Non-Consequential Load Loss. In R2.6.1, installation or modification of Protection Systems or Special Protection Systems are now allowed as part of the Corrective Action Plan. Should undervoltage and underfrequency load shed also be allowed in the Corrective Action Plan? In Requirement R2.6.2, what constitutes a "project initiation date," and how will it be used? Please clarify. Please explain the reason why Requirement R2.8 is needed in the Assessment and how does reporting the largest Consequential Load Loss impact reliability? Please explain the reason why Requirement R2.9 is needed in the Assessment and how does reporting the largest Non-Consequential Load Loss impact reliability? If contingencies occur inside one utility that affect facilities in another utility, which utility is responsible for running these studies during the annual assessments?? R2.8 and R2.9 should be deleted. We don't see a reliability-related need for these requirements. In R2.9, does the requirement require the maximum non-consequential load that can occur for contingencies in Table 1 or does it require just the maximum that a utility will allow on its system? Suggest clarifying permissible or perhaps using similar language as found in R2.8. R2.9: One cannot determine the maximum permissible Non-Consequential Load Loss for every Planning Event. First of all, this should not be a requirement, as it is, for those events that do not even cause Non-Consequential Load Loss. Secondly, to obtain the maximum permissible value, one would have to stress the system in some way until one of the performance requirements are violated. That is an unreasonable stipulation and cumbersome to perform such an analysis.
Response: Requirement R2 has been revised to reflect your suggestion. **R2.** Each Transmission Planner and Planning Coordinator shall prepare an annual Planning Assessment of its portion of the BES. This Planning	

Organization	Question 2 Comment
	Assessment shall use current or past studies, document assumptions, summarize documented results, and cover steady state analyses, short circuit analyses, and Stability analyses. In Part 2.1 it is envisioned that not all parts of the studies on which the Assessment is to be based can rely on past studies. For example, a study on year five performed during the past year may not be representative of year five in the current year. A past study can still be used if it can be demonstrated that the requirements for use of past studies are met. No change made. In the new version, Part 2.6 now contains the requirement for the use of past studies, so Part 2.1 now has the correct reference. No change made. Part 2.1.1 is intended to require studies for System Peak Load Conditions for 2 of the years in the near-term planning horizon: 1) A Year five case to identify potential problem that can be addressed if the planned projects proceed as scheduled. 2) A Year one or Year two case to identify any potential problems unanticipated in the five-year case, which if not addressed, could impact operations as time progresses. Therefore, the SDT declines to make the change as suggested. Parts 2.1.3 (now Part 2.1.4) and R2.4.3 have been revised to clarify the word "timing". **2.1.4** For each of the studies described in Requirement R2, parts 2.1.1 and 2.1.2, sensitivity case(s) shall be utilized to demonstrate the impact of changes to the basic assumptions used in the model for the list of items shown below. To accomplish this, the sensitivity analysis in the Planning Assessment must vary one or more of the following conditions not already included in the studies by a sufficient amount to stress the System within a range of credible conditions that demonstrate a measurable change in performance. • Real and reactive forecasted Load. • Expected transfers. • Expected in service dates of new or modified Transmission Facilities. • Reactive resource capability. • Generation additions, retirements, or other dispatch scenarios. • Controllable Loads and Demand Side Management. • Duration or timing of planned Transmission outages. **2.4.3** For each of the studies described in Requirement R2, parts 2.4.1 and 2.4.2, sensitivity case(s) shall be utilized to demonstrate the impact of changes to the basic assumptions used in the model for the list of items shown below. To accomplish this, the sensitivity analysis in the Planning Assessment must vary one or more of the following conditions not already included in the studies by a sufficient amount to stress the System within a range of credible conditions that demonstrate a measurable change in performance. • Load level, Load forecast, or dynamic model assumptions. • Expected transfers. • Expected in service dates of new or modified Facilities. • Reactive resource capability. • Generation additions, retirements, or other dispatch scenarios. The SDT reviewed Part 2.1.3 and declined to use the term "base study" because "base study" may have different meanings in different parts of the continent, and

Organization	Question 2 Comment
the term, "studies described in Parts 2.1.1 and R2.1.2" should be sufficient to avoid confusion. No change made. Part 2.1.4 (now Part 2.1.5) is intended for the Planning Coordinator and/or Transmission Planner to take into account their spare Equipment strategy for long lead time Equipment when assessing the performance of their System. If the loss of a piece of major Equipment can be replaced within a reasonable period of time, planning studies for the following year can assume that that piece of Equipment will be replaced. If not, its impact of unavailability would need to be assessed. Part 2.1.5 has been revised to require that the assessment reflect the P0, P1, and P2 categories identified in Table 1 during the conditions that the System is expected to experience due to the possible unavailability of the long lead time Equipment. **2.1.5** When an entity's spare equipment strategy could result in the unavailability of major Transmission equipment that has a lead time of one year or more (such as a transformer), an analysis of the impact of this possible unavailability on System performance shall be assessed. The Planning Assessment shall reflect the P0, P1, and P2 categories identified in Table 1 during the conditions that the System is expected to experience due to the possible unavailability of the long lead time equipment. The SDT does not feel that Part 2.3 raises the bar as entities should have been performing these studies all along. No change made. The SDT declines to revise Part 2.3 to include short circuit analysis for one of the years in the Near-Term Transmission Planning Horizon because Part 2.3 only requires that a Planning Assessment be performed. Past studies can be used to support the Planning Assessment. No change made. Parts 2.3 and 2.4 have been revised to include the reference to the requirements for use of past studies. **2.3** The short circuit analysis portion of the Planning Assessment shall be conducted annually addressing the Near-Term Transmission Planning Horizon and can be supported by current or past studies as indicated in Requirement R2, part 2.6. The analysis shall be used to determine whether circuit breakers have interrupting capability for Faults that they will be expected to interrupt using the System short circuit model with any planned generation and Transmission Facilities in service which could impact the study area. **2.4** The Near-Term Transmission Planning Horizon portion of the Stability analysis shall be assessed annually and be supported by current or past studies as indicated in Requirement R2, part 2.6. The following studies are required: Part 2.4.1 has been revised to reflect your suggestion. In addition, Requirement R2.4 concerns only "The Near-Term Transmission Planning Horizon portion of the Stability analysis". Part 2.4.1 is a sub-part of Part 2.4, and so should also carry the same limitation. **2.4.1** System peak Load for one of the five years. System peak Load levels shall include a Load model which represents the dynamic behavior of Loads that could impact the study area, considering the behavior of induction motor Loads. An aggregate System Load model which represents the overall dynamic behavior of the Load is acceptable. The SDT reviewed Part 2.4.3 and declined to use the term "base study" because "base study" may have different meanings in different parts of the continent, and the term, "studies described in Parts 2.4.1 and R2.4.2" should be sufficient to avoid confusion. No change made. Part 2.6 has been revised and included as Part 2.7 to reflect your suggestion. The third bullet in Part 2.6.1 is intended to meet the requirements in Table 1. Generation tripping is allowed at the discretion of the Planning Coordinator or Transmission Planner for P1 Events as long as there is no loss of firm Non-Consequential Load. In addition, in the fifth bullet, the duration for use of an operating procedure is also at the discretion of the Planning Coordinator or Transmission Planner because it may not be feasible environmentally to implement Transmission reinforcements in some locations. Part 2.5.1 has been revised and included as Part 2.6.1 to address your concerns, but the SDT disagrees that the timeframe should be changed to 10 years. **2.6.1** For steady state, short circuit, or Stability analysis: the study shall be five calendar years old or less, unless a technical rationale can be provided

Organization	Question 2 Comment
	to demonstrate that the results of an older study are still valid. Part 2.5 has been revised to reflect your suggestion. **2.5** The Long-Term Transmission Planning Horizon portion of the Stability analysis shall be assessed to address the impact of proposed generation additions or changes in that timeframe and be supported by current or past studies. Use of generation tripping not precluded within the Standard and the maximum duration for operating procedures in Corrective Action Plans is not addressed within the standard. UVLS and UFLS are not precluded in the Corrective Action Plan for those events where controlled load shedding is allowed. The Standard does not address the acceptability of the tools to be used for any Corrective Action Plan. In our last meeting the SDT agreed to revise Part 2.6 (and included it as Part 2.7) and project initiation date is no longer required. **2.7** For planning events shown in Table 1, when the analysis indicates an inability of the System to meet the performance requirements in Table 1, the Planning Assessment shall include Corrective Action Plan(s) addressing how the performance requirements will be met. Revisions to the Corrective Action Plan(s) are allowed in subsequent Planning Assessments but the planned System shall continue to meet the performance requirements in Table 1. Corrective Action Plan(s) do not need to be developed solely to meet the performance requirements for a single sensitivity run in accordance with Requirements R2, parts 2.1.4 and 2.4.3. The Corrective Action Plan(s) shall: Parts 2.8 and 2.9 were intended to contribute to open and transparent Transmission planning for peer review. The SDT reviewed both requirements and agrees that as written, they were unclear. Part 2.9 has been deleted. Part 2.8 has been revised and included as Part 2.9 in the new version to require that the Planning Assessment provides the expected largest Consequential Load Loss identified by the analysis of P1 and P2 events in Table 1 only. **2.9** The Planning Assessment shall provide the expected largest Consequential Load Loss (megawatt Demand) identified by the analysis of P1 and P2 events in Table 1. If Contingencies occur inside one utility that affect facilities in another utility, the Planning Coordinator or Transmission Planner for the utility, whose system is impacted would be responsible for performing the annual Assessment for those contingencies known to cause the impact. A certain amount of coordination will need to occur between the utilities. The parties can then mutually agree upon a Corrective Action Plan.
FirstEnergy Corp	The standard provides prescriptive language in requirement R2.4.1 regarding dynamic stability load models but is silent on steady-state load modeling. Most transmission planners use a conservative approach of simulating constant power loads in the steady-state environment, but other steady-state load modeling assumptions such as constant impedance load and constant current load can be utilized. At a minimum, the standard should require the transmission planner to document its load modeling assumptions for steady-state simulations. To this end, we suggest a new sub-requirement R2.1.1 be placed ahead of the existing R2.1.1 that parallels R2.4.1 and indicates the TP should document its load modeling assumptions for steady-state simulations. Specific comments, Requirements of R2A. R2.1: The requirement incorrectly references R2.6 which should be a reference to R2.5. B. R2.1.1: We propose that the SDT adjust requirement R2.1.1 to annually require one current year Near-Term and one Long-Term study, with the Long-Term study required to alternate between year six and year ten every other assessment year. This would reduce the workload on the industry and cover the mid-point transition period between the Near-term and

Organization	Question 2 Comment
	Long-Term horizons that the standard team believes needs some attention. We find the requirement to perform two Near-Term studies and one Long-Term study each year overly burdensome, in light of the increased workload caused by sensitivity analysis for each steady-state and stability review that is required. FE believes that one current year study within each time period should suffice in being able to interpolate and extrapolate results to cover the entire assessment range; especially when supplemented with qualified past study results. C. We offer the following comments related to requirement R2.4.1: 1. In the last round of comments we made the following comment "This requirement should be separated into two requirements as it covers two distinct topics; a) peak load study for one of the near-term years and b) dynamic load modeling." The SDT responded "...This Requirement is to make you properly represent the dynamic behavior of Loads at high System Load levels." Apparently, the SDT did not agree with our recommendation to split the requirement as no change was made in this regard. Therefore, as written the standard in R2.4.2 (stability study of the Off-Peak Load level) seems to imply that the appropriate modeling of dynamic behavior of loads, including consideration of induction motor loads, is NOT required for the Off-Peak Load stability study. Please clarify or confirm this view of R2.4.2. 2. R2.4.1: We are still of the opinion that the word "appropriately" is vague and only serves to add confusion within this requirement. It's recommended that "appropriately" be struck from the requirement. 3. R2.4.1: In Draft 3, the SDT added text to this requirement that states "An aggregate System Load model which represents the overall dynamic behavior of the Load is acceptable" to clarify that a detailed dynamic Load model is not required at each bus. We understand this to mean that the model is not expected to try and replicate the dynamic behavior of individual end-user Load characteristics and that general approximations for a customer class(es) (residential, commercial or industrial) simulated at a given load bus is acceptable. 4. Based on our comments C.1 through C.3 we propose the following requirement language: R2.4.1. System peak Load for one of the five years.R2.4.2. System Off-Peak Load for on of the five years.R2.4.3. Load models used for stability analysis shall represent the dynamic behavior of Loads, including the behavior of induction motor Loads. The study shall document assumptions made for representing the dynamic behavior of Loads, based on the following load classes - residential, commercial and industrial. D. R2.5.2: For clarity and readability we propose to insert the word "that" between the words "and would" so the requirement reads "...intervening period and that would impact ...". E. R2.6.1: This requirement indicates that an entity's Corrective Action Plans list situations where Table 1 Performance Criteria are not met and the associated actions needed to achieve required System performance. What if the actions and plans associated with newly identified deficiencies (current year studies) are not yet fully known and require further analysis and a more detailed study of various options. Would it be acceptable for a TP to indicate that the planned solution is To Be Determined? This could be a likely scenario for a long-term planning horizon study which may identify a number of deficiencies which require more detailed analysis to determine the appropriate solution. F. R2.6.2: We believe this requirement is overly prescriptive in requiring a project initiate date. The standard should not question an entity's project management but stay focused on whether or not the Correct Action Plan was put in place in a timely fashion. We propose that the team strike from this requirement the reference to project initiation date and focus on

Organization	Question 2 Comment
	whether or not Corrective Action Plans were completed in a timely manner to ensure Table 1 Performance Criteria is met. Additionally, project initiation date is pertinent to a operating procedure solution that is allowed by the standard. R2.6.4: We support requirement R2.6.4 but suggest the word "prudent" be struck from the text of the requirement as it can be subjective and open for debate. G. R2.7: This requirement introduces additional Corrective Action Plan requirements beyond what is stated in R2.6. FE proposes that the SDT restructure the two requirements into a single requirement (and sub-requirements) focused on Corrective Action Plans. H. R2.8: Does this requirement apply to sensitivity simulations? If so, it has limited applications to only those sensitivity analyses that consider variations in load such as a higher forecast (90/10), or increased reactive load (sensitivity to poor power-factor loads), etc. The SDT should consider clarifying the intent of the requirement if each current year study as well as their corresponding sensitivity simulation model(s) is intended to have this information documented within the assessment report. I. R2.9: We ask the SDT to confirm or correct our understanding that the requirement is asking about a TPs criteria for maximum allowable non-consequential load drop and NOT the maximum non-consequential load shed required to meet performance criteria for a particular contingency evaluation. We agree with the stated Measures, VRF, Time-Horizon, Data Retention and VSL of requirement R2

Response: The language does not preclude the documentation of the steady state Load model used because steady state assumption of Load model is a degree of conservativeness. See header note b. No change made.

In the new version, Part 2.6 now contains the requirement for the use of past studies, so Part 2.1 now has the correct reference. No change made.

As written, Requirements R2 and Part 2.1.1 provides flexibility for the Planning Coordinator or Transmission Planner to use past studies to support the current year assessment and to assess other years in addition to those identified in Part 2.1.1. So the suggestion to alternate between year six and year ten every other assessment is already allowed as written. No change made.

In Part 2.4.1 the SDT specifies the dynamic Load model representation for on peak because the System voltages are generally lower during on peak. The percentage of motor load, e.g., in air conditioners, could significantly increase reactive power requirements especially when they stall due to low System voltage and can therefore impact dynamic System performance on-peak. However, motor Load would likely not pose the same problem during off-peak as the System voltages are usually higher. So, in Part 2.4.2, it can be left to the discretion of the Planning Coordinator or Transmission Planner whether the dynamic motor Load would need to be represented per Part 2.4.1,

Part 2.5.2 has been modified and included as Part 2.6.2 and the “intervening period” language has been deleted.

2.6.2 For steady state, short circuit, or Stability analysis: the study shall not include any material changes unless a technical rationale can be provided to demonstrate that System changes do not impact the performance results in the study area.

In our last meeting the SDT agreed to revise Part 2.6 (and included it as Part 2.7) and project initiation date is no longer required.

2.7 For planning events shown in Table 1, when the analysis indicates an inability of the System to meet the performance requirements in Table 1, the

Organization	Question 2 Comment
	Planning Assessment shall include Corrective Action Plan(s) addressing how the performance requirements will be met. Revisions to the Corrective Action Plan(s) are allowed in subsequent Planning Assessments but the planned System shall continue to meet the performance requirements in Table 1. Corrective Action Plan(s) do not need to be developed solely to meet the performance requirements for a single sensitivity run in accordance with Requirements R2, parts 2.1.4 and 2.4.3. The Corrective Action Plan(s) shall: Part 2.6 has been modified and included as new Part 2.7. Part 2.6.1 requires a Corrective Action Plan be developed to enable the System performance requirements in Table 1 and Part 2.6 states that "revisions to the Corrective Action Plans are allowed in subsequent assessments but the System shall continue to meet the performance requirements in Table 1". This allows the Planning Coordinator or Transmission Planner to develop a Corrective Action Plan that can consist, for example, of a number of potential alternative solutions, and, the Corrective Action Plan can be revised as the study continues. 'Prudent' has been deleted in Part 2.6.4 (now Part 2.7.5). **2.7.5** If situations arise that are beyond the control of the Transmission Planner or Planning Coordinator that prevent the implementation of a Corrective Action Plan in the required timeframe, then the Transmission Planner or Planning Coordinator is permitted to utilize Non-Consequential Load Loss and curtailment of Firm Transmission Service to correct the situation that would normally not be permitted in Table 1, provided that the Transmission Planner or Planning Coordinator documents that they are taking actions to resolve the situation. The Transmission Planner or Planning Coordinator shall document the situation causing the problem, alternatives evaluated, and the use of Non-Consequential Load Loss or curtailment of Firm Transmission Service. Part 2.7: Short circuit duty Assessment has been revised for clarity and included as Part 2.8. **2.8** For short circuit analysis, if the short circuit current interrupting duty on circuit breakers determined in Requirement R2, part 2.3 exceeds their Equipment Rating, the Planning Assessment shall include a Corrective Action Plan to address the Equipment Rating violations. The Corrective Action Plan shall: Parts 2.8 and R2.9 were intended to contribute to open and transparent transmission planning for peer review. The SDT reviewed both requirements and agrees that as written, they were unclear. Part 2.9 has been deleted. Part 2.8 has been revised and included as Part 2.9 in the new version to require that the Planning Assessment provides the expected largest Consequential Load Loss identified by the analysis of P1 and P2 events in Table 1 only. **2.9** The Planning Assessment shall provide the expected largest Consequential Load Loss (megawatt Demand) identified by the analysis of P1 and P2 events in Table 1.
IRC Standards Review Committee	(1) When a spare equipment strategy does not cover the long lead time unavailability as stated in 2.1.4, will the system be treated as normal system condition or as having a contingency from which system adjustments are to be made prior to subsequent events. (2) Under R2.5 ?Past Studies may be used to support the Planning Assessment if they meet the following requirements and the sub requirement R2.5.2 states that for SS, SC, or stability analysis; the PRESENT system model shall not include any material changes, such as ".Does this mean that past studies may be used to support planning assessments as long as there are no material changes to the present system model" If so, that would be an impossible scenario to recreate.
Response: In Part 2.1.4 (now Part 2.1.5) when a piece of long lead-time Equipment is unavailable, System adjustments will need to be made. The System, after it is adjusted to accommodate that piece of Equipment out of service will be treated as the "normal" (P0) condition in Table 1. Part 2.1.5 is intended for the Planning Coordinator and/or Transmission Planner to take into account their spare Equipment strategy for long lead time Equipment when assessing the	

Organization	Question 2 Comment
performance of their System. If the loss of a piece of major Equipment can be replaced within a reasonable period of time, planning studies for the following year can assume that that piece of Equipment will be replaced. If not, its impact of unavailability would need to be assessed. Part 2.1.5 has been revised to require that the assessment reflect the P0, P1, and P2 categories identified in Table 1 during the conditions that the System is expected to experience due to the possible unavailability of the long lead time Equipment. **2.1.5** When an entity's spare equipment strategy could result in the unavailability of major Transmission equipment that has a lead time of one year or more (such as a transformer), an analysis of the impact of this possible unavailability on System performance shall be assessed. The Planning Assessment shall reflect the P0, P1, and P2 categories identified in Table 1 during the conditions that the System is expected to experience due to the possible unavailability of the long lead time equipment. Part 2.5.2 is intended to allow the use of past study if the System that is being modeled for Assessment today has not materially changed from the one modeled in the past study for the study area. While changes are expected to occur between planning cycles, not all changes have significant impacts on System performance. For example, if the load growth in an area has not changed significantly, there is no change in the Transmission System and no addition of new generation, and then a case can be made that the past study can be used to support a new Assessment.	
TVA System Planning	Do not understand the rationale for being so prescriptive in requiring specific years to be studied in R2.1.1. Why not allow the TP and/or PC to decide on the three years to be studied in the Near Term? Since R2.3 short circuit analysis is a new raising the bar requirement, should the implementation plan for this be for 5 years like the other new raising the bar requirements? Further clarification is needed in R2.4.1 concerning load models that appropriately represent the dynamic behavior of loads. Is a NERC drafting team addressing these issues to determine an industry standard? If contingencies occur inside one utility that affect facilities in another utility, which utility is responsible for running these studies during the annual assessments? In R2.6.1, is there any limit to the time duration that a SPS and/or operating procedures can be used in the CAP? In Posting #2, undervoltage load shed, underfrequency load shed, and Special Protection Schemes were considered to be Non-Consequential Load Loss. In R2.6.1, installation or modification of Protection Systems or Special Protection Systems are now allowed as part of the Corrective Action Plan. Should undervoltage and underfrequency load shed also be allowed in the Corrective Action Plan? In R2.9, does the requirement require the maximum non-consequential load that can occur for contingencies in Table 1 or does it require just the maximum that a utility will allow on its system? Suggest clarifying permissible or perhaps using similar language as found in R2.8. Please explain the reason why Requirement R2.9 is needed in the Assessment. Reporting the largest Non-Consequential Load Loss doe not impact reliability. In R2.1, change the reference to requirement R2.6 (at the end of the last line) to R2.5. With the elimination of the distinction between system and generating plant stability studies, the blanket requirement in R2.5.1 that all stability analyses be five calendar years old or less, regardless of any material changes to the system, would

Organization	Question 2 Comment
	cause needless work to be performed on those plants or areas of the system where no changes are occurring. Recommend add the following to the end of R2.5.1: unless justification can be provided to demonstrate that the results of an older study are still valid. In Requirement R2.6.2, what constitutes a "project initiation date," and how will it be used? Please clarify. Please explain the reason why Requirement R2.8 is needed in the Assessment. Reporting the largest Consequential Load Loss does not impact reliability. R2.1 What's the value in being able to use qualified past studies if you have to use annual current studies Strike the words supplemented with and insert the word or R2.3 Insert the phrase one year of after the word addressing. In the subrequirements of 2.1.3 and 2.4.3, the use of the word timing is unclear. Consider using in service date or schedule for. In R2.6, does the Corrective Action Plan need to show all possible alternatives to fix a problem that has been identified - or does only one solution need to be shown for a problem?

Response: As written, Requirement R2 and Part 2.1.1 provides flexibility for the Planning Coordinator or Transmission Planner to use past studies to support the current year Planning Assessment, and to assess other years in addition to those identified in Part 2.1.1. So the suggestion is already allowed as written. No change made.

The SDT does not feel that Part 2.3 raises the bar as entities should have been performing these studies all along. No change made.

Part 2.4.1 requires only that the Load model appropriately represent the dynamic behavior of Loads. It is up to the Planning Coordinator and Transmission Planner, who are closer to the issues in the planning area to determine the application of the Load models. No change made.

If Contingencies occur inside one utility that affect Facilities in another utility, the Planning Coordinator or Transmission Planner for the utility whose System is impacted would be responsible for performing the annual Assessment for those Contingencies known to cause the impact. A certain amount of coordination will need to occur between the utilities. The parties can then mutually agree upon a Corrective Action Plan.

Part 2.6 has been revised and included as Part 2.7 in the new version. In the fifth bullet in Part 2.6.1, the duration for use of an operating procedure is at the discretion of the Planning Coordinator or Transmission Planner because it may not be feasible to implement Transmission reinforcements in some locations.

> **2.7** For planning events shown in Table 1, when the analysis indicates an inability of the System to meet the performance requirements in Table 1, the Planning Assessment shall include Corrective Action Plan(s) addressing how the performance requirements will be met. Revisions to the Corrective Action Plan(s) are allowed in subsequent Planning Assessments but the planned System shall continue to meet the performance requirements in Table 1. Corrective Action Plan(s) do not need to be developed solely to meet the performance requirements for a single sensitivity run in accordance with Requirements R2, parts 2.1.4 and 2.4.3. The Corrective Action Plan(s) shall:

UVLS and UFLS are not precluded in the Corrective Action Plan for those events where controlled Load shedding is allowed. The Standard does not address the acceptability of the tools to be used for any Corrective Action Plan. Part.2.6 does not specify how the Corrective Action Plan is written, it only requires that there is a plan to correct the potential problem identified in the Assessment. Therefore, it can be a number of alternatives or a single definitive alternative as long as the potential problem is addressed.

Organization	Question 2 Comment
Part 2.9 has been deleted. In the new version, Part.2.6 now contains the requirement for the use of past studies, so Part 2.1 now has the correct reference. No change made. Part 2.5.1 has been revised and included as Part 2.6.1 to address your concerns. **2.6.1** For steady state, short circuit, or Stability analysis: the study shall be five calendar years old or less, unless a technical rationale can be provided to demonstrate that the results of an older study are still valid. In our last meeting the SDT agreed to revise Part 2.6 (and included it as Part 2.7) and project initiation date is no longer required. The SDT believes that Requirement R2, part 2.8 (now part 2.9) supports the objective of ensuring BES reliability by ensuring that the largest expected amount of Consequential Load Loss is reported in an open, transparent process. Part 2.9 has been clarified. **2.9** The Planning Assessment shall provide the expected largest Consequential Load Loss (megawatt Demand) identified by the analysis of P1 and P2 events in Table 1. In Part 2.1 it is envisioned that not all parts of the studies on which the Assessment is to be based can rely on past studies. For example, a study on year five performed during the past year may not be representative of year five in the current year. A past study can still be used if it can be demonstrated that the requirements for use of past studies are met. Parts 2.1.3 (now Part 2.1.4) and 2.4.3 have been revised to reflect your suggestion. **2.1.4** For each of the studies described in Requirement R2, parts 2.1.1 and 2.1.2, sensitivity case(s) shall be utilized to demonstrate the impact of changes to the basic assumptions used in the model for the list of items shown below. To accomplish this, the sensitivity analysis in the Planning Assessment must vary one or more of the following conditions not already included in the studies by a sufficient amount to stress the System within a range of credible conditions that demonstrate a measurable change in performance. • Real and reactive forecasted Load. • Expected transfers. • Expected in service dates of new or modified Transmission Facilities. • Reactive resource capability. • Generation additions, retirements, or other dispatch scenarios. • Controllable Loads and Demand Side Management. • Duration or timing of planned Transmission outages. **2.4.3** For each of the studies described in Requirement R2, parts 2.4.1 and 2.4.2, sensitivity case(s) shall be utilized to demonstrate the impact of changes to the basic assumptions used in the model for the list of items shown below. To accomplish this, the sensitivity analysis in the Planning Assessment must vary one or more of the following conditions not already included in the studies by a sufficient amount to stress the System within a range of credible conditions that demonstrate a measurable change in performance.

Organization	Question 2 Comment
	• Load level, Load forecast, or dynamic model assumptions. • Expected transfers. • Expected in service dates of new or modified Facilities. • Reactive resource capability. • Generation additions, retirements, or other dispatch scenarios. Part.2.6 does not specify how the Corrective Action Plan is written, it only requires that there is a plan to correct the potential problem identified in the Assessment. Therefore, it can be a number of alternatives or a single definitive alternative as long as the potential problem is addressed.
Exelon Transmission Planning	There are large amounts of resources required to perform the volume of studies required, including the dynamic and steady state sensitivities, extreme studies, and one-year lead time equipment spares. Many of these studies ultimately do not require additional consideration or reinforcement and have low threshold triggers, such as a 20 MW generation change. Performing these studies will be very burdensome to many TPs and result in few, if any, reliability benefits. We believe that the TP should be given more flexibility to allocate planning resources to areas of maximum benefit. The Spare Strategy in R2.1.4 is still not well defined. What types of equipment are included? How would a one-year lead time element be determined for consideration in this requirement? In R2.4.1, we recommend changing appropriately represents to a dynamic model appropriate for the type of stability study being performed? The TP should be allowed to perform only those specific stability studies needed and pertinent to its system. The same can be said about the dynamic load model. Differing interpretations are possible. We suggest changing the last sentence in R2.4.1 to .., a Load model shall be used which appropriately represents..An aggregate System Dynamic Load model which represents the overall dynamic behavior of the Load is acceptable. In 2.1.3 and 2.4.3 strike Expected from the phrase Expected transfers. Expected transfers should already be in the base case. In R2.5.2, the determination of a Material change is an engineering judgment issue and it should not be categorically defined here. There may be more significant material changes than a 20 MW increase in generation that would be better to study. In the phrase, For steady statesuch as generation or transmission additions/removals, or topology changes and would impact the study area, it is suggested to change would to could and impact the study area to significantly change the previous study results. The term should not be Corrective Action Plan, which implies a violation of a requirement. Suggest changing this term to Future Reliability Plan. What is the intended use for reporting the largest consequential and maximum non-consequential load loss amount and event? This would be a potential security concern if made public. There is a similar concern with the extreme event analysis. In 2.6.2 please define Initiation Date. While we appreciate your previous consideration of this comment, it is still not clear what this means. Is this the date of mitigation identification, regulatory approval date, construction start date, equipment procurement date, etc? If this is a commonly understood term not requiring a formal definition, could you then please

Organization	Question 2 Comment
	provide that definition in your response? If there is going to be a requirement to report on each contingency that results in non-consequential load loss it should be specified.

Response: If there are specific requirements in the standard that you feel would require the Transmission Planner to allocate their resources a certain way then you need to supply those specifics. As it stands, the SDT feels that the Transmission Planner can allocate resources any way they want. The standard does not dictate how they should meet requirements. No change made.

Part 2.1.4 (now Part 2.1.5) requires that the Planning Coordinator and/or Transmission Planner consider the possibility that a piece of major Equipment can be out of service for an extended period of time because no spare piece of Equipment is on hand or can be purchased and be placed in service such that the outage won't last into the next planning cycle. Loss of a transformer is given as an example as a piece of major Equipment, which if forced out of service and had to be replaced with a new transformer, may have a lead time of more than one year. However, if a company has a strategy, for example, to have spare transformers in its system, or have an agreement with another entity to share spare transformers, it would significantly reduce the probability of an outage of a transformer for longer than one year. Part 2.1.5 has been revised to require that the assessment reflect the P0, P1, and P2 categories identified in Table 1 during the conditions that the System is expected to experience due to the possible unavailability of the long lead time Equipment.

> **2.1.5** When an entity's spare equipment strategy could result in the unavailability of major Transmission equipment that has a lead time of one year or more (such as a transformer), an analysis of the impact of this possible unavailability on System performance shall be assessed. The Planning Assessment shall reflect the P0, P1, and P2 categories identified in Table 1 during the conditions that the System is expected to experience due to the possible unavailability of the long lead time equipment.

Part 2.4.1 has been revised to address your concerns.

> **2.4.1** System peak Load for one of the five years. System peak Load levels shall include a Load model which represents the dynamic behavior of Loads that could impact the study area, considering the behavior of induction motor Loads. An aggregate System Load model which represents the overall dynamic behavior of the Load is acceptable.

The SDT declines to strike "Expected Transfers" from Parts 2.1.3 (now Part 2.1.4) and 2.4.3. Parts 2.1.4 and 2.4.3 are sensitivity cases to be examined, which should cover conditions different from the base case. In any case, the Planning Coordinator or Transmission Planner are only required to examine one of the items from the list, and has the flexibility to choose other sensitivity cases if changes in expected transfer is not applicable.

Part 2.5.2 has been modified and included as Part 2.6.2. The SDT declines to change the term "Corrective Action Plan" to "Future Reliability Plan" because the Standard only requires the System performance to meet requirements. If a System meets requirements, then a Corrective Action Plan would not be necessary. An entity can still choose to install Transmission reinforcements for other reasons, but they would not be required by this Standard.

> **2.6.2** For steady state, short circuit, or Stability analysis: the study shall not include any material changes unless a technical rationale can be provided to demonstrate that System changes do not impact the performance results in the study area.

Parts 2.8 and 2.9 were intended to contribute to open and transparent Transmission planning for peer review. The SDT reviewed both requirements and agrees that as written, they were unclear. Part 2.9 has been deleted. Part 2.8 has been revised and included as Part 2.9 in the new version to require that the Planning Assessment provides the expected largest Consequential Load Loss identified by the analysis of P1 and P2 events in Table 1 only. The SDT does not believe that this requirement represents a security concern as rewritten.

> **2.9** The Planning Assessment shall provide the expected largest Consequential Load Loss (megawatt Demand) identified by the analysis of P1 and P2

Organization	Question 2 Comment
	events in Table 1. In our last meeting the SDT agreed to revise Part 2.6 (and included it as Part 2.7) and project initiation date is no longer required. **2.7** For planning events shown in Table 1, when the analysis indicates an inability of the System to meet the performance requirements in Table 1, the Planning Assessment shall include Corrective Action Plan(s) addressing how the performance requirements will be met. Revisions to the Corrective Action Plan(s) are allowed in subsequent Planning Assessments but the planned System shall continue to meet the performance requirements in Table 1. Corrective Action Plan(s) do not need to be developed solely to meet the performance requirements for a single sensitivity run in accordance with Requirements R2, parts 2.1.4 and 2.4.3. The Corrective Action Plan(s) shall: The comment – "If there is going to be a requirement to report on each contingency that results in non-consequential load loss it should be specified" does not reference any specific Requirement and therefore, the SDT can't respond. No change made.
Southern Company	The Lower VSL describes a scenario where the TP or PC fails one or both of two particular sub-requirements. This language does not reconcile how failure of two sub-requirements is consistent with failure of only one of the same requirements. The recommendation is to restructure the VSL such that it is invoked when either sub-requirement is violated (not when both are violated). Generating unit stability has now been combined with system stability to be just one category - Stability. Previously, the shelf life of generating unit stability studies was indefinite -only needed to be restudied when system changes required it. Now the maximum shelf life of Stability studies is five years. Does this mean that generating unit stability studies must be repeated every five years whether system changes make it necessary or not? Requirement 2.3 stating that the short circuit analysis portion of the Planning Assessment shall be conducted annually addressing the Near-Term Transmission Planning Horizon. It is not clear if the intent of the requirement is to study every year within Year One and year five. A statement similar to R2.1.1 Year One or two and year five for steady state analysis would be helpful. Some clarification is needed for R2.3 on the term Near-Term. Requirement 2.3 stating that "the analysis shall determine the maximum short circuit interruption duty on fault interrupting devices using the System short circuit model with any generation and Transmission Facilities in service which could impact the study area. What interrupting devices are included? Would the circuit breakers be enough? Moreover, the term System short circuit model is used for the first time (and the only time) here for the entire document. It is very common to use a different short circuit model for short circuit analysis while the steady state and stability analysis use different System models (power flow models). Some clarification is needed. R2.8 and R2.9 use the term megawatt "Demand". This is redundant. We suggest striking the word demand.

Response: The Lower VSL for Requirement R2 has been revised.

R2 VSL	The responsible entity failed to comply with Requirement R2, part 2.9	The responsible entity failed to comply withRequirement R2, part 2.3 or part 2.8.	The responsible entity failed to comply with one of the following parts of Requirement R2: part 2.1,	The responsible entity failed to comply with two or more of thefollowing parts of Requirement R2: part 2.1,

Organization	Question 2 Comment			
			part 2.2, part 2.4, part 2.5, or part 2.7	part 2.2, part 2.4, or part 2.7.

Part 2.5.1 has been revised and included as Part 2.6.1 to address your concerns.

2.6.1 For steady state, short circuit, or Stability analysis: the study shall be five calendar years old or less, unless a technical rationale can be provided to demonstrate that the results of an older study are still valid.

The SDT declines to revise Part 2.3 to include short circuit analysis for one of the years in the Near-Term Transmission Planning Horizon because Part 2.3 only requires that a Planning Assessment be performed. Past studies can be used to support the Planning Assessment.

Part 2.3 is intended for the Planning Coordinator and/or Transmission Planner to assess the whether circuit breakers supporting the BES have interrupting capability for Faults that they will be expected to interrupt and is not specifically related to new planned Facilities. Part 2.3 has been revised to provide greater clarity.

2.3 The short circuit analysis portion of the Planning Assessment shall be conducted annually addressing the Near-Term Transmission Planning Horizon and can be supported by current or past studies as indicated in Requirement R2, part 2.6. The analysis shall be used to determine whether circuit breakers have interrupting capability for Faults that they will be expected to interrupt using the System short circuit model with any planned generation and Transmission Facilities in service which could impact the study area.

The “megawatt” Is the qualifier for “Demand”. The SDT believe it is clear as written. No change made.

United Illuminating	R2 Comment We recommend replacing the phrase “prepare” with “conduct and document” in the first sentence. R2.1.1 Comment The requirement to evaluate year one or year two should be removed. This is not consistent with the time horizon identified in R2. R2.1.2 Comment The requirement should be removed. With no description of the system stresses and generator outages to be applied when assessing the off-peak load, it is difficult to imagine any issues which would arise which are not revealed in the peak load evaluation that could not be addressed through generation dispatch adjustments. R2.1.3 Comment - The emphasis on sensitivity testing in the existing section appears misdirected and should be focused on reasonable risk. The assessment should have to include a discussion of reasonable risk. The sensitivity list can be used to select sensitivities to assess risk. Having a requirement to perform one sensitivity just to meet the requirement of the standard does not add value to the assessment. R2.1.4 Priority Comment With respect to spare equipment strategy, this requirement imposes severe testing requirements upon the system. However, there is no discussion on the generation dispatch or system transfers that are to be used for this portion of the assessment. The expectations for changes in system stresses need to be clear as part of the standard. Additionally, this section does not contemplate changing the acceptability of load loss. After experiencing a major contingency such as this, some change in the acceptability of load loss should be expected. The standard should consider allowing Non-Consequential load loss for P1 & P2 events. The standard needs to allow Non-Consequential load loss for P3 & P4 events. Why doesn’t the standard state (such as a transformer, generator or power electronic device) and not just

Organization	Question 2 Comment
	(such as a transformer). R2.2 Comment We suggest replacing the phrase "a current System peak Load study" with a valid System peak Load study in the first sentence. The word current is confusing as some read the word current to mean today's rather than valid. R2.3 Comment Please provide guidance as to what year should be represented when performing short circuit studies. R2.4.1 Comment Change to read: "For peak System Load levels, a Load model shall be used which appropriately represents the dynamic behavior of Loads, including consideration of the behavior of induction motor Loads or an aggregate System Load model which represents the overall dynamic behavior of the Load. R2.5.1 Comment? We suggest deleting this requirement, and incorporating it into R2.5.2. R2.5.2 Comment To incorporate R.2.5.1 into R2.5.2; please modify the section as follows: For steady state, short circuit, or Stability analysis the study shall be less than five calendar years old or less: the present System model shall not include any material changes, such as, generation or Transmission additions/removals, or topology changes that have occurred in the intervening period and would impact the study area. Material generation changes could include: The addition/deletion/change of individual generating unit capability determined to be material by the Planning Coordinator or Transmission Planner. [A 20 MVA generator is fairly small in a 30,000 MW system and system concerns would already be addressed though the System Impact Study]? An aggregated addition/deletion/change to a group of generating units directly connected through their step-up transformer(s) to the BES determined to be material by the Planning Coordinator or Transmission Planner. R2.6 Priority Comment As written, this section undermines the value of the sensitivity testing. This section should require a corrective action plan to fix problems determined in sensitivity analysis if there is a reasonable risk of occurrence. We suggest making the standard read Provide documentation that explains the reasoning for the sensitivities considered and selected. R2.6 Comment At the end of the second sentence, the phrase "in the tables" is used. We suggest using more definitive language such as in Table 1. R2.6.2 Comment The phrase Project Initiation Date needs to be defined. It is unclear if this is this the date of ground breaking, purchase orders being issued, solution study initiation, etc. Additionally, in the second sentence the phrase "as well as an in-service date" should be modified to read "as well as a target in-service date". R2.6.3 Comment Plans can provide a target in-service year but not an actual in-service year. R2.6.4 Priority Comment There should be a cutoff point when changes occur beyond a certain date. When that date occurs, further changes will be evaluated in the next year's assessment. Otherwise, if a state makes a decision not to site a project a few weeks prior to the end of the assessment period, there will not be sufficient time to incorporate this into that year's assessment and develop corrective actions. R2.8 Comment Largest consequential load loss is not factored into the Planning Assessment and should therefore be deleted. R2.9 Comment This requirement is unclear. Is this requirement asking for each transmission planner to list their criteria for

Organization	Question 2 Comment
	non-consequential load loss, or is it asking how much non-consequential load loss was being relied upon in the assessment? We recommend that the requirement be modified to require documentation of the maximum amount of non-consequential load loss that was relied upon during the assessment.

Response: The SDT does not think that replacing "prepare" with "conduct and document" would add clarity, since Requirement R2 includes a requirement to document assumptions and results. No change made.

The *Time Horizon* term at the end of the requirement deals with mitigation time periods (as shown below) and is not connected to the assessment time frames. No change made. Time Horizons are a consideration when there is a violation of a requirement – the impact to the BES of violating a requirement with a long-term planning horizon is not expected to be as severe as the impact associated with violating a requirement with a real-time operations time horizon.

Mitigation Time Horizon

The time horizons available for mitigating a violation to a requirement include the following:

- **Long-term Planning** — a planning horizon of one year or longer.
- **Operations Planning** — operating and resource plans from day-ahead up to and including seasonal.
- **Same-day Operations** — routine actions required within the timeframe of a day, but not real-time.
- **Real-time Operations** — actions required within one hour or less to preserve the reliability of the bulk electric system.
- **Operations Assessment** — follow-up evaluations and reporting of real time operations.

Part 2.1.2 requires that the Planning Coordinator and/or Transmission Planner also consider off-peak conditions because the System must be able to meet performance requirements over all demand levels. System peak condition may not represent all stressed conditions. For example, during off-peak, the Load is low, and the generation would have to be turned off to achieve Load-resource balance. Turning down resources within a Load area could result in reliability problems. Lowering the Load in areas with many non-dispatchable resources could also pose potential problems. As the System incorporates more and more renewable resources, some of them are non-dispatchable; a standard must be forward looking so the Planning Coordinator and Transmission Planner can identify potential problems as part of the Assessment. No change made.

Part 2.1.3 (now Part 2.1.4) has been rewritten to clarify the intent of the requirement. The requirement does not preclude a discussion of risk.

> **2.1.4** For each of the studies described in Requirement R2, parts 2.1.1 and 2.1.2, sensitivity case(s) shall be utilized to demonstrate the impact of changes to the basic assumptions used in the model for the list of items shown below. To accomplish this, the sensitivity analysis in the Planning Assessment must vary one or more of the following conditions not already included in the studies by a sufficient amount to stress the System within a range of credible conditions that demonstrate a measurable change in performance.
>
> - Real and reactive forecasted Load.
> - Expected transfers.
> - Expected in service dates of new or modified Transmission Facilities.

Organization	Question 2 Comment
	• Reactive resource capability. • Generation additions, retirements, or other dispatch scenarios. • Controllable Loads and Demand Side Management. • Duration or timing of planned Transmission outages. In Part 2.1.4 (now Part 2.1.5) when a piece of long lead-time Equipment is unavailable, System adjustments will need to be made. The System, after it is adjusted to accommodate that piece of Equipment out of service will be treated as the "normal" (P0) condition in Table 1 and the rest of Table 1 will be applied as stated. Part 2.1.5 is intended for the Planning Coordinator and/or Transmission Planner to take into account their spare Equipment strategy for long lead time Equipment when assessing the performance of their System. If a piece of major Equipment can be replaced within a reasonable period of time, planning studies for the following year can assume that that piece of Equipment will be replaced. If not, its impact of unavailability would need to be assessed. Actions such as out of merit dispatch, operational restrictions, System reconfiguration can be part of a Corrective Action Plan if the System cannot meet performance requirements without the Facility in service. Part 2.1.5 has been revised to require that the assessment reflect the P0, P1, and P2 categories identified in Table 1 during the conditions that the System is expected to experience due to the possible unavailability of the long lead time Equipment. **2.1.5** When an entity's spare equipment strategy could result in the unavailability of major Transmission equipment that has a lead time of one year or more (such as a transformer), an analysis of the impact of this possible unavailability on System performance shall be assessed. The Planning Assessment shall reflect the P0, P1, and P2 categories identified in Table 1 during the conditions that the System is expected to experience due to the possible unavailability of the long lead time equipment. Part 2.2 is intended to require a study performed in the current year, as opposed to studied performed in the past years. Part 2.2 has been revised to provide greater clarity. **2.2** The Long-Term Transmission Planning Horizon portion of the steady state analysis shall be assessed annually and be supported by the following annual current study, supplemented with qualified past studies as indicated in Requirement R2, part 2.6: For Part 2.3 the decision on the year to be represented in the study is left to the discretion of the Planning Coordinator or Transmission Planner. Part 2.3 only requires it to be either a study that was performed during the current year or in the past. For example, this year is 2009 and a study performed in 2009 is a current study, the study can investigate the System in a future year, which is at the discretion of the Planning Coordinator or Transmission Planner performing the study. Requirement R2.3 has been revised to provide greater clarity. **2.3** The short circuit analysis portion of the Planning Assessment shall be conducted annually addressing the Near-Term Transmission Planning Horizon and can be supported by current or past studies as indicated in Requirement R2, part 2.6. The analysis shall be used to determine whether circuit breakers have interrupting capability for Faults that they will be expected to interrupt using the System short circuit model with any planned generation and Transmission Facilities in service which could impact the study area. Part 2.4.1 was revised but not changed as proposed because the intent of the last sentence is to allow the use of an aggregated System Load model as an appropriate Load representation. The suggested change could be read to mean that an aggregated System Load model would not appropriately represent the dynamic behavior of Loads. Parts 2.5 .1 and 2.5.2 (new Parts 2.6.1 and 2.6.2) were not combined. While the SDT appreciates the concern that a 20 MW generation addition can be small compared to a large System, a NERC standard needs to be clear as to the applicability. A requirement which contains "determined to be material by the Planning Coordinator or Transmission Planner" is not clear. Therefore, changing from 20 MW to "material" will also have to require justification from the Planning

Organization	Question 2 Comment
Coordinator or Transmission Planner on what is "material". Material has been deleted. Part 2.6 has been modified and included as new Part 2.7. The intent is to allow discretion for the Planning Coordinator or Transmission Planner to correct those deficiencies if they are prevalent (i.e., occur is more than one sensitivity). Although not required, the standard does not preclude the Planning Coordinator or Transmission Planner to develop Corrective Action Plans for high risk scenarios. However, if the scenario is high risk, then it should have been included in the base assumptions in the assessment and the Corrective Action Plan would have been required. The end of the second sentence has been changed to refer to Table 1 as suggested. **2.7** For planning events shown in Table 1, when the analysis indicates an inability of the System to meet the performance requirements in Table 1, the Planning Assessment shall include Corrective Action Plan(s) addressing how the performance requirements will be met. Revisions to the Corrective Action Plan(s) are allowed in subsequent Planning Assessments but the planned System shall continue to meet the performance requirements in Table 1. Corrective Action Plan(s) do not need to be developed solely to meet the performance requirements for a single sensitivity run in accordance with Requirements R2, parts 2.1.4 and 2.4.3. The Corrective Action Plan(s) shall: In our last meeting the SDT agreed to revise Part 2.6 (and included it as Part 2.7) and project initiation date is no longer required. Part 2.6.4 allows the Planning Coordinator or Transmission Planner to address situations that are beyond its control by utilizing Non-Consequential Load Loss and/or curtailment of Firm Transmission Service, which are normally not permitted. Depending on the urgency of the need, the Corrective Action Plan may be developed outside the normal Assessment cycle at the discretion of the Planning Coordinator or Transmission Planner involved. Parts 2.8 and 2.9 were intended to contribute to open and transparent transmission planning for peer review. The SDT reviewed both requirements and agrees that as written, they were unclear. Part 2.9 has been deleted. Part 2.8 has been revised and included as Part 2.9 in the new version to require that the Planning Assessment provides the expected largest Consequential Load Loss identified by the analysis of P1 and P2 events in Table 1 only. **2.9** The Planning Assessment shall provide the expected largest Consequential Load Loss (megawatt Demand) identified by the analysis of P1 and P2 events in Table 1.	
Louisiana Energy and Power Authority	R2.5. This basic requirement intends, as we understand it, to require that earlier studies not be used for a current assessment if they are no longer accurate. But the phrasing is potentially confusing, and would be clearer if revised. Since the requirement deals with the use of past studies, we suggest that R2.5.2 be revised to state that the study may be used only if there have been no material changes, so that R2.5 reads in full:R2.5. Past studies may be used to support the Planning Assessment if they meet the following requirements: R2.5.1. For steady state, short circuit, or Stability analysis: the study shall be five calendar years old or less. R2.5.2. For steady state, short circuit, or Stability analysis: the study may be used only if there have been no material changes, such as generation or Transmission additions/removals, or topology changes that have occurred in the intervening period and would impact the study area. Material generation changes could include: The addition/deletion/change of individual generating unit capability of 20 MW or greater. An aggregated addition/deletion/change to a group of generating units directly connected through their step-up transformer(s) to the BES which total 20 MW or greater. With respect to footnote 10 to Table 1, we fear that the flexibility suggested by those provisions may be excessive for a planning standard. The ambiguity occasioned by stating emergency actions that can properly be taken in a planning standard can be utilized by those who plan the system in a manner which plans to drop non-consequential loads just as footnote b has been used in the past. If this is intended to raise the bar as stated these provisions do not belong in a

Organization	Question 2 Comment
	planning standard, at least as now stated. It may be appropriate to remove the reference to footnote 10, at least in the Initial System Condition entry in P3, where it suggests that it can be invoked after loss of a single generator, and we request the SDT to review that footnote to assure that it is appropriate in the other entries to which it is applied.
Response: Part 2.5 has been revised and included as Part 2.6 as shown. **2.6.1** For steady state, short circuit, or Stability analysis: the study shall be five calendar years old or less, unless a technical rationale can be provided to demonstrate that the results of an older study are still valid. **2.6.2** For steady state, short circuit, or Stability analysis: the study shall not include any material changes unless a technical rationale can be provided to demonstrate that System changes do not impact the performance results in the study area. Footnote 10 (now footnote 9) was added to address the disjoint between how some parties calculate ATC/AFC when assessing Long Term Firm Transmission Service and the currently proposed TPL-001-1 standard. TPL-001-1 requires Transmission Planners to plan their systems to meet multiple contingency events and some parties assess Long Term Firm Transmission Service on a first Contingency basis. Units obligated to re-dispatch, as contemplated in Footnote 9 are those units which are contractually bound to provide the service as well as those obligated to provide the service under Network Integrated Transmission Service, under FERC's pro forma OATT. Under the pro forma OATT, units designated as network resources receiving NITS are obligated to re-dispatch as requested by the Transmission Provider pursuant to Section 33.2 to maintain reliability. The footnote is worded such that curtailment/re-dispatch cannot result in the loss of firm Load preserves the guidance given by FERC in Order 693 that no single Contingency result in the loss of firm Load. No change made. The SDT has reviewed the application of footnote 10 (now footnote 9) and believes that it is correct. No change made.	
System Protection and Transmission Planning Department	R2 - The term "Stability Analysis" is used frequently in the standard, but is not clearly defined. Based on an IEEE paper ("Definition and Classification of Power System Stability," Kundar, et al) there are 5 different categories of stability analysis: 1)small signal angle stability; 2) transient angle stability; 3) frequency stability; 4) large disturbance voltage stability; and 5) small disturbance voltage stability. Does the writing committee intend to make the analysis of all these types of stability issues mandatory? I recommend inserting a new definition into the standard for stability as follows: "Stability Analysis - The study of the bulk electric power system's ability, for a given initial operating condition, to regain a state of operating equilibrium after being subjected to a physical disturbance. There are 5 accepted categories of power system stability: 1) small signal angle stability; 2) transient angle stability; 3) frequency stability; 4) large disturbance voltage stability; and 5) small disturbance voltage stability. While there are situations that exist that require small signal angle and voltage stability analysis, only transient angle stability, frequency stability, and large disturbance voltage stability analysis are generally relevant to system planning performance assessments. R2.1.4 is a new requirement directing studies to consider impacts of spare equipment strategy. Does this require the TP to run scenario analysis without certain transformers? It is not clear what is required. How many spare transformers are required? What reliability level is acceptable? R2.1.4 The one year cut-off seems arbitrary. One MONTH may be unacceptably long in some cases. Instead of one year or more, we suggest the requirement state an extended time period.

Organization	Question 2 Comment
	R2.2. The wording on this requirement is not clear. Is it trying to say that a long-term (5-10 year) peak loading study is required to be performed annually R2.2: What is meant by the term current System peak Load study A powerflow study performed under expected peak-load conditions? Or a forecast of peak loads? R2.3 A short circuit analysis requirement is now added to Planning Assessment requirements. Short circuit analysis appears to be in the standard to document adequate ratings for interrupting equipment. That would be the purpose of short circuit studies we perform. If there are other intended meanings, then additional detail is needed. R2.3 We do not agree that a short circuit analysis needs to be conducted annually. The requirement for a new short circuit duty study should be driven by changes in the system, as is done for powerflow study work. In short, until system changes are made, we would not anticipate higher fault duties, and there would be no reason to rerun studies. R2.4.1 requires dynamic load models. Development of dynamic load models is ongoing, and therefore will need a much longer implementation period than the steady state portions of the standard. We are not sure two years will be enough. It depends partly on pending work that is not under our control.R1.1.2, R2.1.4, R2.5.2, R3.3.4, R4.3.3, R5 When text of a Standard Requirement includes the phrase such as or could include, then gives a list of possible choices, we take it to mean "just one of these items, or none of these, or something not listed here". In other words, such as lists are really non-required, non-interpretable, non-measurable options. They should not be included in requirements. Lists such as these belong in transmittal notes and associated SDT commentary, not in Compliance Standard Requirements. R2.5.2 Limits such as "addition/deletion/change to a group of generating units . . . which total 20 MW or greater. are not always appropriate. Appropriateness of Generation netting with load should depend on system size and engineering judgment, not artificial limits. The suggestion list following generation changes could include: should be eliminated. R2.6.2. For the Near-Term Transmission Planning Horizon, include both a project initiation date as well as an in-service date? The assessment report should not require a full project development just a description of what is required to provide adequate service within specified operating criteria. The term project initiation is not clear. Requirement R2.6.2 should be eliminated. R2.8. The Planning Assessment shall provide the largest Consequential Load Loss (megawatt Demand) and the associated event caused by any P1 event and any P2 event in Table 1. is complicated, and may require new modeling software capability to comply. Software vendors would develop this capability. Why is this required? What is the expected benefit to system reliability?

Response: The SDT disagrees that the Standard should include a definition of Stability analysis because it is covered in Requirement R2. "Stability analysis" is not a defined NERC term and is not intended to be defined as in IEEE; however, it does not conflict with the IEEE definition. No change made.

Part 2.1.4 (now Part 2.1.5) requires that the Planning Coordinator and/or Transmission Planner consider the possibility that a piece of major Equipment can be out of service for an extended period of time because no spare piece of Equipment is on hand or can be purchased and be placed in service such that the outage won't last into the next planning cycle. Loss of a transformer is given as an example as a piece of major Equipment, which if forced out of service and had to be replaced with a new transformer, and may have a lead time of more than one year. However, if a company has a strategy, for example, to have spare transformers in its system, or have agreement with another entity to share spare transformers, it would significantly reduce the probability of an outage of a transformer for longer than

Organization	Question 2 Comment
one year. The Planning Coordinator and/or Transmission Planner will need to decide which pieces of major Equipment in their respective Systems would be more vulnerable to long term outage. In Part 2.1.5 when a piece of long lead-time Equipment is unavailable, System adjustments will need to be made. The System, after it is adjusted to accommodate that piece of Equipment out of service will be treated as the "normal" (P0) condition in Table 1 and the rest of Table 1 will be applied as stated. Part 2.1.5 has been revised to require that the assessment reflect the P0, P1, and P2 categories identified in Table 1 during the conditions that the System is expected to experience due to the possible unavailability of the long lead time Equipment. **2.1.5** When an entity's spare equipment strategy could result in the unavailability of major Transmission equipment that has a lead time of one year or more (such as a transformer), an analysis of the impact of this possible unavailability on System performance shall be assessed. The Planning Assessment shall reflect the P0, P1, and P2 categories identified in Table 1 during the conditions that the System is expected to experience due to the possible unavailability of the long lead time equipment. Part 2.2 has been revised to provide greater clarity. The standard will require that a study for one year within the Long-Term Transmission Planning Horizon be conducted. The Planning Assessment can be supplemented by past studies. **2.2** The Long-Term Transmission Planning Horizon portion of the steady state analysis shall be assessed annually and be supported by the following annual current study, supplemented with qualified past studies as indicated in Requirement R2, part 2.6: Part 2.3 has been revised to provide greater clarity. In addition, Part 2.3 is intended for the Planning Coordinator and/or Transmission Planner to assess whether circuit breakers supporting the BES have interrupting capability for Faults that they will be expected to interrupt and is not specifically related to new planned Facilities. The Assessment is to be supported by a current or past study. Therefore, annual short circuit study is not required if no material change has occurred. **2.3** The short circuit analysis portion of the Planning Assessment shall be conducted annually addressing the Near-Term Transmission Planning Horizon and can be supported by current or past studies as indicated in Requirement R2, part 2.6. The analysis shall be used to determine whether circuit breakers have interrupting capability for Faults that they will be expected to interrupt using the System short circuit model with any planned generation and Transmission Facilities in service which could impact the study area. Part 2.4.1 allows the use of an aggregate System Load model which represents the overall dynamic behavior of the Load that could impact the study area. Part 2.4.1 has been revised to provide greater clarity. In addition, the SDT was not able to locate the phrase "such as" in Requirement R2.4.1. There were two places in Requirement R2 that this phrase appears (Parts 2.1.4 and 2.5.2). In both instances, what follows were examples and not requirements. **2.4.1** System peak Load for one of the five years. System peak Load levels shall include a Load model which represents the dynamic behavior of Loads that could impact the study area, considering the behavior of induction motor Loads. An aggregate System Load model which represents the overall dynamic behavior of the Load is acceptable. Part 2.5.2 has been revised and included as Part 2.6.2 to address your concerns. **2.6.2** For steady state, short circuit, or Stability analysis: the study shall not include any material changes unless a technical rationale can be provided to demonstrate that System changes do not impact the performance results in the study area. In our last meeting the SDT agreed to revise Part 2.6 (and included it as Part 2.7) and project initiation date is no longer required. **2.7** For planning events shown in Table 1, when the analysis indicates an inability of the System to meet the performance requirements in Table 1, the Planning Assessment shall include Corrective Action Plan(s) addressing how the performance requirements will be met. Revisions to the Corrective Action Plan(s) are allowed in subsequent Planning Assessments but the planned System shall continue to meet the performance requirements in Table 1. Corrective Action Plan(s) do not need to be developed solely to meet the performance requirements for a single sensitivity run in accordance with

Organization	Question 2 Comment
Requirements R2, parts 2.1.4 and 2.4.3. The Corrective Action Plan(s) shall: Part 2.8 is intended to contribute to open and transparent transmission planning for peer review. The SDT reviewed the requirement and agrees that as written it was unclear. Part 2.8 has been revised and included as Part 2.9 in the new version to require that the Planning Assessment provides the expected largest Consequential Load Loss identified by the analysis of P1 and P2 events in Table 1 only. **2.9** The Planning Assessment shall provide the expected largest Consequential Load Loss (megawatt Demand) identified by the analysis of P1 and P2 events in Table 1.	
PPL Energy Plus	The standard appropriately recognizes that the planning horizon must be as long as the longest lead-time system upgrade, typically 8+ years for a new line. However, while Requirement 2.2.1 states this, it could be more clearly stated. Requirement R2.5.2 should be clarified to point out if the TP has discretion or if the 20 MW is binding. Requirement R2.6.4 should require TP's and PC's to post on an OASIS to assure easy access by affected parties to information on what is "beyond the control of these organizations. Please retain Requirements 2.8 and 2.9 as these are good measures of the quality of the plan produced by the planners.
Response: Part 2.2.1 has been revised because extending the Planning Horizon beyond 10 years for projects with lead time longer than 10 years is already covered in the definition of Long-Term Transmission Planning Horizon. **2.2.1** A current study assessing expected System peak Load conditions for one of the years in the Long-Term Transmission Planning Horizon and the rationale for why that year was selected. Part 2.5.2 (now Part 2.6.2) has been revised to address your suggestion. Both bullets included references to 20 MW have been deleted from the revised standard. **2.6.2** For steady state, short circuit, or Stability analysis: the study shall not include any material changes unless a technical rationale can be provided to demonstrate that System changes do not impact the performance results in the study area. The SDT declines to require a specific venue for the Planning Coordinator and/or Transmission Planner to post the information regarding Part 2.6.4. The way information is shared should be left to the individual entities involved in accordance with Requirement R7, included in the new version as Requirement R8. Parts 2.8 and 2.9 were intended to contribute to open and transparent transmission planning for peer review. The SDT reviewed both requirements and finds that as written, they were unclear. Part 2.9 has been deleted. Part 2.8 has been revised and included as Part 2.9 in the new version to require that the Planning Assessment provides the expected largest Consequential Load Loss identified by the analysis of P1 and P2 events in Table 1 only. **2.9** The Planning Assessment shall provide the expected largest Consequential Load Loss (megawatt Demand) identified by the analysis of P1 and P2 events in Table 1.	
PacifiCorp SRP Arizona Public Service Co	Short circuit analyses is a local phenomenon and should not be required as part of a transmission planning assessment of the BES. In any case, the effects of failure of over-stressed breakers are already included in the Events to be assessed in Table 1. For example, P2-3 and P2-4 (Internal Breaker Fault), and P4 (Stuck Breaker while attempting to clear a fault). Clarity is needed in R2.1.4. The requirement to assess the Contingencies identified in Table 1 is too burdensome. This requirement does not specify any limits on the equipment for which an analysis must be conducted. As currently drafted, this

Organization	Question 2 Comment
Southern California Edison Company Pacific Gas and Electric Co, California ISO Idaho Power San Diego Gas and Electric Co	could require a separate analysis for each transformer (or any long lead-time equipment) for which a spare is not available. A separate initial case would need to be developed to assess the Contingencies identified in Table 1 for each transformer. This could result in a countless number of additional cases. We recommend a threshold be established, such as all transformers with a low side voltage above 200 kV. We also recommend changing this from a separate sub-Requirement to one of the sensitivities to be considered under 2.1.3. We also believe that the statement at the end of R2.6 that indicates corrective action plans are not required solely to meet the performance requirements for sensitivities should also apply to the spare equipment requirement. The 20 MW threshold identified as material change for generation in R2.5 is too small. The limit should be raised or based on a percentage of the study area's installed generating capacity. R2.8 should be deleted. It is not necessary for reliability. What will be done with this information on the largest Consequential Load Loss and the associated event caused by any P1 event and any P2 event if it is documented? R2.9 should be deleted. It is not necessary for reliability. It will be difficult to determine the maximum permissible Non-Consequential Load value. It will end up being based on cost (monetary, societal, environmental, etc.), which is dependent, among other things, on the types of load being served. It very well may be a case by case situation.
NV Energy	Short circuit analyses is a local phenomenon and should not be required as part of a transmission planning assessment of the BES. In any case, the effects of failure of over-stressed breakers are already included in the Events to be assessed in Table 1. For example, P2-3 and P2-4 (Internal Breaker Fault), and P4 (Stuck Breaker while attempting to clear a fault).R2.1.3 should be modified to remove the last bullet point. Transmission outages should be a part of operational study work not planning study work. Clarity is needed in R2.1.4. The requirement to assess the Contingencies identified in Table 1 is too burdensome. This requirement does not specify any limits on the equipment for which an analysis must be conducted. As currently drafted, this could require a separate analysis for each transformer (or any long lead-time equipment) for which a spare is not available. A separate initial case would need to be developed to assess the Contingencies identified in Table 1 for each transformer. This could result in a countless number of additional cases. We recommend a threshold be established, such as all transformers with a low side voltage above 200 kV. We also recommend changing this from a separate sub-Requirement to one of the sensitivities to be considered under 2.1.3. We also believe that the statement at the end of R2.6 that indicates corrective action plans are not required solely to meet the performance requirements for sensitivities should also apply to the spare equipment requirement. The 20 MW threshold identified as material change for generation in R2.5 is too small. The limit should be based on a percentage of the study area'sinstalled generating capacity. R2.8 should be deleted. It is not necessary for reliability. What will be done with this information on the largest Consequential Load Loss and the associated event caused by any P1 event and any P2 event if it is documented R2.9 should be deleted. It is not necessary for reliability. It will be difficult to determine the maximum permissible Non-Consequential Load value. It will end up being based on cost (monetary, societal, environmental, etc.), which is dependent,

Organization	Question 2 Comment
	among other things, on the types of load being served. It very well may be a case by case situation.
Western Area Power Administration	Short circuit analyses is a local phenomenon and should not be required as part of a transmission planning assessment of the BES. In any case, the effects of failure of over-stressed breakers are already included in the Events to be assessed in Table 1. For example, P2-3 and P2-4 (Internal Breaker Fault), and P4 (Stuck Breaker while attempting to clear a fault).The last bullet under R2.1.3 - "Planned duration or timing of Transmission Outages." does not belong in a long-term planning standard. These-type of seasonal outages are studied and implemetation plans are derived as part of the TOP Standard requirements. In the WECC - this is also covered by the seasonal studies carried out by the Operating Transfer Capability Policy Committee (OTCPC) study groups. Clarity is needed in R2.1.4. The requirement to assess the Contingencies identified in Table 1 is too burdensome. This requirement does not specify any limits on the equipment for which an analysis must be conducted. As currently drafted, this could require a separate analysis for each transformer (or any long lead-time equipment) for which a spare is not available. A separate initial case would need to be developed to assess the Contingencies identified in Table 1 for each transformer. This could result in a countless number of additional cases. We recommend a threshold be established, such as all transformers with a low side voltage above 200 kV. We also recommend changing this from a separate sub-Requirement to one of the sensitivities to be considered under 2.1.3. We also believe that the statement at the end of R2.6 that indicates corrective action plans are not required solely to meet the performance requirements for sensitivities should also apply to the spare equipment requirement - OR simply delete this spare equipment requirement. The 20 MW threshold identified as material change for generation in R2.5 is too small. The limit should be raised or based on a percentage of the study area's installed generating capacity. R2.8 should be deleted. It is not necessary for reliability. What will be done with this information on the largest Consequential Load Loss and the associated event caused by any P1 event and any P2 event if it is documented? R2.9 should be deleted. This requirement is not necessary for reliability. It will be difficult to determine the maximum permissible Non-Consequential Load value. It will end up being based on cost (monetary, societal, environmental, etc.), which is dependent, among other things, on the types of load being served. It very well may be a case by case situation.

Response: Part 2.3 is intended for the Planning Coordinator and/or Transmission Planner to assess whether circuit breakers supporting the BES have interrupting capability for Faults that they will be expected to interrupt. Even though the effects of short circuit capability are localized and may be related to new planned Facilities, it is important to BES reliability. Part 2.3 has been revised to provide greater clarity.

> **2.3** The short circuit analysis portion of the Planning Assessment shall be conducted annually addressing the Near-Term Transmission Planning Horizon and can be supported by current or past studies as indicated in Requirement R2, part 2.6. The analysis shall be used to determine whether circuit breakers have interrupting capability for Faults that they will be expected to interrupt using the System short circuit model with any planned generation and Transmission Facilities in service which could impact the study area.

Part 2.1.4 (now Part 2.1.5) has been revised to require that the assessment reflect the P0, P1, and P2 categories identified in Table 1 during the conditions that the System is expected to experience due to the possible unavailability of the long lead time equipment.

Organization	Question 2 Comment
2.1.5 When an entity's spare equipment strategy could result in the unavailability of major Transmission equipment that has a lead time of one year or more (such as a transformer), an analysis of the impact of this possible unavailability on System performance shall be assessed. The Planning Assessment shall reflect the P0, P1, and P2 categories identified in Table 1 during the conditions that the System is expected to experience due to the possible unavailability of the long lead time equipment. Part 2.5 has been revised and included as Part 2.6 as shown. The references to a 20 MW threshold have been deleted from the revised standard. **2.6.1** For steady state, short circuit, or Stability analysis: the study shall be five calendar years old or less, unless a technical rationale can be provided to demonstrate that the results of an older study are still valid. **2.6.2** For steady state, short circuit, or Stability analysis: the study shall not include any material changes unless a technical rationale can be provided to demonstrate that System changes do not impact the performance results in the study area. Parts 2.8 and 2.9 were intended to contribute to open and transparent transmission planning for peer review. The SDT reviewed both requirements and agrees that as written, they were unclear. Part 2.9 has been deleted. Part 2.8 has been revised and included as Part 2.9 in the new version to require that the Planning Assessment provides the expected largest Consequential Load Loss identified by the analysis of P1 and P2 events in Table 1 only**.** **2.9** The Planning Assessment shall provide the expected largest Consequential Load Loss (megawatt Demand) identified by the analysis of P1 and P2 events in Table 1.	
Western Area Power Administration	Short-circuit studies as related to maintaining adequate protection devices and systems are normally performed either by a specific System Protection Group/Department or System Maintenance Department and should not be in this requirement, but Post-Transient Analysis to mitigate voltage collapse scenarios should be included (includes R2.5.1 & R2.5.2). Also, System Protection including mitigation of short-circuit duty above installed facilities capabilities or for new planned facilities are already covered by the PRC Standards and need not be included and duplicated in the TPL Planning Standard such as in R2.3 & R2.7.
Response: Parts 2.3 and 2.7 are intended for the Planning Coordinator and/or Transmission Planner to assess whether circuit breakers have interrupting capability for Faults that they will be expected to interrupt, and develop Corrective Action Plan is needed. As such, they are not specifically related to new planned Facilities. Requirement for Post-transient voltage collapse is included in Table 1, Header note (a), which states "Voltage instability, cascading outages, and uncontrolled islanding shall not occur." No change made.	
Tampa Electric	R2.1 should state R2.5 at the end of requirement instead of R2.6 R2.1.4 Consider revising to only include P0-P2 contingencies. R2.5.1 please clarify whether the 5 years is from the beginning of the assessment or end of the assessment. R2.6 Consider changing the terminology for "Corrective Action Plan" to "Transmission Plan" R2.8 Please clarify the reason for this requirement. This is not necessary for reliability and the effort to collect this information is substantial and does not benefit the BES. R2.9 Please clarify the reason for this requirement. This is not necessary for reliability and the effort to collect this

Organization	Question 2 Comment
	information is substantial.

Response: In the new version, Part.2.6 now contains the requirement for the use of past studies, so Part 2.1 now has the correct reference.

Part 2.1.4 (now Part 2.1.5) has been revised to require that the assessment reflect the P0, P1, and P2 categories identified in Table 1 during the conditions that the System is expected to experience due to the possible unavailability of the long lead time equipment.

> **2.1.5** When an entity's spare equipment strategy could result in the unavailability of major Transmission equipment that has a lead time of one year or more (such as a transformer), an analysis of the impact of this possible unavailability on System performance shall be assessed. The Planning Assessment shall reflect the P0, P1, and P2 categories identified in Table 1 during the conditions that the System is expected to experience due to the possible unavailability of the long lead time equipment.

For Part 2.5.1 the 5 years should be measured from the completion of the past study to be used to support the current Planning Assessment. However, Part 2.5.1 has been revised and included as Part 2.6.1, which will allow the use of studies older than 5 years if a technical rationale can be provided to demonstrate that the results of an older study are still valid.

> **2.6.1** For steady state, short circuit, or Stability analysis: the study shall be five calendar years old or less, unless a technical rationale can be provided to demonstrate that the results of an older study are still valid.

In Part 2.6, the SDT declines to change the term "Corrective Action Plan" to "Transmission Plan" because the Standard only requires the System performance to meet requirements. If a System meets requirements, then a Corrective Action Plan would not be necessary. An entity can still choose to install Transmission reinforcements for other reasons, but they would not be required by this Standard.

Parts 2.8 and 2.9 were intended to contribute to open and transparent transmission planning for peer review. The SDT reviewed both requirements and agrees that as written, they were unclear. Part 2.9 has been deleted. Part 2.8 has been revised and included as Requirement R2.9 in the new version to require that the Planning Assessment provides the expected largest Consequential Load Loss identified by the analysis of P1 and P2 events in Table 1 only.

> **2.9** The Planning Assessment shall provide the expected largest Consequential Load Loss (megawatt Demand) identified by the analysis of P1 and P2 events in Table 1.

Florida Reliability Coordinating Council, Inc - Transmission Working Group	Incorrect reference shown at the end of R2.1. The appropriate reference should be R2.5. The end of the first sentence of R2.3 should have a reference to R2.5. The end of the first sentence of R2.4 should have a reference to R2.5. R2.1.4 - Please consider revising this for the analysis to include only Contingencies P0-P2 in Table 1. Alternatively we suggest moving this requirement to be under sections 2.1.3 and 2.4.3 and treated as a sensitivity. R2.5 ? This requirement is very valuable in clarifying that past studies can be used and what criteria needs to be met for them to be used. However it is not clear if all new studies could be met using past studies (e.g. a small system with very few changes year to year) of if some sub-requirements require a new study every year, with past studies only used as supporting information. If the intent is that some sub-requirements can not be met with past studies, then consider making that clear through a foot note or a list under Section 2.5 listing which study requirements may depend only past studies that are still current.

Organization	Question 2 Comment
	R2.5.1 Please clarify if the 5 calendar years is from the date the assessment is "finished" or the date the study process for the assessment begins. R2.5.2 the identified 20 MW threshold is extremely small and would be doubtful to change the response of the BES. This requirement could also be interpreted that a previous study where the base case is not identical to the current planning case could be used. Please consider the following proposed language: For steady state, short circuit, or Stability analysis: the present System model shall not include any material changes, such as, generation or Transmission additions/removals, or topology changes that have occurred in the intervening period that would impact the study area. (not show the list) R2.6 - Requiring sensitivities but not requiring that they meet specific performance requirements is a sound approach.R2.6 requires a corrective action plan when performance will not be met in the simulations. However, if an entity has already planned a needed facility and/or operation steps for a given conditions, the simulations will not show any deficiencies and therefore no corrective action plan is required. The term Corrective Action Plan implies that the situation is wrong or incorrect, consider changing the approach to be to require an entity to have a planning and Operations plan, Improvement Action Plan?, or simply a Transmission Plan that includes all facilities planned for the BES and descriptions of conditions where an operational process is being used. R2.6.1 (Bullet 2) This requirement should also account for the removal of a Special Protection Systems: Installation, modification or removal of Protection Systems or Special Protection Systems?. R2.6.4 This is an excellent addition R2.8 Please explain the reason for this requirement. The effort required to collect this data is substantial and does not have any benefit to the BES. R2.9 Please explain the reason for this requirement. It seems to cause Entities to develop performance criteria for themselves for Multiple and Extreme Contingencies that are not in Table 1. The effort required to collect this data to compare against any self-imposed criteria is substantial and does not have any benefit to the BES. The requirement will result in inconsistency across North America. There is also no discussion of what happens if a Multiple or Extreme contingency is shown to exceed the Entity's self-imposed criteria, is the Entity then non-compliant? If so, what if the Entity simply changes the self-imposed criteria? We suggest eliminating this requirement.

Response: In the new version, Part.2.6 now contains the requirement for the use of past studies, so Part 2.1 now has the correct reference.

Parts 2.3 & 2.4 have been revised to reflect your suggestion.

> **2.3** The short circuit analysis portion of the Planning Assessment shall be conducted annually addressing the Near-Term Transmission Planning Horizon and can be supported by current or past studies as indicated in Requirement R2, part 2.6. The analysis shall be used to determine whether circuit breakers have interrupting capability for Faults that they will be expected to interrupt using the System short circuit model with any planned generation and Transmission Facilities in service which could impact the study area.
>
> **2.4** The Near-Term Transmission Planning Horizon portion of the Stability analysis shall be assessed annually and be supported by current or past studies as indicated in Requirement R2, part2.6. The following studies are required.

Part 2.1.4 (now Part 2.1.5) has been revised to require that the assessment reflect the P0, P1, and P2 categories identified in Table 1 during the conditions that the

Organization	Question 2 Comment
	System is expected to experience due to the possible unavailability of the long lead time equipment. **2.1.5** When an entity's spare equipment strategy could result in the unavailability of major Transmission equipment that has a lead time of one year or more (such as a transformer), an analysis of the impact of this possible unavailability on System performance shall be assessed. The Planning Assessment shall reflect the P0, P1, and P2 categories identified in Table 1 during the conditions that the System is expected to experience due to the possible unavailability of the long lead time equipment. For Part 2.5.1 the 5 years should be measured from the completion of the past study to be used to support the current Planning Assessment. However, Part 2.5.1 has been revised and included as Part 2.6.1, which will allow the use of studies older than 5 years if a technical rationale can be provided to demonstrate that the results of an older study are still valid. **2.6.1** For steady state, short circuit, or Stability analysis: the study shall be five calendar years old or less, unless a technical rationale can be provided to demonstrate that the results of an older study are still valid. Part 2.5.2 has been revised and included as Part 2.6.2 to provide greater clarity. The references to a 20 MW threshold have been deleted from the revised standard. **2.6.2** For steady state, short circuit, or Stability analysis: the study shall not include any material changes unless a technical rationale can be provided to demonstrate that System changes do not impact the performance results in the study area. In Part 2.6 (now Part 2.7), the SDT declines to change the term "Corrective Action Plan" to "Transmission Plan" because the Standard only requires the System performance to meet requirements. If a System meets requirements, then a Corrective Action Plan would not be necessary. An entity can still choose to install Transmission reinforcements for other reasons, but they would not be required by this Standard. Although additions of Protection Systems and Special Projection Systems are usually associated with projects to enable the System to meet performance requirements, the second bullet in Part 2.7 has been modified to include removal of Protection Systems or Special Protection Systems to provide greater clarity. **2.7 bullet 2:** Installation, modification, or removal of Protection Systems or Special Protection Systems Parts 2.8 and R2.9 were intended to contribute to open and transparent Transmission planning for peer review. The SDT reviewed both requirements and agrees that as written, they were unclear. Part 2.9 has been deleted. Part 2.8 has been revised and included as Part 2.9 in the new version to require that the Planning Assessment provides the expected largest Consequential Load Loss identified by the analysis of P1 and P2 events in Table 1 only. **2.9** The Planning Assessment shall provide the expected largest Consequential Load Loss (megawatt Demand) identified by the analysis of P1 and P2 events in Table 1.
FMPA	Incorrect reference shown at the end of R2.1. The appropriate reference should be R2.5. The end of the first sentence of R2.3 should have a reference to R2.5. The end of the first sentence of R2.4 should have a reference to R2.5. R2.1.4, what does (t)he analysis shall reflect the Contingencies identified in Table 1 mean? Is the intention similar to sensitivities, where there is no direct requirement to meet the performance standards of Table 1? If so, why not include loss of a long lead time Facility followed by other contingencies one of the Sensitivities and not have a separate sub-requirement for it? Or, is the intention that the TP and PC must meet the performance requirements of Table 1 considering the outage of a long lead time Facility? We hope that the intent is not to require Entities to be able to meet the performance requirements

Organization	Question 2 Comment
	of Table 1 assuming a long lead time Facility out of service. If that is the intent, then we believe that only Contingencies P0-P2 in Table 1 ought to apply to Requirement R2.1.4. Otherwise, Requirement R2.1.4 would require building transmission to triple contingency (N-3) criteria. Contingency P3 requires building transmission to a single contingency plus a generator outage (a double contingency that has the same performance criteria requirements as single contingencies). Since generators are long term lead Facilities that no one that we know of carries spares for, R2.1.4 as written would mean that Contingency P3 becomes two generators out of service with system adjustments followed by another contingency (N-3). This would have the (possibly unintended) consequences of significantly reducing long-term firm ATC since utilities will likely use TRM to account for the potential for long-term outages. If meeting the criteria of Table 1 is the intent of the SDT, then a potential way to address this is to restate R2.1.4 to state that only P0 through P2 (zero and single contingency) apply to R2.1.4.If meeting the performance criteria of Table 1 is the intent of the SDT for R2.1.4, then we also believe that R2.1.4 should also only apply to the EHV and not the HV system. Yes, when a major piece of equipment such as a transformer fails, it could be out for a long period of time; however, a transformer failure is far less probable than an over-head transmission line failure (e.g., a transformer failure is in the range of a once in 50 year event, whereas a transmission line fails probably once a year or once every other year, almost two orders of magnitude difference). A major 500 kV/230 kV autotransformer failure will have a far larger radius of impact than a 230 kV/138 kV autotransformer meant to serve the local area, giving additional support to purchasing a spare transformer for the 500/230 kV auto (EHV system). A small utility with only one or two 230 / 138 kV autos does not have sufficient justification to purchase a spare autotransformer due to the very low failure rate and the much more localized purpose of the transformer. If the intent of the SDT is to meet the performance requirements of Table 1 for R2.1.4, then the standard would essentially cause many small utilities who cannot justify spare autos to plan to serve only load and significantly reduce ATC in the planning horizon. Based on the lesser impact of HV connected autos as compared to EHV connected autos, and if the intent of the SDT is to meet the performance requirements of Table 1 for R2.1.4, then we would recommend that, for auto-transformers, R2.1.4 should only be applicable to EHV connected auto-transformers. R2.8 Please explain the reason for this requirement. The effort required to collect this data is substantial and does not have any benefit to the BES. R2.9 Please explain the reason for this requirement. It seems to cause Entities to develop performance criteria for themselves for Multiple and Extreme Contingencies that are not in Table 1. The effort required to collect this data to compare against any self-imposed criteria is substantial and does not have any benefit to the BES. The requirement will result in inconsistency across North America. There is also no discussion of what happens if a Multiple or Extreme contingency is shown to exceed the Entity's self-imposed criteria, is the Entity then non-compliant? If so, what if the Entity simply changes the self-imposed criteria?

Response: In the new version, Part 2.6 now contains the requirement for the use of past studies, so Part 2.1 now has the correct reference.

Parts 2.3 and 2.4 have been revised to reflect your suggestion.

2.3 The short circuit analysis portion of the Planning Assessment shall be conducted annually addressing the Near-Term Transmission Planning Horizon and can be supported by current or past studies as indicated in Requirement R2, part 2.6. The analysis shall be used to determine whether circuit breakers have interrupting capability for Faults that they will be expected to interrupt using the System short circuit model with any planned

Organization	Question 2 Comment
	generation and Transmission Facilities in service which could impact the study area. **2.4** The Near-Term Transmission Planning Horizon portion of the Stability analysis shall be assessed annually and be supported by current or past studies as indicated in Requirement R2, part 2.6. The following studies are required. Part 2.1.4 (now Part 2.1.5) requires that the Planning Coordinator and/or Transmission Planner consider the possibility that a piece of major Transmission Equipment can be out of service for an extended period of time because no spare piece of Equipment is on hand or can be purchased and be placed in service such that the outage won't last into the next planning cycle. Loss of a transformer is given as an example as a piece of major Equipment, which if forced out of service and had to be replaced with a new transformer, may have a lead time of more than one year. However, if a company has a strategy, for example, to have spare transformers in its System, or have agreement with another entity to share spare transformers, it would significantly reduce the probability of an outage of a transformer for longer than one year. The Planning Coordinator and/or Transmission Planner will need to decide which pieces of major Equipment in their respective systems would be more vulnerable to long term outage. In Part 2.1.5 when a piece of long lead-time Equipment is unavailable, System adjustments will need to be made. The System, after it is adjusted to accommodate that piece of Equipment out of service will be treated as the "normal" (P0) condition in Table 1 and the rest of Table 1 will be applied as stated. Part 2.1.5 has been revised to require that the assessment reflect the P0, P1, and P2 categories identified in Table 1 during the conditions that the System is expected to experience due to the possible unavailability of the long lead time Equipment. **2.1.5** When an entity's spare equipment strategy could result in the unavailability of major Transmission equipment that has a lead time of one year or more (such as a transformer), an analysis of the impact of this possible unavailability on System performance shall be assessed. The Planning Assessment shall reflect the P0, P1, and P2 categories identified in Table 1 during the conditions that the System is expected to experience due to the possible unavailability of the long lead time equipment. Parts 2.8 and 2.9 were intended to contribute to open and transparent Transmission planning for peer review. The SDT reviewed both requirements and agrees that as written, they were unclear. Part 2.9 has been deleted. Part 2.8 has been revised and included as Part 2.9 in the new version to require that the Planning Assessment provides the expected largest Consequential Load Loss identified by the analysis of P1 and P2 events in Table 1 only. **2.9** The Planning Assessment shall provide the expected largest Consequential Load Loss (megawatt Demand) identified by the analysis of P1 and P2 events in Table 1.
Progress Energy Carolina (PEC)	PEC believes that "R2.1.1. System peak Load for either Year One or year two, and for year five" is unneccesarily prescriptive. PEC recommends eliminating the Year One or year two addition. PEC believes that R2.1.4. concerning an entity's spare equipment strategy is overly conservative. The standard should only require N-2 deep planning and not N-3. PEC believes that for R2.4.1 "a Load model shall be used which appropriately represents the dynamic behavior of Loads, including consideration of the behavior of induction motor Loads" should be clarified to include "as appropriate" clause. Induction motor load modeling should not be required for all dynamic studies. PEC believes that for R2.5.2. The language "For steady state, short circuit, or Stability analysis: the present System model shall not include any material changes, such as, generation or Transmission additions/removals, or topology changes that have occurred in the intervening period and would impact the study area" needs to be made more clear. The important point is that material changes must be modeled if they have occurred. Also the 20MW threshold is far too small to be material. PEC believes that R2.8. and P2.9 are unnecessary and should be removed.

Organization	Question 2 Comment
	Response: Requirement R2, part 2.1.1 is intended to require studies for System Peak Load Conditions for 2 of the years in the Near-Term Transmission Planning Horizon: (1) A year five case to identify potential problem that can be addressed if the planned projects proceed as scheduled; (2) A Year One or year two case to identify any potential problems unanticipated in the five-year case, which if not addressed, could impact operations as time progresses. The standard provides flexibility for the Planning Coordinator or Transmission Planner to use past studies to support the current year assessment, and to assess other years in addition to those identified in Requirement R2, part 2.1.1. No change made. Part 2.1.4 (now Part 2.1.5) requires that the Planning Coordinator and/or Transmission Planner consider the possibility that a piece of major Equipment can be out of service for an extended period of time because no spare piece of Equipment is on hand or can be purchased and be placed in service such that the outage won't last into the next planning cycle. Loss of a transformer is given as an example as a piece of major Equipment, which if forced out of service and had to be replaced with a new transformer, may have a lead time of more than one year. However, if a company has a strategy, for example, to have spare transformers in its System, or have agreement with another entity to share spare transformers, it would significantly reduce the probability of an outage of a transformer for longer than one year. In Part 2.1.5 when a piece of long lead-time Equipment is unavailable, System adjustments will need to be made. The System, after it is adjusted to accommodate that piece of Equipment out of service will be treated as the "normal" (P0) condition in Table 1 and the rest of Table 1 will be applied as stated. Part 2.1.5 has been revised to require that the assessment reflect the P0, P1, and P2 categories identified in Table 1 during the conditions that the System is expected to experience due to the possible unavailability of the long lead time Equipment. **2.1.5** When an entity's spare equipment strategy could result in the unavailability of major Transmission equipment that has a lead time of one year or more (such as a transformer), an analysis of the impact of this possible unavailability on System performance shall be assessed. The Planning Assessment shall reflect the P0, P1, and P2 categories identified in Table 1 during the conditions that the System is expected to experience due to the possible unavailability of the long lead time equipment. Part 2.4.1 allows the use of an aggregate System Load model which represents the overall dynamic behavior of the Load that could impact the study area. Part 2.4.1 has been revised to provide greater clarity. **2.4.1** System peak Load for one of the five years. System peak Load levels shall include a Load model which represents the dynamic behavior of Loads that could impact the study area, considering the behavior of induction motor Loads. An aggregate System Load model which represents the overall dynamic behavior of the Load is acceptable. Part 2.5.2 has been revised and included as Part 2.6.2 to address your concerns. The references to a 20 MW threshold have been deleted from the revised standard. **2.6.2** For steady state, short circuit, or Stability analysis: the study shall not include any material changes unless a technical rationale can be provided to demonstrate that System changes do not impact the performance results in the study area. Parts 2.8 and 2.9 were intended to contribute to open and transparent Transmission planning for peer review. The SDT reviewed both requirements and agrees that as written, they were unclear. Part 2.9 has been deleted. Part 2.8 has been revised and included as Part 2.9 in the new version to require that the Planning Assessment provides the expected largest Consequential Load Loss identified by the analysis of P1 and P2 events in Table 1 only. **2.9** The Planning Assessment shall provide the expected largest Consequential Load Loss (megawatt Demand) identified by the analysis of P1 and P2 events in Table 1.
CPS Energy	As written, is it the intent of Requirement R2.1.4. to escalate the contingencies in Table 1 from "N-1" to "N-2" and "N-2" to N-3" for long lead-time replacement equipment, such as autotransformers and GSUs? If so, we feel that this requirement is

Organization	Question 2 Comment
	overly burdensome that will result in unnecessary expense to the customers. In Requirement R2.4.1., what is the intent of the second sentence if an aggregate system load model is acceptable? We feel that the second sentence should be removed. In Requirement R2.6.2., we feel that statement of the project initiation date has no benefit and should be removed as a requirement. The required in-service date should be adequate. We do not believe that there is any benefit to reliability by documenting the Consequential and Non-Consequential Load Loss data required by Requirements R2.8. and R2.9.
Response: Part 2.1.4 (now Part 2.1.5) requires that the Planning Coordinator and/or Transmission Planner consider the possibility that a piece of major Equipment can be out of service for an extended period of time because no spare piece of Equipment is on hand or can be purchased and be placed in service such that the outage won't last into the next planning cycle. Loss of a transformer is given as an example as a piece of major Equipment, which if forced out of service and had to be replaced with a new transformer, may have a lead time of more than one year. However, if a company has a strategy, for example, to have spare transformers in its System, or have agreement with another entity to share spare transformers, it would significantly reduce the probability of an outage of a transformer for longer than one year. Part 2.1.5 has been revised to require that the assessment reflect the P0, P1, and P2 categories identified in Table 1 during the conditions that the System is expected to experience due to the possible unavailability of the long lead time Equipment. **2.1.5** When an entity's spare equipment strategy could result in the unavailability of major Transmission equipment that has a lead time of one year or more (such as a transformer), an analysis of the impact of this possible unavailability on System performance shall be assessed. The Planning Assessment shall reflect the P0, P1, and P2 categories identified in Table 1 during the conditions that the System is expected to experience due to the possible unavailability of the long lead time equipment. In Part 2.4.1, the intent for the second sentence is that if more accurate Load Model is available it should be used. The standard should not inadvertently disallow improved Load modeling. In our last meeting the SDT agreed to revise Part 2.6 (and included it as Part 2.7) and project initiation date is no longer required. **2.7** For planning events shown in Table 1, when the analysis indicates an inability of the System to meet the performance requirements in Table 1, the Planning Assessment shall include Corrective Action Plan(s) addressing how the performance requirements will be met. Revisions to the Corrective Action Plan(s) are allowed in subsequent Planning Assessments but the planned System shall continue to meet the performance requirements in Table 1. Corrective Action Plan(s) do not need to be developed solely to meet the performance requirements for a single sensitivity run in accordance with Requirements R2, parts 2.1.4 and 2.4.3. The Corrective Action Plan(s) shall: Parts 2.8 and 2.9 were intended to contribute to open and transparent Transmission planning for peer review. The SDT reviewed both requirements and agrees that as written, they were unclear. Part 2.9 has been deleted. Part 2.8 has been revised and included as Part 2.9 in the new version to require that the Planning Assessment provides the expected largest Consequential Load Loss identified by the analysis of P1 and P2 events in Table 1 only. **2.9** The Planning Assessment shall provide the expected largest Consequential Load Loss (megawatt Demand) identified by the analysis of P1 and P2 events in Table 1.	
MidAmerican Energy Company	MidAmerican commends the SDT for all its hard work on this standard. MidAmerican offers the following comments on R2: MidAmerican believes that the second sentence of R2.3 as written will result in unnecessary modeling for the required short

Organization	Question 2 Comment
	circuit analysis. MidAmerican recommends that the sentence The analysis shall determine the maximum short circuit interruption duty on fault interrupting devices using the System short circuit model with any generation and Transmission Facilities in service which could impact the study area. MidAmerican recommends that R2.3 be changed by deleting the words any and could and replace with the words materially. In this way, the sentence would read, They analysis shall determine the maximum short circuit interruption duty on fault interrupting devices using the System short circuit model with generation and Transmission Facilities in service which materially impact the study area. Requirement 2.5 is too confining and is complicated and unnecessary. MidAmerican asks that the requirement be deleted in its entirety. Alternatively, if the SDT does not agree with deleting all of R2.5, then MidAmerican asks that the SDT consider deleting the R2.5.1. MidAmerican believes R2.4 will ensure that analysis is fresh by requiring a certain number of studies be conducted for certain years in the planning horizon. Why add the requirement for no older than 5 calander years? With the R2.4 and the material requirements in R2.5.2 shouldn't that be more than enough to ensure that the analysis is fresh enough to support the assessment?? If R2.5.2 is not deleted, the words and interconnected to the Bulk Electric System should be added behind 20 MW or greater. Requirement 2.6.2 requires the project initiation date. MidAmerican recommends that the SDT delete the requirement to provide this date as an initiation date is not related to system reliability. If the SDT believes it is critical to get this date, then the SDT should define it. Does it mean when engineering starts, when it is decided to proceed, or something else? At a minimum, MidAmerican believes that the SDT should add the word expected behind largest to avoid unnecessary compliance issues for an unexpected event, and clarify that R2.8 and R2.9 are not required for sensitivity cases.

Response: Part 2.3 has been revised to provide greater clarity. However, the SDT declines to make the changes suggested because Part 2.3 is intended for the Planning Coordinator and/or Transmission Planner to assess whether circuit breakers have interrupting capability for Faults that they will be expected to interrupt, and develop a Corrective Action Plan as needed. As such, they are not specifically related to individual new planned Facilities.

> **2.3** The short circuit analysis portion of the Planning Assessment shall be conducted annually addressing the Near-Term Transmission Planning Horizon and can be supported by current or past studies as indicated in Requirement R2, part 2.6. The analysis shall be used to determine whether circuit breakers have interrupting capability for Faults that they will be expected to interrupt using the System short circuit model with any planned generation and Transmission Facilities in service which could impact the study area.

Deleting Part 2.5 would leave no guidance on when past studies can be used to support current Assessment. This can increase work load. Part 2.5 has been revised and included as Part 2.6 as shown.

> **2.6.1** For steady state, short circuit, or Stability analysis: the study shall be five calendar years old or less, unless a technical rationale can be provided to demonstrate that the results of an older study are still valid.
>
> **2.6.2** For steady state, short circuit, or Stability analysis: the study shall not include any material changes unless a technical rationale can be provided to demonstrate that System changes do not impact the performance results in the study area.

In our last meeting the SDT agreed to revise Part 2.6 (and included it as Part 2.7) and project initiation date is no longer required.

Organization	Question 2 Comment
2.7 For planning events shown in Table 1, when the analysis indicates an inability of the System to meet the performance requirements in Table 1, the Planning Assessment shall include Corrective Action Plan(s) addressing how the performance requirements will be met. Revisions to the Corrective Action Plan(s) are allowed in subsequent Planning Assessments but the planned System shall continue to meet the performance requirements in Table 1. Corrective Action Plan(s) do not need to be developed solely to meet the performance requirements for a single sensitivity run in accordance with Requirements R2, parts 2.1.4 and 2.4.3. The Corrective Action Plan(s) shall: Parts 2.8 and 2.9 were intended to contribute to open and transparent Transmission planning for peer review. The SDT reviewed both requirements and agrees that as written, they were unclear. Part 2.9 has been deleted. Part 2.8 has been revised and included as Part 2.9 in the new version to require that the Planning Assessment provides the expected largest Consequential Load Loss identified by the analysis of P1 and P2 events in Table 1 only. **2.9** The Planning Assessment shall provide the expected largest Consequential Load Loss (megawatt Demand) identified by the analysis of P1 and P2 events in Table 1.	
Deseret Generation & Transmission	R2.5.2 For Past studies to be used in the Planning Assessment, the suggestion that the addition of a 20 MW generator would disqualify those past studies is way too restrictive. It should be left up to the Transmission Planner to evaluate the applicabililty of past studies and the two sub bullets should be removed and replace with a general statement about past studies should adequately represent the present system to be used in the Planning Assessment. Short circuit analyses is a local phenomenon and should not be required as part of a transmission planning assessment of the BES. In any case, the effects of failure of over-stressed breakers are already included in the Events to be assessed in Table 1. For example, P2-3 and P2-4 (Internal Breaker Fault), and P4 (Stuck Breaker while attempting to clear a fault). Clarity is needed in R2.1.4. The requirement to assess the Contingencies identified in Table 1 is too burdensome. This requirement does not specify any limits on the equipment for which an analysis must be conducted. As currently drafted, this could require a separate analysis for each transformer (or any long lead-time equipment) for which a spare is not available. A separate initial case would need to be developed to assess the Contingencies identified in Table 1 for each transformer. This could result in a countless number of additional cases. We recommend a threshold be established, such as all transformers with a low side voltage above 200 kV. We also recommend changing this from a separate sub-Requirement to one of the sensitivities to be considered under 2.1.3. We also believe that the statement at the end of R2.6 that indicates corrective action plans are not required solely to meet the performance requirements for sensitivities should also apply to the spare equipment requirement. R2.8 should be deleted. It is not necessary for reliability. What will be done with this information on the “largest Consequential Load Loss and the associated event caused by any P1 event and any P2 event” if it is documented? R2.9 should be deleted. It is not necessary for reliability. It will be difficult to determine the maximum permissible Non-Consequential Load value. It will end up being based on cost (monetary, societal, environmental, etc.), which is dependent, among other things, on the types of load being served. It very well may be a case by case situation.
Response: Part 2.5.2 has been revised and included as Part 2.6.2 to address your concerns. The references to a 20 MW threshold have been deleted from the revised standard. **2.6.2** For steady state, short circuit, or Stability analysis: the study shall not include any material changes unless a technical rationale can be provided to	

Organization	Question 2 Comment
	demonstrate that System changes do not impact the performance results in the study area. Part 2.3 is intended for the Planning Coordinator and/or Transmission Planner to assess the whether circuit breakers supporting the BES have interrupting capability for Faults that they will be expected to interrupt and is not specifically related to new planned Facilities. Part 2.3 has been revised to provide greater clarity. **2.3** The short circuit analysis portion of the Planning Assessment shall be conducted annually addressing the Near-Term Transmission Planning Horizon and can be supported by current or past studies as indicated in Requirement R2, part 2.6. The analysis shall be used to determine whether circuit breakers have interrupting capability for Faults that they will be expected to interrupt using the System short circuit model with any planned generation and Transmission Facilities in service which could impact the study area. Part 2.1.4 (now Part 2.1.5) has been revised to require that the assessment reflect the P0, P1, and P2 categories identified in Table 1 during the conditions that the System is expected to experience due to the possible unavailability of the long lead time equipment. Part 2.6 has been modified and included as new Part 2.7. The intent is to allow discretion for the Planning Coordinator or Transmission Planner to correct those deficiencies if they are prevalent (i.e., occur is more than one sensitivity). Part 2.7.2 has also been added to require that the Corrective Action Plan include actions to resolve performance deficiencies identified in multiple sensitivity studies or provide a rationale for why actions were not necessary. The intent is to allow discretion for the Planning Coordinator or Transmission Planner to correct those deficiencies if they are prevalent (i.e., occur is more than one sensitivity). **2.7** For planning events shown in Table 1, when the analysis indicates an inability of the System to meet the performance requirements in Table 1, the Planning Assessment shall include Corrective Action Plan(s) addressing how the performance requirements will be met. Revisions to the Corrective Action Plan(s) are allowed in subsequent Planning Assessments but the planned System shall continue to meet the performance requirements in Table 1. Corrective Action Plan(s) do not need to be developed solely to meet the performance requirements for a single sensitivity run in accordance with Requirements R2, parts 2.1.4 and 2.4.3. The Corrective Action Plan(s) shall: **2.7.2** Include actions to resolve performance deficiencies identified in multiple sensitivity studies or provide a rationale for why actions were not necessary. Parts 2.8 and 2.9 were intended to contribute to open and transparent transmission planning for peer review. The SDT reviewed both requirements and agrees that as written, they were unclear. Part 2.9 has been deleted. Part 2.8 has been revised and included as Part 2.9 in he new version to require that the Planning Assessment provides the expected largest Consequential Load Loss identified by the analysis of P1 and P2 events in Table 1 only. **2.9** The Planning Assessment shall provide the expected largest Consequential Load Loss (megawatt Demand) identified by the analysis of P1 and P2 events in Table 1.
Northeast Utilities	R2 Comment We recommend replacing the phrase prepare with conduct and document in the first sentence. R2.1.1 Comment The requirement to evaluate year one or year two should be removed. This is not consistent with the time horizon identified in R2. R2.1.2 Comment The requirement should be removed. With no description of the system stresses and generator outages to be applied when assessing the off-peak load, it is difficult to imagine any issues which would arise which are not revealed in the peak load evaluation that could not be addressed through generation dispatch adjustments.

Organization	Question 2 Comment
	R2.1.3 Comment - The emphasis on sensitivity testing in the existing section appears misdirected and should be focused on reasonable risk. The assessment should have to include a discussion of reasonable risk. The sensitivity list can be used to select sensitivities to assess risk. Having a requirement to perform one sensitivity study just to meet the requirement of the standard does not add value to the assessment. R2.1.3 Comment - What should be the time duration for the bullet that reads Planned duration or timing of Transmission outages R2.1.4 Priority Comment With respect to spare equipment strategy, this requirement imposes severe testing requirements upon the system. However, there is no discussion on the generation dispatch or system transfers that are to be used for this portion of the assessment. The expectations for changes in system stresses need to be clear as part of the standard. Additionally, this section does not contemplate changing the acceptability of load loss. After experiencing a major contingency such as this, some change in the acceptability of load loss should be expected. The standard needs to allow Non-Consequential load loss for P3 & P6 events when spare equipment strategy is incorporated in the testing. An example of such an event, that non-consequential load loss should be acceptable, would be a long-term outage of one transformer at a station which would be modeled in the base, followed by event P6 testing on initial system condition of a transformer out of service then followed by a 2nd transformer outage. This would be three transformers out at the same station and this could approach Extreme Events Contingency. R2.2 Comment We suggest replacing the phrase a current System peak Load study with a valid System peak Load study in the first sentence. The word current is confusing, as some read the word current to mean today's rather than valid. R2.3 Comment Please provide guidance as to what year should be represented when performing short circuit studies. R2.4.1 Comment ? Change to read: "For peak System Load levels, a Load model shall be used which appropriately represents the dynamic behavior of Loads, including consideration of the behavior of induction motor Loads or an aggregate System Load model which represents the overall dynamic behavior of the Load. R2.5.1 Comment" We suggest deleting this requirement, and incorporating it into R2.5.2. R2.5.2 Comment To incorporate R.2.5.1 into R2.5.2; please modify the section as follows: For steady state, short circuit, or Stability analysis the study shall be less than five calendar years old or less: the present System model shall not include any material changes, such as, generation or Transmission additions/removals, or topology changes that have occurred in the intervening period and would impact the study area. Material generation changes could include: The addition/deletion/change of individual generating unit capability determined to be material by the Planning Coordinator or Transmission Planner. [A 20 MW generator is fairly small in a 30,000 MW system and system concerns would already be addressed through the System Impact Study]?An aggregated addition/deletion/change to a group of generating units directly connected through their step-up transformer(s) to the BES determined to be material by the Planning Coordinator or Transmission Planner. R2.6 Priority Comment As written, this section undermines the value of the sensitivity testing. This section should require a corrective action plan to fix problems determined in sensitivity analysis if there is a reasonable risk of occurrence. We suggest making the standard read Provide documentation that explains the reasoning for the sensitivities considered and selected. R2.6 Comment At the end of the second sentence, the phrase in the tables is used. We suggest using more definitive language such as in Table 1.

Organization	Question 2 Comment
	R2.6.2 Comment The phrase Project Initiation Date needs to be defined. It is unclear if this is the date of ground breaking, purchase orders being issued, solution study initiation, etc. Additionally, in the second sentence the phrase as well as an in-service date should be modified to read as well as a target in-service date. R2.6.3 Comment Plans can provide a target in-service year but not an actual in-service year. R2.6.4 Priority Comment There should be a cutoff point when changes occur beyond a certain date. When that date occurs, further changes will be evaluated in the next year's assessment. Otherwise, if a state makes a decision not to site a project a few weeks prior to the end of the assessment period, there will not be sufficient time to incorporate this into that year's assessment and develop corrective actions. R2.8 Comment Largest consequential load loss is not factored into the Planning Assessment and should therefore be deleted. R2.9 Priority Comment We highly recommend that the standard should not allow non-consequential load loss to resolve any violation arising from the planning events in Table 1. Therefore, this requirement should be deleted.
ISO New England, Inc.	R2 Comment We recommend replacing the phrase prepare with conduct and document in the first sentence. R2.1.1 Comment The requirement to evaluate year one or year two should be removed. This is not consistent with the time horizon identified in R2. R2.1.2 Comment The requirement should be removed. With no description of the system stresses and generator outages to be applied when assessing the off-peak load, it is difficult to imagine any issues which would arise which are not revealed in the peak load evaluation that could not be addressed through generation dispatch adjustments. R2.1.3 Comment - The emphasis on sensitivity testing in the existing section appears misdirected and should be focused on reasonable risk. The assessment should have to include a discussion of reasonable risk. The sensitivity list can be used to select sensitivities to assess risk. Having a requirement to perform one sensitivity just to meet the requirement of the standard does not add value to the assessment. R2.1.4 Priority Comment With respect to spare equipment strategy, this requirement imposes severe testing requirements upon the system. However, there is no discussion on the generation dispatch or system transfers that are to be used for this portion of the assessment. The expectations for changes in system stresses need to be clear as part of the standard. Additionally, this section does not contemplate changing the acceptability of load loss. After experiencing a major contingency such as this, some change in the acceptability of load loss should be expected. The standard should consider allowing Non-Consequential load loss for P1 & P2 events. The standard needs to allow Non-Consequential load loss for P3 & P4 events. Why doesn't the standard state (such as a transformer, generator or power electronic device) and not just (such as a transformer). R2.2 Comment We suggest replacing the phrase a current System peak Load study with a valid System peak Load study in the first sentence. The word current is confusing as some read the word current to mean today's rather than valid. R2.3 Comment Please provide guidance as to what year should be represented when performing short circuit studies. R2.4.1 Comment Change to read: For peak System Load levels, a Load model shall be used which appropriately

Organization	Question 2 Comment
	represents the dynamic behavior of Loads, including consideration of the behavior of induction motor Loads or an aggregate System Load model which represents the overall dynamic behavior of the Load. R2.5.1 Comment? We suggest deleting this requirement, and incorporating it into R2.5.2.R2.5.2 Comment To incorporate R.2.5.1 into R2.5.2; please modify the section as follows: For steady state, short circuit, or Stability analysis the study shall be less than five calendar years old or less: the present System model shall not include any material changes, such as, generation or Transmission additions/removals, or topology changes that have occurred in the intervening period and would impact the study area. Material generation changes could include: The addition/deletion/change of individual generating unit capability determined to be material by the Planning Coordinator or Transmission Planner. [A 20 MVA generator is fairly small in a 30,000 MW system and system concerns would already be addressed though the System Impact Study]? An aggregated addition/deletion/change to a group of generating units directly connected through their step-up transformer(s) to the BES determined to be material by the Planning Coordinator or Transmission Planner. R2.6 Priority Comment As written, this section undermines the value of the sensitivity testing. This section should require a corrective action plan to fix problems determined in sensitivity analysis if there is a reasonable risk of occurrence. We suggest making the standard read Provide documentation that explains the reasoning for the sensitivities considered and selected. R2.6 Comment At the end of the second sentence, the phrase in the tables is used. We suggest using more definitive language such as in Table 1. R2.6.2 Comment The phrase Project Initiation Date needs to be defined. It is unclear if this is this the date of ground breaking, purchase orders being issued, solution study initiation, etc. Additionally, in the second sentence the phrase as well as an in-service date should be modified to read as well as a target in-service date. R2.6.3 Comment Plans can provide a target in-service year but not an actual in-service year. R2.6.4 Priority Comment There should be a cutoff point when changes occur beyond a certain date. When that date occurs, further changes will be evaluated in the next year's assessment. Otherwise, if a state makes a decision not to site a project a few weeks prior to the end of the assessment period, there will not be sufficient time to incorporate this into that year's assessment and develop corrective actions. R2.8 Comment Largest consequential load loss is not factored into the Planning Assessment and should therefore be deleted. R2.9 Comment This requirement is unclear. Is this requirement asking for each transmission planner to list their criteria for non-consequential load loss, or is it asking how much non-consequential load loss was being relied upon in the assessment? We recommend that the requirement be modified to require documentation of the maximum amount of non-consequential load loss that was relied upon during the assessment.
Central Maine Power Company	R2 Comment We recommend replacing the phrase prepare with conduct and document in the first sentence. R2.1.1 Comment The requirement to evaluate year one or year two should be removed. This is not consistent with the time horizon identified in R2.

Organization	Question 2 Comment
	R2.1.2 Comment The requirement should be removed. With no description of the system stresses and generator outages to be applied when assessing the off-peak load, it is difficult to imagine any issues which would arise which are not revealed in the peak load evaluation that could not be addressed through generation dispatch adjustments. R2.1.3 Comment - The emphasis on sensitivity testing in the existing section appears misdirected and should be focused on reasonable risk. The assessment should have to include a discussion of reasonable risk. The sensitivity list can be used to select sensitivities to assess risk. Having a requirement to perform one sensitivity just to meet the requirement of the standard does not add value to the assessment. R2.1.4 Priority Comment With respect to spare equipment strategy, this requirement imposes severe testing requirements upon the system. However, there is no discussion on the generation dispatch or system transfers that are to be used for this portion of the assessment. The expectations for changes in system stresses need to be clear as part of the standard. Additionally, this section does not contemplate changing the acceptability of load loss. After experiencing a major contingency such as this, some change in the acceptability of load loss should be expected. The standard should consider allowing Non-Consequential load loss for P1 & P2 events. The standard needs to allow Non-Consequential load loss for P3 & P4 events. Why doesn't the standard state "(such as a transformer, generator or power electronic device)" and not just "(such as a transformer)". What constitutes "spare equipment strategy" Would a strategy that involves out-of-merit dispatch or operational restrictions be considered a valid "spare equipment strategy". If a transformer is lost, could a reconfiguration of transmission constitute a valid "spare equipment strategy"? R2.2 Comment We suggest replacing the phrase a current System peak Load study with a valid System peak Load study in the first sentence. The word current is confusing as some read the word current to mean today's rather than valid. R2.3 Comment Please provide guidance as to what year should be represented when performing short circuit studies. R2.4.1 Comment Change to read: For peak System Load levels, a Load model shall be used which appropriately represents the dynamic behavior of Loads, including consideration of the behavior of induction motor Loads or an aggregate System Load model which represents the overall dynamic behavior of the Load. R2.5.1 Comment We suggest deleting this requirement, and incorporating it into R2.5.2. R2.5.2 Comment To incorporate R.2.5.1 into R2.5.2; please modify the section as follows:For steady state, short circuit, or Stability analysis the study shall be less than five calendar years old or less: the present System model shall not include any material changes, such as, generation or Transmission additions/removals, or topology changes that have occurred in the intervening period and would impact the study area. Material generation changes could include: The addition/deletion/change of individual generating unit capability determined to be material by the Planning Coordinator or Transmission Planner. [A 20 MVA generator is fairly small in a 30,000 MW system and system concerns would already be addressed though the System Impact Study]? An aggregated addition/deletion/change to a group of generating units directly connected through their step-up transformer(s) to the BES determined to be material by the Planning Coordinator or Transmission Planner. R2.6 Priority Comment As written, this section undermines the value of the sensitivity testing. This section should require a corrective action plan to fix problems determined in sensitivity analysis if there is a reasonable risk of occurrence. We suggest making the standard read Provide documentation that explains the reasoning for the sensitivities considered and

Organization	Question 2 Comment
	selected. R2.6 Comment At the end of the second sentence, the phrase in the tables is used. We suggest using more definitive language such as in Table 1?. R2.6.2 Comment The phrase Project Initiation Date needs to be defined. It is unclear if this is this the date of ground breaking, purchase orders being issued, solution study initiation, etc. Additionally, in the second sentence the phrase as well as an in-service date should be modified to read as well as a target in-service date?. R2.6.3 Comment Plans can provide a target in-service year but not an actual in-service year. R2.6.4 Priority Comment There should be a cutoff point when changes occur beyond a certain date. When that date occurs, further changes will be evaluated in the next year's assessment. Otherwise, if a state makes a decision not to site a project a few weeks prior to the end of the assessment period, there will not be sufficient time to incorporate this into that year's assessment and develop corrective actions. R2.8 Comment Largest consequential load loss is not factored into the Planning Assessment and should therefore be deleted. R2.9 Comment This requirement is unclear. Is this requirement asking for each transmission planner to list their criteria for non-consequential load loss, or is it asking how much non-consequential load loss was being relied upon in the assessment? We recommend that the requirement be modified to require documentation of the maximum amount of non-consequential load loss that was relied upon during the assessment.

Response: The SDT does not think that in Requirement R2 replacing "prepare" with "conduct and document" would add clarity, since Requirement R2 includes requirement to document assumptions and results. No change made.

The *Time Horizon* term at the end of the requirement deals with mitigation time periods (as shown below) and is not connected to the assessment time frames. No change made. Time Horizons are a consideration when there is a violation of a requirement – the impact to the BES of violating a requirement with a long-term planning horizon is not expected to be as severe as the impact associated with violating a requirement with a real-time operations time horizon.

Mitigation Time Horizon

The time horizons available for mitigating a violation to a requirement include the following:

- **Long-term Planning** — a planning horizon of one year or longer.
- **Operations Planning** — operating and resource plans from day-ahead up to and including seasonal.
- **Same-day Operations** — routine actions required within the timeframe of a day, but not real-time.
- **Real-time Operations** — actions required within one hour or less to preserve the reliability of the bulk electric system.
- **Operations Assessment** — follow-up evaluations and reporting of real time operations.

Part 2.1.2 requires that the Planning Coordinator and/or Transmission Planner also consider off-peak conditions because the System must be able to meet

Organization	Question 2 Comment

performance requirements over all demand levels. System peak condition may not represent all stressed conditions. For example, during off-peak, that Load is low, and the generation would have to be turned off to achieve Load-resource balance. Turning down resources within a Load area could result in reliability problems. Lowering the Load in areas with many non-dispatchable resources could also pose potential problems. As the System incorporates more and more renewable resources, some of them are non-dispatchable; a standard must be forward looking so the Planning Coordinator and Transmission Planner can identify potential problems as part of the Assessment. No change made.

Part 2.1.3 (now Part 2.1.4) has been rewritten to clarify the intent of the requirement. The requirement does not preclude a discussion of risk.

> **2.1.4** For each of the studies described in Requirement R2, parts 2.1.1 and 2.1.2, sensitivity case(s) shall be utilized to demonstrate the impact of changes to the basic assumptions used in the model for the list of items shown below. To accomplish this, the sensitivity analysis in the Planning Assessment must vary one or more of the following conditions not already included in the studies by a sufficient amount to stress the System within a range of credible conditions that demonstrate a measurable change in performance.
>
> - Real and reactive forecasted Load.
> - Expected transfers.
> - Expected in service dates of new or modified Transmission Facilities.
> - Reactive resource capability.
> - Generation additions, retirements, or other dispatch scenarios.
> - Controllable Loads and Demand Side Management.
> - Duration or timing of planned Transmission outages.

Part 2.1.4 (now Part 2.1.5) requires that the Planning Coordinator and/or Transmission Planner consider the possibility that a piece of major Equipment can be out of service for an extended period of time because no spare piece of Equipment is on hand or can be purchased and be placed in service such that the outage won't last into the next planning cycle. Loss of a transformer is given as an example as a piece of major Equipment, which if forced out of service and had to be replaced with a new transformer, may have a lead time of more than one year. However, if a company has a strategy, for example, to have spare transformers in its System, or have agreement with another entity to share spare transformers, it would significantly reduce the probability of an outage of a transformer for longer than one year. The Planning Coordinator and/or Transmission Planner will need to decide which pieces of major Equipment in their respective Systems would be more vulnerable to long term outage. In Part 2.1.5 when a piece of long lead-time Equipment is unavailable, System adjustments will need to be made. The System, after it is adjusted to accommodate that piece of Equipment out of service will be treated as the "normal" (P0) condition in Table 1 and the rest of Table 1 will be applied as stated. Part 2.1.5 has been revised to require that the assessment reflect the P0, P1, and P2 categories identified in Table 1 during the conditions that the System is expected to experience due to the possible unavailability of the long lead time Equipment.

> **2.1.5** When an entity's spare equipment strategy could result in the unavailability of major Transmission equipment that has a lead time of one year or more (such as a transformer), an analysis of the impact of this possible unavailability on System performance shall be assessed. The Planning Assessment shall reflect the P0, P1, and P2 categories identified in Table 1 during the conditions that the System is expected to experience due to the possible unavailability of the long lead time equipment.

Part 2.2 is intended to require a study performed in the current year, as opposed to studied performed in the past years. Part 2.2 has been revised to provide

Organization	Question 2 Comment
	greater clarity. **2.2** The Long-Term Transmission Planning Horizon portion of the steady state analysis shall be assessed annually and be supported by the following annual current study, supplemented with qualified past studies as indicated in Requirement R2, part 2.6: For Part 2.3 the decision on the year to be represented in the study is left to the discretion of the Planning Coordinator or Transmission Planner. Part 2.3 only requires it to be either study that was performed during the current year or in the past. For example, this year is 2009 and a study performed in 2009 is a current study, the study can investigate the System in a future year, which is at the discretion of the Planning Coordinator or Transmission Planner performing the study. Part 2.3 has been revised to provide greater clarity. **2.3** The short circuit analysis portion of the Planning Assessment shall be conducted annually addressing the Near-Term Transmission Planning Horizon and can be supported by current or past studies as indicated in Requirement R2, part 2.6. The analysis shall be used to determine whether circuit breakers have interrupting capability for Faults that they will be expected to interrupt using the System short circuit model with any planned generation and Transmission Facilities in service which could impact the study area. Part 2.4.1 was not changed as proposed because the intent of the last sentence is to allow the use of an aggregated System Load model as an appropriate Load representation. The suggested change could be read to mean that an aggregated System Load model would not appropriately represent the dynamic behavior of Loads. Note that changes were made to Part 2.4.1 based on other stakeholder comments. Parts 2.5 .1 and R2.5.2 (new Parts 2.6.1 and R2.6.2) were not combined. The references to the “20 MW” threshold have been deleted from the revised standard. Part 2.6 has been modified and included as new Part 2.7. The intent is to allow discretion for the Planning Coordinator or Transmission Planner to correct those deficiencies if they are prevalent (i.e., occur is more than one sensitivity). Although not required, the standard does not preclude the Planning Coordinator or Transmission Planner to develop Corrective Action Plans for high risk scenarios. However, if the scenario is high risk, then it should have been included in the base assumptions in the assessment and the Corrective Action Plan would have been required. The end of the second sentence has been changed to refer to Table 1 as suggested. **2.7** For planning events shown in Table 1, when the analysis indicates an inability of the System to meet the performance requirements in Table 1, the Planning Assessment shall include Corrective Action Plan(s) addressing how the performance requirements will be met. Revisions to the Corrective Action Plan(s) are allowed in subsequent Planning Assessments but the planned System shall continue to meet the performance requirements in Table 1. Corrective Action Plan(s) do not need to be developed solely to meet the performance requirements for a single sensitivity run in accordance with Requirements R2, parts 2.1.4 and 2.4.3. The Corrective Action Plan(s) shall: Requirement R2, part 2.6.3 has been deleted. Part 2.6.4 allows the Planning Coordinator or Transmission Planner to address situations that are beyond its control by utilizing Non-Consequential Load Loss and/or curtailment of Firm Transmission Service, which are normally not permitted. Depending on the urgency of the need, the Corrective Action Plan may be developed outside the normal Assessment cycle at the discretion of the Planning Coordinator or Transmission Planner involved. No change made. Parts 2.8 and R2.9 were intended to contribute to open and transparent Transmission planning for peer review. The SDT reviewed both requirements and agrees that as written, they were unclear. Part 2.9 has been deleted. Part 2.8 has been revised and included as Part 2.9 in the new version to require that the Planning Assessment provides the expected largest Consequential Load Loss identified by the analysis of P1 and P2 events in Table 1 only. **2.9** The Planning Assessment shall provide the expected largest Consequential Load Loss (megawatt Demand) identified by the analysis of P1 and P2 events in Table 1.

Organization	Question 2 Comment
Gainesville Regional Utilities	R2.1.1- References a "system peak Load" for each of the referenced years. Some utilities are summer peaking and some are winter peaking and others may have a history of having one or the other in any given year. So can you clarify which peak you are referring to or change to statement to perform studies involving both seasonal peaks? R.2.4.1- I suggest quantifying the reference to the behavior of induction motor loads to single motors greater than 1000 hp or multi motors at one bus totalling more that 2000 hp or so, since smaller induction motors probably will not have any significant impact of the BES. I feel this is best handled as a sensitivity issue determined by the PC who is familiar with this area. R2.5.1- If the system has not had any significant changes of the last ten years, then a study going back to that change should be acceptable for the assessment. R2.5.2- Should the "shall not include" really read as "shall include"? R2.6- The reference to "tables" in line 6 should be "table" since there is only a Table 1 in the standard. R2.6.1-R2.6.3- Question-- Why is the font size of the bullet text smaller that the other bullet segments?

Response: In Requirement R2, part 2.1.1, the selection of the system peak Load conditions is at the discretion of the Planning Coordinator or Transmission Planner. The standard allows for use of past studies to support a current Assessment. Therefore, for an area with both summer and winter peaks, the Planning Coordinator or Transmission Planner can choose to perform summer and winter peak cases on alternate years and the Assessment can rely on, e.g., a summer peak study performed in the current year and a winter peak study performed in the previous year, provided the requirement for use of past year studies is satisfied. No change made.

Part 2.4.1 allows for the use of an aggregate System Load model which represents the overall dynamic behavior of the Load that could impact the study area. So as written, the suggested representation is allowed. Note that changes were made to Part 2.4.1 based on other stakeholder comments.

Part 2.5.1 has been revised and included as Requirement R2, part 2.6.1 to address your concerns.

> **2.6.1** For steady state, short circuit, or Stability analysis: the study shall be five calendar years old or less, unless a technical rationale can be provided to demonstrate that the results of an older study are still valid.

In Part 2.5.2 “shall not include” is correct because the intent is that for the past study to be applicable, the present System should not have changed materially compared to that represented in the past study. However, Requirement R2, part 2.5.2 has been revised and included as Requirement R2, part 2.6.2 in the new version to provide greater clarity.

> **2.6.2** For steady state, short circuit, or Stability analysis: the study shall not include any material changes unless a technical rationale can be provided to demonstrate that System changes do not impact the performance results in the study area.

Part 2.6 (now 2.7) was modified to use the phrase, “in Table 1” rather than “in the tables.”

Part 2.5.1 (now 2.6.1) has been revised as shown.

> **2.6.1** For steady state, short circuit, or Stability analysis: the study shall be five calendar years old or less, unless a technical rationale can be provided to demonstrate that the results of an older study are still valid.

Organization	Question 2 Comment
2.6.2 For steady state, short circuit, or Stability analysis: the study shall not include any material changes unless a technical rationale can be provided to demonstrate that System changes do not impact the performance results in the study area. For Part 2.6.1 (now 2.7.1) the format has been corrected. Parts 2.6.2 and 2.6.3 were deleted from the revised standard.	
JEA	R2.1.4 It is not clear if this spare equipment strategy excludes Generator Owner's obligations for their generation plant equipment and only includes Transmission Owner's equipment. It is also not clear what Measurable document is required to back up a position of no vulnerabilities. I recommend that we limit the spare equipment strategy to TO equipment and not include GO equipment which excludes step-up transformers, turbines, generators, rotors, etc.Also, it does seem unreasonable to assess the long-term loss of a transformer to the "Extreme Events" of Table 1 or any other event other than the P3 events unless substituted in the assessment by a more extreme and probable event. An event from P3 alone should be sufficient to expose a weakness of a spare equipment strategy based on historical industry statistics for such likelihood. Propose changing "The analysis shall reflect the Contingencies identified in Table 1..." to "An analysis shall be performed that as a minimum assesses the impact of the long term outage of Transmission Owner equipment under either a P3 event that could occur in the absence of the subject equipment" or a more stressful event as deemed appropriate by the Functional Entity performing the assessment. R2.6.4 First of all, some level of expected Non-consequential load loss is always prudent to balance customer expectations on cost and reliability subject to Local and State Authority's guidance. Second, load development and gneration development are the major drivers for transmission development needs. Generation plans are more dependable and manageable as to timing and impact. Load development is not very dependable and manageable relative to transmission system improvement needs. It is not unusual for new load forecast to either expose a transmission weakness or on the other hand to eradicate a transmission weakness in the Near Term horizon. Without guidance, it could be assumed that affects from load forecast are beyond the control of the Transmission Planner and Transmission Coordinator. In addition, it is not unusual to have the load forecast lead the generation plan by a few years causing a need for Non-Consequential Load Loss until such time the additional generation is in-service providing generation balance to the load area and mitigating the transmission improvement needs. This occurs frequently as generation development lags load development in fast growing communities. Propose establishing a cap on Non-Consequential Load Loss for all Corrective Action Plans where the Table 1 events currently do not allow at all. An additional option for the SDT to consider could be to add an allowance of lag time (maybe 4-5 years) to cover the gap while the generation addition is being developed.
Response: Part 2.1.4 (now Part 2.1.5) requires that the Planning Coordinator and/or Transmission Planner consider the possibility that a piece of major Transmission Equipment can be out of service for an extended period of time because no spare piece of Equipment is on hand or can be purchased and be placed in service such that the outage won't last into the next planning cycle. However, the major Equipment is not limited to the major Equipment of the Transmission Owner; this standard covers major pieces of pieces of Transmission Equipment without regard to ownership. Loss of a transformer is given as an example as a piece of major Equipment, which if forced out of service and had to be replaced with a new transformer, may have a lead time of more than one year. However, if a company has a strategy, for example, to have spare transformers in its System, or have agreement with another entity to share spare transformers, it would significantly reduce the probability of an outage of a transformer for longer than one year. Requirement R2, part 2.1.5 has been revised to require that the analysis reflect the P0, P1, and P2 categories identified in Table 1 during the conditions that the System is expected to experience due to the possible unavailability of the long lead time Equipment.	

Organization	Question 2 Comment
2.1.5 When an entity's spare equipment strategy could result in the unavailability of major Transmission equipment that has a lead time of one year or more (such as a transformer), an analysis of the impact of this possible unavailability on System performance shall be assessed. The Planning Assessment shall reflect the P0, P1, and P2 categories identified in Table 1 during the conditions that the System is expected to experience due to the possible unavailability of the long lead time equipment. For Part 2.6.4 (now 2.7.5), the SDT declines to set a cap on Non-Consequential Load Loss on situations that are outside the control of the Planning Coordinator or the Transmission Planner. The premise is that the Corrective Action Plan has already been developed, but was not able to be implemented in time. The situation can occur with both unexpected changes in generation, Load pattern or delay in permitting and construction of new Transmission Facilities. In addition, a cap on the allowable Non-Consequential Load Loss may be different for different areas and may not be practical in a Continent-wide standard. No change made.	
NorthWestern Corporation NorthWestern Energy (NWE) (NWMT)	Short circuit analysis is a local issue. The reliability of the BES does not depend on the regular assessment of short circuit duty. Therefore, we believe short circuit analysis should be deleted from R2. R2.1.4 needs more clarification as to what constitutes major Transmission equipment. This would require a separate analysis (study) for each transformer (or any long lead-time equipment) for which a spare is not available, which could result in numerous additional cases. Major Transmission equipment could be limited to voltage levels greater than 200 kV. An exception should be made for phase-shifting transformers. As the system changes, with new generation and transmission lines being added, these analyses could become outdated very quickly. If a transformer were to fail, the Planning Department would immediately study the current system with this transformer removed. As stated in R2.4.1, the requirement to include induction motor loads is too prescriptive. At this time, with all of the unknown or estimated variables in the system model, accuracy of the model would not be improved. If a highly industrialized section were to develop within the NWE footprint, induction motor load could be added to the system model. The 20 MW threshold identified as "material change" for generation in R2.5 is too small. A better number for material generation changes would be 100 MW or a limit based on a percentage of the study area's installed generating capacity. Also, an aggregate of 20 MW addition/deletion generation would depend on the location of the individual generators to determine whether the overall system would be affected or not. The statement at the end of R2.6 that indicates corrective action plans are not required solely to meet the performance requirements for sensitivities should also apply to the spare equipment requirement. R2.8 should be deleted. It is not necessary for reliability. R2.9 should be deleted. It is not necessary for reliability.
Response: Part 2.3 is intended for the Planning Coordinator and/or Transmission Planner to assess the whether circuit breakers supporting the BES have interrupting capability for Faults that they will be expected to interrupt and is not specifically related to new planned Facilities. Requirement R2, part 2.3 has been revised to provide greater clarity. **2.3** The short circuit analysis portion of the Planning Assessment shall be conducted annually addressing the Near-Term Transmission Planning Horizon and can be supported by current or past studies as indicated in Requirement R2, part 2.6. The analysis shall be used to determine whether circuit breakers have interrupting capability for Faults that they will be expected to interrupt using the System short circuit model with any planned	

Organization	Question 2 Comment
	generation and Transmission Facilities in service which could impact the study area. Part 2.1.4 (now Part 2.1.5) has been revised to require that the assessment reflect the P0, P1, and P2 categories identified in Table 1 during the conditions that the System is expected to experience due to the possible unavailability of the long lead time Equipment. **2.1.5** When an entity's spare equipment strategy could result in the unavailability of major Transmission equipment that has a lead time of one year or more (such as a transformer), an analysis of the impact of this possible unavailability on System performance shall be assessed. The Planning Assessment shall reflect the P0, P1, and P2 categories identified in Table 1 during the conditions that the System is expected to experience due to the possible unavailability of the long lead time equipment. Part 2.4.1 is intended to allow the Planning Coordinator and Transmission Planner the discretion in the use of Aggregated System Load models in Stability Studies, if specific models are not available. However, it does not dictate the methodology or the process on how the studies are to be done. No change made. Part 2.5 has been revised and included as requirement R2, part 2.6 as shown. Note that the references to the "20 MW" threshold were deleted from the revised standard. **2.6.1** For steady state, short circuit, or Stability analysis: the study shall be five calendar years old or less, unless a technical rationale can be provided to demonstrate that the results of an older study are still valid. **2.6.2** For steady state, short circuit, or Stability analysis: the study shall not include any material changes unless a technical rationale can be provided to demonstrate that System changes do not impact the performance results in the study area. Parts 2.8 and R2.9 were intended to contribute to open and transparent Transmission planning for peer review. The SDT reviewed both requirements and agrees that as written, they were unclear. Part 2.9 has been deleted. Part 2.8 has been revised and included as Requirement R2, part 2.9 in the new version to require that the Planning Assessment provides the expected largest Consequential Load Loss identified by the analysis of P1 and P2 events in Table 1 only. **2.9** The Planning Assessment shall provide the expected largest Consequential Load Loss (megawatt Demand) identified by the analysis of P1 and P2 events in Table 1.
SMUD	R2.1.3 and R2.4.3The sentence, "sensitivity case(s) that are intended to stress the System with variations in one or more of the following conditions not already included in the studies shall be included in the Assessment: ", should be modified by changing the second 'included' to 'considered'. R2.1.4Since there is no NERC reliability standard requirement for a 'spare equipment strategy', what is the standing of a requirement that is based on having one R2.5.2There is no example given for 'Transmission additions/removals' Recommend that the wording of this requirement be made more discretionary with a requirement that the Transmission Planner include language explaining the reasons for using past studies.
Response: Parts 2.1.3 (now Part 2.1.4) and R2.4.3 have been revised. However, the SDT declines to change the work "included" to "considered" because the intent is that if the base case modeled already models the stressed condition, such as 1 in 10 adverse weather Load, even higher Load may not need to be included in the sensitivity study, **2.1.4** For each of the studies described in Requirement R2, parts 2.1.1 and 2.1.2, sensitivity case(s) shall be utilized to demonstrate the impact of	

Organization	Question 2 Comment
	changes to the basic assumptions used in the model for the list of items shown below. To accomplish this, the sensitivity analysis in the Planning Assessment must vary one or more of the following conditions not already included in the studies by a sufficient amount to stress the System within a range of credible conditions that demonstrate a measurable change in performance. • Real and reactive forecasted Load. • Expected transfers. • Expected in service dates of new or modified Transmission Facilities. • Reactive resource capability. • Generation additions, retirements, or other dispatch scenarios. • Controllable Loads and Demand Side Management. • Duration or timing of planned Transmission outages. **2.4.3** For each of the studies described in Requirement R2, parts 2.4.1 and 2.4.2, sensitivity case(s) shall be utilized to demonstrate the impact of changes to the basic assumptions used in the model for the list of items shown below. To accomplish this, the sensitivity analysis in the Planning Assessment must vary one or more of the following conditions not already included in the studies by a sufficient amount to stress the System within a range of credible conditions that demonstrate a measurable change in performance. • Load level, Load forecast, or dynamic model assumptions. • Expected transfers. • Expected in service dates of new or modified Facilities. • Reactive resource capability. • Generation additions, retirements, or other dispatch scenarios. The SDT has included the spare equipment strategy in Part 2.1.4 to ensure that the BES is designed so that it remains reliable even with long lead time Equipment unavailable, consistent with the directive from FERC Order 693. **2.1.5** When an entity's spare equipment strategy could result in the unavailability of major Transmission equipment that has a lead time of one year or more (such as a transformer), an analysis of the impact of this possible unavailability on System performance shall be assessed. The Planning Assessment shall reflect the P0, P1, and P2 categories identified in Table 1 during the conditions that the System is expected to experience due to the possible unavailability of the long lead time equipment. The SDT revised Part 2.5.2 (now Part 2.6.2) to remove the "Transmission additions/removals" and "generation changes" language.
Progress Energy Florida, Inc.	Concerning R2.1.4, this sub-requirement is overly burdensome for two primary reasons: a) It amounts to a system-wide N-2 and N-3 analysis, which goes against FERC's policy of separation and distinction between types of events as stated in Paragraph 1788 of Order 693: Under TPL-002-0 the system is not required to be able to withstand another N-1 contingency. That N-1 requirement is a Category C contingency which is addressed by TPL-003-0. b) The requirement to perform system-wide analysis for such a scenario is a significant workload issue, and will take time away from analysis of more probable events. Concerning the issue of material changes in past studies in sub-requirement

Organization	Question 2 Comment
	R2.5.2, PEF objects to the specification of changes in units of 20 MW or greater, due to the fact that a change (or even deletion) of a 20 MW unit in a case modeling a large BES does not truly constitute a material change. The SDT in its response to Question 15 in the comments for draft 2 stated that The SDT did not want to be overly prescriptive when describing the type of changes that could be considered material and has left the text general. PEF suggests that the SDT take its own advice, making the language in R2.5.2 more general in nature and leaving such modeling details to the discretion of the Transmission Owner. In R2.6.2, PEF assumes that the term "project initiation date" is intended to mean the Construction Move-In date. If the term means the first date at which Planners had identified it as a mitigation, PEF would object to this as it would appear to preclude the right to develop superior mitigations, or to cancel a project if it can be demonstrated as no longer needed. Concerning R2.8 and R2.9, PEF strenuously objects to such requirements. These requirements have no bearing on demonstrating the reliability (or lack thereof) of the BES, and therefore should be removed from the Standard.

Response: Part 2.1.4 (now Part 2.1.5) is based on FERC Order 693, Paragraphs 1724 – 1727. Part 2.1.5 is intended for the Planning Coordinator and/or Transmission Planner to take into account their spare Equipment strategy for long lead time Equipment when assessing the performance of their System. If the loss of a piece of major Equipment can be replaced within a reasonable period of time, planning studies for the following year can assume that that piece of Equipment will be replaced. If not, its impact of unavailability would need to be assessed. Part 2.1.5 has been revised to require that the Planning Assessment reflect the P0, P1, and P2 categories identified in Table 1 during the conditions that the System is expected to experience due to the possible unavailability of the long lead time Equipment.

> **2.1.5** When an entity's spare equipment strategy could result in the unavailability of major Transmission equipment that has a lead time of one year or more (such as a transformer), an analysis of the impact of this possible unavailability on System performance shall be assessed. The Planning Assessment shall reflect the P0, P1, and P2 categories identified in Table 1 during the conditions that the System is expected to experience due to the possible unavailability of the long lead time equipment.

Part 2.5.2 has been revised and included as Requirement R2, part 2.6.2 to address your concerns. The revised standard does not include the reference to a "20 MW" threshold.

> **2.6.2** For steady state, short circuit, or Stability analysis: the study shall not include any material changes unless a technical rationale can be provided to demonstrate that System changes do not impact the performance results in the study area.

Part 2.6 has been revised and included as Requirement R2, part 2.7 in the new version.

> **2.7** For planning events shown in Table 1, when the analysis indicates an inability of the System to meet the performance requirements in Table 1, the Planning Assessment shall include Corrective Action Plan(s) addressing how the performance requirements will be met. Revisions to the Corrective Action Plan(s) are allowed in subsequent Planning Assessments but the planned System shall continue to meet the performance requirements in Table 1. Corrective Action Plan(s) do not need to be developed solely to meet the performance requirements for a single sensitivity run in accordance with Requirements R2, parts 2.1.4 and 2.4.3. The Corrective Action Plan(s) shall:

Parts 2.8 and R2.9 were intended to contribute to open and transparent Transmission planning for peer review. The SDT reviewed both requirements and agrees that as written, they were unclear. Part 2.9 has been deleted. Part 2.8 has been revised and included as Requirement R2, part 2.9 in he new version to require that the Planning Assessment provides the expected largest Consequential Load Loss identified by the analysis of P1 and P2 events in Table 1 only.

Organization	Question 2 Comment
2.9 The Planning Assessment shall provide the expected largest Consequential Load Loss (megawatt Demand) identified by the analysis of P1 and P2 events in Table 1.	
Xcel Energy	R2.1.3 is this indicating that only one of the variations need to be studied? ("in one or more of the following conditions"). Recommend having the planner work with the load to determine what sensitivity studies to perform. R2.1.4 it is unclear as to what should be done with the analysis that incorporates the company's spare equipment strategy. Is this requirement inferring that a company's spare equipment strategy need to ensure that it can still operate to within the requirements for contingencies of Table 1 without the component? R2.2.1 is the intent to have the study for the 10 year horizon or to include any project that is started within the next 10 years and thus the study must be extended to the forecasted completion of the project (conceivably as long as 20 years or more?) R2.6.4 recommend clarifying how situations beyond the control of the TP or PC are determined. It is unclear if this is to imply that if something is outside of the control of the department who conducts the planning studies or if it is outside the control of the registered function's legal entity (i.e. corporation). R2.8 appears to be nonessential information for reliability; for what purpose does this requirement exist? R2.9 - appears to be nonessential information for reliability; for what purpose does this requirement exist?

Response: Part 2.1.3 (now Part 2.1.4) does not preclude the Planning Coordinator or Transmission Planner working with other Functional Entities to develop strategies on performing sensitivity studies. Part 2.1.4 requires that the Planning Coordinator or Transmission Planner perform sensitivity studies for at least one of the variation not already covered in the studies described in Parts 2.1.1 and 2.1.2

Part 2.1.4 (now Part 2.1.5) requires that the Planning Coordinator and/or Transmission Planner consider the possibility that a piece of major Equipment can be out of service for an extended period of time because no spare piece of Equipment is on hand or can be purchased and be placed in service such that the outage won't last into the next planning cycle. Loss of a transformer is given as an example as a piece of major Equipment, which if forced out of service and had to be replaced with a new transformer, may have a lead time of more than one year. However, if a company has a strategy, for example, to have spare transformers in its System, or have agreements with another entity to share spare transformers, it would significantly reduce the probability of an outage of a transformer for longer than one year. Part 2.1.5 has been revised to require that the assessment reflect the P0, P1, and P2 categories identified in Table 1 during the conditions that the System is expected to experience due to the possible unavailability of the long lead time Equipment.

> **2.1.5** When an entity's spare equipment strategy could result in the unavailability of major Transmission equipment that has a lead time of one year or more (such as a transformer), an analysis of the impact of this possible unavailability on System performance shall be assessed. The Planning Assessment shall reflect the P0, P1, and P2 categories identified in Table 1 during the conditions that the System is expected to experience due to the possible unavailability of the long lead time equipment.

Part 2.2.1 has been revised because extending the Planning Horizon beyond 10 years for projects with lead times longer than 10 years is already covered in the definition of Long-Term Transmission Planning Horizon. This allowance is needed to provide planning flexibility, and is at the discretion of the Planning Coordinator or Transmission Planner. For example, if the System is found not to meet performance standards in year 10, but the project to correct the loading cannot be placed in service for 12 years, then the Corrective Action Plan needs to identify the interim solutions before the project can be brought on line.

> **2.2.1** A current study assessing expected System peak Load conditions for one of the years in the Long-Term Transmission Planning Horizon and the

Organization	Question 2 Comment
rationale for why that year was selected. Part 2.6.4 refers to the situations beyond the control of the Transmission Planner or Planning Coordinator as Functional Entities. Parts 2.8 and R2.9 were intended to contribute to open and transparent Transmission planning for peer review. The SDT reviewed both requirements and agrees that as written, they were unclear. Part 2.9 has been deleted. Part 2.8 has been revised and included as requirement R2, part 2.9 in the new version to require that the Planning Assessment provides the expected largest Consequential Load Loss identified by the analysis of P1 and P2 events in Table 1 only. **2.9** The Planning Assessment shall provide the expected largest Consequential Load Loss (megawatt Demand) identified by the analysis of P1 and P2 events in Table 1.	
New Brunswick System Operator	R2.1.4 Major transmission element needs to be defined. For example, what about sync condenser, or generator step up transformer R2.2 Clearity required. Example: What is meant by "current System peak load" It is not clear what supplemental load loss is. Would load tripped due to undervoltage or SPS as a result of a contingency be considered supplemental load? As a follow up what then is Non-consequential load (provide examples). How would this load be lost? The requirements appear the same regardless of the amount of Non-consequential load loss. Is there any consideration of applying thresholds both on suppmental and non-consequential load loss where these loads are defined as (or applied as) "exceeding xxx amount of MW". Regarding Table 1 b, what does the following mean: "However, Supplemental Load Loss associated with an event shall not be used to meet steady state performance requirements." Please clearify the definition of Year One. This definition also does not include Planning coordinator. Was that intentional?
Response: In Part 2.1.4 (now Part 2.1.5), major Transmission Equipment would be those pieces of Equipment, the loss of which can have significant impact on System performance. They are typically the ones listed in the Contingency Events in Table 1. Part 2.1.5 has been revised to require that the assessment reflect the P0, P1, and P2 categories identified in Table 1 during the conditions that the System is expected to experience due to the possible unavailability of the long lead time Equipment. **2.1.5** When an entity's spare equipment strategy could result in the unavailability of major Transmission equipment that has a lead time of one year or more (such as a transformer), an analysis of the impact of this possible unavailability on System performance shall be assessed. The Planning Assessment shall reflect the P0, P1, and P2 categories identified in Table 1 during the conditions that the System is expected to experience due to the possible unavailability of the long lead time equipment. Part 2.2 refers to a "current System peak Load study". This would be a System peak Load study that is performed in the current year. In the Definition Section, Supplemental Load Loss is defined as Load that is disconnected from the network by end-user Equipment responding to post-Contingency System conditions. Because the disconnection is at the discretion of the Load customer, not the Planning Coordinator or Transmission Planner, they cannot be counted on to leave the System. Therefore, the Transmission System cannot be planned as if such Load would disconnect. Part 2.2 has been revised to provide greater clarity. **2.2** The Long-Term Transmission Planning Horizon portion of the steady state analysis shall be assessed annually and be supported by the	

Organization	Question 2 Comment
	following annual current study, supplemented with qualified past studies as indicated in Requirement R2, part 2.6: A cap on the allowable Non-Consequential Load Loss may be different for different areas and may not be practical in a Continent-wide standard. No change made. See response for Part 2.2 above. The definition has been revised to include Planning Coordinator. **Year One:** The first year that a Planning Coordinator or a Transmission Planner is responsible for assessing. This is further defined as the planning window that begins 12-18 months from the end of the current calendar year.
Lafayette Utilities System	R2.5. This basic requirement intends, as we understand it, to require that earlier studies not be used for a current assessment if they are no longer accurate. But the phrasing is potentially confusing, and would be clearer if revised. Since the requirement deals with the use of past studies, we suggest that R2.5.2 be revised to state that the study may be used only if there have been no material changes, so that R2.5 reads in full: R2.5. Past studies may be used to support the Planning Assessment if they meet the following requirements: R2.5.1. For steady state, short circuit, or Stability analysis: the study shall be five calendar years old or less. R2.5.2. For steady state, short circuit, or Stability analysis: the study may be used only if there have been no material changes, such as generation or Transmission additions/removals, or topology changes that have occurred in the intervening period and would impact the study area. Material generation changes could include: The addition/deletion/change of individual generating unit capability of 20 MW or greater. An aggregated addition/deletion/change to a group of generating units directly connected through their step-up transformer(s) to the BES which total 20 MW or greater. With respect to footnote 10 to Table 1, we fear that the flexibility suggested by those provisions may be excessive for a planning standard. The ambiguity occasioned by stating emergency actions that can properly be taken in a planning standard can be utilized by those who plan the system in a manner which plans to drop non-consequential loads just as footnote b has been used in the past. If this is intended to raise the bar as stated these provisions do not belong in a planning standard, at least as now stated. It may be appropriate to remove the reference to footnote 10, at least in the Initial System Condition entry in P3, where it suggests that it can be invoked after loss of a single generator, and we request the SDT to review that footnote to assure that it is appropriate in the other entries to which it is applied. In addition to the foregoing, we are concerned that the language of footnote 10 to Table 1 is unclear and subject to at least one interpretation that would seriously undermine reliability. Specifically, the first sentence of footnote 10 permits "[c]urtailment of firm transmission service, when coupled with the appropriate re-dispatch of resources obligated to re-dispatch." The reference to an "obligat[ion] to re-dispatch" is ambiguous at best and should be clarified. For example, footnote 10 should not be read as permitting Balancing Authority A to rely on curtailment of firm transmission service coupled with re-dispatch of generation by adjacent Balancing Authority B during a Level 5 TLR event, based on the theory that, if a Level 5 TLR is declared and the Reliability Coordinator assigns to Balancing Authority B an NNL reduction responsibility that compels it to reload its resources, Balancing Authority B is therefore "obligated to re-dispatch" within the meaning of footnote 10. We suspect the intent of the first sentence of footnote 10 was to recognize and give effect to arrangements in which (following the example) Balancing Authority A has made a prior contractual arrangement with

Organization	Question 2 Comment
	Balancing Authority B (or another generation owner) to provide redispatch services when requested by Balancing Authority A. In that circumstance, Balancing Authority A would be allowed to couple the curtailment of firm transmission with redispatch provided by Balancing Authority B (or another generation owner) pursuant to its contractual obligation. We suggest that this limitation be reflected by revising the first sentence of footnote 10 to read as follows: Curtailment of firm transmission service, when coupled with the appropriate re-dispatch of resources subject to a contractual obligation to provide re-dispatch service to the operator of the system for which the Transmission Planner is responsible, is allowed both as a System adjustment (as identified in the column titled "Initial System Conditions") and a corrective action, where it can be demonstrated that Facilities remain within applicable Facility Ratings and those adjustments do not result in the shedding of any firm Load. Without the limitation reflected in the foregoing revision, an entity could interpret footnote 10 as allowing it to rely on the redispatch of generation by other systems that may be (in effect) mandated by a Reliability Coordinator during a Level 5 TLR event. That sort of "leaning" on adjacent systems should not be permitted as a System adjustment or corrective action under TPL-001, especially where it imposes uncompensated burdens and costs on the system(s) forced to redispatch under these circumstances.
Response: Part 2.5 has been revised and included as Requirement R2, part 2.6 as shown. Note that the revised standard does not include any reference to the "20 MW" threshold. **2.6.1** For steady state, short circuit, or Stability analysis: the study shall be five calendar years old or less, unless a technical rationale can be provided to demonstrate that the results of an older study are still valid. **2.6.2** For steady state, short circuit, or Stability analysis: the study shall not include any material changes unless a technical rationale can be provided to demonstrate that System changes do not impact the performance results in the study area. Footnote 10 (now footnote 9) was added to address the disjoint between how some parties calculate ATC/AFC when assessing Long Term Firm Transmission Service and the currently proposed TPL-001-1 standard. TPL-001-1 requires Transmission Planners to plan their systems to meet multiple contingency events and some parties assess Long Term Firm Transmission Service on a first Contingency basis. Units obligated to re-dispatch, as contemplated in Footnote 9 are those units which are contractually bound to provide the service as well as those obligated to provide the service under Network Integrated Transmission Service, under FERC's pro forma OATT. Under the pro forma OATT, units designated as network resources receiving NITS are obligated to re-dispatch as requested by the Transmission Provider pursuant to Section 33.2 to maintain reliability. The footnote is worded such that curtailment/re-dispatch cannot result in the loss of firm Load preserves the guidance given by FERC in Order 693 that no single Contingency result in the loss of firm Load. No change made. The SDT has reviewed the application of footnote 10 (now footnote 9) and believes that it is correct. No change made.	
Mississippi Delta Energy Agency	R2.5. This basic requirement intends, as we understand it, to require that earlier studies not be used for a current assessment if they are no longer accurate. But the phrasing is potentially confusing, and would be clearer if revised. Since the requirement deals with the use of past studies, we suggest that R2.5.2 be revised to state that the study may be used only if there have been no material changes, so that R2.5 reads in full:"R2.5. Past studies may be used to support the Planning Assessment if they meet the following requirements: R2.5.1. For steady state, short circuit, or Stability analysis: the study shall be five calendar years old or less. R2.5.2. For steady state, short circuit, or Stability analysis: the study may be used only if there have been no material changes, such as generation or Transmission additions/removals, or topology changes that have occurred in the intervening period and would impact the study area. Material generation changes could include: The addition/deletion/change of individual generating unit capability of 20 MW or greater. An aggregated

Organization	Question 2 Comment
	addition/deletion/change to a group of generating units directly connected through their step-up transformer(s) to the BES which total 20 MW or greater. With respect to footnote 10 to Table 1, we fear that the flexibility suggested by those provisions may be excessive for a planning standard. The ambiguity occasioned by stating emergency actions that can properly be taken in a planning standard can be utilized by those who plan the system in a manner which plans to drop non-consequential loads just as footnote b has been used in the past. If this is intended to raise the bar as stated these provisions do not belong in a planning standard, at least as now stated. It may be appropriate to remove the reference to footnote 10, at least in the Initial System Condition entry in P3, where it suggests that it can be invoked after loss of a single generator, and we request the SDT to review that footnote to assure that it is appropriate in the other entries to which it is applied.
Response: Part 2.5 has been revised and included as Requirement R2, part 2.6 as shown. Note that the revised standard does not include any reference to the "20 MW" threshold. **2.6.1** For steady state, short circuit, or Stability analysis: the study shall be five calendar years old or less, unless a technical rationale can be provided to demonstrate that the results of an older study are still valid. **2.6.2** For steady state, short circuit, or Stability analysis: the study shall not include any material changes unless a technical rationale can be provided to demonstrate that System changes do not impact the performance results in the study area. Footnote 10 (now footnote 9) was added to address the disjoint between how some parties calculate ATC/AFC when assessing Long Term Firm Transmission Service and the currently proposed TPL-001-1 standard. TPL-001-1 requires Transmission Planners to plan their systems to meet multiple contingency events and some parties assess Long Term Firm Transmission Service on a first Contingency basis.. Units obligated to re-dispatch, as contemplated in Footnote 9 are those units which are contractually bound to provide the service as well as those obligated to provide the service under Network Integrated Transmission Service, under FERC's pro forma OATT. Under the pro forma OATT, units designated as network resources receiving NITS are obligated to re-dispatch as requested by the Transmission Provider pursuant to Section 33.2 to maintain reliability. The footnote is worded such that curtailment/re-dispatch cannot result in the loss of firm Load preserves the guidance given by FERC in Order 693 that no single Contingency result in the loss of firm Load. No change made.	
Ameren	In R2, The phrase document results should be changed to summarize results. While results will be documented, the Planning Assessment should just include a summary. In R2.1, the reference to requirement R2.6 (at the end of the last line) should be changed to R2.5. In R2.1.3, it is suggested that the studies be referred to as the "base studies" to avoid confusion with the sensitivity studies. Also it is suggested that another phrase be added at the end for clarity. The entire R2.1.3 would then be as follows: For each of the base studies described in Requirements R2.1.1 and R2.1.2, sensitivity case(s) that are intended to stress the System with variations in one or more of the following conditions not already included in the studies shall be included in the Assessment. Sensitivity studies would include changes to: In Requirement R2.1.4, it is suggested that language be added to reflect the possible unavailability of the equipment, such as: When an entity's spare equipment strategy could result in the unavailability of major Transmission equipment that has a lead time of one year or more (such as a transformer), an analysis of the impact of this possible unavailability on System performance shall be assessed. The analysis shall reflect the Contingencies identified in Table 1 during the conditions that

Organization	Question 2 Comment
	the System is expected to experience the possible unavailability of the long lead time equipment. It is not clear how adequate lead times for equipment would be determined. In Requirements R2.3 and R2.4, consider adding a reference to Requirement R2.5 for the past studies. In Requirement R2.4.1, it is suggested that it be reworded to the following: System peak Load for one of the five years, including Load models which appropriately represents the dynamic behavior of Loads, considering the behavior of induction motor Loads. An aggregate System Load model which represents the overall dynamic behavior of the Load is acceptable. Load models referenced in R2.4.1 should be confined to the consideration of transient stability study work. With the elimination of the distinction between system and generating plant stability studies, the blanket requirement in R2.5.1 that all stability analyses be five calendar years old or less, regardless of any material changes to the system, would cause needless work to be performed on those plants or areas of the system where no changes are occurring. We suggest adding the following to the end of R2.5.1: unless justification can be provided to demonstrate that the results of an older study are still valid. In Requirement R2.4.3, it is suggested that this sub-requirement be reworded to the following: For each of the base studies described in Requirements R2.4.1 and R2.4.2, sensitivity case(s) that are intended to stress the System with variations in one or more of the following conditions not already included in the base studies shall be included in the Assessment. Sensitivity studies would include changes to: In bullet three of Requirement R2.6.1, would we allow automatic generation tripping for a single (P1) event if it is not consequential? It seems that tripping of generation should be restricted to P2 events 2 or 3 at a minimum. In bullet five of Requirement R2.6.1, is there a maximum duration that operating procedures can be used before a capital project must be included (or completed) in the Corrective Action Plan? In Requirement R2.6.2, it is not clear what constitutes a "project initiation date". Please clarify. Please explain the reason why Requirement R2.8 is needed in the Assessment. Reporting the largest Consequential Load Loss does not impact reliability. Please explain the reason why Requirement R2.9 is needed in the Assessment. Reporting the largest Non-Consequential Load Loss doe not impact reliability. The proposed standard not only raises the bar for system performance requirements, but also raises the bar for reporting and documentation. We need to employ almost as many librarians and technical writers as engineers to develop and keep track of the documentation. Engineers need to spend more time performing the studies and spend less time documenting studies keeping track of documentation for multiple years.

Response: Part 2 has been revised to reflect your suggestion.

R2. Each Transmission Planner and Planning Coordinator shall prepare an annual Planning Assessment of its portion of the BES. This Planning Assessment shall use current or past studies, document assumptions, summarize documented results, and cover steady state analyses, short circuit analyses, and Stability analyses.

Organization	Question 2 Comment
In the new version, Part 2.6 now contains the requirement for the use of past studies, so Part 2.1 now has the correct reference. No change made. The SDT reviewed Part 2.1.3 (now Part 2.1.4) and declined to use the term "base study" because "base study" may have different meanings in different parts of the continent, and the term, "studies described in Parts 2.1.1 and 2.1.2" should be sufficient to avoid confusion. No change made. Part 2.1.4 (now Part 2.1.5) has been revised to require that the assessment reflect the P0, P1, and P2 categories identified in Table 1 during the conditions that the System is expected to experience due to the possible unavailability of the long lead time Equipment. **2.1.5** When an entity's spare equipment strategy could result in the unavailability of major Transmission equipment that has a lead time of one year or more (such as a transformer), an analysis of the impact of this possible unavailability on System performance shall be assessed. The Planning Assessment shall reflect the P0, P1, and P2 categories identified in Table 1 during the conditions that the System is expected to experience due to the possible unavailability of the long lead time equipment. Parts 2.3 and 2.4 have been revised to include the reference to the requirements for use of past studies. **2.3** The short circuit analysis portion of the Planning Assessment shall be conducted annually addressing the Near-Term Transmission Planning Horizon and can be supported by current or past studies as indicated in Requirement R2, part 2.6. The analysis shall be used to determine whether circuit breakers have interrupting capability for Faults that they will be expected to interrupt using the System short circuit model with any planned generation and Transmission Facilities in service which could impact the study area. **2.4** The Near-Term Transmission Planning Horizon portion of the Stability analysis shall be assessed annually and be supported by current or past studies as indicated in Requirement R2, part2.6. The following studies are required. Part 2.4.1 has been revised to reflect your suggestion. In addition, Part 2.4 concerns only "The Near-Term Transmission Planning Horizon portion of the Stability analysis". Part 2.4.1 carries the same limitation as Part 2.4. **2.4.1** System peak Load for one of the five years. System peak Load levels shall include a Load model which represents the dynamic behavior of Loads that could impact the study area, considering the behavior of induction motor Loads. An aggregate System Load model which represents the overall dynamic behavior of the Load is acceptable. The requirement has been revised as suggested. **2.6.2** For steady state, short circuit, or Stability analysis: the study shall not include any material changes unless a technical rationale can be provided to demonstrate that System changes do not impact the performance results in the study area. The SDT reviewed Part 2.4.3 and declined to use the term "base study" because "base study" may have different meanings in different parts of the continent, and the term, "studies described in Parts 2.4.1 and 2.4.2" should be sufficient to avoid confusion. No change made. Part 2.6 has been revised and included as Requirement, part 2.7 to reflect your suggestion. **2.7** For planning events shown in Table 1, when the analysis indicates an inability of the System to meet the performance requirements in Table 1, the Planning Assessment shall include Corrective Action Plan(s) addressing how the performance requirements will be met. Revisions to the Corrective Action Plan(s) are allowed in subsequent Planning Assessments but the planned System shall continue to meet the performance requirements in Table 1. Corrective Action Plan(s) do not need to be developed solely to meet the performance requirements for a single sensitivity run in accordance with Requirements R2, parts 2.1.4 and 2.4.3. The Corrective Action Plan(s) shall: The third bullet in Part 2.6.1 (now 2.7.1) is intended to meet the requirements in Table 1. Generation tripping is allowed at the discretion of the Planning

Organization	Question 2 Comment
Coordinator or Transmission Planner for P1 Events as long as there is no loss of firm Non-Consequential Load. In addition, in the fifth bullet, the duration for use of an operating procedure is also at the discretion of the Planning Coordinator or Transmission Planner because it may not be feasible environmentally to implement Transmission reinforcements in some locations. Project initiation date has been deleted from the requirements. Parts 2.8 and 2.9 were intended to contribute to open and transparent Transmission planning for peer review. The SDT reviewed both requirements and agrees that as written, they were unclear. Part 2.9 has been deleted. Part 2.8 has been revised and included as Requirement R2, part 2.9 in the new version to require that the Planning Assessment provides the expected largest Consequential Load Loss identified by the analysis of P1 and P2 events in Table 1 only. **2.9** The Planning Assessment shall provide the expected largest Consequential Load Loss (megawatt Demand) identified by the analysis of P1 and P2 events in Table 1.	
Puget Sound Energy, Inc.	Short circuit analyses is a local phenomenon and should not be required as part of a transmission planning assessment of the BES. In any case, the effects of failure of over-stressed breakers are already included in the Events to be assessed in Table 1. For example, P2-3 and P2-4 (Internal Breaker Fault), and P4 (Stuck Breaker while attempting to clear a fault). Clarity is needed in R2.1.4. The requirement to assess the Contingencies identified in Table 1 is too burdensome. This requirement does not specify any limits on the equipment for which an analysis must be conducted. As currently drafted, this could require a separate analysis for each transformer (or any long lead-time equipment) for which a spare is not available. A separate initial case would need to be developed to assess the Contingencies identified in Table 1 for each transformer. This could result in a countless number of additional cases. We recommend a threshold be established, such as all transformers with a low side voltage above 200 kV. The 20 MW threshold identified as material change for generation in R2.5 is too small. The limit should be raised or based on a percentage of the study area's installed generating capacity. R2.7 should be deleted, see comment on R2 above. R2.8 should be deleted. It is not necessary for reliability. What will be done with this information on the largest Consequential Load Loss and the associated event caused by any P1 event and any P2 event? if it is documented? R2.9 should be deleted. It is not necessary for reliability. It will be difficult to determine the maximum permissible Non-Consequential Load value. It will end up being based on cost (monetary, societal, environmental, etc.), which is dependent, among other things, on the types of load being served. It very well may be a case by case situation.
Response: Part 2.3 is intended for the Planning Coordinator and/or Transmission Planner to assess the whether circuit breakers supporting the BES have interrupting capability for Faults that they will be expected to interrupt and is not specifically related to new planned Facilities. Part 2.3 has been revised to provide greater clarity. **2.3** The short circuit analysis portion of the Planning Assessment shall be conducted annually addressing the Near-Term Transmission Planning Horizon and can be supported by current or past studies as indicated in Requirement R2, part 2.6. The analysis shall be used to determine whether circuit breakers have interrupting capability for Faults that they will be expected to interrupt using the System short circuit model with any planned generation and Transmission Facilities in service which could impact the study area.	

Organization	Question 2 Comment
Part 2.1.4 (now Part 2.1.5) has been revised to require that the assessment reflect the P0, P1, and P2 categories identified in Table 1 during the conditions that the System is expected to experience due to the possible unavailability of the long lead time Equipment. **2.1.5** When an entity's spare equipment strategy could result in the unavailability of major Transmission equipment that has a lead time of one year or more (such as a transformer), an analysis of the impact of this possible unavailability on System performance shall be assessed. The Planning Assessment shall reflect the P0, P1, and P2 categories identified in Table 1 during the conditions that the System is expected to experience due to the possible unavailability of the long lead time equipment. The language in Part 2.5.2 that referenced a 20 MW threshold was deleted from the revised standard. The SDT assumes that you meant the comment on short circuit analysis above. The SDT declines to delete the requirement as the SDT believes that it is a necessary part of an overall Planning Assessment. Parts 2.8 and 2.9 were intended to contribute to open and transparent Transmission planning for peer review. The SDT reviewed the both requirements and agrees that as written, they were unclear. Part 2.9 has been deleted. Part 2.8 has been revised and included as Requirement R2, part 2.9 in the new version to require that the Planning Assessment provides the expected largest Consequential Load Loss identified by the analysis of P1 and P2 events in Table 1 only. **2.9** The Planning Assessment shall provide the expected largest Consequential Load Loss (megawatt Demand) identified by the analysis of P1 and P2 events in Table 1.	
Manitoba Hydro	Requirement Text: R2.1: Reference of past studies should be to R2.5, not R2.6 (typo). R2.1.3: The sensitivity to Planned duration or timing of Transmission Outages should be modified to only include Planned long duration Transmission outages that span multiple seasons, if known. Short duration planned maintenance outages should not be included in a planning assessment. R2.1.4 - The second sentence doesn't read right - the sentence should be changed to read: "The analysis shall reflect the Contingencies identified in Table 1 under the conditions that the System is expected to experience during the unavailability of the long lead time equipment. R2.2.1 - This sub-requirement should be deleted. Why do extra assessments beyond the 10 year period" Any items beyond 10 years will be covered when they fall into the 10 year period. For example, if we assess the 10 year horizon, then the project due to be complete in 12 years will be part of the assessment in 2 years when it is 10 years out. We will have to show every year how our system meets compliance regardless of this extra analysis, so what's the point. Every year we have to show how we comply in the short and long term so what difference does it make when each project is completed as long as we are in compliance or identify Corrective Action Plans (CAPs) along the way. R2.4.1: The statement "a Load model shall be used which appropriately represents the dynamic behavior of Loads is not very crisp. What will appropriate be interpreted to mean by the NERC auditor? Does an MOD standard exist that covers gathering data and validating loads models? This should be a first step. The SDT should add a statement that the application of detailed induction motor modeling can be limited to areas where poor voltage recovery is expected due to a high concentration of such load. The requirement should be modified to require the PC/TP to provide a rationale for the load models used in its specific planning area. R2.5: A Past Study is a definition and should be moved to the definition section. The definition only identifies power changes

Organization	Question 2 Comment
	as possible material changes, but should also include machine control (exciters/governors) changes. We suggest the bulleted list of Material Generation changes be expanded. R2.6.1: Can the SDT clarify how a rate application qualifies as a CAP action? R2.9 - The sentence should refer to maximum Non-Consequential Load Loss not maximum permissible Non-Consequential Load Loss.

Response: In the new version, Part 2.6 now contains the requirement for the use of past studies, so Part 2.1 now has the correct reference. No change made.

In Part 2.1.3 (now Part 2.1.4), outages that span multiple seasons are included in the last bullet, "Planned duration or timing of Transmission outages". No change made.

Part 2.1.4 (now Part 2.1.5) has been revised to reflect your suggestion.

> **2.1.5** When an entity's spare equipment strategy could result in the unavailability of major Transmission equipment that has a lead time of one year or more (such as a transformer), an analysis of the impact of this possible unavailability on System performance shall be assessed. The Planning Assessment shall reflect the P0, P1, and P2 categories identified in Table 1 during the conditions that the System is expected to experience due to the possible unavailability of the long lead time equipment.

Part 2.2.1 has been revised because extending the Planning Horizon beyond 10 years for projects with lead times longer than 10 years is already covered in the definition of Long-Term Transmission Planning Horizon. This allowance is needed to provide planning flexibility, and is at the discretion of the Planning Coordinator or Transmission Planner. For example, if the System is found not to meet performance standards in year 10, but the project to correct the loading cannot be placed in service for 12 years, then the Corrective Action Plan needs to identify the interim solutions before the project can be brought on line.

> **2.2.1** A current study assessing expected System peak Load conditions for one of the years in the Long-Term Transmission Planning Horizon and the rationale for why that year was selected.

Part 2.4.1 has been revised to provide greater clarity.

> **2.4.1** System peak Load for one of the five years. System peak Load levels shall include a Load model which represents the dynamic behavior of Loads that could impact the study area, considering the behavior of induction motor Loads. An aggregate System Load model which represents the overall dynamic behavior of the Load is acceptable.

The SDT declines to move past study to the Definition Section because the Definition, once approved, will apply to all NERC Standards, however, past study is only used in this TPL Standard.

In Part 2.6.1, "rate application" refers to rate incentives to change behavior of end-use customers and can be part of the "actions to achieve required System performance". This is included to allow for non-traditional solutions to achieving required System performance.

Part 2.9 has been deleted.

E.ON U.S.	R2.1.3Change For each of the studies to For at least one of the studies R2.1.1 and R2.1.2 require that 3 studies be performed each year. As written, the requirement indicates that the transmission planner has to perform at least one sensitivity study for the 3 studies required by R2.1.1 and R2.1.2. This means that the transmission planner would also have to perform 3 or more sensitivity studies each year. One sensitivity study for one of the 3 studies required by R2.1.1 and

Organization	Question 2 Comment
	R2.1.2 should suffice. R2.1.4.Delete "The analysis shall reflect the Contingencies identified in Table 1 during the conditions that the System is expected to experience due to the unavailability of the long lead time equipment. This statement is redundant since R3 requires this analysis for all of R2.1. Including this statement in R2.1.4 and not in R2.1.1 and R2.1.2 makes it appear that this requirement has different performance requirements. R2.4.3R2.4 does not require studies annually. However, if the transmission planner chooses to study a System Peak Load or a System Off-Peak Load condition R2.4.3 requires that the planner also study sensitivity to that same condition in the current year. E.ON U.S. believes it sufficient that the assessment include a sensitivity study for some System Peak Load and some System Off-Peak Load condition.R2.6The third sentence should be modified to include R2.1.4., so that it reads "Corrective Action Plans do not need to be developed solely to meet the performance requirements for sensitivities run in accordance with Requirements R2.1.3, R2.1.4 and R2.4.3. The annual studies performed for Category P6 alert the Transmission Planner to the risks of transformer failure. The Transmission Planner is required to design the system to limit those risks. If the delivery time for a piece of equipment is 11 months, then P6 allows Interruption of Firm Transmission Service and Non-Consequential Load Loss. If the delivery time for a piece of equipment is 12 months, then P1 requires that the system be designed for no Interruption of Firm Transmission Service and Non-Consequential Load Loss. This is a significant increase in performance requirements for an event that will most likely not extend beyond to a second System Peak Load period. If R2.1.4 is not included in the requirement the transmission planners would essentially be designing for an Extreme Event, i.e., events which are more severe and have a lower probability of occurrence than Planning Events. R2.6.1Operating Procedures, by NERC definition, require significantly more detail than is appropriate for a Corrective Action Plan. It is not appropriate that Transmission Planners write Operating Procedures to be used by NERC Certified System Operators. E.ON U.S. suggests that Operating Procedures be changed to mitigation plans. R2.6.5 Planning Assessments and System Facilities are not NERC defined terms. Operating Procedures, by NERC definition, require significantly more detail than is appropriate for a Corrective Action Plan. It is not appropriate that Transmission Planners write Operating Procedures to be used by NERC Certified System Operators. E.ON U.S. suggests that Operating Procedures be changed to mitigation plans. R2.8There are no requirements to limit Consequential Load Loss. Impacted customers are typically aware of the customary level of service and have chosen not to pay for extraordinary levels of service. E ON US questions the purpose and benefit of this requirement. While continuity of service to end use customers is an important measure of service reliability for which utilities answer to state authorities, BES reliability requires that the system remain balanced and that local failures not result in cascading BES events NERC standards should, pursuant to FPA Section 215, focus solely on BES reliability

Response: Parts 2.1.3 (now Part 2.1.4) and 2.4.3: The SDT disagrees with changing Parts 2.1.4 and 2.4.3 to requiring sensitivity study for only one System condition because this change potentially could reduce the Assessment to be based on one sensitivity study on one System condition. Since the same sensitivity can have different impacts on System performance under different System conditions, and different System conditions may require different sensitivities to be investigated, such limitation may not be adequate to maintain reliability going forward. No change made.

Part 2.1.4 (now Part 2.1.5) requires that the Planning Coordinator and/or Transmission Planner consider the possibility that a piece of major Transmission Equipment can be out of service for an extended period of time because no spare piece of Equipment is on hand or can be purchased and be placed in service

Organization	Question 2 Comment
such that the outage won't last into the next planning cycle. Loss of a transformer is given as an example as a piece of major Equipment, which if forced out of service and had to be replaced with a new transformer, may have a lead time of more than one year. However, if a company has a strategy, for example, to have spare transformers in its System, or have agreements with another entity to share spare transformers, it would significantly reduce the probability of an outage of a transformer for longer than one year. Part 2.1.5 has been revised to require that the assessment reflect the P0, P1, and P2 categories identified in Table 1 during the conditions that the System is expected to experience due to the possible unavailability of the long lead time Equipment. **2.1.5** When an entity's spare equipment strategy could result in the unavailability of major Transmission equipment that has a lead time of one year or more (such as a transformer), an analysis of the impact of this possible unavailability on System performance shall be assessed. The Planning Assessment shall reflect the P0, P1, and P2 categories identified in Table 1 during the conditions that the System is expected to experience due to the possible unavailability of the long lead time equipment. Part 2.6 is not intended for the Planning Coordinator or Transmission Planner to write Operating Procedures, only to reflect the effects or results of the Operating Procedures in its Corrective Action Plan. Mitigation Plan carries a special meaning for Compliance and so may not be appropriate for use in this standard. No change made. The term, "Planning Assessment" is one of several terms proposed for addition to the NERC Glossary of Terms Used in Reliability Standards. "System" and "Facilities" are already approved terms. Part 2.8 is intended to contribute to open and transparent Transmission planning for peer review. The SDT reviewed the requirement and agrees that as written it was unclear. Part 2.8 has been revised and included as Requirement R2, part 2.9 in the new version to require that the Planning Assessment provides the expected largest Consequential Load Loss identified by the analysis of P1 and P2 events in Table 1 only. **2.9** The Planning Assessment shall provide the expected largest Consequential Load Loss (megawatt Demand) identified by the analysis of P1 and P2 events in Table 1.	
LCRA Transmission Services Corporation	In R2.6.2, it is stated that a project initiation date is required as well as an in-service date. What is considered the project initiation date, the point at which the project plan is approved or the time at which construction is to begin? If it is the time at which construction is to begin, then LCRA TSC believes this requirement does not belong in the TPL-001-1 standard as the construction timeframe for a project is developed by groups outside of Planning based on resources and outage availability.
Response: Project initiation date has been deleted from the requirements.	
National Grid	R2 Comment In the first sentence, replace the phrase prepare with conduct and document and in the second sentence replace "This Planning Assessment shall use current or past studies, document assumptions, document results, and shall cover steady state analyses, short circuit analyses, and Stability analyses" with "The Planning Assessment shall review assumptions of current or past studies and assess the continuing validity of the steady state, short circuit, and stability results. The review of assumptions, supplemental analysis, and updated results shall be documented. R2.1 Comment A. The terms assess and annual study are referenced in the same requirement. It is unclear what constitutes either. Is an annual study required for every area or is an annual assessment required for every area, which may include some supporting study to address changes to the conditions? B. Requirement R2.1 should refer to R2.5 rather than R2.6 R2.1.1 Comment A. Year One and year two do not provide enough time to implement Corrective Action Plans and are better

Organization	Question 2 Comment
	suited for Operations studies. The requirement to evaluate Year One or year two should be removed. B. Is a year 5 study required annually for every area of a system? R2.1.2 Comment ? The requirement should be removed. With no description of the system stresses and generator outages to be applied when assessing the off-peak load, it is difficult to imagine any issues which would arise which are not revealed in the peak load evaluation that could not be addressed through generation dispatch adjustments. Need to define conditions for assessment. R2.1.3 Comment A. The emphasis on sensitivity testing in the existing section appears misdirected and should be focused on the expected accuracy of the assumptions. The assessment should have to include a discussion of accuracy of the assumptions. Having a requirement to perform one more sensitivity not already included is vague and does not add value to the assessment or the standard. B. Planned Transmission Outages are not known in the Planning horizon. Also the release of the outage on any given day is controlled by operations based on the conditions. The conditions are not known for the Planning assessment. The last bullet referring to Planned Transmission Outages should be deleted. C. Delete the phrase "are intended to." It is difficult to measure intent and what is important is whether the system has been stressed, not whether the responsible entity intended to stress the system. D. What is expected from a sensitivity analysis? Is it to change the base case and see how the case responded, is it to create a new base case and rerun all of the events, or is it to change the base case and rerun a select number of events. It is anticipated that the answer will vary based on what is changed. R2.1.4 Priority Comment With respect to spare equipment strategy; this requirement potentially imposes a requirement to plan for three events, which is overly severe. After experiencing a major contingency of a long lead time facility, there should be some change in the acceptability of risk. This change in risk could include an allowance for the loss of non-consequential load or some of the multiple events from Table 1 should be evaluated as Extreme Contingency events. R2.2 Comment We suggest replacing the phrase a current System peak Load study? with a valid System peak Load study in the first sentence. The word current is confusing as some read the word current to mean today's rather than valid. R2.3 Comment A. The requirement to conduct annually isn't consistent with support. We suggest Conducted annually should be replaced with the phrase assessed annually?.B. "Interruption duty" should be changed to "interrupting duty." All terms in the IEEE dictionary related to breaker opening use the word "interrupting," while terms related to loss of supply to customers use the word "interruption." R2.4.1 Comment A. The two sentences are describing an or condition and they should be merged to read: For peak System Load levels, a Load model shall be used which appropriately represents the dynamic behavior of Loads, including consideration of the behavior of induction motor Loads or an aggregate System Load model which represents the overall dynamic behavior of the Load. R2.4.3 Comment - Delete the phrase "are intended to." It is difficult to measure intent and what is important is whether the system has been stressed, not whether the responsible entity intended to stress the system.

Organization	Question 2 Comment
	R2.5 Comment If past studies only support, then a new study is still required. We suggest changing “Past studies may be used to support the Planning Assessment if they meet the following requirements:” to “Past studies may be used to fulfill all or a portion of the Planning Assessment provided they meet the following requirements:” Violation Severity Levels:R2 - There is no VSL associated with R2.5. A VSL should be added, perhaps under Moderate, that "past studies were utilized to fulfill all or a portion of the requirement, but the studies did not meet the requirements in R2.5." R2.5.1 Comment? We suggest deleting this requirement, and incorporating it into R2.5.2.R2.5.2 Comment To incorporate R.2.5.1 into R2.5.2; please modify the section as follows: For steady state, short circuit, or stability analysis the study shall be less than five calendar years old from the date of completion. The present System model shall not include any material changes, such as, generation or Transmission additions/removals, or topology changes that have occurred in the intervening period and would impact the study area. A material change does not require the whole study to be redone. It only requires that the affected portion of the study be reassessed. Material generation changes include: The addition/deletion/change of individual generating unit capability determined to be material by the Planning Coordinator or Transmission Planner. “ An aggregated addition/deletion/change to a group of generating units directly connected to the BES at one point of interconnection through one or more transformers and determined to be material by the Planning Coordinator or Transmission Planner. The reference to the step-up transformer may not capture a wind farm that could have transformers to step-up to a collection voltage and transformer that wouldn’t be labeled a GSU to connect to the system. R2.6 Priority Comment A. As written, this section undermines the value of the sensitivity testing. This section should require a corrective action plan to fix problems determined in sensitivity analysis if there is a reasonable risk of occurrence. We suggest making the standard read Provide documentation that explains the reasoning for the sensitivities considered and selected. B. At the end of the second sentence, the phrase in the tables” is used. We suggest using more definitive language such as in Table 1. R2.6.1 Comment -In the last bullet, the reference to "rate application" is unclear. R2.6.2 Comment The phrase Project Initiation Date needs to be defined. It is unclear if this is the date of ground breaking, purchase orders being issued, solution study initiation, etc. Additionally, in the second sentence the phrase as well as an in-service date should be modified to read as well as a target in-service date. R2.6.3 Comment Plans can provide a target in-service year, but not an actual in-service year. R2.6.4 Priority Comment There should be a cutoff point when changes occur beyond a certain date. When that date occurs, further changes will be evaluated in the next year’s assessment. Otherwise, if a state makes a decision not to site a project a few weeks prior to the end of the assessment period, there will not be sufficient time to incorporate this into that year’s assessment and develop corrective actions. R2.7 Comment A. "Interruption duty" should be changed to "interrupting duty." All terms in the IEEE dictionary related to breaker opening use the word "interrupting," while terms related to loss of supply to customers use the word "interruption."B. The requirement would be clearer if it we restructured as follows: "For short circuit analysis, if the short circuit interrupting duty determined in Requirement R2.3 exceeds the Equipment Rating of fault interrupting devices, the Planning Authority . .

Organization	Question 2 Comment
	." R2.8 Comment A. Largest consequential load loss is not factored into the Planning Assessment and should therefore be deleted. B. If it is not deleted, do we have to prepare one number for P1 and a separate number for P2? The phrase any P1 event and any P2 event in Table 1 could also be read as the worst loading for each event within P1 and P2, which could be hundreds of values depending on how many events are analyzed. We recommend that the requirement be modified to require documentation of the maximum amount of consequential load loss that was relied upon during the assessment of the P1 and P2 events.C. If it is not deleted, "shall provide" should be changed to "shall identify" for consistency with R2.9 R2.9 Comment A. Largest consequential load loss is not factored into the Planning Assessment and should therefore be deleted. B. If it is not deleted, this requirement is unclear. Is this requirement asking for each transmission planner to list their criteria for non-consequential load loss, or is it asking how much non-consequential load loss was being relied upon in the assessment? Including the word "permissible" implies the responsible entity must decide how much Non-Consequential Load Loss is allowed. We recommend that the requirement be modified to require documentation of the maximum amount of non-consequential load loss that was relied upon during the assessment of the P1 and P2 events.

Response: The SDT does not think that in Requirement R2 replacing "prepare" with "conduct and document" would add clarity, since Requirement R2 includes requirement to document assumptions and results. No change made.

In the Definition Section, Planning Assessment is defined as "Documented evaluation of future Transmission System performance and Corrective Action Plans to remedy identified deficiencies". Therefore, in Part 2.1, an Assessment is an evaluation of System performance based on studies performed. While an Assessment is required annually, it can be based on past studies as long as the requirement for a valid past study is met. As such, all studies used to support the Assessment do not have to be preformed annually. No change made.

In the new version, Part 2.6 now contains the requirement for the use of past studies, so Part 2.1 now has the correct reference. No change made.

For Part 2.1.1 Year One and year two are within the Planning Horizon. In the Definition Section, Year One is defined as "The first year that a Transmission Planner is responsible for assessing. This is further defined as the planning window that begins 12-18 months from the current calendar year". Operating Studies are performed for system conditions within 12 months of the current calendar year. No change made.

Part 2.1.1 is intended to require studies for System Peak Load Conditions for 2 of the years in the Near-Term Transmission Planning Horizon: (1) A Year five case to identify potential problems that can be addressed if the planned projects proceed as scheduled; (2) A Year one or Year two case to identify any potential problems unanticipated in the five-year case, which if not addressed, could impact operations as time progresses. The standard provides flexibility for the Planning Coordinator or Transmission Planner to use past studies to support the current year assessment and to assess other years in addition to those identified in Part 2.1.1. No change made.

Part 2.1.2 requires that the Planning Coordinator and/or Transmission Planner also consider off-peak conditions because the System must be able to meet performance requirements over all demand levels. System peak condition may not represent all stressed conditions. For example, during off-peak, the Load is low and the generation would have to be turned off to achieve Load-resource balance. Turning off resources within a Load area could result in reliability problems. Lowering the Load in areas with many non-dispatchable resources could also pose potential problems. As the System incorporates more and more renewable resources, some of them are non-dispatchable; a standard must be forward looking so the Planning Coordinator and Transmission Planner can identify potential problems. If studies for one of the Load periods are not needed annually, the Planning Coordinator or Transmission Planner can rely on past studies for the

Organization	Question 2 Comment

Planning Assessment. No change made.

Part 2.1.3 (now Part 2.1.4) has been rewritten to clarify the intent of the requirement. The Planning Coordinator or Transmission Planner can include a discussion of accuracy of the assumptions in response to the new Part 2.7.2 on the actions to resolve performance deficiencies identified in multiple sensitivity studies or provide a rationale for why actions were not necessary.

> **2.1.4** For each of the studies described in Requirement R2, parts 2.1.1 and 2.1.2, sensitivity case(s) shall be utilized to demonstrate the impact of changes to the basic assumptions used in the model for the list of items shown below. To accomplish this, the sensitivity analysis in the Planning Assessment must vary one or more of the following conditions not already included in the studies by a sufficient amount to stress the System within a range of credible conditions that demonstrate a measurable change in performance.
>
> - Real and reactive forecasted Load.
> - Expected transfers.
> - Expected in service dates of new or modified Transmission Facilities.
> - Reactive resource capability.
> - Generation additions, retirements, or other dispatch scenarios.
> - Controllable Loads and Demand Side Management.
> - Duration or timing of planned Transmission outages.
>
> **2.7.2** Include actions to resolve performance deficiencies identified in multiple sensitivity studies or provide a rationale for why actions were not necessary.

The last Bullet in Part 2.1.3 (now Part 2.1.4) is intended to cover planned outages of Facilities in sensitivity studies if such planned outages are known at the time the planning studies are performed, for example, planned outage of a major Transmission line during construction if the Corrective Action Plan calls for rebuilding of the line to a higher operating voltage. The sensitivity study can cover the "what if" situation where the project start can be delayed or the project may take longer to construct. No change made.

Part 2.1.3 - 'Are intended to' has been deleted.

The SDT declines to make the change as suggested. A Planning Assessment is not the same as a study. As stated in the Definition, a Planning Assessment is a "documented evaluation of future Transmission System performance and Corrective Action Plans to remedy identified deficiencies". As such, a Planning Assessment is based on a number of studies from which to draw conclusions about System performance and to develop Corrective Action Plans where needed. The suggested change would necessarily imply that a study is the same as a Planning Assessment, which is not the intent of Part 2.3.

Part 2.1.4 (now Part 2.1.5) is intended for the Planning Coordinator and/or Transmission Planner to take into account their spare Equipment strategy for long lead time Equipment when assessing the performance of their System. If the loss of a piece of major Equipment can be replaced within a reasonable period of time, planning studies for the following year can assume that that piece of Equipment will be replaced. If not, its impact of unavailability would need to be assessed. Part 2.1.5 has been revised to address some of your concerns. Part 2.1.4 has been revised to require that the assessment reflect the P0, P1, and P2 categories identified in Table 1 during the conditions that the System is expected to experience due to the possible unavailability of the long lead time Equipment.

> **2.1.5** When an entity's spare equipment strategy could result in the unavailability of major Transmission equipment that has a lead time of one year or

Organization	Question 2 Comment
	more (such as a transformer), an analysis of the impact of this possible unavailability on System performance shall be assessed. The Planning Assessment shall reflect the P0, P1, and P2 categories identified in Table 1 during the conditions that the System is expected to experience due to the possible unavailability of the long lead time equipment. Part 2.2 is intended to require a study performed in the current year, as opposed to studies performed in the past years. Part 2.2 has been revised to provide greater clarity. **2.2** The Long-Term Transmission Planning Horizon portion of the steady state analysis shall be assessed annually and be supported by the following annual current study, supplemented with qualified past studies as indicated in Requirement R2, part 2.6: Part 2.3 has been revised to provide greater clarity. **2.3** The short circuit analysis portion of the Planning Assessment shall be conducted annually addressing the Near-Term Transmission Planning Horizon and can be supported by current or past studies as indicated in Requirement R2, part 2.6. The analysis shall be used to determine whether circuit breakers have interrupting capability for Faults that they will be expected to interrupt using the System short circuit model with any planned generation and Transmission Facilities in service which could impact the study area. Part 2.4.1 was not changed as suggested because the intent of the last sentence is to allow the use of an aggregated System Load model as an appropriate Load representation. The suggested change could be read to mean that an aggregated System Load model would not appropriately represent the dynamic behavior of loads. However, Part 2.4.1 has been revised to provide greater clarity. **2.4.1** System peak Load for one of the five years. System peak Load levels shall include a Load model which represents the dynamic behavior of Loads that could impact the study area, considering the behavior of induction motor Loads. An aggregate System Load model which represents the overall dynamic behavior of the Load is acceptable. Part 2.4.3 has been revised to provide greater clarity, and the phrase, “are intended to” is no longer used. **2.4.3** For each of the studies described in Requirement R2, parts 2.4.1 and 2.4.2, sensitivity case(s) shall be utilized to demonstrate the impact of changes to the basic assumptions used in the model for the list of items shown below. To accomplish this, the sensitivity analysis in the Planning Assessment must vary one or more of the following conditions not already included in the studies by a sufficient amount to stress the System within a range of credible conditions that demonstrate a measurable change in performance. • Load level, Load forecast, or dynamic model assumptions. • Expected transfers. • Expected in service dates of new or modified Facilities. • Reactive resource capability. • Generation additions, retirements, or other dispatch scenarios. As revised Part 2.1.3 (now Part 2.1.4) requires the use of sensitivity studies to “demonstrate the impact of changes to the basic assumptions used in the model”. To this end the sensitivity studies need only to be able to demonstrate the impact of changes. Typically, a sensitivity study would be a subset of the study already performed. It usually involves comparing the base cases with and without the change under consideration, and rerunning a list of the worst Contingencies. However, each situation is different and the specifics are left to the Planning Coordinator or Transmission Planner who are more familiar with the situation(s) to be

Organization	Question 2 Comment
investigated. Part 2.5 (now Part 2.6) was not changed because studies, including past studies, are used to support the annual Assessment, and are not used to support current studies. The VSL for Part 2.5 (now Part 2.6) was added as a Lower VSL. R2, Lower VSL: The responsible entity failed to comply with Requirement R2, part 2.9 or Requirement R2, part 2.6. Parts 2.5.1 and 2.5.2 (new Parts 2.6.1 and 2.6.2) were not combined; however, they have been revised to address your concerns. **2.6.1** For steady state, short circuit, or Stability analysis: the study shall be five calendar years old or less, unless a technical rationale can be provided to demonstrate that the results of an older study are still valid. **2.6.2** For steady state, short circuit, or Stability analysis: the study shall not include any material changes unless a technical rationale can be provided to demonstrate that System changes do not impact the performance results in the study area. Part 2.6 has been modified and included as new Part 2.7. The intent is to allow discretion for the Planning Coordinator or Transmission Planner to correct those deficiencies if they are prevalent (i.e., occur is more than one sensitivity). Although not required, the standard does not preclude the Planning Coordinator or Transmission Planner to develop Corrective Action Plans for high risk scenarios. However, if the scenario is high risk, then it should have been included in the base assumptions in the assessment and the Corrective Action Plan would have been required. **2.7** For planning events shown in Table 1, when the analysis indicates an inability of the System to meet the performance requirements in Table 1, the Planning Assessment shall include Corrective Action Plan(s) addressing how the performance requirements will be met. Revisions to the Corrective Action Plan(s) are allowed in subsequent Planning Assessments but the planned System shall continue to meet the performance requirements in Table 1. Corrective Action Plan(s) do not need to be developed solely to meet the performance requirements for a single sensitivity run in accordance with Requirements R2, parts 2.1.4 and 2.4.3. The Corrective Action Plan(s) shall: Part 2.6 has been modified and included as new Part 2.7 In Part 2.6.1, “rate application” refers to rate incentives to change behavior of end-use customers and can be part of the “actions to achieve required System performance”. This is included to allow for non-traditional solutions to achieving required System performance. Part 2.6.3 - Project initiation date and in service date are no longer used in the requirements. Part 2.6.4 allows the Planning Coordinator or Transmission Planner to utilize Non-Consequential Load Loss and/or curtailment of Firm Transmission Service, which are normally not permitted to address situations that are beyond its control. Depending on the urgency of the need, the Corrective Action Plan may be developed outside the normal Assessment cycle at the discretion of the Planning Coordinator or Transmission Planner involved. Part 2.7 has been revised and included as Requirement R2, part 2.8 to reflect your suggestion. **2.8** For short circuit analysis, if the short circuit current interrupting duty on circuit breakers determined in Requirement R2, part 2.3 exceeds their Equipment Rating, the Planning Assessment shall include a Corrective Action Plan to address the Equipment Rating violations. The Corrective Action Plan shall:

Organization	Question 2 Comment
Parts 2.8 and 2.9 were intended to contribute to open and transparent Transmission planning for peer review. The SDT reviewed the both requirements and agrees that as written, they were unclear. Part 2.9 has been deleted. Part 2.8 has been revised and included as Requirement R2, part 2.9 in the new version to require that the Planning Assessment provides the expected largest Consequential Load Loss identified by the analysis of P1 and P2 events in Table 1 only. **2.9** The Planning Assessment shall provide the expected largest Consequential Load Loss (megawatt Demand) identified by the analysis of P1 and P2 events in Table 1.	
Entergy Services, Inc	The "study area" referred to in R2.3 should be defined. Does it mean external contingency events should be evaluated, or, the effects of internal contingency events on external parties. It should be clarified that generating facilities are not included in R2.1.4. The strategy may include agreements to share spare equipment among facilities, generation owners, and transmission owners. In R2.6.4 what is "prudent"? Who decides what is prudent? Recommend that the word be stricken. R2.6.4 is in conflict with the Implementation Plan. The Implementation plan omits P1 as an event where the bar has been raised but R2.6.4 allows the use of non-consequential load and firm transmission service curtailment. Clearly, the bar has been raised for any event, including P1, which allowed the curtailment of non-consequential load or firm transmission service in the existing standard. In R2.9 is the team requiring that a criteria be set by each Transmission Owner to set a maximum level of non-consequential load loss allowed by that Transmission Owner, or, that the amount of non-consequential load curtailment needed to meet the requirement be documented? What is the rationale for being so prescriptive in requiring specific years to be studied in R2.1.1 Why not allow the TP and/or PC to decide on the three years to be studied in the Near Term?? In the subrequirements of R2.1.3 and R2.4.3, the use of the word timing is unclear. Consider using in service date or “schedule for”. R2.1.4: The spare equipment strategy is too severe. The requirement should take into consideration the probability of occurrence of the events. Losing a transformer followed by the loss of a generator and a second transmission element is very unlikely. Non-consequential load loss should be allowed for this type of analysis. With the elimination of the distinction between system and generating plant stability studies, the blanket requirement in R2.5.1 that all stability analyses be five calendar years old or less, regardless of any material changes to the system, would cause needless work to be performed on those plants or areas of the system where no changes are occurring. Recommend adding the following to the end of R2.5.1: unless justification can be provided to demonstrate that the results of an older study are still valid. In R.2.4.1 it is mentioned that an aggregate System Load model that represents dynamic behavior of the load is acceptable. Does it mean that load at every bus in the study area has to be represented with an aggregate load model? This could be very cumbersome effort and we are not sure whether the software program can handle this magnitude of dynamic data. To help address this, revise Load to be Load that could impact the study area is acceptable. In Requirement R2.6.2, please clarify the definition of "project initiation date". Please explain the reason why Requirement R2.8 is needed in the Assessment and how does reporting the largest

Organization	Question 2 Comment
	Consequential Load Loss impact reliability?? Please explain the reason why Requirement R2.9 is needed in the Assessment and how does reporting the largest Non-Consequential Load Loss impact reliability?? Please clarify the use of the word permissible in the phrase "maximum permissible Non Consequential Load Loss".

Response: In Part 2.3 because the area that can be impacted is not confined to Facilities ownership, the study area should therefore include all Facilities that can reasonably be impacted. Where the study area involves several owners, coordination is required. However, since short circuit analysis is usually a localized issue, the area impacted would not be extensive.

Part 2.1.4 (now Part 2.1.5) refers to "unavailability of major Transmission equipment" without regard to ownership. Also, Part 2.1.5 only requires a spare equipment strategy but does not dictate the details of that strategy. So sharing of spare equipment is allowed. Part 2.1.5 has been revised to require that the assessment reflect the P0, P1, and P2 categories identified in Table 1 during the conditions that the System is expected to experience due to the possible unavailability of the long lead time equipment.

> **2.1.5** When an entity's spare equipment strategy could result in the unavailability of major Transmission equipment that has a lead time of one year or more (such as a transformer), an analysis of the impact of this possible unavailability on System performance shall be assessed. The Planning Assessment shall reflect the P0, P1, and P2 categories identified in Table 1 during the conditions that the System is expected to experience due to the possible unavailability of the long lead time equipment.

Part 2.6.4 has been revised to address your concerns and the word, "prudent" was removed.

The Implementation Plan has been revised to include certain P1 events where the bar is being raised.

Part 2.1.1 is intended to require studies for System Peak Load Conditions for 2 of the years in the near-term planning horizon: A Year five case to identify potential problem that can be addressed if the planned projects proceed as scheduled. A Year one or Year two case to identify any potential problems unanticipated in the five-year case, which if not addressed, could impact operations as time progresses. The standard provides flexibility for the Planning Coordinator or Transmission Planner to use past studies to support the current year assessment and to assess other years in addition to those identified in Part 2.1.1.

Parts 2.8 and 2.9 were intended to contribute to open and transparent transmission planning for peer review. The SDT reviewed both requirements and agrees that as written, they were unclear. Part 2.9 has been deleted. Part 2.8 has been revised and included as Part 2.9 in the new version to require that the Planning Assessment provides the expected largest Consequential Load Loss identified by the analysis of P1 and P2 events in Table 1 only.

> **2.9** The Planning Assessment shall provide the expected largest Consequential Load Loss (megawatt Demand) identified by the analysis of P1 and P2 events in Table 1.

Part 2.1.3 (now Part 2.1.4) and R2.4.3 have been revised to reflect your suggestion.

> **2.1.4** For each of the studies described in Requirement R2, parts 2.1.1 and 2.1.2, sensitivity case(s) shall be utilized to demonstrate the impact of changes to the basic assumptions used in the model for the list of items shown below. To accomplish this, the sensitivity analysis in the Planning Assessment must vary one or more of the following conditions not already included in the studies by a sufficient amount to stress the System within a range of credible conditions that demonstrate a measurable change in performance.

Organization	Question 2 Comment
	• Real and reactive forecasted Load. • Expected transfers. • Expected in service dates of new or modified Transmission Facilities. • Reactive resource capability. • Generation additions, retirements, or other dispatch scenarios. • Controllable Loads and Demand Side Management. • Duration or timing of planned Transmission outages. **2.4.3** For each of the studies described in Requirement R2, parts 2.4.1 and 2.4.2, sensitivity case(s) shall be utilized to demonstrate the impact of changes to the basic assumptions used in the model for the list of items shown below. To accomplish this, the sensitivity analysis in the Planning Assessment must vary one or more of the following conditions not already included in the studies by a sufficient amount to stress the System within a range of credible conditions that demonstrate a measurable change in performance. • Load level, Load forecast, or dynamic model assumptions. • Expected transfers. • Expected in service dates of new or modified Facilities. • Reactive resource capability. • Generation additions, retirements, or other dispatch scenarios. Part 2.4.1 has been revised to address your concerns. **2.4.1** System peak Load for one of the five years. System peak Load levels shall include a Load model which represents the dynamic behavior of Loads that could impact the study area, considering the behavior of induction motor Loads. An aggregate System Load model which represents the overall dynamic behavior of the Load is acceptable. Part 2.5 has been revised and included as Part 2.6. **2.6.1** For steady state, short circuit, or Stability analysis: the study shall be five calendar years old or less, unless a technical rationale can be provided to demonstrate that the results of an older study are still valid. **2.6.2** For steady state, short circuit, or Stability analysis: the study shall not include any material changes unless a technical rationale can be provided to demonstrate that System changes do not impact the performance results in the study area. Part 2.6.2 was removed.
Great River Energy	R 2.1, 2.3, and 2.4 need consistency. 2.1 says "The Near-Term Transmission Planning portion of the Steady State analysis..." 2.3 says "The short circuit portion of the Planning Assessment ... addressing the Near-Term Planning Horizon..." 2.4 says "The Near-Term Transmission Planning portion of the Stability analysis..." These three sentences confuse the order. As I understand the Planning Assessment has two parts, a Near-Term portion and a Long-Term portion. Each of those parts has three components, a Steady state component, a Short Circuit component, and a Stability component. I

Organization	Question 2 Comment
	believe the standard's language should be structured as such. R2.1.3- The last bullet would seem to indicate that planners have the capability of predicting the future. The statement would seem to fit more in an operating standard. A suggested revision would be: Known long-term transmission outages with duration greater than one year R 2.1.4 addresses the spare equipment strategy. What is the scope of this sensitivity? Is the intent to do only a full steady state analysis with regard to long lead time spares? R2.6.2 would seem to be placing the planner again in the capability of predicting the future. Coming up with specific dates based on budgets, projected growth rates, potential permitting issues, and material delivery schedules would make it difficult to define an initiating date and an in-service date. An in-service season and year may be more applicable in a planning study for near-term projects. GRE is not sure why an initiating date is of relevance in an assessment.

Response: In the third posting, the Standard, as proposed, requires steady state, Stability and short circuit analyses for the Near-Term Transmission Planning Horizon; steady state for the Long-Term Transmission Planning Horizon. In the fourth posting, the SDT proposes to add Stability analysis to the Long-Term Transmission Planning Horizon. So the requirements are not the same as you described. However, the Requirements have been revised to provide greater clarity.

> **2.3** The short circuit analysis portion of the Planning Assessment shall be conducted annually addressing the Near-Term Transmission Planning Horizon and can be supported by current or past studies as indicated in Requirement R2, part 2.6. The analysis shall be used to determine whether circuit breakers have interrupting capability for Faults that they will be expected to interrupt using the System short circuit model with any planned generation and Transmission Facilities in service which could impact the study area.
>
> **2.4** The Near-Term Transmission Planning Horizon portion of the Stability analysis shall be assessed annually and be supported by current or past studies as indicated in Requirement R2, part2.6. The following studies are required.

The last Bullet in Part 2.1.3 (now Part 2.1.4) is intended to cover planned outages of Facilities in sensitivity studies if such planned outages are known at the time the planning studies are performed, for example, planned outage of a major Transmission line during construction if the Corrective Action Plan calls for rebuilding of the line to a higher operating voltage. The corresponding sensitivity could simulate unplanned delay starts or unplanned extension of construction period. No change made.

Part 2.1.4 (now Part 2.1.5) is intended for the Planning Coordinator and/or Transmission Planner to take into account their spare Equipment strategy for long lead time Equipment when assessing the performance of their System. If the loss of a piece of major Equipment can be replaced within a reasonable period of time, planning studies for the following year can assume that that piece of Equipment will be replaced. If not, its impact of unavailability would need to be assessed. As such the analysis is not limited to steady state studies. Part 2.1.5 has been revised to require that the assessment reflect the P0, P1, and P2 categories identified in Table 1 during the conditions that the System is expected to experience due to the possible unavailability of the long lead time Equipment.

> **2.1.5** When an entity's spare equipment strategy could result in the unavailability of major Transmission equipment that has a lead time of one year or more (such as a transformer), an analysis of the impact of this possible unavailability on System performance shall be assessed. The Planning Assessment shall reflect the P0, P1, and P2 categories identified in Table 1 during the conditions that the System is expected to experience due to the possible unavailability of the long lead time equipment.

Parts 2.6.2 and 2.6.3 have been removed since the definition of Corrective Action Plan already includes "timetable for implementation".

Organization	Question 2 Comment
BC Hydro	Comments: Consider changing the second sentence to read, This Planning Assessment shall use current or past studies, document assumptions, document results and shall cover all analyses needed to clearly demonstrate that the proposed system expansion plan meets all planning criteria and standards. This standard should not limit the studies to only steady state analyses, short circuit analyses and Stability analyses none of which seem to be defined anywhere. In some cases it would be appropriate for planning studies to cover analyses of such phenomenon as electromagnetic transients, sub-synchronous resonance, ferroresonance and harmonics. The fact that Stability is capitalized suggests that it refers to the definition of Stability in the NERC glossary, but that definition reads just, The ability of an electric system to maintain a state of equilibrium during normal and abnormal conditions or disturbances?, but stability analyses (often more properly termed dynamic simulation studies) usually encompass more than simply electromechanical or voltage stability. Usually voltage and frequency excursions are also analyzed and perhaps temporary overcurrent also (eg, assessing temporary overvoltage levels across series capacitor banks).
Response: Even though the other types of studies as identified are important for specific cases, a NERC Standard needs to be applicable continent-wide. The modification could require the inclusion of studies such as EMTP, long-term stability, etc., in the annual Planning Assessment, which is not necessary in all cases. No change made.	
Midwest ISO	Opening Remarks. Specific Comments for Requirement 2:A) Under R2, the Time Horizon of the TPL standards is intended for years one through 10; However the Time Horizon shown in R2 only says Long-term Planning. By definition of Long-Term Transmission Planning Horizon this covers years 6 through 10 and beyond. Suggestion to change the Time Horizon to read: Near-Term and Long-Term Transmission Planning. B) Under R2.1 there is a reference to qualified past studies in R2.6. We believe that this reference should be pointing to R2.5 not R2.6. C) Under R2.1.3 there is ambiguity in the third bullet language new or modified Facilities and we believe that this language should mimic that of R1.1.2 in order to improve this requirement. The third bullet should read: Timing of the installation of new Planned Facilities or changes to existing Facilities. D) Under R2.1.3 there is ambiguity in the fourth bullet language capability and we believe that this language should read: Reactive resource capability (Generator, STATCOM, SVC, other?etc). We believe that this language addition improves this requirement. E) Under R2.1.3 there is ambiguity in the seventh bullet language Transmission outages and we believe that this language should read: Planned duration or timing of specifically scheduled or planned for Transmission outages. This language mimics similar language suggested above in R1.1.1 (letter C on page 3 of 9) F) When a spare equipment strategy does not cover the long lead time unavailability as stated in 2.1.4, will the system be treated as “normal system condition and Table 1 requirements or as having a contingency from which system adjustments are to be made prior to subsequent events. We believe that this task will be burdensome for large entities such as RTOs and we are not clear on the benefit that this requirement brings. For example: If in an RTO system where a party has spare equipment, how can the RTO ensure that a spare part from one asset owner can be made available to other asset owners”

Organization	Question 2 Comment
	G) Under R2.2 a System peak load study is required annually for one of the years in the assessment period. R2.2.1 requires the assessing entity to extend their planning assessment to accommodate any known longer lead time projects that may take longer than ten years to complete. It does not make sense to study the ten year horizon, find a problem in year ten which has a solution that required twelve years to build. For compliance with this standard, you would need to find another solution that can be built within ten years as opposed to the suggested language in R2.2.1 of extending the planning assessment beyond ten years to accommodate the solution that falls outside of the Long-Term Planning Horizon. No project solution greater than 10 years should be acceptable because it falls outside the Long-Term Transmission Planning Horizon. Suggestion to strike sub-requirement R2.2.1 from this standard. H) Under R2.3 the second sentence requires that "The analysis shall determine the maximum short circuit interruption duty on fault interrupting devices using the System short circuit model with any generation and Transmission Facilities in service which could impact the study year". We suggest changing the language to read: The analysis shall determine the maximum short circuit interruption duty on fault interrupting devices using the System short circuit model with Planned Facilities in service which could impact the study year". The definition of Planned Facilities was suggested to be added in the comment above in R1.1.2 under letter (E). I) Under R2.4 the second sentence requires states The following studies are required. We suggest changing the language to read: The following current studies are required. We believe that this language addition improves this requirement. J) Under R2.4.1 the first sentence leaves to much ambiguity as to who determines whether severity of system peak or off peak as well as whether the system load levels appropriately represents the dynamic behavior of loads. If the monitoring agency wishes to make this determination than it should be explicitly written here in this requirement. If the assessing entity is to make this determination than we offer the following language suggestion that we feel will improve this requirement. "For one of the five years, the more severe System peak or off peak System load level, as judged by the assessing entity, shall be used which in the judgment of the assessing entity appropriately represents the dynamic behavior of Loads including consideration of the behavior of induction motors". K) For R2.4.2, we suggest striking this requirement altogether and add System Off-Peak to R2.4.1 above in R2.4.1 under letter (I). L) Under R2.4.3 there is ambiguity in the third bullet language new or modified Facilities and we believe that this language should mimic that of R1.1.2 in order to improve this requirement. The third bullet should read: Timing of the installation of new Planned Facilities or changes to existing Facilities. M) Under R2.4.3 there is ambiguity in the fourth bullet language capability and we believe that this language should read: Reactive resource capability (Generator, STATCOM, SVC, other etc). We believe that this language addition improves this requirement. N) The sub requirement R2.5.2 states that for steady state, short circuit, or stability analysis; the present System model shall not include any material changes, such as..etc. The present language in this section is vague and requires discretion on the part of both the Transmission Planner and the Planning Coordinator performing the assessment. For example, new transmission enhancements may have been added since the previous System model was developed. In general, such topology enhancements will only improve reliability and would not necessitate re-assessment with a newly updated System

Organization	Question 2 Comment
	model. In addition, any significant generator additions would have been evaluated with a full separate generator interconnection study at which the full reliability of the System would have been taken into consideration. For this reason, we believe the following language for R2.5.2 would improve this requirement: For steady state, short circuit, or Stability analysis: the current System model of the assessed plan year shall not include any changes material to the assessment, as judged by the entity performing the assessment, such as, generation or Transmission additions/removals, or topology changes that have occurred in the intervening period and would impact the study year. Material generation changes could include: O) Under R2.6.1 the fifth bullet regarding the use of Operating Procedures needs to be made clearer. We believe that the following language will improve this requirement: Use of Operating Procedures specifying how long they will be needed as part of the Corrective Action Plan. Operating Procedures may not include Non-Consequential Load Loss when not permitted in Table 1. P) Under R2.6.1 the sixth bullet regarding the use of rate applications, DSM, new technologies or other initiatives can be improved with the following language additions: Use of rate applications, DSM, new technologies or other demand side initiatives can be improved with the following language additions. Q) Under R2.6.2 the language regarding project initiation date is vague. We suggest the following definition to be added to this standard and further added to the NERC Glossary of Terms: Project Initiation Date A date in which Planned Facilities are expected to break ground. R) Under R2.8 please add a coma between the words event and caused. A PC/TP would study multiple P1 and P2 events involving consequential load loss not just the largest. Unless the SDT has a measure in mind for consequential load loss, this requirement should be removed. S) Under R2.9 please strike the word permissible and replace with necessary. It is not clear what the SDT is requesting with this requirement.

Response: The *Time Horizon* term at the end of the requirement deals with mitigation time periods (as shown below) and is not connected to the assessment time frames. Time Horizons are a consideration when there is a violation of a requirement – the impact to the BES of violating a requirement with a long-term planning horizon is not expected to be as severe as the impact associated with violating a requirement with a real-time operations time horizon. No change made.

Mitigation Time Horizon

The time horizons available for mitigating a violation to a requirement include the following:

- **Long-term Planning** — a planning horizon of one year or longer.
- **Operations Planning** — operating and resource plans from day-ahead up to and including seasonal.
- **Same-day Operations** — routine actions required within the timeframe of a day, but not real-time.
- **Real-time Operations** — actions required within one hour or less to preserve the reliability of the bulk electric system.

Organization	Question 2 Comment
	• **Operations Assessment** — follow-up evaluations and reporting of real time operations In the new version, Part 2.6 now contains the requirement for the use of past studies, so Part 2.1 now has the correct reference. No change made Part 2.1.3 (including the third and seventh bullets) (and now Part 2.1.4) has been revised to provide greater clarity. The SDT declines to change the fourth bullet because adding a partial list of devices that could provide reactive resources may not improve clarity beyond the present description. **2.1.4** For each of the studies described in Requirement R2, parts 2.1.1 and 2.1.2, sensitivity case(s) shall be utilized to demonstrate the impact of changes to the basic assumptions used in the model for the list of items shown below. To accomplish this, the sensitivity analysis in the Planning Assessment must vary one or more of the following conditions not already included in the studies by a sufficient amount to stress the System within a range of credible conditions that demonstrate a measurable change in performance. • Real and reactive forecasted Load. • Expected transfers. • Expected in service dates of new or modified Transmission Facilities. • Reactive resource capability. • Generation additions, retirements, or other dispatch scenarios. • Controllable Loads and Demand Side Management. • Duration or timing of planned Transmission outages. Part 2.1.4 (now Part 2.1.5) requires that the Planning Coordinator and/or Transmission Planner consider the possibility that a piece of major Equipment can be out of service for an extended period of time because no spare piece of Equipment is on hand or can be purchased and be placed in service such that the outage won't last into the next planning cycle. Loss of a transformer is given as an example as a piece of major Equipment, which if forced out of service and had to be replaced with a new transformer, may have a lead time of more than one year. However, if a company has a strategy, for example, to have spare transformers in its System, or have agreement with another entity to share spare transformers, it would significantly reduce the probability of an outage of a transformer for longer than one year. Perhaps it would help if sharing major Equipment can be part of an operating agreement within entities belonging to the RTO; however, that would be outside the scope of this Standard. Part 2.1.5 has been revised to require that the assessment reflect the P0, P1, and P2 categories identified in Table 1 during the conditions that the System is expected to experience due to the possible unavailability of the long lead time Equipment. **2.1.5** When an entity's spare equipment strategy could result in the unavailability of major Transmission equipment that has a lead time of one year or more (such as a transformer), an analysis of the impact of this possible unavailability on System performance shall be assessed. The Planning Assessment shall reflect the P0, P1, and P2 categories identified in Table 1 during the conditions that the System is expected to experience due to the possible unavailability of the long lead time equipment. Part 2.2.1 has been revised because extending the Planning Horizon beyond 10 years for projects with lead time longer than 10 years is already covered in the definition of Long-Term Transmission Planning Horizon. This allowance is needed to provide planning flexibility, and is at the discretion of the Planning Coordinator or Transmission Planner. For example, if the System is found not to meet performance standard in year 10, but the project to correct the loading cannot be placed in service for 12 years, then the Corrective Action Plan needs to identify the interim solutions before the project can be brought on line. **2.2.1** A current study assessing expected System peak Load conditions for one of the years in the Long-Term Transmission Planning Horizon and the

Organization	Question 2 Comment
	rationale for why that year was selected. Part 2.3 has been revised to reflect your suggestion. **2.3** The short circuit analysis portion of the Planning Assessment shall be conducted annually addressing the Near-Term Transmission Planning Horizon and can be supported by current or past studies as indicated in Requirement R2, part 2.6. The analysis shall be used to determine whether circuit breakers have interrupting capability for Faults that they will be expected to interrupt using the System short circuit model with any planned generation and Transmission Facilities in service which could impact the study area. In Part 2.4.1, the SDT was not able to locate the reference to the comment on the "ambiguity as to who determines whether severity of system peak or off peak". No change made. Part 2.4.1 has been revised to provide greater clarity. However, the SDT declines to modify Part 2.4.1 to require study for "the more severe System peak or off peak System load level" for one of the five years in the Near-Term Transmission Planning Horizon because the System needs to meet performance requirements under all System conditions including peak and off-peak. In addition, the Planning Coordinator or Transmission Planner can rely on past studies as provided in Part 2.5 (Part 2.6 in the new version). For this reason Part 2.4.2 has been retained. **2.4.1** System peak Load for one of the five years. System peak Load levels shall include a Load model which represents the dynamic behavior of Loads that could impact the study area, considering the behavior of induction motor Loads. An aggregate System Load model which represents the overall dynamic behavior of the Load is acceptable. Part 2.4.3 (including the third bullet) has been revised to provide greater clarity. The SDT declines to change the fourth bullet because adding a partial list of devices that could provide reactive resources may not improve clarity beyond the present description. **2.4.3** For each of the studies described in Requirement R2, parts 2.4.1 and 2.4.2, sensitivity case(s) shall be utilized to demonstrate the impact of changes to the basic assumptions used in the model for the list of items shown below. To accomplish this, the sensitivity analysis in the Planning Assessment must vary one or more of the following conditions not already included in the studies by a sufficient amount to stress the System within a range of credible conditions that demonstrate a measurable change in performance. • Load level, Load forecast, or dynamic model assumptions. • Expected transfers. • Expected in service dates of new or modified Facilities. • Reactive resource capability. • Generation additions, retirements, or other dispatch scenarios. Part 2.5 has been revised and included as Part 2.6. **2.6.1** For steady state, short circuit, or Stability analysis: the study shall be five calendar years old or less, unless a technical rationale can be provided to demonstrate that the results of an older study are still valid. **2.6.2** For steady state, short circuit, or Stability analysis: the study shall not include any material changes unless a technical rationale can be provided to demonstrate that System changes do not impact the performance results in the study area. Part 2.6.1 has been revised and included as Part 2.7.1 to provide greater clarity. However, the SDT declines to include "Operating Procedures may not include Non-Consequential Load Loss when not permitted in Table 1" because it is redundant. Part 2.6.1 (now Part 2.7.1) is a sub-part of Part 2.6 (now Part 2.7), which

Organization	Question 2 Comment
explicitly requires meeting the performance requirements in Table 1. Parts 2.6.2 and 2.6.3 have been removed since the definition of Corrective Action Plan already includes “timetable for implementation” so a new NERC definition is not required. Parts 2.8 and 2.9 were intended to contribute to open and transparent Transmission planning for peer review. The SDT reviewed both requirements and agrees that as written, they were unclear. Part 2.9 has been deleted. Part 2.8 has been revised and included as Part 2.9 in the new version to require that the Planning Assessment provides the expected largest Consequential Load Loss identified by the analysis of P1 and P2 events in Table 1 only. **2.9** The Planning Assessment shall provide the expected largest Consequential Load Loss (megawatt Demand) identified by the analysis of P1 and P2 events in Table 1.	
PJM	In R2, why require a Planning Coordinator AND a Transmission Planner to perform this analysis? Isn’t this a duplication of effort? In R2, I have always heard that dynamics studies are performed to determine Stability. In R2.1, need to update reference to R2.6 from R2.5. In 2.1.1 and R2.1.2, is this annual peak or seasonal peak? Summer peak for summer peaking entities and winter peak for winter peaking entities or both summer and winter peak for all entities. R2.1.1 year one or two studies should be only required as operating studies. By their nature, the upgrades or fixes that could be accomplished in this time frame are limited to short lead time fixes. These analyses are needed to determine how to accommodate construction schedule deviations and near term system issues that may cause issues. Traditional Planning studies will be of no benefit in this timeframe. Change the requirement to be a study for year 3,4 or 5 with updates for material changes that occur when a previous year study is still within this time frame.R2.1.2 and R2.1.1 should be combined and the TP should assess and justify its choice of the critical load scenarios to analyze. Concerned about the extent of variations required in R2.1.3. Like would I have to vary all proposed generator in-service dates? Just a couple? One? Requirements need to be clear or compliance will assume the largest scope possible. Also in R2.1.3, first bullet words should align with the words of R1.1.3. Also in R2.1.3, second bullet words should align with words of R1.1.4 and R1.1.5. Also in R2.1.3, third bullet, modified facilities are not installed, suggest changing -installation to -availability--. Also in R2.1.3, fifth bullet, suggest moving retirements-- up to third bullet and dropping -- Generation additions, retirements, or other-- leaving just dispatch scenarios R2.1.4 should be deleted. There are no NERC requirements on spare equipment availability and this requirement seems like a backhanded way to include such a requirement. R2.2.1 should be reworded because it now requires everyone to extend their studies. Suggest If planned projects will take longer than ten years to complete, the Planning Assessment shall be extended accordingly- R2.4.1 Not sure I understand. The second sentence and the third sentence seem to be in conflict

Organization	Question 2 Comment
	R2.4.2. This requirement has lost significance with the deletion of unit stability. Off-Peak scenarios are critical for unit stability and analysis of pockets of known light load stability sensitivity. This requirement should not be worded to require a general system off-peak stability study since this will not provide useful information. The requirement should be reworded to clarify that the TP should identify its critical off-peak stability sensitivities and provide annual stability analyses that address the system's off peak stability issues.R.2.4.3 should only refer to R2.4.1 since R2.4.2 are sensitivities themselves. In R2.4.3, first bullet, how would load model assumptions be varied? Same comments on bullets here as R2.1.3 above. R2.5.2 is impossible to judge. Material changes needs to be defined. The word could in the sentence before the bullets makes them useless as a definition. By trying to define material changes the SDT has created a situation where, for large interconnection, it would be virtually impossible to use a past study. The addition of a 100 MW generator two states removed from the study area would not be considered material but by the guidelines in this requirement it can be interpreted as such. R2.5.2 Add that retools of past studies that address the local impacts of specific cumulative material changes that occur are sufficient to continue to support current planning assessment. R2.6 has a mixing sigular and plural tenses. What if only one problem is found and therefore only one Corrective Action Plan is needed. Or can one Plan cover all the problems found? Responses to R2.8 and R2.9 would be considered Critical Energy Infrastructure Information (CEII) and that should be noted so it can be protected. R2.8 and 2.9 change to read that the Planning Coordinator will provide its criteria for load loss that is adheared to for all events.

Response: Requirement R2 applies to both the Planning Coordinator and Transmission Planner because the Planning Coordinator may have a larger area than the Transmission Planner. Functional Model Version 3 states that, "Like the Resource Planners and Transmission Planners at the 'local' level, the Planning Coordinator maintains system models and performs the necessary studies to evaluate whether the composite resource and transmission plans of its Resource Planners and Transmission Planners are in compliance with reliability standards". No change made.

Please suggest modifications to more accurately describe "stability" Analyses. No change made.

In the new version, Part.2.6 now contains the requirement for the use of past studies, so Part 2.1 now has the correct reference. No change made.

For Part 2.1.1, Year One and year two are within the Planning Horizon. In the Definition Section, Year One is defined as "The first year that a Transmission Planner is responsible for assessing. This is further defined as the planning window that begins 12-18 months from the current calendar year". Operating Studies are performed for system conditions within 12 months of the current calendar year. Part 2.1.1 is intended to require studies for System Peak Load Conditions for 2 of the years in the Near-Term Transmission Planning Horizon: (1) A Year five case to identify potential problem that can be addressed if the planned projects proceed as scheduled; (2) A Year one or year two case to identify any potential problems unanticipated in the five-year case, which if not addressed, could impact operations as time progresses. The standard provides flexibility for the Planning Coordinator or Transmission Planner to use past studies to support the current year assessment and to assess other years in addition to those identified in Part 2.1.1. Part 2.1.2 requires that the Planning Coordinator and/or Transmission Planner also consider off-peak conditions in addition to peak conditions because the System must be able to meet performance requirements over all demand levels. System peak condition may not represent all stressed conditions. For example, during off-peak, the Load is low, and the generation would have to be

Organization	Question 2 Comment

turned off to achieve Load-resource balance. Turning down resources within a Load area could result in reliability problems. Lowering the Load in areas with many non-dispatchable resources could also pose potential problems. As the System incorporates more and more renewable resources, some of them are non-dispatchable; a standard must be forward looking so the Planning Coordinator and Transmission Planner can identify potential problems. If studies for one of the Load periods are not needed annually, the Planning Coordinator or Transmission Planner can rely on past studies for the Planning Assessment.

The bullets under Requirement R1, Part 1.1.3 have been removed from the revised standard, so no effort was made to line up the bullets in Requirement R1, Part 1.1.3 with the first two bullets under Requirement R2, Part 2.1.3. Parts 2.1.3 (now Part 2.1.4) and 2.4.3 and associated bullet lists have been revised to provide greater clarity for the expected changes. "Installation" has been removed from the third bullet. The SDT believes it is appropriate to treat generation change and transmission changes separately and did not move retirements up to the third bullet. The extent of the variations for each item listed is left to the discretion of the Planning Coordinator or Transmission Planner who are more familiar with the system being studied. Load modeling assumptions can be varied by varying, for example, the percentage of motor Load or the customer mix. It is up to the Planning Coordinator or the Transmission Planner to decide how the assumptions would be varied.

2.1.4 For each of the studies described in Requirement R2, parts 2.1.1 and 2.1.2, sensitivity case(s) shall be utilized to demonstrate the impact of changes to the basic assumptions used in the model for the list of items shown below. To accomplish this, the sensitivity analysis in the Planning Assessment must vary one or more of the following conditions not already included in the studies by a sufficient amount to stress the System within a range of credible conditions that demonstrate a measurable change in performance.

- Real and reactive forecasted Load.
- Expected transfers.
- Expected in service dates of new or modified Transmission Facilities.
- Reactive resource capability.
- Generation additions, retirements, or other dispatch scenarios.
- Controllable Loads and Demand Side Management.
- Duration or timing of planned Transmission outages.

2.4.3 For each of the studies described in Requirement R2, parts 2.4.1 and 2.4.2, sensitivity case(s) shall be utilized to demonstrate the impact of changes to the basic assumptions used in the model for the list of items shown below. To accomplish this, the sensitivity analysis in the Planning Assessment must vary one or more of the following conditions not already included in the studies by a sufficient amount to stress the System within a range of credible conditions that demonstrate a measurable change in performance.

- Load level, Load forecast, or dynamic model assumptions.
- Expected transfers.
- Expected in service dates of new or modified Facilities.
- Reactive resource capability.
- Generation additions, retirements, or other dispatch scenarios.

Part 2.1.4 (now Part 2.1.5) is based on FERC Order 693, Paragraphs 1724 – 1727. Part 2.1.4 requires that the Planning Coordinator and/or Transmission Planner consider the possibility that a piece of major Equipment can be out of service for an extended period of time because no spare piece of Equipment is on hand or

Organization	Question 2 Comment
can be purchased and be placed in service such that the outage won't last into the next planning cycle. Loss of a transformer is given as an example as a piece of major Equipment, which if forced out of service and had to be replaced with a new transformer, may have a lead time of more than one year. However, if a company has a strategy, for example, to have spare transformers in its System, or have agreement with another entity to share spare transformers, it would significantly reduce the probability of an outage of a transformer for longer than one year. The Planning Coordinator and/or Transmission Planner will need to decide which pieces of major Equipment in their respective systems would be more vulnerable to long term outage. **2.1.5** When an entity's spare equipment strategy could result in the unavailability of major Transmission equipment that has a lead time of one year or more (such as a transformer), an analysis of the impact of this possible unavailability on System performance shall be assessed. The Planning Assessment shall reflect the P0, P1, and P2 categories identified in Table 1 during the conditions that the System is expected to experience due to the possible unavailability of the long lead time equipment. Part 2.2.1 has been revised to reflect your suggestion. **2.2.1** A current study assessing expected System peak Load conditions for one of the years in the Long-Term Transmission Planning Horizon and the rationale for why that year was selected. Part 2.4.1 is intended to allow the use of aggregated system Load models if more accurate Load models are not available. Therefore, the second and third sentences are not in conflict. The SDT declines to include Part 2.4.2 in Part 2.4.3 because it is not intended to be a sensitivity study because the System needs to meet performance requirements under all System conditions including peak and off-peak. In addition, the Planning Coordinator or Transmission Planner can rely on past studies as provided in Part 2.5 (Part 2.6 in the new version). For this reason Part 2.4.2 has been retained. Part 2.5 has been revised and included as Part 2.6 as shown. The language referencing "material generation changes" has been removed from the revised standard. **2.6.1** For steady state, short circuit, or Stability analysis: the study shall be five calendar years old or less, unless a technical rationale can be provided to demonstrate that the results of an older study are still valid. **2.6.2** For steady state, short circuit, or Stability analysis: the study shall not include any material changes unless a technical rationale can be provided to demonstrate that System changes do not impact the performance results in the study area. Part 2.6 has been revised and included as Part 2.7 to address your concerns about mixing singular and plural possibilities. . **2.7** For planning events shown in Table 1, when the analysis indicates an inability of the System to meet the performance requirements in Table 1, the Planning Assessment shall include Corrective Action Plan(s) addressing how the performance requirements will be met. Revisions to the Corrective Action Plan(s) are allowed in subsequent Planning Assessments but the planned System shall continue to meet the performance requirements in Table 1. Corrective Action Plan(s) do not need to be developed solely to meet the performance requirements for a single sensitivity run in accordance with Requirements R2, parts 2.1.4 and 2.4.3. The Corrective Action Plan(s) shall: Parts 2.8 and R2.9 were intended to contribute to open and transparent Transmission planning for peer review. The standard does not preclude protection of the Critical Energy Infrastructure Information (CEII). The SDT reviewed both requirements and agrees that as written, they were unclear. Part 2.9 has been deleted. Part 2.8 has been revised and included as Part 2.9 in the new version to require that the Planning Assessment provides the expected largest Consequential Load Loss identified by the analysis of P1 and P2 events in Table 1 only. **2.9** The Planning Assessment shall provide the expected largest Consequential Load Loss (megawatt Demand) identified by the analysis of P1 and P2

Organization	Question 2 Comment
events in Table 1.	
Brazos Electric Cooperative	In R2.1, end of paragraph i believe you mean Requirement 2.5, not 2.6. In R2.6.2 we believe maintaining a 'project initiation date' serves no purpose and should be deleted. These dates are wildly variable given the nature of each project and the numerous issues that can affect these dates. 2.6.2 and 2.6.3 should be combined to simply require an in-service year/date and allow the owners to work as needed to meet these dates. We think R2.9 should be deleted as it is vague in nature, seems to serve no purpose and would be hard to verify the accuracy of the value in an audit. 2.8 is direct and can be easily detailed for an audit.
Response: In the new version, Part.2.6 now contains the requirement for the use of past studies, so Part 2.1 now has the correct reference. No change made. Project initiation date and in service date have been removed from the requirements. Parts 2.8 and R2.9 were intended to contribute to open and transparent Transmission planning for peer review. The SDT reviewed both requirements and agrees with the majority of commenters that as written, they were unclear. Part 2.9 has been deleted. Part 2.8 has been revised and included as Part 2.9 in the new version to require that the Planning Assessment provides the expected largest Consequential Load Loss identified by the analysis of P1 and P2 events in Table 1 only. **2.9** The Planning Assessment shall provide the expected largest Consequential Load Loss (megawatt Demand) identified by the analysis of P1 and P2 events in Table 1.	
American Electric Power	AEP agrees with R2.3., but should note that the planning horizon short circuit models are not presently developed in any systematic fashion, since, unlike the development of steady-state (power flow) and stability models that are mandated under MOD-010 and MOD-012, respectively, there are no NERC Standards that mandate the development of short circuit models in a similar fashion. As to R2.4., requiring study of both peak and off-peak conditions in every stability assessment removes the possibility in this regard that stability study scopes may be defined most appropriately by engineering judgment. We believe system load level is often important, but not necessarily more important than any of the other sensitivity variables listed under R2.4.3. We suggest listing system load level along with these and removing R2.4.1. and R2.4.2. The text in R2.4.1., referring to dynamic load modeling, may still be retained somewhere, and since this falls in the category of modeling and data, we suggest including this under R1.1. With regard to R2.5., a 20 MW increase in generation may well be construed as a material generation change, but it is questionable whether a 20 MW decrease would be for transmission planning purposes. Also, the validity of many studies, particularly plant oriented stability studies, may well extend beyond five years if there have been no transmission modifications in the vicinity of the plant or to the plant itself. In these instances, it would seem counter-productive to disqualify a study after five years. The duration of the validity of certain types of past studies is better determined by the occurrence of significant transmission or generation changes. Please note, under R2.6.2., to define project initiation date [Changed sequence to keep in numerical order].

Organization	Question 2 Comment
Response: Part 2.3 is intended for the Planning Coordinator and/or Transmission Planner to assess the whether circuit breakers supporting the BES have interrupting capability for Faults that they will be expected to interrupt and is not specifically related to new planned Facilities. However, a NERC-wide data base or models similar to MOD-010 or MOD-012 may be neither desirable nor necessary, since short circuit study concerns localized issues and can be contained within a study area. Part 2.3 has been revised to provide greater clarity. **2.3** The short circuit analysis portion of the Planning Assessment shall be conducted annually addressing the Near-Term Transmission Planning Horizon and can be supported by current or past studies as indicated in Requirement R2, part 2.6. The analysis shall be used to determine whether circuit breakers have interrupting capability for Faults that they will be expected to interrupt using the System short circuit model with any planned generation and Transmission Facilities in service which could impact the study area. The SDT declines to include Load levels in sensitivity studies in Part 2.4.3 and remove Parts 2.4.1 and 2.4.2. Since Part 2.4.3 would only require studying one or more of the list of sensitivities, this change can result in no Stability study performed for either peak Load or off-peak Load condition in the Near-Term Transmission Planning Horizon. In addition, the standard does not require a new Stability study be performed annually; the Planning Coordinator or Transmission Planner can rely on past studies as provided in Part 2.5 (Part 2.6 in the new version). For this reason no change was made. Part 2.5 has been revised and included as Part 2.6 as shown. The reference to the "20 MW" threshold has been removed from the revised standard. **2.6.1** For steady state, short circuit, or Stability analysis: the study shall be five calendar years old or less, unless a technical rationale can be provided to demonstrate that the results of an older study are still valid. **2.6.2** For steady state, short circuit, or Stability analysis: the study shall not include any material changes unless a technical rationale can be provided to demonstrate that System changes do not impact the performance results in the study area. Project initiation date has been removed from the requirements.	
ITC Holdings	Comments: In R2.1, there is a reference to R2. 6. Based on the posted red-line version, we believe this reference should be changed to R2.5. Should this same reference be included in R2.4?? In R2.3, it is stated that the short circuit analysis should be supported by either current or past studies. Should a reference be added to R2.5? In R2.6 it is stated: Corrective Action Plans do not need to be developed solely to meet the performance requirements for sensitivities run in accordance with Requirements R2.1.3 and R2.4.3. While we recognize that this conforms to FERC orders, it would still seem that this statement might be interpreted to mean that CAPs intended to cover a number of sensitivities go beyond standards and be used by interveners to block such CAPs. A revision to the standard to the standard to encourage CAP when needed for numerous sensitivities might be appropriate. R 2.6.4, as written, is very subjective. While we understand the need for R2.6.4, who is the ultimate judge of what situations are beyond the control of the TP or PC responsible for the mitigation plan and if they "are taking prudent actions to resolve the situation" As written, it is the auditor. This will be difficult to prove compliance and might provide significant discrepancies in compliance with standards.

Organization	Question 2 Comment
Response: In the new version, Part 2.6 now contains the requirement for the use of past studies, so Part 2.1 now has the correct reference. No change made. The reference has been added. **2.4** The Near-Term Transmission Planning Horizon portion of the Stability analysis shall be assessed annually and be supported by current or past studies as indicated in Requirement R2, part 2.6. The following studies are required: Parts 2.3 and 2.4 have been revised to add reference to Part 2.5 (included in the new version as Part 2.6). **2.3** The short circuit analysis portion of the Planning Assessment shall be conducted annually addressing the Near-Term Transmission Planning Horizon and can be supported by current or past studies as indicated in Requirement R2, part 2.6. The analysis shall be used to determine whether circuit breakers have interrupting capability for Faults that they will be expected to interrupt using the System short circuit model with any planned generation and Transmission Facilities in service which could impact the study area. Part 2.6 has been revised and included as Part 2.7. A new Part 2.7.2 has been added to require that the Corrective Action Plan include actions to resolve performance deficiencies identified in multiple sensitivity studies or provide a rationale for why actions were not necessary. **2.7** For planning events shown in Table 1, when the analysis indicates an inability of the System to meet the performance requirements in Table 1, the Planning Assessment shall include Corrective Action Plan(s) addressing how the performance requirements will be met. Revisions to the Corrective Action Plan(s) are allowed in subsequent Planning Assessments but the planned System shall continue to meet the performance requirements in Table 1. Corrective Action Plan(s) do not need to be developed solely to meet the performance requirements for a single sensitivity run in accordance with Requirements R2, parts 2.1.4 and 2.4.3. The Corrective Action Plan(s) shall: **2.7.2** Include actions to resolve performance deficiencies identified in multiple sensitivity studies or provide a rationale for why actions were not necessary. Part 2.6.4 has been revised and included as Part 2.7.5 to address your concerns. The word “prudent” is no longer used. **2.7.5** If situations arise that are beyond the control of the Transmission Planner or Planning Coordinator that prevent the implementation of a Corrective Action Plan in the required timeframe, then the Transmission Planner or Planning Coordinator is permitted to utilize Non-Consequential Load Loss and curtailment of Firm Transmission Service to correct the situation that would normally not be permitted in Table 1, provided that the Transmission Planner or Planning Coordinator documents that they are taking actions to resolve the situation. The Transmission Planner or Planning Coordinator shall document the situation causing the problem, alternatives evaluated, and the use of Non-Consequential Load Loss or curtailment of Firm Transmission Service.	
Northern Indiana Public Service Company	R2.3: Clarify the requirement. Does the short circuit study examine topology for a single year, the topology in years studied using the steady state models or each year of the near term planning horizon?
Response: Part 2.3 requires that the Assessment of short circuit duty requirements are conducted annually addressing the Near-Term Transmission Planning Horizon. However, the specific methodology or assumptions to be used are left to the discretion of the Planning Coordinator or Transmission Planner.	
Minnesota Power	A) Under R2, the Time Horizon of the TPL standards is intended for years one through 10; However the Time Horizon shown in R2 only says Long-term Planning. By definition of Long-Term Transmission Planning Horizon this covers years 6 through 10 and beyond. Suggestion to change the Time Horizon to read: Near-Term and Long-Term Transmission

Organization	Question 2 Comment
	Plannin?. B) Under R2.1 there is a reference to qualified past studies in R2.6. We believe that this reference should be pointing to R2.5 not R2.6. C) R2.1.4 addresses the spare equipment strategy. What is the scope of this sensitivity? Is the intent only to do a steady state analysis on equipment with long lead time spares D) Under R2.2 a System peak load study is required annually for one of the years in the assessment period. R2.2.1 requires the assessing entity to extend their planning assessment to accommodate any known longer lead time projects that may take longer than ten years to complete. It does not make sense to study the ten year horizon, then find a problem in year ten which has a solution that requires twelve years to build. For compliance with this standard, you would need to find another solution that can be built within ten years as opposed to the suggested language in R2.2.1 of extending the planning assessment beyond ten years to accommodate the solution that falls outside of the Long-Term Planning Horizon. No project solution greater than 10 years should be acceptable because it falls outside the Long-Term Transmission Planning Horizon. Suggestion to strike sub-requirement R2.2.1 from this standard. E) Requirements R2.1, R2.3, and R2.4 are written inconsistently. 2.1 says The Near-Term Transmission Planning portion of the Steady State analysis 2.3 says The short circuit portion of the Planning Assessment addressing the Near-Term Planning Horizon 2.4 says The Near-Term Transmission Planning portion of the Stability Analysis These three sentences confuse the order. As we understand, the Planning assessment has two parts: a Near-Term portion and a Long-Term portion. Each of those parts has three components: a Steady State component, a Short Circuit component, and a Stability component. We suggest the language in the standard should be structured consistently and appropriately as such) Under R2.4.3 there is ambiguity in the third bullet language new or modified Facilities and we believe that this language should mimic that of R1.1.2 in order to improve this requirement. The third bullet should read: Timing of the installation of new Facilities or changes to existing Facilities. G) The sub requirement R2.5.2 states that for steady state, short circuit, or stability analysis; the present System model shall not include any material changes, such as..etc. The present language in this section is vague and requires discretion on the part of both the Transmission Planner and the Planning Coordinator performing the assessment. For example, new transmission enhancements may have been added since the previous System model was developed. In general, such topology enhancements will only improve reliability and would not necessitate re-assessment with a newly updated System model. In addition, any significant generator additions would have been evaluated with a full separate generator interconnection study at which the full reliability of the System would have been taken into consideration. For this reason, we believe the following language for R2.5.2 would improve this requirement: For steady state, short circuit, or Stability analysis: the current System model of the assessed plan year shall not include any changes material to the assessment, as judged by the entity performing the assessment, such as, generation or Transmission additions/removals, or topology changes that have occurred in the intervening period and would impact the study year. Material generation changes could include: H) Modify R2.6.2 to remove the obligation to include the project initiation date. The inclusion of this date would add unnecessary work that is not needed to assure adequate BES reliability In addition, it is not clear whether initiation refers to

Organization	Question 2 Comment
	the commencement of engineering, design, construction, etc.

Response: The *Time Horizon* term at the end of the requirement deals with mitigation time periods (as shown below) and is not connected to the assessment time frames. Time Horizons are a consideration when there is a violation of a requirement – the impact to the BES of violating a requirement with a long-term planning horizon is not expected to be as severe as the impact associated with violating a requirement with a real-time operations time horizon. No change made.

Mitigation Time Horizon

The time horizons available for mitigating a violation to a requirement include the following:

- **Long-term Planning** — a planning horizon of one year or longer.
- **Operations Planning** — operating and resource plans from day-ahead up to and including seasonal.
- **Same-day Operations** — routine actions required within the timeframe of a day, but not real-time.
- **Real-time Operations** — actions required within one hour or less to preserve the reliability of the bulk electric system.
- **Operations Assessment** — follow-up evaluations and reporting of real time operations

In the new version, Part 2.6 now contains the requirement for the use of past studies, so Part 2.1 now has the correct reference. No change made.

In Part 2.1.4 (now Part 2.1.5) when a piece of long lead-time Equipment is unavailable, System adjustments will need to be made. The System, after it is adjusted to accommodate that piece of Equipment out of service will be treated as the "normal" (P0) condition in Table 1. Part 2.1.5 is intended for the Planning Coordinator and/or Transmission Planner to take into account their spare Equipment strategy for long lead time Transmission equipment when assessing the performance of their System. If the loss of a piece of major Equipment can be replaced within a reasonable period of time, planning studies for the following year can assume that that piece of Equipment will be replaced. If not, its impact of unavailability would need to be assessed. It is not intended to limit to steady state analyses only. Part 2.1.5 has been revised to require that the assessment reflect the P0, P1, and P2 categories identified in Table 1 during the conditions that the System is expected to experience due to the possible unavailability of the long lead time equipment.

> **2.1.5** When an entity's spare equipment strategy could result in the unavailability of major Transmission equipment that has a lead time of one year or more (such as a transformer), an analysis of the impact of this possible unavailability on System performance shall be assessed. The Planning Assessment shall reflect the P0, P1, and P2 categories identified in Table 1 during the conditions that the System is expected to experience due to the possible unavailability of the long lead time equipment.

Part 2.2.1 has been revised because extending the Planning Horizon beyond 10 years for projects with lead time longer than 10 years is already covered in the definition of Long-Term Transmission Planning Horizon. This allowance is needed to provide planning flexibility, and is at the discretion of the Planning Coordinator or Transmission Planner. For example, if the System is found not to meet performance standard in year 10, but the project to correct the loading cannot be placed in service for 12 years, then the Corrective Action Plan needs to identify the interim solutions before the project can be brought on line.

> **2.2.1** A current study assessing expected System peak Load conditions for one of the years in the Long-Term Transmission Planning Horizon and the rationale for why that year was selected.

As written the Planning Assessment consists of 2 parts: Near-Term Transmission Planning Horizon and Long-Term Transmission Planning Horizon, Steady State and Stability Assessments are required for both near-term and long-Term, but short circuit assessment is required only for the near-term. Part 2.3 has been revised

Organization	Question 2 Comment
to provide greater clarity. **2.3** The short circuit analysis portion of the Planning Assessment shall be conducted annually addressing the Near-Term Transmission Planning Horizon and can be supported by current or past studies as indicated in Requirement R2, part 2.6. The analysis shall be used to determine whether circuit breakers have interrupting capability for Faults that they will be expected to interrupt using the System short circuit model with any planned generation and Transmission Facilities in service which could impact the study area. The 3rd bullet of Part 2.4.3 has been revised. **2.4.3 bullet 3** Expected in service dates of new or modified Facilities Part 2.5.2 has been revised and included as Part 2.6.2 to provide greater clarity. **2.6.2** For steady state, short circuit, or Stability analysis: the study shall not include any material changes unless a technical rationale can be provided to demonstrate that System changes do not impact the performance results in the study area. Project initiation date has been removed from the requirements.	
LADWP	R2.3 There is no value to conduct short circuit analysis on an annual basis. Short circuit contribution is location constrained. Maximum short circuit interrupting duty cannot be determined by any planning cases; so putting this requirement in TPL will cause only confusion and will creat misleading information. If there is a need to develop a standard on how to evaluate maximum short circuit interrupting duty, the more appropriate place would be FAC. R2.1.3 Controllable Loads and DWM: DSM should not be a stand alone item in planning studies because DSM already is imbedded in load forecasts. Not sure what controllable loads are. R2.1.4 Any requirment dealing with spare parts should be handled in TOP, not TPL. TOP is the forum to develop operating procedures,"work-arounds", and so on when the non-availability of spare forced a company to develop temporary mitigations and it would be a mistake to suggest that planners should be able to consider such temporary fixes as acceptable planning solutions.R 2.5.2 The 20 MW threshold, at best, is "noise" for us. We would not be concerned with generation chnages that is 10 times this threshold. What is the rationale for requiring a new study just because there is a change in generation capability? R2.8 and 2.9 What measurements would this required information be measured against? I can't find any and if there is no measurement, it really does not belong. R2.6.2 Project initiation date is hard to define. Is it the date the project is budgeted? or the date the management approved the budget and at what level? or is it the date when engineering design is initiated? For both short term and long term planning horizons, the project in service date should be sufficient. there are too many variables to define "project initiation date" not to mention there is no measurable to benchmark such a requirement.
Response: Parts 2.3 and 2.7 are intended for the Planning Coordinator and/or Transmission Planner to assess whether circuit breakers supporting the BES have the interrupting capability for Faults that they will be expected to interrupt. No change made. Part 2.1.3 (now Part 2.1.4) is intended to cover sensitivity studies, for example, if DSM is imbedded in the Load forecast, the sensitivity study can simulate	

Organization	Question 2 Comment
conditions where not all effects of DSM is realizable, and the Load may be higher than studied . Controllable Load can be part of the local rate incentive program, where the customer Load can be controlled by the Transmission Operator. The bullets are examples, so the Planning Coordinator or Transmission Planner can choose the sensitivity and does not have to study, for example, controllable Load, if the related Load-Serving Entity does not have such a program. Part 2.1.4 (now Part 2.1.5) is intended for the Planning Coordinator and/or Transmission Planner to take into account their spare Equipment strategy for long lead time Transmission Equipment when assessing the performance of their System. If the loss of a piece of major Equipment can be replaced within a reasonable period of time, planning studies for the following year can assume that that piece of Equipment will be replaced. If not, its impact of unavailability would need to be assessed. Part 2.1.5 has been revised to require that the assessment reflect the P0, P1, and P2 categories identified in Table 1 during the conditions that the System is expected to experience due to the possible unavailability of the long lead time Equipment. **2.1.5** When an entity's spare equipment strategy could result in the unavailability of major Transmission equipment that has a lead time of one year or more (such as a transformer), an analysis of the impact of this possible unavailability on System performance shall be assessed. The Planning Assessment shall reflect the P0, P1, and P2 categories identified in Table 1 during the conditions that the System is expected to experience due to the possible unavailability of the long lead time equipment. Parts .2.8 and R2.9 were intended to contribute to open and transparent Transmission planning for peer review. The SDT reviewed both requirements and agrees that as written, they were unclear. Part 2.9 has been deleted. Part 2.8 has been revised and included as Part 2.9 in the new version to require that the Planning Assessment provides the expected largest Consequential Load Loss identified by the analysis of P1 and P2 events in Table 1 only. **2.9** The Planning Assessment shall provide the expected largest Consequential Load Loss (megawatt Demand) identified by the analysis of P1 and P2 events in Table 1. Part 2.5.2 (now 2.6.2) has been revised for clarity and the 20 MW threshold has been removed. **2.6.2** For steady state, short circuit, or Stability analysis: the study shall not include any material changes unless a technical rationale can be provided to demonstrate that System changes do not impact the performance results in the study area. Project initiation date has been removed from the requirements.	
Platte River Power Authority	R2.6.2. Expand on the meaning of the "initiation date." R2.8. I don't understand the relevance of this requirement. May your intention be explained differently? R2.9. I don't understand the relevance of this requirement. May your intention be explained differently?
Response: Project initiation date has been removed from the requirements. Parts 2.8 and R2.9 were intended to contribute to open and transparent Transmission planning for peer review. The SDT reviewed both requirements and agrees that as written, they were unclear. Part 2.9 has been deleted. Part 2.8 has been revised and included as Part 2.9 in the new version to require that the Planning Assessment provides the expected largest Consequential Load Loss identified by the analysis of P1 and P2 events in Table 1 only. **2.9** The Planning Assessment shall provide the expected largest Consequential Load Loss (megawatt Demand) identified by the analysis of P1 and P2 events in Table 1.	
MAPPCOR	R2.1.1 Consider calling this Near Term years instead of specifically naming certain years.

Organization	Question 2 Comment
	R2.1.3 eliminate the last bullet. Planned duration or timing of Transmission outages is part of R1.1.1 which already specifies that models will include planned outages of generation and transmission facilities. R2.1.4 the second line is unclear. There is a reference to lead time of one year or more Is the intent for that to mean outage duration of one year or more??? If so, it should be written that way. Also, in the 3rd line, eliminate the words an analysis of (otherwise it would direct one to assess an analysis.) This in essence is an N-3 study. This risk that a TO or GO takes will show up in the operations of the BES. Also some states assess a penalty for equipment that is sitting idle that cost the taxpayers, so you could be penalize for not have spare equipment or if you do have it. R2.2.1 does this mean, for example, that entities may be doing 12 year or 15 year assessments? It should be written to say what it means. R2.4.1 Change to read: For peak System Load levels, a Load model shall be used which appropriately represents the dynamic behavior of Loads, including consideration of the behavior of induction motor Loads or an aggregate System Load model which represents the overall dynamic behavior of the Load. R2.5.1 Suggest deleting this requirement, and incorporating it into R2.5.2. R2.5.2 Incorporate R.2.5.1 into R2.5.2; please modify the section as follows:For steady state, short circuit, or Stability analysis the study shall be less than five calendar years old or less: the latest Transmission Planning Horizon System model shall not include any material changes, such as, generation or Transmission additions/removals, or topology changes that have occurred in the intervening period and would impact the study area. Material generation changes could include: The addition/deletion/change of individual generating unit capability determined to be material by the Planning Coordinator or Transmission Planner. An aggregated addition/deletion/change to a group of generating units directly connected through their step-up transformer(s) to the BES determined to be material by the Planning Coordinator or Transmission Planner. R2.6 ? The creation of hard and fast Corrective Action Plans for the LTRA is not a good use of resources. The reason for planning studies is to uncover possible weak spots in the system for some number of years into the future, and then pursue additional studies to examine the issues. Planning studies include many assumptions, and the issues may not even arise on the real system. If they do, there may be many possible remedies. Creating CAPs with milestones and other firm dates for potential problems uncovered in assessments of future years is simply not practical, and the PC (PA) may have little or no influence on what remedy is selected even if a problem appears to be real. R2.6.2 The phrase Project Initiation Date needs to be defined. It is unclear if this is this the date of ground breaking, purchase orders being issued, solution study initiation, etc. Additionally, in the second sentence the phrase as well as an in-service date should be modified to read as well as a target in-service date. R2.6.3 Plans can provide a target in-service year but not an actual in-service year. R2.6.4 recommend clarifying how situations beyond the control of the TP or PC are determined. It is unclear if this is to imply that if something is outside of the control of the department who conducts the planning studies or if it is outside the control of the registered function's legal entity (i.e. corporation). There should be a cutoff point when changes occur beyond a certain date. When that date occurs, further changes will be evaluated in the next year's assessment. Otherwise, if a state makes a decision not to site a project a few weeks prior to the end of the assessment period, there will not be sufficient

Organization	Question 2 Comment
	time to incorporate this into that year's assessment and develop corrective actions. R2.8 appears to be nonessential information for reliability; for what purpose does this requirement exist? R2.9 - appears to be nonessential information for reliability; for what purpose does this requirement exist?

Response: Part 2.1.1 is intended to require studies for System Peak Load Conditions for 2 of the years in the Near-Term Transmission Planning Horizon: (1) A year five case to identify potential problem that can be addressed if the planned projects proceed as scheduled; (2) A Year One or year two case to identify any potential problems unanticipated in the five-year case, which if not addressed, could impact operations as time progresses. The standard provides flexibility for the Planning Coordinator or Transmission Planner to use past studies to support the current year assessment, and to assess other years in addition to those identified in R2.1.1.

The last Bullet in Part 2.1.3 is intended to cover planned outages of Facilities in sensitivity studies if such planned outages are known at the time the planning studies are performed, for example, a planned outage of a major Transmission line during construction if the Corrective Action Plan calls for rebuilding of the line to a higher operating voltage. The corresponding sensitivity could simulate unplanned delay starts or unplanned extension of construction period of the planned project. No change made.

Part 2.1.4 (now Part 2.1.5) is intended for the Planning Coordinator and/or Transmission Planner to take into account their spare Equipment strategy for long lead time Transmission equipment when assessing the performance of their System. If the loss of a piece of major Equipment can be replaced within a reasonable period of time, planning studies for the following year can assume that that piece of Equipment will be replaced. If not, its impact of unavailability would need to be assessed**.** Part 2.1.5 has been revised to require that the assessment reflect the P0, P1, and P2 categories identified in Table 1 during the conditions that the System is expected to experience due to the possible unavailability of the long lead time Equipment.

> **2.1.5** When an entity's spare equipment strategy could result in the unavailability of major Transmission equipment that has a lead time of one year or more (such as a transformer), an analysis of the impact of this possible unavailability on System performance shall be assessed. The Planning Assessment shall reflect the P0, P1, and P2 categories identified in Table 1 during the conditions that the System is expected to experience due to the possible unavailability of the long lead time equipment.

Part 2.2.1 has been revised because extending the Planning Horizon beyond 10 years for projects with lead time longer than 10 years is already covered in the definition of Long-Term Transmission Planning Horizon. This allowance is needed to provide planning flexibility, and is at the discretion of the Planning Coordinator or Transmission Planner. For example, if the System is found not to meet performance standard in year 10, but the project to correct the loading cannot be placed in service for 12 years, then the Corrective Action Plan needs to identify the interim solutions before the project can be brought on line.

> **2.2.1** A current study assessing expected System peak Load conditions for one of the years in the Long-Term Transmission Planning Horizon and the rationale for why that year was selected.

Part 2.4.1 has been modified.

> **2.4.1** System peak Load for one of the five years. System peak Load levels shall include a Load model which represents the dynamic behavior of Loads that could impact the study area, considering the behavior of induction motor Loads. An aggregate System Load model which represents the overall dynamic behavior of the Load is acceptable.

Part 2.5.1 (now Part 2.6.1) is considered a separate requirement by the SDT and has not been deleted or merged. It has been revised for clarity.

> **2.6.1** For steady state, short circuit, or Stability analysis: the study shall be five calendar years old or less, unless a technical rationale can be provided

Organization	Question 2 Comment
to demonstrate that the results of an older study are still valid. Part 2.5.2 (now Part 2.6.2) has been revised for clarity. **2.6.2** For steady state, short circuit, or Stability analysis: the study shall not include any material changes unless a technical rationale can be provided to demonstrate that System changes do not impact the performance results in the study area. Part 2.6 has been revised and included as Part 2.7 to address your concerns. **2.7** For planning events shown in Table 1, when the analysis indicates an inability of the System to meet the performance requirements in Table 1, the Planning Assessment shall include Corrective Action Plan(s) addressing how the performance requirements will be met. Revisions to the Corrective Action Plan(s) are allowed in subsequent Planning Assessments but the planned System shall continue to meet the performance requirements in Table 1. Corrective Action Plan(s) do not need to be developed solely to meet the performance requirements for a single sensitivity run in accordance with Requirements R2, parts 2.1.4 and 2.4.3. The Corrective Action Plan(s) shall: Project initiation date has been deleted from the requirements. The requirement for in service date has been deleted. Parts 2.8 and 2.9 were intended to contribute to open and transparent Transmission planning for peer review. The SDT reviewed both requirements and agrees with the majority of the commenters that as written, they were unclear. Part 2.9 has been deleted. Part 2.8 has been revised and included as Part 2.9 in he new version to require that the Planning Assessment provides the expected largest Consequential Load Loss identified by the analysis of P1 and P2 events in Table 1 only. **2.9** The Planning Assessment shall provide the expected largest Consequential Load Loss (megawatt Demand) identified by the analysis of P1 and P2 events in Table 1.	
Orlando Utilities Commission	-I think R2.1 has a typo and should reference requirement R2.5, not R2.6. – R2 Does the phrase “System Peak Load” require true system peak be tested, or a peak condition. As an example, FRCC experience a two peak loads, a summer peak that occurs regularl
Response: In the new version, Part 2.6 now contains the requirement for the use of past studies, so Part 2.1 now has the correct reference. No change made. System peak Load means the highest Load within the time period that is being evaluated.	
American Transmission Company	We propose the following comments for R2:In sections R2.1.3 and R2.4.3 please explain the reference to expected transfers and how that differs from R1.1.5 interchange. If these are analogous, then change the references to interchange. Modify R2.5.2 second bullet to clarify that this addresses an aggregated addition/deletion/change to a group of generating units directly connected through a shared step-up transformer . . . . Modify R2.6.2 to remove the obligation to include the project initiation date. The inclusion of this date would add unnecessary work that is not needed to assure adequate BES reliability. In addition, it is not clear whether initiation refers to the commencement of engineering, design, construction, etc.ATC agrees that the Transmission Planner should be responsible for a corrective action plan (R 2.6) and its associated sub-requirements, but we do not agree that the Planning

Organization	Question 2 Comment
	Coordinator should also be listed. Unlike a Transmission Planner, a Planning Coordinator does not have the ability or responsibility to implement a corrective action plan. Requirement 2.6 and its associated sub-requirements should be limited to only the Transmission Planner. Remove the R2.8 requirement. The activity of identifying and including the largest Consequential Load Loss caused by any P1 or any P2 events in the Planning Assessment may not assure adequate BES reliability. A P1 or P2 event with the largest Consequential Load Loss could occur at a location on the system that is strong enough to not result in any performance violation. The amount of Consequential Load Loss may not have a relevant correlation to system performance and reliability. Remove the R2.9 requirement. The activity of identifying and including the maximum permissible Non-Consequential Load Loss caused by selected Table 1 Planning Events may not assure adequate BES reliability. The maximum permissible Non-Consequential Load Loss could occur at a location on the system that is strong enough to not result in any performance violation. The maximum amount of Non-Consequential Load Loss may not have a relevant correlation to system performance and reliability. Add R2.10. The obligation to identify and observe applicable steady state voltage and post-Contingency voltage deviations should be a Requirement, rather than performance note a in the Planning Events, Steady State Only section of Table 1. And the obligation to identify and observe applicable transient voltage response limits should be a Requirement, rather than performance note b in the Planning Events, Stability Only section of Table 1. In addition, due to the system limit requirements of FAC-010 and FAC-014 the reference to the PC and TP is unnecessary. We suggest this text: The Planning Assessment shall identify the applicable steady state voltage, post-Contingency voltage deviations, and transient voltage response limits.

Response: Part 1.1.5 has been revised to state "Known commitments for Firm Transmission Service and Interchange" The NERC Glossary of Terms defines Firm Transmission Service as "the highest quality (priority) service offered to customers under a filed rate schedule that anticipates no planned interruption" and Interchange as "Energy transfers that cross Balancing Authority boundaries. "Transfer" can cover more than Firm Transmission Service or Interchange. Parts 2.1.3 and 2.4.3 would cover the sensitivity of changes in expected transfers regardless of the cause.

Part 2.5.2 – The examples in the bullets have been deleted.

Part 2.6.2 - Project initiation date has been deleted from the requirements.

Part 2.6 has been revised and included as Part 2.7 in the new version to address your concerns. The SDT declines to limit the application of Part 2.6 to the Transmission Planner because the Planning Coordinator would be responsible for coordination between Transmission Providers.

> **2.7** For planning events shown in Table 1, when the analysis indicates an inability of the System to meet the performance requirements in Table 1, the Planning Assessment shall include Corrective Action Plan(s) addressing how the performance requirements will be met. Revisions to the Corrective Action Plan(s) are allowed in subsequent Planning Assessments but the planned System shall continue to meet the performance requirements in Table 1. Corrective Action Plan(s) do not need to be developed solely to meet the performance requirements for a single sensitivity run in accordance with Requirements R2, parts 2.1.4 and 2.4.3. The Corrective Action Plan(s) shall:

Parts 2.8 and 2.9 were intended to contribute to open and transparent Transmission planning for peer review. The SDT reviewed both requirements and agrees with the majority of the commenters that as written, they were unclear. Part 2.9 has been deleted. Part 2.8 has been revised and included as Part 2.9 in the new

Organization	Question 2 Comment
version to require that the Planning Assessment provides the expected largest Consequential Load Loss identified by the analysis of P1 and P2 events in Table 1 only. **2.9** The Planning Assessment shall provide the expected largest Consequential Load Loss (megawatt Demand) identified by the analysis of P1 and P2 events in Table 1. The obligation to identify potential steady state, transient, post-transient and post-Contingency problems is already included in Parts 2.1 through 2.4 and in Part 2.6 (Part 2.7 in the new version). Therefore adding a new Part 2.10 is not needed.	
Turlock Irrigation District	TID expresses concern that the planning extension of R2.2.1 could lead to a scenario where a single members long term project (beyond 10 years) could then require all neighboring members to extend their own planning horizons (similar to a lowest common denominator issue) and face unnecessary technical issues.
Response: Part 2.2.1 has been revised because extending the Planning Horizon beyond 10 years for projects with lead time longer than 10 years is already covered in the definition of Long-Term Transmission Planning Horizon. This allowance is needed to provide planning flexibility, and is at the discretion of the Planning Coordinator or Transmission Planner. For example, if the System is found not to meet performance standard in year 10, but the project to correct the loading cannot be placed in service for 12 years, then the Corrective Action Plan needs to identify the interim solutions before the project can be brought on line. If a neighboring Planning Coordinator or Transmission Planner extends their planning horizon beyond ten years, it may be prudent for the Planning Coordinator or Transmission Planner to similarly extend the associated planning horizon, but it is not necessary for compliance of this standard. Therefore, the Planning Coordinator or Transmission Planner can choose whether to extend the planning horizon beyond 10 years for its own planning area(s) for the purpose of compliance. **2.2.1** A current study assessing expected System peak Load conditions for one of the years in the Long-Term Transmission Planning Horizon and the rationale for why that year was selected.	
New York Independent System Operator	R2.1.2 - System off-peak is more likely a stability issue than a steady state issue. If system off-peak becomes a steady state issue, it can be mitigated through generation redispatch. Accordingly, it appears that this requirement is not necessary for steady state analysis R2.1.4 - With respect to spare equipment strategy, this requirement potentially imposes a requirement to plan for three events, which is overly severe. As previously stated in R1, the system model should be a model of the projected system, which would include a long term actual forced outage. If this requirement is not referring to actual outages, then it is suggesting an N-1-1-1 analysis, which is a requirement that would require significant additional work with little value added for reliability because such contingencies have a very low probability. Under R2.5 - Past Studies may be used to support the Planning Assessment if they meet the following requirements and the sub-requirement R2.5.2 states that for SS, SC, or stability analysis "the PRESENT (emphasis added) System model shall not include any material changes, such as, . The NYISO interprets this language to mean that past studies may be used to support planning assessments as long as there are no material changes to the LATEST PLANNING HORIZON system model. The Standards Drafting Team should clarify whether this interpretation is correct. The standard should further state whether, if there was a material change such as a 20 MW generator, the past study may be used if the impact of this small change is assessed. Finally, the regional entity should have a process to determine whether changes are material that is

Organization	Question 2 Comment
	similar to the NPCCs process for determining what level of annual transmission review should be conducted each year.

Response: Regarding comment on Part 2.1.2, NERC Standards require that Systems can operate reliably over all demand levels. If steady state problems under off-peak conditions needed to be corrected through re-dispatch and/or switching to reconfigure the System, then a Corrective Action Plan involving re-dispatch and switching will need to be developed to ensure that the plan can be implemented. Since a past study can be used to support a current Assessment in accordance with Part 2.5 (Part 2.6 in the new version), an off-peak study would not have to be performed every year.

In Part 2.1.4 (now Part 2.1.5) when a piece of long lead-time Equipment is unavailable, System adjustments will need to be made. The System, after it is adjusted to accommodate that piece of Equipment out of service will be treated as the "normal" (P0) condition in Table 1 and the rest of Table 1 will be applied as stated. Part 2.1.5 is intended for the Planning Coordinator and/or Transmission Planner to take into account their spare Equipment strategy for long lead time Equipment when assessing the performance of their System. If the loss of a piece of major Equipment can be replaced within a reasonable period of time, planning studies for the following year can assume that that piece of Equipment will be replaced. If not, its impact of unavailability would need to be assessed. Part 2.1.5 has been revised to require that the assessment reflect the P0, P1, and P2 categories identified in Table 1 during the conditions that the System is expected to experience due to the possible unavailability of the long lead time Equipment.

> **2.1.5** When an entity's spare equipment strategy could result in the unavailability of major Transmission equipment that has a lead time of one year or more (such as a transformer), an analysis of the impact of this possible unavailability on System performance shall be assessed. The Planning Assessment shall reflect the P0, P1, and P2 categories identified in Table 1 during the conditions that the System is expected to experience due to the possible unavailability of the long lead time equipment.

Part 2.5.2 (now 2.6.2) has been revised for clarity. The bullets under 2.5.2 have been removed from the revised standard.

> **2.6.2** For steady state, short circuit, or Stability analysis: the study shall not include any material changes unless a technical rationale can be provided to demonstrate that System changes do not impact the performance results in the study area.

Duke Energy	R2 Instead of document results the requirement should be to summarize results. While results will be documented, the Planning Assessment should just include a summary. R2.1 What's the value in being able to use qualified past studies if you have to use annual current studies? Strike the words supplemented with and insert the word or. R2.5.2 Suggest deleting the phrase Material generation changes could include: and the two accompanying bullets. A change of 20 MW on a large system may not always be material. R2.8 and R2.9 should be deleted. We don't see a reliability-related need for these requirements. In the sub-requirements of 2.1.3 and 2.4.3, the use of the word timing is unclear. Consider using in service date or schedule for. R2.4.1: It is not clear how much Load a dynamic model must have. Likely, it must still be proven that the analysis software can accommodate every load in the model having a load model that includes induction motor models. To help address this, revise Load to be Load that could impact the study area is acceptable.

Response: Requirement R2 has been revised to provide greater clarity and the word, "summarize" was added in support of your suggestion.

Organization	Question 2 Comment
	R2. Each Transmission Planner and Planning Coordinator shall prepare an annual Planning Assessment of its portion of the BES. This Planning Assessment shall use current or past studies, document assumptions, summarize documented results, and cover steady state analyses, short circuit analyses, and Stability analyses. In Part 2.1 it is envisioned that not all parts of the studies, on which the Assessment is to be based, can rely on past studies. For example, a study on year five performed during the past year may not be representative of year five in the current year. A past study can still be used if it can be demonstrated that the requirements for use of past studies are met. No change made. 2.5.2 – Both bullets under 2.5.2 have been deleted as suggested Parts 2.8 and 2.9 were intended to contribute to open and transparent Transmission planning for peer review. The SDT reviewed both requirements and agrees with the majority of the commenters that as written, they were unclear. Part 2.9 has been deleted. Part 2.8 has been revised and included as Part 2.9 in the new version to require that the Planning Assessment provides the expected largest Consequential Load Loss identified by the analysis of P1 and P2 events in Table 1 only. **2.9** The Planning Assessment shall provide the expected largest Consequential Load Loss (megawatt Demand) identified by the analysis of P1 and P2 events in Table 1. Parts 2.1.3 (now Part 2.1.4) and 2.4.3 have been revised. **2.1.4** For each of the studies described in Requirement R2, parts 2.1.1 and 2.1.2, sensitivity case(s) shall be utilized to demonstrate the impact of changes to the basic assumptions used in the model for the list of items shown below. To accomplish this, the sensitivity analysis in the Planning Assessment must vary one or more of the following conditions not already included in the studies by a sufficient amount to stress the System within a range of credible conditions that demonstrate a measurable change in performance. • Real and reactive forecasted Load. • Expected transfers. • Expected in service dates of new or modified Transmission Facilities. • Reactive resource capability. • Generation additions, retirements, or other dispatch scenarios. • Controllable Loads and Demand Side Management. • Duration or timing of planned Transmission outages. **2.4.3** For each of the studies described in Requirement R2, parts 2.4.1 and 2.4.2, sensitivity case(s) shall be utilized to demonstrate the impact of changes to the basic assumptions used in the model for the list of items shown below. To accomplish this, the sensitivity analysis in the Planning Assessment must vary one or more of the following conditions not already included in the studies by a sufficient amount to stress the System within a range of credible conditions that demonstrate a measurable change in performance. • Load level, Load forecast, or dynamic model assumptions. • Expected transfers. • Expected in service dates of new or modified Facilities.

Organization	Question 2 Comment
	• Reactive resource capability. • Generation additions, retirements, or other dispatch scenarios. Part 2.4.1 has been revised to reflect your suggestion. **2.4.1** System peak Load for one of the five years. System peak Load levels shall include a Load model which represents the dynamic behavior of Loads that could impact the study area, considering the behavior of induction motor Loads. An aggregate System Load model which represents the overall dynamic behavior of the Load is acceptable.
Tucson Electric Power Company	Short circuit analyses is a local phenomenon and should not be required as part of a transmission planning assessment of the BES. In any case, the effects of failure of over-stressed breakers are already included in the Events to be assessed in Table 1. For example, P2-3 and P2-4 (Internal Breaker Fault), and P4 (Stuck Breaker while attempting to clear a fault). In R2.1, we believe the reference for past studies should be Requirement R2.5 not Requirement R2.6. Also, we suggest removing the phrase supplemented with and replacing it with the word or. This phrase indicates that previous studies cannot be a primary source for the assessment, which contradicts section 2.5.Remove the phrase not already included in the studies in R2.1.3. With this phrase included, you cannot use a previous sensitivity study to support the current assessment and Requirement R2.5 allows the use of previous studies if the conditions are met. Clarity is needed in R2.1.4. The requirement to assess the Contingencies identified in Table 1 is too burdensome. This requirement does not specify any limits on the equipment for which an analysis must be conducted. As currently drafted, this could require a separate analysis for each transformer (or any long lead-time equipment) for which a spare is not available. A separate initial case would need to be developed to assess the Contingencies identified in Table 1 for each transformer. This could result in a countless number of additional cases. We recommend a threshold be established, such as all transformers with a low side voltage above 200 kV. We also recommend changing this from a separate sub-Requirement to one of the sensitivities to be considered under 2.1.3. We also believe that the statement at the end of R2.6 that indicates corrective action plans are not required solely to meet the performance requirements for sensitivities should also apply to the spare equipment requirement.Remove the phrase "not already included in the studies" in R2.4.3. With this phrase included, you cannot use a previous sensitivity study to support the current assessment and Requirement R2.5 allows the use of previous studies if the conditions are met. The 20 MW threshold identified as "material change" for generation in R2.5 is too small. The limit should be raised or based on a percentage of the study area'sinstalled generating capacity. R2.8 should be deleted. It is not necessary for reliability. What will be done with this information on the "largest Consequential Load Loss and the associated event caused by any P1 event and any P2 event" if it is documented? R2.9 should be deleted. It is not necessary for reliability. It will be difficult to determine the maximum permissible Non-Consequential Load value. It will end up being based on cost (monetary, societal, environmental, etc.), which is dependent, among other things, on the types of load being served. It very well may be a case by case situation.
Response: Part 2.3 is intended for the Planning Coordinator and/or Transmission Planner to assess the whether circuit breakers supporting the BES have interrupting capability for Faults that they will be expected to interrupt. Even though the effects of short circuit capability is localized and may be related to new	

Organization	Question 2 Comment
	planned Facilities, it is important to BES reliability. Part 2.3 has been revised to provide greater clarity. **2.3** The short circuit analysis portion of the Planning Assessment shall be conducted annually addressing the Near-Term Transmission Planning Horizon and can be supported by current or past studies as indicated in Requirement R2, part 2.6. The analysis shall be used to determine whether circuit breakers have interrupting capability for Faults that they will be expected to interrupt using the System short circuit model with any planned generation and Transmission Facilities in service which could impact the study area. Part 2.1 requires certain current studies be conducted each year for the Near-Term steady state assessment, which can be supplemented with past studies. The SDT disagrees that the statements are contradictory. No change made. Part 2.1.4 (now Part 2.1.5) has been revised to require that the assessment reflect the P0, P1, and P2 categories identified in Table 1 during the conditions that the System is expected to experience due to the possible unavailability of the long lead time Equipment. **2.1.5** When an entity's spare equipment strategy could result in the unavailability of major Transmission equipment that has a lead time of one year or more (such as a transformer), an analysis of the impact of this possible unavailability on System performance shall be assessed. The Planning Assessment shall reflect the P0, P1, and P2 categories identified in Table 1 during the conditions that the System is expected to experience due to the possible unavailability of the long lead time equipment. Part 2.6 (now Part 2.7) has been revised for clarity. **2.7** For planning events shown in Table 1, when the analysis indicates an inability of the System to meet the performance requirements in Table 1, the Planning Assessment shall include Corrective Action Plan(s) addressing how the performance requirements will be met. Revisions to the Corrective Action Plan(s) are allowed in subsequent Planning Assessments but the planned System shall continue to meet the performance requirements in Table 1. Corrective Action Plan(s) do not need to be developed solely to meet the performance requirements for a single sensitivity run in accordance with Requirements R2, parts 2.1.4 and 2.4.3. The Corrective Action Plan(s) shall: The material change wording has been deleted from the requirement. . Parts 2.8 and 2.9 were intended to contribute to open and transparent Transmission planning for peer review. The SDT reviewed both requirements and agrees that as written, they were unclear. Part 2.9 has been deleted. Part 2.8 has been revised and included as Part 2.9 in the new version to require that the Planning Assessment provides the expected largest Consequential Load Loss identified by the analysis of P1 and P2 events in Table 1 only. **2.9** The Planning Assessment shall provide the expected largest Consequential Load Loss (megawatt Demand) identified by the analysis of P1 and P2 events in Table 1.
Independent Electricity System Operator	1. We think "conduct and document" is more appropriate than "prepare". Suggest to make this change. 2. We understand the reason for introducing the spare equipment strategy in R2.1.4 is to address comments raised on planned and long-term outages. However, this is not the only cause of unavailability of major Transmission equipment for more than 12 months. Construction or line upgrade program may also require certain transmission facilities be taken out of service for a protracted period. We suggest that R2.1.4 be revised to "When an entity's spare equipment strategy or transmission project construction plan could result in the unavailability of".. 3. When would PCs and TPs be expected to perform the analysis referred to in R2.1.4 ? in anticipation of the possibility of unavailability of major transmission equipment of after such unavailability has occurred or is planned?

Organization	Question 2 Comment
	4. R2.3: The first sentence is unclear and the wording can be supported is misleading. We suggest the first sentence be revised to: The short circuit analysis portion of the Planning Assessment addressing the Near-Term Transmission Planning Horizon shall be conducted annually and be supported by current or past studies. Alternatively, language similar to R2.4 may be considered: "The Near-Term Transmission Planning Horizon portion of the short circuit analysis shall be assessed annually and be supported by current or past studies. 5. R2.4 stipulates the details of the study for Near-Term Transmission Planning horizon for the stability analysis. Unlike its steady state analysis counterpart, there is no requirement stipulated for the Long-Term Transmission Planning horizon for the stability analysis. Is this intentional, or do the same conditions apply to the Long-Term stability analysis" 6. R2.6: Suggest to change in the tables to Table 1 at the end of the second sentence. 7. We agree with the VRFs, Mitigation Horizons and Measures. We also agree with the VSLs except R2.5 is not included. However, If R2.5 is meant to be explanatory (to illustrate the conditions under which past studies may be used), then the conditions should be provided in those requirements (e.g. R2.3) that allow for the use of past studies. If, however, these conditions are meant to be requirements, then their VSLs should be developed.

Response: The SDT does not see the proposed language as an improvement. No change made.

In Part 2.1.4 (now Part 2.1.5) when a piece of long lead-time Equipment is unavailable, System adjustments will need to be made. The System, after it is adjusted to accommodate that piece of Equipment out of service will be treated as the "normal" (P0) condition in Table 1 and the rest of Table 1 will be applied as stated. Part 2.1.5 is intended for the Planning Coordinator and/or Transmission Planner to take into account their spare Equipment strategy for long lead time Equipment when assessing the performance of their System. If the loss of a piece of major Equipment can be replaced within a reasonable period of time, planning studies for the following year can assume that that piece of equipment will be replaced. If not, its impact of unavailability would need to be assessed. Part 2.1.5 has been revised to require that the assessment reflect the P0, P1, and P2 categories identified in Table 1 during the conditions that the System is expected to experience due to the possible unavailability of the long lead time Equipment.

> **2.1.5** When an entity's spare equipment strategy could result in the unavailability of major Transmission equipment that has a lead time of one year or more (such as a transformer), an analysis of the impact of this possible unavailability on System performance shall be assessed. The Planning Assessment shall reflect the P0, P1, and P2 categories identified in Table 1 during the conditions that the System is expected to experience due to the possible unavailability of the long lead time equipment.

Part 2.3 has been revised to provide greater clarity**.**

> **2.3** The short circuit analysis portion of the Planning Assessment shall be conducted annually addressing the Near-Term Transmission Planning Horizon and can be supported by current or past studies as indicated in Requirement R2, part 2.6. The analysis shall be used to determine whether circuit breakers have interrupting capability for Faults that they will be expected to interrupt using the System short circuit model with any planned generation and Transmission Facilities in service which could impact the study area.

The SDT added Part 2.5 to address your concern.

> **2.5** The Long-Term Transmission Planning Horizon portion of the Stability analysis shall be assessed to address the impact of proposed generation additions or changes in that timeframe and be supported by current or past studies.

Organization	Question 2 Comment
Part 2.6 (now Part 2.7) has been changed as suggested. **2.7** For planning events shown in Table 1, when the analysis indicates an inability of the System to meet the performance requirements in Table 1, the Planning Assessment shall include Corrective Action Plan(s) addressing how the performance requirements will be met. Revisions to the Corrective Action Plan(s) are allowed in subsequent Planning Assessments but the planned System shall continue to meet the performance requirements in Table 1. Corrective Action Plan(s) do not need to be developed solely to meet the performance requirements for a single sensitivity run in accordance with Requirements R2, parts 2.1.4 and 2.4.3. The Corrective Action Plan(s) shall: The Lower VSL has been revised accordingly. R2, Lower VSL: The responsible entity failed to comply with Requirement R2, part 2.9 or Requirement R2, part 2.6.	
Kansas City Power & Light	R2.1.3 is this indicating that only one of the variations need to be studied? (in one or more of the following conditions). Recommend having the planner work with the load to determine what sensitivity studies to perform. R2.1.4 it is unclear as to what should be done with the analysis that incorporates the company's spare equipment strategy. Is this requirement inferring that a company's spare equipment strategy need to ensure that it can still operate to within the requirements for contingencies of Table 1 without the component? R2.2.1 ? is the intent to have the study for the 10 year horizon or to include any project that is started within the next 10 years and thus the study must be extended to the forecasted completion of the project (conceivably as long as 20 years or more?) R2.5.2 - Remove the word intervening and this requirement must be more specific about what this requirement is trying to communicate and acccomplish. R2.6.4 recommend clarifying how situations beyond the control of the TP or PC are determined. It is unclear if this is to imply that if something is outside of the control of the department who conducts the planning studies or if it is outside the control of the registered function's legal entity (i.e. corporation). R2.8 appears to be nonessential information for reliability; for what purpose does this requirement exist? R2.9 - appears to be nonessential information for reliability; for what purpose does this requirement exist?
Response: Part 2.1.3 (now Part 2.1.4) is intended for the Planning Coordinator or the Transmission Planner to investigate at least one of the conditions listed. Part 2.1.3 has been revised to provide greater clarity. It is expected that there will be coordination between the Planning Coordinator, the Transmission Planner and the other impacted Functional Entities. **2.1.4** For each of the studies described in Requirement R2, parts 2.1.1 and 2.1.2, sensitivity case(s) shall be utilized to demonstrate the impact of changes to the basic assumptions used in the model for the list of items shown below. To accomplish this, the sensitivity analysis in the Planning Assessment must vary one or more of the following conditions not already included in the studies by a sufficient amount to stress the System within a range of credible conditions that demonstrate a measurable change in performance. • Real and reactive forecasted Load.	

Organization	Question 2 Comment
	• Expected transfers. • Expected in service dates of new or modified Transmission Facilities. • Reactive resource capability. • Generation additions, retirements, or other dispatch scenarios. • Controllable Loads and Demand Side Management. • Duration or timing of planned Transmission outages. In Part 2.1.4 (now Part 2.1.5) when a piece of long lead-time Equipment is unavailable, System adjustments will need to be made. The System, after it is adjusted to accommodate that piece of Equipment out of service will be treated as the "normal" (P0) condition in Table 1 and the rest of Table 1 will apply. Part 2.1.5 is intended for the Planning Coordinator and/or Transmission Planner to take into account their spare Equipment strategy for long lead time Equipment when assessing the performance of their System. If the loss of a piece of major Equipment can be replaced within a reasonable period of time, planning studies for the following year can assume that that piece of equipment will be replaced. If not, its impact of unavailability would need to be assessed. Part 2.1.5 has been revised to require that the assessment reflect the P0, P1, and P2 categories identified in Table 1 during the conditions that the System is expected to experience due to the possible unavailability of the long lead time Equipment. **2.1.5** When an entity's spare equipment strategy could result in the unavailability of major Transmission equipment that has a lead time of one year or more (such as a transformer), an analysis of the impact of this possible unavailability on System performance shall be assessed. The Planning Assessment shall reflect the P0, P1, and P2 categories identified in Table 1 during the conditions that the System is expected to experience due to the possible unavailability of the long lead time equipment. Part 2.2.1 has been revised because extending the Planning Horizon beyond 10 years for projects with lead time longer than 10 years is already covered in the definition of Long-Term Transmission Planning Horizon. This allowance is needed to provide planning flexibility, and is at the discretion of the Planning Coordinator or Transmission Planner. For example, if the System is found not to meet performance standard in year 10, but the project to correct the loading cannot be placed in service for 12 years, then the Corrective Action Plan needs to identify the interim solutions before the project can be brought on line. **2.2.1** A current study assessing expected System peak Load conditions for one of the years in the Long-Term Transmission Planning Horizon and the rationale for why that year was selected. Part 2.5.2 has been revised and included as Part 2.6.2 in the new version to provide greater clarity. **2.6.2** For steady state, short circuit, or Stability analysis: the study shall not include any material changes unless a technical rationale can be provided to demonstrate that System changes do not impact the performance results in the study area. Part 2.6.4 (now 2.7.5) does not prejudge the acceptability of the situation outside the control of the Planning Coordinator or Transmission Planner, which has prevented the implementation of the Corrective Action Plan, provided that the Planning Coordinator or Transmission Planner documents that they are taking actions to resolve the situation. The Transmission Planner or Planning Coordinator shall document the situation causing the problem, alternatives evaluated, and the use of Non-Consequential Load Loss or curtailment of Firm Transmission Service. Parts 2.8 and 2.9 were intended to contribute to open and transparent Transmission planning for peer review. The SDT reviewed both requirements and agrees that as written, they were unclear. Part 2.9 has been deleted. Part 2.8 has been revised and included as Part 2.9 in the new version to require that the Planning

Organization	Question 2 Comment
Assessment provides the expected largest Consequential Load Loss identified by the analysis of P1 and P2 events in Table 1 only. **2.9** The Planning Assessment shall provide the expected largest Consequential Load Loss (megawatt Demand) identified by the analysis of P1 and P2 events in Table 1.	
ReliabilityFirst Corporation	R2- Suggest changing annual Planning Assessment to "annual Planning Assessment Report". Requires short circuit analysis, at present NERC wide common data base for conducting short circuit analysis, does not exist. Short circuit analysis is only performed when there are major system changes and their impact is local. R2.1.1 requires either Year One or year two, and year five. NERC members utilize Models developed by MMWG for the assessment study needs and they are usually lag by one year. R2.1.3 -Suggest changing last bullet to read "Transmission lines, Transformers, Generating unit and Reactive sources that are scheduled for extended outages during the study period should not be included in the Assessment Model." R2.4.1- The requirements in the two sentences seem to contradict each other. R2.4.2 – This does not mention modeling dynamic behavior of loads. R2.5.2 – "could include" is weak and may not be enforceable. Suggest removing all the text after the first paragraph. Does this require any additional studies to demonstrate that the changes do not impact previous conclusions? R2.7 – Short Circuit analysis should not be a part of Performance Requirements". These should be included in "PRC" Standards
Response: Requirement R2 has been revised. **R2.** Each Transmission Planner and Planning Coordinator shall prepare an annual Planning Assessment of its portion of the BES. This Planning Assessment shall use current or past studies, document assumptions, summarize documented results, and cover steady state analyses, short circuit analyses, and Stability analyses. Part 2.1.1 is intended to require studies for System Peak Load Conditions for 2 of the years in the near-term planning horizon: (1) A year five case to identify potential problem that can be addressed if the planned projects proceed as scheduled; (2) A Year One or year two case to identify any potential problems unanticipated in the five-year case, which if not addressed, could impact operations as time progresses. The standard provides flexibility for the Planning Coordinator or Transmission Planner to use past studies to support the current year assessment, and to assess other years in addition to those identified in Part 2.1.1. Therefore, if the models developed by MMWG lag by one year, it can qualify as a valid past study. Planned outages of generation and Transmission Facilities are included in Part 1.1.1 (included as Part 1.1.2 in the new version). Transmission Facilities covers lines, reactive devices, and other substation equipment. Part 2.1.3 (now Part 2.1.4) is intended to cover sensitivity studies on "what if" scenarios. Part 2.1.4 has been revised to provide greater clarity. **2.1.4** For each of the studies described in Requirement R2, parts 2.1.1 and 2.1.2, sensitivity case(s) shall be utilized to demonstrate the impact of changes to the basic assumptions used in the model for the list of items shown below. To accomplish this, the sensitivity analysis in the Planning Assessment must vary one or more of the following conditions not already included in the studies by a sufficient amount to stress the System within a range of credible conditions that demonstrate a measurable change in performance.	

Organization	Question 2 Comment
	• Real and reactive forecasted Load. • Expected transfers. • Expected in service dates of new or modified Transmission Facilities. • Reactive resource capability. • Generation additions, retirements, or other dispatch scenarios. • Controllable Loads and Demand Side Management. • Duration or timing of planned Transmission outages. Part 2.4.1 is intended to allow the use of aggregated system Load models if more accurate Load models are not available. Therefore, the second and third sentences are not in conflict. In Part 2.4.1 the SDT specifies the dynamic Load model representation for on peak because the System voltages are generally lower during on peak. The percentage of motor Load, e.g., in air conditioners, could significantly increase reactive power requirements especially when they stall due to low System voltage and can therefore impact dynamic System performance on-peak. However, motor Load would likely not pose the same problem during off-peak as the System voltages are usually higher. So, in Part 2.4.2, it can be left to the discretion of the Planning Coordinator or Transmission Planner whether the dynamic motor Load would need to be represented per the requirement in Part 2.4.1, Part 2.5.2 has been revised and included as Part 2.6.2 in the new version to provide greater clarity**.** **2.6.2** For steady state, short circuit, or Stability analysis: the study shall not include any material changes unless a technical rationale can be provided to demonstrate that System changes do not impact the performance results in the study area. Part 2.7 is intent to require a Corrective Action Plan if the short circuit duty requirement exceeds the current interrupting duty of the circuit breaker. No change made.

3. Requirement R3 – Please provide any specific comments on the requirement text, VRF, Time Horizon, measure associated with the requirement, data retention associated with the requirement, and/or the VSL associated with the requirement.

Summary Consideration: Minor wording changes were made to Requirement R3 to clarify that this requirement pertains to the requirements of the studies needed to support the Planning Assessment. Several industry commenters wanted confirmation that Requirement R3 applied to both the Planning Coordinator and the Transmission Planner feeling that the requirement could result in duplication of effort. The SDT directed the commenters to Requirement R6 (now Requirement R7), which provides a mechanism for determining individual and joint responsibilities for performing the required studies for the Planning Assessment. Several clarifying changes were made to the wording of the parts under Requirement R3 to address industry comments.

R3 For the steady state portion of the Planning Assessment, each Transmission Planner and Planning Coordinator shall perform studies for the Near-Term and Long-Term Transmission Planning Horizons in Requirement R2, parts 2.1, and 2.2. The studies shall be based on computer simulation models using data provided in Requirement R1.

R3.1 Studies shall be performed for planning events to determine whether the BES meets the performance requirements in Table 1 based on the Contingency list created in Requirement R3, part 3.4.

R3.2 Studies shall be performed to assess the impact of the extreme events which are identified by the list created in Requirement R3, part 3.5.

R3.3 Contingency analyses shall be performed and:

R3.3.2 Trip generators where simulations show generator bus voltages are less than known or assumed minimum generator steady state or ride through voltage limitations. Include in the assessment any assumptions made.

R3.3.3 Ensure relay loadability limits are respected.

R3.3.4 Simulate the expected automatic operation of existing and planned devices designed to provide Steady State control of electrical system quantities when such devices impact the study area. These devices may include equipment such as phase-shifting transformers, load tap changing transformers, and switched capacitors and inductors.

R3.4 Those planning events in Table 1, that are expected to produce more severe System impacts on its portion of the BES, shall be identified and a list of those Contingencies to be evaluated for System performance in Requirement R3, part 3.1 created. The rationale for those Contingencies selected for evaluation shall be available as supporting information.

R3.4.1 The Planning Coordinator and Transmission Planner shall coordinate with adjacent Planning Coordinators and Transmission Planners to ensure that Contingencies on adjacent Systems which may impact their Systems are included in the Contingency list.

R3.5 Those extreme events in Table 1 that are expected to produce more severe System impacts shall be identified and a list of those events to be evaluated for System performance in Requirement R3, part 3.2 created. The rationale for those Contingencies selected for evaluation shall be available as supporting information. If the analysis concludes there are cascading outages caused by the occurrence of extreme events, an evaluation of possible actions designed to reduce the likelihood or mitigate the consequences and adverse impacts of the event(s) shall be conducted.

R3, moderate VSL: The responsible entity did not base its studies on computer simulation models using data provided in Requirement R1.

Organization	Question 3 Comment
Northeast Power Coordinating Council	R3.3.2 Traditionally transmission planners have used their judgment about the minimum steady state voltage limitations of generators. If this standard is going to require its incorporation into the assessments, there should be an MOD standard developed requiring the generators to provide the necessary information prior to its inclusion as a requirement in this standard. R3.3.3 " PRC-023 requires relay loadability to be reflected in facility ratings. Therefore this additional requirement is unnecessary and should be deleted. R3.5 ? We recommend that the requirement for Extreme Event testing be removed from this standard as there is no requirement to develop a Corrective Action Plan to address unacceptable consequences. Otherwise we recommend the following:- Extreme Event performance should be a consideration when developing Corrective Action Plans to address Planning Events- It should be clear that an evaluation does not require solution development for all Extreme Events- Change "an evaluation of possible actions" to "where appropriate, reasonably practicable actions designed to reduce the likelihood or mitigate the consequences and adverse impacts of the event(s) shall be considered. For Requirements R3.4 and R3.5, what defines "more severe System impacts"?
Response: R3.3.2: The SDT agrees that judgment is used today. There is a project (PRC-024) that will address this issue. The wording has been changed to clarify the intent of the requirement. For this standard, all that is required is to identify the assumptions concerning voltage limitations of the unit and ensure that they are being treated within the simulation as they will react in the real world. No change made for this comment. R3.3.3: The SDT believes that the requirement is necessary for the TPL standard and has clarified the requirement in an attempt to remove the objections. **R3.3.3** Ensure relay loadability limits are respected. R3.5: The SDT disagrees that the standard should mandate corrective actions for extreme events due to the low probability of these events. However, the SDT believes that those extreme events that are expected to produce more serve System impacts should be analyzed to assess the extent of the impacts on the System to provide the Planning Coordinator/Transmission Planner with information to decide, where appropriate, if it is reasonable to provide some corrective actions to reduce the possibility or limit the consequences of an extreme event. The need to identify possible actions addresses an Order 693 directive. Your suggested wording would make identification of possible actions optional. No change made. R3.4 & R3.5: Requirement R3, parts 3.4 and 3.5 require the Planning Coordinator/Transmission Planner to prepare a list of planning event and extreme event Contingencies that, in the Planning Coordinator's and Transmission Planner's judgment, are expected to produce more severe System impacts, and to document the reasons for the Contingencies selected. The documented rationale provided by the Planning Coordinator/Transmission Planner will define what is considered to be the more severe System impacts.	
Transmission Planning	R3.3.1. COMMENT: This would make sense for 3-terminal lines which we are including in contingency files, but for normal 2-terminal lines, very unnecessary. Suggested language at the end would say "Simulation of individual element outages is allowed if it produces an effect more severe that the entire circuit outage". This implies that by modeling individual branch outages would represent more severe conditions than entire circuit outages due to the fact that there would be consequential load loss. R3.4. COMMENT: Table 1 as drafted is very confusing and could be interpreted incorrectly. Recommend revising the header for "Table 1 " Steady State & Stability Performance Extreme Events" Should be changed to "Table 2 - Steady State & Stability Performance Extreme Events" because the expected performance requirements associated with Planning Events could be

Organization	Question 3 Comment
	interpreted to be applicable to Extreme Events as well. Alternatively, the performance requirements at the top of Table 1 need to include a statement that they are applicable to Planning Events only.
Response: R3.3.1: The SDT disagrees with the comment as the intent of Requirement R3, part 3.3.1, consistent with FERC Order 693, is to perform the simulation to reflect how the Protection System will operate in the real System for each Contingency without operator intervention. The requirement does not preclude the Planning Coordinator/Transmission Planner from studying individual elements or other maintenance scenarios. Planning event P2-1 addresses an element outage configuration. Please also see footnote 8. No change made. R3.4: The SDT feels that the table headings are sufficiently clear as stated. No change made.	
SERC Engineering Committee Planning Standards Subcommittee	R3.1:In Requirement R3.1, it is suggested that the word "contingency" be added to describe the lists created in R3.4.: "Studies shall be performed to determine whether the BES meets the performance requirements in Table 1 based on the contingency lists created in Requirement R3.4. R3.3.1: Recommend that it be clarified that simulation of the more conservative case of a single branch (bus-to-bus) outage is acceptable, as opposed to always simulating the full breaker-to-breaker outage. R3.3.2The requirement needs to be clarified. It is not clear if it is referring to the ability of plants to meet their voltage schedule, or to their ability to stay connected during post contingencies. R3.3.4:In Requirement R3.3.4, it is suggested adding the words "and switched" to capacitors and reactors:"Simulate the expected operation of existing and planned devices designed to provide Steady State control of electrical system quantities. These devices include equipment such as phase-shifting transformers, load tap changing transformers, and switched capacitors and inductors.
Response: R3.1: The SDT agrees and has modified Requirement R3, part 3.1 accordingly **R3.1** Studies shall be performed for planning events to determine whether the BES meets the performance requirements in Table 1 based on the Contingency list created in Requirement R3, part 3.4. R3.3.1: The SDT disagrees with the comment as the intent of Requirement R3, part 3.3.1, consistent with FERC Order 693, is to perform the simulation to reflect how the Protection System will operate in the real System for each Contingency without operator intervention. The requirement does not preclude the Planning Coordinator/Transmission Planner from studying individual elements or other maintenance scenarios. Planning event P2-1 addresses a branch outage configuration. Please also see footnote 8 (now footnote7). No change made. R3.3.2: The wording has been changed to clarify the intent of the requirement. For this standard, all that is required is to identify the assumptions concerning voltage limitations of the unit and ensure they are being treated within the simulation as they will react in the real world. **R3.3.2** Trip generators where simulations show generator bus voltages are less than known or assumed minimum generator steady state or ride through voltage limitations. Include in the assessment any assumptions made. R3.3.4: The SDT agrees and has revised the wording. **R3.3.4** Simulate the expected automatic operation of existing and planned devices designed to provide Steady State control of electrical system quantities	

Organization	Question 3 Comment
when such devices impact the study area. These devices may include equipment such as phase-shifting transformers, load tap changing transformers, and switched capacitors and inductors.	
Modesto Irrigation District	On page 10 under Section R3.3.3, I believe more specifics on what is meant by "relay loadability" need to be given in regard to the requirement of "identify how loadability is analyzed in the steady state simulation". For example, does the analyst need to state that the maximum loading allowed on any system element is less than or equal to 150% of the element's maximum seasonal rating ? We believe that R3.3.1-R3.3.4 should be bullets under R3.3
Response: R3.3.3: The SDT has clarified the requirement to ensure relay loadability limits, as defined in the relay loadability standard, are respected in the analysis. **R3.3.3** Ensure relay loadability limits are respected. R3.3.1-R3.3.4: The SDT disagrees as these are mandatory requirements of the Contingency analyses. Bullets are only used to identify the possible, but not all inclusive, elements of a menu. No change made.	
OPUC	3. Requirement R3 ? Please provide any specific comments on the requirement text, VRF, Time Horizon, measure associated with the requirement, data retention associated with the requirement, and/or the VSL associated with the requirement.Comments:A: R3.3 should be modified to become the requirement to conduct contingency analyses with R3.3.1 thru 4 presented as bullets there-under.
Response: R3.3.1-R3.3.4: The SDT disagrees as these are mandatory requirements of the Contingency analyses. Bullets are only used to identify the possible, but not all inclusive, elements of a menu. No change made.	
Bonneville Power Administration	R3.1 should be clarified. Suggested clarification: R3.1 - "Studies shall be performed to determine whether the BES meets the performance requirements in Table 1. A reduced set of contingencies can be simulated based on a list created in requirement R3.4." As currently drafted, R3.3 is not a requirement. Without the statements in R3.3.1-R3.3.4, R3.3 is simply a phrase. Sub-Sub-Requirements R3.3.1 through R3.3.4 should be bullets under R3.3, with the language in R3.3 modified so that it becomes the requirement to conduct contingency analyses that address the four resulting bullets R3.3.2 is unclear as drafted. The minimum steady state voltage limitation for synchronous generators is not a very meaningful value. All generators with an automatic voltage regulator will maintain the set point voltage until the VAR capability of the generator is exceeded, and then the voltage will deteriorate. Requirement R3.4 also needs to be clarified as follows: R3.4 - "A reduced list of Contingencies can be developed for System Performance evaluation in Requirement R3.1 that includes those Planning Event Contingencies that are expected to produce more severe System impacts based on system performance as required in Table 1. "The Statement at the end of R3.4 and R4.4 says "rationale for the Contingencies selected for evaluation shall be available as supporting information and shall include an

Organization	Question 3 Comment
	explanation of why the remaining Contingencies would exhibit better system performance." The statement does not make sense and should be deleted since the contingencies selected are those to produce more sever system performance. R3.5 ? We disagree with the requirement to explain why remaining Extreme Contingencies would produce less severe System results than the ones selected for study. The first part of the requirement requires identification of events that produce more severe System impacts. The reason the others were not selected is because they were less severe or non-credible. In any case, theoretically, there can always be a more severe Extreme Contingencies than the one selected for study. For example, if the Extreme Contingency studied were simultaneous loss of 3 transmission lines with failure of redundant RAS, then simultaneous loss of 4 lines with failure of 2 sets of redundant RAS would be more severe. Listing all possible extreme events could result in a limitless list.

Response: R3.1: The SDT agrees and has modified the requirement.

> **R3.1** Studies shall be performed for planning events to determine whether the BES meets the performance requirements in Table 1 based on the Contingency list created in Requirement R3, part 3.4.

R3.3:The SDT has modified the wording to provide greater clarity. The SDT disagrees that Requirement R3 parts 3.3.1- 3.3.4 should be bullets as these are mandatory parts of the required contingency analyses. Bullets are only used to identify the possible but not all inclusive elements of a menu. No change made.

> **R3.3** Contingency analyses shall be performed and:

R3.3.2: The wording has been changed to clarify the intent of the requirement. For this standard, all that is required is to identify the assumptions concerning voltage limitations of the unit and ensure they are being treated within the simulation as they will react in the real world.

> **R3.3.2** Trip generators where simulations show generator bus voltages are less than known or assumed minimum generator steady state or ride through voltage limitations. Include in the assessment any assumptions made.

R3.4: The SDT has made a revision to the posted wording of the requirement to add clarity and address your comment.

> **R3.4** Those planning events in Table 1, that are expected to produce more severe System impacts on its portion of the BES, shall be identified and a list of those Contingencies to be evaluated for System performance in Requirement R3, part 3.1 created. The rationale for those Contingencies selected for evaluation shall be available as supporting information.

R3.4 & R4.4: Several industry commenters have indicated that an explanation of “why the remaining Contingencies would produce less severe System performance” should be deleted since the Contingencies selected are already justified as those that produce more severe System performance. The SDT agrees and has deleted the requirement for an “explanation of why the remaining Contingencies would produce less severe System results”.

R3.5: Several industry commenters have indicated that an explanation of “why the remaining Contingencies would produce less severe System performance” should be deleted since the contingencies selected are already justified as those that produce more severe System performance. The SDT agrees and has deleted the requirement for an “explanation of why the remaining Contingencies would produce less severe System results”.

> **R3.5** Those extreme events in Table 1 that are expected to produce more severe System impacts shall be identified and a list of those events to be evaluated for System performance in Requirement R3, part 3.2 created. The rationale for those Contingencies selected for evaluation shall be available as supporting information. If the analysis concludes there are cascading outages caused by the occurrence of extreme events, an evaluation of possible

Organization	Question 3 Comment
actions designed to reduce the likelihood or mitigate the consequences and adverse impacts of the event(s) shall be conducted.	
MRO MRO NERC Standards Review Subcommittee	MRO NSRS proposes the following comments for R3.Revise the R3.3.2 text to clarify that subsequent analysis is performed on generators whose voltages are expected to fall below the minimum voltage limits. MRO NSRS suggests this text: "Consider the minimum steady state voltage limitations of all generators and identify how generators with bus voltages below its minimum voltage limits are analyzed in the subsequent steady state simulations. Revise the R3.3.3 text to more clearly relate to the specific requirements in PRC-023. MRO NSRS suggests this text: "Incorporate relay loadability per PRC-023 and identify how relay loadability is analyzed in the steady state simulation.
Response: R3.3.2: The wording has been changed to clarify the intent of the requirement. For this standard, all that is required is to identify the assumptions concerning voltage limitations of the unit and ensure they are being treated within the simulation as they will react in the real world. **R3.3.2** Trip generators where simulations show generator bus voltages are less than known or assumed minimum generator steady state or ride through voltage limitations. Include in the assessment any assumptions made. R3.3.3: The SDT believes that the requirement is necessary for the TPL standard and has clarified the requirement. **R3.3.3** Ensure relay loadability limits are respected.	
SERC Engineering Committee Dynamics Review Subcommittee (DRS)	R3.3.3 applies to "all Transmission lines. Should this only apply to lines above 230 kV and lines identified as critical below 230 kV" At least this should be limited to BES lines. R3.3.4 says "Simulate the expected operation of existing and planned devices designed to provide Steady State control of electrical system quantities. This should say, "Simulate the expected operation of existing and planned BES devices designed to provide Steady State control of BES electrical system quantities.
Response: R3.3.3: The SDT has clarified the requirement to ensure relay loadability limits, as defined in the relay loadability standard, are respected in the analysis. **R3.3.3** Ensure relay loadability limits are respected. R3.3.4: The SDT disagrees as this standard only applies to the BES. No change made.	
SERC Engineering Committee Reliability Review Subcommittee (RRS)	In R3, should the "and" in the first sentence actually be "or"? especially for same footprint? Perhaps the "and" should be replaced by "and/or". Can the PC satisfy this requirement by reviewing studies performed by differing TPs or is separate analysis really required especially when the TP and PC have the same footprint"? In Requirement R3.1, it is suggested that the word "contingency" be added to describe the lists created in R3.4. R3.3.1. Recommend that it be clarified that simulation of the more conservative case of a single branch (bus-to-bus) outage is acceptable, as opposed to always simulating the full breaker-to-breaker outage. R3.3.2The requirement needs to be clarified. It is not clear if it is referring to the ability of plants to meet their voltage schedule, or

Organization	Question 3 Comment
	to their ability to stay connected during post contingencies. Studies shall be performed to determine whether the BES meets the performance requirements in Table 1 based on the contingency lists created in Requirement R3.4. "R3.3.2"For all generators, studies shall consider the minimum steady state voltage limitations and identify how the generators are analyzed in the steady state simulation. The above wording needs to be changed, as the intent of this sentence is unclear. Is the intent that Transmission Planners need to ensure that generating plants can meet their voltage schedule under Base Case (N-0) conditions? Is this the same as the generator underexcited operation limit?? In R3.3.2, need guidance on how to consider minimum steady state voltage limitations. Is there a NERC team addressing this" R3.3.3"For all Transmission lines, studies shall consider relay loadability and identify how loadability is analyzed in the steady state simulation. The above wording needs to be changed, as the intent of this sentence is unclear. Is the intent that Transmission Planners need to ensure that relay loading limits are included in the facility ratings? Is this the 130% of conductor rating limit?? Revise M3 to include a reference to R6, since the allocation of responsibilities will directly affect the evidence which is to be provided. In the VSL for R3, a severe VSL is listed as failing to meet performance requirement for P0 or P1. We do not understand why a severe VSL would be applied to an all ties closed event which should have little if any problems. We believe that this should be a lower or moderate VSL instead of severe. In R3.3.3 is the relay loadability required for all HV and EHV voltage levels? Previously NERC had required this for 230-kV and above only. This would be massive requirement for our Transmission Lines between 100 and 200-kV. Studies shall be performed to determine whether the BES meets the performance requirements in Table 1 based on the contingency lists created in Requirement R3.4. ? In Requirement R3.3.4, it is suggested adding the words "and switched" to capacitors and reactors: Simulate the expected operation of existing and planned devices designed to provide Steady State control of electrical system quantities. These devices include equipment such as phase-shifting transformers, load tap changing transformers, and switched capacitors and inductors.

Response: R3: The SDT believes that the requirement belongs to both the Planning Coordinator and the Transmission Planner. Requirement R7 provides a mechanism for determining individual and joint responsibilities for performing the required studies for the Planning Assessment regardless of whether the Planning Coordinator and Transmission Planner footprints overlap or not. No change made.

R3.1. The SDT agrees and has modified the requirement.

> **R3.1** Studies shall be performed for planning events to determine whether the BES meets the performance requirements in Table 1 based on the Contingency list created in Requirement R3, part 3.4.

R3.3.1: The SDT disagrees with the comment as the intent of Requirement R3, part 3.3.1, consistent with FERC Order 693, is to perform the simulation to reflect how the Protection System will operate in the real System for each Contingency without operator intervention. The requirement does not preclude the Planning Coordinator/Transmission Planner from studying individual elements or other maintenance scenarios. Planning event P2-1 addresses a branch outage configuration. Please also see footnote 8 (now footnote 7). No change made.

R3.3.2: The wording has been changed to clarify the intent of the requirement. For this standard, all that is required is to identify the assumptions concerning voltage

Organization	Question 3 Comment
limitations of the unit and ensure they are being treated within the simulation as they will react in the real world. There is a project (PRC-024) that will address this issue of minimum steady state voltage limitations. **R3.3.2** Trip generators where simulations show generator bus voltages are less than known or assumed minimum generator steady state or ride through voltage limitations. Include in the assessment any assumptions made. R3.3.3: The SDT has clarified the requirement to ensure relay loadability limits, as defined in the relay loadability standard, are respected in the analysis. **R3.3.3** Ensure relay loadability limits are respected. M3: The SDT disagrees. Requirement R6 (now Requirement R7) is an overarching requirement that applies to the entire set of analysis required to meet the requirements of the TPL standard and to the Corrective Action Plan developed as part of the assessment. The intent of this requirement is to clarify that TPL requirements can be met through joint or shared analysis. Coordinating and/or joint analysis does not alleviate the responsibility that all entities need to comply with the standard requirements. Therefore, the SDT sees no reason to link Requirement R3 directly to Requirement R6 (now Requirement R7) in the measure or anywhere else. The requirements stand by themselves and do not require such a linkage. No change made. VSL: The SDT disagrees with your assessment. The failure to perform studies to determine the BES meets performance requirement for the P0 and P1 categories is deemed to be severe as these categories represent steady state (no Contingency) and single Contingency (probable) operation and are significant elements of the overall requirement. No change made. R3.3.3: The SDT has clarified the requirement to ensure relay loadability limits, as defined in the relay loadability standard, are respected in the analysis. R3.3.4: The SDT agrees and has revised the wording. **R3.3.4** Simulate the expected automatic operation of existing and planned devices designed to provide Steady State control of electrical system quantities when such devices impact the study area. These devices may include equipment such as phase-shifting transformers, load tap changing transformers, and switched capacitors and inductors.	
FirstEnergy Corp	Specific comments, Requirements of R3:A. R3: For readability revise "computer simulations using models utilizing data" to "computer simulation models utilizing data" B. R3.3.2: The intent of this requirement is not clear. What is the voltage limitation sought? Vmin at the generator terminals, high-side of the GSU, low-side GSU, etc. Also the requirement text "identify how the generators are analyzed in the steady state simulation" does not drive a particular reliability goal. If the objective is to require tripping of units during a contingency simulation that are identified to be below their stated Vmin then the requirement should clearly state that the unit should be tripped and solution resolved. C. R3.3.3: This requirement should be removed as it is redundant with facility rating requirements stated in PRC-023, FAC-008 and FAC-009. D. R3.3.4: For readability we suggest inserting the word "may" in between "devices include".We agree with the stated Measures, VRF, Time-Horizon, Data Retention and VSL of requirement R3
Response: R3: The SDT has revised the wording accordingly.	

Organization	Question 3 Comment
	R3 For the steady state portion of the Planning Assessment, each Transmission Planner and Planning Coordinator shall perform studies for the Near-Term and Long-Term Transmission Planning Horizons in Requirement R2, parts 2.1, and 2.2. The studies shall be based on computer simulation models using data provided in Requirement R1. R3.3.2: The wording has been changed to clarify the intent of the requirement. For this standard, all that is required is to identify the assumptions concerning voltage limitations of the unit and ensure they are being treated within the simulation as they will react in the real world. **R3.3.2** Trip generators where simulations show generator bus voltages are less than known or assumed minimum generator steady state or ride through voltage limitations. Include in the assessment any assumptions made. R3.3.3: The SDT believes that the requirement is necessary for the TPL standard and has clarified the requirement in an attempt to remove the objections **R3.3.3** Ensure relay loadability limits are respected. R3.3.4: The STD has added the word "may" in between "devices include". **R3.3.4** Simulate the expected automatic operation of existing and planned devices designed to provide Steady State control of electrical system quantities when such devices impact the study area. These devices may include equipment such as phase-shifting transformers, load tap changing transformers, and switched capacitors and inductors. Measures, VRF, Time Horizon, Data Retention and VSLs: Thank you for your comment.
TVA System Planning	In R3.3.2, need guidance on how to consider minimum steady state voltage limitations. Is there a NERC team addressing this? It is not clear if it is referring to the ability of plants to meet their voltage schedule, or to their ability to stay connected during post contingencies. In R3, should the "and" in the first sentence actually be "or"? especially for same footprint? Perhaps the "and" should be replaced by "and/or". Can the PC satisfy this requirement by reviewing studies performed by differing TPs or is separate analysis really required especially when the TP and PC have the same footprint? In the VSL for R3, a severe VSL is listed as failing to meet performance requirement for P0 or P1. We do not understand why a severe VSL would be applied to an all ties closed event which should have little if any problems. We believe that this should be a lower or moderate VSL instead of severe. In R3.3.3 is the relay loadability required for all HV and EHV voltage levels? Previously NERC had required this for 230-kV and above only. This would be massive requirement for our TLs between 100 and 200-kV.
Response: R3.3.2: The wording has been changed to clarify the intent of the requirement. For this standard, all that is required is to identify the assumptions concerning voltage limitations of the unit and ensure they are being treated within the simulation as they will react in the real world. There is a project (PRC-024) that will address this issue. **R3.3.2** Trip generators where simulations show generator bus voltages are less than known or assumed minimum generator steady state or ride through	

Organization	Question 3 Comment
voltage limitations. Include in the assessment any assumptions made. R3: The SDT believes that the requirement belongs to both the Planning Coordinator and the Transmission Planner regardless of whether the Planning Coordinator and Transmission Planner footprints overlap or not. No change made. VSL: The SDT disagrees with your assessment. The failure to perform studies to determine the BES meets performance requirement for the P0 and P1 categories is deemed to be severe as these categories represent steady state (no Contingency) and single Contingency (probable) operation and are significant elements of the overall requirement. No change made. R3.3.3: The SDT has clarified the requirement to ensure relay loadability limits, as defined in the relay loadability standard, are respected in the analysis. **R3.3.3** Ensure relay loadability limits are respected.	
Exelon Transmission Planning	In R3.3.2 it should be clear that the TP / TO is not required to provide whatever voltage that the unit desires and that the intent of this requirement is to ensure that if a generator is going to trip due to low voltage that the simulation will include the generator tripping. 3.3.2 and 3.3.3. are somewhat redundant with 3.3.1 " suggest rewording 3.3.1 to say including transmission lines with respect to relay loadability and generators with respect to minimum operating voltage. If 3.3.3 is targeting the low voltage ride through capability of the wind generators it should be clear.
Response: R3.3.2: The wording has been changed to clarify the intent of the requirement. For this standard, all that is required is to identify the assumptions concerning voltage limitations of the unit and that they are being treated within the simulation as they will react in the real world (in your comment 3.3.3 referring to low voltage ride through, we assume in our response that you were referring to 3.3.2) **R3.3.2** Trip generators where simulations show generator bus voltages are less than known or assumed minimum generator steady state or ride through voltage limitations. Include in the assessment any assumptions made. R3.3.2 & R3.3.3: The SDT does not agree that Requirement R3 parts 3.3.1, 3.3.2 and 3.3.3 are somewhat redundant as they require distinctly different simulation actions. No change made. R3.3.3: This requirement is for all generators, not just wind. It is important for the planning models to accurately reflect how the System will actually perform.	
Southern Company	R3.3.3 applies to "all Transmission lines. To be consistent with the relay loadability standard, this should only apply to lines above 230 kV and lines between 100 kV and 230 kV identified as critical. R3.2 and R3.5 are both addressing the Extreme Events. However, R3.2 is referring to R3.5 while R3.5 is referring to R3.2. We suggest deleting the reference back to R3.2 which is in R3.5. A similar situation exists for R3.1 and R3.4. R3 seems to use the words studies and analyses interchangeably. Did the SDT intend for them to be the same? Using one term or the other would be better understood.

Organization	Question 3 Comment
	There are two tables labeled table 1. It would be much clearer to mark them table 1 Planning Events and table 2 Extreme Events.
Response: R3.3.3: The SDT has clarified the requirement to ensure relay loadability limits are respected in the analysis. **R3.3.3** Ensure relay loadability limits are respected. R3.1 & R3.4 and R3.2 & R3.5: The SDT has decided to retain the back references for clarity. No change made. R3: The SDT agrees that use of studies and analyses can be confusing. The wording in Requirement R3 has been revised to use studies. **R3** For the steady state portion of the Planning Assessment, each Transmission Planner and Planning Coordinator shall perform studies for the Near-Term and Long-Term Transmission Planning Horizons in Requirement R2, parts 2.1, and 2.2. The studies shall be based on computer simulation models using data provided in Requirement R1. Table 1: Based on Industry feedback, the SDT has decided to have one Table and believes that the headings are sufficiently clear to distinguish between planning and extreme events. No change made.	
United Illuminating	R3.3.2 Comment Traditionally transmission planners have used their judgment about the minimum steady state voltage limitations of generators. If this standard is going to require its incorporation into the assessments, there should be an MOD standard developed requiring the generators to provide the necessary information prior to its inclusion as a requirement in this standard. R3.3.3 Comment ? PRC-023 requires relay loadability to be reflected in facility ratings. Therefore this additional requirement is unnecessary and should be deleted. R3.5 Priority Comment ?We recommend that the requirement for Extreme Event testing be removed from this standard as there is no requirement to develop a Corrective Action Plan to address unacceptable consequences. Otherwise we recommend the following:- Extreme Event performance should be a consideration when developing Corrective Action Plans to address Planning Events- It should be clear that an evaluation does not require solution development for all Extreme Events- Change “an evaluation of possible actions”? to “where appropriate, reasonably practicable actions designed to reduce the likelihood or mitigate the consequences and adverse impacts of the event(s) shall be considered.
Response: R3.3.2: The SDT agrees that judgment is used today. There is a project (PRC-024) that will address this issue. The wording has been changed to clarify the intent of the requirement. For this standard, all that is required is to identify the assumptions concerning voltage limitations of the unit and ensure they are being treated within the simulation as they will react in the real world. **R3.3.2** Trip generators where simulations show generator bus voltages are less than known or assumed minimum generator steady state or ride through voltage limitations. Include in the assessment any assumptions made. R3.3.3: The SDT believes that the requirement is necessary for the TPL standard and has clarified the requirement in an attempt to remove the objections. **R3.3.3** Ensure relay loadability limits are respected. R3.5: The SDT disagrees that the standard should mandate corrective actions for extreme events due to the low probability of these events. However, SDT believes that those extreme events that are expected to produce more serve System impacts should be analyzed to assess the extent of the impacts on the System to provide the Planning Coordinator/Transmission Planner with information to decide, where appropriate, if it is reasonable to provide some corrective actions to reduce the	

Organization	Question 3 Comment
possibility or limit the consequences of an extreme event. The need to identify possible actions addresses an Order 693 directive. Your suggested wording would make identification of possible actions optional. No change made.	
System Protection and Transmission Planning Department	R3 appears to require redundant studies by TP and PC.If the TP and PC participate in the same studies, would this meet the intent of this requirement? This would include studies that are RRO sponsored, or performed by sub-regional planning groups.
Response: R3: The SDT believes that the requirement belongs to both the Planning Coordinator and the Transmission Planner. Requirement R7 (formerly Requirement R6) provides a mechanism for determining individual and joint responsibilities for performing the required studies for the Planning Assessment regardless of whether the PC and TP footprints overlap or not. No change made.	
PPL Energy Plus	It appears there is a 24 month grace period to allow modeling updates to meet R 3.3.1. This is a good idea since the powerflow computer models may not include the required data and will need to be updated.
Response: Thank you for your comment.	
PacifiCorp Deseret Generation & Transmission SRP Arizona Public Service Co Southern California Edison Company Western Area Power Administration Pacific Gas and Electric Co, Puget Sound Energy, Inc. NV Energy San Diego Gas and Electric Co California ISO Tucson Electric Power Company	As currently drafted, R3.3 is not a requirement. Without the statements in R3.3.1-R3.3.4, R3.3 is simply a phrase. Sub-Sub-Requirements R3.3.1 through R3.3.4 should be bullets under R3.3, with the language in R3.3 modified so that it becomes the requirement to conduct contingency analyses that address the four resulting bullets R3.3.2 is unclear as drafted. The minimum steady state voltage limitation for synchronous generators is not a very meaningful value. All generators with an automotive voltage regulator will maintain the set point voltage until the VAR capability of the generator is exceeded, and then the voltage will deteriorate. R3.5 ? We disagree with the requirement to explain why remaining Extreme Contingencies would produce less severe System results than the ones selected for study. The first part of the requirement requires identification of events that produce more severe System impacts. The reason the others were not selected is because they were less severe or non-credible. In any case, theoretically, there can always be a more severe Extreme Contingencies than the one selected for study. For example, if the Extreme Contingency studied were simultaneous loss of 3 transmission lines with failure of redundant RAS, then simultaneous loss of 4 lines with failure of 2 sets of redundant RAS would be more severe. Listing all possible extreme events could result in a limitless list.
NorthWestern Corporation NorthWestern Energy (NWE)	R3.3 is unclear. Requirements R3.3.1 through R3.3.4 should be bullets under R3.3, with R3.3 modified so that it becomes the

Organization	Question 3 Comment
(NWMT)	requirement to conduct contingency analyses that address the four resulting bullets R3.3.2 is unclear. The minimum steady state voltage limitation for synchronous generators is not a very meaningful value. All generators with an automatic voltage regulator will maintain the set point voltage until the VAR capability of the generator is exceeded, and then the voltage will deteriorate. In R3.3.3 the term "loadability" needs to be defined. R3.5 needs to be modified. It would be better to combine R3.2 with R3.5. The first part of the requirement requires identification of events that produce more severe System impacts. The presumed reason that the other contingencies were not selected is because they were deemed to be less severe or non-credible. In any case, theoretically, there can always be examples of more severe Extreme Contingencies than the one selected for study. This can be achieved by simply choosing events that are even less credible. For example, if the Extreme Contingency studied was a simultaneous loss of 3 transmission lines with the failure of a redundant RAS (SPS), then an event resulting in the simultaneous loss of 4 lines with the failure of 2 sets of redundant RASs would be even more severe. Listing all possible extreme events could result in a limitless list.
Response: R3.3: The SDT has modified the wording to provide greater clarity. The SDT disagrees that Requirement R3, parts 3.3.1- 3.3.4 should be bullets as these are mandatory requirements of the contingency analyses. Bullets are only used to identify the possible but not all inclusive elements of a menu. **R3.3** Contingency analyses shall be performed and: R3.3.2: The wording has been changed to clarify the intent of the requirement. For this standard, all that is required is to identify the assumptions concerning voltage limitations of the unit and ensure they are being treated within the simulation as they will react in the real world. **R3.3.2** Trip generators where simulations show generator bus voltages are less than known or assumed minimum generator steady state or ride through voltage limitations. Include in the assessment any assumptions made. R3.5: Several industry commenters have indicated that an explanation of "why the remaining Contingencies would produce less severe System performance" should be deleted since the Contingencies selected are already justified as those that produce more severe System performance. The SDT agrees and has deleted the requirement for an "explanation of why the remaining Contingencies would produce less severe System results". **R3.5** Those extreme events in Table 1 that are expected to produce more severe System impacts shall be identified and a list of those events to be evaluated for System performance in Requirement R3, part 3.2 created. The rationale for those Contingencies selected for evaluation shall be available as supporting information. If the analysis concludes there are cascading outages caused by the occurrence of extreme events, an evaluation of possible actions designed to reduce the likelihood or mitigate the consequences and adverse impacts of the event(s) shall be conducted.	
Western Area Power Administration	R3.3.3 should be covered in the PRC Standards. While R3.3 is labeled as "Contingency analysis", R3.3.4 is related to Steady State control and therefore should not be within R3.3.
Response: R3.3.3**:** The SDT believes that the requirement is necessary for the TPL standard and has clarified the requirement in an attempt to remove the objections. **R3.3.3** Ensure relay loadability limits are respected. R3.3.4: The SDT disagrees with your comment. The simulation of the expected operation of devices such as phase-shifting transformers, load tap changing transformers, etc., impacts the post-Contingency performance of the System. No change made.	

Organization	Question 3 Comment
Tampa Electric	Consider revising standard for clarity. Subrequirements are not clear as written. Consider moving subrequirements R3.3.1 - R3.3.4 under other requirements for clarification. R3.5 Including an explanation of why remaining contingencies would produce less severe system results could be a limitless effort. Listing all "possible" extreme events seems unrealistic.
Response: The SDT requires more information in order to respond to your request to clarify the standard and sub-requirements. Numerous clarifications have been made to the fourth posting due to specific industry comments. R3.3.1-R3.3.4: The SDT disagrees as these are mandatory requirements of the Contingency analyses. No change made. R3.5: Several industry commenters have indicated that an explanation of "why the remaining Contingencies would produce less severe System performance" should be deleted since the contingencies selected are already justified as those that produce more severe System performance. The SDT agrees and has deleted the requirement for an "explanation of why the remaining contingencies would produce less severe System results". **R3.5** Those extreme events in Table 1 that are expected to produce more severe System impacts shall be identified and a list of those events to be evaluated for System performance in Requirement R3, part 3.2 created. The rationale for those Contingencies selected for evaluation shall be available as supporting information. If the analysis concludes there are cascading outages caused by the occurrence of extreme events, an evaluation of possible actions designed to reduce the likelihood or mitigate the consequences and adverse impacts of the event(s) shall be conducted.	
Florida Reliability Coordinating Council, Inc - Transmission Working Group	R3.3.1 & 3.3.4 " Consider adding language that the entity should not be held responsible for simulating "the removal of all elements that the Protection System and other automatic controls are expected to disconnect for each Contingency without operator intervention? on neighboring systems, only on the entity's own system. Also, consider moving R3.3.1 and R3.3.4 under R3.1 as sub-requirements and require that the overall studies take into account the effect of protection systems and control devices in the performance of the BES and it's ability to meet the table 1 requirements. R3.3.1 ? This seems unnecessary for normal 2-terminal lines, consider adding language to the effect of: "Simulation of individual element outages is allowed if it produces an effect more severe than the entire circuit outage". R3.4 - Consider changing the header for table 1 - "Steady State & Stability Performance Extreme Events" to Table 2 - "Steady State & Stability Performance Events". As is, it could be interpreted that the expected performance requirements associated with Planning Events apply to Extreme Events also.
Response: R3.3.1 & R3.3.4: The SDT has determined that it is necessary for the Planning Coordinator and Transmission Planner to coordinate with adjacent Planning Coordinators and Transmission Planners to ensure that Contingencies on adjacent Systems which may impact their Systems are included in the Contingency list created in Requirement R3, part 3.4. Consequently, "the removal of all elements that the Protection System and other automatic controls are expected to disconnect for each Contingency without operator intervention" will also apply for the Contingencies on adjacent Systems. The fourth draft of the standard will include this change by adding Requirement R3, part 3.4.1. **R3.4.1** The Planning Coordinator and Transmission Planner shall coordinate with adjacent Planning Coordinators and Transmission Planners to ensure that Contingencies on adjacent Systems which may impact their Systems are included in the Contingency list.	

Organization	Question 3 Comment
The SDT believes that Requirement R3, parts 3.3.1 and 3.3.4 are separate mandatory requirements and disagrees that they should be moved under Requirement R3, part 3.1. No change made. R3.3.1: The SDT disagrees with the comment as the intent of Requirement R3, part 3.3.1, consistent with FERC Order 693, is to perform the simulation to reflect how the Protection System will operate in the real System for each Contingency without operator intervention. The requirement does not preclude the Planning Coordinator/Transmission Planner from studying individual elements or other maintenance scenarios. Planning event P2-1 addresses an individual outage configuration. Please also see footnote 8. No change made. R3.4 Table 1: Based on Industry feedback, the SDT has decided to have one Table and believes that headings are sufficiently clear. No change made.	
FMPA	R3.1, The criteria in Table 1 do not allow load shedding following a single contingency (e.g., the old footnote “b” was removed). While we agree this ought to be the case for the EHV system, we believe that there are cases where for the HV system, which often acts more like a distribution system, the costs to meet this standard would be prohibitive and unfair to the consumers served by those utilities. For instance, the Florida Keys served by the Florida Keys Electric Coop (FKEC) and Keys Energy Services (KEYS) is connected to the mainland by two 138 kV lines down to Tavernier Key (about 1/3rd the distance from the mainland to Key West). Currently, the system is planned and operated under single contingency to allow non consequential load shedding automatically via Under-Voltage Load Shedding, and to meet thermal limits by manual load shedding, all load shed is in the Florida Keys following the single contingency with no impact to the Bulk Electric System. The standard, as written, would force one of two things: 1) the construction of a third line in this environmentally pristine area at a very high cost that might increase rates to customers in the Florida Keys by 20% for a level of reliability that much of the Keys would not even experience since 2/3rds of the Keys is fed by a radial line with consequential load loss; or 2) separate the two lines such that both are operated radially with resultant consequential load loss, compliant with the standards, but actually causing consumers to have a lower level of reliability. We propose to reinstate footnote “b” for the HV system, allowing non-consequential load loss for lower voltage system that have little to no impact on the Bulk Electric System and limit the elimination of non-consequential load loss to be applicable to only the EHV. Alternatively, but less appealing and more of an administrative challenge would be to establish a Regional Entity administered process for application for exception to this criteria. FERC’s Order 693 at paragraph 1794 states that: “(t)he Commission also clarifies that an entity may seek a regional difference to the Reliability Standard from the ERO for case-specific circumstances”. We interpret this as meaning the Regional Entity can allow exceptions under certain criteria such as a significant increase in costs to consumers with little discernable benefit as is the case with the Florida Keys. For R3.2, we are at a loss of how a hurricane event can be modeled, and why such an evaluation is needed. Albeit, many contingencies can occur during a hurricane event, it is not likely that multiple contingencies will happen within the same < 1 minute window it takes to go from transient stability conditions to steady state conditions, and then it is unlikely that multiple significant contingency events will occur within the 30 minutes it takes operators to adjust the system to prepare for the next contingency. Therefore, we do not understand the significance of modeling a hurricane event. In addition, a hurricane can have an infinite number of different scenarios and time-lines of contingencies and picking one or two would be a meaningless exercise since an actual hurricane will be completely different than what is modeled. At least an earthquake has a fault line that makes it relatively easier to identify which facilities might be affected, but a hurricane has an infinite number of possibilities. We suggest eliminating hurricanes from extreme events and model potential results of a hurricane, such as loss of a ROW, loss of a substation or plant, and loss of a major load center. R3.3, the list ought to consider contingencies on neighboring systems that could impact the TP’s / PC’s system (this comment

Organization	Question 3 Comment
	would not carry over to R4.3 since stability is more a protection system / clearing time issue). R3.3.1, the entity should not be held responsible for simulating "the removal of all elements that the Protection System and other automatic controls are expected to disconnect for each Contingency without operator intervention" on neighboring systems, only on the Entity's own system. R3.4 and the first part of R3.5 ought to be combined, e.g., both require justification for why a limited set of worst case contingencies are studied for N-1, N-2 and extreme contingencies. The latter part of R3.5 concerning cascading outages for an extreme contingency should become the only requirement of R3.5 (there are currently two requirements embedded within R3.5).
Response: R3.1: To comply with Order 693, the SDT have decided to raise the performance requirements such that Non-Consequential Load loss should not be allowed for P1 events of Table 1. No change made. R3.2: Table 1 extreme events: Requirement R3, part 3.5 requires the Planning Coordinator/Transmission Planner to identify and compile a list of the extreme events that are expected to produce more severe System impacts, along with a rationale for selection of those Contingencies. The wide area extreme events such as item 3.iv are provided as examples and not meant to be a mandatory list of events to be simulated. No change made. R3.3: The SDT assumes that the comment "R3.3, the list ought to consider contingencies on neighboring systems that could impact the TP's / PC's system" actually refers to Requirement R3, part 3.4 where the Contingency list is created. The SDT agrees with your comment and has determined that it is necessary for the Planning Coordinator and Transmission Planner to coordinate with adjacent Planning Coordinators and Transmission Planners to ensure that Contingencies on adjacent Systems which may impact their Systems are included in the Contingency list created in Requirement R3, part 3.4. The fourth draft of the standard will include this change by adding Requirement R3, part 3.4.1. The need to include Contingencies on adjacent Systems will also apply to Stability. **R3.4.1** The Planning Coordinator and Transmission Planner shall coordinate with adjacent Planning Coordinators and Transmission Planners to ensure that Contingencies on adjacent Systems which may impact their Systems are included in the Contingency list. R3.3.1: The SDT has determined that it is necessary for the Planning Coordinator and Transmission Planner to coordinate with adjacent Planning Coordinators and Transmission Planners to ensure that Contingencies on adjacent Systems which may impact their Systems are included in the Contingency list created in Requirement R3, part 3.4. Consequently, "the removal of all elements that the Protection System and other automatic controls are expected to disconnect for each Contingency without operator intervention" will also apply for the Contingencies on adjacent Systems. The fourth draft of the standard will include this change. R3.4 & R3.5: The SDT does not agree that these requirements should be combined. Requirement R3, part 3.4 requires the development of a Contingency list of planning events, and Requirement R3, part 3.5 requires a Contingency list of extreme events - two separate requirements. The SDT agrees that both require that a rationale be provided for stating why the events selected are expected to produce the more severe System impacts. No change made. R3.5: The SDT disagrees and sees no reason to split these out as they would still be essentially the same requirement. No change made.	
CPS Energy	Requirement R3.3.2. needs clarification.
Response: R3.3.2: The wording has been changed to clarify the intent of the requirement. For this standard, all that is required is to identify the assumptions concerning voltage limitations of the unit and ensure they are being treated within the simulation as they will react in the real world. **R3.3.2** Trip generators where simulations show generator bus voltages are less than known or assumed minimum generator steady state or ride through	

Organization	Question 3 Comment
voltage limitations. Include in the assessment any assumptions made.	
MidAmerican Energy Company	MidAmerican commends the SDT for it hard wok on this standard and specifically its R3.3.1 wording. MidAmerican has suggestions for the following parts of R3:" . " R3.3.2 " delete the words "For all generators" at the beginning. It is unnecessary in that later in the requirement it states specifically that the responsible entity is to "identify how the generators are analyzed in the steady state limitation". R3.3.3 " use a similar construction to R3.3.2 but delete the words "For all transmission lines". In other words, replace "For all Transmission lines, studies shall consider relay loadability and identify how loadability is analyzed in the steady state limitations. With "Studies shall consider relay loadability and identify how loadability for transmission lines is analyzed in the steady state simulations. " R3.4 and R3.5 " change "remaining Contingencies" to "remaining unselected Contingencies".
Response: Thank you for your comments. R3.3.2: The wording has been changed to clarify the intent of the requirement. For this standard, all that is required is to identify the assumptions concerning voltage limitations of the unit and ensure they are being treated within the simulation as they will react in the real world. **R3.3.2** Trip generators where simulations show generator bus voltages are less than known or assumed minimum generator steady state or ride through voltage limitations. Include in the assessment any assumptions made. R3.3.3: The SDT has clarified the requirement to ensure relay loadability limits, as defined in the relay loadability standard, are respected in the analysis **R3.3.3** Ensure relay loadability limits are respected.. R3.4 & R3.5: The SDT has revised Requirement R3, parts 3.4 and 3.5 by eliminating the requirement to provide the rationale for the unselected Contingencies. **R3.4** Those planning events in Table 1, that are expected to produce more severe System impacts on its portion of the BES, shall be identified and a list of those Contingencies to be evaluated for System performance in Requirement R3, part 3.1 created. The rationale for those Contingencies selected for evaluation shall be available as supporting information. **R3.5** Those extreme events in Table 1 that are expected to produce more severe System impacts shall be identified and a list of those events to be evaluated for System performance in Requirement R3, part 3.2 created. The rationale for those Contingencies selected for evaluation shall be available as supporting information. If the analysis concludes there are cascading outages caused by the occurrence of extreme events, an evaluation of possible actions designed to reduce the likelihood or mitigate the consequences and adverse impacts of the event(s) shall be conducted.	
Northeast Utilities	R3.3.2 Comment - Traditionally transmission planners have used their judgment about the minimum steady state voltage limitations of generators. If this standard is going to require its incorporation into the assessments, there should be an MOD standard developed requiring the generators to provide the necessary information prior to inclusion of R3.3.2 as a requirement in this standard. R3.3.3 Comment - PRC-023 requires relay loadability to be reflected in facility ratings. Therefore this additional requirement is

Organization	Question 3 Comment
	unnecessary and should be deleted. R3.5 Priority Comment - We recommend that the requirement for Extreme Event testing be removed from this standard as there is no requirement to develop a Corrective Action Plan to address unacceptable consequences. Otherwise we recommend the following:-Extreme Event performance should be a consideration when developing Corrective Action Plans to address Planning Events-It should be clear that an evaluation does not require solution development for all Extreme Events-Change "an evaluation of possible actions"? to "where appropriate, reasonably practicable actions designed to reduce the likelihood or mitigate the consequences and adverse impacts of the event(s) shall be considered.
ISO New England, Inc. Central Maine Power Company	R3.3.2 Comment - Traditionally transmission planners have used their judgment about the minimum steady state voltage limitations of generators. If this standard is going to require its incorporation into the assessments, there should be an MOD standard developed requiring the generators to provide the necessary information prior to its inclusion as a requirement in this standard. R3.3.3 Comment - PRC-023 requires relay loadability to be reflected in facility ratings. Therefore this additional requirement is unnecessary and should be deleted. R3.5 Priority Comment -We recommend that the requirement for Extreme Event testing be removed from this standard as there is no requirement to develop a Corrective Action Plan to address unacceptable consequences. Otherwise we recommend the following:- Extreme Event performance should be a consideration when developing Corrective Action Plans to address Planning Events- It should be clear that an evaluation does not require solution development for all Extreme Events- Change "an evaluation of possible actions"? to "where appropriate, reasonably practicable actions designed to reduce the likelihood or mitigate the consequences and adverse impacts of the event(s) shall be considered.
Response: R3.3.2: The SDT agrees that judgment is used today. There is a project (PRC-024) that will address this issue. The wording has been changed to clarify the intent of the requirement. For this standard, all that is required is to identify the assumptions concerning voltage limitations of the unit and ensure they are being treated within the simulation as they will react in the real world. **R3.3.2** Trip generators where simulations show generator bus voltages are less than known or assumed minimum generator steady state or ride through voltage limitations. Include in the assessment any assumptions made. R3.3.3: The SDT believes that the requirement is necessary for the TPL standard and has clarified the requirement in an attempt to remove the objections. **R3.3.3** Ensure relay loadability limits are respected. R3.5: extreme events: The SDT disagrees that the standard should mandate corrective actions for extreme events due to the low probability of these events. However, the SDT believes that those extreme events that are expected to produce more serve System impacts should be analyzed to assess the extent of the impacts on the System to provide the Planning Coordinator/Transmission Planner with information to decide, where appropriate, if it is reasonable to provide some corrective actions to reduce the possibility or limit the consequences of an extreme event. No change made.	
JEA	R3. Change wording from "The studies shall be based on computer simulations using models utilizing data provided in Requirement R1." to "The studies shall be based on computer simulations using models that are the best representation of the future planned system and its associated use as provided by Requirement R1. The studies shall detail the effects of all future

Organization	Question 3 Comment
	equipment connectivity and topology arrangements and their associated Protection system responses to Contingency events regardless of model details." R3.3.2. I assume the concern here is on voltage ride through of generators and generator auxillary equipment. Propose changing language from "For all generators..." to"Include analysis of how generator and generator auxillary equipment over and under voltage protection and ride through capability were considered for the post-contingency steady state bus voltage levels." R3.3.3. I assume the concern here is ensuring consideration is given to how system protection relays could respond to post-contingency circuit emergency loadings. Protection systems that could limit the emergency ratings of transmission circuits should be considered in the Facitility Rating standard and therefore not necessary to include in the TPL standard. However, if requirement does remain in the TPL standard, propose changing language from:"For all transmission lines..." to"Include analysis of how implemented relay protection systems and their potential automatic response prior to timely corrective actions are considered for the post-contingency steady state circuit loadings".
Response: The SDT has revised Requirements R1 and R3 to provide greater clarity to the SDT's intent. **R1** Each Transmission Planner and Planning Coordinator shall maintain System models within its respective area for performing the studies needed to complete its Planning Assessment. The models shall use the latest data consistent with that provided in accordance with the MOD-010 and MOD-012 standards, supplemented by other sources as needed, including items represented in the Corrective Action Plan, and shall represent projected System conditions **R3** For the steady state portion of the Planning Assessment, each Transmission Planner and Planning Coordinator shall perform studies for the Near-Term and Long-Term Transmission Planning Horizons in Requirement R2, parts 2.1, and 2.2. The studies shall be based on computer simulation models using data provided in Requirement R1. R3.3.2: The wording has been changed to clarify the intent of the requirement. For this standard, all that is required is to identify the assumptions concerning voltage limitations of the unit and ensure they are being treated within the simulation as they will react in the real world. **R3.3.2** Trip generators where simulations show generator bus voltages are less than known or assumed minimum generator steady state or ride through voltage limitations. Include in the assessment any assumptions made. R3.3.3: The SDT believes that the requirement is necessary for the TPL standard and has clarified the requirement in an attempt to remove the objections. **R3.3.3** Ensure relay loadability limits are respected.	
SMUD	R3.5Listing all possible scenarios for studying extreme contingencies will result in a limitless list. Discretion should be given to the transmission planner on the selection of the contingencies without a requirement to list why other extreme contingencies have not been included. R3.3.2:When the word, 'consider' is used, it can be read as a guidance and not a requirement. The requirement is unclear.
Response: R3.5: Several industry commenters have indicated that an explanation of "why the remaining Contingencies would produce less severe System performance" should be deleted since the Contingencies selected are those to produce more severe System performance. The SDT agrees and has deleted the requirement for an "explanation of why the remaining Contingencies would produce less severe System results".	

Organization	Question 3 Comment
R3.5 Those extreme events in Table 1 that are expected to produce more severe System impacts shall be identified and a list of those events to be evaluated for System performance in Requirement R3, part 3.2 created. The rationale for those Contingencies selected for evaluation shall be available as supporting information. If the analysis concludes there are cascading outages caused by the occurrence of extreme events, an evaluation of possible actions designed to reduce the likelihood or mitigate the consequences and adverse impacts of the event(s) shall be conducted. R3.3.2: The wording has been changed to clarify the intent of the requirement. For this standard, all that is required is to identify the assumptions concerning voltage limitations of the unit and ensure they are being treated within the simulation as they will react in the real world. **R3.3.2** Trip generators where simulations show generator bus voltages are less than known or assumed minimum generator steady state or ride through voltage limitations. Include in the assessment any assumptions made.	
Progress Energy Florida, Inc.	Concerning R3.3.1, PEF believes that, in virtually every conceivable scenario, contingency analyses show that analysis of individual elements will reveal overloading or undervoltages, whereas the same event modeled according to protection system design (i.e. simulating the event as the actual "breaker-to-breaker" operation would occur) may not. Analysis of individual elements is therefore a more conservative method for studying the BES. PEF is not opposed to analysis of entire circuit outages; PEF therefore suggests that in addition to the existing language of R3.3.1, an additional sentence be added as follows: "Simulation of the loss of individual elements is acceptable in lieu of simulating the loss of all elements in a protection zone if it produces greater overloads or lower voltages. This approach would allow for more efficient coordination with Transmission Operators as they schedule planned outages or make system adjustments in outage scenarios.
Response: R3.3.1: The SDT disagrees with the comment as the intent of Requirement R3, part 3.3.1, consistent with FERC Order 693, is to perform the simulation to reflect how the Protection System will operate in the real System for each Contingency without operator intervention. The requirement does not preclude the Planning Coordinator/Transmission Planner from studying individual elements or other scenarios. Planning event P2-1 addresses an individual element outage configuration. Please also see footnote 8 (now footnote 7). No change made.	
Xcel Energy	R3.3.3: Relay loadability has no bearing beyond the near term horizon. Loadability is not determined several years out. R3.5 " does this imply that mitigation plans must be implemented" If not, then this is highly subjective and the last sentence of this requirement should be deleted.
Response: R3.3.3: The SDT does not agree with your comment**.** No change made. R3.5: The SDT disagrees that the standard should mandate corrective actions for extreme events due to the low probability of these events. However, the SDT believes that those extreme events that are expected to produce more serve System impacts should be analyzed to assess the extent of the impacts on the System to provide the Planning Coordinator/Transmission Planner with information to decide, where appropriate, if it is reasonable to provide some corrective actions to reduce the possibility or limit the consequences of an extreme event. The need to identify possible actions addresses an Order 693 directive. No change made.	
Ameren	In Requirement R3.1, it is suggested that the word "contingency" be added to describe the lists created in R3.4. Studies shall be performed to determine whether the BES meets the performance requirements in Table 1 based on the contingency lists created

Organization	Question 3 Comment
	in Requirement R3.4. R3.3.2 -For all generators, studies shall consider the minimum steady state voltage limitations and identify how the generators are analyzed in the steady state simulation. The above wording needs to be changed, as the intent of this sentence is unclear. It is not clear whether Transmission Planners need to ensure that generating plants can meet their voltage schedule under Base Case (N-0) conditions, or whether this would be the same as the generator underexcited operation limit. R3.3.3?For all Transmission lines, studies shall consider relay loadability and identify how loadability is analyzed in the steady state simulation. The above wording needs to be changed, as the intent of this sentence is unclear, whether the intent is that Transmission Planners ensure that relay loading limits are included in the facility ratings, or whether this reflect some rule of thumb, such as 130% of conductor rating. In Requirement R3.3.4, it is suggested adding the words "and switched" to capacitors and reactors: Simulate the expected operation of existing and planned devices designed to provide Steady State control of electrical system quantities. These devices include equipment such as phase-shifting transformers, load tap changing transformers, and switched capacitors and inductors.
Response: R3.1: The SDT agrees and has modified the requirement. **R3.1** Studies shall be performed for planning events to determine whether the BES meets the performance requirements in Table 1 based on the Contingency list created in Requirement R3, part 3.4. R3.3.2: The SDT has changed the wording to clarify the intent of the requirement. For this standard, all that is required is to identify the assumptions concerning voltage limitations of the unit and ensure they are being treated within the simulation as they will react in the real world. **R3.3.2** Trip generators where simulations show generator bus voltages are less than known or assumed minimum generator steady state or ride through voltage limitations. Include in the assessment any assumptions made. R3.3.3: The SDT has clarified the requirement to ensure relay loadability limits, as defined in the relay loadability standard, are respected in the analysis **R3.3.3** Ensure relay loadability limits are respected. R3.3.4: The SDT agrees and has revised the wording to read “and switched capacitors and inductors”. **R3.3.4** Simulate the expected automatic operation of existing and planned devices designed to provide Steady State control of electrical system quantities when such devices impact the study area. These devices may include equipment such as phase-shifting transformers, load tap changing transformers, and switched capacitors and inductors.	
Manitoba Hydro	R3.1: The requirement text should be changed to read “studies shall be performed for Planning Events to determine whether the BES meets the performance requirements in Table 1 based on the contingency list of events created in Requirement R3.4. . R3.2: Requirement wording should be similar to R3.4 for consistency. R3.4 & R3.5: The selection of the contingency list is based on the knowledge of the PC/TP. How do you produce “an explanation

Organization	Question 3 Comment
	of why the remaining Contingencies would produce less severe System results. without proving this with a study? If the explanation is "that based on engineering judgment, the remaining contingencies would produce less severe system results" then the explanation is implied and not necessary. VSLs: Under the moderate to severe VSL, the performance requirements currently refer to P2 through P7. We believe this is a typo and should be P1 through P7.
Response: R3.1: The SDT agrees and has modified the requirement. **R3.1** Studies shall be performed for planning events to determine whether the BES meets the performance requirements in Table 1 based on the Contingency list created in Requirement R3, part 3.4. R3.2: The SDT has revised the requirement. **R3.2** Studies shall be performed to assess the impact of the extreme events which are identified by the list created in Requirement R3, part 3.5. R3.4 & R3.5: Several industry commenters have indicated that an explanation of "why the remaining Contingencies would produce less severe System performance" should be deleted since the contingencies selected are already justified as those that produce more severe System performance. The SDT agrees and has deleted the requirement for an "explanation of why the remaining Contingencies would produce less severe System results". **R3.4** Those planning events in Table 1, that are expected to produce more severe System impacts on its portion of the BES, shall be identified and a list of those Contingencies to be evaluated for System performance in Requirement R3, part 3.1 created. The rationale for those Contingencies selected for evaluation shall be available as supporting information. **R3.5** Those extreme events in Table 1 that are expected to produce more severe System impacts shall be identified and a list of those events to be evaluated for System performance in Requirement R3, part 3.2 created. The rationale for those Contingencies selected for evaluation shall be available as supporting information. If the analysis concludes there are cascading outages caused by the occurrence of extreme events, an evaluation of possible actions designed to reduce the likelihood or mitigate the consequences and adverse impacts of the event(s) shall be conducted. VSL: The VSL matrix is correct. No change made.	
LCRA Transmission Services Corporation	In R3.3.4, what is meant by the term "electrical system quantities"? Quantities is typically an amount and its use here would indicate that a term such as parameters would be better suited.
Response: R3.3.4 Checking a few dictionary definitions: parameter: "an expression, a constant or variable whose value determines the specific form of the expression; one of an independent variable in a set of parametric equations; whereas quantity is defined as: an exact or specified amount or measure; that property by virtue of which is measurable; extent; measure, size, any amount. It appears that "quantities" is the better choice. No change made.	
National Grid	R3 Comment "Planning Assessment" and "shall perform analysis" are contradictory. R3 and its sub-requirements then reference study requirements. If this is an assessment, then the standard shouldn't be requiring a study.R3.1 Comment ? A. It is not clear what should be included in the list related to R3.4. Events P0 through P4 should include analysis of all BES facilities for which the Transmission Planner is responsible. Events P5 and higher should be limited to contingency events

Organization	Question 3 Comment
	that are deemed the most significant by the Transmission Planner. B. R3.1 refers to "lists". Is R3.4 creating one list or multiple lists" Suggest changing "lists" to "list" R3.2 Comment - Since R3.4 and R3.5 both require the responsible entity to create a list, the words in R3.2 be should be revised to be more similar to the words in R3.1. Suggest changing "Studies shall be performed to assess the impact of the Extreme Events identified in Requirement R3.5. to "Studies shall be performed to assess the impact of the Extreme Events, which are identified by the list created in Requirement R3.5. R3.3.2 Comment " A. Traditionally transmission planners have used their judgment about the minimum steady state voltage limitations of generators. If this standard is going to require its incorporation into the assessments, there should be an MOD standard developed requiring the generators to provide the necessary information prior to its inclusion as a requirement in this standard. B. Voltage limitations are for both minimum and maximum. If this requirement is kept, then "minimum" should be deleted. C. Is this requirement really looking at "voltage limits" or generator "reactive capability"? R3.3.3 - This requirement should be deleted. Each reliability issue should be addressed in one standard and relay loadability is addressed in PRC-023. If requirements of PRC-023 are met, the relay loadability does not constitute a limitation. If this requirement is intended to apply to modeling relay characteristics in stability simulations, which is not addressed by PRC-023, then the requirement should be more explicit. However, as written it appears that the intent was to be in-line with Blackout Recommendation 8a which relates to steady-state loadability, which is covered by PRC-023. R3.4 Comment - Table 1 includes both Steady State and Stability events. R3.4 needs to indicate that it only applies to the Steady State portion of the Table. R3.5 Priority Comment ?It is recommended that the requirement for Extreme Event testing be removed from this standard as there is no requirement to develop a Corrective Action Plan to address unacceptable consequences and the requirements are too vague to have auditable value. If the requirement is not deleted, the following is recommended:- Extreme Event performance should be a consideration when developing Corrective Action Plans to address Planning Events. If not, it will be difficult to utilize the results to obtain projects approvals.- It should be clear that an evaluation does not require solution development for all Extreme Events- Change "an evaluation of possible actions"? to "where appropriate, reasonably practicable actions designed to reduce the likelihood or mitigate the consequences and adverse impacts of the event(s) shall be considered. – The statement "and shall include an explanation of why the remaining Contingencies would produce less severe System results" is too open and should be deleted. Violation Severity Levels:R3.4 Since this is a binary requirement, should this have a Severe VSL? R3.5 Since this is a binary requirement, should this have a Severe VSL?
Response: R3: The SDT agrees that use of studies and analyses can be confusing and has changed the wording to provide greater clarity. **R3** For the steady state portion of the Planning Assessment, each Transmission Planner and Planning Coordinator shall perform studies for the Near-Term and Long-Term Transmission Planning Horizons in Requirement R2, parts 2.1, and 2.2. The studies shall be based on computer simulation models using	

Organization	Question 3 Comment
	data provided in Requirement R1. R3.4: Requirement R3, part 3.4 has been revised to indicate that the Planning Coordinator/Transmission Planner is to produce a Contingency list, of those planning events that are expected to produce more severe results on its portion of the BES. The Planning Coordinator/Transmission Planner is required to identify the Contingency list to be studied and provide the rationale as to why these Contingencies are expected to produce more severe results. There is no requirement to include all BES facilities for P0 to P4. No change made. R3.1: The SDT has changed "lists" to "list". **R3.1** Studies shall be performed for Planning Events to determine whether the BES meets the performance requirements in Table 1 based on the Contingency list created in Requirement R3, part 3.4. R3.2: The SDT has revised the wording of the requirement. **R3.2** Studies shall be performed to assess the impact of the extreme events which are identified by the list created in Requirement R3, part 3.5. R3.3.2: The SDT agrees that judgment is used today. There is a project (PRC-024) that will address this issue. The SDT has changed the wording to clarify the intent of the requirement. For this standard, all that is required is to identify the assumptions concerning voltage limitations of the unit and that they are being treated within the simulation as they will react in the real world. The word minimum was retained as the intent is to address low voltage ride through. No change made. R3.3.3: The SDT believes that the requirement is necessary for the TPL standard and has clarified the requirement in an attempt to remove the objections. R3.4: Although Table 1 includes both steady state and stability events, Requirement R3 is "for the steady state portion of the Planning Assessment.."; so there is no need for adding further clarification in Requirement R3, part 3.4. No change made. R3.5: The SDT disagrees that the standard should mandate corrective actions for extreme events due to the low probability of these events. However, SDT believes that those extreme events that are expected to produce more serve System impacts should be analyzed to assess the extent of the impacts on the System to provide the PC/TP with information to decide, where appropriate, if it is reasonable to provide some corrective actions to reduce the possibility or limit the consequences of an extreme event. The need to identify possible actions addresses an Order 693 directive. Your suggested wording would make identification of possible actions optional. No change made. Several industry commenters have indicated that an explanation of "why the remaining Contingencies would produce less severe System performance" should be deleted since the Contingencies selected are those to produce more severe System performance. The SDT agrees and has deleted the requirement for an "explanation of why the remaining contingencies would produce less severe System results". **R3.4** Those planning events in Table 1, that are expected to produce more severe System impacts on its portion of the BES, shall be identified and a list of those Contingencies to be evaluated for System performance in Requirement R3, part 3.1 created. The rationale for those Contingencies selected for evaluation shall be available as supporting information. **R3.5** Those extreme events in Table 1 that are expected to produce more severe System impacts shall be identified and a list of those events to be evaluated for System performance in Requirement R3, part 3.2 created. The rationale for those Contingencies selected for evaluation shall be available as supporting information. If the analysis concludes there are cascading outages caused by the occurrence of extreme events, an evaluation of possible actions designed

Organization	Question 3 Comment
to reduce the likelihood or mitigate the consequences and adverse impacts of the event(s) shall be conducted. VSLs: The VSLs for Requirement R3, parts 3.4 & 3.5 are required elements of the primary requirement. The VSLs categorize noncompliance with the requirement, "in total" – not with each of the individual parts of the requirement. No change made.	
Entergy Services, Inc	In R3.5 what would constitute "an evaluation of possible actions designed to reduce?" R3 should be broken into two pieces where the near term portion could be a Medium VRF but the long term section should be a Low VRF. Violations occuring in the longer term horizon are subjective and assumptions concerning future plans too broad to justify a Medium VRF. In Requirement R3.1, it is suggested that the word "contingency" be added to describe the lists created in R3.4.
Response: R3.5: In the event that an extreme event causes cascading outages, the "possible actions" would be the possible actions that would reduce the likelihood or mitigate the consequences and adverse impacts of the event". VRF: The SDT believes that all of the steady state responses are equally important. No change made. R3.1: The SDT agrees and has revised the wording. **R3.1** Studies shall be performed for planning events to determine whether the BES meets the performance requirements in Table 1 based on the Contingency list created in Requirement R3, part 3.4.	
Great River Energy	R3.3.3 The relay loadability section needs better definition. Is this identifying that: if the relay load limit is the most Limiting Element of a transmission line how it would be handled if it is overloaded considering that there may be some margin before opening the line and/orif the line reaches a certain overload level based on a non-Relay Load Limit being the Most Limiting Element that the relay load limit should be analyzed to see if it will actually activate an opening of the transmission line or the planners need to review all of the relays associated with all transmission lines within the model and indicate if loadability is a concern for each contingency analyzed. There are a lot of lines, (probably the majority), that have not defined a relay capability within the rating fields of the model! This would seem to be a FAC-009 issue. As a discussion point on R3.3.3, it would seem that relay loadability should be addressed in FAC-009 and the Model Building process. Putting this burden in the planning assessment will be difficult to determine if the Most Limiting Element within the model is not a relay load limit as those parameters typically are not the Most Limiting Element. Every line in the model may need to be defined as to what its relay loadability is to meet this requirement. Our regional model build reports a Most Limiting Element, a short term emergency level, and a long-term emergency for the three ratings available within the model. It would seem that the long-term emergency field should be replaced with a Relay Load Limit value such that the R3.3.3 would not be as great of a burden on the planner.
BC Hydro	R3.3.3: Consider changing it to read, "Demonstrate that, for all Transmission lines, relay loadability standards are met in accordance with the PRC series of standards"
Response: The SDT believes that the requirement is necessary for the TPL standard and has clarified the requirement in an attempt to remove the objections and to	

Organization	Question 3 Comment
ensure relay loadability limits, as defined in the relay loadability standard, are respected in the analysis. **R3.3.3** Ensure relay loadability limits are respected.	
Midwest ISO	Opening Remarks. Specific Comments for Requirement 3:A) Under R3, the Time Horizon of the TPL standards is intended for years one through 10; However the Time Horizon shown in R3 only says "Long-term Planning". By definition of Long-Term Transmission Planning Horizon this covers years 6 through 10 and beyond. Suggestion to change the Time Horizon to read: "Near-Term and Long-Term Transmission Planning". B) Under R3.1 the "Studies shall be performed to determine whether the BES meets the performance requirements in Table 1 based on the lists created in the Requirement 3.4". We believe that the following language will improve this requirement: Studies shall be performed to determine whether the BES meets the performance requirements in Table 1 based on the more severe contingency lists created in the Requirement 3.4. C) Under R3.3.2 the Midwest ISO generally agrees with FirstEnergy's comments on this. D) Under R3.3.3 the Midwest ISO feels that this sub-requirement is redundant with PRC-023-2 and therefore we feel that this sub-requirement needs to be removed and replaced with our suggested bullet language under R1.1.2 ? Relay Loadability Limitation (see F on page 3 of 9 above) E) Under R3.4 to make this requirement clearer, please add the following language between the words "expected to" in the first sentence: "expected by the assessing entity to" We believe that this language addition improves the clarity of this requirement. The first sentence would then read: Those Planning Event Contingencies in Table 1 that are expected by the assessing entity to produce more severe System impacts shall be identified and a list of those Contingencies to be evaluated for System performance in Requirement R3.1 created. F) Under R3.5 to make this requirement clearer, please add the following language between the words "expected to" in the first sentence: "expected by the assessing entity to" We believe that this language addition improves the clarity of this requirement. The first sentence would then read: Those Extreme Events in Table 1 that are expected by the assessing entity to produce more severe System impacts shall be identified and a list of those events to be evaluated for System performance in Requirement R3.2 created.
Response: The *Time Horizon* term at the end of the requirement deals with mitigation time periods (as shown below) and is not connected to the assessment time frames. Time Horizons are a consideration when there is a violation of a requirement – the impact to the BES of violating a requirement with a long-term planning horizon is not expected to be as severe as the impact associated with violating a requirement with a real-time operations time horizon. No change made. **Mitigation Time Horizon** The time horizons available for mitigating a violation to a requirement include the following: • **Long-term Planning** — a planning horizon of one year or longer. • **Operations Planning** — operating and resource plans from day-ahead up to and including seasonal.	

Organization	Question 3 Comment
	• **Same-day Operations** — routine actions required within the timeframe of a day, but not real-time. • **Real-time Operations** — actions required within one hour or less to preserve the reliability of the bulk electric system. • **Operations Assessment** — follow-up evaluations and reporting of real time operations. R3.1: The SDT has modified the requirement. **R3.1** Studies shall be performed for planning events to determine whether the BES meets the performance requirements in Table 1 based on the Contingency list created in Requirement R3, part 3.4. R3.3.2 The SDT has changed the wording to clarify the intent of the requirement. For this standard, all that is required is to identify the assumptions concerning voltage limitations of the unit and ensure they are being treated within the simulation as they will react in the real world. **R3.3.2** Trip generators where simulations show generator bus voltages are less than known or assumed minimum generator steady state or ride through voltage limitations. Include in the assessment any assumptions made. R3.3.3: The SDT believes that the requirement is necessary for the TPL standard and has clarified the requirement in an attempt to remove the objections. **R3.3.3** Ensure relay loadability limits are respected. R3.4 & R3.5: The Planning Coordinator/Transmission Planner are the applicable entities for this standard, so adding "by the assessing entity" is redundant. No change made.
PJM	In R3, why require a Planning Coordinator AND a Transmission Planner to perform this analysis? Isn't this a duplication of effort? R3.4 should come before R3.1. You should never reference down in a standard. Please present the items in the order in which they should be performed/considered. R3.5 should come before R3.2. You should never reference down in a standard. Please present the items in the order in which they should be performed/considered. R3.3.2 should be broken into two requirements since two separate tasks need to be performed. R3.3.3 should be broken into two requirements since two separate tasks need to be performed. Also in R3.3.3, analysis of relay loadability will require the inclusion of all relay models 200 kV and above. This information is not presently gathered by the ERAG MMWG for the Eastern Interconnection. To help with compliance, questions R3.3.4 needs more specificity. Maybe define a minimum percentage of total possible contingencies as a bright line whether you have performed enough more severe contingencies. Would expect a number between 10 and 25 percent. R3.4 should be broken into two requirements since two separate tasks need to be performed. To help with compliance questions, R3.3.5 needs more specificity. Maybe define a minimum percentage of total possible contingencies as a bright line whether you have performed enough more severe extreme contingencies. Would expect a number

Organization	Question 3 Comment
	between 10 and 25 percent. R3.5 should be broken into three requirements since three separate tasks need to be performed.
Response: R3: The SDT believes that the requirement belongs to both the Planning Coordinator and the Transmission Planner. No change made. R3.4 & R3.5: The SDT disagrees. No change made. R3.3.2: The SDT sees this as only one requirement to identify how the generators are analyzed. No change made. R3.3.3: The SDT sees this as only one requirement to identify how the relay loadability is analyzed. No change made. R3.3.3: The SDT has clarified the requirement to ensure all relay loadability limits are respected in the analysis. R3.3.4: The number of Contingencies is system specific and any percentage that the SDT would establish would be wrong for some entities. No change made. R3.4: The SDT disagrees as the tasks are related. No change made. R3.3.5: The number of Contingencies is system specific and any percentage that the SDT would establish would be wrong for some entities. No change made R3.5: The SDT disagrees as the tasks are related. No change made.	
Brazos Electric Cooperative	R3.4 and 3.5 give us a concern. Table 1 identifies a number of events that are to be assessed but requiring an explanation of why certain events would produce less severe results seems to be open ended thus making it hard to audit. If all the events in Table 1 are studied or have been studied in the past then what is one supposed to document? we understand this is to allow the planner a certain amount of flexibility in their analysis but it seems counter to the idea of requiring a review of all the events in Table 1. We don't have any suggested wording changes, just passing along a general idea.
Response: Several industry commenters have indicated that an explanation of "why the remaining Contingencies would produce less severe System performance" should be deleted since the contingencies selected are those that produce more severe System performance. The SDT agrees and has deleted the requirement for an "explanation of why the remaining Contingencies would produce less severe System results".	
American Electric Power	With regard to R3.3.3., please include transformers as relay loadability also applies to transformers.
Response: The SDT has clarified the requirement to ensure relay loadability limits are respected in the analysis. **R3.3.3** Ensure relay loadability limits are respected.	
ITC Holdings	Comments: If the SDT feels that a requirement such as R3.3.4 is necessary, it may also be necessary to identify further limitations on the use of the control devices referred to. For example, a manually controlled phase shifter would require a time period, or loading limits, to readjust flows to limit a post-contingency flow if not pre-set in the pre-contingency state. Similarly, a tap-changing transformer also requires an adjust period for voltage control. We suggest adding a statement to this requirement (or somewhere in performance requirements) that "all post-contingency flows/voltages must remain within the applicable facility ratings before,

Organization	Question 3 Comment
	during, and after the use of such control devices.
Response: The SDT has revised the requirement wording to clarify that the intent is to simulate automatic operation of existing and planned devices. **R3.3.4** Simulate the expected automatic operation of existing and planned devices designed to provide Steady State control of electrical system quantities when such devices impact the study area. These devices may include equipment such as phase-shifting transformers, load tap changing transformers, and switched capacitors and inductors.	
Northern Indiana Public Service Company	R3.3.3: Evaluation of loadability should be triggered only for those circuits with new protection settings issued since the last assessment; evaluation of circuits that have not been newly assigned or re-assign protection settings is a misuse of resources.
Response: The SDT has clarified the requirement to ensure all relay loadability limits are respected in the analysis. **R3.3.3** Ensure relay loadability limits are respected.	
Minnesota Power	A) Under R3, the Time Horizon of the TPL standards is intended for years one through 10; however, the Time Horizon shown in R3 only says "Long-term Planning". By definition of Long-Term Transmission Planning Horizon this covers years 6 through 10 and beyond. Suggestion to change the Time Horizon to read: "Near-Term and Long-Term Transmission Planning". B) R3.3.3 Is this sub-requirement redundant with PRC-023-2? Is it covered in FAC-009? We believe the SDT should review these standards and if it is a redundant requirement, then this sub-requirement needs to be removed. C) Under R3.4 to make this requirement clearer, please add the following language between the words "expected to" in the first sentence: "expected by the assessing entity to"? We believe that this language addition improves the clarity of this requirement. The first sentence would then read: "Those Planning Event Contingencies in Table 1 that are expected by the assessing entity to produce more severe System impacts shall be identified and a list of those Contingencies to be evaluated for System performance in Requirement R3.1 created. D) Under R3.5 to make this requirement clearer, please add the following language between the words "expected to" in the first sentence so that the phrase reads: "expected by the assessing entity to"? We believe that this language addition improves the clarity of this requirement. The first sentence would then read: "Those Extreme Events in Table 1 that are expected by the assessing entity to produce more severe System impacts shall be identified and a list of those events to be evaluated for System performance in Requirement R3.2 created.
Response: The *Time Horizon* term at the end of the requirement deals with mitigation time periods (as shown below) and is not connected to the assessment time frames. Time Horizons are a consideration when there is a violation of a requirement – the impact to the BES of violating a requirement with a long-term planning horizon is not expected to be as severe as the impact associated with violating a requirement with a real-time operations time horizon. No change made. **Mitigation Time Horizon** The time horizons available for mitigating a violation to a requirement include the following:	

Organization	Question 3 Comment
• **Long-term Planning** — a planning horizon of one year or longer. • **Operations Planning** — operating and resource plans from day-ahead up to and including seasonal. • **Same-day Operations** — routine actions required within the timeframe of a day, but not real-time. • **Real-time Operations** — actions required within one hour or less to preserve the reliability of the bulk electric system. • **Operations Assessment** — follow-up evaluations and reporting of real time operations. R3.3.3: The SDT believes that the requirement is necessary for the TPL standard and has clarified the requirement in an attempt to remove the objections. **R3.3.3** Ensure relay loadability limits are respected. R3.4& R3.5: The Planning Coordinator/Transmission Planer are the applicable entities, so adding "by the assessing entity" is redundant. No change made.	
LADWP	R3.4 This requirement is very strange. If there is a known planning event that is more severe than those listed in Table 1, it should be so identified in Table 1. It is not fair to ask every planner to search for more severe contingencies without any specifics. R3.4 should be deleted. R3.5 This is similar to R3.4; this requires proving of null set. The only way this requirement can be met is to perform an exhaustive and unlimited list of extreme event, real or imaginery, before a rationale can be rendered. This requirement should be deleted with the exception of the last sentence regarding "cascading outages.
Response: R3.4: Requirement R3.4 has been revised. The intent is not to identify additional Contingencies in addition to the planning events in Table 1, but to identify those Table 1 planning events that are expected to be more severe for your portion of the BES. Based on industry comments, the SDT has deleted the requirement to provide an explanation of "why the remaining Contingencies would produce less severe System performance". **R3.4** Those planning events in Table 1, that are expected to produce more severe System impacts on its portion of the BES, shall be identified and a list of those Contingencies to be evaluated for System performance in Requirement R3, part 3.1 created. The rationale for those Contingencies selected for evaluation shall be available as supporting information. R3.4 & R3.5: Several industry commenters have indicated that an explanation of "why the remaining Contingencies would produce less severe System performance" should be deleted since the Contingencies selected are those that produce more severe System performance. The SDT agrees and has deleted the requirement for an "explanation of why the remaining Contingencies would produce less severe System results". **R3.5** Those extreme events in Table 1 that are expected to produce more severe System impacts shall be identified and a list of those events to be evaluated for System performance in Requirement R3, part 3.2 created. The rationale for those Contingencies selected for evaluation shall be available as supporting information. If the analysis concludes there are cascading outages caused by the occurrence of extreme events, an evaluation of possible actions designed to reduce the likelihood or mitigate the consequences and adverse impacts of the event(s) shall be conducted.	
Platte River Power Authority	R3.3.3. Zone 3 type relay loadability studies (single and multiple contingency analyses) should be performed in the OPERATING HORIZON to provide results flagged for possible problems to the Relay Engineers who will evaluate a relay setting change on an Facility or a modification to a relay setting for a new Facility about to be put in-service. I do not see the value of Zone 3 relay

Organization	Question 3 Comment
	loadability checks in the Planning Horizon.
Response: The SDT does not agree that relay loadability should be limited to the Operating Horizon. The SDT has clarified the requirement to ensure relay loadability limits are respected in the analysis. **R3.3.3** Ensure relay loadability limits are respected.	
MAPPCOR	R3.3.2 - Traditionally transmission planners have used their judgment about the minimum steady state voltage limitations of generators. If this standard is going to require its incorporation into the assessments, there should be an MOD standard developed requiring the generators to provide the necessary information prior to its inclusion as a requirement in this standard. R3.3.3 - PRC-023 requires relay loadability to be reflected in facility ratings. Therefore this additional requirement is unnecessary and should be deleted. R3.4 is there a measure for what is a "more severe system impact"? R3.5 Recommend that the requirement for Extreme Event testing be removed from this standard as there is no requirement to develop a Corrective Action Plan to address unacceptable consequences. Otherwise we recommend the following:-Extreme Event performance should be a consideration when developing Corrective Action Plans to address Planning Events-It should be clear that an evaluation does not require solution development for all Extreme Events-Change "an evaluation of possible actions"? to "where appropriate, reasonably practicable actions designed to reduce the likelihood or mitigate the consequences and adverse impacts of the event(s) shall be considered.
Response: R3.3.2: The SDT agrees that judgment is used today. There is a project (PRC-024) that will address this issue. The SDT has changed the wording to clarify the intent of the requirement. For this standard, all that is required is to identify the assumptions concerning voltage limitations of the unit and ensure they are being treated within the simulation as they will react in the real world. **R3.3.2** Trip generators where simulations show generator bus voltages are less than known or assumed minimum generator steady state or ride through voltage limitations. Include in the assessment any assumptions made. R3.3.3: The SDT believes that the requirement is necessary for the TPL standard and has clarified the requirement in an attempt to remove the objections **R3.3.3** Ensure relay loadability limits are respected. R3.4: Requirement R3, part 3.4 requires the Planning Coordinator/Transmission Planner to prepare a list of planning event Contingencies that, in the Planning Coordinator's and Transmission Planner's judgment, are expected to produce more severe System impacts, and to document the rationale for the Contingencies selected. The documented rationale provided by the Planning Coordinator/Transmission Planner will define what is considered to be the more severe System impacts relative to the Contingencies not selected because they are expected to be less severe. No change made. R3.5: The SDT disagrees that the standard should mandate corrective actions for extreme events due to the low probability of these events. However, the SDT believes that those extreme events that are expected to produce more serve System impacts should be analyzed to assess the extent of the impacts on the System to provide the Planning Coordinator/Transmission Planner with information to decide, where appropriate, if it is reasonable to provide some corrective actions to reduce the possibility or limit the consequences of an extreme event. The need to identify possible actions addresses an Order 693 directive. Your suggested wording would	

Organization	Question 3 Comment
make identification of possible actions optional. No change made.	
Orlando Utilities Commission	For Requirement 3.3.1 and 3.3.4 I suggest adding language similar to 3.3.2 and 3.3.3 establishing that "studies shall consider" rather then requiring every simulation precisely recreate this usually minor part of system performance. These devices generally do not respond except for a nearby event, and even then their response is rarely such that it would make the situation "worse". The effect of these devices must be considered, but mandating that every simulation faithfully reproduce the response of every device is not only an efficient way to do this, it actually provides a counter incentive to going above and beyond the standard requirements. Any simulation used to meet this standard that failed to precisely reproduce the performance of this equipment would be a violation of this requirement (as currently written). As such there is no incentive for an entity to include anything but the absolute minimum number of simulations required to meet the standard, since each extra simulation represents an opportunity to miss this requirement. Good planning is based on running a broad range of events against a broad range of conditions and evaluating those responses against a set of performance criteria. This is encouraged by requiring that studies consider the response of equipment to these events rather then mandating their precise reproduction in simulation.
Response: R3.3.1: The SDT disagrees with the comment as the intent of Requirement R3, part 3.3.1, consistent with Order 693, is to perform the simulation to reflect how the Protection System will operate in the real System for each Contingency without operator intervention. No change made. R3.3.4: The SDT disagrees with your comment. The simulation of the expected operation of devices such as phase-shifting transformers, load tap changing transformers ,etc. impacts post-Contingency the performance of the System. No change made.	
American Transmission Company	We propose the following comments for R3.Revise the R3.3.2 text to clarify that subsequent analysis is performed on generators whose voltages are expected to fall below the minimum voltage limits. We suggest this text: Consider the minimum steady state voltage limitations of all generators and identify how generators with bus voltages below its minimum voltage limits are analyzed in the subsequent steady state simulations. Revise the R3.3.3 text to more clearly relate to the specific requirements in PRC-023. We suggest this text: "Incorporate relay loadability per PRC-023 and identify how relay loadability is analyzed in the steady state simulation. Add R3.3.5. The obligation to consider only planned System adjustments that are executable should be a Requirement, rather than performance note "e" in the Planning Events, Steady State & Stability section of Table 1. We suggest this text: "Consider planned System adjustments, such as Transmission configuration changes and redispatch of generation, that are executable within the time duration of the applicable Facility Ratings.
Response: R3.3.2: The SDT has changed the wording to clarify the intent of the requirement. For this standard, all that is required is to identify the assumptions concerning voltage limitations of the unit and ensure they are being treated within the simulation as they will react in the real world. **R3.3.2** Trip generators where simulations show generator bus voltages are less than known or assumed minimum generator steady state or ride through voltage limitations. Include in the assessment any assumptions made. R3.3.3: The SDT has clarified the requirement to ensure relay loadability limits are respected in the analysis. **R3.3.3** Ensure relay loadability limits are respected.	

Organization	Question 3 Comment
R3.3: The SDT disagrees as such planned System adjustments are considered to be operator corrective actions as opposed to automatic actions considered in Requirement R3, part 3.3. No change made.	
Idaho Power	R3.3.2 is unclear as drafted. The minimum steady state voltage limitation for synchronous generators is not a very meaningful value. All generators with an automatic voltage regulator will maintain the set point voltage until the VAR capability of the generator is exceeded, and then the voltage will deteriorate. R3.5 -The requirement to explain why remaining Extreme Contingencies would produce less severe System results than the ones selected for study is overly burdensome. The first part of the requirement requires identification of events that produce more severe System impacts. The reason the others were not selected is because they were less severe or non-credible. Listing all possible extreme events could result in a limitless list.
Response: R3.3.2: The SDT has changed the wording to clarify the intent of the requirement. For this standard, all that is required is to identify the assumptions concerning voltage limitations of the unit and ensure they are being treated within the simulation as they will react in the real world. **R3.3.2** Trip generators where simulations show generator bus voltages are less than known or assumed minimum generator steady state or ride through voltage limitations. Include in the assessment any assumptions made. R3.5: Several industry commenters have indicated that an explanation of "why the remaining Contingencies would produce less severe System performance" should be deleted since the Contingencies selected are those to produce more severe System performance. The SDT agrees and has deleted the requirement for an "explanation of why the remaining contingencies would produce less severe System results". **R3.5** Those extreme events in Table 1 that are expected to produce more severe System impacts shall be identified and a list of those events to be evaluated for System performance in Requirement R3, part 3.2 created. The rationale for those Contingencies selected for evaluation shall be available as supporting information. If the analysis concludes there are cascading outages caused by the occurrence of extreme events, an evaluation of possible actions designed to reduce the likelihood or mitigate the consequences and adverse impacts of the event(s) shall be conducted.	
New York Independent System Operator	R3.5. - The Extreme Events testing in Table 1 should be removed from this standard since there is no requirement to develop a Corrective Action Plan to address unacceptable consequences and the requirements are very general or vague. At a minimum, testing should only be required for EHV facilities or facilities specified by the Regional Entity ? for example, NPCC designates facilities that can have consequences outside an area as bulk power system facilities.
Response: R3.5: extreme events: The SDT disagrees that the standard should mandate corrective actions for extreme events due to the low probability of these events. However, SDT believes that those extreme events that are expected to produce more serve System impacts should be analyzed to assess the extent of the impacts on the System to provide the Planning Coordinator/Transmission Planner with information to decide, where appropriate, if it is reasonable to provide some corrective actions to reduce the possibility or limit the consequences of an extreme event. No change made.	
Duke Energy	Revise M3 to include a reference to R6, since the allocation of responsibilities will directly affect the evidence which is to be provided.
Response: M3: The SDT disagrees. Requirement R6 (now Requirement R7) is an overarching requirement that applies to the entire set of analysis required to meet	

Organization	Question 3 Comment
the requirements of the TPL standard and to the Corrective Action Plan developed as part of the assessment. The intent of this requirement is to clarify that TPL requirements can be met through joint or shared analysis. Coordinating and/or joint analysis does not alleviate the responsibility that all entities need to comply with the standard requirements. Therefore, the SDT sees no reason to link Requirement R3 directly to Requirement R6 (now Requirement R7) in the measure or anywhere else. The requirements stand by themselves and do not require such a linkage. No change made	
Independent Electricity System Operator	1. In our opinion, R3 as drafted is rather convoluted as it attempts to cover several objectives. Firstly, we recommend replacing "utilizing data in Requirement R1" with "developed in accordance with Requirement R1" both in the requirement and the VSLs. Secondly, is the main objective of R3 to ensure studies are conducted based on computer simulation utilizing data provided in Requirement R1? Or is it to ensure that this is done, and that all the other objectives are also fulfilled, for example: assessment of system performance (R3.1 and R3.5), conducting the analysis as specified in R3.2 and R3.3, identification of critical Planning Event contingencies (R3.4), etc. If it is the former, then not conducting studies based on computer simulation utilizing data provided in Requirement R1 alone should have a VSL of Severe. If it is the latter, then the requirement should be either: (a) Revised to place all supporting conditions in the subrequirements. As an example, R3 could be revised as follows:R3. The steady state analyses of the Near-Term and Long-Term Planning Assessment as stipulated in R2.1 and R2.2 shall be performed as follows:R3.1. Studies are conducted based on computer simulation utilizing data provided in Requirement R1;R3.2. Studies shall be performed to determine?. (the rest of the existing R3.1) R3.2. The existing R3.3, and so on.This way, not conducting studies based on computer simulation utilizing data provided in Requirement R1 will be "rolled up" to the VSLs for the main requirement, as is currently stated in the VSL table.Or(b) Restructure, if there are multiple main objectives in R3, to clearly have the main objectives in the main requirement, or split it into more than one main requirement.2. Based on the way R3 is written, we agree with the VRF, Time Horizon and Measure. However, we do have a difficulty with the VSL based on our comments above on the requirement, especially on the Moderate VSL for "The Transmission Planner or Planning Coordinator did not base its studies on computer simulations using models utilizing data provided in Requirement R1.
Response: Requirement R3 has been modified. **R3** For the steady state portion of the Planning Assessment, each Transmission Planner and Planning Coordinator shall perform studies for the Near-Term and Long-Term Transmission Planning Horizons in Requirement R2, parts 2.1, and 2.2. The studies shall be based on computer simulation models using data provided in Requirement R1. R3 is a single requirement and the SDT disagrees with the concept of splitting this up into separate requirements. No change made. The moderate VSL has been modified to align with the changes made to the wording of the requirement. **R3, moderate VSL**: The responsible entity did not base its studies on computer simulation models using data provided in Requirement R1.	
Kansas City Power & Light	R3.3.3: Relay loadability has no bearing beyond the near term horizon. Loadability is not determined several years out. R3.5 " does this imply that mitigation plans must be implemented" If not, then this is highly subjective and the last sentence of this requirement should be deleted.

Organization	Question 3 Comment
Response: R3.3.3 The SDT does not agree that relay loadability should be limited to the near term horizon. The SDT has clarified the requirement to ensure relay loadability limits, as defined in the relay loadability standard, are respected in the analysis. **R3.3.3** Ensure relay loadability limits are respected. R3.5: extreme events: The SDT disagrees that the standard should mandate corrective actions for extreme events due to the low probability of these events. However, SDT believes that those extreme events that are expected to produce more serve System impacts should be analyzed to assess the extent of the impacts on the System to provide the Planning Coordinator/Transmission Planner with information to decide, where appropriate, if it is reasonable to provide some corrective actions to reduce the possibility or limit the consequences of an extreme event.	
ReliabilityFirst Corporation	R3- Throughout this requirement there is a mention of developing a contingency table. It will be nice that such a table is developed under MOD-010 and MOD-012 standard. ERAG can develop such a list as part of their base case development effort. R3.3.3- Suggest changing it to read “For all Transmission lines, studies shall consider relay loadability, if that is the limiting factor for line loading.” R3.3.4 The term “expected operation” is vague. Some of these devices have relays which cause them to automatically respond to system changes, others are controlled by an operator. In both cases, the devices are “expected” to be utilized. Given that operator controlled devices are less certain to be utilized, and may be delayed in being utilized. The expected operation needs to be studied differently for automated devices and those requiring operator interventions.
Response: R3: Requirements R3.4 & R3.5 place the responsibility of creating planning event and extreme event Contingency lists on the applicable entities, the Planning Coordinator and the Transmission Planner as owners, operators or users of the BES. The SDT believes that requirement to develop these Contingency lists of planning and extreme events expected to produce the most severe results, and the rationale for the selection of these events, is best left to the Planning Coordinator/Transmission Planner responsible for its portion of the BES. However, the SDT does not believe that the standard would preclude ERAG from playing a role in the development of these Contingency lists; however, the compliance responsibility will fall to the Planning Coordinator/Transmission Planner. R3.3.3: The SDT has clarified the requirement to ensure relay loadability limits are respected in the analysis. **R3.3.3** Ensure relay loadability limits are respected. R3.3.4: The SDT agrees and has added automatic to the requirement. **R3.3.4** Simulate the expected automatic operation of existing and planned devices designed to provide Steady State control of electrical system quantities when such devices impact the study area. These devices may include equipment such as phase-shifting transformers, load tap changing transformers, and switched capacitors and inductors.	

4. Requirement R4 – Please provide any specific comments on the requirement text, VRF, Time Horizon, measure associated with the requirement, data retention associated with the requirement, and/or the VSL associated with the requirement.

Summary Consideration: The SDT has made numerous clarifying changes to the requirements due to industry comments. In addition, Requirement R4, part 4.3.3 has been added.

R4. For the Stability portion of the Planning Assessment, as described in Requirement R2, parts 2.4 and 2.5, each Transmission Planner and Planning Coordinator shall perform the Contingency analyses listed in Table 1. The studies shall be based on computer simulation models using data provided in Requirement R1.

4.1 Studies shall be performed for planning events to determine whether the BES meets the performance requirements in Table 1 based on the Contingency list created in Requirement R4, part 4.4.

4.2 Studies shall be performed to assess the impact of the extreme events which are identified by the list created in Requirement R4, part 4.5.

4.3 Contingency analyses shall be performed and:

4.3.2 Trip generators where simulations show generator bus voltages or high side of the GSU voltages are less than known or assumed generator low voltage ride through capability. Include in the assessment any assumptions made.

4.3.3 Simulate the impact of transient swings on Protection System operation for Transmission lines and transformers.

4.3.4 Simulate the expected automatic operation of existing and planned devices designed to provide dynamic control of electrical system quantities when such devices impact the study area. These devices may include equipment such as generation exciter control and power system stabilizers, static var compensators, power flow controllers, and DC Transmission controllers.

4.4 Those planning events in Table 1that are expected to produce more severe System impacts on its portion of the BES, shall be identified, and a list of those Contingencies to be evaluated for System performance in Requirement R4, part 4.1 created. The rationale for those Contingencies selected for evaluation shall be available as supporting information.

4.4.1 The Planning Coordinator and Transmission Planner shall coordinate with adjacent Planning Coordinators and Transmission Planners to ensure that Contingencies on adjacent Systems which may impact their Systems are included in the Contingency list.

4.5 Those extreme events in Table 1 that are expected to produce more severe System impacts shall be identified and a list of those events to be evaluated for System performance in Requirement R4, part 4.2 created. The rationale for those Contingencies selected for evaluation shall be available as supporting information. If the analysis concludes there are cascading outages caused by the occurrence of extreme events, an evaluation of possible actions designed to reduce the likelihood or mitigate the consequences of the event(s) shall be conducted.

Footnote 2 Unless specified otherwise, simulate Normal Clearing faults. Single line to ground (SLG) or three phase (3Ø) are the fault types, that must be evaluated in Stability simulations for the event described. A 3Ø or a double line to ground fault study indicating the criteria are being met is sufficient evidence that a SLG condition would also meet the criteria.

R4 VSL	The responsible entity did not identify planning events as described in Requirement R4, part 4.4 or extreme events as	The responsible entity did not perform studies as specified in Requirement R4, part 4.1 to determine	The responsible entity did not perform studies as specified in Requirement R4, part 4.1 to determine	The responsible entity did not perform studies as specified in Requirement R4, part 4.1 to determine that the BES meets the

	described in Requirement R4, part 4.5.	that the BES meets the performance requirements for one of the categories (P1 through P7) in Table 1. OR The responsible entity did not perform studies as specified in Requirement R4, part 4.2 to assess the impact of extreme events. OR The responsible entity did not base its studies on computer simulation models using data provided in Requirement R1.	that the BES meets the performance requirements for two of the categories (P1 through P7) in Table 1. OR The responsible entity did not perform Contingency analysis as described in Requirement R4, part 4.3.	performance requirements for three or more of the categories (P1 through P7) in Table 1.

Organization	Question 4 Comment
Dominion - Electric Transmission	R4.4 - Dominion believes that creating a master list of all contingencies a planner must take is burdensome and provides no planning value. In addition the contingencies will vary based on the loading configuration and the specific study case. In general, we start out with the very worst contingencies. If these cause hard rotor swings, we know we will probably have to do most of the possible contingencies in the station until we get down to contingencies that do not swing the generator much. But if the swings are light, then that particular load/topology situation probably does not need in-depth exploration. Creating a master list could create unnecessary study. However, we do support a list of the extreme contingencies in R4.5.
Response: Requirement R4, part R4.4 does not require a master list of all possible contingencies. The requirement is to create a list of those Contingencies expected to produce more severe results. There is nothing that prevents you from modifying the list based on simulation results (e.g., hard rotor swings). No change made.	
Northeast Power Coordinating Council	R4.3.2 - Traditionally transmission planners have assumed that generators would ride through low voltages associated with Planning Events which is generally adequate for non-wind generators. If this standard is going to require its incorporation into the assessments, there should be an MOD standard developed requiring the generators to provide the necessary information prior to its inclusion as a requirement in this standard. R4.5 Priority Comment ?We recommend that the requirement for Extreme Event testing be removed from this standard as there is no requirement to develop a Corrective Action Plan to address unacceptable consequences. Otherwise we recommend the following:- Extreme Event performance should be a consideration when developing Corrective Action Plans to

Organization	Question 4 Comment
	address Planning Events- It should be clear that an evaluation does not require solution development for all Extreme Events- Change "an evaluation of possible actions"? to "where appropriate, reasonably practicable actions designed to reduce the likelihood or mitigate the consequences and adverse impacts of the event(s) shall be considered. For Requirements R4.4 and R4.5, what defines "more severe System impacts"?
Response: R4.3.2: There is a reliability standard (PRC-024) under development which will require Generator Owners to provide information about the low voltage ride through capability of their generators based on relay settings. Requirement R4, part 4.3.2 requires you to include in the assessment how you analyzed voltage ride-through capability. If complete information on the ride-through capability is not available, then you should just document your assumptions regarding ride-through capability for the assessment. The SDT has changed the wording of Requirement R4, part 4.3.2 to clarify this. **4.3.2** Trip generators where simulations show generator bus voltages or high side of the GSU voltages are less than known or assumed generator low voltage ride through capability. Include in the assessment any assumptions made. R4.5: The SDT considers extreme event testing to be an important part of the assessment and therefore will not delete it. The expectation for extreme event testing is that for major problems you will evaluate actions to reduce likelihood or mitigate consequences. The SDT believes the original words express this concept better than your suggested words. No change made. R4.4 and R4.5: The definition of "more severe impacts" is left to the engineering judgment of the Transmission Planner and Planning Coordinator.	
Transmission Planning	R4.3.2. COMMENT: The inability to survive a given low voltage transient is often dependent on motor performance within the generating facility's auxiliary load distribution system and is not a specific relay setting. Determination of specific generating plant low voltage ride through capability requires extensive modeling of the plant distribution system and is outside the scope of this standard.
Response: R4.3.2: The intent of this requirement is to include in the assessment how voltage ride-through capability is analyzed in your studies. It does not require extensive modeling of a generating plant's distribution system. There is a reliability standard (PRC-024) under development which will require Generator Owners to provide information about the low voltage ride through capability of their generators based on relay settings. If complete information on the ride-through capability is not available, then you should document your assumptions regarding voltage ride-through capability for the assessment. The SDT has changed the wording of Requirement R4.3.2 to clarify this. **4.3.2** Trip generators where simulations show generator bus voltages or high side of the GSU voltages are less than known or assumed generator low voltage ride through capability. Include in the assessment any assumptions made.	
SERC Engineering Committee Planning Standards Subcommittee	R4.1:In Requirement R4.1, it is suggested that the word "contingency" be added to describe the lists created in R4.4?Studies shall be performed to determine whether the BES meets the performance requirements in Table 1 based on the contingency lists created in Requirement R4.4. R4.4:Regarding Requirement R4.4, it is suggested that a rewording be considered such as described below:? For each category of the Planning Events in Table 1, those Planning Event Contingencies that are expected to produce more severe System impacts shall be identified, and a list of those Contingencies to be evaluated for System performance in Requirement R4.1 shall be created. The rationale for the Contingencies selected for evaluation shall be available as supporting information

Organization	Question 4 Comment
	with an explanation of why the remaining Contingencies would produce less severe System results. R4.3.2:R4.3.2 requires that voltage ride through capability be analyzed. It is not clear what should be analyzed (e.g. auxiliary loads, generator protection, generator capability, etc.) This requirement needs more clarity. Footnote #3:Footnote #3 needs to be revised to include 2LG faults in addition to 3-Phase faults indicating that the SLG criteria is met.
Response: R4.1: The SDT agrees and has added the word "Contingency". **4.1** Studies shall be performed for planning events to determine whether the BES meets the performance requirements in Table 1 based on the Contingency list created in Requirement R4, part 4.4. R4.4: The SDT agrees and has modified the wording similar to your suggested wording, however - due to other stakeholder comments, the phrase requiring an explanation was deleted from the revised standard. **4.4** Those planning events in Table 1that are expected to produce more severe System impacts on its portion of the BES, shall be identified, and a list of those Contingencies to be evaluated for System performance in Requirement R4, part 4.1 created. The rationale for those Contingencies selected for evaluation shall be available as supporting information R4.3.2: The intent of this requirement is to include in the assessment how voltage ride-through capability is analyzed in your studies. It does not require extensive modeling of a generating plant's distribution system. There is a reliability standard (PRC-024) under development which will require Generator Owners to provide information about the low voltage ride through capability of their generators based on relay settings. If complete information on the ride-through capability is not available, then you should document your assumptions regarding voltage ride-through capability for the assessment. The SDT has changed the wording of Requirement R4, part 4.3.2 to clarify this. **4.3.2** Trip generators where simulations show generator bus voltages or high side of the GSU voltages are less than known or assumed generator low voltage ride through capability. Include in the assessment any assumptions made. Footnote #3 (now footnote #2): The SDT agrees and has modified the wording similar to your suggested wording. **Footnote 2** Unless specified otherwise, simulate Normal Clearing faults. Single line to ground (SLG) or three phase (3Ø) are the fault types, that must be evaluated in Stability simulations for the event described. A 3Ø or a double line to ground fault study indicating the criteria are being met is sufficient evidence that a SLG condition would also meet the criteria.	
Modesto Irrigation District	Comments: We believe that R4.3.1-R4.3.3 should be bullets under R4.3
Response: R4.3.1-R4.3.3: The SDT disagrees as these are mandatory elements of the Contingency analyses. Bullets are only used to identify the possible, but not all inclusive, elements of a menu. No change made.	
OPUC	4. Requirement R4 ? Please provide any specific comments on the requirement text, VRF, Time Horizon, measure associated with the requirement, data retention associated with the requirement, and/or the VSL associated with the requirement. Comments: A: R4.3 should be modified to become the requirement to conduct contingency analyses with R4.3.1 thru 3

Organization	Question 4 Comment
	presented as bullets there-under. B: R4.3.2 should clarify whether all relay protection must be modeled
Response: R4.3: The SDT disagrees as these are mandatory requirements of the Contingency analyses. Bullets are only used to identify the possible, but not all inclusive, elements of a menu. However, R4.3 has been modified to read more like a requirement as shown below. **4.3** Contingency analyses shall be performed and: R4.3.2: The intent of this requirement is to include in the assessment how voltage ride-through capability is analyzed in your studies. It does not require extensive modeling of all relay protection. There is a reliability standard (PRC-024) under development which will require Generator Owners to provide information about the low voltage ride through capability of their generators based on relay settings. If complete information on the ride-through capability is not available, then you should document your assumptions regarding voltage ride-through capability for the assessment. The SDT has changed the wording of Requirement R4, part 4.3.2 to clarify this. **4.3.2** Trip generators where simulations show generator bus voltages or high side of the GSU voltages are less than known or assumed generator low voltage ride through capability. Include in the assessment any assumptions made.	
Bonneville Power Administration	Requirement R4 should be consistent with R3. Suggested edit for R4. - "For the Stability portion of the Planning Assessment, each Transmission Planner and Planning Coordinator shall perform analysis for the Near-Term Transmission Planning Horizon studies in Requirement R2.4. The studies shall be based on computer simulations using models developed from the data provided in Requirement R1." R4.1 should be clarified consistent with comments to R3.1. Suggested clarification for R4.1 - "Studies shall be performed to determine whether the BES meets the performance requirements in Table 1. A reduced set of contingencies can be simulated based on a list created in requirement R4.4." As currently drafted, R4.3 is not a requirement. Without the statements in R4.3.1-R4.3.3, R4.3 is simply a phrase. Sub-Sub-Requirements R4.3.1 through R4.3.3 should be bullets under R4.3, with the language in R4.3 modified so that it becomes the requirement to conduct contingency analyses that address the three resulting bullets. R4.3.2 ? it is not clear what is required to be modeled. Typically a generator may have 10 or more protective relays. Is the intent to model all relay protection? The existing commercial programs do not have sufficient models or capacity to do that for all generators in the system. Requirement R4.4 also needs to be clarified as follows: R4.4 - "A reduced list of Contingencies can be developed for System Performance evaluation in Requirement R4.1 that includes those Planning Event Contingencies that are expected to produce more severe System impacts based on system performance as required in Table 1. R4.5 ? We disagree with the requirement to explain why remaining Extreme Contingencies would produce less severe System results than the ones selected for study. The first part of the requirement requires identification of events that produce more severe System impacts. The reason the others were not selected is because they were less severe or non-credible. In any case, theoretically, there can always be a more severe Extreme Contingency than the one selected for study. For example, if the Extreme Contingency studied were simultaneous loss of 3 transmission lines with failure of redundant RAS, then

Organization	Question 4 Comment
	simultaneous loss of 4 lines with failure of 2 sets of redundant RAS would be more severe. Listing all possible extreme events could result in a limitless list.

Response: The wording in Requirement R4 has been made identical to that in Requirement R3.

> **R4.** For the Stability portion of the Planning Assessment, as described in Requirement R2, parts 2.4 and 2.5, each Transmission Planner and Planning Coordinator shall perform the Contingency analyses listed in Table 1. The studies shall be based on computer simulation models using data provided in Requirement R1.

R4.1: The intent is to run the contingencies developed in Requirement R4, part 4.4, not a reduced set of them. No change made.

R4.3: The SDT disagrees as these are mandatory elements of the Contingency analyses. Bullets are only used to identify the possible, but not all inclusive, elements of a menu. However, Requirement R4, part 4.3 has been modified to read more like a requirement as shown below.

> **4.3** Contingency analyses shall be performed and:

R4.3.2: The intent of this requirement is to include in the assessment how voltage ride-through capability is analyzed in your studies. It does not require modeling of all relay protection. There is a reliability standard (PRC-024) under development which will require Generator Owners to provide information about the low voltage ride through capability of their generators based on relay settings. If complete information on the ride-through capability is not available, then you should document your assumptions regarding voltage ride-through capability for the assessment. The SDT has changed the wording of Requirement R4.3.2 to clarify this.

> **4.3.2** Trip generators where simulations show generator bus voltages or high side of the GSU voltages are less than known or assumed generator low voltage ride through capability. Include in the assessment any assumptions made.

R4.4: The intent of Requirement R4, part 4.4 is to identify and develop a list of Contingencies to be run. Your proposed wording does not capture that intent. No change made.

R4.5: Several industry commenters have indicated that an explanation of "why the remaining Contingencies would produce less severe System performance" should be deleted since the contingencies selected are already justified as those that produce more severe System performance. The SDT agrees and has deleted the requirement for an "explanation of why the remaining Contingencies would produce less severe System results".

MRO MRO NERC Standards Review Subcommittee	MRO NSRS proposes the following comments for R4:Add R4.3.3 text include relay loadability in the R4 (Stability) requirements to parallel R3.3.3 in the R3 (Steady State) requirement which would more clearly relate to the specific requirements in PRC-023. MRO NSRS suggests this text: "Incorporate relay loadability per PRC-023 and identify how relay loadability is analyzed in the dynamic simulation. In R4.3.4, MRO NSRS proposes limiting the scope to automatic devices and adding the notion of "including but not limited to". MRO NSRS suggests R4.3.4 text of: "Simulate the expected automatic operation of existing and planned control devices including but not limited to generation exciter control and power system stabilizers, static VAR compensators, power flow controllers, and DC Transmission controllers.

Response: R4.3: The SDT agrees with the general idea and has added Requirement R4, part 4.3.3. However, Requirement R4, part 4.3.3 requires that you "Simulate the impact of transient swings on Protection System operation for Transmission lines and transformers" rather than creating a stability requirement for relay loadability. This requirement is more applicable to stability studies than a relay loadability requirement would be. Relay loadability is more of a steady state

Organization	Question 4 Comment
issue than a dynamic issue. **4.3.3** Simulate the impact of transient swings on Protection System operation for Transmission lines and transformers. R4.3.4: The SDT has added the word "automatic" into Requirement R4, part 4.3.4 such that it now reads as follows: **4.3.4** Simulate the expected automatic operation of existing and planned devices designed to provide dynamic control of electrical system quantities when such devices impact the study area. These devices may include equipment such as generation exciter control and power system stabilizers, static var compensators, power flow controllers, and DC Transmission controllers.	
SERC Engineering Committee Reliability Review Subcommittee (RRS)	In R4, should the “and” in the first sentence actually be “or”?” Footnote #3 needs to be revised to include 2LG faults in addition to 3Phase faults indicating that the SLG criteria is met. In Requirement R4.1, it is suggested that the word "contingency" be added to describe the lists created in R4.4”Studies shall be performed to determine whether the BES meets the performance requirements in Table 1 based on the contingency lists created in Requirement R4.4. ? Regarding Requirement R4.4, it is suggested that a rewording be considered such as the following: For each category of the Planning Events in Table 1, those Planning Event Contingencies that are expected to produce more severe System impacts shall be identified, and a list of those Contingencies to be evaluated for System performance in Requirement R4.1 shall be created. The rationale for the Contingencies selected for evaluation shall be available as supporting information with an explanation of why the remaining Contingencies would produce less severe System results. ? R4.3.2 requires that voltage ride through capability be analyzed. It is not clear what should be analyzed (e.g. auxiliary loads, generator protection, generator capability, etc.) This requirement needs more clarity. ? R4.3.2 ? By in large, the industry does not have the input data or the methods to do this. It would seem necessary to have PRC-024 approved before this can be met. In R4.3.2, need guidance on how to consider minimum steady state voltage limitations.
Response: R4: Requiring the Planning Coordinator AND the Transmission Planner to perform analysis should not result in a duplication of effort. Requirement R6 (now Requirement R7) requires the two entities to agree on their individual and joint responsibilities. The SDT believes that ‘AND’ is the proper word rather than ‘OR’. Using ‘OR’ could be interpreted by one entity as not applying to them. No change made. Footnote #3 (now footnote #2): The SDT agrees and has made the suggested change. **Footnote 2** Unless specified otherwise, simulate Normal Clearing faults. Single line to ground (SLG) or three phase (3Ø) are the fault types, that must be evaluated in Stability simulations for the event described. A 3Ø or a double line to ground fault study indicating the criteria are being met is sufficient evidence that a SLG condition would also meet the criteria. R4.1: The SDT agrees and has made the suggested change. **4.1** Studies shall be performed for planning events to determine whether the BES meets the performance requirements in Table 1 based on the Contingency list created in Requirement R4, part 4.4.	

Organization	Question 4 Comment
R4.4: The SDT agrees and has made the suggested change however - due to other stakeholder comments, the phrase requiring an explanation was deleted from the revised standard. **4.4** Those planning events in Table 1that are expected to produce more severe System impacts on its portion of the BES, shall be identified, and a list of those Contingencies to be evaluated for System performance in Requirement R4, part 4.1 created. The rationale for those Contingencies selected for evaluation shall be available as supporting information R4.3.2: The intent of this requirement is to include in the assessment how voltage ride-through capability is analyzed in your studies. It does not require modeling of all relay protection. There is a reliability standard (PRC-024) under development which will require Generator Owners to provide information about the low voltage ride through capability of their generators based on relay settings. If complete information on the ride-through capability is not available, then you should document your assumptions regarding voltage ride-through capability for the assessment. The SDT has changed the wording of Requirement R4, part 4.3.2 to clarify this. **4.3.2** Trip generators where simulations show generator bus voltages or high side of the GSU voltages are less than known or assumed generator low voltage ride through capability. Include in the assessment any assumptions made.	
FirstEnergy Corp	Specific comments, Requirements of R4:A. R4.1: A space is needed between the text "Requirement and R4.4" which are run together in the requirement. B. R4.3.3: For readability we suggest inserting the word "may" in between "devices include". We agree with the stated Measures, VRF, Time-Horizon, Data Retention and VSL of requirement R4
Response: R4.1: The SDT has corrected this problem. **4.1** Studies shall be performed for planning events to determine whether the BES meets the performance requirements in Table 1 based on the Contingency list created in Requirement R4, part 4.4. R4.3.3: The SDT agrees and has made the suggested change. **4.3.4** Simulate the expected automatic operation of existing and planned devices designed to provide dynamic control of electrical system quantities when such devices impact the study area. These devices may include equipment such as generation exciter control and power system stabilizers, static var compensators, power flow controllers, and DC Transmission controllers.	
TVA System Planning	In R4, should the “and” in the first sentence actually be “or”? R4.3.2 requires that voltage ride through capability be analyzed. It is not clear what should be analyzed (e.g. auxiliary loads, generator protection, generator capability, etc.) This requirement needs more clarity. By in large, the industry does not have the input data or the methods to do this. It would seem necessary to have PRC-024 approved before this can be met.
Response: R4: Requiring the Planning Coordinator AND the Transmission Planner to perform analysis should not result in a duplication of effort. Requirement R6 (now Requirement R7) requires the two entities to agree on their individual and joint responsibilities. The SDT believes that ‘AND’ is the proper word rather than ‘OR’. Using OR could be interpreted by one entity as not applying to them. No change made. R4.3.2: The intent of this requirement is to include in the assessment how voltage ride-through capability is analyzed in your studies. It does not require modeling of	

Organization	Question 4 Comment
all relay protection. There is a reliability standard (PRC-024) under development which will require Generator Owners to provide information about the low voltage ride through capability of their generators based on relay settings. If complete information on the ride-through capability is not available, then you should document your assumptions regarding voltage ride-through capability for the assessment. The SDT has changed the wording of Requirement R4, part 4.3.2 to clarify this. **4.3.2** Trip generators where simulations show generator bus voltages or high side of the GSU voltages are less than known or assumed generator low voltage ride through capability. Include in the assessment any assumptions made.	
Exelon Transmission Planning	See comment in response to question 9 regarding the lack of definition related to the failure of a "single Protection System".
Response: See response to question 9 comment.	
Southern Company	Generating unit stability should be separated from system stability like in previous drafts. R4.2 and R4.5 are both addressing the extreme events. However, R4.2 is referring to R4.5 while R4.5 is referring to R4.2. We suggest deleting the reference back to R4.2 which is in R4.5. A similar situation exists for R4.1 and R4.4.
Response: The majority of the industry believes that there should be no distinction between generating unit stability and System Stability. No change made. R4.2, R4.5, R4.1, R4.4: The SDT does not see any harm in having the cross referencing. No change made.	
United Illuminating Northeast Utilities ISO New England, Inc. Central Maine Power Company	R4.3.2 Priority Comment - Traditionally transmission planners have assumed that generators would ride through low voltages associated with Planning Events which is generally adequate for non-wind generators. If this standard is going to require its incorporation into the assessments, there should be an MOD standard developed requiring the generators to provide the necessary information prior to its inclusion as a requirement in this standard. R4.5 Priority Comment ?We recommend that the requirement for Extreme Event testing be removed from this standard as there is no requirement to develop a Corrective Action Plan to address unacceptable consequences. Otherwise we recommend the following:- Extreme Event performance should be a consideration when developing Corrective Action Plans to address Planning Events- It should be clear that an evaluation does not require solution development for all Extreme Events- Change "an evaluation of possible actions"? to "where appropriate, reasonably practicable actions designed to reduce the likelihood or mitigate the consequences and adverse impacts of the event(s) shall be considered.
Response: R4.3.2: There is a reliability standard (PRC-024) under development which will require Generator Owners to provide information about the low voltage ride through capability of their generators based on relay settings. Requirement R4, part 4.3.2 requires you to include in the assessment how you analyzed voltage ride-through capability. If complete information on the ride-through capability is not available, then you should document your assumptions regarding ride-through capability for the assessment. The SDT has changed the wording of Requirement R4, part 4.3.2 to clarify this. **4.3.2** Trip generators where simulations show generator bus voltages or high side of the GSU voltages are less than known or assumed generator low voltage ride through capability. Include in the assessment any assumptions made. R4.5: The SDT considers extreme event testing to be an important part of the assessment and therefore will not delete it. The expectation for extreme event testing is that for major problems you will evaluate actions to reduce likelihood or mitigate consequences. The SDT believes the original words express this concept better	

Organization	Question 4 Comment
than your suggested words. No change made.	
System Protection and Transmission Planning Department	Comments under R1 apply here as well. The requirement to "utiliz[e] data provided in Requirement R1" is redundant with MOD-012, and should be moved to MOD-012. To conform with R1, we suggest a phrase be inserted that requires model data used in Stability Studies used for Annual Assessments be consistent with data submitted under MOD-012.
Response: R4: MOD-012 does not require the data to be used for an assessment of the Transmission System. Therefore, the requirement to utilize data provided under Requirement R1 is needed in this standard. No change made. R4: Because Requirement R1 references the data provided under MOD-012, there is no need for a reference to MOD-012 in Requirement R4. No change made.	
PPL Energy Plus	It should be pointed out that Breaker Failure (i.e. fail to open) and Breaker Fault (internal fault in breaker) are two different events.
Response: Breaker failure and breaker fault are two different events and that is reflected by having two different designations for these events in Table 1 (P2.3 and P4). No change made.	
PacifiCorp Deseret Generation & Transmission SRP Arizona Public Service Co Southern California Edison Company Western Area Power Administration Pacific Gas and Electric Co, Puget Sound Energy, Inc. NV Energy San Diego Gas and Electric Co Tucson Electric Power Company	As currently drafted, R4.3 is not a requirement. Without the statements in R4.3.1-R4.3.3, R4.3 is simply a phrase. Sub-Sub-Requirements R4.3.1 through R4.3.3 should be bullets under R4.3, with the language in R4.3 modified so that it becomes the requirement to conduct contingency analyses that address the three resulting bullets. R4.3.2 - it is not clear what is required to be modeled. Typically a generator may have 10 or more protective relays. Is the intent to model all relay protection? The existing commercial programs do not have sufficient models or capacity to do that for all generators in the system. R4.5 ? We disagree with the requirement to explain why remaining Extreme Contingencies would produce less severe System results than the ones selected for study. The first part of the requirement requires identification of events that produce more severe System impacts. The reason the others were not selected is because they were less severe or non-credible. In any case, theoretically, there can always be a more severe Extreme Contingency than the one selected for study. For example, if the Extreme Contingency studied were simultaneous loss of 3 transmission lines with failure of redundant RAS, then simultaneous loss of 4 lines with failure of 2 sets of redundant RAS would be more severe. Listing all possible extreme events could result in a limitless list.
NorthWestern Corporation NorthWestern Energy (NWE)	R4.3 is unclear. Requirements R4.3.1 through R4.3.3 should be bullets under R4.3, with R4.3 modified so that it becomes the requirement to conduct contingency analyses that address the three resulting bullets

Organization	Question 4 Comment
(NWMT)	R4.3.2 is unclear. It appears to be a broken sentence. Typically a generator may have 10 or more protective relays. Is the intent to model all relay protection? The existing commercial programs do not have sufficient models or capacity to do that for all generators in the system. It is our understanding that the voltage ride through standard is not complete at this time. R4.5 needs to be modified. It would be better to combine R4.2 and R4.5. The first part of the requirement requires identification of events that produce more severe System impacts. The presumed reason that the other contingencies were not selected is because they were less severe or non-credible. In any case, theoretically, there can always be examples of more severe Extreme Contingencies than the one selected for study. This can be achieved by simply choosing events that are even less credible. For example, if the Extreme Contingency studied was a simultaneous loss of 3 transmission lines with the failure of redundant RAS (SPS), then an event resulting in the simultaneous loss of 4 lines with the failure of 2 sets of redundant RASs would be even more severe. Listing all possible extreme events could result in a limitless list.
Response: R4.3: The SDT disagrees as these are mandatory elements of the Contingency analyses. Bullets are only used to identify the possible, but not all inclusive, elements of a menu. However, Requirement R4, part 4.3 has been modified to read more like a requirement as shown below. **4.3** Contingency analyses shall be performed and: R4.3.2: The intent of this requirement is to include in the assessment how voltage ride-through capability is analyzed in your studies. It does not require modeling of all relay protection. There is a reliability standard (PRC-024) under development which will require Generator Owners to provide information about the low voltage ride through capability of their generators based on relay settings. If complete information on the ride-through capability is not available, then you should document your assumptions regarding voltage ride-through capability for the assessment. The SDT has changed the wording of Requirement R4, part 4.3.2 to clarify this. **4.3.2** Trip generators where simulations show generator bus voltages or high side of the GSU voltages are less than known or assumed generator low voltage ride through capability. Include in the assessment any assumptions made. R4.5: Several industry commenters have indicated that an explanation of "why the remaining Contingencies would produce less severe System performance" should be deleted since the contingencies selected are already justified as those that produce more severe System performance. The SDT agrees and has deleted the requirement for an "explanation of why the remaining Contingencies would produce less severe System results".	
Western Area Power Administration	R4.3.3 need not include the operation of exciters and power system stabilizers as modeling of these parts of a generation system is already covered in Mod-12 & Mod-13 Standards and therefore are inherent in the dynamic analysis conducted using a program such as the GE PSLF or PTI power system simulation programs.
Response: R4.3.3: MOD-012 and MOD-013 do not require the data to be used for an assessment of the Transmission System. Therefore, the requirement to simulate the operation of exciters and stabilizers is needed in this standard. No change made.	
Tampa Electric	Clarification needed on modeling of protection system equipment.
Response: Requirement R4, parts 4.3.1 and 4.3.2 do not require modeling of Protection System equipment. It just requires you to have simulations which include the effect of Protection System equipment operation. You don't have to specifically model a relay to simulate the effect of clearing a fault at 3 cycles. No change made.	

Organization	Question 4 Comment
Florida Reliability Coordinating Council, Inc - Transmission Working Group	R4.3.1 - Please clarify, is the intent of this requirement to have every relay modeled? We suggest clarifying that the intent is that Protection System Equipment would be incorporated into the contingency list, and that modeling the Protection System equipment settings and logic would only be done for Protection Systems that could significantly impact stability response (e.g., out-of-step relaying) as deemed appropriate through engineering judgment, and that the intent would be to do this only for the Region under study and not the entire Interconnection (e.g., studies in Florida should not need to include relays in Canada). R4.4 & R4.5 - Does the intent of allowing this "More severe events" to establish actual study parameter extend between the planned events and extreme events (e.g. if a range of extreme events establishes that planning events performance requirements are met, would a redundant analysis of the planning events still be required)
Response: Requirement R4, part 4.3.1 does not require modeling of Protection System equipment. It just requires you to have simulations which include the effects of Protection System equipment operation. You don't have to specifically model a relay to simulate the effect of clearing a fault at 3 cycles. If you need to model a relay to capture its effect, then model that relay. And certainly engineering judgment should be used to determine which relay effects should be included in the simulations. No change made. R4.4 and R4.5: You can always demonstrate that performance requirements are met by meeting them for a more severe Contingency. It is possible that you could demonstrate that performance requirements are met for planning events by performing extreme events (e.g., using a three-phase fault with stuck breaker Contingency can demonstrate that performance requirements for a single phase fault plus stuck breaker contingency is met). No change made.	
FMPA	R4.2, see comment on R3.3 concerning how to model a hurricane event or other weather event. R4.3, contingency analysis ought to specifically exclude studying contingencies on neighboring systems since stability is more related to protection system and clearing times. R4.3.1, please clarify, is the intent of this requirement to have every distance relay in each Interconnect modeled? We suggest clarifying that the intent is that Protection System Equipment would be incorporated into Facility Ratings and the contingency list, and that modeling the Protection System equipment settings and logic would only be done for Protection Systems that could significantly impact stability response (e.g., out-of-step relaying) as deemed appropriate through engineering judgment, and that the intent would be to do this only for the Region under study and not the entire Interconnection (e.g., studies in Florida should not need to include relay models in Canada). R4.3.2, we assume that the intent of this requirement would be to help establish the magnitude and duration of acceptable post-transient voltage dips, presumable to meet the curve published in the PRC-023 standard under draft. Is this a correct assumption? We assume the drafting team does not expect models to be written for every generator to actually model potential loss of station service due to voltage dips and automatically model potential generator trips. R4.4 and R4.5, see comments on R3.4 and R3.5 about re-arranging these requirements.
Response: R4.2: There are no hurricane events or weather events in the extreme events for stability analysis. No change made. R4.3: The SDT disagrees. There may be some contingencies on external systems which can have a dynamic impact on the system under study. Part 4.4.1 has been added to Requirement R4 to address this possibility.	

Organization	Question 4 Comment
4.4.1 The Planning Coordinator and Transmission Planner shall coordinate with adjacent Planning Coordinators and Transmission Planners to ensure that Contingencies on adjacent Systems which may impact their Systems are included in the Contingency list. R4.3.1: Requirement R4, part 4.3.1 does not require modeling of Protection System equipment. It just requires you to have simulations which include the effects of Protection System equipment operation. Certainly engineering judgment should be used to determine which relay effects should be included in the simulations. No change made. R4.3.2: The intent of this requirement is to include in the Planning Assessment how voltage ride-through capability is analyzed in your studies. It does not require extensive modeling of a generating plant's distribution system. There is a reliability standard (PRC-024) under development which will require Generator Owners to provide information about the low voltage ride through capability of their generators based on relay settings. If complete information on the ride-through capability is not available, then you should document your assumptions regarding voltage ride-through capability for the Planning Assessment. The SDT has changed the wording of Requirement R4, part 4.3.2 to clarify this. **4.3.2** Trip generators where simulations show generator bus voltages or high side of the GSU voltages are less than known or assumed generator low voltage ride through capability. Include in the assessment any assumptions made. R4 and R5: The SDT does not agree that the requirements should be re-ordered. No change made.	
MidAmerican Energy Company	MidAmerican commends the SDT for its hard work on this standard. MidAmerican suggests that R4.5 be revised by changing "remaining Contingencies" to "remaining unselected Contingencies.
Response: R4.5: Several industry commenters have indicated that an explanation of "why the remaining Contingencies would produce less severe System performance" should be deleted since the contingencies selected are already justified as those that produce more severe System performance. The SDT agrees and has deleted the requirement for an "explanation of why the remaining Contingencies would produce less severe System results". **4.5** Those extreme events in Table 1 that are expected to produce more severe System impacts shall be identified and a list of those events to be evaluated for System performance in Requirement R4, part 4.2 created. The rationale for those Contingencies selected for evaluation shall be available as supporting information. If the analysis concludes there are cascading outages caused by the occurrence of extreme events, an evaluation of possible actions designed to reduce the likelihood or mitigate the consequences of the event(s) shall be conducted.	
SMUD	R4.3:R4.3.2 - The requirement is unclear. If it is to cover modeling issues, then it should be under MOD series. If it is to cover voltage ride through performance, then performance metrics should be provided. R4.5Listing all possible scenarios for studying extreme contingencies will result in a limitless list. Discretion should be given to the transmission planner on the selection of the contingencies without a requirement to list why other extreme contingencies have not been included.
Response: R4.3.2: The intent of this requirement is to include in the assessment how voltage ride-through capability is analyzed in your studies. It does not require extensive modeling of a generating plant's distribution system. There is a reliability standard (PRC-024) under development which will require Generator Owners to provide information about the low voltage ride through capability of their generators based on relay settings. If complete information on the ride-through capability is not available, then you should document your assumptions regarding voltage ride-through capability for the assessment. The SDT has changed the wording of Requirement R4, part 4.3.2 to clarify this.	

Organization	Question 4 Comment
4.3.2 Trip generators where simulations show generator bus voltages or high side of the GSU voltages are less than known or assumed generator low voltage ride through capability. Include in the assessment any assumptions made. R4.5: Several industry commenters have indicated that an explanation of "why the remaining Contingencies would produce less severe System performance" should be deleted since the contingencies selected are already justified as those that produce more severe System performance. The SDT agrees and has deleted the requirement for an "explanation of why the remaining Contingencies would produce less severe System results".	
Progress Energy Florida, Inc.	For R4.3.2, PEF assumes that the SDT understands that the extent of analyzing generation voltage ride-through capability does not extend to modeling of individual inductive loads on the Distribution side, as this does not fit the definition of the BES. Motor loads on the Distribution system do have an effect on generation voltage ride-through capability, however, and PEF therefore is perplexed as to what extent the SDT expects concerning analysis for this sub-requirement.
Response: R4.3.2: The intent of this requirement is to include in the assessment how voltage ride-through capability is analyzed in your studies. It does not require extensive modeling of a generating plant's distribution system. There is a reliability standard (PRC-024) under development which will require Generator Owners to provide information about the low voltage ride through capability of their generators based on relay settings. If complete information on the ride-through capability is not available, then you should document your assumptions regarding voltage ride-through capability for the assessment. The SDT has changed the wording of Requirement R4, part 4.3.2 to clarify this. **4.3.2** Trip generators where simulations show generator bus voltages or high side of the GSU voltages are less than known or assumed generator low voltage ride through capability. Include in the assessment any assumptions made.	
Xcel Energy	R4.3 - requires very labor intensive and detailed studies to be conducted; there are concerns about being able to accomplish the required studies within the 24 month implementation period; additionally, while there may be some reliability benefit to requiring these studies, have the costs of this requirement been studied?; an alternative could be some sort of phased implementation (x% completed by 24months, etc.) R4.3.3 - to what degree is generator relaying factored into the model/study?
Response: R4.3: The SDT believes that 24 months is sufficient to perform the additional studies. No change made. R4.3.3: Generator relaying is not a part of Requirement R4, part 4.3.3.	
Ameren	In Requirement R4.1, it is suggested that the word "contingency" be added to describe the lists created in R4.4Studies shall be performed to determine whether the BES meets the performance requirements in Table 1 based on the contingency lists created in Requirement R4.4. Regarding Requirement R4.4, it is suggested that a rewording be considered such as described below:For each category of the Planning Events in Table 1, those Planning Event Contingencies that are expected to produce more severe System impacts shall be identified, and a list of those Contingencies to be evaluated for System performance in Requirement R4.1 shall be created. The rationale for the Contingencies selected for evaluation shall be available as supporting information with an explanation of why the remaining Contingencies would produce less severe System results.

Organization	Question 4 Comment
	R4.3.2 requires that voltage ride through capability be analyzed. It is not clear what should be analyzed. e.g. auxiliary loads, generator protection, generator capability, etc. We would like to see more clarity on this requirement. It seems that the stuck breaker scenarios would always be more severe than the internal breaker failure scenario since they would be clearing in delayed clearing time and thus make P2.3 redundant. Are there is some question on whether P3 contingencies would be necessary for stability analysis. Revise wording in VSL from “categories” to “applicable categories”. e.g. some entities may not have common tower facilities and thus there would be no P7 category contingencies to evaluate. Footnote #3 needs to be revised to include Double-Line-To-Ground faults in addition to Three-Phase faults indicating that the SLG criteria is met.

Response: R4.1: The SDT agrees and has added the word "Contingency".

> **4.1** Studies shall be performed for planning events to determine whether the BES meets the performance requirements in Table 1 based on the Contingency list created in Requirement R4, part 4.4.

R4.4: The SDT agrees and has modified the wording similar to your suggested wording however - due to other stakeholder comments, the phrase requiring an explanation was deleted from the revised standard.

> **4.4** Those planning events in Table 1that are expected to produce more severe System impacts on its portion of the BES, shall be identified, and a list of those Contingencies to be evaluated for System performance in Requirement R4, part 4.1 created. The rationale for those Contingencies selected for evaluation shall be available as supporting information.

R4.3.2: The intent of this requirement is to include in the assessment how voltage ride-through capability is analyzed in your studies. It does not require extensive modeling of a generating plant's distribution system. There is a reliability standard (PRC-024) under development which will require Generator Owners to provide information about the low voltage ride through capability of their generators based on relay settings. If complete information on the ride-through capability is not available, then you should document your assumptions regarding voltage ride-through capability for the assessment. The SDT has changed the wording of Requirement R4, part 4.3.2 to clarify this.

> **4.3.2** Trip generators where simulations show generator bus voltages or high side of the GSU voltages are less than known or assumed generator low voltage ride through capability. Include in the assessment any assumptions made.

Stuck breaker comment: A stuck breaker scenario would not always be more severe than an internal breaker fault. Depending on the location of CTs and PTs, an internal fault could take longer to clear.

P3 comment: Fault induced delayed voltage recovery simulations could be more severe in a Load area when a generator is out of service. Therefore, P3 events are applicable to Stability analysis.

VSL: The SDT does not believe it is necessary to add the word "applicable" in front of "categories" in the VSL for Requirement R4. The requirement in Part 4.1 is to study the list (Part 4.4) of "Those planning event Contingencies in Table 1 that are expected to produce more severe System impacts". If you have no applicable events in one of the categories, then just state that in the Planning Assessment. This will not be considered as not performing a study for one of the categories.

Organization	Question 4 Comment			
R4 VSL	The responsible entity did not identify planning events as described in Requirement R4, part 4.4 or extreme events as described in Requirement R4, part 4.5.	The responsible entity did not perform studies as specified in Requirement R4, part 4.1 to determine that the BES meets the performance requirements for one of the categories (P1 through P7) in Table 1. OR The responsible entity did not perform studies as specified in Requirement R4, part 4.2 to assess the impact of extreme events. OR The responsible entity did not base its studies on computer simulation models using data provided in Requirement R1.	The responsible entity did not perform studies as specified in Requirement R4, part 4.1 to determine that the BES meets the performance requirements for two of the categories (P1 through P7) in Table 1. OR The responsible entity did not perform Contingency analysis as described in Requirement R4, part 4.3.	The responsible entity did not perform studies as specified in Requirement R4, part 4.1 to determine that the BES meets the performance requirements for three or more of the categories (P1 through P7) in Table 1.
Footnote #3 (now footnote #2): The SDT agrees and has modified the wording similar to your suggested wording. **Footnote 2** Unless specified otherwise, simulate Normal Clearing faults. Single line to ground (SLG) or three phase (3Ø) are the fault types, that must be evaluated in Stability simulations for the event described. A 3Ø or a double line to ground fault study indicating the criteria are being met is sufficient evidence that a SLG condition would also meet the criteria.				
Manitoba Hydro	R4.1: The requirement text should be changed to read “studies shall be performed for Planning Events to determine whether the BES meets the performance requirements in Table 1 based on the contingency lists of events created in Requirement R4.4. R4.2: Requirement wording should be similar to R4.4 for consistency. R4.3: We agree that consideration of generator voltage ride through is important. However, we also suggest that frequency ride through capability be analyzed. R4.4 & R4.5: The selection of the contingency list is based on the knowledge of the PC/TP. How do you produce “an explanation of why the remaining Contingencies would produce less severe System results. without proving this with a study” If the explanation is “that based on engineering judgment, the remaining contingencies would produce less severe system results” then the explanation is implied and not necessary.			

Organization	Question 4 Comment
Response: R4.1: The SDT agrees and has changed the wording similar to your suggestion. **4.1** Studies shall be performed for planning events to determine whether the BES meets the performance requirements in Table 1 based on the Contingency list created in Requirement R4, part 4.4. R4.2: The SDT does not understand this comment. No change made. R4.3: Frequency ride-through for generators would only be needed for a limited number of simulations, and therefore the SDT does not see the need to make a general requirement for this. No change made. R4.4 and R4.5: Several industry commenters have indicated that an explanation of "why the remaining Contingencies would produce less severe System performance" should be deleted since the contingencies selected are already justified as those that produce more severe System performance. The SDT agrees and has deleted the requirement for an "explanation of why the remaining Contingencies would produce less severe System results".	
LCRA Transmission Services Corporation	In R4.3.3, what is meant by the term "electrical system quantities"? Quantities is typically an amount and its use here would indicate that a term such as parameters would be better suited.
Response: "Electrical system quantities" are items such as voltage, current, power, etc. The SDT believes the use of this term is appropriate in Requirement R4, part 4.3.3 (now 4.3.4). No change made.	
National Grid	R4 Comment " "Planning Assessment" and "shall perform analysis" are contradictory. R4 and its sub-requirements, then reference study requirements. If this is an assessment, then the standard shouldn't be requiring a study. R4.1 Comment ? A. It is not clear what should be included in the list related to R4.4. Events P0 through P4 should include analysis of all facilities BES facilities for which the Transmission Planner is responsible. Events P5 and higher should be limited to contingency events that are deemed the most significant by the Transmission Planner. B. R4.1 refers to "lists". Is R4.4 creating one list or multiple lists? Suggest changing "lists" to "list" R4.2 Comment - Since R4.4 and R4.5 both require the responsible entity to create a list, the words in R4.2 be should be revised to be more similar to the words in R4.1. Suggest changing "Studies shall be performed to assess the impact of the Extreme Events identified in Requirement R4.5. " to "Studies shall be performed to assess the impact of the Extreme Events, which are identified by the list created in Requirement R4.5. R4.3.2 Priority Comment - Traditionally transmission planners have assumed that generators would ride through low voltages associated with Planning Events which is generally adequate for non-wind generators. If this standard is going to require its incorporation into the assessments, there should be an MOD standard developed requiring the generators to provide the necessary information prior to its inclusion as a requirement in this standard. R4.5 Priority Comment ?It is recommended that the requirement for Extreme Event testing be removed from this standard as there is no requirement to develop a Corrective Action Plan to address unacceptable consequences. If the requirement is not deleted, the following is recommended:- Extreme Event performance should be a consideration when developing Corrective Action Plans to address Planning Events. If not, it will be difficult to utilize the results to obtain projects approvals.- It should be clear that an evaluation does not require solution development for all Extreme Events- Change "an evaluation of possible

Organization	Question 4 Comment
	actions"? to "where appropriate, reasonably practicable actions designed to reduce the likelihood or mitigate the consequences and adverse impacts of the event(s) shall be considered. - The statement "and shall include an explanation of why the remaining Contingencies would produce less severe System results" is too open and should be deleted. Violation Severity Levels:R4.4 Since this is a binary requirement, should this have a Severe VS? R4.5 Since this is a binary requirement, should this have a Severe VSL?
Response: R4: The SDT does not see a contradiction. Requirement R4 is a study requirement. The assessment requirement for stability is Requirement R2, part 2.4 and requires the use of current or past studies. No change made. R4.1A: The SDT disagrees. P1 - P4 (P0 not applicable to Stability) should be run for those Contingencies expected to produce more severe results. It is not necessary to study faults on every line in the System. No change made. R4.1B: The SDT agrees and has changed "lists" to "list". **4.1** Studies shall be performed for planning events to determine whether the BES meets the performance requirements in Table 1 based on the Contingency list created in Requirement R4, part 4.4. R4.2: The SDT agrees and has changed to your suggested wording. **4.2** Studies shall be performed to assess the impact of the extreme events which are identified by the list created in Requirement R4, part 4.5. R4.3.2: There is a reliability standard (PRC-024) under development which will require Generator Owners to provide information about the low voltage ride through capability of their generators based on relay settings. Requirement R4, part 4.3.2 requires you to include in the assessment how you analyzed voltage ride-through capability. If complete information on the ride-through capability is not available, then you should document your assumptions regarding ride-through capability for the assessment. The SDT has changed the wording of Requirement R4, part 4.3.2 to clarify this. **4.3.2** Trip generators where simulations show generator bus voltages or high side of the GSU voltages are less than known or assumed generator low voltage ride through capability. Include in the assessment any assumptions made. R4.5: The SDT considers extreme event testing to be an important part of the assessment and therefore will not delete it. The expectation for extreme event testing is that for major problems you will evaluate actions to reduce likelihood or mitigate consequences. The SDT believes the original words express this concept better than your suggested words. No change made. R4.4 and R4.5 VSLs: The VSLs are based on taking Requirement R4 as a whole with Requirement R4, parts 4.4 and 4.5 being portions of that whole. The SDT does not think that failing to create a list of Contingencies should be a severe violation. When taking Requirement R4 as a whole, failing to create the list was deemed to be lower violations. No change made.	
Entergy Services, Inc	In R4.5 what would constitute "an evaluation of possible actions designed to reduce?"? R4.3.2 requires that voltage ride through capability be analyzed. It is not clear what should be analyzed (e.g. auxiliary loads, generator protection, generator capability, etc.) This requirement needs more clarity. " R4.3.2 " By in large, the industry does not have the input data or the methods to do this. It would seem necessary to have PRC-024 approved before this can be met.

Organization	Question 4 Comment
Response: R4.5: "An evaluation of actions designed to reduce" means looking for ways to reduce the probability of the event occurring or reducing the magnitude of the consequences of that event. For example, if a three phase fault with a bus differential failing to operate results in the collapse of a large Load area, a possible action would be to add a redundant bus differential relay. This reduces the probability of the event occurring. Or if a three phase fault with a stuck breaker results in a large area of the system pulling out of synchronism, an SPS could be used to trip a generator and keep the rest of the system in synchronism. This would reduce the magnitude of the consequences of the event. The evaluation would be comparing potential solutions and their cost with the consequences of the event to determine the best course of action to take (if any). R4.3.2: There is a reliability standard (PRC-024) under development which will require Generator Owners to provide information about the low voltage ride through capability of their generators based on relay settings. Requirement R4, part 4.3.2 requires you to include in the assessment how you analyzed voltage ride-through capability. If complete information on the ride-through capability is not available, then you should document your assumptions regarding ride-through capability for the assessment. The SDT has changed the wording of Requirement R4, part 4.3.2 to clarify this. **4.3.2** Trip generators where simulations show generator bus voltages or high side of the GSU voltages are less than known or assumed generator low voltage ride through capability. Include in the assessment any assumptions made.	
BC Hydro	Comments: Consider changing R4.3.2 to, “Confirm proper generator performance under anticipated conditions including low voltage ride-through capability” In R4.3.3, change “VAR” to “var”. The IEC has adopted the name var, var (volt ampere reactive power), for the coherent SI unit volt ampere for reactive power. (see: http://www.iec.ch/zone/si/si_elecmag.htm#si_rpo). Is there an overlap between R4.3.3 and the MOD standards? If so, perhaps R4.3.3 should be deleted. If not, perhaps the MOD standard should be expanded to include this. Consider adding R4.3.4, “not simulate any operator intervention”
Response: R4.3.2: The SDT has changed the wording of Requirement R4, part 4.3.2 for additional clarification. **4.3.2** Trip generators where simulations show generator bus voltages or high side of the GSU voltages are less than known or assumed generator low voltage ride through capability. Include in the assessment any assumptions made. R4.3.3: The SDT agrees and has changed "VAR" to "var". **4.3.4** Simulate the expected automatic operation of existing and planned devices designed to provide dynamic control of electrical system quantities when such devices impact the study area. These devices may include equipment such as generation exciter control and power system stabilizers, static var compensators, power flow controllers, and DC Transmission controllers. R4.3.3: MOD-012 and MOD-013 do not require the data to be used for an assessment of the Transmission System. Therefore, the requirement to simulate the operation of exciters and stabilizers is needed in this standard. No change made. R4.3.4: The SDT does not think it is necessary to add "not simulate any operator intervention". If operator intervention is appropriate in the time frame of the study, then simulate it. No change made.	
Midwest ISO	Opening Remarks. Specific Comments for Requirement 4:

Organization	Question 4 Comment
	A) Under R4, the Time Horizon of the TPL standards is intended for years one through 10; However the Time Horizon shown in R4 only says "Long-term Planning". By definition of Long-Term Transmission Planning Horizon this covers years 6 through 10 and beyond. Suggestion to change the Time Horizon to read: "Near-Term and Long-Term Transmission Planning".
Minnesota Power	Under R4, the Time Horizon of the TPL standards is intended for years one through 10; however, the Time Horizon shown in R4 only says "Long-term Planning". By definition of Long-Term Transmission Planning Horizon this covers years 6 through 10 and beyond. Suggestion to change the Time Horizon to read: "Near-Term and Long-Term Transmission Planning".

Response: The *Time Horizon* term at the end of the requirement deals with mitigation time periods (as shown below) and is not connected to the assessment time frames. Time Horizons are a consideration when there is a violation of a requirement – the impact to the BES of violating a requirement with a long-term planning horizon is not expected to be as severe as the impact associated with violating a requirement with a real-time operations time horizon. No change made.

Mitigation Time Horizon

The time horizons available for mitigating a violation to a requirement include the following:

- **Long-term Planning** — a planning horizon of one year or longer.
- **Operations Planning** — operating and resource plans from day-ahead up to and including seasonal.
- **Same-day Operations** — routine actions required within the timeframe of a day, but not real-time.
- **Real-time Operations** — actions required within one hour or less to preserve the reliability of the bulk electric system.
- **Operations Assessment** — follow-up evaluations and reporting of real time operations.

PJM	In R4, why require a Planning Coordinator AND a Transmission Planner to perform this analysis? Isn't this a duplication of effort? R4.4 should come before R4.1. You should never reference down in a standard. Please present the items in the order in which they should be performed/considered. Also in R4.1, a space is needed between "Requirement" and -R4.4-. R4.5 should come before R4.2. You should never reference down in a standard. Please present the items in the order in which they should be performed/considered. In R4.2.3, I question whether the existing dynamics models can evaluate voltage ride through. If you are just talking about modeling voltage protection of generators then maybe, but this protection information is presently not collected by the ERAG MMWG for the Eastern Interconnection. R4.4 should be broken into two requirements since two separate tasks need to be performed. R4.5 should be broken into three requirements since three separate tasks need to be performed.

Organization	Question 4 Comment
Response: R4: Requiring the Planning Coordinator AND the Transmission Planner to perform analysis should not result in a duplication of effort. Requirement R6 (now Requirement R7) requires the two entities to agree on their individual and joint responsibilities. No change made. R4.4 & R4.5: The SDT does not believe that re-ordering the requirements serves any purpose. No change made. R4.1: The SDT has revised the requirement. **4.1** Studies shall be performed for planning events to determine whether the BES meets the performance requirements in Table 1 based on the Contingency list created in Requirement R4, part 4.4. R4.2.3: The SDT assumes you meant Requirement R4.3.2: There is a reliability standard (PRC-024) under development which will require Generator Owners to provide information about the low voltage ride through capability of their generators based on relay settings. Requirement R4, part 4.3.2 requires you to include in the assessment how you analyzed voltage ride-through capability. If complete information on the ride-through capability is not available, then you should document your assumptions regarding ride-through capability for the assessment. The SDT has changed the wording of Requirement R4, part 4.3.2 to clarify this. **4.3.2** Trip generators where simulations show generator bus voltages or high side of the GSU voltages are less than known or assumed generator low voltage ride through capability. Include in the assessment any assumptions made. R4.4: The SDT disagrees that this requirement should be broken into two requirements. There are not two independent tasks in the requirement. The tasks are inherently correlated and will be assessed as part of the primary Requirement R4. No change made. R4.5: The SDT disagrees that this requirement should be broken into three requirements. There are not three independent tasks in the requirement. The tasks are inherently correlated and will be assessed as part of the primary Requirement R4. No change made.	
Brazos Electric Cooperative	Same general comment in 4.4 and 4.5 about the requirement to maintain documentation on why certain events would produce less severe results.
Response: Several industry commenters have indicated that an explanation of "why the remaining Contingencies would produce less severe System performance" should be deleted since the contingencies selected are already justified as those that produce more severe System performance. The SDT agrees and has deleted the requirement for an "explanation of why the remaining Contingencies would produce less severe System results".	
American Electric Power	The cross-referencing between R4.1 and R4.4, and between R4.2 and R4.5, seems to add unnecessary complexity and could be eliminated by merging each of these pairs of sub-requirements. Under the event column of Table 1 of the proposed TPL standard, considering entries P3 and P6, the option to apply either SLG or 3-phase fault types should be retained to be consistent with the existing TPL standards, which permit either SLG or 3-phase faults (see existing Table 1, Category B and Category C3). If the SDT decides not to make the requested change, then the SDT should give recognition to the unique characteristics of 765 kV lines where permanent 3-phase faults are virtually non-existent. AEP's 765 kV transmission facilities have been successfully planned and operated with only a SLG fault criterion. Therefore, Table 1 Planning Events P3 and P6 should permit application of SLG faults.
Response: The SDT does not see any harm in having the cross referencing. No change made.	

Organization	Question 4 Comment
Table 1: Requirement R1.3.1 in TPL-002-0a states that simulations should "Be performed and evaluated only for those Category B Contingencies that would produce the more severe System results or impacts." The SDT believes that the intent of the existing TPL standards is to simulate the worst case whether three phase or single-line-to-ground. The new standard is clarifying that three-phase is required for single Contingency events. No change made. Note that AEP may request an entity variance from this part of the standard.	
ITC Holdings	Comments: In R2.5.1, a limitation is identified for stability studies that are used to support the annual assessment be less than five calendar years old. Should this reference be included in R4??
Response: R4: Because the five year limitation is stated in Requirement R2, part 2.5.1, there is no need to repeat it in Requirement R4. No change made.	
LADWP	R4.5 See coments on R3.4 and 3.5
Response: See response to comments for Requirement R3, parts 3.4 and 3.5.	
Platte River Power Authority	R4.3.2. Delete this requirement as it is covered under MOD-013-1, R1.2 for RRO Dynamics Data requirements. When the generator is modeled accordingly the generator's performance will be simulated and analyzed in the stability studies. R4.3.3. Delete this requirement as it is covered under MOD-013-1, R1.2 and R1.3 for RRO Dynamics Data requirements. When the generator is modeled accordingly the generator's performance will be simulated and analyzed in the stability studies.
Response: R4.3.2: The SDT has changed the wording of Requirement R4, part 4.3.2 for additional clarification. This does not require the modeling of generator relays although that is one method that could be used to meet the requirement. **4.3.2** Trip generators where simulations show generator bus voltages or high side of the GSU voltages are less than known or assumed generator low voltage ride through capability. Include in the assessment any assumptions made. R4.3.3: MOD-013 does not require the data to be used for an assessment of the Transmission System. Therefore, the requirement to simulate the operation of exciters and stabilizers is needed in this standard. No change made.	
MAPPCOR	R4.3.2 - Traditionally transmission planners have assumed that generators would ride through low voltages associated with Planning Events which is generally adequate for non-wind generators. If this standard is going to require its incorporation into the assessments, there should be an MOD standard developed requiring the generators to provide the necessary information prior to its inclusion as a requirement in this standard. R4.5 -Recommend that the requirement for Extreme Event testing be removed from this standard as there is no requirement to develop a Corrective Action Plan to address unacceptable consequences. Otherwise we recommend the following:-Extreme Event performance should be a consideration when developing Corrective Action Plans to address Planning Events-It should be clear that an evaluation does not require solution development for all Extreme Events-Change “an evaluation of possible actions”? to “where appropriate, reasonably practicable actions designed to reduce the likelihood or mitigate the consequences and adverse impacts of the event(s) shall be considered.

Organization	Question 4 Comment
Response: R4.3.2: There is a reliability standard (PRC-024) under development which will require Generator Owners to provide information about the low voltage ride through capability of their generators based on relay settings. Requirement R4, part 4.3.2 requires you to include in the assessment how you analyzed voltage ride-through capability. If complete information on the ride-through capability is not available, then you should document your assumptions regarding ride-through capability for the assessment. The SDT has changed the wording of Requirement R4, part 4.3.2 to clarify this. **4.3.2** Trip generators where simulations show generator bus voltages or high side of the GSU voltages are less than known or assumed generator low voltage ride through capability. Include in the assessment any assumptions made. R4.5: The SDT considers extreme event testing to be an important part of the assessment and therefore will not delete it. The expectation for extreme event testing is that for major problems you will evaluate actions to reduce likelihood or mitigate consequences. The SDT believes the original words express this concept better than your suggested words. No change made.	
Orlando Utilities Commission	For Requirement 4.3.1 and 4.3.3 I suggest adding language similar to 3.3.2 and 3.3.3 establishing that "studies shall consider" rather then requiring every simulation precisely recreate this usually minor part of system performance. These devices generally do not respond except for a nearby event, and even then their response is rarely such that it would make the situation "worse". The effect of these devices must be considered, but mandating that every simulation faithfully reproduce the response of every device is not only an efficient way to do this, it actually provides a counter incentive to going above and beyond the standard requirements. Any simulation used to meet this standard that failed to precisely reproduce the performance of this equipment would be a violation of this requirement (as currently written). As such there is no incentive for an entity to include anything but the absolute minimum number of simulations required to meet the standard, since each extra simulation represents an opportunity to miss this requirement. Good planning is based on running a broad range of events against a broad range of conditions and evaluating those responses against a set of performance criteria. This is encouraged by requiring that studies consider the response of equipment to these events rather then mandating their precise reproduction in simulation. Requirement 4.4 and 4.5 establish that only those events that would cause the most severe system impacts should be studied. This is an excellent requirement since it focuses the large resource requirement in performing these studies on the events that will provide the best information. Does the intent of the "More severe events" to establish actual study parameter extend between the planned events (R4.4) and extreme events (R4.5)? Or phrased another way, if an entity selects a proper range of extreme events and establishes that planning event performance requirements are met, could that be used as evidence that R4.4 is met as well, or would R4.4 require the same conditions be reproduced in their less severe configuration.
Response: R4.3.1: The SDT believes you should simulate the removal of System elements that Protection System and other controls would remove, not just consider it. No change made. R4.3.3 (now Part 4.3.4): The SDT has clarified that the devices to be included in the study which provide dynamic control are those that impact the study area. R4.4 and R4.5: You can always demonstrate that performance requirements are met by meeting them for a more severe Contingency. It is possible that you could demonstrate that performance requirements are met for planning events by performing extreme events (e.g., using a three-phase fault with stuck breaker Contingency can demonstrate that performance requirements for a single phase fault plus stuck breaker Contingency is met).	
American Transmission	We propose the following comments for R4:Add R4.3.3 text to include relay loadability in the R4 (Stability) requirements to

Organization	Question 4 Comment
Company	parallel R3.3.3 in the R3 (Steady State) requirement which would more clearly relate to the specific requirements in PRC-023. We suggest this text: "Incorporate relay loadability per PRC-023 and identify how relay loadability is analyzed in the dynamic simulation. In R4.3.4, we propose limiting the scope to automatic devices and adding the notion of "including but not limited to". We suggest R4.3.4 text of: "Simulate the expected automatic operation of existing and planned control devices including but not limited to generation exciter control and power system stabilizers, static VAR compensators, power flow controllers, and DC Transmission controllers. Add R4.3.5. The obligation to consider only planned System adjustments that are executable should be a Requirement, rather than performance note "e" in the Planning Events, Steady State & Stability section of Table 1. We suggest this text that matches R3.3.5: "Consider planned System adjustments, such as Transmission configuration changes and redispatch of generation, that are executable within the time duration of the applicable Facility Ratings.
Response: R4.3.3: The SDT agrees with the general idea and has added Requirement R4, part 4.3.3. However, Requirement R4, part 4.3.3 requires that you "Simulate the impact of transient swings on Protection System operation for Transmission lines and transformers" rather than creating a Stability requirement for relay loadability. This requirement is more applicable to Stability studies than a relay loadability requirement would be. Relay loadability is more of a steady state issue than a dynamic issue. **4.3.3** Simulate the impact of transient swings on Protection System operation for Transmission lines and transformers. R4.3.4: The SDT has made the suggested changes. **4.3.4** Simulate the expected automatic operation of existing and planned devices designed to provide dynamic control of electrical system quantities when such devices impact the study area. These devices may include equipment such as generation exciter control and power system stabilizers, static var compensators, power flow controllers, and DC Transmission controllers. R4.3.5: Header note 'e' gives permission to use System adjustments under certain conditions. This is not a requirement and doesn't need to be included in Requirement R4. No change made.	
Idaho Power	R4.3.2 Generation protection system contain up to a dozen tripping functions functions. Is the intent to model all relay protection? The existing commercial programs do not have sufficient models or capacity to do that for all generators in the system.R4.5 ? Again I disagree with this requirement. It is the same as R3.5 and overly burdensome.
Response: R4.3.2: The intent of this requirement is to include in the assessment how voltage ride-through capability is analyzed in your studies. It does not require extensive modeling of all relay protection. There is a reliability standard (PRC-024) under development which will require Generator Owners to provide information about the low voltage ride through capability of their generators based on relay settings. If complete information on the ride-through capability is not available, then you should document your assumptions regarding voltage ride-through capability for the assessment. The SDT has changed the wording of Requirement R4, part 4.3.2 to clarify this. **4.3.2** Trip generators where simulations show generator bus voltages or high side of the GSU voltages are less than known or assumed generator low voltage ride through capability. Include in the assessment any assumptions made.	

Organization	Question 4 Comment
Duke Energy	Revise M4 to include a reference to R6, since the allocation of responsibilities will directly affect the evidence which is to be provided.
Response: M4: The SDT disagrees. No change made.	
California ISO	As currently drafted, R4.3 is not a requirement. Without the statements in R4.3.1-R4.3.3, R4.3 is simply a phrase. Sub-Sub-Requirements R4.3.1 through R4.3.3 should be bullets under R4.3, with the language in R4.3 modified so that it becomes the requirement to conduct contingency analyses that address the three resulting bullets. R4.3.2 it is not clear what is required to be modeled. Typically a generator may have 10 or more protective relays. Is the intent to model all relay protection? The existing commercial programs do not have sufficient models or capacity to do that for all generators in the system. R4.5 We disagree with the requirement to explain why remaining Extreme Contingencies would produce less severe System results than the ones selected for study. The first part of the requirement requires identification of events that produce more severe System impacts. The reason the others were not selected is because they were less severe or non-credible. In any case, theoretically, there can always be a more severe Extreme Contingency than the one selected for study. For example, if the Extreme Contingency studied were simultaneous loss of 3 transmission lines with failure of redundant RAS, then simultaneous loss of 4 lines with failure of 2 sets of redundant RAS would be more severe. Listing all possible extreme events could result in a limitless list.

Response: R4.3: The SDT disagrees as these are mandatory elements of the Contingency analyses. Bullets are only used to identify the possible, but not all inclusive, elements of a menu. However, Requirement R4, part 4.3 has been modified to read more like a requirement as shown below.

> **4.3** Contingency analyses shall be performed and:

R4.3.2: The intent of this requirement is to include in the assessment how voltage ride-through capability is analyzed in your studies. It does not require modeling of all relay protection. There is a reliability standard (PRC-024) under development which will require Generator Owners to provide information about the low voltage ride through capability of their generators based on relay settings. If complete information on the ride-through capability is not available, then you should document your assumptions regarding voltage ride-through capability for the assessment. The SDT has changed the wording of Requirement R4, part 4.3.2 to clarify this.

> **4.3.2** Trip generators where simulations show generator bus voltages or high side of the GSU voltages are less than known or assumed generator low voltage ride through capability. Include in the assessment any assumptions made.

R4.5: Several industry commenters have indicated that an explanation of "why the remaining Contingencies would produce less severe System performance" should be deleted since the Contingencies selected are those that produce more severe System performance. The SDT agrees and has deleted the requirement for an "explanation of why the remaining Contingencies would produce less severe System results".

> **4.5** Those extreme events in Table 1 that are expected to produce more severe System impacts shall be identified and a list of those events to be evaluated for System performance in Requirement R4, part 4.2 created. The rationale for those Contingencies selected for evaluation shall be available as supporting information. If the analysis concludes there are cascading outages caused by the occurrence of extreme events, an evaluation of possible actions designed to reduce the likelihood or mitigate the consequences of the event(s) shall be conducted.

Organization	Question 4 Comment
Independent Electricity System Operator	. Same comments as in R3, above, except our proposed wording on R4 will read:R4. The Stability analyses of the Near-Term Planning Assessment as stipulated in R2.4.2 shall be performed as follows:. since there are no detailed requirements stipulated for Stability analysis portion for the Long-Term Planning Assessment. However, the main requirement contains a condition for performing the Contingency analyses listed in Table 1. First of all, there are no VSLs for failing to meet this condition. Secondly, this duplicates with some of the subrequirements, e.g. R4.4, R4.5. Suggest to remove this condition from the main requirement. If the main requirement is to be revised in a similar fashion as suggested for R3, then this will become a non-issue. 2. Similar to R3, we agree with the VRF, Time Horizon and Measure for R4. However, we do have the same difficulty with the VSL based on our comments on the convoluted nature of the requirement as indicated above, especially on the Moderate VSL for The Transmission Planner or Planning Coordinator did not base its studies on computer simulations using models utilizing data provided in Requirement R1.
Response: R4: The SDT does not see any need for Requirement R4 to reference back to Requirement R2, part 2.4. No change made. R4 VSL: (1) The VSL for Requirement R4 does cover failing to perform the Contingency analysis in Table 1. Depending on how many Contingency categories are not addressed, the violation could be moderate, high, or severe. No change made. R4 VSL: (2) Requirement R4 provides the general requirement to perform the Contingency analysis in Table 1. The parts like Requirement R4, part 4.4 provide more details on what must be run. There is no duplication. No change made. R4.5: The SDT believes that Requirement R4, part 4.5 is a necessary part. No change made. R4 VSL: The SDT disagrees with this idea. No change made.	
Kansas City Power & Light	R4.3 requires very labor intensive and detailed studies to be conducted; there are concerns about being able to accomplish the required studies within the 24 month implementation period; additionally, while there may be some reliability benefit to requiring these studies have the costs of this reliability increase been studied?; an alternative could be some sort of phased implementation (x% completed by 24months, etc.) R4.3.3 to what degree is generator relaying factored into the model/study?
Response: R4.3: The SDT believes that 24 months is sufficient to perform the additional studies. No change made. R4.3.3: Generator relaying is not a part of Requirement R4, part 4.3.3.	
ReliabilityFirst Corporation	R4.3.2 – Requires simulating generator voltage ride through capability. This may require modeling generator protection schemes to existing Dynamic models. This falls under which again falls under Section 1600 of NERC Rules of Procedure.
Response: R4.3.2: The intent of this requirement is to include in the assessment how voltage ride-through capability is analyzed in your studies. It does not require modeling of generator protection schemes. There is a reliability standard (PRC-024) under development which will require Generator Owners to provide information	

Organization	Question 4 Comment
	about the low voltage ride through capability of their generators based on relay settings. If complete information on the ride-through capability is not available, then you should document your assumptions regarding voltage ride-through capability for the assessment. The SDT has changed the wording of Requirement R4, part 4.3.2 to clarify this. **4.3.2** Trip generators where simulations show generator bus voltages or high side of the GSU voltages are less than known or assumed generator low voltage ride through capability. Include in the assessment any assumptions made.

5. Requirement R5 – Please provide any specific comments on the requirement text, VRF, Time Horizon, measure associated with the requirement, data retention associated with the requirement, and/or the VSL associated with the requirement.

Summary Consideration: In response to industry comments, the SDT has deleted the word 'proxy' in favor of the terminology 'criteria or methodology' in Requirement R5 (now Requirement R6).

R6. Each Transmission Planner and Planning Coordinator shall define and document, within its Planning Assessment, any criteria or methodology used in its analysis to identify System instability for conditions such as cascading outages, voltage instability, or uncontrolled islanding.

Organization	Question 5 Comment
Dominion - Electric Transmission Tucson Electric Power Company	Use of Proxies: There is no requirement that the Planning Coordinator (PC) must use the same proxies as the Transmission Planner (TP). Since differences in proxy assumptions may lead to different study results, R5 should be revised to require the PC and TP to coordinate the use of proxies.
Hydro-Québec TransEnergie (HQT)	There is no requirement that the Planning Coordinator must use the same proxies as the Transmission Planner. Differences in proxy assumptions may lead to different study results. R5 needs to be modified to require coordination of proxies between Planning Coordinators and Transmission Planners.
Response: Criteria or methodologies will be fleshed out in peer review. No change made.	
OPUC	MRO NSRS proposes specifying that the proxy documentation be included in the Planning Assessment and add the rationale for the proxy. MRO NSRS suggests this text: "Each Transmission Planner and Planning Coordinator shall document within the Planning Assessment any proxies used in the analysis to identify System instability for conditions such as cascading outages, voltage instability, or uncontrolled islanding. The documentation will consist of the definition of each proxy used and the rationale for the proxies.
Response: The SDT has revised the requirement language to provide greater clarity as to the intent. **R6.** Each Transmission Planner and Planning Coordinator shall define and document, within its Planning Assessment, any criteria or methodology used in its analysis to identify System instability for conditions such as cascading outages, voltage instability, or uncontrolled islanding.	
Bonneville Power Administration	There is no requirement that the Planning Coordinator (PC) must use the same proxies as the Transmission Planner (TP). Since differences in proxy assumptions may lead to different study results, R5 should be revised to require the PC and TP to coordinate the use of proxies. M5 doesn't make any sense. Need to revise this Measure so that it fits the Requirement R5. Also need to revise the Data Retention discussion in Section 1.4 to align with R5. In the VSL associated with R5, we believe that failure to define and document one of the proxies should be a moderate VSL,

Organization	Question 5 Comment
	failure to define and document two proxies should me a high VSL, while failure to define and document three proxies should be a severe VSL. Otherwise failing to document only one proxy would result in a severe VSL.
Response: Criteria or methodologies will be fleshed out in peer review. The SDT has changed the language of Requirement R6 (formerly Requirement R5). **R6.** Each Transmission Planner and Planning Coordinator shall define and document, within its Planning Assessment, any criteria or methodology used in its analysis to identify System instability for conditions such as cascading outages, voltage instability, or uncontrolled islanding. The SDT does not agree and believes that the Measure appropriately addresses Requirement R6 (formerly Requirement R5). No change made. The SDT does not agree and believes that the Data Retention for this Requirement is in line with accepted Guidelines. No change made. The SDT appreciates your comment on the level of severity for this Requirement but still believes this is the appropriate level to apply. No change made.	
MRO MRO NERC Standards Review Subcommittee	We agree with the stated Requirement, Measure, VRF, Time-Horizon, Data Retention and VSL of requirement R5.
PacifiCorp	None - no concerns identified by the TWG
JEA	PEF does not presently have any concerns with R5.
Central Maine Power Company	We agree with the requirement, the VRF, Time Horizon, Measure and VSLs.
Response: Thank you for your response. However, due to other responses, some changes have been made. Please see the summary response.	
SRP	In R5 the term “proxy” needs to be defined. In addition, an example of a proxy should be given.
Gainesville Regional Utilities	R5:Guidelines for identifying proxies for unstable conditions would be helpful.
Progress Energy Florida, Inc.	The term proxy is unclear. Please provide an example or an explanation of proxy. If this is related to Note “i” in Table 1, it should be so stated. If it is related to assumptions or criteria, please state so.
Xcel Energy	Please clearify "Proxies"
Mississippi Delta Energy Agency	The term proxy is unclear. Please provide an example or an explanation of proxy. Perhaps a different term, such as metric, may better describe this requirement to more people.
Tenaska, Inc.	In R5, what is meant by the term “any proxies”? Please clarify. This comment also pertains to this terms use in the VSL as well.

Organization	Question 5 Comment
Manitoba Hydro	It is unclear as to what is meant by the term “proxy used in the analysis” used in this requirement. Is a “proxy” a “criteria”?
National Grid	Comments: The meaning of the word “proxies” in this context seems uncommon making the requirement unclear. Perhaps “proxies” should be replaced with “criteria” or “criteria or proxies”.
Northern Indiana Public Service Company	What is a proxy as related to transmission planning? The drafting team should not introduce "non-standard" terms in a Standard document.
San Diego Gas and Electric Co	R5. For clarification, please list examples of "proxies" that might be used.
Minnesota Power	an example of proxy may be helpful, not all entities use proxies.
ISO New England, Inc. Western Area Power Administration American Electric Power Great River Energy New York Independent System Operator Modesto Irrigation District Louisiana Energy and Power Authority City Utilities of Springfield, MO Duke Energy New Brunswick System Operator MidAmerican Energy Company	The term proxy is unclear. Please provide an example or an explanation of proxy.
California ISO NorthWestern Corporation NorthWestern Energy (NWE) (NWMT)	The term “proxies” is somewhat confusing; recommend the use of “assumptions” if that is an acceptable substitute.
Independent Electricity System	On page 13 under Section R5, can the term “proxies” be defined and clarified, and examples given, in this context ?

Organization	Question 5 Comment
Operator Northeast Power Coordinating Council	
Kansas City Power & Light	5. Requirement R5 Please provide any specific comments on the requirement text, VRF, Time Horizon, measure associated with the requirement, data retention associated with the requirement, and/or the VSL associated with the requirement.Comments:A: An example should be added for proxy use.
IRC Standards Review Committee	We recommend using an alternate term for proxies such as criteria, guidelines, etc. to clarify what is meant.
Pepco Holdings, Inc. - Affiliates	We recommend that the word “proxies” be changed to “criteria”.
Transmission Planning	5. Requirement R5 Please provide any specific comments on the requirement text, VRF, Time Horizon, measure associated with the requirement, data retention associated with the requirement, and/or the VSL associated with the requirement.Comments:A: An example should be added for proxy use.
TVA System Planning	It is unclear as to what is meant by the term “proxy used in the analysis” used in this requirement. Does this mean Planning Coordinator established practices, thresholds or guidelines used to gauge when simulations suggest an event such as cascading outages occurs? If so the language should state: R5. Each Transmission Planner and Planning Coordinator shall define and document, within their Planning Assessment, when established practices, thresholds or guidelines identify System instability for conditions such as cascading outages, voltage instability, or uncontrolled islanding.
United Illuminating	Please clarify how the term “Proxies” is used in this requirement.
PPL Energy Plus	Please define the term "proxies".
CPS Energy	Comments: It is unclear as to what is meant by the term “proxy used in the analysis” as it is used in this requirement. Does this mean Planning Coordinator established practices, thresholds, or guidelines used to gauge when simulations suggest an event such as cascading outages occurs? If so the language should state: R5. Each Transmission Planner and Planning Coordinator shall define and document, within their Planning Assessment, when established practices, thresholds or guidelines identify System instability for conditions such as cascading outages, voltage instability, or uncontrolled islanding.
Response: The SDT agrees with this comment and has changed the Requirement language to provide clarity as to intent. **R6.** Each Transmission Planner and Planning Coordinator shall define and document, within its Planning Assessment, any criteria or methodology used in its analysis to identify System instability for conditions such as cascading outages, voltage instability, or uncontrolled islanding.	
SERC Engineering Committee	In the VSL associated with R5, we believe that failure to define and document one of the proxies should be a moderate VSL,

Organization	Question 5 Comment
Reliability Review Subcommittee (RRS)	failure to define and document two proxies should me a high VSL, while failure to define and document three proxies should be a severe VSL. Otherwise failing to document only one proxy would result in a severe VSL. The word "proxies" in this context is confusing and subject to various interpretations. Recommend changing the word "proxies" to "criteria. There is no requirement that the Planning Coordinator (PC) must use the same proxies as the Transmission Planner (TP). Since differences in proxy assumptions may lead to different study results, R5 should be revised to require the PC and TP to coordinate the use of proxies.
Response: The SDT appreciates your comment on the level of severity for this Requirement but still believes this is the appropriate level to apply. No change made. The SDT agrees with this comment and has changed the Requirement language to provide clarity as to intent. **R6.** Each Transmission Planner and Planning Coordinator shall define and document, within its Planning Assessment, any criteria or methodology used in its analysis to identify System instability for conditions such as cascading outages, voltage instability, or uncontrolled islanding. The SDT does not see the need for a requirement to coordinate the use of proxies. No change made.	
FirstEnergy Corp	The determination of a failure to document a single proxy should not be categorized as "severe".
Response: The SDT appreciates your comment on the level of severity for this Requirement but still believes this is the appropriate level to apply. No change made.	
Southern Company	"Proxies" is not defined. We take "proxy" to mean a procedure used to model system response that is outside the capability of system modeling tools used in the analysis. For example, a powerflow model might not be able to model cascading events with built-in capabilities. As a proxy, the engineer would run follow-up studies that would mimic expected system response. Please define the term "proxy".
SMUD	It is unclear as to what is meant by the term "proxy used in the analysis" used in this requirement. Does this mean Planning Coordinator established practices, thresholds or guidelines used to gauge when simulations suggest an event such as cascading outages occurs? If so the language should state: R5. Each Transmission Planner and Planning Coordinator shall define and document, within their Planning Assessment, when established practices, thresholds or guidelines identify System instability for conditions such as cascading outages, voltage instability, or uncontrolled islanding.
Platte River Power Authority	We propose specifying that the proxy documentation be included in the Planning Assessment and add the rationale for the proxy. We suggest this text: "Each Transmission Planner and Planning Coordinator shall document within the Planning Assessment any proxies used in the analysis to identify System instability for conditions such as cascading outages, voltage instability, or uncontrolled islanding. The documentation will consist of the definition of each proxy used and the rationale for the proxies.

Organization	Question 5 Comment
Turlock Irrigation District	Comments: It is unclear as to what is meant by the term "proxy used in the analysis" used in this requirement. Does this mean Planning Coordinator established practices, thresholds or guidelines used to gauge when simulations suggest an event such as cascading outages occurs? If so the language should state: R5. Each Transmission Planner and Planning Coordinator shall define and document, within their Planning Assessment, when established practices, thresholds or guidelines identify System instability for conditions such as cascading outages, voltage instability, or uncontrolled islanding.
Response: The SDT agrees with this comment and has changed the Requirement language to provide clarity as to intent. **R6.** Each Transmission Planner and Planning Coordinator shall define and document, within its Planning Assessment, any criteria or methodology used in its analysis to identify System instability for conditions such as cascading outages, voltage instability, or uncontrolled islanding.	
Deseret Generation & Transmission	Please provide a definition of "cascading outages" since the FERC and NERC removed their approval of the definition. Or use the definition of "cascading" found in the NERC Glossary of Terms. This term is also used in R3.5, R4.5, and Table 1.a. without any definition provided. NOTE: On December 27,2007, the Federal Energy Regulatory Commission remanded the definition of" Cascading Outage" to NERC. On February 12, 2008, the NERC Board of Trustees withdrew its November 1, 2006 approval of that definition, without prejudice to the ongoing work of the FACstandards drafting team and the revised standards that are developed through the standardsdevelopment process. Therefore, the definition is no longer in effect. Please provide a definition of "voltage instability" since the NERC Glossary of Terms does not provide one. This term is also used in Table 1.a. without any definition provided. Please provide a definition of "uncontrolled islanding" since the NERC Glossary of Terms does not provide one. This term is also used in Table 1.a. without any definition provided.
Response: The SDT declines to provide definitions for the indicated terms.	
Puget Sound Energy, Inc.	Data Retention: The 5th bullet should refer to "proxies" instead of "studies".
Response: The SDT disagrees with your statement as the studies will reveal the Proxies (now criteria or methodology) used in the Planning Assessment. No change made.	
E.ON U.S.	M5 doesn't make any sense. Need to revise this Measure so that it fits the Requirement R5. Also need to revise the Data Retention discussion in Section 1.4 to align with R5. In the VSL associated with R5, we believe that failure to define and document the proxies should be a moderate VSL.
Response: The SDT does not agree and believes that the Measure appropriately addresses Requirement R6 (formerly Requirement R5). No change made. The SDT does not agree and believes that the Data Retention for this Requirement should be and is identical to the other Requirements. No change made. The SDT appreciates your comment on the level of severity for this Requirement but still believes this is the appropriate level to apply. No change made.	

Organization	Question 5 Comment
Entergy Services, Inc	Under R5, the Time Horizon of the TPL standards is intended for years one through 10; However the Time Horizon shown in R5 only says "Long-term Planning". By definition of Long-Term Transmission Planning Horizon this covers years 6 through 10 and beyond. Suggestion to change the Time Horizon to read: "Near-Term and Long-Term Transmission Planning".
ITC Holdings	Under R5, the Time Horizon of the TPL standards is intended for years one through 10; however, the Time Horizon shown in R5 only says "Long-term Planning". By definition of Long-Term Transmission Planning Horizon this covers years 6 through 10 and beyond. Suggestion to change the Time Horizon to read: "Near-Term and Long-Term Transmission Planning".

Response: The *Time Horizon* term at the end of the requirement deals with mitigation time periods (as shown below) and is not connected to the assessment time frames. Time Horizons are a consideration when there is a violation of a requirement – the impact to the BES of violating a requirement with a long-term planning horizon is not expected to be as severe as the impact associated with violating a requirement with a real-time operations time horizon. No change made.

Mitigation Time Horizon

The time horizons available for mitigating a violation to a requirement include the following:

- **Long-term Planning** — a planning horizon of one year or longer.
- **Operations Planning** — operating and resource plans from day-ahead up to and including seasonal.
- **Same-day Operations** — routine actions required within the timeframe of a day, but not real-time.
- **Real-time Operations** — actions required within one hour or less to preserve the reliability of the bulk electric system.

Operations Assessment — follow-up evaluations and reporting of real time operations.

Idaho Power	M5 doesn't make any sense. Need to revise this Measure so that it fits the Requirement R5. Also need to revise the Data Retention discussion in Section 1.4 to align with R5.

Response: The SDT does not agree and believes that the Measure appropriately addresses Requirement R6 (formerly Requirement R5). No change made.

6. Requirement R6 – Please provide any specific comments on the requirement text, VRF, Time Horizon, measure associated with the requirement, data retention associated with the requirement, and/or the VSL associated with the requirement.

Summary Consideration: Requirement R6 (now Requirement R7) is an overarching requirement that applies to the entire set of analysis required to meet the requirements of the TPL standard and to the Corrective Action Plan developed as part of the Planning Assessment. The intent of this requirement is to clarify that while the responsibilities for the TPL requirements are for both the Transmission Planner and Planning Coordinator, the individual tasks may be met through joint or shared analysis. Industry feedback indicates that it is important to minimize duplicative studies to the greatest extent possible. Coordinating and/or joint analysis does not alleviate the responsibility that all entities need to comply with the standard requirements. The SDT has made changes for clarity.

R7. Each Planning Coordinator, in conjunction with each of its Transmission Planners, shall determine and identify each entity's individual and joint responsibilities for performing the required studies for the Planning Assessment.

Organization	Question 6 Comment
Northeast Power Coordinating Council United Illuminating Northeast Utilities ISO New England, Inc. Central Maine Power Company	We do not feel that this requirement belongs in this standard and it should be deleted. The standard defines requirements for the assessment not who does what.
Response: The intent of this requirement is to clarify that TPL requirements can be meet through joint or shared analysis. Industry feedback indicates that it is important to minimize duplicative studies to the greatest extent possible. This requirement does not preclude any single entity from performing all the study work required to support an assessment. No change made.	
MRO NERC Standards Review Subcommittee	MRO NSRS is not clear if: 1) Each Transmission Planner is to meet all the requirements including doing all the studies and all Planning coordinators are to meet the requirements including doing all the studies.Or 2) If the Transmission Planner and Planning Coordinator are to work as a team to meet all the requirements including doing all the studies. Either one of them could do various parts of the required studies. For example, maybe the PC could do the stability part so all TP's would not necessarily have to buy that software if they did not need it for other planning purposes.In the first read of this standard, it appears that the intention was number 1, which sounds awfully duplicative. But then take a look at Requirement 6. R6. Each Transmission Planner and Planning Coordinator shall determine and identify individual and joint responsibilities for performing the required studies for the Planning Assessment. [Violation Risk Factor: Low] [Time Horizon: Long-term Planning]After reading R6, it appears that number 2 was intended. Perhaps R6 should be the very first requirement in the standard. The MRO NSRS requests that the NERC SDT clarify the responsibility of the requirements of this standard.

Organization	Question 6 Comment
Response: The requirement specifies that individual and joint responsibilities for performing the required studies be identified. Requirement R6 (now Requirement R7) is an overarching requirement that applies to the entire set of analysis required to meet all the requirements of the TPL. **R7**. Each Planning Coordinator, in conjunction with each of its Transmission Planners, shall determine and identify each entity's individual and joint responsibilities for performing the required studies for the Planning Assessment.	
SERC Engineering Committee Reliability Review Subcommittee (RRS)	In absence of these agreements, it is assumed that both Transmission Planners and Planning Coordinators would be responsible for performing the studies. How do the Corrective Action Plans get resolved between these entities if there is no agreement on the study results??Requirements R1, R2, R3, R4 and R5 should all be revised to include a reference to R6 regarding the determination of individual and joint responsibilities for performing the required studies. In the VSL associated with R6, we believe that failure to determine and identify one responsibility should be a moderate VSL, failure to determine and identify two responsibilities should me a high VSL, while failure to determine and identify three responsibilities should be a severe VSL. Otherwise failing to document only one responsibility would result in a severe VSL.
Response: Requirement R6 (now Requirement R7) is an overarching requirement that applies to the entire set of analysis required to meet all the requirements of the TPL and to the corrective action plan developed as part of the assessment. The proposed changes to the VSLs do not conform to Guideline 3 of the FERC VSL order. No change made to the VSL. **R7**. Each Planning Coordinator, in conjunction with each of its Transmission Planners, shall determine and identify each entity's individual and joint responsibilities for performing the required studies for the Planning Assessment.	
FirstEnergy Corp	We agree with the stated Requirement, Measure, VRF, Time-Horizon, Data Retention and VSL of requirement R6.
Progress Energy Florida, Inc.	PEF does not presently have any concerns with R6.
American Transmission Company	We agree with the revisions to R6.
Independent Electricity System Operator	We agree with the requirement, the VRF, Time Horizon, Measure and VSLs.
Response: Thank you for your response. However, please see changes indicated in the summary due to other industry comments.	
TVA System Planning	In the VSL associated with R6, we believe that failure to determine and identify one responsibility should be a moderate VSL, failure to determine and identify two responsibilities should me a high VSL, while failure to determine and identify three responsibilities should be a severe VSL. Otherwise failing to document only one responsibility would result in a severe VSL.
Response: The proposed changes to the VSL do not conform to Guideline 3 of the FERC VSL order. No change made	

Organization	Question 6 Comment
Florida Reliability Coordinating Council, Inc - Transmission Working Group	Please clarify that the phrase "individual and joint responsibilities" applies to entities (e.g., the TPs and PCs) and not specific individuals.R6 Please clarify if this requirement is intended for cases where a TP is not a PC and therefore is working "under" a PC? Or if this is intended to apply across neighboring PC's?
FMPA	Please clarify that the phrase "individual and joint responsibilities" applies to entities (e.g., the TPs and PCs) and not specific individuals.
Response: Thank you for pointing out a potential for misinterpretation of the intent of the requirement. The SDT has modified the language**.** **R7**. Each Planning Coordinator, in conjunction with each of its Transmission Planners, shall determine and identify each entity's individual and joint responsibilities for performing the required studies for the Planning Assessment.	
Xcel Energy	Why is this needed if both entities must comply with the standard?At a minimum the requirement should include language to state that the one party must provide to the other with enough notice to comply with a required study if there is a shift or assignment of a responsibility.
Ameren	In absence of these agreements, it is assumed that both Transmission Planners and Planning Coordinators would be responsible for performing the studies. It is not clear how the Corrective Action Plans get resolved between these entities if there is no agreement on the study results.
Duke Energy	Requirements R1, R2, R3, R4 and R5 should all be revised to include a reference to R6 regarding the determination of individual and joint responsibilities for performing the required studies.
Response: Requirement R6 (now Requirement R7) is an overarching requirement that applies to the entire set of analysis to meet all the requirements of the TPL. This includes the corrective action plan developed as part of the assessment. Coordinating and/or joint analysis does not alleviate the responsibility that all entities need to comply with the standard requirements. **R7**. Each Planning Coordinator, in conjunction with each of its Transmission Planners, shall determine and identify each entity's individual and joint responsibilities for performing the required studies for the Planning Assessment.	
Midwest ISO	A) Under R6, the Time Horizon of the TPL standards is intended for years one through 10; However the Time Horizon shown in R6 only says "Long-term Planning". By definition of Long-Term Transmission Planning Horizon this covers years 6 through 10 and beyond. Suggestion to change the Time Horizon to read: "Near-Term and Long-Term Transmission Planning".
Minnesota Power	Under R6, the Time Horizon of the TPL standards is intended for years one through 10; however, the Time Horizon shown in R6 only says "Long-term Planning". By definition of Long-Term Transmission Planning Horizon this covers years 6 through 10 and beyond. Suggestion to change the Time Horizon to read: "Near-Term and Long-Term Transmission Planning".
Response: The *Time Horizon* term at the end of the requirement deals with mitigation time periods (as shown below) and is not connected to the assessment time	

Organization	Question 6 Comment
frames. Time Horizons are a consideration when there is a violation of a requirement – the impact to the BES of violating a requirement with a long-term planning horizon is not expected to be as severe as the impact associated with violating a requirement with a real-time operations time horizon. No change made. **Mitigation Time Horizon** The time horizons available for mitigating a violation to a requirement include the following: • **Long-term Planning** — a planning horizon of one year or longer. • **Operations Planning** — operating and resource plans from day-ahead up to and including seasonal. • **Same-day Operations** — routine actions required within the timeframe of a day, but not real-time. • **Real-time Operations** — actions required within one hour or less to preserve the reliability of the bulk electric system. • **Operations Assessment** — follow-up evaluations and reporting of real time operations.	
Brazos Electric Cooperative	is there any other way to identify responsibilities between the parties than having an agreement? R6 seems to indicate an agreement of some sort must be in place. if that is the case then it could simply say an agreement must be in place.
Response: The requirement has been clarified in response to others' comments. The SDT did not want to imply that a separate agreement would be required for the purposes of the assessment. **R7**. Each Planning Coordinator, in conjunction with each of its Transmission Planners shall determine and identify each entity's individual and joint responsibilities for performing the required studies for the Planning Assessment.	
ITC Holdings	Comments: Should this requirement state that ?The Transmission Planner in conjunction with their Planning Coordinator shall determine and identify individual and joint responsibilities for performing the required studies for the Planning Assessment.
Response: The SDT has modified the language**.** **R7**. Each Planning Coordinator, in conjunction with each of its Transmission Planners, shall determine and identify each entity's individual and joint responsibilities for performing the required studies for the Planning Assessment.	
LADWP	R6: Does this requirement requires authors of the planning assessment report should be identified? If so, can we use plain English like "The authors of the Planning Assessment report shall be identified". If not, please explain what this requirement is all about.
Kansas City Power & Light	Why is this needed if both entities must comply with the standard?At a minimum the requirement should include language to state that the one party must provide to the other with enough notice to comply with a required study if there is a shift or assignment of a responsibility.

Organization	Question 6 Comment
Response: Requirement R6 (now Requirement R7) is an overarching requirement that applies to the entire set of analysis required to meet all the requirements of the TPL and to the corrective action plan developed as part of the assessment. The intent of this requirement is to clarify TPL requirements can be met through joint or shared analysis. Industry feedback indicates that it is important to minimize duplicative studies to the greatest extent possible. Coordinating and/or joint analysis does not alleviate the responsibility that all entities need to comply with the standard requirements. **R7**. Each Planning Coordinator, in conjunction with each of its Transmission Planners, shall determine and identify each entity's individual and joint responsibilities for performing the required studies for the Planning Assessment.	
Orlando Utilities Commission	R6: Is this requirement intended for cases where the TP is not also their PC, or is this between adjacent PC's?
Response: The intent of this requirement is to clarify TPL requirements can be meet through joint or shared analysis. Industry feedback indicates that it is important to minimize duplicative studies to the greatest extent possible. The requirement has been clarified in response to others' comments. **R7**. Each Planning Coordinator, in conjunction with each of itsTransmission Planners, shall determine and identify each entity's individual and joint responsibilities for performing the required studies for the Planning Assessment.	

7. Requirement R7 – Please provide any specific comments on the requirement text, VRF, Time Horizon, measure associated with the requirement, data retention associated with the requirement, and/or the VSL associated with the requirement.

Summary Consideration: Many commenters feel that the reference to FERC Order 890 is inappropriate, but most do not argue against the importance of sharing Planning Assessment information. There was also concern about the meaning of the phrase "coordinating of analysis of these results", and what was specifically required. The SDT believes sharing of information, understanding the impact on/from neighboring areas, peer review/feedback, and wide area assessment are important to effective Transmission planning. As a result of the comments several revisions have been made to TPL-001-1.

Revisions to Requirement R3, part R3.4 and Requirement R4, part 4.4 will clarify the expectation that Transmission Planner's and Planning Coordinator's analyze Table 1 events outside their System for reliability impacts to understand neighboring System impacts. The revised TPL-001-1 Requirement R8 (formerly Requirement R7) will ensure appropriate information is exchanged between Transmission Planner's and Planning Coordinator's for sharing of information, review, and coordination of plans in conformance with Order 693, paragraph 1755 and 1756 expectations by requiring distribution of Planning Assessments to neighboring Transmission Planners and Planning Coordinators, as well as entities with a reliability-related need. The NERC Rules and Procedures and delegation agreements cover existing TPL-005-0 & TPL-006-0 assessment requirements for regional and inter-regional assessments allowing for retirement of these two standards. The aggregate effect of the above items will be an overlapping assessment of BES reliability from each Transmission Planner area up through each Interconnection.

R8 Each Planning Coordinator and Transmission Planner shall distribute its Planning Assessment results to adjacent Planning Coordinators and Transmission Planners and to any functional entity that indicates a reliability related need for the Planning Assessment results.

R8.1 If a recipient of the Planning Assessment results provides documented comments on the results, the respective Planning Coordinator or Transmission Planner shall provide a documented response to that recipient within 90 calendar days of receipt of those comments.

M8 Each Planning Coordinator and Transmission Planner shall provide evidence, such as email notices, documentation of updated web pages, postal receipts showing recipient, date, and contents, or a demonstration of a public posting, that it has distributed its Planning Assessment results to adjacent Planning Coordinators and Transmission Planners and any functional entity who has indicated a reliability need and has provided a documented response to comments received on Planning Assessment results within 90 calendar days of receipt of those comments in accordance with Requirement R8.

R8 VSL	The responsible entity failed to distribute the results of its Planning Assessment to any one of its adjacent Transmission Planners and Planning Coordinators, respectively in accordance with Requirement R8.	N/A	The responsible entity failed to distribute the results of its Planning Assessment to its adjacent Transmission Planners and Planning Coordinators, respectively in accordance with Requirement R8.	The responsible entity failed to provide a documented response to a recipient of the Planning Assessment results who provided documented comments on the results within 90 calendar days of receipt of those comments in accordance with Requirement R8.

Organization	Question 7 Comment
Northeast Power Coordinating Council United Illuminating Northeast Utilities ISO New England, Inc. National Grid Central Maine Power Company	This standard should not be reiterating FERC Order 890. We do not feel that this requirement belongs in this standard and it should be deleted.
SERC Engineering Committee Planning Standards Subcommittee	FERC Order 890:The reference to FERC Order 890 as it is currently written makes it seem like a suggestion to follow Order 890. If Order 890 explicitly describes this process then the sentence should read "as described in FERC Order 890. If not, this should not be mentioned at all.
Bonneville Power Administration PacifiCorp Deseret Generation & Transmission SRP Arizona Public Service Co Western Area Power Administration Pacific Gas and Electric Co, Puget Sound Energy, Inc. NV Energy Southern California Edison Company San Diego Gas and Electric Co California ISO Tucson Electric Power Company	We believe that references to FERC Orders should not be included in requirements of standards. This comment also applies to M7.

Organization	Question 7 Comment
NorthWestern Corporation NorthWestern Energy (NWE) (NWMT)	In R7 the references to FERC Orders should not be included in requirements of standards. This comment also applies to M7.
Response: The SDT agrees that the standard should not reference Order 890 and the reference has been deleted. **R8** Each Planning Coordinator and Transmission Planner shall distribute its Planning Assessment results to adjacent Planning Coordinators and Transmission Planners and to any functional entity that indicates a reliability related need for the Planning Assessment results. **M8** Each Planning Coordinator and Transmission Planner shall provide evidence, such as email notices, documentation of updated web pages, postal receipts showing recipient, date, and contents, or a demonstration of a public posting, that it has distributed its Planning Assessment results to adjacent Planning Coordinators and Transmission Planners and any functional entity who has indicated a reliability need and has provided a documented response to comments received on Planning Assessment results within 90 calendar days of receipt of those comments in accordance with Requirement R8.	
MRO NERC Standards Review Subcommittee	MRO NSRS proposes expanding the scope of entities to consider, limit it to those entities that indicate a reliability need for coordination, and eliminate the direct reference to Order 890. MRO NSRS suggests this text: "Each Planning Coordinator shall establish a list of adjacent Planning Coordinators and any functional entity who has indicated a reliability need, distribute its Planning Assessment results to the listed entities and consider comments on the assumptions and results through an open and transparent peer review process.
Response: The scope of entities has been modified. Each Transmission Planner and Planning Coordinator shall distribute Planning Assessment results to adjacent Transmission Planners and Planning Coordinators, respectively; and to any functional entity that indicates a reliability-related need for the Planning Assessment results. An additional sub-requirement has been added to require that if a recipient of the Planning Assessment results provides documented comments on the results, the respective Transmission Planner or Planning Coordinator shall provide a documented response to that recipient within 90 calendar days of receipt of those comments. **R8.1** If a recipient of the Planning Assessment results provides documented comments on the results, the respective Planning Coordinator or Transmission Planner shall provide a documented response to that recipient within 90 calendar days of receipt of those comments.	
SERC Engineering Committee Reliability Review Subcommittee (RRS)	The reference to FERC Order 890 as it is currently written makes it seem like a suggestion to follow Order 890. If Order 890 explicitly describes this process then the sentence should read "as described in FERC Order 890. If not, this should not be mentioned at all. " Requirement R7 describes that the Planning Coordinator is to share Planning Assessments with adjacent Planning Coordinators. Does this need to be expanded for the Transmission Planners to share their Planning Assessments with the Planning Coordinators?? In the VSL associated with R7, we believe that the PC failing to coordinate analysis should be a moderate VSL, the PC failing to distribute should be a high VSL, and failing to do both of these tasks should be a severe VSL.

Organization	Question 7 Comment

Response: The SDT agrees that the standard should not reference Order 890 and the reference has been deleted.

The scope of entities has been modified. Each Transmission Planner and Planning Coordinator shall distribute Planning Assessment results to adjacent Transmission Planners and Planning Coordinators, respectively; and to any functional entity that indicates a reliability-related need for the Planning Assessment.

The VSL has been modified to reflect the changes to the requirement. The requirement no longer requires a coordinated analysis. The failure to distribute the results is a High VSL. Failure to respond to comments is a Severe VSL.

R8 Each Planning Coordinator and Transmission Planner shall distribute its Planning Assessment results to adjacent Planning Coordinators and Transmission Planners and to any functional entity that indicates a reliability related need for the Planning Assessment results.

R8 VSL	The Transmission Planner or Planning Coordinator failed to distribute the results of its Planning Assessment to any one of its adjacent Transmission Planners and Planning Coordinators, respectively in accordance with Requirement R8.	N/A	The Transmission Planner or Planning Coordinator failed to distribute the results of its Planning Assessment to its adjacent Transmission Planners and Planning Coordinators, respectively in accordance with Requirement R8.	The Transmission Planner or Planning Coordinator failed to provide a documented response to a recipient of the Planning Assessment results who provided documented comments on the results within 90 calendar days of receipt of those comments in accordance with Requirement R8.

FirstEnergy Corp	We agree with the stated Requirement, Measure, VRF, Time-Horizon, Data Retention and VSL of requirement R7.
Progress Energy Florida, Inc.	PEF does not presently have any concerns with R7.

Response: Thank you for your response. However, please note the changes made to Requirement R7, Measure R7, and the Requirement R7 VSL (now Requirement R8) due to a majority of industry commenters indicating that some changes were needed.

IRC Standards Review Committee	Is the PC expected to distribute the TP Planning Assessments as part of its coordination requirement?

Response: The term "coordinating analysis" has been deleted from the requirement and only distribution of assessments by the Transmission Planner and Planning Coordinator is required.

R8 Each Planning Coordinator and Transmission Planner shall distribute its Planning Assessment results to adjacent Planning Coordinators and Transmission Planners and to any functional entity that indicates a reliability related need for the Planning Assessment results.

Organization	Question 7 Comment			
TVA System Planning	In the VSL associated with R7, we believe that the PC failing to coordinate analysis should be a moderate VSL, the PC failing to distribute should be a high VSL, and failing to do both of these tasks should be a severe VSL.			
Response: The VSL has been modified to reflect the changes to the requirement. The requirement no longer requires a coordinated analysis. The failure to distribute the results is a High VSL. Failure to respond to comments is a Severe VSL. **R8** Each Planning Coordinator and Transmission Planner shall distribute its Planning Assessment results to adjacent Planning Coordinators and Transmission Planners and to any functional entity that indicates a reliability related need for the Planning Assessment results.				
R8 VSL	The Transmission Planner or Planning Coordinator failed to distribute the results of its Planning Assessment to any one of its adjacent Transmission Planners and Planning Coordinators, respectively in accordance with Requirement R8.	N/A	The Transmission Planner or Planning Coordinator failed to distribute the results of its Planning Assessment to its adjacent Transmission Planners and Planning Coordinators, respectively in accordance with Requirement R8.	The Transmission Planner or Planning Coordinator failed to provide a documented response to a recipient of the Planning Assessment results who provided documented comments on the results within 90 calendar days of receipt of those comments in accordance with Requirement R8.
Southern Company	We recommend the following wording for R7.Each Planning Coordinator shall coordinate the distribution of Planning Assessment results among adjacent Planning Coordinators and any functional entity who has indicated a reliability need. Each Planning Coordinator shall coordinate analysis of these results through an open and transparent peer review process such as described in FERC Order 890.			
Response: The SDT agrees and, in addition, the scope of entities has been modified. Each Transmission Planner and Planning Coordinator shall distribute Planning Assessment results to adjacent Transmission Planners and Planning Coordinators, respectively; and to any functional entity that indicates a reliability-related need for the Planning Assessment results. The VSL has been modified to reflect the changes to the requirement. The requirement no longer requires a coordinated analysis. The failure to distribute the results is a High VSL. Failure to respond to comments is a Severe VSL. **R8** Each Planning Coordinator and Transmission Planner shall distribute its Planning Assessment results to adjacent Planning Coordinators and Transmission Planners and to any functional entity that indicates a reliability related need for the Planning Assessment results.				
R8 VSL	The responsible entity failed to distribute the results of its Planning Assessment to any one of	N/A	The responsible entity failed to distribute the results of its Planning Assessment to its adjacent Transmission	The responsible entity failed to provide a documented response to a recipient of the Planning Assessment

Organization	Question 7 Comment			
	its adjacent Transmission Planners and Planning Coordinators, respectively in accordance with Requirement R8.		Planners and Planning Coordinators, respectively in accordance with Requirement R8.	results who provided documented comments on the results within 90 calendar days of receipt of those comments in accordance with Requirement R8.
System Protection and Transmission Planning Department	The phrase "coordinating analysis of these results" seems to indicate potential second-guessing by other entities. We suggest "coordinating REVIEW of these results" may be clearer. The term "such as described in FERC Order 890" allows non-jurisdictional utilities to establish an appropriate process. This is good. However, we still have the same misgivings about the term "such as" used here.			
Manitoba Hydro	It is unclear as to what is meant by “coordinating analysis of these results”? Does this imply an obligation to conduct joint studies or just an obligation to distribute the assessment and respond to feedback? We suggest that the wording “such as described in FERC Order 890” be replaced with “such as may be required by a regulator in its PC/TP area”. The SDT is posing several other questions for industry consideration not related to the specific requirement questions above.			
Response: The SDT agrees that the term “coordinating analysis” is unclear and has modified Requirement R7 (now Requirement R8) to only require distribution of planning assessments. The reference to Order 890 is no longer necessary. However, the SDT does believe it is appropriate to require a response if a recipient of the Planning Assessment results provides documented comments on the results. **R8** Each Planning Coordinator and Transmission Planner shall distribute its Planning Assessment results to adjacent Planning Coordinators and Transmission Planners and to any functional entity that indicates a reliability related need for the Planning Assessment results.				
PPL Energy Plus	Please continue to mention relevant FERC Orders (such as 890) in the standards since the FERC orders are the source of many of the planning standards. Planners need to acknowledge, respect, and design processes and systems around the FERC rulings.			
MidAmerican Energy Company	MidAmerican commends the SDT for its hard work on this standard. MidAmerican recommends changing R7 by changing “FERC Order 890” to “FERC Order No. 890”.			
Response: The majority of commenters had an opposite opinion of referencing FERC Orders in NERC standards and the reference to Order 890 has been deleted.				
Florida Reliability Coordinating Council, Inc - Transmission Working Group	The requirement as written requires that the results of the assessment are shared on a post assessment basis between entities in a manner similar to the Attachment K process. Please clarify whether:-Is this intended to be the end results? Or does this require the inviting of entities in at the very beginning and facilitating their participation throughout the process? -Is it intended that the process described in order 890 become essentially a NERC Standard that every sentence must be met in the most literal of sense? Or is this referencing the order as a general guideline on what should be expected but not as a literal			

Organization	Question 7 Comment
	checkmark of the process? Consider adding a footnote or other clarifications that failure of others to participate in the process is not a non compliance by the entity inviting them to the process. Otherwise non-responsiveness of a neighboring PC who may not have reliability need to participate and whose participation is beyond the control of the PC that initiated the process could trigger non-compliance.
Entergy Services, Inc	This requirement is addressed through FERC Order No. 890 (9 principles of transmission planning).
Platte River Power Authority	R7. Delete this requirement as it is the responsibility of the Transmission Provider under FERC Order 890.
American Transmission Company	We propose expanding the scope of entities to consider, limit it to those entities that indicate a reliability need for coordination, and eliminate the direct reference to FERC Order 890 and peer review. We suggest this text: "Each Planning Coordinator shall establish a list of adjacent Planning Coordinators and any functional entity who has indicated a reliability need, and distribute its Planning Assessment results to the listed entities and consider comments on the assumptions and results.
Response: The reference to Order 890 created confusion regarding process requirements and the reference has been deleted. The standard now requires each Transmission Planner and Planning Coordinator to distribute Planning Assessment results to adjacent Transmission Planners and Planning Coordinators, respectively; and to any functional entity that indicates a reliability-related need for the Planning Assessment results. In addition, if a recipient of the Planning Assessment results provides documented comments on the results, the respective Transmission Planner or Planning Coordinator shall provide a documented response to that recipient within 90 calendar days of receipt of those comments. This simplifies the process while achieving appropriate involvement of affected entities. **R8** Each Planning Coordinator and Transmission Planner shall distribute its Planning Assessment results to adjacent Planning Coordinators and Transmission Planners and to any functional entity that indicates a reliability related need for the Planning Assessment results. **R8.1** If a recipient of the Planning Assessment results provides documented comments on the results, the respective Planning Coordinator or Transmission Planner shall provide a documented response to that recipient within 90 calendar days of receipt of those comments.	
SMUD	Requirement R7 should end after the words '....who has indicated a reliability need'. R7:The requirement should not invoke another document for compliance. The words, ", coordinating analysis of these results through an open and transparent peer review process such as described in FERC Order 890', should be deleted. This comment also applies to M7.
Response: The reference to Order 890 created confusion regarding process requirements and the reference has been deleted. The standard now requires each Transmission Planner and Planning Coordinator to distribute Planning Assessment results to adjacent Transmission Planners and Planning Coordinators, respectively; and to any functional entity that indicates a reliability-related need for the Planning Assessment results. In addition, if a recipient of the Planning Assessment results provides documented comments on the results, the respective Transmission Planner or Planning Coordinator shall provide a documented response to that recipient within 90 calendar days of receipt of those comments. This simplifies the process while achieving appropriate involvement of affected entities. Conforming changes have been made to Measure M7 (now M8). **R8** Each Planning Coordinator and Transmission Planner shall distribute its Planning Assessment results to adjacent Planning Coordinators and	

Organization	Question 7 Comment
Transmission Planners and to any functional entity that indicates a reliability related need for the Planning Assessment results. **R8.1** If a recipient of the Planning Assessment results provides documented comments on the results, the respective Planning Coordinator or Transmission Planner shall provide a documented response to that recipient within 90 calendar days of receipt of those comments. **M8** Each Planning Coordinator and Transmission Planner shall provide evidence, such as email notices, documentation of updated web pages, postal receipts showing recipient, date, and contents, or a demonstration of a public posting, that it has distributed its Planning Assessment results to adjacent Planning Coordinators and Transmission Planners and any functional entity who has indicated a reliability need and has provided a documented response to comments received on Planning Assessment results within 90 calendar days of receipt of those comments in accordance with Requirement R8.	
Xcel Energy	Recommend deleting the portion of the requirement that states: "coordinating analysis of these results through an open and transparent review process such as described in FERC Order 890.
LADWP	FERC 890 stands on its own, why should a planning standard refers to a FERC Order? Does this imply that if a FERC Order is not referenced in the planning standard, we can ignor the order?
Independent Electricity System Operator	1. We question the need to mention FERC 890. If this meant to be an example for the US entities, we suggest this to be put into a footnote with indication that it is an example for the US entities only.2. We agree with the requirement, the VRF, Time Horizon, Measure and VSLs.
Response: The reference to Order 890 created confusion regarding process requirements and the reference has been deleted. **R8** Each Planning Coordinator and Transmission Planner shall distribute its Planning Assessment results to adjacent Planning Coordinators and Transmission Planners and to any functional entity that indicates a reliability related need for the Planning Assessment results.	
Ameren	Requirement R7 describes that the Planning Coordinator is to share Planning Assessments with adjacent Planning Coordinators. It is not clear whether this needs to be expanded for the Transmission Planners to share their Planning Assessments with the Planning Coordinators. The reference to FERC Order 890 as it is currently written makes it seem like a suggestion to follow Order 890. If Order 890 explicitly describes this process then the sentence should read "as described in FERC Order 890. If not, maybe this should not be mentioned at all.
Response: The scope of entities has been modified. Each Transmission Planner and Planning Coordinator shall distribute Planning Assessment results to adjacent Transmission Planners and Planning Coordinators, respectively; and to any functional entity that indicates a reliability-related need for the Planning Assessment results. The reference to Order 890 created confusion regarding process requirements and the reference has been deleted. **R8** Each Planning Coordinator and Transmission Planner shall distribute its Planning Assessment results to adjacent Planning Coordinators and Transmission Planners and to any functional entity that indicates a reliability related need for the Planning Assessment results.	
Midwest ISO	A) Under R7, the Time Horizon of the TPL standards is intended for years one through 10; However the Time Horizon shown in R7 only says "Long-term Planning". By definition of Long-Term Transmission Planning Horizon this covers years 6 through 10

Organization	Question 7 Comment
	and beyond. Suggestion to change the Time Horizon to read: "Near-Term and Long-Term Transmission Planning". B) The coordination of analysis of results through an open and transparent process is already a FERC requirement thus producing a double jeopardy for those entities that fall under the jurisdiction of FERC Order 890. We recommend striking the following language in the last sentence: ...coordinating analysis of these results through an open and transparent peer review process such as described in FERC Order 890. C) Under R7 only the Planning Coordinator is required to coordinate the distribution of Planning Assessment results among adjacent PCs and any functional entity who has indicated a reliability need, coordinating analysis of these results through an open and transparent peer review process such as described in FERC Order 890. Should the TP be added to this requirement? We propose the suggested language change: Each Transmission Planner and Planning Coordinator shall coordinate the distribution of Planning Assessment results among adjacent Transmission Planners and Planning Coordinators, respectfully, and to any functional entity who has indicated a reliability need, coordinating analysis of these results through an open and transparent peer review process such as described in FERC Order 890. D) Based on the comments above in (B) and (C), our suggested requirement language is as follows: Each Transmission Planner and Planning Coordinator shall coordinate analysis in support of assessments in accordance with applicable regulatory requirements. Each Planning Coordinator shall distribute its completed planning assessment results among adjacent Planning Coordinators and any functional entity who indicated in writing a reliability related need.

Response: The *Time Horizon* term at the end of the requirement deals with mitigation time periods (as shown below) and is not connected to the assessment time frames. No change made.

Mitigation Time Horizon

The time horizons available for mitigating a violation to a requirement include the following:

- **Long-term Planning** — a planning horizon of one year or longer.
- **Operations Planning** — operating and resource plans from day-ahead up to and including seasonal.
- **Same-day Operations** — routine actions required within the timeframe of a day, but not real-time.
- **Real-time Operations** — actions required within one hour or less to preserve the reliability of the bulk electric system.
- **Operations Assessment** — follow-up evaluations and reporting of real time operations.

The reference to "coordinating analysis" and Order 890 created confusion regarding process requirements and the requirement has been modified. The standard now requires each Transmission Planner and Planning Coordinator to distribute Planning Assessment results to adjacent Transmission Planners and Planning Coordinators, respectively; and to any functional entity that indicates a reliability-related need for the Planning Assessment results. In addition, if a recipient of the Planning Assessment results provides documented comments on the results, the respective Transmission Planner or Planning Coordinator shall provide a documented response to that recipient within 90 calendar days of receipt of those comments. This simplifies the process while achieving appropriate involvement of affected entities.

Organization	Question 7 Comment
R8 Each Planning Coordinator and Transmission Planner shall distribute its Planning Assessment results to adjacent Planning Coordinators and Transmission Planners and to any functional entity that indicates a reliability related need for the Planning Assessment results. **R8.1** If a recipient of the Planning Assessment results provides documented comments on the results, the respective Planning Coordinator or Transmission Planner shall provide a documented response to that recipient within 90 calendar days of receipt of those comments.	
PJM	R7 needs to be broken into two parts. First establish the list of entities that need to get the assessment results. Second would be to coordinate the results as mentioned. Are the results mentioned in R7 different from the Planning Assessment?
Response: The standard now requires each Transmission Planner and Planning Coordinator distribute Planning Assessment results to adjacent Transmission Planners and Planning Coordinators, respectively; and to any functional entity that indicates a reliability-related need for the Planning Assessment results. In addition, if a recipient of the Planning Assessment results provides documented comments on the results, the respective Transmission Planner or Planning Coordinator shall provide a documented response to that recipient within 90 calendar days of receipt of those comments. This simplifies the process while achieving appropriate involvement of affected entities. The reference to "results" in Requirement R7 (now Requirement R8) is to the Planning Assessment results. **R8** Each Planning Coordinator and Transmission Planner shall distribute its Planning Assessment results to adjacent Planning Coordinators and Transmission Planners and to any functional entity that indicates a reliability related need for the Planning Assessment results. **R8.1** If a recipient of the Planning Assessment results provides documented comments on the results, the respective Planning Coordinator or Transmission Planner shall provide a documented response to that recipient within 90 calendar days of receipt of those comments.	
Minnesota Power	Under R7, the Time Horizon of the TPL standards is intended for years one through 10; however, the Time Horizon shown in R7 only says "Long-term Planning". By definition of Long-Term Transmission Planning Horizon this covers years 6 through 10 and beyond. Suggestion to change the Time Horizon to read: "Near-Term and Long-Term Transmission Planning".
Response: The *Time Horizon* term at the end of the requirement deals with mitigation time periods (as shown below) and is not connected to the assessment time frames. Time Horizons are a consideration when there is a violation of a requirement – the impact to the BES of violating a requirement with a long-term planning horizon is not expected to be as severe as the impact associated with violating a requirement with a real-time operations time horizon. No change made. **Mitigation Time Horizon** The time horizons available for mitigating a violation to a requirement include the following: • **Long-term Planning** — a planning horizon of one year or longer. • **Operations Planning** — operating and resource plans from day-ahead up to and including seasonal. • **Same-day Operations** — routine actions required within the timeframe of a day, but not real-time. • **Real-time Operations** — actions required within one hour or less to preserve the reliability of the bulk electric system.	

Organization	Question 7 Comment
• **Operations Assessment** — follow-up evaluations and reporting of real time operations.	
MAPPCOR	Propose expanding the scope of entities to consider, limit it to those entities that indicate a reliability need for coordination, and eliminate the direct reference to Order 890. Suggest this text: "Each Planning Coordinator shall establish a list of adjacent Planning Coordinators and any functional entity who has indicated a reliability need, distribute its Planning Assessment results to the listed entities and consider comments on the assumptions and results through an open and transparent peer review process.
Response: The standard now requires each Transmission Planner and Planning Coordinator distribute Planning Assessment results to adjacent Transmission Planners and Planning Coordinators, respectively; and to any functional entity that indicates a reliability-related need for the Planning Assessment results. The reference to Order 890 created confusion regarding process requirements and the reference has been deleted. **R8** Each Planning Coordinator and Transmission Planner shall distribute its Planning Assessment results to adjacent Planning Coordinators and Transmission Planners and to any functional entity that indicates a reliability related need for the Planning Assessment results.	
Orlando Utilities Commission	The term "results of the assessment", is this is the final end result that is shared and analyzed? A requirement should not reference an order or another non NERC document. All the requirements and measures for performance should be covered in the standard or through reference to another NERC approved standard. The language used in other standards would be more appropriate and directly auditable. Require that the PC/TP to share assessment and support material with those requesting entities and respond to any of their specific comments. This will insure openness and transparency in a manner and can be directly audited.
Response: The reference to "coordinating analysis" and Order 890 created confusion regarding process requirements and the reference has been deleted. The standard now requires each Transmission Planner and Planning Coordinator distribute Planning Assessment results to adjacent Transmission Planners and Planning Coordinators, respectively; and to any functional entity that indicates a reliability-related need for the Planning Assessment results. In addition, if a recipient of the Planning Assessment results provides documented comments on the results, the respective Transmission Planner or Planning Coordinator shall provide a documented response to that recipient within 90 calendar days of receipt of those comments. This simplifies the process while achieving appropriate involvement of affected entities. **R8** Each Planning Coordinator and Transmission Planner shall distribute its Planning Assessment results to adjacent Planning Coordinators and Transmission Planners and to any functional entity that indicates a reliability related need for the Planning Assessment results. **R8.1** If a recipient of the Planning Assessment results provides documented comments on the results, the respective Planning Coordinator or Transmission Planner shall provide a documented response to that recipient within 90 calendar days of receipt of those comments.	
Turlock Irrigation District	In light of the fact that FERC has determined not to apply the Order No. 890 transmission planning processes requirement to non-public utilities, TID expresses concern over the reference to Order No. 890 in R7. TID recommends that this reference be replaced with a more direct instruction that details what exactly is meant by the requirement of "an open and transparent peer review process. R7 makes reference to the peer review process laid out in FERC Order No. 890. This reference to Order No. 890 is duplicative and vague and must be clarified. The peer review process set forth in Attachment K of Order No. 890, lays out nine different principles (Coordination, Openness, Transparency, Information Exchange, Comparability, Dispute Resolution,

Organization	Question 7 Comment
	Regional Participation, Economic Planning Studies, and Cost Allocation for New Projects). Most of these principles are inapplicable when placed in the context of NERC Reliability Standards. Subjecting NERC members to all of these vague and broad principles without specific guidance as to their application would be a significant burden. TID proposes that the reference to Order No. 890 be removed from R7 and replaced with a provision that expressly details the principles of openness and transparency that are contemplated in R7. Such an express provision would bring clarity to the requirement so that entities subject to R7 would know exactly what they are expected to do to comply with the requirements of R7. As it is now written, the broad reference to Order No. 890 is vague and confusing.TID is also concerned with the fact that the Violation Severity Levels for R7 now appear to run from High to Severe, with the potential of significant penalties being assessed on noncompliant entities. The High and Severe Violation Severity Levels for TLP-001-1 R7 are inappropriate given the already vague and conflicting guidance of R7, especially as R7 merely duplicates the Order No. 890 requirements. Once the reference to Order No. 890 is replaced with a provision that expressly provides specific guidance as to what is meant by the "open and transparent peer review process," the appropriate Violation Severity Level for R7 would be Low to Moderate.

Response: The reference to "coordinating analysis" and Order 890 created confusion regarding process requirements and the reference has been deleted. The standard now requires each Transmission Planner and Planning Coordinator distribute Planning Assessment results to adjacent Transmission Planners and Planning Coordinators, respectively; and to any functional entity that indicates a reliability-related need for the Planning Assessment results. In addition, if a recipient of the Planning Assessment results provides documented comments on the results, the respective Transmission Planner or Planning Coordinator shall provide a documented response to that recipient within 90 calendar days of receipt of those comments. This simplifies the process while achieving appropriate involvement of affected entities.

The VSL's have been modified based on the clarified Requirement R7 (now Requirement R8) for distribution of Planning Assessments, the importance of sharing planning information and being responsive to neighboring entities reliability related concerns.

R8 Each Planning Coordinator and Transmission Planner shall distribute its Planning Assessment results to adjacent Planning Coordinators and Transmission Planners and to any functional entity that indicates a reliability related need for the Planning Assessment results.

R8.1 If a recipient of the Planning Assessment results provides documented comments on the results, the respective Planning Coordinator or Transmission Planner shall provide a documented response to that recipient within 90 calendar days of receipt of those comments.

R8 VSL	The responsible entity failed to distribute the results of its Planning Assessment to any one of its adjacent Transmission Planners and Planning Coordinators, respectively in accordance with Requirement R8.	N/A	The responsible entity failed to distribute the results of its Planning Assessment to its adjacent Transmission Planners and Planning Coordinators, respectively in accordance with Requirement R8.	The responsible entity failed to provide a documented response to a recipient of the Planning Assessment results who provided documented comments on the results within 90 calendar days of receipt of those comments in accordance with Requirement R8.

New York Independent System	The Standards Drafting Team should clarify the standard as to whether the PC will be expected to distribute the TP Planning

Organization	Question 7 Comment
Operator	Assessments as part of its coordination requirement?
Response: The language has been clarified as to the responsibility of each Transmission Planner and Planning Coordinator. The standard now requires each Transmission Planner and Planning Coordinator distribute Planning Assessment results to adjacent Transmission Planners and Planning Coordinators, respectively; and to any functional entity that indicates a reliability-related need for the Planning Assessment results. **R8** Each Planning Coordinator and Transmission Planner shall distribute its Planning Assessment results to adjacent Planning Coordinators and Transmission Planners and to any functional entity that indicates a reliability related need for the Planning Assessment results.	
Kansas City Power & Light	Recommend deleting the portion of the requirement that states: “coordinating analysis of these results through an open and transparent review process such as described in FERC Order 890.
Response: The reference to “coordinating analysis” and Order 890 created confusion regarding process requirements and the reference has been deleted. **R8** Each Planning Coordinator and Transmission Planner shall distribute its Planning Assessment results to adjacent Planning Coordinators and Transmission Planners and to any functional entity that indicates a reliability related need for the Planning Assessment results.	

8. The SDT changed several definitions in response to industry comments to the second posting. Do you agree with these changes? If not, please clearly indicate which definition you disagree with and provide specific comments.

Summary Consideration: Many of the responders suggested that several of the definitions either be revised or deleted. As a result, the definitions for Supplemental Load Loss, Load Reduction, Planning Events and Extreme Events have been deleted and the definitions for Consequential Load Loss, Non-Consequential Load Loss and Year One have been revised.

In association with the changes in definitions, the SDT has also revised note 'b' and added note 'i' in the header to Table 1.

There were several requests to include comment on Under-frequency (UFLS) and Under-voltage load (UVLS) shedding. UVLS and UFLS are not precluded in the Corrective Action Plan for those events where controlled Load shedding is allowed. The Standard does not address the acceptability of the tools to be used for any Corrective Action Plan. As a result, no change was made.

There were some suggestions to include definitions and distinction between 'planned' and 'proposed'. The SDT tried to address the concepts of planned and proposed in a prior posting. The response from industry strongly discouraged the Standard from delving into the distinction. As a result, no change was made.

There were a couple of suggestions relative to adding back the examples of applications of Bus-tie Breakers or otherwise changing the definition. The SDT removed the statement on Bus-tie Breakers because comments were received to indicate that although the examples were true for most applications, it wasn't universal and examples were provided where Bus-tie Breakers were used between ring buses, etc. As a result, no change was made.

There was a suggestion to change the reference to 'Horizon'. "Horizon" is not something new and the SDT does not agree with changing it. As a result, no was change made.

There were a couple of requests to include new definitions for "cascading outages", "voltage instability", and "uncontrolled islanding". The SDT did not see a reason to define these terms in TPL-001-1. The requesters were invited to draft a SAR if they wanted to pursue having these terms defined. As a result, no change was made.

The following changes were made to definitions as a result of industry comments:

Consequential Load Loss: All Load that is no longer served by the Transmission System as a result of Transmission Facilities being removed from service by a Protection System operation designed to isolate the fault.

Non-Consequential Load Loss: Non-Interruptible Load loss other than Consequential Load Loss and the response of voltage sensitive Load including Load that is disconnected from the System by end-user equipment.

Year One: The first year that a Planning Coordinator or a Transmission Planner is responsible for assessing. This is further defined as the planning window that begins 12-18 months from the end of the current calendar year.

Header note 'b': Consequential Load Loss and consequential generation loss are acceptable as a consequence of any planning or extreme event excluding P0.

Header note 'i': The response of voltage sensitive Load including Load that is disconnected from the System by end-user equipment associated with an event shall not be used to meet steady state performance requirements.

Organization	Yes or No	Question 8 Comment
Northeast Power Coordinating Council	No	Revise the Load Reduction and Non-Consequential Load Loss definitions as follows.Load Reduction: Load that is still connected to the System, but is reduced due to lower voltage conditions resulting from following a Planning or Extreme Event. Non-Consequential Load Loss: Non-Interruptible Load loss other than Consequential Load Loss, Supplemental Load Loss, and Load Reduction. Intended post contingency loss of load (other than Interruptible Load, Supplemental Load or Load Reduction) caused by operator or SPS (RAS) action. (Priority Comment)For Drafting Team consideration: What types of non-interruptible load loss would be considered non-consequential load loss--manual load shedding for example? With this in mind, can the definition be simplified, maybe to read: Non-Consequential Load Loss: Operator action taken to deliberately remove load from service in response to adverse system conditions.
Response: The SDT has deleted the Load Reduction definition. The SDT has simplified the Non-Consequential Load Loss definition and has eliminated the references to Supplemental Load Loss and Load Reduction. The New definition is: **Non-Consequential Load Loss:** Non-Interruptible Load loss other than Consequential Load Loss and the response of voltage sensitive Load including Load that is disconnected from the System by end-user equipment.		
SERC Engineering Committee Planning Standards Subcommittee	No	Definitions: Revised Definitions are generally better than those from the previous version, but additional clarity could be provided. Load Reduction Please clarify whether this includes both load response and operator initiated action, such as in changes to transformer LTC. Supplemental Load Loss - From a utility perspective, this would be considered as load response. Please clarify how Supplemental Load Loss would be included in the stability analysis. Bus tie breaker A statement in the previous version which listed examples was removed from this version of the definition. The statement was helpful and should be re-inserted. The statement was: Substation configurations such as ring bus, breaker and a half, or double-bus double-breaker do not use bus tie breakers.
Response: The definitions for Load Reduction and Supplemental Load Loss have been deleted. The SDT has simplified the Non-Consequential Load Loss definition and has eliminated the references to Supplemental Load Loss and Load Reduction. The New definition is: **Non-Consequential Load Loss:** Non-Interruptible Load loss other than Consequential Load Loss and the response of voltage sensitive Load including Load that is disconnected from the System by end-user equipment. In association with the changes in definitions, the SDT has revised note 'b' and added note 'i' in the header to Table 1.		

Organization	Yes or No	Question 8 Comment
Header note 'b': Consequential Load Loss and consequential generation loss are acceptable as a consequence of any planning or extreme event excluding P0. **Header note 'i':** The response of voltage sensitive Load including Load that is disconnected from the System by end-user equipment associated with an event shall not be used to meet steady state performance requirements. The SDT removed the statement on Bus-tie Breakers because comments were received to indicate that although it was true for most applications, it wasn't universal and examples were provided where Bus-tie Breakers were used between ring buses, etc. No change made.		
Modesto Irrigation District	No	On page 2 under "Definitions of Terms Used in Standard", the red-lined out example used to clarify the definition of "Non-Consequential Load Loss" seems valuable to me, and I think they should not remove it but leave it in.
Response: The SDT has decided that it is inappropriate to include examples within a Standard's definition. The SDT is concerned that an example isn't all inclusive and it will create opportunities for loopholes. No change made.		
Bonneville Power Administration PacifiCorp Deseret Generation & Transmission SRP Xcel Energy Western Area Power Administration Southern California Edison Company San Diego Gas and Electric Co Idaho Power California ISO	No	Clarification is needed on the use of UVLS. Is it acceptable or not. Typically UVLS relays are modeled in the study. Not allowing any load shedding as a result of UVLS relays could result in very costly fixes for a very small amount of remote load. If the Non-Consequential Load Loss Allowed column is No, is load disconnecetd from the system by UVLS a violation? What about Supplemental Load Loss or UFLS?
Arizona Public Service Co	No	Claification is needed on the use of UVLS. Is it acceptable or not. Typically UVLS relays are modeled in the study. Not allowing any load shedding as a result of UVLS relays could result in very costly fixes for a very small amount of remote load. If the Non-Consequential Load Loss Allowed column has a No entry, is load disconnecetd from the system by UVLS a violation? What about Supplemental Load Loss or UFLS?

Organization	Yes or No	Question 8 Comment
Pacific Gas and Electric Co,	No	Claification is needed on the use of UVLS. Is it acceptable or not? We understand from the discussion in the webinar that in the proposed TPL-001-1, Table 1, if there is a "no" in the column for allowable load loss, you are still allowed to have UVLS set up to drop the load, but cannot plan on meeting the standard with the load shedding. Therefore, if the Non-Consequential Load Loss Allowed column is No, is load disconnecetd from the system by UVLS a violation, given that you can lose the load but cannot plan on it? Typically UVLS relays are modeled in the study. Not allowing any load shedding as a result of UVLS relays could result in very costly fixes for a very small amount of remote load. What about the treatment of Supplemental Load Loss or UFLS?
Puget Sound Energy, Inc.	No	Claification is needed on the use of UVLS. Is it acceptable or not. Typically UVLS relays are modeled in the study. Not allowing any load shedding as a result of UVLS relays could result in very costly fixes for a very small amount of remote load. If the Non-Consequential Load Loss Allowed column is No, is load disconnecetd from the system by UVLS a violation? What about Supplemental Load Loss or UFLS?Provide clear explanations of the load definitions.
NV Energy	No	Claification is needed on the use of UVLS. Is it acceptable or not. Typically UVLS relays are modeled in the study. Not allowing any load shedding as a result of UVLS relays could result in very costly fixes for a very small amount of remote load. If the Non-Consequential Load Loss Allowed column is No, is load disconnecetd from the system by UVLS a violation? What about Supplemental Load Loss or UFLS? We are also wondering how loads that have interruptible rates should be handled.
LADWP	No	UVLS should be an allowed mitigation for multiple contingencies, P3 and above. UVLS is an effective measure against voltage collapse, a system condition that if not mitigated in a timely fashion could lead to cascading events. Saqme with UFLS.
Response: UVLS and UFLS are not precluded in the Corrective Action Plan for those events where controlled load shedding is allowed. The Standard does not address the acceptability of the tools to be used for any Corrective Action Plan. No change made.		
Tucson Electric Power Company	No	Claification is needed on the use of UVLS. Is it acceptable or not? Typically UVLS relays are modeled in the study. Not allowing any load shedding as a result of UVLS relays could result in very costly fixes for a very small amount of remote load. If the Non-Consequential Load Loss Allowed column is No, is load disconnecetd from the system by UVLS a violation? What about Supplemental Load Loss or UFLS? Year One The use of calendar year is confusing. When does the 12-18 month window begin? We suggest "The year 18 months beyond the present month.
Response: UVLS and UFLS are not precluded in the Corrective Action Plan for those events where controlled load shedding is allowed. The Standard does not address the acceptability of the tools to be used for any Corrective Action Plan. No change made. The definition of Year One has been clarified. **Year One:** The first year that a Planning Coordinator or a Transmission Planner is responsible for assessing. This is further defined as the planning window that		

Organization	Yes or No	Question 8 Comment
begins 12-18 months from the end of the current calendar year.		
MRO NERC Standards Review Subcommittee	No	MRO NSRS suggests the following comments: Add a Consequential Generation Loss definition because both load and generation loss can be considered, but there is only Consequential Load Loss definition. MRO NSRS suggests text of: Consequential Generation Loss: All Generation that is no longer delivered to any Transmission Facilities as a result of the Transmission Facilities removal from service by the operation of the installed Protection Systems designed to isolate fault conditions or otherwise protect the Transmission Facilities from abnormal operating conditions. Expand the Consequential Load Loss definition to include protection for abnormal operating conditions. MRO NSRS suggests text of: Consequential Load Loss: All Load that is no longer served by any Transmission Facilities as a result of the Transmission Facilities removal from service by the operation of the installed Protection Systems designed to isolate fault conditions or otherwise protect the Transmission Facilities from abnormal operating conditions. Expand the Load Reduction definition to include consideration of TOP judgment and established protection schemes. MRO NSRS suggests text of: Load Reduction: The reduction of Load that is still connected to the System, but in the judgment of the Transmission Operator or through the previous established Special Protection Systems, Under-Frequency Load Shedding programs, Over-Frequency Load Shedding program, should be reduced to overcome to lower voltage conditions following a Planning or Extreme Event. Modify the Planning Assessment definition to more explicitly apply to the BES and the TPL-001 requirements. MRO NSRS suggests text of: Planning Assessment: Documented evaluation of future Transmission System performance and Corrective Action Plans to remedy identified deficiencies in the BES from the steady state and stability performance requirements set forth in the TPL-001 standard. Modify the Planning Events definition more explicitly apply to the TPL-001 requirements. MRO NSRS suggests text of: Planning Events: Events that are identified in the steady state and stability performance requirements set forth in the TPL-001 standard. Expand the Year One definition to include the PC, refer to the Planning Assessment, and refer to the current calendar year. MRO NSRS suggests text of: Year One: The first year that each Transmission Planner and Planning Coordinator is responsible for conducting a Planning Assessment. This is further defined as the planning window that begins 12-18 months from the current calendar year. MRO NSRS would like to delete the definition of "Year One". This is already being done and adding a planning window opens entities to noncompliance for conditions i.e. Model building outside of entities control.
Response: Requirement R2, part 2.7.1 allows for generation tripping and run-back, so a definition for Consequential Generation Loss is not required. The proposed change to expand Protection System operation to include abnormal operating conditions is too vague and is too broad. In addition it would create an overlap with the definition of Non-Consequential Load because Protection Systems used to protect abnormal operating conditions would include Special Protection System which could be used to trip Non-Consequential Load. No change made. The SDT has deleted the Load Reduction definition. UVLS and UFLS are not precluded in the Corrective Action Plan for those events where controlled load shedding is allowed. The Standard does not address the		

Organization	Yes or No	Question 8 Comment
acceptability of the tools to be used for any Corrective Action Plan. No change made. As stated in the "Purpose" the Standard establishes Transmission System planning performance for the BES. Repeating that within the Standard creates opportunities for confusion whenever it is not specifically noted. The SDT wants to minimize confusion by not repeating applicability throughout the document. Also the Planning Assessment involves more than remedying identified deficiencies. For example, it may also confirm that there are no deficiencies or it may evaluate the impacts of schedule changes in the Corrective Action Plans. No change made. The definition for Planning Events has been deleted. The SDT believes that a near term study requirement is a necessary part of the standard and that a definition for Year One is a necessary component to achieve that objective. The SDT has received several constructive comments on this and has made revisions to the definition. Although revisions fall short of your suggestion, the SDT hopes that additional clarity will help. The revised definition is: **Year One:** The first year that a Planning Coordinator or a Transmission Planner is responsible for assessing. This is further defined as the planning window that begins 12-18 months from the end of the current calendar year.		
SERC Engineering Committee Dynamics Review Subcommittee (DRS)	No	There is a need to add definitions to discriminate between planned and proposed projects. We propose the following definitions: Planned Facilities: Facilities that address the near-term deficiencies and have been approved with a financial commitment. Proposed Facilities: Facilities that address long-term deficiencies for which no commitment is required today since they may change based on future evaluation. We propose the following definitions for events: Planning Events: Events which are listed as Planning in Table 1 in Standard TPL-001-1. Extreme Events: Events which are listed as Extreme in Table 1 in Standard TPL-001-1. Bus-tie Breaker definition still seems somewhat generic and the use of 'configurations' causes uncertainty. We propose the following definition: Bus-tie Breaker: A circuit breaker whose intended purpose is to connect two individual substation buses. The definition of Supplemental Load Loss includes the phrase, "by end-user equipment", which could be understood to mean there are devices at the end-user location that remove this equipment (and conversely, load that is not disconnected "by" end-user equipment cannot be included). Also, the term "post-Contingency" can be confusing because in the case of faults, this phrase is not clear if it means conditions after the fault initiation itself or only after the clearing of the fault. We propose the following definition: Supplemental Load Loss: End-user Load that inherently disconnects from the System as a consequence of (or "in response") to the conditions created by the System event. Load Reduction: A decrease in the amount of connected Load caused by lower voltage conditions following a Planning or Extreme Event.
Response: The SDT tried to address the concepts of planned and proposed in a prior posting. The response from industry strongly discouraged the standard from delving into the distinction. No change made.		

Organization	Yes or No	Question 8 Comment
The definition for planning events has been deleted. The definition for extreme events has been deleted. The definition as proposed by SERC for a Bus-tie Breaker would apply to every breaker in any configuration. The definition in the Standard is trying to limit the application to a connection between configurations of buses, which could include flat buses, ring buses, breaker and a half, etc. The SDT is deliberately using the term configuration to avoid unintentionally excluding a particular configuration. No change made. The definition for Supplemental Load Loss has been deleted. The definition for Load Reduction has been deleted.		
SERC Engineering Committee Reliability Review Subcommittee (RRS)	No	Revised Definitions are generally better than those from the previous version, but additional clarity could be provided. Supplemental Load Loss - From a utility perspective, this would be considered as load response. Please clarify how Supplemental Load Loss would be included in the stability analysis. “Bus tie breaker “ A statement in the previous version which listed examples was removed from this version of the definition. The statement was helpful and should be re-inserted. The statement was: “Substation configurations such as ring bus, breaker and a half, or double-bus double-breaker do not use bus tie breakers. “Extreme Events definition references severity and probability. These terms should be included in the definition of Planning Events. Add a definition of Planned and Proposed facilities. Planned facilities address the near term deficiencies and have been approved with a financial commitment while proposed facilities address long term deficiencies for which no commitment is required today since they may change based on future evaluation. Consequential Load Loss - Is an SPS to trip load qualify as a planned protection system”? Load Reduction - Is this automatic as in a load response or is it operator initiated as in changes to transformer LTC? How would Supplemental Load Loss be included in the stability analysis? Table 1 suggests that it cannot be included to meet steady-state performance. Suggest that the following be added to the definition: Supplemental Load Loss associated with an event shall not be used to meet steady state performance requirements. “Where would interruptible load be included in these definitions” Bus-tie Breaker definitions still seems somewhat generic and the use of 'configurations' causes uncertainty. Revise Bus-tie Breaker to read, "A circuit breaker whose intended purpose is to connect two individual substation buses." "Bus-tie" is not capitalized in the Table. “Consequential Load Loss must include load that is lost due to the inherent response of the particular type of load. Some motors, lighting and processes will naturally trip during an event, although not as a result of the protection system. It may have been the intent of the SDT to include this phenomenon in the Supplemental Load Loss defintion. However, this definition includes the phrase, "by end-user equipment", and that makes one think that there are devices at the end-user location that is removing this equipment (and conversely, load that is not disconneted "by" end-user equipment cannot be

Organization	Yes or No	Question 8 Comment
		included). Also, the term "post-Contingency" can be confusing because in the case of faults, this phrase is not clear if it means conditions after the fault initiation itself or only after the clearing of the fault. Revise Supplemental Load Loss to read, "End-user Load that inherently disconnects from the System as a consequence of (or "in response") to the conditions created by the System event." SERC RRS suggests adding back the following to the Bus-tie breaker definition that was contained in Posting #2: ?Substations configurations such as ring bus, breaker and a half, or double bus double breaker protection schemes do not use bus tie breakers?. SERC Members believe that this additional wording helps explain this definition much more clearly. In Posting #2, undervoltage load shed, underfrequency load shed, and Special Protection Schemes were considered to be Non-Consequential Load Loss. Are these now no longer considered to be Non-Consequential Load Loss but instead now considered to be Load Reduction, Supplemental Load Loss, or something else? Should Supplemental Load Loss be further defined as load that is disconnected from the network by end-user equipment responding during duration of the fault as well as to post contingency system conditions? Also the definition of Supplemental Load Loss may benefit from some examples in the definition to further help clarify. The second sentence in the Year One definition is rather confusing. We would suggest changing “calendar year” to “date”. Otherwise it may be interpreted that Year One would begin 12 to 18 months from the end of the current calendar year. Suggest from “beginning”.

Response: The SDT has simplified the Non-Consequential Load Loss definition and has eliminated the references to Supplemental Load Loss and Load Reduction. The New definition is:

Non-Consequential Load Loss: Non-Interruptible Load loss other than Consequential Load Loss and the response of voltage sensitive Load including Load that is disconnected from the System by end-user equipment.

In association with the changes in definitions, the SDT has revised note ‘b’ and added note ‘i’ in the header to Table 1.

Header note ‘b’: Consequential Load Loss and consequential generation loss are acceptable as a consequence of any planning or extreme event excluding P0.

Header note ‘i’: The response of voltage sensitive Load including Load that is disconnected from the System by end-user equipment associated with an event shall not be used to meet steady state performance requirements.

The SDT removed the statement on Bus-tie Breakers because comments were received to indicate that although it was true for most applications, it wasn’t universal and examples were provided where bus tie breakers were used between ring buses, etc. No change made.

The SDT tried to address the concepts of planned and proposed in a prior posting. The response from industry strongly discouraged the standard from delving into the distinction. No change made.

An SPS does not qualify as a planned Protection System because it is not being used “to isolate the fault”, which is a condition of the statement. No change made.

The definition for Load Reduction has been deleted.

Interruptible load is either Consequential Load or Non-Consequential Load which is permitted to be lost for specific events and conditions defined in Table 1. No

Organization	Yes or No	Question 8 Comment
change made. The SDT removed the statement on Bus-tie Breakers because comments were received to indicate that although it was true for most applications, it wasn't universal and examples were provided where bus tie breakers were used between ring buses, etc. No change made. The definition for Supplemental Load Loss has been deleted. Bus-tie Breaker has been capitalized in the Table. The definition for Load Reduction has been deleted. The SDT removed the statement on Bus-tie Breakers because comments were received to indicate that although it was true for most applications, it wasn't universal and examples were provided where bus tie breakers were used between ring buses, etc. No change made. UVLS and UFLS are not precluded in the Corrective Action Plan for those events where controlled load shedding is allowed. The Standard does not address the acceptability of the tools to be used for any Corrective Action Plan. No change made. The SDT has decided that it is inappropriate to include examples within a Standard's definition. The SDT is concerned that an example isn't all inclusive and it will create opportunities for loop holes. The definition for Year One has been revised to add clarity. The revised definition is: **Year One:** The first year that a Planning Coordinator or a Transmission Planner is responsible for assessing. This is further defined as the planning window that begins 12-18 months from the end of the current calendar year.		
FirstEnergy Corp	No	A. Supplemental Load Loss: We disagree with newly proposed definition for "Supplemental Load Loss" which is introduced to address some stakeholders concerns related to a Load's response to transient conditions. Table 1 note "b" causes confusion indicating that Supplemental Load Loss is an acceptable consequence of a Planning Event or an Extreme Event but then goes on to say that Supplemental Load Loss can not be relied upon to meet steady state performance requirements. This seems to imply that it is permissible to use Supplemental Load Loss for stability analysis. It is not logical to allow its use in one time frame but not the other. The inclusion of the Supplemental Load Loss definition enters into a power quality issue at the end-user delivery point which is not the focus of the TPL-001-1 standard. FE suggests that this definition be removed. B. Load Reduction: The new proposed definition of "Load Reduction" while technically written correctly may not align with its common use throughout industry. Load Reduction is often thought of as an operator initiated response, rather than a natural system response to a contingency event. If the definition remains, the SDT should consider striking the text "following a Planning or Extreme Event" so that the definition can more generally apply to other areas of the standards if needed. However, as stated in question 9, we believe Load Reduction was inadvertently omitted in note "b" of the Table 1. If so, we would have similar concerns with the occasional use of Load Reduction in that it would be allowed in stability and excluded in steady-state FE suggests that this definition be removed.The "Load Reduction" definitional term brings into question what is an acceptable steady-state load model within the TPL-001-1 standard. The standard provides some prescriptive language in requirement R2.4.1 regarding dynamic stability load models but is silent on steady-state load modeling. Most transmission planners use a conservative approach of simulating constant power loads in the steady-state environment and therefore the "Load Reduction" definition would not apply. However, if a constant impedance load

Organization	Yes or No	Question 8 Comment
		model were used, Load Reduction would be reflected and less conservative outcomes would result. At a minimum, the standard should require the transmission planner to document its load modeling assumptions for steady-state simulations. [See above comment on Question 2 regarding a proposed new R2.1.1 requirement] C. Year One: We continue to oppose the Year One definition developed by the SDT. In our Draft 2 comments, FirstEnergy proposed a Year One definition of "The planning year that begins with the upcoming annual period under study". During the last comment period we indicated:"We believe the attempt to try and delineate between the near-term planning horizon and operational planning horizon is not needed within the TPL standard and that the near-term period should account for the upcoming annual study periods. If not revised, the need for two near-term studies on an annual basis is overly burdensome as many transmission planning organizations perform upcoming annual seasonal assessments for seasonal peak (summer/winter) periods. Requiring an additional two studies near-term does not provide significant benefit. Further reasoning for making the change is the allowance of operating procedures as part of Corrective Action plans. Operating procedures can easily be developed and implemented to mitigate projected performance violations prior to an upcoming seasonal period." The SDT's response from the Draft 2 comment period indicated "The standard does not require that studies are duplicated. If an operating study can be used to demonstrate an assessment for planning purposes, then the operating study would be sufficient."Since "Year One" is defined as "...a planning window that begins 12-18 months from the current calendar year" we would appreciate the SDT reconciling their Draft 2 response to the Year One definition and confirm whether or not it intends that a study of the next occurring seasonal peak period would suffice for meeting one of the current year Near-Term studies as required in requirement R2.1.1.A secondary concern with the Year One definition is its reference to the Transmission Planner with no mention of the Planning Coordinator. D. Planning Assessment: We suggest that the team consider an enhancement to the definition of "Planning Assessment". When read independently within the NERC Glossary of Terms a lay person should have a better understanding of the transmission Planning Assessment and it should set the foundational understanding that a Planning Assessment is not equivalent to a single study but rather a collection of studies. Additionally, the definition should more explicitly apply to the TPL-001-1 intended purpose. We propose a new definition based largely on the verbiage in requirement R2. "Planning Assessment: An annual documented evaluation of future Transmission System performance predicted over a minimum 10-year period, based on new or previously completed simulation studies and the Corrective Action Plans needed to satisfy steady-state, stability and short circuit performance requirements." E. Planning Event: We propose that the definition of "Planning Event" more explicitly apply to the TPL-001-1 standard and read as follows: "Planning Event: A contingency condition evaluated for its steady-state and stability impacts on the BES transmission System, requiring Corrective Action plans to remedy identified deficiencies" F. Consequential Load Loss: We suggest that the definition be revised to more closely align with the text stated in requirement R3.3.1. The proposed definition would read "Consequential Load Loss: All Load that is no longer served by any Transmission Facilities as a result of the removal of all elements that the Protection System and other automatic controls are expected to disconnect for a transmission System Contingency without operator intervention." If our proposed new definition is not acceptable, we suggest that the word "automatically" be added between "being removed" and replace "a planned" with "as designed".

Organization	Yes or No	Question 8 Comment
Response: The definition of Supplemental Load Loss has been deleted from the revised standard. In association with the changes in definitions, the SDT has revised note 'b' and added note 'i' in the header to Table 1. **Header note 'b':** Consequential Load Loss and consequential generation loss are acceptable as a consequence of any planning or extreme event excluding P0. **Header note 'i':** The response of voltage sensitive Load including Load that is disconnected from the System by end-user equipment associated with an event shall not be used to meet steady state performance requirements. The definition for Load Reduction has been deleted. The definition for Year One has been revised to reflect your comment. The revised definition is: **Year One:** The first year that a Planning Coordinator or a Transmission Planner is responsible for assessing. This is further defined as the planning window that begins 12-18 months from the end of the current calendar year. The SDT does not agree with combining the types of studies in the definition of Planning Assessment. No change made. The definition for planning event has been deleted. The definition of Consequential Load Loss has been revised however the SDT did not believe that it was necessary to insert 'automatically' in the definition. The revised definition is: **Consequential Load Loss:** All Load that is no longer served by the Transmission System as a result of Transmission Facilities being removed from service by a Protection System operation designed to isolate the fault .		
IRC Standards Review Committee New York Independent System Operator	No	The Year One definition is confusing. According to the definition, Year One can start any time between 12 and 18 months from a current calendar year. Is that January 1 of the current calendar year? Further, when does year 2, year 3, etc? start? Is this definition only applicable to the TP?
Progress Energy Carolina (PEC)	No	In this definition: "Year One: The first year that a Transmission Planner is responsible for assessing. This is further defined as the planning window that begins 12-18 months from the current calendar year" recommend that the '12-18 months' specification be removed. It is confusing.
E.ON U.S.	No	Year One: The calendar year contains 12 months. As written, Year One could start as early as January 2010 (1/1/2009 plus 12 months) or as late as July 2011 (12/31/2009 plus 18 months). E.ON U.S. believes that the statement should be modified to: read " that begins 12-18 months from the beginning of the current calendar year". This would limit the beginning of the current window to be January 2010 or July 2010.
Midwest ISO	No	Year One: At a minimum the SDT needs to address the applicability of this definition to include both the Transmission

Organization	Yes or No	Question 8 Comment
		Planner and Planning Coordinator. The Year One definition needs additional clarification with the current calendar year. According to the definition, Year One can start any time between 12 and 18 months from a current calendar year. Suggested definition for Year One: The first year that each Transmission Planner and Planning Coordinator is responsible for conducting a Planning Assessment. This is further defined as the planning window that begins at least 12-18 months from the end of the current calendar year.
BPA		Definition of terms - Year one: The current draft defines "year one" as "the planning window that begins 12-18 months from the current calendar year". However it's not clear: 1. When this 12-18 months should start to be counted. Is it counted from Jaunuary 1 of this calendar year, or Dec. 31 of this calendar year, or somewhere in the middle of the year depending on the planning entity's choice. 2. Does this calendar year refer to the year when the annual assessment report is submitted, or the calendar year when the annual assessment is started? For example, we may start to work on an annual assessment report in late 2009 but finally complete it in early 2010. In this case which year should be the "current calendar year" for the report? Each year in July BCTC receives a new load forecast, which covers the next 10 years with year 1 starting on April 1 of the next calendar year. If we determine the TPL "year one" by counting 12-18 months from the beginning of this calendar year, we are oke to use this new load forecast. If we determine the TPL year one by counting 12-18 months from the end of this calendar year, the new load forecast for year 1 and year 10 are already out-of-date by the time we receive them. Clarify which year is the "current calendar year" and when is the start of the 12-18 months.
Response: Rather than removing the specification, the SDT has revised the definition to clarify the reference point. The revised definition is: **Year One:** The first year that a Planning Coordinator or a Transmission Planner is responsible for assessing. This is further defined as the planning window that begins 12-18 months from the end of the current calendar year.		
TVA System Planning	No	TVA suggests adding back the following to the Bus-tie breaker definition that was contained in Posting #2: Substations configurations such as ring bus, breaker and a half, or double bus double breaker protection schemes do not use bus tie breakers. TVA believes that this additional wording helps explain this definition much more clearly. In Posting #2, undervoltage load shed, underfrequency load shed, and Special Protection Schemes were considered to be Non-Consequential Load Loss. Are these now no longer considered to be Non-Consequential Load Loss but instead now

Organization	Yes or No	Question 8 Comment
		considered to be Load Reduction, Supplemental Load Loss, or something else? Should Supplemental Load Loss be further defined as load that is disconnected from the network by end-user equipment responding during duration of the fault as well as to post contingency system conditions? Also the definition of Supplemental Load Loss may benefit from some examples in the definition to further help clarify. Please clarify how Supplemental Load Loss would be included in the stability analysis. The second sentence in the Year One definition is rather confusing. We would suggest changing “calendar year” to “date”. Otherwise it may be interpreted that Year One would begin 12 to 18 months from the end of the current calendar year. Suggest from “beginning”. Load Reduction ? Please clarify whether this includes both load response and operator initiated action, such as in changes to transformer LTC. Should definition also include that this load is continuing to be served? Consequential Load Loss must include load that is lost due to the inherent response of the particular type of load. Some motors, lighting and processes will naturally trip during an event, although not as a result of the protection system. It may have been the intent of the SDT to include this phenomenon in the Supplemental Load Loss defintion. However, this definition includes the phrase, "by end-user equipment", and that makes one think that there are devices at the end-user location that is removing this equipment (and conversely, load that is not disconneted "by" end-user equipment cannot be included). Also, the term "post-Contingency" can be confusing because in the case of faults, this phrase is not clear if it means conditions after the fault initiation itself or only after the clearing of the fault. Revise Supplemental Load Loss to read, "End-user Load that inherently disconnects from the System as a consequence of (or "in response") to the conditions created by the System event."

Response: The SDT removed the statement on Bus-tie Breakers because comments were received to indicate that although it was true for most applications, it wasn’t universal and examples were provided where bus tie breakers were used between ring buses, etc. No change made.

The definition of Non-Consequential Load Loss has been revised to provide greater clarity.

> **Non-Consequential Load Loss:** Non-Interruptible Load loss other than Consequential Load Loss and the response of voltage sensitive Load including Load that is disconnected from the System by end-user equipment.

The definition for Supplemental Load Loss has been deleted.

The definition for Year One has been revised to reflect your comment. The revised definition is:

> **Year One:** The first year that a Planning Coordinator or a Transmission Planner is responsible for assessing. This is further defined as the planning window that begins 12-18 months from the end of the current calendar year.

The definition for Load Reduction has been deleted.

In association with the changes in definitions, the SDT has revised note ‘b’ and added note ‘h’ in the header to Table 1.

Organization	Yes or No	Question 8 Comment
Header note 'b': Consequential Load Loss and consequential generation loss are acceptable as a consequence of any planning or extreme event excluding P0. **Header note 'i':** The response of voltage sensitive Load including Load that is disconnected from the System by end-user equipment associated with an event shall not be used to meet steady state performance requirements. The definition for Supplemental Load Loss has been deleted.		
Southern Company	No	We disagree with deleting the definition of system stability and generating unit stability. The proposed definition for Year One reads as follows Year One: The first year that a Transmission Planner is responsible for assessing. This is further defined as the planning window that begins 12-18 months from the current year. Please clarify if this refers to the first "calendar" year when a Transmission Planner becomes responsible for assessments. If so, then add the word "Calendar" so that it reads "Year One: The first calendar year ..... .
Response: The SDT deleted the difference between generator unit Stability and System Stability due to a majority of comments received from industry in a previous posting. No change made. The definition for Year One has been revised to reflect your comment. The revised definition is: **Year One:** The first year that a Planning Coordinator or a Transmission Planner is responsible for assessing. This is further defined as the planning window that begins 12-18 months from the end of the current calendar year.		
United Illuminating	No	Load Reduction: Load that is still connected to the System, but is reduced due to lower voltage conditions resulting from a Planning or Extreme Event. Non-Consequential Load Loss: Non-Interruptible Load loss other than Consequential Load Loss, Supplemental Load Loss, and Load Reduction. Intended post contingency loss of load (other than Interruptible Load, Supplemental Load or Load Reduction) caused by operator or SPS (RAS) action. (Priority Comment)
Northeast Utilities Central Maine Power Company	No	Refine load loss definitions as follows.Load Reduction: Load that is still connected to the System, but is reduced due to lower voltage conditions resulting from a Planning or Extreme Event. Non-Consequential Load Loss: Intended post contingency loss of load (other than Interruptible Load, Supplemental Load or Load Reduction) caused by operator or SPS (RAS) action. (Priority Comment)
ISO New England, Inc.	No	Refine load loss definitions as follows.Load Reduction: Load that is still connected to the System, but is reduced due to lower voltage conditions resulting from following a Planning or Extreme Event. Non-Consequential Load Loss: Non-Interruptible Load loss other than Consequential Load Loss, Supplemental Load Loss, and Load Reduction. Intended post contingency loss of load (other than Interruptible Load, Supplemental Load or Load Reduction) caused by operator or SPS (RAS) action. (Priority Comment)

Organization	Yes or No	Question 8 Comment
Response: The definition for Load Reduction has been deleted. The SDT has simplified the Non-Consequential Load Loss definition and has eliminated the references to Supplemental Load Loss and Load Reduction. The New definition is: **Non-Consequential Load Loss:** Non-Interruptible Load loss other than Consequential Load Loss and the response of voltage sensitive Load including Load that is disconnected from the System by end-user equipment.		
System Protection and Transmission Planning Department	Yes	We appreciate the effort of the SDT to clarify "Consequential load loss", and think references to this term are clearer in this draft. Proxies?, used in R5, should be defined. See R5 comments for our suggestion.
Response: See response to question 5 comments. The term, "proxies" is not used in the revised standard.		
MidAmerican Energy Company	No	MidAmerican commends the SDT for its hard work on this standard. MidAmerican believes the SDT improved several of the definitions and believes additional changes are needed: For the bus-tie definition, what does "individual substation bus configurations" mean?? The consequential load loss states that it is load that "removed from service by a planned Protection System operation to isolate fault conditions". This implies that a contingency that does not involve a fault could never have consequential load loss. MidAmerican suggests that the words "to isolate fault conditions" be replaced with "in response to a contingency event". Alternatively, consider using the words in R3.3.1 which defines the same information but without referring to fault conditions. The definition of Long-Term Transmission Planning Horizon is confusing because it is not clear which term the words "when required to accommodate any known longer lead time projects that may take longer than ten years to complete" are meant to modify. MidAmerican believes the intent is that these words only apply to the years ten or beyond and not the entire period years six to ten and beyond. Therefore, we recommend that the words be changed by starting a new sentence in the definition and putting it in parentheses "(Years beyond ten years are required to accommodate any known longer lead time projects that may take longer than ten years to complete.) MidAmerican commends the SDT for improving the Year One definition. MidAmerican still believes the Year One definition is too confining. It indicates that the first year is defined as the planning window that begins 12-18 months from the current calendar year. This means if the regional entity provides models during the current calendar year in April, the responsible entity cannot use those models in conducting planning until a year that begins in May of the next year. Why delay the start of Year One? What is gained by this delay? MidAmerican recommends that Year One NOT be a defined term. This definition clarifies a term that does NOT need to be clarified for any reason. MidAmerican believe this is a fix for a problem that does not exist. Does the SDT have evidence of lack of compliance in this regard?? Modify the Planning Assessment definition to more explicitly apply to the BES and the TPL-001 requirements. We suggest text of: Planning Assessment: Documented evaluation of future Transmission System performance and Corrective Action Plans to remedy identified deficiencies in the BES from the steady state and stability performance requirements set forth in

Organization	Yes or No	Question 8 Comment
		the TPL-001 standard. Modify the Planning Events definition more explicitly apply to the TPL-001 requirements. We suggest text of: Planning Events: Events that are identified in the steady state and stability performance requirements set forth in the TPL-001 standard.
Response: Bus configurations could include flat buses, ring buses, breaker and a half, etc. The reference to fault conditions was intentionally used to exclude SPS action. A Contingency without a fault would be an inadvertent or mis-operation, which is not directly addressed by this standard. No change made. The SDT did not recognize a benefit to the proposed wording change for the definition of Long-Term Transmission Planning Horizon. No change made. The SDT believes that a near term study requirement is a necessary part of the standard and that a definition for Year One is a necessary component to achieve that objective. The SDT has received several constructive comments on this and has made revisions to the definition. Although revisions fall short of your suggestion, the SDT hopes that additional clarity will help. The revised definition is: **Year One:** The first year that a Planning Coordinator or a Transmission Planner is responsible for assessing. This is further defined as the planning window that begins 12-18 months from the end of the current calendar year. As stated in the "Purpose" the Standard establishes Transmission System planning performance for the BES. Repeating that within the Standard creates opportunities for confusion whenever it is not specifically noted. The SDT wants to minimize confusion by not repeating applicability throughout the document. Also the Planning Assessment involves more than remedying identified deficiencies. For example, it may also confirm that there are no deficiencies or it may evaluate the impacts of schedule changes in the Corrective Action Plans. No change made. The definition for planning events has been deleted.		
Gainesville Regional Utilities	Yes	But as referenced in question 5, I believe you need a good definition for the following terms; "cascading outages", "voltage instability", and "uncontrolled islanding".
Response: The SDT sees no reason to define "cascading outages", "voltage instability", or "uncontrolled islanding" in TPL-001-1. If Gainsville wishes to pursue, please draft a SAR. No change made.		
Progress Energy Florida, Inc.	No	PEF continues to disagree strenuously with differentiating between Consequential Load Loss and Non-Consequential Load Loss. PEF does not believe that load loss has anything whatsoever to do with demonstrating the robustness of the BES. The approach the SDT is taking with TPL-001-1 is essentially "Feeder Reliability", rather than BES Reliability. Should the SDT decide that they must continue with this approach, PEF will explore options for expressing concern about this at the FERC level. PEF is perplexed by the definition of Supplemental Load Loss. PEF, as a Transmission Owner, considers its "end-user" to be the Distribution System. PEF would therefore use this definition to design Distribution-side controlled load curtailment schemes that essentially qualify as Consequential Load Loss. If this is not the intent of the SDT, PEF suggests that the

Organization	Yes or No	Question 8 Comment
		SDT modify this definition to make its meaning clearer.
Response: The SDT has revised the definitions and notes in the table, which should clarify the reference to the end-user. Pertinent revisions are: **Non-Consequential Load Loss:** Non-Interruptible Load loss other than Consequential Load Loss and the response of voltage sensitive Load including Load that is disconnected from the System by end-user equipment. **Header note 'b':** Consequential Load Loss and consequential generation loss are acceptable as a consequence of any planning or extreme event excluding P0. **Header note 'i':** The response of voltage sensitive Load including Load that is disconnected from the System by end-user equipment associated with an event shall not be used to meet steady state performance requirements.		
Ameren	No	Extreme Events definition references severity and probability. These terms should be included in the definition of Planning Events. Add a definition of Planned and Proposed facilities. Planned facilities address the near term deficiencies and have been approved with a financial commitment while proposed facilities address long term deficiencies for which no commitment is required today since they may change based on future evaluation. Revised Definitions are generally better than those from the previous version, but additional clarity could be provided. Consequential Load Loss ? Would an SPS to trip load qualify as a planned protection system? Load Reduction ? Please clarify whether this includes both load response and operator initiated action, as in changes to transformer LTC. Supplemental Load Loss - From a utility perspective, this would be considered as load response. Please clarify how Supplemental Load Loss would be included in the stability analysis. Table 1 suggests that it cannot be included to meet steady-state performance. Suggest that the following be added to the definition: Supplemental Load Loss associated with an event shall not be used to meet steady state performance requirements.
Response: The definitions for both extreme events and planning events have been deleted. The SDT tried to address the concepts of planned and proposed in a prior posting. The response from industry strongly discouraged the standard from delving into the distinction. No change made. An SPS does not qualify as a planned Protection System because it is not being used "to isolate the fault", which is a condition of the statement. The definition for Load Reduction has been deleted. In association with the changes in definitions, the SDT has revised note 'b' and added note 'i' in the header to Table 1. **Header note 'b':** Consequential Load Loss and consequential generation loss are acceptable as a consequence of any planning or extreme event excluding P0. **Header note 'i':** The response of voltage sensitive Load including Load that is disconnected from the System by end-user equipment associated with an		

Organization	Yes or No	Question 8 Comment
event shall not be used to meet steady state performance requirements.		
Manitoba Hydro	No	Consequential Load Loss: the wording "by a planned Protection System operation to isolate fault conditions" is awkward wording. The wording should be changed to "by a Protection System operation designed to isolate fault conditions". Load Reduction: This definition is not needed and load reduction is not prohibited in the standard. It will take some effort to even measure such a load reduction in simulation. Given that there are four load related definitions, the standard would be simplified by deleting this term. Any voltage dependent load will be reduced for a low voltage condition. In steady state (P0), load is normally modeled as constant MVA load so load is constant. In the steady state period after a contingency, transformer taps and voltage control devices will restore voltage, and consequently, any load modeled as voltage dependent will be restored to pre-contingency level. The term is not used anywhere in the requirements of the standard - it is only included in Table 1 Note b in the definition of Non-Consequential Load Loss. We do not think it is needed. Supplemental Load Loss: Why did the drafting team decide to include Supplemental load loss? In Table 1, it is stated under "note b" that Supplemental Load Loss cannot be used to meet steady state performance requirements. Does this imply that it is acceptable for "non-consequential" induction motor load to trip off as a result of undervoltage during the disturbance due to its protection setting? It is possible that this load loss during a stability simulation may avoid the need to add dynamic reactive support. Can the drafting team clarify the intent of the standard or delete Supplemental Load Loss. At minimum, the TP/PA should identify the minimum transient voltage that they are planning the system for. In that way, any load loss for unplanned events that cause lower transient voltages or load loss that occurs at a higher transient voltage wouldn't be a violation. Also, unless the end-user load is modeled in detail, or a proxy is used, the planner will not know if such load exists or would be lost in the simulation.
Response: The definition for Consequential Load Loss has been revised to reflect your comment. The revised definition is: **Consequential Load Loss:** All Load that is no longer served by the Transmission System as a result of Transmission Facilities being removed from service by a Protection System operation designed to isolate the fault . The definitions for Load Reduction and Supplemental Load Loss have been deleted. In association with the changes in definitions, the SDT has revised note 'b' and added note 'h' in the header to Table 1. **Header note 'b':** Consequential Load Loss and consequential generation loss are acceptable as a consequence of any planning or extreme event excluding P0. **Header note 'i':** The response of voltage sensitive Load including Load that is disconnected from the System by end-user equipment associated with an event shall not be used to meet steady state performance requirements.		
National Grid	No	Comments: Can the definitions of the "Planning Horizon" in the FAC, the "Long-term Planning" Time Horizon (italicized and in parentheses next to the Violation Risk Factor), and the "Near-Term" and "Long-Term Transmission Planning" be included in the definitions section to avoid confusion" Refine load loss definitions as follows. Consequential Load Loss: All Load that is no longer served by any Transmission

Organization	Yes or No	Question 8 Comment
		Facilities as a result of the Facilities being removed from service by a planned Protection System operation to isolate fault conditions. Comment It is not clear if Consequential load includes load that is connected to transmission within an island. Suggest revising the definition to "..load no longer served by the Transmission System (or perhaps by the BES?) as a result of Transmission Facilities being removed?" Load Reduction: Quantity of Load that is reduced due to lower voltage conditions resulting from a Planning or Extreme Event. Comment "Load Reduction" as written is the load remaining after the reduction. This should be rewritten to indicate it is the change in load from the previous value to that still connected. Also, the defined term "Load Reduction" is counter to what most engineers consider to be a load reduction and as written it does not seem necessary to define this term. Most engineers associate Load Reduction as a manual or automatic action by a customer to reduce demand. As defined it appears that Load Reduction refers only to the voltage sensitivity of load which should be captured in the system model if it is necessary to model this effect. Therefore the reference should be changed from "Load Reduction" to "Voltage Sensitive Load Loss". Non-Consequential Load Loss: Non-Interruptible Load loss other than Consequential Load Loss, Supplemental Load Loss, and Load Reduction. Comment The definition is indirect. Suggest to revise the definition to be direct by stating "Intended post contingency loss of load (other than Interruptible Load, Supplemental Load or Load Reduction) caused by operator or SPS (RAS) action. Planning Events: Events that require Transmission system performance requirements to be met.Comment - Suggest "Events for which Transmission system performance requirements shall be met". Supplemental Load Loss: Load that is disconnected from the network by end-user equipment responding to post-Contingency System conditions.Comment - Suggest rewording last phrase to "..responding to System Contingency conditions." - or perhaps just "..responding to System conditions." Year One: The first year that a Transmission Planner is responsible for assessing. This is further defined as the planning window that begins 12-18 months from the current calendar year. Comment - Suggest rewording second sentence to "This is further defined as beginning 12-18 months from the current calendar year." - This avoids the awkwardness in present draft of seeming to define Year One as a planning window as well as a particular year.

Response: The *Time Horizon* term at the end of the requirement deals with mitigation time periods (as shown below) and is not connected to the assessment time frames. Time Horizons are a consideration when there is a violation of a requirement – the impact to the BES of violating a requirement with a long-term planning horizon is not expected to be as severe as the impact associated with violating a requirement with a real-time operations time horizon. No change made.

Mitigation Time Horizon

The time horizons available for mitigating a violation to a requirement include the following:

- **Long-term Planning** — a planning horizon of one year or longer.
- **Operations Planning** — operating and resource plans from day-ahead up to and including seasonal.
- **Same-day Operations** — routine actions required within the timeframe of a day, but not real-time.

Organization	Yes or No	Question 8 Comment
• **Real-time Operations** — actions required within one hour or less to preserve the reliability of the bulk electric system. • **Operations Assessment** — follow-up evaluations and reporting of real time operations. The definition for Consequential Load Loss has been revised to reflect your comment. **Consequential Load Loss:** All Load that is no longer served by the Transmission System as a result of Transmission Facilities being removed from service by a Protection System operation designed to isolate the fault . The definitions for Load Reduction and Supplemental Load Loss have been deleted. The definition for Planning Event has been deleted. The definition for Year One has been revised to reflect your comment.. The revised definition is: **Year One:** The first year that a Planning Coordinator or a Transmission Planner is responsible for assessing. This is further defined as the planning window that begins 12-18 months from the end of the current calendar year.		
Entergy Services, Inc	No	Include a definition of "planned facilities": Facilities that address the near-term deficiencies and have been approved with a financial commitment. In Posting #2, undervoltage load shed, underfrequency load shed, and Special Protection Schemes were considered to be Non-Consequential Load Loss. Are these now no longer considered to be Non-Consequential Load Loss but instead now considered to be Load Reduction, Supplemental Load Loss, or something else?
Response: The SDT tried to address the concepts of planned and proposed in a prior posting. The response from industry strongly discouraged the standard from delving into the distinction. No change made. UVLS and UFLS are not precluded in the Corrective Action Plan for those events where controlled load shedding is allowed. The Standard does not address the acceptability of the tools to be used for any Corrective Action Plan. No change made.		
BC Hydro	No	Comments: In almost all instances, the word "horizon" should be changed to "period" in both the definitions and throughout the standard. The word horizon refers to the end of the period; it literally means, "the limit of one's mental outlook" and the horizon is normally the furthest we can see. A long-term horizon-year study would be a study of conditions expected in the last year of the long-term planning period (often the 10th or 20th year). A long-term horizon-year study would not be expected to refer to a series of studies of each year in the long-term planning period.
Response: The reference to 'Horizon' is not something new and the SDT does not agree with changing it. No change made.		
PJM	No	Planning Events and Extreme Events should refer to the lists in the tables since there is no other way to understand which contingency falls into what definition. The designation is deterministic and somewhat arbitrary but commonly accepted.

Organization	Yes or No	Question 8 Comment
Response: The definitions for planning events and extreme events have been deleted.		
American Electric Power	No	"Load Reduction" does not need to be retained as a defined term; in fact it only appears once in the draft standard at the top of Table 1. In addition, it is well understood that load is sensitive to voltage, so it seems unnecessary to call attention to it. Furthermore, the "Supplemental Load Loss" definition should also be removed. These definitions are not generally relevant to planning studies. Neither steady-state nor stability planning studies should acknowledge or rely on "Supplemental Load Loss" because it is simply unpredictable without detailed load device protection data. In fact, properly set minimum voltage limits should ensure that no appreciable load is tripped by customer equipment response as long as that equipment meets generally accepted equipment and design standards. For the same reason, steady-state planning studies should not rely on "Load Reduction" because the planning function is supposed to ensure that a designated forecasted load can be served under credible contingencies. However, it is okay that stability studies acknowledge and rely on load voltage sensitivity ("Load Reduction"), and in fact this is required due to the nature of the analysis and cannot be otherwise. Therefore, there is no need to call attention to it.Given the above comments, the remaining two load loss definitions should be further clarified, though not changed substantively, to read as noted below. Consequential Load Loss: All Load that is no longer served by any Transmission Facilities as a result of the Facilities being removed from service by a planned Protection System operation to isolate fault conditions. It excludes Load that is disconnected from the network by load internal protection or end-user equipment responding to post-Contingency System conditions. Also, it excludes Load that remains connected to the System, but that may be reduced due to lower voltage conditions as a consequence of a Planning or Extreme Event.Non-Consequential Load Loss: Any Load loss intentionally caused due to automatic system protective functions such as UVLS, special protection systems, or as the result of operating procedures. Finally, the lettered bullets at the top of Table 1 need to be modified as appropriate to reflect the above comments that load loss due to internal load protection or end-user equipment, what was called "Supplemental Load Loss", should NOT be permitted in complying with either steady-state or stability performance criteria. Load that remains connected to the System, but that may be reduced due to lower voltage, should NOT be permitted in complying with steady-state performance criteria, but should be allowed, by necessity, in complying with stability performance criteria.
Response: The definitions for Load Reduction and Supplemental Load Loss have been deleted. The definitions for Consequential and Non-Consequential Load loss have been revised **Consequential Load Loss:** All Load that is no longer served by the Transmission System as a result of Transmission Facilities being removed from service by a Protection System operation designed to isolate the fault . **Non-Consequential Load Loss:** Non-Interruptible Load loss other than Consequential Load Loss and the response of voltage sensitive Load including		

Organization	Yes or No	Question 8 Comment
Load that is disconnected from the System by end-user equipment. In association with the changes in definitions, the SDT has revised note 'b' and added note 'i' in the header to Table 1. **Header note 'b':** Consequential Load Loss and consequential generation loss are acceptable as a consequence of any planning or extreme event excluding P0. **Header note 'i':** The response of voltage sensitive Load including Load that is disconnected from the System by end-user equipment associated with an event shall not be used to meet steady state performance requirements. UVLS and UFLS are not precluded in the Corrective Action Plan for those events where controlled load shedding is allowed. The Standard does not address the acceptability of the tools to be used for any Corrective Action Plan. No change made.		
Northern Indiana Public Service Company	No	The definitions need clarification, especially if they will be extracted from the standard when approved and included in the NERC Glossary. The SDT should include a Technical Writer to clarify the proposed language.
Response: Thank you for your response.		
Platte River Power Authority	No	Non-Consequential Loss of Load - It is not clear in all the Load Loss definitions where planned load shedding or "controlled interruption of electric supply" belong. However, the NERC Webinar on June 30 was very helpful, and I make the following comment in line with the answer I heard to my question. A "Yes" in the last column of Table 1 means that planned load shedding or "controlled interruption of electric supply" is allowed for that Category of Contingencies. (For a P2.2 Bus Section Fault, SLG, HV, "Yes", one could choose to implement a planned load shedding procedure or scheme to meet system performance requirements.) Planned load shedding may be manual load shedding or automatic actions such as direct load tripping or UVLS for example. Therefore, please add mention of the planned load shedding or the "controlled interruption of electric supply" and list specific examples in the definition for "Non-Consequential Loss of Load."
Response: The SDT has decided that it is inappropriate to include examples within a Standard's definition. The SDT is concerned that an example isn't all inclusive and it will create opportunities for loopholes. No change made**.** UVLS and UFLS are not precluded in the Corrective Action Plan for those events where controlled load shedding is allowed. The Standard does not address the acceptability of the tools to be used for any Corrective Action Plan. No change made.		
American Transmission Company	No	We suggest the following comments: Add a Consequential Generation Loss definition because both load and generation loss can be considered, but there is only Consequential Load Loss definition. We suggest text of: "Consequential Generation Loss: All Generation that is no longer delivered to any Transmission Facilities as a result of the Transmission Facilities removal from service by the operation of the installed Protection Systems designed to isolate fault conditions or otherwise protect the Transmission Facilities from abnormal operating conditions.

Organization	Yes or No	Question 8 Comment
		Expand the Consequential Load Loss definition to include protection for abnormal operating conditions. We suggest text of: "Consequential Load Loss: All Load that is no longer served by any Transmission Facilities as a result of the Transmission Facilities removal from service by the operation of the installed Protection Systems designed to isolate fault conditions or otherwise protect the Transmission Facilities from abnormal operating conditions. Expand the Load Reduction definition to include consideration of TOP judgment and established protection schemes. We suggest text of: "Load Reduction: The reduction of Load that is still connected to the System, but in the judgment of the Transmission Operator or through the previous established Special Protection Systems, Under-frequency Load Shedding programs, Over-frequency Load Shedding program, should be reduced to overcome to lower voltage conditions following a Planning or Extreme Event. Modify the Planning Assessment definition to more explicitly apply to the BES and the TPL-001 requirements. We suggest text of: "Planning Assessment: Documented evaluation of future Transmission System performance and Corrective Action Plans to remedy identified deficiencies in the BES from the steady state and stability performance requirements set forth in the TPL-001 standard. Modify the Planning Events definition to more explicitly apply to the TPL-001 requirements. We suggest text of: "Planning Events: Events that are identified in the steady state and stability performance requirements set forth in the TPL-001 standard. Expand the Year One definition to include the PC, refer to the Planning Assessment, and refer to the current calendar year. We suggest text of: "Year One: The first year that each Transmission Planner and Planning Coordinator is responsible for conducting a Planning Assessment. This is further defined as the planning window that begins 12-18 months from the current calendar year.

Response: Requirement R2, part 2.7.1 allows for generation tripping and run-back, so a definition for Consequential Generation Loss is not required.

The definition for Consequential Load Loss has been revised to provide greater clarity.

> **Consequential Load Loss:** All Load that is no longer served by the Transmission System as a result of Transmission Facilities being removed from service by a Protection System operation designed to isolate the fault .

The definition for Load Reduction has been deleted.

UVLS and UFLS are not precluded in the Corrective Action Plan for those events where controlled load shedding is allowed. The Standard does not address the acceptability of the tools to be used for any Corrective Action Plan. No change made.

As stated in the "Purpose" the Standard establishes Transmission System planning performance for the BES. Repeating that within the Standard creates opportunities for confusion whenever it is not specifically noted. The SDT wants to minimize confusion by not repeating applicability throughout the document. Also the Planning Assessment involves more than remedying identified deficiencies. For example, it may also confirm that there are no deficiencies or it may evaluate the impacts of schedule changes in the Corrective Action Plans. No change made.

The definition of planning events has been deleted.

Organization	Yes or No	Question 8 Comment
The definition for Year One has been revised to reflect your comment. The revised definition is: **Year One:** The first year that a Planning Coordinator or a Transmission Planner is responsible for assessing. This is further defined as the planning window that begins 12-18 months from the end of the current calendar year.		
Duke Energy	No	Bus-tie Breaker definitions still seems somewhat generic and the use of 'configurations' causes uncertainty. Revise Bus-tie Breaker to read, "A circuit breaker whose intended purpose is to connect two individual substation buses." "Bus-tie" is not capitalized in the Table. Consequential Load Loss must include load that is lost due to the inherent response of the particular type of load. Some motors, lighting and processes will naturally trip during an event, although not as a result of the protection system. It may have been the intent of the SDT to include this phenomenon in the Supplemental Load Loss definition. However, this definition includes the phrase, "by end-user equipment", and that makes one think that there are devices at the end-user location that are removing this equipment (and conversely, load that is not disconnected "by" end-user equipment cannot be included). Also, the term "post-Contingency" can be confusing because in the case of faults, this phrase is not clear if it means conditions after the fault initiation itself or only after the clearing of the fault. Revise Supplemental Load Loss to read, "End-user Load that, due to its characteristics, disconnects from the System in response to the conditions created by the System event."
Response: The definition as proposed by Duke Energy for a Bus-tie Breaker would apply to every breaker in any configuration. The definition in the Standard is trying to limit the application to a connection between configurations of buses, which could include flat buses, ring buses, breaker and a half, etc. The SDT is deliberately using the term configuration to avoid unintentionally excluding a particular configuration. No change made. The table has been updated to capitalize the term, “Bus-tie Breaker” where used. The definition for Supplemental Load Loss has been deleted. The definition for Consequential Load Loss has been revised to reflect your comments. The revised definition is: **Consequential Load Loss:** All Load that is no longer served by the Transmission System as a result of Transmission Facilities being removed from service by a Protection System operation designed to isolate the fault .		
Independent Electricity System Operator	No	Is Year One intended to coincide with a calendar year or can it start in any month of the year? We suggest the following change to the definition. Insert “calendar” before “first” and “within” before “12” and change “from” to “of”. NERC should seek to reinstate a definition of “cascading outages” and create one for “uncontrolled islanding”.
Response: The definition for Year One has been revised to reflect your comment. The revised definition is: **Year One:** The first year that a Planning Coordinator or a Transmission Planner is responsible for assessing. This is further defined as the planning window that begins 12-18 months from the end of the current calendar year.		

Organization	Yes or No	Question 8 Comment
The SDT sees no reason to define “cascading outages” or “uncontrolled islanding” in TPL-001-1. If IESO wishes to pursue, please draft a SAR. No change made.		
Kansas City Power & Light	Yes	
Dominion - Electric Transmission	Yes	
Transmission Planning	Yes	
Pepco Holdings, Inc. - Affiliates	Yes	
Exelon Transmission Planning	Yes	
Western Area Power Administration	Yes	
Tampa Electric	Yes	
Florida Reliability Coordinating Council, Inc - Transmission Working Group	Yes	Excellent changes
FMPA	Yes	
CPS Energy	Yes	
JEA	Yes	
Brazos Electric Cooperative	Yes	
ITC Holdings	Yes	None

Organization	Yes or No	Question 8 Comment
Minnesota Power	Yes	
Orlando Utilities Commission	Yes	Good Job.
ReliabilityFirst Corporation	Yes No	It would have been nice if a red lined list of these changes is attached to the standard.
Response: Thank you for your response. However, due to other comments, several definitions have been changed as shown above.		

9. Do you agree with the changes in the performance elements and notes in Table 1? If not, please provide specific comments by note number, note alpha character, or performance category. Please note that footnotes 5 and 10 are handled separately in question 10.

Summary Consideration: While many comments were received from industry for this question, the vast majority of them were of a clarifying nature. While there were still a few questions on raising the bar for 300 kV, the actual performance elements now seem to have been honed to a point that is acceptable. The following changes were made due to industry comments:

Non-Consequential Load Loss: Non-Interruptible Load loss other than Consequential Load Loss and the response of voltage sensitive Load including Load that is disconnected from the System by end-user equipment.

R1 Each Transmission Planner and Planning Coordinator shall maintain System models within its respective area for performing the studies needed to complete its Planning Assessment. The models shall use the latest data consistent with that provided in accordance with the MOD-010 and MOD-012 standards, supplemented by other sources as needed, including items represented in the Corrective Action Plan, and shall represent projected System conditions.

R5 Each Transmission Planner and Planning Coordinator shall have criteria for acceptable System steady state voltage limits, post-Contingency voltage deviations, and the transient voltage response for its System. For transient voltage response, the criteria shall at a minimum, specify a voltage level and a maximum length of time that transient voltages may remain outside that level.

Header note 'a': BES Transmission voltage instability, cascading outages, and uncontrolled islanding shall not occur.

Header note 'c': Simulate the removal of all elements that Protection Systems and other controls are expected to automatically disconnect for each event.

Header note 'f': Facility Ratings shall not be exceeded.

Header note 'k': Transient voltage response shall be within acceptable limits established by the Planning Coordinator and the Transmission Planner.

P4: Loss of multiple elements caused by a stuck breaker [11](non-Bus-tie) attempting to clear a Fault on one of the following: & 6. Loss of multiple elements caused by a stuck breaker[10] (Bus-tie) attempting to clear a Fault on the associated bus

P7: Any two adjacent (vertically or horizontally) circuits on common structure

Extreme event 'a': Simulate the removal of all elements that Protection Systems and automatic controls are expected to disconnect for each Contingency

Extreme event steady state 1: Loss of a single generator, Transmission Circuit, single pole of a DC Line, shunt device, or transformer forced out of service followed by another single generator, Transmission Circuit, single pole of a different DC Line, shunt device, or transformer forced out of service prior to System adjustments.

Extreme event Stability 1: With an initial condition of a single generator, Transmission circuit, single pole of a DC line, shunt device, or transformer forced out of service, apply a 3Ø fault on another single generator, Transmission circuit, single pole of a different DC line, shunt device, or transformer prior to System adjustments.

Footnote 2: Unless specified otherwise, simulate Normal Clearing faults. Single line to ground (SLG) or three phase (3Ø) are the fault types, that must be evaluated in Stability simulations for the event described. A 3Ø or a double line to ground fault study indicating the criteria are being met is sufficient evidence that a SLG condition would also meet the criteria.

Footnote 3: Bulk Electric System (BES) level references include extra-high voltage (EHV) Facilities defined as greater than 300kV and high voltage (HV) Facilities defined as the 300kV and lower voltage Systems as defined by the Regional Entity. The designation of EHV and HV is used to distinguish between stated performance criteria allowances for interruptions of Firm Transmission Service and Non-Consequential Load.

Footnote 7: Opening breaker(s) without a fault on one end of a normally networked Transmission circuit such that the line is now open at that end and possibly serving Load radial from a single source point.

Footnote 10: A stuck breaker means that for a gang-operated breaker, all three phases of the breaker have remained closed. For an independent pole operated (IPO) or an independent pole tripping (IPT) breaker, only one pole is assumed to remain closed. A stuck breaker results in Delayed Fault Clearing .

Footnote 11: Excludes circuits that share a common structure or common Right-of-Way for 1 mile or less.

Organization	Yes or No	Question 9 Comment
Northeast Power Coordinating Council	No	For Steady State & Stability: Steady State & Stability: a. Transmission voltage instability, cascading outages, and uncontrolled islanding shall not occur. b. Consequential Load Loss, Supplemental Load Loss, Load Reduction, and consequential generation loss are acceptable as a consequence of any Planning or Extreme Event excluding P0. However, Supplemental Load Loss and Load Reduction associated with an event shall not be used to meet steady state performance requirementsP5 Priority Comment As written, this requirement is overly severe. This would require the simulation of a “dead” station if only one battery is present (use of NERC Glossary Protective System definition is too broad). The failure of the single protection system should be limited to certain aspects of the protection system. P7 Priority Comment Event 1 - This requirement requires the evaluation of the loss of two circuits on a multiple circuit tower. We recommend that this be modified so that only the loss of two adjacent (vertically or horizontally) circuits need be evaluated. We also recommend that the Planning Coordinator be allowed to evaluate and if appropriate exempt specific locations from this contingency based on acceptable risk. Comments on Extreme Events Table 1- We recommend renumbering the Extreme Events table to be Table 2. Stability Condition 2 Note a - Priority Comment - As written, this requirement is overly severe. This would require the simulation of a “dead” station if only one battery is present (use of NERC Glossary’s Protective System definition is too broad). The failure of the single protection system should be limited to certain aspects of the protection system. Stability Condition 2 Note h “ Eliminate this requirement or change to loss of station following three-phase fault. This note is confusing. Without providing a better defined scenario, it is unclear as to what clearing times should

Organization	Yes or No	Question 9 Comment
		be used in this simulation. Comments on Footnotes " Table 1- We recommend renumbering the Footnotes table to be Table 3. Footnote 1.a.i " Should clarify that this requirement refers to generator units that are connected to the BES system. Footnote 1.a.ii " Contingency Reserve is dependent on the generation on-line. We suggest changing the first sentence to say that you can't lose more than that permissible by the Planning Coordinator. Also change "pull out of synchronism" to "lose synchronism" in this sentence and in the second sentence. (Is "Lose synchronism" a more commonly used term?). Footnote 1.a.i, states "For Planning Event P1: No generating unit or units shall be allowed to pull out of synchronism." There is the potential for this requirement to be taken too far. Does this mean that someone's 4 kW generator at home needs to remain synchronized? Therefore, there needs to be some sort of qualifier on this requirement. Suggested wording: "For Planning Event P1: No generating unit or units greater than 20 MW and directly interconnected at 100 kV or above shall be allowed to lose synchronism. Note that synchronism applies to conventional synchronous generators and may not apply to other generation technology." Footnote 3 " We recommend revising the wording of the last sentence to "A three phase fault study indicating criteria are being met is sufficient evidence that a SLG condition would also meet criteria. Footnote 4 " We recommend that a lower bound be put on the HV electric systems (such as 100 kV), rather than just saying "and lower". As has been commented on in a previous draft, the Drafting Team should also consider not having a prescribed voltage definition of BES, be it called EHV or HV. Studies should determine what facilities should be part of the BES because of their impact on reliability. A proposal is to modify Footnote 4 to replace the phrase "?(EHV) Facilities defined as greater than 300 kV?? with "?(EHV) Facilities defined as having a significant impact on the reliability of the System, generally at voltages greater than 300 kV as determined by the Planning Coordinator?? In using such language, the more stringent requirements could apply to BES/EHV but not globally for Facilities operating at voltages greater than 300 kV. Using this methodology the extra investment required would go towards real improvement of the reliability of the System. EHV and HV should be added to the Definitions of Terms Used in Standard. Footnote 12 We recommend adding an alternative modifier to the end of the sentence, "or for 5 towers or less. This is consistent with NPCC criteria.
Response: NPCC suggested adding the word 'Transmission' to the beginning of header note 'a'. In TPL-001-1, draft 4, the SDT made a change to header note 'a' as suggested by the commenter but modified it to be 'BES Transmission'. **Header note 'a':** BES Transmission voltage instability, cascading outages, and uncontrolled islanding shall not occur. Additionally it is proposed to state in header note "b" that Load Reduction is not an acceptable means to meet steady state performance requirements. Regarding the		

Organization	Yes or No	Question 9 Comment
suggested change to header note 'b', no change was made as the standard does not prescribe a particular Load model such as constant power, constant impedance, etc. Depending on the assumptions used by the Transmission Planner, a Load Reduction could occur in the steady state analysis. In response to industry comments on TPL-001-1, draft 2, the SDT clarified that the P5 event is not intended to include an evaluation of individual components of the Protection System. The intent of P5 is to evaluate the failure of a Protection System design, and it is not based on any particular component of that design. Also, please see the Summary Considerations for Question 7 from the second posting comments; specifically item 3 on page 207. The suggested wording change to include 'adjacent' for the P7 planning event is accepted by the SDT and reflected in TPL-001-1, draft 4. The SDT does not accept the proposed provision for the Planning Coordinator to exempt locations for study of the P7 event beyond what is already exempted per footnote 11. **P7:** Any two adjacent (vertically or horizontally) circuits on common structure The suggested change to reference the extreme events as Table 2 was not accepted by the SDT. The team feels sufficient clarity is provided by the division breaks within the table. The table is to be viewed holistically as a single table stating performance requirements and reference notes for the TPL-001-1 standard. Regarding extreme event Stability item 2a, the response to your P5 comment above applies. No changes were made in regard to extreme event 2a. Regarding extreme event Stability item 2h, items 2f through 2h are deleted as this was a mis-interpretation of the existing table and are not required in the Stability timeframe. The suggested change to reference the Footnotes area as Table 3 was not accepted by the SDT. The team feels sufficient clarity is provided by the division breaks within the table. The table is to be viewed holistically as a single table stating performance requirements and reference notes for the TPL-001-1 standard. Footnote 1 has been deleted and moved into Requirement R4, parts 4.1.1 – 4.1.3. The indicated change was not made by the SDT as it was felt that it added no additional clarity. Regarding footnote 1.a.ii the SDT did not accept the proposed wording changes related to loss of synchronism. The change proposed was not substantive and the wording presently used, "pulling out of synchronism", is sufficient. Footnote 1 has been deleted and moved into Requirement R4, parts 4.1.1 – 4.1.3. No change made. Regarding the suggestion for the Planning Coordinator to establish the maximum allowable amount, the SDT has set a maximum and believes that it is the appropriate value. An entity can always set more stringent criteria. No change made. The comment on footnote 1.a.i is redundant and already addressed above. Footnote 1 has been deleted and moved into Requirement R4, parts 4.1.1 – 4.1.3. The SDT accepts the NPCC proposed change for footnote 3 (now footnote 2). **Footnote 2:** Unless specified otherwise, simulate Normal Clearing faults. Single line to ground (SLG) or three phase (3Ø) are the fault types, that must be evaluated in Stability simulations for the event described. A 3Ø or a double line to ground fault study indicating the criteria are being met is sufficient evidence that a SLG condition would also meet the criteria. Regarding footnote 4 (now footnote 3), the SDT does not accept the proposed change to establish a lower bound on the HV electric System. The lower bound is based on the BES definition established by a Regional Entity organization. While this is generally understood to be 100kV, it may vary throughout the North American footprint. The SDT has however modified footnote 3 for clarity. **Footnote 3:** Bulk Electric System (BES) level references include extra-high voltage (EHV) Facilities defined as greater than 300kV and high voltage (HV) Facilities defined as the 300kV and lower voltage Systems as defined by the Regional Entity. The designation of EHV and HV is used to distinguish		

Organization	Yes or No	Question 9 Comment
between stated performance criteria allowances for interruptions of Firm Transmission Service and Non-Consequential Load. Regarding footnote 4 (now footnote 3), the commenter suggest that the standard should not prescribe a voltage definition of BES, be it called EHV or HV and that studies are needed to determine BES Facility definitions. The BES definition is defined by the Regional Entity organization and studies are not generally relied upon for BES determination. The additional changes suggested in revising footnote 3 to limit the EHV definition to only those Facilities deemed significant to reliability as determined by the Planning Coordinator was not accepted by the SDT. Although not unanimous, the majority of the SDT and industry stakeholders believe the 300 kV and higher Systems (EHV) generally represent the backbone of many Systems in the various Interconnections and that the EHV breakpoint and the more stringent requirements are appropriately defined. The EHV and HV definitions are not being added to the NERC Glossary of Terms based on their limited use within the TPL standard. Regarding footnote 12 (now footnote 11), the 1 mile exception is more precise as span lengths can vary greatly between towers. No change was made.		
Transmission Planning	No	COMMENT: P2-1. Opening of Breaker(s) w/o fault Event: Does the modeling of this event require that the line remains energized up to the breakers" This will require adding a bus at each end with a zero impedance branch connection to "open" representation of breakers. Explicit modeling of a circuit breaker opening would require a substantial modeling effort and would not produce results more adverse than any of the other P2 contingencies. Why is this necessary? Recommend deletion of this planning event. The threshold of higher performance for facilities above 300 kV may wrongly influence decisions on project alternatives in favor of facilities with less stringent requirements. We do not agree that such a threshold is necessary or warranted.
Response: In Draft 3, footnote 8 (now footnote 7) was added to further clarify the need for the P2-1. There is no need to show a line energized up to the breakers that opened. The intent is simply to look for low voltage or thermal problems while supplying Load from one end of a normally networked line. The SDT does not believe the proposed higher performance requirements for the EHV will cause a disincentive for the EHV infrastructure. Although not unanimous, the majority of the SDT and industry stakeholders believe the 300 kV and higher Systems (EHV) generally represent the backbone of many Systems in the various Interconnections and that the EHV breakpoint and the more stringent requirements are appropriately defined. No change made.		
SERC Engineering Committee Planning Standards Subcommittee	No	Table 1 titles: The word "Requirements" needs to be added to the Table 1 titles in the existing tables. Table 1 " Steady State & Stability Performance Requirements Planning Events Table 1 " Steady State & Stability Performance Requirements Extreme Events Table 1 " Steady State & Stability Performance Requirements Footnotes (Planning Events and Extreme Events)Steady-state vs. stability analysis: We recommend that Table 1 be split back as was done in the previous draft to handle the 1) steady-state and 2) stability performance requirements. This is needed to provide clarity on which contingencies apply to steady-state and which apply to stability analysis. Table I, P7.1: It would not be likely to lose the two outside circuits on a vertically configured structure and not lose the middle circuit. Change the wording to: "Any two adjacent circuits on a common structure.
Response: The Table 1 title does not include the word requirements since the table is referenced by the requirements of the standard. For example, see		

Organization	Yes or No	Question 9 Comment
Requirements R3, parts 3.1 and 3.4 which require the Transmission Planner to develop Contingency lists for study based on the table performance requirements. The tables were combined for convenience since each Contingency event was the same in each table and based on stakeholder input. The Fault Type column adequately describes what fault type is required for study in the dynamic Stability timeframe. No change made. The suggested wording change to include "adjacent" for the P7 planning event is accepted by the SDT and reflected in Draft 4. **P7:** Any two adjacent (vertically or horizontally) circuits on common structure		
Duke Energy	No	Stability Extreme 2g needs a note like number 12 that excludes short distances. Stability Extreme 2h: Is this meant to be an event initiated by a 3LG fault or is it a catastrophic event that leaves all the elements at a station with a 3LG fault. If it is the former, then 2h needs a note to limit this to locations where actual events could lead to the loss of the entire station. There is no need to study this if there are no protection system events that lead to loss of the whole station (there would be no scenario to model). If 2h is meant to represent some catastrophe that causes all the elements at the site to experience a fault, then some clarification is needed to get consistent studies. Possibly rewrite 2h as, ?Assume all the buses at a single voltage level (one voltage level plus transformers) experience an event that results in a 3LG fault and disables local protection (fault must clear from remote stations or other side of transformer).
Response: The SDT agrees with the proposed addition of a footnote to address a threshold distance for circuits considered for study in loss of common Right-of-Way. The team has set the threshold at 1 mile or more, consistent with footnote 11. Footnote 11 (formerly footnote 12) was revised to account for both the common tower and common Right-of-Way exemption. Footnote 11 has been added to the extreme event Stability 2f and steady-state 2b. **Footnote 11:** Excludes circuits that share a common structure or common Right-of-Way for 1 mile or less Regarding extreme event Stability item 2h, items 2f through 2h are deleted as this was a mis-interpretation of the existing table and are not required in the Stability timeframe.		
Modesto Irrigation District	No	On page 20 under Table 1, why are "SLG" (i.e., single line to ground) type faults still specified when footnote 3 on page 24 indicates that analyzing three phase faults is sufficient ? On page 20 under Table 1 part f, changing "post transient" to "post Contingency" may be confusing to most analysts as post-transient is a well defined term that has been in use for many years, and is even referenced in Table W-1 of the WECC supplemental planning standard TPL - (001 thru 004) " WECC " 1 - CR. On page 20 under Table 1 part g, does that mean that for Planning Event P0 the analyst is not required to simulate a fault with normal clearing without a loss of any system element, in order to demonstrate system stability " On page 24 under Footnote 1 a ii, I would like to suggest that we add the phrase "(unless the relays are equipped with blinders and timers)" right after the phrase "must not pass through relay characteristics". This is because the blinders (i.e., straight line characteristic of a distance relay) and timers can be used to prevent distance relays from tripping when power angle swings cause the apparent impedance the distance relays see to cross into the distance relay's zone of protection.

Organization	Yes or No	Question 9 Comment
Response: When a SLG fault type is specified in Table 1, it is the fault that must be satisfied to meet performance criteria for the referenced planning event. Since 3-phase faults are simpler to simulate, a planner may simulate the 3-phase fault and if performance criteria are met then no further work is needed since the 3-phase fault has a greater BES impact than an SLG fault. However, if the 3-phase screening does not meet performance criteria, then the planner must perform the more labor intensive SLG analysis to determine whether or not performance criteria are being met. Please see footnote 2. The change from post-transient to post-Contingency was made in the last draft since the note refers to a steady-state timeframe. No change made. No stability review for the P0 event is required. Footnote 1 has been deleted and moved to Requirement R4, parts 4.1.1 – 4.1.3 but the indicated change was not made as the SDT does not feel that it would add any clarity.		
Pepco Holdings, Inc. - Affiliates	Yes	PHI does not disagree with the performance elements, but suggests that the table would be improved if a leading sentence were added to the definition section at the beginning of the table.
Response: Without a specific recommendation, the SDT is unable to make a change.		
MRO NERC Standards Review Subcommittee	No	MRO NSRS suggests the following changes:MRO NSRS believes reference to the use of Load Reduction to meet steady state performance requirement was omitted in Planning Events, Steady State and Stability, Item b. MRO NSRS suggests modifying the last sentence in Item b: However, Supplemental Load Loss and Load Reduction associated with an event shall not be used to meet steady state performance requirements. MRO NSRS proposes limiting the scope to automatic devices in Planning Events, Steady State and Stability, Item c. MRO NSRS suggests text of: c. Simulate the removal of all elements that Protection Systems and other Controls are expected to disconnect automatically for each Contingency?. Modify the P3 Category performance criteria to apply only to the loss of two generators because probability of the loss of two base load generators is an order of magnitude higher than the loss of a generator and any other transmission element. MRO NSRS suggests the listing of: the loss of transmission circuit, transformer, shunt device, and single pole of DC line be removed from the P3 Events column. The corresponding events be moved to the P6 Category by “1. Generator” to the listing in the Initial System Condition (Loss of . . .) column. Limit the scope of the simulations in Item 1 of the Extreme Events, Steady State and Stability section to automatic systems and controls. MRO NSRS suggests this text: 1. Simulate the removal of all elements that Protection Systems and controls are expected to disconnect automatically for each Contingency. Clarify the meaning of the loss of multiple circuits in Item 2.a of the Extreme Events, Steady State section by using wording similar to P7. MRO NSRS suggests this text: a. Loss of three or more circuits that share a common structure. Clarify the reference to actual, historical operating experience in Item 3.b of the Extreme Events, Steady State section. MRO NSRS suggests this text: b. Other events based upon actual operating experience that may result in wide area disturbances. Clarify the reference to actual, historical operating experience in Item 2.i of the Extreme Events, Stability State

Organization	Yes or No	Question 9 Comment
		section. MRO NSRS suggests this text that is similar to Steady State, Item 3.b: i. Other events based upon actual operating experience that may result in wide area disturbances. Further clarify the applicable shunt devices in Footnote 7 with this suggested text: 7. Requirements which are applicable to shunt devices, also apply to FACTS devices that are connected to ground, but not instrument voltage transformers or surge arresters.
Response: Regarding the suggested change to header note "b", no change was made as the standard does not prescribe a particular Load model such as constant power, constant impedance, etc. The SDT has added the suggested wording. **Header note 'c':** Simulate the removal of all elements that Protection Systems and other controls are expected to automatically disconnect for each event. The SDT disagrees with the proposed change to the P3 event. The loss of a generator is highly probable and the SDT and other stakeholders support the P3 requirement to meet the P1 criteria for the loss of a generator unit plus the loss of any other P1 element, not just another generator. No change made. The SDT has added the suggested wording. **Extreme event 'a':** Simulate the removal of all elements that Protection Systems and automatic controls are expected to disconnect for each Contingency The SDT disagrees that the proposed wording of extreme event 2a is needed since the proposed change is not substantive. The SDT disagrees that the proposed wording of extreme event 3b is needed since the proposed change is not substantive. Regarding the suggested change to footnote 7 (now footnote 6), the devices listed are not typically considered in a planning study. The SDT disagrees that the proposed change is needed for clarity. No change made.		
SERC Engineering Committee Dynamics Review Subcommittee (DRS)	No	P5 should not be a Planning Event. PRC Standards address protection system failures. The complexity associated with identifying and simulating such events is unknown and the defense of assumptions made and events simulated will lead to inconsistency in compliance and enforcement. Industry-accepted proxies for such events could be developed that would allow for efficient identification of areas needing further detailed study. Attempting to intermingle protection system operation with BES performance will be nearly impossible to implement given current technologies Stability Extreme 2g needs a note like number 12 that excludes short distances. Stability Extreme 2h: Is this meant to be an event initiated by a 3LG fault or is it a catastrophic event that leaves all the elements at a station with a 3LG fault. If it is the former, then 2h needs a note to limit this to locations where actual events could lead to the loss of the entire station. There is no need to study this if there are no protection system events that lead to loss of the whole station (there would be no scenario to model). If 2h is meant to represent some catastrophe that causes all the elements at the site to experience a fault, then some clarification is needed to get consistent studies. Possibly rewrite 2h as, "Assume all the buses at a single voltage level (one voltage level plus transformers) experience an event that results in a 3LG fault and disables local protection (fault must clear from remote stations or other side of transformer).

Organization	Yes or No	Question 9 Comment
Response: In P5 the event description was changed in Draft 3 to match what is stated in the currently approved TPL standards under Category C6 through C9. The intent of P5 is to evaluate a failure of a single Protection System design that introduces a delayed clearing mode that may also include additional electrical Facilities being removed when compared to normal fault clearing. The SDT agrees with the proposed addition of a footnote to address a threshold distance for circuits considered for study in loss of common Right-of-Way. The team has set the threshold at 1 mile or more, consistent with footnote 12 (now footnote 11). Footnote 11 was revised to account for both the common tower and common Right-of-Way exemption. Footnote 11 has been added to the extreme event Stability 2f and steady-state 2b. **Footnote 11:** Excludes circuits that share a common structure or common Right-of-Way for 1 mile or less Regarding extreme event Stability item 2h, items 2f through 2h are deleted as this was a mis-interpretation of the existing table and are not required in the Stability timeframe.		
SERC Engineering Committee Reliability Review Subcommittee (RRS)	No	"The word "Requirements" needs to be added to the Table 1 titles in the existing tables.oTable 1 ? Steady State & Stability Performance Requirements Planning Events Table 1 ? Steady State & Stability Performance Requirements Extreme Events Table 1 Steady State & Stability Performance Requirements? Footnotes (Planning Events and Extreme Events)? We recommend that Table 1 be split back as was done in the previous draft to handle the 1) steady-state and 2) stability performance requirements. This is needed to provide clarity on which contingencies apply to steady-state and which apply to stability analysis. Table I, P7.1: It would not be likely to lose the two outside circuits on a vertically configured structure and not lose the middle circuit. Change the wording to: Any two adjacent circuits on a common structure. The word "Requirements" needs to be added to the Table 1 titles in the existing tables.oTable 1 Steady State & Stability Performance Requirements Planning Events Table 1 Steady State & Stability Performance Requirements Extreme Events Table 1 Steady State & Stability Performance Requirements? Since it appears that the Table 1 cannot fit on a single page, it is suggested that multiple tables be developed to handle the 1) steady-state and 2) stability performance requirements. Footnotes may be included on a second page if needed. Comments were provided in early versions regarding the issues associated with raising the bar, and it was suggested that the marginal reliability benefits associated with these changes were not worth the marginal costs. We have not seen any significant changes from the earlier performance requirements. The question still remains, are we directing the resources where they need to be allocated to address and improve system reliability? So far the answer is believed to be "No". The existing TPL 002-0 allows for some local load to be dropped for a single contingency event as long as the Bulk system reliability was not impacted. However there is no such allowance any longer for losing such load for a single contingency in the proposed draft. It would be very expensive for SERC Members to fix all such events in several remote areas that would have very little impact on the overall reliability of the SERC Members? bulk system. SERC Members believe that the capital spent for these fixes could be used to better strengthen the overall bulk system in much better ways.

Organization	Yes or No	Question 9 Comment
		P5 should not be a planning event. PRC standards address protection system failures. The complexity associated with identifying and simulating such events is unknown and the defense of assumptions made and events simulated will lead to inconsistency in compliance and enforcement. Industry accepted proxies for such events could be developed that would allow for efficient identification of areas needing further study. Attempting to intermingle protection system operation with BES performance will be nearly impossible to implement given current technologies.
Response: The Table 1 title does not include the word requirements since the table is referenced by the requirements of the standard. For example, see Requirement R3, parts 3.1 and 3.4 which require the Transmission Planner to develop Contingency lists for study based on the table performance requirements. The tables were combined for convenience since each Contingency event was the same in each table and based on stakeholder input. The Fault Type column adequately describes what fault type is required for study in the dynamic Stability timeframe. The suggested wording change to include "adjacent" for the P7 planning event is accepted by the SDT and reflected in Draft 4. **P7:** Any two adjacent (vertically or horizontally) circuits on common structure In regards to proposed change to prohibit Non-Consequential Load shed in response to a single Contingency event. FERC, in Order 693, was clear in paragraph 1794 that interruption of Non-Consequential Load is not permitted for single Contingency events. This position was vetted in draft 1 of TPL-001-1 and most stakeholders and the majority of the SDT support this position. The use of an SPS design would be permitted for a single Contingency event if the SPS design interrupts service to customers involved in an interruptible Load contract arrangement. The suggestion for multiple tables was not accepted by the SDT. The team feels sufficient clarity is provided by the division breaks within the table. The table is to be viewed holistically as a single table stating performance requirements and reference notes for the TPL-001-1 standard. In P5 the event description was changed in Draft 3 to match what is stated in the currently approved TPL standards under Category C6 through C9. The intent of P5 is to evaluate a failure of a single Protection System design that introduces a delayed clearing mode that may also include additional electrical Facilities being removed when compared to normal fault clearing.		
FirstEnergy Corp	No	A. Note b: Please see comments in our response to Question #8 related to note b and the Supplemental Load definition. B. Note b: We believe the SDT inadvertently allowed the used of Load Reduction to meet Steady State performance requirements. We suggest text of: "However, Supplemental Load Loss and Load Reduction associated with an event shall not be used to meet steady state performance requirements." C. Note b: If our assumption is correct on item B above, we fail to see the need to define two terms Load Reduction and Supplemental Load Loss which are not permitted within the Table 1 performance requirements for steady-state nor mentioned and used within the requirement language. It appears that the Load Reduction and Supplemental Load Loss are permissible within the stability timeframe. It is not understood why it would be valid to account for these in the stability timeframe but not steady-state. D. Note i: What if the TP or PC has no criteria for transient voltage response? The standard should have a requirement that ensures that such a criteria is documented by the entity if it is intended to be used within the TPL-

Organization	Yes or No	Question 9 Comment
		001-1 standard. E. P2-3: It seems that footnote 10 should apply to the EHV criteria stated in the column titled "Interruption of Firm Transmission Service Allowed" since it applies for the P5-1 through P5-5 EHV criterion. F. P5: We agree with the change made in Draft 3 to remove the reference to "single component" of the Protection System. Additionally, the SDT clarified its intended purpose of the P5 event as stated in the Draft 2, Q7 Summary Considerations:"A number of commenters expressed concern related to Planning Event P5 Protection System Failure and the need to evaluate a single component failure of a BES Protection System; particularly a failure of a station battery. The SDT has revised the P5 Planning Event description to remove the reference to single component failure and the event description was changed to match what is stated in the currently approved TPL standards under Category C6 through C9. The intent of P5 is to evaluate a failure of a single Protection System design that introduces a delayed clearing mode that may also include additional electrical Facilities being removed when compared to normal fault clearing. A Protection System failure resulting in loss of the substation (one voltage level plus transformers) would not qualify as a P5 Planning Event since that event is considered an Extreme Event. A Standard Authorization Request (SAR) has been issued for industry comment (1/20/2009 through 2/18/2009) based on work completed by the System Protection and Controls Task Force (SPCTF). The proposed project will address the need for Protection System redundancy, based on an n-1 failure of individual components of the Protection System."It is suggested that a footnote be added the text Protection System as stated in the P5 Event Description. The footnote should read "Failure of a single Protection System design that introduces a delayed clearing mode that may also include additional electrical Facilities being removed when compared to normal fault clearing. This contingency is NOT based on failure of any particular single component of the Protection System design." This footnote will help clarify the intent without having to rely on the Comment record established during this standard development project. G. In the Extreme Event table we suggest event identifiers that are similar to those used in the Planning Events table. For Extreme Steady State we suggest ESS1, ESS2-1, ESS2-1... ESS2-5, ESS3-1 and ESS3-2. For the Extreme Stability we suggest ES1, ES2-1...ES2-9. This will provide a short-cut reference for industry when referring to a particular event.

Response:

A) Please see our comments related to the Supplemental Load definition in question 8.

B) Regarding the suggested change to header note “b”, no change was made as the standard does not prescribe a particular Load model such as constant power, constant impedance, etc.

C) Voltage sensitive Load loss is permitted in the transient Stability timeframe as it is common in Stability simulation tools to assume a certain percentage of Load is removed based on motor stalling. To the extent a Transmission Planner accounts for this within their analysis, the standard does not prohibit its use in the Stability timeframe. However, for steady-state thermal and voltage criteria reviews the use of voltage sensitive Load loss is prohibited. The definition of Load reduction has been deleted and the concept has been incorporated in the definition of Non-Consequential Load Loss.

D) The standard drafting team has added new Requirement R5 to explicitly require criteria for transient voltage criteria.

Organization	Yes or No	Question 9 Comment
R5 Each Transmission Planner and Planning Coordinator shall have criteria for acceptable System steady state voltage limits, post-Contingency voltage deviations, and the transient voltage response for their System. For transient voltage response, the criteria shall at a minimum, specify a voltage level and a maximum length of time that transient voltages may remain outside that level. E) Footnote 10 (now footnote 9) does not apply since P2-3 is classified as a single Contingency. F) In regards to the P5 event, in response to industry comments on Draft 2, the SDT clarified that the P5 event is not intended to include an evaluation of individual components of the Protection System. The intent of P5 is to evaluate a failure of a Protection System design, and not based on any particular component of the design. Please see the Summary Considerations area of Question 7 from the Draft 2 comments; specifically item 3 on page 207. Since the P5 event description says loss of a single Protection System and not single Protection System device or component, the SDT believes sufficient clarity is inherent in the P5 event description. The proposed footnote was not accepted by the SDT. **G)** Regarding the proposed short-cut references to the extreme events, the SDT disagrees. No change made.		
TVA System Planning	No	The existing TPL 002-0 allows for some local load to be dropped for a single contingency event as long as the Bulk system reliability was not impacted. However there is no such allowance any longer for losing such load for a single contingency in the proposed draft. It would be very expensive for TVA to fix all such events in several remote areas that would have very little impact on the overall reliability of the TVA bulk system. TVA believes that the capital spent for these fixes could be used to better strengthen the overall bulk system in much better ways. P5 should not be a planning event. PRC standards address protection system failures. The complexity associated with identifying and simulating such events is unknown and the defense of assumptions made and events simulated will lead to inconsistency in compliance and enforcement. Industry accepted proxies for such events could be developed that would allow for efficient identification of areas needing further study. Attempting to intermingle protection system operation with BES performance will be nearly impossible to implement given current technologies. Stability Extreme 2.g, and Steady State 2.b. both need a note like footnote number 12 that excludes short distances. Suggest footnote #12 be modified to include right-of-way in addition to structures.
Response: In regards to a proposed change to prohibit Non-Consequential Load shed in response to a single Contingency event, FERC, in Order 693, was clear in paragraph 1794 that interruption of Non-Consequential Load is not permitted for single Contingency events. This position was vetted in draft 1 of TPL-001-1 and most stakeholders and the majority of the SDT support this position. The use of an SPS design would be permitted for a single Contingency event if the SPS design interrupts service to customers involved in an interruptible Load contract arrangement. In P5 the event description was changed in Draft 3 to match what is stated in the currently approved TPL standards under Category C6 through C9. The intent of P5 is to evaluate a failure of a single Protection System design that introduces a delayed clearing mode that may also include additional electrical Facilities being removed when compared to normal fault clearing. The SDT agrees with the proposed addition of a footnote to address a threshold distance for circuits considered for study in loss of common Right-of-Way. The SDT has set the threshold at 1 mile or more, consistent with footnote 12 (now footnote 11). Footnote 11 was revised to account for both the common tower and common ROW exemption. Footnote 11 has been added to the extreme event steady-state 2b.		

Organization	Yes or No	Question 9 Comment
Footnote 11: Excludes circuits that share a common structure or common Right-of-Way for 1 mile or less		
Exelon Transmission Planning	No	Table 1 comments in general: Even after modification from the previous version, it is still not clear if the "BES Voltage Level" applies to the contingency element voltage leFRCCan overload on a 138 kV line, is non-consequential load loss allowed on the 138 kV system? There is a concern about the lack of definition related to the failure of a "single Protection System" this could be widely interpreted. Would over tripping for line faults fall into this definition?
Response: The BES Voltage Level column applies to the System voltage of the Facilities removed from service by the planning event studied. In the example provided by Exelon, Non-Consequential Load Loss would not be permitted since the outaged facility is at the EHV level. No, over tripping is mis-operation and that does not fall into this definition.		
United Illuminating	No	Steady State & Stability comments as follows: Steady State & Stability: a. Transmission voltage instability, cascading outages, and uncontrolled islanding shall not occur. b. Consequential Load Loss, Supplemental Load Loss, Load Reduction, and consequential generation loss are acceptable as a consequence of any Planning or Extreme Event excluding P0. However, Supplemental Load Loss and Load Reduction associated with an event shall not be used to meet steady state performance requirements P5 Priority Comment As written, this requirement is overly severe. This would require the simulation of a "dead" station if only one battery is present (use of NERC Glossary Protective System definition is too broad). The failure of the single protection system should be limited to certain aspects of the protection system. P7 Priority Comment Event 1 - This requirement requires the evaluation of the loss of two circuits on a multiple circuit tower. We recommend that this be modified so that only the loss of two adjacent (vertically or horizontally) circuits need be evaluated. We also recommend that the Planning Coordinator be allowed to evaluate and if appropriate exempt specific locations from this contingency based on acceptable risk. Comments on Extreme Events Table 1- We recommend renumbering the Extreme Events table to be Table 2. Stability Condition 2 Note a - Priority Comment - As written, this requirement is overly severe. This would require the simulation of a "dead" station if only one battery is present (use of NERC Glossary Protective System definition is too broad). The failure of the single protection system should be limited to certain aspects of the protection system. Stability Condition 2 Note h " Eliminate this requirement or change to loss of station following three phase fault. This note is confusing. Without providing a better defined scenario, it is unclear as to what clearing times should be used in this simulation. Note 1.a.ii " Contingency Reserve is dependent on the generation on-line. We suggest changing the first sentence to say that you can't lose more than that permissible by the Planning Coordinator. Also change "pull out of synchronism" to "lose synchronism" in this sentence and in the second sentence. (Is "Lose synchronism" a more

Organization	Yes or No	Question 9 Comment
		commonly used term?). Note 3 We recommend revising the wording of the last sentence to "A 3 phase fault study indicating criteria are being met is sufficient evidence that a SLG condition would also meet criteria. Note 4 " We recommend that a lower bound be put on the HV electric systems (such as 100 kV), rather than just saying "and lower".
Northeast Utilities	No	Steady State & Stability are as follows:Steady State & Stability: a. Transmission voltage instability, cascading outages, and uncontrolled islanding shall not occur. b. Consequential Load Loss, Supplemental Load Loss, Load Reduction, and consequential generation loss are acceptable as a consequence of any Planning or Extreme Event excluding P0. However, Supplemental Load Loss and Load Reduction associated with an event shall not be used to meet steady state performance requirements Non-Consequential Load Loss Allowed Comment (priority comment):We highly recommend that the standard as written should not allow non-consequential load loss to resolve any violation arising from the planning events in Table 1 (except when considering spare equipment strategy together with events P3 or P6). We believe that planning for reliable power should discourage load loss mitigation. Therefore, the column for the "Non-Consequential Load Loss Allowed" in Table 1 should all have entries of "No". P5 Priority Comment As written, this requirement is overly severe. This would require the simulation of a "dead" station if only one battery is present (use of NERC Glossary's Protective System definition is too broad). The failure of the single protection system should be limited to certain aspects of the protection system. P7 Priority Comment Event 1 - This requirement requires the evaluation of the loss of two circuits on a multiple circuit tower. We recommend that this be modified so that only the loss of two adjacent (vertically or horizontally) circuits need be evaluated. We also recommend that the Planning Coordinator be allowed to evaluate and, if appropriate, exempt specific locations from this contingency based on acceptable risk. Comments on Extreme Events Table 1- We recommend renumbering the Extreme Events table to be Table 2. Stability Condition 2 Note a - Priority Comment - As written, this requirement is overly severe. This would require the simulation of a "dead" station if only one battery is present (use of NERC Glossary's Protective System definition is too broad). The failure of the single protection system should be limited to certain aspects of the protection system. Stability Condition 2 Note h ? Eliminate this requirement or change to loss of station following three-phase fault. This note is confusing. Without providing a better defined scenario, it is unclear as to what clearing times should be used in this simulation. Comments on Footnotes Table 1- We recommend renumbering the Footnotes table to be Table 3. Note 1.a.i " Should clarify that this requirement refers to generator units that are connected to the BES system. Note 1.a.ii " Contingency Reserve is dependent on the generation on-line. We suggest changing the first sentence

Organization	Yes or No	Question 9 Comment
		to say that you can't lose more than that permissible by the Planning Coordinator. Also change "pull out of synchronism" to "lose synchronism" in this sentence and in the second sentence. (Is "Lose synchronism" a more commonly used term?). Note 3 We recommend revising the wording of the last sentence to "A three-phase fault study indicating criteria are being met is sufficient evidence that a SLG fault condition would also meet criteria. Note 4 " We recommend that a lower bound be put on the HV electric systems (such as 100 kV), rather than just saying "and lower".
Central Maine Power Company	No	Steady State & Stability comments as follows:Steady State & Stability: a. Transmission voltage instability, cascading outages, and uncontrolled islanding shall not occur. b. Consequential Load Loss, Supplemental Load Loss, Load Reduction, and consequential generation loss are acceptable as a consequence of any Planning or Extreme Event excluding P0. However, Supplemental Load Loss and Load Reduction associated with an event shall not be used to meet steady state performance requirements P5 Priority Comment As written, this requirement is overly severe. This would require the simulation of a ?dead? station if only one battery is present (use of NERC Glossary Protective System definition is too broad). The failure of the single protection system should be limited to certain aspects of the protection system. P7 Priority Comment Event 1 - This requirement requires the evaluation of the loss of two circuits on a multiple circuit tower. We recommend that this be modified so that only the loss of two adjacent (vertically or horizontally) circuits need be evaluated. We also recommend that the Planning Coordinator be allowed to evaluate and if appropriate exempt specific locations from this contingency based on acceptable risk. Comments on Extreme Events Table 1- We recommend renumbering the Extreme Events table to be Table 2. Extreme Event Stability Condition 2 Note a - Priority Comment - As written, this requirement is overly severe. This would require the simulation of a "dead" station if only one battery is present (use of NERC Glossary Protective System definition is too broad). The failure of the single protection system should be limited to certain aspects of the protection system. Extreme Event Stability Condition 2 Note h " Eliminate this requirement or change to loss of station following three phase fault. This note is confusing. Without providing a better defined scenario, it is unclear as to what clearing times should be used in this simulation. Footnote 1.a.ii " Contingency Reserve is dependent on the generation on-line. We suggest changing the first sentence to say that you can't lose more than that permissible by the Planning Coordinator. Also change "pull out of synchronism" to "lose synchronism" in this sentence and in the second sentence. (Is "Lose synchronism" a more commonly used term?). Footnote 1.a.i, states "For Planning Event P1: No generating unit or units shall be allowed to pull out of synchronism." There is the potential for this requirement to be taken too far. Does this mean that someone's 4 kW generator at home needs to remain synchronized" Therefore, there needs to be some sort of qualifier on this

Organization	Yes or No	Question 9 Comment
		requirement. Suggested wording: "For Planning Event P1: No generating unit or units greater than 20 MW and directly interconnected at 100 kV or above shall be allowed to lose synchronism. Note that synchronism applies to conventional synchronous generators and may not apply to other generation technology." Footnote 3 " We recommend revising the wording of the last sentence to "A three phase fault study indicating criteria are being met is sufficient evidence that a SLG condition would also meet criteria. Footnote 4 " We recommend that a lower bound be put on the HV electric systems (such as 100 kV), rather than just saying "and lower". Footnote 12 " We recommend adding an alternative modifier to the end of the sentence, "or for 5 towers or less. This is consistent with NPCC criteria.

Response: The stakeholders suggest adding the word "Transmission" to the beginning of header note "a". Additionally it is proposed to state in header note "b" that Load Reduction is not an acceptable means to meet steady state performance requirements. In Draft 4, the SDT made a change to header note "a" as suggested by the commenter but modified it to be "BES Transmission…". Regarding the suggested change to header note "b", no change was made as the standard does not prescribe a particular Load model such as constant power, constant impedance, etc. However, the load reduction definition has been deleted and incorporated in Non-Consequential Load.

Header note 'a': BES Transmission voltage instability, cascading outages, and uncontrolled islanding shall not occur.

The SDT agrees that Non-Consequential Load Loss should be discouraged, however, many of the events contained in Table 1 are very low probability events where intentionally dropping load to protect the integrity of the remainder of the BES may be an acceptable solution. Throughout the development process, the SDT has reviewed whether to allow Non-Consequential Load Loss for each event within Table 1 and has determined that "Yes" is the appropriate response where it is used within this column. No change made.

In regards to the P5 event, in response to industry comments on Draft 2, the SDT clarified that the P5 event is not intended to include an evaluation of individual components of the Protection System. The intent of P5 is to evaluate a failure of a Protection System design, and is not based on any particular component of the design. Please see the Summary Considerations area of Question 7 from the Draft 2 comments; specifically item 3 on page 207. Since the P5 event description says loss of a single Protection System and not single Protection System device or component, the SDT believes sufficient clarity is inherent in the P5 event description.

The suggested wording change to include "adjacent" for the P7 planning event is accepted by the SDT and reflected in Draft 4. The SDT does not accept the proposed provision for the Planning Coordinator to exempt locations for study of the P7 event beyond what is already exempted per footnote 12 (now footnote 11).

P7: Any two adjacent (vertically or horizontally) circuits on common structure

The suggested change to reference the extreme events as Table 2 was not accepted by the SDT. The team feels sufficient clarity is provided by the division breaks within the table. The table is to be viewed holistically as a single table stating performance requirements and reference notes for the TPL-001-1 standard.

Regarding extreme event Stability item 2a, our response to your P5 comment above applies. No changes were made in regard to the extreme event 2a.

Regarding extreme event Stability item 2h, items 2f through 2h are deleted as this was a mis-interpretation of the existing table and are not required in the Stability timeframe.

The suggested change to reference the Footnotes area as Table 3 was not accepted by the SDT. The team feels sufficient clarity is provided by the division breaks

Organization	Yes or No	Question 9 Comment
		within the table. The table is to be viewed holistically as a single table stating performance requirements and reference notes for the TPL-001-1 standard. Footnote 1 was deleted and moved to Requirement R4, parts 4.1.1 – 4.1.3 but the SDT did not make the suggested change as it felt that it didn't add any additional clarity. Regarding footnote 1.a.ii the SDT did not accept the proposed wording changes related to loss of synchronism. The change proposed was not substantive and the wording presently used, "pulling out of synchronism", is sufficient. No change made. Regarding the suggestion for the Planning Coordinator to establish the maximum allowable amount, the SDT has set a maximum and believes that it is the appropriate value. An entity can always set more stringent criteria. No change made. The comment on footnote 1.a.i is redundant and already addressed above. The SDT accepts the proposed change for footnote 3 (now footnote 2). **Footnote 2:** Unless specified otherwise, simulate Normal Clearing faults. Single line to ground (SLG) or three phase (3Ø) are the fault types, that must be evaluated in Stability simulations for the event described. A 3Ø or a double line to ground fault study indicating the criteria are being met is sufficient evidence that a SLG condition would also meet the criteria. Regarding footnote 4 (now footnote 3), the SDT does not accept the proposed change to establish a lower bound on the HV electric System. The lower bound is based on the BES definition established by a Regional Entity organization. While this is generally understood to be 100kV, it may vary throughout the North American footprint. The SDT has however modified footnote 3 for clarity. **Footnote 3:** Bulk Electric System (BES) level references include extra-high voltage (EHV) Facilities defined as greater than 300kV and high voltage (HV) Facilities defined as the 300kV and lower voltage Systems as defined by the Regional Entity. The designation of EHV and HV is used to distinguish between stated performance criteria allowances for interruptions of Firm Transmission Service and Non-Consequential Load. Regarding footnote 4 (now footnote 3), the commenter suggest that the standard should not prescribe a voltage definition of BES, be it called EHV or HV and that studies are needed to determine BES Facility definitions. The BES definition is defined by the Regional Entity organization and studies are not generally relied upon for BES determination. The additional changes suggested in revising footnote 3 to limit the EHV definition to only those facilities deemed significant to reliability as determined by the Planning Coordinator was not accepted by the SDT. Although not unanimous, the majority of the SDT and industry stakeholders believe the 300 kV and higher Systems (EHV) generally represent the backbone of many Systems in the various Interconnections and that the EHV breakpoint and the more stringent requirements are appropriately defined. The EHV and HV definitions are not being added to the NERC Glossary of Terms based on their limited use within the TPL standard. Regarding footnote 12 (now footnote 11), the 1 mile exception is more precise as span lengths can vary greatly between towers. No change was made.
System Protection and Transmission Planning Department	No	The order of scenarios listed in the table should reflect the relative probability of events. Did the SDT intend to order listed contingencies by relative severity? Could it do so" Planning Events - SLG fault simulation should not be required. They should only be performed if more severe than 3-phase faults. A SLG fault with delayed breaker clearing could have more system impact than a 3-phase fault. The "Extreme Events" portion of the table is confusing " partly because the form differs from the Planning Event portion. The difference between contingencies in the Planning portion and the Extreme portion is not clear.

Organization	Yes or No	Question 9 Comment
		Perhaps the Extreme Event portion could be a separate Table. Extreme Events / Stability section - Why specifically require "g. SLG fault on all Transmission lines on a common Right-of-Way. "
Response: The order is not based on probability. When a SLG fault type is specified in Table 1, it is the fault that must be satisfied to meet performance criteria for the referenced planning event. Since 3-phase faults are simpler to simulate a planner may simulate the 3-phase and if performance criteria are met, then no further work is needed since the 3-phase fault has a greater BES impact than a SLG fault. However, if the 3-phase screening does not meet criteria, then the planner must perform the more labor intensive SLG analysis to determine whether or not performance criteria are being met. See footnote 2. The extreme events area of the table has not been reformatted. The SDT believes the table clearly delineates what is required in regards to studies required for stability and those required for steady-state. Regarding the extreme events Stability item "g" retains consistency with what is currently in the approved TPL-004-0 standard as a NERC category D7 event.		
PPL Energy Plus	No	The WECC suggests P4 penalizes EHV and if this is true, please re-write P4 to eliminate the penalty.
Response: In regards to the EHV performance criteria for the P4 event, the EHV performance expectations remain as stated in Draft 3. P4 events pose higher risk and impact to the BES since there is no time for System adjustments for potential multiple Facility outages that can result from a single fault. Since the EHV is considered the backbone of the BES carrying large amounts of power between generation and Load and typically not directly servicing end-user customers the higher performance expectations for the high impact P4 events is warranted.		
Bonneville Power Administration PacifiCorp Deseret Generation & Transmission SRP Southern California Edison Company Western Area Power Administration Pacific Gas and Electric Co, NV Energy San Diego Gas and Electric Co	No	P4: Under the event column it should clarify and state language similar to that of P5 (Loss of multiple elements caused by a stuck breaker). In addition, this is a multiple contingency condition and may result in loss of more than 2 elements. As such, this is a low probability condition and loss of Non-Consequential load should be allowed for EHV. We disagree with raising the bar for EHV for P4.

Organization	Yes or No	Question 9 Comment
Idaho Power California ISO		
Xcel Energy	No	P4: Under the event column it should clarify and state language similar to that of P5 (Loss of multiple elements caused by a stuck breaker). In addition, this is a multiple contingency condition and may result in loss of more than 2 elements.
Puget Sound Energy, Inc.	No	P4: Under the event column it should clarify and state language similar to that of P5 (Loss of multiple elements caused by a stuck breaker).
Response: The SDT has added the introductory text proposed for the P4 "Event" column of the table to bring consistency with the P5 event. In regards to the EHV performance criteria for the P4 event, the EHV performance expectations remain as stated in Draft 3. P4 events pose higher risk and impact to the BES since there is no time for System adjustments for potential multiple Facility outages that can result from a single fault. Since the EHV is considered the backbone of the BES carrying large amounts of power between generation and Load and typically not directly servicing end-user customers the higher performance expectations for the high impact P4 events is warranted.		
Western Area Power Administration	Yes	There is information within the notes that is not required to correctly understand and apply the TPL Standard. Examples are: 1. Note 1.a.i " the 2nd sentence is not needed to say what is not an out-of-step occurrence. 2. Note 9 is not needed to clarify what "internal" means.
Response: The SDT believes the notes provided help clarify the performance criteria stated in Table 1. No changes were made in Draft 4.		
Florida Reliability Coordinating Council, Inc - Transmission Working Group		The table is significantly improved from the prior versions and provides superior clarification over the existing standards. However, please explain why there is a performance difference between P2.3 (breaker failure), P4 (stuck breaker) and P7 (2 circuits on a common tower) for EHV. We recommend consistant critera between P2.3, P4 and P7 that allow curtailment of firm service and loss of non-consequential load.
Response: The SDT appreciates your support in the overall table revisions. In the early stages of standard development, the SDT reviewed the various Contingency classifications for likelihood and impact. Single Contingency events were placed higher in the table than multiple Contingency events. The SDT determined that since the EHV System (300kV and above) was utilized to carry large amounts of power between generation and Load and typically not directly servicing end-user customers, higher performance expectations were appropriate for some higher impact events. The P2.3 (breaker failure) event poses a high risk and impact to the BES since it is a single Contingency event. The SDT raised the performance requirement on the P4 (stuck breaker) event for EHV to parallel that of the P2.3 event. The SDT considered that even though P4 is a multiple event, the design of the substation and Protection System can reduce the impact of events and the SDT believes that the standard should encourage designs that have a positive impact on the System's ability to serve Load. The SDT determined that the performance requirements for the P7 event for EHV should not be raised.		
FMPA	No	Table 1 seems to have lost the requirement to be within Facility Ratings for single and double contingencies (e.g., the change in note "f" of Table 1). Are we missing something? If not, is this change intentional?

Organization	Yes or No	Question 9 Comment
		Footnote 10 does not seem to adequately highlight that Facilities should be within applicable ratings for single and credible double contingencies. The table is significantly improved from the prior versions and provides superior clarification over the existing standards. However, please explain why there is a performance difference between P2.3 (breaker failure), P4 (stuck breaker) and P7 (2 circuits on a common tower) for EHV. Considering the frequency of these events in actual experience, it would seem that 2 circuits on a common tower should have a more restrictive or equal performance to a stuck breaker performance, yet the performance requirements are just the opposite. We recommend allowing curtailment of firm service and loss of non-consequential load for a stuck breaker or failed breaker.
Response: In Table 1, header note "f", the text "Facility Ratings shall not be exceeded" was inadvertently deleted in the Draft 3 standard and has been re-inserted in Draft 4. **Header note 'f':** Facility Ratings shall not be exceeded. Regarding footnote 10 (now footnote 9), the issue was addressed by adding Facility Ratings back in. The SDT appreciates your support in the overall table revisions. In the early stages of standard development, the SDT reviewed the various Contingency classifications for likelihood and impact. Single Contingency events were placed higher in the table than multiple Contingency events. The SDT determined that since the EHV System (300kV and above) was utilized to carry large amounts of power between generation and Load and typically not directly servicing end-user customers, higher performance expectations were appropriate for some higher impact events. The P2.3 (breaker failure) event poses a high risk and impact to the BES since it is a single Contingency event. The SDT raised the performance requirement on the P4 (stuck breaker) event for EHV to parallel that of the P2.3 event. The SDT considered that even though P4 is a multiple event, the design of the substation and Protection System can reduce the impact of events and the SDT believes that the standard should encourage designs that have a positive impact on the System's ability to serve Load. The SDT determined that the performance requirements for the P7 event for EHV should not be raised.		
Progress Energy Carolina (PEC)		PEC prefers having separate tables for steady-state and dynamic analyses. PEC believes the requirements were more clear in that format.
Response: The SDT consolidated the tables following several Draft 2 stakeholder comments to consolidate. The prior separate tables reflected the same planning events and the SDT agreed (although not unanimously) to consolidate for simplification. The column labeled "Fault Type" along with footnote 3 (now footnote 2) provides sufficient information regarding what is needed for the Stability analysis.		
City Utilities of Springfield, MO	No	City Utilities of Springfield, Missouri does not agree with the restrictions placed on the Category P3 contingencies. Since this will simulate a multiple contingency similar to a Category P4, loss of firm transmission service and/or loss of non-consequential load should be allowed. We suggest that the drafting team expand the allowable mitigating measures for a Category P3 to be consistent with a Category P4, where loss of firm transmission service and/or loss of non-consequential load is allowed for HV levels.
Response: The P3 Contingency (loss of a generator unit, followed by System adjustments follow by another N-1) was considered by the SDT as one of the more		

Organization	Yes or No	Question 9 Comment
likely planning events and therefore both the EHV and HV were kept to the more stringent planning performance criteria. No changes made for Draft 4.		
MidAmerican Energy Company	No	MidAmerican commends the SDT for its hard work on this standard. MidAmerican commends the SDT for most of the changes to Table 1. MidAmerican does have a few comments:? MidAmerican suggests that Footnote 11 be added to the sixth item under P4. The note 11 clarifies the meaning of a stuck breaker yet this footnote isn't applied to item 6 under P4 which is a stuck-breaker item. MidAmerican believes that it is confusing having a set of explanations for Extreme Events that are 1 through 3 under Steady State and 1 and 2 under Stability and yet have later footnotes listed that are 1 through 11. MidAmerican suggests that the items 1 through 3 under Steady State and 1 and 2 under Stability for Extreme Events be changed to some other designation such as bullets or letters so that it is easy to see that the numerical footnotes start after these explanations of the extreme events. ? Further clarify the applicable shunt devices in Footnote 7 with the suggested text 7. Requirements which are applicable to shunt devices also apply to FACTS devices that are connected to ground, but not instrument voltage transformers or surge arrestors.
Response: The SDT accepts the proposed change to add a reference to footnote 11 (now footnote 10) on planning event P4.6. The SDT believes that the formatting is correct and sufficiently clear. No change made. Regarding the suggested change to footnote 7 (now footnote 6), the devices listed are not BES Facilities typically considered in a planning study. The SDT disagrees that the proposed change is needed for clarity. No change made.		
JEA	No	Footnote 8 relative to P2.1 seems to imply that all of the single contingency assessments for circuits should include assessment of (1) both ends of the circuit disconnecting as in P1 and (2) either end of the circuit disconnceting as in P2. This results in 3 seperate single contingency assessments for the one circuit. I am not sure of the benefit other than trying to identify a high voltage situation or in the case of tap loads, a thermal loading issue. Recommend changing Footnote 8 to"For circuits with tapped load, a seperate analysis shall be performed for an outage of each end of the circuit where the load is tapped."
Response: The SDT did not change the footnote since there are other conditions that may need to be evaluated for an open ended line such as angular Stability and high voltage.		
NorthWestern Corporation NorthWestern Energy (NWE) (NWMT)	No	P6 on the table seems to be less severe than either P4 or P5, yet it allows loss of Firm Transmission Service and Non-consequential Load which are not allowed for EHV in P4 or P5. Interruption of Firm Transmission Service and Non-Consequential Load Loss should be allowed for P4, P5, and P6. Transmission lines should have the same requirements regardless of the voltage. Also, if not able to model Firm Transmission Service, how will one know if it is interrupted? The column labeled Interruption of Firm Transmission Service Allowed? should be eliminated since it is not a clearly defined test of

Organization	Yes or No	Question 9 Comment
		performance. It is not clear how to use the present definition of "Firm Transmission Service" for a planning horizon study. P4: Under the event column it should clarify and state language similar to that of P5 (Loss of multiple elements caused by a stuck breaker). In addition, this is a multiple contingency condition and may result in loss of more than 2 elements. As such, this is a low probability condition and loss of Non-Consequential load should be allowed for EHV.
Response: The P6 event is considered a lower impact event since it requires two separate faults to occur. Therefore, interruption of Firm Transmission Service and Non-Consequential Load Loss following the second event is permitted. Conversely, the P4 and P5 events are based on a single fault and an abnormal clearing mode. These events pose higher risk and impact to the BES since there is no time for System adjustments for the multiple Contingency Facility outcomes resulting from a single fault. Therefore, the EHV is held to higher performance criteria. The SDT disagrees with the proposed change. The higher expectation placed on the EHV, and therefore differing requirements for portions of the Transmission System, is due to the EHV being the backbone of the BES carrying large amounts of power between generation and Load and typically not directly servicing end-user customers. The numerous Firm Transmission Service contracts occurring on a short-term basis within the operating horizon are not the focus in TPL-001-1. It is expected that any long-term Firm Transmission Service agreements required for consideration within a Transmission planning horizon will be limited and well known by the responsible entity. This has been further clarified in draft 4 per the revisions made to the Requirement R1 modeling requirements. **R1** Each Transmission Planner and Planning Coordinator shall maintain System models within its respective area for performing the studies needed to complete its Planning Assessment. The models shall use the latest data consistent with that provided in accordance with the MOD-010 and MOD-012 standards, supplemented by other sources as needed, including items represented in the Corrective Action Plan, and shall represent projected System conditions. The SDT has added the introductory text proposed for the P4 "Event" column of the table to bring consistency with the P5 event. In regards to the EHV performance criteria for the P4 event, the EHV performance expectations remain as stated in Draft 3. P4 events pose higher risk and impact to the BES since there is no time for System adjustments for potential multiple Facility outages that can result from a single fault. Since the EHV is considered the backbone of the BES carrying large amounts of power between generation and Load and typically not directly servicing end-user customers the higher performance expectations for the high impact P4 events is warranted. **P4:** Loss of multiple elements caused by a stuck breaker [11](non-Bus-tie) attempting to clear a Fault on one of the following: & 6. Loss of multiple elements caused by a stuck breaker[10] (Bus-tie) attempting to clear a Fault on the associated bus		
SMUD	No	The allowed corrective actions in Table 1 to meet performance standards do not explicitly state how DSM solutions should be treated [there is a potential for 20% of national peak demand to be met by "demand response"] . If it is allowed to be used, and since this is a fairly significant amount, it would help if it is explicitly addressed in Table 1.
Response: The standard does not place a ceiling on DSM that can be utilized. No changes made in Draft 4.		
Progress Energy Florida, Inc.	No	PEF has multiple concerns with Table 1, the most fundamental of these concerns being that the existing Table in the existing TPL Standards is far superior to the new table. PEF suspects that the large blackout/brownout events in the Northeast and West have been the primary impetus behind devising a new Standard that will allegedly

Organization	Yes or No	Question 9 Comment
		improve BES reliability. PEF strongly feels that proper planning, operation and maintenance under existing NERC Standards could have prevented all of the aforementioned events, and thus a new TPL Standard and a new Table 1 is not necessary. PEF's specific concerns with Table 1 as it exists in this 3rd draft of TPL-001-1 are as follows: As a general concern, PEF, as has been stated already, does not believe that organizing a Reliability table according to whether or not loss of Firm Transmission Service or loss of Non-Consequential Load can occur is appropriate. The BES can be demonstrated to be robust and can even be continually improved under the existing TPL Standards. PEF fails to see how FERC's and NERC's desire to eliminate Footnote (b) as stated in the existing TPL Standards has anything to do with the desire to improve the reliability of the BES. Indeed, as TPL-001-1 exists at present, PEF suspects that many Transmission Owners will a) reduce posted ATC values to reduce risk of loss of Firm Transmission Service or b) remove breakers to convert Non-Consequential Load into Consequential Load. Both of these actions fly in the face of what FERC desires for the BES of the future. FERC certainly desires for power markets to open up further and thereby encourage lower energy prices, but at present TPL-001-1 and the accompanying Table 1 is in opposition to enhancing the power marketing industry. In addition, removing breakers is in opposition to reliability and customer service. An additional general concern involves the continued differentiation between HV and EHV. EHV by its very nature carries significantly larger amounts of power than HV, and therefore an EHV event inherently causes a greater disparity between Generation and Load than a HV event, making the loss of Firm Transmission Service or loss of Non-Consequential Load necessary for even a single contingency. Should all utilities be therefore required to make their EHV systems redundant? Such a suggestion is preposterous. Given this fact, and the fact that EHV events hardly ever occur (and, as outlined in the draft Table 1, have never occurred on PEF's system), PEF believes holding EHV to a higher standard is inappropriate, and will result in no more than a negligible reliability improvement at tremendous cost.Based on the above concerns, PEF believes for all event scenarios (P0 P7), analysis according to whether or not loss of Firm Transmission Service or loss of Non-Consequential Load can occur is inappropriate and should be deleted from the Standard. Concerning event P2-1, PEF assumes that "opening of breaker w/o fault" means opening breakers from both sides of the circuit. PEF therefore does not understand the difference between event P2-1 and events P1-1 through P1-4, and therefore suggests deleting P2-1 and combining the remainder of P2 with P1. Given the concerns above, voicing additional concerns about the Footnotes, short of reinstating the existing Footnote (b), is irrelevant.

Response: In regards to proposed change to prohibit Non-Consequential Load shed in response to a single Contingency event, FERC, in Order 693, was clear in paragraph 1794 that interruption of Non-Consequential Load is not permitted for single Contingency events. This position was vetted in draft 1 of TPL-001-1 and most stakeholders and the majority of the SDT support this position. The use of an SPS design would be permitted for a single Contingency event if the SPS design interrupts service to customers involved in an interruptible Load contract arrangement.

In Draft 3, footnote 8 (now footnote 7) was added to further clarify the need for the P2-1 event. The intent is simply to look for low voltage or thermal problems while supplying Load from one end of a normally networked line. In planning event P1-2, the network line would be opened at both ends and any Load tapped to the

Organization	Yes or No	Question 9 Comment
network line would be dropped. For planning event P2-1 for the same line, the Load would be studied being served from either end of the line.		
ISO New England, Inc.	No	Priority Comment As written, this requirement is overly severe. This would require the simulation of a "dead" station if only one battery is present (use of NERC Glossary Protective System definition is too broad). The failure of the single protection system should be limited to certain aspects of the protection system. Priority Comment Event 1 - This requirement requires the evaluation of the loss of two circuits on a multiple circuit tower. We recommend that this be modified so that only the loss of two adjacent (vertically or horizontally) circuits need be evaluated. We also recommend that the Planning Coordinator be allowed to evaluate and if appropriate exempt specific locations from this contingency based on acceptable risk. Comments on Extreme Events Table 1- We recommend renumbering the Extreme Events table to be Table 2. Stability Condition 2 Note h Eliminate this requirement or change to loss of station following three phase fault. This note is confusing. Without providing a better defined scenario, it is unclear as to what clearing times should be used in this simulation. Note 1.a.ii Contingency Reserve is dependent on the generation on-line. We suggest changing the first sentence to say that you can't lose more than that permissible by the Planning Coordinator. Also change "pull out of synchronism" to "lose synchronism" in this sentence and in the second sentence. (Is "Lose synchronism" a more commonly used term?). Note 3 We recommend revising the wording of the last sentence to ?A 3 phase fault study indicating criteria are being met is sufficient evidence that a SLG condition would also meet criteria. Note 4 We recommend that a lower bound be put on the HV electric systems (such as 100 kV), rather than just saying "and lower".
Response: In regards to the P5 event, in response to industry comments on Draft 2, the SDT clarified that the P5 event is not intended to include an evaluation of individual components of the Protection System. The intent of P5 is to evaluate a failure of a Protection System design, and not based on any particular component of the design. Please see the Summary Considerations area of Question 7 from the Draft 2 comments; specifically item 3 on page 207. Since the P5 event description says loss of a single Protection System and not single Protection System device or component, the SDT believes sufficient clarity is inherent in the P5 event description. The suggested wording change to include "adjacent" for the P7 planning event is accepted by the SDT and reflected in Draft 4. The SDT does not accept the proposed provision for the Planning Coordinator to exempt locations for study of the P7 event beyond what is already exempted per footnote 12 (now footnote 11).The suggested change to reference the extreme events as Table 2 was not accepted by the SDT. The team feels sufficient clarity is provided by the division breaks within the table. The table is to be viewed holistically as a single table stating performance requirements and reference notes for the TPL-001-1 standard. **P7:** Any two adjacent (vertically or horizontally) circuits on common structure The SDT believes that the table is formatted correctly and is sufficiently clear. No change made. Regarding extreme event Stability item 2h, items 2f through 2h are deleted as this was a mis-interpretation of the existing table and are not required in the Stability timeframe. Regarding footnote 1.a.ii the SDT did not accept the proposed wording changes related to loss of synchronism. The change proposed was not substantive		

Organization	Yes or No	Question 9 Comment
and the wording presently used, "pulling out of synchronism", is sufficient. Footnote 1 was deleted and moved to Requirement R4, parts 4.1.1 – 4.1.3. Regarding the suggestion for the Planning Coordinator to establish the maximum allowable amount, the SDT has set a maximum and believes that it is the appropriate value. An entity can always set more stringent criteria. No change made. The SDT accepts the proposed change for footnote 3 (now footnote 2). **Footnote 2:** Unless specified otherwise, simulate Normal Clearing faults. Single line to ground (SLG) or three phase (3Ø) are the fault types, that must be evaluated in Stability simulations for the event described. A 3Ø or a double line to ground fault study indicating the criteria are being met is sufficient evidence that a SLG condition would also meet the criteria. Regarding footnote 4 (now footnote 3), the SDT does not accept the proposed change to establish a lower bound on the HV electric System. The lower bound is based on the BES definition established by a Regional Entity organization. While this is generally understood to be 100kV, it may vary throughout the North American footprint. The SDT has however modified footnote 3 to include the text "defined by the applicable BES" to address the concern raised by the commenter. **Footnote 3:** Bulk Electric System (BES) level references include extra-high voltage (EHV) Facilities defined as greater than 300kV and high voltage (HV) Facilities defined as the 300kV and lower voltage Systems as defined by the Regional Entity. The designation of EHV and HV is used to distinguish between stated performance criteria allowances for interruptions of Firm Transmission Service and Non-Consequential Load.		
Arizona Public Service Co	No	P4: Under the event column it should clarify and state language similar to that of P5 (Loss of multiple elements caused by a stuck breaker). In addition, this is a multiple contingency condition and may result in loss of more than 2 elements. As such, this is a low probability condition and loss of Non-Consequential load should be allowed for EHV. We disagree with raising the bar for EHV for P4. We do not agree with Note "i" which requires establishing transient voltage response limits. There is no solid basis for such limits. In the past such limits were used as proxies for VAR margin and are not needed anymore. This will also result into non-uniform criteria throughout the interconnection. If such a limit were to be established, it should be based upon quantifiable reliably impact and should be supported by firm technical basis. Note 1b: Acceptable damping should not be defined by Planning coordinator and should be left to the Transmission Planner. Otherwise it would result into non-uniform criteria for the interconnections.
Response: The SDT has added the introductory text proposed for the P4 "Event" column of the table to bring consistency with the P5 event. In regards to the EHV performance criteria for the P4 event, the EHV performance expectations remain as stated in Draft 3. P4 events pose higher risk and impact to the BES since there is no time for System adjustments for potential multiple Facility outages that can result from a single fault. Since the EHV is considered the backbone of the BES carrying large amounts of power between generation and Load and typically not directly servicing end-user customers the higher performance expectations for the high impact P4 events is warranted. **P4:** Loss of multiple elements caused by a stuck breaker [11](non-Bus-tie) attempting to clear a Fault on one of the following: & 6. Loss of multiple elements caused by a stuck breaker[10] (Bus-tie) attempting to clear a Fault on the associated bus The SDT has added a Requirement R5 to explicitly require criteria for transient voltage criteria. **R5** Each Transmission Planner and Planning Coordinator shall have criteria for acceptable System steady state voltage limits, post-Contingency voltage deviations, and the transient voltage response for their System. For transient voltage response, the criteria shall at a minimum, specify a voltage level and a		

Organization	Yes or No	Question 9 Comment
		maximum length of time that transient voltages may remain outside that level. In regards to the comment on footnote 1b, as written it's based on the more restrictive criteria of the Planning Coordinator or the Transmission Planner. Since the Planning Coordinator has a wider area purview over the Transmission Planner, it is unclear why the commenter has a concern of Planning Coordinator criteria causing non-uniformity within the Interconnection. With fewer Planning Coordinators being involved there would be less disparity across an Interconnection if the Planning Coordinator's criteria were more restrictive than the Transmission Planner's criteria. No changes were made to this footnote in Draft 4.
Hydro-Québec TransEnergie (HQT)	No	Footnote 4 We recommend that a lower bound be put on the HV electric systems (such as 100 kV), rather than just saying "and lower". As has been commented on in a previous draft, the Drafting Team should also consider not having a prescribed voltage definition of BES, be it called EHV or HV. Studies should determine what facilities should be part of the BES because of their impact on reliability. A proposal is to modify Footnote 4 to replace the phrase "(EHV) Facilities defined as greater than 300 kV" with "(EHV) Facilities defined as having a significant impact on the reliability of the System, generally at voltages greater than 300 kV as determined by the Planning Coordinator"? In using such language, the more stringent requirements could apply to BES/EHV but not globally for Facilities operating at voltages greater than 300 kV. Using this methodology the extra investment required would go towards real improvement of the reliability of the System. EHV and HV should be added to the Definitions of Terms Used in Standard. Footnote 12 We recommend adding an alternative modifier to the end of the sentence, "or for 5 towers or less. This is consistent with NPCC criteria.
Response: Regarding footnote 4 (now footnote 3), the SDT does not accept the proposed change to establish a lower bound on the HV electric System. The lower bound is based on the BES definition established by a Regional Entity organization. While this is generally understood to be 100kV, it may vary throughout the North American footprint. The SDT has however modified footnote 3 to include the text "defined by the applicable BES" to address the concern raised by the commenter. **Footnote 3:** Bulk Electric System (BES) level references include extra-high voltage (EHV) Facilities defined as greater than 300kV and high voltage (HV) Facilities defined as the 300kV and lower voltage Systems as defined by the Regional Entity. The designation of EHV and HV is used to distinguish between stated performance criteria allowances for interruptions of Firm Transmission Service and Non-Consequential Load. Regarding footnote 4 (now footnote 3), the commenter suggests that the standard should not prescribe a voltage definition of BES, be it called EHV or HV and that studies are needed to determine BES Facility definitions. The BES definition is defined by the Regional Entity organization and studies are not generally relied upon for BES determination. The additional changes suggested in revising footnote 3 to limit the EHV definition to only those Facilities deemed significant to reliability as determined by the Planning Coordinator was not accepted by the SDT. Although not unanimous, the majority of the SDT and industry stakeholders believe the 300 kV and higher Systems (EHV) generally represent the backbone of many Systems in the various Interconnections and that the EHV breakpoint and the more stringent requirements are appropriately defined. The EHV and HV definitions are not being added to the NERC Glossary of Terms based on their limited use within the TPL standard. Regarding footnote 12 (now footnote 11), the 1 mile exception is more precise as span lengths can vary greatly between towers. No change was made.		

Organization	Yes or No	Question 9 Comment
Ameren	No	The word "Requirements" needs to be added to the Table 1 titles in the existing tables.Table 1 Steady State & Stability Performance RequirementsPlanning Events Table 1 Steady State & Stability Performance RequirementsExtreme Events Table 1 Steady State & Stability Performance RequirementsFootnotes (Planning Events and Extreme Events) Since it appears that the Table 1 cannot fit on a single page, it is suggested that multiple tables be developed to handle the 1) steady-state and 2) stability performance requirements. Footnotes may be included on a second page if needed. Comments were provided in early versions regarding the issues associated with raising the bar, and it was suggested that the marginal reliability benefits associated with these changes were not worth the marginal costs. We have not seen any significant changes from the earlier performance requirements. The question still remains, are we directing the resources where they need to be allocated to address and improve system reliability? So far the answer is believed to be "No".
Response: The Table 1 title does not include the word requirements since the table is referenced by the requirements of the standard. For example, see Requirement R3, parts 3.1 and 3.4 which require the Transmission Planner to develop Contingency lists for study based on the table performance requirements. The suggestion for multiple tables was not accepted by the SDT. The team feels sufficient clarity is provided by the division breaks within the table. The table is to be viewed holistically as a single table stating performance requirements and reference notes for the TPL-001-1 standard. Although not unanimous, the majority of the SDT and industry stakeholders believe the 300 kV and higher Systems (EHV) generally represent the backbone of many Systems in the various Interconnections and that the EHV breakpoint and the more stringent requirements are appropriately defined.		
Maine Public Advocate	No	P2, P3, P4, and P5 - The change allowing no load shedding or interruption of firm transmission service for the types of events and faults listed will lead to the construction and installation of more transmission plant. These expensive plant additions have not, however, been preceded or justified by any evidence that the reliability of the current system - using current planning standards which allow load shedding and interruption of firm transmission service - is lacking. The August 2003 blackout, to the extent utilities and other industry stakeholders have cited it for this purpose, was not caused by the lack of such planning standards; it was an event that should not have occured and would not have but for the utter failure of First Energy to pay attention to operations and vegetation management. The Joint US/Canada Report makes this clear. These proposed changes are not needed and will cause unreasonable increases in rates that are not justified by the putative increases in reliability.There is currently too much emphasis on reliability and not enough emphasis on costs. Utilities are spurred, of course, by the FERC's ROE incentive. NERC should not allow this incentive to influence the reasonalbeness of any of its standards, particularly this one which can only lead to unneeded redundancy in the high voltage transmission system and resulting higher costs.
Response: FERC, in Order 693, was clear in paragraph 1794 that interruption of Non-Consequential Load is not permitted for single Contingency events. This position was vetted in draft 1 of TPL-001-1 and most stakeholders and the majority of the SDT support this position. The use of an SPS design would be permitted for a single Contingency event if the SPS design interrupts service to customers involved in an interruptible Load contract arrangement.		

Organization	Yes or No	Question 9 Comment
The P2 events are common failure, single Contingency events therefore the criteria is properly set. Although not unanimous, the majority of the SDT and industry stakeholders believe the 300 kV and higher Systems (EHV) generally represent the backbone of many Systems in the various Interconnections and that the EHV breakpoint and the more stringent requirements are appropriately defined.		
Manitoba Hydro	No	Note b should be reworded to ?However, Supplemental Load Loss associated with a P2 through P5 event shall not be used to meet post-contingency steady-state performance requirements. Also we do not see a need for Load Reduction (see Q8 comment) Note b also implies that voltage dependent load is not permitted to be modeled for P0. This in turn means that the model must have all load represented as constant MVA. The load representation can change for categories P1 through P7. Is this the intent of the language? Note e: Are the planned System adjustments and redispatch allowed following all Planning Events if they result in curtailment of Firm Transmission Service? Should Note 10 also be referenced here? Footnote 7 applies to FACTS devices that are connected to ground. It is possible to have an ungrounded FACTS device (eg. Delta connected) or a series connected FACTS device (UPFC, SSSC, etc.). I would recommend deleting "that are connected to ground" so that the note is more general. Series connected FACTS will likely be separated via circuit breakers in a similar way as a transformer or phase shifter. Other series FACTS device, like a TCSC also typically self protect via a bypass breaker and should be considered as a separate element. Extreme Events:Steady State 1: Does the loss of a DC line refer to a bipole line? Steady State 2e: The loss of a large load could result from a Planning Event, perhaps even a P1 or P2 event - likely not an extreme event - compared to the loss of a major load center.
Response: The commenter provides no reasoning for the proposed limitation. No changes made. See our response to your Q8 comment. The standard does not prescribe a particular Load model such as constant power, constant impedance, etc. Footnote 10 (now footnote 9) does not apply globally to the entire table so it should not be reflected on header note “e”. No change made. The phrase “connected to ground” is appropriate since the focus is on shunt devices. No changes made. Loss of a bipolar line is covered as a P7 planning event. The reference to DC Line for the extreme event in question is intended to be loss of two independent single pole DC lines without time for System adjustments between each outage. The SDT has revised the extreme event descriptions for item 1 of steady state and Stability for clarity. **Extreme event steady state 1:** Loss of a single generator, Transmission Circuit, single pole of a DC Line, shunt device, or transformer forced out of service followed by another single generator, Transmission Circuit, single pole of a different DC Line, shunt device, or transformer forced out of service prior to System adjustments. **Extreme event Stability 1:** With an initial condition of a single generator, Transmission circuit, single pole of a DC line, shunt device, or transformer forced		

Organization	Yes or No	Question 9 Comment
out of service, apply a 3Ø fault on another single generator, Transmission circuit, single pole of a different DC line, shunt device, or transformer prior to System adjustments. While it is true that large amounts of Load could result from single Contingency planning events, the focus with the extreme event Steady State 2e item is different and intended to cover the complete loss of a major population center or urban area.		
E.ON U.S.		Table 1 Extreme Events CommentsSteady State2.bRight-of-Way should include a reference to footnote 1 2.2.d.Item 2.d. references loss of all generating units at a "station" but Item 3 references generating plants and nuclear power plants. It is unclear whether Item 2.d requires an outage of all generating units connected to a single transmission station (all voltages) or an outage of all generating units at a generating plant (although they may be connected to multiple transmission stations). 2.gRight-of-Way should include a reference to footnote 12. Footnotes12E ON U.S. suggests the definition be expanded to: Exclude circuits that share common structure for 1 mile or less and Transmission lines that share common Right-of-Way for 1 mile or less.
Response: The SDT does not believe a reference to footnote 1 is needed as suggested by the commenter. If the intent was to say a reference to footnote 12 (now footnote 11) as raised by other stakeholders, the SDT agrees with the proposed addition of a footnote to address a threshold distance for circuits considered for study in loss of common Right-of-Way. The team has set the threshold at 1 mile or more, consistent with footnote 11. Footnote 11 was revised to account for both the common tower and common Right-of-Way exemption. Footnote 11 has been added to the extreme event steady-state 2b. **Footnote 11:** Excludes circuits that share a common structure or common Right-of-Way for 1 mile or less Extreme event 2d and 3a are similar in that each covers the loss of all generating units at a single plant location. However, in 3a, two plants are reviewed. In each case, all units are to be outaged regardless of the BES voltage level to which they connect.		
National Grid	No	Steady State & Stability comments are as follows:Steady State & Stability: a. Transmission voltage instability, cascading outages, and uncontrolled islanding shall not occur. How does this apply to Steady State testing?b. Consequential Load Loss, Supplemental Load Loss, Load Reduction, and consequential generation loss are acceptable as a consequence of any Planning or Extreme Event excluding P0. However, Supplemental Load Loss and Load Reduction associated with an event shall not be used to meet steady state performance requirementsThe second sentence re: Supplemental Load Loss implies need to test without end-user's actions and then assess whether action of separating end-user needs to be taken by Transmission system? B. Event P2-3 and P4 have the same impact; also events P2-4 and P4-6 have the same impact. Can these be consolidated? P5 Priority Comment ? As written, this requirement is overly severe. This would require the simulation of a "dead" station if only one battery is present (use of NERC Glossary Protective System definition is too broad). The failure of the single protection system should be limited to certain aspects of the protection system. P7 Priority Comment Event 1 - This requirement requires the evaluation of the loss of two circuits on a multiple

Organization	Yes or No	Question 9 Comment
		circuit tower. We recommend that this be modified so that only the loss of two adjacent (vertically or horizontally) circuits need be evaluated. Or allow the Planning Coordinator to evaluate and if appropriate exempt specific locations from this contingency based on acceptable risk. Comments on Extreme Events Table 1- We recommend renumbering the Extreme Events table to be Table 2. Stability Condition 2 Note a - Priority Comment - As written, this requirement is overly severe. This would require the simulation of a "dead" station if only one battery is present (use of NERC Glossary Protective System definition is too broad). The failure of the single protection system should be limited to certain aspects of the protection system. Stability Condition 2 Note h Eliminate this requirement or change to loss of station following three phase fault. This note is confusing. Without providing a better defined scenario, it is unclear as to what clearing times should be used in this simulation. Note 1.a.i - For Planning Event P1: No generating unit or units shall be allowed to pull out of synchronism." There needs to be some sort of qualifier on this requirement. We suggest the following, "For Planning Event P1: No generating unit or units, directly interconnected at 100 kV or above, shall be allowed to lose synchronism." Note 1.a.ii " Contingency Reserve is dependent on the generation on-line. We suggest changing the first sentence to say that you can't lose more than that permissible by the Planning Coordinator. Also change "pull out of synchronism" to "lose synchronism" in this sentence and in the second sentence. (Is "Lose synchronism" a more commonly used term?). Note 3 We recommend revising the wording of the last sentence to "A 3 phase fault study indicating criteria are being met is sufficient evidence that a SLG condition would also meet criteria. Note 11. Reference is made to Independent Pole Operation (IPO) " Can this be clarified by referencing it as IPO or Independent Pole Trip (IPT) as opposed to single-pole switching. Note 4 ? We recommend that a lower bound be put on the HV electric systems (such as 100 kV), rather than just saying "and lower". Extreme Events:Steady State 3a - loss of two generating plants - This can be considered in two ways - one which results in loss of source (e.g. from fuel, cooling water, or nuke design shutdown) OR the second which could result in loss of stations including lines and breakers (e.g. from wildfires, weather, cyber attack, etc) - which is meant here? Both?

Response: The identification of Transmission voltage instability, cascading outages, and uncontrolled islanding is an appropriate expectation for steady state analysis. Steady state power flow analysis such as P-V or Q-V is suitable for screening, final System reinforcement decisions or operating limits are generally confirmed by more accurate time domain (dynamic) simulation. The TPL-001-1 standard in Requirement R5 requires the Transmission Planner and Planning Coordinator to define and document any criteria used to identify System instability such as cascading events, voltage instability or uncontrolled islanding.

The commenter suggests adding the word "Transmission" to the beginning of header note "a". Additionally it is proposed to state in header note "b" that Load Reduction is not an acceptable means to meet steady state performance requirements. In Draft 4, the SDT made a change to header note "a" as suggested by the

Organization	Yes or No	Question 9 Comment
commenter but modified it to be "BES Transmission…". Regarding the suggested change to header note "b", no change was made as the standard does not prescribe a particular Load model such as constant power, constant impedance, etc. However, the definition of Load reduction has been deleted as it is now contained within the definition of Non-Consequential Load Loss. The definition for Supplemental Load Loss was deleted and the definition of Non-Consequential Load Loss has been changed to reflect this. **Non-Consequential Load Loss:** Non-Interruptible Load loss other than Consequential Load Loss and the response of voltage sensitive Load including Load that is disconnected from the System by end-user equipment. The commenter proposes to consolidate planning events P2-3 & P4 as well as P2-4 & P4-6 indicating they will have the same result. Within the steady state timeframe, these events will result in common outcomes; however, considered with the transient Stability timeframe, different outcomes are expected due to the delayed clearing mode of the P4 events. No changes were made by the SDT in this regard. In regards to the P5 event, in response to industry comments on Draft 2, the SDT clarified that the P5 event is not intended to include an evaluation of individual components of the Protection System. The intent of P5 is to evaluate a failure of a Protection System design, and not based on any particular component of the design. Please see the Summary Considerations area of Question 7 from the Draft 2 comments; specifically item 3 on page 207. Since the P5 event description says loss of a single Protection System and not single Protection System device or component, the SDT believes sufficient clarity is inherent in the P5 event description. The suggested wording change to include "adjacent" for the P7 planning event is accepted by the SDT and reflected in Draft 4. The SDT does not accept the proposed provision for the Planning Coordinator to exempt locations for study of the P7 event beyond what is already exempted per footnote 12 (now footnote 11). **Footnote 11:** Excludes circuits that share a common structure or common Right-of-Way for 1 mile or less The suggested change to reference the extreme events as Table 2 was not accepted by the SDT. The team feels sufficient clarity is provided by the division breaks within the table. The table is to be viewed holistically as a single table stating performance requirements and reference notes for the TPL-001-1 standard. Regarding extreme event Stability item 2a, our response to your P5 comment above applies. No changes were made in regard to the extreme event 2a. Regarding extreme event Stability item 2h, items 2f through 2h are deleted as this was a mis-interpretation of the existing table and are not required in the Stability timeframe. The suggested change to reference the Footnotes area as Table 3 was not accepted by the SDT. The team feels sufficient clarity is provided by the division breaks within the table. The table is to be viewed holistically as a single table stating performance requirements and reference notes for the TPL-001-1 standard. Footnote 1 has been deleted and moved to Requirement R4, parts 4.1.1 – 4.1.3. No change was made to the requirement wording as this standard only applies to the BES. Regarding footnote 1.a.ii the SDT did not accept the proposed wording changes related to loss of synchronism. The change proposed was not substantive and that the wording presently used, "pulling out of synchronism", is sufficient. Regarding the suggestion for the Planning Coordinator to establish the maximum allowable amount, the SDT has set a maximum and believes that it is the appropriate value. An entity can always set more stringent criteria. No change made. The comment on footnote 1.a.i is redundant and already addressed above. The SDT accepts the proposed change for footnote 3 (now footnote 2). **Footnote 2:** Unless specified otherwise, simulate Normal Clearing faults. Single line to ground (SLG) or three phase (3Ø) are the fault types, that must be evaluated in Stability simulations for the event described. A 3Ø or a double line to ground fault study indicating the criteria are being met is sufficient		

Organization	Yes or No	Question 9 Comment
evidence that a SLG condition would also meet the criteria. Footnote 11 (now footnote 10) has been changed to address your concern. **Footnote 10:** A stuck breaker means that for a gang-operated breaker, all three phases of the breaker have remained closed. For an independent pole operated (IPO) or an independent pole tripping (IPT) breaker, only one pole is assumed to remain closed. A stuck breaker results in Delayed Fault Clearing Regarding footnote 4 (now footnote 3), the SDT does not accept the proposed change to establish a lower bound on the HV electric System. The lower bound is based on the BES definition established by a Regional Entity organization. While this is generally understood to be 100kV, it may vary throughout the North American footprint. The SDT has however modified footnote 3 to include the text "defined by the applicable BES" to address the concern raised by the commenter. **Footnote 3:** Bulk Electric System (BES) level references include extra-high voltage (EHV) Facilities defined as greater than 300kV and high voltage (HV) Facilities defined as the 300kV and lower voltage Systems as defined by the Regional Entity. The designation of EHV and HV is used to distinguish between stated performance criteria allowances for interruptions of Firm Transmission Service and Non-Consequential Load. Regarding footnote 12 (now footnote 11), the 1 mile exception is more precise as span lengths can vary greatly between towers. No change was made. For extreme event 3a, the minimum expectation is the loss of two entire generation plants due to some wide area event as described by the examples in roman numeral i through vi. The planner at its own discretion could simulate removal of Transmission lines, transformers, etc. for the initiating event scenario considered.		
Entergy Services, Inc	No	P2.1 should allow the shedding of load along the line that would be served radially to mitigate overloads or undervoltages on the radial line. Doing so would clearly not result in degradations to the BES but only the local area served by the radial line. P4.5 is an extremely unlikely occurrence and should be equivalent to P4.6. P5 should not be a planning event. PRC standards address Protection systems. The complexity associated with identifying and simulating such events is unknown and the defense of assumptions made and events simulated will lead to inconsistency in compliance and enforcement. Industry accepted proxies for such events could be developed that would allow for efficient identification of areas needing further detailed study. Attempting to intermingle protection system operation with BES performance will be nearly impossible to implement given current technologies. In general, the entire table should be reconciled, one way or another, with MOD standards governing ATC/AFC. If multiple contingencies, protection system failures, breaker failures, and other less likely events must be planned for, then ATC/AFC processes should be equally limited, at least for long term service. Any service granted on a simple N-1 basis should be Conditional Firm. Anything less than interconnection-wide application of more stringent AFC/ATC evaluation processes commensurate with the long term planning standards will result in the shifting of costs and risks from wholesale users to retail rate payers.
Response: FERC, in Order 693, was clear in paragraph 1794 that interruption of Non-Consequential Load is not permitted for single Contingency events. This position was vetted in draft 1 of TPL-001-1 and most stakeholders and the majority of the SDT support this position. The use of an SPS design would be permitted for a single Contingency event if the SPS design interrupts service to customers involved in an interruptible Load contract arrangement.		

Organization	Yes or No	Question 9 Comment
The likelihood of a bus fault is the same for each. However, the Bus-tie Breaker event (P4.6) has a lower risk simply because there are a limited set of Bus-tie Breakers compared to a entire population of BES breakers that could be in a stuck condition as in the P4.5 situation. No change was made in draft 4. The P5 the event description was changed in Draft 3 to match what is stated in the currently approved TPL standards under Category C6 through C9. The intent of P5 is to evaluate a failure of a single Protection System design that introduces a delayed clearing mode that may also include additional electrical Facilities being removed when compared to normal fault clearing. The comments made on the needed for reconciling the ATC standards are beyond the scope of this project. However, it is expected that conforming changes in other standards that currently reference the existing TPL standards will need to occur.		
Great River Energy	No	Why is the P needed in defining the category? They all have a P. Top note f and i should reference the Planning criteria established by the Planning Coordinator (or the Transmission Owner if more restrictive).The Transmission Owner is typically the one that sets the limits on their facilities. The Planner just works for the Owner.
Response: P is used as shorthand for "planning" event contingency as opposed to an extreme event Contingency. The Transmission Owner would establish the Facility Ratings, however, the Planning Coordinator and Transmission Planner establish the System criteria that must be met. Header notes 'f' and 'I' refer to established System parameters or criteria for voltage. No changes made.		
BC Hydro	No	Comments: Note "d": The term "Normal Clearing" is not well defined. Consider adding a definition in this standard or changing the NERC Glossary definition of "Normal Clearing" to read, "A protection system operates as designed and the fault is cleared in the maximum time that a properly functioning protection system would be expected to take to clear the fault, considering tolerances in normal protection operating times and circuit breaker interrupting times"No generating unit or units totaling more than the Contingency Reserve of the Balancing Authority (or Reserve Sharing Group if applicable) shall be disconnected from the System by a Special Protection System Note "e": Consider changing to, "For all Planning Events, planned System adjustments such as Transmission configuration changes and redispatch of generation are allowed if such adjustments are automatic (ie, implemented by a NERC-certified Special Protection System, SPS) and executable within the time duration applicable to the Facility Ratings. For P1 and P2 events, (a) generation shedding shall be limited to the normal level of Contingency Reserve of the Balancing Authority (or Reserve Sharing Group if applicable) that would be carried in the control area under the system conditions being studied and (b) no manual operator actions should be necessary to ensure Facility Ratings are not exceeded. Note that, in the operating time frame, the operator would immediately take whatever actions and system adjustments are needed to prepare for the next set of possible contingencies". It should be recognized that this will result in a higher transmission planning standard than the previous wording and that should be seen as a desirable outcome of updating the NERC standards since transmission system reliability (or lack of it) is the impetus for the whole Mandatory Reliability Standards (MRS) process. It should also be emphasized that PLANNING standards are necessarily conservative, simple and easy to apply since in the planning time frame all possible circumstances that might be encountered in the operating timeframe cannot be

Organization	Yes or No	Question 9 Comment
		assessed or nothing would ever get built. If operator action is permitted "if such adjustments are executable within the time duration applicable to the Facility Ratings", how will that be measured consistently to ensure the standard is met? One planner might count on five operators having nothing to distract them from adjusting the output levels of 10 plants to reduce the load on a line to below its 10-minute overload rating, whereas another might be more conservative and assume some of the operators may be busy with other things and be more conservative in estimating how much can be accomplished in 10 minutes. If no operator action is permitted, the standard is easily measured and a more secure system results, one of the main objectives of the MRS. The addition of the requirement that criteria are met without operator action is consistent with R3.3.1 that states "[Contingency analysis shall] simulate the removal of all elements that the Protection System and other automatic controls are expected to disconnect for each Contingency without operator intervention [emphasis added]". Performance Category P7: Consider changing the first event to, "All circuits on common structures" and consider changing the fault type to 3-phase. Extreme Events (Steady State): Consider changing item 1 to read, "With an initial condition of a single generator, Transmission Circuit, DC Line (one pole), shunt device or transformer forced out of service and prior to System adjustments, a second generator, Transmission Circuit, DC Line (one pole), shunt device or transformer is forced out of service. Extreme Events (Stability): Change item 1 to read, "With an initial condition of a single generator, Transmission Circuit, DC Line (one pole), shunt device or transformer forced out of service and prior to System adjustments, apply a 3" fault on a second generator, Transmission Circuit, DC Line (one pole), shunt device or transformer. Change item 2.g to read, "3" fault on all Transmission lines on a common Right-of-Way. Simultaneous 3" faults on all lines on a common right of way seems more likely (plane crash, avalanche, earth quake, wildfire) than simultaneous SLG faults. Footnote 1: Consider changing Item 1.a.I to read, "For Planning Events P1 and P2: No generating unit or units". And consider adding the following sentence, "No generating unit or units totaling more than the Contingency Reserve of the Balancing Authority (or Reserve Sharing Group if applicable) shall be disconnected from the System by a Special Protection System?. Footnote 8: Consider changing to, "Opening of Breaker(s) w/o fault in category P2 includes the situation in which one end of a normally networked Transmission circuit becomes open-ended, possibly resulting in voltage deviations outside acceptable limits especially at the open end of the line". Using the phrase "Opening of Breaker(s) w/o fault" that is used in the "event" column of category P2 will help people make the connection to the footnote.

Response: The SDT reviewed the existing NERC Glossary of Terms definition for Normal Clearing and found it sufficient for use in the TPL-001-1 standard. No changes were made.

Header note 'e' is not limited to automatic System adjustments. Manual operator initiated System adjustments are permitted so long as the applicable time limited rating is maintained during the adjustment. The proposed change was not accepted by the SDT.

Organization	Yes or No	Question 9 Comment
a) The standard does not place a ceiling on consequential generation tripping. b) Manual operator actions are permitted for all Contingencies. The ratings must always be adhered to. If a Contingency were to cause current flows to exceed a 24-hour Facility Rating but a 4-hour rating was not, then either natural Load reduction or System adjustments must occur within the 4-hour period. The standard permits manual System adjustments. Requirement R3, part 3.3.1 only refers to the initial System reaction to the event that the simulation program must accurately represent. The proposed changes to P7 were not accepted by the SDT. The situation described is covered as an extreme event under Steady State item 2a. The proposed change of "DC Line (one pole)" over the existing text "DC Line" was accepted by the SDT with a slight modification to read single pole. Changes were made to items 1 for both extreme event Steady State and Stability. **Extreme event steady state 1:** Loss of a single generator, Transmission Circuit, single pole of a DC Line, shunt device, or transformer forced out of service followed by another single generator, Transmission Circuit, single pole of a different DC Line, shunt device, or transformer forced out of service prior to System adjustments. **Extreme event Stability 1:** With an initial condition of a single generator, Transmission circuit, single pole of a DC line, shunt device, or transformer forced out of service, apply a 3Ø fault on another single generator, Transmission circuit, single pole of a different DC line, shunt device, or transformer prior to System adjustments. Regarding extreme event Stability item 2g, items 2f through 2h were deleted as this was a mis-interpretation of the existing table and are not required in the Stability timeframe. The change proposed is no longer required. The proposed change to footnote 1 was not accepted. Generation tripping by an SPS is permitted. Footnote 8 (now footnote 7) was changed for clarity. **Footnote 7:** Opening breaker(s) without a fault on one end of a normally networked Transmission circuit such that the line is now open at that end and possibly serving Load radial from a single source point.		
IRC Standards Review Committee Midwest ISO Minnesota Power New York Independent System Operator	Yes	The stability studies require significantly more computer time and a more detailed model. The standard should allow the PC/TP to use judgment to manage size and complexity of the study.
Response: The standard permits judgment on choosing those events that are "expected to produce more severe System impacts." See Requirement R3, part 3.4 and Requirement R4, part 4.4. Additionally, in this draft the SDT has removed extreme event Stability items 2f through 2h since this was a mis-interpretation of the existing table and are not required in the Stability timeframe.		
PJM	No	Table 1, Lead in Note I. The industry has not yet reached a consensus on appropriate Transient Voltage Limits.

Organization	Yes or No	Question 9 Comment
		It's not clear that reliability will be enhanced by requiring each entity to establish a Transient Voltage Limit. Table 1 footnote 1 - System stable means: a. Angular Stability:i. For Planning Event P1: No generating unit or units shall be allowed to pull out of synchronism. A generator being disconnected from the System by fault clearing action or by a Special Protection System is not considered pulling out of synchronism.This is not consistent with Loss of load whereby load can be lost due to a first contingency within contractual arrangements made with the load. This definition should be modified to read -A generator being disconnected from the System by fault clearing action or by a Special Protection System or prior arrangement?- as long as no other cascading outages occur. In Table 1, Extreme Events, Item 3a, i, ii, iii, iv and vi seem like events that would occur over long periods of time not in contingency simulation time frames. They seem more like sensitivities. Table 1 Delete P5 is the preferred option. If not deleted need to clarify that so that related or additional -faults in the vicinity of- are considered. As currently worded it can require all simultaneous N-2 combinations within some number of substation radius for which overtrips could occur. You would have to do all combinations since they are unpredictable. If the SDT means for the relay failure to be located at or very near to the initiating event, then perhaps the combinations are more manageable but still extremely burdensome.
Response: The SDT has added new Requirement R5 to explicitly require criteria for transient voltage criteria. This new requirement allows for the responsible entity to determine the acceptable limit for its System. **R5** Each Transmission Planner and Planning Coordinator shall have criteria for acceptable System steady state voltage limits, post-Contingency voltage deviations, and the transient voltage response for their System. For transient voltage response, the criteria shall at a minimum, specify a voltage level and a maximum length of time that transient voltages may remain outside that level. The proposed change for "or by prior agreement" was not accepted by the SDT since the addition of footnote 5 (now footnote 4) and the ability to shed Conditional Firm service should adequately cover the situation described. No change made. The intent of extreme event 3 'a' is simply to look at the loss of all units from two separate plants. Items i, ii, iii, iv and vi are merely explanatory to what could initiate this type of event. No change made. The P5 event description was changed in Draft 3 to match what is stated in the currently approved TPL standards under Category C6 through C9. The intent of P5 is to evaluate a failure of a single Protection System design that introduces a Delayed Clearing mode that may also include additional electrical Facilities being removed when compared to normal fault clearing.		
Brazos Electric Cooperative	No	For the most part Table 1 is acceptable but not entirely. The general 'feel' is that more studies are required. Requiring more studies is not going to provide additional reliability benefit but Brazos does not own many miles of transmission above 300 kV so the impact will be less for us than other larger TOs. We do not see the purpose of studying events where all forms of load loss is allowed. We understand upgrading the transmission system for these events is not required and is unneeded so why study certain events other than to insure that cascading outages don't occur? Without running a full set of studies it is a little hard to determine if Table 1 can be readily assessed or the true value of the additional studies.

Organization	Yes or No	Question 9 Comment
Response: More studies are being required in the sense that sensitivity studies are now required. However, the number of scenarios covered in the planning events and extreme events is comparable to the existing Category A, B, C and D items in use today. For events that permit the loss of Non-Consequential Load, a Transmission Planner could elect to impose stricter criteria on itself than the minimum expectations of the standard. However, the SDT believes an appropriate criterion has been established. Although not unanimous, the majority of the SDT and industry stakeholders believe the 300 kV and higher Systems (EHV) generally represent the backbone of many Systems in the various Interconnections and that the EHV breakpoint and the more stringent requirements are appropriately defined. The sensitivity studies are intended to broaden the knowledge of the Transmission Planner. If several sensitivities show a susceptibility to a particular planning event, a Transmission Planner may elect to act and include in their Corrective Action Plans based on the risk and likelihood.		
American Electric Power	No	Consider adding a Planning Event defined to address common mode outages of two generating units. The language could parallel that of P7, substituting “common system” for “common structure”. In the present draft, Planning Events P4 and P5 address single faults that may result in multiple contingencies. Most of these events can be expected to involve either multiple transmission facilities or a mix of generating units and transmission facilities. P7 covers common mode (structure) outages of transmission lines. There are no common mode generator contingencies specified. Define the term “common Right-of-Way” and/or modify the term to “common or adjacent Right(s)-of-Way”. In the absence of a definition, if two lines are built on opposite sides of some geographic boundary (such as a two-lane road) they may legally be completely separate, potentially with no overlap in the agreements between the Transmission Owner and landowners. However, from the standpoint of BES exposure to weather related outages, the lines clearly will simultaneously be exposed to similar conditions. Lines that follow geographically parallel routes for more than a minimum distance and are within some minimum separation should be considered to be on a common Right-of-Way. Suggestion for the minimum parallel distance would be 1 mile (based on footnote 12).
Response: The common mode event described is classified as an extreme event, see item 1 in steady state and Stability. The Transmission Planner could elect to impose a higher criteria on itself and consider a variation of the P3.1 event that would not include a System adjustment between the loss of two units, but it is not required by the standard. No change made. The commenter accurately describes the potential outcome of the P4 and the P5 events. As described above, the Transmission Planner could elect to evaluate the simultaneous loss of two units, but it was not identified by data reviewed by the SDT as being a highly likely event and therefore not included as a planning event. The SDT has made clarifying changes to Footnote 12 (now footnote 11). Footnote 11 has been added to the extreme event steady-state 2b. Extreme event Stability 2f has been deleted. **Footnote 11:** Excludes circuits that share a common structure or common Right-of-Way for 1 mile or less		
LADWP	No	Table 1 continues with discriminatory performance criteria required of 300kV and above facilities. This new "higher" criteria could lead to endless argument and litigations as to who did what to whom if implemented. Currently, all transmission facilities have same performance criteria; the impacts of each new facility are carefully evaluated and mitigations are included as part of the Plan of Service. This new, discriminatory requirement would

Organization	Yes or No	Question 9 Comment
		force everyone with EHV facilities to re-do its palnning studies and mitigate the impacts. Unfortunately, the real world is quite messy. For example, Company A has put in a 500KV line twenty years ago and since then, Companies B, C, and D have put in several underlying 230 kV, 115 kV lines. Is company A on hook now to mitigate all the problems for lines that came in later? Or is it required to re-create the conditions 20 years ago and mitigate only what would have been required. This is a very simplistic example to illustrate potential disagreements that would arise by this discriminatory criteria. If there is any engineering evidence to support this arbitrary requiremnts, it has yet to be presented. As I commented in the past, the last two major cyctme wide cascading event, both in WECC AND THE Eastern Interconnect, were both caused by 230kV systems.
Response: Although not unanimous, the majority of the SDT and industry stakeholders believe the 300 kV and higher Systems (EHV) generally represent the backbone of many Systems in the various Interconnections and that the EHV breakpoint and the more stringent requirements are appropriately defined. In the example provided, each company A, B, C and D is responsible for ensuring that criteria is met for its own facilities.		
Platte River Power Authority	No	At the top of Table 1 Planning Events, under "Stability Only:" regarding Note "i": Suggest deleting everything from "established" on to the end. (WECC establishes acceptable limits for transient voltage response.)
Response: The SDT has revised the referenced header note, now header note “k” in draft 4. The note now says both the Transmission Planner’s and the Planning Coordinator’s criteria must be met. **Header note ‘k’:** Transient voltage response shall be within acceptable limits established by the Planning Coordinator and the Transmission Planner.		
Orlando Utilities Commission	Yes	Comments: The table is significantly improved from the prior versions and provides superior clarification over the existing standards. In areas where an entity is the TSP and the PC, it is obvious that the Firm Service provided by the TSP falls within the performance requirements of the standard regarding curtailment. However if the firm service is provided by another TSP (a different PC) and causes a problem, who is responsible for insuring it does not have to be curtailed. As an example if System A has a firm transmission service agreement that under contingency causes a problem on System C, is system C in violation if the service has to be cut to protect their system, or is System A that granted and is responsible for the service?
Response: We appreciate your support of the TPL-001-1 standard and the revised Table 1. The Planning Coordinator or Transmission Planner is responsible for its portion of the BES and therefore is responsible for insuring there are no performance violations on its System. Further, the origin of the violation and the responsibility for curtailing service is not within the scope of the planning standards as it is an equity issue and not a reliability issue.		
American Transmission Company	No	We suggest the following changes:We believe reference to the use of Load Reduction to meet steady state performance requirement was omitted in Planning Events, Steady State and Stability, Item b. We suggest modifying the last sentence in Item b: However, Supplemental Load Loss and Load Reduction associated with an event shall not be used to meet steady state performance requirements. We propose limiting the scope to automatic devices in Planning Events, Steady State and Stability, Item c. We suggest text of: c. Simulate the removal of all elements that Protection Systems and other Controls are expected

Organization	Yes or No	Question 9 Comment
		to disconnect automatically for each Contingency?. Remove performance note ?e" in the Planning Events, Steady State & Stability section and replace it with R3.3.5 and R4.3.5, as suggested in the comments for R3 and R4. The qualification of allowable planned System adjustments should be a Requirement, rather than a performance note. Remove performance note "a" in the Planning Events, Steady State Only section, and replace it with R2.10, as suggested in the comments for R2. The obligation to identify and observe applicable steady state voltage and post-Contingency voltage deviations should be a Requirement, rather than a performance note. Remove performance note "b" in the Planning Events, Stability Only section and replace it with R2.10, as suggested in the comment for R2. The obligation to identify and observe applicable transient voltage response limits should be a Requirement, rather a performance note. Modify the P3 Category performance criteria to apply only to the loss of two generators because the probability of the loss of two base load generators is an order of magnitude greater than the loss of a generator and any other transmission element. We suggest the listing of: the loss of transmission circuit, transformer, shunt device, and single pole of DC line be removed from the P3 Events column. The corresponding events be moved to the P6 Category by "1. Generator" to the listing in the Initial System Condition (Loss of . . .) column.Limit the scope of the simulations in Item 1 of the Extreme Events, Steady State and Stability section to automatic systems and controls. We suggest this text: "1. Simulate the removal of all elements that Protection Systems and controls are expected to disconnect automatically for each Contingency. Clarify the meaning of the loss of multiple circuits in Item 2.a of the Extreme Events, Steady State section by using wording similar to P7. We suggest this text: "a. Loss of three or more circuits that share a common structure. Clarify the reference to actual, historical operating experience in Item 3.b of the Extreme Events, Steady State section. We suggest this text: "b. Other events based upon actual operating experience that may result in wide area disturbances. Clarify the reference to actual, historical operating experience in Item 2.i of the Extreme Events, Stability State section. We suggest this text that is similar to Steady State, Item 3.b: "i. Other events based upon actual operating experience that may result in wide area disturbances. Further clarify the applicable shunt devices in Footnote 7 with this suggested text: "7. Requirements which are applicable to shunt devices, also apply to FACTS devices that are connected to ground, but not instrument voltage transformers or surge arresters. ATC suggest that following change to Table 1, footnote 4. Existing language:"Bulk Electric System (BES) level references include extra-high voltage (EHV) Facilities defined as greater than 300kV and high voltage (HV) Facilities defined as the 300kV and lower voltage Systems."Suggested Modification:"Bulk Electric System (BES) level references include extra-high voltage (EHV) Facilities defined as greater than 300kV and high voltage (HV) Facilities defined as the 100kV through the 300kV Systems."

Organization	Yes or No	Question 9 Comment
Response: Regarding the suggested change to header note "b", no change was made as the standard does not prescribe a particular Load model such as constant power, constant impedance, etc. The proposed change to header note "c" has been made. **Header note 'c':** Simulate the removal of all elements that Protection Systems and other controls are expected to automatically disconnect for each event. The proposed deletion of header note "e" was not accepted. The note is explanatory describing something that is permitted rather than a requirement that shall be followed. The proposed change to move item header note 'e' to the requirements was not accepted. Additionally, under Requirement R3, part 3.1 and Requirement R4, part 4.1 the entire table is tied to a reliability requirement for both steady state and Stability. Regarding comments on header notes "a" and "b" - under Requirement R3, part 3.1 and Requirement R4, part 4.1 the entire table is tied to a reliability requirement for both steady state and Stability. The loss of a generator plus any other N-1 item was viewed as highly likely by the SDT. No change was made to the P3 and P6 events as proposed by the commenter. No change was made to the note as the SDT considered the present wording sufficient to describe the condition. No change was made to the note as the SDT considered the present wording sufficient to describe the condition. The proposed change to footnote 7 (now footnote 6) was not made as the SDT considers the present wording sufficient to describe the condition. The change to footnote 4 (now footnote 3) was not accepted although the SDT did make a clarifying change to the footnote. **Footnote 3:** Bulk Electric System (BES) level references include extra-high voltage (EHV) Facilities defined as greater than 300kV and high voltage (HV) Facilities defined as the 300kV and lower voltage Systems as defined by the Regional Entity. The designation of EHV and HV is used to distinguish between stated performance criteria allowances for interruptions of Firm Transmission Service and Non-Consequential Load.		
Omaha Public Power District	No	Header note 'f' under Planning Events: The redline version shows that the sentence "Facility Ratings shall not be exceeded" was removed from the beginning of header note "f" (header note "b" in the previous draft). This sentence needs to be reinserted at the beginning of header note "f". The requirement that Facility Ratings not be exceeded is a core principle of steady-state transmission-system assessment and needs to be explicitly stated somewhere in the standard. If this sentence is not reinserted, it could lead to a situation where different regions come up with different interpretations of the manner in which Facility Ratings need to be respected. Category P2: In the third column of the table, there is a dotted line that appears to be separating two parts of the description for event type P2.3. It appears that this dotted line should be removed. Category P3: In the fifth, sixth, and seventh columns of the table, there is one set of cells for event types P3.1 through P3.4 and another set of cells for event type P3.5. Since these two sets of cells are identical, they can be merged into one set that applies to event types P3.1 through P3.5. This would make the presentation of requirements for Category P3 consistent with that of Category P1. Category P7: Category P7 requires analyzing SLG faults on any two circuits on common structures. Add language to clarify whether SLG faults on both the same and different phases of the two circuits need to be

Organization	Yes or No	Question 9 Comment
		considered or whether it is sufficient to assume that the SLG faults occur on the same phase of the two circuits.
Response: In header note "f", the text "Facility Ratings shall not be exceeded" was inadvertently deleted in the Draft 3 standard and has been re-inserted in Draft 4. The dotted line separator is appropriate and is used to distinguish between the EHV and HV performance criteria of the P2.3 event. The suggested table format change for the P3 event was accepted. The standard does not specify. It's at each Planning Coordinator's or Transmission Planner's discretion.		
Tucson Electric Power Company	No	Clarify use of the term "single contingency" in P2 as P2-2 and P2-3 are labeled as single contingencies but multiple elements are effected. In the past loss of a branch or shunt element has been considered a single contingency but loss of a bus element could involve the loss of multiple branch or shunt elements. P4: Under the event column it should clarify and state language similar to that of P5 (Loss of multiple elements caused by a stuck breaker). In addition, this is a multiple contingency condition and may result in loss of more than 2 elements. As such, this is a low probability condition and loss of Non-Consequential load should be allowed for EHV. We disagree with raising the bar for EHV for P4.We also disagree with raising the bar for P5. This is a multiple contingency condition and may result in loss of more than 2 elements. We strongly disagree with elimination of load shed (of non-consequential load) for loss of multiple branch or shunt elements >300 kV.
Response: The P2-2 and P2-3 items are considered single Contingency since a single fault occurrence causes the event. While it is true that multiple elements are anticipated to trip, the event is still considered a single Contingency. TPL-001-1 differs from the existing standard in that it is clear that single branch outages that are not reflective of actual Protection Systems and controls design will not be acceptable. If a single fault can result in multiple elements being removed from service they must be simulated accordingly. The SDT has added the introductory text proposed for the P4 "Event" column of the table to bring consistency with the P5 event. In regards to the EHV performance criteria for the P4 event, the EHV performance expectations remain as stated in Draft 3. P4 events pose higher risk and impact to the BES since there is no time for System adjustments for potential multiple Facility outages that can result from a single fault. Since the EHV is considered the backbone of the BES carrying large amounts of power between generation and Load and typically not directly servicing end-user customers the higher performance expectations for the high impact P4 events is warranted. **P4:** Loss of multiple elements caused by a stuck breaker [11](non-Bus-tie) attempting to clear a Fault on one of the following: & 6. Loss of multiple elements caused by a stuck breaker[10] (Bus-tie) attempting to clear a Fault on the associated bus Although not unanimous, the majority of the SDT and industry stakeholders believe the 300 kV and higher Systems (EHV) generally represent the backbone of many Systems in the various Interconnections and that the EHV breakpoint and the more stringent requirements are appropriately defined. The Implementation Plan is intended to provide sufficient time to shift to the new expectations.		
Independent Electricity System Operator	No	"Single-phase-to-ground" faults should replace all occurrences of "single-line-to-ground" faults.

Organization	Yes or No	Question 9 Comment
		Events in P6 and P7 need more clarity for back to back installation where no DC line exists. In note footnote 11 we propose the following change. 11. A stuck breaker means that for a gang-operated breaker, all three phases of the breaker have remained closed. For an independent pole operated (IPO) breaker, only one pole is assumed to remain closed. A stuck breaker results in Delayed Fault Clearing. We do not agree with the removal of the provision to allow load rejection for 1 and 2 elements out of service under certain defined conditions as indicated in footnote "b" of Table I of the current TPL standards.
Response: The SLG fault description is a commonly understood term. No change was made. For back to back installations, each pole of the converter station would be treated the same as a DC line. No change made. The proposed change for footnote 11 (now footnote 10) was accepted. **Footnote 10:** A stuck breaker means that for a gang-operated breaker, all three phases of the breaker have remained closed. For an independent pole operated (IPO) or an independent pole tripping (IPT) breaker, only one pole is assumed to remain closed. A stuck breaker results in Delayed Fault Clearing In regards to proposed change to prohibit Non-Consequential Load shed in response to a single Contingency event, FERC, in Order 693, was clear in paragraph 1794 that interruption of Non-Consequential Load are not permitted for single Contingency events. This position was vetted in draft 1 of TPL-001-1 and most stakeholders and the majority of the SDT support this position. The use of an SPS design would be permitted for a single Contingency event if the SPS design interrupts service to customers involved in an interruptible Load contract arrangement.		
ReliabilityFirst Corporation	Yes	The term "stuck breaker" has been mis-understood, and additional text is needed to make it clear. "A stuck breaker is defined as a breaker that failed to open due to a mechanical failure internal to the breaker which prevents it from opening or protection system failures that failed to send a trip signal.
Response: The SDT agrees in part with your response. We concur that a stuck breaker is based on a mechanical failure of a single breaker. However, a Protection System failure could result in different outcomes depending on the design implemented. The SDT has partitioned the prior C6 through C9 contingencies into the P4 and P5 planning events to bring greater focus on this distinction.		
Kansas City Power & Light	Yes	
ReliabilityFirst Corporation	Yes	
Dominion - Electric Transmission	Yes	
Duke Energy	Yes	
ITC Holdings	Yes	None

Organization	Yes or No	Question 9 Comment
New Brunswick System Operator		No comment
Gainesville Regional Utilities	Yes	
CPS Energy	Yes	
Southern Company	Yes	
Tampa Electric	Yes	
Response: Thank you for your response.		

10. The changes to the Table include the addition/revision of footnotes 5 and 10 that address curtailment of Firm Transmission Service and conditional Firm Transmission Service. Do you agree with the footnotes? If not, please provide specific comments.

Summary Consideration: The majority of respondents were positive with their comments on the addition of the two footnotes. A number of clarifying questions were asked and the SDT has attempted to quell those questions with clarifications made to the footnotes. Please note that footnote 5 is now footnote 4 and footnote 10 is now footnote 9.

Footnote 4: Curtailment of Conditional Firm Transmission Service is allowed when the conditions and/or events being studied formed the basis for the Conditional Firm Transmission Service.

Footnote 9: Curtailment of Firm Transmission Service, when coupled with the appropriate re-dispatch of resources obligated to re-dispatch, is allowed both as a System adjustment (as identified in the column entitled 'Initial System Conditions') and a corrective action, where it can be demonstrated that Facilities remain within applicable Facility Ratings and those adjustments do not result in the shedding of any firm Demand. Where limited options for re-dispatch exist, sensitivities associated with the availability of those resources should be considered. Where Facilities external to the Transmission Planner's planning region are relied upon, Facility Ratings in those regions should also be respected.

Organization	Yes or No	Question 10 Comment
Dominion - Electric Transmission	No	Table 1 Interruption of Firm Transmission Service is not allowed for many of the events listed. Doesn't this imply that firm point-to-point service can't be interrupted even when the service is provided across points that are connected only by a radial facility? If so, does NERC have the authority to determine how transmission service providers calculate firm ATC? Dominion is also concerned that transmission service providers appear subject to "double jeopardy" I.E, NERC fine for violations of applicable reliability standard and FERC sanctions if OATT is violated.
Response: It is the SDT's opinion that the point-to-point service described is in essence; Conditional Firm Service based on the condition that the radial Facility is in service and could thus be interrupted under Footnote 5 (now footnote 4). No change made.		
Transmission Planning	No	It appears that the reference callout to footnote 5 should be placed on every "No" in the "Interruption of Firm Transmission Service column instead of in the header, as was done with reference callouts to footnote 10. In footnote 5 "conditional" should be capitalized since it refers to a specific product defined under the OATT. Also, this only covers the specific condition form of the product, but does not address the specified number of hours form of the product. If the second form of the product is the basis for the service and the transaction is modeled in the case, and curtailment will mitigate an overload, it should also be allowed. Footnote 10 is too long and subjective. There is no purpose in adding the phrase "when coupled with the appropriate re-dispatch of resources obligated to re-dispatch" because if there is an obligation to re-dispatch, it is done, and if there is no obligation to do so, then curtailment is the only alternative " no coupling necessary,

Organization	Yes or No	Question 10 Comment
		therefore, this phrase should be deleted. In addition, the last two sentences end in “must be considered”. What is the appropriate amount of “consideration” and what defines whether the consideration is acceptable or not? The last sentence should be a stand alone performance requirement in the Steady State and Stability notes at the top of Table 1 (in the list a through e) and should end in “must be adhered to” instead of “must be considered”.Suggested revision:10. Curtailment of firm transmission service is allowed both as a System adjustment (as identified in the column titled “Initial System Conditions”) and a corrective action, where it can be demonstrated that Facilities remain within applicable Facility Ratings and those adjustments do not result in the shedding of any firm Load.
Response: Footnote 5 (now footnote 4) is intended to apply to every row in the “Interruption of Firm Transmission Service Allowed” column while Footnote 10 (now footnote 9) does not. The placement of the footnotes is predicated on that premise. No change made. The SDT agrees with the capitalization of the word Conditional and has made the necessary corrections. **Footnote 4:** Curtailment of Conditional Firm Transmission Service is allowed when the conditions and/or events being studied formed the basis for the Conditional Firm Transmission Service. Curtailment of Conditional Firm Transmission Service is allowed when the conditions and/or events being studied formed the basis for the Conditional Firm Transmission Service. Footnote 5 (now footnote 4) states that “When the conditions and/or event(s) being studied form the basis for conditional Firm Transmission Service…” The word “conditions” is intended to address the ‘hours’ form of Conditional Firm service in that the hours a service may not be available should be based on System conditions that exist for those hours. No change made. Footnote 10 (now footnote 9) was added to address the disjoint between how some parties calculate ATC/AFC when assessing Long Term Firm Transmission Service and the currently proposed TPL-001-1 standard. TPL-001-1 requires Transmission Planners to plan their systems to meet multiple contingency events and some parties assess Long Term Firm Transmission Service on a first Contingency basis. Units obligated to re-dispatch, as contemplated in Footnote 9 are those units which are contractually bound to provide the service as well as those obligated to provide the service under Network Integrated Transmission Service, under FERC’s pro forma OATT. Under the pro forma OATT, units designated as network resources receiving NITS are obligated to re-dispatch as requested by the Transmission Provider pursuant to Section 33.2 to maintain reliability. The footnote is worded such that curtailment/re-dispatch cannot result in the loss of firm Load preserves the guidance given by FERC in Order 693 that no single Contingency result in the loss of firm Load. No change made**.** Where contractual agreements exist between entities allowing re-dispatch, and the curtailment of Firm Transmission Service associated with that re-dispatch is point-to-point, the point-to-point service curtailment would be allowed. In the case of units otherwise obligated, namely those resources with Network Integrated Transmission Service designated as network resources, curtailment of point-to-point service involving those resources would not be allowed. The SDT believes that applicable Facility Ratings noted throughout the standard cover all Facilities. No change made.		
SERC Engineering Committee Planning Standards Subcommittee	No	Footnote 5:Suggest rewording of footnote 5 to:Curtailment of conditional Firm Transmission Service is allowed when the conditions and/or events being studied formed the basis for the conditional Firm Transmission Service. Footnote 10: Footnote 10 is definitely an improvement from previous versions. It is suggested that the word "also" be added to the last line:Curtailment of firm transmission service, when coupled with the appropriate re-dispatch of

Organization	Yes or No	Question 10 Comment
		resources obligated to re-dispatch, is allowed both as a System adjustment (as identified in the column titled "Initial System Conditions") and a corrective action, where it can be demonstrated that Facilities remain within applicable Facility Ratings and those adjustments do not result in the shedding of any firm Load. Where limited options for re-dispatch exist, sensitivities associated with the availability of those resources must be considered. Where Facilities external to the Transmission Planner's planning region are relied upon, Facility Ratings in those regions must also be considered.
Ameren	No	Suggest rewording of footnote 5, though we do not use conditional firm service:Curtailment of conditional Firm Transmission Service is allowed when the conditions and/or events being studied formed the basis for the conditional Firm Transmission Service. Footnote 10 is definitely an improvement from previous versions. It is suggested that the word "also" be added to the last line:Curtailment of firm transmission service, when coupled with the appropriate re-dispatch of resources obligated to re-dispatch, is allowed both as a System adjustment (as identified in the column titled "Initial System Conditions") and a corrective action, where it can be demonstrated that Facilities remain within applicable Facility Ratings and those adjustments do not result in the shedding of any firm Load. Where limited options for re-dispatch exist, sensitivities associated with the availability of those resources must be considered. Where Facilities external to the Transmission Planner'splanning region are relied upon, Facility Ratings in those regions must also be considered.
Response: The SDT agrees with proposed re-wording of Footnote 5 (now footnote 4) and the additional wording in Footnote 10 (now footnote 9). **Footnote 4:** Curtailment of Conditional Firm Transmission Service is allowed when the conditions and/or events being studied formed the basis for the Conditional Firm Transmission Service.: **Footnote 9:** Curtailment of Firm Transmission Service, when coupled with the appropriate re-dispatch of resources obligated to re-dispatch, is allowed both as a System adjustment (as identified in the column entitled 'Initial System Conditions') and a corrective action, where it can be demonstrated that Facilities remain within applicable Facility Ratings and those adjustments do not result in the shedding of any firm Demand. Where limited options for re-dispatch exist, sensitivities associated with the availability of those resources should be considered. Where Facilities external to the Transmission Planner's planning region are relied upon, Facility Ratings in those regions must should also be respected. Curtailment of Conditional Firm Transmission Service is allowed when the conditions and/or events being studied formed the basis for the Conditional Firm Transmission Service. Curtailment of Firm Transmission Service, when coupled with the appropriate re-dispatch of resources obligated to re-dispatch, is allowed both as a System adjustment (as identified in the column entitled 'Initial System Conditions') and a corrective action, where it can be demonstrated that Facilities remain within applicable Facility Ratings and those adjustments do not result in the shedding of any firm Demand. Where limited options for re-dispatch exist, sensitivities associated with the availability of those resources must be considered. Where Facilities external to the Transmission Planner's planning region are relied upon, Facility Ratings in those regions should also be respected.		
SERC Engineering Committee Reliability Review Subcommittee	No	Suggest rewording of footnote 5 to: Curtailment of conditional Firm Transmission Service is allowed when the conditions and/or events being studied formed the basis for the conditional Firm Transmission Service.

Organization	Yes or No	Question 10 Comment
(RRS)		Footnote 10 is definitely an improvement from previous versions. It is suggested that the word "also" be added to the last line: Curtailment of firm transmission service, when coupled with the appropriate re-dispatch of resources obligated to re-dispatch, is allowed both as a System adjustment (as identified in the column titled "Initial System Conditions") and a corrective action, where it can be demonstrated that Facilities remain within applicable Facility Ratings and those adjustments do not result in the shedding of any firm Load. Where limited options for re-dispatch exist, sensitivities associated with the availability of those resources must be considered. Where Facilities external to the Transmission Planner's planning region are relied upon, Facility Ratings in those regions must also be considered.
Response: The SDT agrees with proposed re-wording of Footnote 5 (now footnote 4) and the additional wording in Footnote 10 (now footnote 9). **Footnote 4:** Curtailment of Conditional Firm Transmission Service is allowed when the conditions and/or events being studied formed the basis for the Conditional Firm Transmission Service. **Footnote 9:** Curtailment of Firm Transmission Service, when coupled with the appropriate re-dispatch of resources obligated to re-dispatch, is allowed both as a System adjustment (as identified in the column entitled 'Initial System Conditions') and a corrective action, where it can be demonstrated that Facilities remain within applicable Facility Ratings and those adjustments do not result in the shedding of any firm Demand. Where limited options for re-dispatch exist, sensitivities associated with the availability of those resources should be considered. Where Facilities external to the Transmission Planner's planning region are relied upon, Facility Ratings in those regions must should also be respected. Curtailment of Conditional Firm Transmission Service is allowed when the conditions and/or events being studied formed the basis for the Conditional Firm Transmission Service. Curtailment of Firm Transmission Service, when coupled with the appropriate re-dispatch of resources obligated to re-dispatch, is allowed both as a System adjustment (as identified in the column entitled 'Initial System Conditions') and a corrective action, where it can be demonstrated that Facilities remain within applicable Facility Ratings and those adjustments do not result in the shedding of any firm Demand. Where limited options for re-dispatch exist, sensitivities associated with the availability of those resources must be considered. Where Facilities external to the Transmission Planner's planning region are relied upon, Facility Ratings in those regions should also be respected.		
Southern Company	No	Footnote 10 should not be applied to P3. The curtailment of firm service should not be allowed for a unit out / line out contingency.
Response: Footnote 10 (now footnote 9) was added to address the disjoint between how some parties calculate ATC/AFC when assessing Long Term Firm Transmission Service and the currently proposed TPL-001-1 standard. TPL-001-1 requires Transmission Planners to plan their systems to meet multiple contingency events and some parties assess Long Term Firm Transmission Service on a first Contingency basis.. Units obligated to re-dispatch, as contemplated in Footnote 9 are those units which are contractually bound to provide the service as well as those obligated to provide the service under Network Integrated Transmission Service, under FERC's pro forma OATT. Under the pro forma OATT, units designated as network resources receiving NITS are obligated to re-dispatch as requested by the Transmission Provider pursuant to Section 33.2 to maintain reliability. The footnote is worded such that curtailment/re-dispatch cannot result in the loss of firm Load preserves the guidance given by FERC in Order 693 that no single Contingency result in the loss of firm Load. No change made**.**		
System Protection and Transmission Planning	Yes	These concepts seem too important to relegate to footnotes. Could this discussion of how to handle Firm transactions and redispatch be moved to a more prominent place? Perhaps these concepts should be removed

Organization	Yes or No	Question 10 Comment
Department		from this standard entirely. A more appropriate place for these concepts would be in ATC standards.
Response: While the SDT agrees that these are important concepts, given that the inclusion of all firm use of the BES, including the use created by Firm Transmission Service, is essential to meaningful Transmission Planning Assessments, The SDT therefore does not agree that the concepts can be removed entirely from the TPL standard. Ultimately Transmission planning engineers will be responsible for the study work done and the proposals to ensure each entity meets the requirements in the standard. The SDT believes that the tables will be the central point of reference and thus the most appropriate place for the provisions regarding how firm Transmission use can be handled. No change made.		
Florida Reliability Coordinating Council, Inc - Transmission Working Group	Yes	Excellent additionFootnote 10 is long and subjective. There is no purpose in adding the phrase "when coupled with the appropriate re-dispatch of resources obligated to re-dispatch" because if there is an obligation to re-dispatch, it is done, and if there is no obligation to do so, then curtailment is the only alternative " no coupling necessary. Suggested revision:10. Curtailment of firm transmission service is allowed both as a System adjustment (as identified in the column titled "Initial System Conditions") and as a corrective action, providing those adjustments do not result in the shedding of any firm Load.
Response: Footnote 10 (now footnote 9) was added to address the disjoint between how some parties calculate ATC/AFC when assessing Long Term Firm Transmission Service and the currently proposed TPL-001-1 standard. TPL-001-1 requires Transmission Planners to plan their systems to meet multiple contingency events and some parties assess Long Term Firm Transmission Service on a first Contingency basis.. Units obligated to re-dispatch, as contemplated in Footnote 9 are those units which are contractually bound to provide the service as well as those obligated to provide the service under Network Integrated Transmission Service, under FERC's pro forma OATT. Under the pro forma OATT, units designated as network resources receiving NITS are obligated to re-dispatch as requested by the Transmission Provider pursuant to Section 33.2 to maintain reliability. The footnote is worded such that curtailment/re-dispatch cannot result in the loss of firm Load preserves the guidance given by FERC in Order 693 that no single Contingency result in the loss of firm Load. No change made.		
FMPA	Yes	We disagree with how the performance criteria is applied to different contingencies, but agree that firm transmission can be curtailed post-contingency as a system adjustment, and especially as preparation for the next contingency.
NorthWestern Corporation NorthWestern Energy (NWE) (NWMT)	No	NWE has provided comments above concerning Firm Transmission Service and the foot notes should address the issues that we have raised above.
Progress Energy Florida, Inc.	No	Again, given the fundamental concerns that PEF has stated in previous Questions, PEF sees voicing detailed concerns for these footnotes as irrelevant, short of suggesting the reinstatement of the existing Footnote (b).
Response: The SDT thanks you for your comments.		
Progress Energy Carolina (PEC)	No	PEC believes that Footnote 10 should be clarified. The proposed wording "Where Facilities external to the Transmission Planner'splanning region are relied upon, Facility Ratings in those regions must be considered" is unclear. It is not clear what "relied upon" means. Also, thermal overloads on neighboring systems are generally

Organization	Yes or No	Question 10 Comment
		the neighboring system's responsibility to mitigate.
Response: The intent of Footnote 10 (now footnote 9) is to allow Transmission Planner's to use resources obligated to re-dispatch to meet reliability requirements. However, without due consideration to Facilities external to the Transmission Planner's study area, Facility Ratings could potentially be violated in those areas unbeknownst to the owners of those Facilities. Footnote 10 has been revised for clarity. **Footnote 9:** Curtailment of Firm Transmission Service, when coupled with the appropriate re-dispatch of resources obligated to re-dispatch, is allowed both as a System adjustment (as identified in the column entitled 'Initial System Conditions') and a corrective action, where it can be demonstrated that Facilities remain within applicable Facility Ratings and those adjustments do not result in the shedding of any firm Demand. Where limited options for re-dispatch exist, sensitivities associated with the availability of those resources should be considered. Where Facilities external to the Transmission Planner's planning region are relied upon, Facility Ratings in those regions must should also be respected.		
JEA	No	Footnote 10: First of all, the term firm Load is used instead of the term Non-Consequential load. Are these the same? If so, maybe we need to be consistent here. Assuming they are the same and in reference to previous comment on use of Non-Consequential load shedding. :"Propose establishing a cap on Non-Consequential Load Loss for all Corrective Action Plans where the Table 1 events currently do not allow at all. The cap could also be accompanied by an allowance of lag time (maybe 4-5 years)."To be consistent, some level of Non-Consequential load shedding should be allowed where Generation redispatch falls short for a few years until new planned generation is added to the system.
Response: The SDT does not see where any additional clarity would be added by the suggested change. No change made. The SDT has considered establishing a cap on Consequential and Non-Consequential Load Loss. Currently the SDT has elected not to do so, but instead to add reporting requirements in Requirement R2, Part 2.9 for a possible cap in the future. Curtailment of Firm Transmission Service, when coupled with the appropriate re-dispatch of resources obligated to re-dispatch, is allowed both as a System adjustment (as identified in the column entitled 'Initial System Conditions') and a corrective action, where it can be demonstrated that Facilities remain within applicable Facility Ratings and those adjustments do not result in the shedding of any firm Demand. Where limited options for re-dispatch exist, sensitivities associated with the availability of those resources must be considered. Where Facilities external to the Transmission Planner's planning region are relied upon, Facility Ratings in those regions must also be adhered to.		
SMUD	No	The allowed corrective actions in Table 1 to meet performance standards do not explicitly state how DSM solutions should be treated [there is a potential for 20% of national peak demand to be met by "demand response"] . If it is allowed to be used, and since this is a fairly significant amount, it would help if it is explicitly addressed in Table 1.
Response: The SDT agrees that DSM initiatives can impact TPL-001-1 assessments. It is the SDT's opinion that DSM initiatives would be reflected in the Load models. No change made.		
Pacific Gas and Electric Co,	Yes	We support the concept. However, we are unclear about the last sentence of Footnote 10, which reads "where

Organization	Yes or No	Question 10 Comment
		Facilities external to the Transmission Planner'splanning region are relied upon, Facility Ratings in those regions must be considered. For resources from areas external to the Transmission Planner'splanning regions, would identification of the need to, for example, increase System Operating Limits into the his/her Transmission Planning Area as part of the Corrective Action Plan be counted as having "considered" the "Facility Ratings in those impacted regions"? Otherwise, it may be difficult for the Transmission Planner to assess and identify all the Facility Ratings that may be impacted in a region external to his/her Transmission Planning Area.
Response: The SDT agrees and has strengthened the language in Footnote 10 (now footnote 9) **Footnote 9:** Curtailment of Firm Transmission Service, when coupled with the appropriate re-dispatch of resources obligated to re-dispatch, is allowed both as a System adjustment (as identified in the column entitled 'Initial System Conditions') and a corrective action, where it can be demonstrated that Facilities remain within applicable Facility Ratings and those adjustments do not result in the shedding of any firm Demand. Where limited options for re-dispatch exist, sensitivities associated with the availability of those resources should be considered. Where Facilities external to the Transmission Planner's planning region are relied upon, Facility Ratings in those regions must should also be respected. Curtailment of Firm Transmission Service, when coupled with the appropriate re-dispatch of resources obligated to re-dispatch, is allowed both as a System adjustment (as identified in the column entitled 'Initial System Conditions') and a corrective action, where it can be demonstrated that Facilities remain within applicable Facility Ratings and those adjustments do not result in the shedding of any firm Demand. Where limited options for re-dispatch exist, sensitivities associated with the availability of those resources must be considered. Where Facilities external to the Transmission Planner's planning region are relied upon, Facility Ratings in those regions must also be adhered to.		
Manitoba Hydro	Yes	Note 10: The drafting team is to be congratulated for including the ability to curtail Firm Transmission Service as long as generation is available to redispatch to prevent firm load loss. Note 5: Firm transmission service can also be curtailed when the service is conditioned on the element is being available (note 5). It is recommended to add note 10 to contingencies P1 and P2. This would allow for curtailment of Firm Transmission Service via redispatch without dropping load when re-adjusting the system following these single contingency events, or automatically adjusting the system via an SPS action initiated by the P1 or P2 event, consistent with note b of the existing TPL standards. The consequence of not including Note 10 could mean extensive new transmission line construction without any increase in transfer capability. In Note 10, the SDT is assuming that the Firm transmission Service is Network Service to load. Does Note 10 also apply if the Firm Transmission Service is firm point-to-point service?
Response: The SDT agrees that Footnote 10 (now footnote 9) all System adjustments. However, P1 and P2 do not include System Adjustments. While the SDT recognizes that firm service has been granted on radial Facilities it is the SDT's opinion that such service is, in essence, Conditional Firm Service based upon the condition that the radial Facility is in service. No change made. Footnote 10 (now footnote 9) was added to address the disjoint between how some parties calculate ATC/AFC when assessing Long Term Firm Transmission Service and the currently proposed TPL-001-1 standard. TPL-001-1 requires Transmission Planners to plan their systems to meet multiple contingency events and some parties assess Long Term Firm Transmission Service on a first Contingency basis. Units obligated to re-dispatch, as contemplated in Footnote 9 are those units which are contractually bound to provide the service as well as those obligated to provide the service under Network Integrated Transmission Service, under FERC's pro		

Organization	Yes or No	Question 10 Comment
forma OATT. Under the pro forma OATT, units designated as network resources receiving NITS are obligated to re-dispatch as requested by the Transmission Provider pursuant to Section 33.2 to maintain reliability. The footnote is worded such that curtailment/re-dispatch cannot result in the loss of firm Load preserves the guidance given by FERC in Order 693 that no single Contingency result in the loss of firm Load. No change made. Where contractual agreements exist between entities allowing re-dispatch, and the curtailment of Firm Transmission Service associated with that re-dispatch was point-to-point, the point-to-point service curtailment would be allowed. In the case of units otherwise obligated, namely those resources with Network Integrated Transmission Service designated as network resources, curtailment of point-to-point service involving those resources would not be allowed as there is no obligation to do so.		
National Grid Northeast Utilities	Yes	Capitalize "Firm Transmission Service" in footnote 10 and instead of saying firm Load use Firm Demand to be consistent with the NERC Glossary
Northeast Power Coordinating Council	No	Capitalize Firm Transmission Service in footnote 10 and instead of saying firm Load use Firm Demand to be consistent with the NERC Glossary.
Response: The SDT agrees with the proposed changes. **Footnote 9:** Curtailment of Firm Transmission Service, when coupled with the appropriate re-dispatch of resources obligated to re-dispatch, is allowed both as a System adjustment (as identified in the column entitled 'Initial System Conditions') and a corrective action, where it can be demonstrated that Facilities remain within applicable Facility Ratings and those adjustments do not result in the shedding of any firm Demand. Where limited options for re-dispatch exist, sensitivities associated with the availability of those resources should be considered. Where Facilities external to the Transmission Planner's planning region are relied upon, Facility Ratings in those regions must should also be respected.: Curtailment of Firm Transmission Service, when coupled with the appropriate re-dispatch of resources obligated to re-dispatch, is allowed both as a System adjustment (as identified in the column entitled 'Initial System Conditions') and a corrective action, where it can be demonstrated that Facilities remain within applicable Facility Ratings and those adjustments do not result in the shedding of any firm Demand. Where limited options for re-dispatch exist, sensitivities associated with the availability of those resources must be considered. Where Facilities external to the Transmission Planner's planning region are relied upon, Facility Ratings in those regions must also be adhered to.		
BC Hydro	No	Comments: Consider changing Footnote 10 to read, "Curtailment of firm Transmission Service, when coupled with the appropriate re-dispatch of resources obligated to re-dispatch, is allowed both as a System adjustment (as identified in the column entitled ["title" is a noun, not a verb and "titled" is an adjective meaning having a title, esp. of nobility] "Initial System Conditions") and a corrective action provided both are accomplished automatically by a NERC-certified SPS, where it can be demonstrated that Facilities remain within applicable Facility Ratings and those adjustments do not result in the shedding of any firm Load. Where limited options for re-dispatch exist, sensitivities associated with the availability of those resources must be considered. Where Facilities external to the Transmission Planner's planning region are relied upon, Facility Ratings in those regions must be considered.
Response: The SDT agrees with the proposed use of "entitled". **Footnote 9:** Curtailment of Firm Transmission Service, when coupled with the appropriate re-dispatch of resources obligated to re-dispatch, is allowed		

Organization	Yes or No	Question 10 Comment
both as a System adjustment (as identified in the column entitled 'Initial System Conditions') and a corrective action, where it can be demonstrated that Facilities remain within applicable Facility Ratings and those adjustments do not result in the shedding of any firm Demand. Where limited options for re-dispatch exist, sensitivities associated with the availability of those resources should be considered. Where Facilities external to the Transmission Planner's planning region are relied upon, Facility Ratings in those regions must should also be respected. Curtailment of Firm Transmission Service, when coupled with the appropriate re-dispatch of resources obligated to re-dispatch, is allowed both as a System adjustment (as identified in the column entitled 'Initial System Conditions') and a corrective action, where it can be demonstrated that Facilities remain within applicable Facility Ratings and those adjustments do not result in the shedding of any firm Demand. Where limited options for re-dispatch exist, sensitivities associated with the availability of those resources must be considered. Where Facilities external to the Transmission Planner's planning region are relied upon, Facility Ratings in those regions must also be adhered to. The SDT respectfully disagree that inclusion of language limiting the use of Footnote 10 (now footnote 9) to only those applications where an SPS is involved would further complicate the application of the footnote and would unduly limit its application. No change made.		
San Diego Gas and Electric Co		We agree that TPL-005 and TPL-006 appear to have been adequately covered in the draft TPL-001-1 as currently written. However, we will need to review this assessment after TPL-001-1 is finalized. In addition, there is no place to state our concerns for Section D. so we added it here. We question the "not applicable" entry under Section D 1.1.2. What does it mean when the reset period is not applicable? Does it mean there is no reset period, so all non-compliance in all prior years will be counted as prior violations when considering non-compliance in future years?
Response: The sanctions guidelines developed by the compliance program as part of the ERO start-up process eliminated the use of the concept of the "compliance reset period." The reason the heading "Compliance Monitoring and Reset Time" is still in the standards template is because some Standards Committee members felt that a change to the standard template couldn't be made without having the change go through full due process. Therefore, NERC staff agreed to always put, "Not applicable" under this heading until the next version of the manual is issued. This term will be eliminated in Version 8.		
LADWP	No	The use of the term"Firm Transmission Service" is problematic at best. See my comments on R1. The proper term is "Expected Transfer Level"
Response: Although Firm Transmission Service is a defined term in the NERC Glossary, it is recognized that some planning processes do not designate inter-area transfers as firm or non-firm. Re-dispatch of Designated Network Resources or resources contractually bound to participate in re-dispatch activities would in many cases result in changes in area interchange and thus would still be allowed in Footnote 10 (now footnote 9). Additionally, the proposed standard now requires sensitivities to be included in the Planning Assessment which may include expected transfers. No change made.		
Central Maine Power Company	Yes	
Independent Electricity System Operator	Yes	

Organization	Yes or No	Question 10 Comment
Kansas City Power & Light	Yes	
Pepco Holdings, Inc. - Affiliates	Yes	
MRO MRO NERC Standards Review Subcommittee	Yes	N/A
SERC Engineering Committee Dynamics Review Subcommittee (DRS)	Yes	None.
Platte River Power Authority	Yes	
American Transmission Company	Yes	
Idaho Power	Yes	
Minnesota Power	Yes	
Midwest ISO	Yes	
NV Energy	Yes	
PJM	Yes	
Brazos Electric Cooperative	Yes	no comment
American Electric Power	Yes	
ITC Holdings	Yes	Comments: We concur that footnote 10 should not apply to P0, P1 or P2 events.
Entergy Services, Inc	Yes	Units obligated to re-dispatch must include all Network Resources
ISO New England, Inc.	Yes	
New Brunswick System Operator		No comment

Organization	Yes or No	Question 10 Comment
Western Area Power Administration	Yes	
MidAmerican Energy Company	Yes	
Deseret Generation & Transmission	Yes	
Gainesville Regional Utilities	Yes	
Western Area Power Administration	Yes	
Tampa Electric	Yes	
IRC Standards Review Committee	Yes	
TVA System Planning	Yes	
Exelon Transmission Planning	Yes	
United Illuminating	Yes	
FirstEnergy Corp	Yes	We presently agree with the Footnote 5 and text.
Response: Thank you for your response.		

11. The SDT has provided an Implementation Plan as part of this posting. The plan includes the retirement of TPL-005-0 and TPL-006-0. Do you agree with the elements of the Plan? If not, please provide specific comments.

Summary Consideration: There were 3 main comments associated with this question.

Eleven commenters indicated that 60 months is not enough time to build major lines, especially if up to 24 months is needed to do the Planning Assessment and develop a Corrective Action Plan. The SDT considered this issue when TPL-001-1, draft 3 was prepared, and the SDT discussed its position in light of the comments received from this posting. The SDT believes that extending the 60 month implementation period would water down the standard by potentially delaying some corrective actions that could be implemented in 60 months or less. The third draft of TPL-001-1 does in fact recognize the distinct possibility that major construction projects could take more than 60 months, in which case Requirement R2, part 2.7.5 would apply.

The relevant portion of that requirement states: "If situations arise that are beyond the control of the Transmission Planner or Planning Coordinator that prevent the implementation of a Corrective Action Plan in the required timeframe, then the Transmission Planner or Planning Coordinator is permitted to utilize Non-Consequential Load Loss and curtailment of Firm Transmission Service to correct the situation that would normally not be permitted in Table 1, provided that the Transmission Planner or Planning Coordinator documents that they are taking prudent actions to resolve the situation. …." This provision could be applied when formulating the original Corrective Action Plan when it is known in advance that the permitting and construction process will require longer than 60 months or after the plan is formulated and unexpected delays arise outside the Transmission Planner's or Planning Coordinator's control.

Eight commenters indicated that more time is needed before dynamic Load modeling Requirement R2, part 2.4.1 becomes effective. However, Requirement R2, part 2.4.1 does not require a detailed dynamic Load model, only an aggregate System model. The SDT believes that such a model can be developed within the 24 month period before this requirement becomes effective.

Seven commenters raised concerns about the retirement of TPL-005-0 and TPL-006-0, regarding the requirements or lack thereof being placed on the Planning Coordinators and Transmission Planners to provide inputs to the Regional Entities so they can meet their obligations to NERC to prepare regional assessments. The SDT believes that the retirement of TPL-005-0 and TPL 006-0 have been adequately addressed by adding the Requirement R3, part 3.4.1, Requirement R4, part 4.4, and Requirement R8 with part 8.1 in the fourth draft of TPL-001-1 to ensure that Planning Coordinators and Transmission Planners will provide the necessary inputs to the Regions so that the Regions can fulfill their obligations to NERC in accordance with the NERC Rules of Procedure.

Changes were made to the following requirements due to industry comments:

3.4.1 The Planning Coordinator and Transmission Planner shall coordinate with adjacent Planning Coordinators and Transmission Planners to ensure that Contingencies on adjacent Systems which may impact their Systems are included in the Contingency list.

4.4.1 The Planning Coordinator and Transmission Planner shall coordinate with adjacent Planning Coordinators and Transmission Planners to ensure that Contingencies on adjacent Systems which may impact their Systems are included in the Contingency list.

R8 Each Planning Coordinator and Transmission Planner shall distribute its its Planning Assessment results to adjacent Planning Coordinators and Transmission Planners and to any functional entity that indicates a reliability related need for the Planning Assessment results.

8.1 If a recipient of the Planning Assessment results provides documented comments on the results, the respective Planning Coordinator or Transmission Planner shall provide a documented response to that recipient within 90 calendar days of receipt of those comments.

Organization	Yes or No	Question 11 Comment
Dominion - Electric Transmission	No	Dominion agrees with the retirement of TPL-005-0 and TPL-006-0. However, Dominion has some concern over the implementation period and believes that 60 months to implement corrective action plans may not be enough. This standard has more stringent requirements ("raising the bar") than the current TPL standards. Having to assess the system for these new standards as well as implementing corrective action plans within 60 months could be difficult to get approval to site and construct new transmission. Dominion suggests that an additional 12 to 24 months be given to allow time for the assessments to determine violations, solicit input from all stakeholders through RTO process (As required by FERC 890) to determine the most appropriate corrective action plans.
Response: The SDT considered the issues you raise on the sufficiency of a 60 month implementation window when TPL-001-1, draft 3 was prepared, and the SDT discussed its position in light of your comments and similar comments from others. The SDT believes that extending the 60 month implementation period would water down the standard by potentially delaying some corrective actions that could be implemented in 60 months or less. The third draft of TPL-001-1 does in fact recognize the distinct possibility that major construction projects could take more than 60 months, in which case Requirement R2, part 2.7.5 would apply. The relevant portion of that requirement states: "If situations arise that are beyond the control of the Transmission Planner or Planning Coordinator that prevent the implementation of a Corrective Action Plan in the required timeframe, then the Transmission Planner or Planning Coordinator is permitted to utilize Non-Consequential Load Loss and curtailment of Firm Transmission Service to correct the situation that would normally not be permitted in Table 1, provided that the Transmission Planner or Planning Coordinator documents that they are taking prudent actions to resolve the situation. …." This provision could be applied when formulating the original Corrective Action Plan when it is known in advance that the permitting and construction process will require longer than 60 months or after the plan is formulated and unexpected delays arise outside the Transmission Planner's or Planning Coordinator's control.		
Northeast Power Coordinating Council	No	Please clarify, since R2 through R6 should become effective before results could be distributed to adjacent Planning Coordinators and any functional entity. However, by the wording of the effective date of R1 and R7 it appears R7 becomes effective before R2 to R6. That is, 24 months are allowed by the standard to complete the planning assessments after regulatory approval. The results may not be ready for distribution by the planning coordinator after the first twelve months. As written, the Standard would become effective at different times in different jurisdictions. Requirement R7 requires coordination among adjacent Planning Coordinators and any Functional Entity that has indicated a reliability need. Such coordination cannot be granted until the Standard is effective for all involved jurisdictions. The term "Planning Coordinator" is not defined in the NERC Glossary of Terms used in Reliability Standards and, therefore, this standard should indicate whether this term is the same as the "Planning Authority" defined in the glossary. Otherwise the definition of the Planning Coordinator should be included in the NERC Glossary of Terms used in Reliability Standards. With regard to the many changes/modifications from the previous draft and from the previous TPL standards being replaced by TPL-001-1, another posting of this Standard will be necessary to fully evaluate the impact (on reliability and also cost of implementation) of such changes. The decision to allow the use of all type of RAS or SPS (particularly generator tripping and run-back) as a common practice for single contingency does not "raise the bar" in the planning standard, and should be reviewed. How can higher system performance be required that involves substantial infrastructure investment to prevent

Organization	Yes or No	Question 11 Comment
		events with a very low probability of occurrence, and allow use of a less reliable measure (SPS failure or misoperation having a higher probability of occurrence) to reduce the investment for more probable events?
Response: Distribution of Planning Assessments under Requirement R7 (now Requirement R8) is not limited to Planning Assessment results produced in conformance with the revised standard. Until such results are available, the SDT intended that Planning Assessments produced using the existing standards would be distributed. Planning Coordinator is listed as the new term for Planning Authority in the latest approved version of the Functional Model and is in the latest version of the NERC Glossary of Terms Used in Reliability Standards. No change made. The SDT agrees that another posting is required and has produced a fourth draft. The SDT's intent was to raise the bar where it was practical to do so and not lower the bar in any case. The allowance for the use of SPS and RAS in response to single Contingencies simply reflects the existing practice in many parts of North America. Where this has not been a common practice, individual Regional Entities, Planning Coordinators or Transmission Planners have the latitude to establish more stringent criteria.		
SERC Engineering Committee Planning Standards Subcommittee	No	Construction activities:60 months effective date seems acceptable for planning activities, but may not adequate for all construction activities. Typical times to construct a transmission line in various areas of SERC can range between 7 to 10 years. Accordingly, we recommend the effective date for construction projects be changed to at least 84 months.Dynamic load models:More time is needed for entities to determine the appropriate dynamic load model required by R2.4.1. We recommend at least 36 months before this requirement becomes effective.
Response: The SDT considered the issues you raise on the sufficiency of a 60 month implementation window when TPL-001-1, draft 3 was prepared, and the SDT discussed its position in light of your comments and similar comments from others. The SDT believes that extending the 60 month implementation period would water down the standard by potentially delaying some corrective actions that could be implemented in 60 months or less. The third draft does in fact recognize the distinct possibility that major construction projects could take more than 60 months, in which case Requirement R2, part 2.7.5 would apply. The relevant portion of that requirement states: "If situations arise that are beyond the control of the Transmission Planner or Planning Coordinator that prevent the implementation of a Corrective Action Plan in the required timeframe, then the Transmission Planner or Planning Coordinator is permitted to utilize Non-Consequential Load Loss and curtailment of Firm Transmission Service to correct the situation that would normally not be permitted in Table 1, provided that the Transmission Planner or Planning Coordinator documents that they are taking prudent actions to resolve the situation. …." This provision could be applied when formulating the original Corrective Action Plan when it is known in advance that the permitting and construction process will require longer than 60 months or after the plan is formulated and unexpected delays arise outside the Transmission Planner's or Planning Coordinator's control. Requirement R2, part 2.4.1 does not require a detailed dynamic Load model, only an aggregate System model. The SDT believes that such a model can be developed within the 24 month period before this requirement becomes effective.		
Bonneville Power Administration		We agree that TPL-005 and TPL-006 appear to have been adequately covered in the draft TPL-001-1 as currently written. However, we will need to review this assessment after TPL-001-1 is finalized. In addition, there is no place to state our concerns for Section D. so we've added it here. We question the "not applicable" entry under Section D 1.1.2. What does it mean when the reset period is not applicable? Does it mean there is no reset period, so all non-compliance in all prior years will be counted as prior violations when considering non-compliance in future years? OTHER COMMENTS:Would like to see TPL-001-1 more specifically address system performance required for radial load areas served by multiple transmission circuits (unequal capacity) from a single source substation. For

Organization	Yes or No	Question 11 Comment
		example, a radial load served by a single circuit 115-kV line and a single circuit 230-kV line. For a single contingency loss of the 230-kV circuit, cannot serve peak load area demand. Is this situation meant to be covered by Category P1 in TPL-001-1? I don't see anything similar to TPL-002-0a, Category B, Note b under Loss of Demand.
Response: The sanctions guidelines developed by the compliance program as part of the ERO start-up process eliminated the use of the concept of the "compliance reset period." The reason the heading "Compliance Monitoring and Reset Time" is still in the standards template is because some Standards Committee members felt that a change to the standard template couldn't be made without having the change go through full due process. Therefore, NERC staff agreed to always put, "Not applicable" under this heading until the next version of the manual is issued. This term will be eliminated in Version 8. The loss of Load served by a single Transmission line would be considered Consequential Load Loss which is permitted by the TPL-001-1 standard. However, as in your example, if a Load is served by 2 Transmission lines and one of the lines is not sufficient to supply the Load for the loss of the other, then it would be considered Non-Consequential Load Loss which is not permitted.		
MRO MRO NERC Standards Review Subcommittee	No	MRO NSRS offers the following comments.The last paragraph should be removed from the Effective Date section. This paragraph contains requirements and describes compliance procedures, rather than stating effective date details. If any requirements regarding Corrective Action Plans are included, then they should be placed in the R2 section. If descriptions of compliance procedures related to Corrective Action Plan implementation are deemed to be necessary, then they should be placed in NERC procedure documents. This standard should not contain any requirements regarding the implementation of Corrective Action Plans. The implementation of transmission system action plans depends on the actions (e.g. financing, regulatory approval, legal services, engineering, construction, commissioning) of many different entities, other than PCs or TPs. So, PCs and TPs should not be held responsible for the implementation of action plans since they have little or no control over the activities related to implementation. The standard could include requirements that obligate PCs and TPs to develop Corrective Action Plans that are executable (i.e. plans that are based on lead times that provide reasonable assurance that the planned facilities can be placed in service by the time that they are needed) or devise revised Corrective Action Plans when they learn that the actions plans are not expected to be implemented by the intended in-service date. The standard could also include requirements that obligate PCs and TPs to establish and apply project implementation lead time assumptions that are derived from historical experience and the implementation lead time projections from the applicable TOs, GOs, and DPs. Remove or modify the 60 month effective date statement because it's impractical and unreasonable. The effective date for performing analyses and developing subsequent Corrective Action Plans is 24 months. This leaves only 36 months to expect that the more stringent Corrective Action Plans would be implemented. It is improbable that all action plans related to BES facilities, especially above 300 kV could be implemented. Some EHV projects can take 5 to 10 years to implement depending on the size, complexity, and controversial nature of the project. MRO NSRS suggests that the effective date be stated in a more "implementation dependent" rather than a "fixed timeframe" manner. Consider wording such as "tripping of Non-Consequential Load or curtailment of Firm Transmission Service (in accordance with Requirement R2.6.4) is allowed until Corrective Action Plans based on TPL-001-1 analyses are implemented".
Response: The SDT disagrees that the last paragraph of the Effective Date should be removed. No change made.		

Organization	Yes or No	Question 11 Comment
The SDT disagrees with your view that the Corrective Action Plans should not include implementation requirements. A plan has no value unless it is implemented. No change made. The SDT considered the issues you raise on the sufficiency of a 60 month implementation window when TPL-001-1, draft 3 was prepared, and the SDT discussed its position in light of your comments and similar comments from others. The SDT believes that extending the 60 month implementation period would water down the standard by potentially delaying some corrective actions that could be implemented in 60 months or less. The third draft does in fact recognize the distinct possibility that major construction projects could take more than 60 months, in which case Requirement R2, part 2.7.5 would apply. The SDT considered your suggestion to change the language of Requirement 2.7.5 to make it more "implementation dependent" rather than using a "fixed timeframe" but we do not believe such a change is appropriate because it would make auditing of this requirement difficult.		
SERC Engineering Committee Dynamics Review Subcommittee (DRS)	No	More time is needed for entities to determine the appropriate dynamic load model required by R2.4.1. We recommend at least 36 months before this requirement becomes effective. A 60 month effective date seems acceptable for planning activities, but may not adequate for all construction activities. Typical times to construct a transmission line in various areas of SERC can range between 7 to 10 years. Accordingly, we recommend the effective date for construction projects be changed to at least 84 months.
Response: The SDT considered the issues you raise on the sufficiency of a 60 month implementation window when TPL-001-1, draft 3 was prepared, and the SDT discussed its position in light of your comments and similar comments from others. The SDT believes that extending the 60 month implementation period would water down the standard by potentially delaying some corrective actions that could be implemented in 60 months or less. The third draft does in fact recognize the distinct possibility that major construction projects could take more than 60 months, in which case Requirement R2, part 2.7.5 would apply. The relevant portion of that requirement states: "If situations arise that are beyond the control of the Transmission Planner or Planning Coordinator that prevent the implementation of a Corrective Action Plan in the required timeframe, then the Transmission Planner or Planning Coordinator is permitted to utilize Non-Consequential Load Loss and curtailment of Firm Transmission Service to correct the situation that would normally not be permitted in Table 1, provided that the Transmission Planner or Planning Coordinator documents that they are taking prudent actions to resolve the situation. …." This provision could be applied when formulating the original Corrective Action Plan when it is known in advance that the permitting and construction process will require longer than 60 months or after the plan is formulated and unexpected delays arise outside the Transmission Planner's or Planning Coordinator's control.		
SERC Engineering Committee Reliability Review Subcommittee (RRS)	No	60 months after effective date seems generally acceptable for planning activities, but may not adequate for all construction activities. Typical times to construct a transmission line in various areas of SERC can range between 7 to 10 years. Accordingly, we recommend the effective date for construction projects be changed to at least 84 months. More time is needed for entities to determine the appropriate dynamic load model required by R2.4.1. We recommend at least 36 months before this requirement becomes effective. Since breaker duty is a new "raising the bar" issue - should there also be a 5 or more year implementation plan for this as well? Also trying to construct enough facilities within the 5 year implementation period will result in multiple outages at same time - possibly affecting SERC member's bulk reliability during this construction period. Also SERC members are concerned that EHV equipment manufacturers will not be able to meet all the equipment orders that will be required to meet the "raising the bar" requirements. SERC members are also concerned that the costs to meet the new requirements contained in this TPL will amount to many billions of dollars with very little impact overall on the reliability of the Bulk transmission system. "When will the Implementation Plan be removed from the standard after it is officially approved" Will a revised

Organization	Yes or No	Question 11 Comment
		TPL standard need to be prepared to omit this implementation language?? If contingencies in one utility's system results in issues within another utility, who is responsible for studying the contingencies and who would be responsible for documenting the CAP?

Response: The SDT considered the issues you raise on the sufficiency of a 60 month implementation window when TPL-001-1, draft 3 was prepared, and the SDT discussed its position in light of your comments and similar comments from others. The SDT believes that extending the 60 month implementation period would water down the standard by potentially delaying some corrective actions that could be implemented in 60 months or less. This third draft does in fact recognize the distinct possibility that major construction projects could take more than 60 months, in which case Requirement R2, part 2.7.5 would apply.

The relevant portion of that requirement states: "If situations arise that are beyond the control of the Transmission Planner or Planning Coordinator that prevent the implementation of a Corrective Action Plan in the required timeframe, then the Transmission Planner or Planning Coordinator is permitted to utilize Non-Consequential Load Loss and curtailment of Firm Transmission Service to correct the situation that would normally not be permitted in Table 1, provided that the Transmission Planner or Planning Coordinator documents that they are taking prudent actions to resolve the situation. …." This provision could be applied when formulating the original Corrective Action Plan when it is known in advance that the permitting and construction process will require longer than 60 months or after the plan is formulated and unexpected delays arise outside the Transmission Planner's or Planning Coordinator's control.

Requirement R2, part 2.4.1 does not require a detailed dynamic Load model, only an aggregate System model. The SDT believes that such a model can be developed within the 24 month period before this requirement becomes effective.

The SDT does not view the breaker duty requirements as a raising of the bar. While these may be new requirements in NERC Standards, the SDT believes that most entities already follow these practices because they are safety related.

If manufacturers or other service providers can not meet increased demands for equipment and services, that would be an event outside the control of the Planning Coordinator or Transmission Planner. With respect to any additional capital requirements driven by the new standard, the SDT can not speculate regarding the magnitude of such requirements. However, the SDT strongly believes that the revised standard is necessary to ensure an adequate level of reliability for North America's Bulk Electric Systems.

The Implementation Plan is not a part of the Standard per se but will be balloted.

The SDT has modified the language in Requirement R3, part 3.4.1 and Requirement R4, part 4.4.1 as well as Requirement R8 with part 8.1 to clarify the handling of "cross border" Contingencies and performance violations.

3.4.1 The Planning Coordinator and Transmission Planner shall coordinate with adjacent Planning Coordinators and Transmission Planners to ensure that Contingencies on adjacent Systems which may impact their Systems are included in the Contingency list.

4.4.1 The Planning Coordinator and Transmission Planner shall coordinate with adjacent Planning Coordinators and Transmission Planners to ensure that Contingencies on adjacent Systems which may impact their Systems are included in the Contingency list.

R8 Each Planning Coordinator and Transmission Planner shall distribute its Planning Assessment results to adjacent Planning Coordinators and Transmission Planners and to any functional entity that indicates a reliability related need for the Planning Assessment results.

8.1 If a recipient of the Planning Assessment results provides documented comments on the results, the respective Planning Coordinator or Transmission Planner shall provide a documented response to that recipient within 90 calendar days of receipt of those comments.

TVA System Planning	No	TVA is concerned that the 5 year window for meeting the "raising the bar" requirements is still not adequate. For instance, it typically takes TVA 7 to 10 years to build a new 500-kV transmission line - including time required for such processes as federally mandated NEPA environmental reviews. Strongly suggest increasing this time

Organization	Yes or No	Question 11 Comment
		window to 10 years.Also trying to construct enough facilities within the 5 year implementation period will result in multiple outages at same time - possibly affecting TVA's bulk reliability during this construction period. Also TVA is concerned that EHV equipment manufacturers will not be able to meet all the equipment orders that will be required to meet the "raising the bar" requirements. Thus TVA believes that these additional concerns strengthen the need to have a 10 year implementation period. Since breaker duty is a new "raising the bar" issue - should there also be a 5 year implementation plan for this as well? TVA is also concerned that the costs to meet the new requirements contained in this TPL will amount to between $1 billion to $2 billion with very little impact overall on the reliability of the Bulk transmission system. TVA is also very concerned about the increase in rates that will be required to support these new facilities. When will the Implementation Plan be removed from the standard after it is officially approved? Will a revised TPL standard need to be prepared to omit this implementation language? If contingencies in one utility's system results in issues within another utility, who is responsible for studying the contingencies and who would be responsible for documenting the CAP? More time is needed for entities to determine the appropriate dynamic load model required by R2.4.1. We recommend at least 36 months before this requirement becomes effective.

Response: The SDT considered the issues you raise on the sufficiency of a 60 month implementation window when TPL-001-1, draft 3 was prepared, and the SDT discussed its position in light of your comments and similar comments from others. The SDT believes that extending the 60 month implementation period would water down the standard by potentially delaying some corrective actions that could be implemented in 60 months or less. This third draft does in fact recognize the distinct possibility that major construction projects could take more than 60 months, in which case Requirement R2, part 2.7.5 would apply.

The relevant portion of that requirement states: "If situations arise that are beyond the control of the Transmission Planner or Planning Coordinator that prevent the implementation of a Corrective Action Plan in the required timeframe, then the Transmission Planner or Planning Coordinator is permitted to utilize Non-Consequential Load Loss and curtailment of Firm Transmission Service to correct the situation that would normally not be permitted in Table 1, provided that the Transmission Planner or Planning Coordinator documents that they are taking prudent actions to resolve the situation. …." This provision could be applied when formulating the original Corrective Action Plan when it is known in advance that the permitting and construction process will require longer than 60 months or after the plan is formulated and unexpected delays arise outside the Transmission Planner's or Planning Coordinator's control.

If manufacturers or other service providers can not meet increased demands for equipment and services, that would be an event outside the control of the Planning Coordinator or Transmission Planner.

The SDT does not view the breaker duty requirements as a raising of the bar. While these may be new requirements in NERC Standards, the SDT believes that most entities already follow these practices because they are safety related.

With respect to any additional capital requirements driven by the new standard, the SDT can not speculate regarding the magnitude of such requirements. However, the SDT strongly believes that the revised standard is necessary to ensure an adequate level of reliability for North America's Bulk Electric Systems.

The Implementation Plan is not a part of the Standard per se but it will be balloted.

The SDT has modified the language in Requirement R3, part 3.4.1, Requirement R4, part 4.4.1, and Requirement R8 with part 8.1 to clarify the handling of "cross border" Contingencies and performance violations.

3.4.1 The Planning Coordinator and Transmission Planner shall coordinate with adjacent Planning Coordinators and Transmission Planners to ensure that

Organization	Yes or No	Question 11 Comment
Contingencies on adjacent Systems which may impact their Systems are included in the Contingency list. **4.4.1** The Planning Coordinator and Transmission Planner shall coordinate with adjacent Planning Coordinators and Transmission Planners to ensure that Contingencies on adjacent Systems which may impact their Systems are included in the Contingency list. **R8** Each Planning Coordinator and Transmission Planner shall distribute its Planning Assessment results to adjacent Planning Coordinators and Transmission Planners and to any functional entity that indicates a reliability related need for the Planning Assessment results. **8.1** If a recipient of the Planning Assessment results provides documented comments on the results, the respective Planning Coordinator or Transmission Planner shall provide a documented response to that recipient within 90 calendar days of receipt of those comments. Requirement R2, part 2.4.1 does not require a detailed dynamic Load model, only an aggregate System model. The SDT believes that such a model can be developed within the 24 month period before this requirement becomes effective.		
FirstEnergy Corp	No	We disagree with the proposed Implementation Plan. The implementation period for the TPL-001-1 transmission planning standard should be limited to the time needed to transition to the new study requirements. The proposed 5-year implementation for the "raise the bar" aspects of this standard delves into project management and review of capital construction progress which should remain outside the scope of this standard. The standard should only consider if an entity has completed the required studies and has developed Corrective Action Plans to ensure performance criteria is being maintained. The last paragraph of the Implementation Plan is not appropriate for the Implementation Plan as it discusses compliance enforcement information. This paragraph should be srtuck.
Response: The SDT disagrees with your view that the Corrective Action Plans should not include implementation requirements. A plan has no value unless it is implemented. No change made. The SDT disagrees that the last paragraph of the Effective Date should be removed. No change made.		
IRC Standards Review Committee	Yes	The 3rd draft states this will be addressed later in the project. Removal of these standards would not affect NERC and the RE's obligations to perform assessments. Will the PC/TP be obligated under NERC Rules of Procedure to provide Assessments to NERC and the Regions upon request?
Midwest ISO	Yes	The 3rd draft states that this will be addressed later in the project. Removal of these standards would not affect NERC and the RE's obligations to perform assessments. Will the PC/TP be obligated under NERC Rules of Procedure to provide Assessments to NERC and the Regions upon request?
New York Independent System Operator		The 3rd draft states the Plan will be addressed later in the project. Removal of these standards would not affect NERC and the RE's obligations to perform assessments. The Standards Drafting Team should clarify whether the PC/TP will be obligated under NERC Rules of Procedure to provide Assessments to NERC and the Regions upon request.
Response: Retirement of TPL-005-0 and TPL 006-0 have been addressed by adding the necessary requirements in the fourth draft of TPL-001-1 to ensure that Planning Coordinators and Transmission Planners will provide the necessary inputs to the Regions so that the Regions can fulfill their obligations to NERC in accordance with the NERC Rules of Procedure. **3.4.1** The Planning Coordinator and Transmission Planner shall coordinate with adjacent Planning Coordinators and Transmission Planners to ensure that		

Organization	Yes or No	Question 11 Comment
Contingencies on adjacent Systems which may impact their Systems are included in the Contingency list. **4.4.1** The Planning Coordinator and Transmission Planner shall coordinate with adjacent Planning Coordinators and Transmission Planners to ensure that Contingencies on adjacent Systems which may impact their Systems are included in the Contingency list. **R8** Each Planning Coordinator and Transmission Planner shall distribute its Planning Assessment results to adjacent Planning Coordinators and Transmission Planners and to any functional entity that indicates a reliability related need for the Planning Assessment results. **8.1** If a recipient of the Planning Assessment results provides documented comments on the results, the respective Planning Coordinator or Transmission Planner shall provide a documented response to that recipient within 90 calendar days of receipt of those comments.		
Southern Company	No	More time is needed for entities to determine the appropriate dynamic load model required by R2.4.1. We recommend at least 36 months before this requirement becomes effective.Other than that, the SDT has done a good job in allowing time for entities to get into compliance with the requirements where the bar has been raised.
Response: Requirement R2, part 2.4.1 does not require a detailed dynamic Load model, only an aggregate System model. The SDT believes that such a model can be developed within the 24 month period before this requirement becomes effective.		
Lafayette Utilities System	No	Lafayette is in the area which is impacted by Entergy transmission planning. Entergy is one of the few NERC transmission owners which has for some years now relied upon its interpretation of “footnote b” in the previous TPL-001-0, TPL-002-0a, TPL-003-0a and TPL-004-0 as permitting planning for the loss of Non-Consequential Load or interruption of firm transfers as a way of planning and building less transmission than other utilities would have considered themselves obligated to build for reliability. That Entergy interpretation, and the consequent lower investment in transmission planning and construction, has been a matter of some concern among Entergy regulators at both State and Federal levels, as well as Entergy transmission customers, and has been rejected by the SPP, which has been given the authority to develop the base plan for transmission additions on the Entergy system. It was the Entergy rejection of that base plan that most recently led to a day long technical conference among regulators at the recent SEARUC conference in Charleston, SC.The proposed Implementation Plan for TPL-001-1 is drafted to make the new standard, which the proposed Implementation Plan describes as one that “raises the bar in several areas,” effective only after the passage of 60 months from the first day of the first calendar quarter following applicable approval. That time for implementation is also embodied in A.5 of the proposed standard. This time lag is chosen, according to the proposed Implementation Plan, because of the “significant budget, siting, permitting, and construction impacts on many transmission owners. There are significant problems and costs for those whose electric service is dependent upon an inadequate transmission system, which would argue for a lesser period of time to reach compliance. This is especially true when the existing system is planned on an assumption as to the meaning of footnote b which assumption was clearly recognized as being controversial and a minority view. In recent years there have been repeated Entergy TLRs at quite high levels, which have repeatedly required emergency EEA-3s to keep firm load on line. And there has been an ongoing dispute between Entergy and the SPP as to footnote b and whether there should be limits on consequential load to be shed which has led the SPP (as the Entergy ICT) to have a complete base case for Entergy transmission construction already developed which is, by FERC direction, the basis for the Entergy construction plan. In its construction plan, however, Entergy dropped some 20 of the projects in the SPP base plan because of the Entergy view that it could go ahead and plan to drop non-consequential load as a means of remaining in compliance with Standards rather than building the transmission projects that would have been required in accordance with the

Organization	Yes or No	Question 11 Comment
		SPP base plan. While not all of the proposed changes embodied in TPL-001-1 may have been incorporated in the SPP base plan development, certainly the footnote b issues were. The costs of the failure of reliability and congestion resulting from the Entergy failure have been quite high, for Entergy retail customers as well as for others, and will continue to be high so long as there is no obligation to comply. Firm transmission obligations are simply not met while there is no obligation to comply. While it is certainly true that transmission cannot be planned and constructed overnight, it is also true that those who relied upon the minority interpretation of footnote b have been on notice for years both that that interpretation was challenged, and also that it was a minority viewpoint, as NERC itself advised FERC in its response to the NOPR that preceded Order 693.In 2007 FERC directed that NERC clarify the intended meaning of footnote b in its Order 693, and pointed out at that time that the interpretation permitting loss of load was "based largely on the matter of economics, not reliability. Id., P 1792. At that time, only Entergy and NIPSCO (certainly not "many" Transmission Owners" a word that appears twice in the draft Implementation Plan) would even admit to their interpretation of footnote b to weaken the grid. NERC agreed that such an interpretation was incorrect in its filings leading up to Order 693. In its June 26, 2006 Comments of North American Electric Reliability Council and North American Electric Reliability Corporation on Staff Preliminary Assessment, at p. 57-58, NERC noted that load shedding in a single contingency event is not acceptable: "footnote b to TPL-002-0 is intended to provide a limited exception to the general rule for serving load from a radial transmission line and should only be applied in unique circumstances, as described above. NERC recognizes that looped configurations are key to the reliable operation of the interconnection, and to meet reasonable expectations for reliable service to loads. . . . NERC standards, including footnote b, are not intended to endorse or approve planning the interconnection using radial configurations as a preferred method for reliably serving load, nor do NERC standards consider load shedding acceptable for single contingency events. It thus seems strange for NERC, an organization whose very existence was intended to assure the reliability of the grid, to reward those recalcitrant transmission owners who intentionally failed to expend the money and effort that the responsible transmission owners did expend, and at the expense of those who rely on the transmission system to do its basic job. Order 693, P 1794, "strongly discourage[d] an approach that reflects the lowest common denominator. Many of those transmission owners and planners for whom this change constitutes "raising the bar" presumably had plenty of time to consider what their options would be if their interpretation was incorrect, and should be expected to have reserve plans on hand pretty close to being ready to go when the dispute was lost. In the Entergy case, the plan has been in its hands for some time, and the fact that it has chosen to reject the SPP plan based on its own minority interpretation of footnote b is no one's fault but its own. And it certainly does not have to start from scratch to develop the plan; it consciously chose to reject the plan that the ICT developed for it.Lafayette asks that at least as to the changes tied to footnote b interpretation, and other excuses for dropping non-consequential load, the time for compliance be shortened to no more than two years following regulatory approval of the standard. R2.6 already provides for the development of a Corrective Action Plan, and it would not encourage reliability if five years were taken to develop a Corrective Action Plan, as opposed to complying with the standard. Second, Lafayette suggests that, whether or not NERC chooses to stick with its 5-year "lowering of the bar" to permit those entities which may have used a similar interpretation of footnote b to avoid building a sturdy grid, it not try to influence FERC and the courts as to legal questions that may develop during that period. We recognize that the changes made in what will be TPL-001-1 go well beyond the clarification of footnote b, so that for some changes there may be a reason for the 5 year phase in. But whether or not the 5 year phase in is going to be

Organization	Yes or No	Question 11 Comment
		applicable to all of those changes, we suggest that it would be improper to mischaracterize what is being done in a way that appears to have been drafted to influence legal questions that may come up.Specifically, as currently drafted, the descriptive modifier "many" should not be used in describing the entities which had chosen to use the lower bar interpretation of footnote b. While we recognize that a number of commenters have looked to one interpretation or another of footnote b in a few extreme situations, a review of comments does not show other transmission owners who have relied on the extreme interpretation used by Entergy on a systematic basis, And we think it inappropriate for the description in the paragraph beginning at the bottom of p.1 of that draft Implementation Plan to focus on the footnote b issue, as it now does. We suggest a modification which makes the description accurate, and which avoids the kind of misinterpretation which led to the footnote b controversy in the first place. We suggest that that first part of that paragraph be revised to read as follows:TPL-001-1 "raises the bar" in several areas where performance requirements have been changed in the new Standard versus those in existing TPL-001-0, TPL-002-0a, TPL-003-0a and TPL-004-0. Among other things, loss of Non-Consequential Load or interruption of firm transfers is no longer allowed for certain events, whereas the existing Standards were interpreted by some to allow such actions. As shown in Table 1 of TPL-001-1, the performance requirements associated with the following events represent "raising the bar"??
Louisiana Energy and Power Authority	No	LEPA is in the area which is impacted by Entergy transmission planning. Entergy is one of the few NERC transmission owners which has for some years now relied upon its interpretation of "footnote b" in the previous TPL-001-0, TPL-002-0a, TPL-003-0a and TPL-004-0 as permitting planning for the loss of Non-Consequential Load or interruption of firm transfers as a way of planning and building less transmission than other utilities would have considered themselves obligated to build for reliability. That Entergy interpretation, and the consequent lower investment in transmission planning and construction, has been a matter of some concern among Entergy regulators at both State and Federal levels, as well as Entergy transmission customers, and has been rejected by the SPP, which has been given the authority to develop the base plan for transmission additions on the Entergy system. It was the Entergy rejection of that base plan that most recently led to a day long technical conference among regulators at the recent SEARUC conference in Charleston, SC.The proposed Implementation Plan for TPL-001-1 is drafted to make the new standard, which the proposed Implementation Plan describes as one that "raises the bar in several areas," effective only after the passage of 60 months from the first day of the first calendar quarter following applicable approval. That time for implementation is also embodied in A.5 of the proposed standard. This time lag is chosen, according to the proposed Implementation Plan, because of the "significant budget, siting, permitting, and construction impacts on many transmission owners. There are significant problems and costs for those whose electric service is dependent upon an inadequate transmission system, which would argue for a lesser period of time to reach compliance. This is especially true when the existing system is planned on an assumption as to the meaning of footnote b which assumption was clearly recognized as being controversial and a minority view. In recent years there have been repeated Entergy TLRs at quite high levels, which have repeatedly required emergency EEA-3s to keep firm load on line. And there has been an ongoing dispute between Entergy and the ICT as to footnote b and whether there should be limits on consequential load to be shed which has led the SPP (as the Entergy ICT) to have a complete base case for Entergy transmission construction already developed which is, by FERC direction, the basis for the Entergy construction plan. In its construction plan, however, Entergy dropped some 20 of the projects in the ICT base plan because of the Entergy view that it could go ahead and plan to drop non-consequential load as a means of remaining in compliance with

Organization	Yes or No	Question 11 Comment
		Standards rather than building the transmission projects that would have been required in accordance with the ICT base plan. While not all of the proposed changes embodied in TPL-001-1 may have been incorporated in the SPP base plan development, certainly the footnote b issues were. The costs of the failure of reliability and congestion resulting from the Entergy failure have been quite high, for Entergy retail customers as well as for others, and will continue to be high so long as there is no obligation to comply. Firm transmission obligations are simply not met while there is no obligation to comply. While it is certainly true that transmission cannot be planned and constructed overnight, it is also true that those who relied upon the minority interpretation of footnote b have been on notice for years both that that interpretation was challenged, and also that it was a minority viewpoint, as NERC itself advised FERC in its response to the NOPR that preceded Order 693.In 2007 FERC directed that NERC clarify the intended meaning of footnote b in its Order 693, and pointed out at that time that the interpretation permitting loss of load was "based largely on the matter of economics, not reliability. Id., P 1792. At that time, only Entergy and NIPSCO would even admit to this less reliable interpretation of footnote b. NERC agreed that such an interpretation was incorrect in its filings leading up to Order 693. In its June 26, 2006 Comments of North American Electric Reliability Council and North American Electric Reliability Corporation on Staff Preliminary Assessment, at p. 57-58, NERC noted that load shedding in a single contingency event is not acceptable: "footnote b to TPL-002-0 is intended to provide a limited exception to the general rule for serving load from a radial transmission line and should only be applied in unique circumstances, as described above. NERC recognizes that looped configurations are key to the reliable operation of the interconnection, and to meet reasonable expectations for reliable service to loads. . . . NERC standards, including footnote b, are not intended to endorse or approve planning the interconnection using radial configurations as a preferred method for reliably serving load, nor do NERC standards consider load shedding acceptable for single contingency events. Hence, those recalcitrant transmission owners who intentionally failed to expend the money and effort that the responsible transmission owners did expend, have been rewarded at the expense of those who rely on the transmission system to do its basic job. Order 693, P 1794, "strongly discourage[d] an approach that reflects the lowest common denominator. Many of those transmission owners and planners for whom this change constitutes "raising the bar" presumably had plenty of time to consider what their options would be if their interpretation was incorrect, and should be expected to have reserve plans on hand pretty close to being ready to go when the dispute was lost. In the Entergy case, the plan has been in its hands for some time, and it has chosen to reject the ICT plan based on its own minority interpretation of footnote b. LEPA asks that at least as to the changes tied to footnote b interpretation, and other excuses for dropping non-consequential load, the time for compliance be shortened to no more than two years following regulatory approval of the standard. R2.6 already provides for the development of a Corrective Action Plan, and it would not encourage reliability if five years were taken to develop a Corrective Action Plan, as opposed to complying with the standard. Second, LEPA suggests that, whether or not NERC chooses to stick with its 5-year time period to permit those entities which may have used a similar interpretation of footnote b, it not try to influence FERC and the courts as to legal questions that may develop during that period. We recognize that the changes made in what will be TPL-001-1 go well beyond the clarification of footnote b, so that for some changes there may be a reason for the 5 year phase in. But whether or not the 5 year phase in is going to be applicable to all of those changes, we suggest that it would be improper to mischaracterize what is being done in a way that appears to have been drafted to influence legal questions that may come up.Specifically, as currently drafted, the descriptive modifier "many" should not be

Organization	Yes or No	Question 11 Comment
		used in describing the entities which had chosen to use the lower bar interpretation of footnote b. While we recognize that a number of commenters have looked to one interpretation or another of footnote b in a few extreme situations, a review of comments does not show other transmission owners who have relied on the extreme interpretation used by Entergy on a systematic basis, And we think it inappropriate for the description in the paragraph beginning at the bottom of p.1 of that draft Implementation Plan to focus on the footnote b issue, as it now does. We suggest a modification which makes the description accurate, and which avoids the kind of misinterpretation which led to the footnote b controversy in the first place. We suggest that that first part of that paragraph be revised to read as follows:"TPL-001-1 "raises the bar" in several areas where performance requirements have been changed in the new Standard versus those in existing TPL-001-0, TPL-002-0a, TPL-003-0a and TPL-004-0. Among other things, loss of Non-Consequential Load or interruption of firm transfers is no longer allowed for certain events, whereas the existing Standards were interpreted by some to allow such actions. As shown in Table 1 of TPL-001-1, the performance requirements associated with the following events represent "raising the bar""?
Mississippi Delta Energy Agency	No	MDEA is in the area which is impacted by Entergy transmission planning. Entergy is one of the few NERC transmission owners which has for some years now relied upon its interpretation of "footnote b" in the previous TPL-001-0, TPL-002-0a, TPL-003-0a and TPL-004-0 as permitting planning for the loss of Non-Consequential Load or interruption of firm transfers as a way of planning and building less transmission than other utilities would have considered themselves obligated to build for reliability. That Entergy interpretation, and the consequent lower investment in transmission planning and construction, has been a matter of some concern among Entergy regulators at both State and Federal levels, as well as Entergy transmission customers, and has been rejected by the SPP, which has been given the authority to develop the base plan for transmission additions on the Entergy system. It was the Entergy rejection of that base plan that most recently led to a day long technical conference among regulators at the recent SEARUC conference in Charleston, SC.The proposed Implementation Plan for TPL-001-1 is drafted to make the new standard, which the proposed Implementation Plan describes as one that "raises the bar in several areas," effective only after the passage of 60 months from the first day of the first calendar quarter following applicable approval. That time for implementation is also embodied in A.5 of the proposed standard. This time lag is chosen, according to the proposed Implementation Plan, because of the "significant budget, siting, permitting, and construction impacts on many transmission owners. There are significant problems and costs for those whose electric service is dependent upon an inadequate transmission system, which would argue for a lesser period of time to reach compliance. This is especially true when the existing system is planned on an assumption as to the meaning of footnote b which assumption was clearly recognized as being controversial and a minority view. In recent years there have been repeated Entergy TLRs at quite high levels, which have repeatedly required emergency EEA-3s to keep firm load on line. And there has been an ongoing dispute between Entergy and the SPP as to footnote b and whether there should be limits on consequential load to be shed which has led the SPP (as the Entergy ICT) to have a complete base case for Entergy transmission construction already developed which is, by FERC direction, the basis for the Entergy construction plan. In its construction plan, however, Entergy dropped some 20 of the projects in the SPP base plan because of the Entergy view that it could go ahead and plan to drop non-consequential load as a means of remaining in compliance with Standards rather than building the transmission projects that would have been required in accordance with the SPP base plan. While not all of the proposed changes embodied in TPL-001-1 may have been incorporated in the

Organization	Yes or No	Question 11 Comment
		SPP base plan development, certainly the footnote b issues were. The costs of the failure of reliability and congestion resulting from the Entergy failure have been quite high, for Entergy retail customers as well as for others, and will continue to be high so long as there is no obligation to comply. Firm transmission obligations are simply not met while there is no obligation to comply. While it is certainly true that transmission cannot be planned and constructed overnight, it is also true that those who relied upon the minority interpretation of footnote b have been on notice for years both that that interpretation was challenged, and also that it was a minority viewpoint, as NERC itself advised FERC in its response to the NOPR that preceded Order 693.In 2007 FERC directed that NERC clarify the intended meaning of footnote b in its Order 693, and pointed out at that time that the interpretation permitting loss of load was "based largely on the matter of economics, not reliability. Id., P 1792. At that time, only Entergy and NIPSCO (certainly not "many" Transmission Owners? a word that appears twice in the draft Implementation Plan) would even admit to their interpretation of footnote b to weaken the grid. NERC agreed that such an interpretation was incorrect in its filings leading up to Order 693. In its June 26, 2006 Comments of North American Electric Reliability Council and North American Electric Reliability Corporation on Staff Preliminary Assessment, at p. 57-58, NERC noted that load shedding in a single contingency event is not acceptable: "footnote b to TPL-002-0 is intended to provide a limited exception to the general rule for serving load from a radial transmission line and should only be applied in unique circumstances, as described above. NERC recognizes that looped configurations are key to the reliable operation of the interconnection, and to meet reasonable expectations for reliable service to loads. . . . NERC standards, including footnote b, are not intended to endorse or approve planning the interconnection using radial configurations as a preferred method for reliably serving load, nor do NERC standards consider load shedding acceptable for single contingency events. It thus seems strange for NERC, an organization whose very existence was intended to assure the reliability of the grid, to reward those recalcitrant transmission owners who intentionally failed to expend the money and effort that the responsible transmission owners did expend, and at the expense of those who rely on the transmission system to do its basic job. Order 693, P 1794, "strongly discourage[d] an approach that reflects the lowest common denominator. Many of those transmission owners and planners for whom this change constitutes "raising the bar" presumably had plenty of time to consider what their options would be if their interpretation was incorrect, and should be expected to have reserve plans on hand pretty close to being ready to go when the dispute was lost. In the Entergy case, the plan has been in its hands for some time, and the fact that it has chosen to reject the SPP plan based on its own minority interpretation of footnote b is no one's fault but its own. And it certainly does not have to start from scratch to develop the plan; it consciously chose to reject the plan that the ICT developed for it.MDEA asks that at least as to the changes tied to footnote b interpretation, and other excuses for dropping non-consequential load, the time for compliance be shortened to no more than two years following regulatory approval of the standard. R2.6 already provides for the development of a Corrective Action Plan, and it would not encourage reliability if five years were taken to develop a Corrective Action Plan, as opposed to complying with the standard. Second, MDEA suggests that, whether or not NERC chooses to stick with its 5-year "lowering of the bar" to permit those entities which may have used a similar interpretation of footnote b to avoid building a sturdy grid, it not try to influence FERC and the courts as to legal questions that may develop during that period. We recognize that the changes made in what will be TPL-001-1 go well beyond the clarification of footnote b, so that for some changes there may be a reason for the 5 year phase in. But whether or not the 5 year phase in is going to be applicable to all of those changes, we suggest that it would be improper to mischaracterize what is being done in a way that

Organization	Yes or No	Question 11 Comment
		appears to have been drafted to influence legal questions that may come up.Specifically, as currently drafted, the descriptive modifier "many" should not be used in describing the entities which had chosen to use the lower bar interpretation of footnote b. While we recognize that a number of commenters have looked to one interpretation or another of footnote b in a few extreme situations, a review of comments does not show other transmission owners who have relied on the extreme interpretation used by Entergy on a systematic basis, And we think it inappropriate for the description in the paragraph beginning at the bottom of p.1 of that draft Implementation Plan to focus on the footnote b issue, as it now does. We suggest a modification which makes the description accurate, and which avoids the kind of misinterpretation which led to the footnote b controversy in the first place. We suggest that that first part of that paragraph be revised to read as follows:TPL-001-1 "raises the bar" in several areas where performance requirements have been changed in the new Standard versus those in existing TPL-001-0, TPL-002-0a, TPL-003-0a and TPL-004-0. Among other things, loss of Non-Consequential Load or interruption of firm transfers is no longer allowed for certain events, whereas the existing Standards were interpreted by some to allow such actions. As shown in Table 1 of TPL-001-1, the performance requirements associated with the following events represent "raising the bar"??
Response: Thank you for the background which helps the SDT understands your concerns. The SDT believes that this revised Standard has clarified the intent of the old footnote 'b' as well as other areas of the original standard that were open to interpretation. Standards must apply equally to all, so the SDT has chosen what it believes to be a reasonable implementation timeline that balances a wide variety of interests and circumstances. Finally, please note that the Implementation Plan document provided with this posting of the draft Standard is neither a part of the Standard or the Standard Roadmap but will be balloted. Therefore the SDT sees no need to modify the language.		
System Protection and Transmission Planning Department	Yes	We concur with SDT intent to retire TPL-005 and TPL-006. As there is no comment form entry to accept comments on MEASURES, we add one note here, related to "such as" lists - as noted above for R1.1.2, R2.1.4, R2.5.2, R3.3.4, R4.3.3, and R5. As written now, all measures include "such as" lists. We strongly suggest you remove "such as electronic or hard copies" from all measure statements.
Response: Thank you for your response. The SDT believes that examples of evidence "such as electronic or hard copies" help clarify the intent of the measure. Since no other responses requested removal of those words, the SDT will retain them.		
PacifiCorp Deseret Generation & Transmission SRP Southern California Edison Company Western Area Power Administration Pacific Gas and Electric Co, Puget Sound Energy, Inc.		We agree that TPL-005 and TPL-006 appear to have been adequately covered in the draft TPL-001-1 as currently written. However, we will need to review this assessment after TPL-001-1 is finalized. In addition, there is no place to state our concerns for Section D. so we added it here. We question the "not applicable" entry under Section D 1.1.2. What does it mean when the reset period is not applicable? Does it mean there is no reset period, so all non-compliance in all prior years will be counted as prior violations when considering non-compliance in future years?

Organization	Yes or No	Question 11 Comment
California ISO		
NV Energy	No	We agree that TPL-005 and TPL-006 appear to have been adequately covered in the draft TPL-001-1 as currently written. However, we will need to review this assessment after TPL-001-1 is finalized. In addition, there is no place to state our concerns for Section D. so we added it here. We question the "not applicable" entry under Section D 1.1.2. What does it mean when the reset period is not applicable? Does it mean there is no reset period, so all non-compliance in all prior years will be counted as prior violations when considering non-compliance in future years? Why is this changing from an annual reset period in the current standards?
Response: The sanctions guidelines developed by the compliance program as part of the ERO start-up process eliminated the use of the concept of the "compliance reset period." The reason the heading "Compliance Monitoring and Reset Time" is still in the standards template is because some Standards Committee members felt that a change to the standard template couldn't be made without having the change go through full due process. Therefore, NERC staff agreed to always put, "Not applicable" under this heading until the next version of the manual is issued. This term will be eliminated in Version 8.		
Tampa Electric	Yes	Consider having all requirements go into effect at the same time.
Response: The SDT chose a phased approach for establishing effective dates for individual requirements to reflect the broad range of implementation time frames associated with different requirements. Rather than use a least common denominator, which would have led to a new standard that would not be implemented for 60 months, those requirements that needed less time were assigned earlier effective dates. No change made.		
Florida Reliability Coordinating Council, Inc - Transmission Working Group		Overall the plan is an improvement! Allowing for a 60 month phase in of the more restrictive performance requirements is useful, however consider applying the 60 month phase in (or some timeframe) to P1 events for extenuating circumstances, e.g. unable to obtain ROW, etc. Having R1 and R7 going into effect first do raise the concern of what TPL standards are in effect during the time frame. The implementation should also be more specific on what "going into effect" means. Assessments are not a one day event but are a year long effort that culminates in a final "report" that is the assessment. Most NERC standards effect ongoing activities, and the day they go into effect the utilities functions are expected to be compliant. In this case that rationale would require that in the prior year two assessments where performed, one compliant with the current standard and one compliant with then new standard, however we don't believe that was the intent. Perhaps a statement below the paragraph regarding the 60 month implementation plan for Corrective Action Plans to the effect of:"Once effective all future assessments shall upon completion be compliant with this standard. Assessments completed prior to the effective date shall be based on the TPL standards in effect at the time. The standard is not intended to require a retroactively compliant assessment be in effect when the standard becomes active, but instead that the next assessment be compliant with the revised standard"
Response: The SDT believes that extenuating circumstances are covered in Requirement R2, part 2.7.5. The relevant portion of that requirement states: "If situations arise that are beyond the control of the Transmission Planner or Planning Coordinator that prevent the implementation of a Corrective Action Plan in the required timeframe, then the Transmission Planner or Planning Coordinator is permitted to utilize Non-Consequential Load Loss and curtailment of Firm Transmission Service to correct the situation that would normally not be permitted in Table 1, provided that the Transmission Planner or Planning Coordinator documents that they are taking prudent actions to resolve the situation. …." This provision could be applied when formulating the original Corrective Action Plan when it is known in advance that the permitting and construction process will require longer than 60 months or after the plan is formulated and unexpected delays arise outside the Transmission Planner's		

Organization	Yes or No	Question 11 Comment
or Planning Coordinator's control. The SDT recognizes that assessments take a period of time to complete. The date on which the assessment was initiated would determine whether the current TPL standards or the revised TPL-001-1 would govern compliance requirements. No change made.		
FMPA	No	We suggest that the 60 month calendar apply to the HV system as well for all Categories. It is just as difficult, if not more difficult, to build a new 138 kV line in the Florida Keys as it is to build a 300+ kV line. The same time frame should apply to both. Also, as highlighted in the comments above to R2.1.4, P3 essentially causes utilities to build upgrades to N-3 planning criteria which may necessitate significant transmission upgrades if left unchanged. Hence, if left unchanged, P3 ought to have at least 5 years as well. The implementation plan ought to include an "out" for extenuating circumstances, e.g., unable to obtain ROW, etc. For instance, it is doubtful that another line in the Keys could ever get built without significant intervention and utilities that are unable to obtain ROW should not receive sanctions for something outside of their control. Consider changing the effective dates of R1 and R7 to take effect at the same time as R2 through R6 so you do not have to meet two standards during the same time period. Otherwise, clarify how the effective date impacts which version of the standard is to be used in an assessment before a scheduled compliance audit. The implementation should also be more specific on what "going into effect" means. Assessments are not a one day event but are a year long effort that culminates in a final "report" that is the assessment. Most NERC standards effect ongoing activities, and the day they go into effect the utilities functions are expected to be compliant. In this case that rationale would require that in the prior year two assessments were performed, one compliant with the current standard and one compliant with then new standard, however we don't believe that was the intent. Perhaps a statement below the paragraph regarding the 60 month implementation plan for Corrective Action Plans to the effect of:?Once effective all future assessments shall upon completion be compliant with this standard. Assessments completed prior to the effective date shall be based on the TPL standards in effect at the time. The standard is not intended to require a retroactively compliant assessment be in effect when the standard becomes active, but instead that the next assessment be compliant with the revised standard?
Response: The revised standard has raised the bar for certain planning events. In those cases, a 60 month effective date is permitted. The determination as to when the 60 month period applies is related to the Contingency and not the solution. Therefore, if a 138 kV line is proposed as a corrective action for one of the raising the bar events, 60 months would be provided to implement the construction of the 138 kV line. Regarding the impact of spare policies, the SDT does not agree with your premise that solutions to meet this requirement could take at least 5 years. Since the requirement addresses spare transmission equipment, and not generating equipment as your example suggests, one direct solution would be to purchase additional spare transmission equipment. In virtually all cases this could be accomplished in less than 5 years. The SDT believes that extenuating circumstances are covered in Requirement R2, part 2.7.5. The relevant portion of that requirement states: "If situations arise that are beyond the control of the Transmission Planner or Planning Coordinator that prevent the implementation of a Corrective Action Plan in the required timeframe, then the Transmission Planner or Planning Coordinator is permitted to utilize Non-Consequential Load Loss and curtailment of Firm Transmission Service to correct the situation that would normally not be permitted in Table 1, provided that the Transmission Planner or Planning Coordinator documents that they are taking prudent actions to resolve the situation. …." The SDT chose a phased approach for establishing effective dates for individual requirements to reflect the broad range of implementation time frames associated with		

Organization	Yes or No	Question 11 Comment
different requirements. Rather than use a least common denominator, which would have led to a new standard that would not be implemented for 60 months, those requirements that needed less time were assigned earlier effective dates. No change made. The SDT recognizes that assessments take a period of time to complete. The date on which the assessment was initiated would determine whether the current TPL standards or the revised TPL-001-1 would govern compliance requirements. No change made		
Progress Energy Carolina (PEC)	No	More time than 12 months is needed for modeling the complete effects of Relay Protection Systems and the effects of Relay Loadability. PEC suggests that this period of time be extended to 24 months or longer.
Response: The standard does not require detailed modeling of Relay Protection Systems. It only requires that the impacts of those systems be reflected in the modeling of Contingencies and the evaluation of the resulting System performance. This is no different than the current standards.		
MidAmerican Energy Company	No	MidAmerican commends the SDT for its hard work on this standard. MidAmerican does not support the paragraph that states "Any entity that cannot fully implement its Corrective Action Plan".shall self report itself?? MidAmerican believes that the Energy Policy Act of 2005 does not provide NERC or FERC the authority to require construction of facilities. Therefore, MidAmerican believes that this paragraph should be deleted in its entirety from the implementation plan as requiring responsibility to build facilities or else self report non-compliance. This is in direct contradiction to federal law.
Response: The Corrective Action Plan requirements do not necessarily result in construction of new Facilities, although it is understood that in some cases the only practical solution to a performance violation will require new or upgraded Facilities. Therefore, the SDT does not believe that these requirements contradict federal law and disagrees with your recommendation that the paragraph you mentioned should be removed.		
Northeast Utilities	Yes	Other Comments:Comment 1 Please clarify, since R2 through R6 should become effective before results could be distributed to adjacent Planning Coordinators and any functional entity. However, by the wording of the effective date of R1 and R7 it appears R7 becomes effective before R2 to R6. That is, 24 months are allowed by the standard to complete the planning assessments after regulatory approval. The results may not be ready for distribution by the planning coordinator after the first twelve months. Comment 2 The term "Planning Coordinator" is not defined in the NERC Glossary of Terms used in Reliability Standards and, therefore, this standard should indicate whether this term is the same as the "Planning Authority" defined in the glossary. Otherwise the definition of the Planning Coordinator should be included in the NERC Glossary of Terms used in Reliability Standards.
Progress Energy Florida, Inc.	No	While the Implementation Plan is extremely vague at present, making a specific enforcement date impossible to determine, PEF is concerned that the language at present will not allow enough time for Transmission Owners to prepare for the increased stringency.
Response: The SDT chose a phased approach for establishing effective dates for individual requirements to reflect the broad range of implementation time frames associated with different requirements. Rather than use a least common denominator, which would have led to a new standard that would not be implemented for 60 months, those requirements that needed less time were assigned earlier effective dates. No change made. Planning Coordinator is defined in the latest approved version of the Glossary.		
Hydro-Québec TransEnergie (HQT)	No	With regard to the many changes/modifications from the previous draft and from the previous TPL standards being replaced by TPL-001-1, another posting of this Standard will be necessary to fully evaluate the impact (on

Organization	Yes or No	Question 11 Comment
		reliability and also cost of implementation) of such changes. The decision to allow the use of all type of RAS or SPS (particularly generator tripping and run-back) as a common practice for single contingency does not "raise the bar" in the planning standard, and should be reviewed. How can higher system performance be required that involves substantial infrastructure investment to prevent events with a very low probability of occurrence, and allow use of a less reliable measure (SPS failure or misoperation having a higher probability of occurrence) to reduce the investment for more probable events?
Response: The SDT agrees that another posting is required and has produced a fourth draft. The SDT's intent was to raise the bar where it was practical to do so and not lower the bar in any case. The allowance for the use of SPS and RAS in repose to single contingencies simply reflects the practice in many parts of North America. Where this has not been a common practice, individual Regional Entities, Planning Coordinators or Transmission Planners have the latitude to establish more stringent criteria.		
Ameren	No	At least 36 months would be needed for R1 compliance, should inclusion of explicit modeling of protection system equipment be required in dynamic model representations, and if all breakers would need to be explicitly modeled. More time is needed for entities to determine the appropriate dynamic load model required by R2.4.1. We recommend at least 36 months before this requirement becomes effective. 60 months effective date seems acceptable for planning activities, but may not adequate for all construction activities. Typical times to construct a transmission line in various areas of SERC can range between 7 to 10 years. Accordingly, we recommend the effective date for construction projects be changed to at least 84 months. 12 months appears reasonable for R7.
Response: The standard does not require detailed modeling of Relay Protection Systems or circuit breakers. It only requires that the impacts of those systems be reflected in the modeling of Contingencies and the evaluation of the resulting System performance. This is no different than the current standards. Requirement R2, part 2.4.1 does not require a detailed dynamic Load model, only an aggregate System model. The SDT believes that such a model can be developed within the 24 month period before this requirement becomes effective. The SDT considered the issues you raise on the sufficiency of a 60 month implementation window when TPL-001-1, draft 3 was prepared, and the SDT discussed its position in light of your comments and similar comments from others. The SDT believes that extending the 60 month implementation period would water down the standard by potentially delaying some corrective actions that could be implemented in 60 months or less. The third draft does in fact recognize the distinct possibility that major construction projects could take more than 60 months, in which case Requirement R2, part 2.7.5 would apply. The relevant portion of that requirement states: "If situations arise that are beyond the control of the Transmission Planner or Planning Coordinator that prevent the implementation of a Corrective Action Plan in the required timeframe, then the Transmission Planner or Planning Coordinator is permitted to utilize Non-Consequential Load Loss and curtailment of Firm Transmission Service to correct the situation that would normally not be permitted in Table 1, provided that the Transmission Planner or Planning Coordinator documents that they are taking prudent actions to resolve the situation. …." This provision could be applied when formulating the original Corrective Action Plan when it is known in advance that the permitting and construction process will require longer than 60 months or after the plan is formulated and unexpected delays arise outside the Transmission Planner's or Planning Coordinator's control.		
Manitoba Hydro	No	TPL-005-0 is a Regional and Interregional Self-Assessment Reliability Report. Such an assessment is beyond the capability of an individual PC or TP. While the new TPL-001-1 can and should include a requirement on the PC and TP to include in their assessments the interconnections with their adjacent systems, it does not make sense to

Organization	Yes or No	Question 11 Comment
		mandate an individual TP or PC to conduct an interregional assessment. Consequently, TPL-005-0 should be retained and mandated on the regions via the NERC delegation agreements with the regions.
Response: The standard does not require an individual Planning Coordinator or Transmission Planner to conduct an interregional assessment. It would require Planning Coordinators to provide the necessary inputs and work with the Regional Entity to provide a regional assessment that would continue to satisfy NERC's needs. The filing of a Planning Assessment by the Regional Entity is no longer required by a standard because it is covered adequately in NERC's Rules of Procedure.		
Entergy Services, Inc	No	P1 events needs to be correctly classified as "raising the bar": P1 events should be included in the bulleted list of areas where the "bar was raised". The paragraph beginning at the bottom of page 2 of the Implementation Plan clearly states that the bar was raised "because loss of Non-Consequential Load or interruption of firm transfers is no longer allowed". Since P1 events in the existing standard allow this, the revised P1 events should be categorized as a raising of the bar. " Effective date needs to be extended: Additionally, in the areas where the bar has been raised, the effective date needs to be extended to at least 7 years. Siting (environment assessment and permitting, right-of-way acquition, regulatory approvals) alone for many of the facilities likely needed can take 3 years or more in some areas. Likely delays due to litigation and affected stakeholder intervention must be considered. In addition, while the SDT has collected some cursory estimates of the costs which may be passed on to end-use customers, no discussion of the intended or expected increase in reliability has been published. Other considerations that will have an impact on the effective date are construction outages on the bulk transmission system and competition of resources (human and material). " Effect on reliability is not adequately quantified: Since one of the SDTs objectives is to ensure that "requirements set at an appropriate level to ensure reliability,"what reliability metrics are expected to be impacted? By how much? What will the billions of dollars spent on transmission procure in terms of reliability to ratepayers? To what degree would the proposed standard decrease the probability of a blackout? If a blackout were to occur, would the proposed standard tend to decrease or increase the size and magnitude of the event?? More time is needed for entities to determine the appropriate dynamic load model required by R2.4.1. We recommend at least 36 months before this requirement becomes effective. Since breaker duty is a new "raising the bar" issue - should there also be a 5 or more year implementation plan for this as well? If a Transmission Planner has a Corrective Action Plan identified within the accepted time limitations but the facilities identified in the CAP cannot be implemented in time, would the TP be found non-compliant on the TPL-001-1?? If contingencies in one utility's system results in issues within another utility, who is responsible for studying the contingencies and who would be responsible for documenting the CAP?
Response: The SDT disagrees that P1 represents a raising of the bar. While the exiting standard was somewhat unclear about dropping firm Non-Consequential Load for P1 type events, there is little evidence to support that as a widespread practice. Therefore, the revised standard is simply a clarification of the intent of the earlier standards. The SDT considered the issues you raise on the sufficiency of a 60 month implementation window when TPL-001-1, draft 3 was prepared, and the SDT discussed its position in light of your comments and similar comments from others. The SDT believes that extending the 60 month implementation period would water down the		

Organization	Yes or No	Question 11 Comment
standard by potentially delaying some corrective actions that could be implemented in 60 months or less. The third draft does in fact recognize the distinct possibility that major construction projects could take more than 60 months, in which case Requirement R2, part 2.7.5 would apply. The relevant portion of that requirement states: "If situations arise that are beyond the control of the Transmission Planner or Planning Coordinator that prevent the implementation of a Corrective Action Plan in the required timeframe, then the Transmission Planner or Planning Coordinator is permitted to utilize Non-Consequential Load Loss and curtailment of Firm Transmission Service to correct the situation that would normally not be permitted in Table 1, provided that the Transmission Planner or Planning Coordinator documents that they are taking prudent actions to resolve the situation. …." This provision could be applied when formulating the original Corrective Action Plan when it is known in advance that the permitting and construction process will require longer than 60 months or after the plan is formulated and unexpected delays arise outside the Transmission Planner's or Planning Coordinator's control. With respect to any additional capital requirements driven by the new standard, the SDT can not speculate regarding the magnitude of such requirements. However, the SDT strongly believes that the revised standard is necessary to ensure an adequate level of reliability for North America's Bulk Electric Systems. Requirement R2.4.1 does not require a detailed dynamic Load model, only an aggregate System model. The SDT believes that such a model can be developed within the 24 month period before this requirement becomes effective. The SDT does not view the breaker duty requirements as a raising of the bar. While these may be new requirements in NERC Standards, the SDT believes that most entities already follow these practices because they are safety related. If a Transmission Planner has prepared an acceptable Corrective Action Plan within the required time limits, but the implementation of the plan cannot be completed in time for reasons that are beyond the control of the Transmission Planner, " then the Transmission Planner or Planning Coordinator is permitted to utilize Non-Consequential Load Loss and curtailment of Firm Transmission Service to correct the situation that would normally not be permitted in Table 1, provided that the Transmission Planner or Planning Coordinator documents that they are taking prudent actions to resolve the situation. …." In such a case, it is the intent of the SDT that the Transmission Planner would be compliant. The SDT has modified the language in Requirement R3, part 3.4.1, Requirement R4, part 4.4.1, and Requirement R8 with part 8.1 to clarify the handling of "cross border" Contingencies and performance violations. **3.4.1** The Planning Coordinator and Transmission Planner shall coordinate with adjacent Planning Coordinators and Transmission Planners to ensure that Contingencies on adjacent Systems which may impact their Systems are included in the Contingency list. **4.4.1** The Planning Coordinator and Transmission Planner shall coordinate with adjacent Planning Coordinators and Transmission Planners to ensure that Contingencies on adjacent Systems which may impact their Systems are included in the Contingency list. **R8** Each Planning Coordinator and Transmission Planner shall distribute its Planning Assessment results to adjacent Planning Coordinators and Transmission Planners and to any functional entity that indicates a reliability related need for the Planning Assessment results. **8.1** If a recipient of the Planning Assessment results provides documented comments on the results, the respective Planning Coordinator or Transmission Planner shall provide a documented response to that recipient within 90 calendar days of receipt of those comments.		
PJM	No	Removal of these standards will not affect NERC and the Regional Entity's obligations to perform assessments. Will the PC/TP be obligated under NERC Rules of Procedure to provide Assessments to NERC and the Regions upon request?
Response: The standard does not require an individual Planning Coordinator or Transmission Planner to conduct an interregional assessment. The filing of an		

Organization	Yes or No	Question 11 Comment
assessment by the Regional Entity is no longer required by a standard because it is covered adequately in NERC's Rules of Procedure.		
ITC Holdings	Yes	Comments: We generally concur. However, it would appear that there is no incentive to submit a mitigation plan for less than 60 months for the new requirements that raise the bar (those listed as bullet points). If "circumstances are within your control" to mitigate in less than 60 months, why not require it?
Response: While the SDT understands the basis for your suggestion, it would be cumbersome and possibly confusing to change the requirements to apply differently in different circumstances. The SDT believes that peer reviews of the Corrective Action Plan and compliance audits would incent completion of corrective actions as soon as practical. No change made.		
Northern Indiana Public Service Company	No	In A5, text appearing under "Effective Date" is not clear regarding application of the phrase, "(above 300 kV)", for the first and fourth dot points.
Response: For the first dot, the parenthetical "above 300 kV" applies only to P2-2 events. For the fourth dot, the parenthetical applies to all events P4-1 through P4-5		
LADWP	No	Cannot agree to something when this is not final.
Idaho Power	No	I would like to review this after completion of the standard.
Response: The SDT was simply asking whether you agree with the Implementation Plan as written.		
Orlando Utilities Commission	Yes	Overall the plan is excellent! Allowing for a 60 month phase in of the more restrictive performance requirements and an exception for those who need longer to meet them is an equitable and reliable practice. Having R1 and R7 go into effect first though raises the question of what TPL standard is in effect during that time frame? I recommend having the entire standard go into effect at the same time and avoid that issue. There is limited benefit to R1 and R7 going into effect early. The implementation should also be more specific on what "going into effect" means. Assessments are not a one day event but are a year long effort that culminates in a final "report" that is the assessment. Most NERC standards affect ongoing activities, and the day they go into effect the utilities functions are expected to be compliant, this is not however so clear when the "function" is the culmination of a year long effort. Perhaps a statement below the paragraph regarding the 60 month carve out to the effect of: Once this standard becomes effective all future assessments shall be compliant with this standard. Assessments completed prior to the effective date shall be judged by their compliance with TPL standards in effect at the time.
Response: The SDT chose a phased approach for establishing effective dates for individual requirements to reflect the broad range of implementation time frames associated with different requirements. Rather than use a least common denominator, which would have lead to a new standard that would not be implemented for 60 months, those requirements that needed less time were assigned earlier effective dates. The SDT recognizes that assessments take a period of time to complete. The date on which the assessment was initiated would determine whether the current TPL standards or the revised TPL-001-1 would govern compliance requirements.		
American Transmission Company	No	We offer the following comments.The proposed standard implies that the 24 and 60 month periods run in parallel rather than sequentially. As currently proposed, the effective date for performing analyses and developing subsequent Corrective Action Plans is 24 months. If the identification of new needs and action plans take 24 months, then only 36 months would be left to implement the new action plans. It may not be feasible to install some BES facilities, especially above 300 kV in less than 3 years. Some EHV projects can take 5 to 10 years to

Organization	Yes or No	Question 11 Comment
		implement depending on the size, complexity, and controversial nature of the project. We suggest that the effective date be stated in a more "implementation dependent" rather than a "fixed timeframe" manner. Consider wording such as "tripping of Non-Consequential Load or curtailment of Firm Transmission Service (in accordance with Requirement R2.6.4) is allowed until Corrective Action Plans that are based on TPL-001-1 analyses can be implemented".
Response: The SDT considered the issues you raise on the sufficiency of a 60 month implementation window when TPL-001-1, draft 3 was prepared, and the SDT discussed its position in light of your comments and similar comments from others. The SDT believes that extending the 60 month implementation period would water down the standard by potentially delaying some corrective actions that could be implemented in 60 months or less. This third draft does in fact recognize the distinct possibility that major construction projects could take more than 60 months, in which case Requirement R2, part 2.7.5 would apply. The relevant portion of that requirement states: "If situations arise that are beyond the control of the Transmission Planner or Planning Coordinator that prevent the implementation of a Corrective Action Plan in the required timeframe, then the Transmission Planner or Planning Coordinator is permitted to utilize Non-Consequential Load Loss and curtailment of Firm Transmission Service to correct the situation that would normally not be permitted in Table 1, provided that the Transmission Planner or Planning Coordinator documents that they are taking prudent actions to resolve the situation. …." This provision could be applied when formulating the original Corrective Action Plan when it is known in advance that the permitting and construction process will require longer than 60 months or after the plan is formulated and unexpected delays arise outside the Transmission Planner's or Planning Coordinator's control. The SDT considered your suggestion to change the language of Requirement R2, part 2.7.5 to make it more "implementation dependent" rather than using a "fixed timeframe" but we do not believe such a change is appropriate because it would make auditing of this requirement difficult.		
Duke Energy	No	Requirements R2 through R6 are proposed to become effective the first day of the first calendar quarter 24 months after applicable regulatory approval, and we agree with that. However, the standard also provides that for 60 months following the first day of the first calendar quarter following applicable regulatory approval, Corrective Action Plans applying to performance elements P2-1, P2-2 (above 300 kV), P2-3 (above 300 kV), P3-1 through P3-5, P4-1 through P4-5 (above 300 kV), and P5 (above 300 kV) are allowed to include tripping of Non-Consequential Load or curtailment of Firm Transmission Service (in accordance with Requirement R2.6.4) that would not otherwise be permitted by the requirements of TPL-001-1. Since the first 24 months following regulatory approval will be spent developing and validating new studies and methodologies needed to meet TPL-001-1, that would only leave 36 months to implement corrective actions. We propose that the 60 month clock start with the effective dates of Requirements R2 through R6, to allow sufficient time to implement corrective actions that are determined within the 24 month period, which could include system modifications that require long lead times. Also, the implementation plan contains the following wording regarding retirement of the existing TPL standards: TPL-001-0, TPL-002-0a, TPL-003-0a, and TPL-004-0 are being retired as they are replaced in their entirety by TPL-001-1. TPL-005-0 and TPL-006-0 are being retired because their requirements are adequately covered by the revised TPL-001-1 and NERC's Rules of Procedure, Section 800. TPL-001-1 should not be used as a vehicle for fulfilling any of the TPL-005-0 and 006-0 requirements because of the difference in focus and entities involved. In reality, the new TPL-001-1 does not appear to have incorporated any of the requirements of TPL-005-0 and 006-0. TPL-001-1 appropriately focuses on how PC's and TP's should perform studies and document assessments of their transmission facilities impact on BES reliability. TPL-005-0 and 006-0 focus on assessments of regional and inter-regional BES reliability, including other non-transmission issues as well. The NERC Rules of Procedure and existing FERC Order 890 efforts appear to be sufficient to cover the requirements of TPL-005-0 and 006-0.

Organization	Yes or No	Question 11 Comment
		Therefore, retirement of TPL-005-0 and 006-0 is still appropriate.
Response: The SDT considered the issues you raise on the sufficiency of a 60 month implementation window when TPL-001-1, draft 3 was prepared, and the SDT discussed its position in light of your comments and similar comments from others. The SDT believes that extending the 60 month implementation period would water down the standard by potentially delaying some corrective actions that could be implemented in 60 months or less. This third draft does in fact recognize the distinct possibility that major construction projects could take more than 60 months, in which case Requirement R2, part 2.7.5 would apply. The relevant portion of that requirement states: "If situations arise that are beyond the control of the Transmission Planner or Planning Coordinator that prevent the implementation of a Corrective Action Plan in the required timeframe, then the Transmission Planner or Planning Coordinator is permitted to utilize Non-Consequential Load Loss and curtailment of Firm Transmission Service to correct the situation that would normally not be permitted in Table 1, provided that the Transmission Planner or Planning Coordinator documents that they are taking prudent actions to resolve the situation. …." This provision could be applied when formulating the original Corrective Action Plan when it is known in advance that the permitting and construction process will require longer than 60 months or after the plan is formulated and unexpected delays arise outside the Transmission Planner's or Planning Coordinator's control. The SDT believes that this revised standard together with NERC's Rules of Procedure will completely address the regional assessment requirements covered in the existing standards.		
Tucson Electric Power Company		We agree that TPL-005 and TPL-006 appear to have been adequately covered in the draft TPL-001-1 as currently written. However, we will need to review this assessment after TPL-001-1 is finalized. In addition, there is no place to state our concerns for Section D. so we added it here. We question the "not applicable" entry under Section D 1.1.2. What does it mean when the reset period is not applicable? Does it mean there is no reset period, so all non-compliance in all prior years will be counted as prior violations when considering non-compliance in future years? We believe that 60 months is not sufficient to implement the Corrective Action Plan for the "raise the bar" requirements. Siting transmission lines can take longer than this window. We strongly recommend increasing the window to 120 months which is a more realistic estimate of the time required to bring an EHV transmission project from conception to construction.
Response: The sanctions guidelines developed by the compliance program as part of the ERO start-up process eliminated the use of the concept of the "compliance reset period." The reason the heading "Compliance Monitoring and Reset Time" is still in the standards template is because some Standards Committee members felt that a change to the standard template couldn't be made without having the change go through full due process. Therefore, NERC staff agreed to always put, "Not applicable" under this heading until the next version of the manual is issued. This term will be eliminated in Version 8. The SDT considered the issues you raise on the sufficiency of a 60 month implementation window when TPL-001-1, draft 3 was prepared, and the SDT reconsidered its position in light of your comments and similar comments from others. The SDT believes that extending the 60 month implementation period would water down the standard by potentially delaying some corrective actions that could be implemented in 60 months or less. This third draft does in fact recognize the distinct possibility that major construction projects could take more than 60 months, in which case Requirement R2, part 2.7.5 would apply. The relevant portion of that requirement states: "If situations arise that are beyond the control of the Transmission Planner or Planning Coordinator that prevent the implementation of a Corrective Action Plan in the required timeframe, then the Transmission Planner or Planning Coordinator is permitted to utilize Non-Consequential Load Loss and curtailment of Firm Transmission Service to correct the situation that would normally not be permitted in Table 1, provided that the Transmission Planner or Planning Coordinator documents that they are taking prudent actions to resolve the situation. …." This provision could be applied when formulating the original Corrective Action Plan when it is known in advance that the permitting and construction process will require longer than 60 months or after the plan is formulated and unexpected delays arise outside the Transmission Planner's or Planning Coordinator's control.		

Organization	Yes or No	Question 11 Comment
Kansas City Power & Light	No	Regional areas may be made up of multiple Planning Coordinators. It is important to maintain an assessment of an entire Regional Reliability Organizations area. TPL-005 and TPL-006 should not be replaced with this proposed TPL-001.
Response: The SDT recognizes that many of the Regional Entities have multiple Planning Coordinators within their boundaries. The filing of an assessment by the Regional Entity is no longer required by a standard because it is covered adequately in NERC's Rules of Procedure.		
ReliabilityFirst Corporation	Yes	
Transmission Planning	Yes	
Pepco Holdings, Inc. - Affiliates	Yes	
Exelon Transmission Planning	Yes	
United Illuminating	Yes	
Western Area Power Administration	Yes	
Gainesville Regional Utilities	Yes, Yes	,
ISO New England, Inc.	Yes	
National Grid	Yes	
Brazos Electric Cooperative	Yes	no comment at this time
American Electric Power	Yes	
Minnesota Power	Yes	
Central Maine Power Company	Yes	
Response: Thank you for your response.		

Implementation Plan for TPL-001-1

Prerequisite Approvals

There are no other Reliability Standards or Standard Authorization Requests (SARs), in progress or approved, that must be implemented before this standard can be implemented.

TPL-001-1 — Transmission System Planning Performance Requirements

In revising the TPL standards, the SDT is assuming that planners will receive valid data from the MOD standards link described in TPL-001-1, Requirement R1. Furthermore, there is a tacit assumption that future revisions of the MOD standards will include steps to validate MOD based data.

Revision to Sections of Approved Standards and Definitions

There are multiple new definitions in the proposed standard.

Bus-tie Breaker: A circuit breaker that is positioned to connect two individual substation bus configurations.

Consequential Load Loss: All Load that is no longer served by the Transmission System as a result of Transmission Facilities being removed from service by a Protection System operation designed to isolate the fault .

Long-Term Transmission Planning Horizon: Transmission planning period that covers years six through ten or beyond when required to accommodate any known longer lead time projects that may take longer than ten years to complete.

Near-Term Transmission Planning Horizon: Transmission planning period that covers Years One through five.

Non-Consequential Load Loss: Non-Interruptible Load loss other than Consequential Load Loss and the response of voltage sensitive Load including Load that is disconnected from the System by end-user equipment.

Planning Assessment: Documented evaluation of future Transmission System performance and Corrective Action Plans to remedy identified deficiencies.

Year One: The first year that a Planning Coordinator or a Transmission Planner is responsible for assessing. This is further defined as the planning window that begins 12-18 months from the end of the current calendar year.

Compliance with Standards

Standard	Functions That Must Comply With the Associated Requirements	
	Transmission Planner	Planning Coordinator
TPL-001-1 — Transmission System Planning Performance Requirements	X	X

Effective Dates

The effective date is the date entities are expected to meet the performance identified in this standard.

Except as indicated below**,** all Requirements and associated sub-requirements shall become effective 24 months after the first day of the first calendar quarter following applicable regulatory approval. In those jurisdictions where no regulatory approval is required, all requirements go into effect 24 months after Board of Trustees adoption.

TPL-001-0, TPL-002-0a, TPL-003-0a, and TPL-004-0 are being retired as they are replaced in their entirety by TPL-001-1. TPL-005-0 and TPL-006-0 are being retired because their requirements are adequately covered by the revised TPL-001-1 and NERC's Rules of Procedure, Section 800. However, during this 24-month period, all aspects of TPL-001-0 through TPL-006-0 shall remain in effect for compliance monitoring. This 24 month period is to allow entities to develop, perform and/or validate new and/or modified studies, methodologies, assessments, procedures, etc. necessary to implement and meet the TPL-001-1 requirements. The specified effective dates are expected to allow sufficient time for proper assessment of the available options necessary to create a viable Corrective Action Plan that is compliant with the new Standard.

> R1. This Requirement is related to maintaining System models and the data needed to do so. This requirement shall become effective 12 months after the first day of the first calendar quarter following applicable regulatory approval. In those jurisdictions where no regulatory approval is required, this requirement goes into effect 12 months after Board of Trustees adoption.
>
> R8. This Requirement identifies an obligation to determine individual and joint responsibilities for performing studies needed to do the Planning Assessment. This requirement shall become effective 12 months after the first day of the first calendar quarter following applicable regulatory approval. In those jurisdictions where no regulatory approval is required, this requirement goes into effect 12 months after Board of Trustees adoption.

TPL-001-1 'raises the bar' in several areas where performance requirements have been changed in the new Standard versus those in existing TPL-001-0, TPL-002-0a, TPL-003-0a and TPL-004-0 because loss of Non-Consequential Load or interruption of firm transfers is no longer allowed for certain events, whereas the existing Standards were interpreted by many to allow such actions. As shown in Table 1 of TPL-001-1, the performance requirements associated with the following events represent "raising the bar":

- P1-2 (for controlled interruption of electric supply to local network customers connected to or supplied by the Faulted element)
- P1-3 (for controlled interruption of electric supply to local network customers connected to or supplied by the Faulted element)
- P2-1
- P2-2 (above 300 kV)
- P2-3 (above 300 kV)
- P3-1 through P3-5
- P4-1 through P4-5 (above 300 kV)
- P5 (above 300 kV)

This "raising the bar" is beyond the control of the Transmission Planner and Planning Coordinator and may have significant budget, siting, permitting, and construction impacts on many Transmission Owners. In question 14 of the second posting of the revised standard, the SDT requested input from industry on the amount of time required to implement the Corrective Action Plans needed to address the 'raise the bar' issues. The SDT has studied the responses and determined that a timeframe coincident with the end of the Near-Term Transmission Planning Horizon would be the appropriate amount of time to implement the changes. Therefore, for 60 months after the first day of the first calendar quarter following applicable regulatory approval, Corrective Action Plans applying to performance elements P1-2 and P1-3 (for controlled interruption of electric supply to local network customers connected to or supplied by the Faulted element), P2-1, P2-2 (above 300 kV), P2-3 (above 300 kV), P3-1 through P3-5, P4-1 through P4-5 (above 300 kV), and P5 (above 300 kV) are allowed to include tripping of Non-Consequential Load or curtailment of Firm Transmission Service (in accordance with Requirement R2.7.5) that would not otherwise be permitted by the requirements of TPL-001-1.

Any entity which cannot fully implement their Corrective Action Plan to eliminate the need to trip Non-Consequential Load or curtail Firm Transmission Service for these performance elements by that date shall self report themselves as being unable to meet the performance requirements of the Reliability Standard. The entities will submit a mitigation plan to their Regional Entity outlining the steps they will take to become compliant and the date they anticipate becoming compliant. The Regional Entity and NERC will review the mitigation plan and the Regional Entity/NERC will either approve it or remand it back for changes (this could include dates, steps, etc.). If the mitigation plan is approved by the Regional Entity and NERC and the entity completes the mitigation plan by the date contained within the mitigation plan, it is the intent of the SDT that no penalties will be assessed. Those entities who do not meet the date outlined in the mitigation plan will begin settlement proceedings at that date.

Implementation Plan for TPL-001-1

Prerequisite Approvals

There are no other Reliability Standards or Standard Authorization Requests (SARs), in progress or approved, that must be implemented before this standard can be implemented.

TPL-001-1 – Transmission System Planning Performance Requirements

In revising the TPL standards, the SDT is assuming that planners will receive valid data from the MOD standards link described in TPL-001-1, Requirement R1. Furthermore, there is a tacit assumption that future revisions of the MOD standards will include steps to validate MOD based data.

Revision to Sections of Approved Standards and Definitions

There are multiple new definitions in the proposed standard.

Bus-tie Breaker: A circuit breaker that is positioned to connect two individual substation bus configurations.

Consequential Load Loss: ~~All Load that is no longer served by any Transmission Facilities as a result of the Facilities being removed from service by a planned Protection System operation to isolate fault conditions.~~ All Load that is no longer served by ~~any~~the Transmission ~~Facilities~~ System as a result of ~~the~~ Transmission Facilities being removed from service by a ~~planned~~ Protection System operation designed to isolate the fault ~~conditions~~.

~~**Extreme Events:** Events which are more severe and have a lower probability of occurrence than Planning Events.~~

~~**Load Reduction:** Load that is still connected to the System, but is reduced due to lower voltage conditions following a Planning or Extreme Event.~~

Long-Term Transmission Planning Horizon: Transmission planning period that covers years six through ten or beyond when required to accommodate any known longer lead time projects that may take longer than ten years to complete.

Near-Term Transmission Planning Horizon: Transmission planning period that covers Years One through five.

Non-Consequential Load Loss: Non-Interruptible Load loss other than Consequential Load Loss~~, Supplemental Load Loss, and Load Reduction~~ and the response of voltage sensitive Load including Load that is disconnected from the System by end-user equipment..

Planning Assessment: Documented evaluation of future Transmission System performance and Corrective Action Plans to remedy identified deficiencies.

~~**Planning Events:** Events that require Transmission system performance requirements to be met.~~

~~**Supplemental Load Loss:** Load that is disconnected from the network by end-user equipment responding to post-Contingency System conditions.~~

Year One: The first year that a Planning Coordinator or a Transmission Planner is responsible for assessing. This is further defined as the planning window that begins 12-18 months from the end of the current calendar year.

Compliance with Standards

Standard	Functions That Must Comply With the Associated Requirements	
TPL-001-1 – Transmission System Planning Performance Requirements	Transmission Planner	Planning Coordinator
	X	X

Effective Dates

The effective date is the date entities are expected to meet the performance identified in this standard.

Except as indicated below**,** all Requirements and associated sub-requirements shall become effective 24 months after the first day of the first calendar quarter following applicable regulatory approval. In those jurisdictions where no regulatory approval is required, all requirements go into effect 24 months after Board of Trustees adoption.

TPL-001-0, TPL-002-0a, TPL-003-0a, and TPL-004-0 are being retired as they are replaced in their entirety by TPL-001-1. TPL-005-0 and TPL-006-0 are being retired because their requirements are adequately covered by the revised TPL-001-1 and NERC's Rules of Procedure, Section 800. However, during this 24-month period, all aspects of TPL-001-0 through TPL-006-0 shall remain in effect for compliance monitoring. This 24 month period is to allow entities to develop, perform and/or validate new and/or modified studies, methodologies, assessments, procedures, etc. necessary to implement and meet the TPL-001-1 requirements. The specified effective dates are expected to allow sufficient time for proper assessment of the available options necessary to create a viable Corrective Action Plan that is compliant with the new Standard.

R1. This Requirement is related to maintaining System models and the data needed to do so. This requirement shall become effective 12 months after the first day of the first calendar quarter following applicable regulatory approval. In those jurisdictions where no regulatory approval is required, this requirement goes into effect 12 months after Board of Trustees adoption.

R~~7~~8. This Requirement identifies an obligation to determine individual and joint responsibilities for performing studies needed to do the Planning Assessment. This requirement shall become effective 12 months after the first day of the first calendar quarter following applicable regulatory approval. In those jurisdictions where no regulatory

approval is required, this requirement goes into effect 12 months after Board of Trustees adoption.

TPL-001-1 'raises the bar' in several areas where performance requirements have been changed in the new Standard versus those in existing TPL-001-0, TPL-002-0a, TPL-003-0a and TPL-004-0 because loss of Non-Consequential Load or interruption of firm transfers is no longer allowed for certain events, whereas the existing Standards were interpreted by many to allow such actions. As shown in Table 1 of TPL-001-1, the performance requirements associated with the following events represent "raising the bar":

- P1-2 (for controlled interruption of electric supply to local network customers connected to or supplied by the Faulted element)
- P1-3 (for controlled interruption of electric supply to local network customers connected to or supplied by the Faulted element)
- P2-1
- P2-2 (above 300 kV)
- P2-3 (above 300 kV)
- P3-1 through P3-5
- P4-1 through P4-5 (above 300 kV)
- P5 (above 300 kV)

This "raising the bar" is beyond the control of the Transmission Planner and Planning Coordinator and may have significant budget, siting, permitting, and construction impacts on many Transmission Owners. In question 14 of the second posting of the revised standard, the SDT requested input from industry on the amount of time required to implement the Corrective Action Plans needed to address the 'raise the bar' issues. The SDT has studied the responses and determined that a timeframe coincident with the end of the Near-Term Transmission Planning Horizon would be the appropriate amount of time to implement the changes. Therefore, for 60 months after the first day of the first calendar quarter following applicable regulatory approval, Corrective Action Plans applying to performance elements P1-2 and P1-3 (for controlled interruption of electric supply to local network customers connected to or supplied by the Faulted element), P2-1, P2-2 (above 300 kV), P2-3 (above 300 kV), P3-1 through P3-5, P4-1 through P4-5 (above 300 kV), and P5 (above 300 kV) are allowed to include tripping of Non-Consequential Load or curtailment of Firm Transmission Service (in accordance with Requirement R2.7.~~4~~5) that would not otherwise be permitted by the requirements of TPL-001-1.

Any entity which cannot fully implement their Corrective Action Plan to eliminate the need to trip Non-Consequential Load or curtail Firm Transmission Service for these performance elements by that date shall self report themselves as being unable to meet the performance requirements of the Reliability Standard. The entities will submit a mitigation plan to their Regional Entity outlining the steps they will take to become compliant and the date they anticipate becoming compliant. The Regional Entity and NERC will review the mitigation plan and the Regional Entity/NERC will either approve it or remand it back for changes (this could include dates, steps, etc.). If the mitigation plan is approved by the Regional Entity and NERC and the entity completes the mitigation plan by the date contained within the mitigation plan, it is the intent of the SDT that no penalties will be assessed. Those entities who do not meet the date outlined in the mitigation plan will begin settlement proceedings at that date.

NERC
NORTH AMERICAN ELECTRIC RELIABILITY CORPORATION

Unofficial Comment Form for Fourth Draft of TPL-001-1 (Project 2006-02)

Please **DO NOT** use this form to submit comments. Please use the electronic form located at the link below to submit comments on the fourth draft of the TPL-001-1 standard for Assess Transmission Future Needs (Project 2006-02) by **October 16, 2009.**

If you have questions please contact Ed Dobrowolski at ed.dobrowolski@nerc.net or by telephone at 609-947-3673.

http://www.nerc.com/filez/standards/Assess-Transmission-Future-Needs.html

Background Information

TPL-001-1 Transmission System Planning Performance Requirements

Comments on the third draft of the TPL-001-1 Transmission System Planning Performance Requirements standard were received from the industry through July 9, 2009. The Drafting Team sought and received feedback to 11 questions, and the team appreciates the tremendous industry participation that generated over 400 pages of comments from over 85 organizations. Below is a brief overview of the 4th draft of the standard highlighting areas where the SDT made changes based on stakeholder feedback from the third posting. The team's objectives remain unchanged - to create a single Transmission planning standard: 1) with clear, concise requirements set at an appropriate level to ensure reliability, and 2) that fully addresses all issues raised by FERC Orders 693 and 890, and industry inputs, including the SAR scope document.

Fourth Draft Overview:

1. At first glance the fourth draft of the standard may appear to have been substantially changed; however, this is not the case as the SDT has maintained its vision throughout the process and the changes shown are primarily clarifying in nature.
2. The flow and organization of the standard remain similar to the 3rd draft. Requirement labeling has been modified in accordance with NERC's revised standards process to eliminate sub-requirements and re-label them as "parts."
3. However, some changes are noteworthy:
    a. Several definitions were revised or deleted based on industry feedback.
    b. Requirement R1 has been revised to clarify the SDT's intent with regard to modeling issues.
    c. Requirement R2, part 2.1.3 has been added to clarify that studies must be performed with known outages included in the base case.
    d. Requirement R2, part 2.1.5 has been revised to clarify the spare equipment strategy and limit the analysis to P0, P1 and P2 categories
    e. How sensitivity studies fit into the overall assessment has been clarified in Requirement R2, part 2.4.3.
    f. Requirement R2, part 2.5 has been added to require stability analysis for proposed generation additions or changes in the Long Term Transmission Planning Horizon.

g. Requirement R2, part 2.6.2 has been revised to decrease unnecessary documentation requirements and the examples of 'material generation changes' have been deleted.

h. Requirement R2, part 2.7.2 has been added to clarify necessary actions with regard to sensitivity studies.

i. Requirement R2, parts 2.7.3 and 2.7.4 have been deleted so inclusion of project initiation dates and in service dates are no longer required.

j. Requirement R2, part 2.10 has been deleted so the maximum permissible Non-Consequential Load Loss does not have to be reported.

k. Requirement R3, parts 3.3.2, 3.3.3 and 3.3.4 have been revised to clarify the requirements for contingency analysis.

l. Requirement R3, part 3.4.1 and Requirement R4, part 4.4.1 have been added to ensure that planners are coordinating with adjacent planners.

m. Requirement R3, part 3.6 has been added to require documentation of generation runback or tripping used to meet performance requirements.

n. Requirements R4, parts 4.1.1 through 4.1.3 have been added as requirements text to replace previous footnote 1 in Table 1.

o. Requirement R4, part 4.3.1 was revised to include the impacts of high speed reclosing.

p. Requirement R4, part 4.3.3 was added to ensure that the impacts of transient swings are simulated.

q. Requirement R5 was added so that appropriate criteria are set.

r. Requirement R8, part 8.1 was added to clarify actions for responding to comments on results of Planning Assessments.

s. All VSLs have been modified to match the new requirement language.

t. Miscellaneous clarifications to existing requirements and Table 1 footnote language.

4. The Implementation Plan has been revised to provide more time for entities to become compliant with P1-2 and P1-3 events with regard to local Load issues.

To facilitate the ability of industry respondents to comment in an orderly fashion and to ease the coordination burden on the SDT in responding to comments, the SDT is asking an all encompassing question for each requirement. This question solicits comments on the requirement text, VRF, Time Horizon, measure associated with the requirement, data retention associated with the requirement, and the VSL associated with the requirement. Please note the numbering below refers to the clean copy of the fourth posting.

1. Requirement R1 – Please provide any specific comments on the requirement text, VRF, Time Horizon, measure associated with the requirement, data retention associated with the requirement, and/or the VSL associated with the requirement.

   Comments:

2. Requirement R2 – Please provide any specific comments on the requirement text, VRF, Time Horizon, measure associated with the requirement, data retention associated with the requirement, and/or the VSL associated with the requirement.

   Comments:

3. Requirement R3 – Please provide any specific comments on the requirement text, VRF, Time Horizon, measure associated with the requirement, data retention associated with the requirement, and/or the VSL associated with the requirement.

   Comments:

4. Requirement R4 – Please provide any specific comments on the requirement text, VRF, Time Horizon, measure associated with the requirement, data retention associated with the requirement, and/or the VSL associated with the requirement.

   Comments:

5. Requirement R5 – Please provide any specific comments on the requirement text, VRF, Time Horizon, measure associated with the requirement, data retention associated with the requirement, and/or the VSL associated with the requirement. (Note – This is a new requirement.)

   Comments:

6. Requirement R6 – Please provide any specific comments on the requirement text, VRF, Time Horizon, measure associated with the requirement, data retention associated with the requirement, and/or the VSL associated with the requirement.

   Comments:

7. Requirement R7 – Please provide any specific comments on the requirement text, VRF, Time Horizon, measure associated with the requirement, data retention associated with the requirement, and/or the VSL associated with the requirement.

Comments:

8. Requirement R8 – Please provide any specific comments on the requirement text, VRF, Time Horizon, measure associated with the requirement, data retention associated with the requirement, and/or the VSL associated with the requirement.

   Comments:

The SDT is posing several other questions for industry consideration to supplement the specific requirement questions above.

9. The SDT has revised the definitions in response to industry comments to the third posting. Do you agree with these definition changes? If not, please clearly indicate which definition you disagree with and provide specific comments.

   ☐ Yes

   ☐ No

   Comments:

10. Do you agree with the changes in the performance elements and notes in Table 1? If not, please provide specific comments by note number, note alpha character, or performance category.

    ☐ Yes

    ☐ No

    Comments:

11. The SDT has provided a revised Implementation Plan as part of this posting. Do you agree with the revisions to the Plan? If not, please provide specific comments.

    ☐ Yes

    ☐ No

    Comments:

12. Do you believe that this standard is ready to go to ballot? (if 'No' is checked here, the SDT will consider that comments raised on the other questions drove that decision.)

    ☐ Yes

    ☐ No

    Comments:

Standard Development Roadmap

This section is maintained by the drafting team during the development of the standard and will be removed when the standard becomes effective.

Development Steps Completed:

1. Version 1 of SAR posted for comment from April 2, 2002 through May 3, 2002.
2. Version 2 of SAR posted for comment from May 5, 2004 through June 5, 2004.
3. Version 3 of SAR posted on November 18, 2005.
4. SAR approved on April 30, 2006.
5. Version 1 of Supplemental SAR posted for comment from February 15, 2007 through March 16, 2007.
6. Version 2 of Supplemental SAR posted on April 9, 2007.
7. Version 1 of revised standard(s) posted for comment on September 17, 2007.
8. Version 2 of the revised standards posted for comment on August 15, 2008.
9. Version 3 of the revised standards posted for comment on May 26, 2009.

Proposed Action Plan and Description of Current Draft:

The SDT has established a schedule of meetings and conference calls that allows for steady progress through the standards development process in anticipation of completing their assignment in 1Q10. The current draft is the second iteration of the revision of existing standards TPL-001 through TPL-006 and includes one revised standard, TPL-001-1, replacing TPL-001-0, TPL-002-0, TPL-003-0 and TPL-004-0. TPL-005 & -006 issues are addressed in this fourth draft.

Future Development Plan:

Anticipated Actions	Anticipated Date
1. Respond to comments from second posting of standard(s) and submit revision 4 of the standard(s).	4Q08
2. Respond to comments from third posting and submit revision 5 of the standard.	3Q09
3. Submit standard(s) for balloting.	4Q09
4. Submit standard(s) to BOT.	4Q09
5. Submit to regulatory authorities for approval.	1Q10

Definitions of Terms Used in Standard

This section includes all newly defined or revised terms used in the proposed standard. Terms already defined in the Reliability Standards Glossary of Terms are not repeated here. New or revised definitions listed below become approved when the proposed standard is approved. When the standard becomes effective, these defined terms will be removed from the individual standard and added to the Glossary.

Bus-tie Breaker: A circuit breaker that is positioned to connect two individual substation bus configurations.

Consequential Load Loss: All Load that is no longer served by the Transmission System as a result of Transmission Facilities being removed from service by a Protection System operation designed to isolate the fault .

Long-Term Transmission Planning Horizon: Transmission planning period that covers years six through ten or beyond when required to accommodate any known longer lead time projects that may take longer than ten years to complete.

Near-Term Transmission Planning Horizon: Transmission planning period that covers Years One through five.

Non-Consequential Load Loss: Non-Interruptible Load loss other than Consequential Load Loss and the response of voltage sensitive Load including Load that is disconnected from the System by end-user equipment.

Planning Assessment: Documented evaluation of future Transmission System performance and Corrective Action Plans to remedy identified deficiencies.

Year One: The first year that a Planning Coordinator or a Transmission Planner is responsible for assessing. This is further defined as the planning window that begins 12-18 months from the end of the current calendar year.

A. Introduction

1. **Title:** **Transmission System Planning Performance Requirements**

2. **Number:** **TPL-001-1**

3. **Purpose:** Establish Transmission System planning performance requirements within the planning horizon to develop a Bulk Electric System (BES) that will operate reliably over a broad spectrum of System conditions and following a wide range of probable Contingencies.

4. **Applicability:**

   4.1. Functional Entity

   4.1.1. Planning Coordinator.

   4.1.2. Transmission Planner.

5. **Effective Date:** Requirements R1 and R8 shall become effective on the first day of the first calendar quarter, 12 months after applicable regulatory approval. In those jurisdictions where no regulatory approval is required, Requirements R1 and R8 become effective on the first day of the first calendar quarter, 12 months after Board of Trustees adoption.

   Except as indicated below, Requirements R2 through R7 shall become effective on the first day of the first calendar quarter, 24 months after applicable regulatory approval. In those jurisdictions where no regulatory approval is required, all requirements, except as noted below, go into effect on the first day of the first calendar quarter, 24 months after Board of Trustees adoption.

   - For 60 calendar months after the first day of the first calendar quarter following applicable regulatory approval, Corrective Action Plans applying to the following categories of Contingencies and events identified in TPL-001-1, Table 1 are allowed to include tripping of Non-Consequential Load or curtailment of Firm Transmission Service (in accordance with Requirement R2, part 2.7.5.) that would not otherwise be permitted by the requirements of TPL-001-1:
     - P1-2 (for controlled interruption of electric supply to local network customers connected to or supplied by the Faulted element)
     - P1-3 (for controlled interruption of electric supply to local network customers connected to or supplied by the Faulted element)
     - P2-1, P2-2 (above 300 kV)
     - P2-3 (above 300 kV)
     - P3-1 through P3-5
     - P4-1 through P4-5 (above 300 kV)
     - P5 (above 300 kV)

   Any entity that cannot fully implement its Corrective Action Plan to eliminate the need to trip Non-Consequential Load or curtail Firm Transmission Service for the above listed performance elements within 60 calendar months of the compliance date for Requirements R2 through R4 shall self report itself as being unable to meet

performance requirements of this Reliability Standard. Any such entity shall submit a mitigation plan to its Regional Entity outlining the steps it will take to become compliant and the date it anticipates becoming compliant. The Regional Entity and NERC shall review the mitigation plan and the Regional Entity/NERC will either approve it or remand it for changes (this could include dates, steps, etc.). If the mitigation plan is approved by the Regional Entity and NERC and the entity completes the mitigation plan by the date contained within the mitigation plan, the intent of the SDT is that no penalties will be assessed. Those entities that do not meet the date outlined in an approved mitigation plan will begin settlement proceedings at that date.

B. Requirements

R1. Each Transmission Planner and Planning Coordinator shall maintain System models within its respective area for performing the studies needed to complete its Planning Assessment. The models shall use the latest data consistent with that provided in accordance with the MOD-010 and MOD-012 standards, supplemented by other sources as needed, including items represented in the Corrective Action Plan, and shall represent projected System conditions. *[Violation Risk Factor: Medium] [Time Horizon: Long-term Planning]*

1.1. System models shall represent:

1.1.1. Existing Facilities

1.1.2. Known outage(s) of generation or Transmission Facility(ies) with a duration of at least six months.

1.1.3. New planned Facilities and changes to existing Facilities

1.1.4. Real and reactive Load forecasts

1.1.5. Known commitments for Firm Transmission Service and Interchange

1.1.6. Resources required to supply Load

R2. Each Transmission Planner and Planning Coordinator shall prepare an annual Planning Assessment of its portion of the BES. This Planning Assessment shall use current or past studies, document assumptions, summarize documented results, and cover steady state analyses, short circuit analyses, and Stability analyses. *[Violation Risk Factor: Medium] [Time Horizon: Long-term Planning]*

2.1. The Near-Term Transmission Planning Horizon portion of the steady state analysis shall be assessed annually and be supported by the following annual current studies, supplemented with qualified past studies as indicated in Requirement R2, part 2.6:

2.1.1. System peak Load for either Year One or year two, and for year five.

2.1.2. System Off-Peak Load for one of the five years.

2.1.3. P1 events in Table 1 for known outages, as modeled in Requirement R1, part 1.1.2 under those System peak or Off-Peak conditions when known outages are scheduled.

2.1.4. For each of the studies described in Requirement R2, parts 2.1.1 and 2.1.2, sensitivity case(s) shall be utilized to demonstrate the impact of

changes to the basic assumptions used in the model for the list of items shown below. To accomplish this, the sensitivity analysis in the Planning Assessment must vary one or more of the following conditions not already included in the studies by a sufficient amount to stress the System within a range of credible conditions that demonstrate a measurable change in performance.

- Real and reactive forecasted Load.
- Expected transfers.
- Expected in service dates of new or modified Transmission Facilities.
- Reactive resource capability.
- Generation additions, retirements, or other dispatch scenarios.
- Controllable Loads and Demand Side Management.
- Duration or timing of planned Transmission outages.

2.1.5. When an entity's spare equipment strategy could result in the unavailability of major Transmission equipment that has a lead time of one year or more (such as a transformer), an analysis of the impact of this possible unavailability on System performance shall be assessed. The Planning Assessment shall reflect the P0, P1, and P2 categories identified in Table 1 during the conditions that the System is expected to experience due to the possible unavailability of the long lead time equipment.

2.2. The Long-Term Transmission Planning Horizon portion of the steady state analysis shall be assessed annually and be supported by the following annual current study, supplemented with qualified past studies as indicated in Requirement R2, part 2.6:

2.2.1. A current study assessing expected System peak Load conditions for one of the years in the Long-Term Transmission Planning Horizon and the rationale for why that year was selected.

2.3. The short circuit analysis portion of the Planning Assessment shall be conducted annually addressing the Near-Term Transmission Planning Horizon and can be supported by current or past studies as indicated in Requirement R2, part 2.6. The analysis shall be used to determine whether circuit breakers have interrupting capability for Faults that they will be expected to interrupt using the System short circuit model with any planned generation and Transmission Facilities in service which could impact the study area.

2.4. The Near-Term Transmission Planning Horizon portion of the Stability analysis shall be assessed annually and be supported by current or past studies as indicated in Requirement R2, part2.6. The following studies are required:

2.4.1. System peak Load for one of the five years. System peak Load levels shall include a Load model which represents the dynamic behavior of Loads that could impact the study area, considering the behavior of

induction motor Loads. An aggregate System Load model which represents the overall dynamic behavior of the Load is acceptable.

2.4.2. System Off-Peak Load for one of the five years.

2.4.3. For each of the studies described in Requirement R2, parts 2.4.1 and 2.4.2, sensitivity case(s) shall be utilized to demonstrate the impact of changes to the basic assumptions used in the model for the list of items shown below. To accomplish this, the sensitivity analysis in the Planning Assessment must vary one or more of the following conditions not already included in the studies by a sufficient amount to stress the System within a range of credible conditions that demonstrate a measurable change in performance.

- Load level, Load forecast, or dynamic model assumptions.
- Expected transfers.
- Expected in service dates of new or modified Facilities.
- Reactive resource capability.
- Generation additions, retirements, or other dispatch scenarios.

2.5. The Long-Term Transmission Planning Horizon portion of the Stability analysis shall be assessed to address the impact of proposed generation additions or changes in that timeframe and be supported by current or past studies.

2.6. Past studies may be used to support the Planning Assessment if they meet the following requirements:

2.6.1. For steady state, short circuit, or Stability analysis: the study shall be five calendar years old or less, unless a technical rationale can be provided to demonstrate that the results of an older study are still valid.

2.6.2. For steady state, short circuit, or Stability analysis: the study shall not include any material changes unless a technical rationale can be provided to demonstrate that System changes do not impact the performance results in the study area.

2.7. For planning events shown in Table 1, when the analysis indicates an inability of the System to meet the performance requirements in Table 1, the Planning Assessment shall include Corrective Action Plan(s) addressing how the performance requirements will be met. Revisions to the Corrective Action Plan(s) are allowed in subsequent Planning Assessments but the planned System shall continue to meet the performance requirements in Table 1. Corrective Action Plan(s) do not need to be developed solely to meet the performance requirements for a single sensitivity run in accordance with Requirements R2, parts 2.1.4 and 2.4.3. The Corrective Action Plan(s) shall:

2.7.1. List System deficiencies and the associated actions needed to achieve required System performance. Such actions may include:

- Installation, modification, retirement, or removal of Transmission and generation Facilities and any associated equipment.

- Installation, modification, or removal of Protection Systems or Special Protection Systems
- Installation or modification of automatic generation tripping as a response to a single or multiple Contingency to mitigate Stability performance violations.
- Installation or modification of manual and automatic generation runback/tripping as a response to a single or multiple Contingency to mitigate Steady State performance violations.
- Use of Operating Procedures specifying how long they will be needed as part of the Corrective Action Plan.
- Use of rate applications, DSM, new technologies, or other initiatives.

2.7.2. Include actions to resolve performance deficiencies identified in multiple sensitivity studies or provide a rationale for why actions were not necessary.

2.7.3. If situations arise that are beyond the control of the Transmission Planner or Planning Coordinator that prevent the implementation of a Corrective Action Plan in the required timeframe, then the Transmission Planner or Planning Coordinator is permitted to utilize Non-Consequential Load Loss and curtailment of Firm Transmission Service to correct the situation that would normally not be permitted in Table 1, provided that the Transmission Planner or Planning Coordinator documents that they are taking actions to resolve the situation. The Transmission Planner or Planning Coordinator shall document the situation causing the problem, alternatives evaluated, and the use of Non-Consequential Load Loss or curtailment of Firm Transmission Service.

2.7.4. Be reviewed in subsequent annual Planning Assessments for continued validity and implementation status of identified System Facilities and Operating Procedures.

2.8. For short circuit analysis, if the short circuit current interrupting duty on circuit breakers determined in Requirement R2, part 2.3 exceeds their Equipment Rating, the Planning Assessment shall include a Corrective Action Plan to address the Equipment Rating violations. The Corrective Action Plan shall:

2.8.1. List System deficiencies and the associated actions needed to achieve required System performance.

2.8.2. Be reviewed in subsequent annual Planning Assessments for continued validity and implementation status.

2.9. The Planning Assessment shall provide the expected largest Consequential Load Loss (megawatt Demand) identified by the analysis of P1 and P2 events in Table 1.

R3. For the steady state portion of the Planning Assessment, each Transmission Planner and Planning Coordinator shall perform studies for the Near-Term and Long-Term Transmission Planning Horizons in Requirement R2, parts 2.1, and 2.2. The studies

shall be based on computer simulation models using data provided in Requirement R1. *[Violation Risk Factor: Medium] [Time Horizon: Long-term Planning]*

3.1. Studies shall be performed for planning events to determine whether the BES meets the performance requirements in Table 1 based on the Contingency list created in Requirement R3, part 3.4.

3.2. Studies shall be performed to assess the impact of the extreme events which are identified by the list created in Requirement R3, part 3.5.

3.3. Contingency analyses shall be performed and:

3.3.1. Simulate the removal of all elements that the Protection System and other automatic controls are expected to disconnect for each Contingency without operator intervention.

3.3.2. Trip generators where simulations show generator bus voltages are less than known or assumed minimum generator steady state or ride through voltage limitations. Include in the assessment any assumptions made.

3.3.3. Ensure relay loadability limits are respected.

3.3.4. Simulate the expected automatic operation of existing and planned devices designed to provide Steady State control of electrical system quantities when such devices impact the study area. These devices may include equipment such as phase-shifting transformers, load tap changing transformers, and switched capacitors and inductors.

3.4. Those planning events in Table 1, that are expected to produce more severe System impacts on its portion of the BES, shall be identified and a list of those Contingencies to be evaluated for System performance in Requirement R3, part 3.1 created. The rationale for those Contingencies selected for evaluation shall be available as supporting information.

3.4.1. The Planning Coordinator and Transmission Planner shall coordinate with adjacent Planning Coordinators and Transmission Planners to ensure that Contingencies on adjacent Systems which may impact their Systems are included in the Contingency list.

3.5. Those extreme events in Table 1 that are expected to produce more severe System impacts shall be identified and a list of those events to be evaluated for System performance in Requirement R3, part 3.2 created. The rationale for those Contingencies selected for evaluation shall be available as supporting information. If the analysis concludes there are cascading outages caused by the occurrence of extreme events, an evaluation of possible actions designed to reduce the likelihood or mitigate the consequences and adverse impacts of the event(s) shall be conducted.

3.6. When manual or automatic generation runback or tripping is used to meet steady state performance requirements for planning events P1 through P7 in Table 1, the amount of generation lost shall be documented in the Planning Assessment with a description of why the generation was runback or tripped for each event.

R4. For the Stability portion of the Planning Assessment, as described in Requirement R2, parts 2.4 and 2.5, each Transmission Planner and Planning Coordinator shall perform the Contingency analyses listed in Table 1. The studies shall be based on computer simulation models using data provided in Requirement R1. *[Violation Risk Factor: Medium] [Time Horizon: Long-term Planning]*

4.1. Studies shall be performed for planning events to determine whether the BES meets the performance requirements in Table 1 based on the Contingency list created in Requirement R4, part 4.4.

4.1.1. For planning event P1: No generating unit shall pull out of synchronism. A generator being disconnected from the System by fault clearing action or by a Special Protection System is not considered pulling out of synchronism.

4.1.2. For planning events P2 through P7: A generator that pulls out of synchronism shall be tripped in the simulations and the resulting apparent impedance swings shall not result in the tripping of any Transmission System elements other than the generating unit and its directly connected Facilities.

4.1.3. For planning events P1 through P7: Power oscillations shall exhibit acceptable damping as established by the Planning Coordinator and Transmission Planner.

4.2. Studies shall be performed to assess the impact of the extreme events which are identified by the list created in Requirement R4, part 4.5.

4.3. Contingency analyses shall be performed and:

4.3.1. Simulate the removal of all elements that the Protection System and other automatic controls are expected to disconnect for each Contingency without operator intervention while also considering the impact of successful or unsuccessful high speed reclosing.

4.3.2. Trip generators where simulations show generator bus voltages or high side of the GSU voltages are less than known or assumed generator low voltage ride through capability. Include in the assessment any assumptions made.

4.3.3. Simulate the impact of transient swings on Protection System operation for Transmission lines and transformers.

4.3.4. Simulate the expected automatic operation of existing and planned devices designed to provide dynamic control of electrical system quantities when such devices impact the study area. These devices may include equipment such as generation exciter control and power system stabilizers, static var compensators, power flow controllers, and DC Transmission controllers.

4.4. Those planning events in Table 1that are expected to produce more severe System impacts on its portion of the BES, shall be identified, and a list of those Contingencies to be evaluated for System performance in Requirement R4, part 4.1 created. The rationale for those Contingencies selected for evaluation shall be available as supporting information.

4.4.1. Each Planning Coordinator and Transmission Planner shall coordinate with adjacent Planning Coordinators and Transmission Planners to ensure that Contingencies on adjacent Systems which may impact their Systems are included in the Contingency list.

4.5. Those extreme events in Table 1 that are expected to produce more severe System impacts shall be identified and a list of those events to be evaluated for System performance in Requirement R4, part 4.2 created. The rationale for those Contingencies selected for evaluation shall be available as supporting information. If the analysis concludes there are cascading outages caused by the occurrence of extreme events, an evaluation of possible actions designed to reduce the likelihood or mitigate the consequences of the event(s) shall be conducted.

R5. Each Transmission Planner and Planning Coordinator shall have criteria for acceptable System steady state voltage limits, post-Contingency voltage deviations, and the transient voltage response for its System. For transient voltage response, the criteria shall at a minimum, specify a voltage level and a maximum length of time that transient voltages may remain outside that level. *[Violation Risk Factor: Medium] [Time Horizon: Long-term Planning]*

R6. Each Transmission Planner and Planning Coordinator shall define and document, within their Planning Assessment, any criteria or methodology used in the analysis to identify System instability for conditions such as cascading outages, voltage instability, or uncontrolled islanding. *[Violation Risk Factor: Low] [Time Horizon: Long-term Planning]*

R7. Each Planning Coordinator, in conjunction with each of its Transmission Planners, shall determine and identify each entity's individual and joint responsibilities for performing the required studies for the Planning Assessment. *[Violation Risk Factor: Low] [Time Horizon: Long-term Planning]*

R8. Each Planning Coordinator and Transmission Planner shall distribute its Planning Assessment results to adjacent Planning Coordinators and Transmission Planners and to any functional entity that indicates a reliability related need for the Planning Assessment results. *[Violation Risk Factor: Low] [Time Horizon: Long-term Planning]*

8.1. If a recipient of the Planning Assessment results provides documented comments on the results, the respective Planning Coordinator or Transmission Planner shall provide a documented response to that recipient within 90 calendar days of receipt of those comments.

C. Measures

M1. Each Transmission Planner and Planning Coordinator shall provide evidence, in electronic or hard copy format, that it is maintaining System models, using the latest data consistent with MOD-010 and MOD-012, including items represented in the Corrective Action Plan, representing projected System conditions, and that the models represent the required information in accordance with Requirement R1.

M2. Each Transmission Planner and Planning Coordinator shall provide evidence, such as electronic or hard copies of its annual Planning Assessment, that it has prepared an

annual Planning Assessment of its portion of the BES in accordance with Requirement R2.

M3. Each Transmission Planner and Planning Coordinator shall provide evidence, such as electronic or hard copies of the studies utilized in preparing the Planning Assessment, in accordance with Requirement R3.

M4. Each Transmission Planner and Planning Coordinator shall provide evidence, such as electronic or hard copies of the studies utilized in preparing the Planning Assessment in accordance with Requirement R4.

M5. Each Transmission Planner and Planning Coordinator shall provide evidence such as electronic or hard copies of the documentation specifying the criteria for acceptable System steady state voltage limits, post-Contingency voltage deviations, and the transient voltage response for its System in accordance with Requirement R5.

M6. Each Transmission Planner and Planning Coordinator shall provide evidence, such as electronic or hard copies of the studies utilized in preparing the Planning Assessment in accordance with Requirement R6.

M7. Each Planning Coordinator, in conjunction with each of its Transmission Planners, shall provide evidence, such as a dated document, that identifies that agreement has been reached on individual and joint responsibilities for performing the required studies for the Planning Assessment in accordance with Requirement R7.

M8. Each Planning Coordinator and Transmission Planner shall provide evidence, such as email notices, documentation of updated web pages, postal receipts showing recipient, date, and contents, or a demonstration of a public posting, that it has distributed its Planning Assessment results to adjacent Planning Coordinators and Transmission Planners and any functional entity who has indicated a reliability need and has provided a documented response to comments received on Planning Assessment results within 90 calendar days of receipt of those comments in accordance with Requirement R8.

D. Compliance

1. Compliance Monitoring Process

1.1 Compliance Enforcement Authority

Regional Entity.

1.2 Compliance Monitoring Period and Reset Timeframe

Not applicable.

1.3 Compliance Monitoring and Enforcement Processes:

Compliance Audits

Self-Certifications

Spot Checking

Compliance Violation Investigations

Self-Reporting

Complaints

1.4 Data Retention

The Transmission Planner and Planning Coordinator shall each retain data or evidence to show compliance as identified unless directed by its Compliance Enforcement Authority to retain specific evidence for a longer period of time as part of an investigation:

- The models utilized in the current Planning Assessment and one previous Planning Assessment in accordance with Requirement R1 and Measure M1.
- All Planning Assessments performed since the last compliance audit in accordance with Requirement R2 and Measure M2.
- All studies performed in support of its Planning Assessments since the last compliance audit in accordance with Requirement R3 and Measure M3.
- All studies performed in support of its Planning Assessments since the last compliance audit in accordance with Requirement R4 and Measure M4.
- All documentation specifying the criteria since the last compliance audit in accordance with Requirement R5 and Measure M5.
- All studies performed in support of its Planning Assessments since the last compliance audit in accordance with Requirement R6 and Measure M6.
- The current, in force agreement on identified responsibilities, as well as all such agreements in force since the last compliance audit, in accordance with Requirement R7 and Measure M7.

The Planning Coordinator shall retain data or evidence to show compliance as identified unless directed by its Compliance Enforcement Authority to retain specific evidence for a longer period of time as part of an investigation:

- Three calendar years of the notifications employed in accordance with Requirement R8 and Measure M8.

1.5 Additional Compliance Information

None.

2 Violation Severity Levels

	Lower VSL	Moderate VSL	High VSL	Severe VSL
R1	The responsible entity's System model failed to represent one of the Requirement R1, parts 1.1.1 through 1.1.6.	The responsible entity's System model failed to represent two of the Requirement R1, parts 1.1.1 through 1.1.6. OR The System model did not use the latest data consistent with the data provided in accordance with the MOD-010 and MOD-012 standards and other sources, including items represented in the Corrective Action Plan.	The responsible entity's System model failed to represent three of the Requirement R1, parts 1.1.1 through 1.1.6.	The responsible entity's System model failed to represent four or more of the Requirement R1, parts 1.1.1 through 1.1.6. OR The System model did not represent projected System conditions as described in Requirement R1.
R2	The responsible entity failed to comply with Requirement R2, part 2.9 or Requirement R2, part 2.6.	The responsible entity failed to comply with Requirement R2, part 2.3 or part 2.8.	The responsible entity failed to comply with one of the following parts of Requirement R2: part 2.1, part 2.2, part 2.4, part 2.5, or part 2.7.	The responsible entity failed to comply with two or more of the following parts of Requirement R2: part 2.1, part 2.2, part 2.4, or part 2.7.
R3	The responsible entity did not identify planning events as described in Requirement R3, part 3.4 or extreme events as described in Requirement R3, part 3.5.	The responsible entity did not perform studies as specified in Requirement R3, part 3.1 to determine that the BES meets the performance requirements for one of the categories (P2 through P7) in Table 1. OR The responsible entity did not perform studies as specified in Requirement R3, part 3.2 to assess	The responsible entity did not perform studies as specified in Requirement R3, part 3.1 to determine that the BES meets the performance requirements for two of the categories (P2 through P7) in Table 1. OR The responsible entity did not perform Contingency analysis as described in Requirement R3, part	The responsible entity did not perform studies as specified in Requirement R3, part 3.1 to determine that the BES meets the performance requirements for three or more of the categories (P2 through P7) in Table 1. OR The responsible entity did not perform studies to determine that the BES meets the performance requirements for the P0 or P1 categories in Table 1.

	Lower VSL	Moderate VSL	High VSL	Severe VSL
		the impact of extreme events. OR The responsible entity did not base its studies on computer simulation models using data provided in Requirement R1.	3.3.	
R4	The responsible entity did not identify planning events as described in Requirement R4, part 4.4 or extreme events as described in Requirement R4, part 4.5.	The responsible entity did not perform studies as specified in Requirement R4, part 4.1 to determine that the BES meets the performance requirements for one of the categories (P1 through P7) in Table 1. OR The responsible entity did not perform studies as specified in Requirement R4, part 4.2 to assess the impact of extreme events. OR The responsible entity did not base its studies on computer simulation models using data provided in Requirement R1.	The responsible entity did not perform studies as specified in Requirement R4, part 4.1 to determine that the BES meets the performance requirements for two of the categories (P1 through P7) in Table 1. OR The responsible entity did not perform Contingency analysis as described in Requirement R4, part 4.3.	The responsible entity did not perform studies as specified in Requirement R4, part 4.1 to determine that the BES meets the performance requirements for three or more of the categories (P1 through P7) in Table 1.
R5	N/A	N/A	N/A	The responsible entity does not have criteria for acceptable System steady state voltage limits, post-Contingency voltage deviations, or the transient voltage response for its System.

	Lower VSL	Moderate VSL	High VSL	Severe VSL
R6	N/A	N/A	N/A	The responsible entity failed to define and document the criteria or methodology for System instability used within its analysis as described in Requirement R6.
R7	N/A	N/A	N/A	The Planning Coordinator, in conjunction with each of its Transmission Planners, failed to determine and identify individual or joint responsibilities for performing required studies.
R8	The responsible entity failed to distribute the results of its Planning Assessment to any one of its adjacent Transmission Planners and Planning Coordinators, respectively in accordance with Requirement R8.	N/A	The responsible entity failed to distribute the results of its Planning Assessment to its adjacent Transmission Planners and Planning Coordinators, respectively in accordance with Requirement R8.	The responsible entity failed to provide a documented response to a recipient of the Planning Assessment results who provided documented comments on the results within 90 calendar days of receipt of those comments in accordance with Requirement R8.

E. Regional Variances

None.

Table 1 – Steady State & Stability Performance Planning Events

Steady State & Stability:

a. BES Transmission voltage instability, cascading outages, and uncontrolled islanding shall not occur.

b. Consequential Load Loss and consequential generation loss are acceptable as a consequence of any planning or extreme event excluding P0.

c. Simulate the removal of all elements that Protection Systems and other controls are expected to automatically disconnect for each event.

d. Simulate Normal Clearing unless otherwise specified.

e. For all planning events, planned System adjustments such as Transmission configuration changes and redispatch of generation are allowed if such adjustments are executable within the time duration applicable to the Facility Ratings.

Steady State Only:

f. Facility Ratings shall not be exceeded.

g. System steady state voltage limits and post-Contingency voltage deviations shall be within acceptable limits as established by the Planning Coordinator and the Transmission Planner.

h. Planning event P0 is applicable to steady state only.

i. The response of voltage sensitive Load including Load that is disconnected from the System by end-user equipment associated with an event shall not be used to meet steady state performance requirements.

Stability Only:

j. The System shall remain stable. [1]

k. Transient voltage response shall be within acceptable limits established by the Planning Coordinator and the Transmission Planner.

Category	Initial System Condition	Event [1]	Fault Type [2]	BES Level [3]	Interruption of Firm Transmission Service Allowed [4]	Non-Consequential Load Loss Allowed
P0 No Contingency	Normal System	None	N/A	EHV, HV	No	No
P1 Single Contingency	Normal System	Loss of one of the following: 1. Generator 2. Transmission Circuit 3. Transformer [5] 4. Shunt Device [6]	3Ø	EHV, HV	No	No
		5. Single Pole of a DC line	SLG			
P2 Single Contingency	Normal System	1. Opening of Breaker(s) w/o fault [7]	N/A	EHV, HV	No	No
		2. Bus Section Fault	SLG	EHV	No	No
				HV	Yes	Yes
		3. Internal Breaker Fault [8] (Non Bus-tie)	SLG	EHV	No	No
			SLG	HV	Yes	Yes
		4. Internal Breaker Fault (Bus-tie) [8]	SLG	EHV, HV	Yes	Yes

Table 1 – Steady State & Stability Performance
Planning Events

Category	Initial System Condition	Event [1]	Fault Type [2]	BES Level [3]	Interruption of Firm Transmission Service Allowed [4]	Non-Consequential Load Loss Allowed
P3 Multiple Contingency	Loss of generator unit followed by System adjustments[19]	Loss of one of the following: 1. Generator 2. Transmission Circuit 3. Transformer [5] 4. Shunt Device [6]	3Ø	EHV, HV	No[19]	No
		5. Single pole of a DC line	SLG			
P4 Multiple Contingency *(Fault plus stuck breaker [101])*	Normal System	Loss of multiple elements caused by a stuck breaker [11](non-Bus-tie) attempting to clear a Fault on one of the following: 1. Generator 2. Transmission Circuit 3. Transformer [5] 4. Shunt Device [6] 5. Bus Section	SLG	EHV	No[10]	No
				HV	Yes	Yes
		6. Loss of multiple elements caused by a stuck breaker[10] (Bus-tie) attempting to clear a Fault on the associated bus		EHV, HV	Yes	Yes
P5 Multiple Contingency *(Fault plus Protection System failure)*	Normal System	Loss of multiple elements caused by the failure of a single Protection System while clearing a fault on one of the following: 1. Generator 2. Transmission Circuit 3. Transformer [5] 4. Shunt Device [6] 5. Bus Section	SLG	EHV	No[19]	No
				HV	Yes	Yes
P6 Multiple Contingency *(Two overlapping singles)*	Loss of one of the following followed by System adj.[9]: 1. Transmission Circuit 2. Transformer [5] 3. Shunt Device[6] 4. Single pole of a DC line	Loss of one of the following: 1. Transmission Circuit 2. Transformer [5] 3. Shunt Device [6]	3Ø	EHV, HV	Yes	Yes
		4. Single pole of a DC line	SLG	EHV, HV	Yes	Yes

P7 Multiple Contingency *(Common Structure)*	Normal System	The loss of: 1. Any two adjacent (vertically or horizontally) circuits on common structure [11] 2. Loss of a bipolar DC line	SLG	EHV, HV	Yes	Yes

<table>
<tr><th colspan="2">Table 1 – Steady State & Stability Performance
Extreme Events</th></tr>
<tr><td colspan="2">Steady State & Stability
For all extreme events evaluated:
a. Simulate the removal of all elements that Protection Systems and automatic controls are expected to disconnect for each Contingency.
b. Simulate Normal Clearing unless otherwise specified.</td></tr>
<tr><td>Steady State
1. Loss of a single generator, Transmission Circuit, single pole of a DC Line, shunt device, or transformer forced out of service followed by another single generator, Transmission Circuit, single pole of a different DC Line, shunt device, or transformer forced out of service prior to System adjustments.
2. Local area events affecting the Transmission System such as:
a. Loss of a tower line with three or more circuits.[12]
b. Loss of all Transmission lines on a common Right-of-Way[12].
c. Loss of a switching station or substation (loss of one voltage level plus transformers).
d. Loss of all generating units at a station.
e. Loss of a large Load or major Load center.
3. Wide area events affecting the Transmission System based on System topology such as:
a. Loss of two generating plants resulting from conditions such as:
i. Loss of a large gas pipeline into a region or multiple regions that have significant gas-fired generation.
ii. Loss of the use of a large body of water as the cooling source for generation.
iii. Wildfires.
iv. Severe weather, e.g., hurricanes, tornadoes, etc.
v. A successful cyber attack.
vi. Shutdown of a nuclear power plant(s) and related facilities for a day or more for common causes such as problems with similarly designed plants.
b. Other events based upon operating experience that may result in wide area disturbances.</td>
<td>Stability
1. With an initial condition of a single generator, Transmission circuit, single pole of a DC line, shunt device, or transformer forced out of service, apply a 3Ø fault on another single generator, Transmission circuit, single pole of a different DC line, shunt device, or transformer prior to System adjustments.
2. Local or wide area events affecting the Transmission System such as:
a. 3Ø fault on generator with stuck breaker[11] or a Protection System failure resulting in Delayed Fault Clearing.
b. 3Ø fault on Transmission circuit with stuck breaker[11] or a Protection System failure resulting in Delayed Fault Clearing.
c. 3Ø fault on transformer with stuck breaker[11]or a Protection System failure resulting in Delayed Fault Clearing.
d. 3Ø fault on bus section with stuck breaker[11] or a Protection System failure resulting in Delayed Fault Clearing.
e. 3Ø internal breaker fault[11].
f. Other events based upon operating experience, such as consideration of initiating events that experience suggests may result in wide area disturbances</td></tr>
</table>

Table 1 – Steady State & Stability Performance Footnotes (Planning Events and Extreme Events)
1. If the event analyzed involves BES elements at multiple System voltage levels, the lowest System voltage level for stated performance criteria applies regarding allowances for interruptions of Firm Transmission Service and loss of Non-Consequential Load.
2. Unless specified otherwise, simulate Normal Clearing faults. Single line to ground (SLG) or three phase (3Ø) are the fault types, that must be evaluated in Stability simulations for the event described. A 3Ø or a double line to ground fault study indicating the criteria are being met is sufficient evidence that a SLG condition would also meet the criteria.
3. Bulk Electric System (BES) level references include extra-high voltage (EHV) Facilities defined as greater than 300kV and high voltage (HV) Facilities defined as the 300kV and lower voltage Systems as defined by the Regional Entity. The designation of EHV and HV is used to distinguish between stated performance criteria allowances for interruptions of Firm Transmission Service and Non-Consequential Load.
4. Curtailment of Conditional Firm Transmission Service is allowed when the conditions and/or events being studied formed the basis for the Conditional Firm Transmission Service.
5. For non-Generator Step Up transformer outage events, the reference voltage applies to the low-side winding (excluding tertiary windings). For generator and generator Step Up transformer outage events, the reference voltage applies to the BES connected voltage (high-side of the Generator Step Up transformer). Requirements which are applicable to transformers also apply to variable frequency transformers and phase shifting transformers.
6. Requirements which are applicable to shunt devices also apply to FACTS devices that are connected to ground.
7. Opening breaker(s) without a fault on one end of a normally networked Transmission circuit such that the line is now open at that end and possibly serving Load radial from a single source point.
8. An internal breaker fault means a breaker failing internally, thus creating a System fault which must be cleared by protection on both sides of the breaker.
9. Curtailment of Firm Transmission Service, when coupled with the appropriate re-dispatch of resources obligated to re-dispatch, is allowed both as a System adjustment (as identified in the column entitled 'Initial System Conditions') and a corrective action, where it can be demonstrated that Facilities remain within applicable Facility Ratings and those adjustments do not result in the shedding of any firm Demand. Where limited options for re-dispatch exist, sensitivities associated with the availability of those resources should be considered. Where Facilities external to the Transmission Planner's planning region are relied upon, Facility Ratings in those regions should also be respected.
10. A stuck breaker means that for a gang-operated breaker, all three phases of the breaker have remained closed. For an independent pole operated (IPO) or an independent pole tripping (IPT) breaker, only one pole is assumed to remain closed. A stuck breaker results in Delayed Fault Clearing.
11. Excludes circuits that share a common structure or common Right-of-Way for 1 mile or less.

Version History

Version	Date	Action	Change Tracking
1	TBD	Revision of TPL-001-0 as per Project 2006-02; includes merging requirements of TPL-001-0, TPL-002-0, TPL-003-0, and TPL-004-0 into one, single, comprehensive, coordinated standard: TPL-001-1	Not employed due to scope of revision

Standard Development Roadmap

This section is maintained by the drafting team during the development of the standard and will be removed when the standard becomes effective.

Development Steps Completed:

1. Version 1 of SAR posted for comment from April 2, 2002 through May 3, 2002.
2. Version 2 of SAR posted for comment from May 5, 2004 through June 5, 2004.
3. Version 3 of SAR posted on November 18, 2005.
4. SAR approved on April 30, 2006.
5. Version 1 of Supplemental SAR posted for comment from February 15, 2007 through March 16, 2007.
6. Version 2 of Supplemental SAR posted on April 9, 2007.
7. Version 1 of revised standard(s) posted for comment on September 17, 2007.
8. Version 2 of the revised standards posted for comment on August 15, 2008.
9. Version 3 of the revised standards posted for comment on May 26, 2009.

Proposed Action Plan and Description of Current Draft:

The SDT has established a schedule of meetings and conference calls that allows for steady progress through the standards development process in anticipation of completing their assignment in 1Q10. The current draft is the second iteration of the revision of existing standards TPL-001 through TPL-006 and includes one revised standard, TPL-001-1, replacing TPL-001-0, TPL-002-0, TPL-003-0 and TPL-004-0. TPL-005 & -006 issues are addressed in this fourth draft.

Future Development Plan:

Anticipated Actions	Anticipated Date
1. Respond to comments from second posting of standard(s) and submit revision 4 of the standard(s).	4Q08
2. Respond to comments from third posting and submit revision 5 of the standard.	3Q09
3. Submit standard(s) for balloting.	4Q09
4. Submit standard(s) to BOT.	4Q09
5. Submit to regulatory authorities for approval.	1Q10

Deleted: 3

Deleted: TBD

Definitions of Terms Used in Standard

This section includes all newly defined or revised terms used in the proposed standard. Terms already defined in the Reliability Standards Glossary of Terms are not repeated here. New or revised definitions listed below become approved when the proposed standard is approved. When the standard becomes effective, these defined terms will be removed from the individual standard and added to the Glossary.

Bus-tie Breaker: A circuit breaker that is positioned to connect two individual substation bus configurations.

Consequential Load Loss: All Load that is no longer served by the Transmission System as a result of Transmission Facilities being removed from service by a Protection System operation designed to isolate the fault.

Long-Term Transmission Planning Horizon: Transmission planning period that covers years six through ten or beyond when required to accommodate any known longer lead time projects that may take longer than ten years to complete.

Near-Term Transmission Planning Horizon: Transmission planning period that covers Years One through five.

Non-Consequential Load Loss: Non-Interruptible Load loss other than Consequential Load Loss and the response of voltage sensitive Load including Load that is disconnected from the System by end-user equipment.

Planning Assessment: Documented evaluation of future Transmission System performance and Corrective Action Plans to remedy identified deficiencies.

Year One: The first year that a Planning Coordinator or a Transmission Planner is responsible for assessing. This is further defined as the planning window that begins 12-18 months from the end of the current calendar year.

Deleted:

Deleted: any

Deleted:

Deleted: Facilities

Deleted: the

Deleted: planned

Deleted: conditions

Deleted: Extreme Events: Events which are more severe and have a lower probability of occurrence than Planning Events.

Deleted: Load Reduction: Load that is still connected to the System, but is reduced due to lower voltage conditions following a Planning or Extreme Event.

Deleted: ,

Deleted: Supplemental Load Loss,

Deleted: Load Reduction

Deleted: Planning Events: Events that require Transmission system performance requirements to be met.

Deleted: Supplemental Load Loss: Load that is disconnected from the network by end-user equipment responding to post-Contingency System conditions.

Deleted: 3

Deleted: TBD

A. Introduction

1. **Title:** **Transmission System Planning Performance Requirements**

2. **Number:** **TPL-001-1**

3. **Purpose:** Establish Transmission System planning performance requirements within the planning horizon to develop a Bulk Electric System (BES) that will operate reliably over a broad spectrum of System conditions and following a wide range of probable Contingencies.

4. **Applicability:**

   4.1. Functional Entity

   4.1.1. Planning Coordinator.

   4.1.2. Transmission Planner.

5. **Effective Date:** Requirements R1 and R8 shall become effective on the first day of the first calendar quarter, 12 months after applicable regulatory approval. In those jurisdictions where no regulatory approval is required, Requirements R1 and R8 become effective on the first day of the first calendar quarter, 12 months after Board of Trustees adoption.

   Except as indicated below, Requirements R2 through R7 shall become effective on the first day of the first calendar quarter, 24 months after applicable regulatory approval. In those jurisdictions where no regulatory approval is required, all requirements, except as noted below, go into effect on the first day of the first calendar quarter, 24 months after Board of Trustees adoption.

   - For 60 calendar months after the first day of the first calendar quarter following applicable regulatory approval, Corrective Action Plans applying to the following categories of Contingencies and events identified in TPL-001-1, Table 1 are allowed to include tripping of Non-Consequential Load or curtailment of Firm Transmission Service (in accordance with Requirement R2, part 2.7.5.) that would not otherwise be permitted by the requirements of TPL-001-1:
     - P1-2 (for controlled interruption of electric supply to local network customers connected to or supplied by the Faulted element)
     - P1-3 (for controlled interruption of electric supply to local network customers connected to or supplied by the Faulted element)
     - P2-1, P2-2 (above 300 kV)
     - P2-3 (above 300 kV)
     - P3-1 through P3-5
     - P4-1 through P4-5 (above 300 kV)
     - P5 (above 300 kV)

   Any entity that cannot fully implement its Corrective Action Plan to eliminate the need to trip Non-Consequential Load or curtail Firm Transmission Service for the above listed performance elements within 60 calendar months of the compliance date for Requirements R2 through R4 shall self report itself as being unable to meet performance requirements of this Reliability Standard. Any such entity shall submit a mitigation plan to its Regional Entity outlining the steps it will take to become compliant and the date it anticipates becoming compliant. The Regional Entity and

Deleted: 7

Deleted: 7

Deleted: 6

Deleted: R2

Deleted: 6.4

Deleted: 3

Deleted: TBD

NERC shall review the mitigation plan and the Regional Entity/NERC will either approve it or remand it for changes (this could include dates, steps, etc.). If the mitigation plan is approved by the Regional Entity and NERC and the entity completes the mitigation plan by the date contained within the mitigation plan, the intent of the SDT is that no penalties will be assessed. Those entities that do not meet the date outlined in an approved mitigation plan will begin settlement proceedings at that date.

B. Requirements

R1. Each Transmission Planner and Planning Coordinator shall maintain System models within its respective area for performing the studies needed to complete its Planning Assessment. The models shall use the latest data consistent with that provided in accordance with the MOD-010 and MOD-012 standards, supplemented by other sources as needed, including items represented in the Corrective Action Plan, and shall represent projected System conditions. *[Violation Risk Factor: Medium] [Time Horizon: Long-term Planning]*

1.1. System models shall represent:

1.1.1. Existing Facilities

1.1.2. Known outage(s) of generation or Transmission Facility(ies) with a duration of at least six months.

1.1.3. New planned Facilities and changes to existing Facilities.

-
-
-
-
-
-
-

1.1.4. Real and reactive Load forecasts

1.1.5. Known commitments for Firm Transmission Service and Interchange

1.1.6. Resources required to supply Load

R2. Each Transmission Planner and Planning Coordinator shall prepare an annual Planning Assessment of its portion of the BES. This Planning Assessment shall use current or past studies, document assumptions, summarize documented results, and cover steady state analyses, short circuit analyses, and Stability analyses. *[Violation Risk Factor: Medium] [Time Horizon: Long-term Planning]*

2.1. The Near-Term Transmission Planning Horizon portion of the steady state analysis shall be assessed annually and be supported by the following annual current studies, supplemented with qualified past studies as indicated in Requirement R2, part2.6:

2.1.1. System peak Load for either Year One or year two, and for year five.

2.1.2. System Off-Peak Load for one of the five years.

Deleted: their
Deleted: the data
Deleted: and
Deleted: data
Deleted: simulate
Deleted: including requirements of regulatory authorities and other legal obligations
Deleted: M
Deleted: for the Planning Assessment
Deleted: Planned
Deleted: and
Deleted: , if specifically known
Deleted: for each year of the Near-Term and Long-Term Transmission Planning Horizon, such as:
Deleted: Transmission Lines
Deleted: Generators
Deleted: Circuit breakers
Deleted: Reactive Power devices
Deleted: Protection System equipment
Deleted: Control devices
Deleted: New technologies.
Deleted: Demand of
Deleted: <#>Interchange¶ Network r
Formatted: Bullets and Numbering
Deleted: shall
Deleted:
Deleted: R
Deleted: 3
Deleted: TBD

2.1.3. P1 events in Table 1 for known outages, as modeled in Requirement R1, part 1.1.2 under those System peak or Off-Peak conditions when known outages are scheduled.

2.1.4. For each of the studies described in Requirement R2, parts 2.1.1 and 2.1.2, sensitivity case(s) shall be utilized to demonstrate the impact of changes to the basic assumptions used in the model for the list of items shown below. To accomplish this, the sensitivity analysis in the Planning Assessment must vary one or more of the following conditions not already included in the studies by a sufficient amount to stress the System within a range of credible conditions that demonstrate a measurable change in performance.

- Real and reactive forecasted Load.
- Expected transfers.
- Expected in service dates of new or modified Transmission Facilities.
- Reactive resource capability.
- Generation additions, retirements, or other dispatch scenarios.
- Controllable Loads and Demand Side Management.
- Duration or timing of planned Transmission outages.

2.1.5. When an entity's spare equipment strategy could result in the unavailability of major Transmission equipment that has a lead time of one year or more (such as a transformer), an analysis of the impact of this possible unavailability on System performance shall be assessed. The Planning Assessment shall reflect the P0, P1, and P2 categories identified in Table 1 during the conditions that the System is expected to experience due to the possible unavailability of the long lead time equipment.

2.2. The Long-Term Transmission Planning Horizon portion of the steady state analysis shall be assessed annually and be supported by the following annual current study, supplemented with qualified past studies as indicated in Requirement R2, part 2.6:

2.2.1. A current study assessing expected System peak Load conditions for one of the years in the Long-Term Transmission Planning Horizon and the rationale for why that year was selected.

2.3. The short circuit analysis portion of the Planning Assessment shall be conducted annually addressing the Near-Term Transmission Planning Horizon and can be supported by current or past studies as indicated in Requirement R2, part 2.6. The analysis shall be used to determine whether circuit breakers have interrupting capability for Faults that they will be expected to interrupt using the System short circuit model with any planned generation and Transmission Facilities in service which could impact the study area.

Deleted: For each of the studies described in Requirements R2.1.1 and R2.1.2, sensitivity case(s) that are intended to stress the System with variations in one or more of the following conditions not already included in the studies shall be included in the Assessment:

Deleted: F

Deleted: and power factor

Deleted: Timing of the installation

Deleted: Planned d

Deleted: analysis

Deleted: Contingencies

Deleted: For t

Deleted: ,

Deleted: a current System peak Load study is required annually for one of the years in the assessment period to support the annual Planning Assessment.

Deleted: To accommodate any known longer lead time projects that may take longer than ten years to complete, the Planning Assessment shall be extended accordingly

Deleted: the maximum short circuit interruption duty on fault interrupting devices

Deleted: 3

Deleted: TBD

2.4. The Near-Term Transmission Planning Horizon portion of the Stability analysis shall be assessed annually and be supported by current or past studies as indicated in Requirement R2, part2.6. The following studies are required:

2.4.1. System peak Load for one of the five years. System peak Load levels shall include a Load model which represents the dynamic behavior of Loads that could impact the study area, considering the behavior of induction motor Loads. An aggregate System Load model which represents the overall dynamic behavior of the Load is acceptable.

2.4.2. System Off-Peak Load for one of the five years.

2.4.3. For each of the studies described in Requirement R2, parts 2.4.1 and 2.4.2, sensitivity case(s) shall be utilized to demonstrate the impact of changes to the basic assumptions used in the model for the list of items shown below. To accomplish this, the sensitivity analysis in the Planning Assessment must vary one or more of the following conditions not already included in the studies by a sufficient amount to stress the System within a range of credible conditions that demonstrate a measurable change in performance.

- Load level, Load forecast, or dynamic model assumptions.
- Expected transfers.
- Expected in service dates of new or modified Facilities.
- Reactive resource capability.
- Generation additions, retirements, or other dispatch scenarios.

2.5. The Long-Term Transmission Planning Horizon portion of the Stability analysis shall be assessed to address the impact of proposed generation additions or changes in that timeframe and be supported by current or past studies.

2.6. Past studies may be used to support the Planning Assessment if they meet the following requirements:

2.6.1. For steady state, short circuit, or Stability analysis: the study shall be five calendar years old or less, unless a technical rationale can be provided to demonstrate that the results of an older study are still valid.

2.6.2. For steady state, short circuit, or Stability analysis: the study shall not include any material changes unless a technical rationale can be provided to demonstrate that System changes do not impact the performance results in the study area.

-
-

2.7. For planning events shown in Table 1, when the analysis indicates an inability of the System to meet the performance requirements in Table 1, the Planning Assessment shall include Corrective Action Plan(s) addressing how the performance requirements will be met. Revisions to the Corrective Action Plan(s) are allowed in subsequent Planning Assessments but the planned System shall continue to meet the performance requirements in Table 1. Corrective Action Plan(s) do not need to be developed solely to meet the

Deleted: For
Deleted: System
Deleted: ,
Deleted: shall be used
Deleted: appropriately
Deleted: including
Deleted: ation
Deleted: of
Deleted: For each of the studies described in Requirements R2.4.1 and R2.4.2, sensitivity case(s) that are intended to stress the System with variations in one or more of the following conditions not already included in the studies shall be included in the Assessment:
Deleted: Timing of the installation
Deleted: present System model
Deleted: ,
Deleted: such as, generation or Transmission additions/removals, or topology changes that have occurred in the intervening period and would impact the study area. Material generation changes could include:
Deleted: The addition
Deleted: /
Deleted: , deletion
Deleted: /
Deleted: , or change of individual generating unit capability of 20 MW or greater.
Deleted: An aggregated addition
Deleted: /
Deleted: , deletion
Deleted: /
Deleted: , or change to a group of generating units directly connected through their step-up transformer(s) to the BES which total 20 MW or greater.
Deleted: P
Deleted: E
Deleted: a
Deleted: the
Deleted: t
Deleted: s
Deleted: 3
Deleted: TBD

performance requirements for a single sensitivity run in accordance with Requirements R2, parts 2.1.4 and 2.4.3. The Corrective Action Plan(s) shall:

2.7.1. List System deficiencies and the associated actions needed to achieve required System performance. Such actions may include:

- Installation, modification, retirement, or removal of Transmission and generation Facilities and any associated equipment.
- Installation, modification, or removal of Protection Systems or Special Protection Systems
- Installation or modification of automatic generation tripping as a response to a single or multiple Contingency to mitigate Stability performance violations.
- Installation or modification of manual and automatic generation runback/tripping as a response to a single or multiple Contingency to mitigate Steady State performance violations.
- Use of Operating Procedures specifying how long they will be needed as part of the Corrective Action Plan.
- Use of rate applications, DSM, new technologies, or other initiatives.

2.7.2. Include actions to resolve performance deficiencies identified in multiple sensitivity studies or provide a rationale for why actions were not necessary.

2.7.3.

2.7.4.

2.7.5. If situations arise that are beyond the control of the Transmission Planner or Planning Coordinator that prevent the implementation of a Corrective Action Plan in the required timeframe, then the Transmission Planner or Planning Coordinator is permitted to utilize Non-Consequential Load Loss and curtailment of Firm Transmission Service to correct the situation that would normally not be permitted in Table 1, provided that the Transmission Planner or Planning Coordinator documents that they are taking actions to resolve the situation. The Transmission Planner or Planning Coordinator shall document the situation causing the problem, alternatives evaluated, and the use of Non-Consequential Load Loss or curtailment of Firm Transmission Service.

2.7.6. Be reviewed in subsequent annual Planning Assessments for continued validity and implementation status of identified System Facilities and Operating Procedures.

2.8. For short circuit analysis, if the short circuit current interrupting duty on circuit breakers determined in Requirement R2, part 2.3 exceeds their Equipment Rating, the Planning Assessment shall include a Corrective Action Plan to address the Equipment Rating violations. The Corrective Action Plan shall:

2.8.1. List System deficiencies and the associated actions needed to achieve required System performance.

2.8.2. Be reviewed in subsequent annual Planning Assessments for continued validity and implementation status.

Deleted: sensitivities
Deleted: R
Deleted: 3
Deleted: R
Deleted: or
Deleted: For the Near-Term Transmission Planning Horizon, include both a project initiation date as well as an in-service date.
Deleted: For the Long-Term Transmission Planning Horizon, provide an in-service year.
Deleted: prudent
Deleted: as
Deleted: to
Deleted: on
Deleted: fault interrupting devices
Deleted: R
Deleted: as to
Deleted: 3
Deleted: TBD

2.9. The Planning Assessment shall provide the expected largest Consequential Load Loss (megawatt Demand) identified by the analysis of P1 and P2 events in Table 1.

2.10.

R3. For the steady state portion of the Planning Assessment, each Transmission Planner and Planning Coordinator shall perform studies for the Near-Term and Long-Term Transmission Planning Horizons in Requirement R2, parts 2.1, and 2.2. The studies shall be based on computer simulation models using data provided in Requirement R1. *[Violation Risk Factor: Medium] [Time Horizon: Long-term Planning]*

3.1. Studies shall be performed for planning events to determine whether the BES meets the performance requirements in Table 1 based on the Contingency list created in Requirement R3, part 3.4.

3.2. Studies shall be performed to assess the impact of the extreme events which are identified by the list created in Requirement R3, part 3.5.

3.3. Contingency analyses shall be performed and:

3.3.1. Simulate the removal of all elements that the Protection System and other automatic controls are expected to disconnect for each Contingency without operator intervention.

3.3.2. Trip generators where simulations show generator bus voltages are less than known or assumed minimum generator steady state or ride through voltage limitations. Include in the assessment any assumptions made.

3.3.3. Ensure relay loadability limits are respected.

3.3.4. Simulate the expected automatic operation of existing and planned devices designed to provide Steady State control of electrical system quantities when such devices impact the study area. These devices may include equipment such as phase-shifting transformers, load tap changing transformers, and switched capacitors and inductors.

3.4. Those planning events in Table 1, that are expected to produce more severe System impacts on its portion of the BES, shall be identified and a list of those Contingencies to be evaluated for System performance in Requirement R3, part 3.1 created. The rationale for those Contingencies selected for evaluation shall be available as supporting information.

3.4.1. The Planning Coordinator and Transmission Planner shall coordinate with adjacent Planning Coordinators and Transmission Planners to ensure that Contingencies on adjacent Systems which may impact their Systems are included in the Contingency list.

3.5. Those extreme events in Table 1 that are expected to produce more severe System impacts shall be identified and a list of those events to be evaluated for System performance in Requirement R3, part 3.2 created. The rationale for those Contingencies selected for evaluation shall be available as supporting information. If the analysis concludes there are cascading outages caused by the occurrence of extreme events, an evaluation of possible actions designed to reduce the likelihood or mitigate the consequences and adverse impacts of the event(s) shall be conducted.

Deleted: and the associated event caused
Deleted: any
Deleted: and any P2 event
Deleted: The Planning Assessment shall identify the maximum permissible Non-Consequential Load Loss (megawatt Demand) for those Planning Events where Non-Consequential Load Loss is allowed in Table 1.
Deleted: analysis
Deleted: studies
Deleted: R
Deleted: Requirement
Deleted: R
Deleted: s
Deleted: models utilizing
Deleted: s
Deleted: R
Deleted: E
Deleted: E
Deleted: R
Deleted: For all generators, studies shall
Deleted: c
Deleted: Consider the minimum steady state voltage limitations for all generators and identify how the generators are analyzed in the steady state simulation
Deleted: For all Transmission lines, studies shall c
Deleted: Consider
Deleted: for all Transmission lines and identify how loadability is analyze ... [1]
Deleted: ,
Deleted: Planning Event Contingencies
Deleted:
Deleted: R
Deleted: the
Deleted: and shall include an ... [2]
Deleted: E
Deleted: E
Deleted:
Deleted: R
Deleted: the
Deleted: and shall include an ... [3]
Deleted: E
Deleted: E
Deleted:
Deleted: 3
Deleted: TBD

3.6. When manual or automatic generation runback or tripping is used to meet steady state performance requirements for planning events P1 through P7 in Table 1, the amount of generation lost shall be documented in the Planning Assessment with a description of why the generation was runback or tripped for each event.

R4. For the Stability portion of the Planning Assessment, as described in Requirement R2, parts 2.4 and 2.5, each Transmission Planner and Planning Coordinator shall perform the Contingency analyses listed in Table 1. The studies shall be based on computer simulation models using data provided in Requirement R1. *[Violation Risk Factor: Medium] [Time Horizon: Long-term Planning]*

4.1. Studies shall be performed for planning events to determine whether the BES meets the performance requirements in Table 1 based on the Contingency list created in Requirement R4, part 4.4.

4.1.1. For planning event P1: No generating unit shall pull out of synchronism. A generator being disconnected from the System by fault clearing action or by a Special Protection System is not considered pulling out of synchronism.

4.1.2. For planning events P2 through P7: A generator that pulls out of synchronism shall be tripped in the simulations and the resulting apparent impedance swings shall not result in the tripping of any Transmission System elements other than the generating unit and its directly connected Facilities.

4.1.3. For planning events P1 through P7: Power oscillations shall exhibit acceptable damping as established by the Planning Coordinator and Transmission Planner.

4.2. Studies shall be performed to assess the impact of the extreme events which are identified by the list created in Requirement R4, part 4.5.

4.3. Contingency analyses shall be performed and:

4.3.1. Simulate the removal of all elements that the Protection System and other automatic controls are expected to disconnect for each Contingency without operator intervention while also considering the impact of successful or unsuccessful high speed reclosing.

4.3.2. Trip generators where simulations show generator bus voltages or high side of the GSU voltages are less than known or assumed generator low voltage ride through capability. Include in the assessment any assumptions made.

4.3.3. Simulate the impact of transient swings on Protection System operation for Transmission lines and transformers.

4.3.4. Simulate the expected automatic operation of existing and planned devices designed to provide dynamic control of electrical system quantities when such devices impact the study area. These devices may include equipment such as generation exciter control and power system stabilizers, static var compensators, power flow controllers, and DC Transmission controllers.

Deleted: R
Deleted: ,
Deleted:
Deleted: s
Deleted: using
Deleted: utilizing
Deleted:
Deleted: s
Deleted: R
Deleted: E
Deleted: E
Deleted: R
Deleted:
Deleted: Simulate generator performance under anticipated conditions including how the voltage ride through capability is analyzed.
Deleted: VAR
Deleted: 3
Deleted: TBD

4.4. Those planning events in Table 1that are expected to produce more severe System impacts on its portion of the BES, shall be identified, and a list of those Contingencies to be evaluated for System performance in Requirement R4, part 4.1 created. The rationale for those Contingencies selected for evaluation shall be available as supporting information.

4.4.1. Each Planning Coordinator and Transmission Planner shall coordinate with adjacent Planning Coordinators and Transmission Planners to ensure that Contingencies on adjacent Systems which may impact their Systems are included in the Contingency list.

Deleted: Planning Event Contingencies
Deleted:
Deleted: –
Deleted:
Deleted: R
Deleted: the
Deleted: with an explanation of why the remaining Contingencies would produce less severe System results

4.5. Those extreme events in Table 1 that are expected to produce more severe System impacts shall be identified and a list of those events to be evaluated for System performance in Requirement R4, part 4.2 created. The rationale for those Contingencies selected for evaluation shall be available as supporting information. If the analysis concludes there are cascading outages caused by the occurrence of extreme events, an evaluation of possible actions designed to reduce the likelihood or mitigate the consequences of the event(s) shall be conducted.

Deleted: E
Deleted: E
Deleted:
Deleted: R
Deleted: the
Deleted: and shall include an explanation of why the remaining Contingencies would produce less severe System results
Deleted: E
Deleted: E

R5. Each Transmission Planner and Planning Coordinator shall have criteria for acceptable System steady state voltage limits, post-Contingency voltage deviations, and the transient voltage response for its System. For transient voltage response, the criteria shall at a minimum, specify a voltage level and a maximum length of time that transient voltages may remain outside that level. *[Violation Risk Factor: Medium] [Time Horizon: Long-term Planning]*

R6. Each Transmission Planner and Planning Coordinator shall define and document, within their Planning Assessment, any criteria or methodology used in the analysis to identify System instability for conditions such as cascading outages, voltage instability, or uncontrolled islanding. *[Violation Risk Factor: Low] [Time Horizon: Long-term Planning]*

Deleted: ¶
Formatted: Bullets and Numbering
Deleted: proxies

R7. Each Planning Coordinator, in conjunction with each of its Transmission Planners, shall determine and identify each entity's individual and joint responsibilities for performing the required studies for the Planning Assessment. *[Violation Risk Factor: Low] [Time Horizon: Long-term Planning]*

Deleted: and Planning Coordinator

R8. Each Planning Coordinator and Transmission Planner shall distribute its Planning Assessment results to adjacent Planning Coordinators and Transmission Planners and to any functional entity that indicates a reliability related need for the Planning Assessment results. *[Violation Risk Factor: Low] [Time Horizon: Long-term Planning]*

8.1. If a recipient of the Planning Assessment results provides documented comments on the results, the respective Planning Coordinator or Transmission Planner shall provide a documented response to that recipient within 90 calendar days of receipt of those comments.

Deleted: coordinate the distribution of
Deleted: among
Deleted: who has indicated
Deleted: , coordinating analysis of these results through an open and transparent peer review process such as described in FERC Order 890

C. Measures

M1. Each Transmission Planner and Planning Coordinator shall provide evidence, in electronic or hard copy format, that it is maintaining System models, using the latest

Deleted: such as the System model with the specified data
Deleted: 3
Deleted: TBD

data consistent with MOD-010 and MOD-012, including items represented in the Corrective Action Plan, representing projected System conditions, and that the models represent the required information in accordance with Requirement R1.

M2. Each Transmission Planner and Planning Coordinator shall provide evidence, such as electronic or hard copies of its annual Planning Assessment, that it has prepared an annual Planning Assessment of its portion of the BES in accordance with Requirement R2.

M3. Each Transmission Planner and Planning Coordinator shall provide evidence, such as electronic or hard copies of the studies utilized in preparing the Planning Assessment, in accordance with Requirement R3.

M4. Each Transmission Planner and Planning Coordinator shall provide evidence, such as electronic or hard copies of the studies utilized in preparing the Planning Assessment in accordance with Requirement R4.

M5. Each Transmission Planner and Planning Coordinator shall provide evidence such as electronic or hard copies of the documentation specifying the criteria for acceptable System steady state voltage limits, post-Contingency voltage deviations, and the transient voltage response for its System in accordance with Requirement R5.

M6. Each Transmission Planner and Planning Coordinator shall provide evidence, such as electronic or hard copies of the studies utilized in preparing the Planning Assessment in accordance with Requirement R6.

M7. Each Planning Coordinator, in conjunction with each of its Transmission Planners, shall provide evidence, such as a dated document, that identifies that agreement has been reached on individual and joint responsibilities for performing the required studies for the Planning Assessment in accordance with Requirement R7.

M8. Each Planning Coordinator and Transmission Planner shall provide evidence, such as email notices, documentation of updated web pages, postal receipts showing recipient, date, and contents, or a demonstration of a public posting, that it has distributed its Planning Assessment results to adjacent Planning Coordinators and Transmission Planners and any functional entity who has indicated a reliability need and has provided a documented response to comments received on Planning Assessment results within 90 calendar days of receipt of those comments in accordance with Requirement R8.

Deleted: simulating

Deleted: ,

Deleted: ,

Deleted: ,

Deleted: 5

Deleted: and Planning Coordinator

Deleted: 6

Deleted: coordinated the distribution of

Deleted: among

Deleted: , coordinating analysis of these results through an open and transparent peer review process such as described in FERC Order 890

Deleted: 7

D. Compliance

1. Compliance Monitoring Process

1.1 Compliance Enforcement Authority

Regional Entity.

1.2 Compliance Monitoring Period and Reset Timeframe

Not applicable.

1.3 Compliance Monitoring and Enforcement Processes:

Compliance Audits

Self-Certifications

Spot Checking

Compliance Violation Investigations

Deleted: 3

Deleted: TBD

Self-Reporting

Complaints

1.4 Data Retention

The Transmission Planner and Planning Coordinator shall each retain data or evidence to show compliance as identified unless directed by its Compliance Enforcement Authority to retain specific evidence for a longer period of time as part of an investigation:

- The models utilized in the current Planning Assessment and one previous Planning Assessment in accordance with Requirement R1 and Measure M1.
- All Planning Assessments performed since the last compliance audit in accordance with Requirement R2 and Measure M2.
- All studies performed in support of its Planning Assessments since the last compliance audit in accordance with Requirement R3 and Measure M3.
- All studies performed in support of its Planning Assessments since the last compliance audit in accordance with Requirement R4 and Measure M4.
- All documentation specifying the criteria since the last compliance audit in accordance with Requirement R5 and Measure M5.
- All studies performed in support of its Planning Assessments since the last compliance audit in accordance with Requirement R6 and Measure M6.
- The current, in force agreement on identified responsibilities, as well as all such agreements in force since the last compliance audit, in accordance with Requirement R7 and Measure M7.

The Planning Coordinator shall retain data or evidence to show compliance as identified unless directed by its Compliance Enforcement Authority to retain specific evidence for a longer period of time as part of an investigation:

- Three calendar years of the notifications employed in accordance with Requirement R8 and Measure M8.

Deleted: .

Deleted: 5

Deleted: 5

Deleted: 6

Deleted: 6

Deleted: 7

Deleted: 7

1.5 Additional Compliance Information

None.

Deleted: 3

Deleted: TBD

2 Violation Severity Levels

	Lower VSL	Moderate VSL	High VSL	Severe VSL
R1	The responsible entity's System model failed to represent one of the Requirement R1, parts 1.1.1 through 1.1.6.	The responsible entity's System model failed to represent two of the Requirement R1, parts 1.1.1 through 1.1.6. OR The System model did not use the latest data consistent with the data provided in accordance with the MOD-010 and MOD-012 standards and other sources, including items represented in the Corrective Action Plan.	The responsible entity's System model failed to represent three of the Requirement R1, parts 1.1.1 through 1.1.6.	The responsible entity's System model failed to represent four or more of the Requirement R1, parts 1.1.1 through 1.1.6. OR The System model did not represent projected System conditions as described in Requirement R1.
R2	The responsible entity failed to comply with Requirement R2, part 2.9 or Requirement R2, part 2.6.	The responsible entity failed to comply with Requirement R2, part 2.3 or part 2.8.	The responsible entity failed to comply with one of the following parts of Requirement R2: part 2.1, part 2.2, part 2.4, part 2.5, or part 2.7.	The responsible entity failed to comply with two or more of the following parts of Requirement R2: part 2.1, part 2.2, part 2.4, or part 2.7.
R3	The responsible entity did not identify planning events as described in Requirement R3, part 3.4 or extreme events as described in Requirement R3, part 3.5.	The responsible entity did not perform studies as specified in Requirement R3, part 3.1 to determine that the BES meets the performance requirements for one of the categories (P2 through P7) in Table 1. OR The responsible entity did not perform studies as specified in Requirement R3, part 3.2 to assess	The responsible entity did not perform studies as specified in Requirement R3, part 3.1 to determine that the BES meets the performance requirements for two of the categories (P2 through P7) in Table 1. OR The responsible entity did not perform Contingency analysis as described in Requirement R3, part	The responsible entity did not perform studies as specified in Requirement R3, part 3.1 to determine that the BES meets the performance requirements for three or more of the categories (P2 through P7) in Table 1. OR The responsible entity did not perform studies to determine that the BES meets the performance requirements for the P0 or P1 categories in Table 1.

Deleted: Transmission Planner or Planning Coordinator's …sub- ... [4]
Deleted: Transmission Planner or Planning Coordinator's …sub- ... [5]
Deleted: sub-requirements …R. ... [6]
Deleted: sub-requirements …R. ... [7]
Deleted: simulate
Deleted: data
Deleted: Transmission Planner or Planning Coordinator …one or both of the following sub-requirements: R ... [8]
Deleted: Transmission Planner or Planning Coordinator … one of the sub-requirements…R…R…7… ... [9]
Deleted: Transmission Planner or Planning Coordinator … sub-requirements…R…R…R…R…6 ... [10]
Deleted: the sub-requirements…R…R…R…R…R ... [11]
Deleted: .
Deleted: Transmission Planner or Planning Coordinator ... [12]
Deleted: Transmission Planner or Planning Coordinator …R ... [13]
Deleted: Transmission Planner or Planning Coordinator …R ... [14]
Deleted: R
Deleted: Transmission Planner or Planning Coordinato…r ... [15]
Deleted: Transmission Planner or Planning Coordinator …R ... [16]
Deleted: Transmission Planner or Planning Coordinator
Deleted: 3…TBD: ... [17]

	Lower VSL	Moderate VSL	High VSL	Severe VSL
		the impact of extreme events. OR The responsible entity did not base its studies on computer simulation models using data provided in Requirement R1.	3.3.	
R4	The responsible entity did not identify planning events as described in Requirement R4, part 4.4 or extreme events as described in Requirement R4, part 4.5.	The responsible entity did not perform studies as specified in Requirement R4, part 4.1 to determine that the BES meets the performance requirements for one of the categories (P1 through P7) in Table 1. OR The responsible entity did not perform studies as specified in Requirement R4, part 4.2 to assess the impact of extreme events. OR The responsible entity did not base its studies on computer simulation models using data provided in Requirement R1.	The responsible entity did not perform studies as specified in Requirement R4, part 4.1 to determine that the BES meets the performance requirements for two of the categories (P1 through P7) in Table 1. OR The responsible entity did not perform Contingency analysis as described in Requirement R4, part 4.3.	The responsible entity did not perform studies as specified in Requirement R4, part 4.1 to determine that the BES meets the performance requirements for three or more of the categories (P1 through P7) in Table 1.
R5	N/A	N/A	N/A	The responsible entity does not have criteria for acceptable System steady state voltage limits, post-Contingency voltage deviations, or the transient voltage response for its System.

Deleted: E
Deleted: E
Deleted: R
Deleted: Transmission Planner or Planning Coordinator
Deleted: s using
Deleted: utilizing
Deleted: Transmission Planner ... [18]
Deleted: Transmission Planner ... [19]
Deleted: Transmission Planner ... [20]
Deleted: Transmission Planner ... [21]
Deleted: P
Deleted: E
Deleted: R
Deleted: R
Deleted: R
Deleted: R
Deleted: E
Deleted: E
Deleted: R
Deleted: Transmission Planner ... [22]
Deleted: Transmission Planner ... [23]
Deleted: R
Deleted: E
Deleted: E
Deleted: R
Deleted: Transmission Planner ... [24]
Deleted: s using
Deleted: utilizing
Deleted: 3
Deleted: TBD:

	Lower VSL	Moderate VSL	High VSL	Severe VSL
R6	N/A	N/A	N/A	The responsible entity failed to define and document the criteria or methodology for System instability used within its analysis as described in Requirement R6.
R7	N/A	N/A	N/A	The Planning Coordinator, in conjunction with each of its Transmission Planners, failed to determine and identify individual or joint responsibilities for performing required studies.
R8	The responsible entity failed to distribute the results of its Planning Assessment to any one of its adjacent Transmission Planners and Planning Coordinators, respectively in accordance with Requirement R8.	N/A	The responsible entity failed to distribute the results of its Planning Assessment to its adjacent Transmission Planners and Planning Coordinators, respectively in accordance with Requirement R8.	The responsible entity failed to provide a documented response to a recipient of the Planning Assessment results who provided documented comments on the results within 90 calendar days of receipt of those comments in accordance with Requirement R8.

Deleted: 5

Deleted: Transmission Planner or Planning Coordinator

Deleted: proxies

Deleted: their

Deleted: 5

Deleted: 6

Deleted: or Planning Coordinator

Deleted: 7

Deleted: N/A

Deleted: The Planning Coordinator failed to coordinate the analysis of its Planning Assessment results through an open and transparent peer review process.

Deleted: The Planning Coordinator failed to distribute the results of its Planning Assessment.

E. Regional Variances

None.

Deleted: 3

Deleted: TBD:

Table 1 – Steady State & Stability Performance
Planning Events

Steady State & Stability:

a. BES Transmission voltage instability, cascading outages, and uncontrolled islanding shall not occur.

b. Consequential Load Loss and consequential generation loss are acceptable as a consequence of any planning or extreme event excluding P0.

c. Simulate the removal of all elements that Protection Systems and other controls are expected to automatically disconnect for each event.

d. Simulate Normal Clearing unless otherwise specified.

e. For all planning events, planned System adjustments such as Transmission configuration changes and redispatch of generation are allowed if such adjustments are executable within the time duration applicable to the Facility Ratings.

Steady State Only:

f. Facility Ratings shall not be exceeded.

g. System steady state voltage limits and post-Contingency voltage deviations shall be within acceptable limits as established by the Planning Coordinator and the Transmission Planner.

h. Planning event P0 is applicable to steady state only.

i. The response of voltage sensitive Load including Load that is disconnected from the System by end-user equipment associated with an event shall not be used to meet steady state performance requirements.

Stability Only:

j. The System shall remain stable. [1]

k. Transient voltage response shall be within acceptable limits established by the Planning Coordinator and the Transmission Planner.

Category	Initial System Condition	Event[1]	Fault Type[2]	BES Level[3]	Interruption of Firm Transmission Service Allowed[4]	Non-Consequential Load Loss Allowed
P0 No Contingency	Normal System	None	N/A	EHV, HV	No	No
P1 Single Contingency	Normal System	Loss of one of the following: 1. Generator 2. Transmission Circuit 3. Transformer[5] 4. Shunt Device[6]	3Ø	EHV, HV	No	No
		5. Single Pole of a DC line	SLG			
P2 Single Contingency	Normal System	1. Opening of Breaker(s) w/o fault[7]	N/A	EHV, HV	No	No
		2. Bus Section Fault	SLG	EHV	No	No
				HV	Yes	Yes
		3. Internal Breaker Fault[8] (Non Bus-tie)	SLG	EHV	No	No
			SLG	HV	Yes	Yes
		4. Internal Breaker Fault (Bus-tie)[8]	SLG	EHV, HV	Yes	Yes

Deleted: V
Deleted: ,
Deleted: Supplemental Load Loss,
Deleted: Load Reduction,
Deleted: P
Deleted: E
Deleted: E
Deleted: However, Supplemental Load Loss associated with an event shall not be used to meet steady state performance requirements.
Deleted: P
Deleted: E
Deleted: (or
Deleted: if more restrictive)
Deleted: E
Formatted: Bullets and Numbering
Deleted: (or
Deleted: if more restrictive)
Deleted: [3]
Deleted: [4]
Deleted: [2]
Deleted: [5]
Deleted: [6]
Deleted: [7]
Deleted: [8]
Deleted: [9]
Deleted: bus
Deleted: bus
Deleted: [9]
Deleted: 3
Deleted: TBD:

Table 1 – Steady State & Stability Performance Planning Events

Category	Initial System Condition	Event[1]	Fault Type[2]	BES Level[3]	Interruption of Firm Transmission Service Allowed[4]	Non-Consequential Load Loss Allowed
P3 Multiple Contingency	Loss of generator unit followed by System adjustments[19]	Loss of one of the following: 1. Generator 2. Transmission Circuit 3. Transformer[5] 4. Shunt Device[6]	3Ø	EHV, HV	No[19]	No
		5. Single pole of a DC line	SLG			
P4 Multiple Contingency *(Fault plus stuck breaker[101])*	Normal System	Loss of multiple elements caused by a stuck breaker[11] (non-Bus-tie) attempting to clear a Fault on one of the following: 1. Generator 2. Transmission Circuit 3. Transformer[5] 4. Shunt Device[6] 5. Bus Section	SLG	EHV	No[10]	No
				HV	Yes	Yes
		6. Loss of multiple elements caused by a stuck breaker[10] (Bus-tie) attempting to clear a Fault on the associated bus		EHV, HV	Yes	Yes
P5 Multiple Contingency *(Fault plus Protection System failure)*	Normal System	Loss of multiple elements caused by the failure of a single Protection System while clearing a fault on one of the following: 1. Generator 2. Transmission Circuit 3. Transformer[5] 4. Shunt Device[6] 5. Bus Section	SLG	EHV	No[19]	No
				HV	Yes	Yes
P6 Multiple Contingency *(Two overlapping singles)*	Loss of one of the following followed by System adj[9]: 1. Transmission Circuit 2. Transformer[5] 3. Shunt Device[6] 4. Single pole of a DC line	Loss of one of the following: 1. Transmission Circuit 2. Transformer[5] 3. Shunt Device[6]	3Ø	EHV, HV	Yes	Yes
		4. Single pole of a DC line	SLG	EHV, HV	Yes	Yes

Deleted: [3]
Deleted: [4]
Deleted: [2]
Deleted: [5]
Deleted: [0]
Deleted: [6]
Deleted: EHV, HV
Deleted: No[10]
Deleted: No
Deleted: [7]
Deleted: [0]
Deleted: S
Deleted: bus
Deleted: SLG¶ SLG
Deleted: [6]
Deleted: [7]
Deleted: [1]
Deleted: S
Deleted: bus
Deleted: [0]
Deleted: SLG
Deleted: [6]
Deleted: [7]
Deleted: [6]
Deleted: [10]
Deleted: [7]
Deleted: [6]
Deleted: [7]
Deleted: 3
Deleted: TBD:

P7 Multiple Contingency *(Common Structure)*	Normal System	The loss of: 1. Any two adjacent (vertically or horizontally) circuits on common structure[11] 2. Loss of a bipolar DC line	SLG	EHV, HV	Yes	Yes

Deleted: [12]

Deleted: 3

Deleted: TBD:

Table 1 – Steady State & Stability Performance Extreme Events	
Steady State & Stability For all extreme events evaluated: a. Simulate the removal of all elements that Protection Systems and automatic controls are expected to disconnect for each Contingency. b. Simulate Normal Clearing unless otherwise specified.	
Steady State 1. Loss of a single generator, Transmission Circuit, single pole of a DC Line, shunt device, or transformer forced out of service followed by another single generator, Transmission Circuit, single pole of a different DC Line, shunt device, or transformer forced out of service prior to System adjustments. 2. Local area events affecting the Transmission System such as: a. Loss of a tower line with three or more circuits.[12] b. Loss of all Transmission lines on a common Right-of-Way[12]. c. Loss of a switching station or substation (loss of one voltage level plus transformers). d. Loss of all generating units at a station. e. Loss of a large Load or major Load center. 3. Wide area events affecting the Transmission System based on System topology such as: a. Loss of two generating plants resulting from conditions such as: i. Loss of a large gas pipeline into a region or multiple regions that have significant gas-fired generation. ii. Loss of the use of a large body of water as the cooling source for generation. iii. Wildfires. iv. Severe weather, e.g., hurricanes, tornadoes, etc. v. A successful cyber attack. vi. Shutdown of a nuclear power plant(s) and related facilities for a day or more for common causes such as problems with similarly designed plants. b. Other events based upon operating experience that may result in wide area disturbances.	**Stability** 1. With an initial condition of a single generator, Transmission circuit, single pole of a DC line, shunt device, or transformer forced out of service, apply a 3Ø fault on another single generator, Transmission circuit, single pole of a different DC line, shunt device, or transformer prior to System adjustments. 2. Local or wide area events affecting the Transmission System such as: a. 3Ø fault on generator with stuck breaker[11] or a Protection System failure resulting in Delayed Fault Clearing. b. 3Ø fault on Transmission circuit with stuck breaker[11] or a Protection System failure resulting in Delayed Fault Clearing. c. 3Ø fault on transformer with stuck breaker[11]or a Protection System failure resulting in Delayed Fault Clearing. d. 3Ø fault on bus section with stuck breaker[11] or a Protection System failure resulting in Delayed Fault Clearing. e. 3Ø internal breaker fault[11]. f. Other events based upon operating experience, such as consideration of initiating events that experience suggests may result in wide area disturbances

Deleted: E

Deleted: E

Formatted: Bullets and Numbering

Deleted: 3Ø fault on two or more circuits on a common structure[12]. ¶ <#>SLG fault on all Transmission lines on a common Right-of-Way. ¶ 3Ø fault on switching station or substation (loss of one voltage level plus transformers)

Deleted: 3

Deleted: TBD:

Table 1 – Steady State & Stability Performance
Footnotes
(Planning Events and Extreme Events)

1.

a.

1. If the event analyzed involves BES elements at multiple System voltage levels, the lowest System voltage level for stated performance criteria applies regarding allowances for interruptions of Firm Transmission Service and loss of Non-Consequential Load.
2. Unless specified otherwise, simulate Normal Clearing faults. Single line to ground (SLG) or three phase (3Ø) are the fault types, that must be evaluated in Stability simulations for the event described. A 3Ø or a double line to ground fault study indicating the criteria are being met is sufficient evidence that a SLG condition would also meet the criteria.
3. Bulk Electric System (BES) level references include extra-high voltage (EHV) Facilities defined as greater than 300kV and high voltage (HV) Facilities defined as the 300kV and lower voltage Systems as defined by the Regional Entity. The designation of EHV and HV is used to distinguish between stated performance criteria allowances for interruptions of Firm Transmission Service and Non-Consequential Load.
4. Curtailment of Conditional Firm Transmission Service is allowed when the conditions and/or events being studied formed the basis for the Conditional Firm Transmission Service.
5. For non-Generator Step Up transformer outage events, the reference voltage applies to the low-side winding (excluding tertiary windings). For generator and generator Step Up transformer outage events, the reference voltage applies to the BES connected voltage (high-side of the Generator Step Up transformer). Requirements which are applicable to transformers also apply to variable frequency transformers and phase shifting transformers.
6. Requirements which are applicable to shunt devices also apply to FACTS devices that are connected to ground.
7. Opening breaker(s) without a fault on one end of a normally networked Transmission circuit such that the line is now open at that end and possibly serving Load radial from a single source point.
8. An internal breaker fault means a breaker failing internally, thus creating a System fault which must be cleared by protection on both sides of the breaker.
9. Curtailment of Firm Transmission Service, when coupled with the appropriate re-dispatch of resources obligated to re-dispatch, is allowed both as a System adjustment (as identified in the column entitled 'Initial System Conditions') and a corrective action, where it can be demonstrated that Facilities remain within applicable Facility Ratings and those adjustments do not result in the shedding of any firm Demand. Where limited options for re-dispatch exist, sensitivities associated with the availability of those resources should be considered. Where Facilities external to the Transmission Planner's planning region are relied upon, Facility Ratings in those regions should also be respected.
10. A stuck breaker means that for a gang-operated breaker, all three phases of the breaker have remained closed. For an independent pole operated (IPO) or an independent pole tripping (IPT) breaker, only one pole is assumed to remain closed. A stuck breaker results in Delayed Fault Clearing.
11. Excludes circuits that share a common structure or common Right-of-Way for 1 mile or less.

Deleted: System stable means:

Deleted: <#>Angular Stability:¶ <#>For Planning Event P1: No generating unit or units shall be allowed to pull out of synchronism. A generator being disconnected from the System by fault clearing action or by a Special Protection System is not considered pulling out of synchronism. ¶ <#>For all other Planning Events: No generating unit or units totaling more than the Contingency Reserve of the Balancing Authority (or Reserve Sharing Group if applicable) shall be allowed to pull out of synchronism. Generators that pull out of synchronism must have out-of-step protection or some other means to trip the generator for this cond ... [25]

Formatted: Bullets and Numbering

Deleted: shall provide

Deleted: When the condition ... [26]

Deleted: Inadvertent tripping of

Deleted: f

Deleted: t

Deleted: s

Deleted:

Deleted:

Deleted: Load

Deleted: must

Deleted: must

Deleted: considered

Deleted: introduces a

Deleted: d

Deleted: c

Deleted: mode

Deleted: 3

Deleted: TBD:

Version History

Version	Date	Action	Change Tracking
1	TBD	Revision of TPL-001-0 as per Project 2006-02; includes merging requirements of TPL-001-0, TPL-002-0, TPL-003-0, and TPL-004-0 into one, single, comprehensive, coordinated standard: TPL-001-1	Not employed due to scope of revision

Deleted: 3

Deleted: TBD:

Page 8: [1] Deleted **Ed Dobrowolski** **7/24/2009 10:28:00 AM**

for all Transmission lines and identify how loadability is analyzed in the steady state simulation.

Page 8: [2] Deleted **Ed Dobrowolski** **7/24/2009 10:28:00 AM**

and shall include an explanation of why the remaining Contingencies would produce less severe System results

Page 8: [3] Deleted **Ed Dobrowolski** **7/24/2009 10:29:00 AM**

and shall include an explanation of why the remaining Contingencies would produce less severe System results

Page 13: [4] Deleted **Ed Dobrowolski** **7/30/2009 7:24:00 PM**

Transmission Planner or Planning Coordinator's

Page 13: [4] Deleted **Ed Dobrowolski** **7/30/2009 7:24:00 PM**

sub-requirements

Page 13: [4] Deleted **Ed Dobrowolski** **7/30/2009 7:24:00 PM**

R

Page 13: [4] Deleted **Ed Dobrowolski** **7/30/2009 7:24:00 PM**

R

Page 13: [4] Deleted **Ed Dobrowolski** **7/30/2009 7:24:00 PM**

Transmission Planner or Planning Coordinator's

Page 13: [5] Deleted **Ed Dobrowolski** **7/30/2009 7:25:00 PM**

Transmission Planner or Planning Coordinator's

Page 13: [5] Deleted **Ed Dobrowolski** **7/30/2009 7:25:00 PM**

sub-requirements

Page 13: [5] Deleted **Ed Dobrowolski** **7/30/2009 7:26:00 PM**

R

Page 13: [5] Deleted **Ed Dobrowolski** **7/30/2009 7:26:00 PM**

R

Page 13: [5] Deleted **Ed Dobrowolski** **7/30/2009 7:26:00 PM**

Transmission Planner or Planning Coordinator's

Page 13: [6] Deleted **Ed Dobrowolski** **7/30/2009 7:25:00 PM**

sub-requirements

Page 13: [6] Deleted **Ed Dobrowolski** **7/30/2009 7:25:00 PM**

R

Page 13: [6] Deleted **Ed Dobrowolski** **7/30/2009 7:25:00 PM**

R

Page 13: [7] Deleted **Ed Dobrowolski** **7/30/2009 7:26:00 PM**

sub-requirements

Page 13: [7] Deleted **Ed Dobrowolski** **7/30/2009 7:26:00 PM**

R

Page 13: [7] Deleted **Ed Dobrowolski** **7/30/2009 7:26:00 PM**

R

Page 13: [8] Deleted **Ed Dobrowolski** **7/30/2009 7:26:00 PM**

Transmission Planner or Planning Coordinator

Page 13: [8] Deleted **Ed Dobrowolski** **7/24/2009 10:23:00 AM**

one or both of the following sub-requirements: R2.8 or

Page 13: [8] Deleted **Ed Dobrowolski** **7/30/2009 7:27:00 PM**

R

Page 13: [9] Deleted **Ed Dobrowolski** **7/30/2009 7:27:00 PM**

Transmission Planner or Planning Coordinator

Page 13: [9] Deleted **Ed Dobrowolski** **7/30/2009 7:27:00 PM**

one of the sub-requirements

Page 13: [9] Deleted **Ed Dobrowolski** **7/30/2009 7:28:00 PM**

R

Page 13: [9] Deleted **Ed Dobrowolski** **7/30/2009 7:28:00 PM**

R

Page 13: [9] Deleted **Ed Dobrowolski** **8/6/2009 12:16:00 AM**

7

Page 13: [9] Deleted **Ed Dobrowolski** **7/30/2009 7:28:00 PM**

Transmission Planner or Planning Coordinator

Page 13: [10] Deleted	Ed Dobrowolski	7/30/2009 7:29:00 PM

Transmission Planner or Planning Coordinator

Page 13: [10] Deleted	Ed Dobrowolski	7/30/2009 7:30:00 PM

sub-requirements

Page 13: [10] Deleted	Ed Dobrowolski	7/30/2009 7:30:00 PM

R

Page 13: [10] Deleted	Ed Dobrowolski	7/30/2009 7:30:00 PM

R

Page 13: [10] Deleted	Ed Dobrowolski	7/30/2009 7:30:00 PM

R

Page 13: [10] Deleted	Ed Dobrowolski	7/30/2009 7:30:00 PM

R

Page 13: [10] Deleted	Ed Dobrowolski	8/6/2009 12:15:00 AM

6

Page 13: [11] Deleted	Ed Dobrowolski	7/30/2009 7:28:00 PM

the sub-requirements

Page 13: [11] Deleted	Ed Dobrowolski	7/30/2009 7:29:00 PM

R

Page 13: [11] Deleted	Ed Dobrowolski	7/30/2009 7:29:00 PM

R

Page 13: [11] Deleted	Ed Dobrowolski	7/30/2009 7:29:00 PM

R

Page 13: [11] Deleted	Ed Dobrowolski	7/30/2009 7:29:00 PM

R

Page 13: [11] Deleted	Ed Dobrowolski	7/30/2009 7:29:00 PM

R

Page 13: [11] Deleted	Ed Dobrowolski	8/6/2009 12:15:00 AM

Page 13: [12] Deleted **Ed Dobrowolski** **7/30/2009 7:30:00 PM**

Transmission Planner or Planning Coordinator

Page 13: [12] Deleted **Ed Dobrowolski** **8/5/2009 11:35:00 PM**

P

Page 13: [12] Deleted **Ed Dobrowolski** **8/5/2009 11:35:00 PM**

E

Page 13: [12] Deleted **Ed Dobrowolski** **7/30/2009 7:31:00 PM**

R

Page 13: [12] Deleted **Ed Dobrowolski** **8/5/2009 11:38:00 PM**

E

Page 13: [12] Deleted **Ed Dobrowolski** **8/5/2009 11:38:00 PM**

E

Page 13: [12] Deleted **Ed Dobrowolski** **7/30/2009 7:31:00 PM**

R

Page 13: [12] Deleted **Ed Dobrowolski** **7/30/2009 7:31:00 PM**

Transmission Planner or Planning Coordinator

Page 13: [13] Deleted **Ed Dobrowolski** **7/30/2009 7:32:00 PM**

Transmission Planner or Planning Coordinator

Page 13: [13] Deleted **Ed Dobrowolski** **7/30/2009 7:32:00 PM**

R

Page 13: [14] Deleted **Ed Dobrowolski** **7/30/2009 7:33:00 PM**

Transmission Planner or Planning Coordinator

Page 13: [14] Deleted **Ed Dobrowolski** **7/30/2009 7:33:00 PM**

R

Page 13: [15] Deleted **Ed Dobrowolski** **7/30/2009 7:33:00 PM**

Transmission Planner or Planning Coordinato

Page 13: [15] Deleted **Ed Dobrowolski** **7/30/2009 7:33:00 PM**

r

Page 13: [16] Deleted	Ed Dobrowolski	7/30/2009 7:31:00 PM

Transmission Planner or Planning Coordinator

Page 13: [16] Deleted	Ed Dobrowolski	7/30/2009 7:32:00 PM

R

Page 13: [17] Deleted	Maureen Long	9/15/2009 2:05:00 PM

3

Page 13: [17] Deleted	Maureen Long	9/15/2009 2:04:00 PM

TBD:

Page 14: [18] Deleted	Ed Dobrowolski	7/30/2009 7:33:00 PM

Transmission Planner or Planning Coordinator

Page 14: [19] Deleted	Ed Dobrowolski	7/30/2009 7:34:00 PM

Transmission Planner or Planning Coordinator

Page 14: [20] Deleted	Ed Dobrowolski	7/30/2009 7:35:00 PM

Transmission Planner or Planning Coordinator

Page 14: [21] Deleted	Ed Dobrowolski	7/30/2009 7:35:00 PM

Transmission Planner or Planning Coordinator

Page 14: [22] Deleted	Ed Dobrowolski	7/30/2009 7:34:00 PM

Transmission Planner or Planning Coordinator

Page 14: [23] Deleted	Ed Dobrowolski	7/30/2009 7:35:00 PM

Transmission Planner or Planning Coordinator

Page 14: [24] Deleted	Ed Dobrowolski	7/30/2009 7:34:00 PM

Transmission Planner or Planning Coordinator

Page 20: [25] Deleted	Ed Dobrowolski	8/6/2009 12:29:00 AM

Angular Stability:

For Planning Event P1: No generating unit or units shall be allowed to pull out of synchronism. A generator being disconnected from the System by fault clearing action or by a Special Protection System is not considered pulling out of synchronism.

For all other Planning Events: No generating unit or units totaling more than the Contingency Reserve of the Balancing Authority (or Reserve Sharing Group if applicable) shall be allowed to pull out of synchronism. Generators that pull out of synchronism must have out-of-step protection or some other means to trip the generator for this condition and the resulting apparent impedance swings must not pass through relay characteristics that would result in the tripping of any

Transmission System elements other than the generating unit and its direct connection Facilities.

For all Planning Events evaluated: Power oscillations shall exhibit acceptable damping as established by the Planning Coordinator (or Transmission Planner if more restrictive)

Page 20: [26] Deleted **Ed Dobrowolski** **8/5/2009 11:52:00 PM**

When the conditions and/or event(s) being studied form the basis for conditional Firm Transmission Service, curtailment of that conditional Firm Transmission Service is allowed.

NERC
NORTH AMERICAN ELECTRIC RELIABILITY CORPORATION

Standards Announcement

Comment Period Open
September 16–October 16, 2009

Now available at: http://www.nerc.com/filez/standards/Assess-Transmission-Future-Needs.html

Project 2006-02: Assess Transmission Future Needs

The Assess Transmission Future Needs Standard Drafting Team is seeking comments on the following documents **until 8 p.m. EDT on October 16, 2009**:

- Draft four of TPL-001-1 — Transmission System Planning Performance Requirements
- Revised implementation plan

TPL-001-1 is designed to be a single, comprehensive, and coordinated standard that merges the requirements of four existing standards: TPL-001-0, TPL-002-0, TPL-003-0, and TPL-004-0. The proposed standard includes several new definitions.

This is the fourth comment period for the proposed standard and includes revisions based on industry comments. The team has posted its consideration of industry comments received during the previous comment period.

Instructions

Please use this electronic form to submit comments. If you experience any difficulties in using the electronic form, please contact Lauren Koller at Lauren.Koller@nerc.net. An off-line, unofficial copy of the comment form is posted on the project page:
http://www.nerc.com/filez/standards/Assess-Transmission-Future-Needs.html

Next Steps

The drafting team will draft and post responses to comments received during this period. The drafting team will also determine whether to post the standard for an additional comment period or seek approval from the Standards Committee to proceed to balloting.

Project Background

The purpose of the proposed standard is to establish transmission system planning performance requirements within the planning horizon to develop a bulk electric system that will operate reliably over a broad spectrum of system conditions and following a wide range of probable contingencies. The project includes updating and consolidating the following standards:

- TPL-001-0 — System Performance under Normal Conditions
- TPL-002-0 — System Performance Following Loss of a Single BES Element
- TPL-003-0 — System Performance Following Loss of Two or More BES Elements
- TPL-004-0 — System Performance Following Extreme BES Events
- TPL-005-0 — Regional and Interregional Self-Assessment Reliability Reports

- TPL-006-0 — Data from the Regional Reliability Organization Needed to Assess Reliability

This part of the project addresses TPL-001-0 through TPL-004-0. TPL-005 and TPL-006 will be addressed later in the project.

Applicability of Standards in Project:

Transmission Planner
Planning Coordinator

Standards Development Process

The Reliability Standards Development Procedure contains all the procedures governing the standards development process. The success of the NERC standards development process depends on stakeholder participation. We extend our thanks to all those who participate.

For more information or assistance,
please contact Shaun Streeter at shaun.streeter@nerc.net or at 609.452.8060.

Individual or group. (66 Responses)
Name (48 Responses)
Organization (48 Responses)
Group Name (18 Responses)
Question 1 (0 Responses)
Question 1 Comments (66 Responses)
Question 2 (0 Responses)
Question 2 Comments (66 Responses)
Question 3 (0 Responses)
Question 3 Comments (66 Responses)
Question 4 (0 Responses)
Question 4 Comments (66 Responses)
Question 5 (0 Responses)
Question 5 Comments (66 Responses)
Question 6 (0 Responses)
Question 6 Comments (66 Responses)
Question 7 (0 Responses)
Question 7 Comments (66 Responses)
Question 8 (0 Responses)
Question 8 Comments (66 Responses)
Question 9 (61 Responses)
Question 9 Comments (66 Responses)
Question 10 (62 Responses)
Question 10 Comments (66 Responses)
Question 11 (55 Responses)
Question 11 Comments (66 Responses)
Question 12 (60 Responses)
Question 12 Comments (66 Responses)

Group
TIS
The six month limitation of requirement 1.1.2. “Known outage(s) of generation or Transmission Facility(ies) with a duration of at least six months.” Is is applicable to near-term and long-term Planning studies, but makes the new TPL-001 standard non-extensible to the near-term operational planning studies (next month, next week, or next day). During near-term operational planning periods, it is essential to include the impacts of ALL known outages in the operational analysis. It should be made clear that the TPL-001 Standard is not applicable to the Operational Planning Horizon. This points out the need for a separate (but equal in scope) operational planning analysis standard. There appears to be a double-jeopardy issue related to relay loadability and protection system redundancy. Relay loadability is handled in greater detail (as it should be) under the proposed PRC-023 standard, so any reference here should only be a placeholder. Similarly, the issues of redundancy are being addressed in more detail in a new proposed standard on protection system reliability.
The reference in R2.1.3 to the outage schedules as listing in part R1.1.2 must be recognized as a limitation to the standard to the Planning Horizon. See the TIS comment tor R1. There is confusion in interpretation of the Table 1 — When the voltage class of the contingency element and the monitored element are different (one is HV and the other is EHV), to which voltage class is the allowance for shedding of non-consequential load applied? For example if a SLG fault is on a 138-kV element or a 345/138-kV autotransformer, are you allowed to shed load to keep a345-kV element from overloading? Conversely, if the fault is on a 345-kV element, are you allowed to shed load to keep a 138-kV from overloading? It should be the voltage level of the overloaded element (not the outaged element) that determines whether or not non-consequential load shedding is allowed. The TIS believes that the requirement to report the largest single consequential load loss under Requirement 2.9 should not be included in the standard. If it remains, it must be made clear that it be applicable only to Year One, and there should be additional clarification that the requirement to report consequential load loss

(single number) is ONLY for the most severe contingencies studied for the P1 and P2 contingencies.

Nowhere in the stability requirements is it necessary for evaluating the loss of all generators in a station; it is included in the steady state requirements. The standard should require examination of all units in a generating station where single line-to-ground faults on generation station buses could cause the clearing of the entire station. Further, single phase faults with delayed clearing (or stuck breaker) are not included. Often, such exclusion of stability analysis for loss of all generators at a station – these are things that happen!

There appears to be a double-jeopardy issue related to voltage performance criteria related to the VAR Standards.

Term "document" in R8.1 – the term documented needs to be defined. TIS suggests using the term "written " i.e., "If a recipient of the Planning Assessment results provides documented written comments on the results, the respective Planning Coordinator or Transmission Planner shall provide a documented written response to that recipient within 90 calendar days of receipt of those comments." The requirement to distribute reports to entities with "need" has very significant CEII implications. This should be tightened to a "bona fide reliability need" for the information, requiring CEII or confidential material handling procedures. Other general comments: 1. Footnotes on P3 and P4 (101 & 19) should be 9 and 10, respectively. This merely appears to be a typo in the latest draft.

Yes

Yes

Footnotes on P3 and P4 (101 & 19) should be 9 and 10, respectively. This merely appears to be a typo in the latest draft. There is confusion in interpretation of the Table 1 — When the voltages class of the contingency element and the monitored element are different (one is HV and the other is EHV), to which voltage class is the allowance for shedding of non-consequential load applied?. Please see additional comments provided for R2.

Yes

Yes

Individual

Tom Mielnik

MidAmerican Energy Company

MidAmerican recommends the words in all caps be added to M1 to indicate that each responsible entity must provide evidence that "it is maintaining System models WITHIN ITS RESPECTIVE AREA, using the latest…"

• MidAmerican commends the SDT for their hard work on this standard. MidAmerican does have comments about this requirement though. • MidAmerican recommends a minor editorial to 2.1.4. The subrequirement states that "To accomplish this, the sensitivity analysis in the Planning Assessment must vary one or more of the following conditions not already included in the studies, by a sufficient amount to…" The subrequirement as written is not clear whether the condition to be varied is to be one not included in the base studies or a condition that is not varied as part of the sensitivity studies. MidAmerican recommends that this subrequirement be changed as follows: "To accomplish this, the sensitivity analysis in the Planning Assessment must vary one or more of the following conditions FOR WHICH VARIATION IS not already included in the studies, by a sufficient amount to…" The words in caps are words that MidAmerican suggests are added to this part of requirement 2. • MidAmerican recommends that the SDT clarify section 2.4.1 and when load models considering induction motors are required. The clarification should add limits or thresholds to provide load models based on areas that have stability limits or issues and to loads of substation size and having dynamic characteristic capable of significantly impacting system damping. Areas that don't have large motors or stability issues should not be required to add unnecessary load modeling. • MidAmerican recommends that the SDT modify 2.6.2 by changing "to demonstrate that System changes do no impact the performance results in the study area" to "to demonstrate that System changes do not SIGNIFICANTLY impact the performance results in the study area." The word that is in all caps is added. 2.6.2 as written results in an unrealistic requirement to review every impact minor or large and determine which meets this item and which do not. The recommended change solves this problem. • MidAmerican recommends the data retention for R2 and M2 be revised to change "All" to "The". The word "All" is unnecessary and could encourage over-the-top compliance monitoring and enforcement. The revised data retention would read as follows: "THE Planning Assessments performed since…." The word in all caps is a word suggested to be added.

• MidAmerican commends the SDT for their hard work on this standard. MidAmerican does have comments about this requirement though. • MidAmerican recommends the data retention for R3 and M3 be revised to change "All" to "The". The word "All" is unnecessary and could encourage over-the-top compliance monitoring and enforcement. The revised data retention would read as follows: "THE studies

performed in support….” The word in all caps is a word suggested to be added.
• MidAmerican commends the SDT for their hard work on this standard. MidAmerican does have comments about this requirement though. • MidAmerican urges that the SDT delete 4.1.1 which requires that no generating unit shall pull out of synchronism during a stability analysis. A generating unit pulling out of synchronism does not necessarily result in thermal, voltage, or stability violations and does not necessarily result in cascading, instability, or uncontrolled separation. The loss of synchronism and tripping of a generator is in effect no different than tripping due to mechanical issues such as tube leaks. Present electric grid design that allows tripping for out-of-synchronism is reliable and secure. Adding the requirement that no unit may pull out of synchronism goes well beyond current grid design practices. • MidAmerican believes that 4.1.2 and 4.3.3 as written would require responsible entities in the industry to add additional modeling of relaying in dynamic stability models of our system. MidAmerican suggests that 4.3.3 be limited to transient swings on facilities 345 kV and above so as to limit this part of requirement 4 to those situations that are most likely to result in cascading. If the SDT determines not to add such a limitation, MidAmerican asks that the implementation time for R4 to be increased. MidAmerican believes that many responsible entities would need 3 years to add these relaying models to system stability models so that the fourth year additional transmission planning analysis in this respect is conducted. MidAmerican urges that the SDT increase the implementation time for R4 from 2 years to 4 years. (MidAmerican also made this comment under Question 11.) • 4.3.1 indicates that for stability contingency analysis shall be performed to “Simulate the removal of all elements that the Protection System and other automatic controls are expected to disconnect for each Contingency without operator intervention while also considering the impact of successful or unsuccessful high speed reclosing.” MidAmerican believes that it is over-kill to provide this as a general requirement as written. In such a case, such successful or unsuccessful high speed reclosing analysis conceivably would need to be performed for numerous unnecessary situations given the generally wide spread use of high speed reclosing on transmissions systems. MidAmerican urges the SDT to revise this requirement to only require the study of successful and unsuccessful high speed reclosing where high speed reclosing has been added to resolve a specific stability issue such as a breaker closing angle issue. • 4.5 MidAmerican believes that the extreme events that should be studied are the more credible ones. The credible events are those that the planner considers credible when considering both how severe the event is and how likely it is. For example, while a tornado might be the most severe event, its likelihood of hitting key facilities is low. It is more likely to have a severe thunderstorm that hits key facilities but causes less impact on the system. The planner should plan for the severe thunderstorm but perhaps should not plan for the tornado. MidAmerican recommends that 4.5 be revised to indicate that a list of those events that “produce more severe System impacts AND ARE MORE LIKELY” (the words in all caps are suggested words to be added) be studied as being more credible events. Then the purpose of the last sentence in 4.5 is clearer in that possible actions that reduce the likelihood or mitigate the consequences of the events shall be reviewed for those contingencies where likelihood in combination with consequences justify such evaluation. • MidAmerican recommends the data retention for R4 and M4 be revised to change “All” to “The”. The word “All” is unnecessary and could encourage over-the-top compliance monitoring and enforcement. The revised data retention would read as follows: “THE studies performed in support….” The word in all caps is a word suggested to be added.
• MidAmerican commends the SDT for their hard work on this standard. MidAmerican does have comments about this requirement though. • MidAmerican recommends the data retention for R5 and M5 be revised to change “All” to “The”. The word “All” is unnecessary and could encourage over-the-top compliance monitoring and enforcement. The revised data retention would read as follows: “THE documentation specifying the criteria since….” The word in all caps is a word suggested to be added.
• MidAmerican commends the SDT for their hard work on this standard. MidAmerican does have comments about this requirement though. • MidAmerican recommends the data retention for R6 and M6 be revised to change “All” to “The”. The word “All” is unnecessary and could encourage over-the-top compliance monitoring and enforcement. The revised data retention would read as follows: “THE studies performed in support….” The word in caps is a word suggested to be added.
• MidAmerican commends the SDT for their hard work on this standard. MidAmerican does have comments about this requirement though. • MidAmerican recommends the data retention for R7 and M7 be revised to delete “All”. The word “All” is unnecessary and could encourage over-the-top compliance monitoring and enforcement. The revised data retention would read as follows: “The current, in force agreement on identified responsibilities, as well as such agreements in force….”
• MidAmerican commends the SDT for their hard work on this standard. MidAmerican does have comments about this requirement though. • MidAmerican asks that the SDT revise R8 to limit the need to provide the Planning Assessment as follows “adjacent Planning Coordinators and ADJACENT Transmission Planners and to any REGISTERED functional entity…” The words in all caps are words that MidAmerican suggests are added to the requirement to clarify that the word adjacent also applies to Transmission Planners and to clarify that the functional entity must be registered in order for the requirement to provide the Planning Assessment to apply. • MidAmerican asks that the low VSL for R8 be revised to delete the word “any” from the requirement so that the requirement will read “The responsible entity failed to distribute the results of its Planning Assessment to one of its adjacent Transmission Planners….”
No
The SDT is to be commended for working on the Year One definition, however, MidAmerican continues

to be concerned that if the standard is adopted with the Year One definition as written, it is incompatible with the eastern interconnection wide ERAG model process. The definition as currently provided in the draft standard states that Year One of analysis should begin 12-18 months from the end of the current calendar year. This contradicts the time frames that models are currently made available in the MRO as a result of the process for building models through the ERAG. For example, the models developed through the MRO and ERAG model building process in 2009 include cases for the years 2010, 2011, 2015, and 2020. According to the definition of Year One, the 2011 cases in the 2009 series models would be representative of Year One during the 2009 calendar year. However the ERAG models are not provided until late 2009, and some data sets may not be available until early 2010. With this Year One definition, there would be limited or no time where the ERAG model series would include cases representing Year One as defined in the draft standard. MidAmerican urges the SDT to delete the Year One definition altogether. Since the development of regional models are tied to ERAG models and since ERAG model timing is set at the interconnection-wide level, it is likely that nearly all Transmission Planners and Planning Coordinators are working with similar models that are available at similar times. It seems to MidAmerican that this detail on what Year One is can be easily controlled interconnection-wide through the ERAG and which models they provide when. However, if the SDT believes that the Year One definition is necessary, MidAmerican urges the SDT to revised the Year One definition from stating “12-18 months from the end of the current calendar year” to stating “0-18 months from the end of the current calendar year”. This revised definition would be at least compatible with the current ERAG process.

No

• The SDT should be commended for the changes that were made to Table 1. However, MidAmerican does recommend a few editorial changes. On page 16 under the Steady State and Stability heading is item d. Simulate Normal Clearing unless otherwise specified. This is also listed as footnote 2 to the table. MidAmerican recommends that item d under the Steady State and Stability heading be deleted. • Why is there a footnote 1 indicator to note j. under Stability only? MidAmerican suggests that this footnote 1 indicator be deleted. • Item i. under Steady State only states that “the response of voltage sensitive Load that is disconnected form the System by end-user equipment” is not to be used to meet steady state requirements. However, the non-consequential load loss says yes meaning it is allowed for some events in the table and non-consequential load loss definition includes the “response of voltage sensitive Load that is disconnected from the System by end-user equipment.” This seems to be a direct contradiction. MidAmerican suggest that Item i. under steady state only be deleted. • MidAmerican does not understand why there is a footnote 19 indicator for P3 and P5 – EHV in the table when no footnote 19 exists. Perhaps the SDT meant footnotes 1 and 9 but MidAmerican recommends that this be corrected. • MidAmerican does not understand why there is a footnote 12 indicator for Item 2 a and 2 b. on page 19. Perhaps the SDT meant footnotes 1 and 2 apply but MidAmerican recommends that this be corrected.

No

• MidAmerican commends the SDT for changes that improved the Implementation Plan, however, MidAmerican does have a comment about the plan. MidAmerican urges the SDT to modify the implementation plan where it is indicated that any “entity which cannot fully implement their Corrective Action Plan to eliminate the need to trip Non-Consequential Load or curtail Firm Transmission Service for these performance elements by that date shall self report themselves as being unable to meet the performance requirements of the Reliability Standard.” This is essentially requiring an entity to self report for failing to build facilities. The Energy Policy Act of 2005 did not give FERC and therefore, NERC, the authority to require construction of electric facilities. Therefore, this implementation plan is implying an authority that is not given to FERC or NERC. This provision of the implementation plan should be completely deleted from the standard, the provision to state that one is non-compliant for this should be deleted from the standard, or there should be a statement that such a requirement is subject to limitations of the Energy Policy Act of 2005. This is a deal-killer for MidAmerican with regard to voting on this standard. MidAmerican believes that 4.1.2 and 4.3.3 as written would require responsible entities in the industry to add additional modeling of relaying in dynamic stability models of our system. MidAmerican suggests that 4.3.3 be limited to transient swings on facilities 345 kV and above so as to limit this part of requirement 4 to those situations that are most likely to result in cascading. If the SDT determines not to add such a limitation, MidAmerican asks that the implementation time for R4 to be increased. MidAmerican believes that many responsible entities would need 3 years to add these relaying models to system stability models so that the fourth year additional transmission planning analysis in this respect is conducted. MidAmerican urges that the SDT increase the implementation time for R4 from 2 years to 4 years. (MidAmerican may this comment in response to Question 4 as well.)

No

• MidAmerican commends the SDT for their hard work on this standard. Although MidAmerican does not believe that the standard is ready to go to ballot unless all our comments to the other questions and those below are resolved. • MidAmerican urges the SDT to modify the effective date where it is indicated that any “entity that cannot fully implement its Corrective Action Plan to eliminate the need to trip Non-Consequential Load or curtail Firm Transmission Service for the above listed performance elements within 60 calendar months of the compliance date for Requirements R2 through R4 shall self report itself as being unable to meet the performance requirements of this Reliability Standard.” This is

essentially requiring an entity to self report for failing to build facilities. The Energy Policy Act of 2005 did not give FERC and therefore, NERC, the authority to require construction of electric facilities. Therefore, this implementation plan is implying an authority that is not given to FERC or NERC. This provision of the effective date should be completely deleted from the standard, the provision to state that one is non-compliant for this should be deleted from the standard, or there should be a statement that such a requirement is subject to limitations of the Energy Policy Act of 2005. • MidAmerican also recommends a minor editorial change to the "Effective Date" portion of the standard. In the bullets, one bullet indicates "P2-1, P2-2 (above 300 kV)". It is not clear that (above 300 KV) is meant to apply to both P2-1 and P2-2. MidAmerican recommends that this bullet be changed to state, "P2-1 and P2-2".

Individual

Pete Jones

Puget Sound Energy, Inc.

R1.1.4 could be interpreted that the standard requires forecasting reactive load. However, most entities forecast demand (MW) and apply a power factor(s) to calculate reactive load. Therefore, please change "real and reactive load forecast" to "forecasted demand and power factor" so it is clear that forecasting reactive load is not required. For R1.1.5 we suggest changing the wording from "Known commitments for Firm Transmission Service and Interchange" to "Known commitments for Firm Transmission Service or Interchange". It is difficult to distinguish between the two in future cases where not all contractual arrangements are known.

The wording in R2.1 is unclear as to whether new annual studies are required each year or whether qualified past studies are acceptable if no changes have been made. R2 reads "This Planning Assessment shall use current or past studies…", while R2.1 implies current studies must be used but can be supplemented by past studies. We suggest changing the wording from "The Near-Term Transmission Planning Horizon portion of the steady state analysis shall be assessed annually and be supported by the following annual current studies, supplemented with qualified past studies…" to "The Near-Term Transmission Planning Horizon portion of the steady state analysis shall be assessed annually and be supported by the following annual current studies, or qualified past studies…" The wording in R2.1.1 is unclear as to whether two studies are required or only one. Should it read "year one or year two or year 5" as opposed to "year 1 or year 2 and year 5?" The language in 2.3, indicating that short circuit analysis be studied as part a BES transmission planning assessment should not be required. The effects of the failure of over-stressed breakers are already included in the Events listed in Table 1. Examples would include P2-3 and P2-4 (Internal Breaker Fault), and P4 (Stuck Breaker while attempting to clear a fault). The addition of short circuit analysis study does not add any additional reliability information. It is unclear if the drafting team intended the sensitivity studies identified by the bullets in R2.1.4 to align with the sensitivity studies identified by the bullets in R2.4.3. Both are for Near-Term studies but for steady state and stability respectively. If the intent is that they align, the wording should be modified to be the same. Also, similar to R1.1.4 above, R2.1.4 could be interpreted that the standard requires forecasting reactive load. However, most entities forecast demand (MW) and apply a power factor(s) to calculate reactive load. Therefore, please change "real and reactive load forecast" to "forecasted demand and power factor" so it is clear that forecasting reactive load is not required. R2.9 should be deleted (or not required for local load loss). The SDT indicated in the response to 'Consideration of Comments on 3rd Draft of Standard TPL-001-1' that the requirement R2.9 is intended to "contribute to an open and transparent Transmission planning for peer review." And if the 'largest Consequential Load Loss' is a local (intra-network) event? Would the documentation of such an event contribute to reliability in any way?

R3.41 requires clarification. With respect to these "Contingencies on adjacent systems," the responsibility of listing and analyzing these events needs to be clarified. Should the event simulation be the responsibility of the 'neighboring' system (where the event would occur) or the adjacent system that may feel the impact of this event? Per the developed rationale from R3.4, the neighboring system may determine that a particular event is 'less severe' and hence not studied, even though this event may potentially impact a neighbor. Further, for these "Contingencies on adjacent systems" that result in system performance outside one's own operating limits, it is unclear who is responsible for mitigating these contingencies. It is potentially awkward in that one entity may be planning another entity's system improvements.

Requirements R4.4 and R4.5 appear to be related to and set the limits for R4.1 and R4.2 respectively. Suggest moving both Requirements R4.4 and R4.5 into R4.1 and R4.2, allowing these sub-Requirements (R4.4 and 4.5) to be deleted. It is unclear from the wording in R4.3 whether the Contingency analyses need to be performed for all planning events or the more severe events referenced in R4.1 and R4.2. Please clarify the wording of R4.3. R4.41 requires clarification. With respect to these "Contingencies on adjacent systems," the responsibility of listing and analyzing these events needs to be clarified. Should the event simulation be the responsibility of the 'neighboring' system (where the event would occur) or the adjacent system that may feel the impact of this event? Per the developed rationale from R4.4, the neighboring system may determine that a particular event is 'less severe' and hence not studied, even though this event may potentially impact a neighbor. Further, for these "Contingencies on adjacent systems" that result in system performance outside one's own operating limits, it is unclear who is responsible for mitigating these contingencies. It is potentially awkward in that one entity may be planning another entity's system improvements.

As worded R5 is unclear. We interpret R5 to require entities to specify minimum voltage levels that must not be exceeded for more than a specific period of time. High transient voltages are typically not a problem. We suggest changing the second sentence of R5 to read: “For transient voltage response, the criteria shall at a minimum, specify a voltage level and a maximum length of time that transient voltage may remain below that level.”

Clarity is needed in the phrase functional entity in R8. Is this referring to the entities identified in the Functional Model or something else?

No

The definition of Non-Consequential Load is in need of clarification. As written, it could be interpreted that load that is disconnected from the System by end-user equipment would not be allowed for certain contingencies. Suggested revision to the language follows Non-Interruptible Load loss other than: • Consequential Load Loss • the response of voltage sensitive Load • Load that is disconnected from the System by end-user equipment. This version uses the same wording but clarifies that the term “other than” applies to all three things.

No

As currently drafted, several outages identified in Categories P2, P4, and P5 appear to potentially result in the same elements being removed from service, so therefore the same event, even though the initiating event is different. We believe that the drafting team needs to conduct a workshop prior to balloting to educate the industry on what outages are required to be simulated for which Categories. Additionally there are footnotes numbered 12, 19, and 101, which do not relate to any foot note in the document, and some other footnotes seem to be misplaced. We encourage the drafting team to carefully review all footnotes to ensure accuracy prior to balloting this standard.

No

Revisions are necessary to the Effective Date language to clarify the 60 calendar months language for Corrective Action Plans. It is unclear if the entity has five years from the day they identify the problem or five years from the modeled year or five years from the effective date of this standard.

No

Based on the unclear or ambiguous language identified in the comments above as well as the confusion noted in the Table 1 regarding outages and footnotes, we believe modifications are necessary prior to taking this standard to ballot.

Individual

Baj Agrawal

Arizona Public Service Co.

R2.6.2: The wording “study shall not include” is confusing since it refers to the past studies.

It is not clear who this applies to. Is it both TP and PC individually, or one of the two, or both jointly?

No

The definition of Non-Consequential Load is confusing. It is not clear whether the response of voltage sensitive load and the load that is disconnected by the end user is included or not included. It is suggested that all items that are excluded be itemized and that there be no ambiguity.

No

Note a: It would be helpful if there was a clear understanding of what constitutes voltage instability for the purpose of this standard. Is TP expected to have its own criteria for voltage stability? Are the dynamic and angle stabilities intentionally excluded? P3 refers to foot note 19 but there is no foot note 19. P4 refers to foot note 11, but the foot note does not seem to be applicable. Foot notes in second to last column of the table are confusing.

Group

SRC of ISO/RTO

The PC may begin model building using provisions from tariff or agreements such as its Transmission Owners agreement. While the data may be consistent with that provided in MOD 10 and 12, there may not be a direct correllation. The following wording is suggested for R1. R1. Each Transmission Planner and Planner Coordinator shall maintain System Models within its respective area for performing the studies needed to complete its Planning Assessment. The models shall reflect data consistent with that

provided in accordance with the MOD-010 and MOD-012 standards and/or data that is provided in accordance with tariff or transmission owner agreements. The models may be supplemented by other sources as needed including items represented in Corrective Action Plans, and shall represent projected System conditions. AESO does not comment on VSLs or VRFs.

Under 2.1.4- It should be made clear that the sensitivity findings do not obligate the PC or TP to establish Corrective Action Plans to address any needs identified in the sensitivity cases. Specifically, we do not believe the sentence "To accomplish this, the sensitivity analysis in the Planning Assesment must vary one or more of the following conditions not already included in the studies by a sufficient amount to stress the System within a range of credible conditions that demonstrate a measurable change in performance." is measurable or necessary. The first part of 2.1.4 already stipulates sufficient details for the responsible entity to conduct sensitivity analysis including the parameters to be varied. Adding the "how-to-conduct" requirement is overly prescriptive and unnecessary, and the condition for "that demonstrate a measurable change in performance" is not measurable. It lacks a definitive target or direction for the responsible entity to determine (a) what conditions need to be attained to demonstrate a measurable change in performance, (b) what constitutes "measurable change in performance", and (c) what follow-up or corrective actions are needed to address the adverse performance as a result of stressing the system beyond the forecast conditions. Under 2.1.4 and 2.4.3 "sufficient" and "measurable" are too vague and hard to quantify. This may require an auditor's opinion. Suggest removing at least the word "sufficient" from the requirements. Under 2.3- Some PCs do not perform short circuit analysis. Is it the intent of the SDT to make the analysis standardized over a footprint? Alternatively, this could be a TP only responsibility. Further, Part 2.3 stipulates the short-circuit assessment requirements for the near-term horizon. Unlike its steady-state and stability counterparts, there are no requirements stipulated for short-circuit analysis for the long-term horizon. Is this intentional? If so, we are unable to identify the rationale for this decision. If not, we suggest revising Part 2.3 to: "The short circuit analysis portion of the Planning Assessment shall be conducted annually addressing the near-term and long-term Transmission Planning Horizons and can be supported by...". Under 2.7.2, it is not clear how an entity can provide rational for why actions are not necessary. If actions are not necessary, then no rationalizing is needed. Further, as stated above, corrective action plans should not be required for sensitivity studies. R2.7.2 should be struck. We propose to remove R2.9, since there is not a reliability need for this information and it is unnecessary. AESO does not comment on VSLs or VRFs.

R3 has become more of a "how to" requirement than a "what" requirement as illustrated below. (a) Part 3.3 is overly prescriptive. A requirement that says contingency analysis shall be performed which reflect proper operation of all Protection Systems and actions of all automatic devices would suffice. If necessary, some examples such as those listed in Part 3.3.4 may be added as illustration. (b) The parts that ask for creating a list of continencies and having rationale available as supporting information, in Part 3.4 for example, are overly prescriptive and unnecessary. These are documentation requirements, not reliability requirements. If one ask the question: Will reliability be adversely affected if the responsible entity failed to document the list and teh rationale for choosing the list? and the answer is no, then the requirement does not rise up to a reliability standard. To meet the intent of Part 3.4, a simple requirement that asks the responsible entity to demonstrate acceptable system performance for the applicable planning event in Table 1 would suffice. Table 1 already stipulates the event that must be considered in the analysis. We do not see the need to go into such details as "some events are expected to produce more severe impacts...", and the need to ask the planners to create a list of these more impactive contingencies for subsequent evaluation. Similar observation is made for Part 3.5 on the extreme event list and for Part 3.6 for the amount of generation loss, and the rationale. AESO does not comment on VSLs or VRFs>

1. Part 4.3: Similar comments as for Part 3.3 (i.e. overly prescriptive, etc...) provided under question 3 also apply here. 2. Parts 4.4 and 4.5: Similar comments on Part 3.4 and 3.5 provided under question 3 also apply here. AESO does not comment on VSLs or VRFs.

None

None

None

Under R8 it should be made clear that a TP should not be required to send their assessment to adjacent PCs and that PCs should not be required to send their assessments to TPs not in their footprint. Under R8.1: If a recipient of the Planning Assessment results provides documented comments on the results, the respective Planning Coordinator or Transmission Planner shall provide a documented response to that recipient within 90 calendar days of receipt of those comments. This should not be required until the Assessment is final and could be an administrative intense task. The following wording is suggested for R8: R8. Each Planning Coordinator shall distribute its planning assessment results to adjacent Planning Coordinators and to any Planning Coordinator who indicates a reliability related need for the planning assessment results. Each Transmission Planner shall distribute its planning assessment results to adjacent Transmission Planners and to any other Transmission Planner who indicates they have a reliability need for the planning assessment results. R8.1 If a recipient of the Planning Assessment final results provides documented comments on the results, the respective Planning Coordinator or Transmission Planner shall provide a documented response to such recipient within 90 calendar days of receipt of those comments. AESO does not comment on VSLs or VRFs.

No

In note b of the steady state and stability section of Table 1, consequential generation loss is referenced; however, there is no definition of such. A definition of consequential generation loss that is defined similar to "consequential load loss" should be added. The definition for "Bus Tie Breaker" should be revised to clarify whether a breaker in a standard ring bus or breaker and one-half scheme should be considered a "bus tie breaker". "year one" definition changes have clarified what is intended. AESO does not comment on VSLs or VRFs.

No

Table 1 should appear right after the requirements and before the VSLs. AESO does not comment on VSLs or VRFs.

Yes

No

The proposed changes and comments need to be adequately addressed before any ballot.

Individual

Jay Teixeira

ERCOT ISO

* This requirement seems to be embedding information that should be contained in the MOD standards. Does this present double jeopardy? This requirement, measurement, and VSL are all about maintaining models – a MOD standard revision may need to be included or recommended to allow the focus of the TPL standard to be on transmission planning studies, not modeling. * Requirement 1.1.2 should read “all known outages of generation or transmission facilities with a duration of at least six months as appropriate for the timeframe represented by the particular model” * The moderate VSL category states “the System model did not use” – this is confusing as the model does not do anything. It should contain the latest data. We also want to ensure this is not implying that the studies must use the latest data – data changes continuously, and a study may never be complete if the data must be continuously updated. * Will any agreements made in R7 override the “each TP and PC” requirement? To clarify this, the requirement could be rephrased: "In accordance to the responsibilities assigned in R7, the responsible Transmission Planners and Planning Coordinators shall maintain System models for performing the studies needed to complete the required Planning Assessments. The models shall contain the latest data consistent with MOD-010 and MOD-012… "

* Requirement R2 (and throughout the standard) – What is meant by “its portion of the BES”? Will any agreements made in R7 override the “each TP and PC” requirement? To clarify this, the requirement could be rephrased: "In accordance to the responsibilities assigned in R7, the responsible Transmission Planners and Planning Coordinators shall prepare…" * Requirement 2.1.3: This is not needed if these outages are properly built into the model. * Requirement 2.1.4: This requirement applies to 2.1.1 and 2.1.2. Why does it omit 2.1.3? Should it be referring to 2.1.3 for P1 contingencies? * How will 2.1.4 be proven? What is the definition of “stress” in this context and what defines “sufficient” stress? What is “measureable change”? What is the expected response to the results of this analysis? For example, if the load forecast must double to “sufficiently” stress the system, is the expectation that facilities should be planned to respond to the stress? * Requirement 2.1.5: Including the spare equipment strategy will be difficult for a PC that doesn’t own or manage the transmission equipment or the strategies. But if this inclusion is only done by a TP, the benefits of coordinating with other TPs may not be realized. * Requirement 2.2: If each entity is responsible to study the System peak Load of its area, but a PC is responsible for multiple TP systems, then what System Peak Load is the PC responsible to study – a model that includes the non-coincident peaks of all of the TP systems for which it is responsible or the coincident peak demand across the whole system for which the PC is responsible? * Requirements 2.4.1 and 2.4.2: These appear to have inconsistent references to defined terms. Should this be consistent? The NERC glossary states: "Off-Peak: Those hours or other periods defined by NAESB business practices, contract, agreements, or guides as periods of lower electrical demand." "On-Peak: Those hours or other periods defined by NAESB business practices, contract, agreements, or guides as periods of higher electrical demand." "System: A combination of generation, transmission, and distribution components." * Requirement 2.6.2: Reads as if a change is being made to an existing study. It is confusing. Possibly restate: "2.6.2 For steady state, short circuit, or stability analysis: previous studies can be used only if a material change to the system has not occurred or if a change that did occur does not impact the study area." * Requirement 2.7: in each case throughout the standard, replace “planning events” with “planning events as defined in Table 1” and “extreme events” with “extreme events as defined in Table 1” * Requirement 2.7.2: It would be good to clearly state here or in 2.1.4 that results from stressing the system do not always need to be resolved.

* Will any agreements made in R7 override the “each TP and PC” requirement? To clarify this, the requirement could be rephrased: "In accordance to the responsibilities assigned in R7, the responsible Transmission Planners and Planning Coordinators shall perform…. " * Section 3.1 and 3.4 appear to be related. Confusing references can be eliminated by combining them and removing 3.4 as follows: "3.1. Those planning events in Table 1 that are expected to produce more severe System impacts on its portion of the BES shall be identified and studies shall be performed for planning events to determine whether the BES meets the performance requirements in Table 1. A list of those Contingencies and the

rationale for those Contingencies selected for evaluation shall be available as supporting information". * Similarly, Section 3.2 and 3.5 appear to be related. Confusing references can be eliminated by combining them and removing 3.5: "3.2. Those extreme events in Table 1 that are expected to produce more severe System impacts shall be identified and studies shall be performed to assess the impact of the extreme events. If the analysis concludes there are cascading outages caused by the occurrence of extreme events, an evaluation of possible actions designed to reduce the likelihood or mitigate the consequences and adverse impacts of the event(s) shall be conducted A list of the events and the rationale for those Contingencies selected for evaluation shall be available as supporting information."

* Will any agreements made in R7 override the “each TP and PC” requirement? To clarify this, the requirement could be rephrased: "In accordance to the responsibilities assigned in R7, the responsible Transmission Planners and Planning Coordinators shall perform…. " * Similar to comments provided in R3, Section 4.1 and 4.4 appear to be related. Confusing references can be eliminated by combining them and removing 4.4: "4.1. Those planning events in Table 1that are expected to produce more severe System impacts on its portion of the BES, shall be identified and studies shall be performed for planning events to determine whether the BES meets the performance requirements in Table 1. A list of those Contingencies and the rationale for those Contingencies selected for evaluation shall be available as supporting information. " * Similarly, Section 4.2 and 4.5 appear to be related. Confusing references can be eliminated by combining them and removing 4.5: "4.2. Those extreme events in Table 1 that are expected to produce more severe System impacts shall be identified and studies shall be performed to assess the impact of the extreme events. If the analysis concludes there are cascading outages caused by the occurrence of extreme events, an evaluation of possible actions designed to reduce the likelihood or mitigate the consequences of the event(s) shall be conducted. A list of those events and the rationale for those Contingencies selected for evaluation shall be available as supporting information. "

None.

None.

* Will any agreements made in R7 override the “each TP and PC” requirement? Would it be appropriate to say: " Each Planning Coordinator, in conjunction with each of its Transmission Planners, shall determine and identify each entity’s individual and joint responsibilities for performing the required studies and assessments. " * What kind of documentation will be acceptable to demonstrate “each entity’s individual and joint responsibilities”?

* Will any agreements made in R7 override the “each TP and PC” requirement? To clarify this, the requirement could be rephrased: "In accordance to the responsibilities assigned in R7, the responsible Transmission Planners and Planning Coordinators shall distribute…. " * Include “within the interconnection” such as: "… distribute its Planning Assessment results to adjacent Planning Coordinators and Transmission Planners within the interconnection and to any functional entity that indicates a reliability related need for the Planning Assessment results" * Should “reliability related need” be defined? This appears in multiple standards.

No

* Planning horizon is not formally defined but used many times throughout the standards. If there is a need to define the Near- and Long-term Transmission Planning Horizons, then the transmission planning horizon itself also should be defined. Additional confusion on this issue is the use of Long-term Planning as a planning horizon of one year or longer, also not formally defined. We finally found this referenced in the NERC Drafting Team guideline, which is not an obvious place to look for a definition. * Year One is only used two times – once to define Near-term Transmission Planning Horizon and once in the TPL standard. If this is not used throughout the NERC standards, it should not be defined. As an alternative, the transmission planning horizon could be formally defined, with Near- and Long-term Transmission Planning Horizons defined as subsets of the main definition. This would eliminate the need for a formal definition of Year One. If Year One stays as a new definition, it seems to be too broad, potentially allowing for omission of a peak season in the study. For example, if Year One is the period 12 to 18 months from the end of 2009, then Year One is currently 2011. Why is the year 2010 not considered to be Year One. * Non-Consequential Load Loss is confusing – due to the base word “consequence”. Consequential Load Loss is intended to be a load loss that is a result, or consequence, of the isolation. Non-Consequential Load Loss seems intended to imply it was not a consequence of the isolation. Although the standard attempts to define the term, this definition does not agree with the common English definition of the term. “Non-consequential” (or “Inconsequential”) implies that the load loss is unimportant, minor or insignificant. This is the opposite intent of how this term is used in the standard, where it is used to mean the load that it is unacceptable to lose for a particular event. Alternatives could be “Direct Load loss” and “Indirect Load loss” to replace the two concepts that are included as Consequential and Non-Consequential respectively.

No

The references to the footnotes need commas – there are several references to footnote 19 and at least one to footnote 101.

No

* The implementation plan references revisions to the MOD standards. Should the team submit a SAR for the revision of the MOD standards to ensure TPL needs are considered? As stated in the comments for R1 – if the MOD standards are properly updated, there is no need to state MOD requirements in TPL-001. * Definition comments from Question 9 apply to implementation plan. * The Implementation

Plan references R1 and R8 to be effective within 12 months of regulatory approval. R8 per the implementation plan state that the responsibilities of the PC and TP will be defined. This appears to be R7 of Draft 4 and the requirement language does not align. Conversely, the Effective Date should be revised to ensure the references to the requirements align properly. As written it states the assessment should be available before the assessment is complete. * During the 24 month transition period, any entity that can prove compliance with the revised TPL-001 should not have to prove compliance to the old TPL-001 through TPL-004. * The SAR should state that TPL-005 and TPL-006 are to be retired. The only place this has been found is within the implementation plan. It is not an intuitive place to find this information.

No

ERCOT recognizes that much effort has been put into this standard. However, a lot of effort will be required to ensure documentation for the standard is sufficient, yet the benefit of the additional documentation effort required is marginal. For a standard like this, stating every possible issue and studying every possible scenario is not realistic and potentially will lead to complacency – very little planning outside the scope of this standard will be done regardless of the system needs.

Group

Northeast Power Coordinating Council--RSC

Requirement 1.1.1: Replace “Existing Facilities” with “Existing Facilities and Resources” so that it will be a lead in to the changes proposed for 1.1.6. Requirement 1.1.2 –Consideration of known outages should not be included in a planning assessment. Such outages are coordinated by operations and are only permitted if the system can be operated reliably, where assumptions may be different than those used in planning assessments. Including this as a requirement effectively means that the system must be designed to withstand three outages. In those cases where safety, or reliability, or both are a concern by long duration outages (e.g., more than one year), temporary Operating Protocols are implemented to mitigate their impact. During known outages for equipment upgrades or repairs there may be some increased exposure to load loss, which should be recognized as an acceptable exposure. If this requirement must be kept, the outages with duration in excess of a year should be considered, rather than those of six months. This type of event is sufficiently addressed within the existing testing requirements (P6) and therefore should be eliminated, beyond that such outages are reviewed and approved on an operational basis and should not be included in a planning standard. Known or “known planned” outages will not necessarily fall in the operations timeframe, and as such may not be subject to approval by operations departments. This is especially so given the fact that the earliest start date for Year One is 12 months beyond the current year. Requirement 1.1.5 – Interchange. Interchange usually refers to non-firm short-term economic transactions that often take place between Balancing Authorities to take advantage of their respective resources surplus (i.e. not needed for local reliability.) However, such transactions should not be modeled in the base case system representation, unless their neutrality to system reliability has been clearly demonstrated. For example, economic interchanges between New England and PJM through New York have an impact on the New York transmission system that may, at times, pose reliability constraints on the operation of the New York system. Requirement 1.1.6 – what are “resources required to supply load” – gens, HVDC, tie lines? Resources may not be exclusively sources supplying load. The focus should be on changes to resources. “Resources required to supply Load” should be replaced with New planned Resources and changes to existing Resources”. NPCC suggests NERC develops a definition for “resource” or use the following definition found in NPCC Glossary of Terms, Document A-7: Resource — Resource refers to the total contributions provided by supply-side and demand-side facilities and/or actions. Supply-side facilities include utility and non-utility generation and purchases from neighboring systems. Demand-side facilities include measures for reducing load, such as conservation, demand management, and interruptible load. A Requirement 1.2 should be added to address the base assumptions for sensitivity and other issues’ requirements. For Measure M1: Elaborate on “…hard copy format…”. Does that entail maintaining a hard copy of the system model? It is impractical to retain system model information in a hard copy format. This provision should be dropped.

Requirement R2 (second line): “ This Planning Assessment shall use current or past studies,…” should be replaced with “This Planning Assessment shall use current studies or qualified past studies as indicated in Requirement R2, part 2.6,…” Requirements 2.1, 2.2, 2.3, and 2.4--As written, are not clear. It is suggested to revise the language as follows: “The Near-Term Transmission Planning Horizon portion of the steady state analysis shall be assessed annually and be supported by current studies or qualified past studies as indicated in Requirement R2, part 2.6. The following studies are required:” Requirement 2.1.2 – The use of the term “off peak” is a concern. The definition for this term is not provided, and can be read to say that it is any load level less than peak. This does not provide enough clarity to guide the required assessments. Requirement 2.1.3: It must be clarified that the reference to outages as listed in Requirement R1, part 1.1.2 must be limited to Planning Horizon. Refer to Requirement 1.1.2 in the response to Question 1. Requirement 2.1.4: Consistent with the suggestion made for Requirment 1.1.2 remove the last bulleted item in the list under Requirement 2.1.4 “Duration or timing of planned Transmission outages.” The standard is referring to requirements for sensitivity without a reference to base cases. Refer to Comment on Proposal to add an item 1.2 Requirement 2.1.5: It needs to be clear that this is only an assessment, not a solution. Actions such as out of merit dispatch, operational restrictions, System reconfiguration can be part of a Corrective Action Plan if the System cannot meet performance requirements without the Facility in service. It can be reworded as –

"…an assessment of the impact of this possible unavailability on System performance shall be performed". Requirement 2.3: The requirement does not indicate a year to study. This should be modified to state that it is up to the Planner to determine the year of study within the Near Term Transmission Planning Horizon. Requirement 2.4.2: Same as 2.1.2 Requirement 2.4.3: Refer to the Comment for Question 1 to add a Requirement 1.2 Requirement 2.5: Revise language as follows: "…be supported by current studies or qualified past studies as indicated in Requirement R2, part 2.6." Requirement 2.7 – NPCC suggests changing the word "run" to "condition" so the wording will read "Corrective Action Plan(s) do not need to be developed solely to meet the performance requirements for a single sensitivity condition in accordance with Requirements R2, parts 2.1.4 and 2.4.3." Requirement 2.9 – It should not be necessary to identify the largest consequential load loss if the TPL standard does not limit the size of the consequential load loss. This requirement should be deleted. If it remains, it must be made clear that it be applicable only to Year One or Year Two.
Requirement 3.2: This requirement should be deleted. The requirements for sensitivity analysis already address issues going beyond what is expected to meet reliability requirements. Requiring extreme event analysis is requiring two layers of event analysis beyond what is required and there is no requirement for corrective action if anything is identified. Therefore Extreme Event analysis no longer provides any value in this standard. Requirement 3.3.3: This requirement is already addressed in NERC Standard PRC-023 and reflected in the facility's rating and should be removed from TPL-001-1 since the standard already requires observance of facility ratings. Relay Loadability is handled in greater detail (as it should be) under the proposed PRC-023 standard, so no reference should be made in this standard, thereby introducing a double jeopardy issue. Requirement 3.4: It is strongly suggested that this requirement is made a sub-bullet of Requirement 3.1 to keep the related requirements together. Requirements 3.5--This requirement needs clarification as to what is specifically required for the "evaluation of possible actions." The list associated with Requirement 2. part 2.7.1 provides examples of possible actions, and leaving "evaluation" undefined offers the Planning Coordinator and Transmission Planner the leeway to use judgment in making their evaluations. Requirement 3.5 – NPCC strongly suggests making this a sub-bullet of Requirement 3.2 to keep the related requirements together. Provide clarification as to what is specifically required for the "evaluation of possible actions". Requirement 3.6 –Currently this requirement is not clear, and does not address any reliability issue. Clarification should be added that the "consequential generation" loss be excluded from the amount documented. Without the clarification, the Requirement should be deleted.
Requirement 4.1.1: This should be revised to only be applicable to generators interconnected to the BES. This may need an implementation period as not all existing units are interconnected in accordance with the standard as proposed. As written this applies to small generators and doesn't necessarily reflect reliability of the network. 20 MW is a recommended generator minimum size. Requirement 4.1.2: Simulating the tripping of a generator that pulls out of synchronism is presently not modeled and will require an implementation period. Requirement 4.2: This requirement should be deleted. The requirements for sensitivity analysis already address issues going beyond what is expected to meet reliability requirements. Requiring extreme event analysis is requiring two layers of event analysis beyond what is required and there is no requirement for corrective action if anything is identified. Therefore Extreme Event analysis no longer provides any value in this standard. Requirement 4.4 – NPCC strongly suggests making this requirement a sub-bullet of Requirement 4.1 to keep the related requirements together. Requirement 4.5 – NPCC strongly suggests making this requirement a sub-bullet of Requirement 4.2 to keep the related requirements together. This requirement needs clarification as to what is specifically required for the "evaluation of possible actions." The list associated with Requirement 2. part 2.7.1 provides examples of possible actions, and leaving "evaluation" undefined offers the Planning Coordinator and Transmission Planner the leeway to use judgment in making their evaluations.
Voltage criteria are addressed by the VAR standards. Including a voltage requirement in the planning standards appears to be creating a double-jeopardy exposure. Also, implementing transient voltage criteria will require time. Replace "Each Transmission Planner and Planning Coordinator…" with "Each Transmission Planner OR Planning Coordinator…".
No comments.
No comments.
Requirements R8, 8.1, and Measure M8--There are a number of concerns with these requirements. There needs to be a specified time period upon which comments must be received. As written, there is no sunset on when comments may be made and therefore they must be responded to. Additionally, it is not clear if the 90-day response time may extend beyond the end of the year to maintain and maintain annual compliance. R8 also causes redundancy of distribution of assessments. There is no statute of limitation for comments. There is also potential conflict with the deadline for completing a study and when comments may be submitted (e.g. comments are received the day before the study is to be completed.) These issues must be addressed. This standard should not be used to remedy deficiencies in meeting the requirements of FERC Order 890. Therefore these should be deleted. If this requirement is retained the following revision to Requirement 8 is suggested: "Each Planning Coordinator and Transmission Planner shall distribute its Planning Assessment results to their adjacent Planning Coordinators and Transmission Planners, respectively, and to the functional entities that the Planning Coordinator and Transmission Planner recognize as having a reliability need for the Planning Assessment results." Compliance: 1.4 Data Retention: The Transmission Planner and the Planning

Coordinator may not be using the same software. If both are required to store the data, do they both have to have the software to use the data? Can this be changed to an 'or' such that one of them must retain the data and it can be up to them as to who it is? 1.4 – Data Retention, last bullet - this relates back to Requirements R8, 8.1, and Measure M8. "Three calendar years of the notifications" seems to be an unnecessary requirement, and should be deleted. As an alternative to deletion, the implementation of a rolling three calendar years of notifications could be considered.

No

Definitions – Year One – This still defines Year One as both a particular year AND a window. It cannot be both. Suggest rewording the second sentence to read: "This is further defined as beginning 12-18 months from the end of the current year." As currently defined Non-Consequential Load Loss could allow widespread or cascading motor stall. The language in the definition cannot be this generic. The text is broad enough that it could allow a voltage collapse. The definition is incompatible with Table 1a (BES Transmission voltage instability, cascading outages, and uncontrolled islanding shall not occur). The definition for the non-consequential load loss combined with Table 1 would prohibit any customer from tripping its own load for contingencies that indicate 'no' in the non-consequential load loss column. This is not practical and appears to be an unintended consequence of the change in definition. This requires a change in the definition or the table. It is suggested to redefine Non-Consequential Load Loss as "intended post contingency loss of load caused by operator or SPS (RAS) action."

No

There is confusion in interpretation of the Table 1 — When the voltages class of the contingency element and the monitored element are different (one is HV and the other is EHV), to which voltage class is the allowance for shedding of non-consequential load applied. For example if the fault is on the 138-kV side of a 345/138-kV autotransformer, are you allowed to shed load to keep the 345-kV from overloading? Conversely, if the fault is on the 345-kV side of a 345/138-kV autotransformer, are you allowed to shed load to keep the 138-kV from overloading? Footnotes on P3 and P4 (101 & 19) should be 9 and 10, respectively. This merely appears to be a typo in the latest draft. Other footnotes appear to be mislabeled as well. If Extreme Events are not deleted from the standard, then a different number for the table for Extreme Events should be used. Extreme Events 2a – need to define towerline. Add language to replace towerline with structure. Table 1 Footnotes require a close editorial review. There are two number ones, and multiple items pointing to the wrong footnote or footnotes that don't exist (19, 101), etc. Several instances are discussed below but this is not an exhaustive list. Table 1 – Steady State & Stability Performance Planning Events - Note (a) – this note is placed under "Steady State & Stability" but issues of voltage instability, cascading outages, and uncontrolled islanding apply only to stability. NPCC suggests this note be relocated to "Stability Only." Table 1 – Steady State & Stability Performance Planning Events - Note (i) – this indicates that one cannot meet steady state requirements by depending on end-user owned equipment. Please clarify the purpose and performance requirement on this note with respect to end-user schemes and possible arrangements already in place to trip end-user equipment. Table 1, P4 – footnote reference in Category column needs to change from 101 to 10. Footnote reference in Event column lead-in description needs to change from 11 to 10. Table 1, P5 – As written, this requirement replicates a fault causing a loss of station anywhere that there is only one protection system. This is overly severe and would lead to the requirement for fully redundant protection systems at many stations. The use of the term "Protection System" in P5 is unacceptably inconsistent with the NERC definition of Protection System because it does not exclude the battery and its associated series elements. Battery systems should not be included. Table 1, P7 – for Event 1 (the loss of two adjacent circuits), this needs to specify if these are the same phase or different phases. Table 1 – Steady State & Stability Performance Extreme Events It appears that for Steady state, item 2, that item (a) is encompassed by (b). It if is not, what makes it different? Table 1, footnote #2 – typo – there is an erroneous comma in the phrase "are the fault types, that must be evaluated." Please remove said comma. Table 1, footnote #3, NPCC has asked NERC to put a lower bound on the HV but it seems that this remains unaddressed. More stringent performance requirements should be applied to Facilities that represent the backbone of the electric power grid and act as the medium for moving large amounts of power from production to various Load centers, rather than to those Facilities that directly serve end-use Load customers. However, as had been commented in preceding postings, the EHV breakpoint for these more stringent requirements, defined in note 3 of table 1 as "all Facilities greater than 300 kV", is not appropriately defined and should be reviewed. A uniform voltage-level threshold has not been shown to adequately cover all of the different power systems in North America, and significant additional costs will be incurred without proportional or measurable reliability benefits if this definition is not changed. The following is a proposed modification to the EHV definition "all Facilities greater than 300 kV…": "Facilities representing the backbone of the System, generally operating at voltages greater than 300 kV, as determined by the Planning Coordinator and approved by Regional Entity." In using such language, we believe that the extra investment required would go towards real improvement of the reliability of the Interconnected System.

Yes

No

There are still issues as indicated in the submitted comments that need to be addressed before this standard should go to ballot.

Individual

Milorad Papic

Idaho Power

R1.1.4 could be interpreted that the standard requires forecasting reactive load. However, most entities forecast demand (MW) and apply a power factor(s) to calculate reactive load. Therefore, please change “real and reactive load forecast” to “forecasted demand and power factor” so it is clear that forecasting reactive load is not required. For R1.1.5 I suggest changing the wording from “Known commitments for Firm Transmission Service and Interchange” to “Known commitments for Firm Transmission Service or Interchange”. It is difficult to distinguish between the two in future cases where not all contractual arrangements are known.

The wording in R2.1 is unclear as to whether new annual studies are required each year or whether qualified past studies are acceptable if no changes have been made. R2 reads “This Planning Assessment shall use current or past studies…”, while R2.1 implies current studies must be used but can be supplemented by past studies. I suggest changing the wording from “The Near-Term Transmission Planning Horizon portion of the steady state analysis shall be assessed annually and be supported by the following annual current studies, supplemented with qualified past studies…” to “The Near-Term Transmission Planning Horizon portion of the steady state analysis shall be assessed annually and be supported by the following annual current studies, or qualified past studies…” It is unclear if the drafting team intended the sensitivity studies identified by the bullets in R2.1.4 to align with the sensitivity studies identified by the bullets in R2.4.3. Both are for Near-Term studies but for steady state and stability respectively. If the intent is that they align, the wording should be modified to be the same. Also, similar to R1.1.4 above, R2.1.4 could be interpreted that the standard requires forecasting reactive load. However, most entities forecast demand (MW) and apply a power factor(s) to calculate reactive load. Therefore, please change “real and reactive load forecast” to “forecasted demand and power factor” so it is clear that forecasting reactive load is not required.

For clarity we suggest that the wording in R3.3.3 be changed to “Ensure the power flows in the simulations are no higher than actual relay loadability limits.

Requirements R4.4 and R4.5 appear to be related to and set the limits for R4.1 and R4.2 respectively. Suggest moving both Requirements R4.4 and R4.5 into R4.1 and R4.2, allowing these sub-Requirements (R4.4 and 4.5) to be deleted. It is unclear from the wording in R4.3 whether the Contingency analyses need to be performed for all planning events or the more severe events referenced in R4.1 and R4.2. Please clarify the wording of R4.3. R4.3.1 appears to require an assessment of both successful and unsuccessful high-speed reclosing. Successful reclosing is a much less severe event, so it seems unnecessary to assess both. If the intent is to make entities assess both we suggest including the assessment in the list of sensitivities.

As worded R5 is unclear. I interpret R5 to require entities to specify minimum voltage levels that must not be exceeded for more than a specific period of time. High transient voltages are typically not a problem. I suggest changing the second sentence of R5 to read: “For transient voltage response, the criteria shall at a minimum, specify a voltage level and a maximum length of time that transient voltage may remain below that level.”

No

The definition of Non-Consequential Load is in need of clarification. As written, it could be interpreted that load that is disconnected from the System by end-user equipment would not be allowed for certain contingencies. Suggested revision to the language follows Non-Interruptible Load loss other than: • Consequential Load Loss • the response of voltage sensitive Load • Load that is disconnected from the System by end-user equipment. This version uses the same wording but clarifies that the term “other than” applies to all three things.

No

As currently drafted, several outages identified in Categories P2, P4, and P5 appear to potentially result in the same elements being removed from service, so therefore the same event, even though the initiating event is different. I believe that the drafting team needs to conduct a workshop prior to balloting to educate the industry on what outages are required to be simulated for which Categories. Additionally there are footnotes numbered 12, 19, and 101, which do not relate to any foot note in the document, and some other footnotes seem to be misplaced. We encourage the drafting team to carefully review all footnotes to ensure accuracy prior to balloting this standard.

No

Revisions are necessary to the Effective Date language to clarify the 60 calendar months language for Corrective Action Plans. It is unclear if the entity has five years from the day they identify the problem or five years from the modeled year or five years from the effective date of this standard.

No

Based on the unclear or ambiguous language identified in the comments above as well as the confusion noted in the Table 1 regarding outages and footnotes, I believe modifications are necessary prior to

taking this standard to ballot.

Individual

James Tucker

Deseret Power

Comments: R1.1.4 could be interpreted that the standard requires forecasting reactive load. However, most entities forecast demand (MW) and apply a power factor(s) to calculate reactive load. Therefore, please change “real and reactive load forecast” to “forecasted demand and power factor” so it is clear that forecasting reactive load is not required. For R1.1.5 we suggest changing the wording from “Known commitments for Firm Transmission Service and Interchange” to “Known commitments for Firm Transmission Service or Interchange”. It is difficult to distinguish between the two in future cases where not all contractual arrangements are known.

Comments: The wording in R2.1 is unclear as to whether new annual studies are required each year or whether qualified past studies are acceptable if no changes have been made. R2 reads “This Planning Assessment shall use current or past studies…”, while R2.1 implies current studies must be used but can be supplemented by past studies. We suggest changing the wording from “The Near-Term Transmission Planning Horizon portion of the steady state analysis shall be assessed annually and be supported by the following annual current studies, supplemented with qualified past studies…” to “The Near-Term Transmission Planning Horizon portion of the steady state analysis shall be assessed annually and be supported by the following annual current studies, or qualified past studies…” It is unclear if the drafting team intended the sensitivity studies identified by the bullets in R2.1.4 to align with the sensitivity studies identified by the bullets in R2.4.3. Both are for Near-Term studies but for steady state and stability respectively. If the intent is that they align, the wording should be modified to be the same. Also, similar to R1.1.4 above, R2.1.4 could be interpreted that the standard requires forecasting reactive load. However, most entities forecast demand (MW) and apply a power factor(s) to calculate reactive load. Therefore, please change “real and reactive load forecast” to “forecasted demand and power factor” so it is clear that forecasting reactive load is not required.

Comments: For clarity we suggest that the wording in R3.3.3 be changed to “Ensure the power flows in the simulations are no higher than actual relay loadability limits.

Comments: Requirements R4.4 and R4.5 appear to be related to and set the limits for R4.1 and R4.2 respectively. Suggest moving both Requirements R4.4 and R4.5 into R4.1 and R4.2, allowing these sub-Requirements (R4.4 and 4.5) to be deleted. It is unclear from the wording in R4.3 whether the Contingency analyses need to be performed for all planning events or the more severe events referenced in R4.1 and R4.2. Please clarify the wording of R4.3. R4.3.1 appears to require an assessment of both successful unsuccessful high-speed reclosing. Successful reclosing is a much less severe event, so it seems unnecessary to assess both. If the intent is to make entities assess both we suggest including the assessment in the list of sensitivities.

Comments: As worded R5 is unclear. We interpret R5 to require entities to specify minimum voltage levels that must not be exceeded for more than a specific period of time. High transient voltages are typically not a problem. We suggest changing the second sentence of R5 to read: “For transient voltage response, the criteria shall at a minimum, specify a voltage level and a maximum length of time that transient voltage may remain below that level.”

Comments: Clarity is needed in the phrase functional entity in R8. Is this referring to the entities identified in the Functional Model or something else?

No

Comments: The definition of Non-Consequential Load is in need of clarification. As written, it could be interpreted that load that is disconnected from the System by end-user equipment would not be allowed for certain contingencies. Suggested revision to the language follows Non-Interruptible Load loss other than: • Consequential Load Loss • the response of voltage sensitive Load • Load that is disconnected from the System by end-user equipment. This version uses the same wording but clarifies that the term “other than” applies to all three things.

No

Comments: As currently drafted, several outages identified in Categories P2, P4, and P5 appear to potentially result in the same elements being removed from service, so therefore the same event, even though the initiating event is different. We believe that the drafting team needs to conduct a workshop prior to balloting to educate the industry on what outages are required to be simulated for which Categories. Additionally there are footnotes numbered 12, 19, and 101, which do not relate to any foot note in the document, and some other footnotes seem to be misplaced. We encourage the drafting team to carefully review all footnotes to ensure accuracy prior to balloting this standard.

No

Comments: Revisions are necessary to the Effective Date language to clarify the 60 calendar months language for Corrective Action Plans. It is unclear if the entity has five years from the day they identify the problem or five years from the modeled year or five years from the effective date of this standard.

No

Comments: Based on the unclear or ambiguous language identified in the comments above as well as the confusion noted in the Table 1 regarding outages and footnotes, we believe modifications are necessary prior to taking this standard to ballot.

Individual

Adam Menendez

Portland General Electric Co.

PGE believes that the scope of the studies mandated by this requirement should be limited to elements energized at 200kV and above, elements included in generator interconnection, and elements included in interconnections with other utilities. PGE's 115kV system functions to provide "load service" rather than transmission and does not impact the grid in the same manner as the 230kV and 500kV elements that comprise PGE's transmission system. PGE further believes that the requirement to conduct off-peak studies should focus on the varied generation patterns and impact to recognized transmission paths (for WECC, those identified in the WECC Path Catalog) rather than including the full range of studies that are required for on-peak studies. PGE's transmission system is embedded within the larger regional transmission system of the Bonneville Power Administration, and studies of System Off-Peak Load will not reveal any meaningful data internal to PGE's system. Finally, PGE believes that the wording of R2.6.2 is so restrictive that the entire intent of the subrequirement would be negated. PGE believes that "material changes" is such a broad term that every past study would have to have such changes made to reflect the system as it currently exists. Therefore, a company seeking to use a past study to support its Planning Assessment would have to provide a "technical rationale" showing that the material changes do not impact performance results. An effort to demonstrate a technical rationale in a manner that would satisfy future auditors would in many cases be more burdensome than performing a new study.

No

PGE believes that this standard should not go to ballot without revisions to restrict the scope of the standard as outlined above.

Group

SERC Planning Standards Subcommittee

R1: MOD-010 and 012 are not directly applicability to the PC. References to other processes (e.g. tariff requirements or transmission owner agreements) that are utilized to provide this data may be desirable, but do not satisfy R1 as presently written. VSL: In the Moderate and Severe VSL, insert "responsible entity's" in front of the term "System model."

Part 2.1.4 and 2.4.3: delete the word "sufficient." We appreciate the deletion of the previous R2.9 on non-Consequential Load Loss from the previous draft of TPL-001-1. Part 2.9: Does this refer to customer loads only, or does it include pump-storage or compressed air generating plant pumping load.

It is not clear as to the expectations of standard drafting team for dynamic modeling of relays. Parts 4.1.2 and 4.3.3 imply that transmission relays may need to be explicitly modeled in the dynamic simulations. Is this the team's intent, please clarify? Part 4.3.1: add "when used as part of a protection system" to the end of the sentence. Part 4.3.3: add "when such devices affect the study area" to the end of the sentence.

The content in the severe VSL column should be split among the lower, moderate, and high categories, with failure to include one element as Moderate and two elements as High. It is stated that the Transmission Planner and Planning Coordinator shall have criteria specifying voltage limits, post-Contingency voltage deviations, and transient voltage response. How would an interaction with a third party system be handled? For example a contingency that occurs on a system that is within their voltage deviation criteria, but causes a voltage deviation violation on a neighboring system that has a more stringent criteria.

Comments: M6: The wording on this measure appears to have been copied from M3 or M4 but is not appropriate since R6 addresses criteria and methodology and not a study.

Comments: R8: It is not clear whether the assessment results must be distributed to all parties of interest, or if it would be sufficient to post the assessment at a central location, and distribute

information to access the information. Also, FERC Standards of Conduct issues would come into play in assuring that the information is available only to appropriate personnel. R8: It is not clear if the requirement to provide assessment results to adjacent PCs and TPs is required, or only upon a reliability related request. R8: The PC and TP responsibilities should be stated separately for clarity. Part 8.1: It is not clear what the form of the response to the comments should be – would an acknowledgement be sufficient, or would it be necessary to pursue a process of examining comments in detail and revising and reissuing the corresponding assessment? The requirement needs to be revised to make the above points clear.

No

With the simplified definition for Bus-tie Breaker, would a breaker in a standard ring bus or breaker-and-a-half scheme be considered a Bus-tie Breaker? Request the definition be revised to clarify this. Suggest revising the Non-Consequential Load Loss definition: Non-Interruptible Load loss other than (1) Consequential Load Loss and (2) the response of voltage sensitive Load including Load that is disconnected from the System by end-user equipment.

No

Comments: Some of the footnote superscripts do not appear to have a corresponding reference in the footnotes, in the case of number 19 at several locations in the Firm Transmission Service column, and number 101 in the P4 cell in the Category column.

Yes

No

If the revisions recommended above are adopted, the standard would then be ready for ballot. We commend the drafting team for their efforts in preparing this draft standard for ballot.

Individual

Kasia Mihalchuk

Manitoba Hydro

Recommend removing "and shall represent projected System Conditions" from R1. This is already clearly contained in R1.1.1 through R1.1.6. If the drafting team knows of other projected system conditions then they should be listed in R1.1. "The System Model did not represent projected System Conditions as described in Requirement R1" should be removed from the severe VSL column. By failing to represent 4 or more of the requirements in 1.1.1 through 1.1.6, projected System Conditions are not represented.

R2.1.4.: The first sentence implies that all sensitivities should be studied. The second sentence refers to one or more. I suggest the following change to the first sentence: "....basic assumptions used in the model." (i.e. delete "for the list of items shown below." from the end of the first sentence.) R2.4.3: The exact same change as above in R2.1.4. R2.1.5: We assume the intent of the standard would be to perform an annual review of the inventory of spare equipment to determine if the spare strategy required updating. For example, if a transformer failed and the spare was moved into position, a new spare would be ordered to replace the failed one. During the period, when no spare was in place, additional assessments would be required to ensure meeting Table 1. Can the drafting team clarify? R2.5: The drafting team modified “material changes” to simply “changes” in R2.5. This does not add clarity. Given that R2.5 is related to Stability Analysis, perhaps “changes” could be modified to “changes that could impact stability or voltage”. R2.6: Recommend changing “the study” to “the past study” and “an older study” to “an older past study” to ensure no confusion could result from past and current studies. Can the drafting team explain how a past study can have material changes in R2.6.2? Perhaps R2.6.2 could be deleted. VSL: We would recommend moving R2.8’s VSL from Moderate to both High and Severe. R2.8 requires a corrective plan to be developed when the short circuit duty of a circuit breaker is known to be exceeded. This is safety issue and a reliability issue.

R3.2: Recommend changing “the list” to “the Contingency list” to add clarity and consistency.

R4.1.2: For P2 events, a generator that pulls out of synchronism must be tripped. Tripping of the generator could result in Interruption of Firm Transmission Service unless redispatch is allowed - Footnote 9 should be allowed. R4.1.3 states that “power oscillation shall exhibit acceptable damping as established by the PC and TP”. There is no requirement for the PC or TP to develop criteria for acceptable damping. Requirement R5 or R6 should be expanded to require the PC and TP to establish criteria for acceptable power oscillation damping. R4.2: Recommend changing “the list” to “the Contingency list” to add clarity and consistency.

The R6 text does not match the Data Retention 6th bullet text “studies performed”. The Retention 6th bullet text should be updated to reflect the R6 text “criteria or methodology used in the analysis to identify System instability”. The R6 text does not match the M6 text. The M6 text should be revised as follows: replace “studies utilized in preparing the Planning Assessment” with “criteria and methodology to identify System instability used within its analysis”.

Is there a need to retain comments and responses to comments for Requirement R8?

Yes

No

Table 1: 1. When two (or more) footnotes apply simultaneously they should be separated by commas; ot are these typos? 2. The P2 contingency "opening of a breaker without a fault" could be moved up to a P1 contingency. This is a higher probability event then a bus section fault. 3. P4, Event column: The 11 superscript, after the phrase "Loss of multiple elements....", should be a 10. In P3, should 19 be 9? 4. Footnote 9: The drafting team clearly permits generator redispatch coupled with curtailment of firm transmission service for multiple contingencies (P3-P5). We believe generator redispatch is appropriate for P1 and P2 as well. R2.7.1 lists several actions that are permitted to be used as corrective plans including Special Protection Systems, automatic generator tripping or manual generator runback to respond to both single and multiple contingencies. Any loss of generation will require redispatch to ensure emergency generation reserves are replenished and the system is ready for the next contingency. For contingency P1, loss of generator, load will not be lost because there are generation reserves, however redispatch will be required to restore these reserves. Footnote 9 should apply to P1 and P2 contingencies. 5. Footnote 11: This note is a reference for a common tower outage. I think the words "or common Right-of-Way" should be deleted from the sentence. It is obvious that circuits on a common tower must be on a common Right-of-Way. 6. Note b: Consequential generation loss could use a definition similar to consequential and non-consequential load loss to add clarity. The standard as written in R4.1.2 permits cascade tripping of generators due to pulling out of synchronism. Typically this has been defined as instability or cascade tripping and not permitted in the past. 7. Note i: note i implies that any voltage sensitive load or load dropped by end-user equipment shall not be used to meet steady-state performance requirements. However, given that this note is not included under the stability portion, does this mean that voltage sensitive load or load that is dropped by end-user equipment can be used to meet the TC and PC planning criteria established in R5? Induction motors could trip in the stability analysis if the transient voltage is low enough (non-consequential load loss). The R5 criteria will be met as long as the load is manually switched back in and the post-disturbance steady state loading is acceptable. Can the drafting team clarify the intent of Note i?

No

Requirement R8, as the standard is currently written, doesn't match the language on page 2 of the discussion provided by the drafting team (i.e. related to determining individual and joint assessments). The drafting team should flip Requirements R7 and R8 so that the implementation plan matches the intent or modify the implementation plan.

No

Individual

Tim Ponseti, VP

TVA System Planning

TVA agrees with the changes made in R1 - especially the minimum 6 month duration required for outages to be modeled. In R1.1.5, how should partial path transmission service be accounted for in the known commitments for firm transmission service and interchange? VSL: In the Moderate and Severe VSL, insert “responsible entity’s” in front of the term “System model” after the “or”.

In R2.1.4 and R2.4.3, TVA is concerned about the use of the words “sufficient” and “measurable” from a compliance standpoint. TVA believes that these words should be deleted or at least better defined to clarify the actual intent from the SDT on what is technically required for these sensitivity studies. TVA agrees with limiting R2.1.5 spare equipment strategy to just the P0, P1, and P2 single contingency categories. In R2.7.3, both Non-Consequential Load Loss and curtailment of Firm Transmission Service can be permitted if situations arise that are beyond the control of the TP or PC. However these actions are not useful for stability related issues. TVA suggests that for stability related issues, if situations arise that are beyond the control of the Transmission Planner or Planning Coordinator that prevent the implementation of a Corrective Action Plan in the required timeframe, then the TP or PC is permitted to allow some generation to lose synchronism utilizing out of step relaying or other protection method to correct the situation that would normally not be permitted in Table 1. We appreciate the deletion of the previous requirement on non-Consequential Load Loss from the previous draft of TPL-001-1. R2.9: Recommend that this refers to customer loads only, and not to include utility loads such as pump-storage or compressed air generating plant pumping load.

In R3.3.3, TVA believes that relay loadability is already covered in PRC-023. TVA is concerned that including this requirement could result in possible double jeopardy if a utility was found non compliant with PRC-023. Is the SDT proposing that relay loadability be covered for all BES facilities or just those facilities identified in PRC-023?

For R4.1.2. Suggested change: For planning events P2 through P7: A generator that pulls out of synchronism shall be considered in the simulations and the resulting apparent impedance swings shall not result in the tripping of any Transmission System elements other than the generating unit and its directly connected Facilities. [Since often tripping a out of step generator reduces impedance swings, if the simulation shows acceptable impedance swings and voltage levels without tripping the generator, why would we be required to determine the tripping time and simulate tripping in each of the simulations that we have to run for these event categories? Without the suggested change involving the

word “considered”, significant extra effort would be required to perform simulations for small generators with no added benefit in achieving the purpose of assuring that impedance swings from generators are not passing through lines on the Bulk Electric System for events P2-P7. 4.3.3. Suggested change: Simulate the impact of transient swings on Protection System operation for Transmission lines and transformers when such devices impact the study area. Without this change, a significant amount of effort would be required (with no added benefit) to evaluate protection systems all over the grid that have little or no impact on the study area. R4.3.1: add “if reclosing is actually used as part of a protection system” to the end of the sentence.

In the VSL associated with R5, we believe that failure to define and document one of the criteria should be a moderate VSL, failure to define and document two criteria should me a high VSL, while failure to define and document three criteria should be a severe VSL. Otherwise failing to document only one criteria would result in a severe VSL.

M6: The wording on this measure appears to have been copied from M3 or M4 but is not appropriate since R6 addresses criteria and methodology and not a study.

In the VSL associated with R7, we believe that failure to determine and identify one responsibility should be a moderate VSL, failure to determine and identify two responsibilities should me a high VSL, while failure to determine and identify three responsibilities should be a severe VSL. Otherwise failing to document only one responsibility would result in a severe VSL.

TVA believes that the TP and PC are unnecessarily duplicating work as shown in R8 and in M8. TVA believes that just the PC should be responsible for this coordination. R8: It is not clear whether the assessment results must be distributed to all parties of interest, or if it would be sufficient to post the assessment at a central location, and distribute information necessary to access the results. Also, FERC Standards of Conduct issues would come into play in assuring that the information is available only to appropriate personnel. R8.1: It is not clear what the form of the response to the comments should be – would an acknowledgement be sufficient, or would it be necessary to pursue a process of examining comments in detail and revising and reissuing the corresponding assessment?

No

Is the 12-18 months referenced in the Year One definition actually from the start of the TA or the anticipated completion date of the same TA? Suggest revising the Non-Consequential Load Loss definition: Non-Interruptible Load loss other than (1) Consequential Load Loss, (2) the response of voltage sensitive Load including Load that is disconnected from the System by end-user equipment, and (3) utility loads such as pump storage loads, compressed air generating pumping loads, and scrubber loads, etc when such loads do not result in tripping of a generating unit.

No

In Header note j - the reference to footnote #1 should be removed. Are batteries included as part of Protection System for P5 events? P3 reference to footnote #19 under Initial System Condition and for Interruption of Firm Transmission Service Allowed should actually be footnote #9. P5 reference to footnote #19 for Interruption of Firm Transmission Service Allowed should actually be footnote #9. The reference to footnote #101 in the P4 category should actually be to #10. For Steady State notes under Extreme Events, events 2a and 2b should reference footnote #11 instead of #12. For Stability notes, event 2 should refer to footnote #10 instead of #11. In footnote #3, should there be an “or” before “as defined by the Regional Entity”?

No

TVA agrees with the inclusion of P1-2 and P1-3 in the 60 month implementation window. However TVA also strongly suggests that all Planning Events be included in the same implementation window where local load was allowed to be dropped in the past in footnotes b and c of the existing TPL standards. In the first bullet under Effective Date, both Non-Consequential Load Loss and curtailment of Firm Transmission Service can be permitted for certain events up to 60 months. However these actions are not useful for stability related issues. TVA suggests that out of step relaying or other protection method be allowed in for stability related issues when situations do arise that are beyond the control of the TP or PC. TVA is very concerned about the last paragraph in the Implementation Plan. TVA interprets this language to state that the entity is basically noncompliant if the mentioned Corrective Action Plans are not implemented within 60 calendar months. Due to the large amount of work that some utilities will have to meet these new requirements, TVA strongly suggests that the utilities be found compliant if the utilities are still putting a good faith effort forward in trying to meet the new standards, such as for constructing a long 500-kV transmission line that may take at least 10 years to construct TVA still believes that since breaker duty was not included in the previous TPL standards, this should also have a 60 month implementation window as well due to this now becoming a new TPL compliance issue. TVA noted this same comment in Posting #3; however, TVA requests that this be reconsidered due to being a new official TPL requirement like the other new requirements have with the 60 month implementation window. TVA is concerned that the 60 calendar month window for meeting the “raising the bar” requirements is still not adequate. For instance, it typically takes TVA 7 to 10 years to build a new 500-kV transmission line - including time required for such processes as federally mandated NEPA environmental reviews. Strongly suggest increasing this time window to 10 years.

No

TVA is very concerned about the tremendous amount of additional work that has been proposed for

both the steady state and for stability analysis. TVA believes that there will be very little payoff for these additional studies. TVA is concerned that the costs to meet the new requirements contained in this draft TPL will amount to between $1 billion to $2 billion with very little impact overall on the reliability of the Bulk transmission system. TVA is also very concerned about the increase in customer rates that will be required to support these new facilities.

Individual

Brian Keel

SRP

R1.1.4 could be interpreted that the standard requires forecasting reactive load. However, most entities forecast demand (MW) and apply a power factor(s) to calculate reactive load. Therefore, please change “real and reactive load forecast” to “forecasted demand and power factor” so it is clear that forecasting reactive load is not required. For R1.1.5 we suggest changing the wording from “Known commitments for Firm Transmission Service and Interchange” to “Known commitments for Firm Transmission Service or Interchange”. It is difficult to distinguish between the two in future cases where not all contractual arrangements are known.

The wording in R2.1 is unclear as to whether new annual studies are required each year or whether qualified past studies are acceptable if no changes have been made. R2 reads “This Planning Assessment shall use current or past studies…”, while R2.1 implies current studies must be used but can be supplemented by past studies. We suggest changing the wording from “The Near-Term Transmission Planning Horizon portion of the steady state analysis shall be assessed annually and be supported by the following annual current studies, supplemented with qualified past studies…” to “The Near-Term Transmission Planning Horizon portion of the steady state analysis shall be assessed annually and be supported by the following annual current studies, or qualified past studies…” It is unclear if the drafting team intended the sensitivity studies identified by the bullets in R2.1.4 to align with the sensitivity studies identified by the bullets in R2.4.3. Both are for Near-Term studies but for steady state and stability respectively. If the intent is that they align, the wording should be modified to be the same. Also, similar to R1.1.4 above, R2.1.4 could be interpreted that the standard requires forecasting reactive load. However, most entities forecast demand (MW) and apply a power factor(s) to calculate reactive load. Therefore, please change “real and reactive load forecast” to “forecasted demand and power factor” so it is clear that forecasting reactive load is not required.

For clarity we suggest that the wording in R3.3.3 be changed to “Ensure the power flows in the simulations are no higher than actual relay loadability limits.

Requirements R4.4 and R4.5 appear to be related to and set the limits for R4.1 and R4.2 respectively. Suggest moving both Requirements R4.4 and R4.5 into R4.1 and R4.2, allowing these sub-Requirements (R4.4 and 4.5) to be deleted. It is unclear from the wording in R4.3 whether the Contingency analyses need to be performed for all planning events or the more severe events referenced in R4.1 and R4.2. Please clarify the wording of R4.3. R4.3.1 appears to require an assessment of both successful unsuccessful high-speed reclosing. Successful reclosing is a much less severe event, so it seems unnecessary to assess both. If the intent is to make entities assess both we suggest including the assessment in the list of sensitivities.

As worded R5 is unclear. We interpret R5 to require entities to specify minimum voltage levels that must not be exceeded for more than a specific period of time. High transient voltages are typically not a problem. We suggest changing the second sentence of R5 to read: “For transient voltage response, the criteria shall at a minimum, specify a voltage level and a maximum length of time that transient voltage may remain below that level.”

Clarity is needed in the phrase functional entity in R8. Is this referring to the entities identified in the Functional Model or something else?

No

The definition of Non-Consequential Load is in need of clarification. As written, it could be interpreted that load that is disconnected from the System by end-user equipment would not be allowed for certain contingencies. Suggested revision to the language follows Non-Interruptible Load loss other than: • Consequential Load Loss • the response of voltage sensitive Load • Load that is disconnected from the System by end-user equipment. This version uses the same wording but clarifies that the term “other than” applies to all three things.

No

: As currently drafted, several outages identified in Categories P2, P4, and P5 appear to potentially result in the same elements being removed from service, so therefore the same event, even though the initiating event is different. We believe that the drafting team needs to conduct a workshop prior to balloting to educate the industry on what outages are required to be simulated for which Categories. Additionally there are footnotes numbered 12, 19, and 101, which do not relate to any foot note in the document, and some other footnotes seem to be misplaced. We encourage the drafting team to carefully review all footnotes to ensure accuracy prior to balloting this standard.

No

Revisions are necessary to the Effective Date language to clarify the 60 calendar months language for Corrective Action Plans. It is unclear if the entity has five years from the day they identify the problem or five years from the modeled year or five years from the effective date of this standard.

No

: Based on the unclear or ambiguous language identified in the comments above as well as the confusion noted in the Table 1 regarding outages and footnotes, we believe modifications are necessary prior to taking this standard to ballot.

Individual

Vishal Patel

Southern California Edison (SCE)

R1.1.4 could be interpreted that the standard requires forecasting reactive load. However, most entities forecast demand (MW) and apply a power factor(s) to calculate reactive load. Therefore, please change “real and reactive load forecast” to “forecasted demand and power factor” so it is clear that forecasting reactive load is not required. For R1.1.5 we suggest changing the wording from “Known commitments for Firm Transmission Service and Interchange” to “Known commitments for Firm Transmission Service or Interchange”. It is difficult to distinguish between the two in future cases where not all contractual arrangements are known.

The wording in R2.1 is unclear as to whether new annual studies are required each year or whether qualified past studies are acceptable if no changes have been made. R2 reads “This Planning Assessment shall use current or past studies…”, while R2.1 implies current studies must be used but can be supplemented by past studies. We suggest changing the wording from “The Near-Term Transmission Planning Horizon portion of the steady state analysis shall be assessed annually and be supported by the following annual current studies, supplemented with qualified past studies…” to “The Near-Term Transmission Planning Horizon portion of the steady state analysis shall be assessed annually and be supported by the following annual current studies, or qualified past studies…” It is unclear if the drafting team intended the sensitivity studies identified by the bullets in R2.1.4 to align with the sensitivity studies identified by the bullets in R2.4.3. Both are for Near-Term studies but for steady state and stability respectively. If the intent is that they align, the wording should be modified to be the same. Also, similar to R1.1.4 above, R2.1.4 could be interpreted that the standard requires forecasting reactive load. However, most entities forecast demand (MW) and apply a power factor(s) to calculate reactive load. Therefore, please change “real and reactive load forecast” to “forecasted demand and power factor” so it is clear that forecasting reactive load is not required. Additionally, 2.4.2 is inconsistent with 2.4.1 with regards to language. It seems the intent of the Standards Drafting Team was to have the two consistent with each other. Specifically, the quote below, from section 2.4.1, is missing from section 2.4.2 (keeping in mind the word "peak" should be replaced with "Off-Peak". "System peak Load levels shall include a Load model which represents the dynamic behavior of Loads that could impact the study area, considering the behavior of induction motor Loads. An aggregate System Load model which represents the overall dynamic behavior of the Load is acceptable."

For clarity we suggest that the wording in R3.3.3 be changed to “Ensure the power flows in the simulations are no higher than actual relay loadability limits."

Requirements R4.4 and R4.5 appear to be related to and set the limits for R4.1 and R4.2 respectively. Suggest moving both Requirements R4.4 and R4.5 into R4.1 and R4.2, allowing these sub-Requirements (R4.4 and 4.5) to be deleted. It is unclear from the wording in R4.3 whether the Contingency analyses need to be performed for all planning events or the more severe events referenced in R4.1 and R4.2. Please clarify the wording of R4.3. R4.3.1 appears to require an assessment of both successful unsuccessful high-speed reclosing. Successful reclosing is a much less severe event, so it seems unnecessary to assess both. If the intent is to make entities assess both we suggest including the assessment in the list of sensitivities.

As worded R5 is unclear. We interpret R5 to require entities to specify minimum voltage levels that must not be exceeded for more than a specific period of time. High transient voltages are typically not a problem. We suggest changing the second sentence of R5 to read: “For transient voltage response, the criteria shall at a minimum, specify a voltage level and a maximum length of time that transient voltage may remain below that level.”

Clarity is needed in the phrase functional entity in R8. Is this referring to the entities identified in the Functional Model or something else?

No

The definition of Non-Consequential Load is in need of clarification. As written, it could be interpreted that load that is disconnected from the System by end-user equipment would not be allowed for certain contingencies. Suggested revision to the language follows Non-Interruptible Load loss other than: • Consequential Load Loss • the response of voltage sensitive Load • Load that is disconnected from the System by end-user equipment. This version uses the same wording but clarifies that the term “other than” applies to all three things.

No

As currently drafted, several outages identified in Categories P2, P4, and P5 appear to potentially result in the same elements being removed from service, so therefore the same event, even though the initiating event is different. We believe that the drafting team needs to conduct a workshop prior to balloting to educate the industry on what outages are required to be simulated for which Categories. Additionally there are footnotes numbered 12, 19, and 101, which do not relate to any foot note in the document, and some other footnotes seem to be misplaced. We encourage the drafting team to carefully review all footnotes to ensure accuracy prior to balloting this standard.
No
Revisions are necessary to the Effective Date language to clarify the 60 calendar months language for Corrective Action Plans. It is unclear if the entity has five years from the day they identify the problem or five years from the modeled year or five years from the effective date of this standard.
No
Based on the unclear or ambiguous language identified in the comments above as well as the confusion noted in the Table 1 regarding outages and footnotes, we believe modifications are necessary prior to taking this standard to ballot.
Individual
John Collins
Platte River Power Authority
Change R1.1.5 wording from "...Service and Interchange." to "...Service or Interchange."
No
1. Please make the definition for Non-Consequential Load Loss simple and straightforward. For example, Non-Consequential Load Loss: The planned shedding of firm load. (Note that phrases "firm load" and "firm load shedding" are used frequently in a dozen other standards.) 2. Move the remainder of the sentence about "the response of voltage sensitive Load including...by end-user equipment." from the Non-Consequential Load Loss definition to the Consequential Load Loss definition.
Yes
If clarity is given for the "Non-Consequential Load Loss Allowed" column of Yes/No that it refers to the planned shedding of firm load. (see my comment on Definition)
No
No, not until there is some form of common understanding, among the people reading this draft, of how to interpret from Table 1 (Planned and Extreme) all the contingency scenarios that will be required to demonstrate full compliance with the standard. It would be helpful if the Drafting Team spearheaded some workshops to walk us through how this might be done.
Individual
Gordon Rawlings
British Columbia Transmission Corp
none
none
none
none
none
none
none
None
Yes
No
1. Table 1 event indicates loss of one of the equipment. It appears to be silent on the event classification regarding multiple equipments within the same protection zone. Is this considered as a single contingency or multiple contingencies? Please clarify. 2. Table 1 P5 refers to the event on loss of multiple elements caused by the failure of a single protection system while clearing a fault on one contingency. For systems equipped with dual or redundant protections, is a protection failure still a valid concern? Shouldn't this contingency analysis be excluded from the requirement? Please clarify. 3. Table

1 Extreme Events under Stability section, there is a reference to protection failure during fault clearing. Again for systems equipped with dual or redundant protections the requirement should be reconsidered. Please confirm. 4. Table 1 Extreme Events under both Steady State and Stability sections, there is a reference to loss of transmission lines on a common right-of-way. Please consider adding a Footnote to define the common right-of-way using minimum length similar to the one used for circuits on common structure (Footnote 12). 5. Performance Table 1 Footnote Item 1 on definition of angular stability, it states "For Planning Event P1: No generating unit or units shall be allowed to pull out of synchronism." o The requirement of no unit pull out of sync is not clear. Does this apply to small generators connected to distribution or lower voltage class lines? Or this is only applicable to generators connected to BEC (i.e. 100kV and above) without intermediary transmission voltage line connections? 6. Table 1 Footnote Item 6 refers to the "reference voltage" for transformers. What is the purpose of a reference voltage? Is this used to determine a valid transformer contingency? If so, according to the present definition a 3 phase fault on the 138kV side of a 138/66kV transformer is not considered a valid contingency to be assessed. Is this the intent?

Yes

No

Group

NERC System Protection and Control Subcommittee (SPCS)

No

The Drafting Team should change the definition of Consequential Load Loss to clarify that load lost due to operation of remote backup protection is not Consequential Load Loss. Operation of remote backup protection is not Normal Clearing for a fault. Consequential Load Loss: All Load that is no longer served by the Transmission System as a result of Transmission Facilities being removed from service by Normal Clearing initiated by the a Protection System operation designed to isolate the fault.

No

The Drafting Team should modify the P5 Category column in Table 1 to read "P5 Multiple Contingency (Fault plus Protection System failure to operate)." This addition will focus the P5 Category on the overall Protection System failure to operate. The Drafting Team should include requirements in P5 of Table 1 for simulating both single-phase and 3-phase fault types for Protection System failures to operate. P4 and P5 call for simulations with SLG faults. Prolonged clearing times that result from breaker failures or Protection System failures to operate increase the probability that the fault may evolve from single-phase to multi-phase, and that probability further increases in EHV substations due to the closer clearances of bus work and equipment. Whereas Breaker Failure times are more likely to be known and mitigated through Breaker Failure Protection Systems, the clearing times associated with Protection System failures to operate may be much longer, increasing the probability of evolving in to multi-phase faults. The phrase "or a protection system failure" should be removed from items 2a through 2e in the Extreme Event table following Table 1. If the initializing event is the SLG fault, its evolution to a multi-phase fault alone (due to a Protection System failure to operate) should not be considered an Extreme Event for stability analysis.

No

Inclusion of the changes proposed by the System Protection and Control Subcommittee (SPCS) drove the belief that the standard is not ready to go to ballot. Such changes would be substantial enough to invoke another round of comments by the Industry.

Group

Florida Power and Light

No entity that we know of provides specific reactive load forecasts. From the auditor's perspective, what is expected and acceptable for System models representing reactive load forecasts? Suggested change: "1.1.4 Real Load forecasts and future reactive Load assumptions" Not all system models can represent all "Known commitments for Firm Transmission Service and Interchange". The SDT needs to add "…that are expected to be utilized." to the requirement. 1.1.6 Recommend changing to "Resources expected to supply Load" The requirements seem to imply a difference in certainty between "known" and "planned". Known implies certainty, where planned implies less certainty, as in an assumption. Planned things can change but known things are much less subject to change. The drafting team should clarify the

distinction between the two terms or be more specific in the requirement as to what is expected rather than leaving it for interpretation as to meaning and intent.
The requirement clearly states that "For the steady state portion of the Planning Assessment …" it must perform simulations that show generator ride through voltage limitations under 3.3.2. However, ride through limitations are performed through stability simulations not steady state as required by R3. This is confusing as currently drafted, please provide clarity. Additionally, 3.2 requires studies to be performed to assess the impact of the extreme events. Yet, 3.3 requires analyses shall be performed but does not specify the events intended to study. Suggested language for 3.3 should say "Contingency analyses shall be performed to assess the impact of the extreme events and:" Under 3.3.1 it states that the Planner must simulate the removal of all elements that the Protection System would be expected to disconnect. Language should be included to allow the Planner to provide a rationale to assess more severe system conditions without needing to simulate the effects of Protection Systems. This would capture the intent of this requirement.
The requirement to distribute the Planning Assessment should not mandate distribution of a document but should be more flexible and allow for making the Planning Assessment available, such that those entities that need the information can have it readily available. R8 should be modified as follows: Each Planning Coordinator and Transmission Planner shall make available its Planning Assessment results to adjacent Planning Coordinators and Transmission Planners and to any functional entity that indicates a reliability related need for the Planning Assessment results.
No
The definition of "Known Commitments" should explain how that would diferentiate between Planned Commitments Planning Assessment definition should be clarified as follows: Planning Assessment: Documented evaluation of (1) studies of future Transmission System performance and (2) Corrective Action Plans (included in studies) to remedy identified deficiencies. Non-Consequential Load Loss definition should be clarified as follows: Non-Consequential Load Loss: Non-Interruptible Load loss that does not include: (1) Consequential Load Loss, or (2) the response of voltage sensitive Load that is disconnected from the System by end-user equipment. The SDT should do a search through the document (and Table 1) on “cascading” and capitalize the “C” and delete “outages” where it appears after “Cascading”.
No
The P2-1 event needs to be clarified with its intent. In the SDT Consideration of Comments to the 3rd DRAFT posting, the response to Transmission Planning clarified that “There is no need to show a line energized up to the breakers that opened. The intent is simply to look for low voltage or thermal problems while supplying Load from one end of a normally networked line.” This could be accomplished by adding this to footnote 7 or re-naming the event “Opening of a Line Section w/o fault”.
No
Do not understand the parenthetical for P1-2 and P1-3. The language is confusing and needs to be clarified. Isn’t it referring to Consequential Load Loss that is allowed for P1 events?
No
Individual
James Starling
SCE&G
No Comments
Does R.2.9 refer to customer load only or does it include pumped storage facility pumping loads?
No Comments.
No Comments.
No Comments.
No Comments.
No Comments.
It is not clear if the requirement to provide assessment results to adjacent Planning Coordinators and Transmission Planners is always required or only upon a reliability related request.
Yes
Yes
Yes

No
As per our comments.
Individual
Catherine Mathews
NorthWestern Energy
As written R1.1.4, “Real and reactive Load forecasts”, could mean that both Real and Reactive Load forecasts are required. Since most entities only forecast Real (MW) and apply a power factor for reactive (MVAR), wording could be changed to “ forecasted demand and power factor” to clarify that forecasting reactive load is not required. In R1.1.5 Change “Firm Transmission Service and Interchange” to “Firm Transmission Service or Interchange”. This way the requirement can be satisfied by either one or the other.
Short circuit analysis is a local issue. The reliability of the BES does not depend on the regular assessment of short circuit duty. Therefore, we believe short circuit analysis should be deleted from R2. The wording in R2.1 is unclear: Are new annual studies required each year or are qualified past studies acceptable if no changes have been made? R2 reads “This Planning Assessment shall use current or past studies…”, while R2.1 implies current studies must be used but can be supplemented by past studies. We suggest changing the wording from “The Near-Term Transmission Planning Horizon portion of the steady state analysis shall be assessed annually and be supported by the following annual current studies, supplemented with qualified past studies…” to “The Near-Term Transmission Planning Horizon portion of the steady state analysis shall be assessed annually and be supported by the following annual current studies, or qualified past studies…” Are the sensitivity studies identified by the bullets in R2.1.4 to align with the sensitivity studies identified by the bullets in R2.4.3? Both are for Near-Term studies but for steady state and stability respectively. If they should align, the wording should be modified to be the same. As written R2.1.4, “Real and reactive Load forecasts”, could mean that both Real and Reactive Load forecasts are required. Since most entities only forecast Real (MW) and apply a power factor for reactive (MVAR), wording could be changed to “ forecasted demand and power factor” to clarify that forecasting reactive load is not required.
The wording in R3.3.3 should be changed to “Ensure the power flows in the simulations are no higher than actual relay loadability limits. In R3.3.3 The term “loadability” needs to be defined. R3.5 needs to be modified. It would be better to combine R3.2 with R3.5. The first part of the requirement requires identification of events that produce more severe System impacts. The presumed reason that the other contingencies were not selected is because they were deemed to be less severe or non-credible. In any case, theoretically, there can always be examples of more severe Extreme Contingencies than the one selected for study. This can be achieved by simply choosing events that are even less credible. For example, if the Extreme Contingency studied was a simultaneous loss of 3 transmission lines with the failure of a redundant RAS (SPS), then an event resulting in the simultaneous loss of 4 lines with the failure of 2 sets of redundant RASs would be even more severe. Listing all possible extreme events could result in a limitless list.
R4.4 and R4.5 appear to be related to and set the limits for R4.1 and R4.2 respectively. We suggest moving both R4.4 and R4.5 into R4.1 and R4.2, then R4.4 and R4.5 could be deleted. R4.3 is unclear whether the Contingency analyses need to be performed for all planning events or only the more severe events referenced in R4.1 and R4.2. R4.3 needs clarification. R4.3.1 requires considering the impact of both successful and unsuccessful high-speed reclosing. Since successful reclosing is a much less severe event, it seems unnecessary to assess both. If entities need to assess both, the assessment could be in the list of sensitivities. R4.5 needs to be modified. It would be better to combine R4.2 and R4.5. The first part of the requirement requires identification of events that produce more severe System impacts. The presumed reason that the other contingencies were not selected is because they were less severe or non-credible. In any case, theoretically, there can always be examples of more severe Extreme Contingencies than the one selected for study. This can be achieved by simply choosing events that are even less credible. For example, if the Extreme Contingency studied was a simultaneous loss of 3 transmission lines with the failure of redundant RAS (SPS), then an event resulting in the simultaneous loss of 4 lines with the failure of 2 sets of redundant RASs would be even more severe. Listing all possible extreme events could result in a limitless list.
R5 could be interpreted to address both high voltage and low voltage criteria. We suggest changing the second sentence of R5 to read: “For transient voltage response, the criteria shall at a minimum, specify a voltage level and a maximum length of time that transient voltage may remain below that level.” This way high voltage is definitely excluded.
None
None
The term "functional entity" needs to be defined.
No
The definition of Non-Consequential Load needs clarification. A possible revision is to list bulleted items in the definition: Non-Interruptible Load loss other than: • Consequential Load Loss • the response of voltage sensitive Load • Load that is disconnected from the System by end-user equipment. This way “other than” applies to all three bullets.

No

Several outages identified in Categories P2, P4, and P5 seem to result in the same elements being removed from service, even though the initiating event is different. Thus, the same scenario is evaluated more than once. Also, the footnote numbering is not correct. We would like the drafting team to conduct a workshop before this standard goes to ballot to educate the industry on what outages are required to be simulated for which Categories.

No

In the Effective Date section, 60 calendar months is allowed for Corrective Action Plans. When does the 60 month period start? From the day the problem is identified? From the modeled year? Or from the effective date of the standard?

No

Since the definition section needs to be changed, some wording in the requirements needs to be modified, and the footnote numbering in Table 1 need to be corrected, we believe another draft should be issued before taking this standard to ballot.

Individual

Dilip Mahendra

Sacramento Municipal Utility District

SMUD appreciates the diligence with which the SDT has responded to our earlier comments. SMUD offers the following comments on Draft #4 for the SDT's consideration: R2.1.4: To define a “sensitivity” case, the standard should first define a “base” case. If a sensitivity case is a more conservative scenario analysis than a base case, does an entity need to perform/document a Planning Assessment for both “base” and “sensitivity” or is a Planning Assessment that uses the “Sensitivity” case adequate? R2.1: The wording in R2.1 is unclear as to whether new annual studies are required each year or whether qualified past studies are acceptable if no changes have been made. R2 reads “This Planning Assessment shall use current or past studies…”, while R2.1 implies current studies must be used but can be supplemented by past studies. We suggest changing the wording from “The Near-Term Transmission Planning Horizon portion of the steady state analysis shall be assessed annually and be supported by the following annual current studies, supplemented with qualified past studies…” to “The Near-Term Transmission Planning Horizon portion of the steady state analysis shall be assessed annually and be supported by the following annual current studies, or qualified past studies…”. R2.1.4 and R2.4.3: The words, “by a sufficient amount” should be removed as it does not provide any more clarity. R2.1.5: The first part of the sentence calls for an analysis of the impact (of modeling the spare equipment strategy). The second part of the sentence that defines the applicable categories to study, starts with the words “The Planning Assessment…”. Use of the defined words “Planning Assessment”, broadens the study to both an impact assessment and providing details of a “Corrective Action Plan”. The intent of the requirement should be made clear in the first sentence. R2.4.3: Suggest deleting the words “in the Planning Assessment”. Since a corrective action is not required for all sensitivities (see R2.7), use of the defined term in this paragraph can be confusing. R2.6.1: SMUD agrees with allowing a study older than five years to be considered if a technical rationale can be provided. R2.9: The requirement to report the largest single consequential load loss should not be included in the standard. If it remains, it must be made clear that it be applicable only to Year One, and there should be additional clarification that the requirement to report consequential load loss (single number) is ONLY for the most severe contingencies studied for the P1 and P2 contingencies. Table 1 P1.3 and associated Note 5: Is the purpose of the ‘reference voltage’ to determine a valid transformer contingency (thereby, limiting the scope of R2.9)? R2.7 / Table 1, Notes e and i: Note (e) excludes references to load that is allowed to be dropped if it is NOT part of Non-Consequential Load Loss. This note should include such Load (if represented in the load forecast being studied as being part of the Demand Response) if it can be dropped within the time duration applicable to the Facility Ratings. Note (i): Since the definition of Non-CLL would allow interruptible load to be dropped, is note (i) stating that interruptible load cannot be dropped even if it meets the ‘executable within the time duration' requirement?

R3.3.3: To implement this requirement, the standard appears to call for one more facility rating which is based on Relay Loadability. Is the intent to also model the protection system actions if this limit is violated? Should such a requirement be moved to the MOD or FAC standard with conformance subject to Note (f) of Table 1 (Facility ratings shall not be exceeded) and R3.3.1 (simulate the removal of all elements that the Protection System and other … are expected to disconnect…)?

R4.1.1: There appears to be a conflict between what is not allowed for a generator in R4.1.1 and what is allowed in Note (b) of Table 1 (…consequential generation loss – which is an undefined term – and hence can be interpreted as one sees fit). R4.3.3: It is unclear what is expected from this requirement. Are Protection personnel to take the results of the transient stability simulation and determine its impact on the Protection System? Or, is it that the Protection System should be properly modeled in stability simulations? If it is the latter, this requirement is already covered by R4.3.1 (simulate the removal of all elements …). R4.3.2: If done right, this requirement should be already complied with under R4.3.1. If it needs to be spelled out, a better place may be in the MOD Standards. R4.4 and R4.5: Requirements R4.4 and R4.5 appear to be related to and set the limits for R4.1 and R4.2 respectively. Suggest moving both Requirements R4.4 and R4.5 into R4.1 and R4.2, allowing these sub-Requirements (R4.4 and 4.5) to be deleted. It is unclear from the wording in R4.3 whether the

Contingency analyses need to be performed for all planning events or the more severe events referenced in R4.1 and R4.2. Please clarify the wording of R4.3. R4.3.1 appears to require an assessment of both successful and unsuccessful high-speed reclosing. Successful reclosing is a much less severe event, so it seems unnecessary to assess both. If the intent is to make entities assess both, we suggest including the assessment in the list of sensitivities.

As worded R5 is unclear. We interpret R5 to require entities to specify minimum voltage levels that must not be exceeded for more than a specific period of time. High transient voltages are typically not a problem. We suggest changing the second sentence of R5 to read: "For transient voltage response, the criteria shall at a minimum, specify a voltage level and a maximum length of time that transient voltage may remain below that level."

Clarity is needed in the phrase functional entity in R8. Is this referring to the entities identified in the Functional Model or something else?

No

Definition of Non-Consequential Load (Non-CLL): This definition excludes from the "Non-Consequential Load" only the "Interruptible" portion of Demand Response. The last SDT response to a comment on Draft #3 stated that there is no ceiling on the amount of DSM that can be utilitized (see Reference 1 below). Since Demand Response is more than just "Interruptible" demand, it is recommended that the exclusion in the definition for Non-CLL be broadened to include other relevant categories (see Reference 2 below) of Demand Response / DSM that is acceptable. Reference 1: pdf page 310, 337: SDT response related to DSM at http://www.nerc.com/docs/standards/sar/ATFNSDT_third_posting_comment_responses_2009Sept16.pdf Reference 2: http://www.nerc.com/docs/pc/drdtf/DADS_Phase_III_Final_090109.pdf, Figure 3 at pdf page 16, block under Capacity; and, associated definitions in Appendix III at pdf page 46 Use of the defined term "Planning Assessment" throughout the standard: Since the definition includes both performance evaluation (assessment) and corrective action to remedy identified deficiencies, its usage throughout the standard should be reviewed to ensure that it does not mandate corrective actions where the minimum requirement may be calling only for an assessment. The SDT should consider including a definition for "Spare Equipment Strategy". The SDT's comments on 'spare equipment strategy' (at pdf page 122 of Consideration of Comments on 3rd Draft) state that it is based on a directive from FERC Order 693. Directives that impact reliability should be translated in to a requirement in a Standard. Even the proposed scope of MOD-010-0 (reference http://www.nerc.com/files/2010-2012_RS-Development-Plan_Volume-I_II.pdf page 223) makes a reference to the strategy, but does not require it.

No

As currently drafted, several outages identified in Categories P2, P4, and P5 appear to potentially result in the same elements being removed from service, so therefore the same event, even though the initiating event is different. Comments on notes have been provided with associated requirements.

No

Revisions are necessary to the Effective Date language to clarify the 60 calendar months language for Corrective Action Plans. It is unclear if the entity has five years from the day they identify the problem or five years from the modeled year or five years from the effective date of this standard.

The SDT should develop a detailed sample assessment prior to balloting so that the SDT's hard work can be voted on by an informed ballot pool.

Group

Florida Municipal Power Agency, and its Member Cities, Lakeland Electric and Fort Pierce Utility Authority

The MOD standards for load forecasts (e.g., MOD-016 through 021) do not require submission of a reactive load forecast from the LSEs and RPs; therefore, why is it expected that the TPs and PCs use a reactive forecast that is not provided? From the auditor's perspective, what is expected and acceptable for System models representing reactive load forecasts? Suggested change: "1.1.4 Real Load forecasts and future reactive Load assumptions" Not all system models can represent all "Known commitments for Firm Transmission Service and Interchange". The SDT needs to add "…that are expected to be utilized." to the requirement.

As worded, 2.1 now seems to require power flow, short circuit and stability studies be done every year for the Near Term. Is this the intent of the SDT? There are smaller systems that do not require this (e.g., if a smaller system has nothing more change form year to year than a 1.5% load growth, and there is plenty of margin on various SOLs, why is another study needed?). FMPA suggests re-wording to: "The Near-Term Transmission Planning Horizon portion of the steady state analysis shall be assessed annually and be supported by the following annual current studies or by qualified past studies as indicated in Requirement R2, part 2.6" Since 2.2 only has one sub-bullet, 2.2.1 ought to be collapsed into 2.2. We think it would read less confusing as well, see below for suggested phrasing: "The Long-Term Transmission Planning Horizon portion of the steady state analysis shall be assessed annually and be supported by a current study of expected System peak Load conditions for one of the years in the Long-Term Transmission Planning Horizon and the rationale for why that year was selected,

supplemented with qualified past studies as indicated in Requirement R2, part 2.6." The short circuit studies of 2.3 should not only assess the fault current interrupting capability of breakers, but also circuit switchers and the momentary current carrying capability of other equipment, such as switches and substation bus. We recommend changing the phrase to: "The analysis shall be used to determine whether the fault current is within the momentary current carrying capabilities and/or fault current interrupting capabilities of (Elements or Facilities) using …. " Also, for the short circuit study of 2.3 (and 2.8), it is not necessary to study all of the contingencies, just P2. Taking other Facilities out in addition to the fault will only reduce fault current. Auditors may not be aware of that and maybe the standard could say that only P2 needs to be studied to reduce future confusion. In 2.6, "material change" is ambiguous, especially in regards to load growth. How much load growth is allowed before it is "material"? Is the intent of the SDT to have 2.7 apply to all previous bullets in R2? If so, then it could be made clearer by starting 2.7 with "For the analyses discussed in 2.1 through 2.5, and for the planning events shown in Table 1, when the analyses indicate …" 2.7 seems to have lost the reference to lead times for Corrective Action Plan(s) that were present in the existing TPL-001-0, TPL-002-0 and TPL-003-0 standards, is that the intent of the SDT? Since only two of the years in the near term need to be studied, and one of the year's in the long term study, there ought to be some method to determine when a Corrective Action Plan is needed, the lead time of that Corrective Action Plan, to give an indication of when activity needs to start to implement the Corrective Action Plan. The Planning Coordinator and Transmission Planner should not be responsible in 2.7 for any repercussion of an entity not implementing the Corrective Action Plan. Bullet 2.7 ought to be reworded to developing the Corrective Action Plan only and not implementation. For instance, 2.7.4 requires review of Corrective Action Plans. If a Corrective Action Plan calls for a major transmission addition, then that addition usually is in the domain of the Transmission Owner. If the Transmission Owner decides not to build the transmission upgrade for a variety of reasons (e.g., budgets, etc.), then the Planning Coordinator and Transmission Planner could end up being in violation of the standards through no fault of their own (e.g., even though curtailment of firm service would then be allowed in 2.7.3, if such curtailment would not solve the problem, e.g., if there is not enough pre-contingency re-dispatch available, then the Planning Coordinator would be in violation). Implementation of the Corrective Action Plan, however, is very important. FMPA suggests that another requirement be added to require Transmission Owners, Generation Owners, Transmission Operators, Generation Operators (latter two if there are operating schemes involved) within the planning area of the Planning Coordinators and Transmission Planners to implement the plan as determined by the Planning Coordinators and Transmission Planners, with another requirement requiring that the entities agree on the Corrective Action Plan. This would mean expanding the applicability of the standard. This new requirement ought to have a VRF of High because not implementing the Corrective Action Plan could have high risks. What is the reliability purpose of 2.9? Is it to identify the largest potential supply / demand mismatch? If so, the largest loss of source, usually about 1000 MW, will overwhelm this number. FMPA does not understand the reliability purpose of providing this number, especially since the power flow models already capture most of this information (e.g., amount of load connected to tap substations or radial feeds). This seems to be an administrative item with no reliability purpose, especially since it only applies to P1 (why does it apply to P1 – how can there be consequential load loss without a contingency, unless it's specific to 2.1.5?) and P2.
3.3.1, is the intent of the SDT that extreme events that may cause loading beyond relay trip settings (especially Zone 3) be simulated? There is no need for 3.3.3 since the Facility Ratings should already take this into account (FAC-008, R1.2.1 The scope of equipment addressed shall include, but not be limited to, … relay protective devices, …"). This adds unneeded burden to transmission planners in developing evidence for this that already exists elsewhere. In other words, by respecting Facility Ratings, we respect relay loadability.
4.1.1, suggest rewording "(a) generator being disconnected from the Bulk Electric System …", system as defined in the Glossary includes distribution, and we do not believe that is the intent of the SDT. 4.1.2, 4.3.1 and 4.3.3 essentially require modeling every Zone 3 (or higher, such as Zone 5) relay in each Interconnection (or at least in the Region under study and adjacent regions) because, in order to simulate the impact of a power swing on a distance relay, one would need to know the characteristics of the distance relay and how long the transient swing remains within that characteristic, which means modeling the relay. Is that the intent of the SDT? If so, FMPA suggests limiting these bullets to Facilities 230 kV and higher.
No comments
FMPA suggests adding the word "potential" into "… identify the potential for System instability …". The criteria and methodology may be used to determine if further analysis is warranted, e.g., if steady state voltages fall below 0.9 per unit, then do a voltage stability study, or something like that. Going below 0.9 does not mean voltage collapse, but, it may be an indicator to study it; hence, the word "potential".
The Measure and Data Retention for R7 is ambiguous. While the measure could be interpreted as not requiring a contract, the data retention uses the words "in force agreement" which implies a formal contract, where roles and responsibilities could very well be assigned in regional planning committee minutes and ensuing e-mail correspondence. Suggest changing the words to "Documentation of agreement on roles and responsibilities, such as meeting minutes, agreements, and e-mail correspondence" in both locations.
No comment

Yes

No

Table 1, under Steady State & Stability, “a” states: “BES Transmission voltage instability, cascading outages and uncontrolled islanding shall not occur.” There are small portions of the grid where there may be three long lines feeding a load, and if two of those two lines were lost (P6 for instance), the remaining line would go into voltage collapse losing a few hundred MWs of consequential load with no impact to the BES. FMPA suggests that the wording be appended by: “BES Transmission voltage instability, cascading outages and uncontrolled islanding shall not occur for P0 through P2. BES Transmission voltage instability, cascading outages and uncontrolled islanding causing a supply / demand mismatch of more than the largest single loss of source shall not occur.” FMPA does not understand why a bus-tie breaker would be treated differently than another breaker. They both have the same chance of failure.

Yes

Group

Oklahoma Gas & Electric

R2.4.3 Not positive what this actually requires Transmission Planner to perform. Recommend compliance with requirement be the responsibility of the Transmission Coordinator. R2.9 OG&E has not provided this information in the past. Different sets of load flow models will result in different data results. Do not see any merit with providing information.

R 3.4, R3.5 There appear to be no standards of directions on identifying severe or extreme system impacts. OG&E does not like being held accountable to nebulas standards. Need more specific information.

R4 OG&E believes the Transmission Coordinator be held accountable for R4. The Transmission Coordinator should coordinate this type of study with the Transmission Planner for a regional look of the whole system. For example Southwest Power Pool should coordinate this type of study with the members of the Southwest Power Pool to better examine the entire region of the Southwest Power Pool. We do not see the need to duplicate the work. R4.4 & R4.5 There appear to be no standards of directions on identifying severe or extreme system impacts. OG&E does not like being held accountable to nebulas standards. Need more specific information.

R5 OG&E believes the Transmission Coordinator be held accountable for the transient voltage response portion of R5. The Transmission Coordinator should coordinate this type of voltage criteria with the Transmission Planner for a regional look of the whole system. For example Southwest Power Pool should coordinate this type of study with a stakeholder developed voltage criteria within the members of the Southwest Power Pool to better examine the entire region of the Southwest Power Pool. We do not see the need to duplicate the work.

R6 OG&E believes the Transmission Coordinator be held accountable for R6. The Transmission Coordinator should coordinate this type of study/documentation with the Transmission Planner for a regional look of the whole system. For example Southwest Power Pool should coordinate this type of study/documentation with the members of the Southwest Power Pool to better examine the entire region of the Southwest Power Pool. We do not see the need to duplicate the work.

We agree that it should be clearly stated who does what between the Transmission Planner and the Planning Coordinator. We feel like this will eliminate duplication of work and create a better overall regional examination of the electric grid.

R8 OG&E believes the Transmission Coordinator be held accountable for R8 and coordinate this type of data exchange to ensure a regional coordination effort is achieved.

No

R 3.4, R3.5, R4.4 & R4.5 There appear to be no standards of directions on identifying severe or extreme system impacts. This may need to be defined. Extreme events evaluated (last page of Table 1) – OG&E needs more specific information on what is defined to be an extreme event before offering support. It appears the number of possible combinations and permutations that could be run make any compressive study overwhelming to perform and would provide very limited benefits. This needs to be clarified.

No

Category P7 – OG&E supports as long as footnote 11 is included. Category P6 is an N-2 situation. OG&E does not support the wholesale study of every N-2 combination of contingencies even though one is allowed for the interruption of firm transmission service and non-consequential load loss. Establishing and maintaining operating guides associated with every N-2 set of contingencies is oppressive and would provide limited value. OG&E understands the need for targeted N-2 contingency studies; such as breaker failure. Category P5 – Need more specific description of “Protection System failure” before receiving OG&E’s support. Category P4 – OG&E supports performing studies. OG&E also supports the differentiation between “DHV” and “HV”. OG&E does not support developing operating guides for every

voltage or overload issue discovered. Category P3 – OG&E is concerned about the value of P3. Information about the expected value of performing studies for the category is needed before receiving OG&E support. Category P2 – OG&E supports even though there are a few minor issues. Category P1 – OG&E supports OG&E will need every bit of the 60 months time mentioned on page 3 under “Effective Date” to implement all indicated upgrades. There is benefit in hardening the OG&E electrical system for such protection system failures, such as P4 & P5, but it may not be cost effective. Comments – Stability Analysis Stability Analysis – Recommend Planning Coordinator will be responsible for running the stability analysis to assure NERC compliance. The Planning Coordinator and Transmission Planner should work together to prepare the data.
No
OG&E will need every bit of the 60 months time mentioned on page 3 under “Effective Date” to implement all indicated upgrades. There is benefit in hardening the OG&E electrical system for such protection system failures, such as P4 & P5, but it may not be cost effective.
No
This document needs to be cyrstal clear because of compliance requirements. It still needs some work to clarify some definitions and address duplication of work (between the Transmission Planner and Planning Coordinator).
Individual
Thad Ness
American Electric Power
Because the revised transmission planning standard now explicitly references short circuit analysis, we believe that there is a need for a parallel MOD standard to establish requirements for short circuit modeling and for a corresponding reference under R1, just as there are references made in R1 to MOD-010 (power flow models) and MOD-012 (stability models) . We recognize that such a MOD standard will not be addressed as part of this project, but we request that the SDT pass this comment on to NERC Staff.
R 2.6.2, as written, may lead to misinterpretation. Following are two alternative suggestions to remedy this issue for the SDT’s consideration: 1) "For steady-state, short-circuit, or Stability analysis: the study shall be rendered obsolete by any material changes unless…" or 2) "For steady-state, short-circuit, or Stability analysis: the system shall not include any material changes unless…" While R3 (steady-state studies) covers 2.1 and 2.2 (steady-state assessments), and R4 (stability studies) covers 2.4 and 2.5 (stability assessments), there does not appear to be a corresponding requirement (short circuit studies) to cover 2.3 (short circuit assessments). We recommend that a new requirement be established and numbered to align between existing requirements R3 and R4.
No Comments.
We recommend inserting "unstable" in the requirement language as follows: "Simulate the impact of unstable transient swings on Protection System operation…" Our perception is that the wording of 4.3.3 is almost certain to require the representation of impedance relay characteristics on both ends of all lines in a study area in order to satisfy an audit, and would eventually require representation on both ends of all BES lines as all areas would be studied at some point. This sub-requirement would place a huge burden on transmission planning and protection engineering staff. Experience has shown that tripping of transmission lines or transformers on stable swings is extremely rare. The burden this sub-requirement would cause as presently worded is not commensurate with the expected benefit.
We believe that it is appropriate to eliminate the reference to transient voltage response as it is duplicative and unnecessary. System stability is already better addressed by other performance requirements defined in this standard.
M6 does not appear to align with the content of R6. M6 needs to be reworded to reference documentation of criteria or methodology rather than studies. Corresponding changes will also need to be made to the corresponding bullet under Data Retention.
No Comments.
No Comments.
Yes
Yes
In Table 1, footnotes 19 and 101 should probably read 9 and 10. Also, we suggest adding table borders in P4 to more clearly align the columns that correspond to Event 6 (similar use of table borders as was done in P2).
Yes
Yes
The SDT has done an exceptional job working through complex issues and varying perspectives to arrive at this solid draft. This version has significantly improved the standard and has raised the bar where appropriate to do so. With favorable consideration of comments from this round, the revised draft should be ready for ballot.

Individual
Bart White
Progress Energy Florida, Inc.
As PEF is opposed to TPL-001-1 as a whole, PEF will have no further comment on this issue other than to encourage all appropriate parties to review PEF's previous comments to this effect.
As PEF is opposed to TPL-001-1 as a whole, PEF will have no further comment on this issue other than to encourage all appropriate parties to review PEF's previous comments to this effect.
As PEF is opposed to TPL-001-1 as a whole, PEF will have no further comment on this issue other than to encourage all appropriate parties to review PEF's previous comments to this effect.
As PEF is opposed to TPL-001-1 as a whole, PEF will have no further comment on this issue other than to encourage all appropriate parties to review PEF's previous comments to this effect.
As PEF is opposed to TPL-001-1 as a whole, PEF will have no further comment on this issue other than to encourage all appropriate parties to review PEF's previous comments to this effect.
As PEF is opposed to TPL-001-1 as a whole, PEF will have no further comment on this issue other than to encourage all appropriate parties to review PEF's previous comments to this effect.
As PEF is opposed to TPL-001-1 as a whole, PEF will have no further comment on this issue other than to encourage all appropriate parties to review PEF's previous comments to this effect.
As PEF is opposed to TPL-001-1 as a whole, PEF will have no further comment on this issue other than to encourage all appropriate parties to review PEF's previous comments to this effect.
No
As PEF is opposed to TPL-001-1 as a whole, PEF will have no further comment on this issue other than to encourage all appropriate parties to review PEF's previous comments to this effect.
No
As PEF is opposed to TPL-001-1 as a whole, PEF will have no further comment on this issue other than to encourage all appropriate parties to review PEF's previous comments to this effect.
No
As PEF is opposed to TPL-001-1 as a whole, we cannot comment on the details of the Implementation Plan, other than to say that given the fundamental inadequacies of TPL-001-1, PEF does not believe the Standard should be implemented at all. Given that the wording of Question 12 appears to imply that any general comments made in the Question 12 comments section would be unwelcome and disregarded, PEF would respectfully like to make the following comments regarding our overall position on TPL-001-1: PEF filed extensive comments for the 1st, 2nd and 3rd drafts of TPL-001-1 and voiced serious concerns about the consequences that Transmission Owners and ratepayers will undoubtedly face if TPL-001-1 were to be implemented. PEF respectfully asks the SDT to review PEF's previous comments, particularly from the perspective of the ratepayers. The average ratepayer in the U.S. is already experiencing high electricity bills based on fuel pass-through charges and electric utilities' needs to raise rates to successfully operate and maintain the system. Furthermore, the ratepayers have not been involved in this Standard drafting process, and indeed have not even been informed at even the most cursory level. PEF has pointed this out in previous comments, and the SDT's response has been inadequate. Given the erroneous approach of Table 1 in TPL-001-1 to gauge reliability based on whether or not firm transmission service or non-consequential load will be curtailed, implementation of the Standard will dramatically increase ratepayers' already-high rates with little or no appreciable reliability improvement. Additionally, Transmission Owners will be forced to reduce ATC in order to prevent compliance violations, thus shutting out Power Marketers and potentially resulting in construction of more new generation than is really needed. Another major conflict that TPL-001-1 will cause is a rift between the FERC/NERC regulatory environment and the various states' Public Service Commissions (PSC). The major transmission projects that TPL-001-1 will mandate (especially those mandated due to the overly burdensome and unnecessary > 300 kV section) will have to be approved for permitting and funding through Determination of Need hearings at the PSC. When questioned by the PSC on the need for such projects, Transmission Owners will be obligated to admit that the projects really aren't needed but for NERC's new TPL-001-1 Standard, which will undoubtedly result in the PSC's denial of approval. PEF also would like to note that the SDT still has not provided sufficient reason for the need to implement a new TPL Standard. PEF and its fellow members in FRCC have historically demonstrated excellent reliability while performing long-term Transmission Planning under the existing TPL Standards. There simply is no practical reason for improvement on the existing Standards. PEF is aware of the history of the drafting of a new TPL Standard, however, having reviewed FERC's direction to NERC in this matter. Regarding this, PEF feels that NERC should have pointed out the likely consequences to merely following FERC's directions in their entirety; instead, NERC formed a SDT which proceeded to draft a new TPL Standard that satisfied each and every direction FERC had given. This approach has resulted in a draft Standard that is much too stringent, not conducive to significant reliability improvement and prohibitively expensive to implement. In conclusion, PEF strenuously opposes TPL-001-1, and feels the implementation of TPL-001-1 is unfair, irresponsible and unnecessary. PEF furthermore feels that it has sufficiently proven this in previous comments, and will continue to seek additional avenues to ensure that said comments are given proper consideration. TPL-001-1 is thus not in a condition to go to ballot, and it would be highly inappropriate to send this Standard to ballot given the major concerns that PEF and numerous other utilities within NERC have

raised.

No

Individual

Terry Huval

Lafayette Utilities System

LUS is satisfied that the current version resolves the issues we raised as to R2.

The modified version resolves the confusion noted by several commenters in the earlier draft.

Yes

LUS generally supports the changes to the definitions and the changes to the rest of the standard. We appreciate the efforts of the SDT in responding to the many comments that were filed in response to version 3, and in crafting what appears to LUS to be a reasonable attempt to attain a consensus position, at least as we understand the result.

Yes

While LUS remains concerned as to the way in which what is now footnote 9 may be followed in operation in areas where there have been historic problems with the old “footnote b”, we appreciate the clarifications that have been made, and recognize that this may be the best way to resolve an issue for the industry. Please note that there remains what appears to be a typographical error in Table 1, Category P3, under “Initial System Condition” in that the footnote reference is to footnote 19, which does not exist. The reference was to footnote 10 in v.3 and we assume that the correct reference here is to footnote 9, which used to be footnote 10.

LUS remains concerned as to the length of time permitted for implementation, and believes that it should be shorter, but would not oppose adoption of version 4, as it has now been clarified, if that is the only issue of concern. There may be ways, outside the standard development process, to limit the financial harms caused to others as a result of the failure to meet the clarified standard during the implementation period.

Yes

LUS believes that the current draft of the standard is a significant improvement on the previous draft, and that the standard is ready to go to ballot. While there are elements of the standard which we consider to be short of the ideal, we recognize that this has been a consensus-building process and that the version 4, as explained and clarified, is a compromise which may be the best attainable for the industry at the moment.

Individual

Jessica Rice

NV Energy

R1.1.4 could be interpreted that the standard requires forecasting reactive load. However, most entities forecast demand (MW) and apply a power factor(s) to calculate reactive load. Therefore, please change “real and reactive load forecast” to “forecasted demand and power factor” so it is clear that forecasting reactive load is not required. For R1.1.5 we suggest changing the wording from “Known commitments for Firm Transmission Service and Interchange” to “Known commitments for Firm Transmission Service or Interchange”. It is difficult to distinguish between the two in future cases where not all contractual arrangements are known.

The wording in R2.1 is unclear as to whether new annual studies are required each year or whether qualified past studies are acceptable if no changes have been made. R2 reads “This Planning Assessment shall use current or past studies…”, while R2.1 implies current studies must be used but can be supplemented by past studies. We suggest changing the wording from “The Near-Term Transmission Planning Horizon portion of the steady state analysis shall be assessed annually and be supported by the following annual current studies, supplemented with qualified past studies…” to “The Near-Term Transmission Planning Horizon portion of the steady state analysis shall be assessed annually and be supported by the following annual current studies, or qualified past studies…” It is unclear if the drafting team intended the sensitivity studies identified by the bullets in R2.1.4 to align with the sensitivity studies identified by the bullets in R2.4.3. Both are for Near-Term studies but for steady state and stability respectively. If the intent is that they align, the wording should be modified to be the same. Also, similar to R1.1.4 above, R2.1.4 could be interpreted that the standard requires forecasting reactive load. However, most entities forecast demand (MW) and apply a power factor(s) to calculate reactive load. Therefore, please change “real and reactive load forecast” to “forecasted demand and power factor” so it is clear that forecasting reactive load is not required.

For clarity we suggest that the wording in R3.3.3 be changed to “Ensure the power flows in the simulations are no higher than actual relay loadability limits.
Requirements R4.4 and R4.5 appear to be related to and set the limits for R4.1 and R4.2 respectively. Suggest moving both Requirements R4.4 and R4.5 into R4.1 and R4.2, allowing these sub-Requirements (R4.4 and 4.5) to be deleted. It is unclear from the wording in R4.3 whether the Contingency analyses need to be performed for all planning events or the more severe events referenced in R4.1 and R4.2. Please clarify the wording of R4.3. R4.3.1 appears to require an assessment of both successful unsuccessful high-speed reclosing. Successful reclosing is a much less severe event, so it seems unnecessary to assess both. If the intent is to make entities assess both we suggest including the assessment in the list of sensitivities.
As worded R5 is unclear. We interpret R5 to require entities to specify minimum voltage levels that must not be exceeded for more than a specific period of time. High transient voltages are typically not a problem. We suggest changing the second sentence of R5 to read: “For transient voltage response, the criteria shall at a minimum, specify a voltage level and a maximum length of time that transient voltage may remain below that level.”
No Comments
No Comments
Clarity is needed in the phrase functional entity in R8. Is this referring to the entities identified in the Functional Model or something else?
No
The definition of Non-Consequential Load is in need of clarification. As written, it could be interpreted that load that is disconnected from the System by end-user equipment would not be allowed for certain contingencies. Suggested revision to the language follows Non-Interruptible Load loss other than: • Consequential Load Loss • the response of voltage sensitive Load • Load that is disconnected from the System by end-user equipment. This version uses the same wording but clarifies that the term “other than” applies to all three things.
No
As currently drafted, several outages identified in Categories P2, P4, and P5 appear to potentially result in the same elements being removed from service, so therefore the same event, even though the initiating event is different. We believe that the drafting team needs to conduct a workshop prior to balloting to educate the industry on what outages are required to be simulated for which Categories. Additionally there are footnotes numbered 12, 19, and 101, which do not relate to any foot note in the document, and some other footnotes seem to be misplaced. We encourage the drafting team to carefully review all footnotes to ensure accuracy prior to balloting this standard.
No
Revisions are necessary to the Effective Date language to clarify the 60 calendar months language for Corrective Action Plans. It is unclear if the entity has five years from the day they identify the problem or five years from the modeled year or five years from the effective date of this standard.
No
Based on the unclear or ambiguous language identified in the comments above as well as the confusion noted in the Table 1 regarding outages and footnotes, we believe modifications are necessary prior to taking this standard to ballot.
Individual
L. Earl Fair
Gainesville Regional Utillities
I like the more simplified approach used in the requirement listing. As far as “using the latest data consistent with MOD-010 & MOD -012 data”, I feel that unplanned or unknown system changes between the times when studies are actually ran for the long term planning process should not be an issue for any type of negative interpretation by a compliance auditor. I presently do not have a suggestion on how to guarantee such an understanding. Overall the revisions look good.
Combining 4 TPL standards into 1 standard makes for a situation that you will always be audited on all the covered functional areas instead of part of the functions in a given audit. Example, in 2009, TPL-004 was not part of the audit while the other 3 standards were part of the audit. Of course, you should always be current with all functional assessments. I use one assessment document to cover all the functional areas. I do like the added clarity on the time horizons for various studies. I find R2. part 2.1.5 to create a somewhat clearer focus on spare equipment strategy. But the created task could create a lot of work for a utility depending on its configuration and redundancy.
Even though I do assess my portion of the BES, I do so, not in an isolated, detached vacuum, but in light of its active connection to the rest of the FRCC Region and how, if at all possible, my small system could in any way be determined at the region level to have any impact in any of the functional areas of the entire region. So the requirements in this section are considered and assessed as “a part of the whole”.
As generation and transmission elements are added to our small system, we evaluate the stability impact as part of its feasibility and impact studies. After installation and in each year of a critical conditions study at the regional level, our elements are considered in the regional priority listings to

determine if any stability issues need additional or continuous evaluation. Again, as a “part of the whole” our elements are considered and our assessment is based on these and other findings. Again, this revision seems to add clarity to this requirement and its parts. Good Job!
Voltage considerations can get lost in the various studies. This requirement brings focus to the voltage component which it rightly deserves.
I believe that this requirement is better defined and documented at the regional level with all involved parties contributing. If consensus is not achievable, then the exception utilities can create their own knowing that they need technically valid references to support their position.
Looks good.
The wording could be a little better to indicate that the PC and TP should always get each others planning assessments, but other entities need to indicate a reliability related need to get the same. I suggest making a second sentence and eliminating the word “and”.
No
I still find the Non-Consequential Load Loss definition vague. But, I presently do not have anything better to offer and thus I can live with it.
Yes
Yes
Yes
Individual
Phuong Tran
Lakeland Electric
• Suggesting language “known planned” outages and in place of “known” outages • Suggesting language “real & reactive resources” in place of “Resources” • “within its respective area”, how about ties?
Agree with the changes made to the spare equipment strategy requirement
No
Recommended the following changes to the HV definition: Bulk Electric System (BES) level references include extra-high voltage (EHV) Facilities defined as greater than 300kV and high voltage (HV) Facilities defined as the 300kV and lower voltage Systems, per the Regional Entity’s BES criteria/definition. Bulk Electric System (BES) level references include extra-high voltage (EHV) Facilities defined as greater than 300kV and high voltage (HV) Facilities defined as the 300kV and lower voltage Systems, per the Regional Entity’s BES criteria/definition.
No
The effective section needs more clarification: The assessment and supporting studies in accordance with the new standard is not effective until two years after this new standard is approved, however, it is required (R8) that PCs and TPs distribute its planning Assessment and results to adjacent PCs and TPs one year after the standard is effective. Which standard does the SDT intend for the (the old TPL standards or the new TPL standard) PCs and TPs to use to assess their system during the first year after the standard is approved? R2 thru R7 (assessments and studies) becomes effective 2 yrs after regulatory approval. That means that utilities have three years left to build/upgrade the projects identified in the studies/assessment (which was not effective until the 2nd year). Three years might not be enough to build long EHV or HV lines to meet the standard requirement. What happens between year 5 and year 7? After year 5, utilities are not allowed to trip Non-Consequential Load or curtailment of Firm Transmission Service for those specific contingency listed. However, the utilities do not have to self report until year 7 (“60 months of the compliance date for R2 through R4”)
Individual
Michael Ayotte
ITC Holdings
Comments: These requirements refer to new facilities which would include new generators. ITC requests clarification as to what constitutes a "new generator" that needs to be considered -- those in the queue, those with signed Interconnection Agreements, those under construction... What is the line of

demarcation between what is in and what is out? In addition to the above, ITC also requests clarification as to whether or not these requirements apply to new generators, who connect to the network as “Energy Only” resources and, are either, not required to construct facilities needed to meet reliability requirements or are allowed to operate as “Energy Only” until needed facilities are constructed. The CAP for these facilities is that they will be curtailed or other generation will be curtailed should “operating” violations occur. Under market mechanisms, these generators are allowed to operate if their energy prices are lower than other generators whose curtailment eliminates the violation, even though the curtailed generators have paid for the facilities needed to meet reliability requirements. As the standard is written, these requirements imply that all generators must be included in studies. Were we to do so, significant standards violations might result. Does the Transmission Owner have to study all violation scenarios or include all “Energy Only” generators in studies when the CAP is always the same: “Market redispatch”. Please clarify study scenario requirements for “Energy Only” resources.

Comments: R2.1.1 – Are two distinct study years necessary if a transmission owner can demonstrate that loads within their footprint have minimal growth over the 5 year period, defined to be less than X% of growth? Since the standard requires a relatively large number of studies to meet performance requirements, an initial set of studies along with studies demonstrating that “CAPs work” seems sufficient during periods of load stagnation. R2.1.4, R2.4.3 & R2.7.1. These requirements refer to new facilities which would include new generators. ITC requests clarification as to what constitutes a "new generator" that needs to be considered -- those in the queue, those with signed Interconnection Agreements, those under construction... What is the line of demarcation between what is in and what is out? In addition to the above, ITC also requests clarification as to whether or not these requirements apply to new generators, who connect to the network as “Energy Only” resources and, are either, not required to construct facilities needed to meet reliability requirements or are allowed to operate as “Energy Only” until needed facilities are constructed. The CAP for these facilities is that they will be curtailed or other generation will be curtailed should “operating” violations occur. Under market mechanisms, these generators are allowed to operate if their energy prices are lower than other generators whose curtailment eliminates the violation, even though the curtailed generators have paid for the facilities needed to meet reliability requirements. As the standard is written, these requirements imply that all generators must be included in studies. Were we to do so, significant standards violations might result. Does the Transmission Owner have to study all violation scenarios or include all “Energy Only” generators in studies when the CAP is always the same: “Market redispatch”. Please clarify study scenario requirements for “Energy Only” resources.

Comments: Assumptions regarding Low Voltage Ride Through (LVRT) capability are risky and not well understood. If the SDT feels this is a critical requirement that merits corrective action then we believe LVRT characteristics for various machine types should be developed through a NERC process. Without such “standards”, it will be difficult to justify CAPs based on LVRT assumptions. For example, would the Transmission Owner (TO) or Generator Owner be responsible for the cost of VAR CAPs if an LVRT assumption were violated. Can a TO require an LSE to install automatic load shedding for an LVRT assumption when cascade or local load loss result from an LVRT assumption? In addition, as the SDT has already indicated, the industry is still in a learning curve regarding the dynamic behavior of certain loads. If LVRT capability is considered as a critical requirement, then what about High Voltage Ride Through (HVRT) capability? The violation of HVRT could also cause certain damages to the system. R3.4.1 – (contingency list coordination with neighbors) It’s unclear as to the “measure” for this requirement. Do you give your neighbor a list of “contingencies” in your area. Should it include all categories (p1 thru p7 for example)? Does your neighbor have to study a cascade situation in his system caused by an outage in your system? Are joint studies merited? More importantly, if an outage in a neighboring system requires a CAP, who’s responsible, particularly if the CAP involves the neighboring system. Does the neighbor have to have a CAP, according to this standard, if the violation is in your system, and the CAP is in his? Who pays? Are you putting a study burden on your neighbor when you do this? Do you include additional contingencies to ensure that you do not miss a contingency that might impact your neighbors system to avoid any potential compliance implication on you?

Comments: On R4.3.2: Assumptions regarding Low Voltage Ride Through (LVRT) capability are risky and not well understood. If the SDT feels this is a critical requirement that merits corrective action then we believe LVRT characteristics for various machine types should be developed through a NERC process. Without such “standards”, it will be difficult to justify CAPs based on LVRT assumptions. For example, would the Transmission Owner (TO) or Generator Owner be responsible for the cost of VAR CAPs if an LVRT assumption were violated. Can a TO require an LSE to install automatic load shedding for an LVRT assumption when cascade or local load loss result from an LVRT assumption? In addition, as the SDT has already indicated, the industry is still in a learning curve regarding the dynamic behavior of certain loads. If LVRT capability is considered as a critical requirement, then what about High Voltage Ride Through (HVRT) capability? The violation of HVRT could also cause certain damages to the system. R4.4.1 - (contingency list coordination with neighbors) It’s unclear as to the “measure” for this requirement. Do you give your neighbor a list of “contingencies” in your area. Should it include all categories (p1 thru p7 for example)? Does your neighbor have to study a cascade situation in his system caused by an outage in your system? Are joint studies merited? More importantly, if an outage in a neighboring system requires a CAP, who’s responsible, particularly if the CAP involves the neighboring system. Does the neighbor have to have a CAP, according to this standard, if the violation is in your system, and the CAP is in his? Who pays? Are you putting a study burden on your neighbor

when you do this? Do you include additional contingencies to ensure that you do not miss a contingency that might impact your neighbors system to avoid any potential compliance implication on you?

none

none

none

none

Yes

none

Yes

none

Yes

none

No

Comments: In addition to our other comments, ITC offers the following feedback. The requirements are rather complex, yet the measures seem extremely simple. Have they been discussed in any detail and are they sufficiently described to insure and understanding of just what is expected (ie., Are the requirements sufficient as measures in and of themselves?) R2.1.5 for example discusses “spare equipment strategy for long-lead time facilities”. If I have a 2p.u. xfmr, can I assume it spares all similar category transformers or would I have to study P0,P1 and P2 contingencies if it replaces a 3 p.u. xfmr. If I don’t have a spare and can’t meet P0,P1 or P2 contingencies without load shedding, do I need a CAP. See also our comments under R3.4.1. We haven’t reviewed all requirements and all measures in this fashion but suggest the SDT do so.

Individual

John Pearson

ISO New England

R1.1.1 Make this read “Existing Facilities and Resources” so that it will be a lead in to the changes proposed for 1.1.6. R1.1.2 This type of event is sufficiently addressed within the existing testing requirements (P6) and therefore should be eliminated , beyond that such outages are reviewed and approved on an operational basis and should not be included in a planning standard. During known outages for equipment upgrades or repairs there may be some increased exposure to load loss, which should be recognized as an acceptable exposure. In the event that this requirement is maintained please change six months to one year. 1.1.6.. Resources may not be exclusively sources supplying load. Therefore the reference should not involve load. The focus should be on changes to resources and “resources required to supply load” should be replaced with “New planned Resources and changes to existing Resources” We suggest NERC develops a definition for “resource” or use the following definition found in NPCC Glossary of Terms, Document A-7: Resource — Resource refers to the total contributions provided by supply-side and demand-side facilities and/or actions. Supply-side facilities include utility and non-utility generation and purchases from neighboring systems. Demand-side facilities include measures for reducing load, such as conservation, demand management, and interruptible load. ADD 1.2 – The standard is referring to requirements for sensitivity and other issues without a reference to base assumptions. The standard must describe base assumptions. M1 It is not practical to retain system model information in a hard copy form. This provision could be dropped. D.1.1.4 Data Retention: The Transmission Planner and the Planning Coordinator may not be using the same software. If both are required to store the data, do they both have to have the software to use the data? Can this be changed to an ‘or’ such that one of them must retain the data and it can be up to them as to who it is.

2.1.3: In the event that R1.1.2 is kept it must be clear that the reference to outage schedules as listed in part 1.1.2 must be limited to the Planning Horizon. Table 1 - There is confusion in interpretation of the table 1 — When the voltages class of the contingency element and the monitored element are different (one is HV and the other is EHV), to which voltage class is the allowance for shedding of non-consequential load applied. For example if the fault is on the 138-kV side of a 345/138-kV autotransformer, are you allowed to shed load to keep the 345-kV from overloading? Conversely, if the fault is on the 345-kV side of a 345/138-kV autotransformer, are you allowed to shed load to keep the 138-kV from overloading? 2.1 – Language should be revised similar to R2.4 as follows: “The Near-Term Transmission Planning Horizon portion of the steady state analysis shall be assessed annually and be supported by current or past studies as indicated in Requirement R2, part 2.6. The following studies are required:” 2.1.2 –Should be moved to the list of sensitivities currently in 2.1.4. (Off-peak needs to be more specifically defined). 2.1.4 Consistent with the suggestion made for section 1.1.2 please remove the last bulleted item in the list under section 2.1.4. “Duration or timing of planned Transmission outages.” To define a sensitivity, NERC must define base assumptions. Refer to Comment on Proposal to add an item 1.2 2.2 – The language in 2.2 should be revised to be similar to 2.4 as follows: “The Long-Term Transmission Planning Horizon portion of the steady state analysis shall be assessed annually and be supported by current or past studies as indicated in Requirement R2, part 2.6. The following studies are required:” 2.3 This should be modified to state that it is up to the Planner to determine the year of study within the Near Term Transmission Planning Horizon. 2.4.2 This should be

deleted as it is covered under section 2.4.3. 2.4.3 To define a sensitivity, NERC must define base assumptions. Requirement 2.7 – We suggest changing the word “run” to “condition” such that it reads “Corrective Action Plan(s) do not need to be developed solely to meet the performance requirements for a single sensitivity condition in accordance with Requirements R2, parts 2.1.4 and 2.4.3.” 2.9: The requirement to report the largest single consequential load loss under Requirement 2.9 should not be included in the standard. The TPL does not limit the size of the consequential load loss. If it remains, it must be made clear that it be applicable only to Year One or Year Two.
3.2 Item 3.2 should be deleted. The requirements for sensitivity analysis already address issues going beyond what is expected to meet reliability requirements. Requiring extreme event analysis is requiring two layers of event analysis beyond what is required and there is no requirement for corrective action if anything is identified. Therefore Extreme Event analysis no longer provides any value in this standard. 3.3.2 This requirement is not practical unless a MOD is created so that known minimum generator steady state or ride through voltage limitations are used instead of assumed values. To create a MOD, collect the data, and incorporate the information into the studies will take time, which necessitates the need for an implementation period. Absent accepting this suggestion with respect to creating an MOD, please provide assumed minimum generator steady state or ride through voltage limitations as a standard reference for this analysis. 3.3.3 There appears to be a compliance double-jeopardy issue related to relay loadability. Relay loadability is handled in greater detail (as it should be) under the proposed PRC-023 standard, so any reference here should be deleted. 3.4 – It is suggested that this requirement is made a sub-bullet of Requirement 3.1 to keep the related requirements together. 3.5 and 4.5 – Both of these requirements need clarification as to what is specifically required for the “evaluation of possible actions.” 3.5 – It is suggested that this be made a sub-bullet of Requirement 3.2 to keep the related requirements together. 3.6 Item 3.6 should be deleted since there is no limit defined in the standard.
4.1.1 This should be revised to only be applicable to generators interconnected to the BES. This may need an implementation period as not all existing units are interconnected in accordance with the standard as proposed. As written this applies to small generators and doesn’t necessarily reflect reliability of the network. 20 MW is a recommended generator minimum size. 4.1.2 This will require implementation period. 4.2 Item 4.2 should be deleted. The requirements for sensitivity analysis already address issues going beyond what is expected to meet reliability requirements. Requiring extreme event analysis is requiring two layers of event analysis beyond what is required and there is no requirement for corrective action if anything is identified. Therefore Extreme Event analysis no longer provides any value in this standard. 4.4 – It is suggested that this requirement is made a sub-bullet of Requirement 4.1 to keep the related requirements together. 4.5 – It is suggested that this requirement is made a sub-bullet of Requirement 4.2 to keep the related requirements together.
Voltage criteria is addressed by the VAR standards. Including a voltage requirement in the planning standards appears to be creating a double-jeopardy exposure. R5. Change to Read “Each Transmission Planner OR Planning Coordinator … Need time to implement transient voltage criteria.
R8, 8.1, and Measurement M8 – This standard should not be used to remedy deficiencies in meeting the coordination requirements of FERC Order 890. Therefore these should be deleted. If this requirement is retained the following is suggested: “Each Planning Coordinator and Transmission Planner shall distribute its Planning Assessment results to their adjacent Planning Coordinators and Transmission Planners, respectively, and to the functional entities that the Planning Coordinator and Transmission Planner recognizes as having a reliability need for the Planning Assessment results.” Additionally, there is no statute of limitation for comments. There is also potential conflict with the deadline for completing a study and when comments may be submitted (e.g. comments are received the day before the study is to be completed.) These issues must be addressed. 1.4 – Data Retention: The last bullet is unnecessary and should be deleted from the standard.
No
As currently defined Non-Consequential Load Loss could allow widespread or cascading motor stall. The language in the definition cannot be this generic. The text is broad enough that it could allow a voltage collapse, the definition is incompatible with Table 1a (BES Transmission voltage instability, cascading outages, and uncontrolled islanding shall not occur). The definition for the non-consequential load loss combined with Table 1 would prohibit any customer from tripping its own load for contingencies that indicate 'no' in the non-consequential load loss column. This is not practical and appears to be unintended consequencetof the change in definition. This requires a change in the definition or the table. We suggest defining Non-Consequential Load Loss as “intended post contingency loss of load caused by operator or SPS (RAS) action.”
No
We generally agree with the table however our issues are as follows: Footnotes on P3 and P4 (101 & 19) should be 9 and 10, respectively. This merely appears to be a typo in the latest draft. Other footnotes appear to be mislabeled as well. If Extreme Events are not deleted from the standard, then a different number for the table for Extreme Events should be used. There is confusion in interpretation of the Table 1 — When the voltages class of the contingency element and the monitored element are different (one is HV and the other is EHV), to which voltage class is the allowance for shedding of non-

consequential load applied. For example if the fault is on the 138-kV side of a 345/138-kV autotransformer, are you allowed to shed load to keep the 345-kV from overloading? Conversely, if the fault is on the 345-kV side of a 345/138-kV autotransformer, are you allowed to shed load to keep the 138-kV from overloading? P5 –The use of the term "Protection System" in P5 is unacceptably inconsistent with the NERC definition of Protection System because it does not exclude the battery and its associated series elements. Extreme Events 2a – need to define tower line. Add language to replace "tower line" with "structure". Table 1, footnote #3, change Regional Entity to Regional Reliability Organization.

Yes

No

It is closer, but there are still some unacceptable issues that need to be addressed. The single most important comment is to define the base assumptions for use in studies.

Individual

Darryl Curtis

Oncor Electric Delivery

The six month limitation of requirement 1.1.2. "Known outage(s) of generation or Transmission Facility(ies) with a duration of at least six months." is applicable to near-term and long-term Planning studies, but makes the new TPL-001 standard non-extendible to the near-term operational planning studies (next month, next week, or next day). During near-term operational planning periods, it is essential to include the impacts of ALL known outages in the operational analysis. It should be made clear that the TPL-001 Standard is not applicable to the Operational Planning Horizon. This non-applicability points out the need for a separate (but equal in scope) operational planning analysis standard. There appears to be a lack of clarity related to relay loadability and protection system redundancy. Relay loadability is handled in greater detail (as it should be) under the proposed PRC-023 standard, so any reference here should only be a placeholder. Similarly, the issues of redundancy are being addressed in more detail in a new proposed standard on protection system reliability. 1.1.2 – The requirement will result in the need to evaluate construction sequence in planning studies. 1.1.6 – What are "resources required to supply load" – gens, HVDC, tie lines? NPCC suggests NERC develops a definition for "resource" or use the following definition found in NPCC Glossary of Terms, Document A-7: Resource — Resource refers to the total contributions provided by supply-side and demand-side facilities and/or actions. Supply-side facilities include utility and non-utility generation and purchases from neighboring systems. Demand-side facilities include measures for reducing load, such as conservation, demand management, and interruptible load. 1.1.6 Resources are not serving load but are supporting network operations. ADD 1.1.7 – The standard is referring to requirements for sensitivity and other issues without a reference to base cases. It is recommended that each Region have a document that defines what constitutes "base case" conditions. M1 What does it mean to have a hardcopy of a system model? 1.4 Data Retention: The Transmission Planner and the Planning Coordinator may not be using the same software. If both are required to store the data, are they both required to have identical software to use the data? We recommend that the entities have an option to determine which of the two entities retains the information.

2.1.3: It must be clear that the reference to outage schedules listed in part 1.1.2 must be limited to the Planning Horizon. See the TIS comment tor R1. There is lack of clarity in the interpretation of certain rudiments of Table 1 — When the voltage class of the contingency element and the monitored element are different (one is HV and the other is EHV), which voltage class is the allowance for shedding of non-consequential load applied? For example if the fault is on the 138-kV side of a 345/138-kV autotransformer, are there allowances to shed load to keep the 345-kV from exceeding its load rating.? Conversely, if the fault is on the 345-kV side of a 345/138-kV autotransformer, would there be allowances to shed load to keep the 138-kV from exceeding its load rating? 2.1 – Language should be revised similar to R2.4 as follows: "The Near-Term Transmission Planning Horizon portion of the steady state analysis shall be assessed annually and be supported by current or past studies as indicated in Requirement R2, part 2.6. The following studies are required:" 2.1.2 – the term "off peak" is an issue. The definition just says less than peak. 2.1.4 Duration or timing of planned Transmission outages. In order to define a "sensitivity", NERC must define a base case. 2.1.5 There should be greater clarity to the fact that this is an assessment only, and not a solution. Actions such as "out of merit dispatch", "operational restrictions", "System reconfiguration" can be part of a Corrective Action Plan if the system cannot meet performance requirements without the facility in service. 2.2 – The language in 2.2 should be revised to be similar to 2.4 as follows: "The Long-Term Transmission Planning Horizon portion of the steady state analysis shall be assessed annually and be supported by current or past studies as indicated in Requirement R2, part 2.6. The following studies are required:" 2.3 The standard does not indicate a year to study. Is this the discretion of the Transmission Planner? [Review last comment/why doesn't this apply to stability?] 2.4.2 There should be greater clarity to the term "Off peak" Should the Transmission Planner have more discretion in selecting load level. Is there a need for this requirement? 2.4.3 To define a "sensitivity" a base case must be defined for comparison. Requirement 2.7 – suggest changing the term "run" to "condition" in "Corrective Action Plan(s) does not need to be developed solely to meet the performance requirements for a single sensitivity run(?) in accordance with Requirements R2, parts 2.1.4 and 2.4.3." 2.7.2 See previous comments on sensitivities. 2.9: The

requirement to report the largest single consequential load loss under Requirement 2.9 should not be included in the standard. If it remains, provide greater clarity that there is applicability only to Year One. Furthermore, additional clarification is needed to ensure that the requirement to report consequential load loss (single number) is ONLY for the most severe contingencies studied for the P1 and P2 contingencies. 2.9 – Why is it necessary to identify the largest consequential load loss if the TPL standard does not limit the size of the consequential load loss?

3.3.2 Do we want to be able to trip gen? 3.3.3 Relay loadability covered in PRC-023 3.6 Why is this information reported if there is no limit or reliability consequence. 3.3.3 – This requirement is already addressed in NERC Standard PRC-023 and reflected in the facility's rating and should be removed from TPL-001-1. 3.4 – It is strongly suggested that this requirement is made a sub-bullet of Requirement 3.1 to keep the related requirements together. 3.5 and 4.5 – Both of these requirements need clarification as to what is specifically required for the "evaluation of possible actions." 3.5 – It is strongly suggested that this be made a sub-bullet of Requirement 3.2 to keep the related requirements together. 3.6 – It is recommended that the "consequential generation" loss is excluded from the amount documented. [Why?]

Within "stability requirements" there is no requirement for evaluating the loss of all generators in a station; it is included in the steady state requirements. We recommend that the standard require examination of all units in a generating station where single line-to-ground faults on generation station buses could result in clearing of the entire station. Furthermore, single phase faults with delayed clearing (or stuck breaker) are not included. Often, such exclusion of stability analysis for loss of all generators at a station – these are things that happen! 4.1.1 This should be dropped. As written, this applies to small generators and doesn't necessarily reflect reliaiblity of the network. 4.1.2 This is not presently modeled and will require implementation period 4.2 Why do we need to do study extreme events? The requirements for sensitivity analysis already address issues going beyond what is expected to meet reliability requirements. Requiring extreme event analysis is requiring two layers of event analysis beyond what is required and there is no requirement for corrective action if anything is identified. 4.4 – It is strongly suggested that this requirement is made a sub-bullet of Requirement 4.1 to keep the related requirements together. 4.5 – It is strongly suggested that this requirement is made a sub-bullet of Requirement 4.2 to keep the related requirements together.

Voltage criteria is addressed within the VAR standards. This appears to be redundant.

8.1 This requirement should be removed because it appears redundant to FERC 890. (suggest having one statement or the other) However, if it isn't, then the Term "documented" in R8.1 – the term documented needs to be defined. Suggest adding the qualifier "written " i.e., "If a recipient of the Planning Assessment results provides 'documented written' comments on the results, the respective Planning Coordinator or Transmission Planner shall provide a 'documented written' response to that recipient within 90 calendar days of receipt of those comments." The requirement to distribute reports to entities with "need" has very significant CEII implications. This should be tightened to a "bona fide reliability need" for the information, requiring CEII or confidential material handling procedures. R8, 8.1, and Measurement M8 – There is no statute of limitation for comments (Suggest clarifying what we mean here – assume we are note referring to the NERC Standards Commenting Process), nor is there a limit on the number of comments. There is also potential conflict with the deadline for completing a study and when comments may be submitted (e.g. comments are received the day before the study is to be completed. If this requirement is retained the following is suggested: "Each Planning Coordinator and Transmission Planner shall distribute its Planning Assessment results to their adjacent Planning Coordinators and Transmission Planners, respectively, and to functional entities that demonstrated a reliability need with concurrence from their planning coordinator for the Planning Assessment results." [I think there are issues still with this language. I think it needs to say "…and to the functional entities that the Planning Coordinator recognizes as having a reliability need for the Planning Assessment results."] Compliance 1.4 – Data Retention, last bullet - this relates back to Requirements R8, 8.1, and Measurement M8. This seems to be a nuisance requirement to get in trouble for. [Requirement is to keep 3 years of notifications related to R8 & 8.1.]

Yes

(Motor stall should not be included in this section) The language in the definition cannot be this generic. This becomes open to interpretation in Table 1. Localized load may not be an issue, but the text is broad enough that it could allow a voltage collapse.

Yes

Errata Changes - Footnotes on P3 and P4 (101 & 19) should be 9 and 10, respectively. Other Footnotes appear to be mislabeled as well. There is lack of clarity in the interpretation of Table 1 — When the voltages class of the contingency element and the monitored element are different (one is HV and the other is EHV), to which voltage class is the allowance for shedding of non-consequential load applied. For example if the fault is on the 138-kV side of a 345/138-kV autotransformer, are you allowed to shed load to keep the 345-kV from exceeding its load rating? Conversely, if the fault is on the 345-kV side of a 345/138-kV autotransformer, are you allowed to shed load to keep the 138-kV from exceeding its load rating? Table I, item "e" –It doesn't specify which units can be adjusted following the contingency. This seems to be similar to the fact that the standard doesn't address the base case.

Should the standard be clear that you can or cannot rely on generation redispatch? Should failure of a fast start generator to start up be included in the contingency, or is this another level of contingency? Table I, non-consequential load loss – under no circumstance is it acceptable to shed non-consequential load to address issues in a future looking system plan. Table 1 – Steady State & Stability Performance Planning Events - Note (i) – this indicates that one cannot meet steady state requirements by depending on end-user owned equipment. Please clarify the purpose and performance requirement on this note with respect to end-user UVLS scheme and possible contractual arrangement already in place to trip end-user equipment. Table 1, P7 – for the DCT, are these the same phase? Table 1 – Steady State & Stability Performance Extreme Events Steady state, item 2, isn't (a) covered by (b)? Table 1, footnote #3, NPCC has asked NERC to put a lower bound on the HV but it seems that this remains unaddressed. P5 – This test is overly severe since it could assume the total protection system failure and the system would have to rely on remote end clearing. Part of the problem seems to be that the battery is part of the protection system. The intent seems to have been to fail part of one system, not the battery. If the battery is to be excluded, then it should be clearly stated. Extreme Events 2a – The term "towerline" should be defined. We agree with the SDT that more stringent performance requirements be applied for the Facilities that do not directly serve end-use load but rather represent the backbone of the electric power grid and act as the medium for moving large amounts of power from production to various load centers. However, as HQT commented on previous draft, we strongly believe that the EHV breakpoint for these more stringent requirements, defined in note 3 of table 1 as "all Facilities greater than 300 kV" is not appropriately defined and should be reviewed. The SDT have not demonstrated that a uniform voltage-level threshold could adequately covers all different power system types in North America and we strongly believe that significant, additional costs will be incurred without proportional or measurable reliability benefits if this definition is not changed. We propose to modify EHV definition "all Facilities greater than 300 kV…" by the following " Facilities representing the backbone of the System, generally at voltage greater than 300 kV, as determined by the Planning Coordinator and approved by Regional Entity." In using such a language, we believe that the additional investment required would facilitate real improvement of the reliability of the interconnected System.

Yes

Yes

Individual

Scott Goodwin

Midwest ISO

Requirement R1: The Planning Coordinator may begin model building using provisions from tariff and/or other agreements such as its Transmission Owners agreement. While the data may be consistent with that provided in Mod 10 and 12, there may not be a direct correlation between the two sets of data. This could become burdensome for a Planning Coordinator to make that correlation between the two. Suggest the following wording for R1. Each Transmission Planner and Planning Coordinator shall maintain System models within its respective area for performing the studies needed to complete its Planning Assessment. The models shall reflect data consistent with that provided in accordance with the MOD-010 and MOD-012 standards and/or data that is provided in accordance with tariff or transmission owner agreements. The models may be supplemented by other sources as needed including items represented in the Corrective Action Plan, and shall represent projected System conditions. Requirement R1.1.5: In the Moderate and Severe VSL, insert "responsible entity's" in front of the term "System Models" so it reads as such: "The responsible entity's System model did not…"

Requirement R2.1.4: It should be made clear that the sensitivity findings do not obligate the PC or TP to establish Corrective Action Plans to address any needs identified in the sensitivity cases. Also, the use of the following two words "sufficient" and "measurable" are too vague and hard to quantify. This may require an auditor's opinion. Suggest at least removing the word "sufficient" from the requirements. Requirement R2.1.5: This requirement states that we need to perform prior outage analysis for P0, P1 and P2 events for all long-lead time (>1year) components without spares. This seems redundant with P3 and P6 which will answer whether those events are an issue. Need to be clear that loss of load is or is not allowed for these events. P2 still allows for some loss of load. Bottom line is that P2.1.5 seems duplicative. What is intent of requirement? Rather say the P3 and P6 should note if long-lead time items are involved without spares. Also, the Planning Coordinator could have an administrative burden demonstrating compliance with a spare equipment strategy for its entire footprint. Requirement R2.4.3: the use of the following two words "sufficient" and "measurable" are too vague and hard to quantify. This may require an auditor's opinion. Suggest at least removing the word "sufficient" from the requirements. Requirement R2.7.2: As suggested in the comments above for R2.1.4, it should be clarified that corrective actions are not necessary for performance deficiencies identified by sensitivity studies. Request removing this requirement all together. If the SDT agrees to keep this requirement then we offer the following comments: It is not clear how an entity can provide rational for why actions were not necessary. Requirement R2.9: With regards to the largest consequential loss of loads for P1 and P2 events; if no action is required then why require the entities to provide this. Will it matter if 10MW or 100MW is tripped with the line? This is a system design issue which is not addressed by the standards, if this requirement is kept how is an entity expected to demonstrate compliance for this?

This requirement is an administrative burden and we propose to remove R2.9 all together considering that there is not a reliability-related need for this information and it is unnecessary.
Requirement R3.6: With regards to the Generation Runback MW reporting; if no action is required then why require the entities to provide this. Will it matter if 10MW or 100MW is part of the generation runback scheme tripped with the line? This is a system design issue which is not addressed by the standards, if this requirement is kept how is an entity expected to demonstrate compliance for this? This requirement is an administrative burden and we propose to remove R3.6 all together considering that there is not a reliability-related need for this information and it is unnecessary.
Requirement R4.3.1: Please consider adding the following language to the end of the sentence “when used as part of a protection system”. Requirement R4.3.1: Please consider adding the following language to the end of the sentence “when such devices affect the study area”.
Requirement R5: Not all Transmission Planners have delta voltage criteria which this requirement will now require them to have. Looks like this requirement is not a one shoe fits all requirement.
No comment!
No Comment!
Requirement R8- It should be made clear that a TP should not be required to send their assessment to adjacent PCs. Likewise the PCs should be required to send their assessment to TPs not in their footprint. Please consider the following language change for R8: Each Planning Coordinator shall distribute its planning assessment results to adjacent Planning Coordinators and to any other Planning Coordinators who indicate they have a reliability related need for the planning assessment results. Each Transmission Planner shall distribute its planning assessment results to adjacent Transmission Planner and to any other Transmission Planner who indicates they have a reliability related need for the planning assessment results. Requirement R8.1: This should be clarified such that this requirement is only required on Assessments that are completed and posted as final. If not, this could be an administratively burdensome task for an entity to have to respond to each and every comment and then document that they did respond within 90 days. Please consider the following language changes for R8.1 If a recipient of the Planning Assessment’s final results provides documented comments on the results, the respective Planning Coordinator or Transmission Planner shall provide a documented response to that recipient within 90 calendar days of receipt of those comments.
No
Definition Section: The definition for “Bus Tie Breaker” should be revised to clarify whether a breaker in a standard ring bus or breaker and one-half scheme should be considered a “bus tie breaker”. Definition Section: We believe that the “Year One” definition changes have clarified what is intended. Definition Section: We suggest having the following definition of Consequential Generation Loss added to the definition section. Consequential Generation Loss - All generation that is no longer connected to the transmission system as a result of Transmission Facilities being removed from service by a Protection System operation designed to isolate the fault.
No
Table 1 – Steady State & Stability Performance Planning Events, Note “b”: It states that consequential generation loss is acceptable; however, there is no definition of this in the definition section. We suggest having the following definition of Consequential Generation Loss added to the definition section. Table 1 – There appears to be a few typos on P3, P4 and P5 note references because there are no Note 19 nor Note 101. Please clarify this. Table 1 – Steady State & Stability Performance Planning Events: We believe that this table should appear right after the requirements but before the VSLs.
No Comment!
No
Only if the proposed changes and questions are adequately addressed.
Group
Southern Company
Part 4.3.1: add “when used on the system” to the end of the sentence. This is needed to clarify that you don't have to study high speed reclosing if you don't utilize it.
M6: The wording on this measure appears to have been copied from M3 or M4 but is not appropriate since R6 addresses criteria and methodology and not a study. Replace the word "studies" with "criteria or methodology".
For additional clarity in who should receive the assessment, we recommend replacing "indicates" with "has" and adding words to the end of the sentence so that it states the following: "and to any functional entity that has a reliability related need for the Planning Assessment results and provides a written request." For Part 8.1, we do not believe the intent is for casual emails to be documented and formally responded to. And we do not believe that anyone who happens to receive the assessment

should be able to comment. Therefore, we recommend the following wording: "If one of the above named entities provides formal written comments on the results, the respective Planning Coordinator or Transmission Planner shall provide a documented response to that recipient within 90 calendar days of receipt of those comments." If these recommendations are accepted, then the wording of M8 would have to change accordingly.

Yes

Suggest revising the Non-Consequential Load Loss definition for additional clarity to the following: Non-Interruptible Load loss other than (1) Consequential Load Loss and (2) the response of voltage sensitive Load including Load that is disconnected from the System by end-user equipment.

Yes

Some of the footnote superscripts do not appear to have a corresponding reference in the footnotes, in the case of number 19 at several locations in the Firm Transmission Service column (should be 9), and number 101 in the P4 cell in the Category column (should be 10). In header note j, the reference to footnote 1 should be removed. In steady state extreme events 2a and 2b, the reference to footnote 12 should be to footnote 11. In stability extreme events 2a through 2e, the reference to footnote 11 should be to footnote 10.

Yes

Yes

Individual

John Sullivan

Ameren

R1.1.2: Inclusion of outages of generation or transmission facilities with a duration of at least 6 months in the models is too restrictive. An outage duration of 1 month would be more appropriate for inclusion in the seasonal peak and off-peak models. R1.1.5: It is not clear from the wording how Firm Transmission Service and Interchange schedules should be considered, or whether the status quo is adequate. A given generating facility may have transmission service commitments which exceed the facility's generating capability. VSL: Given the annual cycle of collecting, revising and submitting system model data under MOD-010 and MOD-012, there could be a lag of several months between receipt of updated data prior to having this data included in the next round of system models. The TP/PC should not be penalized for this.

R2.1.3: The wording for this requirement needs clarification. It is suggested that the following language be submitted as a replacement: Known outages of generation or Transmission facilities should be included in the models representing those System peak or Off-peak conditions when outages are scheduled. R2.1.4 and R2.4.3: The phrase "by a sufficient amount" should be modified to "by an amount". Also, in R2.4.3, "dynamic model assumptions" should be changed to "dynamic load model assumptions." R2.6.2: Recognition should be made of the fact that cancellation of generation or transmission projects, which may have been included in a previous study, would decrease fault levels, and would reduce or eliminate the need for short circuit analysis. R2.8: Would the Planning Coordinator be required to review, replicate, or validate short circuit studies? We appreciate the deletion of R2.9 from the previous draft of TPL-001-1 and eliminated the reporting of Non-Consequential Load Loss for each of the planning events. In R2.9, it is recommended that the largest Consequential Load Loss not include items such as pumped storage load or other utility load.

The readability of R3.3 could be improved with the following wording changes: 3.3 Contingency analyses shall be performed: 3.3.1 To simulate the removal… 3.3.2 To simulate tripping generators where simulations show… 3.3.3 And results reviewed to ensure relay loadability limits… 3.3.4 To simulate the expected… Requirement R3.3.1 needs to include language regarding the automatic restoration of facilities. The following language is suggested: To simulate the removal of all elements that the Protection System is expected to disconnect and the restoration of all elements that the automatic controls are expected to restore for each Contingency without operator intervention. Requirement R3.6: What is the purpose of this Requirement? We do not see how the reporting of this information adds to system reliability, and believe that this is more of a market issue. For those systems that are planned based on a single contingency, it is believed that numerous generation facilities would be impacted by the N-2 planning events and particularly those involving transmission facilities in the vicinity of power plant switchyards. Documenting manual or automatic generation runback or tripping of generation for the proposed P1 and P2 events is not unreasonable, but it is expected that developing runback or tripping schemes for the proposed P3-P7 events and reporting those contingencies and the amount of generation curtailed on an annual basis is of little value. Further, what information is to be reported for the P6 events for R3.6? As P6 events allow system adjustment following the first contingency (P1 event) to prepare for the second contingency (P1 event), is the runback information to be reported the generation that is to be curtailed after the first event (which should already be reported for the P1 category), after the second event, or after both events? In real-time operations, security constrained economic redispatch continually adjusts generation to maintain transmission facility loadings within ratings anticipating the next single contingency event. Does the Standards Drafting Team intend for the industry to report the amount of curtailed generation in

anticipation of the next P1 event?

It is not clear as to the expectations of the standard drafting team for dynamic modeling of relays. Requirements 4.1.2 and 4.3.3 imply that transmission relays may need to be explicitly modeled in the dynamic simulations. Is this the team's intent? If so, has the team given consideration to the availability of relay models in the commonly used Power System simulation software programs, and considered the cost and effort required for such implementation versus the expected benefits? Is there any historical experience that would imply that such modeling is crucial to the reliability of the BES? It is suggested that generators that pull out of synchronism be given consideration for their effects on the system, without requiring simulation of generator tripping in R4.1.2. Requirement R4.3.1 needs to include some additional language regarding the automatic restoration of facilities and allowance of high-speed reclosing. The following language is suggested: Simulate the removal of all elements that the Protection System is expected to disconnect and the restoration of all elements that the automatic controls are expected to restore for each Contingency without operator intervention while also considering the impact of successful or unsuccessful high-speed reclosing, if high-speed reclosing is employed. R4.3.3: Suggested wording addition: "for those devices relevant to the study area." A space needs to be added between "Table 1" and "that" in Requirement 4.4.

With respect to specifying a voltage level and maximum duration for transient voltage response, does it make sense for each Transmission Planner to have their own criteria? Should we be meeting an industry standard such as the ITI (CBEMA) Curve published by the Technical Committee 3 (TC3) of the Information Technology Industry Council (ITI, formerly known as the Computer & Business Equipment manufacturer's Association) and available at www.itic.org? Meeting any of the criteria to be developed for Requirement R5 will depend on the load model assumptions used. It is stated that the Transmission Planner and Planning Coordinator shall have criteria specifying voltage limits, pos-Contingency voltage deviations, and transient voltage response. How would an interaction with a third party be handled, particularly if one entity has more stringent criteria? The content in the severe VSL column should be split among the lower, moderate, and high categories.

M6: The wording on this measure appears to have been copied from M3 or M4 but is not appropriate since R6 addresses criteria and methodology and not a study.

R8: It is not clear whether the assessment results must be distributed to all parties of interest, or if it would be sufficient to post the assessment at a central location, and distribute information to access the information. Also, FERC Standards of Conduct issues would come into play in assuring that the information is available only to appropriate personnel. R8.1: It is not clear what the form of the response to the comments should be – would an acknowledgement be sufficient, or would it be necessary to pursue a process of examining comments in detail and revising and reissuing the corresponding assessment? The audience of those able to provide comments to the assessments should be appropriately limited, and not open to anyone who wishes to comment.

No

The definition of Bus-tie Breaker is unclear. This definition needs to be made clearer to remove issues regarding P2 and P5 planning events. We suggest the following additional language: A breaker in a standard breaker-and-a-half or ring bus configuration is not a Bus-tie Breaker. Suggest rewording Non-Consequential Load Loss definition: Non-Interruptible Load loss other than Consequential Load Loss. Non-Consequential Load Loss does not include the response of voltage sensitive Load or Load that is disconnected from the System by end-user equipment.

No

Some of the footnote superscripts do not appear to have a corresponding reference in the footnotes, in the case of number 19 at several locations in the Firm Transmission Service column, which should be changed to number 9, and numbers 11 and 101 in the P4 cell in the Category column that should be changed to 10. Table 1 - Steady State and Stability Performance - Planning Events, note c., and Table 1 - Steady State & Stability Performance - Extreme Events, note a. will need to be revised to address the restoration of facilities as described above in comments to Questions 3 and 5. A header is needed on the third page of Table 1 Steady State & Stability Performance. Table 1 – Steady State and Stability Performance – Extreme Events - Steady State: Superscripts on items 2a and 2b should be 11 rather than 12. Similarly, for the Extreme Events - Stability items 2a through 2f, the superscript should be 10 rather than 11.

No

We appreciate that the Standards Drafting Team has proposed delayed effective dates to allow tripping of Non-Consequential Load or curtailment of Firm Transmission Service for a number of categories of contingency events to allow more time to become compliant. However, we do not look forward to having to self-report non-compliance because the industry and the government changed the planning rules in the middle of the game.

No

Certainly the proposed assessment and documentation requirements are more comprehensive and the performance standards are more rigorous than the existing TPL-001 through TPL-004 reliability standards. But, by performing the proposed additional required studies and documenting the results, how much additional reliability will be provided to the System? None, but we will be auditably

compliant. More planning engineers will need to be hired to perform the studies and develop the assessments, more librarians will need to be hired to keep track of all the paperwork and computer file storage, and more trees will be killed printing the paper to send to all those that need to review the documents and provide comments. Is this the most effective way to improve transmission system reliability from a planning perspective? What measurable benefits are to be accrued for providing an EHV system that would not result in the loss of non-consequential load for P2-2, P2-3, P4 1-5, and P5 1-5 planning events, all of which are rare and infrequent? What is the estimated cost for this incremental "improvement" to cover the System's short-comings? The EHV system is already the most reliable portion of the BES with an availability of approximately 99% and can withstand extreme events without widespread outages.

Individual

Saurabh Saksena

National Grid

Sub-Requirement 1.1.1: Replace "Existing Facilities" with "Existing Facilities and Resources" so that it will be a lead in to the changes proposed for 1.1.6. Sub-Requirement 1.1.2: This type of event is sufficiently addressed within the existing testing requirements (P6) and therefore should be eliminated, beyond that such outages are reviewed and approved on an operational basis and should not be included in a planning standard. During known outages for equipment upgrades or repairs there may be some increased exposure to load loss, which should be recognized as an acceptable exposure. In the event that this requirement is maintained please change six months to one year. Sub-Requirement 1.1.6: Resources may not be exclusively sources supplying load. Therefore the reference should involve load. The focus should be on changes to resources. "Resources required to supply Load" should be replaced with "New planned Resources and changes to existing Resources" It is suggested that NERC develop a definition for "resource" or use the following definition found in NPCC Glossary of Terms, Document A-7: Resource — Resource refers to the total contributions provided by supply-side and demand-side facilities and/or actions. Supply-side facilities include utility and non-utility generation and purchases from neighboring systems. Demand-side facilities include measures for reducing load, such as conservation, demand management, and interruptible load. ADD 1.2 – The standard is referring to requirements for sensitivity and other issues without a reference to base assumptions. The standard must describe base assumptions. Measure M1: Elaborate on "…hard copy format…". Does that entail maintaining a hard copy of the system model? It is impractical to retain system model information in a hard copy format. This provision should be dropped.

Requirement R2 (second line): " This Planning Assessment shall use current or past studies,…" should be replaced with "This Planning Assessment shall use current studies or qualified past studies as indicated in Requirement R2, part 2.6,…" Sub-Requirements 2.1, 2,2, 2,3, and 2.4: Language to be revised to the following: "…be supported by current studies or qualified past studies as indicated in Requirement R2, part 2.6. The following studies are required." Sub-Requirement 2.1.2: Definition of "off-peak" not provided and can be read to say that it is any load level less than peak. This does not provide enough clarity to guide the required assessments. Sub-Requirement 2.1.3: It must be clarified that the reference to outages as listed in Requirement R1, part 1.1.2 must be limited to Planning Horizon. Refer to Sub-Requirement 1.1.2 in Question 1. Sub-Requirement 2.1.4: Consistent with the suggestion made for section 1.1.2 please remove the last bulleted item in the list under section 2.1.4. "Duration or timing of planned Transmission outages." The standard is referring to requirements for sensitivity without a reference to base cases. Refer to Comment on Proposal to add an item 1.2 Sub-Requirement 2.1.5: It needs to be clear that this is only an assessment, not a solution. Actions such as out of merit dispatch, operational restrictions, System reconfiguration can be part of a Corrective Action Plan if the System cannot meet performance requirements without the Facility in service. It can be reworded as – "…an assessment of the impact of this possible unavailability on System performance shall be performed" Sub-Requirement 2.3: The requirement does not indicate a year to study. This should be modified to state that it is up to the Planner to determine the year of study within the Near Term Transmission Planning Horizon. Sub-Requirement 2.4.2: Same as 2.1.2 Sub-Requirement 2.4.3: Refer to Comment on Proposal to add an item 1.2 Sub-Requirement 2.5: Revise language as follows: "…be supported by current studies or qualified past studies as indicated in Requirement R2, part 2.6. Sub-Requirement 2.7: It is suggested to change the word "run" to "condition" such that it reads "Corrective Action Plan(s) do not need to be developed solely to meet the performance requirements for a single sensitivity condition in accordance with Requirements R2, parts 2.1.4 and 2.4.3." Sub-Requirement 2.7.2: Refer to Comment on Proposal to add an item 1.2 Sub-Requirement 2.9: It should not be necessary to identify the largest consequential load loss if the TPL standard does not limit the size of the consequential load loss. This requirement should be deleted. If it remains, it must be made clear that it be applicable only to Year One or Year Two.

Sub-Requirement 3.2: This requirement should be deleted. The requirements for sensitivity analysis already address issues going beyond what is expected to meet reliability requirements. Requiring extreme event analysis is requiring two layers of event analysis beyond what is required and there is no requirement for corrective action if anything is identified. Therefore Extreme Event analysis no longer provides any value in this standard. Sub-Requirement 3.3.3: Relay Loadability is handled in greater detail (as it should be) under the proposed PRC-023 standard, so no reference should be made in this standard. It indicates a double jeopardy. Sub-Requirement 3.4: It is strongly suggested that this requirement is made a sub-bullet of Requirement 3.1 to keep the related requirements together. Sub-

Requirement 3.5: It is strongly suggested that this requirement is made a sub-bullet of Requirement 3.2 to keep the related requirements together. Provide clarification as to what is specifically required for the “evaluation of possible actions.” Sub-Requirement 3.6: This requirement does not address any reliability issue should be deleted. If it is to be kept, it is recommended that the “consequential generation” loss be excluded from the amount documented.
Sub-Requirement 4.1.1: This should be revised to only be applicable to generators interconnected to the BES. This may need an implementation period as not all existing units are interconnected in accordance with the standard as proposed. As written this applies to small generators and doesn’t necessarily reflect reliability of the network. 20 MW is a recommended generator minimum size. Sub-Requirement 4.1.2: Simulating the tripping of a generator that pulls out of synchronism is presently not modeled and will require implementation period. Sub-Requirement 4.2: This requirement should be deleted. The requirements for sensitivity analysis already address issues going beyond what is expected to meet reliability requirements. Requiring extreme event analysis is requiring two layers of event analysis beyond what is required and there is no requirement for corrective action if anything is identified. Therefore Extreme Event analysis no longer provides any value in this standard. Sub-Requirement 4.4: It is strongly suggested that this requirement is made a sub-bullet of Requirement 4.1 to keep the related requirements together. Sub-Requirement 4.5: It is strongly suggested that this requirement is made a sub-bullet of Requirement 4.2 to keep the related requirements together. Provide clarification as to what is specifically required for the “evaluation of possible actions.”
Voltage criteria are addressed by the VAR standards. Including a voltage requirement in the planning standards appears to be creating a double-jeopardy exposure. Also, implementing transient voltage criteria will require time. Replace “Each Transmission Planner and Planning Coordinator…” with “Each Transmission Planner OR Planning Coordinator…”.
No Comments.
No Comments.
This standard should not be used to remedy deficiencies in meeting the requirements of FERC Order 890. Therefore these should be deleted. If this requirement is retained the following is suggested: “Each Planning Coordinator and Transmission Planner shall distribute its Planning Assessment results to their adjacent Planning Coordinators and Transmission Planners, respectively, and to the functional entities that the Planning Coordinator and Transmission Planner recognizes as having a reliability need for the Planning Assessment results.” Additionally, there is no statute of limitation for comments. There is also potential conflict with the deadline for completing a study and when comments may be submitted (e.g. comments are received the day before the study is to be completed.) These issues must be addressed. Compliance: 1.4 Data Retention: The Transmission Planner and the Planning Coordinator may not be using the same software. If both are required to store the data, do they both have to have the software to use the data? Can this be changed to an ‘or’ such that one of them must retain the data and it can be up to them as to who is it. 1.4 – Data Retention, last bullet - this relates back to Requirements R8, 8.1, and Measurement M8. “Three calendar years of notification” seems to be a nuisance requirement to get in trouble for. This is unnecessary and should be deleted.
No
As currently defined Non-Consequential Load Loss could allow widespread or cascading motor stall. The language in the definition cannot be this generic. The text is broad enough that it could allow a voltage collapse, the definition is incompatible with Table 1a (BES Transmission voltage instability, cascading outages, and uncontrolled islanding shall not occur). The definition for the non-consequential load loss combined with Table 1 would prohibit any customer from tripping its own load for contingencies that indicate 'no' in the non-consequential load loss column. This is not practical and appears to be unintended consequent of the change in definition. This requires a change in the definition or the table. It is suggested to redefine Non-Consequential Load Loss as “intended post contingency loss of load caused by operator or SPS (RAS) action.”
No
There is confusion in interpretation of the Table 1 — When the voltages class of the contingency element and the monitored element are different (one is HV and the other is EHV), to which voltage class is the allowance for shedding of non-consequential load applied. For example if the fault is on the 138-kV side of a 345/138-kV autotransformer, are you allowed to shed load to keep the 345-kV from overloading? Conversely, if the fault is on the 345-kV side of a 345/138-kV autotransformer, are you allowed to shed load to keep the 138-kV from overloading? Footnotes on P3 and P4 (101 & 19) should be 9 and 10, respectively. This merely appears to be a typo in the latest draft. Other footnotes appear to be mislabeled as well. If Extreme Events are not deleted from the standard, then a different number for the table for Extreme Events should be used. Table 1, P5: The use of the term “Protection System” in P5 is unacceptably inconsistent with the NERC definition of Protection System because it does not exclude the battery and its associated series elements. Extreme Events 2a – need to define towerline. Add language to replace towerline with structure. Table 1, footnote #3, change Regional Entity to Regional Reliability Organization.
Yes
None.
No

It is closer, but there are still some unacceptable issues that need to be addressed.

Individual

Robert H. Easton

Western Area Power Adm - RMR

R1.1.4 could be interpreted that the standard requires forecasting reactive load. However, most entities forecast demand (MW) and apply a power factor(s) to calculate reactive load. Therefore, please change "real and reactive load forecast" to "forecasted demand and power factor" so it is clear that forecasting reactive load is not required. For R1.1.5, I suggest changing the wording from "Known commitments for Firm Transmission Service and Interchange" to "Known commitments for Firm Transmission Service or Interchange". It is difficult to distinguish between the two in future cases where not all contractual arrangements are known.

The wording in R2.1 is unclear as to whether new annual studies are required each year or whether qualified past studies are acceptable if no changes have been made. R2 reads "This Planning Assessment shall use current or past studies…", while R2.1 implies current studies must be used but can be supplemented by past studies. I suggest changing the wording from "The Near-Term Transmission Planning Horizon portion of the steady state analysis shall be assessed annually and be supported by the following annual current studies, supplemented with qualified past studies…" to "The Near-Term Transmission Planning Horizon portion of the steady state analysis shall be assessed annually and be supported by the following annual current studies, or qualified past studies…" It is unclear if the drafting team intended the sensitivity studies identified by the bullets in R2.1.4 to align with the sensitivity studies identified by the bullets in R2.4.3. Both are for Near-Term studies but for steady state and stability respectively. If the intent is that they align, the wording should be modified to be the same. Also, similar to R1.1.4 above, R2.1.4 could be interpreted that the standard requires forecasting reactive load. However, most entities forecast demand (MW) and apply a power factor(s) to calculate reactive load. Therefore, please change "real and reactive load forecast" to "forecasted demand and power factor" so it is clear that forecasting reactive load is not required. In R2.1.5 – the opening statement "When an entity's 'spare equipment strategy'…" Does this imply an auditor would ask for this documentation as part of the review of this new TPL-001? Also – what other Standard requires the "spare equipment strategy"? I'm trying to determine what kind of documentation is required for this Requirement.

For clarity, I suggest that the wording in R3.3.3 be changed to "Ensure the power flows in the simulations are no higher than actual relay loadability limits."

Requirements R4.4 and R4.5 appear to be related to and set the limits for R4.1 and R4.2, respectively. I Suggest moving both Requirements R4.4 and R4.5 into R4.1 and R4.2, allowing these sub-Requirements (R4.4 and 4.5) to be deleted. It is unclear from the wording in R4.3 whether the Contingency analyses need to be performed for all planning events or the more severe events referenced in R4.1 and R4.2. Please clarify the wording of R4.3. R4.3.1 appears to require an assessment of both successful and unsuccessful high-speed reclosing. Successful reclosing is a much less severe event, so it seems unnecessary to assess both.

As worded, R5 is unclear. I interpret R5 to require entities to specify minimum voltage levels that must not be exceeded for more than a specific period of time. High transient voltages are typically not a problem. I suggest changing the second sentence of R5 to read: "For transient voltage response, the criteria shall at a minimum, specify a voltage level and a maximum length of time that transient voltage may remain below that level."

N/A

N/A

Clarity is needed in the phrase functional entity in R8. Is this referring to the entities identified in the Functional Model or something else?

No

The definition of Non-Consequential Load is in need of clarification. As written, it could be interpreted that load that is disconnected from the System by end-user equipment would not be allowed for certain contingencies. Suggested revision to the language follows: Non-Interruptible Load loss other than: • Consequential Load Loss • the response of voltage sensitive Load • Load that is disconnected from the System by end-user equipment. This version uses the same wording but clarifies that the term "other than" applies to all three things.

No

As currently drafted, several outages identified in Categories P2, P4, and P5 appear to potentially result in the same elements being removed from service, so therefore the same event, even though the initiating event is different. I believe that the drafting team needs to conduct a workshop prior to balloting to educate the industry on what outages are required to be simulated for which Categories. Additionally there are footnotes numbered 12, 19, and 101, which do not relate to any footnote in the document, and some other footnotes seem to be misplaced. I encourage the drafting team to carefully review all footnotes to ensure accuracy prior to balloting this standard.

No

Revisions are necessary to the Effective Date language to clarify the 60 calendar months language for

Corrective Action Plans. It is unclear if the entity has five years from the day they identify the problem or five years from the modeled year or five years from the Effective Date of this standard.

No

Based on the unclear or ambiguous language identified in the comments above as well as the confusion noted in the Table 1 regarding outages and footnotes, I believe modifications are necessary prior to taking this standard to ballot.

Group

Pepco Holdings, Inc. - Affiliates PHI

While the SDT has stated in the Description of Current Draft that the issues of TPL-005 and TPL-006 have been addressed. It is not clear to PHI Affiliates that this is true. It is not evident how wide area planning is performed. Requirement 2 states Each Transmission Planner and Planning Coordinator shall prepare an annual Planning Assessment of its portion of the BES.

Yes

No

Category P5 should be more appropriately titled DELAYED CLEARING OR Loss of multiple elements caused by the failure of a single Protection System while clearing a fault on one of the following.... A protection system failure does not necessarily lead to loss of multiple power system elements. Sometimes it may just be delayed clearing of the faulted element. The recommended change is based on the SDT's response to comments submitted to Draft #2 of the standard˜ -A number of commenters expressed concern related to Planning Event P5 “Protection System Failure” and the need to evaluate a single component failure of a BES Protection System; particularly a failure of a station battery. The SDT has revised the P5 Planning Event description to remove the reference to “single component failure” and the event description was changed to match what is stated in the currently approved TPL standards under Category C6 through C9. --The intent of P5 is to evaluate a failure of a single Protection System design that introduces a delayed clearing mode that may also include additional electrical Facilities being removed when compared to normal fault clearing.-- A Protection System failure resulting in loss of the substation (one voltage level plus transformers) would not qualify as a P5 Planning Event since that event is considered an Extreme Event. Also, the phrase "failure of a single Protection System" should be defined. Draft #1 language used the term -single component failure- of a protection system. Based on a number of comments that were received, that term was subsequently replaced with the term -failure of a single Protection System-. To avoid confusion, this term needs to be defined within this standard and / or examples provided. If not, there will be confusion on how to study this category of events. This issue has been raised by numerous commenters throughout the standard development process. That fact that it continues to be expressed through numerous drafts indicates a lack of clarity as to exactly what protection system failures are to be studied. For example - Assume there are two protection systems on a facility (Scheme A and Scheme B). Assume one publishes a clearing time for Scheme A, and a slower clearing time for Scheme B. The TPL standard, as written, could imply that for a P5 failure of a single Protection System (scheme A or B fails) you would study the event assuming the worst case clearing time (i.e., using the slower clearing time for Scheme B.) Is that what is intended? If so, it should be so stated. However, that interpretation assumes the failure of a single Protection System would not effect the operation of the second Protection System. In other words it would not address single component points of failure, which could disable both Scheme A and Scheme B. Suppose both schemes were fed from the same set of CT's, VT's, battery, etc. Since the phrase "single component failure of the protection system" was eliminated, does this mean failure of both schemes due to a single component failure is not required to be studied under the P5 category? The standard must be very clear as to what contingency (i.e., what kind of protection system failure) is to be studied. It should not be silent on this point, nor should it refer to another standard for guidance on what contingencies to study.

Yes

No

Group

FRCC Transmission Working Group

Several questions on the details: - R1 requires the maintenance of system models for the purpose of studies and establishes that these models should be updated with the latest data from various sources. Read in context this seems to require that a PA/TP has models, and they are updated either on some

sort of regular schedule, for example quarterly or before the start of a study, and use the latest information at the time they are updated. Is this a correct understanding of the requirement? - R1 states that the model should be "..supplemented by other sources as needed, including items represented in the corrective action plan…" Read in context with the overall requirement this allows for projects that are in the corrective action plan to be added to the model as needed, is this the correct understanding? -R1 requires the model to represent "projected system conditions" which include in the list below "Known Commitments for Firm Transmission Service" and "Load Forecast". This seems to require that your known firm transmission service commitments are matched to their corresponding customers load forecast and expected operation profile, relative to load level in the case. Or phrased another way, the model should represent the service and load as they would be expected to operate at the load level in the case. Is this a correct understanding? Comments: With regard to the Moderate Violation Severity Level, what if the entity does not have the "latest" data but the entity did include items in the corrective action plan? Should the "and" between MOD-010 and MOD-012 be an "OR" and have the "AND" be for the High VSL? Not all system models can represent all "Known commitments for Firm Transmission Service and Interchange". The SDT needs to add "…that are expected to be utilized." to the requirement. 1.1.6 Recommend changing to "Resources expected to supply Load"

Please further clarify the definition when past studies may be used. Requirement 2, bullets 2.1, 2.2 appear to say that current studies must be used, but that additional information can be provided if desired and it meets certain requirements. Sub-Requirements 2.3, 2.4 and 2.5 seem to allow use of past studies that meet the requirements of 2.6 in lieu of new work. If this is the correct understanding then I suggest the following: For 2.1 and 2.2 revise the statement to read "…and be supported by the following annual current studies. The analysis may also include other current and past studies in addition to the annual current studies listed below. R2Bullet 2.6 should also be revised to read "Past studies may be used in lieu of current studies for Bullets 2.3, 2.4, 2.6 if they meet the following requirements:" This will insure that it is very obvious the planner, when they may or may not use prior art in place of new work and it's specified in all places in the standard where this is referenced. For these supplemental or "above and beyond" studies, 2.6 should not be referenced. First of all it makes it confusing, since 2.6 is primarily concerned with prior art being used in lieu of new work. Also if the material is supplemental, then it's supplemental and setting requirements on it will only reduce the material provided not improve the reliability of the system. -2.6.2 Consider revising "the study shall not include any material changes" to "the system represented in the study shall not include any material changes". Stating that "the study shall not include material changes" implies changes to the study from the time it was performed to the time it was used, not changes in the underlying transmission system which is what I think you are really targeting. -2.1.4 and 2.4.3: The statement "sufficient amount to stress the system…credible conditions…demonstrate a measurable change" implies that a sensitivity must meet three general criteria: (I will be using load forecast as an easy example, but obviously there is a range of items that could be used) 1. That it is expected to increase stress, for example increasing the load forecast would general increase stress, where decreasing it would not. 2. That increases should be substantial, for example growing the load at 2x the expected rate vs 1.01x the expected rate. 3. That the change doesn't have to exceed the bounds of credibility. If a 2x or 3x increase doesn't result in a stack of new constraints, it does not mean the increase has to go to 10x the forecast just to show extensive effects. Is this a correct understanding? , realizing that I'm only referencing load growth for simplicity, it not being the only sensitivity? -2.1.4 and 2.4.3: The first sentence "impact of changes to the basic assumptions used in the model for the list of items below", please consider changing to just "impact of change to the basic assumptions used in the model". Including the "list of items below" implies that all items must be addressed, which seems to conflict with the second sentence which specifically allows one or more. -2.7: Is the "Corrective Action Plan" intended to document all of an entities planned future reliability related transmission projects and operational procedures? Or is it intended to address situations where simulation and the application of currently planned projects and procedures are insufficient to meet the performance requirements? -2.7: If a project is added one year to the "Corrective Action Plan" but then in the subsequent year has been added to the model, resulting in simulation showing no performance violations, should it be removed from the Corrective Action Plan? Or should it be referenced in the plan each year until it is either in service or demonstrated to no longer be required? Comments: With regard to the Lower VSL, is 2.6 considered to be met if only one of two sub-requirements (2.6.1 or 2.6.2) is met? With regard to the Moderate VSL, is 2.8 considered to be met if only one of two sub-requirements (2.8.1 or 2.8.2) is met? Also, since 2.3 depends on 2.6, what happens if an entity does not meet R2.6 because it did not meet one of the sub-requirements of 2.6? With regard to the High and Severe VSL, if any one of the sub-requirements of 2.1, 2.2, 2.4 or 2.7 is not met, is the entire sub-requirement considered not met? (This question is generic throughout all VSL) Also, for the short circuit study of 2.3 (and 2.8), it is not necessary to study all of the contingencies, just P2. Taking other Facilities out in addition to the fault will only reduce fault current. Auditors may not be aware of that and maybe the standard could say that only P2 needs to be studied to reduce future confusion. Is the intent of the SDT to have 2.7 apply to all previous bullets in R2? If so, then it could be made clearer by starting 2.7 with "For the analyses discussed in 2.1 through 2.5, and for the planning events shown in Table 1, when the analyses indicate …" 2.7 seems to have lost the reference to lead times for Corrective Action Plan(s) that were present in the existing TPL-001-0, TPL-002-0 and TPL-003-0 standards, is that the intent of the SDT? Since only two of the years in the near term need to be studied, and one of the year's in the long term study, there ought to be some method to determine when a Corrective Action Plan is needed, the lead time of that Corrective Action Plan, to

give an indication of when activity needs to start to implement the Corrective Action Plan. The requirement clearly states that "For the steady state portion of the Planning Assessment …" it must perform simulations that show generator ride through voltage limitations under 3.3.2. However, ride through limitations are performed through stability simulations not steady state as required by R3. Please provide clarity. Additionally, 3.2 requires studies to be performed to assess the impact of the extreme events. Yet, 3.3 requires analyses shall be performed but does not specify the events intended to study. Suggested language for 3.3 should say "Contingency analyses shall be performed to assess the impact of the extreme events and:" Under 3.3.1 it states that the Planner must simulate the removal of all elements that the Protection System would be expected to disconnect. Language should be included to allow the Planner to provide a rationale to assess more severe system conditions without needing to simulate the effects of Protection Systems. The references within the requirements are very confusing. 3.1 refers to a contingency list created in 3.4 which refers back to 3.1. Similarly 3.2 refers to a contingency list created in 3.5 which refers back to 3.2. These should be combined into one sub-requirement.

Comments: With regard to the Moderate VSL, consider deleting “utilizing data” in order to avoid penalizing twice for failing to meet R1. Please provide clarity to 3.3.2 which states that a Planning Assessment “it must perform simulation that show generator ride through voltage limitation”. However, ride through is only performed through stability simulation. The references within the requirements are very confusing. 3.1 refers to a contingency list created in 3.4 which refers back to 3.1. Similarly 3.2 refers to a contingency list created in 3.5 which refers back to 3.2. These should be combined into one requirementbullet. Please provide clarity to 3.3.1. Is the intent of the drafting team that extreme events that may cause loading beyond relay trip settings (zone 3) be simulated?

With regard to the Moderate VSL, consider deleting “utilizing data” in order to avoid penalizing twice for failing to meet R1. 4.1.1, suggest rewording “(a) generator being disconnected from the Bulk Electric System …”, system as defined in the Glossary includes distribution, and we do not believe that is the intent of the SDT. 4.1.2, 4.3.1 and 4.3.3 essentially requirerequires modeling every Zone 3 (or higher, such as Zone 5) relay in each Interconnection (or at least in the Region under study and adjacent regions) because, in order to simulate the impact of a power swing on a distance relay, one would need to know the characteristics of the distance relay and how long the transient swing remains within that characteristic, which means modeling the relay. Is that the intent of the SDT?

No Comment

For R6 please consider the following revision: "Each TP and PC shall define and document within their planning assessment any criteria or methodology used in their analysis to identify system instability /deleted/ for /deleted/ conditions such as cascading outages, voltage instability, or uncontrolled islanding." As written originally it could be taken to be the methods for determining if you have instability during a cascading outage, rather then the methods for determining if you are at risk for instability like a cascading outage. the word “potential” into “… identify the potential for System instability …”. The criteria and methodology may be used to determine if further analysis is warranted, e.g., if steady state voltages fall below 0.9 per unit, then duedo a voltage stability study. Going below 0.9 does not mean voltage collapse, but, it may be an indicator to study it; hence, the word “potential”.

No Comment

With regards to the High VSL, what about entities that indicate a reliability related need for the Planning Assessment? Should this be part of the High VSL? Consider changing the requirement to distribute the Planning Assessment to become more flexible and allow for making the Planning Assessment available to those entities that indicates a need. Consider revising as follows: Each Planning Coordinator and Transmission Planner shall make available its Planning Assessment results to adjacent Planning Coordinators and Transmission Planners and to any functional entity that indicates a reliability related need for the Planning Assessment results. The definition of "Known Commitments" should explain how that would diferentiate between Planned Commitments

Consider the following definition for clarification: Planning Assessment: Documented evaluation of (1) studies of future Transmission System performance and (2) Corrective Action Plans (included in studies) to remedy identified deficiencies. Non-Consequential Load Loss: Non-Interruptible Load loss that does not include: (1) Consequential Load Loss, or (2) the response of voltage sensitive Load that is disconnected from the System by end-user equipment.

Please clearly indicate for P3 and P5 that note 1 and note 9 apply. Consider using a comma, not a note 19 that does not exist. The P2-1 event needs to be clarified with its intent. In the SDT Consideration of Comments to the 3rd DRAFT posting, the response to Transmission Planning clarified that “There is no need to show a line energized up to the breakers that opened. The intent is simply to look for low voltage or thermal problems while supplying Load from one end of a normally networked line.” This could be accomplished by adding this to footnote 7 or re-naming the event “Opening of a Line Section w/o fault”.

The implementation plan needs to be clarified that during the first year the existing TPL standards are still in effect. As written it appears that only R1 and R8 are in effect and the existing TPL standards are not. Assessments are a year long process and are based on a year or more worth of studies, the study work and assessment are not executed in a single day. R2 through R7 is unclear what “coming into effect means”. Please consider adding the following paragraph: “Entities are not required to alter their annual schedule based on the R2-R7 requirements going into place or have duplicate efforts at

assessments in the year the old and new standard overlap. Therefore any assessment performed prior to R2-R7 going into effect shall meet R1, R8 and the prior TPL standards; an assessment under the revised standard is not required until the following annual cycle. An assessment performed after R2-R7 are in effect shall meet these new TPL Standard. The date the assessment is "performed" for the purposes of this phase in, shall be determined by the date the entity began formally sharing results with its neighbors under R8." Please clarify the parenthetical for P1-2 and P1-3. Is the intent of this parenthetical referring to Consequential Load Loss that is allowed for P1 events?

We the FRCC TWG feel that the standard is very close to ballot, but the drafting team still needs to address several issues raised in the comments before balloting.

Individual

Roger Champagne

Hydro-Québec TransÉnergie (HQT)

Requirement 1.1.2 –Consideration of known outages should not be included in a planning assessment. Such outages are coordinated by operations and are only permitted if the system can be operated reliably, where assumptions may be different than those used in planning assessments. Including this as a requirement effectively means that the system must be designed to withstand three outages. In those cases where safety, or reliability, or both are a concern by long duration outages (e.g., more than one year), temporary Operating Protocols are implemented to mitigate their impact. If this requirement must be kept, the outages with duration in excess of a year should be considered, rather than those of six months. Requirement 1.1.5 – Interchange. Interchange usually refers to non-firm short-term economic transactions that often take place between Balancing Authorities to take advantage of their respective resources surplus (i.e. not needed for local reliability.) However, such transactions should not be modeled in the base case system representation, unless their neutrality to system reliability has been clearly demonstrated. For example, economic interchanges between New England and PJM through New York have an impact on the New York transmission system that may, at times, pose reliability constraints on the operation of the New York system. Requirement 1.1.6 – what are "resources required to supply load" – gens, HVDC, tie lines? HQT, as does NPCC, suggests NERC develops a definition for "resource" or use the following definition found in NPCC Glossary of Terms, Document A-7: Resource — Resource refers to the total contributions provided by supply-side and demand-side facilities and/or actions. Supply-side facilities include utility and non-utility generation and purchases from neighboring systems. Demand-side facilities include measures for reducing load, such as conservation, demand management, and interruptible load.

Requirement 2.1 – As written, it is not clear. HQT, as does NPCC, suggests revising language as in 2.4 as follows: "The Near-Term Transmission Planning Horizon portion of the steady state analysis shall be assessed annually and be supported by current or past studies as indicated in Requirement R2, part 2.6. The following studies are required:" Requirement 2.1.2 – The use of the term "off peak" is a concern. The definition for this term can be read to say that it is any load level less than peak. This does not provide enough clarity to guide the required assessments. Requirement 2.2 – As written, it is not clear. HQT, as does NPCC, suggests revising language in 2.2 as in 2.4 as follows: "The Long-Term Transmission Planning Horizon portion of the steady state analysis shall be assessed annually and be supported by current or past studies as indicated in Requirement R2, part 2.6. The following studies are required:" Requirement 2.7 – HQT,as does NPCC, suggests changing the word "run" to "condition" in "Corrective Action Plan(s) do not need to be developed solely to meet the performance requirements for a single sensitivity run in accordance with Requirements R2, parts 2.1.4 and 2.4.3." Requirement 2.9 – It should not be necessary to identify the largest consequential load loss if the TPL standard does not limit the size of the consequential load loss. This requirement should be deleted.

Requirements 3.5 and 4.5 – Both of these requirements need clarification as to what is specifically required for the "evaluation of possible actions." Requirement 3.3.3 – This requirement is already addressed in NERC Standard PRC-023 and reflected in the facility's rating and should be removed from TPL-001-1 since the standard already requires observance of facility ratings. Requirement 3.4 – HQT, as does NPCC, strongly suggests making this requirement a sub-bullet of Requirement 3.1 to keep the related requirements together. Requirement 3.5 – HQT, as does NPCC, strongly suggests making this a sub-bullet of Requirement 3.2 to keep the related requirements together. Requirement 3.6 –Currently this requirement is not clear. HQT, as does NPCC, recommends clarification be added that the "consequential generation" loss is excluded from the amount documented.

Requirements 3.5 and 4.5 – Both of these requirements need clarification as to what is specifically required for the "evaluation of possible actions." Requirement 4.4 – HQT, as does NPCC, strongly suggests making this requirement a sub-bullet of Requirement 4.1 to keep the related requirements together. Requirement 4.5 – HQT, as does NPCC, strongly suggests making this requirement a sub-bullet of Requirement 4.2 to keep the related requirements together.

Requirements R8, 8.1, and Measurement M8 – There are a number of concerns with these requirements. There needs to be a specified time period upon which comments must be received. As written, there is no sunset on when comments may be made and therefore they must be responded to.

Additionally, it is not clear if the 90-day response time may extend beyond the end of the year to maintain and maintain annual compliance. R8 also causes redundancy of distribution of assessments. Suggested revised Requirement R8 to say: "Each Planning Coordinator and Transmission Planner shall distribute its Planning Assessment results to their adjacent Planning Coordinators and Transmission Planners, respectively, and to functional entities that demonstrated a reliability need with concurrence from their planning coordinator for the Planning Assessment results."

No

Definitions – Year One – This still defines Year One as both a particular year AND a window. It cannot be both. Suggest rewording the second sentence to read: "This is further defined as beginning 12-18 months from the end of the current year."

No

There is confusion in interpretation of the Table 1 — When the voltages class of the contingency element and the monitored element are different (one is HV and the other is EHV), to which voltage class is the allowance for shedding of non-consequential load applied. For example if the fault is on the 138-kV side of a 345/138-kV autotransformer, are you allowed to shed load to keep the 345-kV from overloading? Conversely, if the fault is on the 345-kV side of a 345/138-kV autotransformer, are you allowed to shed load to keep the 138-kV from overloading? Footnotes on P3 and P4 (101 & 19) should be 9 and 10, respectively. This merely appears to be a typo in the latest draft. Other footnotes appear to be mislabeled as well. If Extreme Events are not deleted from the standard, then a different number for the table for Extreme Events should be used. Extreme Events 2a – need to define towerline. Add language to replace towerline with structure. Table 1 Footnotes require a close editorial review. There are two number ones, and multiple items pointing to the wrong footnote or footnotes that don't exist (19, 101), etc. Several instances are discussed below but this is not an exhaustive list. Table 1 – Steady State & Stability Performance Planning Events - Note (a) – this note is placed under "Steady State & Stability" but issues of voltage instability, cascading outages, and uncontrolled islanding apply only to stability. NPCC suggests this note be relocated to "Stability Only." Table 1 – Steady State & Stability Performance Planning Events - Note (i) – this indicates that one cannot meet steady state requirements by depending on end-user owned equipment. Please clarify the purpose and performance requirement on this note with respect to end-user schemes and possible arrangements already in place to trip end-user equipment. Table 1, P4 – footnote reference in Category column needs to change from 101 to 10. Footnote reference in Event column lead-in description needs to change from 11 to 10. Table 1, P5 – As written, this requirement replicates a fault causing a loss of station anywhere that there is only one protection system. This is overly severe and would lead to the requirement for fully redundant protection systems at many stations. The use of the term "Protection System" in P5 is unacceptably inconsistent with the NERC definition of Protection System because it does not exclude the battery and its associated series elements. Battery systems should not be included. Table 1, P7 – for Event 1 (the loss of two adjacent circuits), this needs to specify if these are the same phase or different phases. Table 1 – Steady State & Stability Performance Extreme Events It appears that for Steady state, item 2, that item (a) is encompassed by (b). It if is not, what makes it different? Table 1, footnote #2 – typo – there is an erroneous comma in the phrase "are the fault types, that must be evaluated." Please remove said comma. Table 1, footnote #3, HQT, as does NPCC, has asked NERC to put a lower bound on the HV but it seems that this remains unaddressed. More stringent performance requirements should be applied to Facilities that represent the backbone of the electric power grid and act as the medium for moving large amounts of power from production to various Load centers, rather than to those Facilities that directly serve end-use Load customers. However, as had been commented in preceding postings, the EHV breakpoint for these more stringent requirements, defined in note 3 of table 1 as "all Facilities greater than 300 kV", is not appropriately defined and should be reviewed. A uniform voltage-level threshold has not been shown to adequately cover all of the different power systems in North America, and significant additional costs will be incurred without proportional or measurable reliability benefits if this definition is not changed. The following is a proposed modification to the EHV definition "all Facilities greater than 300 kV…": "Facilities representing the backbone of the System, generally operating at voltages greater than 300 kV, as determined by the Planning Coordinator and approved by Regional Entity." In using such language, we believe that the extra investment required would go towards real improvement of the reliability of the Interconnected System. Furthermore, HQT believe that untill the BES/BPS definition debate is settled at NERC and FERC level, the proposed definition permits the use of the performance base methodology to determine the BPS element subjected to this standard. The way the standard is actually written, it can be interpreted as 300 kV and above, wheter it is part of BPS or not. HQT believe it is overly prescriptive and leaves no leeway.

Yes

No

There are still issues as indicated in the submitted comments that need to be addressed before this standard should go to ballot.

Group

E.ON U.S.

With respect to Category P6, a Multiple Contingency event (the overlapping occurrence of two or more single events) allows Non-Consequential Load Loss. The "System adjustments" do not list yet do not exclude Load Shedding. E.ON U.S believes that Load Shedding should be included as an option in similar manner to Curtailment of Firm Transmission Service. If the SDT disagrees with this recommendation, then E.ON U.S. suggests that the SDT clearly state the allowed use of Load Shedding. E.ON U.S. observes that in the case of Extreme Events the SDT provided the following response to a previous comment: Extreme event 2d and 3a are similar in that each covers the loss of all generating units at a single plant location. However, in 3a, two plants are reviewed. In each case, all units are to be outaged regardless of the BES voltage level to which they connect. E.ON U.S. recommends that the word "station" in event 2d to be changed "plant".

Group

SERC Dynamics Review Subcommittee (DRS)

R1: MOD-010 and 012 are not directly applicable to the PC. References to other processes (e.g. tariff requirements or transmission owner agreements) that are utilized to provide this data may be desirable, but do not satisfy R1 as presently written. VSL: In the Moderate and Severe VSL, insert “responsible entity’s” in front of the term “System model.”

Part 2.1.4 and 2.4.3: delete the word “sufficient.” We appreciate the deletion of the previous R2.9 on non-Consequential Load Loss from the previous draft of TPL-001-1. Bullet 1 of R.2.4.3: change “Dynamic Model” to “Dynamic Load Model”. Part 2.9: Does this refer to customer loads only, or does it include pump-storage or compressed air generating plant pumping load. We recommend that the expected largest consequential load be limited to customer load, not utility load, i.e., pump-storage.

R3.3.1: We propose to add “permanently” before “disconnect”.

It is not clear as to the expectations of standard drafting team for dynamic modeling of relays. Parts 4.1.2 and 4.3.3 imply that all transmission relays may need to be explicitly modeled in the dynamic simulations. Is this the team’s intent, please clarify? For R4.1.2. Suggested change: Replace word “tripped” with “considered”. Reasoning: Since often tripping an out-of-step generator reduces impedance swings, if the simulation shows acceptable impedance swings and voltage levels without tripping the generator, why would we be required to determine the tripping time and simulate tripping in each of the simulations that we have to run for these event categories? Without the suggested change involving the word “considered”, significant extra effort would be required to perform simulations for small generators with no added benefit in achieving the purpose of assuring that impedance swings from generators are not passing through lines on the Bulk Electric System for events P2-P7. Part 4.3.1: add “when used as part of a protection system” to the end of the sentence. Part 4.3.3: add “when such devices affect the study area” to the end of the sentence. Part 4.4: place a space between words “Table 1” and “that”.

The content in the severe VSL column should be split among the lower, moderate, and high categories, with failure to include one element as Moderate and two elements as High. It is stated that the Transmission Planner and Planning Coordinator shall have criteria specifying voltage limits, post-contingency voltage deviations, and transient voltage response. How would an nteraction with a third party system be handled? For example a contingency causes a voltage deviation on one system that is within thevoltage deviation criteria, but causes a voltage deviation violation on a neighboring system that has a more stringent criterion.

M6: The wording on this measure appears to have been copied from M3 or M4 but is not appropriate since R6 addresses criteria and methodology but not a study.

None.

R8: It is not clear whether the assessment results must be distributed to all parties of interest, or if it would be sufficient to post the assessment at a central location, and distribute information to access the information. Also, FERC Standards of Conduct issues would come into play in assuring that the information is available only to appropriate personnel. For additional clarity in who should receive the assessment, we recommend replacing "indicates" with "has" and adding words to the end of the sentence so that it states the following: "and to any functional entity that has a reliability related need for the Planning Assessment results and provides a written request." R8: The PC and TP responsibilities should be stated separately for clarity. Part 8.1: It is not clear what the form of the response to the comments should be. Would an acknowledgement be sufficient, or would it be necessary to pursue a process of examining comments in detail and revising and reissuing the corresponding assessment? The

requirement needs to be revised to make the above point clear. For Part 8.1, we do not believe the intent is for casual emails to be documented and formally responded to. And we do not believe that anyone who happens to receive the assessment should be able to comment. Therefore, we recommend the following wording: "If one of the above named entities provides formal written comments on the results, the respective Planning Coordinator or Transmission Planner shall provide a documented response to that recipient within 90 calendar days of receipt of those comments." If these recommendations are accepted, then the wording of M8 would have to change accordingly.

No

With the simplified definition for Bus-tie Breaker, would a breaker in a standard ring bus or breaker-and-a-half scheme be considered a Bus-tie Breaker? Request the definition be revised to clarify as follows: Add this sentence to the end of the definition: “A breaker in a standard breaker–and-a-half or ring bus configuration is not a Bus-tie Breaker”. Suggest revising the Non-Consequential Load Loss definition to: Non-Interruptible Load loss other than (1) Consequential Load Loss and (2) the response of voltage sensitive Load including Load that is disconnected from the System by end-user equipment.

No

Some of the footnote superscripts do not appear to have a corresponding reference in the footnotes, in the case of: Table 1 Planning Events P3 superscripts should be 9 and not 19. Table 1 P5 superscript 19 should also be 9. Table 1 Planning Events P4 superscript 101 should be 10, superscript 11 should also be 10. Table 1 Extreme Events steady state items 2A and 2B superscript should be 11, not 12. Table 1 Extreme Events stability items 2A-2F superscript should be 10, not 11. No header on third page of Table 1 Planning Events. Table 1, Planning Events, wherever it says “no” in the “interruptions of firm transmission service” column, generation tripping by fault clearing action should be allowed.

No

There is a concern about the last paragraph in the Implementation Plan. It is easy to interpret this language to state that the entity is noncompliant if the performance requirements are not completed within 5 years. The concern is that the 5 year window for meeting the “raising the bar” requirements is still not adequate. For instance, it typically takes 7 to 10 years to build a new 500-kV transmission line - including time required for such processes as federally mandated NEPA environmental reviews. We strongly suggest increasing this time window to 10 years.

No

If the revisions recommended above are adopted, the standard would then be ready for ballot. We commend the drafting team for their efforts in preparing this draft standard for ballot.

Individual

Greg Campoli

NYISO

R1 - The NYISO would like to align itself with the comments of the ISO/RTO Council stating that the PC may begin model building using provisions from tariff or agreements such as its Transmission Owners agreement. While the data may be consistent with that provided in Mod 10 and 12, there may not be a direct correlation. We, therefore, also suggest the following wording for R1. “Each Transmission Planner and Planning Coordinator shall maintain System models within its respective area for performing the studies needed to complete its Planning Assessment. The models shall reflect data consistent with that provided in accordance with the MOD-010 and MOD-012 standards and/or data that is provided in accordance with tariff or transmission owner agreements. The models may be supplemented by other sources as needed including items represented in the Corrective Action Plan, and shall represent projected System conditions.” R1.1.2 - Outages of less than 12 months are generally coordinated by operations, not planning departments. In reference to system modeling, it doesn’t make sense for outages of less than a year. We therefore recommend replacing “duration of at least six months” with duration of 12 months or more.” R1.1.5 - Interchange should not be modeled in the base case system representation, unless their neutrality to system reliability has been clearly demonstrated. There are times that economic interchanges between New York and a neighbor may have an impact on one of the transmission systems that may, at times, pose reliability constraints on the operation of the New York system. R1.1.6 - Please define what is included in “resources required to supply load.” It is unclear what is included or not included in this requirement. The NPCC definition of “resource” is inclusive.

R2. - The NYISO tariff establishes a biennial “Comprehensive System Planning Process,” Compliance with an “Annual Planning Assessment” will therefore be a simple repetition of data reported in the prior year assessment. Please clarify that this is acceptable. We believe that the use of “past studies” provides for this. R2.1 - “Steady state” should be defined upfront with other definitions. In defining “steady state” is “thermal voltage” the primary metric being measured? R2.1.1 - Again want to confirm that due to the NYISO biennial planning cycle, that use of “past studies” will be acceptable. R2.1.2 - Please define what is intended by “off peak.” Our reading is that it is ANY load level less than peak. Also, consistent with our comments on the prior draft, system off-peak is more likely a stability issue than a steady state issue. If system off-peak becomes a steady state issue, it can be mitigated through generation redispatch. Accordingly, it appears that this requirement is not necessary for steady state analysis. R2.1.4 - This is just too vague to be a useful requirement. The sentence “ To accomplish this, the sensitivity analysis in the Planning Assessment must vary one or more of the following conditions not already included in the studies by a sufficient amount to stress the System within a range of

credible conditions that demonstrate a measurable change in performance." is too subjective to be enforceable. Either definitions of phrases like "sufficient amount" "credible conditions" and "measurable change" are included, or the requirement needs to be written more clearly to state what is actually being required without such high level of subjectivity. Further, we believe that this sentence may not be necessary at all, as the first sentence in 2.1.4 provides sufficient detail to conduct sensitivity analysis without being overly prescriptive. R2.4.3 As much of this language is a repeat of language in 2.1.4, above, our comments there also apply to this section. R2.6 - "Past Studies may be used to support the Planning Assessment if they meet the following requirements" and the sub-requirement R2.6.2 states that for SS, SC, or stability analysis the study shall not include any material changes, such unless a technical rationale can be provided to demonstrate that System changes do not impact the performance results in the study area. While this is better than the prior draft, the NYISO still would like more clarity on the definition of "material changes." Would the inclusion of a technical rationale satisfy ANY change, regardless of magnitude, in a past study. Or could we just invoke the usage of a statement such as "The NYISO feels this change does not constitute a "material change."" to be compliant with this requirement? We recommend that the regional entity should have a process to determine whether changes are material that is similar to the NPCC's process for determining what level of annual transmission review should be conducted each year. Finally, does this only relate to, or is limited to, the LATEST PLANNING HORIZON system model? R2.7 – Recommend that in the sentence "Corrective Action Plan(s) do not need to be developed solely to meet the performance requirements for a single sensitivity…" wording should be changed to "performance requirements for any single sensitivity…" R2.7.1 – Recommend changing phrase that leads into list to read "Such actions including, but not limited to:" R2.7.2 - Recommend consideration of striking this section. It is not clear how an entity can provide a rational for unnecessary actions. Further, if actions are not necessary, what limit would there be on a rational, so they would seemingly be useless? Finally, it is stated above, corrective action plans should not be required for sensitivity studies. R2.9 – There does not seem to relate to any reliability need the NYISO is aware of for this requirement to remain.

R3.3.3 – This requirement is already addressed in NERC Standard PRC-023 and reflected in the facility's rating and should be removed. R3.5. - The Extreme Events testing in Table 1 should be removed from this standard since there is no requirement to develop a Corrective Action Plan to address unacceptable consequences and the requirements are very general or vague. At a minimum, testing should only be required for EHV facilities or facilities specified by the Regional Entity – for example, NPCC designates facilities that can have consequences outside an area as bulk power system facilities. If this remains, the NYISO requests that the phrase "evaluation of possible actions" be greatly clarified. R3.6 – The NYISO seeks greater clarification of the phrase "consequential generation."

R7. - The NYISO requests clarification as to whether the PC will be expected to distribute the TP Planning Assessments as part of its coordination requirement?

R8- It should be made clear that a TP should not be required to send their assessment to adjacent PCs. Likewise the PCs should not be required to send their assessment to TPs not in their footprint. R8.1: This should not be required until the Assessment is complete and posted. Additionally, this could be an administratively intense task to respond to each and every comment and document that a response is made within 90 days. Is there any room for an extension to this requirement?

No

Question # 9 – The SDT has revised the definitions in response to industry comments to the third posting. Do you agree with these definition changes? If not, please clearly indicate which definition you disagree with and provide specific comments. No. Need to define "Steady State" and "Consequential Load" as well as other phrases included throughout the NYISO's response.

Yes

Question #10. – Do you agree with the changes in the performance elements and notes in Table 1? If not, please provide specific comments by note number, note alpha character, or performance category. Yes

Yes

Question #11 – The SDT has provided a revised Implementation Plan as part of this posting. Do you agree with the revisions to the Plan? If not, please provide specific comments. Yes

No

Question #12 – Do you believe that this standard is ready to go to ballot? (if 'No' is checked here, the SDT will consider that comments raised on the other questions drove that decision.) No. Too many significant questions and key definitions remain unanswered. Table 1 - General comment - Footnotes – needs significant clean-up Page 16 Note (a) – this note is placed under "Steady State & Stability" but issues of voltage instability, cascading outages, and uncontrolled islanding apply only to stability Note (f) – Does this refer to "Normal Ratings"? Please provide clarity. Note (g) – "System steady state" should be defined by applicable regional entity. Note (i) – indicates that one cannot meet steady state requirements by depending on end-user owned equipment. Please clarify the purpose and performance requirement on this note with respect to end-user schemes and possible arrangements already in place

to trip end-user equipment. Page 17 P5 – As written, this requirement replicates a fault causing a loss of station anywhere that there is only one protection system. This is overly severe and would lead to the requirement for fully redundant protection systems at many stations. Page 18 P7 – for Event 1 (the loss of two adjacent circuits), this needs to specify if these are the same phase or different phases Page 19 How could any system planner reasonably and accurately portray what contingencies might occur from any single or combination of extreme events listed? PAGE 20 Is the one mile exclusion in footnote 14 a contiguous mile, or a total of one mile for the entire length of the lines? (i.e. Are multiple instances of common towers or common rights of way exempt if each instance is less than a mile?) General Comment: The NYISO would like to align itself in supporting the following comment submitted by the NPCC: We agree with the SDT that more stringent performance requirements be applied for Facilities that do not directly serve end-use Load customers but rather represent the backbone of the electric power grid and act as the medium for moving large amounts of power from production to various Load centers. However, as HQT commented on previous draft, we strongly believe that the EHV breakpoint for these more stringent requirements, defined in note 3 of table 1 as “all Facilities greater than 300 kV” is not appropriately defined and should be reviewed. The SDT have not demonstrated that a uniform voltage-level threshold could adequately covers all different power system types in North America and we strongly believe that significant additional costs will be incurred without proportional or measurable reliability benefits if this definition is not changed. We propose to modify EHV definition “all Facilities greater than 300 kV…” by the following “Facilities representing the backbone of the System, generally at voltage greater than 300 kV, as determined by the Planning Coordinator and approved by Regional Entity.” In using such a language, we believe that the extra investment required would go towards real improvement of the reliability of the interconnected System.

Individual

Chifong Thomas

Pacific Gas and Electric Co.

R1.1.4 could be interpreted that the standard requires forecasting reactive load. However, most entities forecast demand (MW) and apply a power factor(s) to calculate reactive load. Therefore, please change “real and reactive load forecast” to “forecasted demand and power factor” so it is clear that forecasting reactive load is not required. For R1.1.5 we suggest changing the wording from “Known commitments for Firm Transmission Service and Interchange” to “Known commitments for Firm Transmission Service or Interchange”. It is difficult to distinguish between the two in future cases where not all contractual arrangements are known.

The wording in R2.1 is unclear as to whether new annual studies are required each year or whether qualified past studies are acceptable if no changes have been made. R2 reads “This Planning Assessment shall use current or past studies…”, while R2.1 implies current studies must be used but can be supplemented by past studies. We suggest changing the wording from “The Near-Term Transmission Planning Horizon portion of the steady state analysis shall be assessed annually and be supported by the following annual current studies, supplemented with qualified past studies…” to “The Near-Term Transmission Planning Horizon portion of the steady state analysis shall be assessed annually and be supported by the following annual current studies, or qualified past studies…” It is unclear if the drafting team intended the sensitivity studies identified by the bullets in R2.1.4 to align with the sensitivity studies identified by the bullets in R2.4.3. Both are for Near-Term studies but for steady state and stability respectively. If the intent is that they align, the wording should be modified to be the same. Also, similar to R1.1.4 above, R2.1.4 could be interpreted that the standard requires forecasting reactive load. However, most entities forecast demand (MW) and apply a power factor(s) to calculate reactive load. Therefore, please change “real and reactive load forecast” to “forecasted demand and power factor” so it is clear that forecasting reactive load is not required.

Requirements R3.4 and R3.5 appear to be related to and set the limits for R3.1 and R3.2 respectively. Suggest moving both Requirements R3.4 and R3.5 into R3.1 and R3.2, allowing these sub-Requirements (R3.4 and 3.5) to be deleted. It is unclear from the wording in R3.3 whether the Contingency analyses need to be performed for all planning events or the more severe events referenced in R3.1 and R3.2. Please clarify the wording of R3.3. For clarity we suggest that the wording in R3.3.3 be changed to “Ensure the power flows in the simulations are no higher than actual relay loadability limits.

Requirements R4.4 and R4.5 appear to be related to and set the limits for R4.1 and R4.2 respectively. Suggest moving both Requirements R4.4 and R4.5 into R4.1 and R4.2, allowing these sub-Requirements (R4.4 and 4.5) to be deleted. It is unclear from the wording in R4.3 whether the Contingency analyses need to be performed for all planning events or the more severe events referenced in R4.1 and R4.2. Please clarify the wording of R4.3. R4.3.1 appears to require an assessment of both successful unsuccessful high-speed reclosing. Successful reclosing is a much less severe event, so it seems unnecessary to assess both. If the intent is to make entities assess both we suggest including the assessment in the list of sensitivities.

As worded R5 is unclear. We interpret R5 to require entities to specify minimum voltage levels that must not be exceeded for more than a specific period of time. High transient voltages are typically not a problem. We suggest changing the second sentence of R5 to read: “For transient voltage response, the criteria shall at a minimum, specify a voltage level and a maximum length of time that transient voltage may remain below that level.”

Clarity is needed in the phrase functional entity in R8. Is this referring to the entities identified in the Functional Model or something else?

No

The definition of Non-Consequential Load is in need of clarification. As written, it could be interpreted that load that is disconnected from the System by end-user equipment would not be allowed for certain contingencies. Suggested revision to the language follows Non-Interruptible Load loss other than: • Consequential Load Loss • the response of voltage sensitive Load • Load that is disconnected from the System by end-user equipment. This version uses the same wording but clarifies that the term “other than” applies to all three things.

No

As currently drafted, several outages identified in Categories P2, P4, and P5 appear to potentially result in the same elements being removed from service, so therefore the same event, even though the initiating event is different. We believe that the drafting team needs to conduct a workshop prior to balloting to educate the industry on what outages are required to be simulated for which Categories. Additionally there are footnotes numbered 12, 19, and 101, which do not relate to any foot note in the document, and some other footnotes seem to be misplaced. We encourage the drafting team to carefully review all footnotes to ensure accuracy prior to balloting this standard.

No

Revisions are necessary to the Effective Date language to clarify the 60 calendar months language for Corrective Action Plans. It is unclear if the entity has five years from the day they identify the problem or five years from the modeled year or five years from the effective date of this standard.

No

Based on the unclear or ambiguous language identified in the comments above as well as the confusion noted in the Table 1 regarding outages and footnotes, we believe modifications are necessary prior to taking this standard to ballot.

Group

Modesto Irrigation District Transmission Planning

R1.1.4 could be interpreted that the standard requires forecasting reactive load. However, most entities forecast demand (MW) and apply a power factor(s) to calculate reactive load. Therefore, please change “real and reactive load forecast” to “forecasted demand and power factor” so it is clear that forecasting reactive load is not required. R1.1.5 we suggest changing the wording from “Known commitments for Firm Transmission Service and Interchange” to “Known commitments for Firm Transmission Service or Interchange”. It is difficult to distinguish between the two in future cases where not all contractual arrangements are known.

The wording in R2.1 is unclear as to whether new annual studies are required each year or whether qualified past studies are acceptable if no changes have been made. R2 reads “This Planning Assessment shall use current or past studies…”, while R2.1 implies current studies must be used but can be supplemented by past studies. We suggest changing the wording from “The Near-Term Transmission Planning Horizon portion of the steady state analysis shall be assessed annually and be supported by the following annual current studies, supplemented with qualified past studies…” to “The Near-Term Transmission Planning Horizon portion of the steady state analysis shall be assessed annually and be supported by the following annual current studies, or qualified past studies…” It is unclear if the drafting team intended the sensitivity studies identified by the bullets in R2.1.4 to align with the sensitivity studies identified by the bullets in R2.4.3. Both are for Near-Term studies but for steady state and stability respectively. If the intent is that they align, the wording should be modified to be the same. Also, similar to R1.1.4 above, R2.1.4 could be interpreted that the standard requires forecasting reactive load. However, most entities forecast demand (MW) and apply a power factor(s) to calculate reactive load. Therefore, please change “real and reactive load forecast” to “forecasted demand and power factor” so it is clear that forecasting reactive load is not required. R2.1.4,R2.4.3 "... vary one or more of the following conditions not already included in the studies by a sufficient amount to stress the System within a range of credible conditions that demonstrate a measureable change in performance." Please define measureable. An example would certainly help. This would be a good workshop item to show how to perform. R2.6.2 The previous version defined material change. This current version eliminated the definition of material change, but still indicates the study shall not include any material changes.... This is unclear; please clarify.

For clarity we suggest that the wording in R3.3.3 be changed to “Ensure the power flows in the simulations are no higher than actual relay loadability limits. Also please define relay loadability limit.

Requirements R4.4 and R4.5 appear to be related to and set the limits for R4.1 and R4.2 respectively. Suggest moving both Requirements R4.4 and R4.5 into R4.1 and R4.2, allowing these sub-Requirements (R4.4 and 4.5) to be deleted. It is unclear from the wording in R4.3 whether the Contingency analyses need to be performed for all planning events or the more severe events referenced in R4.1 and R4.2. Please clarify the wording of R4.3. R4.3.1 appears to require an assessment of both successful unsuccessful high-speed reclosing. Successful reclosing is a much less severe event, so it seems unnecessary to assess both. If the intent is to make entities assess both we

suggest including the assessment in the list of sensitivities.

R5 is unclear. We interpret R5 to require entities to specify minimum voltage levels that must not be exceeded for more than a specific period of time. High transient voltages are typically not a problem. We suggest changing the second sentence of R5 to read: “For transient voltage response, the criteria shall at a minimum, specify a voltage level and a maximum length of time that transient voltage may remain below that level.”

Clarity is needed in the phrase functional entity in R8. Is this referring to the entities identified in the Functional Model or something else?

No

The definition of Non-Consequential Load is in need of clarification. As written, it could be interpreted that load that is disconnected from the System by end-user equipment would not be allowed for certain contingencies. Suggested revision to the language follows Non-Interruptible Load loss other than: • Consequential Load Loss • the response of voltage sensitive Load • Load that is disconnected from the System by end-user equipment. This version uses the same wording but clarifies that the term “other than” applies to all three things.

No

As currently drafted, several outages identified in Categories P2, P4, and P5 appear to potentially result in the same elements being removed from service, so therefore the same event, even though the initiating event is different. We believe that the drafting team needs to conduct a workshop prior to balloting to educate the industry on what outages are required to be simulated for which Categories. Additionally there are footnotes numbered 12, 19, and 101, which do not relate to any foot note in the document, and some other footnotes seem to be misplaced. We encourage the drafting team to carefully review all footnotes to ensure accuracy prior to balloting this standard. please define "post contingency" and "post transient" Why was the previous version footnote 1 defining "angular stability eliminated?

No

Revisions are necessary to the Effective Date language to clarify the 60 calendar months language for Corrective Action Plans. It is unclear if the entity has five years from the day they identify the problem or five years from the modeled year or five years from the effective date of this standard.

No

Based on the unclear or ambiguous language identified in the comments above as well as the confusion noted in the Table 1 regarding outages and footnotes, we believe modifications are necessary prior to taking this standard to ballot.

Individual

Greg Rowland

Duke Energy

No comments.

• Reword R2.1 as follows: “The Near-Term Transmission Planning Horizon portion of the steady state analysis shall be assessed annually and be based on the following annual current studies, supplemented with qualified past studies that meet Requirement R2, part 2.6. The following studies are required:” • We believe that using a past study for the Long Term Assessment is adequate, as long as the past study meets R2.6. Reword R2.2 as follows: “The Long-Term Transmission Planning Horizon portion of the steady state analysis shall be assessed annually and be based on the following annual current study or qualified past study that meets Requirement R2, part 2.6. The following study is required:” • Reword R2.2.1 as follows: “System peak Load conditions for one of the years in the Long-Term Transmission Planning Horizon and the rationale for why that year was selected.” • We believe that using past studies for the Near-Term Transmission Planning Horizon portion of the Stability analysis is adequate, as long as the past studies meet R2.6. Reword R2.4 as follows: “The Near-Term Transmission Planning Horizon portion of the Stability analysis shall be assessed annually and be based on the following annual current studies or qualified past studies that meet Requirement R2, part2.6. The following studies are required:” • R2.5 – Does the phrase “proposed generation additions or changes in that timeframe” refer only to generation changes, or does it also refer to transmission system changes?

R3.5 includes the phrase “cascading outages”. We believe that the word “cascading” should be the capitalized NERC-defined term “Cascading”.

• R4.3.3 must be clarified regarding what method is to be used for assessing the impact of transient swings on Protection System operation. For example, how is this to be included in models, is this referring to a post simulation evaluation comparing results to actual relay settings, etc? • R4.5 includes the phrase “cascading outages”. We believe that the word “cascading” should be the capitalized NERC-defined term “Cascading”.

No comments.

R6 includes the phrase “cascading outages”. We believe that the word “cascading” should be the capitalized NERC-defined term “Cascading”.

No comments.

No comments.

No

Reword the definition of Non-Consequential Load Loss as follows: Non-Interruptible Load loss other than Consequential Load Loss and other than the response of voltage sensitive Load including Load that is disconnected from the System by end-user equipment.

No

• Reword Steady State Only: f. as follows: “Applicable Facility Ratings shall not be exceeded.” • P3 Initial System Conditions footnote should be 9, not 19. Also, P4 footnote should not be 101. Please check all footnote references.

Yes

Yes, however we don’t understand the meaning of this phrase which follows P1-2 and P1-3: “for controlled interruption of electric supply to local network customers connected to or supplied by the Faulted element”.

Yes

Yes, assuming our comments are addressed effectively.

Group

FirstEnergy Corp

FirstEnergy believes the draft 4 version of requirement R1 is greatly improved over prior drafts. The team has correctly responded to industry stakeholders and arrived at an appropriate middle ground that should resolve most stakeholder concerns. The changes made in R1.1.2 stating modeling of known outages with a duration of 6-months or more helps clarify a requirement that was previous subjective and open for interpretation. The removal of the previously prescriptive "such as list" is also well received by FirstEnergy. Finally, the addition of the text "known commitments" in regards to Firm Transmission Service and Interchange resolves our prior concerns.

A. FirstEnergy disagrees with requirement R2 sub-part 2.1.1 requiring the annual completion of two near-term steady-state studies. We believe that on a yearly basis completion of one near-term study and one long-term study is sufficient to interpolate and extrapolate the results needed to cover the entire planning horizon. The team should keep in mind that the overall assessment will include qualified past studies to supplement the results for a more refined view of anticipated conditions. We request that the team revise the near-term annual study requirements to require completion of only one near-term steady-state study and allow the TP/PC flexibility in choosing the appropriate study year. B. In requirement 2.7.1 the team should consider collapsing the 3rd and 4th bullets into a more succinct single bullet that says "Installation or modification of automatic generation runback/tripping". The use of "manual" generation run-back should be accounted for in an Operating Procedure (5th bulleted item). The additional text on the existing 3rd and 4th bullets discussing "single or multiple contingency" is not needed as the text stated in the parent R2.7 text is sufficient. C. We concur with the team’s removal of the overly prescriptive requirements to include "initiation dates" and "in-service dates" from the Corrective Action Plans. However, the team may want to ensure some aspect of timing is identified in the Corrective Action Plans. It is recommended that the team revise the text of sub-part 2.7.1 that precedes the bulleted list to read "List system deficiencies, associated actions needed to achieve required System performance and the timing of when the actions are needed"

A. The inclusion of sub-part 3.3.3 of Requirement R3 that reads "Ensure relay loadability limits are respected" is not needed as it is duplicative with standard PRC-023, and indirectly redundant with the facility rating standards FAC-008 and FAC-009. Additionally, the introductory notes of performance Table 1 item "f" is clear that Facility Ratings shall not be exceeded and PRC-023 makes it clear that relay loadability must be accounted for in Facility Ratings. In NERC’s three-year assessment, Attachment 2 it clearly indicates that one goal of NERC’s standards development work plan is " ...retiring redundant requirements ..." (Please reference page 4, the 6th bullet under plan objectives). To that end, we should not knowingly create redundant requirements that lead to double jeopardy issues for industry stakeholders. If a "belts and suspenders" is the goal here, it’s suggested that a footnote be added to item "f" of the introductory notes that would clarify that PRC-023 must be adhered to with regard to Facility ratings. B. If the generator bus is modeled at the generator voltage, then this should be the reference voltage point. If the generator is modeled directly connected to the BES, then the transmission voltage should be the reference voltage. Either way, the reference point should be consistent. In addition, 3.3.2 requires the unit to be tripped. It should be noted that the minimum voltage point may be overly-conservative, since the minimum voltage that a unit can stay on line is MVA output dependent. For base load units, determining a generator minimum voltage should be relatively straightforward, however, peaking and regulating units, not so. Our experience has been that generating units at manned locations generally do not have undervoltage protection or alarms, so FE is not certain how this Requirement to trip those units matches the "real world". C. We suggest the team discontinue the use of "Coordinate with adjacent transmission planners" in regards to sub-part 3.4.1 related to the inclusion of contingencies from adjacent systems. The "coordination" type of requirements creates a need to develop compliance evidence such as e-mail correspondence, meeting minutes etc that serve no real reliability purpose. The requirement should simply be that the TP shall include adjacent System contingencies expected to produce the more severe System impacts on their

system. In fact, sub-part 3.4 already includes that language. We suggest the team append the sentence "The planning event contingencies shall include:" to the end of sub-part 3.4 followed by two bullets that indicate 1) events within the TP's system and 2) events on adjacent transmission Systems.

A. The SDT should bring consistency to the text used for sub-part 4.3.2 of R4 and sub-part 3.3.2 of R3. In R4 it indicates "generator bus voltages or high-side of GSU" as the reference voltage point whereas 3.3.2 only indicates "generator bus voltage" as the point of reference. If the generator bus is modeled at the generator voltage, then this should be the reference voltage point. If the generator is modeled directly connected to the BES (no transformer is explicitly modeled), then the transmission voltage should be the reference voltage. B. Requirement R4, sub-part 4.3.2 is well intentioned, but problematic for those performing dynamic simulations. Does a Guide or Practice exist to determine the dynamic undervoltage capability of a synchronous machine? Most excitation systems contain "field forcing" functions to maintain stability through fault conditions (1 second or so of capability), but FE is not aware of any published, readily available quantities or formulas that can be used to determine this highly time dependent function. Application of the steady state minimum voltage is grossly over-conservative. FE questions why low voltage limits should even be considered in dynamic simulations, since the primary concern for generating equipment during events of this nature and duration are metallurgical, not thermal (voltage). C. Requirement R3 sub-part 4.3.3 is troublesome since the modeling detail needed for Protection Systems within traditional stability programs is not available. It is expected that software adjustments will be needed from the software vendors before this requirement can be met. The implementation plan of 24 months may be insufficient in regards to 4.3.3. In draft 3 Progress Energy and Ameren in the Q11 comments indicated that more time is needed for Protection System modeling required by TPL-001-1. The SDT responded "The standard does not require detailed modeling of Relay Protection Systems. It only requires that the impacts of those systems be reflected in the modeling of Contingencies and the evaluation of the resulting System performance. This is no different than the current standards." The inclusion of sub-part 4.3.3 in Draft 4 does not appear to align with this response. Please clarify the intent of 4.3.3 and respond regarding FE's belief that more time is needed for software improvements. D. We suggest the team discontinue the use of "Coordinate with adjacent transmission planners" in regards to sub-part 4.4.1 related to the inclusion of contingencies from adjacent systems. The "coordination" type of requirements creates a need to develop compliance evidence such as e-mail correspondence, meeting minutes etc that serve no real reliability purpose. The requirement should simply be that the TP shall include adjacent contingencies expected to produce the more severe System impacts on their systems. In fact, sub-part 4.4 already includes that language. We suggest the team append the sentence "The planning event contingencies shall include:" to the end of sub-part 4.4 followed by two bullets that indicate 1) events within the TP's system and 2) events on adjacent transmission Systems.

We concur with the inclusion of R5 and the criteria needed for steady-state voltage limits, post-contingency deviations and the transient voltage response for its System. In regards to the transient voltage criteria, its our understanding that the this criteria is for planning purposes only and not intended for operation time horizon evaluations being performed by the TOP.

If an entity is required to adhere to its Facility Ratings, how is it feasible that a cascade violation would occur? FirstEnergy questions the need for this review based on Table 1 performance requirements and the need to adhere to Facility Ratings.

Yes

Yes

No

We disagree with the proposed Implementation Plan. The implementation period for the TPL-001-1 transmission planning standard should be limited to the time needed to transition to the new study requirements. The proposed 5-year implementation for the "raise the bar" aspects of this standard delves into project management and review of capital construction progress which should remain outside the scope of this standard. The standard should only consider if an entity has completed the required studies and has developed Corrective Action Plans to ensure performance criteria is being maintained. Implementation of transmission system action plans depends on the actions of many other functional entities, other than PCs or TPs. PC's and TP's should not be held responsible for the implementation of action plans since they have little or no control over the activities related to implementation. For example, an RTO/ISO may act as both the PC and the TP for its transmission owner or transmission operator membership, however, the RTO/ISO should not be subject to compliance sanctions for incomplete projects that it does not have direct responsibility. FirstEnergy suggests that a new TPL standard is required to successfully accomplish the vision and endpoint that this drafting team has in mind. It is our opinion that the TO, TOP, DP and GO are needed as applicable entities to bring to fruition the capital enforcement projects or operating procedures that are identified by the PC/TP. This TPL-001-1 standard should stop at the conclusion of studies, assessments and development of Corrective Action Plans and a new TPL standard should be developed to address implementation of Corrective Action Plans.

No

FirstEnergy does not believe the proposed TPL-001-1 standard is ready for ballot until our primary concern with the Implementation Plan as identified in our comment to Q11 is addressed. Additionally, our most pressing secondary concern is the modeling required for Protection Systems related to 4.3.3. Finally, we believe the standard is overly burdensome related to the annual near-term study requirements as stated in 2.1.1 as noted by our Q2 comments.

Individual

David M. Conroy

Central Maine Power Company

R1.1.1 Make this read “Existing Facilities and Resources” so that it will be a lead in to the changes proposed for 1.1.6. R1.1.2 This type of event is sufficiently addressed within the existing testing requirements (P6) and therefore should be eliminated , beyond that such outages are reviewed and approved on an operational basis and should not be included in a planning standard. During known outages for equipment upgrades or repairs there may be some increased exposure to load loss, which should be recognized as an acceptable exposure. In the event that this requirement is maintained please change six months to one year. 1.1.6 Resources may not be exclusively sources supplying load. Therefore the reference should not involve load. The focus should be on changes to resources and “resources required to supply load” should be replaced with “New planned Resources and changes to existing Resources” We suggest NERC develops a definition for “resource” or use the following definition found in NPCC Glossary of Terms, Document A-7: Resource — Resource refers to the total contributions provided by supply-side and demand-side facilities and/or actions. Supply-side facilities include utility and non-utility generation and purchases from neighboring systems. Demand-side facilities include measures for reducing load, such as conservation, demand management, and interruptible load. ADD 1.2 The standard is referring to requirements for sensitivity and other issues without a reference to base assumptions. The standard must describe base assumptions. M1 It is not practical to retain system model information in a hard copy form. This provision should be dropped. D.1.1.4 Data Retention: The Transmission Planner and the Planning Coordinator may not be using the same software. If both are required to store the data, do they both have to have the software to use the data? Can this be changed to an ‘or’ such that one of them must retain the data and it can be up to them as to who is responsible for data retention.

2.1.3 In the event that R1.1.2 is kept it must be clear that the reference to outage schedules as listed in part 1.1.2 must be limited to the Planning Horizon. Table 1 There is confusion in interpretation of the table 1 — When the voltages class of the contingency element and the monitored element are different (one is HV and the other is EHV), to which voltage class is the allowance for shedding of non-consequential load applied. For example if the fault is on the 138-kV side of a 345/138-kV autotransformer, are you allowed to shed load to keep the 345-kV from overloading? Conversely, if the fault is on the 345-kV side of a 345/138-kV autotransformer, are you allowed to shed load to keep the 138-kV from overloading? 2.1 Language should be revised similar to R2.4 as follows: “The Near-Term Transmission Planning Horizon portion of the steady state analysis shall be assessed annually and be supported by current or past studies as indicated in Requirement R2, part 2.6. The following studies are required:” 2.1.2 Should be moved to the list of sensitivities currently in 2.1.4. (Off-peak needs to be more specifically defined). 2.1.4 Consistent with the suggestion made for section 1.1.2 please remove the last bulleted item in the list under section 2.1.4. “Duration or timing of planned Transmission outages.” 2.2 The language in 2.2 should be revised to be similar to 2.4 as follows: “The Long-Term Transmission Planning Horizon portion of the steady state analysis shall be assessed annually and be supported by current or past studies as indicated in Requirement R2, part 2.6. The following studies are required:” 2.3 This should be modified to state that it is up to the Planner to determine the year of study within the Near Term Transmission Planning Horizon. 2.4.2 This should be deleted as it is covered under section 2.4.3. 2.4.3 To define a sensitivity, NERC must define base assumptions. 2.7 We suggest changing the word “run” to “condition” such that it reads “Corrective Action Plan(s) do not need to be developed solely to meet the performance requirements for a single sensitivity condition in accordance with Requirements R2, parts 2.1.4 and 2.4.3.” 2.9 The requirement to report the largest single consequential load loss under Requirement 2.9 should not be included in the standard. The TPL does not limit the size of the consequential load loss. If it remains, it must be made clear that it be applicable only to Year One or Year Two.

3.2 Item 3.2 should be deleted. The requirements for sensitivity analysis already address issues going beyond what is expected to meet reliability requirements. Requiring extreme event analysis is requiring two layers of event analysis beyond what is required and there is no requirement for corrective action if anything is identified. Therefore Extreme Event analysis no longer provides any value in this standard. 3.3.2 This requirement is not practical unless a MOD is created so that known minimum generator steady state or ride through voltage limitations are used instead of assumed values. To create a MOD, collect the data, and incorporate the information into the studies will take time, which necessitates the need for an implementation period. Absent accepting this suggestion with respect to creating an MOD, please provide assumed minimum generator steady state or ride through voltage limitations as a standard reference for this analysis. 3.3.3 There appears to be a compliance double-jeopardy issue related to relay loadability. Relay loadability is handled in greater detail (as it should be) under the proposed PRC-023 standard, so any reference here should be deleted. 3.4 It is suggested that this

requirement is made a sub-bullet of Requirement 3.1 to keep the related requirements together. 3.5 and 4.5 Both of these requirements need clarification as to what is specifically required for the "evaluation of possible actions." 3.5 It is suggested that this be made a sub-bullet of Requirement 3.2 to keep the related requirements together. 3.6 Item 3.6 should be deleted since there is no limit defined in the standard.

4.1.1 This should be revised to only be applicable to generators interconnected to the BES. This may need an implementation period as not all existing units are interconnected in accordance with the standard as proposed. As written this applies to small generators and doesn't necessarily reflect reliability of the network. 20 MW is a recommended generator minimum size. 4.1.2 This will require implementation period. 4.2 Item 4.2 should be deleted. The requirements for sensitivity analysis already address issues going beyond what is expected to meet reliability requirements. Requiring extreme event analysis is requiring two layers of event analysis beyond what is required and there is no requirement for corrective action if anything is identified. Therefore Extreme Event analysis no longer provides any value in this standard. 4.4 It is suggested that this requirement is made a sub-bullet of Requirement 4.1 to keep the related requirements together. 4.5 It is suggested that this requirement is made a sub-bullet of Requirement 4.2 to keep the related requirements together.

Voltage criteria is addressed by the VAR standards. Including a voltage requirement in the planning standards appears to be creating a double-jeopardy exposure. R5. Change to Read "Each Transmission Planner OR Planning Coordinator … Need time to implement transient voltage criteria.

R8, 8.1, and Measurement M8 This standard should not be used to remedy deficiencies in meeting the coordination requirements of FERC Order 890. Therefore these should be deleted. If this requirement is retained the following is suggested: "Each Planning Coordinator and Transmission Planner shall distribute its Planning Assessment results to their adjacent Planning Coordinators and Transmission Planners, respectively, and to the functional entities that the Planning Coordinator and Transmission Planner recognizes as having a reliability need for the Planning Assessment results." Additionally, there is no deadline for comments. There is also potential conflict with the deadline for completing a study and when comments may be submitted (e.g. comments are received the day before the study is to be completed.) These issues must be addressed. 1.4 – Data Retention: The last bullet is unnecessary and should be deleted from the standard.

No

As currently defined Non-Consequential Load Loss could allow widespread or cascading motor stall. The language in the definition cannot be this generic. The text is broad enough that it could allow a voltage collapse; the definition is incompatible with Table 1a (BES Transmission voltage instability, cascading outages, and uncontrolled islanding shall not occur). The definition for the non-consequential load loss combined with Table 1 would prohibit any customer from tripping its own load for contingencies that indicate 'no' in the non-consequential load loss column. This is not practical and appears to be an unintended consequence of the change in definition. This requires a change in the definition or the table. We suggest defining Non-Consequential Load Loss as "intended post contingency loss of load caused by operator or SPS (RAS) action."

No

We generally agree with the table, however our issues are as follows: Footnotes on P3 and P4 (101 & 19) should be 9 and 10, respectively. This merely appears to be a typo in the latest draft. Other footnotes appear to be mislabeled as well. If Extreme Events are not deleted from the standard, then a different number for the table for Extreme Events should be used. There is confusion in interpretation of the Table 1 — When the voltages class of the contingency element and the monitored element are different (one is HV and the other is EHV), to which voltage class is the allowance for shedding of non-consequential load applied. For example if the fault is on the 138-kV side of a 345/138-kV autotransformer, are you allowed to shed load to keep the 345-kV from overloading? Conversely, if the fault is on the 345-kV side of a 345/138-kV autotransformer, are you allowed to shed load to keep the 138-kV from overloading? P5 –The use of the term "Protection System" in P5 is unacceptably inconsistent with the NERC definition of Protection System because it does not exclude the battery and its associated series elements. Extreme Events 2a – need to define tower line. Add language to replace "tower line" with "structure". Table 1, footnote #3 – change Regional Entity to Regional Reliability Organization.

Yes

No

It is closer, but there are still some unacceptable issues that need to be addressed.

Group

Bonneville Power Administration

: R1.1.4 could be interpreted that the standard requires forecasting reactive load. However, most entities forecast demand (MW) and apply a power factor(s) to calculate reactive load. Therefore, please change "real and reactive load forecast" to "forecasted demand and power factor" so it is clear that forecasting reactive load is not required. For R1.1.5 we suggest changing the wording from "Known

commitments for Firm Transmission Service and Interchange" to "Known commitments for Firm Transmission Service or Interchange". It is difficult to distinguish between the two in future cases where not all contractual arrangements are known.

: The wording in R2.1 is unclear as to whether new annual studies are required each year or whether qualified past studies are acceptable if no changes have been made. R2 reads "This Planning Assessment shall use current or past studies…", while R2.1 implies current studies must be used but can be supplemented by past studies. We suggest changing the wording from "The Near-Term Transmission Planning Horizon portion of the steady state analysis shall be assessed annually and be supported by the following annual current studies, supplemented with qualified past studies…" to "The Near-Term Transmission Planning Horizon portion of the steady state analysis shall be assessed annually and be supported by the following annual current studies, or qualified past studies…" It is unclear if the drafting team intended the sensitivity studies identified by the bullets in R2.1.4 to align with the sensitivity studies identified by the bullets in R2.4.3. Both are for Near-Term studies but for steady state and stability respectively. If the intent is that they align, the wording should be modified to be the same. Also, similar to R1.1.4 above, R2.1.4 could be interpreted that the standard requires forecasting reactive load. However, most entities forecast demand (MW) and apply a power factor(s) to calculate reactive load. Therefore, please change "real and reactive load forecast" to "forecasted demand and power factor" so it is clear that forecasting reactive load is not required.

For clarity we suggest that the wording in R3.3.3 be changed to "Ensure the power flows in the simulations are no higher than actual relay loadability limits.

Requirements R4.4 and R4.5 appear to be related to and set the limits for R4.1 and R4.2 respectively. Suggest moving both Requirements R4.4 and R4.5 into R4.1 and R4.2, allowing these sub-Requirements (R4.4 and 4.5) to be deleted. It is unclear from the wording in R4.3 whether the Contingency analyses need to be performed for all planning events or the more severe events referenced in R4.1 and R4.2. Please clarify the wording of R4.3. R4.3.1 appears to require an assessment of both successful unsuccessful high-speed reclosing. Successful reclosing is a much less severe event, so it seems unnecessary to assess both. If the intent is to make entities assess both we suggest including the assessment in the list of sensitivities.

As worded R5 is unclear. We interpret R5 to require entities to specify minimum voltage levels that must not be exceeded for more than a specific period of time. High transient voltages are typically not a problem. We suggest changing the second sentence of R5 to read: "For transient voltage response, the criteria shall at a minimum, specify a voltage level and a maximum length of time that transient voltage may remain below that level."

Clarity is needed in the phrase functional entity in R8. Is this referring to the entities identified in the Functional Model or something else?

No

The definition of Non-Consequential Load is in need of clarification. As written, it could be interpreted that load that is disconnected from the System by end-user equipment would not be allowed for certain contingencies. Suggested revision to the language follows Non-Interruptible Load loss other than: • Consequential Load Loss • the response of voltage sensitive Load • Load that is disconnected from the System by end-user equipment. This version uses the same wording but clarifies that the term "other than" applies to all three things.

No

As currently drafted, several outages identified in Categories P2, P4, and P5 appear to potentially result in the same elements being removed from service, so therefore the same event, even though the initiating event is different. We believe that the drafting team needs to conduct a workshop prior to balloting to educate the industry on what outages are required to be simulated for which Categories. Additionally there are footnotes numbered 12, 19, and 101, which do not relate to any foot note in the document, and some other footnotes seem to be misplaced. We encourage the drafting team to carefully review all footnotes to ensure accuracy prior to balloting this standard. Table 1, the second to last column: Please clarify what is meant by "Interruption of Firm Transmission Service." Planning studies do not differentiate firm and non-firm transmission services. Planning studies model a load forecast, a generation dispatch, and the system topography. Interruption of firm transmission service is a commercial issue and is not related to assessing reliability of the system. If an assumed transfer is interrupted in a power flow case due to a contingency, and if no consequential load loss were allowed and all criteria were met, the system would still be exhibiting reliable performance. We believe interruption of firm transmission service should be allowed for all planning events P1 through P5 when assessing the reliability of the transmission system. At a minimum, footnote 9 in Table 1 should apply to all events in category's P1 through P5 that do not allow interruption of firm transmission service. The NERC definition of Firm Transmission Service states "highest quality of service offered to customers under a filed rate schedule that anticipates no planned interruption." Planning events required to be evaluated in Table 1 are unplanned interruptions by nature since they are studied to determine mitigation should they occur unexpectedly. This is inconsistent with the definition. Table 1, P1.4, P3.4, P4.4, P5.4, and P6.3: Shunt devices are not required to be in service at all times. It does not make sense to include it in the events column. How would you assess it while several of these devices are not

deployed because they are not needed for the conditions studied? Table 1, P1 & P2: What is the rational for having two categories for single contingency? Table 1, P2.1 (Opening of a breaker without a fault): Please clarify what constitutes opening a breaker without a fault mean? Planning for these events will be time consuming (modeling every breaker position open) and expensive to mitigate for events that occur solely due to human error and should be removed for the table. Table 1, P2.2, P2.3, and P2.4: These are not single contingency events and should be moved to P3.

No

Revisions are necessary to the Effective Date language to clarify the 60 calendar months language for Corrective Action Plans. It is unclear if the entity has five years from the day they identify the problem or five years from the modeled year or five years from the effective date of this standard.

No

Based on the unclear or ambiguous language identified in the comments above as well as the confusion noted in the Table 1 regarding outages and footnotes, we believe modifications are necessary prior to taking this standard to ballot.

Individual

Paul Rocha

CenterPoint Energy

CenterPoint Energy appreciates the SDT's efforts in revising R1 and generally agrees with the requirement except for verbiage and sub-requirements relating to modeling future transmission system projects, including projects identified in Corrective Action Plans. Specifically, CenterPoint Energy recommends that the SDT revise R1 by deleting the text "including items represented in the Corrective Action Plan" and delete part 1.1.3 in its entirety. Certainly, it is appropriate to model some limited subset of future projects, including projects included in Corrective Action Plans, which are reasonably "firm" or "committed". In previous drafts, the SDT tried to incorporate language to capture that concept but apparently abandoned the idea in response to industry comments. However, it remains true that many future "planned" projects, including projects in Corrective Action Plans, are tentative in nature and have a high degree of uncertainty due to uncertainty in forecasted system conditions. Because of this reality, and the fact that models are intended to be useful for identifying what future projects might be necessary, CenterPoint Energy believes many transmission planning organizations do not and should not model any and all new planned transmission facilities tentatively identified based upon studies and assessments of previous system models. Once the System model is updated with previously contemplated transmission projects, it is problematic to determine in future studies whether or not those projects are still needed, which is contrary to the intent of updating the model. If CenterPoint Energy's recommended changes are made, Transmission Planners and Planning Coordinators would not be precluded from incorporating future projects into their System models in accordance with their established practice but they would not be required to inappropriately model any and all previously contemplated projects.

Part 2.2: CenterPoint Energy recommends deleting part 2.2 since studies performed in the Long-Term Transmission Planning Horizon have dubious value for organizations whose longest lead time items take less than five years to construct. Even for organizations requiring longer than five years to build some projects, it should be noted that beyond the five year horizon, generation reserve margins have generally been exhausted, requiring speculation as to the location and size of future generating resources in developing system models. In recognition of this reality, the current set of TPL standards appropriately require that assessments be conducted beyond the five-year horizon only as needed to address identified marginal conditions that may require longer lead time solutions. Part 2.5: Part 2.5 appears to have been added in response to one comment to the 3rd draft. In fact, the commenter did not recommend or propose the requirement found in 2.5, but only asked about the SDT's intent regarding this matter. CenterPoint Energy strongly disagrees that part 2.5 is necessary or advisable and recommends that it be deleted. We wholeheartedly agree that Transmission Planners should consider and selectively study potential stability concerns. However, we believe that Transmission Planners are already considering and selectively studying potential stability concerns, and deleting part 2.5 would not preclude the continuation of these practices. However, we oppose mandating stability analysis in the Long-Term Transmission Planning horizon of proposed generation additions or changes due to the uncertainty of where and how much generation will actually be constructed beyond the five year horizon, particularly since generation can be built much faster than five years and can easily invalidate any such assessment. Part 2.7: CenterPoint Energy recommends that part 2.7 be revised to add a reference to part 3.4 and part 4.4 as follows: "For planning events shown in Table 1, selected in accordance with parts 3.4 and 4.4, when the analysis…". This recommended change is to prevent possible ambiguity or conflicts between part 2.7 and parts 3.4 and 4.4. Part 2.9: – CenterPoint Energy agrees with multiple commenters to the 3rd draft that part 2.9 (previously 2.8) should be deleted. Part 2.9 is an unnecessary reporting requirement that has no actual bearing on reliability. By continuing to insist on R2.9, the SDT seems to have inappropriately ignored industry comments to the previous draft while ironically inserting R2.5 into this draft in response to only one industry comment (which did not actually advocate that R2.5 was necessary). CenterPoint Energy urges the SDT to reconsider its dismissal of industry concerns regarding R2.9.

CenterPoint Energy recommends references to "Long-Term Transmission Planning Horizon" be revised to contain comparable language as in the existing TPL standards that limit Long-Term studies to

marginal system conditions requiring longer lead times. See CenterPoint Energy's comments regarding part 2.2 for the rationale behind this recommendation. CenterPoint Energy also recommends deleting part 3.4.1 as being overly prescriptive and difficult to demonstrate in an audit.
CenterPoint Energy recommends deleting part 4.4.1 as being overly prescriptive and difficult to demonstrate in an audit.
CenterPoint Energy is not familiar with the phrase "post-Contingency voltage deviations" and recommends that this phrase be deleted. Alternatively, the text should be revised to read "steady state post-contingency voltage limits." Including both phrases is unnecessary and confusing.
CenterPoint Energy believes R7 relates to matters best addressed through registration, such as JROs or delegation agreements. If other commenters agree, CenterPoint Energy recommends that R7 be deleted.
CenterPoint Energy believes R8 is over-reaching and recommends deleting it. CenterPoint Energy is particularly concerned about requiring assessments to be distributed to "any functional entity that indicates a reliability related need". There is already a process in place for entities to request and receive the FERC Form 715 submittals of other entities. FERC's process appropriately recognizes and addresses CEII issues and imposes a requirement that the entity demonstrate need for the information and that the industry complies with certain security-related requirements. Beyond CEII matters, transmission planning information can have implications for market entities bidding on congestion rights in competitive energy markets. Therefore, the dissemination of transmission planning information may be governed by the regulatory authority having jurisdiction over the market functions, which is not necessarily FERC in all cases. In any case, given the availability of the FERC 715 process, there is no need for a somewhat duplicative requirement in this standard. Accordingly, CenterPoint Energy recommends that R8 be deleted in its entirety.
No
CenterPoint Energy is well aware of the diligence of the SDT in preparing this major consolidation and rewrite of the existing TPL standards. CenterPoint Energy believes this latest version is almost ready for ballot. CenterPoint Energy respectfully requests consideration by the SDT of the refinements to this latest draft proposed by CenterPoint Energy.
Individual
Mark Byrd
Progress Energy Carolinas
PEC believes that the language of R2.5 "proposed generation additions and changes" should be clarified as to whether transmission changes near generators are included or not. PEC believes that the requirement to report the largest single consequential load loss under Requirement 2.9 should not be included in the standard. If it remains, it must be made clear that it be applicable only to Year One, and there should be additional clarification that the requirement to report consequential load loss (single number) is ONLY for the most severe contingencies studied for the P1 and P2 contingencies.
PEC believes that R3.3.3 "Ensure relay loadability limits are respected" is unnecessary. The requirement to stay within Facility Limits is much more bounding. Several footnote references from Table 1 to the footnotes are incorrect.
There appears to be a double-jeopardy issue related to voltage performance criteria related to the VAR Standards. The voltage and var criteria will also be required in VAR-001 and 002.
Need to define "adjacent" Planning Coordinators. Does this mean a neighbor with at least one joint interconnection? The requirement to provide the Planning Assessment "to any functional entity that indicates a reliability related need" should be made subject to applicable confidentiality and CEII provisions.
Yes
Yes
Yes
Yes
Individual

Larry Brusseau
MAPP
It would be helpful to identify the relationship expected between the PC and the TP. It looks as if both PC and TP are expected to maintain the same models. We need to avoid duplicated effort. Does the standard really apply to “both”, or could it be “either”? Is a Corrective Action Plan being used correctly throughout this standard? It seems like the specifics of a CAP aren’t appropriate for future planning years. Planning studies are only estimates of expected system growth, and the apparent problem might turn out to be different, or not exist at all. Will compliance people start going “over the top” examining CAPs? The current practice of summarizing possible problems in future years and identifying possible solutions seems more appropriate than pinning entities down to Corrective Action Plans. Corrective Action Plans seem appropriate only for the Operating horizon. R1 – We interpret that “within their respective areas” refers the geographic footprint of the TP or PC transmission system. We propose clarifying that “within their respective area” does not require the inclusion of remote generation or load (metering) buses that are within the declared Balancing Authority area, but may be outside and separate from the TP or PC geographic footprint. M1 – We recommend the bolded words be added to M1 to indicate that each responsible entity must provide evidence that “it is maintaining System models within its respective area, using the latest…” What does it mean to have a hardcopy of a system model? R1.1.2 – We suggest that this requirement be removed because the “known outage(s)” are only to be included in the models when for P1 events are simulated, as specified in R2.1.3. We suggest that the intent can be more simply handled by stating in R2.1.3 that known outages be simulated along with P1 events for the System peak or Off-Peak conditions when the outages are scheduled to occur. R1.1.3 – Add the qualification of “for the years defined in R2”. R1.1.6 – We interpret that “Resources required” allows the inclusion of fictional generators in the models when they are needed to make future normal system cases solve. If this is not the intended interpretation, then we suggest modifying the wording to make the desired interpretation more clear.
2.1.3: It must be clear that the reference to outage schedules as listing in part 1.1.2 must be limited to the Planning Horizon. There is confusion in interpretation of the Table 1 — When the voltages class of the contingency element and the monitored element are different (one is HV and the other is EHV), to which voltage class is the allowance for shedding of non-consequential load applied. For example if the fault is on the 138-kV side of a 345/138-kV autotransformer, are you allowed to shed load to keep the 345-kV from overloading? Conversely, if the fault is on the 345-kV side of a 345/138-kV autotransformer, are you allowed to shed load to keep the 138-kV from overloading? R2.1.4/R2.4.3 – The terms ‘credible’ and ‘measurable change’ are ambiguous and not defined. Therefore, we suggest that these terms be defined or more clearly described to avoid the risk of different and possibly contradictory interpretations by TPs, PCs, and auditors. R 2.1.5 - Spare equipment strategy. This appears to be more of a risk analysis than a simulation study requirement. If a simulation is required then it would appear that the PC/TP would need to rerun the entire system intact study with each “major transmission equipment “that is unavailable as a prior outage (i.e. for each generator, HVDC, SVC, XFMR) over the entire study parameters. How would this be evaluated? Is this not covered under P2 already? We also propose replacing the term ‘major Transmission’ with “BES” because BES is a well defined term while ‘major Transmission‘ is not. R2.4.1 – We recommend that the SDT clarify section 2.4.1 and when load models considering induction motors are required. The clarification should add limits or thresholds to provide load models based on areas that have stability limits or issues and to loads of substation size and having dynamic characteristic capable of significantly impacting voltage stability. Areas that don’t have large motors or stability issues should not be required to add unnecessary load modeling. R2.6.2 Change “to demonstrate that System changes do no impact the performance results in the study area” to “to demonstrate that System changes do not significantly impact the performance results in the study area.” 2.6.2 As written results in an unrealistic requirement to review every impact minor or large and determine which meets this item and which do not. The recommended change solves this problem. R 2.7 – Corrective Action Plan: Is this not already apart of FERC Order 890? The PC may not be able to develop a CAP as they may not be the owners and would have no say about how a problem will be resolved. R 2.8.1 – Suggest using a word other than “deficiencies” as it is associated with non-compliance. R2.9 – We propose that this requirement be removed because annually stating the single, largest expected, Consequential Load Loss due to a P1 or P2 event in the TP or PC system is not needed to provide reliable BES performance or assure open and transparent Transmission planning peer review. In general, standards should not contain requirements that don’t improve reliability.
R3.3.2 - We suggest that this requirement be removed because it is premature to require Transmission Planners to simulate under voltage tripping until the MOD standards require it. If the drafting team does not remove this requirement we propose revised wording to qualify which generating units to consider and which voltage limits to simulate, “Trip generating units that are connected to the BES when actual or assumed minimum generator steady state or ride through voltage limits are known and simulations show voltages may fall below the voltage limit. If assumed voltage limits are used, then they should be included in the assessment“. 3.3.3 – We suggest that R3.3.3 be removed and this System Protection simulation requirement should be included in R3.3.1, which is the requirement to properly simulate Protection System actions Add R3.3.5 – We suggest the addition of R3.3.5, “Applicable System Operating Limits for the planning horizon shall not be exceeded.” because Note “a” and “b” under “Steady State Only” at the beginning of Table 1 are stated in the form of a Requirement (e.g. uses the

verb, “shall”) and all Requirements should be explicitly stated under Requirements and not be introduced (and hidden) in the performance notes of Table 1. [After R3.3.5 is added, Note “a” should be revised and refer to R3.3.5.] Add R3.3.6 – We suggest the addition of R3.3.6, “The response of voltage sensitive Load including Load that is disconnected from the System by end-user equipment associated with an event shall not be used to steady state voltage requirements.” because Note “d” under “Steady State Only” at the beginning of Table 1 is stated in the form of a Requirement (e.g. uses the verb, “shall”) and all Requirements should be explicitly stated under Requirements and not be introduced (and hidden) in the performance notes of Table 1. [After R3.3.6 is added, Note “d” should be revised to refer to R3.3.6.] R3.4.1: Remove the Transmission Planner and change “coordinate” to “provide” information to adjacent PC. We are working on other standards to remove “coordinate” and we should avoid it here. Coordinate requires interaction between two entities (or more), so if one does not respond, the other could be found to be non-compliant for something they cannot control.
R4.1.1 & R4.1.2 - We propose that these sub-requirements be removed. The generating unit loss of synchronism does not necessary result in a thermal, voltage, or stability violations. R4.3.2 We suggest that this requirement be removed because it is premature to require Transmission Planners to simulate under voltage tripping until the MOD standards require it. If the drafting team does not remove this requirement we propose wording like, “Trip generating units that are connected to the BES when actual or assumed minimum generator transient voltage limits are known and simulations show voltages may fall below the voltage limit. If assumed voltage limits are used, then they should be included in the assessment“. The requirement should not apply to all relevant generating units until one of the MOD standards requires all Generator Owners to provide their minimum generating unit voltage limits to the TP and PC. If the wording of R4.3.2 must be different from its counterpart, R3.3.2, then please explain the reasons for any differences. Add R4.3.5 – We suggest the addition of R4.3.5, “Applicable System Operating Limits for the planning horizon shall not be exceeded.” because Note “a” and “b” under “Stability Only” at the beginning of Table 1 are stated in the form of a Requirement (e.g. uses the verb, “shall”) and all Requirements should be explicitly stated under Requirements and not be introduced (and hidden) in the performance notes of Table 1. [After R4.3.5 is added, Note “a” should revised and refer to R4.3.5.]
A voltage criterion is addressed by the VAR standards where they are applicable to TOs and TOPs. Including a voltage requirement in the planning standards appears to be creating a double-jeopardy exposure.
Suggest removing “Transmission Planner” since the PC performs the assessment.
Suggest moving this requirement to the head of the list. It’s a basis for the rest of this standard.
R8: Remove Transmission Planners: Each PC shall distribute it Planning Assessment to adjacent PC and to any registered function entity that indicates a reliability need for the Planning Assessment results. R8.1 Remove Transmission Planners from subrequirement.
No
Add a Consequential Generation Loss definition, which would be a complement to the Consequential Load Loss definition. Both consequential load loss and consequential generation loss are referred to in note “b” of the Steady State & Stability section of Table 1, but only consequential load loss is defined. We suggest text of: “Consequential Generation Loss: All Generation that is no longer delivered to any Transmission Facilities as a result of the Transmission Facilities removal from service by the operation of the installed Protection Systems designed to isolate fault conditions or otherwise protect the Transmission Facilities from abnormal operating conditions.” Add a Planning Horizon definition. This term is used in this proposed standard, in the FAC-010-2 standard, and possibly in other future standards, but it has not been defined yet.
No
The table needs to match the stated requirements in R3 & R4
No
The last part of the Effective Date section deals with the requirement to submit a Corrective Action Plan, and then to submit a mitigation plan to be approved by the Regional Entity and NERC. Failure do get those done would result in the initiation of “settlement proceedings.” This means that entities may be found non-compliant for failure to build facilities. That seems to fly in the face of the EPAct of 2005.
No
MAPPCOR urges the SDT to modify the effective date where it is indicated that any “entity that cannot fully implement its Corrective Action Plan to eliminate the need to trip Non-Consequential Load or curtail Firm Transmission Service for the above listed performance elements within 60 calendar months of the compliance date for Requirements R2 through R4 shall self report itself as being unable to meet the performance requirements of this Reliability Standard.” This is essentially requiring an entity to self report for failing to build facilities. The Energy Policy Act of 2005 did not give FERC and therefore, NERC, the authority to require construction of electric facilities. Therefore, this implementation plan is implying an authority that is not given to FERC or NERC. This provision of the effective date should be completely deleted from the standard, the provision to state that one is non-compliant for this should be deleted from the standard, or there should be a statement that such a requirement is subject to limitations of the Energy Policy Act of 2005.
Individual

Aaron Staley
Orlando Utilities Commisssion
In general I support all the changes from the prior revision. I especially like the clarification that outages of 6 months or longer need attention in planning studies. Several questions on the details: R1 requires the maintenance of system models for the purpose of studies and establishes that these models should be updated with the latest data from various sources. Is this requiring that models should always be current, updated for the slightest change, even between studies? Or just that models are kept up to date in a more practical application such as monthly, quarterly or before their use in a study? R1 states that the model should be "..supplemented by other sources as needed, including items represented in the corrective action plan…" Read in context with the overall requirement this allows for projects that are in the corrective action plan to be added, but does not require that they are, is this the correct understanding? -R1 requires the model to represent Known Commitments for Firm Transmission Service, and also references load forecasts. The application of this requirement seems to be that the model should be based on the load forecast and include the appropriate known firm transmission service for the amount that would be used at that forecast level?
-I like the clarification of "summarize results" compared to the wording in the prior edition. -It is obvious an attempt has been made to further define when past studies may be used, but I think it is still a bit confusing. Requirement 2.1, 2.2 appear to be saying that current studies must be used, but that additional information can be provided if desired and it meets certain requirements. Sub-Requirements 2.3, 2.4 and 2.5 seem to allow use of past studies that meet the requirements of 2.6 in lieu of new work. If this is the correct understanding then I suggest the following: For 2.1 and 2.2 revise the statement to read "…and be supported by the following annual current studies. The analysis may also include other current and past studies in addition to the required annual current studies listed below. The reference to R2.6 is removed since including it invites confusion over when prior art can be used and if the material is solely supplemental, then there is no reliability advantage to limiting what can be incorporated a supplemental material. R2.6 should also be revised to read "Past studies may be used in lieu of current studies for R2.3, R2.4, R2.6 if they meet the following requirements:" This will insure that it is very obvious in both places when prior art may be used in lieu of new work. -R2.6.2 Consider revising "the study shall not include any material changes" to "the system represented in the study shall not include any material changes". Stating that "the study shall not include material changes" implies changes to the study from the time it was performed to the time it was used, like inserting or removing text, not changes in the underlying transmission system which is what I think you are really targeting. -R2.1.4 and 2.4.3: The statement "sufficient amount to stress the system…credible conditions…demonstrate a measurable change" implies that a sensitivity must meet three general criteria: (I will be using load forecast as an easy example, but obviously there is a range and combination of items that could be used) 1. That it is expected to increase stress, for example increasing the load forecast would general increase stress, where decreasing it would not. 2. That the increase should be substantial, for example growing the load at 2x the expected growth rate vs 1.01x the expected rate. 3. That the change doesn't have to exceed the bounds of credibility. If a 2x or 3x increase doesn't result in a stack of new constraints, it does not mean the sensitivity is inadmissible. Is this a correct understanding? -R2.7: Is the "Corrective Action Plan" intended to document all of an entities planned future reliability related transmission projects and operational procedures? Or is it intended to address situations where simulation and the application of currently planned projects and procedures are insufficient to meet the performance requirements? The next comment is very closely related to this one. -R2.7: If a project is added one year to the "Corrective Action Plan" but then in the subsequent year has been added to the model, resulting in simulation showing no performance violations, should it be removed from the Corrective Action Plan? Or should it be referenced in the plan each year until it is either in service or demonstrated to no longer be required?
No comments
No Comments
No Comments
For R6 please consider the following revision: "Each TP and PC shall define and document within their planning assessment any criteria or methodology used in <<their>> analysis to identify system instability //for// conditions such as cascading outages, voltage instability, or uncontrolled islanding." Adding the text in <<>> and deleting the text in ////. As written originally it could be taken to be the methods for determining if you have instability during a cascading outage, rather then the methods for determining if you are at risk for instability like a cascading outage.
The intent is much clearer, thank you for revising this.
Excellent requirement, thank you for revising this
Yes
I agree, but that is based on not having seen any proposed changes from others that might change my mind.
Yes
Note 2 regarding three phase faults being sufficient evidence for SLG faults is an excellent addition, thank you. For P3 and P5 it should be made clearer that note 1 AND note 9 apply, maybe by using a comma in-between, not a note 19 that I wasn't able to locate. For Note 9, reading the context it

applies only to P3, P5 and P6, but not to P1. To apply this to actual study methodology, in responding to a P1 event Note 9 can not be applied when returning the system to a continuous (sustainable) state. However after those adjustments are made if additional adjustments are needed to make the system "secure", that is prepared for the next event in the P3 or P6 contingency, then note 9 can be applied? Is this a correct understanding?

Yes

The phasing in of the higher performance criteria is a very reasonable approach. The implementation plan needs to be painfully clear that during the first year the existing TPL standards are still in effect, and that R1 and R8 are in effect in addition. Most NERC standards have one revision take effect on a specific date, make the old version out of date. In this case however if TPL 001 retires the prior standards, then only R1 and R8 would need to be performed in the first year, which I do not believe that is the intent. In addition to this, further clarification may be needed for the application of R2-R7, even if they were to come into effect the first year. Assessments are a year long process and published once a annually. As an example many entities "publish" or finish the Assessment in December, that being the culmination of months of work. If R2-R7 are effective on June 2011 then the intended application seems to be that the assessment in Dec 2011 should comply with the new standard. Is that the intent, or would there need to be a valid assessment based on the new standard available the day the standard is in effect? Maybe phrasing to this effect. "Entities are not required to alter there annual schedule based on the R2-R7 requirements going into place or have duplicate efforts at assessments in the annual period the old and new standard overlap. Any assessment completed (as determined by the date that the entity formally shared results under R8) after the effective date for R2-R7 shall comply with those requirements."

Yes

I have not seen all the comments of other entities, so there may be some comments that would require the standard be reposted. Assuming I have correctly read the standard, all of my comments would improve the communication of the existing intent, not alter the requirement.

Group

Exelon Transmission Planning

The feedback from Round 3 of comments is appreciated, but there is still a concern that the inclusion of known (or 'expected') transfers is to be studied as a sensitivity. We believe that the base case should already contain the most likely ('expected') transfer scenario and a sensitivity case would be studied with a less likely transfer scenario. As written it appears that the standard would require that the base case would contain no transfers or some transfer level other than what is 'expected'. It is suggested the term "Expected transfers" be changed to "Additional transfers beyond base case conditions". The use of this term will provide clarity between what is to be modeled in the basecase and what is to be studied as a sensitivity case. There are a number of overlapping requirements with this standard and other standards in various stages of development, such as voltage stability criteria, protection system redundancy, relay loadability, and protection system contingencies that could cause non-compliance with several standards for a single infraction. Suggest removing overlapping requirements be removed from R6, P5 from Table 1, R3.3.3 and R3.3.1, respectively.

We believe that the Table 1 performance criteria should be based on the voltage level of potentially overloaded elements and not based on the voltage level of the element(s) removed from service. If a 100 kV line were overloaded for a 500 kV contingency, it does not make sense to us to treat it differently than if the same overload occurred for a 100 kV contingency since the severity of the event is the same in both cases. The availability of load shedding to reduce overloads on EHV equipment and not for overloads on HV equipment makes sense since typically a greater amount of load would need to be shed to unload an EHV facility than an HV facility. We disagree with the requirement to report the largest amount of consequential load loss. If this information is not used to meet a requirement adding to reliability, it is creating undo burden. If the requirement is kept, it should be made clear as to which case or cases the requirement pertains. The Planning Assessment will contain extremely sensitive information. The threshold that it must be supplied to ANY functional entity is too low. There should be a CEII or other process to ensure that this information is adequately protected.

Yes

Yes

Yes

Yes

Concern is with the issues raised in Question 2. Performance requirements should be based on the voltage level of the overloaded element.
Individual
Martin Bauer
US Bureau of Reclamation
The requirement for the model is not clearly stated. Based on the requirement 2, the models must prove the Corrective Action Plan items developed in 2.7.1. The actions in 2.7.1 are developed by the Transmission Planner or Planning Authority ("List System deficiencies and associated actions needed to achieve required System performance"). Requirement 1 however requires that the model "shall represent projected System conditions". Is the intent of the modelling to demonstrate system performance based on changes proposed by the Tranmission Owners and Generator Owners. Or is it the intent to have the Transmission Planner and Planning Authority develop proposals through system studies that the Transmission Owners and Generator Owners must implement?
The conflict is created in Section 2.5 in that only proposed generation additions or changes are assessed in "Long-Term planning Horizon portion of the Stability analysis. This Section should also address proposed transmission facility additoins or changes. Section 2.7 indicates that the Planning Assessment shall include Corrective Action Plan(s) addressing how performance requirements will addressed. This implies that the Corrective Action plans are not proposed generation or transmission additions or changes. If Corrective Action Plan items are developed through Planning Assessments, they should be clarified as proposals for consideration by Generator Owners and Transmission owners in developed future system modifications or additions.
No comment
No comment
The requirement in Table 1 is for Planning Authority and Transmission Planner to establish accceptable voltage deviations and limits. The requirement only indicates the that each shall have a criteria. That does not imply an agreement on a single limit or deviation allowable under a System Steady State post-contingency condition.
No comment
No comment
Results of the Planning Assessments should be coordinated with all owner entities who all share in system reliability. Any owner that may choose to implement a Corrective ACtion Plan item should have access to the basis for the need.
No
The term "Conssequential Load Loss" and "Planning Assessment" contain the terms "Transmission System" and/or "Transmission Facilities". The terms "Transmission System and Transmission Facilities are not defined in the NERC Glossary of Terms. The terms should either be in lower case or a definition added. The Term "Non-Consequential Load Loss" refers to a "Non-Interruptible Load" loss which is other than Consequentail Load Loss. There is no mention in the Consequential Load Loss definition of the type of load (interrubtible or non-interrubptible). This adds confusion to what appears to be the distinction in the differences between the two, that one was the result of a fault and the other was the result of voltage.
No
Consequential Load Loss was defined, however, consequential generator loss was not. It may be easier to define "consequential loss" and let it apply to either.
Yes
No
The definitions require revisions. Additional work is required to clarify Corrective Action plan items, agreement on votlage limits and acceptable deviations, as well as coordination of Planning Assessment results with owner entities.
Individual
Michael R. Lombardi
Northeast Utilities
[R1.1.6] What is NERC's definition of "Resources required to supply load"? [Add R1.1.7] The standard is referring to requirements for sensitivity and other issues without a reference to base cases. There needs to be some direction provided on the initial conditions used in the assessment. This guidance should include a discussion as to whether or not generator forced outages are to be represented in the base cases. Additionally, the standard is also silent on the treatment of system transfers, both internal and external, as to how they should be modeled in the base cases. For some areas, their current practice is to include heavy system stresses in their base cases. It is unclear if this practice works within the purview of this standard. Therefore, it is recommended that each Region must have a document that defines what constitutes base case conditions.
[R2.1] The language of this requirement should be revised as follow: "The Near-Term Transmission Planning Horizon portion of the steady state analysis shall be assessed annually and be supported by

current or past studies as indicated in Requirement R2, part 2.6. The following studies are required:" [R2.1.2] Please clarify the load level to be used for "System Off-Peak Load". [R2.1.4] To include and define sensitivity cases and simulations in the standard NERC must also define base cases to be used in the assessments. Refer to comment suggesting the addition of Requirement R1.1.7. [R2.1.5] It is not clear whether a corrective action plan should be developed for this requirement and if we are to develop an action plan should it be temporary and cover only the time period that the major Transmission equipment was unavailable? [R2.2] The language of this requirement should be revised as follow: "The long-Term Transmission Planning Horizon portion of the steady state analysis shall be assessed annually and be supported by current or past studies as indicated in Requirement R2, part 2.6. The following studies are required:" [R2.3] Please provide guidance as to what year should be represented when performing short circuit studies or is it up to the Planner to select a year for the study? [R2.5] There is no guidance on the load level that should be used for the long-term stability study as is required by Requirement R2.2.1 for the Steady State assessment. [R2.9] Why the need to report the largest Consequential Load Loss since the TPL Standard does not limit the amount of Consequential Load that could be allowed? We recommend that this requirement should be deleted.

[R3.3.2] Traditionally, transmission planners have assumed that generators would ride through low voltages associated with Planning Events, which is generally adequate for non-wind generators. If this standard is going to require its incorporation into the assessments, there should be a MOD standard developed requiring the generator owners to provide the necessary information prior to its inclusion as a requirement in this standard. [R3.3.3] This requirement is already addressed in NERC Standard PRC-023 and reflected in facility ratings and therefore, should be removed from TPL-001-1. [R3.5] This requirement needs clarification as to what is specifically required for the "evaluation of possible actions". Otherwise the following is recommended: • It should be clear that an evaluation does not require solution development for all Extreme Events. • Change "an evaluation of possible actions…" to "where appropriate, reasonably practicable actions designed to reduce the likelihood or mitigate the consequences and adverse impacts of the event(s) shall be considered." [R3.6] Why the need to report the amount of "Consequential Generation Loss" since TPL-001-1 does not impose any limit or reliability consequence? We recommend that this requirement be deleted from the standard.

[R4.1.1] This requirement needs better clarification. Does it mean that a generator that trips on any other condition apart from tripping on out-of-synchronism is acceptable? Example if the generator is not able to ride through a low voltage condition created by a fault. We recommend that this requirement is dropped from TPL-001-1 standard. [R4.1.2] This approach will require a different modeling technique from current practice and will require an implementation period. [R4.3.2] Refer to comment for Requirement R3.3.2. [R4.5] This requirement needs clarification as to what is specifically required for the "evaluation of possible actions". Otherwise the following is recommended: • It should be clear that an evaluation does not require solution development for all Extreme Events • Change "an evaluation of possible actions…" to "where appropriate, reasonably practicable actions designed to reduce the likelihood or mitigate the consequences and adverse impacts of the event(s) shall be considered."

[R8.1] There is no statute of limitation for comments, nor is there a limit on the number of comments. There is also potential conflict with the deadline for completing a study and when comments may be submitted. If this requirement is retained the following is suggested: "Each Planning Coordinator and Transmission Planner shall distribute its Planning Assessment results to their adjacent Planning Coordinators and Transmission Planners, respectively, and to the functional entities that the Planning Coordinator recognizes as having a reliability need for the Planning Assessment results".

No

[Comment on Year One Definition] This still defines Year One as both a particular year AND a window. It cannot be both. We suggest rewording the second sentence to read: "This is further defined as the beginning 12-18 months from the end of the current year".

No

[Comment on Non-Consequential Load Allowed for certain Planning Events] We recommend that the standard as written should not allow non-consequential load loss to be used to resolve violations arising from the planning events in Table 1. We believe that planning for a reliable power system should discourage mitigation by load loss. Therefore, Non-Consequential Load Loss should not be allowed in a future looking system plan. [Comment on Table 1 Item e, under Steady State & Stability] Our understanding here is that we should be able to redispatch after the first contingency (using fast start generation) to secure the system in anticipation of a second contingency and not redispatch to fix first contingency violations. Is this interpretation correct? Further, this standard doesn't specify which units can be adjusted following the contingency. This seems to stress the fact that the standard needs to address the definition of what is a base case. Also, the standard should be clear on whether we can or cannot rely on generation redispatch after the first contingency, i.e., should the failure of a fast start generator to start up be included in the contingency, or is this another level of contingency? [Comments on Footnotes] Footnotes 1, 10, 11, 19 and 101 need to be fixed. They are either mislabeled or do not point to any item.

Yes

No

Individual

Alice Murdock

Xcel Energy

R1.1.4 could be interpreted that the standard requires forecasting reactive load. However, most entities forecast demand (MW) and apply a power factor(s) to calculate reactive load. Therefore, please change "real and reactive load forecast" to "forecasted demand and power factor" so it is clear that forecasting reactive load is not required.

R2.1 The wording in R2.1 is unclear as to whether new annual studies are required each year or whether qualified past studies are acceptable if no changes have been made. R2 reads "This Planning Assessment shall use current or past studies…", while R2.1 implies current studies must be used but can be supplemented by past studies. We suggest changing the wording from "The Near-Term Transmission Planning Horizon portion of the steady state analysis shall be assessed annually and be supported by the following annual current studies, supplemented with qualified past studies…" to "The Near-Term Transmission Planning Horizon portion of the steady state analysis shall be assessed annually and be supported by the following annual current studies, or qualified past studies…" R2.1.5 Does "The Planning Assessment shall reflect" mean that the entity must meet the performance requirements for categories P0,P1,and P2 during the equipment unavailability? R2.9 As commented in the previous draft, we do not believe this requirement contributes anything to improving BES reliability. Therefore, we strongly recommend deleting this requirement.

R3.3.3 Xcel does not believe that relay loadability limits is a valid system planning performance criterion because we are unsure how transmission relay loadability settings developed in accordance with PRC-023 can be more limiting than the Facility Ratings. Note that the purpose of PRC-023 standard is "Protective relay settings shall not limit transmission loadability…" and it requires that the relay settings be higher than the "highest seasonal Facility Rating of a circuit". If relay settings limit the transmission loadability below its Facility Rating, then it is a violation of PRC-023. Requirements R3.4 and R3.5 appear to be related to and set the limits for R3.1 and R3.2 respectively. Suggest moving both Requirements R3.4 and R3.5 into R3.1 and R3.2, allowing these sub-Requirements (R3.4 and 3.5) to be deleted. R3.3 It is unclear from the wording in R3.3 whether the Contingency analyses need to be performed for all planning events or the more severe events referenced in R3.1 and R3.2. Please clarify the wording of R3.3.

4.3 Does the requirement allow it to be optional as to whether an entity chooses to include generator exciter controls, PSS, etc.? To what degree must a device impact the study area, in order for it to be required to be included in the simulation? Requirements R4.4 and R4.5 appear to be related to and set the limits for R4.1 and R4.2 respectively. Suggest moving both Requirements R4.4 and R4.5 into R4.1 and R4.2, allowing these sub-Requirements (R4.4 and 4.5) to be deleted. R4.3 It is unclear from the wording in R4.3 whether the Contingency analyses need to be performed for all planning events or the more severe events referenced in R4.1 and R4.2. Please clarify the wording of R4.3. R4.3.1 appears to require an assessment of both successful and unsuccessful high-speed reclosing. Successful reclosing is a much less severe event, so it seems unnecessary to assess both. If it is the intent to require that entities assess both, we suggest including the assessment in the list of sensitivities.

R8 Xcel Energy appreciates the language stating 'reliability need' however it is unclear as to what constitutes this or who would make that determination. Please clarify so as to avoid future disputes on providing or obtaining the information.

No

The definition of Non-Consequential Load is in need of clarification. As written, it could be interpreted that load that is disconnected from the System by end-user equipment would not be allowed for certain contingencies. Suggested revision to the language follows Non-Interruptible Load loss other than: • Consequential Load Loss • the response of voltage sensitive Load • Load that is disconnected from the System by end-user equipment. This version uses the same wording but clarifies that the term "other than" applies to all three things.

No

There are references to footnote 12 on page 19, and footnote 101 on page 17, yet no such footnotes exist on page 20. Some of the other footnotes seem to be misplaced. Please review and validate all footnote references.

No

Revisions are necessary to the Effective Date language to clarify the 60 calendar months language for Corrective Action Plans. It is unclear if the entity has five years from the day they identify the problem, or five years from the modeled year, or five years from the effective date of this standard.

No

As currently drafted, several outages identified in Categories P2, P4, and P5 appear to potentially result in the same elements being removed from service, so therefore the same event, even though the initiating event is different.
Individual
David Wang
San Diego Gas & Electric Co
R1.1.4 could be interpreted that the standard requires forecasting reactive load. However, most entities forecast demand (MW) and apply a power factor(s) to calculate reactive load. Therefore, please change “real and reactive load forecast” to “forecasted demand and power factor” so it is clear that forecasting reactive load is not required. R1.1.5 "firm transmission service agreements" should be removed the from the requirement. Firm transmission service agreements, "known" or otherwise, have no effect on reliable operation of the grid; power will flow where it wants, not where, or how, the firm transmission service agreement may specify. From a reliability perspective this information is of no use.
The wording in R2.1 is unclear as to whether new annual studies are required each year or whether qualified past studies are acceptable if no changes have been made. R2 reads “This Planning Assessment shall use current or past studies…”, while R2.1 implies current studies must be used but can be supplemented by past studies. We suggest changing the wording from “The Near-Term Transmission Planning Horizon portion of the steady state analysis shall be assessed annually and be supported by the following annual current studies, supplemented with qualified past studies…” to “The Near-Term Transmission Planning Horizon portion of the steady state analysis shall be assessed annually and be supported by the following annual current studies, or qualified past studies…” It is unclear if the drafting team intended the sensitivity studies identified by the bullets in R2.1.4 to align with the sensitivity studies identified by the bullets in R2.4.3. Both are for Near-Term studies but for steady state and stability respectively. If the intent is that they align, the wording should be modified to be the same. Also, similar to R1.1.4 above, R2.1.4 could be interpreted that the standard requires forecasting reactive load. However, most entities forecast demand (MW) and apply a power factor(s) to calculate reactive load. Therefore, please change “real and reactive load forecast” to “forecasted demand and power factor” so it is clear that forecasting reactive load is not required.
For clarity we suggest that the wording in R3.3.3 be changed to “Ensure the power flows in the simulations are no higher than actual relay loadability limits.
Requirements R4.4 and R4.5 appear to be related to and set the limits for R4.1 and R4.2 respectively. Suggest moving both Requirements R4.4 and R4.5 into R4.1 and R4.2, allowing these sub-Requirements (R4.4 and 4.5) to be deleted. It is unclear from the wording in R4.3 whether the Contingency analyses need to be performed for all planning events or the more severe events referenced in R4.1 and R4.2. Please clarify the wording of R4.3. R4.3.1 appears to require an assessment of both successful unsuccessful high-speed reclosing. Successful reclosing is a much less severe event, so it seems unnecessary to assess both. If the intent is to make entities assess both we suggest including the assessment in the list of sensitivities.
As worded R5 is unclear. We interpret R5 to require entities to specify minimum voltage levels that must not be exceeded for more than a specific period of time. High transient voltages are typically not a problem. We suggest changing the second sentence of R5 to read: “For transient voltage response, the criteria shall at a minimum, specify a voltage level and a maximum length of time that transient voltage may remain below that level.”
Clarity is needed in the phrase functional entity in R8. Is this referring to the entities identified in the Functional Model or something else?
No
The definition of Non-Consequential Load is in need of clarification. As written, it could be interpreted that load that is disconnected from the System by end-user equipment would not be allowed for certain contingencies. Suggested revision to the language follows Non-Interruptible Load loss other than: • Consequential Load Loss • the response of voltage sensitive Load • Load that is disconnected from the System by end-user equipment.
No
As currently drafted, several outages identified in Categories P2, P4, and P5 appear to potentially result in the same elements being removed from service, so therefore the same event, even though the initiating event is different.
No
Revisions are necessary to the Effective Date language to clarify the 60 calendar months language for Corrective Action Plans. It is unclear if the entity has five years from the day they identify the problem or five years from the modeled year or five years from the effective date of this standard.
No
Based on the unclear or ambiguous language identified in the comments above as well as the confusion noted in the Table 1 regarding outages and footnotes, we believe modifications are necessary prior to taking this standard to ballot.

Individual

Dan Rochester

Independent Electricity System Operator

Please explain what is envisaged by the phrase “and shall represent projected System conditions.” that is not already covered by the list in Requirement R1, part 1.1. We suggest removing the phrase. We do not have any comments on the, measure, VRF and Time Horizon. Consistent with our comment above, we believe that the 2nd condition under the Severe VSL is (a) vague, and (b) already covered by parts 1.1.1 to 1.1.6. This second condition is not needed.

(1) Part 2.1.4: We do not believe the sentence: “To accomplish this, the sensitivity analysis in the Planning Assessment must vary one or more of the following conditions not already included in the studies by a sufficient amount to stress the System within a range of credible conditions that demonstrate a measurable change in performance.” is necessary or measurable. The first part of 2.1.4 already stipulates sufficient details for the responsible entity to conduct sensitivity analysis including the parameters to be varied. Adding the “how-to conduct” requirement is overly prescriptive and unnecessary, and the condition for “that demonstrate a measurable change in performance” is not measurable. It lacks a definitive target or direction for the responsible entity to determine (a) what conditions need to be attained to demonstrate a measurable change in performance, (b) what constitutes “measurable change in performance”, and (c) what follow-up or corrective actions are needed to address the adverse performance as a result of stressing the system beyond the forecast conditions. In our comments on Draft 1, we disagreed with the requirement to conduct sensitivity testing. This is part of the analysis exercise that planners normally perform to help them identify critical parameters/conditions for consideration in planning assessments and in developing remedial plans. Having a reliability requirement to stipulate the details of sensitivity analysis is unnecessary but produces much increased work whose acts are difficult to measure and whose results are not taken any further to arrive at a useful outcome. Once again, we urge the SDT to consider dropping this requirement. (2) Part 2.3 stipulates the short-circuit assessment requirements for the near-term horizon. Unlike its steady-state and stability counterparts, there are no requirements stipulated for short-circuit analysis for the long-term horizon. Is this intentional? If so, we are unable to identify the rationale for this decision. If not, we suggest revising Part 2.3 to: “The short circuit analysis portion of the Planning Assessment shall be conducted annually addressing the near-term and long-term Transmission Planning Horizons and can be supported by….” (3) R2.4.1: We believe that “considering the behavior of induction motors” is not necessary since the wording “a Load model which represents the dynamic behavior” already covers this. (4) In part 2.5, we recommend inserting the text “and Transmission Facilities” after “generation” to be consistent with the wording of part 2.3 (5) As drafted, the VLSs do not address missing certain combinations of parts of Requirement R2. For example, the condition assigning a Low, Moderate or High VSL is the failure of one of the parts listed under these columns. There is no assignment for failing more than one of the listed parts. We propose adding a second condition under the High VSL as follows: “OR two or more of parts 2.3, 2.6, 2.8 and 2.9.”. Also, part 2.5 is missing from the SEVERE VSL. We recommend including it. As written, it is possible to miss say parts 2.1 and 2.5 and still not be captured under the Severe VSL if that is the intent.

(1) R3 has become more of a “how to” requirement than a “what” requirement, as illustrated below. (a) Part 3.3 is overly prescriptive. A requirement that says contingency analysis shall be performed which reflect proper operation of all Protection Systems and actions of all automatic devices would suffice. If necessary, some examples such as those listed in Part 3.3.4 may be added as illustration. (b) The parts that ask for creating a list of contingencies and having rationale available as supporting information, in Part 3.4 for example, are overly prescriptive and unnecessary. These are documentation requirements, not reliability requirements. If one asked the question: will reliability be adversely affected if the responsible entity failed to document the list and the rationale for choosing this list? If the answer is no, then they don’t rise up to a reliability standard. To meet the intent of Part 3.4, a simple requirement that asks the responsible entity to demonstrate acceptable system performance for the applicable planning events in Table 1 would suffice. Table 1 already stipulates the events that must be considered in the analysis. We do not see the need to go into such details as “some events are expected to produce more severe impacts…”, and the need to ask the planners to create a list of these more impactive contingencies for subsequent evaluation. Similar observation is made for Part 3.5 on the extreme event list and for Part 3.6 for the amount of generation loss, and the rationale. (2) We have no comments on the measure, VRF and Time Horizon. However, there is no VSL for Part 3.6.

(1) Part 4.3: Similar comments on Part 3.3 provided under Q3 also apply here. (2) Parts 4.4 and 4.5: similar comments on Parts 3.4 and 3.5 provided under Q3 also apply here. (3) We do not have any comments on the measure, VRF, Time Horizon and VSLs.

(1) We do not have any concern with the requirement as written, but suggest the SDT consider adding “and associated reactive power requirements” after “acceptable System steady state voltage limits” to take care of the concern raised in the recently posted SAR for a new VAR standard. We do not think a new standard is required for stipulating reactive power requirements as they are best addressed in the planning assessment criteria and the SOL/IROL determination requirements. (2) We do not have any comments on the measure, VRF, Time Horizon and VSL.

We do not have any comments on the requirement, VRF, Time Horizon and the VSL. However, Measure M6 (which refers to “studies utilized in preparing the Planning Assessment”) does not seem to be

relevant to Requirement R6, which deals with defining and documenting the criteria and methodology used in the analysis to identify System instability.

No comments on the requirement, measure, VRF, Time Horizon and VSLs.

(1) No comments on the requirement, measure, VRF and Time Horizon. (3) VSLs: (a) We do not agree with the Severe VSL condition. In our view, distributing planning assessment results is the intent of the requirement; it is more important to share results than to field questions from recipients of the results. Assigning a Severe VSL for failing Part 8.1 puts the driver at the wrong place. (b) The condition under Low and High seems to be the same. In the Low, failing to distribute the results to ANY ONE of the TPs and PCs means none, which is the same as the condition for High unless the condition under Low really means failing to distribute the results to ONE of the TPs and PCs whereas the High really means failing to distribute the results to two or more of the TPs and PCs. If this is the proper interpretation, then we'd suggest the VSLs be revised as follows: Low: failing to respond to comments within 90 days High: failing to distribute the results to one of the TPs and PCs Severe: failing to distribute the results to two or more of the TPs and PCs. Alternatively, a Moderate can be added to capture the condition for failing to distribute the results to two of the TPs and PCs, while the Severe can become failure to distribute the results to three of the TPs and PCs.

Yes

Yes

Yes

No

The standard has become overly prescriptive and unnecessary (see our comments under Q2, Q3 and Q4 on Part 2.1.4, Parts 3.3 to 3.6, Parts 4.3 to 4.5. Much work is needed to condense or remove these requirements.

Individual

Jason Shaver

American Transmission Company

We propose the following changes and questions: R1 – We interpret that "within their respective areas" refers the geographic footprint of the TP or PC transmission system. We propose clarifying that "within their respective area" does not require the inclusion of remote generation or load (metering) buses that are within the declared Balancing Authority area, but may be outside and separate from the TP or PC geographic footprint. R1.1.2 – We suggest that this requirement be removed because the "known outage(s)" are only to be included in the models when P1 events are simulated, as specified in R2.1.3. We suggest that the intent of this requirement can be more simply handled by stating in R2.1.3 that "known outages be simulated along with P1 events for the System peak or Off-Peak conditions when the outages are scheduled to occur". R1.1.3 – Add the qualification of "for the years defined in R2". R1.1.6 – We interpret that "Resources required" allows the inclusion of fictional generators in the models when they are needed to make future normal system cases solve. If this is not the intended interpretation, then we suggest modifying the wording to make the desired interpretation more clear. M1 – Revise M1 to indicate that each responsible entity must provide evidence with the added qualification, ". . . it is maintaining System models within its respective area, using the latest . . ."

We propose the following changes and following questions: New R2.1 – We suggest that R2.6 be relocated to the R2.1 position to allow the preferred style of backward references to text that occurs earlier in a document, rather than forward references to text that appears later in a document. R2.1.3 – As noted above, we suggest that R1.1.2 be removed and that R2.1.3 be revised to state that "Known outages of generation or Transmission Facilities with a duration of at least six months be simulated along with P1 events for the System peak or Off-Peak conditions when the outages are scheduled to occur." We interpret that simulation of known outages of at least six months should refer only to individual outages with duration of six months or more have to be simulated and not a set of sequential (back-to-back) outages where each individual outage is less than six months, but the composite duration of the set is more than six months. We also interpret that if two or more known outages with duration of at least six months are overlapping that the outage would be simulated as simultaneous for the System peak or Off-Peak conditions when the overlapping outages are scheduled to occur. R2.1.4 – The terms of 'credible' and 'measurable change" are ambiguous and not defined. Therefore, we suggest that these terms be defined or more clearly described to avoid the risk of different and possibly contradictory interpretations by TPs, PCs, and auditors. R2.1.4 bullet items – We suggest that the number and description of the bullet items in R2.1.4 match the bullet points in R2.4.3. Otherwise, please explain the reasons for any differences between the bullet items in R2.1.4 and R2.4.3. R2.1.4 bullet #2 & # 5 – We suggest that the wording of bulletin #2 be changed to "Expected transfers and other generation dispatch scenarios". This modification would put the transfer and dispatch element, which are complementary, together in the same bullet item, rather than grouping the 'generation dispatch' (operating level) element together with the generation capacity elements in bullet item #5. R2.1.4 bullet #7 – We propose replacing the adjective "planned" with "known" for consistency with R2.1.3 and any other 'known' references in the standard. R2.1.5 – We propose replacing the term

	‘major Transmission’ with “BES” because BES is a well defined term, while ‘major Transmission‘ is not. New R2.3.1 – We suggest the addition of new R2.3.1 to emulate the distinction between the requirement to perform a short circuit assessment and conduct required studies or analysis to support the assessment (e.g. R2.1/R2.1.1 and R2.2/R2.2.1). We propose wording such as, “Perform an analysis for at least one year in the Near Term Transmission Planning Horizon.” This requirement would set an expectation that an analysis should be conducted to at least one or more years in the near-term planning horizon, rather than imply that an analysis of all five years in the near-term planning horizon must be conducted. R2.4.1 - The terms of ‘study area’ and ‘represents’ are ambiguous and not defined. Therefore, we suggest that these terms be more clearly described to avoid the risk of different and possibly contradictory interpretations by TPs, PCs, and auditors. R2.4.3 – The terms of ‘credible’ and ‘measurable change’ are ambiguous and not defined. Therefore, we suggest that these terms be defined or more clearly described to avoid the risk of different and possibly contradictory interpretations by TPs, PCs, and auditors. R2.4.3 bullet items – We suggest that the number and description of the bullet items in R2.1.4 match the bullet points in R2.1.4. Otherwise, please explain the reasons for any differences. R2.4.3 bullet #2 & # 5 – We suggest that the wording of bulletin #2 be changed to “Expected transfers and other generation dispatch scenarios”. This would place these similar items in the same bullet item #2, rather than having the ‘other generation dispatch’ in bullet item #5. R2.4.3 bullet #3 – We suggest that the wording of “new or modified Transmission Facilities” to agree with the wording in bulletin #3 of R2.1.4. R2.6 – As noted earlier, we suggest that the numbering of this requirement be changing it to R2.1 to avoid the style of forward references. Add R2.7.1 Item #7 - We propose the addition of the following bullet item to R2.7.1 because any requirement in the head notes or foot motes of Table 1 should occur within the body of standard. Item #7 could read, “Planned System adjustments such as Transmission configuration changes and redispatch of generation are allowed if such adjustments are executable within the time duration of the Facility Ratings.” Note “e” in the Planning Events, Steady State & Stability section is stated in the form of a Requirement (e.g. use the verb “shall”), but all requirements should be included in the Requirements section and not introduced (and basically hidden) in the performance notes of Table 1. [After bullet item #7 is added, Note “e” under “Steady State & Stability section of Table 1 should refer to R2.7.1] R2.7.2 – We suggest using the term, “mitigation actions”, to more clearly distinguish that this requirement is not asking for the development of “Corrective Action Plans”, such as those that are needed for inability to meet base case performance requirements. R2.7.6 – We suggest that the wording of R2.7.6 be the same as R.2.8.2. Otherwise, we propose that R2.7.6 and R2.8.2 be revised with wording like, “. . . implementation status of identified Corrective Action Plans for System Facilities and Operating Procedures.” to clarify that the identified system facilities and operating procedures refer only to those that were in the previous year’s Corrective Action Plans. R2.9 – We still propose that this requirement be removed because annually stating the single, largest expected, Consequential Load Loss due to a P1 or P2 event in the TP or PC system is not needed to provide reliable BES performance or assure open and transparent Transmission planning peer review.
	We propose the following changes and questions: R3.3.1 – The term of ‘controls’ is ambiguous and not defined, unlike the term, ’Protection Systems’, which is defined. Therefore, we suggest that this item be defined or more clearly described to avoid the risk of different and possibly contradictory interpretations by TPs, PCs, and auditors. R3.3.1 – Add the wording, “. . . including the simulation of transmission circuit loadability protection.” to this requirement, rather than have a separate R3.3.3 requirement for recognizing overload protection. Overload protection is simply one of the types of automatic Protection System that may remove one or more elements from service. R3.3.2 - We suggest qualifying which generating units to consider and which voltage limits to simulate with revised wording like, “Trip generating units that are connected to the BES when actual or assumed minimum generator steady state or ride through voltage limits are known and simulations show voltages may fall below the voltage limit. If assumed voltage limits are used, then they should be included in the assessment“. The requirement should not apply to all relevant generating units until one of the MOD standards requires all Generator Owners to provide their minimum generating unit voltage limits to the TP and PC. If the wording of R3.3.2 must be different from its counterpart, R4.3.2, then please explain the reasons for any differences. R3.3.3 – As noted above, we suggest that R3.3.3 be removed and that this System Protection loadability simulation requirement is included in R3.3.1 because overload protection is simply one type of automatic Protection System actions. Add R3.3.5 – We suggest the addition of R3.3.5 because any requirement in the head notes or foot notes of Table 1 should occur within the body of standard. The text of R3.3.5 should read, “Applicable System Operating Limits for the planning horizon shall not be exceeded.” Presently, Note “a” and “b” under “Steady State Only” at the beginning of Table 1 are stated in the form of a Requirement (e.g. uses the verb, “shall”) and all Requirements should be explicitly stated under Requirements and not be introduced (and basically hidden) in the performance notes of Table 1. [After R3.3.5 is added, Note “a” should be revised and refer to R3.3.5.] Add R3.3.6 – We suggest the addition of R3.3.6 because any requirement in the head notes or foot motes of Table 1 should occur within the body of standard. The text of R3.3.6 should read, “The response of voltage sensitive Load including Load that is disconnected from the System by end-user equipment associated with an event shall not be used to steady state voltage requirements.” because Note “d” under “Steady State Only” at the beginning of Table 1 is stated in the form of a Requirement (e.g. uses the verb, “shall”) and all Requirements should be explicitly stated under Requirements and not be introduced (and basically hidden) in the performance notes of Table 1. [After R3.3.6 is added, Note “d” should be revised to refer to R3.3.6.] R3.5 - We interpret that R3.5 requires the TP and PC to conduct an

evaluation of possible actions to reduce the likelihood or impact of extreme events, which produce the more severe impacts, if cascading outages may occur. Does the drafting team intend for the TP and PC to fulfill this requirement for at least one event in each of the five categories (i.e. 3 steady state and 2 stability) or in each of the 21 categories/sub-categories (i.e. 14 steady state and 7 stability). Also, if the resulting cascading outages do not result in any overloads, under-voltages, voltage collapse, or loss of generator synchronization, then should the evaluation of possible actions to reduce likelihood or impact be required? R3.6 – We suggest the wording of this requirement be revised to, "Manual or automatic generation runback or tripping is permitted to meet steady state performance requirements for planning events P1 through P7 in Table 1." because Reliability Standard PRC-015-1 already includes requirements regarding the review and approval of Special Protection Systems. Therefore, the Planning Assessment does not need to duplicate description of the design and intent of the Special Protection System.

We propose the following changes and pose the following questions: R4.1.1 – We suggest that there should be some qualification of which generating units are referred to in this requirement. We propose that the requirement say, "No generating unit connected to the BES shall pull out of synchronism." For example, some utilities include smaller generation units that are connected at voltages below 100 kV and even down to distribution voltage in their base cases. R4.1.2 – We propose that the wording of this requirement be revised to reflect the same BES qualification of the generating unit that we noted in R4.1.1 above. 4.3.1 – This requirement refers to high speed reclosing and we presume that this is special high speed reclosing that is completed in several cycles, rather than the normal high speed reclosing that is completed in a number of seconds. We recommend that the term high speed reclosing be defined for this sub-requirement. R.4.3.2 – We suggest qualifying which generating units to consider and which voltage limits to simulate with revised wording like, "Trip generating units that are connected to the BES when actual or assumed minimum generator transient voltage limits are known and simulations show voltages may fall below the voltage limit. If assumed voltage limits are used, then they should be included in the assessment". The requirement should not apply to all relevant generating units until one of the MOD standards requires all Generator Owners to provide their minimum generating unit voltage limits to the TP and PC. If the wording of R4.3.2 must be different from its counterpart, R3.3.2, then please explain the reasons for any differences. R4.3.3 – Every dynamic event simulation involves power system transient swings. What are the size and scope of the transient swings and what is the scope of the system to be examined, to which this requirement is referring? Please reword this requirement to give the industry a better understanding of what is intended. Add R4.3.5 – We suggest the addition of R4.3.5, "Applicable System Operating Limits for the planning horizon shall not be exceeded." Note "a" and "b" under "Stability Only" at the beginning of Table 1 are stated in the form of a Requirement (e.g. uses the verb, "shall") and all Requirements should be explicitly stated under Requirements and not be introduced (and basically hidden) in the performance notes of Table 1. [After R4.3.5 is added, Note "a" should be revised and refer to R4.3.5.] Add R4.3.5 – We suggest the addition of R4.3.5, "Applicable System Operating Limits for the planning horizon shall not be exceeded." because Note "a" and "b" under "Steady State Only" at the beginning of Table 1 is stated in the form of a Requirement (e.g. note usage of the verb, "shall") and all Requirements should be clearly included in the body of the standard and not be introduced (and basically hidden) in the performance notes of Table 1. [After R3.3.5 is added, Note "a" should allude to R3.3.5.]

R5 – This requirement should not include the criteria item, "post-Contingency voltage deviation", because this criteria is not used widely enough in the industry to be a well established criteria.

Revise part of the requirement text to read, ". . . identify each entity's individual and joint responsibilities . . ." to provide better clarity. Perhaps this requirement should be listed at the beginning of the Requirements section, instead being mentioned near the end of this section.

No

We suggest the following changes: Add a Consequential Generation Loss definition, which would be a complement to the Consequential Load Loss definition. Both consequential load loss and consequential generation loss are referred to in note "b" of the Steady State & Stability section of Table 1, but only consequential load loss is defined. We suggest text of: "Consequential Generation Loss: All Generation that is no longer delivered to any Transmission Facilities as a result of the Transmission Facilities removal from service by the operation of the installed Protection Systems designed to isolate fault conditions or otherwise protect the Transmission Facilities from abnormal operating conditions." Revise the Consequential Load Loss definition to include protection for abnormal operating conditions. We suggest text of: "Consequential Load Loss: All Load that is no longer served by any Transmission Facilities as a result of the Transmission Facilities removal from service by the operation of the installed Protection Systems designed to isolate fault conditions or otherwise protect the Transmission Facilities from abnormal operating conditions." Revise the Planning Assessment definition to more explicitly apply to the BES and the TPL-001 requirements. We suggest text of: "Planning Assessment: Documented evaluation of future Transmission System performance and Corrective Action Plans to remedy identified deficiencies in the BES from the steady state and stability performance requirements set forth in the TPL-001 standard." Add a Planning Horizon definition. This term is used in this proposed standard, in the FAC-010-2 standard, and possibly in other future standards, but it has not been defined yet.

No

We suggest the following changes: Note “e” in the Planning Events, Steady State & Stability section - After bulletin item #7 is added to R2.7.1 as proposed above, refer to this bulletin item with wording like, “. . . applicable to the Facility Ratings (as noted in R2.7.1).”. Note “a” and Note “b” in the Planning Events, Steady State Only section – Both of these notes are stated in the form of a Requirement (e.g. use the verb “shall”), but all requirements should be included in the Requirements section and not introduced (hidden) in the performance notes of Table 1. After R3.3.5 is added as proposed above, replace Note “a” and “b” with wording from R3.3.5, “Applicable System Operating Limits for the planning horizon shall not be exceeded, as stated in R3.3.5.”. Note “a” and “b” can be combined and replaced with a single Note because the observance of System Operating Limits related to steady state conditions covers both items. Note “d” in the Planning Events, Steady State Only section – This note is stated in the form of a Requirement (e.g. use the verb “shall”), but all requirements should be included in the Requirements section and not introduced in the performance notes of Table 1. After R3.3.6 is added as proposed above, replace Note “d” with wording from R3.3.6, “The response of voltage sensitive Load including Load that is disconnected from the System by end-user equipment associated with an event shall not be used to steady state voltage requirements, as stated in R3.3.6.” Note “a” and Note “b” in the Planning Events, Stability Only section – Both of these notes are stated in the form of a Requirement (e.g. use the verb “shall”), but all requirements should be included in the Requirements section and not introduced in the performance notes of Table 1. After R4.3.5 is added as proposed above, replace Note “a” and “b” with wording from R4.3.5, “Applicable System Operating Limits for the planning horizon shall not be exceeded, as stated in R4.3.5.”. Note “a” and “b” can be combined and replaced with a single Note because the observance of System Operating Limits related to stability covers both items. P3 – Modify the P3 Category performance criteria to apply only to the loss of two generators because the probability of the loss of two base load generators is an order of magnitude greater than the loss of a generator and any other transmission element. We suggest the listing of: the loss of transmission circuit, transformer, shunt device, and single pole of DC line be removed from the P3 Events column. Move the “generator + another element” events to the P6 Category by adding “1. Generator” to the listing in the Initial System Condition (Loss of . . .) column. Item 2.a in the Extreme Events, Steady State section – Clarify the meaning of the loss of multiple circuits in Item 2.a by using wording similar to P7. We suggest this text: “a. Loss of three or more circuits that share a common tower.” Item 3.b of the Extreme Events, Steady State section – Clarify the reference to actual, historical operating experience in Item 3.b. We suggest this text: “b. Other events based upon actual operating experience that may result in wide area disturbances.” Item 2.i of the Extreme Events, Stability State section – Clarify the reference to actual, historical operating experience in Item 2.i. We suggest this text that is similar to Steady State, Item 3.b: “i. Other events based upon actual operating experience that may result in wide area disturbances.” Extreme Event sections are not updated to reflect the new footnote numbering (for instance Item 2a and Item 2b of the Steady State column). Footnote 6 – Further clarify the applicable shunt devices in Footnote 6 with this suggested text: “6. Requirements which are applicable to shunt devices, also apply to FACTS devices that are connected to ground, but not instrument voltage transformers or surge arresters.”

No

We offer the following comments. This standard does not contain any requirements regarding the implementation of the Corrective Action Plans. So, the wording in this section of “Any entity that cannot fully implement . . . “, should be replaced with wording like, “If the Corrective Action Plans to eliminate the need . . . can not be implemented within 60 calendar months . . . then the TP and PA should work with the applicable TO(s) and Re(s) to develop mitigation plans for revised Corrective Action Plans until the implementation issue is resolved”. The proposed standard implies that the 24 month time period (for R2-R7) and 60 month time period (for specific allowances for selected event categories) run in parallel rather than sequentially. As currently proposed, the effective date for performing analyses and developing subsequent Corrective Action Plans is 24 months. If the identification of new needs and action plans take 24 months, then only 36 months would be left to implement the new corrective action plans. It may not be feasible to install some BES facilities, especially above 300 kV, in less than 3 years. Some EHV projects can take 5 to 10 years to implement depending on the size, complexity, and controversial nature of the project. We suggest that the effective date be stated in more “implementation dependent” terms for this ‘one time’ transient period, rather than specific and possibly inappropriate “fixed timeframe” terms. Consider wording such as “tripping of Non-Consequential Load or curtailment of Firm Transmission Service (in accordance with Requirement R2, part 2.7.5) is allowed until Corrective Action Plans that are based on TPL-001-1 analyses can be implemented”. The ‘implementation dependent’ approach may allow the removal of all or part of the text on implementation exceptions and mitigation procedures that do not appear to be suitable in an Effective Date section.

Yes

Yes, if the proposed changes and questions are adequately addressed.

Individual

R. Peter Mackin

Utility System Efficiencies, Inc. (USE)

For R1.1.5 I suggest changing the wording from “Known commitments for Firm Transmission Service and Interchange” to “Known commitments for Firm Transmission Service or Interchange”. It is difficult

to distinguish between the two in future cases where not all contractual arrangements are known.

The wording in R2.1 is unclear as to whether new annual studies are required each year or whether qualified past studies are acceptable if no changes have been made. R2 reads “This Planning Assessment shall use current or past studies…”, while R2.1 implies current studies must be used but can be supplemented by past studies. I suggest changing the wording from “The Near-Term Transmission Planning Horizon portion of the steady state analysis shall be assessed annually and be supported by the following annual current studies, supplemented with qualified past studies…” to “The Near-Term Transmission Planning Horizon portion of the steady state analysis shall be assessed annually and be supported by the following annual current studies, or qualified past studies…” It is unclear if the drafting team intended the sensitivity studies identified by the bullets in R2.1.4 to align with the sensitivity studies identified by the bullets in R2.4.3. Both are for Near-Term studies but for steady state and stability respectively. If the intent is that they align, the wording should be modified to be the same.

For clarity I suggest that the wording in R3.3.3 be changed to “Ensure the power flows in the simulations are no higher than actual relay loadability limits.

It is unclear from the wording in R4.3 whether the Contingency analyses need to be performed for all planning events or the more severe events referenced in R4.1 and R4.2. Please clarify the wording of R4.3. R4.3.1 appears to require an assessment of both successful unsuccessful high-speed reclosing. Successful reclosing is a much less severe event, so it seems unnecessary to assess both. If the intent is to make entities assess both we suggest including the assessment in the list of sensitivities.

Clarity is needed in the phrase functional entity in R8. Is this referring to the entities identified in the Functional Model or something else?

No

The definition of Non-Consequential Load is in need of clarification. As written, it could be interpreted that load that is disconnected from the System by end-user equipment would not be allowed for certain contingencies. Suggested revision to the language follows Non-Interruptible Load loss other than: • Consequential Load Loss • the response of voltage sensitive Load • Load that is disconnected from the System by end-user equipment. This version uses the same wording but clarifies that the term “other than” applies to all three things.

No

As currently drafted, several outages identified in Categories P2, P4, and P5 appear to potentially result in the same elements being removed from service. Simulations of these outages would then be the same, even though the initiating event is different. I believe that the drafting team needs to conduct a workshop prior to balloting to educate the industry on what outages are required to be simulated for which Categories. Additionally there are footnotes numbered 12, 19, and 101, which do not relate to any footnote in the document, and some other footnotes seem to be misplaced. I would encourage drafting team to carefully review all footnotes to ensure accuracy prior to balloting this standard.

Yes

No

Based on the unclear or ambiguous language identified in the comments above as well as the confusion noted in the Table 1 regarding outages and footnotes, I believe additional modifications are necessary prior to taking this standard to ballot.

Individual

Mark Graham, on behalf of the Power System Planning Department

Tri-State Generation and Transmission Association

R1 - The changes to R1 seem good.

•R2.2 What is an “annual current study”? Would this include previously performed studies that are still applicable? •R2.2. What is “qualified past studies”? We have no definitions for “qualifying” previous work. This might be remedied by inserting the term “qualified” in R2.6. •R2.1.4. Sensitivity cases could add much work to the existing process. However, the standard calls for “at least one” of the listed sensitivity studies to be performed. •R2.2.1. The requirement to perform a “current study” assessing expected System peak Load conditions, for one of the years in the Long-Term Transmission Planning Horizon, is extra work if a valid/qualified study is available. If the intention here is to have a valid study for at least one of the years 6 to 10, then perhaps some simple rewording will solve the problem. We ascribe to the concept of requiring annual assessments, but not necessarily requiring repeated analysis if system changes do not warrant restudy. •Hyphenate “in-service” •R2.6.1 Change “the study shall be five calendar years old or less” to: “the study is five calendar years old or less” •R2.6.2 change the phrase “shall not include any material changes” to “does not include any material changes •R2.6.2 it is not clear what is meant by “material changes” - different “Study conditions” or “changes that could cause different results for a particular study”?

•Thank you for removing the requirement to explain why “non-studied contingencies” would produce less severe results. •Don’t say “R3, part 3.4”. Instead, for much easier referencing of sections, just say

"R3.4". This applies throughout the entire Standard. •R3.5 In the phrase "extreme events in Table 1 that are expected to produce more severe System impacts", the term "extreme events" seems redundant with "more severe". If Extreme Events were capitalized, it would be apparent that the TP should choose more severe events typified by details listed in the Extreme Events section of Table 1.
•The standard needs to use the term "Dynamic Stability", not just "Stability", to differentiate between dynamic and voltage stability considerations. •R4.1 contains the phrase "based on the Contingency list created in Requirement R4.4". The contingency list is referred to in R4.4 (and R3.4), but is not created there. •In R4.3.1 the requirement for additional evaluation of "successful or unsuccessful high speed reclosing" is an additional performance requirement. Whether this refers to the possibility of reclosing mechanism failure, or the effectiveness of reclosing operations (there is some ambiguity here). •The reference to high speed reclosing in R4.3.1 is a good addition. For ease in auditing, it should be listed as a separate requirement (or sub-requirement).
R5 - no comment
R6 seems OK – but check M6. Should this refer to R2 and not R6?
•R7 - Duties of the Planning Coordinator are being created and changed as we go along, like changing rules of a flag football game as it is played. Is there any requirement that every TP have a PC? As far as we know, the PC was introduced as an additional authority level for regional or inter-utility study work. Previous R7 wording asked PCs and TPs to work together. The present wording implies that every TP must have a PC which is a separate entity, and that PC would dictate study responsibilities. The wording of R4.4.1 seems much better in this regard.
R8 - We find that web-site posting would be sufficient distribution if it were not for the need for auditability. Please consider a way to qualify web-posting as an acceptable distribution method.
No
•The SDT removed definitions of Extreme Events and Load Reduction. We still need to have some scale to differentiate N-1 from less likely but possibly higher impact events. However, we do understand that such a criteria will take some time to develop, and should perhaps be a separate subject addressed by a new SAR. •Year One has a flexible definition. It does not seem very intuitive. We can't say whether this is good or bad, although one entity's year one could overlap with another's year two.
No
•Extreme Events detailed at the end of Table 1 should be itemized in the same way as for so-called "Planning Events" at the beginning of Table 1. Steady State Extreme Event 1 would be EP1, Dynamic Stability Extreme Event 1 would be ED1, etc. Also, please use the term Dynamic Stability, not just Stability, as explained above. •It would be helpful if descriptions had unique identifiers, for example Dynamic Extreme Event 1 could be called N-1-1. •For Dynamic Extreme Event 1, the phrase "With an initial condition" conflicts with the phrase "prior to System adjustments" at the end of the sentence. The term "initial condition" suggests a maintenance outage, or at least an outage that has sustained long enough for the system to have responded/adjusted. Footnote text does not line-up with the body text in the Extreme Event Table. •It seems to us that a bus-tie breaker would have the same chance of failure as another breaker. Therefore differentiation is not needed in Table 1.
No
Yes and No. We see some potential problems. 12 months after BOT adoption, R1 – maintain system models - becomes effective. Why delay? Also 12 months after adoption, R8 – distribute planning assessment results - becomes effective. As an assessment cannot be distributed before it is completed, this must be coordinated with R2. 24 months after BOT adoption R2 – Annual Planning Assessment - timing must coordinate with R8 above.
No
•The SDT needs to look at the Measures section more closely. •Please consider: In what jurisdiction could it be developed, and would it be possible to develop estimates of costs to meet the new requirements contained in this draft TPL by Reliability Area, then have utilities examine whether there will be a corresponding increase in Bulk Transmission System reliability? •The primary directive of NERC Reliability Standards is to improve system reliability and thus minimize potential cascading of the Bulk Electric System. This developing TPL Standard will provide some needed clarification and perhaps better uniformity of Planning Study work. Any Standard that would move us toward the primary goal should be attended to meticulously. The SDT must endeavor to ensure this standard moves us in that direction and does not simply give us more structure. That said, please use this guiding test as we put final touches on this standard: Will each Requirement decrease the potential of cascading outages and increase service reliability?
Individual
David Bradt
United Illuminating
R1.1.1 Make this read "Existing Facilities and Resources" so that it will be a lead in to the changes proposed for 1.1.6. R1.1.2 This type of event is sufficiently addressed within the existing testing requirements (P6) and therefore should be eliminated , beyond that such outages are reviewed and approved on an operational basis and should not be included in a planning standard. During known outages for equipment upgrades or repairs there may be some increased exposure to load loss, which

should be recognized as an acceptable exposure. In the event that this requirement is maintained please change six months to one year. 1.1.6.. Resources may not be exclusively sources supplying load. Therefore the reference should not involve load. The focus should be on changes to resources and "resources required to supply load" should be replaced with "New planned Resources and changes to existing Resources" We suggest NERC develops a definition for "resource" or use the following definition found in NPCC Glossary of Terms, Document A-7: Resource — Resource refers to the total contributions provided by supply-side and demand-side facilities and/or actions. Supply-side facilities include utility and non-utility generation and purchases from neighboring systems. Demand-side facilities include measures for reducing load, such as conservation, demand management, and interruptible load. ADD 1.2 – The standard is referring to requirements for sensitivity and other issues without a reference to base assumptions. The standard must describe base assumptions.
2.1.3: In the event that R1.1.2 is kept it must be clear that the reference to outage schedules as listed in part 1.1.2 must be limited to the Planning Horizon. Table 1 - There is confusion in interpretation of the table 1 — When the voltages class of the contingency element and the monitored element are different (one is HV and the other is EHV), to which voltage class is the allowance for shedding of non-consequential load applied. For example if the fault is on the 138-kV side of a 345/138-kV autotransformer, are you allowed to shed load to keep the 345-kV from overloading? Conversely, if the fault is on the 345-kV side of a 345/138-kV autotransformer, are you allowed to shed load to keep the 138-kV from overloading? 2.1 – Language should be revised similar to R2.4 as follows: "The Near-Term Transmission Planning Horizon portion of the steady state analysis shall be assessed annually and be supported by current or past studies as indicated in Requirement R2, part 2.6. The following studies are required:" 2.1.2 –Should be moved to the list of sensitivities currently in 2.1.4. (Off-peak needs to be more specifically defined). 2.1.4 Consistent with the suggestion made for section 1.1.2 please remove the last bulleted item in the list under section 2.1.4. "Duration or timing of planned Transmission outages." To define a sensitivity, NERC must define base assumptions. Refer to Comment on Proposal to add an item 1.2 2.2 – The language in 2.2 should be revised to be similar to 2.4 as follows: "The Long-Term Transmission Planning Horizon portion of the steady state analysis shall be assessed annually and be supported by current or past studies as indicated in Requirement R2, part 2.6. The following studies are required:" 2.3 This should be modified to state that it is up to the Planner to determine the year of study within the Near Term Transmission Planning Horizon. 2.4.2 This should be deleted as it is covered under section 2.4.3. 2.4.3 To define a sensitivity, NERC must define base assumptions. Requirement 2.7 – We suggest changing the word "run" to "condition" such that it reads "Corrective Action Plan(s) do not need to be developed solely to meet the performance requirements for a single sensitivity condition in accordance with Requirements R2, parts 2.1.4 and 2.4.3." 2.9: The requirement to report the largest single consequential load loss under Requirement 2.9 should not be included in the standard. The TPL does not limit the size of the consequential load loss. If it remains, it must be made clear that it be applicable only to Year One or Year Two.
3.2 Item 3.2 should be deleted. The requirements for sensitivity analysis already address issues going beyond what is expected to meet reliability requirements. Requiring extreme event analysis is requiring two layers of event analysis beyond what is required and there is no requirement for corrective action if anything is identified. Therefore Extreme Event analysis no longer provides any value in this standard. 3.3.2 This requirement is not practical unless a MOD is created so that known minimum generator steady state or ride through voltage limitations are used instead of assumed values. To create a MOD, collect the data, and incorporate the information into the studies will take time, which necessitates the need for an implementation period. Absent accepting this suggestion with respect to creating an MOD, please provide assumed minimum generator steady state or ride through voltage limitations as a standard reference for this analysis. 3.3.3 There appears to be a compliance double-jeopardy issue related to relay loadability. Relay loadability is handled in greater detail (as it should be) under the proposed PRC-023 standard, so any reference here should be deleted. 3.4 – It is suggested that this requirement is made a sub-bullet of Requirement 3.1 to keep the related requirements together. 3.5 and 4.5 – Both of these requirements need clarification as to what is specifically required for the "evaluation of possible actions." 3.5 – It is suggested that this be made a sub-bullet of Requirement 3.2 to keep the related requirements together. 3.6 Item 3.6 should be deleted since there is no limit defined in the standard.
4.1.1 This should be revised to only be applicable to generators interconnected to the BES. This may need an implementation period as not all existing units are interconnected in accordance with the standard as proposed. As written this applies to small generators and doesn't necessarily reflect reliability of the network. 20 MW is a recommended generator minimum size. 4.1.2 This will require implementation period. 4.2 Item 4.2 should be deleted. The requirements for sensitivity analysis already address issues going beyond what is expected to meet reliability requirements. Requiring extreme event analysis is requiring two layers of event analysis beyond what is required and there is no requirement for corrective action if anything is identified. Therefore Extreme Event analysis no longer provides any value in this standard. 4.4 – It is suggested that this requirement is made a sub-bullet of Requirement 4.1 to keep the related requirements together. 4.5 – It is suggested that this requirement is made a sub-bullet of Requirement 4.2 to keep the related requirements together.
Voltage criteria is addressed by the VAR standards. Including a voltage requirement in the planning standards appears to be creating a double-jeopardy exposure. R5. Change to Read "Each Transmission Planner OR Planning Coordinator … Need time to implement transient voltage criteria.

R8, 8.1, and Measurement M8 – This standard should not be used to remedy deficiencies in meeting the coordination requirements of FERC Order 890. Therefore these should be deleted. If this requirement is retained the following is suggested: “Each Planning Coordinator and Transmission Planner shall distribute its Planning Assessment results to their adjacent Planning Coordinators and Transmission Planners, respectively, and to the functional entities that the Planning Coordinator and Transmission Planner recognizes as having a reliability need for the Planning Assessment results.” Additionally, there is no statute of limitation for comments. There is also potential conflict with the deadline for completing a study and when comments may be submitted (e.g. comments are received the day before the study is to be completed.) These issues must be addressed. Measures M1: It is not practical to retain system model information in a hard copy form. This provision could be dropped. Compliance: D 1.1.4 Data Retention: The Transmission Planner and the Planning Coordinator may not be using the same software. If both are required to store the data, do they both have to have the software to use the data? Can this be changed to an ‘or’ such that one of them must retain the data and it can be up to them as to who it is. Also, the last bullet is unnecessary and should be deleted from the standard.

No

As currently defined "Non-Consequential Load Loss" could allow widespread or cascading motor stall. The language in the definition cannot be this generic. The text is broad enough that it could allow a voltage collapse, the definition is incompatible with Table 1a (BES Transmission voltage instability, cascading outages, and uncontrolled islanding shall not occur). The definition for the non-consequential load loss combined with Table 1 would prohibit any customer from tripping its own load for contingencies that indicate 'no' in the non-consequential load loss column. This is not practical and appears to be an unintended consequence of the change in definition. This requires a change in the definition or the table. We suggest clearly defining exactly what Non-Consequential Load Loss is as “intended post contingency loss of load caused by operator or SPS (RAS) action.”

No

We generally agree with the table however our issues are as follows: Footnotes on P3 and P4 (101 & 19) should be 9 and 10, respectively. This merely appears to be a typo in the latest draft. Other footnotes appear to be mislabeled as well. If Extreme Events are not deleted from the standard, then a different number for the table for Extreme Events should be used. There is confusion in interpretation of the Table 1 — When the voltages class of the contingency element and the monitored element are different (one is HV and the other is EHV), to which voltage class is the allowance for shedding of non-consequential load applied. For example if the fault is on the 138-kV side of a 345/138-kV autotransformer, are you allowed to shed load to keep the 345-kV from overloading? Conversely, if the fault is on the 345-kV side of a 345/138-kV autotransformer, are you allowed to shed load to keep the 138-kV from overloading? P5 –The use of the term “Protection System” in P5 is unacceptably inconsistent with the NERC definition of Protection System because it does not exclude the battery and its associated series elements. Extreme Events 2a – need to define tower line. Add language to replace “tower line” with “structure”. Table 1, footnote #3, change Regional Entity to Regional Reliability Organization.

Yes

No

Group

NERC Standards Review Subcommittee

R1 – The MRO NSRS interprets that “within their respective areas” refers to the geographic footprint of the TP or PC transmission system. The MRO NSRS proposes clarifying that “within their respective area” does not require the inclusion of remote generation or load (metering) buses that are within the declared Balancing Authority area, but may be outside and separate from the TP or PC geographic footprint. M1 – The MRO NSRS recommends that words be added to M1 to indicate that each responsible entity must provide evidence that “it is maintaining System models within its respective area, using the latest…”

Add R2.7.1 Item #7 – The MRO NSRS proposes the addition of the following bullet item to R2.7.1, “Planned System adjustments such as Transmission configuration changes and redispatch of generation are allowed if such adjustments are executable within the time duration of the Facility Ratings.” because this explains what is allowed to be considered for Corrective Action Plan developments. [After bullet item #7 is added, Note “e” under “Steady State & Stability section of Table 1 should refer to R2.7.1.] R2.9 – The MRO NSRS still proposes that this requirement be removed because annually stating the single, largest expected, Consequential Load Loss due to a P1 or P2 event in the TP or PC system is not needed to provide reliable BES performance or assure open and transparent Transmission planning peer review. In general, standards should not contain requirements that don’t improve reliability. R2.4.1 – The MRO NSRS recommends that the SDT clarify section 2.4.1 and when load models considering induction motors are required. The clarification should add limits or thresholds to provide load models based on areas that have stability limits or issues and to loads of substation size and having dynamic

characteristic capable of significantly impacting voltage stability. Areas that don't have large motors or stability issues should not be required to add unnecessary load modeling.

R3.3.1 – Revise the wording to add, ". . . including the simulation of transmission circuit loadability protection." The Protection System actions should be included in this requirement regarding proper Protection System simulation, rather than as a separate requirement in R3.3.3. Otherwise there would be in double jeopardy of violating R3.3.1. and R3.3.3 when circuit loadability protection is not properly simulated. R3.3.2 – The MRO NSRS suggests that this requirement be removed because it is premature to requirement Transmission Planners to simulate under voltage tripping until the MOD standards require it. If the drafting team does not remove this requirement the MRO NSRS proposes revised wording to qualify which generating units to consider and which voltage limits to simulate, "Trip generating units that are connected to the BES when actual or assumed minimum generator steady state or ride through voltage limits are known and simulations show voltages may fall below the voltage limit. If assumed voltage limits are used, then they should be included in the assessment". The requirement should not apply to all relevant generating units until one of the MOD standards requires all Generator Owners to provide their minimum generating unit voltage limits to the TP and PC. If the wording of R3.3.2 must be different from its counterpart, R4.3.2, then please explain the reasons for any differences. R3.3.3 – As noted above, The MRO NSRS suggests that R3.3.3 be removed and this System Protection simulation requirement should be included in R3.3.1, which is the requirement to properly simulate Protection System actions. Add R3.3.5 – The MRO NSRS suggests the addition of R3.3.5, "Applicable System Operating Limits for the planning horizon shall not be exceeded." because Note "a" and "b" under "Steady State Only" at the beginning of Table 1 are stated in the form of a Requirement (e.g. uses the verb, "shall") and all Requirements should be explicitly stated under Requirements and not be introduced (and hidden) in the performance notes of Table 1. [After R3.3.5 is added, Note "a" should be revised and refer to R3.3.5.] Add R3.3.6 – The MRO NSRS suggests the addition of R3.3.6, "The response of voltage sensitive Load including Load that is disconnected from the System by end-user equipment associated with an event shall not be used to steady state voltage requirements." because Note "d" under "Steady State Only" at the beginning of Table 1 is stated in the form of a Requirement (e.g. uses the verb, "shall") and all Requirements should be explicitly stated under Requirements and not be introduced (and hidden) in the performance notes of Table 1. [After R3.3.6 is added, Note "d" should be revised to refer to R3.3.6.] R3.4.1 – The MRO NSRS suggests that the word "coordinate" and the reference to the Transmission Planner be removed and offer the following revised text, "the Planning Coordinator shall provide the list of contingencies that are simulated in the adjacent Planning Coordinator area to the respective Planning Coordinator for review and feedback.". Standard Drafting Teams are generally instructed not to use the word "coordinate". The MRO NSRS suggests that this requirement apply to the PC because the PC would share with any affected Transmission Planners. R3.6 – The MRO NSRS suggests the wording of this requirement be revised to, "Manual or automatic generation runback or tripping is permitted to meet steady state performance requirements for planning events P1 through P7 in Table 1." because Reliability Standard PRC-015-1 already includes requirements regarding the review and approval of Special Protection Systems. Therefore, the Planning Assessment does not need to duplicate description of the design and intent of the Special Protection System. M3 & R3 Data Retention - The MRO NSRS proposes that the wording in these elements be revised to change "All" to "The". The word "All" is unnecessary and could encourage over-the-top compliance monitoring and enforcement. The revised data retention would read as follows: "The studies performed in support…."

R4.1.1 & R4.1.2 – The MRO NSRS proposes that these sub-requirements be removed. The generating unit loss of synchronism does not necessary result in a thermal, voltage, or stability violations. R4.1.1 - Wording from R4.1.1 about no generating unit pulling out of synchronism should be deleted. The simple loss of synchronism of a unit or even multiple units does not necessarily result in thermal, voltage, or stability. All standards and requirements should demonstrate a reliability related basis. There is no direct reliability or security requirement that prevents a unit from loosing synchronism. The loss of a unit from synchronism is no different than the regular loss of the unit for mechanical reasons, therefore this requirement unnecessarily results in FERC directing utilities to build infrastructure beyond what is needed for system security. R4.1.3 – The MRO NSRS proposes that this sub-requirement be removed because there are no NERC power system damping standards. R.4.3.2 – The MRO NSRS suggests that this requirement be removed because it is premature to requirement Transmission Planners to simulate under voltage tripping until the MOD standards require it. If the drafting team does not remove this requirement the MRO NSRS proposes wording like, "Trip generating units that are connected to the BES when actual or assumed minimum generator transient voltage limits are known and simulations show voltages may fall below the voltage limit. If assumed voltage limits are used, then they should be included in the assessment". The requirement should not apply to all relevant generating units until one of the MOD standards requires all Generator Owners to provide their minimum generating unit voltage limits to the Transmission Planner and Planning Coordinator. If the wording of R4.3.2 must be different from its counterpart, R3.3.2, then please explain the reasons for any differences. R4.3.3 – Every dynamic event simulation involves power system transient swings. What are the size and scope of the transient swings and what is the scope of the system to be examined, to which this requirement is referring? Please reword this requirement to give the industry a better understanding of what is intended. As written R4.3.3, it might be interpreted to require responsible entities to add the modeling of all relaying instead of just pertinent. Perhaps, R4.3.3 should be limited to transient swings on facilities 345 kV and above so as to limit this part of requirement 4 to those situations that are most

likely to result in cascading. If the SDT determines not to add such a limitation, the MRO NSRS proposes that the implementation time for R4 to be increased. The MRO NSRS believes that many responsible entities would need 3 years to add these relaying models to system stability models so that the fourth year additional transmission planning analysis in this respect is conducted. The MRO NSRS urges that the SDT increase the implementation time for R4 from 2 years to 4 years. When it may actually respond or triggered. R 4.3.1 – This requirement refers to high speed reclosing and the MRO NSRS presumes that this is special high speed reclosing that is completed in several cycles, rather than the normal high speed reclosing that is completed in a number of seconds. The MRO NSRS recommends that the term high speed reclosing be defined for this sub-requirement with an angular stability component. R4.5 - The MRO NSRS believes that the extreme events that should be studied are the more credible ones. The credible events are those that the planner considers credible when considering both how severe the event is and how likely it is. For example, while a tornado might be the most severe event, its likelihood of hitting key facilities is quite low. It is more likely to have a severe thunderstorm that hits key facilities but causes less impact on the system. The planner should plan for the severe thunderstorm but perhaps should not plan for the tornado. The MRO NSRS recommends that 4.5 be revised to indicate that a list of those events that "produce more severe System impacts and are more likely" (the bolded words are suggested words to be added) be studied as being more credible events. Then the purpose of the last sentence in 4.5 is clearer in that possible actions that reduce the likelihood or mitigate the consequences of the events shall be reviewed for those contingencies where likelihood in combination with consequences justify such evaluation.

A. The MRO NSRS recommends the data retention for R5 and M5 be revised to change "All" to "The". The word "All" is unnecessary and could encourage over-the-top compliance monitoring and enforcement. The revised data retention would read as follows: "The documentation specifying the criteria since…." B. This requirement should not include the criterion, "post-Contingency voltage deviation", because this criterion is not used widely enough in the industry to be a well established criterion.

The MRO NSRS recommends the data retention for R6 and M6 be revised to change "All" to "The". The word "All" is unnecessary and could encourage over-the-top compliance monitoring and enforcement. The revised data retention would read as follows: "The studies performed in support…."

The MRO NSRS recommends the data retention for R7 and M7 be revised to delete "All". The word "All" is unnecessary and could encourage over-the-top compliance monitoring and enforcement. The revised data retention would read as follows: "The current, in force agreement on identified responsibilities, as well as such agreements in force…."

The MRO NSRS asks that the SDT revise R8 to limit the need to provide the Planning Assessment as follows "adjacent Planning Coordinators and adjacent Transmission Planners and to any registered functional entity…" This MRO NSRS suggestion is added to the requirement to clarify that the word adjacent also applies to Transmission Planners and to clarify that the functional entity must be registered in order for the entity to be applicable to the requirement.

No

A. Add a Consequential Generation Loss definition, which would be a complement to the Consequential Load Loss definition. Both consequential load loss and consequential generation loss are referred to in note "b" of the Steady State & Stability section of Table 1, but only consequential load loss is defined. The MRO NSRS suggests text of: "Consequential Generation Loss: All Generation that is no longer delivered to any Transmission Facilities as a result of the Transmission Facilities removal from service by the operation of the installed Protection Systems designed to isolate fault conditions or otherwise protect the Transmission Facilities from abnormal operating conditions." B. The MRO NSRS offers the following comment to one of the proposed definitions of TPL-001. Non-Consequential Load Loss: Non-Interruptible Load loss other than Consequential Load Loss that is the result of the response of voltage sensitive Load including Load that is disconnected from the System by end-user equipment. C. Add a Planning Horizon definition. This term is used in this proposed standard, in the FAC-010-2 standard, and possibly in other future standards, but it has not been defined yet. D. The SDT is to be commended for working on the Year one definition, however, concerns exist that if the standard is adopted as written, it is incompatible with the eastern interconnection wide ERAG model process. E. If the SDT intends to change the planning processes and model building processes throughout NERC in this regard, then the SDT should explain the benefits of changing this process and verify that it does not sabotage the normal model building and study process.

No

A. P3 – Modify the P3 Category performance criteria to apply only to the loss of two generators because the probability of the loss of two base load generators is an order of magnitude greater than the loss of a generator and any other transmission element. The MRO NSRS suggests the listing of: the loss of transmission circuit, transformer, shunt device, and single pole of DC line be removed from the P3 Events column. Move the "generator + another element" events to the P6 Category by adding "1. Generator" to the listing in the Initial System Condition (Loss of . . .) column. B. The SDT should be commended for the changes that were made to Table 1. However, the MRO NSRS does recommend a few editorial changes. On page 16 under the Steady State and Stability heading is item d. Simulate Normal Clearing unless otherwise specified. This is also listed as footnote 2 to the table. The MRO NSRS recommends that item d under the Steady State and Stability heading be deleted. C. Why is there a

footnote 1 indicator to note j. under Stability only? The MRO NSRS suggests that this footnote 1 indicator be deleted. D. Item i. under Steady State only states that "the response of voltage sensitive Load that is disconnected from the System by end-user equipment" is not to be used to meet steady state requirements. However, the non-consequential load loss says yes meaning it is allowed for some events in the table and non-consequential load loss definition includes the "response of voltage sensitive Load that is disconnected from the System by end-user equipment." This seems to be a direct contradiction. The MRO NSRS suggests that Item i. under steady state only be deleted. E. The MRO NSRS does not understand why there is a footnote 19 indicator for P3 and P5 – EHV in the table when no footnote 19 exists. Perhaps the SDT meant footnotes 1 and 9 but The MRO NSRS recommends that this be corrected. F. The MRO NSRS does not understand why there is a footnote 12 indicator for Item 2 a and 2 b. on page 19. Perhaps the SDT meant footnotes 1 and 2 apply but The MRO NSRS recommends that this be corrected.

No

A. In the implementation plan, the provision which indicates if an entity doesn't construct in time that entity has to report itself as noncompliant. This is a violation of the energy policy act. Since FERC can't force an entity to built, this provision should be deleted. B. This standard does not contain any requirements regarding the implementation of the Corrective Action Plans. So, the wording in this section of "Any entity that cannot fully implement . . . ", should be replaced with wording like, "If the Corrective Action Plans to eliminate the need . . . can not be implemented within 60 calendar months . . . then the Transmission Planner and Planning Authority should work with the applicable Transmission Owner (s) and Regional entity(s) to develop mitigation plans for revised Corrective Action Plans until the implementation issue is resolved". C. The proposed standard implies that the 24 month time period (for R2-R7) and 60 month time period (for specific allowances for selected event categories) run in parallel rather than sequentially. As currently proposed, the effective date for performing analyses and developing subsequent Corrective Action Plans is 24 months. If the identification of new needs and action plans take 24 months, then only 36 months would be left to implement the new corrective action plans. It may not be feasible to install some BES facilities, especially above 300 kV, in less than 3 years. Some EHV projects can take 5 to 10 years to implement depending on the size, complexity, and controversial nature of the project. D. The MRO NSRS suggests that the effective date be stated in more "implementation dependent" terms for this 'one time' transient period, rather than specific and possibly inappropriate "fixed timeframe" terms. Consider wording such as "tripping of Non-Consequential Load or curtailment of Firm Transmission Service (in accordance with Requirement R2, part 2.7.5) is allowed until Corrective Action Plans that are based on TPL-001-1 analyses can be implemented".

No

More discussion is needed pertaining to this standard.

Individual

John Mayhan

Omaha Public Power District

In the first sentence of the requirement text, change "voltage limits" to "voltage".

No

The definition of Non-Consequential Load Loss is not clear. It's not clear whether "the response of voltage sensitive Load including Load that is disconnected from the System by end-user equipment" is considered to be Non-Consequential Load Loss or not. Based on previous drafts, it appears that the SDT's intent is that "the response of voltage sensitive Load including Load that is disconnected from the System by end-user equipment" is considered to be a special type of Consequential Load Loss--a type that transmission-planning entities are not allowed to rely upon to meet steady-state performance requirements. Comments on this fourth draft from one commenter seemed to indicate that he was interpreting the definition of Non-Consequential Load Loss to mean that "the response of voltage sensitive Load including Load that is disconnected from the System by end-user equipment" is considered to be Non-Consequential Load Loss. Consider breaking the definition of Non-Consequential Load Loss into two or more sentences to prevent misinterpretation and confusion. Also consider including a reference to "the response of voltage sensitive Load including Load that is disconnected from the System by end-user equipment" in the definition of Consequential Load Loss if this type of load loss is considered to be a special type of Consequential Load Loss. If this type of load loss is considered to be a special type of Consequential Load Loss, add the following sentence to the end of Note "b" at the top of Table 1: 'However, see Note "i" for a restriction that applies to steady state performance.'

No

If "the response of voltage sensitive Load including Load that is disconnected from the System by end-

user equipment" is considered to be a special type of Consequential Load Loss, add the following sentence to the end of Note "b": 'However, see Note "i" for a restriction that applies to steady state performance.' In Note "g", change "voltage limits" to "voltages". In Note "j", it appears that the reference to Footnote 1 is not needed. For Category P3, should the reference to Footnote 19 in the second column be a reference to Footnote 9? For Categories P3, P4, and P5, in the column labeled "Interruption of Firm Transmission Service Allowed", are the references to Footnotes 19 and 10 needed? For Category P4, should the reference to Footnote 101 in the first column be a reference to Footnote 10? For Category P4, should the reference to Footnote 11 in the third column be a reference to Footnote 10? In Items 2a and 2b of the "Steady State" subsection of the "Extreme Events" section, should the references to Footnote 12 be references to Footnote 11? In Footnote 1, change "loss of Non-Consequential Load" to either "Non-Consequential loss of Load" or "Non-Consequential Load Loss". (The point here is that the adjective "Non-Consequential" applies to the word "loss" rather the word "Load".) In the first sentence of Footnote 2, change "Normal Clearing faults" to "Normal Clearing of faults". In the second sentence of Footnote 2, remove the comma following the word "types". In Footnote 3, change "Non-Consequential Load" to either "Non-Consequential loss of Load" or "Non-Consequential Load Loss". (The point here is that the adjective "Non-Consequential" applies to the word "loss" rather the word "Load".) In the second sentence of Footnote 5, change "generator Step Up" to "Generator Step Up" to be consistent with the rest of the footnote.

Consideration of Comments on Fourth Draft of Standard TPL-001-1 — Project 2006-02

The Assess Transmission Future Needs Standard Drafting Team thanks all commenters who submitted comments on the fourth draft of the TPL-001-1 standard. This standard was posted for a 30-day public comment period from September 16, 2009 through October 16, 2009. The stakeholders were asked to provide feedback on the standards through a special Electronic Comment Form. There were 67 sets of comments, including comments from more than 180 different people from over 85 companies representing all of the 10 Industry Segments as shown in the table on the following pages.

http://www.nerc.com/filez/standards/Assess-Transmission-Future-Needs.html

Due to industry comments, the SDT has made the following clarifying changes;

- Definition: Non-Consequential Load Loss
- Requirement R1, part 1.1.6
- Requirement R2, parts 2.1.3, 2.1.4, 2.1.5, 2.3, 2.4, 2.4.3 bullet #3, 2.5, 2.6.2, 2.7, 2.7.1 bullets #1 and #4, and 2.9
- Requirement R3, parts 3.3, 3.3.2, 3.3.3 and 3.6
- Requirement R4, parts 4.1.2, 4.3, and 4.5
- Requirement R5
- Requirement R6
- Requirement R8
- Measures M1, M6, M7, and M8
- Table 1, Header notes 'b', 'f', and 'g', footnotes 1, 2, 3, 5, and 7
- Data retention for Requirement R1, R3, R5, R6, and R8
- VSLs for Requirements R1 and R8

While the changes cited address the vast majority of comments received, the following minority viewpoints remain:

- Continued concern over the value of the "raising the bar" for EHV Facilities
- Continued concern with excessive study or documentation requirements
- Concerns that the Implementation Plan could be interpreted to require construction (contrary to the Energy Policy Act of 2005)

In addition, several commenters requested that workshops be conducted to explain the details of the new standard. To date, the SDT has conducted 3 webinars and presented the standard at 2 different NERC standards workshops. In addition, the NERC Planning Committee has had 2 presentations and several regional entities requested and received presentations from SDT members. If Regional Entities wish to conduct seminars on the standard, SDT members from that region could be made available as participants in the discussions.

The SDT does not feel that this standard requires field testing prior to ballot. The SDT has not made any substantive or contextual changes with this posting and has determined that this standard is ready to go to ballot.

If you feel that your comment has been overlooked, please let us know immediately. Our goal is to give every comment serious consideration in this process! If you feel there has been an error or omission, you can contact the Vice President and Director of Standards, Gerry Adamski, at 609-452-8060 or at gerry.adamski@nerc.net. In addition, there is a NERC Reliability Standards Appeals Process.[1]

[1] The appeals process is in the Reliability Standards Development Procedures: http://www.nerc.com/standards/newstandardsprocess.html.

Index to Questions, Comments, and Responses

1. Requirement R1 – Please provide any specific comments on the requirement text, VRF, Time Horizon, measure associated with the requirement, data retention associated with the requirement, and/or the VSL associated with the requirement. 12
2. Requirement R2 – Please provide any specific comments on the requirement text, VRF, Time Horizon, measure associated with the requirement, data retention associated with the requirement, and/or the VSL associated with the requirement. 38
3. Requirement R3 – Please provide any specific comments on the requirement text, VRF, Time Horizon, measure associated with the requirement, data retention associated with the requirement, and/or the VSL associated with the requirement. 105
4. Requirement R4 – Please provide any specific comments on the requirement text, VRF, Time Horizon, measure associated with the requirement, data retention associated with the requirement, and/or the VSL associated with the requirement. 131
5. Requirement R5 – Please provide any specific comments on the requirement text, VRF, Time Horizon, measure associated with the requirement, data retention associated with the requirement, and/or the VSL associated with the requirement. (Note – This is a new requirement.).....159
6. Requirement R6 – Please provide any specific comments on the requirement text, VRF, Time Horizon, measure associated with the requirement, data retention associated with the requirement, and/or the VSL associated with the requirement. 168
7. Requirement R7 – Please provide any specific comments on the requirement text, VRF, Time Horizon, measure associated with the requirement, data retention associated with the requirement, and/or the VSL associated with the requirement. 172
8. Requirement R8 – Please provide any specific comments on the requirement text, VRF, Time Horizon, measure associated with the requirement, data retention associated with the requirement, and/or the VSL associated with the requirement. 175
9. The SDT has revised the definitions in response to industry comments to the third posting. Do you agree with these definition changes? If not, please clearly indicate which definition you disagree with and provide specific comments. 193
10. Do you agree with the changes in the performance elements and notes in Table 1? If not, please provide specific comments by note number, note alpha character, or performance category. 212
11. The SDT has provided a revised Implementation Plan as part of this posting. Do you agree with the revisions to the Plan? If not, please provide specific comments. 252
12. Do you believe that this standard is ready to go to ballot? (if 'No' is checked here, the SDT will consider that comments raised on the other questions drove that decision.)267

The Industry Segments are:

1 — Transmission Owners
2 — RTOs, ISOs
3 — Load-serving Entities
4 — Transmission-dependent Utilities
5 — Electric Generators
6 — Electricity Brokers, Aggregators, and Marketers
7 — Large Electricity End Users
8 — Small Electricity End Users
9 — Federal, State, Provincial Regulatory or other Government Entities
10 — Regional Reliability Organizations, Regional Entities

		Commenter	Organization	Industry Segment									
				1	2	3	4	5	6	7	8	9	10
1.	Group	Bob Cummings	TIS	X	X		X	X				X	X

	Additional Member	Additional Organization	Region	Segment Selection
1.	Eric M. Mortenson (Chair)	Exelon Energy Delivery		
2.	Mark Byrd (Vice Chair)	Progress Energy Carolinas		
3.	Gary Brownfield	Ameren		
4.	Kenneth A. Donohoo	Oncor Electric Delivery		
5.	Patricia E. Metro	National Rural Electric Cooperative Association		
6.	I. Paul McCurley	National Rural Electric Cooperative Association		
7.	Scott M. Helyer	Tenaska, Inc.		
8.	Israel Melendez	Constellation Energy Commodities Group		
9.	Hari Singh	Siemens Power Technologies International		8
10.	John M. Simonelli	ISO New England, Inc.		2
11.	Digaunto Chatterjee	MISO		2
12.	Steve Corey	New York Independent System Operator		2
13.	Dana Walters	National Grid USA	NPCC	9
14.	Hai Quoc Le	Northeast Power Coordinating Council, Inc.	NPCC	9

	Commenter	Organization	Industry Segment									
			1	2	3	4	5	6	7	8	9	10
15. Bill Harm		PJM	RFC	9								
16. Wenchun Zhu		American Transmission Company	MRO	9								
17. Salva R. Andiappan		Midwest Reliability Organization	MRO	9								
18. Hector Sanchez		Florida Power & Light Co.	FRCC	9								
19. Pedro Modia		Midwest Reliability Organization	FRCC	9								
20. W. Perry Stowe		Southern Company Transmission Company	SERC	9								
21. Jay Caspary		Southwest Power Pool	SPP	9								
22. Wesley Woitt		CenterPoint Energy	ERCOT	9								
23. David Franklin		Southern California Edison Company	WECC	9								
24. Branden Sudduth		Western Electricity Coordinating Council	WECC	9								
25. Other Observers and NERC Staff												
2. Group	Ben Li	SRC of ISO/RTO (Comments submitted by Mark Westendorf of Midwest ISO on behalf of Ben Li)		X								

	Additional Member	Additional Organization	Region	Segment Selection
1.	Ben Li	IESO	NPCC	2
2.	Bill Phillips	MISO	MRO	2
3.	Mark Thompson	AESO	WECC	2
4.	Charles Yeung	SPP	SPP	2
5.	Steve Myers	ERCOT	ERCOT	2
6.	Patrick Brown	PJM	RFC	2
7.	James Castle	NYISO	NPCC	2

3. Group	Guy Zito	Northeast Power Coordinating Council--RSC										X

	Additional Member	Additional Organization	Region	Segment Selection
1.	Ralph Rufrano	New York Power Authority	NPCC	5
2.	Alan Adamson	New York State Reliability Council, LLC	NPCC	10
3.	Gregory Campoli	New York Independent System Operator	NPCC	2
4.	Roger Champagne	Hydro-Quebec TransEnergie	NPCC	2
5.	Kurtis Chong	Independent Electricity System Operator	NPCC	2

	Commenter	Organization	Industry Segment									
			1	2	3	4	5	6	7	8	9	10
6. Sylvain Clermont	Hydro-Quebec TransEnergie	NPCC 1										
7. Saurabh Saksena	National Grid	NPCC 1										
8. Chris de Graffenried	Consolidated Edison Co. of New York, Inc.	NPCC 1										
9. Brian D. Evans-Mongeon	Utility Services	NPCC 8										
10. Mike Garton	Dominion Resources Services, Inc.	NPCC 5										
11. Brian L. Gooder	Ontario Power Generation Incorporated	NPCC 5										
12. Kathleen Goodman	ISO - New England	NPCC 2										
13. David Kiguel	Hydro One Networks Inc.	NPCC 1										
14. Michael R. Lombardi	Northeast Utilities	NPCC 1										
15. Randy MacDonald	New Brunswick System Operator	NPCC 2										
16. Greg Mason	Dynegy Generation	NPCC 5										
17. Bruce Metruck	New York Power Authority	NPCC 6										
18. Chris Orzel	FPL Energy/NextEra Energy	NPCC 5										
19. Robert Pellegrini	The United Illuminating Company	NPCC 1										
20. Michael Schiavone	National Grid	NPCC 1										
21. Peter Yost	Consolidated Edison Co. of New York, Inc.	NPCC 3										
22. Gerry Dunbar	Northeast Power Coordinating Council	NPCC 10										
23. Lee Pedowicz	Northeast Power Coordinating Council	NPCC 10										
4. Group	Philip R. Kleckley	SERC Planning Standards Subcommittee			X							
Additional Member	**Additional Organization**	**Region Segment Selection**										
1. John Sullivan	Ameren Services Co.	SERC 1										
2. Charles Long	Entergy	SERC 1										
3. Scott Goodwin	Midwest Independent Transmission System Operator	SERC 1										
4. James Manning	North Carolina Electric Membership Corporation	SERC 3										
5. Jim Kelley	PowerSouth Energy Cooperative	SERC 1										
6. Pat Huntley	SERC Reliability Corporation	SERC 10										
7. Bob Jones	Southern Company Services, Inc.-Trans	SERC 1										
8. David Marler	Tenessee Valley Authority	SERC 1										
5. Group	Bob Cummings (Coordinator)	NERC System Protection and Control Subcommittee (SPCS)	X	X		X	X				X	X

	Commenter	Organization	Industry Segment									
			1	2	3	4	5	6	7	8	9	10

	Additional Member	Additional Organization	Region	Segment Selection
1.	John L. Ciufo	Hydro One, Inc	NPCC	1
2.	Jonathan Sykes	PG&E	WECC	1
3.	Michael McDonald	Ameren Services Company	SERC	1
4.	William J. Miller	Exelon Corporation	RFC	1
5.	Josh Wooten	Tennessee Valley Authority	SERC	9
6.	Sungsoo Kim	Ontario Power Generation Inc	NPCC	5
7.	Joe T. Uchiyama	U.S. Bureau of Reclamation	WECC	5
8.	Charles W. Rogers	Consumers Energy	RFC	4
9.	Joseph M Burdis	PJM Interconnection, L.L.C.	RFC	2
10.	Jim Ingleson	New York Independent System Operator	NPCC	2
11.	Bryan J Gwyn	National Grid	NPCC	1, 10
12.	Henry G Miller	AEP Service Corp	RFC	1, 10
13.	Richard P. Quest	Xcel Energy	MRO	1, 10
14.	John Mulhausen	Florida Power & Light Co	FRCC	1, 10
15.	Philip Winston	Georgia Power Company	SERC	10, 1
16.	Dean Sikes	Cleco Power LLC	SPP	1, 10
17.	Samuel Francis	Oncor Electric Delivery	ERCOT	1, 10
18.	Baj Agrawal	Arizona Public Service Co	WECC	1, 10
19.	Thomas Wiedman	Wiedman Power System Consulting Ltd		NA
20.	Robert W. Cummings	NERC		NA
21.	Philip J Tatro	NERC		NA

6.	Group	W. R. Schoneck	Florida Power and Light	X		X							

	Additional Member	Additional Organization	Region	Segment Selection
1.	John Shaffer		FRCC	
2.	Pedro Modia		FRCC	
3.	Carlos Candelaria		FRCC	
4.	Kiko Barredo		FRCC	

7.	Group	Richard Kafka	Pepco Holdings, Inc. - Affiliates PHI	X		X		X	X				

		Commenter	Organization	Industry Segment									
				1	2	3	4	5	6	7	8	9	10
Additional Member	**Additional Organization**	**Region**	**Segment Selection**										
1. Bill Mitchell	Delmarva Power & Light Co.	RFC	1										
2. John Radman	Potomac Electric Power Co.	RFC	1										
3. Carl Kinsley	Atlantic City Electric	RFC	1										
8.	Group	Rick Foster	SERC Dynamics Review Subcommittee (DRS)	X								X	X
Additional Member	**Additional Organization**	**Region**	**Segment Selection**										
1. John Sullivan	Ameren Services Company	SERC	1										
2. Anthony Williams	Duke Energy Carolinas	SERC	1										
3. Sujit Mandal	Entergy	SERC	1										
4. Venkat Kolluri	Entergy	SERC	1										
5. John O'Connor	Progress Energy Carolinas	SERC	1										
6. Bob Jones	Southern Company Services, Inc. - Trans	SERC	1										
7. Jonathan Glidewell	Southern Company Services, Inc. - Trans	SERC	1										
8. Robbie Bottoms	Tennessee Valley Authority	SERC	1, 9										
9. Tom Cain	Tennessee Valley Authority	SERC	1, 9										
10. Herb Schrayshuen	SERC Reliability Corporation	SERC	10										
11. Carter Edge	SERC Reliability Corporation	SERC	10										
9.	Group	Steve Hill	Modesto Irrigation District Transmission Planning	X		X		X					
Additional Member	**Additional Organization**	**Region**	**Segment Selection**										
1. Spencer Tacke	MID	WECC	NA										
10.	Group	Doug Hohlbaugh	FirstEnergy Corp	X		X	X	X	X				
Additional Member	**Additional Organization**	**Region**	**Segment Selection**										
1. Ed Baznik	FE	RFC	1										
2. John Stephens	FE	RFC	1										
3. Jeff Mackauer	FE	RFC	1										
4. Carl Bridenbaugh	FE	RFC	1										
5. Sam Ciccone	FE		1, 3, 4, 6										

		Commenter	Organization	Industry Segment									
				1	2	3	4	5	6	7	8	9	10
11.	Group	Denise Koehn	Bonneville Power Administration	X		X		X	X				

	Additional Member	Additional Organization	Region	Segment Selection
1.	Berhanu Tesema	BPA Transmission Planning	WECC	1
2.	Melvin Rodrigues	BPA Transmission Planning	WECC	1
3.	Chuck Matthews	BPA Transmission Planning	WECC	1
4.	Kyle Kohne	BPA Transmission Planning	WECC	1
5.	Larry Furumasu	BPA Transmission Planning	WECC	1

12.	Group	Carol Gerou	NERC Standards Review Subcommittee										X

	Additional Member	Additional Organization	Region	Segment Selection
1.	Neal Balu	WPS Corporation	MRO	3, 4, 5, 6
2.	Terry Bilke	Midwest ISO Inc.	MRO	2
3.	Jodi Jenson	Western Area Power Administration	MRO	1, 6
4.	Ken Goldsmith	Alliant Energy	MRO	4
5.	Alice Murdock	Xcel Energy	MRO	1, 3, 5, 6
6.	Dave Rudolph	Basin Electric Power Cooperative	MRO	1, 3, 5, 6
7.	Eric Ruskamp	Lincoln Electric System	MRO	1, 3, 5, 6
8.	Joseph Knight	Great River Energy	MRO	1, 3, 5, 6
9.	Joe DePoorter	Madison Gas & Electric	MRO	3, 4, 5, 6
10.	Scott Nickels	Rochester Public Utilties Address	MRO	4
11.	Terry Harbour	MidAmerican Energy Company	MRO	1, 3, 5, 6

13.	Individual	Frank Gaffney, Regulatory Compliance Officer	Florida Municipal Power Agency, and its Member Cities, Lakeland Electric and Fort Pierce Utility Authority	X		X	X	X	X	X			
14.	Individual	Travis Hyde	Oklahoma Gas & Electric	X									
15.	Individual	Hugh Francis	Southern Company	X		X		X					
16.	Individual	Richard	FRCC Transmission Working Group	X		X	X					X	X

		Commenter	Organization	Industry Segment									
				1	2	3	4	5	6	7	8	9	10
17.	Individual	Brent Ingebrigtson	E.ON U.S.	X		X		X	X				
18.	Individual	Eric Mortenson	Exelon Transmission Planning	X		X							
19.	Individual	Tom Mielnik	MidAmerican Energy Company	X		X		X	X				
20.	Individual	Pete Jones	Puget Sound Energy, Inc.	X									
21.	Individual	Baj Agrawal	Arizona Public Service Co.	X		X		X					
22.	Individual	Jay Teixeira	ERCOT ISO		X								X
23.	Individual	Milorad Papic	Idaho Power	X									
24.	Individual	James Tucker	Deseret Power	X		X		X					
25.	Individual	Adam Menendez	Portland General Electric Co.	X		X		X	X				
26.	Individual	Kasia Mihalchuk	Manitoba Hydro	X		X		X	X				
27.	Individual	Tim Ponseti, VP	TVA System Planning	X									
28.	Individual	Brian Keel	SRP	X									
29.	Individual	Vishal Patel	Southern California Edison (SCE)	X		X		X					
30.	Individual	John Collins	Platte River Power Authority	X		X			X				
31.	Individual	Gordon Rawlings	British Columbia Transmission Corp	X	X								
32.	Individual	James Starling	SCE&G	X		X		X	X				
33.	Individual	Catherine Mathews	NorthWestern Energy	X		X		X					
34.	Individual	Dilip Mahendra	Sacramento Municipal Utility District	X		X	X	X					

		Commenter	Organization	Industry Segment									
				1	2	3	4	5	6	7	8	9	10
35.	Individual	Thad Ness	American Electric Power	X		X		X	X				
36.	Individual	Bart White	Progress Energy Florida, Inc.	X		X							
37.	Individual	Terry Huval	Lafayette Utilities System										
38.	Individual	Jessica Rice	NV Energy	X									
39.	Individual	L. Earl Fair	Gainesville Regional Utilities	X		X		X					
40.	Individual	Phuong Tran	Lakeland Electric	X		X		X					
41.	Individual	Michael Ayotte	ITC Holdings	X									
42.	Individual	John Pearson	ISO New England		X								
43.	Individual	Darryl Curtis	Oncor Electric Delivery	X									
44.	Individual	Scott Goodwin	Midwest ISO		X								
45.	Individual	John Sullivan	Ameren	X		X		X	X				
46.	Individual	Saurabh Saksena	National Grid	X		X							
47.	Individual	Robert H. Easton	Western Area Power Adm - RMR	X								X	
48.	Individual	Roger Champagne	Hydro-Québec TransEnergie (HQT)	X									
49.	Individual	Greg Campoli	NYISO		X								
50.	Individual	Chifong Thomas	Pacific Gas and Electric Co.	X		X		X					
51.	Individual	Greg Rowland	Duke Energy	X		X		X	X				
52.	Individual	David M. Conroy	Central Maine Power Company	X									

		Commenter	Organization	Industry Segment									
				1	2	3	4	5	6	7	8	9	10
53.	Individual	Paul Rocha	CenterPoint Energy	X									
54.	Individual	Mark Byrd	Progress Energy Carolinas	X		X		X					
55.	Individual	Larry Brusseau	MAPP								X		
56.	Individual	Aaron Staley	Orlando Utilities Commission	X		X		X	X				
57.	Individual	Martin Bauer	US Bureau of Reclamation					X					
58.	Individual	Michael R. Lombardi	Northeast Utilities	X		X		X					
59.	Individual	Alice Murdock	Xcel Energy	X		X		X	X				
60.	Individual	David Wang	San Diego Gas & Electric Co	X									
61.	Individual	Dan Rochester	Independent Electricity System Operator		X								
62.	Individual	Jason Shaver	American Transmission Company	X									
63.	Individual	R. Peter Mackin	Utility System Efficiencies, Inc. (USE)										
64.	Individual	Mark Graham, on behalf of the Power System Planning Department	Tri-State Generation and Transmission Association	X		X		X	X				
65.	Individual	David Bradt	United Illuminating	X									
66.	Individual	John Mayhan	Omaha Public Power District	X		X		X	X				
67.	Individual	Mark Kuras	PJM										

1. **Requirement R1 – Please provide any specific comments on the requirement text, VRF, Time Horizon, measure associated with the requirement, data retention associated with the requirement, and/or the VSL associated with the requirement.**

Summary Consideration: The SDT has made several clarifying changes to Requirement R1, Measure M1, and to the VSLs for R1 based on industry comments.

Requirement R1, Part 1.1.6 has been clarified to reflect that this requirement may not be exclusively sources supplying load. As an example, Demand Side-Management (DSM) may be used.

The words "within its respective area" have been added after "that it is maintaining System models," to Measure M1 for additional clarification.

The words "responsible entity's" have been added after "OR The" under the Moderate and Severe VSLs for Requirement R1 for additional clarification as well.

R1, Part 1.1.6 - Resources (supply or demand side) required for Load

R3.3.3. Trip Transmission elements when relay loadability limits are exceeded

R6. Each Transmission Planner and Planning Coordinator shall define and document, within their Planning Assessment, any criteria or methodology used in the analysis to identify System instability for conditions such as Cascading , voltage instability, or uncontrolled islanding.

M1. Each Transmission Planner and Planning Coordinator shall provide evidence, in electronic or hard copy format, that it is maintaining System models within its respective area, using the latest data consistent with MOD-010 and MOD-012, including items represented in the Corrective Action Plan, representing projected System conditions, and that the models represent the required information in accordance with Requirement R1.

R1 VSL	The responsible entity's System model failed to represent one of the Requirement R1, parts 1.1.1 through 1.1.6.	The responsible entity's System model failed to represent two of the Requirement R1, parts 1.1.1 through 1.1.6. OR The responsible entity's System model did not use the latest data consistent with the data provided in accordance with the MOD-010 and MOD-012 standards and other	The responsible entity's System model failed to represent three of the Requirement R1, parts 1.1.1 through 1.1.6.	The responsible entity's System model failed to represent four or more of the Requirement R1, parts 1.1.1 through 1.1.6. OR The responsible entity's System model did not represent projected System conditions as described in Requirement R1.

		sources, including items represented in the Corrective Action Plan.		

Organization	Comments for Question 1
ERCOT ISO	* This requirement seems to be embedding information that should be contained in the MOD standards. Does this present double jeopardy? This requirement, measurement, and VSL are all about maintaining models a MOD standard revision may need to be included or recommended to allow the focus of the TPL standard to be on transmission planning studies, not modeling. * Requirement 1.1.2 should read "all known outages of generation or transmission facilities with a duration of at least six months as appropriate for the timeframe represented by the particular model" * The moderate VSL category states "the System model did not use" this is confusing as the model does not do anything. It should contain the latest data. We also want to ensure this is not implying that the studies must use the latest data data changes continuously, and a study may never be complete if the data must be continuously updated. * Will any agreements made in R7 override the "each TP and PC" requirement? To clarify this, the requirement could be rephrased: "In accordance to the responsibilities assigned in R7, the responsible Transmission Planners and Planning Coordinators shall maintain System models for performing the studies needed to complete the required Planning Assessments. The models shall contain the latest data consistent with MOD-010 and MOD-012? "
Response: 1. The SDT believes that additional modeling requirements not presently contained in the MOD standards are necessary for Transmission Planning purposes. The SDT has incorporated these additional requirements in the TPL standard with the intent that they will be removed from the TPL standard when they are incorporated into the MOD standards at a later date. As for the double jeopardy comment - From the ERO Rules of Procedure, Appendix 4B- Sanction Guidelines, Section 3.10 Multiple Violations: "Strictly speaking, NERC or the regional entity can determine and levy a separate penalty or sanction, or direct remedial action, upon a violator for each individual violation. However, in instances of multiple violations related to a single act or common incidence of noncompliance, NERC or the regional entity will generally determine and issue a single aggregate penalty, sanction, or remedial action directive bearing reasonable relationship to the aggregate of the related violations. The penalty, sanction, or remedial action will not be that determined individually for the least serious of the violations; it will generally be at least as large or expansive as what would be called for individually for the most serious of the violations." 2. The SDT does not believe that the proposed language adds any clarity. No change made. 3. The SDT does not believe that the proposed language adds any clarity. No change made. The system models should be updated per MOD-010 & MOD-012. 4. Requirement R7 identifies the individual and joint responsibilities for performing required studies only. The SDT believes that both the Transmission Planner and Planning Coordinator have this modeling responsibility. Therefore the SDT believes that the existing language is adequate and that no changes are required.	
Bonneville Power Administration	: R1.1.4 could be interpreted that the standard requires forecasting reactive load. However, most entities forecast demand (MW) and apply a power factor(s) to calculate reactive load. Therefore, please change "real and reactive load forecast" to "forecasted demand and power factor" so it is clear that forecasting reactive load is not required.

Organization	Comments for Question 1
	For R1.1.5 we suggest changing the wording from "Known commitments for Firm Transmission Service and Interchange" to "Known commitments for Firm Transmission Service or Interchange". It is difficult to distinguish between the two in future cases where not all contractual arrangements are known.
NorthWestern Energy	As written R1.1.4, "Real and reactive Load forecasts", could mean that both Real and Reactive Load forecasts are required. Since most entities only forecast Real (MW) and apply a power factor for reactive (MVAR), wording could be changed to " forecasted demand and power factor" to clarify that forecasting reactive load is not required. In R1.1.5 Change "Firm Transmission Service and Interchange" to "Firm Transmission Service or Interchange". This way the requirement can be satisfied by either one or the other.
Deseret Power	Comments: R1.1.4 could be interpreted that the standard requires forecasting reactive load. However, most entities forecast demand (MW) and apply a power factor(s) to calculate reactive load. Therefore, please change "real and reactive load forecast" to "forecasted demand and power factor" so it is clear that forecasting reactive load is not required. For R1.1.5 we suggest changing the wording from "Known commitments for Firm Transmission Service and Interchange" to "Known commitments for Firm Transmission Service or Interchange". It is difficult to distinguish between the two in future cases where not all contractual arrangements are known.
Idaho Power	R1.1.4 could be interpreted that the standard requires forecasting reactive load. However, most entities forecast demand (MW) and apply a power factor(s) to calculate reactive load. Therefore, please change "real and reactive load forecast" to "forecasted demand and power factor" so it is clear that forecasting reactive load is not required. For R1.1.5 I suggest changing the wording from "Known commitments for Firm Transmission Service and Interchange" to "Known commitments for Firm Transmission Service or Interchange". It is difficult to distinguish between the two in future cases where not all contractual arrangements are known.
Modesto Irrigation District Transmission Planning	R1.1.4 could be interpreted that the standard requires forecasting reactive load. However, most entities forecast demand (MW) and apply a power factor(s) to calculate reactive load. Therefore, please change "real and reactive load forecast" to "forecasted demand and power factor" so it is clear that forecasting reactive load is not required. R1.1.5 we suggest changing the wording from "Known commitments for Firm Transmission Service and Interchange" to "Known commitments for Firm Transmission Service or Interchange". It is difficult to distinguish between the two in future cases where not all contractual arrangements are known.
NV Energy	R1.1.4 could be interpreted that the standard requires forecasting reactive load. However, most entities forecast demand (MW) and apply a power factor(s) to calculate reactive load. Therefore, please change "real and reactive load forecast" to "forecasted demand and power factor" so it is clear that forecasting reactive load is not required. For R1.1.5 we suggest changing the wording from "Known commitments for Firm Transmission Service and Interchange" to "Known commitments for Firm Transmission Service or Interchange". It is difficult to distinguish between the two in future cases

Organization	Comments for Question 1
	where not all contractual arrangements are known.
Pacific Gas and Electric Co.	R1.1.4 could be interpreted that the standard requires forecasting reactive load. However, most entities forecast demand (MW) and apply a power factor(s) to calculate reactive load. Therefore, please change “real and reactive load forecast” to “forecasted demand and power factor” so it is clear that forecasting reactive load is not required. For R1.1.5 we suggest changing the wording from “Known commitments for Firm Transmission Service and Interchange” to “Known commitments for Firm Transmission Service or Interchange”. It is difficult to distinguish between the two in future cases where not all contractual arrangements are known.
Puget Sound Energy, Inc.	R1.1.4 could be interpreted that the standard requires forecasting reactive load. However, most entities forecast demand (MW) and apply a power factor(s) to calculate reactive load. Therefore, please change “real and reactive load forecast” to “forecasted demand and power factor” so it is clear that forecasting reactive load is not required. For R1.1.5 we suggest changing the wording from “Known commitments for Firm Transmission Service and Interchange” to “Known commitments for Firm Transmission Service or Interchange”. It is difficult to distinguish between the two in future cases where not all contractual arrangements are known.
San Diego Gas & Electric Co	R1.1.4 could be interpreted that the standard requires forecasting reactive load. However, most entities forecast demand (MW) and apply a power factor(s) to calculate reactive load. Therefore, please change “real and reactive load forecast” to “forecasted demand and power factor” so it is clear that forecasting reactive load is not required. R1.1.5 "firm transmission service agreements" should be removed the from the requirement. Firm transmission service agreements, "known" or otherwise, have no effect on reliable operation of the grid; power will flow where it wants, not where, or how, the firm transmission service agreement may specify. From a reliability perspective this information is of no use.
Southern California Edison (SCE)	R1.1.4 could be interpreted that the standard requires forecasting reactive load. However, most entities forecast demand (MW) and apply a power factor(s) to calculate reactive load. Therefore, please change “real and reactive load forecast” to “forecasted demand and power factor” so it is clear that forecasting reactive load is not required. For R1.1.5 we suggest changing the wording from “Known commitments for Firm Transmission Service and Interchange” to “Known commitments for Firm Transmission Service or Interchange”. It is difficult to distinguish between the two in future cases where not all contractual arrangements are known.
SRP	R1.1.4 could be interpreted that the standard requires forecasting reactive load. However, most entities forecast demand (MW) and apply a power factor(s) to calculate reactive load. Therefore, please change “real and reactive load forecast” to “forecasted demand and power factor” so it is clear that forecasting reactive load is not required. For R1.1.5 we suggest changing the wording from “Known commitments for Firm Transmission Service and Interchange” to “Known commitments for Firm Transmission Service or Interchange”. It is difficult to distinguish between the two in future cases where not all contractual arrangements are known.

Organization	Comments for Question 1
Western Area Power Adm - RMR	R1.1.4 could be interpreted that the standard requires forecasting reactive load. However, most entities forecast demand (MW) and apply a power factor(s) to calculate reactive load. Therefore, please change "real and reactive load forecast" to "forecasted demand and power factor" so it is clear that forecasting reactive load is not required. For R1.1.5, I suggest changing the wording from "Known commitments for Firm Transmission Service and Interchange" to "Known commitments for Firm Transmission Service or Interchange". It is difficult to distinguish between the two in future cases where not all contractual arrangements are known.
Response: 1. Requirement R1, part 1.1.4 states that a reactive forecast is required. Using a power factor is one method that may be used in calculating this reactive forecast. No change made. 2. The SDT believes that the existing language is adequate and no further change is required. If you do not have any known Firm Transmission Service as an example, then this fact should just be documented.	
Northeast Utilities	[R1.1.6] What is NERC's definition of "Resources required to supply load"?[Add R1.1.7] The standard is referring to requirements for sensitivity and other issues without a reference to base cases. There needs to be some direction provided on the initial conditions used in the assessment. This guidance should include a discussion as to whether or not generator forced outages are to be represented in the base cases. Additionally, the standard is also silent on the treatment of system transfers, both internal and external, as to how they should be modeled in the base cases. For some areas, their current practice is to include heavy system stresses in their base cases. It is unclear if this practice works within the purview of this standard. Therefore, it is recommended that each Region must have a document that defines what constitutes base case conditions.
Response: 1. "Resources required to supply load" is not a NERC defined term. "Facility" is a defined term and does include generators. The SDT has made a clarifying change to Requirement R1, part 1.1.6. **R1, part 1.1.6** - Resources (supply or demand side) required for Load **2.** The SDT believes that "base case conditions" should be defined by the entity performing the study. Sensitivity studies are performed to provide insight into the impacts of potential variations of assumptions in studies. The SDT therefore declines to make the change as suggested. Please note that Requirement R1, part 1.1.2 includes only known outages of generation with duration of at least 6 months. Requirement R1, part 1.1.5 includes known commitments for Firm Transmission Service and Interchange - while the sensitivity analysis under Requirement R2, parts 2.1.4 and 2.4.3 can include varying expected transfers by a sufficient amount to stress the System. The Standard will leave it up to each Region to further define their own base case documentation if they desire to have such a document.	
Progress Energy Florida, Inc.	As PEF is opposed to TPL-001-1 as a whole, PEF will have no further comment on this issue other than to encourage all appropriate parties to review PEF's previous comments to this effect.
Response: Throughout the drafting process, the SDT has carefully considered your comments as well comments from other industry members.	
American Electric Power	Because the revised transmission planning standard now explicitly references short circuit analysis, we believe that there is a

Organization	Comments for Question 1
	need for a parallel MOD standard to establish requirements for short circuit modeling and for a corresponding reference under R1, just as there are references made in R1 to MOD-010 (power flow models) and MOD-012 (stability models) . We recognize that such a MOD standard will not be addressed as part of this project, but we request that the SDT pass this comment on to NERC Staff.
Response: NERC has committed that it will update the appropriate MOD standards after the TPL revisions are finalized. A note has already been made in the official NERC issues database for a revision to the MOD standards based on the changes to TPL.	
CenterPoint Energy	CenterPoint Energy appreciates the SDT's efforts in revising R1 and generally agrees with the requirement except for verbiage and sub-requirements relating to modeling future transmission system projects, including projects identified in Corrective Action Plans. Specifically, CenterPoint Energy recommends that the SDT revise R1 by deleting the text "including items represented in the Corrective Action Plan" and delete part 1.1.3 in its entirety. Certainly, it is appropriate to model some limited subset of future projects, including projects included in Corrective Action Plans, which are reasonably "firm" or "committed". In previous drafts, the SDT tried to incorporate language to capture that concept but apparently abandoned the idea in response to industry comments. However, it remains true that many future "planned" projects, including projects in Corrective Action Plans, are tentative in nature and have a high degree of uncertainty due to uncertainty in forecasted system conditions. Because of this reality, and the fact that models are intended to be useful for identifying what future projects might be necessary, CenterPoint Energy believes many transmission planning organizations do not and should not model any and all new planned transmission facilities tentatively identified based upon studies and assessments of previous system models. Once the System model is updated with previously contemplated transmission projects, it is problematic to determine in future studies whether or not those projects are still needed, which is contrary to the intent of updating the model. If CenterPoint Energy's recommended changes are made, Transmission Planners and Planning Coordinators would not be precluded from incorporating future projects into their System models in accordance with their established practice but they would not be required to inappropriately model any and all previously contemplated projects.
Response: The SDT believes that the Corrective Action Plans and Requirement R1, part 1.1.3 are being correctly used in this planning standard. Please note that there are a variety of associated actions that can be used to achieve required System performance as noted in Requirement R2, part 2.7.1. The SDT agrees that systems can change over time which will result in some changes for the Corrective Action Plans. The SDT is not trying to "pin down" entities in regards to these plans but to ensure that entities are planning reliable Transmission Systems and have sufficient time to get needed plans in service to continue meeting the TPL 001-1 requirements. The SDT believes that these actions are needed in the planning horizons in order to have a reliable Bulk Electric System. No change made.	
Platte River Power Authority	Change R1.1.5 wording from "...Service and Interchange." to "...Service or Interchange."
Response: The SDT believes that the existing language is adequate and no further change is required. If you do not have any known Firm Transmission Service as an example, then this fact should just be documented.	
ITC Holdings	Comments: These requirements refer to new facilities which would include new generators. ITC requests clarification as to what constitutes a "new generator" that needs to be considered -- those in the queue, those with signed Interconnection Agreements, those under construction... What is the line of demarcation between what is in and what is out?

Organization	Comments for Question 1
	In addition to the above, ITC also requests clarification as to whether or not these requirements apply to new generators, who connect to the network as "Energy Only" resources and, are either, not required to construct facilities needed to meet reliability requirements or are allowed to operate as "Energy Only" until needed facilities are constructed. The CAP for these facilities is that they will be curtailed or other generation will be curtailed should "operating" violations occur. Under market mechanisms, these generators are allowed to operate if their energy prices are lower than other generators whose curtailment eliminates the violation, even though the curtailed generators have paid for the facilities needed to meet reliability requirements. As the standard is written, these requirements imply that all generators must be included in studies. Were we to do so, significant standards violations might result. Does the Transmission Owner have to study all violation scenarios or include all "Energy Only" generators in studies when the CAP is always the same: "Market redispatch". Please clarify study scenario requirements for "Energy Only" resources.
Response: 1. Requirement R1 is a modeling requirement which requires any expected operational Facilities to be modeled based on market and contractual obligations. 2. The SDT believes that the requirements under this standard do include "Energy Only" generators. Please note under Requirement R2, part 2.7.1 that manual and automatic generation runback/tripping is allowed as a response to single or multiple Contingencies to mitigate Steady State performance violations. Also automatic generation tripping is allowed for single and multiple Contingency events to mitigate Stability performance violations.	
FirstEnergy Corp	FirstEnergy believes the draft 4 version of requirement R1 is greatly improved over prior drafts. The team has correctly responded to industry stakeholders and arrived at an appropriate middle ground that should resolve most stakeholder concerns. The changes made in R1.1.2 stating modeling of known outages with a duration of 6-months or more helps clarify a requirement that was previous subjective and open for interpretation. The removal of the previously prescriptive "such as list" is also well received by FirstEnergy.Finally, the addition of the text "known commitments" in regards to Firm Transmission Service and Interchange resolves our prior concerns.
Gainesville Regional Utilities	I like the more simplified approach used in the requirement listing. As far as "using the latest data consistent with MOD-010 & MOD -012 data", I feel that unplanned or unknown system changes between the times when studies are actually ran for the long term planning process should not be an issue for any type of negative interpretation by a compliance auditor. I presently do not have a suggestion on how to guarantee such an understanding. Overall the revisions look good.
Tri-State Generation and Transmission Association	R1 - The changes to R1 seem good.
Response: Thank you for your comments.	
Utility System Efficiencies, Inc. (USE)	For R1.1.5 I suggest changing the wording from "Known commitments for Firm Transmission Service and Interchange" to "Known commitments for Firm Transmission Service or Interchange". It is difficult to distinguish between the two in future cases where not all contractual arrangements are known.
Response: The SDT believes that the existing language is adequate and no further change is required. If you do not have any known Firm Transmission Service as	

Organization	Comments for Question 1
an example, then this fact should just be documented.	
Orlando Utilities Commission	In general I support all the changes from the prior revision. I especially like the clarification that outages of 6 months or longer need attention in planning studies. Several questions on the details: R1 requires the maintenance of system models for the purpose of studies and establishes that these models should be updated with the latest data from various sources. Is this requiring that models should always be current, updated for the slightest change, even between studies? Or just that models are kept up to date in a more practical application such as monthly, quarterly or before their use in a study?R1 states that the model should be "..supplemented by other sources as needed, including items represented in the corrective action plan"? Read in context with the overall requirement this allows for projects that are in the corrective action plan to be added, but does not require that they are, is this the correct understanding? -R1 requires the model to represent Known Commitments for Firm Transmission Service, and also references load forecasts. The application of this requirement seems to be that the model should be based on the load forecast and include the appropriate known firm transmission service for the amount that would be used at that forecast level?
Response: 1. Yes, your understanding is correct. Thank you for your comments. 2. The SDT agrees that the model should be based on the load forecast. The SDT believes that the appropriate known Firm Transmission Service should also be included. Please note that Requirement R1, part 1.1.6 has been clarified to state that supply or demand side can be used for supplying Load. **R1, part 1.1.6** - Resources (supply or demand side) required for Load	
MAPP	1. It would be helpful to identify the relationship expected between the PC and the TP. It looks as if both PC and TP are expected to maintain the same models. We need to avoid duplicated effort. Does the standard really apply to "both", or could it be "either"? 2. Is a Corrective Action Plan being used correctly throughout this standard? It seems like the specifics of a CAP aren't appropriate for future planning years. Planning studies are only estimates of expected system growth, and the apparent problem might turn out to be different, or not exist at all. Will compliance people start going "over the top" examining CAPs? The current practice of summarizing possible problems in future years and identifying possible solutions seems more appropriate than pinning entities down to Corrective Action Plans. Corrective Action Plans seem appropriate only for the Operating horizon.R1 We interpret that "within their respective areas" refers the geographic footprint of the TP or PC transmission system. 3. We propose clarifying that "within their respective area" does not require the inclusion of remote generation or load (metering) buses that are within the declared Balancing Authority area, but may be outside and separate from the TP or PC geographic footprint. 4. M1 We recommend the bolded words be added to M1 to indicate that each responsible entity must provide evidence that "it is maintaining System models within its respective area, using the latest"? What does it mean to have a hardcopy of a system model? 5. R1.1.2 We suggest that this requirement be removed because the "known outage(s)" are only to be included in the models

Organization	Comments for Question 1
	when for P1 events are simulated, as specified in R2.1.3. We suggest that the intent can be more simply handled by stating in R2.1.3 that known outages be simulated along with P1 events for the System peak or Off-Peak conditions when the outages are scheduled to occur. 6. R1.1.3 Add the qualification of "for the years defined in R2". 7. R1.1.6 We interpret that "Resources required" allows the inclusion of fictional generators in the models when they are needed to make future normal system cases solve. If this is not the intended interpretation, then we suggest modifying the wording to make the desired interpretation more clear.
Response: 1. The SDT believes that both the Transmission Planner and Planning Coordinator have this modeling responsibility. Therefore the SDT believes that the existing language is adequate and that no changes are required. 2. The SDT believes that the Corrective Action Plans are being correctly used in this planning standard and is appropriate for all planning years. Please note that there are a variety of associated actions that can be used to achieve required System performance as noted in Requirement R2, part 2.7.1. The SDT agrees that Systems can change over time which will result in some changes for the Corrective Action Plans. The SDT cannot speculate on auditor's actions. The SDT is not trying to "pin down" entities in regards to these plans but to ensure that entities are planning reliable Transmission Systems and have sufficient time to get needed plans in service to continue meeting the TPL-001-1 requirements. The SDT believes that these actions are needed in the planning horizons in order to have a reliable Bulk Electric System. The SDT believes that "within their respective area" does refer to the Transmission Planner's or Planning Coordinator's geographic footprint. 3. The SDT believes agrees that the "within their respective area" terminology excludes remote generation and Load buses since they are not within the Transmission Planner's or Planning Coordinator's geographic footprint. The SDT believes that the existing language is adequate and no further change is required. 4. The SDT agrees that adding "within its respective area" would help clarify this measure. The SDT has modified Measure M1 to include this new language. An example of a hard copy of a System model is having printouts of each individual bus showing Load, Transmission line, generator, capacitors, etc., connected to that bus with associated impedances, ratings, etc. **M1**. Each Transmission Planner and Planning Coordinator shall provide evidence, in electronic or hard copy format, that it is maintaining System models within its respective area, using the latest data consistent with MOD-010 and MOD-012, including items represented in the Corrective Action Plan, representing projected System conditions, and that the models represent the required information in accordance with Requirement R1 5. The SDT disagrees since multiple outages may be taken during the same time period under Requirement R1, part 1.1.2. The SDT believes that all outages should be modeled to insure the System reliability during the outage duration. If a Transmission element outage occurs during a specified time, then the new base case for that time period would result with that element out of service pre-Contingency. See Requirement R2, part 2.1.3 for additional details concerning studies required with known outages. No change made. 6. The SDT does not believe that the proposed language adds any clarity. No change made. 7. The SDT believes that this requirement includes any fictional generators that may be needed to match up generation and Load. The SDT has made clarifying change to Requirement R1, part 1.1.6. **R1, part 1.1.6** - Resources (supply or demand side) required for Load	
MidAmerican Energy Company	MidAmerican recommends the words in all caps be added to M1 to indicate that each responsible entity must provide evidence

Organization	Comments for Question 1
	that "it is maintaining System models WITHIN ITS RESPECTIVE AREA, using the latest"?
Response: The SDT agrees that adding "within its respective area" would help clarify this measure. The SDT has modified Measure M1 to include this new language. **M1**. Each Transmission Planner and Planning Coordinator shall provide evidence, in electronic or hard copy format, that it is maintaining System models within its respective area, using the latest data consistent with MOD-010 and MOD-012, including items represented in the Corrective Action Plan, representing projected System conditions, and that the models represent the required information in accordance with Requirement R1.	
Florida Power and Light	No entity that we know of provides specific reactive load forecasts. From the auditor's perspective, what is expected and acceptable for System models representing reactive load forecasts? Suggested change: 1.1.4 Real Load forecasts and future reactive Load assumptions? Not all system models can represent all "Known commitments for Firm Transmission Service and Interchange". The SDT needs to add "that are expected to be utilized." to the requirement. 1.1.6 Recommend changing to "Resources expected to supply Load"The requirements seem to imply a difference in certainty between "known" and "planned". Known implies certainty, where planned implies less certainty, as in an assumption. Planned things can change but known things are much less subject to change. The drafting team should clarify the distinction between the two terms or be more specific in the requirement as to what is expected rather than leaving it for interpretation as to meaning and intent.
Response: 1. Requirement R1, part 1.1.4 states that a reactive forecast is required. Using a power factor is one method that may be used in calculating this reactive forecast. The SDT believes that the existing language is adequate. The SDT believes that all known commitments for Firm Transmission Service and Interchange should be modeled. The SDT does not believe that the proposed language adds any clarity. No change made. 2. The SDT has made clarifying change to Requirement R1, part 1.1.6 based on industry comments. Please note that the word "required" is used in Requirement R1, part 1.1.6. **R1, part 1.1.6** - Resources (supply or demand side) required for Load	
Independent Electricity System Operator	Please explain what is envisaged by the phrase "and shall represent projected System conditions." that is not already covered by the list in Requirement R1, part 1.1. We suggest removing the phrase. We do not have any comments on the, measure, VRF and Time Horizon. Consistent with our comment above, we believe that the 2nd condition under the Severe VSL is (a) vague, and (b) already covered by parts 1.1.1 to 1.1.6. This second condition is not needed.
Response: The goal is for the responsible entity to build a realistic simulation for the System models which may contain items not listed under Requirement R1, part 1.1. The SDT disagrees with the VSL comment and believes that the second condition under the Severe VSL covers additional items under Requirement R1 itself that are not covered under Requirement R1, parts 1.1.1 thru 1.1.6. No change made.	
NYISO	R1 - The NYISO would like to align itself with the comments of the ISO/RTO Council stating that the PC may begin model building using provisions from tariff or agreements such as its Transmission Owners agreement. While the data may be

Organization	Comments for Question 1
	consistent with that provided in Mod 10 and 12, there may not be a direct correlation. We, therefore, also suggest the following wording for R1."Each Transmission Planner and Planning Coordinator shall maintain System models within its respective area for performing the studies needed to complete its Planning Assessment. The models shall reflect data consistent with that provided in accordance with the MOD-010 and MOD-012 standards and/or data that is provided in accordance with tariff or transmission owner agreements. The models may be supplemented by other sources as needed including items represented in the Corrective Action Plan, and shall represent projected System conditions. "R1.1.2 - Outages of less than 12 months are generally coordinated by operations, not planning departments. In reference to system modeling, it doesn't make sense for outages of less than a year. We therefore recommend replacing "duration of at least six months" with duration of 12 months or more. R1.1.5 - Interchange should not be modeled in the base case system representation, unless their neutrality to system reliability has been clearly demonstrated. There are times that economic interchanges between New York and a neighbor may have an impact on one of the transmission systems that may, at times, pose reliability constraints on the operation of the New York system. R1.1.6 - Please define what is included in "resources required to supply load." It is unclear what is included or not included in this requirement. The NPCC definition of "resource" is inclusive.
Response: 1. The SDT believes the existing language is correct and that the suggested changes do not provide additional clarity. No change made. 2. The requirement does not refer to outages occurring within the next 6 months which the SDT agrees would be an operational issue and not a planning issue. The requirement is referring to outages in the planning horizon that have a duration of at least six months. The SDT believes that such outages should be incorporated into the Planning Assessment. No change made. 3. The SDT disagrees and believes that known firm transmission commitments and interchange should be modeled and can affect the transmission system reliability. No change made. 4. "Resources required to supply load" is not a NERC defined term. "Facility" is a defined term and does include generators. The SDT has made a clarifying change to Requirement R1, part 1.1.6. **R1, part 1.1.6** - Resources (supply or demand side) required for Load	
NERC Standards Review Subcommittee	R1 The MRO NSRS interprets that "within their respective areas" refers to the geographic footprint of the TP or PC transmission system. The MRO NSRS proposes clarifying that "within their respective area" does not require the inclusion of remote generation or load (metering) buses that are within the declared Balancing Authority area, but may be outside and separate from the TP or PC geographic footprint. M1 The MRO NSRS recommends that words be added to M1 to indicate that each responsible entity must provide evidence that "it is maintaining System models within its respective area, using the latest"?
Response: 1. The SDT believes agrees that the "within their respective area" terminology excludes remote generation and Load buses since they are not within the Transmission Planner's or Planning Coordinator's geographic footprint. The SDT believes that the existing language is adequate and no further change is required.	

Organization	Comments for Question 1
2. The SDT agrees that adding "within its respective area" would help clarify this measure. The SDT has modified M1 to include this new language. **M1**. Each Transmission Planner and Planning Coordinator shall provide evidence, in electronic or hard copy format, that it is maintaining System models within its respective area, using the latest data consistent with MOD-010 and MOD-012, including items represented in the Corrective Action Plan, representing projected System conditions, and that the models represent the required information in accordance with Requirement R1	
Central Maine Power Company	R1.1.1 Make this read "Existing Facilities and Resources" so that it will be a lead in to the changes proposed for 1.1.6. R1.1.2 This type of event is sufficiently addressed within the existing testing requirements (P6) and therefore should be eliminated , beyond that such outages are reviewed and approved on an operational basis and should not be included in a planning standard. During known outages for equipment upgrades or repairs there may be some increased exposure to load loss, which should be recognized as an acceptable exposure. In the event that this requirement is maintained please change six months to one year. 1.1.6 Resources may not be exclusively sources supplying load. Therefore the reference should not involve load. The focus should be on changes to resources and "resources required to supply load" should be replaced with "New planned Resources and changes to existing Resources"We suggest NERC develops a definition for "resource" or use the following definition found in NPCC Glossary of Terms, Document A-7: Resource - Resource refers to the total contributions provided by supply-side and demand-side facilities and/or actions. Supply-side facilities include utility and non-utility generation and purchases from neighboring systems. Demand-side facilities include measures for reducing load, such as conservation, demand management, and interruptible load. ADD 1.2 The standard is referring to requirements for sensitivity and other issues without a reference to base assumptions. The standard must describe base assumptions. M1 It is not practical to retain system model information in a hard copy form. This provision should be dropped. D.1.1.4 Data Retention: The Transmission Planner and the Planning Coordinator may not be using the same software. If both are required to store the data, do they both have to have the software to use the data? Can this be changed to an "or" such that one of them must retain the data and it can be up to them as to who is responsible for data retention.
ISO New England	1. R1.1.1 Make this read "Existing Facilities and Resources" so that it will be a lead in to the changes proposed for 1.1.6. 2. R1.1.2 This type of event is sufficiently addressed within the existing testing requirements (P6) and therefore should be eliminated , beyond that such outages are reviewed and approved on an operational basis and should not be included in a planning standard. During known outages for equipment upgrades or repairs there may be some increased exposure to load loss, which should be recognized as an acceptable exposure. In the event that this requirement is maintained please change six months to one year. 3. 1.1.6.. Resources may not be exclusively sources supplying load. Therefore the reference should not involve load. The focus should be on changes to resources and "resources required to supply load" should be replaced with "New planned Resources and changes to existing Resources"We suggest NERC develops a definition for "resource" or use the following definition found in NPCC Glossary of Terms, Document A-7: Resource Resource refers to the total contributions provided by supply-side and demand-side facilities and/or actions. Supply-side facilities include utility and non-utility generation and purchases

Organization	Comments for Question 1
	from neighboring systems. Demand-side facilities include measures for reducing load, such as conservation, demand management, and interruptible load. 4. ADD 1.2 The standard is referring to requirements for sensitivity and other issues without a reference to base assumptions. The standard must describe base assumptions. 5. M1It is not practical to retain system model information in a hard copy form. This provision could be dropped. 6. D.1.1.4 Data Retention: The Transmission Planner and the Planning Coordinator may not be using the same software. If both are required to store the data, do they both have to have the software to use the data? Can this be changed to an "or" such that one of them must retain the data and it can be up to them as to who it is.
Response: 1. The SDT believes that the "and Resources" is not needed as a lead in to Requirement R1, part 1.1.6 since both Requirement R1, parts 1.1.1 and 1.1.6 are directly under Requirement R1, part 1.1. No change made. 2. The SDT disagrees since multiple outages may be taken during the same time period under Requirement R1, part 1.1.2, thus this situation may be worse than only having two Contingencies as noted in P6. The SDT believes that all outages should be modeled to ensure the System reliability during the outage duration. If a Transmission element outage occurs during a specified time, then the new base case for that time period would result with that element out of service pre-Contingency. See Requirement R2, part 2.1.3 for additional details concerning studies required with known outages. No change made. 3. The SDT agrees that this requirement may not be exclusively sources supplying Load. As an example, Demand Side-Management (DSM) may be used. The SDT has made clarifying change to Requirement R1, part 1.1.6 based on industry comments. **R1, part 1.1.6** - Resources (supply or demand side) required for Load 4. The SDT believes that the "base case conditions" should be defined by the entity performing the study. Sensitivity studies are performed to provide insight into the impacts of potential variations of assumptions in studies. The SDT therefore declines to make the change as suggested. 5. Since Measure M1 states that either electronic OR hard copy format is required, the SDT believes that no changes are required since either of the formats is acceptable. 6. The SDT believes that both the Transmission Planner and Planning Coordinator have this responsibility. Therefore the SDT believes that the existing language is adequate and that no changes are required.	
United Illuminating	R1.1.1 Make this read "Existing Facilities and Resources" so that it will be a lead in to the changes proposed for 1.1.6. R1.1.2 This type of event is sufficiently addressed within the existing testing requirements (P6) and therefore should be eliminated , beyond that such outages are reviewed and approved on an operational basis and should not be included in a planning standard. During known outages for equipment upgrades or repairs there may be some increased exposure to load loss, which should be recognized as an acceptable exposure. In the event that this requirement is maintained please change six months to one year. 1.1.6.. Resources may not be exclusively sources supplying load. Therefore the reference should not involve load. The focus should be on changes to resources and "resources required to supply load" should be replaced with "New planned Resources and changes to existing Resources"We suggest NERC develops a definition for "resource" or use the following definition found

Organization	Comments for Question 1
	in NPCC Glossary of Terms, Document A-7: Resource Resource refers to the total contributions provided by supply-side and demand-side facilities and/or actions. Supply-side facilities include utility and non-utility generation and purchases from neighboring systems. Demand-side facilities include measures for reducing load, such as conservation, demand management, and interruptible load. ADD 1.2 The standard is referring to requirements for sensitivity and other issues without a reference to base assumptions. The standard must describe base assumptions.
Response: 1. The SDT believes that the "and Resources" is not needed as a lead in to Requirement R1, part 1.1.6 since both Requirement R1, parts 1.1.1 and 1.1.6 are directly under Requirement R1, part 1.1. No change made. 2. The SDT disagrees since multiple outages may be taken during the same time period under Requirement R1, part 1.1.2, thus this situation may be worse than only having two Contingencies as noted in P6. The SDT believes that all outages should be modeled to ensure the System reliability during the outage duration. If a Transmission element outage occurs during a specified time, then the new base case for that time period would result with that element out of service pre-Contingency. See Requirement R2, part 2.1.3 for additional details concerning studies required with known outages. No change made. 3. The SDT agrees that this requirement may not be exclusively sources supplying Load. As an example, Demand Side-Management (DSM) may be used. The SDT has made clarifying change to Requirement R1, part 1.1.6 based on industry comments. **R1, part 1.1.6** - Resources (supply or demand side) required for Load 4. The SDT believes that the "base case conditions" should be defined by the entity performing the study. Sensitivity studies are performed to provide insight into the impacts of potential variations of assumptions in studies. The SDT therefore declines to make the change as suggested.	
Ameren	R1.1.2: Inclusion of outages of generation or transmission facilities with a duration of at least 6 months in the models is too restrictive. An outage duration of 1 month would be more appropriate for inclusion in the seasonal peak and off-peak models. R1.1.5: It is not clear from the wording how Firm Transmission Service and Interchange schedules should be considered, or whether the status quo is adequate. A given generating facility may have transmission service commitments which exceed the facility's generating capability. VSL: Given the annual cycle of collecting, revising and submitting system model data under MOD-010 and MOD-012, there could be a lag of several months between receipt of updated data prior to having this data included in the next round of system models. The TP/PC should not be penalized for this.
Response: 1. The SDT believes that the 6 month outage duration required for modeling outages is sufficient. However a utility may exceed this requirement by having lower outage duration if they choose. The outages should be modeled in the appropriate cases whether the outages occur in the spring, summer, fall, winter, etc. 2. The Standard is requiring the modeling of known commitments for Firm Transmission Service and Interchange schedules as a means of stressing the transmission system pre-contingency. If a given generator is reserving transmission capability beyond the capability of the resources to deliver, then someone must have evaluated the system based on a set of assumptions that identified that the system is capable of delivering the service, which would be consistent with this requirement. 3 The System models should be updated in accordance with MOD-010 & MOD-012. No change made.	

Organization	Comments for Question 1
Xcel Energy	R1.1.4 could be interpreted that the standard requires forecasting reactive load. However, most entities forecast demand (MW) and apply a power factor(s) to calculate reactive load. Therefore, please change "real and reactive load forecast" to "forecasted demand and power factor" so it is clear that forecasting reactive load is not required.
Response: Requirement R1, part 1.1.4 states that a reactive forecast is required. Using a power factor is one method that may be used in calculating this reactive forecast.	
SERC Planning Standards Subcommittee	R1: MOD-010 and 012 are not directly applicability to the PC. References to other processes (e.g. tariff requirements or transmission owner agreements) that are utilized to provide this data may be desirable, but do not satisfy R1 as presently written.VSL: In the Moderate and Severe VSL, insert "responsible entity's" in front of the term "System model."
SERC Dynamics Review Subcommittee (DRS)	R1: MOD-010 and 012 are not directly applicable to the PC. References to other processes (e.g. tariff requirements or transmission owner agreements) that are utilized to provide this data may be desirable, but do not satisfy R1 as presently written.VSL: In the Moderate and Severe VSL, insert "responsible entity's" in front of the term "System model."

Response: The MOD-010 and MOD-012 standards are not directly applicable to the Planning Coordinator; however the Planning Coordinator has to utilize data provided by others such as that provided in accordance with MOD-010 and -012.

The SDT agrees and will insert this additional wording in the moderate and severe VSLs for Requirement R1.

R1 VSL	The responsible entity's System model failed to represent one of the Requirement R1, parts 1.1.1 through 1.1.6.	The responsible entity's System model failed to represent two of the Requirement R1, parts 1.1.1 through 1.1.6. OR The responsible entity's System model did not use the latest data consistent with the data provided in accordance with the MOD-010 and MOD-012 standards and other sources, including items represented in the Corrective Action Plan.	The responsible entity's System model failed to represent three of the Requirement R1, parts 1.1.1 through 1.1.6.	The responsible entity's System model failed to represent four or more of the Requirement R1, parts 1.1.1 through 1.1.6. OR The responsible entity's System model did not represent projected System conditions as described in Requirement R1.

Manitoba Hydro	Recommend removing "and shall represent projected System Conditions" from R1. This is already clearly contained in R1.1.1

Organization	Comments for Question 1
	through R1.1.6. If the drafting team knows of other projected system conditions then they should be listed in R1.1. "The System Model did not represent projected System Conditions as described in Requirement R1 should be removed from the severe VSL column. By failing to represent 4 or more of the requirements in 1.1.1 through 1.1.6, projected System Conditions are not represented.
Response: The SDT disagrees and believes that there may need to be additional information contained in the models that is not specifically noted under Requirement R1.1. The goal is for the responsible entity to build a realistic simulation for the System models. The SDT disagrees and believes that the second condition under the Severe VSL covers additional items under Requirement R1 itself that are not covered under Requirement parts 1.1.1 thru 1.1.6.	
Northeast Power Coordinating Council--RSC	1. Requirement 1.1.1: Replace "Existing Facilities" with "Existing Facilities and Resources" so that it will be a lead in to the changes proposed for 1.1.6. 2. Requirement 1.1.2 "Consideration of known outages should not be included in a planning assessment. Such outages are coordinated by operations and are only permitted if the system can be operated reliably, where assumptions may be different than those used in planning assessments. Including this as a requirement effectively means that the system must be designed to withstand three outages. In those cases where safety, or reliability, or both are a concern by long duration outages (e.g., more than one year), temporary Operating Protocols are implemented to mitigate their impact. During known outages for equipment upgrades or repairs there may be some increased exposure to load loss, which should be recognized as an acceptable exposure. If this requirement must be kept, the outages with duration in excess of a year should be considered, rather than those of six months. This type of event is sufficiently addressed within the existing testing requirements (P6) and therefore should be eliminated, beyond that such outages are reviewed and approved on an operational basis and should not be included in a planning standard. Known or "known planned" outages will not necessarily fall in the operations timeframe, and as such may not be subject to approval by operations departments. This is especially so given the fact that the earliest start date for Year One is 12 months beyond the current year. 3. Requirement 1.1.5 Interchange. Interchange usually refers to non-firm short-term economic transactions that often take place between Balancing Authorities to take advantage of their respective resources surplus (i.e. not needed for local reliability.) However, such transactions should not be modeled in the base case system representation, unless their neutrality to system reliability has been clearly demonstrated. For example, economic interchanges between New England and PJM through New York have an impact on the New York transmission system that may, at times, pose reliability constraints on the operation of the New York system. 4. Requirement 1.1.6 what are "resources required to supply load, gens, HVDC, tie lines? Resources may not be exclusively sources supplying load. The focus should be on changes to resources. "Resources required to supply Load" should be replaced with New planned Resources and changes to existing Resources. NPCC suggests NERC develops a definition for "resource" or use the following definition found in NPCC Glossary of Terms, Document A-7: Resource Resource refers to the total contributions provided by supply-side and demand-side facilities and/or actions. Supply-side facilities include utility and non-utility generation and purchases from neighboring systems. Demand-side facilities include measures for reducing load, such as conservation, demand management, and interruptible load.A

Organization	Comments for Question 1
	5. Requirement 1.2 should be added to address the base assumptions for sensitivity and other issues requirements. 6. For Measure M1: Elaborate on "hard copy format". Does that entail maintaining a hard copy of the system model? It is impractical to retain system model information in a hard copy format. This provision should be dropped.
Response: 1.The SDT believes that the "and Resources" is not needed as a lead in to Requirement R1, part 1.1.6 since both Requirement R1, parts 1.1.1 and 1.1.6 are directly under Requirement R1, part 1.1. 2. The SDT disagrees and believes that all outages should be modeled to ensure System reliability during the outage duration. Since multiple outages may be taken during the same time period under Requirement R1, part 1.1.2, this situation may be worse than only having two Contingencies as noted in P6. If a Transmission element outage occurs during a specified time, then the new base case for that time period would result with that element out of service pre-Contingency. See Requirement R2, part 2.1.3 for additional details concerning studies required with known outages. No change made. 3. The SDT disagrees and believes that known firm Transmission commitments and interchange should be modeled and can affect the Transmission System reliability. No change made. 4. The SDT agrees that this requirement may not be exclusively sources supplying Load. As an example, Demand Side-Management (DSM) may be used. The SDT has made a clarifying change to Requirement R1, part 1.1.6 based on industry comments. **R1, part 1.1.6** - Resources (supply or demand side) required for Load 5. The SDT believes that the "base case conditions" should be defined by the entity performing the study. Sensitivity studies are performed to provide insight into the impacts of potential variations of assumptions in studies. The SDT therefore declines to make the change as suggested. 6. Since Measure M1 states that either electronic OR hard copy format is required, the SDT believes that no changes are required since either of the formats is acceptable. An example of a hard copy of a System model is having printouts of each individual bus showing Load, Transmission line, generator, capacitors, etc., connected to that bus with associated impedances, ratings, etc.	
Hydro-Québec TransEnergie (HQT)	Requirement 1.1.2 Consideration of known outages should not be included in a planning assessment. Such outages are coordinated by operations and are only permitted if the system can be operated reliably, where assumptions may be different than those used in planning assessments. Including this as a requirement effectively means that the system must be designed to withstand three outages. In those cases where safety, or reliability, or both are a concern by long duration outages (e.g., more than one year), temporary Operating Protocols are implemented to mitigate their impact. If this requirement must be kept, the outages with duration in excess of a year should be considered, rather than those of six months. Requirement 1.1.5 Interchange. Interchange usually refers to non-firm short-term economic transactions that often take place between Balancing Authorities to take advantage of their respective resources surplus (i.e. not needed for local reliability.) However, such transactions should not be modeled in the base case system representation, unless their neutrality to system reliability has been clearly demonstrated. For example, economic interchanges between New England and PJM through New York have an impact on the New York transmission system that may, at times, pose reliability constraints on the operation of the New York system. Requirement 1.1.6 what are "resources required to supply load" " gens, HVDC, tie lines" HQT, as does NPCC, suggests NERC

Organization	Comments for Question 1
	develops a definition for "resource" or use the following definition found in NPCC Glossary of Terms, Document A-7: Resource - Resource refers to the total contributions provided by supply-side and demand-side facilities and/or actions. Supply-side facilities include utility and non-utility generation and purchases from neighboring systems. Demand-side facilities include measures for reducing load, such as conservation, demand management, and interruptible load.

Response: 1. The SDT disagrees and believes that all outages should be modeled to ensure System reliability during the outage duration. If a Transmission element outage occurs during a specified time, then the new base case for that time period would result with that element out of service pre-Contingency. See Requirement R2, part 2.1.3 for additional details concerning studies required with known outages.

The SDT believes that the 6 month duration is appropriate. No change made.

2. The SDT disagrees and believes that known firm Transmission commitments and interchange should be modeled and can affect the Transmission System reliability. No change made.

3. The SDT agrees that this requirement may not be exclusively sources supplying Load. As an example, Demand Side-Management (DSM) may be used. The SDT has made a clarifying change to Requirement R1, part 1.1.6 based on industry comments.

R1, part 1.1.6 - Resources (supply or demand side) required for Load

Midwest ISO	Requirement R1: The Planning Coordinator may begin model building using provisions from tariff and/or other agreements such as its Transmission Owners agreement. While the data may be consistent with that provided in Mod 10 and 12, there may not be a direct correlation between the two sets of data. This could become burdensome for a Planning Coordinator to make that correlation between the two. Suggest the following wording for R1.Each Transmission Planner and Planning Coordinator shall maintain System models within its respective area for performing the studies needed to complete its Planning Assessment. The models shall reflect data consistent with that provided in accordance with the MOD-010 and MOD-012 standards and/or data that is provided in accordance with tariff or transmission owner agreements. The models may be supplemented by other sources as needed including items represented in the Corrective Action Plan, and shall represent projected System conditions Requirement R1.1.5: In the Moderate and Severe VSL, insert "responsible entity's" in front of the term "System Models" so it reads as such: "The responsible entity's System model did not"

Response: 1. The SDT does not believe that the proposed language adds any clarity. No change made.

The SDT agrees and will insert this additional wording in the moderate and severe VSLs for Requirement R1.

R1 VSL	The responsible entity's System model failed to represent one of the Requirement R1, parts 1.1.1 through 1.1.6.	The responsible entity's System model failed to represent two of the Requirement R1, parts 1.1.1 through 1.1.6. OR	The responsible entity's System model failed to represent three of the Requirement R1, parts 1.1.1 through 1.1.6.	The responsible entity's System model failed to represent four or more of the Requirement R1, parts 1.1.1 through 1.1.6. OR

Organization	Comments for Question 1
	The responsible entity's System model did not use the latest data consistent with the data provided in accordance with the MOD-010 and MOD-012 standards and other sources, including items represented in the Corrective Action Plan. The responsible entity's System model did not represent projected System conditions as described in Requirement R1.
FRCC Transmission Working Group	Several questions on the details:- R1 requires the maintenance of system models for the purpose of studies and establishes that these models should be updated with the latest data from various sources. Read in context this seems to require that a PA/TP has models, and they are updated either on some sort of regular schedule, for example quarterly or before the start of a study, and use the latest information at the time they are updated. Is this a correct understanding of the requirement? - R1 states that the model should be "..supplemented by other sources as needed, including items represented in the corrective action plan"? Read in context with the overall requirement this allows for projects that are in the corrective action plan to be added to the model as needed, is this the correct understanding? -R1 requires the model to represent "projected system conditions" which include in the list below "Known Commitments for Firm Transmission Service" and "Load Forecast". This seems to require that your known firm transmission service commitments are matched to their corresponding customers load forecast and expected operation profile, relative to load level in the case. Or phrased another way, the model should represent the service and load as they would be expected to operate at the load level in the case. Is this a correct understanding? Comments: With regard to the Moderate Violation Severity Level, what if the entity does not have the "latest" data but the entity did include items in the corrective action plan? Should the "and" between MOD-010 and MOD-012 be an "OR" and have the "AND" be for the High VSL?Not all system models can represent all "Known commitments for Firm Transmission Service and Interchange". The SDT needs to add "that are expected to be utilized." to the requirement. 1.1.6 Recommend changing to "Resources expected to supply Load"

Response: 1. The SDT agrees with your understanding. The System models should be updated in accordance with MOD-010 & MOD-012.

2. Yes, this is the correct understanding. Items from the Corrective Action Plan should be included in the models as noted under Requirement R1.

3. The SDT agrees with your understanding.

4. If the entity does not have the latest data, but did include items in the Corrective Action Plan, then the SDT believes the entity would be in violation of a Moderate Severity level. The SDT believes that the existing language is correct. The SDT believes that all System models should represent all known commitments for Firm Transmission Service and Interchange. The SDT does not believe that the proposed language adds any clarity. No change made.

5 The SDT realizes that this requirement may not be exclusively sources supplying Load. As an example, Demand Side-Management (DSM) may be used. The SDT

Organization	Comments for Question 1
has made a clarifying change to Requirement R1, part 1.1.6 based on industry comments. **R1, part 1.1.6** - Resources (supply or demand side) required for Load	
National Grid	Sub-Requirement 1.1.1: Replace "Existing Facilities" with "Existing Facilities and Resources" so that it will be a lead in to the changes proposed for 1.1.6. Sub-Requirement 1.1.2: This type of event is sufficiently addressed within the existing testing requirements (P6) and therefore should be eliminated, beyond that such outages are reviewed and approved on an operational basis and should not be included in a planning standard. During known outages for equipment upgrades or repairs there may be some increased exposure to load loss, which should be recognized as an acceptable exposure. In the event that this requirement is maintained please change six months to one year. Sub-Requirement 1.1.6: Resources may not be exclusively sources supplying load. Therefore the reference should involve load. The focus should be on changes to resources. "Resources required to supply Load" should be replaced with "New planned Resources and changes to existing Resources"It is suggested that NERC develop a definition for "resource" or use the following definition found in NPCC Glossary of Terms, Document A-7: Resource - Resource refers to the total contributions provided by supply-side and demand-side facilities and/or actions. Supply-side facilities include utility and non-utility generation and purchases from neighboring systems. Demand-side facilities include measures for reducing load, such as conservation, demand management, and interruptible load. ADD 1.2 The standard is referring to requirements for sensitivity and other issues without a reference to base assumptions. The standard must describe base assumptions. Measure M1: Elaborate on "hard copy format". Does that entail maintaining a hard copy of the system model? It is impractical to retain system model information in a hard copy format. This provision should be dropped.
Response: 1 The SDT believes that the "and Resources" is not needed as a lead in to Requirement R1, part 1.1.6 since both Requirement R1, parts 1.1.1 and 1.1.6 are directly under Requirement R1, part 1.1. 2. The SDT disagrees since multiple outages may be taken during the same time period under Requirement R1, part 1.1.2, thus this situation may be worse than only having two Contingencies as noted in P6. The SDT believes that all outages should be modeled to ensure the System reliability during the outage duration. If a Transmission element outage occurs during a specified time, then the new base case for that time period would result with that element out of service pre-Contingency. See Requirement R2, part 2.1.3 for additional details concerning studies required with known outages. 3. The SDT agrees that this requirement may not be exclusively sources supplying Load. As an example, Demand Side-Management (DSM) may be used. The SDT has made a clarifying change to Requirement R1, part 1.1.6 based on industry comments. **R1, part 1.1.6** - Resources (supply or demand side) required for Load 4 The SDT believes that the "base case conditions" should be defined by the entity performing the study. Sensitivity studies are performed to provide insight into the impacts of potential variations of assumptions in studies. The SDT therefore declines to make the change as suggested. 5. Since Measure M1 states that either electronic OR hard copy format is required, the SDT believes that no changes are required since either of the formats is acceptable. An example of a hard copy of a System model is having printouts of each individual bus showing Load, Transmission line, generator, capacitors, etc.,	

Organization	Comments for Question 1
connected to that bus with associated impedances, ratings, etc.	
Lakeland Electric	Suggesting language "known planned" outages and in place of "known" outages Suggesting language "real & reactive resources" in place of "Resources" "within its respective area", how about ties?
Response: The SDT does not believe that the proposed language adds any clarity. No change made. The SDT has made clarifying change to Requirement R1, part 1.1.6 based on industry comments since this requirement may not be exclusively sources supplying Load. **R1, part 1.1.6** - Resources (supply or demand side) required for Load Tie Lines should be modeled as required to achieve conformance with the MOD standards.	
Exelon Transmission Planning	The feedback from Round 3 of comments is appreciated, but there is still a concern that the inclusion of known (or "expected") transfers is to be studied as a sensitivity. We believe that the base case should already contain the most likely ("expected") transfer scenario and a sensitivity case would be studied with a less likely transfer scenario. As written it appears that the standard would require that the base case would contain no transfers or some transfer level other than what is "expected". It is suggested the term "Expected transfers" be changed to "Additional transfers beyond base case conditions". The use of this term will provide clarity between what is to be modeled in the basecase and what is to be studied as a sensitivity case. There are a number of overlapping requirements with this standard and other standards in various stages of development, such as voltage stability criteria, protection system redundancy, relay loadability, and protection system contingencies that could cause non-compliance with several standards for a single infraction. Suggest removing overlapping requirements be removed from R6, P5 from Table 1, R3.3.3 and R3.3.1, respectively.
Response: 1. Requirement R1, part 1.1.5 requires that known commitments for Firm Transmission Service and Interchange be modeled. However the sensitivity analysis under Requirement R2, parts 2.1.4 and 2.4.3 require that at least one condition not already in the studies be varied by a sufficient amount in order to stress the System by a measurable change in performance. The SDT does not believe that the proposed language adds any clarity. No change made 2. As for the double jeopardy comment - From the ERO Rules of Procedure, Appendix 4B- Sanction Guidelines, Section 3.10 Multiple Violations: "Strictly speaking, NERC or the regional entity can determine and levy a separate penalty or sanction, or direct remedial action, upon a violator for each individual violation. However, in instances of multiple violations related to a single act or common incidence of noncompliance, NERC or the regional entity will generally determine and issue a single aggregate penalty, sanction, or remedial action directive bearing reasonable relationship to the aggregate of the related violations. The penalty, sanction, or remedial action will not be that determined individually for the least serious of the violations; it will generally be at least as large or expansive as what would be called for individually for the most serious of the violations." 3. The SDT believes that some overlap is necessary but the SDT has tried to minimize this as much as possible. Requirement R6 deals with defining and documenting certain items such as Cascading, voltage instability, and uncontrolled islanding. Note that Requirement R6 has been clarified to remove "outages" from "Cascading outages". P5 is a multiple Contingency caused by loss of a single Protection System. R3.3.1 deals with the removal of elements that the Protection System and other	

Organization	Comments for Question 1
automatic controls are expected to disconnect. However the SDT has clarified the relay loadability issue in Requirement R3, part 3.3.3 by stating how these are handled in the simulations when these limits are exceeded. **R3.3.3**. Trip Transmission elements when relay loadability limits are exceeded **R6**. Each Transmission Planner and Planning Coordinator shall define and document, within its Planning Assessment, any criteria or methodology used in the analysis to identify System instability for conditions such as Cascading , voltage instability, or uncontrolled islanding.	
Florida Municipal Power Agency, and its Member Cities	The MOD standards for load forecasts (e.g., MOD-016 through 021) do not require submission of a reactive load forecast from the LSEs and RPs; therefore, why is it expected that the TPs and PCs use a reactive forecast that is not provided? From the auditor's perspective, what is expected and acceptable for System models representing reactive load forecasts? Suggested change: 1.1.4 Real Load forecasts and future reactive Load assumptions? Not all system models can represent all "Known commitments for Firm Transmission Service and Interchange". The SDT needs to add "that are expected to be utilized." to the requirement.
Response: 1. Requirement R1, part 1.1.4 states that a reactive forecast is required. Using a power factor is one method that may be used in calculating this reactive forecast. The SDT cannot comment on what an auditor may find compliant or non-compliant. No change made. 2. The SDT believes that the existing language is adequate and no further change is required. If you do not have any known Firm Transmission Service as an example, then this fact should just be documented.	
SRC of ISO/RTO	The PC may begin model building using provisions from tariff or agreements such as its Transmission Owners agreement. While the data may be consistent with that provided in MOD 10 and 12, there may not be a direct correllation. The following wording is suggested for R1.R1. Each Transmission Planner and Planner Coordinator shall maintain System Models within its respective area for performing the studies needed to complete its Planning Assessment. The models shall reflect data consistent with that provided in accordance with the MOD-010 and MOD-012 standards and/or data that is provided in accordance with tariff or transmission owner agreements. The models may be supplemented by other sources as needed including items represented in Corrective Action Plans, and shall represent projected System conditions. AESO does not comment on VSLs or VRFs.
Response: 1. The SDT believes that this is adequate as long as the data remains consistent with that provided in MOD-010 and MOD-012.	
US Bureau of Reclamation	The requirement for the model is not clearly stated. Based on the requirement 2, the models must prove the Corrective Action Plan items developed in 2.7.1. The actions in 2.7.1 are developed by the Transmission Planner or Planning Authority ("List System deficiencies and associated actions needed to achieve required System performance"). Requirement 1 however requires that the model "shall represent projected System conditions". Is the intent of the modelling to demonstrate system performance based on changes proposed by the Tranmission Owners and Generator Owners. Or is it the intent to have the Transmission Planner and Planning Authority develop proposals through system studies that the Transmission Owners and Generator Owners must implement?

Organization	Comments for Question 1
Response: Requirement R1 requires that Corrective Action Plans be included in the models. Requirement R1 includes items represented in the Corrective Action Plans along with represented projected System conditions. The intent of the modeling is to ensure that entities are planning reliable Transmission Systems and have sufficient time to get needed plans in service to continue meeting the TPL-001-1 requirements. The SDT believes that these actions are needed in the planning horizons in order to have a reliable Bulk Electric System. No change made.	
Oncor Electric Delivery	The six month limitation of requirement 1.1.2. "Known outage(s) of generation or Transmission Facility(ies) with a duration of at least six months." is applicable to near-term and long-term Planning studies, but makes the new TPL-001 standard non-extendible to the near-term operational planning studies (next month, next week, or next day). During near-term operational planning periods, it is essential to include the impacts of ALL known outages in the operational analysis.It should be made clear that the TPL-001 Standard is not applicable to the Operational Planning Horizon. This non-applicability points out the need for a separate (but equal in scope) operational planning analysis standard.There appears to be a lack of clarity related to relay loadability and protection system redundancy. Relay loadability is handled in greater detail (as it should be) under the proposed PRC-023 standard, so any reference here should only be a placeholder. Similarly, the issues of redundancy are being addressed in more detail in a new proposed standard on protection system reliability. 1.1.2 ? The requirement will result in the need to evaluate construction sequence in planning studies. 1.1.6 ? What are "resources required to supply load gens, HVDC, tie lines" NPCC suggests NERC develops a definition for "resource" or use the following definition found in NPCC Glossary of Terms, Document A-7: Resource Resource refers to the total contributions provided by supply-side and demand-side facilities and/or actions. Supply-side facilities include utility and non-utility generation and purchases from neighboring systems. Demand-side facilities include measures for reducing load, such as conservation, demand management, and interruptible load.1.1.6 Resources are not serving load but are supporting network operations. ADD 1.1.7 The standard is referring to requirements for sensitivity and other issues without a reference to base cases. It is recommended that each Region have a document that defines what constitutes "base case" conditions. M1What does it mean to have a hardcopy of a system model? 1.4 Data Retention: The Transmission Planner and the Planning Coordinator may not be using the same software. If both are required to store the data, are they both required to have identical software to use the data? We recommend that the entities have an option to determine which of the two entities retains the information.
Response: 1. The SDT agrees that this standard does not apply to the operating planning horizon. Please see the NERC TOP standards, as an example, for additional information concerning operational planning. The SDT believes that relay redundancy is best handled in Project 2009-07: Reliability of Protection Systems. However, the SDT has clarified the relay loadability issue in Requirement R3, part 3.3.3 by stating how these are handled in the simulations when these limits are exceeded. **R3.3.3**. Trip Transmission elements when relay loadability limits are exceeded	

Organization	Comments for Question 1
2. The SDT agrees that evaluation of construction sequences would have to be performed in order to successfully model outages as required. 3. The SDT agrees that this requirement may not be exclusively sources supplying Load. As an example, Demand Side-Management (DSM) may be used. The SDT has made a clarifying change to Requirement R1, part 1.1.6 based on industry comments. **R1, part 1.1.6** - Resources (supply or demand side) required for Load 4. The SDT believes that the "base case conditions" should be defined by the entity performing the study. Sensitivity studies are performed to provide insight into the impacts of potential variations of assumptions in studies. The SDT therefore declines to make the change as suggested. 5. Since Measure M1 states that either electronic OR hard copy format is required, the SDT believes that no changes are required since either of the formats is acceptable. An example of a hard copy of a system model is having printouts of each individual bus showing Load, Transmission line, generator, capacitors, etc., connected to that bus with associated impedances, ratings, etc. 6. The SDT believes that both the Transmission Planner and Planning Coordinator have this responsibility. Therefore, the SDT believes that the existing language is adequate and that no changes are required.	
TIS	The six month limitation of requirement 1.1.2. "Known outage(s) of generation or Transmission Facility(ies) with a duration of at least six months." Is is applicable to near-term and long-term Planning studies, but makes the new TPL-001 standard non-extensible to the near-term operational planning studies (next month, next week, or next day). During near-term operational planning periods, it is essential to include the impacts of ALL known outages in the operational analysis.It should be made clear that the TPL-001 Standard is not applicable to the Operational Planning Horizon. This points out the need for a separate (but equal in scope) operational planning analysis standard. There appears to be a double-jeopardy issue related to relay loadability and protection system redundancy. Relay loadability is handled in greater detail (as it should be) under the proposed PRC-023 standard, so any reference here should only be a placeholder. Similarly, the issues of redundancy are being addressed in more detail in a new proposed standard on protection system reliability.
Response: 1. The SDT agrees that this standard does not apply to the operating planning horizon. See the NERC TOP standards, as an example, for additional information concerning operational planning. 2. As for the double jeopardy comment - From the ERO Rules of Procedure, Appendix 4B- Sanction Guidelines, Section 3.10 Multiple Violations: "Strictly speaking, NERC or the regional entity can determine and levy a separate penalty or sanction, or direct remedial action, upon a violator for each individual violation. However, in instances of multiple violations related to a single act or common incidence of noncompliance, NERC or the regional entity will generally determine and issue a single aggregate penalty, sanction, or remedial action directive bearing reasonable relationship to the aggregate of the related violations. The penalty, sanction, or remedial action will not be that determined individually for the least serious of the violations; it will generally be at least as large or expansive as what would be called for individually for the most serious of the violations." 3. The TPL draft is silent on the issue of redundancy. However the SDT has clarified the relay loadability issue in Requirement R3, part 3.3.3 by stating how these are handled in the simulations when these limits are exceeded. **R3.3.3**. Trip Transmission elements when relay loadability limits are exceeded	

Organization	Comments for Question 1
TVA System Planning	TVA agrees with the changes made in R1 - especially the minimum 6 month duration required for outages to be modeled.In R1.1.5, how should partial path transmission service be accounted for in the known commitments for firm transmission service and interchange? VSL: In the Moderate and Severe VSL, insert "responsible entity's" in front of the term "System model" after the "or".

Response: 1. The SDT believes that you should plan for known commitments. Therefore, the part of the partial path that is known should be modeled.

2. The SDT agrees and will insert this additional wording in the moderate and severe VSLs for R1.

R1 VSL	The responsible entity's System model failed to represent one of the Requirement R1, parts 1.1.1 through 1.1.6.	The responsible entity's System model failed to represent two of the Requirement R1, parts 1.1.1 through 1.1.6. OR The responsible entity's System model did not use the latest data consistent with the data provided in accordance with the MOD-010 and MOD-012 standards and other sources, including items represented in the Corrective Action Plan.	The responsible entity's System model failed to represent three of the Requirement R1, parts 1.1.1 through 1.1.6.	The responsible entity's System model failed to represent four or more of the Requirement R1, parts 1.1.1 through 1.1.6. OR The responsible entity's System model did not represent projected System conditions as described in Requirement R1.

American Transmission Company	We propose the following changes and questions: R1 We interpret that "within their respective areas" refers the geographic footprint of the TP or PC transmission system. We propose clarifying that "within their respective area" does not require the inclusion of remote generation or load (metering) buses that are within the declared Balancing Authority area, but may be outside and separate from the TP or PC geographic footprint. R1.1.2 We suggest that this requirement be removed because the "known outage(s)" are only to be included in the models when P1 events are simulated, as specified in R2.1.3. We suggest that the intent of this requirement can be more simply handled by stating in R2.1.3 that "known outages be simulated along with P1 events for the System peak or Off-Peak conditions when the outages are scheduled to occur". R1.1.3 Add the qualification of "for the years defined in R2". R1.1.6 We interpret that "Resources required" allows the inclusion of fictional generators in the models when they are needed to

Organization	Comments for Question 1
	make future normal system cases solve. If this is not the intended interpretation, then we suggest modifying the wording to make the desired interpretation more clear. M1 " Revise M1 to indicate that each responsible entity must provide evidence with the added qualification, ". . . it is maintaining System models within its respective area, using the latest . . ."
Response: 1. The SDT believes that the "within their respective area" does refer to the Transmission Planner's or Planning Coordinator's geographic footprint. The SDT does not believe that the proposed language adds any clarity. No change made. 2. The SDT disagrees since multiple outages may be taken during the same time period under Requirement R1, part 1.1.2. The SDT believes that all outages should be modeled to ensure the System reliability during the outage duration. If a Transmission element outage occurs during a specified time, then the new base case for that time period would result with that element out of service pre-Contingency. See Requirement R2, part 2.1.3 for additional details concerning studies required with known outages. 3. The requirements in TPL-001-1 are all inter-related so no change is required. 4. The SDT believes that this requirement includes any fictional generators that may be needed to match up generation and Load. The SDT has made a clarifying change to Requirement R1, part 1.1.6. **R1, part 1.1.6** - Resources (supply or demand side) required for Load 5. The SDT agrees that adding "within its respective area" would help clarify this measure. The SDT has modified Measure M1 to include this new language. **M1**. Each Transmission Planner and Planning Coordinator shall provide evidence, in electronic or hard copy format, that it is maintaining System models within its respective area, using the latest data consistent with MOD-010 and MOD-012, including items represented in the Corrective Action Plan, representing projected System conditions, and that the models represent the required information in accordance with Requirement R1.	
PJM	Consider rewording R1.1 to, -Consistent with the desired year and season a system model shall represent-. This removes some ambiguity about what to include in each model. Possible confusion existed about the multitude of models and what needed to be in each of them. These words deal with each model separately.
Response: The SDT does not believe that the proposed language adds any clarity. No change made.	

2. Requirement R2 – Please provide any specific comments on the requirement text, VRF, Time Horizon, measure associated with the requirement, data retention associated with the requirement, and/or the VSL associated with the requirement.

Summary Consideration: A number of Commenters requested clarification of on the use of past studies (Part 2.6) either as a supplement to or in place of the annual current year studies (in Parts 2.1 through 2.5). Many also requested that the requirements for Part 2.1 (Near-Term steady state studies) and Part 2.2 (Long-Term steady state studies) be changed from "annual current studies, supplemented by qualified past studies" to "annual current study or qualified past studies".

The SDT reviewed Requirement 2 and Parts 2.1 through 2.5. Only Parts 2.1 and 2.2 require "annual current year study, supplemented by qualified past studies". Parts 2.1 and 2.2 cover steady state studies in the Near-Term and the Long-Term planning horizon, respectively. While the SDT envisions that the standard is flexible enough to allow the use of qualified past studies, the planning assessment cannot be based entirely on past studies. Because steady state analysis is part of the basic planning process, the SDT believes that the steady state portion of the studies covering Year One or year two and year five for the Near-Term Planning Horizon and one of the years in the Long-Term Planning Horizon should be done annually. Qualified past studies can be used to supplement the studies for the remaining study years to support the assessment for the entire planning horizon. Making the change as requested can result in no current-year study being performed. Therefore, the SDT declines to make the change as suggested.

A number of Commenters questioned the need for two distinct study years to support the planning assessment for the Near Term planning horizon, especially in areas with very low Load growth. They requested reducing the requirements for annual current studies to one study to support the Near-Term planning horizon.

The SDT reviewed the requirements and declines to change to one Near-Term study. Load growth may not be the only determination factor for System performance; other examples are addition or retirement of generation. The SDT therefore, believes that, as a minimum to support reliability, Transmission plans are needed for the time frame just after operation planning (Year One or year two), as well as the time frame at the end of the Near-Term (year five) to allow implementation of solutions, which may require longer lead time.

Many Commenters requested clarification of the Load level(s) to be used in an "off-peak" case. One Commenter explained that the NERC glossary defines Off-Peak as those hours or other periods defined by NAESB business practices, contract, agreements, or guides as periods of lower electrical demand and On-Peak as those hours or other periods defined by NAESB business practices, contract, agreements, or guides as periods of higher electrical demand. Therefore, the Commenters pointed out that Off-peak can be ANY Load level less than peak, and, as such, can be confusing.

The SDT notes that the intent of Parts 2.1.2 and 2.4.2 is to assess those System conditions during periods with lower Load levels than peak when the System may show different potential problems than during periods with peak Load level. For example, during light Load conditions, there may be high voltage problems because of the charging in the lightly loaded lines. There could also be thermal overload problems for areas with more generation than Load. The System could have less damping and could result in potential Stability problems. For this reason, it would not be appropriate to eliminate the

requirement to investigate Off-Peak steady state conditions. At the same time, the standard should not be overly prescriptive; therefore, the exact System Off-Peak Load should be specified by the entity performing the study.

Commenters also questioned the need for Off-Peak studies because the System Off-Peak is more likely a Stability issue than a steady state issue, and if System Off-Peak becomes a steady state issue, it can be mitigated through generation re-dispatch. Three Commenters also suggest moving Part 2.1.2 to Part 2.1.4 and treating it as one of the sensitivity analyses.

Based on the need to assess System conditions during periods of lower Load, the SDT believes that it would not be appropriate to move the studies of Off-Peak Load conditions from Parts 2.1.2 or Part 2.4.2 to be included in the sensitivity studies required in Parts 2.1.4 or 2.4.3. Sensitivity studies only need to cover one of the six conditions included in the bullets, and this may not be the one selected by the entity, resulting in no study of Off-Peak conditions being performed.

Many Commenters suggested clarification that for Part 2.1.3 it must be clear that the reference to outage schedules as listed in Part 1.1.2 (which requires modeling of known outage(s) of generation or Transmission Facility(ies) with a duration of at least six months) must be limited to the planning horizon.

Part 2.1.3 is a sub-part of Part 2.1 which is limited by the Near-Term Transmission Planning Horizon so no change is made.

One Commenter suggested that Part 2.1.3 is not needed if the outages in Part 1.1.2 are properly built into the model. Three Commenters suggested clarifying changes.

Part 2.1.3 codifies studies needed to support the Planning Assessment. The SDT intends for Part 2.1.3 to cover known long duration outages, for example, taking a 230 kV Transmission line out of service to rebuild it to operate at 500 kV. These cases are to simulate System conditions with the Facility in question out of service as Category P0 (or N-0). For the next outage, the System performance will need to meet requirements for Category P1. This is not the same as requirements for Category P6, which assumes that the outage for the first Facility would be of shorter duration than 6 months. To provide greater clarity, Part 2.1.3 has been revised.

Many Commenters expressed concerns that the use of the words and phrases, “credible”, “sufficient”, “stressed” conditions and “measurable change” may be too vague for compliance. Many Commenters also state that to include and define sensitivity cases and simulations in the standard, the base case assumptions to be used in the assessments must also be defined.

The SDT notes that it envisions that “credible”, “sufficient”, “stressed” conditions and “measurable change” are to be defined by the responsible Planning Coordinator or Transmission Planner because each System is different. Likewise, the SDT believes that the “base case conditions”, on which to base the sensitivity cases should be defined by the entity performing the study. Sensitivity studies are performed to provide insight into the impacts of potential variations of assumptions in studies.

Some Commenters suggested removing the last bulleted item in the list under Part 2.1.4. (Duration or timing of planned Transmission outages).

The SDT declines to remove the last bullet in Part 2.1.4, "Duration or timing of planned Transmission outages" as a potential sensitivity. The intent of this bullet item is to cover unexpected changes in plans, for example, a potential delay in returning a Transmission line back to service after a planned outage of 6 months or more for rebuilding to a higher capacity line. In this case, the System with the equipment in question out of service would be modeled as P0 (or N-0). For the next outage, the System performance will need to meet requirements for Category P1 and not P6.

Many Commenters also asked whether the (bulleted) list of potential sensitivities in Parts 2.1.4 and 2.4.3 should be the same. Many also expressed concern that Part 2.1.4 (as well as Part 1.1.4) seems to require forecasting reactive Load when most entities forecast demand (MW) and apply a power factor(s) to calculate reactive Load.

The SDT reviewed Parts 2.1.4 and 2.4.3. The third bullet in Part 2.4.3 has been modified. The remaining differences between the two parts are intended. The SDT developed the lists contained within Parts 2.1.4 and 2.4.3 to address those situations which it believed were the most relevant for the steady state evaluations and Stability evaluations, respectively. Part 1.1.4 and Part 2.1.4 state that a reactive forecast is required. Using a power factor is one method that may be used in calculating this reactive forecast.

Two Commenters would like clarification that the sensitivity findings do not obligate the Planning Coordinator or Transmission Planner to establish Corrective Action Plans.

The SDT notes that Part 2.7 states, in part, that "Corrective Action Plan(s) do not need to be developed solely to meet the performance requirements for a single sensitivity run in accordance with Requirements R2, parts 2.1.4 and 2.4.3. In addition, Part 2.7.2 describes the requirement on Corrective Action Plans to "Include actions to resolve performance deficiencies identified in multiple sensitivity studies or provide a rationale for why actions were not necessary".

Some Commenters suggested clarifying changes to the first sentence in Parts 2.1.4 and Part 2.4.3 from "impact of changes to the basic assumptions used in the model for the list of items below", to "impact of change to the basic assumptions used in the model". For Part 2.4.3, a number of Commenters also suggested a workshop to clarify some of the requirements.

The SDT modified Parts 2.1.4 and 2.4.3. The SDT agrees that a workshop is a good idea. However, because of differences in each Region/Interconnection, the SDT encourages the Regions to hold workshops on issues specific to the Regions utilizing SDT members as participants in the discussions.

Some Commenters expressed concerns that Part 2.1.5 may require entities to have a spare equipment strategy, about the amount of added work, and that it may be redundant with Categories P2, P3, or P6 in Table 1. One Commenter was concerned that this requirement may be difficult for entities such as the Planning Coordinator, who may not own or manage the Transmission equipment or the spare strategy.

The SDT notes that Part 2.1.5 only requires that the Planning Coordinator and the Transmission Planner plan for the potential unavailability of long lead time major Transmission equipment in accordance with its spare equipment strategy. For example, if an entity's spare equipment strategy is to have a spare transformer on site, then the unavailability of a similar transformer

(due to outages) would be limited to the time it would take to energize the spare transformer. Assuming that this time is no more than that required to return a similar outaged transformer back to service, Part 2.1.5 can be satisfied without performing additional planning studies. If on the other hand, the transformer would have to be purchased, then it would take more than a year to replace. In this case, for Part 2.1.5, P0 should be modeled with the transformer in question out of service. The performance requirements in Table 1 will apply for the next single Contingency. This is not the same as P2 or P6; both of which are events starting from System intact condition as P0. It is also not the same as P3, which covers loss of a generator as the first event, and Part 2.1.5 covers loss of a piece of major Transmission equipment for which there is no spare. In addition, the Planning Coordinator does not have to own or manage the Transmission equipment or the strategies, it only needs to know the strategy and take it into account in selecting the appropriate Contingencies to study and plans for the potential unavailability of long lead time major Transmission equipment. It also does not preclude a Transmission Planner from coordinating its spare equipment strategy with others.

Some Commenters state that the requirement is not clear as to whether a Corrective Action Plan is required for those pieces of long lead time equipment without spares. Others believe that the Corrective Action Plans should allow actions such as, “out of merit dispatch”, “operational restrictions”, and “System reconfiguration” if the System cannot meet performance requirements without the facility in service.The SDT notes that Part 2.1.5 is part of Requirement 2, for which a Corrective Action Plan would be required. As stated in Part 2.1.5, the corrective actions should, as a minimum, allow reliable operations for categories P0, P1, and P2 during the times when the equipment is expected to be unavailable. The SDT also believes that the concern of allowing actions such as, “out of merit dispatch”, “operational restrictions”, and “System reconfiguration” to be part of the Corrective Action Plan has already been addressed. These actions are allowed in Part 2.7.1 on Corrective Actions.

One commenter seeks clarification on the study requirements for Part 2.1.5 during the time period in which the spare was put in service and no spare would be in place.

The SDT notes that Part 2.1.5 does not address the specific requirements of an individual plan. Since a Planning Assessment is required annually, the analysis required under Part 2.1.5 is an annual requirement. The answer to the specific example would depend on a variety of factors, including the timing of the failure, the length of time that it would take to replace the spare, your Operation Planning time horizon and the specifics of your individual spare equipment strategy. In addition, to provide greater clarity, the SDT has revised the first sentence of Part 2.1.5.

A number of Commenters suggested that Part 2.3 be modified to state that it is up to the planner to determine the year of study within the Near-Term Transmission Planning Horizon.

The SDT notes that Part 2.3 is silent on the year of study within the Near-Term Transmission Planning Horizon. Therefore, it is up to the Transmission Planner or Planning Coordinator to select the study years most suited to the System in question. In addition, Part 2.3 only requires an annual Planning Assessment, which is to be supported by annual current or qualified past studies.

A number of Commenters asked why there is no requirement stipulating short-circuit analysis for the long-term horizon. Another Commenter asked why there is no requirement for short circuit studies similar to Requirement R3 for steady state studies or Requirement R4 for Stability studies.

The SDT notes that Part 2.3 is for short circuit assessment of the System in general and is more suited for the near-term planning horizon, when Transmission plans are more certain. Lead time to implement a corrective action if found necessary can reasonably be expected to be completed in the near-term time frame. Short circuit study for the longer term planning horizon should be studied on a case by case basis associated with specific project(s). In addition, the SDT does not believe a requirement to cover short circuit studies similar to Requirement R3 or Requirement R4 is required. The SDT's intent was that while the standard requires short circuit results to be included in the assessment, it does not need to address the technical requirements for completing the short circuit study as that may be entity specific.

Some Commenters questioned the need for short circuit studies to be required in this standard since Short circuit analysis is a local issue. The reliability of the BES does not depend on the regular assessment of short circuit duty. In addition, the effects of the failure of over-stressed breakers are already included in the events listed in Table 1: for example, P2-3 and P2-4 (Internal Breaker Fault), and P4 (Stuck Breaker while attempting to clear a fault).

The SDT states that Part 2.3 is intended for the Planning Coordinator and/or Transmission Planner to assess whether circuit breakers supporting the BES have interrupting capability for Faults that they will be expected to interrupt. Even though the effects of short circuit capability are localized and may be related to new planned Facilities, it is important to BES reliability.

A number of Commenters requested that the SDT clarify Part 2.4.1 as to when "Load models considering induction motors" are required. They requested limits or thresholds to provide Load models based on areas that have Stability limits or issues and based on Loads capable of significantly impacting voltage Stability. This is so that areas that don't have large motors or Stability issues should not be required to add unnecessary Load modeling.

The SDT declines to add specifics on Load modeling requirements because such specificity needs to be determined by the entity performing the study. Part 2.4.1 allows the use of "an aggregate System Load model which represents the overall dynamic behavior of the Load". All areas including those that do not have large motors can use an appropriate aggregate System Load model.

One Commenter asked if Part 2.4.2 should include requirements for dynamic Load models, considering the behavior of induction motor Loads.

The SDT reviewed Parts 2.4.1 and 2.4.2. In Part 2.4.1 the SDT specifies the dynamic Load model representation for on peak because the System voltages are generally lower during on peak. The percentage of motor Load, e.g., in air conditioners, could significantly increase reactive power requirements especially when they stall due to low System voltage and can therefore impact dynamic System performance on-peak. However, motor Load would likely not pose the same problem during off-peak as the System voltages are usually higher. So, in Part 2.4.2, it can be left to the discretion of the Planning Coordinator or Transmission Planner whether the dynamic motor Load would need to be represented per the requirement in Part 2.4.1.

Some Commenters requested clarification as to whether the language in Part 2.5 "proposed generation additions and changes" should also include Transmission additions and changes.

The SDT intends for Part 2.5 to require investigation of Stability issues due to addition of generators, not system stability issues in general. The SDT does not believe that, in general, a Stability assessment is needed for the Long-Term Planning Horizon. The System model for that time frame is too uncertain for a meaningful assessment of the System's stability. However, for those situations where a specific generator is planned to be added in that time frame, the SDT believes that it will be appropriate to require that the generator's Stability impact be evaluated.

A number of Commenters request clarification on the phrase “material change”, which could impact whether a past study can be used to support a current-year assessment.

The SDT notes that Part 2.6.2 also allows an entity to rely on a past study with a material change if “a technical rationale can be provided to demonstrate that System changes do not impact the performance results in the study area”. Therefore, it is up to the entities performing the study to provide the rationale based on changes, such as Load growth.

Some Commenters requested clarification of the intent of the Corrective Action Plan and whether projects added in the Corrective Action Plan should be modeled in subsequent years when assessing System performances.

The SDT believes that Part 2.7 requires a Corrective Action Plan to be developed “when the analysis indicates an inability of the System to meet the performance requirements in Table 1”. Therefore, the intent is to address situations where simulation and the application of currently planned projects and procedures are insufficient to meet the performance requirements. If a project is added to the Corrective Action Plan, it should be included as part of the study assumptions based on the criteria Planning Coordinator’s and Transmission Planner’s use for inclusion of such planned projects, and clearly identified as an assumption for the annual assessment as required in Requirement R2 until it is in service or shown to be no longer needed. Two Commenters observed that Part 2.7 seems to have lost the reference to lead times for Corrective Action Plan(s) that were present in the existing TPL-001-0, TPL-002-0, and TPL-003-0 standards and requested to include in the standard some indication of when activity needs to start to implement the Corrective Action Plan. The SDT notes that the NERC Glossary of Terms defines Corrective Action Plan as “A list of actions and an associated timetable for implementation to remedy a specific problem. Also, Part 2.7.4 requires that the CAP be reviewed in subsequent annual Planning Assessments for continued validity and implementation status of identified System Facilities and Operating Procedures. By including the timing of needed action and requiring such reviews in subsequent assessments, any deficiencies, if not adequately addressed, will become violations. Therefore, the SDT believes that this concern has been addressed.

A majority of Commenters objected to the inclusion of Part 2.9 because it is not reliability related and does not address a performance oriented issue but is rather an information gathering exercise, and suggested that this requirement be deleted.

The SDT agrees with the Commenters as to the nature of the requirement. The SDT also reviewed FERC Order 693 and observed that it directs the ERO to consider including this effort in the standard development process. The SDT has tried through several postings but industry pushback is still significant that this doesn’t belong in a standard. The SDT decided that

this effort should best be continued through a NERC data gathering request. The data gathered can then be used in a future revision of this standard.

The following changes were made to the standard requirements due to industry comments:

Requirement R2, part 2.1.3: P1 events in Table 1 with known outages modeled, as in Requirement R1, part 1.1.2 under those System peak or Off-Peak conditions when known outages are scheduled.

Requirement R2, part 2.1.4: For each of the studies described in Requirement R2, parts 2.1.1 and 2.1.2, sensitivity case(s) shall be utilized to demonstrate the impact of changes to the basic assumptions used in the model. To accomplish this, the sensitivity analysis in the Planning Assessment must vary one or more of the following conditions not already included in the studies by a sufficient amount to stress the System within a range of credible conditions that demonstrate a measurable change in performance:

Requirement R2, part 2.1.5: When an entity's spare equipment strategy could result in the unavailability of major Transmission equipment that has a lead time of one year or more (such as a transformer), the impact of this possible unavailability on System performance shall be assessed. The Planning Assessment shall reflect the P0, P1, and P2 categories identified in Table 1 during the conditions that the System is expected to experience due to the possible unavailability of the long lead time equipment.

Requirement R2, part 2.3: The short circuit analysis portion of the Planning Assessment shall be conducted annually addressing the Near-Term Transmission Planning Horizon and can be supported by current or past studies as qualified in Requirement R2, part 2.6. The analysis shall be used to determine whether circuit breakers have interrupting capability for Faults that they will be expected to interrupt using the System short circuit model with any planned generation and Transmission Facilities in service which could impact the study area.

Requirement R2, part 2.4: The Near-Term Transmission Planning Horizon portion of the Stability analysis shall be assessed annually and be supported by current or past studies as qualified in Requirement R2, part2.6. The following studies are required:

Requirement R2, part 2.4.3: For each of the studies described in Requirement R2, parts 2.4.1 and 2.4.2, sensitivity case(s) shall be utilized to demonstrate the impact of changes to the basic assumptions used in the model. To accomplish this, the sensitivity analysis in the Planning Assessment must vary one or more of the following conditions not already included in the studies by a sufficient amount to stress the System within a range of credible conditions that demonstrate a measurable change in performance:

Requirement R2, part 2.4.3, bullet #1: Load level, Load forecast, or dynamic Load model assumptions

Requirement R2, part 2.4.3, **bullet #3**: Expected in service dates of new or modified Transmission Facilities

Requirement R2, part 2.5: The Long-Term Transmission Planning Horizon portion of the Stability analysis shall be assessed to address the impact of proposed generation additions or changes in that timeframe and be supported by current or past studies as qualified in Requirement R2, part 2.6.

Requirement R2, part 2.6.2: For steady state, short circuit, or Stability analysis: the System represented in the study shall not include any material changes unless a technical rationale can be provided to demonstrate that System changes do not impact the performance results in the study area.

Requirement R2, part 2.7: For planning events shown in Table 1, when the analysis indicates an inability of the System to meet the performance requirements in Table 1, the Planning Assessment shall include Corrective Action Plan(s) addressing how the performance requirements will be met. Revisions to the Corrective Action Plan(s) are allowed in subsequent Planning Assessments but the planned System shall continue to meet the performance requirements in Table 1. Corrective Action Plan(s) do not need to be developed solely to meet the performance requirements for a single sensitivity case analyzed in accordance with Requirements R2, parts 2.1.4 and 2.4.3. The Corrective Action Plan(s) shall:

Requirement R2, part 2.7.1, bullet #4: Installation or modification of manual and automatic generation runback/tripping as a response to a single or multiple Contingency to mitigate steady state performance violations.

Requirement R2, part 2.9:

Table 1, footnote 1: If the event analyzed involves BES elements at multiple System voltage levels, the lowest System voltage level of the element(s) removed for the analyzed event determines the stated performance criteria regarding allowances for interruptions of Firm Transmission Service and Non-Consequential Load Loss.

Requirement R2, data retention: The Planning Assessments performed since the last compliance audit in accordance with Requirement R2 and Measure M2.

Organization	Comments for Question 2
Independent Electricity System Operator	(1) Part 2.1.4: We do not believe the sentence: To accomplish this, the sensitivity analysis in the Planning Assessment must vary one or more of the following conditions not already included in the studies by a sufficient amount to stress the System within a range of credible conditions that demonstrate a measurable change in performance. is necessary or measurable. The first part of 2.1.4 already stipulates sufficient details for the responsible entity to conduct sensitivity analysis including the parameters to be varied. Adding the "how-to conduct" requirement is overly prescriptive and unnecessary, and the condition for "that demonstrate a measurable change in performance" is not measurable. It lacks a definitive target or direction for the responsible entity to determine (a) what conditions need to be attained to demonstrate a measurable change in performance, (b) what constitutes "measurable change in performance", and (c) what follow-up or corrective actions are needed to address the adverse performance as a result of stressing the system beyond the forecast conditions. In our comments on Draft 1, we disagreed with the requirement to conduct sensitivity testing. This is part of the analysis exercise that planners normally perform to help them identify critical parameters/conditions for consideration in planning assessments and in developing remedial plans. Having a reliability requirement to stipulate the details of sensitivity analysis is unnecessary but produces much increased work whose acts are difficult to measure and whose results are not taken any further to arrive at a useful outcome. Once again, we urge the SDT to consider dropping this requirement. (2) Part 2.3 stipulates the short-circuit assessment requirements for the near-term horizon. Unlike its steady-state and stability counterparts, there are no requirements stipulated for short-circuit analysis for the long-term horizon. Is this intentional? If so, we are unable to identify the rationale for this decision. If not, we suggest revising Part 2.3 to: The short circuit analysis portion of the Planning Assessment shall be conducted annually addressing the near-term and long-term Transmission Planning Horizons

Organization	Comments for Question 2
	and can be supported by. (3) R2.4.1: We believe that "considering the behavior of induction motors" is not necessary since the wording "a Load model which represents the dynamic behavior" already covers this. (4) In part 2.5, we recommend inserting the text "and Transmission Facilities" after "generation" to be consistent with the wording of part 2.3 (5) As drafted, the VLSs do not address missing certain combinations of parts of Requirement R2. For example, the condition assigning a Low, Moderate or High VSL is the failure of one of the parts listed under these columns. There is no assignment for failing more than one of the listed parts. We propose adding a second condition under the High VSL as follows: OR two or more of parts 2.3, 2.6, 2.8 and 2.9.. Also, part 2.5 is missing from the SEVERE VSL. We recommend including it. As written, it is possible to miss say parts 2.1 and 2.5 and still not be captured under the Severe VSL if that is the intent.
Response: For Part 2.1.4, The SDT envisions that stressed conditions and "measurable change" are to be defined by the responsible Planning Coordinator or Transmission Planner. Part 2.7 states, in part, that "Corrective Action Plan(s) do not need to be developed solely to meet the performance requirements for a single sensitivity run in accordance with Requirements R2, Parts 2.1.4 and 2.4.3. In addition, Part 2.7.2 describes the requirement on corrective action plans to "Include actions to resolve performance deficiencies identified in multiple sensitivity studies or provide a rationale for why actions were not necessary". No change made. Part 2.3 is for short circuit assessment of the System in general and is more suited for the near-term planning horizon, when Transmission plans are more certain. Lead time to implement corrective actions if found necessary can reasonably be expected to be completed in the near-term time frame. Short circuit studies for the longer term planning horizon should be studied on a case by case basis associated with specific project(s). Therefore the SDT declines to make the change as suggested. For Part 2.4.1, the clause "considering the behavior of induction motor Loads" is a clarification of the intent of this Requirement. Therefore, the SDT declines to make the change. Part 2.5 is intended for investigation of Stability issues due to addition of generators. The SDT does not believe that, in general, a Stability assessment is needed for the Long-Term Transmission Planning Horizon. The System model for that time frame is too uncertain for a meaningful assessment of the System's Stability. However, for those situations where a specific generator is planned to be added in that time frame, the SDT believes that it will be appropriate to require that the generator's Stability impact be evaluated. The SDT reviewed the VSL assignments and believes that as written they are as intended. In assigning the VSLs the SDT considers the potential lead time to implement the corrective action as well as the impact of non-compliance. Parts 2.1, 2.2, 2.4, and 2.7 cover the basics of planning activities and the lead time to implement the Corrective Action Plan can be longer than the near term planning horizon. As such, failure to comply with two of more of these parts can severely impact future System reliability. Part 2.5 covers long term Stability analysis, corrective actions would likely involve addition of dynamic voltage support, which can reasonably be expected to be implemented within the near term horizon.	
ERCOT ISO	* Requirement R2 (and throughout the standard) What is meant by "its portion of the BES"? Will any agreements made in R7 override the "each TP and PC" requirement? To clarify this, the requirement could be rephrased: "In accordance to the responsibilities assigned in R7, the responsible Transmission Planners and Planning Coordinators shall prepare?"* Requirement 2.1.3: This is not needed if these outages are properly built into the model.

Organization	Comments for Question 2
	* Requirement 2.1.4: This requirement applies to 2.1.1 and 2.1.2. Why does it omit 2.1.3? Should it be referring to 2.1.3 for P1 contingencies? * How will 2.1.4 be proven? What is the definition of “stress” in this context and what defines “sufficient” stress? What is “measureable change”? What is the expected response to the results of this analysis? For example, if the load forecast must double to “sufficiently” stress the system, is the expectation that facilities should be planned to respond to the stress? * Requirement 2.1.5: Including the spare equipment strategy will be difficult for a PC that doesn’t own or manage the transmission equipment or the strategies. But if this inclusion is only done by a TP, the benefits of coordinating with other TPs may not be realized. * Requirement 2.2: If each entity is responsible to study the System peak Load of its area, but a PC is responsible for multiple TP systems, then what System Peak Load is the PC responsible to study “ a model that includes the non-coincident peaks of all of the TP systems for which it is responsible or the coincident peak demand across the whole system for which the PC is responsible” * Requirements 2.4.1 and 2.4.2: These appear to have inconsistent references to defined terms. Should this be consistent? The NERC glossary states: "Off-Peak: Those hours or other periods defined by NAESB business practices, contract, agreements, or guides as periods of lower electrical demand.""On-Peak: Those hours or other periods defined by NAESB business practices, contract, agreements, or guides as periods of higher electrical demand.""System: A combination of generation, transmission, and distribution components."* Requirement 2.6.2: Reads as if a change is being made to an existing study. It is confusing. Possibly restate: "2.6.2 For steady state, short circuit, or stability analysis: previous studies can be used only if a material change to the system has not occurred or if a change that did occur does not impact the study area." * Requirement 2.7: in each case throughout the standard, replace “planning events” with “planning events as defined in Table 1” and “extreme events” with “extreme events as defined in Table 1” * Requirement 2.7.2: It would be good to clearly state here or in 2.1.4 that results from stressing the system do not always need to be resolved.

Response: BES can cover the entire region or Interconnection. “Its portion of the BES” limits the accountability to only the portion for which the Planning Coordinator or Transmission Planner is responsible. Requirement R7 requires that the Planning Coordinator and Transmission Planner’s coordinate and delineate their individual responsibilities within their portions of BES if there are any overlaps. Therefore the SDT declines to make the change.

Part 2.1.3 codifies studies needed to support the Planning Assessment and as such must be retained.

Parts 2.1.1 and 2.1.2 are “normal” System conditions. Part 2.1.3 covers P1 Contingencies with known long duration outage of a Facility included as Category P0. Therefore, the standard does not require sensitivity studies on top of P1 outage events as specified in Part 2.1.3. However, the standard does not preclude applying Part 2.1.4 to Part 2.1.3.

For Part 2.1.4, The SDT envisions that stressed conditions and “measurable change” are to be defined by the responsible Planning Coordinator or Transmission Planner.

For Part 2.1.5, the Planning Coordinator does not have to own or manage the Transmission equipment or the strategies, it only needs to know the strategy and take it

Organization	Comments for Question 2
	into account in selecting the appropriate Contingencies to study. Part 2.1.5 does not require that each entity has a spare equipment strategy; only that it plans for the potential unavailability of long lead time major Transmission equipment. It also does not preclude a Transmission Planner from coordinating its spare equipment strategy with others. For Part 2.2, the intent of the System peak Load case is to model the System conditions at the time of Peak Demand of the System for which an entity is responsible. Therefore, this case should model the coincidental peak of the System. However, the standard does not preclude the Planning Coordinator from also studying System conditions at higher Load levels, such as the non-coincident peak. For Parts 2.4.1 and 2.4.2, the NERC Glossary defines "Peak Demand" as: "1. The highest hourly integrated Net Energy For Load within a Balancing Authority Area occurring within a given period (e.g., day, month, season, or year). 2. The highest instantaneous demand within the Balancing Authority Area." NERC also defines Load as, "An end-use device or customer that receives power from the electric system." The draft Standard uses "System peak Load" to refer to the System conditions when the Load level is at the Peak Demand of the System being studied; and "Off-Peak Load" to refer to those System conditions when the Load level is lower. For assessing System performance, reasonably adverse System conditions should be modeled. Part 2.6.2 is governed by Part 2.6, which states: "Past studies may be used to support the Planning Assessment if they meet the following requirements". Therefore the SDT believes that the proposed change does not add clarity and has already been covered. Furthermore, the proposed change would introduce confusion in Part 2.6.1, which is also governed by Part 2.6. Planning event appears once in Requirement R2: Part 2.7 begins with "For planning events shown in Table 1". The SDT cannot find "extreme events" in requirement R2. Therefore, the SDT was not clear on the issues being raised. Since the language used has the same intent as the proposed change, no change was made. Part 2.7 states, in part, that "Corrective Action Plan(s) do not need to be developed solely to meet the performance requirements for a single sensitivity run in accordance with Requirements R2, Parts 2.1.4 and 2.4.3. In addition, Part 2.7.2 describes the requirement on Corrective Action Plans to "Include actions to resolve performance deficiencies identified in multiple sensitivity studies or provide a rationale for why actions were not necessary". The SDT believes that this concern is covered in the existing draft.
Bonneville Power Administration	: The wording in R2.1 is unclear as to whether new annual studies are required each year or whether qualified past studies are acceptable if no changes have been made. R2 reads "This Planning Assessment shall use current or past studies", while R2.1 implies current studies must be used but can be supplemented by past studies. We suggest changing the wording from "The Near-Term Transmission Planning Horizon portion of the steady state analysis shall be assessed annually and be supported by the following annual current studies, supplemented with qualified past studies" to "The Near-Term Transmission Planning Horizon portion of the steady state analysis shall be assessed annually and be supported by the following annual current studies, or qualified past studies " It is unclear if the drafting team intended the sensitivity studies identified by the bullets in R2.1.4 to align with the sensitivity studies identified by the bullets in R2.4.3. Both are for Near-Term studies but for steady state and stability respectively. If the intent is that they align, the wording should be modified to be the same. Also, similar to R1.1.4 above, R2.1.4 could be interpreted that the standard requires forecasting reactive load. However, most

Organization	Comments for Question 2
	entities forecast demand (MW) and apply a power factor(s) to calculate reactive load. Therefore, please change "real and reactive load forecast" to "forecasted demand and power factor" so it is clear that forecasting reactive load is not required.
Response: The SDT reviewed Requirement 2 and Parts 2.1 through 2.5. Only Parts 2.1 and 2.2 require "annual current year study, supplemented by qualified past studies". Parts 2.1 and 2.2 cover steady state studies in the Near-Term and the Long-Term Transmission Planning Horizons, respectively. While the SDT envisions the standard to be flexible enough to allow the use of qualified past studies, the Planning Assessment cannot be based entirely on past studies. Because steady state analysis is part of the basic planning process, the SDT believes that the steady state portion of the studies covering Year One or year two and year five for Near-Term Transmission Planning Horizon and one of the years in the Long-Term Transmission Planning Horizon should be done annually. Qualified past studies can be used to supplement the studies for the remaining study years to support the assessment for the entire planning horizon. Making the change as requested can result in no current-year study being performed. Therefore, the SDT declines to make the change as suggested. The SDT reviewed Parts 2.1.4 and 2.4.3. The third bullet in Part 2.4.3 has been modified. The remaining differences between the two parts are intended. The SDT developed the lists contained within Parts 2.1.4 and 2.4.3 to address those situations which it believed were the most relevant for the steady state evaluations and stability evaluations, respectively. **Requirement R2, part 2.4.3**, **bullet #3**: Expected in service dates of new or modified Transmission Facilities Parts 1.1.4 and 2.1.4 state that a reactive forecast is required. Using a power factor is one method that may be used in calculating this reactive forecast	
Northeast Utilities	[R2.1] The language of this requirement should be revised as follow: The Near-Term Transmission Planning Horizon portion of the steady state analysis shall be assessed annually and be supported by current or past studies as indicated in Requirement R2, part 2.6. The following studies are required: [R2.1.2] Please clarify the load level to be used for "System Off-Peak Load". [R2.1.4] To include and define sensitivity cases and simulations in the standard NERC must also define base cases to be used in the assessments. Refer to comment suggesting the addition of Requirement R1.1.7. [R2.1.5] It is not clear whether a corrective action plan should be developed for this requirement and if we are to develop an action plan should it be temporary and cover only the time period that the major Transmission equipment was unavailable? [R2.2] The language of this requirement should be revised as follow: The long-Term Transmission Planning Horizon portion of the steady state analysis shall be assessed annually and be supported by current or past studies as indicated in Requirement R2, part 2.6. The following studies are required: [R2.3] Please provide guidance as to what year should be represented when performing short circuit studies or is it up to the Planner to select a year for the study? [R2.5] There is no guidance on the load level that should be used for the long-term stability study as is required by Requirement R2.2.1 for the Steady State assessment. [R2.9] Why the need to report the largest Consequential Load Loss since the TPL Standard does not limit the amount of Consequential Load that could be allowed? We recommend that this requirement should be deleted.

Organization	Comments for Question 2
Response: The SDT reviewed Requirement 2 and Parts 2.1 through 2.5. Only Parts 2.1 and 2.2 require "annual current year study, supplemented by qualified past studies". Parts 2.1 and 2.2 cover steady state studies in the Near-Term and the Long-Term Transmission Planning Horizons, respectively. While the SDT envisions the standard to be flexible enough to allow the use of qualified past studies, the Planning Assessment cannot be based entirely on past studies. Because steady state analysis is part of the basic planning process, the SDT believes that the steady state portion of the studies covering Year One or year two and year five for Near-Term Transmission Planning Horizon and one of the years in the Long-Term Transmission Planning Horizon should be done annually. Qualified past studies can be used to supplement the studies for the remaining study years to support the assessment for the entire planning horizon. Making the change as requested can result in no current-year study will be performed. Therefore, the SDT declines to make the change as suggested. The intent of Part 2.1.2 is to assess those System conditions during periods with lower Load levels than peak when the System may show different potential problems than during periods with peak Load level. For example, during light Load conditions, there may be high voltage problems because of the charging in the lightly loaded lines. There could also be thermal overload problems for areas with more generation than Load. For this reason, it would not be appropriate to eliminate the requirement to investigate Off-Peak steady state or Stability conditions. At the same time, the standard is not intended to be prescriptive; therefore, the exact System Off-Peak Load can be specified by the entity performing the study. For Part 2.1.4, the SDT believes that the "base case conditions", on which to base the sensitivity cases should be defined by the entity performing the study. Sensitivity studies are performed to provide insight into the impacts of potential variations of assumptions in studies. The SDT therefore declines to make the change as suggested. The Corrective Action Plan is covered in Part 2.7 for planning events shown in Table 1 "when the analysis indicates an inability of the System to meet the performance requirements in Table 1". For Part 2.1.5, the corrective action should, as a minimum, allow reliable operations for categories P0, P1, and P2 during the times when the equipment is expected to be unavailable. For Part 2.2, while the SDT envisions that the standard is flexible enough to allow the use of qualified past studies; the Planning Assessment cannot be based entirely on past studies. Because steady state analysis is part of basic planning process, the SDT believes that the steady state portion of the studies should be done annually covering one of the years in the Long-Term Transmission Planning Horizon. Qualified past studies can be used to supplement the studies for the remaining study years to support the assessment for the entire Long-Term Transmission Planning Horizon. Making the change as requested in Part 2.2 can result in no current-year study being performed for the Long-Term Transmission Planning Horizon. Therefore, the SDT declines to make the change as suggested. Part 2.3 is silent on the year of study within the Near-Term Transmission Planning Horizon. Therefore, it is up to the Transmission Planner or Planning Coordinator to select the study years most suited to the System in question. In addition, Part 2.3 only requires an annual Planning Assessment, which is to be supported by annual current or qualified past studies. For Part 2.5, the stressed conditions for Stability are often System specific. The intent is to allow the entity performing the Stability study, which is most knowledgeable about its System, to determine the System conditions, including Load levels, on which to perform the assessment. Part 2.9 has been deleted as suggested.	
Central Maine Power Company	2.1.3 In the event that R1.1.2 is kept it must be clear that the reference to outage schedules as listed in part 1.1.2 must be limited to the Planning Horizon. Table 1 There is confusion in interpretation of the table 1 When the voltages class of the contingency element and the monitored element are different (one is HV and the other is EHV), to which voltage class is the allowance for shedding of non-consequential load applied. For example if the fault is on the 138-kV side of a 345/138-kV autotransformer, are you allowed to

Organization	Comments for Question 2
	shed load to keep the 345-kV from overloading? Conversely, if the fault is on the 345-kV side of a 345/138-kV autotransformer, are you allowed to shed load to keep the 138-kV from overloading? 2.1 Language should be revised similar to R2.4 as follows: The Near-Term Transmission Planning Horizon portion of the steady state analysis shall be assessed annually and be supported by current or past studies as indicated in Requirement R2, part 2.6. The following studies are required: 2.1.2 Should be moved to the list of sensitivities currently in 2.1.4. (Off-peak needs to be more specifically defined). 2.1.4 Consistent with the suggestion made for section 1.1.2 please remove the last bulleted item in the list under section 2.1.4. Duration or timing of planned Transmission outages. 2.2 The language in 2.2 should be revised to be similar to 2.4 as follows: The Long-Term Transmission Planning Horizon portion of the steady state analysis shall be assessed annually and be supported by current or past studies as indicated in Requirement R2, part 2.6. The following studies are required: 2.3 This should be modified to state that it is up to the Planner to determine the year of study within the Near Term Transmission Planning Horizon. 2.4.2 This should be deleted as it is covered under section 2.4.3. 2.4.3 To define a sensitivity, NERC must define base assumptions. 2.7 We suggest changing the word “run” to “condition” such that it reads “Corrective Action Plan(s) do not need to be developed solely to meet the performance requirements for a single sensitivity condition in accordance with Requirements R2, parts 2.1.4 and 2.4.3.” 2.9 The requirement to report the largest single consequential load loss under Requirement 2.9 should not be included in the standard. The TPL does not limit the size of the consequential load loss. If it remains, it must be made clear that it be applicable only to Year One or Year Two.
ISO New England	2.1.3: In the event that R1.1.2 is kept it must be clear that the reference to outage schedules as listed in part 1.1.2 must be limited to the Planning Horizon. Table 1 - There is confusion in interpretation of the table 1 When the voltages class of the contingency element and the monitored element are different (one is HV and the other is EHV), to which voltage class is the allowance for shedding of non-consequential load applied. For example if the fault is on the 138-kV side of a 345/138-kV autotransformer, are you allowed to shed load to keep the 345-kV from overloading? Conversely, if the fault is on the 345-kV side of a 345/138-kV autotransformer, are you allowed to shed load to keep the 138-kV from overloading 2.1 Language should be revised similar to R2.4 as follows: “The Near-Term Transmission Planning Horizon portion of the steady stateanalysis shall be assessed annually and be supported by current or past studies as indicated inRequirement R2, part 2.6. The following studies are required:”2.1.2 Should be moved to the list of sensitivities currently in 2.1.4. (Off-peak needs to be

Organization	Comments for Question 2
	more specifically defined). 2.1.4 Consistent with the suggestion made for section 1.1.2 please remove the last bulleted item in the list under section 2.1.4. "Duration or timing of planned Transmission outages." To define a sensitivity, NERC must define base assumptions. Refer to Comment on Proposal to add an item 1.22.2 The language in 2.2 should be revised to be similar to 2.4 as follows: "The Long-Term Transmission Planning Horizon portion of the steady stateanalysis shall be assessed annually and be supported by current or past studies as indicated inRequirement R2, part 2.6. The following studies are required:"2.3 This should be modified to state that it is up to the Planner to determine the year of study within the Near Term Transmission Planning Horizon. 2.4.2 This should be deleted as it is covered under section 2.4.3. 2.4.3 To define a sensitivity, NERC must define base assumptions. Requirement 2.7 We suggest changing the word "run" to "condition" such that it reads "Corrective Action Plan(s) do not need to be developed solely to meet the performance requirements for a single sensitivity condition in accordance with Requirements R2, parts 2.1.4 and 2.4.3." 2.9: The requirement to report the largest single consequential load loss under Requirement 2.9 should not be included in the standard. The TPL does not limit the size of the consequential load loss. If it remains, it must be made clear that it be applicable only to Year One or Year Two.
United Illuminating	2.1.3: In the event that R1.1.2 is kept it must be clear that the reference to outage schedules as listed in part 1.1.2 must be limited to the Planning Horizon. Table 1 - There is confusion in interpretation of the table 1 When the voltages class of the contingency element and the monitored element are different (one is HV and the other is EHV), to which voltage class is the allowance for shedding of non-consequential load applied. For example if the fault is on the 138-kV side of a 345/138-kV autotransformer, are you allowed to shed load to keep the 345-kV from overloading? Conversely, if the fault is on the 345-kV side of a 345/138-kV autotransformer, are you allowed to shed load to keep the 138-kV from overloading? 2.1 Language should be revised similar to R2.4 as follows: "The Near-Term Transmission Planning Horizon portion of the steady stateanalysis shall be assessed annually and be supported by current or past studies as indicated inRequirement R2, part 2.6. The following studies are required:"2.1.2 Should be moved to the list of sensitivities currently in 2.1.4. (Off-peak needs to be more specifically defined). 2.1.4 Consistent with the suggestion made for section 1.1.2 please remove the last bulleted item in the list under section 2.1.4. Duration or timing of planned Transmission outages. To define a sensitivity, NERC must define base assumptions. Refer to Comment on Proposal to add an item 1.22.2 The

Organization	Comments for Question 2
	language in 2.2 should be revised to be similar to 2.4 as follows: The Long-Term Transmission Planning Horizon portion of the steady stateanalysis shall be assessed annually and be supported by current or past studies as indicated inRequirement R2, part 2.6. The following studies are required: 2.3 This should be modified to state that it is up to the Planner to determine the year of study within the Near Term Transmission Planning Horizon. 2.4.2 This should be deleted as it is covered under section 2.4.3. 2.4.3 To define a sensitivity, NERC must define base assumptions. Requirement 2.7 We suggest changing the word "run" to "condition" such that it reads "Corrective Action Plan(s) do not need to be developed solely to meet the performance requirements for a single sensitivity condition in accordance with Requirements R2, parts 2.1.4 and 2.4.3." 2.9: The requirement to report the largest single consequential load loss under Requirement 2.9 should not be included in the standard. The TPL does not limit the size of the consequential load loss. If it remains, it must be made clear that it be applicable only to Year One or Year Two.

Response: Part 2.1.3 is a sub-part of Part 2.1 which is limited by the Near-Term Transmission Planning Horizon so no change is made.

The determination of when interrupting Non-Consequential Load and/or Firm Transmission Service is permitted to meet Table 1 performance requirements service is based solely on the lowest voltage level of Facilities disconnected by design for the planning event studied and not based on the monitored Facilities. For the example provided, the HV provisions would apply since a 345/138kV transformer is considered a HV facility that is removed from service regardless of where the fault originated. Changes were made to footnote 1 to better clarify the SDT's intent.

> **Table 1, footnote 1**: If the event analyzed involves BES elements at multiple System voltage levels, the lowest System voltage level of the element(s) removed for the analyzed event determines the stated performance criteria regarding allowances for interruptions of Firm Transmission Service and Non-Consequential Load Loss.

While the SDT envisions the standard to be flexible enough to allow the use of qualified past studies, the Planning Assessment cannot be based entirely on past studies. Because Near-Term steady state analysis as required in part 2.1 is part of the basic planning process, the SDT believes that the steady portion of the studies covering Year One or year two and year five for Near-Term Transmission Planning Horizon should be done annually. Qualified past studies can be used to supplement the studies for the remaining study years to support the assessment for the entire Near-Term Transmission Planning Horizon. Making the change as requested can result in no current-year study being performed. Therefore, the SDT declines to make the change as suggested.

The intent of Part 2.1.2 is to support the assessment of those System conditions during periods with lower Load levels than peak when the System may show different potential problems than during periods with peak Load level. For example, during light Load conditions, there may be high voltage problems because of the charging in the lightly loaded lines. There could also be thermal overload problems for areas with more generation than Load. The SDT therefore disagrees that studies of Off-Peak Load should be included in sensitivity studies. Sensitivity studies only need to cover one of the six conditions included in the bullets and may not be the one selected by the entity, resulting in no study of Off-Peak conditions being performed. The exact System Off-Peak Load should be specified by the entity performing the study.

The SDT declines to remove the last bullet in Part 2.1.4, "Duration or timing of planned Transmission outages" as a potential sensitivity. The intent is to cover unexpected changes in plans, for example, a potential delay in returning a Transmission line back to service after a planned outage of 6 months or more for rebuilding to

Organization	Comments for Question 2
	a higher capacity line. In this case, the System with the equipment in question out of service would be modeled as P0 (or N-0). For the next outage, the System performance will need to meet requirements for Category P1 and not P6. For Part 2.1.4, the SDT believes that the "base case conditions", on which to base the sensitivity cases, should be defined by the entity performing the study. Sensitivity studies are performed to provide insight into the impacts of potential variations of assumptions in studies. The SDT therefore declines to make the change as suggested. While the SDT envisions the standard to be flexible enough to allow the use of qualified past studies, the Planning Assessment cannot be based entirely on past studies. Because Long-Term steady state analysis as required in part 2.2 is part of the basic planning process, the SDT believes that the steady state portion of the studies covering one of the years in the Long-Term Transmission Planning Horizon should be done annually. Qualified past studies can be used to supplement the studies for the remaining study years to support the assessment for the entire Long-Term Transmission Planning Horizon. Making the change as requested can result in no current-year study being performed. Therefore, the SDT declines to make the change as suggested. Part 2.3 is silent on the year of study within the Near-Term Transmission Planning Horizon. Therefore, it is up to the Transmission Planner or Planning Coordinator to select the study years most suited to the System in question. In addition, Part 2.3 only requires an annual Planning Assessment, which is to be supported by annual current or qualified past studies. . The SDT declines to delete part 2.4.2 as it does not believe that Part 2.4.3 covers System conditions at Off-Peak Load level(s) as envisioned. The Sensitivity study only needs to cover one of the six conditions included in the bullets and may not be the one selected by the entity, resulting in no study of Off-Peak conditions. As in Part 2.1.4, for Part 2.4.3, the SDT believes that the "base case conditions" on which to base the sensitivity cases, should be defined by the entity performing the study. Sensitivity studies are performed to provide insight into the impacts of potential variations of assumptions in studies. Part 2.7 has been changed to address your concerns. **Requirement R2, part 2.7**: For planning events shown in Table 1, when the analysis indicates an inability of the System to meet the performance requirements in Table 1, the Planning Assessment shall include Corrective Action Plan(s) addressing how the performance requirements will be met. Revisions to the Corrective Action Plan(s) are allowed in subsequent Planning Assessments but the planned System shall continue to meet the performance requirements in Table 1. Corrective Action Plan(s) do not need to be developed solely to meet the performance requirements for a single sensitivity case analyzed in accordance with Requirements R2, parts 2.1.4 and 2.4.3. The Corrective Action Plan(s) shall: Part 2.9 has been deleted as suggested.
MAPP	2.1.3: It must be clear that the reference to outage schedules as listing in part 1.1.2 must be limited to the Planning Horizon. There is confusion in interpretation of the Table 1 When the voltages class of the contingency element and the monitored element are different (one is HV and the other is EHV), to which voltage class is the allowance for shedding of non-consequential load applied. For example if the fault is on the 138-kV side of a 345/138-kV autotransformer, are you allowed to shed load to keep the 345-kV from overloading? Conversely, if the fault is on the 345-kV side of a 345/138-kV autotransformer, are you allowed to shed load to keep the 138-kV from overloading? R2.1.4/R2.4.3 The terms "credible" and "measurable change" are ambiguous and not defined. Therefore, we suggest that these terms be defined or more clearly described to avoid the risk of different and possibly contradictory interpretations by TPs, PCs, and auditors.

Organization	Comments for Question 2
	R 2.1.5 - Spare equipment strategy. This appears to be more of a risk analysis than a simulation study requirement. If a simulation is required then it would appear that the PC/TP would need to rerun the entire system intact study with each "major transmission equipment "that is unavailable as a prior outage (i.e. for each generator, HVDC, SVC, XFMR) over the entire study parameters. How would this be evaluated? Is this not covered under P2 already? We also propose replacing the term "major Transmission" with "BES" because BES is a well defined term while "major Transmission" is not. R2.4.1 We recommend that the SDT clarify section 2.4.1 and when load models considering induction motors are required. The clarification should add limits or thresholds to provide load models based on areas that have stability limits or issues and to loads of substation size and having dynamic characteristic capable of significantly impacting voltage stability. Areas that don't have large motors or stability issues should not be required to add unnecessary load modeling. R2.6.2 Change "to demonstrate that System changes do no impact the performance results in the study area" to "to demonstrate that System changes do not significantly impact the performance results in the study area." 2.6.2 As written results in an unrealistic requirement to review every impact minor or large and determine which meets this item and which do not. The recommended change solves this problem. R 2.7 Corrective Action Plan: Is this not already apart of FERC Order 890? The PC may not be able to develop a CAP as they may not be the owners and would have no say about how a problem will be resolved. R 2.8.1 Suggest using a word other than "deficiencies" as it is associated with non-compliance. R2.9 ? We propose that this requirement be removed because annually stating the single, largest expected, Consequential Load Loss due to a P1 or P2 event in the TP or PC system is not needed to provide reliable BES performance or assure open and transparent Transmission planning peer review. In general, standards should not contain requirements that don't improve reliability.

Response: Part 2.1.3 is a sub-part of Part 2.1 which is limited by the Near-Term Transmission Planning Horizon so no change is made.

The determination of when interrupting Non-Consequential Load and/or Firm Transmission Service is permitted to meet Table 1 performance requirements service is based solely on the lowest voltage level of Facilities disconnected by design for the planning event studied and not based on the monitored Facilities. For the example provided, the HV provisions would apply since a 345/138kV transformer is considered a HV facility that is removed from service regardless of where the fault originated. Changes were made to footnote 1 to better clarify the SDT's intent and it now reads:

> **Table 1, footnote 1**: If the event analyzed involves BES elements at multiple System voltage levels, the lowest System voltage level of the element(s) removed for the analyzed event determines the stated performance criteria regarding allowances for interruptions of Firm Transmission Service and Non-Consequential Load Loss.

For Part 2.1.4, The SDT envisions that credible stressed conditions and "measurable change" are to be defined by the responsible Planning Coordinator or Transmission Planner.

Part 2.1.5 only requires that the Planning Coordinator or Transmission Planner plans for the potential unavailability of long lead time major Transmission equipment in accordance with its spare equipment strategy. For example, if an entity's spare equipment strategy is to have a spare transformer on site, then the unavailability of a

Organization	Comments for Question 2
similar transformer (due to outages) would be limited to the time it would take to energize the spare transformer. Assuming that this time is no more than that required to return a similar outaged transformer back to service, Part 2.1.5 can be satisfied without performing additional planning studies. If on the other hand, the transformer would have to be purchased, then it would take more than a year to replace. In this case, P0 should be modeled with the transformer in question out of service. This is not the same as P2. The SDT declines to replace the term "major Transmission equipment" with "BES equipment" because the intent is to investigate the unavailability of major pieces of equipment in the Transmission System. Transmission is defined in the NERC Glossary as, "An interconnected group of lines and associated equipment for the movement or transfer of electric energy between points of supply and points at which it is transformed for delivery to customers or is delivered to other electric systems". For Part 2.4.1, the SDT declines to add specifics, which includes "limits or thresholds to provide Load models based on areas that have Stability limits or issues and to Loads of substation size and having dynamic characteristic capable of significantly impacting voltage Stability" because such specificity needs to be determined by the entity performing the study. Part 2.4.1 allows the use of "an aggregate System Load model which represents the overall dynamic behavior of the Load". All areas including those that do not have large motors can use an appropriate aggregate System Load model. The SDT declines to make the change suggested in Part 2.6.2 because it did not add more clarity than the existing language. In Part 2.7, the responsibility for developing CAPs lies with both the Planning Coordinator & Transmission Planner regardless of ownership. A FERC Order is not a NERC Standard, and not subject to the NERC audit and enforcement procedures. The SDT declines to change the word "deficiencies" in Part 2.8.1. The SDT believes it is the most appropriate word to capture the SDT intent. Part 2.9 has been deleted as suggested.	
Oncor Electric Delivery	2.1.3: It must be clear that the reference to outage schedules listed in part 1.1.2 must be limited to the Planning Horizon. See the TIS comment tor R1. There is lack of clarity in the interpretation of certain rudiments of Table 1 When the voltage class of the contingency element and the monitored element are different (one is HV and the other is EHV), which voltage class is the allowance for shedding of non-consequential load applied? For example if the fault is on the 138-kV side of a 345/138-kV autotransformer, are there allowances to shed load to keep the 345-kV from exceeding its load rating. Conversely, if the fault is on the 345-kV side of a 345/138-kV autotransformer, would there be allowances to shed load to keep the 138-kV from exceeding its load rating 2.1 Language should be revised similar to R2.4 as follows: "The Near-Term Transmission Planning Horizon portion of the steady stateanalysis shall be assessed annually and be supported by current or past studies as indicated inRequirement R2, part 2.6. The following studies are required: 2.1.2 the term "off peak" is an issue. The definition just says less than peak. 2.1.4 Duration or timing of planned Transmission outages. In order to define a "sensitivity", NERC must define a base case. 2.1.5 There should be greater clarity to the fact that this is an assessment only, and not a solution. Actions such as "out of merit dispatch", "operational restrictions", "System reconfiguration" can be part of a Corrective Action Plan if the system cannot meet

Organization	Comments for Question 2
	performance requirements without the facility in service. 2.2 The language in 2.2 should be revised to be similar to 2.4 as follows: The Long-Term Transmission Planning Horizon portion of the steady state analysis shall be assessed annually and be supported by current or past studies as indicated inRequirement R2, part 2.6. The following studies are required:2.3 The standard does not indicate a year to study. Is this the discretion of the Transmission Planner? [Review last comment/why doesn't this apply to stability?] 2.4.2 There should be greater clarity to the term "Off peak" Should the Transmission Planner have more discretion in selecting load level. Is there a need for this requirement? 2.4.3 To define a "sensitivity" a base case must be defined for comparison. Requirement 2.7 suggest changing the term "run" to "condition" in "Corrective Action Plan(s) does not need to be developed solely to meet the performance requirements for a single sensitivity run(?) in accordance with Requirements R2, parts 2.1.4 and 2.4.3. 2.7.2 See previous comments on sensitivities. 2.9: The requirement to report the largest single consequential load loss under Requirement 2.9 should not be included in the standard. If it remains, provide greater clarity that there is applicability only to Year One. Furthermore, additional clarification is needed to ensure that the requirement to report consequential load loss (single number) is ONLY for the most severe contingencies studied for the P1 and P2 contingencies. 2.9 ? Why is it necessary to identify the largest consequential load loss if the TPL standard does not limit the size of the consequential load loss?

Response: Part 2.1.3 is a sub-part of Part 2.1 which is limited by the Near-Term Transmission Planning Horizon so no change is made.

The determination of when interrupting Non-Consequential Load and/or Firm Transmission Service is permitted to meet Table 1 performance requirements service is based solely on the lowest voltage level of Facilities disconnected by design for the planning event studied and not based on the monitored Facilities. For the example provided, the HV provisions would apply since a 345/138kV transformer is considered a HV facility that is removed from service regardless of where the fault originated. Changes were made to footnote 1 to better clarify the SDT's intent and it now reads:

> **Table 1, footnote 1**: If the event analyzed involves BES elements at multiple System voltage levels, the lowest System voltage level of the element(s) removed for the analyzed event determines the stated performance criteria regarding allowances for interruptions of Firm Transmission Service and Non-Consequential Load Loss.

Part 2.1 covers near-term steady state studies and Part 2.4 covers near-term Stability studies. While the SDT envisions the standard to be flexible enough to allow the use of qualified past studies, the Planning Assessment cannot be based entirely on past studies. Because steady state analysis is part of basic planning process, the SDT believes that the steady state portion of the studies covering Year One or year two and year five for Near-Term Transmission Planning Horizon should be done annually. Qualified past studies can be used to supplement the studies for the remaining study years to support the assessment for the entire Near-Term Transmission Planning Horizon. Making the change as requested can result in no current-year study being performed. Therefore, the SDT declines to make the change as suggested.

Organization	Comments for Question 2
	The intent of Part 2.1.2 is to assess those System conditions during periods with lower Load levels than peak when the System may show different potential problems than during periods with peak Load level. For example, during light Load conditions, there may be high voltage problems because of the charging in the lightly loaded lines. There could also be thermal overload problems for areas with more generation than Load. Since such conditions can be case specific, the standard should not be overly prescriptive; therefore, the exact System Off-Peak Load should be specified by the entity performing the study. The last bullet in Part 2.1.4, "Duration or timing of planned Transmission outages" is intended to cover unexpected changes in plans, for example, a potential delay in returning a Transmission line back to service after a planned outage of 6 months or more for rebuilding to a higher capacity line. The SDT believes that your concern on Part 2.1.5 has already been addressed. Part 2.7.1 Corrective Action can include, among other things: o Installation, modification, or removal of Protection Systems or Special Protection Systems o Installation or modification of automatic generation tripping as a response to a single or multiple Contingency to mitigate Stability performance violations. o Installation or modification of manual and automatic generation runback/tripping as a response to a single or multiple Contingency to mitigate Steady State performance violations. o Use of Operating Procedures specifying how long they will be needed as part of the Corrective Action Plan. o Use of rate applications, DSM, new technologies, or other initiatives. For Part 2.2, while the SDT envisions the standard to be flexible enough to allow the use of qualified past studies, the Planning Assessment cannot be based entirely on past studies. Because steady state analysis is part of basic planning process, the SDT believes that the long-term steady state portion of the studies in Part 2.2 should be done annually. Qualified past studies can be used to supplement the studies for the remaining study years to support the assessment for the entire long-term planning horizon. Making the change as requested can result in no current-year study being performed. Therefore, the SDT declines to make the change as suggested. Part 2.3 is silent on the year of study within the Near-Term Transmission Planning Horizon. Therefore, it is up to the Transmission Planner or Planning Coordinator to select the study years most suited to the System in question. In addition, Part 2.3 only requires an annual Planning Assessment, which is to be supported by annual current or qualified past studies. The NERC glossary states: "Off-Peak: Those hours or other periods defined by NAESB business practices, contract, agreements, or guides as periods of lower electrical demand." The intent is to assess those System conditions during periods with lower Load levels than peak when the System may show different potential problems than during periods with peak Load levels. For example, during light Load conditions, there may be high voltage problems because of the charging in the lightly loaded lines. There could also be thermal overload problems for areas with more generation than Load. The exact System Off-Peak Load should be specified by the entity performing the study. For part 2.4.3, the SDT believes that the "base case conditions" should be defined by the entity performing the study. Sensitivity studies are performed to provide insight into the impacts of potential variations of assumptions in studies involving long-term forecasts. Part 2.7 has been changed to address your concerns. **Requirement R2, part 2.7**: For planning events shown in Table 1, when the analysis indicates an inability of the System to meet the performance requirements in Table 1, the Planning Assessment shall include Corrective Action Plan(s) addressing how the performance requirements will be met. Revisions to the Corrective Action Plan(s) are allowed in subsequent Planning Assessments but the planned System shall continue to meet the performance requirements in Table 1. Corrective Action Plan(s) do not need to be developed solely to meet the performance requirements for a single sensitivity case analyzed in accordance with Requirements R2, parts 2.1.4 and 2.4.3. The Corrective Action Plan(s) shall: For Part 2.7.2, see the responses above to your other comments.

Organization	Comments for Question 2
Part 2.9 has been deleted as suggested.	
FirstEnergy Corp	A. FirstEnergy disagrees with requirement R2 sub-part 2.1.1 requiring the annual completion of two near-term steady-state studies. We believe that on a yearly basis completion of one near-term study and one long-term study is sufficient to interpolate and extrapolate the results needed to cover the entire planning horizon. The team should keep in mind that the overall assessment will include qualified past studies to supplement the results for a more refined view of anticipated conditions. We request that the team revise the near-term annual study requirements to require completion of only one near-term steady-state study and allow the TP/PC flexibility in choosing the appropriate study year. B. In requirement 2.7.1 the team should consider collapsing the 3rd and 4th bullets into a more succinct single bullet that says "Installation or modification of automatic generation runback/tripping". The use of "manual" generation run-back should be accounted for in an Operating Procedure (5th bulleted item). The additional text on the existing 3rd and 4th bullets discussing "single or multiple contingency" is not needed as the text stated in the parent R2.7 text is sufficient. C. We concur with the team's removal of the overly prescriptive requirements to include "initiation dates" and "in-service dates" from the Corrective Action Plans. However, the team may want to ensure some aspect of timing is identified in the Corrective Action Plans. It is recommended that the team revise the text of sub-part 2.7.1 that precedes the bulleted list to read "List system deficiencies, associated actions needed to achieve required System performance and the timing of when the actions are needed"
Response: For Part 2.1.1, the SDT declines to change to one near-term study because as a minimum to support reliability, Transmission plans are needed for the timeframe just after operation planning (Year One or year two), as well as the timeframe at the end of the near-term (year five) to allow implementation of solutions, which may require longer lead time. The SDT reviewed Requirement R2, part 2.7.1 and found that it is clear as written. The SDT therefore declines to make the change. For Requirement R2, part 2.7.1, the NERC Glossary of Terms defines Corrective Action Plan as "A list of actions and an associated timetable for implementation to remedy a specific problem. Therefore, the suggested change to include "timing" is not needed.	
NERC Standards Review Subcommittee	Add R2.7.1 Item #7 The MRO NSRS proposes the addition of the following bullet item to R2.7.1, "Planned System adjustments such as Transmission configuration changes and redispatch of generation are allowed if such adjustments are executable within the time duration of the Facility Ratings." because this explains what is allowed to be considered for Corrective Action Plan developments. [After bullet item #7 is added, Note "e" under "Steady State & Stability section of Table 1 should refer to R2.7.1.] R2.9" The MRO NSRS still proposes that this requirement be removed because annually stating the single, largest expected, Consequential Load Loss due to a P1 or P2 event in the TP or PC system is not needed to provide reliable BES performance or assure open and transparent Transmission planning peer review. In general, standards should not contain requirements that don't improve reliability. R2.4.1 The MRO NSRS recommends that the SDT clarify section 2.4.1 and when load models considering induction motors are required. The clarification should add limits or thresholds to provide load models based on areas that have stability limits or issues and to loads of substation size and having dynamic characteristic capable of significantly impacting voltage stability.

Organization	Comments for Question 2
	Areas that don't have large motors or stability issues should not be required to add unnecessary load modeling.
Response: Planned system adjustments could include Operating Plans such as re-dispatch. Requirement R2, part 2.7.1 is a list of examples, so it could include more items than listed, including Note e in Table 1. The SDT declines to make the suggested change. Part 2.9 has been deleted as suggested. For Part 2.4.1, the SDT declines to add specifics, which includes "limits or thresholds to provide Load models based on areas that have Stability limits or issues and to Loads of substation size and having dynamic characteristic capable of significantly impacting voltage Stability" because such specificity needs to be determined by the entity performing the study. Part 2.4.1 allows the use of "an aggregate System Load model which represents the overall dynamic behavior of the Load". Areas that do not have large motors can use an appropriate aggregate System Load model.	
Lakeland Electric	Agree with the changes made to the spare equipment strategy requirement
Response: The SDT thanks you for your comments**.**	
Progress Energy Florida, Inc.	As PEF is opposed to TPL-001-1 as a whole, PEF will have no further comment on this issue other than to encourage all appropriate parties to review PEF's previous comments to this effect.
Response: Throughout the drafting process, the SDT has carefully considered your comments as well as comments from other industry members.	
Florida Municipal Power Agency, and its Member Cities	As worded, 2.1 now seems to require power flow, short circuit and stability studies be done every year for the Near Term. Is this the intent of the SDT? There are smaller systems that do not require this (e.g., if a smaller system has nothing more change form year to year than a 1.5% load growth, and there is plenty of margin on various SOLs, why is another study needed?). FMPA suggests re-wording to: "The Near-Term Transmission Planning Horizon portion of the steady state analysis shall be assessed annually and be supported by the following annual current studies or by qualified past studies as indicated in Requirement R2, part 2.6" Since 2.2 only has one sub-bullet, 2.2.1 ought to be collapsed into 2.2. We think it would read less confusing as well, see below for suggested phrasing: "The Long-Term Transmission Planning Horizon portion of the steady state analysis shall be assessed annually and be supported by a current study of expected System peak Load conditions for one of the years in the Long-Term Transmission Planning Horizon and the rationale for why that year was selected, supplemented with qualified past studies as indicated in Requirement R2, part 2.6. The short circuit studies of 2.3 should not only assess the fault current interrupting capability of breakers, but also circuit switchers and the momentary current carrying capability of other equipment, such as switches and substation bus. We recommend changing the phrase to: "The analysis shall be used to determine whether the fault current is within the momentary current carrying capabilities and/or fault current interrupting capabilities of (Elements or Facilities) using ". Also, for the short circuit study of 2.3 (and 2.8), it is not necessary to study all of the contingencies, just P2. Taking other Facilities out in addition to the fault will only reduce fault current. Auditors may not be aware of that and maybe the standard

Organization	Comments for Question 2
	could say that only P2 needs to be studied to reduce future confusion. In 2.6, "material change" is ambiguous, especially in regards to load growth. How much load growth is allowed before it is "material"? Is the intent of the SDT to have 2.7 apply to all previous bullets in R2? If so, then it could be made clearer by starting 2.7 with " For the analyses discussed in 2.1 through 2.5, and for the planning events shown in Table 1, when the analyses indicate "? 2.7 seems to have lost the reference to lead times for Corrective Action Plan(s) that were present in the existing TPL-001-0, TPL-002-0 and TPL-003-0 standards, is that the intent of the SDT? Since only two of the years in the near term need to be studied, and one of the year's in the long term study, there ought to be some method to determine when a Corrective Action Plan is needed, the lead time of that Corrective Action Plan, to give an indication of when activity needs to start to implement the Corrective Action Plan. The Planning Coordinator and Transmission Planner should not be responsible in 2.7 for any repercussion of an entity not implementing the Corrective Action Plan. Bullet 2.7 ought to be reworded to developing the Corrective Action Plan only and not implementation. For instance, 2.7.4 requires review of Corrective Action Plans. If a Corrective Action Plan calls for a major transmission addition, then that addition usually is in the domain of the Transmission Owner. If the Transmission Owner decides not to build the transmission upgrade for a variety of reasons (e.g., budgets, etc.), then the Planning Coordinator and Transmission Planner could end up being in violation of the standards through no fault of their own (e.g., even though curtailment of firm service would then be allowed in 2.7.3, if such curtailment would not solve the problem, e.g., if there is not enough pre-contingency re-dispatch available, then the Planning Coordinator would be in violation).Implementation of the Corrective Action Plan, however, is very important. FMPA suggests that another requirement be added to require Transmission Owners, Generation Owners, Transmission Operators, Generation Operators (latter two if there are operating schemes involved) within the planning area of the Planning Coordinators and Transmission Planners to implement the plan as determined by the Planning Coordinators and Transmission Planners, with another requirement requiring that the entities agree on the Corrective Action Plan. This would mean expanding the applicability of the standard. This new requirement ought to have a VRF of High because not implementing the Corrective Action Plan could have high risks. What is the reliability purpose of 2.9? Is it to identify the largest potential supply / demand mismatch? If so, the largest loss of source, usually about 1000 MW, will overwhelm this number. FMPA does not understand the reliability purpose of providing this number, especially since the power flow models already capture most of this information (e.g., amount of load connected to tap substations or radial feeds). This seems to be an administrative item with no reliability purpose, especially since it only applies to P1 (why does it apply to P1 ? how can there be consequential load loss without a contingency, unless it's specific to 2.1.5?) and P2.
Response: The SDT reviewed Requirement R2, parts 2.1 through 2.5. Only Parts 2.1 and 2.2 require "annual current year study, supplemented by qualified past studies". Parts 2.1 and 2.2 cover steady state studies in the Near-Term and the Long-Term planning horizons, respectively. Short circuit studies (Part 2.3), near-term Stability studies (Part 2.4) and long-term Stability studies (Part 2.5) allow the use of current or qualified past studies. Therefore, as drafted the standard only requires annual steady state studies. While the SDT envisions the standard to be flexible enough to allow the use of qualified past studies, the Planning Assessment cannot be based entirely on past studies. Because steady state analysis is part of the basic planning process, the SDT believes that the steady state portion of the studies covering Year One or year two and year five for the Near-Term Transmission Planning Horizon and one of the years in the Long-Term Transmission Planning Horizon	

Organization	Comments for Question 2
	should be done annually. Qualified past studies can be used to supplement the studies for the remaining study years to support the assessment for the entire planning horizon. Making the change as requested can result in no current-year study being performed. Therefore, the SDT declines to make the change as suggested. In addition, the two study years are intended to cover both the timeframe just after operation planning (Year One or year two), as well as the timeframe to allow implementation of solutions, which may require a longer lead time. Load growth may not be the only determination factor on System performance; other examples are addition or retirement of generation. The suggested change for Parts 2.2 and 2.2.1 does not provide additional clarity. The SDT declines to make the change. Part 2.3 was changed in the previous posting to include circuit breakers only due to a preponderance of industry comments in draft 3. The SDT declines to make the suggested change. The SDT believe this concern on Part 2.3 is covered. The Transmission Planner or Planning Coordinator can provide an explanation of why the Contingencies selected would produce the more severe conditions. Note that Part 2.3 requires an annual Planning Assessment only. Part 2.6.2 allows an entity to rely on a past study with a material change if "a technical rationale can be provided to demonstrate that System changes do not impact the performance results in the study area". Therefore, it is up to the entities performing the study to provide the rationale based on changes, such as Load growth. The intent of Part 2.7 is to be applied to all "planning events shown in Table 1, when the analysis indicates an inability of the System to meet the performance requirements in Table 1". The SDT believes that the intent is clear. The SDT declines to make the suggested change. Part 2.7 requires that for all planning events in Table 1, the Planning Assessment includes a Corrective Action Plan(s) addressing how the performance requirements will be met. Revisions to the Corrective Action Plan(s) are allowed in subsequent Planning Assessments but the planned System shall continue to meet the performance requirements in Table 1. Also, Part 2.7.4 requires that the CAP be reviewed in subsequent annual Planning Assessments for continued validity and implementation status of identified System Facilities and Operating Procedures. For 2.7.1, the NERC Glossary of Terms defines Corrective Action Plan as "A list of actions and an associated timetable for implementation to remedy a specific problem. Therefore, your concerns have been addressed. The planners' responsibility is to always have a plan that meets the performance requirements during the planning horizon. If the original CAP can't be implemented, the planner must develop an alternate plan to meet the performance requirements. The definition of CAP includes a timing element as per the Glossary. For issues involving inability to implement a CAP, which is beyond the control of the Planning Coordinator or Transmission Planner, such as the example given, the Planning Coordinator or Transmission Planner can rely on Part 2.7.3 in addition to those actions already allowed tomeet performance requirements. Part 2.9 has been deleted to address your concerns.
Gainesville Regional Utilities	Combining 4 TPL standards into 1 standard makes for a situation that you will always be audited on all the covered functional areas instead of part of the functions in a given audit. Example, in 2009, TPL-004 was not part of the audit while the other 3 standards were part of the audit. Of course, you should always be current with all functional assessments. I use one assessment document to cover all the functional areas. I do like the added clarity on the time horizons for various studies. I find R2. part 2.1.5 to create a somewhat clearer focus on spare equipment strategy. But the created task could create a lot of

Organization	Comments for Question 2
	work for a utility depending on its configuration and redundancy.
Response: Combining TPL-001 through -006 into one standard was in response to comments from the industry and FERC Order 693. Part 2.1.5 only requires that the Planning Coordinator or Transmission Planner plans for the potential unavailability of long lead time major Transmission equipment in accordance with its spare equipment strategy. For example, if an entity's spare equipment strategy is to have a spare transformer on site, then the unavailability of a similar transformer (due to outages) would be limited to the time it would take to energize the spare transformer. Assuming that this time is no more than that required to return a similar outaged transformer back in service, Part 2.1.5 can be satisfied without performing additional planning studies. If on the other hand, the transformer would have to be purchased, then it would take more than a year to replace, and studies will likely needed to be done to plan for the potential unavailability.	
ITC Holdings	Comments: R2.1.1 Are two distinct study years necessary if a transmission owner can demonstrate that loads within their footprint have minimal growth over the 5 year period, defined to be less than X% of growth? Since the standard requires a relatively large number of studies to meet performance requirements, an initial set of studies along with studies demonstrating that "CAPs work" seems sufficient during periods of load stagnation. R2.1.4, R2.4.3 & R2.7.1. These requirements refer to new facilities which would include new generators. ITC requests clarification as to what constitutes a "new generator" that needs to be considered -- those in the queue, those with signed Interconnection Agreements, those under construction... What is the line of demarcation between what is in and what is out? In addition to the above, ITC also requests clarification as to whether or not these requirements apply to new generators, who connect to the network as "Energy Only" resources and, are either, not required to construct facilities needed to meet reliability requirements or are allowed to operate as "Energy Only" until needed facilities are constructed. The CAP for these facilities is that they will be curtailed or other generation will be curtailed should "operating" violations occur. Under market mechanisms, these generators are allowed to operate if their energy prices are lower than other generators whose curtailment eliminates the violation, even though the curtailed generators have paid for the facilities needed to meet reliability requirements. As the standard is written, these requirements imply that all generators must be included in studies. Were we to do so, significant standards violations might result. Does the Transmission Owner have to study all violation scenarios or include all "Energy Only" generators in studies when the CAP is always the same: "Market redispatch". Please clarify study scenario requirements for "Energy Only" resources.
Response: For Part 2.1.1, Load growth may not be the only determination factor on system performance; other examples are addition or retirement of generation. The two study years are intended to cover both the time frame just after operation planning (Year One or year two), as well as the time frame to allow implementation of solutions, which may require longer lead time. NERC Standards specify what the requirements are and not how to meet the requirements. The SDT therefore declines to specify how the studies are to be done. The intent of the standard is to allow the Planning Coordinator or the Transmission Planner performing the studies the discretion on the sensitivities (Parts 2.1.4 and 2.4.3) to investigate and the generators to be assumed in the Corrective Action Plan (Part 2.7.1). The SDT believes that the requirements under this draft do include "Energy Only" generators. Please note under Requirement R2, part 2.7.1 that manual and automatic generation runback/tripping is allowed as a response to single or multiple Contingencies to mitigate Steady State performance violations. Also automatic generation tripping is allowed for single and multiple Contingency events to mitigate Stability performance violations	

Organization	Comments for Question 2
Deseret Power	Comments: The wording in R2.1 is unclear as to whether new annual studies are required each year or whether qualified past studies are acceptable if no changes have been made. R2 reads "This Planning Assessment shall use current or past studies", while R2.1 implies current studies must be used but can be supplemented by past studies. We suggest changing the wording from "The Near-Term Transmission Planning Horizon portion of the steady state analysis shall be assessed annually and be supported by the following annual current studies, supplemented with qualified past studies" to "The Near-Term Transmission Planning Horizon portion of the steady state analysis shall be assessed annually and be supported by the following annual current studies, or qualified past studies" It is unclear if the drafting team intended the sensitivity studies identified by the bullets in R2.1.4 to align with the sensitivity studies identified by the bullets in R2.4.3. Both are for Near-Term studies but for steady state and stability respectively. If the intent is that they align, the wording should be modified to be the same. Also, similar to R1.1.4 above, R2.1.4 could be interpreted that the standard requires forecasting reactive load. However, most entities forecast demand (MW) and apply a power factor(s) to calculate reactive load. Therefore, please change "real and reactive load forecast" to "forecasted demand and power factor" so it is clear that forecasting reactive load is not required.
Response: The SDT reviewed Requirement R2, parts 2.1 through 2.5. Only Parts 2.1 and 2.2 require "annual current year study, supplemented by qualified past studies". Parts 2.1 and 2.2 cover steady state studies in the near-term and the long-term planning horizons, respectively. While the SDT envisions the standard to be flexible enough to allow the use of qualified past studies, the Planning Assessment cannot be based entirely on past studies. Because steady state analysis is part of the basic planning process, the SDT believes that the steady state portion of the studies covering Year One or year two and year five for the Near-Term Transmission Planning Horizon and one of the years in the Long-Term Transmission Planning Horizon should be done annually. Qualified past studies can be used to supplement the studies for the remaining study years to support the assessment for the entire planning horizon. Making the change as requested can result in no current-year study being performed. Therefore, the SDT declines to make the change as suggested. The SDT reviewed Parts 2.1.4 and 2.4.3. The third bullet in Part 2.4.3 has been modified. The remaining differences between the two parts are intended. The SDT developed the lists contained within Parts 2.1.4 and 2.4.3 to address those situations which it believed were the most relevant for the steady state evaluations and Stability evaluations, respectively. **Requirement R2, part 2.4.3**, **bullet #3**: Expected in service dates of new or modified Transmission Facilities Part 1.1.4 and Part 2.1.4 state that a reactive forecast is required. Using a power factor is one method that may be used in calculating this reactive forecast	
SCE&G	Does R.2.9 refer to customer load only or does it include pumped storage facility pumping loads?
Response: Part 2.9 has been deleted based on industry input.	
Orlando Utilities Commission	I like the clarification of "summarize results" compared to the wording in the prior edition. -It is obvious an attempt has been made to further define when past studies may be used, but I think it is still a bit confusing. Requirement 2.1, 2.2 appear to be saying that current studies must be used, but that additional information can be provided if desired and it meets certain requirements. Sub-Requirements 2.3, 2.4 and 2.5 seem to allow use of past studies that meet the

Organization	Comments for Question 2
	requirements of 2.6 in lieu of new work. If this is the correct understanding then I suggest the following: For 2.1 and 2.2 revise the statement to read "…and be supported by the following annual current studies. The analysis may also include other current and past studies in addition to the required annual current studies listed below. The reference to R2.6 is removed since including it invites confusion over when prior art can be used and if the material is solely supplemental, then there is no reliability advantage to limiting what can be incorporated a supplemental material. R2.6 should also be revised to read "Past studies may be used in lieu of current studies for R2.3, R2.4, R2.6 if they meet the following requirements:" This will insure that it is very obvious in both places when prior art may be used in lieu of new work. -R2.6.2 Consider revising "the study shall not include any material changes" to "the system represented in the study shall not include any material changes". Stating that "the study shall not include material changes" implies changes to the study from the time it was performed to the time it was used, like inserting or removing text, not changes in the underlying transmission system which is what I think you are really targeting. -R2.1.4 and 2.4.3: The statement "sufficient amount to stress the system…credible conditions…demonstrate a measurable change" implies that a sensitivity must meet three general criteria: (I will be using load forecast as an easy example, but obviously there is a range and combination of items that could be used) 1. That it is expected to increase stress, for example increasing the load forecast would general increase stress, where decreasing it would not. 2. That the increase should be substantial, for example growing the load at 2x the expected growth rate vs 1.01x the expected rate. 3. That the change doesn't have to exceed the bounds of credibility. If a 2x or 3x increase doesn't result in a stack of new constraints, it does not mean the sensitivity is inadmissible. Is this a correct understanding? -R2.7: Is the "Corrective Action Plan" intended to document all of an entities planned future reliability related transmission projects and operational procedures? Or is it intended to address situations where simulation and the application of currently planned projects and procedures are insufficient to meet the performance requirements? The next comment is very closely related to this one. -R2.7: If a project is added one year to the "Corrective Action Plan" but then in the subsequent year has been added to the model, resulting in simulation showing no performance violations, should it be removed from the Corrective Action Plan? Or should it be referenced in the plan each year until it is either in service or demonstrated to no longer be required?

Response: The SDT reviewed Requirement R2, parts 2.1 through 2.5. Only Parts 2.1 and 2.2 require "annual current year study, supplemented by qualified past studies". Parts 2.1 and 2.2 cover steady state studies in the near-term and the long-term planning horizons, respectively. While the SDT envisions the standard to be flexible enough to allow the use of qualified past studies, the Planning Assessment cannot be based entirely on past studies. Because steady state analysis is part of the basic planning process, the SDT believes that the steady state portion of the studies should be done annually covering Year One or year two and year five for Near-Term Transmission Planning Horizon and one of the years in the Long-Term Transmission Planning Horizon. Qualified past studies can be used to supplement the studies for the remaining study years to support the assessment for the entire planning horizon. The remaining requirements for Short circuit studies Part 2.3), near-term stability studies (Part 2.4) and long-term Stability studies (Part 2.5) can then be covered by current or past studies.

The SDT declines to change Part 2.6 to read "Past studies may be used in lieu of current studies for Requirement R2, parts 2.3, 2.4, and 2.6 if they meet the following requirements" because it does not add clarity.

Organization	Comments for Question 2
Part 2.6.2 has been revised to address your concerns. **Requirement R2, part 2.6.2**: For steady state, short circuit, or Stability analysis: the System represented in the study shall not include any material changes unless a technical rationale can be provided to demonstrate that System changes do not impact the performance results in the study area For Parts 2.1.4 and 2.4.3, the example you gave is a valid example for addressing "the sensitivity analysis in the Planning Assessment must vary one or more of the following conditions not already included in the studies by a sufficient amount to stress the System within a range of credible conditions that demonstrate a measurable change in performance". Part 2.7 requires a Corrective Action Plan to be developed "when the analysis indicates an inability of the System to meet the performance requirements in Table 1". Therefore, the intent is to address situations where simulation and the application of currently planned projects and procedures are insufficient to meet the performance requirements. If a project is added to the Corrective Action Plan, it should be included as part of the study assumptions based on that the criteria Planning Coordinator and Transmission Planner use for inclusion of such planned projects, and clearly identified as an assumption for the annual Assessment as required in Requirement R2, until it is in service or shown to be no longer needed.	
TVA System Planning	In R2.1.4 and R2.4.3, TVA is concerned about the use of the words "sufficient" and "measurable" from a compliance standpoint. TVA believes that these words should be deleted or at least better defined to clarify the actual intent from the SDT on what is technically required for these sensitivity studies. TVA agrees with limiting R2.1.5 spare equipment strategy to just the P0, P1, and P2 single contingency categories. In R2.7.3, both Non-Consequential Load Loss and curtailment of Firm Transmission Service can be permitted if situations arise that are beyond the control of the TP or PC. However these actions are not useful for stability related issues. TVA suggests that for stability related issues, if situations arise that are beyond the control of the Transmission Planner or Planning Coordinator that prevent the implementation of a Corrective Action Plan in the required timeframe, then the TP or PC is permitted to allow some generation to lose synchronism utilizing out of step relaying or other protection method to correct the situation that would normally not be permitted in Table 1. We appreciate the deletion of the previous requirement on non-Consequential Load Loss from the previous draft of TPL-001-1.R2.9: Recommend that this refers to customer loads only, and not to include utility loads such as pump-storage or compressed air generating plant pumping load.
Response: For Part 2.1.4, The SDT envisions that stressed conditions and "measurable change" are to be defined by the responsible Planning Coordinator or Transmission Planner. For Part 2.7.3, most of the situations that are beyond the control of the Transmission Planner or Planning Coordinator usually involve permitting or long lead time projects. If there is a Stability issue, there should be time to implement a CAP. No change made. Part 2.9 has been deleted in response to industry comments.	
Lafayette Utilities System	LUS is satisfied that the current version resolves the issues we raised as to R2.

Organization	Comments for Question 2
Response: The SDT thanks you for your comments.	
MidAmerican Energy Company	MidAmerican commends the SDT for their hard work on this standard. MidAmerican does have comments about this requirement though. MidAmerican recommends a minor editorial to 2.1.4. The subrequirement states that "To accomplish this, the sensitivity analysis in the Planning Assessment must vary one or more of the following conditions not already included in the studies, by a sufficient amount to" The subrequirement as written is not clear whether the condition to be varied is to be one not included in the base studies or a condition that is not varied as part of the sensitivity studies. MidAmerican recommends that this subrequirement be changed as follows: "To accomplish this, the sensitivity analysis in the Planning Assessment must vary one or more of the following conditions FOR WHICH VARIATION IS not already included in the studies, by a sufficient amount to"? The words in caps are words that MidAmerican suggests are added to this part of requirement 2. MidAmerican recommends that the SDT clarify section 2.4.1 and when load models considering induction motors are required. The clarification should add limits or thresholds to provide load models based on areas that have stability limits or issues and to loads of substation size and having dynamic characteristic capable of significantly impacting system damping. Areas that don't have large motors or stability issues should not be required to add unnecessary load modeling. MidAmerican recommends that the SDT modify 2.6.2 by changing "to demonstrate that System changes do no impact the performance results in the study area" to "to demonstrate that System changes do not SIGNIFICANTLY impact the performance results in the study area." The word that is in all caps is added. 2.6.2 as written results in an unrealistic requirement to review every impact minor or large and determine which meets this item and which do not. The recommended change solves this problem. MidAmerican recommends the data retention for R2 and M2 be revised to change "All" to "The". The word "All" is unnecessary and could encourage over-the-top compliance monitoring and enforcement. The revised data retention would read as follows: "THE Planning Assessments performed since". The word in all caps is a word suggested to be added.
Response: The SDT declines to make the change because it does not add clarity to the requirement. For Part 2.4.1, the SDT declines to add specifics, which includes "limits or thresholds to provide load models based on areas that have stability limits or issues and to loads of substation size and having dynamic characteristic capable of significantly impacting voltage stability" because such specificity needs to be determined by the entity performing the study. Part 2.4.1 allows the use of "an aggregate System Load model which represents the overall dynamic behavior of the Load". Areas that do not have large motors can use an appropriate aggregate System Load model. The SDT declines to make the change suggested in Part 2.6.2 because it did not add more clarity than the existing language. The SDT has made the suggested change. **Requirement R2, data retention**: The Planning Assessments performed since the last compliance audit in accordance with Requirement R2 and Measure M2.	
British Columbia Transmission Corp	none

Organization	Comments for Question 2
Response: The SDT thanks you for your comments.	
SERC Dynamics Review Subcommittee (DRS)	Part 2.1.4 and 2.4.3: delete the word "sufficient." We appreciate the deletion of the previous R2.9 on non-Consequential Load Loss from the previous draft of TPL-001-1.Bullet 1 of R.2.4.3: change "Dynamic Model" to "Dynamic Load Model". Part 2.9: Does this refer to customer loads only, or does it include pump-storage or compressed air generating plant pumping load.We recommend that the expected largest consequential load be limited to customer load, not utility load, i.e., pump-storage.
Response: For Part 2.1.4, The SDT envisions that credible sufficient stressed conditions are to be defined by the responsible Planning Coordinator or Transmission Planner. Bullet 1 of Requirement R2, part 2.4.3: has been revised to address your concerns. **Requirement R2, part 2.4.3, bullet #1:** Load level, Load forecast, or dynamic Load model assumptions Part 2.9 has been deleted in response to industry comments.	
SERC Planning Standards Subcommittee	Part 2.1.4 and 2.4.3: delete the word "sufficient." We appreciate the deletion of the previous R2.9 on non-Consequential Load Loss from the previous draft of TPL-001-1. Part 2.9: Does this refer to customer loads only, or does it include pump-storage or compressed air generating plant pumping load.
Response: The word "sufficient" is needed in Part 2.1.4 and Part 2.4.3 to ensure that the variations made to the assumptions to investigate sensitivity are large enough to be meaningful so they can demonstrate the impacts of the changes. The SDT envisions that credible sufficient stressed conditions are to be defined by the responsible Planning Coordinator or Transmission Planner. As such, the SDT declines to revise Parts 2.1.4 and 2.4.3 as suggested. Part 2.9 has been deleted in response to industry comments.	
CenterPoint Energy	Part 2.2: CenterPoint Energy recommends deleting part 2.2 since studies performed in the Long-Term Transmission Planning Horizon have dubious value for organizations whose longest lead time items take less than five years to construct. Even for organizations requiring longer than five years to build some projects, it should be noted that beyond the five year horizon, generation reserve margins have generally been exhausted, requiring speculation as to the location and size of future generating resources in developing system models. In recognition of this reality, the current set of TPL standards appropriately require that assessments be conducted beyond the five-year horizon only as needed to address identified marginal conditions that may require longer lead time solutions. Part 2.5: Part 2.5 appears to have been added in response to one comment to the 3rd draft. In fact, the commenter did not recommend or propose the requirement found in 2.5, but only asked about the SDT's intent regarding this matter. CenterPoint

Organization	Comments for Question 2
	Energy strongly disagrees that part 2.5 is necessary or advisable and recommends that it be deleted. We wholeheartedly agree that Transmission Planners should consider and selectively study potential stability concerns. However, we believe that Transmission Planners are already considering and selectively studying potential stability concerns, and deleting part 2.5 would not preclude the continuation of these practices. However, we oppose mandating stability analysis in the Long-Term Transmission Planning horizon of proposed generation additions or changes due to the uncertainty of where and how much generation will actually be constructed beyond the five year horizon, particularly since generation can be built much faster than five years and can easily invalidate any such assessment. Part 2.7: CenterPoint Energy recommends that part 2.7 be revised to add a reference to part 3.4 and part 4.4 as follows: For planning events shown in Table 1, selected in accordance with parts 3.4 and 4.4, when the analysis. This recommended change is to prevent possible ambiguity or conflicts between part 2.7 and parts 3.4 and 4.4. Part 2.9: CenterPoint Energy agrees with multiple commenters to the 3rd draft that part 2.9 (previously 2.8) should be deleted. Part 2.9 is an unnecessary reporting requirement that has no actual bearing on reliability. By continuing to insist on R2.9, the SDT seems to have inappropriately ignored industry comments to the previous draft while ironically inserting R2.5 into this draft in response to only one industry comment (which did not actually advocate that R2.5 was necessary). CenterPoint Energy urges the SDT to reconsider its dismissal of industry concerns regarding R2.9.
Response: For Part 2.2, the SDT believes there is value in taking a long range view in planning to assess the general trend. The effort can be useful even taking into consideration the uncertainty surrounding long-term planning studies. Since the Long-Term Transmission Planning Horizon is year 6 – year 10, the Planning Coordinator or Transmission Planner can for example, select year 6 or 7 in the Long-Term Transmission Planning Horizon and then use this study as the past study to supplement the near-term studies in the following year(s). For Part 2.5, The SDT believes it is important to evaluate Stability when the planners are evaluating new generation addition or changes which can be more than 5 years in the future, as required in NERC Standard FAC-001-0. Part 2.7 is the Corrective Action Plan resulting from the Planning Assessment. Part 3.4 covers the requirements for studies supporting the steady state portion of the assessment; and Part 4.4 covers the requirements for studies supporting the Stability portion. The SDT believes that Part 2.7 is clear as is and no change is needed. Part 2.9 has been deleted in response to industry comments.	
Progress Energy Carolinas	PEC believes that the language of R2.5 "proposed generation additions and changes" should be clarified as to whether transmission changes near generators are included or not. PEC believes that the requirement to report the largest single consequential load loss under Requirement 2.9 should not be included in the standard. If it remains, it must be made clear that it be applicable only to Year One, and there should be additional clarification that the requirement to report consequential load loss (single number) is ONLY for the most severe contingencies studied for the P1 and P2 contingencies.
Response: Part 2.5 is intended for investigation of Stability issues due to addition of generators. The SDT does not believe that, in general, a Stability assessment is needed for the Long-Term Transmission Planning Horizon. The System model for that timeframe is too uncertain for a meaningful assessment of the System's Stability. However, for those situations where a specific generator is planned to be added in that timeframe, the SDT believes that it will be appropriate to require that	

Organization	Comments for Question 2
the generator's Stability impact be evaluated. Part 2.9 has been deleted in response to industry comments.	
Portland General Electric Co.	PGE believes that the scope of the studies mandated by this requirement should be limited to elements energized at 200kV and above, elements included in generator interconnection, and elements included in interconnections with other utilities. PGE's 115kV system functions to provide "load service" rather than transmission and does not impact the grid in the same manner as the 230kV and 500kV elements that comprise PGE's transmission system. PGE further believes that the requirement to conduct off-peak studies should focus on the varied generation patterns and impact to recognized transmission paths (for WECC, those identified in the WECC Path Catalog) rather than including the full range of studies that are required for on-peak studies. PGE's transmission system is embedded within the larger regional transmission system of the Bonneville Power Administration, and studies of System Off-Peak Load will not reveal any meaningful data internal to PGE's system. Finally, PGE believes that the wording of R2.6.2 is so restrictive that the entire intent of the subrequirement would be negated. PGE believes that "material changes" is such a broad term that every past study would have to have such changes made to reflect the system as it currently exists. Therefore, a company seeking to use a past study to support its Planning Assessment would have to provide a "technical rationale" showing that the material changes do not impact performance results. An effort to demonstrate a technical rationale in a manner that would satisfy future auditors would in many cases be more burdensome than performing a new study.
Response: NERC Reliability Standards apply to BES elements as defined by each Regional Entity. No change made. The SDT believes that System Off-Peak Load studies are a valuable tool in proper planning. Therefore, your Planning Assessment needs to address the results for your System of an Off-Peak Load study regardless of whether you conduct the studies or you rely on studies done by others. No change made. The SDT does not agree that developing a 'technical rationale' is such an onerous task. One can utilize their professional judgment, point to past studies of similar conditions, etc. The key is to thoroughly explain your decisions. No change made.	
FRCC Transmission Working Group	Please further clarify the definition when past studies may be used. Requirement 2, bullets 2.1, 2.2 appear to say that current studies must be used, but that additional information can be provided if desired and it meets certain requirements. Sub-Requirements 2.3, 2.4 and 2.5 seem to allow use of past studies that meet the requirements of 2.6 in lieu of new work. If this is the correct understanding then I suggest the following:For 2.1 and 2.2 revise the statement to read "and be supported by the following annual current studies. The analysis may also include other current and past studies in addition to the annual current studies listed below. R2Bullet 2.6 should also be revised to read "Past studies may be used in lieu of current studies for Bullets 2.3, 2.4, 2.6 if they meet the following requirements: This will insure that it is very obvious the planner, when they may or may not use prior art in place of new work and it's specified in all places in the standard where this is referenced.For these supplemental or "above and beyond" studies, 2.6 should not be referenced. First of all it makes it confusing, since 2.6 is primarily concerned with prior art being used in lieu of new work. Also if the material is supplemental, then it's supplemental and setting requirements on it will

Organization	Comments for Question 2
	only reduce the material provided not improve the reliability of the system. -2.6.2 Consider revising "the study shall not include any material changes" to "the system represented in the study shall not include any material changes". Stating that "the study shall not include material changes" implies changes to the study from the time it was performed to the time it was used, not changes in the underlying transmission system which is what I think you are really targeting. -2.1.4 and 2.4.3: The statement "sufficient amount to stress the system"credible conditions"demonstrate a measurable change" implies that a sensitivity must meet three general criteria: (I will be using load forecast as an easy example, but obviously there is a range of items that could be used)1. That it is expected to increase stress, for example increasing the load forecast would general increase stress, where decreasing it would not.2. That increases should be substantial, for example growing the load at 2x the expected rate vs 1.01x the expected rate. 3. That the change doesn't have to exceed the bounds of credibility. If a 2x or 3x increase doesn't result in a stack of new constraints, it does not mean the increase has to go to 10x the forecast just to show extensive effects. Is this a correct understanding? , realizing that I'm only referencing load growth for simplicity, it not being the only sensitivity? -2.1.4 and 2.4.3: The first sentence "impact of changes to the basic assumptions used in the model for the list of items below", please consider changing to just "impact of change to the basic assumptions used in the model". Including the "list of items below" implies that all items must be addressed, which seems to conflict with the second sentence which specifically allows one or more. -2.7: Is the "Corrective Action Plan" intended to document all of an entities planned future reliability related transmission projects and operational procedures? Or is it intended to address situations where simulation and the application of currently planned projects and procedures are insufficient to meet the performance requirements? -2.7: If a project is added one year to the "Corrective Action Plan" but then in the subsequent year has been added to the model, resulting in simulation showing no performance violations, should it be removed from the Corrective Action Plan? Or should it be referenced in the plan each year until it is either in service or demonstrated to no longer be required? Comments: With regard to the Lower VSL, is 2.6 considered to be met if only one of two sub-requirements (2.6.1 or 2.6.2) is met? With regard to the Moderate VSL, is 2.8 considered to be met if only one of two sub-requirements (2.8.1 or 2.8.2) is met? Also, since 2.3 depends on 2.6, what happens if an entity does not meet R2.6 because it did not meet one of the sub-requirements of 2.6? With regard to the High and Severe VSL, if any one of the sub-requirements of 2.1, 2.2, 2.4 or 2.7 is not met, is the entire sub-requirement considered not met? (This question is generic throughout all VSL) Also, for the short circuit study of 2.3 (and 2.8), it is not necessary to study all of the contingencies, just P2. Taking other Facilities out in addition to the fault will only reduce fault current. Auditors may not be aware of that and maybe the standard could say that only P2 needs to be studied to reduce future confusion. Is the intent of the SDT to have 2.7 apply to all previous bullets in R2? If so, then it could be made clearer by starting 2.7 with

Organization	Comments for Question 2
	"For the analyses discussed in 2.1 through 2.5, and for the planning events shown in Table 1, when the analyses indicate " 2.7 seems to have lost the reference to lead times for Corrective Action Plan(s) that were present in the existing TPL-001-0, TPL-002-0 and TPL-003-0 standards, is that the intent of the SDT? Since only two of the years in the near term need to be studied, and one of the year's in the long term study, there ought to be some method to determine when a Corrective Action Plan is needed, the lead time of that Corrective Action Plan, to give an indication of when activity needs to start to implement the Corrective Action Plan. The requirement clearly states that "For the steady state portion of the Planning Assessment " it must perform simulations that show generator ride through voltage limitations under 3.3.2. However, ride through limitations are performed through stability simulations not steady state as required by R3. Please provide clarity. Additionally, 3.2 requires studies to be performed to assess the impact of the extreme events. Yet, 3.3 requires analyses shall be performed but does not specify the events intended to study. Suggested language for 3.3 should say "Contingency analyses shall be performed to assess the impact of the extreme events and:" Under 3.3.1 it states that the Planner must simulate the removal of all elements that the Protection System would be expected to disconnect. Language should be included to allow the Planner to provide a rationale to assess more severe system conditions without needing to simulate the effects of Protection Systems. The references within the requirements are very confusing. 3.1 refers to a contingency list created in 3.4 which refers back to 3.1. Similarly 3.2 refers to a contingency list created in 3.5 which refers back to 3.2. These should be combined into one sub-requirement.

Response: The SDT reviewed Requirement R2, parts 2.1 through 2.5. Only Parts 2.1 and 2.2 require "annual current year study, supplemented by qualified past studies". Parts 2.1 and 2.2 cover steady state studies in the near-term and the long-term planning horizons, respectively. While the SDT envisions the standard to be flexible enough to allow the use of qualified past studies, the Planning Assessment cannot be based entirely on past studies. Because steady state analysis is part of the basic planning process, the SDT believes that the steady state portion of the studies covering Year One or year two and year five for Near-Term Transmission Planning Horizon and one of the years in the Long-Term Transmission Planning Horizon should be done annually. Qualified past studies can be used to supplement the studies for the remaining study years to support the assessment for the entire planning horizon.

The SDT declines to make the suggested changes in Parts 2.1, 2.2, and 2.6 because they do not add clarity.

The SDT has revised Part 2.6.2 as suggested.

> **Requirement R2, part 2.6.2**: For steady state, short circuit, or Stability analysis: the System represented in the study shall not include any material changes unless a technical rationale can be provided to demonstrate that System changes do not impact the performance results in the study area.

For Parts 2.1.4 and 2.4.3, the example you gave is a valid example for addressing "the sensitivity analysis in the Planning Assessment must vary one or more of the following conditions not already included in the studies by a sufficient amount to stress the System within a range of credible conditions that demonstrate a measurable change in performance".

Part 2.1.4 and 2.4.3 have been revised as suggested.

> **Requirement R2, part 2.1.4**: For each of the studies described in Requirement R2, parts 2.1.1 and 2.1.2, sensitivity case(s) shall be utilized to demonstrate the impact of changes to the basic assumptions used in the model. To accomplish this, the sensitivity analysis in the Planning Assessment must vary one or more of the following conditions not already included in the studies by a sufficient amount to stress the System within a range of credible conditions that demonstrate a measurable change in performance:

Organization	Comments for Question 2
	Requirement R2, part 2.4.3: For each of the studies described in Requirement R2, parts 2.4.1 and 2.4.2, sensitivity case(s) shall be utilized to demonstrate the impact of changes to the basic assumptions used in the model. To accomplish this, the sensitivity analysis in the Planning Assessment must vary one or more of the following conditions not already included in the studies by a sufficient amount to stress the System within a range of credible conditions that demonstrate a measurable change in performance: Part 2.7 requires a Corrective Action Plan to be developed for "when the analysis indicates an inability of the System to meet the performance requirements in Table 1". Therefore, the intent is to address situations where simulation and the application of currently planned projects and procedures are insufficient to meet the performance requirements. If a project is added to the Corrective Action Plan, it should be included as part of the study assumptions (and clearly identified as such), based on the criteria that the Planning Coordinator and Transmission Planner use for inclusion of such planned projects, for the annual Assessment as required in requirement R2, until it is in service or shown to be no longer needed. For the VSL for Requirement 2, both Parts 2.6.1 and 2.6.2 as well as Parts 2.8.1 and 2.8.2 must be met for the requirements to be met. If an entity relied on a past study, which was not a qualified study in accordance with Part 2.6, then based on the standard, it would not meet the requirement in Part 2.3. The intent is that with regard to the High and Severe VSL, if any one of the sub-requirements of Parts 2.1, 2.2, 2.4, or 2.7 is not met, the entire sub-requirement will be considered not met. The SDT believes this concern on Part 2.3 is covered. The Transmission Planner or Planning Coordinator can provide an explanation for why the Contingencies selected would produce the more severe conditions. Part 2.3 requires annual Planning Assessment only. The intent of Part 2.7 is to be applied to all "planning events shown in Table 1, when the analysis indicates an inability of the System to meet the performance requirements in Table 1". Therefore, a reference to Parts 2.1 through 2.5 is not needed. For 2.7.1, NERC Glossary of Terms defines Corrective Action Plan as "A list of actions and an associated timetable for implementation to remedy a specific problem. Also, Part 2.7.4 requires that the CAP be reviewed in subsequent annual Planning Assessments for continued validity and implementation status of identified System Facilities and Operating Procedures. By including the timing of needed action and requiring such reviews in subsequent Assessments, any deficiencies, if not adequately addressed, will become violations. Therefore, the SDT believes that your concerns have been addressed. Part 3.3.2: Generator protections exist that can result in generator tripping for bus voltage below minimum generator steady state voltage limits. The SDT believes that the voltage ride through test is applicable in post-Contingency steady-state where the planner would know if post-Contingency bus voltage violates generator trip points. If a trip point is violated, Part 3.3.2 would require the planner to trip the generator in the post-Contingency case to assess if performance is met with the generator tripped. No change made. Part 3.2 & Part 3.3: The SDT revised the wording of Part 3.3 as shown below to make it clear that it applies to both planning and extreme events: **Requirement R3, part 3.3**: Contingency analyses for Requirement R3, Parts 3.1 & 3.2 shall: Part 3.3.1: The SDT disagrees with the comment as the intent of Requirement R3, part 3.3.1, consistent with Order 693, is to perform the simulation to reflect how the Protection System will operate in the real System for each Contingency without operator intervention. The requirement does not preclude the Planning Coordinator/Transmission Planner from studying more severe scenarios. No change made. Part 3.1/Part 3.4 & Part 3.2/Part 3.5: The SDT does not believe that combining the requirements would provide any significant advantage. No change made.

Organization	Comments for Question 2
American Electric Power	R 2.6.2, as written, may lead to misinterpretation. Following are two alternative suggestions to remedy this issue for the SDT's consideration: 1) "For steady-state, short-circuit, or Stability analysis: the study shall be rendered obsolete by any material changes unless?" or 2) "For steady-state, short-circuit, or Stability analysis: the system shall not include any material changes unless?" While R3 (steady-state studies) covers 2.1 and 2.2 (steady-state assessments), and R4 (stability studies) covers 2.4 and 2.5 (stability assessments), there does not appear to be a corresponding requirement (short circuit studies) to cover 2.3 (short circuit assessments). We recommend that a new requirement be established and numbered to align between existing requirements R3 and R4.
Response: Part 2.6.2 has been revised as suggested. **Requirement R2, part 2.6.2**: For steady state, short circuit, or Stability analysis: the System represented in the study shall not include any material changes unless a technical rationale can be provided to demonstrate that System changes do not impact the performance results in the study area. For Part 2.3, the SDT does not believe a requirement to cover short circuit studies similar to Requirement 3 or Requirement 4 is required. The SDT's intent is for the short circuit study results to be included in the assessment. It does not believe that the standard needs to address the technical requirements for completing the short circuit study as that may be entity specific. Therefore the SDT declines to make the change as suggested.	
NYISO	R2. - The NYISO tariff establishes a biennial "Comprehensive System Planning Process," Compliance with an "Annual Planning Assessment" will therefore be a simple repetition of data reported in the prior year assessment. Please clarify that this is acceptable. We believe that the use of "past studies" provides for this. R2.1 - "Steady state" should be defined upfront with other definitions. In defining "steady state" is "thermal voltage" the primary metric being measured? R2.1.1 - Again want to confirm that due to the NYISO biennial planning cycle, that use of "past studies" will be acceptable. R2.1.2 - Please define what is intended by "off peak." Our reading is that it is ANY load level less than peak. Also, consistent with our comments on the prior draft, system off-peak is more likely a stability issue than a steady state issue. If system off-peak becomes a steady state issue, it can be mitigated through generation redispatch. Accordingly, it appears that this requirement is not necessary for steady state analysis. R2.1.4 - This is just too vague to be a useful requirement. The sentence ? To accomplish this, the sensitivity analysis in the Planning Assessment must vary one or more of the following conditions not already included in the studies by a sufficient amount to stress the System within a range of credible conditions that demonstrate a measurable change in performance. is too subjective to be enforceable. Either definitions of phrases like "sufficient amount" "credible conditions" and "measurable change" are included, or the requirement needs to be written more clearly to state what is actually being required without such high level of subjectivity. Further, we believe that this sentence may not be necessary at all, as the first sentence in 2.1.4 provides sufficient detail to conduct sensitivity analysis without being overly prescriptive. R2.4.3 As much of this language is a repeat of language in 2.1.4, above, our comments there also apply to this section. R2.6 - "Past Studies may be used to support the Planning Assessment if they meet the following requirements" and the sub-

Organization	Comments for Question 2
	requirement R2.6.2 states that for SS, SC, or stability analysis the study shall not include any material changes, such unless a technical rationale can be provided to demonstrate that System changes do not impact the performance results in the study area. While this is better than the prior draft, the NYISO still would like more clarity on the definition of "material changes." Would the inclusion of a technical rationale satisfy ANY change, regardless of magnitude, in a past study. Or could we just invoke the usage of a statement such as "The NYISO feels this change does not constitute a "material change." to be compliant with this requirement? We recommend that the regional entity should have a process to determine whether changes are material that is similar to the NPCC's process for determining what level of annual transmission review should be conducted each year. Finally, does this only relate to, or is limited to, the LATEST PLANNING HORIZON system model R2.7 Recommend that in the sentence "Corrective Action Plan(s) do not need to be developed solely to meet the performance requirements for a single sensitivity" wording should be changed to "performance requirements for any single sensitivity" R2.7.1 Recommend changing phrase that leads into list to read "Such actions including, but not limited to:" R2.7.2 - Recommend consideration of striking this section. It is not clear how an entity can provide a rational for unnecessary actions. Further, if actions are not necessary, what limit would there be on a rational, so they would seemingly be useless? Finally, it is stated above, corrective action plans should not be required for sensitivity studies. R2.9 There does not seem to relate to any reliability need the NYISO is aware of for this requirement to remain.

Response: Regarding Requirement R2 and Part 2.1.1, the SDT believes that NYISO's current process is inconsistent with Parts 2.1 (covering near-term steady state studies) and 2.2 (covering long-term steady state studies) of the draft Standard. Both Parts 2.1 and 2.2 require an annual current year study. Because steady state analysis is part of the basic planning process, the SDT believes that the steady state portion of the studies covering Year One or year two and year five for the Near-Term Transmission Planning Horizon and one of the years in the Long-Term Transmission Planning Horizon should be done annually. Qualified past studies can be used to supplement the studies for the remaining study years to support the assessment for the entire planning horizon.

For part 2.1, the SDT does not believe a definition for steady state is needed as this is a well understood term. There is no 'primary' metric – see the Table 1 Header Notes for more details.

The intent of Part 2.1.2 is to assess those System conditions during periods with lower Load levels than peak when the System may show different potential problems than during periods with peak Load level. For example, during light Load conditions, there may be high voltage problems because of the charging in the lightly loaded lines. There could also be thermal overload problems for areas with more generation than Load. For this reason, it would be appropriate to investigate Off-Peak steady state conditions to ensure that System performance can meet requirements under all demand levels. At the same time, the standard should not be overly prescriptive; therefore, the exact System Off-Peak Load and System conditions should be specified by the entity performing the study.

For Parts 2.1.4 and 2.4.3, The SDT envisions that credible "sufficient" "stressed" conditions and "measurable change" are to be defined by the responsible Planning Coordinator or Transmission Planner because each System is different and the standard should not be overly prescriptive.

Part 2.6.2 allows an entity to rely on a past study with a material change if "a technical rationale can be provided to demonstrate that System changes do not impact the performance results in the study area". The intent is to assess system performance based on the latest available information. Therefore, it is up to the entities performing the study to provide the rationale based on changes, such as Load growth, generation or Transmission additions or modifications.

Part 2.7 has been changed to address your concerns.

Requirement R2, part 2.7: For planning events shown in Table 1, when the analysis indicates an inability of the System to meet the performance requirements

Organization	Comments for Question 2
in Table 1, the Planning Assessment shall include Corrective Action Plan(s) addressing how the performance requirements will be met. Revisions to the Corrective Action Plan(s) are allowed in subsequent Planning Assessments but the planned System shall continue to meet the performance requirements in Table 1. Corrective Action Plan(s) do not need to be developed solely to meet the performance requirements for a single sensitivity case analyzed in accordance with Requirements R2, parts 2.1.4 and 2.4.3. The Corrective Action Plan(s) shall: Part 2.7.1 is simply a list and an entity can always do more than what is required in the Standard. No change made. Part 2.7.2 provides for development of a Corrective Action Plan if a number of sensitivity studies result in the same potential problem. For example, if only one sensitivity study results in potential problems or if the probability of occurrences of the sensitivity scenarios is low, then this would be the rationale to state that a Corrective Action Plan would not be necessary. Part 2.9 has been deleted in response to industry comments.	
Xcel Energy	R2.1 The wording in R2.1 is unclear as to whether new annual studies are required each year or whether qualified past studies are acceptable if no changes have been made. R2 reads "This Planning Assessment shall use current or past studies", while R2.1 implies current studies must be used but can be supplemented by past studies. We suggest changing the wording from "The Near-Term Transmission Planning Horizon portion of the steady state analysis shall be assessed annually and be supported by the following annual current studies, supplemented with qualified past studies" to "The Near-Term Transmission Planning Horizon portion of the steady state analysis shall be assessed annually and be supported by the following annual current studies, or qualified past studies" R2.1.5 Does "The Planning Assessment shall reflect" mean that the entity must meet the performance requirements for categories P0,P1,and P2 during the equipment unavailability? R2.9 As commented in the previous draft, we do not believe this requirement contributes anything to improving BES reliability. Therefore, we strongly recommend deleting this requirement.
Response: The SDT reviewed Requirement R2, parts 2.1 through 2.5. Only Parts 2.1 and 2.2 require "annual current year study, supplemented by qualified past studies". Parts 2.1 and 2.2 cover steady state studies in the near-term and the long-term planning horizon, respectively. While the SDT envisions the standard to be flexible enough to allow the use of qualified past studies, the Planning Assessment cannot be based entirely on past studies. Because steady state analysis is part of the basic planning process, the SDT believes that the steady state portion of the studies covering Year One or year two and year five for Near-Term Transmission Planning Horizon and one of the years in the Long-Term Transmission Planning Horizon should be done annually. Qualified past studies can be used to supplement the studies for the remaining study years to support the assessment for the entire planning horizon. Making the change as requested can result in no current-year study being performed. Therefore, the SDT declines to make the change as suggested. For 2.1.5, your interpretation is correct. Part 2.1.5 requires that the Planning Coordinator or Transmission Planner plans for the potential unavailability of long lead time major Transmission equipment in accordance with its spare equipment strategy. If the spare equipment strategy can result in unavailability of long lead time equipment, the study will need to also be modeled with the piece of equipment out of service as P0. Part 2.9 has been deleted as suggested.	
Ameren	R2.1.3: The wording for this requirement needs clarification. It is suggested that the following language be submitted as a replacement: Known outages of generation or Transmission facilities should be included in the models representing those

Organization	Comments for Question 2
	System peak or Off-peak conditions when outages are scheduled. R2.1.4 and R2.4.3: The phrase "by a sufficient amount" should be modified to "by an amount". Also, in R2.4.3, "dynamic model assumptions" should be changed to "dynamic load model assumptions." R2.6.2: Recognition should be made of the fact that cancellation of generation or transmission projects, which may have been included in a previous study, would decrease fault levels, and would reduce or eliminate the need for short circuit analysis. R2.8: Would the Planning Coordinator be required to review, replicate, or validate short circuit studies? We appreciate the deletion of R2.9 from the previous draft of TPL-001-1 and eliminated the reporting of Non-Consequential Load Loss for each of the planning events. In R2.9, it is recommended that the largest Consequential Load Loss not include items such as pumped storage load or other utility load.
Response: Part 2.1.3 covers known long duration outages, for example, taking a 230 kV Transmission line out of service to rebuild it to operate at 500 kV. These cases are to simulate System conditions with the Facility in question out of service as Category P0 (or N-0). For the next outage, the System performance will need to meet requirements for Category P1. For Parts 2.1.4 and 2.4.3, the SDT envisions that "credible", "sufficient", "stressed" conditions and "measurable change" are to be defined by the responsible Planning Coordinator or Transmission Planner because each System is different. Part 2.4.3 has been revised as suggested. **Requirement R2, part 2.4.3, bullet #1:** Load level, Load forecast, or dynamic Load model assumptions For Part 2.6.2, the SDT agrees with the expectation concerning short circuit studies. For Part 2.8, as in other parts of this draft standard, the Planning Coordinator is responsible for its portion of the BES. It may delegate the work by agreement, it is, however, still responsible. Part 2.9 has been deleted in response to industry comments.	
Manitoba Hydro	R2.1.4.: The first sentence implies that all sensitivities should be studied. The second sentence refers to one or more. I suggest the following change to the first sentence: "....basic assumptions used in the model." (i.e. delete "for the list of items shown below." from the end of the first sentence.) R2.4.3: The exact same change as above in R2.1.4. R2.1.5: We assume the intent of the standard would be to perform an annual review of the inventory of spare equipment to determine if the spare strategy required updating. For example, if a transformer failed and the spare was moved into position, a new spare would be ordered to replace the failed one. During the period, when no spare was in place, additional assessments would be required to ensure meeting Table 1. Can the drafting team clarify? R2.5: The drafting team modified "material changes" to simply "changes" in R2.5. This does not add clarity. Given that R2.5 is

Organization	Comments for Question 2
	related to Stability Analysis, perhaps "changes" could be modified to "changes that could impact stability or voltage". R2.6: Recommend changing "the study" to "the past study" and "an older study" to "an older past study" to ensure no confusion could result from past and current studies. Can the drafting team explain how a past study can have material changes in R2.6.2? Perhaps R2.6.2 could be deleted. VSL: We would recommend moving R2.8's VSL from Moderate to both High and Severe. R2.8 requires a corrective plan to be developed when the short circuit duty of a circuit breaker is known to be exceeded. This is safety issue and a reliability issue.

Response: In Parts 2.1.4 and 2.4.3, the first sentence has been revised as suggested.

> **Requirement R2, part 2.1.4**: For each of the studies described in Requirement R2, parts 2.1.1 and 2.1.2, sensitivity case(s) shall be utilized to demonstrate the impact of changes to the basic assumptions used in the model. To accomplish this, the sensitivity analysis in the Planning Assessment must vary one or more of the following conditions not already included in the studies by a sufficient amount to stress the System within a range of credible conditions that demonstrate a measurable change in performance:
>
> **Requirement R2, part 2.4.3**: For each of the studies described in Requirement R2, parts 2.4.1 and 2.4.2, sensitivity case(s) shall be utilized to demonstrate the impact of changes to the basic assumptions used in the model. To accomplish this, the sensitivity analysis in the Planning Assessment must vary one or more of the following conditions not already included in the studies by a sufficient amount to stress the System within a range of credible conditions that demonstrate a measurable change in performance:

Part 2.1.5 does not address the specific requirements of an individual plan. Since a Planning Assessment is required annually, the analysis required under Part 2.1.5 is an annual requirement. The answer to the specific example would depend on a variety of factors, including the timing of the failure, the length of time that it would take to replace the spare, your Operation Planning time horizon and the specifics of your individual spare equipment strategy. The language in Part 2.1.5 states "the impact of this possible unavailability on System performance shall be assessed", which must be completed annually as a part of your Planning Assessment. The first year that a Planning Coordinator or a Transmission Planner is responsible for assessing (Year One) is defined as the planning window that begins 12-18 months from the end of the current calendar year. After the original spare is put to use, if a new spare can be made available before Year One in the next Planning Assessment, the time period during which no spare is available could then be covered in Operation Planning studies. Longer delivery times would impact the spare availability and an appropriate assessment would be expected in Year One by the Transmission Planner. In addition, to provide greater clarity, the SDT has revised the first sentence of Part 2.1.5 to read, "When an entity's spare equipment strategy could result in the unavailability of major Transmission equipment that has a lead time of one year or more (such as a transformer), the impact of this possible unavailability on System performance shall be assessed.

> **Requirement R2, part 2.1.5**: When an entity's spare equipment strategy could result in the unavailability of major Transmission equipment that has a lead time of one year or more (such as a transformer), the impact of this possible unavailability on System performance shall be assessed. The Planning Assessment shall reflect the P0, P1, and P2 categories identified in Table 1 during the conditions that the System is expected to experience due to the possible unavailability of the long lead time equipment.

Part 2.5, the SDT declines to make the change as suggested because the suggested change does not add clarity.

The SDT declines to make the change suggested in Part 2.6 because it did not add more clarity than the existing language.

The SDT has revised Part 2.6.2 to provide additional clarity.

> **Requirement R2, part 2.6.2**: For steady state, short circuit, or Stability analysis: the System represented in the study shall not include any material changes

Organization	Comments for Question 2
unless a technical rationale can be provided to demonstrate that System changes do not impact the performance results in the study area. While the SDT agrees that the short circuit analysis is important, Part 2.8 has been assigned a VSL based on its need to fulfill Requirement R2. Safety is covered in other venues.	
Tri-State Generation and Transmission Association	R2.2 What is an "annual current study"? Would this include previously performed studies that are still applicable?? R2.2. What is "qualified past studies"? We have no definitions for "qualifying" previous work. This might be remedied by inserting the term "qualified" in R2.6.? R2.1.4. Sensitivity cases could add much work to the existing process. However, the standard calls for "at least one" of the listed sensitivity studies to be performed. R2.2.1. The requirement to perform a "current study" assessing expected System peak Load conditions, for one of the years in the Long-Term Transmission Planning Horizon, is extra work if a valid/qualified study is available. If the intention here is to have a valid study for at least one of the years 6 to 10, then perhaps some simple rewording will solve the problem. We ascribe to the concept of requiring annual assessments, but not necessarily requiring repeated analysis if system changes do not warrant restudy. Hyphenate "in-service" R2.6.1 Change "the study shall be five calendar years old or less" to: "the study is five calendar years old or less" R2.6.2 change the phrase "shall not include any material changes" to "does not include any material changes" R2.6.2 it is not clear what is meant by "material changes" - different "Study conditions" or "changes that could cause different results for a particular study"?
Response: In Parts 2.2 & 2.2.1, an "annual current study" is one that must be done in the current assessment cycle. Previously performed studies can be used to supplement the current study, but not in place of it. Because steady state analysis is part of basic planning process, the SDT believes that the steady state portion of the studies covering one of the years in the Long-Term Transmission Planning Horizon should be done annually. Qualified past studies can be used to supplement the studies for the remaining study years to support the assessment for the entire Long-Term Transmission Planning Horizon. In Part 2.2, the "qualified past studies" are as indicated in Requirement R2, part 2.6. The SDT believes that the existing language is clear and changes are not needed. Part 2.1.4 – There is no question here so the SDT is unable to provide a specific response. For Part 2.6.1, the SDT declines to make the changes as suggested because they do not provide more clarity than the existing language. The SDT has revised Part 2.6.2 to address your concerns. Part 2.6.2 also allows an entity to rely on a past study with a material change if "a technical rationale can be provided to demonstrate that System changes do not impact the performance results in the study area". Therefore, it is up to the entities performing the study to provide the rationale based on changes, such as load growth. **Requirement R2, part 2.6.2**: For steady state, short circuit, or Stability analysis: the System represented in the study shall not include any material changes unless a technical rationale can be provided to demonstrate that System changes do not impact the performance results in the study area.	
Oklahoma Gas & Electric	R2.4.3 Not positive what this actually requires Transmission Planner to perform. Recommend compliance with requirement be

Organization	Comments for Question 2
	the responsibility of the Transmission Coordinator. R2.9 OG&E has not provided this information in the past. Different sets of load flow models will result in different data results. Do not see any merit with providing information.
Response: Part 2.4.3 is part of Requirement 2, which applies to both the Transmission Planner and the Planning Coordinator for their respective portion of the BES. So, both are responsible for meeting the requirements even though the actual work may be shared or delegated. Part 2.9 has been deleted in response to industry comments.	
Arizona Public Service Co.	R2.6.2: The wording "study shall not include" is confusing since it refers to the past studies.
Response: Part 2.6.2 has been to address your concerns. **Requirement R2, part 2.6.2**: For steady state, short circuit, or Stability analysis: the System represented in the study shall not include any material changes unless a technical rationale can be provided to demonstrate that System changes do not impact the performance results in the study area.	
Hydro-Québec TransEnergie (HQT)	Requirement 2.1 As written, it is not clear. HQT, as does NPCC, suggests revising language as in 2.4 as follows:"The Near-Term Transmission Planning Horizon portion of the steady state" analysis shall be assessed annually and be supported by current or past studies as indicated in? Requirement R2, part 2.6. The following studies are required: Requirement 2.1.2 The use of the term "off peak" is a concern. The definition for this term can be read to say that it is any load level less than peak. This does not provide enough clarity to guide the required assessments. Requirement 2.2 As written, it is not clear. HQT, as does NPCC, suggests revising language in 2.2 as in 2.4 as follows: The Long-Term Transmission Planning Horizon portion of the steady state" analysis shall be assessed annually and be supported by current or past studies as indicated in? Requirement R2, part 2.6. The following studies are required: Requirement 2.7 HQT,as does NPCC, suggests changing the word "run" to "condition" in "Corrective Action Plan(s) do not need to be developed solely to meet the performance requirements for a single sensitivity run in accordance with Requirements R2, parts 2.1.4 and 2.4.3." Requirement 2.9 It should not be necessary to identify the largest consequential load loss if the TPL standard does not limit the size of the consequential load loss. This requirement should be deleted.
Response: The SDT reviewed Requirement R2, parts 2.1 through 2.5. Only Parts 2.1 and 2.2 require "annual current year study, supplemented by qualified past studies". Parts 2.1 and 2.2 cover steady state studies in the near-term and the long-term planning horizon, respectively. While the SDT envisions the standard to be flexible enough to allow the use of qualified past studies, the Planning Assessment cannot be based entirely on past studies. Because steady state analysis is part of the basic planning process, the SDT believes the steady state portion of the studies covering Year One or year two and year five for Near-Term Transmission Planning Horizon and one of the years in the Long-Term Transmission Planning Horizon should be done annually. Qualified past studies can be used to supplement the studies for the remaining study years to support the assessment for the entire planning horizon. Making the change as requested can result in no current-year	

Organization	Comments for Question 2
	study being performed. Therefore, the SDT declines to make the change as suggested. The intent of Part 2.1.2 is to assess those System conditions during periods with lower Load levels than peak when the System may show different potential problems than during periods with peak Load level. For example, during light Load conditions, there may be high voltage problems because of the charging in the lightly loaded lines. There could also be thermal overload problems for areas with more generation than Load. For this reason, it would not be appropriate to eliminate the requirement to investigate Off-Peak steady state or Stability conditions. At the same time, the standard should not be overly prescriptive; therefore, the exact System Off-Peak Load should be specified by the entity performing the study. Part 2.7 has been changed to address your concerns. **Requirement R2, part 2.7**: For planning events shown in Table 1, when the analysis indicates an inability of the System to meet the performance requirements in Table 1, the Planning Assessment shall include Corrective Action Plan(s) addressing how the performance requirements will be met. Revisions to the Corrective Action Plan(s) are allowed in subsequent Planning Assessments but the planned System shall continue to meet the performance requirements in Table 1. Corrective Action Plan(s) do not need to be developed solely to meet the performance requirements for a single sensitivity case analyzed in accordance with Requirements R2, parts 2.1.4 and 2.4.3. The Corrective Action Plan(s) shall: Part 2.9 has been deleted as suggested.
Northeast Power Coordinating Council--RSC	Requirement R2 (second line): "This Planning Assessment shall use current or past studies," should be replaced with "This Planning Assessment shall use current studies or qualified past studies as indicated in Requirement R2, part 2.6," Requirements 2.1, 2.2, 2.3, and 2.4--As written, are not clear. It is suggested to revise the language as follows: "The Near-Term Transmission Planning Horizon portion of the steady stateanalysis shall be assessed annually and be supported by current studies or qualified past studies as indicated in Requirement R2, part 2.6. The following studies are required:"Requirement 2.1.2 The use of the term "off peak" is a concern. The definition for this term is not provided, and can be read to say that it is any load level less than peak. This does not provide enough clarity to guide the required assessments. Requirement 2.1.3: It must be clarified that the reference to outages as listed in Requirement R1, part 1.1.2 must be limited to Planning Horizon. Refer to Requirement 1.1.2 in the response to Question 1. Requirement 2.1.4: Consistent with the suggestion made for Requirment 1.1.2 remove the last bulleted item in the list under Requirement 2.1.4 "Duration or timing of planned Transmission outages." The standard is referring to requirements for sensitivity without a reference to base cases. Refer to Comment on Proposal to add an item 1.2 Requirement 2.1.5: It needs to be clear that this is only an assessment, not a solution. Actions such as out of merit dispatch, operational restrictions, System reconfiguration can be part of a Corrective Action Plan if the System cannot meet performance requirements without the Facility in service. It can be reworded as "an assessment of the impact of this possible unavailability on System performance shall be performed". Requirement 2.3: The requirement does not indicate a year to study. This should be modified to state that it is up to the Planner to determine the year of study within the Near Term Transmission Planning Horizon.

Organization	Comments for Question 2
	Requirement 2.4.2: Same as 2.1.2 Requirement 2.4.3: Refer to the Comment for Question 1 to add a Requirement 1.2 Requirement 2.5: Revise language as follows: be supported by current studies or qualified past studies as indicated in Requirement R2, part 2.6. Requirement 2.7 NPCC suggests changing the word "run" to "condition" so the wording will read Corrective Action Plan(s) do not need to be developed solely to meet the performance requirements for a single sensitivity condition in accordance with Requirements R2, parts 2.1.4 and 2.4.3. Requirement 2.9 It should not be necessary to identify the largest consequential load loss if the TPL standard does not limit the size of the consequential load loss. This requirement should be deleted. If it remains, it must be made clear that it be applicable only to Year One or Year Two.
National Grid	Requirement R2 (second line): This Planning Assessment shall use current or past studies, should be replaced with "This Planning Assessment shall use current studies or qualified past studies as indicated in Requirement R2, part 2.6," Sub-Requirements 2.1, 2,2, 2,3, and 2.4: Language to be revised to the following:"be supported by current studies or qualified past studies as indicated in Requirement R2, part 2.6. The following studies are required."Sub-Requirement 2.1.2: Definition of "off-peak" not provided and can be read to say that it is any load level less than peak. This does not provide enough clarity to guide the required assessments. Sub-Requirement 2.1.3: It must be clarified that the reference to outages as listed in Requirement R1, part 1.1.2 must be limited to Planning Horizon. Refer to Sub-Requirement 1.1.2 in Question 1.Sub-Requirement 2.1.4: Consistent with the suggestion made for section 1.1.2 please remove the last bulleted item in the list under section 2.1.4. "Duration or timing of planned Transmission outages." The standard is referring to requirements for sensitivity without a reference to base cases. Refer to Comment on Proposal to add an item 1.2 Sub-Requirement 2.1.5: It needs to be clear that this is only an assessment, not a solution. Actions such as out of merit dispatch, operational restrictions, System reconfiguration can be part of a Corrective Action Plan if the System cannot meet performance requirements without the Facility in service. It can be reworded as "an assessment of the impact of this possible unavailability on System performance shall be performed" Sub-Requirement 2.3: The requirement does not indicate a year to study. This should be modified to state that it is up to the Planner to determine the year of study within the Near Term Transmission Planning Horizon. Sub-Requirement 2.4.2: Same as 2.1.2Sub-Requirement 2.4.3: Refer to Comment on Proposal to add an item 1.2 Sub-Requirement 2.5: Revise language as follows:"be supported by current studies or qualified past studies as indicated in Requirement R2, part 2.6. Sub-Requirement 2.7: It is suggested to change the word "run" to "condition" such that it reads "Corrective Action Plan(s) do not

Organization	Comments for Question 2
	need to be developed solely to meet the performance requirements for a single sensitivity condition in accordance with Requirements R2, parts 2.1.4 and 2.4.3." Sub-Requirement 2.7.2: Refer to Comment on Proposal to add an item 1.2 Sub-Requirement 2.9: It should not be necessary to identify the largest consequential load loss if the TPL standard does not limit the size of the consequential load loss. This requirement should be deleted. If it remains, it must be made clear that it be applicable only to Year One or Year Two.

Response: The SDT reviewed Requirement R2, parts 2.1 through 2.5. Only Parts 2.1 and 2.2 require "annual current year study, supplemented by qualified past studies". Parts 2.1 and 2.2 cover steady state studies in the near-term and the long-term planning horizon, respectively. While the SDT envisions the standard to be flexible enough to allow the use of qualified past studies, the Planning Assessment cannot be based entirely on past studies. Because steady state analysis is part of basic planning process, the SDT believes that the steady state portion of the studies covering Year One or year two and year five for Near-Term Transmission Planning Horizon and one of the years in the Long-Term Transmission Planning Horizon should be done annually. Qualified past studies can be used to supplement the studies for the remaining study years to support the assessment for the entire planning horizon. Making the change as requested can result in no current-year study being performed. Therefore, the SDT declines to make the change as suggested.

The intent of Parts 2.1.2 and 2.4.2 is to support assessment of those System conditions during periods with lower Load levels than peak when the System may show different potential problems than during periods with peak Load level. For example, during light Load conditions, there may be high voltage problems because of the charging in the lightly loaded lines. There could also be thermal overload problems for areas with more generation than Load. The System could have less damping and could result in potential Stability problems. For this reason, it would not be appropriate to eliminate the requirement to investigate Off-Peak steady state or Stability conditions. At the same time, the standard should not be overly prescriptive; therefore, the exact System Off-Peak Load should be specified by the entity performing the study.

Part 2.1.2 – Off-Peak is a defined term in the NERC Glossary.

Part 2.1.3 is a sub-part of Part 2.1 which is limited by the Near-Term Transmission Planning Horizon so no change is made.

The SDT declines to remove the last bullet in Part 2.1.4, "Duration or timing of planned Transmission outages" as a potential sensitivity. The intent is to cover unexpected changes in plans, for example, a potential delay in returning a Transmission line back to service after a planned outage of 6 months or more for rebuilding to a higher capacity line. In this case, the System with the equipment in question out of service would be modeled as P0 (or N-0), the next outage would be, for example, P1 (N-1), and not covered in P6.

For Part 2.1.4, the SDT believes that the "base case conditions", on which to base the sensitivity cases, should be defined by the entity performing the study. Sensitivity studies are performed to provide insight into the impacts of potential variations of assumptions in studies. The SDT therefore declines to make the change as suggested.

The SDT believes that your concern on Part 2.1.5 has already been addressed. Part 2.7.1 - Corrective Action can include, among other things:

- Installation, modification, or removal of Protection Systems or Special Protection Systems
- Installation or modification of automatic generation tripping as a response to a single or multiple Contingency to mitigate Stability performance violations.
- Installation or modification of manual and automatic generation runback/tripping as a response to a single or multiple Contingency to mitigate Steady State performance violations.
- Use of Operating Procedures specifying how long they will be needed as part of the Corrective Action Plan.

Organization	Comments for Question 2
	o Use of rate applications, DSM, new technologies, or other initiatives. In addition, the first sentence of Part 2.1.5 has been revised. **Requirement R2, part 2.1.5**: When an entity's spare equipment strategy could result in the unavailability of major Transmission equipment that has a lead time of one year or more (such as a transformer), the impact of this possible unavailability on System performance shall be assessed. The Planning Assessment shall reflect the P0, P1, and P2 categories identified in Table 1 during the conditions that the System is expected to experience due to the possible unavailability of the long lead time equipment. The SDT believes that this concern has been addressed. Part 2.3 is silent on the year of study within the Near-Term Transmission Planning Horizon. Therefore, it is up to the Transmission Planner or Planning Coordinator to select the study years most suited to the System in question. In addition, Part 2.3 only requires an annual Planning Assessment, which is to be supported by annual current or qualified past studies. For Part 2.4.3, the SDT believes that the "base case conditions", on which to base the sensitivity cases, should be defined by the entity performing the study. Sensitivity studies are performed to provide insight into the impacts of potential variations of assumptions in studies. The SDT therefore declines to make the change as suggested. The existing language in Part 2.5 already allows the assessment to be supported by current or past studies. Therefore, the suggested change is not needed. Part 2.7 has been changed to address your concerns. **Requirement R2, part 2.7**: For planning events shown in Table 1, when the analysis indicates an inability of the System to meet the performance requirements in Table 1, the Planning Assessment shall include Corrective Action Plan(s) addressing how the performance requirements will be met. Revisions to the Corrective Action Plan(s) are allowed in subsequent Planning Assessments but the planned System shall continue to meet the performance requirements in Table 1. Corrective Action Plan(s) do not need to be developed solely to meet the performance requirements for a single sensitivity case analyzed in accordance with Requirements R2, parts 2.1.4 and 2.4.3. The Corrective Action Plan(s) shall: For response to comments on Part 2.7.2, please see previous response to proposal to add Part 1.2. Part 2.9 has been deleted due to industry comments.
Midwest ISO	Requirement R2.1.4: It should be made clear that the sensitivity findings do not obligate the PC or TP to establish Corrective Action Plans to address any needs identified in the sensitivity cases. Also, the use of the following two words "sufficient" and "measurable" are too vague and hard to quantify. This may require an auditor's opinion. Suggest at least removing the word "sufficient" from the requirements. Requirement R2.1.5: This requirement states that we need to perform prior outage analysis for P0, P1 and P2 events for all long-lead time (>1year) components without spares. This seems redundant with P3 and P6 which will answer whether those events are an issue. Need to be clear that loss of load is or is not allowed for these events. P2 still allows for some loss of load. Bottom line is that P2.1.5 seems duplicative. What is intent of requirement? Rather say the P3 and P6 should note if long-lead time items are involved without spares. Also, the Planning Coordinator could have an administrative burden demonstrating compliance with a spare equipment strategy for its entire footprint. Requirement R2.4.3: the use of the following two words "sufficient" and "measurable" are too vague and hard to quantify. This may require an auditor's opinion. Suggest at least removing the word "sufficient" from the requirements.

Organization	Comments for Question 2
	Requirement R2.7.2: As suggested in the comments above for R2.1.4, it should be clarified that corrective actions are not necessary for performance deficiencies identified by sensitivity studies. Request removing this requirement all together. If the SDT agrees to keep this requirement then we offer the following comments: It is not clear how an entity can provide rational for why actions were not necessary. Requirement R2.9: With regards to the largest consequential loss of loads for P1 and P2 events; if no action is required then why require the entities to provide this. Will it matter if 10MW or 100MW is tripped with the line? This is a system design issue which is not addressed by the standards, if this requirement is kept how is an entity expected to demonstrate compliance for this? This requirement is an administrative burden and we propose to remove R2.9 all together considering that there is not a reliability-related need for this information and it is unnecessary.
Response: The SDT believes that your concern on Part 2.1.4 is already covered in the existing draft. The existing Part 2.7 states, in part, that "Corrective Action Plan(s) do not need to be developed solely to meet the performance requirements for a single sensitivity case analyzed in accordance with Requirements R2, parts 2.1.4 and 2.4.3. In addition, Part 2.7.2 describes the requirement on Corrective Action Plans to "Include actions to resolve performance deficiencies identified in multiple sensitivity studies or provide a rationale for why actions were not necessary". For Parts 2.1.4 and 2.4.3, The SDT envisions that "credible", "sufficient", "stressed" conditions and "measurable change" are to be defined by the responsible Planning Coordinator or Transmission Planner because each System is different. Part 2.1.5 only requires that the Planning Coordinator or Transmission Planner plans for the potential unavailability of long lead time major Transmission equipment in accordance with its spare equipment strategy. For example, if an entity's spare equipment strategy is to have a spare transformer on site, then the unavailability of a similar transformer (due to outages) would be limited to the time it would take to energize the spare transformer. Assuming that this time is no more than that required to return a similar outaged transformer back in service, Part 2.1.5 can be satisfied without performing additional planning studies. If on the other hand, the transformer would have to be purchased, then it would take more than a year to replace. In this case, for Part 2.1.5, P0 should be modeled with the transformer in question out of service. The performance requirements in Table 1 will apply for the next single Contingency. This is not the same as P2 or P6; both of which are events starting from System intact condition as P0. It is also not the same as P3, which covers loss of a generator as the first event, and Part 2.1.5 covers loss of a piece of major Transmission equipment, for which there is no spare. The words "sufficient" and 'measurable' are needed in Part 2.4.3 to ensure that the variations made to the assumptions to investigate sensitivity are large enough to be meaningful so they can demonstrate the impacts of the changes. The SDT envisions that credible sufficient stressed conditions and measurable changes are to be defined by the responsible Planning Coordinator or Transmission Planner. As such, the SDT declines to revise Parts 2.1.4 and 2.4.3 as suggested. The SDT believes that your concern on Part 2.7 is covered in the existing draft. Part 2.7 states, in part, that "Corrective Action Plan(s) do not need to be developed solely to meet the performance requirements for a single sensitivity run in accordance with Requirements R2, Parts 2.1.4 and 2.4.3. In addition, Part 2.7.2 provides for development of a Corrective Action Plan if a number of sensitivity studies result in the same potential problem. For example, if only one sensitivity study results in potential problems or if the probability of occurrences of the sensitivity scenarios is low, then this could be the rationale to state that corrective action plan would not be necessary. Part 2.9 has been deleted as suggested.	
Duke Energy	Reword R2.1 as follows: The Near-Term Transmission Planning Horizon portion of the steady state analysis shall be assessed annually and be based on the following annual current studies, supplemented with qualified past studies that meet Requirement R2, part 2.6.

Organization	Comments for Question 2
	The following studies are required: We believe that using a past study for the Long Term Assessment is adequate, as long as the past study meets R2.6. Reword R2.2 as follows: The Long-Term Transmission Planning Horizon portion of the steady state analysis shall be assessed annually and be based on the following annual current study or qualified past study that meets Requirement R2, part 2.6. The following study is required: Reword R2.2.1 as follows: System peak Load conditions for one of the years in the Long-Term Transmission Planning Horizon and the rationale for why that year was selected. We believe that using past studies for the Near-Term Transmission Planning Horizon portion of the Stability analysis is adequate, as long as the past studies meet R2.6. Reword R2.4 as follows: The Near-Term Transmission Planning Horizon portion of the Stability analysis shall be assessed annually and be based on the following annual current studies or qualified past studies that meet Requirement R2, part2.6. The following studies are required: R2.5 Does the phrase "proposed generation additions or changes in that timeframe" refer only to generation changes, or does it also refer to transmission system changes?
Response: The SDT declines to make the change to Part 2.1 as suggested because it does not add more clarity than the existing language. The SDT declines to make this change to Part 2.2 and Part 2.2.1. While the SDT envisions the standard to be flexible enough to allow the use of qualified past studies, the Planning Assessment cannot be based entirely on past studies. Because steady state analysis is part of the basic planning process, the SDT believes that the steady state portion of the studies one of the years in the Long-Term Transmission Planning Horizon should be done annually. Qualified past studies can be used to supplement the studies for the remaining study years to support the assessment for the entire Long-Term Transmission Planning Horizon. Making the change as requested can result in no current-year study for the Long-Term Transmission Planning Horizon being performed. Therefore, the SDT declines to make the change as suggested. The SDT declines to make the change to Part 2.4 as suggested because it does not add more clarity than the existing language. Part 2.5 is intended for investigation of Stability issues due to addition of generators. The SDT does not believe that, in general, a Stability assessment is needed for the Long-Term Transmission Planning Horizon. The System model for that timeframe is too uncertain for a meaningful assessment of the System's Stability. However, for those situations where a specific generator is planned to be added in that timeframe, the SDT believes that it will be appropriate to require that the generator's Stability impact be evaluated.	
NorthWestern Energy	Short circuit analysis is a local issue. The reliability of the BES does not depend on the regular assessment of short circuit duty. Therefore, we believe short circuit analysis should be deleted from R2. The wording in R2.1 is unclear: Are new annual studies required each year or are qualified past studies acceptable if no changes have been made? R2 reads "This Planning Assessment shall use current or past studies", while R2.1 implies current studies must be used but can be supplemented by past studies. We suggest changing the wording from "The Near-Term Transmission Planning Horizon portion of the steady state analysis shall be assessed annually and be supported by the following annual current studies, supplemented with qualified past studies" to "The Near-Term Transmission Planning Horizon portion of the steady state analysis shall be assessed annually and be supported by the following annual current studies, or qualified past studies"

Organization	Comments for Question 2
	Are the sensitivity studies identified by the bullets in R2.1.4 to align with the sensitivity studies identified by the bullets in R2.4.3? Both are for Near-Term studies but for steady state and stability respectively. If they should align, the wording should be modified to be the same. As written R2.1.4, "Real and reactive Load forecasts", could mean that both Real and Reactive Load forecasts are required. Since most entities only forecast Real (MW) and apply a power factor for reactive (MVAR), wording could be changed to " forecasted demand and power factor" to clarify that forecasting reactive load is not required.
Response: Part 2.3 is intended for the Planning Coordinator and/or Transmission Planner to assess the whether circuit breakers supporting the BES have interrupting capability for Faults that they will be expected to interrupt. Even though the effects of short circuit capability are localized and may be related to new planned Facilities, it is important to BES reliability. Therefore, the SDT declines to delete the requirement for short circuit analysis from Requirement R2. The SDT reviewed Requirement 2 and Parts 2.1 through 2.5. Only Parts 2.1 and 2.2 require "annual current year study, supplemented by qualified past studies". Parts 2.1 and 2.2 cover steady state studies in the near-term and the long-term planning horizons, respectively. While the SDT envisions the standard to be flexible enough to allow the use of qualified past studies, the Planning Assessment cannot be based entirely on past studies. Because steady state analysis is part of the basic planning process, the SDT believes that the steady state portion of the studies covering Year One or year two and year five for the Near-Term Transmission Planning Horizon and one of the years in the Long-Term Transmission Planning Horizon should be done annually. Qualified past studies can be used to supplement the studies for the remaining study years to support the assessment for the entire planning horizon. Making the change as requested can result in no current-year study being performed. Therefore, the SDT declines to make the change as suggested. The SDT reviewed Parts 2.1.4 and 2.4.3. The third bullet in Part 2.4.3 has been modified. The remaining differences between the two parts are intended. The SDT developed the lists contained within Parts 2.1.4 and 2.4.3 to address those situations which it believed were the most relevant for the steady state evaluations and stability evaluations, respectively. **Requirement R2, part 2.4.3**, **bullet #3**: Expected in service dates of new or modified Transmission Facilities Part 2.1.4 states that a reactive forecast is required. Using a power factor is one method that may be used in calculating this reactive forecast.	
Sacramento Municipal Utility District	SMUD appreciates the diligence with which the SDT has responded to our earlier comments. SMUD offers the following comments on Draft #4 for the SDT's consideration: R2.1.4: To define a "sensitivity" case, the standard should first define a "base" case. If a sensitivity case is a more conservative scenario analysis than a base case, does an entity need to perform/document a Planning Assessment for both "base" and "sensitivity" or is a Planning Assessment that uses the "Sensitivity" case adequate? R2.1: The wording in R2.1 is unclear as to whether new annual studies are required each year or whether qualified past studies are acceptable if no changes have been made. R2 reads "This Planning Assessment shall use current or past studies", while R2.1 implies current studies must be used but can be supplemented by past studies. We suggest changing the wording from "The Near-Term Transmission Planning Horizon portion of the steady state analysis shall be assessed annually and be supported by the following annual current studies, supplemented with qualified past studies" to "The Near-Term Transmission Planning Horizon portion of the steady state analysis shall be assessed annually and be supported by the following annual current studies, or qualified past studies". R2.1.4 and R2.4.3: The words, "by a sufficient amount" should be removed as it does not provide any more clarity.

Organization	Comments for Question 2
	R2.1.5: The first part of the sentence calls for an analysis of the impact (of modeling the spare equipment strategy). The second part of the sentence that defines the applicable categories to study, starts with the words "The Planning Assessment". Use of the defined words "Planning Assessment", broadens the study to both an impact assessment and providing details of a "Corrective Action Plan". The intent of the requirement should be made clear in the first sentence. R2.4.3: Suggest deleting the words "in the Planning Assessment". Since a corrective action is not required for all sensitivities (see R2.7), use of the defined term in this paragraph can be confusing. R2.6.1: SMUD agrees with allowing a study older than five years to be considered if a technical rationale can be provided. R2.9: The requirement to report the largest single consequential load loss should not be included in the standard. If it remains, it must be made clear that it be applicable only to Year One, and there should be additional clarification that the requirement to report consequential load loss (single number) is ONLY for the most severe contingencies studied for the P1 and P2 contingencies. Table 1 P1.3 and associated Note 5: Is the purpose of the "reference voltage" to determine a valid transformer contingency (thereby, limiting the scope of R2.9)? R2.7 / Table 1, Notes e and i: Note (e) excludes references to load that is allowed to be dropped if it is NOT part of Non-Consequential Load Loss. This note should include such Load (if represented in the load forecast being studied as being part of the Demand Response) if it can be dropped within the time duration applicable to the Facility Ratings. Note (i): Since the definition of Non-CLL would allow interruptible load to be dropped, is note (i) stating that interruptible load cannot be dropped even if it meets the "executable within the time duration' requirement"

Response: For Part 2.1.4, the SDT believes that the "base case conditions" on which to base the sensitivity cases should be defined by the entity performing the study. Sensitivity studies are performed to provide insight into the impacts of potential variations of assumptions in studies. It is also up to the entity performing the study to determine the scenarios to be used for the Planning Assessment.

The SDT reviewed Requirement 2 and Parts 2.1 through 2.5. Only Parts 2.1 and 2.2 require "annual current year study, supplemented by qualified past studies". Parts 2.1 and 2.2 cover steady state studies in the near-term and the long-term planning horizons, respectively. While the SDT envisions the standard to be flexible enough to allow the use of qualified past studies, the Planning Assessment cannot be based entirely on past studies. Because steady state analysis is part of the basic planning process, the SDT believes that the steady state portion of the studies covering Year One or year two and year five for Near-Term Transmission Planning Horizon and one of the years in the Long-Term Transmission Planning Horizon should be done annually. Qualified past studies can be used to supplement the studies for the remaining study years to support the assessment for the entire planning horizon. Making the change as requested can result in no current-year study being performed. Therefore, the SDT declines to make the change as suggested.

For Parts 2.1.4 and 2.4.3, The SDT envisions that "credible", "sufficient", "stressed" conditions and "measurable change" are to be defined by the responsible Planning Coordinator or Transmission Planner because each System is different.

Part 2.1.5 is part of Requirement R2, which requires that each Transmission Planner and Planning Coordinator prepare an annual Planning Assessment of its portion of the BES, therefore, the use of Planning Assessment in Part 2.1.5 has not broadened the requirement. The first sentence of Part 2.1.5 has been revised to provide more clarity.

Requirement R2, part 2.1.5: When an entity's spare equipment strategy could result in the unavailability of major Transmission equipment that has a lead time of

Organization	Comments for Question 2
	one year or more (such as a transformer), the impact of this possible unavailability on System performance shall be assessed. The Planning Assessment shall reflect the P0, P1, and P2 categories identified in Table 1 during the conditions that the System is expected to experience due to the possible unavailability of the long lead time equipment. For Part 2.4.3, the SDT declines to delete "in the Planning Assessment" as suggested because Part 2.4.3 is part of Requirement R2, which covers the requirement of preparing an annual Planning Assessment. Part 2.9 has been deleted as suggested. Table 1, P1.3 and associated footnote 5: the term "reference voltage" is used in determining if a transformer is classified as EHV or HV for the BES. This classification then ties to footnote 1 in regards to provisions for the interruption of Firm Transmission Service and Non-Consequential Load Loss. For example, if a 345/138 kV transformer is outaged for the event studied the high-voltage (HV) allowances for interruption of Firm Transmission Service and loss of Non-Consequential Load would apply. The 138/66 kV transformer may not be classified as a BES Facility; your regional entity organization definition of the BES should be consulted for an official position. Note (e) in Table 1 refers to "planned System adjustments" and "Transmission configuration changes and re-dispatch of generation" are examples of "planned System adjustments". Table 1 note (i) is intended to clarify that even if it is known that an end-user who implements a more conservative practice than that of the Transmission Planner/Planning Coordinator regarding steady-state voltage criteria and chooses to interrupt its own Load, the end-use Load must still be represented in the steady-state timeframe. The Load tripping is permitted in a Stability review, however, it should be assumed that a customer will react quickly to restore its Load and therefore the standard requires the Load be represented in the steady-state timeframe. Only actions (manual or automatic) taken by the Transmission Planner/Planning Coordinator are permitted for consideration for a steady-state review.
US Bureau of Reclamation	The conflict is created in Section 2.5 in that only proposed generation additions or changes are assessed in "Long-Term planning Horizon portion of the Stability analysis. This Section should also address proposed transmission facility additoins or changes. Section 2.7 indicates that the Planning Assessment shall include Corrective Action Plan(s) addressing how performance requirements will addressed. This implies that the Corrective Action plans are not proposed generation or transmission additions or changes. If Corrective Action Plan items are developed through Planning Assessments, they should be clarified as proposals for consideration by Generator Owners and Transmission owners in developed future system modifications or additions.
Response: Part 2.5 is intended for investigation of Stability issues due to addition of generators. The SDT does not believe that, in general, a Stability assessment is needed for the Long-Term Transmission Planning Horizon. The System model for that timeframe is too uncertain for a meaningful assessment of the System's Stability. However, for those situations where a specific generator is planned to be added in that timeframe, the SDT believes that it will be appropriate to require that the generator's Stability impact be evaluated. However, the standard does not preclude investigation of addition of other Facilities, such as Transmission Facilities. Part 2.7 does not imply that "the Corrective Action plans are not proposed generation or transmission additions or changes". Part 2.7.2 includes a list of actions that can be included as part of a Corrective Action Plan, which the Transmission Planner and Planning Coordinator are required to prepare.	
TIS	The reference in R2.1.3 to the outage schedules as listing in part R1.1.2 must be recognized as a limitation to the standard to the Planning Horizon. See the TIS comment tor R1.

Organization	Comments for Question 2
	There is confusion in interpretation of the Table 1 When the voltage class of the contingency element and the monitored element are different (one is HV and the other is EHV), to which voltage class is the allowance for shedding of non-consequential load applied? For example if a SLG fault is on a 138-kV element or a 345/138-kV autotransformer, are you allowed to shed load to keep a345-kV element from overloading? Conversely, if the fault is on a 345-kV element, are you allowed to shed load to keep a 138-kV from overloading? It should be the voltage level of the overloaded element (not the outaged element) that determines whether or not non-consequential load shedding is allowed. The TIS believes that the requirement to report the largest single consequential load loss under Requirement 2.9 should not be included in the standard. If it remains, it must be made clear that it be applicable only to Year One, and there should be additional clarification that the requirement to report consequential load loss (single number) is ONLY for the most severe contingencies studied for the P1 and P2 contingencies.
Response: Part 2.1.3 is a sub-part of Part 2.1 which is limited by the Near-Term Transmission Planning Horizon so no change is made. The determination of when interrupting Non-Consequential Load and/or Firm Transmission Service is permitted to meet Table 1 performance requirements service is based solely on the lowest voltage level of Facilities disconnected by design for the planning event studied and not based on the monitored Facilities. For the example provided, the HV provisions would apply since a 345/138kV transformer is considered a HV facility that is removed from service regardless of where the fault originated. Changes were made to footnote 1 to better clarify the SDT's intent and it now reads: **Table 1, footnote 1**: If the event analyzed involves BES elements at multiple System voltage levels, the lowest System voltage level of the element(s) removed for the analyzed event determines the stated performance criteria regarding allowances for interruptions of Firm Transmission Service and Non-Consequential Load Loss. Part 2.9 has been deleted as suggested.	
Idaho Power	The wording in R2.1 is unclear as to whether new annual studies are required each year or whether qualified past studies are acceptable if no changes have been made. R2 reads "This Planning Assessment shall use current or past studies"?, while R2.1 implies current studies must be used but can be supplemented by past studies. I suggest changing the wording from "The Near-Term Transmission Planning Horizon portion of the steady state analysis shall be assessed annually and be supported by the following annual current studies, supplemented with qualified past studies"? to "The Near-Term Transmission Planning Horizon portion of the steady state analysis shall be assessed annually and be supported by the following annual current studies, or qualified past studies"? It is unclear if the drafting team intended the sensitivity studies identified by the bullets in R2.1.4 to align with the sensitivity studies identified by the bullets in R2.4.3. Both are for Near-Term studies but for steady state and stability respectively. If the intent is that they align, the wording should be modified to be the same. Also, similar to R1.1.4 above, R2.1.4 could be interpreted that the standard requires forecasting reactive load. However, most entities forecast demand (MW) and apply a power factor(s) to calculate reactive load. Therefore, please change "real and reactive load forecast" to "forecasted demand and power factor" so it is clear that forecasting reactive load is not required.
Response: The SDT reviewed Requirement 2 and Parts 2.1 through 2.5. Only Parts 2.1 and 2.2 require "annual current year study, supplemented by qualified past studies". Parts 2.1 and 2.2 cover steady state studies in the near-term and the long-term planning horizons, respectively. While the SDT envisions the standard to be	

Organization	Comments for Question 2
flexible enough to allow the use of qualified past studies, the Planning Assessment cannot be based entirely on past studies. Because steady state analysis is part of the basic planning process, the SDT believes that at least parts of the steady state portion of the studies covering Year One or year two and year five for Near-Term Transmission Planning Horizon and one of the years in the Long-Term Transmission Planning Horizon should be done annually. Qualified past studies can be used to supplement the studies for the remaining study years to support the assessment for the entire planning horizon. Making the change as requested can result in no current-year study being performed. Therefore, the SDT declines to make the change as suggested. The SDT reviewed Parts 2.1.4 and 2.4.3. The third bullet in Part 2.4.3 has been modified. The remaining differences between the two parts are intended. The SDT developed the lists contained within Parts 2.1.4 and 2.4.3 to address those situations which it believed were the most relevant for the steady state evaluations and stability evaluations, respectively. **Requirement R2, part 2.4.3**, **bullet #3**: Expected in service dates of new or modified Transmission Facilities Parts 1.1.4 and 2.1.4 state that a reactive forecast is required. Using a power factor is one method that may be used in calculating this reactive forecast.	
Modesto Irrigation District Transmission Planning	The wording in R2.1 is unclear as to whether new annual studies are required each year or whether qualified past studies are acceptable if no changes have been made. R2 reads “This Planning Assessment shall use current or past studies”, while R2.1 implies current studies must be used but can be supplemented by past studies. We suggest changing the wording from “The Near-Term Transmission Planning Horizon portion of the steady state analysis shall be assessed annually and be supported by the following annual current studies, supplemented with qualified past studies” to “The Near-Term Transmission Planning Horizon portion of the steady state analysis shall be assessed annually and be supported by the following annual current studies, or qualified past studies” It is unclear if the drafting team intended the sensitivity studies identified by the bullets in R2.1.4 to align with the sensitivity studies identified by the bullets in R2.4.3. Both are for Near-Term studies but for steady state and stability respectively. If the intent is that they align, the wording should be modified to be the same. Also, similar to R1.1.4 above, R2.1.4 could be interpreted that the standard requires forecasting reactive load. However, most entities forecast demand (MW) and apply a power factor(s) to calculate reactive load. Therefore, please change “real and reactive load forecast” to “forecasted demand and power factor” so it is clear that forecasting reactive load is not required.R2.1.4, R2.4.3 "... vary one or more of the following conditions not already included in the studies by a sufficient amount to stress the System within a range of credible conditions that demonstrate a measureable change in performance." Please define measureable. An example would certainly help. This would be a good workshop item to show how to perform. R2.6.2 The previous version defined material change. This current version eliminated the definition of material change, but still indicates the study shall not include any material changes.... This is unclear; please clarify.
Response: The SDT reviewed Requirement R2 and Parts 2.1 through 2.5. Only Parts 2.1 and 2.2 require “annual current year study, supplemented by qualified past studies”. Parts 2.1 and 2.2 cover steady state studies in the near-term and the long-term planning horizons, respectively. While the SDT envisions the standard to be flexible enough to allow the use of qualified past studies, the Planning Assessment cannot be based entirely on past studies. Because steady state analysis is part of the basic planning process, the SDT believes that the steady state portion of the studies covering Year One or year two and year five for Near-Term Transmission Planning Horizon and one of the years in the Long-Term Transmission Planning Horizon should be done annually. Qualified past studies can be used to supplement	

Organization	Comments for Question 2
the studies for the remaining study years to support the assessment for the entire planning horizon. Making the change as requested can result in no current-year study being performed. Therefore, the SDT declines to make the change as suggested. The SDT reviewed Parts 2.1.4 and 2.4.3. The third bullet in Part 2.4.3 has been modified. The remaining differences between the two parts are intended. The SDT developed the lists contained within Parts 2.1.4 and 2.4.3 to address those situations which it believed were the most relevant for the steady state evaluations and stability evaluations, respectively. **Requirement R2, part 2.4.3**, **bullet #3**: Expected in service dates of new or modified Transmission Facilities Parts 1.1.4 and 2.1.4 state that a reactive forecast is required. Using a power factor is one method that may be used in calculating this reactive forecast. For Part 2.4.3, the SDT envisions that "measurable change" is to be defined by the responsible Planning Coordinator or Transmission Planner because each System is different. The SDT agrees that a workshop is a good idea. However, because of differences in each Region/Interconnection, the SDT encourages the Regions to hold workshops on issues specific to the Regions utilizing SDT members as participants in the discussions. Part 2.6.2 allows an entity to rely on a past study with a material change if "a technical rationale can be provided to demonstrate that System changes do not impact the performance results in the study area". Therefore, it is up to the entities performing the study to provide the rationale based on changes, such as Load growth.	
NV Energy	The wording in R2.1 is unclear as to whether new annual studies are required each year or whether qualified past studies are acceptable if no changes have been made. R2 reads "This Planning Assessment shall use current or past studies", while R2.1 implies current studies must be used but can be supplemented by past studies. We suggest changing the wording from "The Near-Term Transmission Planning Horizon portion of the steady state analysis shall be assessed annually and be supported by the following annual current studies, supplemented with qualified past studies" to "The Near-Term Transmission Planning Horizon portion of the steady state analysis shall be assessed annually and be supported by the following annual current studies, or qualified past studies" It is unclear if the drafting team intended the sensitivity studies identified by the bullets in R2.1.4 to align with the sensitivity studies identified by the bullets in R2.4.3. Both are for Near-Term studies but for steady state and stability respectively. If the intent is that they align, the wording should be modified to be the same. Also, similar to R1.1.4 above, R2.1.4 could be interpreted that the standard requires forecasting reactive load. However, most entities forecast demand (MW) and apply a power factor(s) to calculate reactive load. Therefore, please change "real and reactive load forecast" to "forecasted demand and power factor" so it is clear that forecasting reactive load is not required.
Pacific Gas and Electric Co.	The wording in R2.1 is unclear as to whether new annual studies are required each year or whether qualified past studies are acceptable if no changes have been made. R2 reads "This Planning Assessment shall use current or past studies", while R2.1 implies current studies must be used but can be supplemented by past studies. We suggest changing the wording from "The Near-Term Transmission Planning Horizon portion of the steady state analysis shall be assessed annually and be supported by the following annual current studies, supplemented with qualified past studies" to "The Near-Term Transmission Planning Horizon portion of the steady state analysis shall be assessed annually and be supported by the following annual current studies, or qualified past studies"? It is unclear if the drafting team intended the sensitivity studies identified by the bullets in R2.1.4 to align with the sensitivity studies identified by the bullets in R2.4.3. Both are for Near-Term studies but for steady state and stability respectively. If the

Organization	Comments for Question 2
	intent is that they align, the wording should be modified to be the same. Also, similar to R1.1.4 above, R2.1.4 could be interpreted that the standard requires forecasting reactive load. However, most entities forecast demand (MW) and apply a power factor(s) to calculate reactive load. Therefore, please change "real and reactive load forecast" to "forecasted demand and power factor" so it is clear that forecasting reactive load is not required.
San Diego Gas & Electric Co	The wording in R2.1 is unclear as to whether new annual studies are required each year or whether qualified past studies are acceptable if no changes have been made. R2 reads "This Planning Assessment shall use current or past studies", while R2.1 implies current studies must be used but can be supplemented by past studies. We suggest changing the wording from "The Near-Term Transmission Planning Horizon portion of the steady state analysis shall be assessed annually and be supported by the following annual current studies, supplemented with qualified past studies" to "The Near-Term Transmission Planning Horizon portion of the steady state analysis shall be assessed annually and be supported by the following annual current studies, or qualified past studies"? It is unclear if the drafting team intended the sensitivity studies identified by the bullets in R2.1.4 to align with the sensitivity studies identified by the bullets in R2.4.3. Both are for Near-Term studies but for steady state and stability respectively. If the intent is that they align, the wording should be modified to be the same. Also, similar to R1.1.4 above, R2.1.4 could be interpreted that the standard requires forecasting reactive load. However, most entities forecast demand (MW) and apply a power factor(s) to calculate reactive load. Therefore, please change "real and reactive load forecast" to "forecasted demand and power factor" so it is clear that forecasting reactive load is not required.
SRP	The wording in R2.1 is unclear as to whether new annual studies are required each year or whether qualified past studies are acceptable if no changes have been made. R2 reads "This Planning Assessment shall use current or past studies", while R2.1 implies current studies must be used but can be supplemented by past studies. We suggest changing the wording from "The Near-Term Transmission Planning Horizon portion of the steady state analysis shall be assessed annually and be supported by the following annual current studies, supplemented with qualified past studies" to "The Near-Term Transmission Planning Horizon portion of the steady state analysis shall be assessed annually and be supported by the following annual current studies, or qualified past studies" It is unclear if the drafting team intended the sensitivity studies identified by the bullets in R2.1.4 to align with the sensitivity studies identified by the bullets in R2.4.3. Both are for Near-Term studies but for steady state and stability respectively. If the intent is that they align, the wording should be modified to be the same. Also, similar to R1.1.4 above, R2.1.4 could be interpreted that the standard requires forecasting reactive load. However, most entities forecast demand (MW) and apply a power factor(s) to calculate reactive load. Therefore, please change "real and reactive load forecast" to "forecasted demand and power factor" so it is clear that forecasting reactive load is not required.
Response: The SDT reviewed Requirement R2 and Parts 2.1 through 2.5. Only Parts 2.1 and 2.2 require "annual current year study, supplemented by qualified past studies". Parts 2.1 and 2.2 cover steady state studies in the near-term and the long-term planning horizons, respectively. While the SDT envisions the standard to be flexible enough to allow the use of qualified past studies, the Planning Assessment cannot be based entirely on past studies. Because steady state analysis is part of the basic planning process, the SDT believes that the steady state portion of the studies covering Year One or year two and year five for Near-Term Transmission	

Organization	Comments for Question 2
Planning Horizon and one of the years in the Long-Term Transmission Planning Horizon should be done annually. Qualified past studies can be used to supplement the studies for the remaining study years to support the assessment for the entire planning horizon. Making the change as requested can result in no current-year study being performed. Therefore, the SDT declines to make the change as suggested. The SDT reviewed Parts 2.1.4 and 2.4.3. The third bullet in Part 2.4.3 has been modified. The remaining differences between the two parts are intended. The SDT developed the lists contained within 2.1.4 and 2.4.3 to address those situations which it believed were the most relevant for the steady state evaluations and stability evaluations, respectively. **Requirement R2, part 2.4.3**, **bullet #3**: Expected in service dates of new or modified Transmission Facilities Parts 1.1.4 and 2.1.4 state that a reactive forecast is required. Using a power factor is one method that may be used in calculating this reactive forecast.	
Puget Sound Energy, Inc.	The wording in R2.1 is unclear as to whether new annual studies are required each year or whether qualified past studies are acceptable if no changes have been made. R2 reads "This Planning Assessment shall use current or past studies", while R2.1 implies current studies must be used but can be supplemented by past studies. We suggest changing the wording from "The Near-Term Transmission Planning Horizon portion of the steady state analysis shall be assessed annually and be supported by the following annual current studies, supplemented with qualified past studies" to "The Near-Term Transmission Planning Horizon portion of the steady state analysis shall be assessed annually and be supported by the following annual current studies, or qualified past studies" The wording in R2.1.1 is unclear as to whether two studies are required or only one. Should it read "year one or year two or year 5" as opposed to "year 1 or year 2 and year 5"? The language in 2.3, indicating that short circuit analysis be studied as part a BES transmission planning assessment should not be required. The effects of the failure of over-stressed breakers are already included in the Events listed in Table 1. Examples would include P2-3 and P2-4 (Internal Breaker Fault), and P4 (Stuck Breaker while attempting to clear a fault). The addition of short circuit analysis study does not add any additional reliability information. It is unclear if the drafting team intended the sensitivity studies identified by the bullets in R2.1.4 to align with the sensitivity studies identified by the bullets in R2.4.3. Both are for Near-Term studies but for steady state and stability respectively. If the intent is that they align, the wording should be modified to be the same. Also, similar to R1.1.4 above, R2.1.4 could be interpreted that the standard requires forecasting reactive load. However, most entities forecast demand (MW) and apply a power factor(s) to calculate reactive load. Therefore, please change "real and reactive load forecast" to "forecasted demand and power factor" so it is clear that forecasting reactive load is not required. R2.9 should be deleted (or not required for local load loss). The SDT indicated in the response to "Consideration of Comments on 3rd Draft of Standard TPL-001-1" that the requirement R2.9 is intended to "contribute to an open and transparent Transmission planning for peer review." And if the "largest Consequential Load Loss" is a local (intra-network) event? Would the documentation of such an event contribute to reliability in any way?
Response: The SDT reviewed Requirement R2 and Parts 2.1 through 2.5. Only Parts 2.1 and 2.2 require "annual current year study, supplemented by qualified past studies". Parts 2.1 and 2.2 cover steady state studies in the near-term and the long-term planning horizon, respectively. While the SDT envisions the standard to be flexible enough to allow the use of qualified past studies, the Planning Assessment cannot be based entirely on past studies. Because steady state analysis is part of	

Organization	Comments for Question 2
	the basic planning process, the SDT believes that the steady state portion of the studies covering Year One or year two and year five for Near-Term Transmission Planning Horizon and one of the years in the Long-Term Transmission Planning Horizon should be done annually. Qualified past studies can be used to supplement the studies for the remaining study years to support the assessment for the entire planning horizon. Making the change as requested can result in no current-year study being performed. Therefore, the SDT declines to make the change as suggested. Part 2.1.1 is intended to cover both the timeframe just after operation planning (Year One or year two), as well as the timeframe to allow implementation of solutions, which may require a longer lead time. Therefore, the "Year 1 or year 2 and year 5" in Part 2.1.1 is correct as written. Part 2.3 is intended for the Planning Coordinator and/or Transmission Planner to assess whether circuit breakers supporting the BES have interrupting capability for Faults that they will be expected to interrupt. Even though the effects of short circuit capability are localized and may be related to new planned Facilities, it is important to BES reliability. The SDT reviewed Parts 2.1.4 and 2.4.3. The third bullet in Part 2.4.3 has been modified. The remaining differences between the two parts are intended. The SDT developed the lists contained within 2.1.4 and 2.4.3 to address those situations which it believed were the most relevant for the steady state evaluations and stability evaluations, respectively. **Requirement R2, part 2.4.3**, **bullet #3**: Expected in service dates of new or modified Transmission Facilities Parts 1.1.4 and 2.1.4 state that a reactive forecast is required. Using a power factor is one method that may be used in calculating this reactive forecast. Part 2.9 has been deleted as suggested.
Southern California Edison (SCE)	The wording in R2.1 is unclear as to whether new annual studies are required each year or whether qualified past studies are acceptable if no changes have been made. R2 reads "This Planning Assessment shall use current or past studies", while R2.1 implies current studies must be used but can be supplemented by past studies. We suggest changing the wording from "The Near-Term Transmission Planning Horizon portion of the steady state analysis shall be assessed annually and be supported by the following annual current studies, supplemented with qualified past studies" to "The Near-Term Transmission Planning Horizon portion of the steady state analysis shall be assessed annually and be supported by the following annual current studies, or qualified past studies"? It is unclear if the drafting team intended the sensitivity studies identified by the bullets in R2.1.4 to align with the sensitivity studies identified by the bullets in R2.4.3. Both are for Near-Term studies but for steady state and stability respectively. If the intent is that they align, the wording should be modified to be the same. Also, similar to R1.1.4 above, R2.1.4 could be interpreted that the standard requires forecasting reactive load. However, most entities forecast demand (MW) and apply a power factor(s) to calculate reactive load. Therefore, please change "real and reactive load forecast" to "forecasted demand and power factor" so it is clear that forecasting reactive load is not required. Additionally, 2.4.2 is inconsistent with 2.4.1 with regards to language. It seems the intent of the Standards Drafting Team was to have the two consistent with each other. Specifically, the quote below, from section 2.4.1, is missing from section 2.4.2 (keeping in mind the word "peak" should be replaced with "Off-Peak"."System peak Load levels shall include a Load model which represents the dynamic behavior of Loads that could impact the study area, considering the behavior of induction motor Loads. An aggregate System Load model which represents the overall dynamic behavior of the Load is acceptable."

Organization	Comments for Question 2
Response: The SDT reviewed Requirement R2 and Parts 2.1 through 2.5. Only Parts 2.1 and 2.2 require "annual current year study, supplemented by qualified past studies". Parts 2.1 and 2.2 cover steady state studies in the near-term and the long-term planning horizons, respectively. While the SDT envisions the standard to be flexible enough to allow the use of qualified past studies, the Planning Assessment cannot be based entirely on past studies. Because steady state analysis is part of the basic planning process, the SDT believes that the steady state portion of the studies covering Year One or year two and year five for the Near-Term Transmission Planning Horizon and one of the years in the Long-Term Transmission Planning Horizon should be done annually. Qualified past studies can be used to supplement the studies for the remaining study years to support the assessment for the entire planning horizon. Making the change as requested can result in no current-year study being performed. Therefore, the SDT declines to make the change as suggested. The SDT reviewed Parts 2.1.4 and 2.4.3. The third bullet in Part 2.4.3 has been modified. The remaining differences between the two parts are intended. The SDT developed the lists contained within 2.1.4 and 2.4.3 to address those situations which it believed were the most relevant for the steady state evaluations and stability evaluations, respectively. **Requirement R2, part 2.4.3**, **bullet #3**: Expected in service dates of new or modified Transmission Facilities Parts 1.1.4 and 2.1.4 state that a reactive forecast is required. Using a power factor is one method that may be used in calculating this reactive forecast. In Part 2.4.1, the SDT specifies the dynamic Load model representation for on peak because the System voltages are generally lower during on peak. The percentage of motor Load, e.g., in air conditioners, could significantly increase reactive power requirements especially when they stall due to low System voltage and can therefore impact dynamic System performance on-peak. However, motor Load would likely not pose the same problem during Off-peak as the System voltages are usually higher. So, in Part 2.4.2, it can be left to the discretion of the Planning Coordinator or Transmission Planner whether the dynamic motor Load would need to be represented per the requirement in Part 2.4.1.	
Utility System Efficiencies, Inc. (USE)	The wording in R2.1 is unclear as to whether new annual studies are required each year or whether qualified past studies are acceptable if no changes have been made. R2 reads "This Planning Assessment shall use current or past studies", while R2.1 implies current studies must be used but can be supplemented by past studies. I suggest changing the wording from "The Near-Term Transmission Planning Horizon portion of the steady state analysis shall be assessed annually and be supported by the following annual current studies, supplemented with qualified past studies" to "The Near-Term Transmission Planning Horizon portion of the steady state analysis shall be assessed annually and be supported by the following annual current studies, or qualified past studies"? It is unclear if the drafting team intended the sensitivity studies identified by the bullets in R2.1.4 to align with the sensitivity studies identified by the bullets in R2.4.3. Both are for Near-Term studies but for steady state and stability respectively. If the intent is that they align, the wording should be modified to be the same.
Response: The SDT reviewed Requirement R2 and Parts 2.1 through 2.5. Only Parts 2.1 and 2.2 require "annual current year study, supplemented by qualified past studies". Parts 2.1 and 2.2 cover steady state studies in the near-term and the long-term planning horizons, respectively. While the SDT envisions the standard to be flexible enough to allow the use of qualified past studies, the Planning Assessment cannot be based entirely on past studies. Because steady state analysis is part of basic planning process, the SDT believes that the steady state portion of the studies covering Year One or year two and year five for the Near-Term Transmission Planning Horizon and one of the years in the Long-Term Transmission Planning Horizon should be done annually. Qualified past studies can be used to supplement the studies for the remaining study years to support the assessment for the entire planning horizon. Making the change as requested can result in no current-year study being performed. Therefore, the SDT declines to make the change as suggested.	

Organization	Comments for Question 2
The SDT reviewed Parts 2.1.4 and 2.4.3. The third bullet in Part 2.4.3 has been modified. The remaining differences between the two parts are intended. The SDT developed the lists contained within 2.1.4 and 2.4.3 to address those situations which it believed were the most relevant for the steady state evaluations and stability evaluations, respectively. **Requirement R2, part 2.4.3**, **bullet #3**: Expected in service dates of new or modified Transmission Facilities	
Western Area Power Adm - RMR	The wording in R2.1 is unclear as to whether new annual studies are required each year or whether qualified past studies are acceptable if no changes have been made. R2 reads "This Planning Assessment shall use current or past studies", while R2.1 implies current studies must be used but can be supplemented by past studies. I suggest changing the wording from "The Near-Term Transmission Planning Horizon portion of the steady state analysis shall be assessed annually and be supported by the following annual current studies, supplemented with qualified past studies" to "The Near-Term Transmission Planning Horizon portion of the steady state analysis shall be assessed annually and be supported by the following annual current studies, or qualified past studies"? It is unclear if the drafting team intended the sensitivity studies identified by the bullets in R2.1.4 to align with the sensitivity studies identified by the bullets in R2.4.3. Both are for Near-Term studies but for steady state and stability respectively. If the intent is that they align, the wording should be modified to be the same. Also, similar to R1.1.4 above, R2.1.4 could be interpreted that the standard requires forecasting reactive load. However, most entities forecast demand (MW) and apply a power factor(s) to calculate reactive load. Therefore, please change "real and reactive load forecast" to "forecasted demand and power factor" so it is clear that forecasting reactive load is not required. In R2.1.5 " the opening statement "When an entity's "spare equipment strategy" Does this imply an auditor would ask for this documentation as part of the review of this new TPL-001? Also " what other Standard requires the "spare equipment strategy"? I'm trying to determine what kind of documentation is required for this Requirement.
Response: The SDT reviewed Requirement R2 and Parts 2.1 through 2.5. Only Parts 2.1 and 2.2 require "annual current year study, supplemented by qualified past studies". Parts 2.1 and 2.2 cover steady state studies in the near-term and the long-term planning horizon, respectively. While the SDT envisions the standard to be flexible enough to allow the use of qualified past studies, the Planning Assessment cannot be based entirely on past studies. Because steady state analysis is part of basic planning process, the SDT believes that the steady state portion of the studies covering Year One or year two and year five for the Near-Term Transmission Planning Horizon and one of the years in the Long-Term Transmission Planning Horizon should be done annually. Qualified past studies can be used to supplement the studies for the remaining study years to support the assessment for the entire planning horizon. Making the change as requested can result in no current-year study being performed. Therefore, the SDT declines to make the change as suggested. The SDT reviewed Parts 2.1.4 and 2.4.3. The third bullet in Part 2.4.3 has been modified. The remaining differences between the two parts are intended. The SDT developed the lists contained within 2.1.4 and 2.4.3 to address those situations which it believed were the most relevant for the steady state evaluations and stability evaluations, respectively. **Requirement R2, part 2.4.3**, **bullet #3**: Expected in service dates of new or modified Transmission Facilities Parts 1.1.4 and 2.1.4 state that a reactive forecast is required. Using a power factor is one method that may be used in calculating this reactive forecast. Part 2.1.5 does not require a spare equipment strategy. It only requires that the Planning Coordinator or Transmission Planner plans for the potential unavailability of long lead time major Transmission equipment in accordance with its spare equipment strategy. For example, if an entity's spare equipment strategy is to have a spare	

Organization	Comments for Question 2
transformer on site, then the unavailability of a similar transformer (due to outages) would be limited to the time it would take to energize the spare transformer. Assuming that this time is no more than that required to return a similar outaged transformer back in service, Part 2.1.5 can be satisfied without performing additional planning study. If on the other hand, the transformer would have to be purchased, then it would take more than a year to replace. In this case, P0 should also be modeled with the transformer in question out of service. The SDT cannot comment on what documentation an auditor would need to support an audit.	
SRC of ISO/RTO	Under 2.1.4- It should be made clear that the sensitivity findings do not obligate the PC or TP to establish Corrective Action Plans to address any needs identified in the sensitivity cases. Specifically, we do not believe the sentence "To accomplish this, the sensitivity analysis in the Planning Assesment must vary one or more of the following conditions not already included in the studies by a sufficient amount to stress the System within a range of credible conditions that demonstrate a measurable change in performance." is measurable or necessary. The first part of 2.1.4 already stipulates sufficient details for the responsible entity to conduct sensitivity analysis including the parameters to be varied. Adding the "how-to-conduct" requirement is overly prescriptive and unnecessary, and the condition for "that demonstrate a measurable change in performance" is not measurable. It lacks a definitive target or direction for the responsible entity to determine (a) what conditions need to be attained to demonstrate a measurable change in performance, (b) what constitutes "measurable change in performance", and (c) what follow-up or corrective actions are needed to address the adverse performance as a result of stressing the system beyond the forecast conditions. Under 2.1.4 and 2.4.3 "sufficient" and "measurable" are too vague and hard to quantify. This may require an auditor's opinion. Suggest removing at least the word "sufficient" from the requirements. Under 2.3- Some PCs do not perform short circuit analysis. Is it the intent of the SDT to make the analysis standardized over a footprint? Alternatively, this could be a TP only responsibility. Further, Part 2.3 stipulates the short-circuit assessment requirements for the near-term horizon. Unlike its steady-state and stability counterparts, there are no requirements stipulated for short-circuit analysis for the long-term horizon. Is this intentional? If so, we are unable to identify the rationale for this decision. If not, we suggest revising Part 2.3 to: "The short circuit analysis portion of the Planning Assessment shall be conducted annually addressing the near-term and long-term Transmission Planning Horizons and can be supported by...". Under 2.7.2, it is not clear how an entity can provide rational for why actions are not necessary. If actions are not necessary, then no rationalizing is needed. Further, as stated above, corrective action plans should not be required for sensitivity studies. R2.7.2 should be struck. We propose to remove R2.9, since there is not a reliability need for this information and it is unnecessary. AESO does not comment on VSLs or VRFs.
Response: For Part 2.1.4, the requirement for Corrective Action Plans to address any needs identified in the sensitivity cases is included in Part 2.7. Part 2.7 states, in part, that “Corrective Action Plan(s) do not need to be developed solely to meet the performance requirements for a single sensitivity run in accordance with Requirements R2, Parts 2.1.4 and 2.4.3. In addition, Part 2.7.2 describes the requirement on Corrective Action Plans to “Include actions to resolve performance deficiencies identified in multiple sensitivity studies or provide a rationale for why actions were not necessary”. For Parts 2.1.4 and 2.4.3, the SDT envisions that “credible”, “sufficient”, “stressed” conditions and “measurable change” are to be defined by the responsible Planning Coordinator or Transmission Planner because each System is different.	

Organization	Comments for Question 2
Part 2.3 is intended for the Planning Coordinator and Transmission Planner to assess the whether circuit breakers supporting the BES have interrupting capability for Faults that they will be expected to interrupt. The standard allows the Planning Coordinator and Transmission Planner to coordinate on who would perform short circuit studies. But each is still responsible for meeting the requirements. Part 2.3 is for short circuit assessment of the system in general and is more suited for the Near-Term Transmission Planning Horizon, when Transmission plans are more certain. Lead time to implement corrective action if found necessary can reasonably be expected to be completed in the near-term timeframe. Short circuit study for the longer term planning horizon should be studied on a case by case basis associated with specific project(s). The SDT disagrees that Part 2.7.2 should be struck. Part 2.7.2 provides for development of a Corrective Action Plan if a number of sensitivity studies result in the same potential problem. For example, if only one sensitivity study results in potential problems or if the probability of occurrences of the sensitivity scenarios is low, then this could be the rationale to state that corrective action plan would not be necessary. Part 2.9 has been deleted as suggested.	
Exelon Transmission Planning	We believe that the Table 1 performance criteria should be based on the voltage level of potentially overloaded elements and not based on the voltage level of the element(s) removed from service. If a 100 kV line were overloaded for a 500 kV contingency, it does not make sense to us to treat it differently than if the same overload occurred for a 100 kV contingency since the severity of the event is the same in both cases. The availability of load shedding to reduce overloads on EHV equipment and not for overloads on HV equipment makes sense since typically a greater amount of load would need to be shed to unload an EHV facility than an HV facility. We disagree with the requirement to report the largest amount of consequential load loss. If this information is not used to meet a requirement adding to reliability, it is creating undo burden. If the requirement is kept, it should be made clear as to which case or cases the requirement pertains. The Planning Assessment will contain extremely sensitive information. The threshold that it must be supplied to ANY functional entity is too low. There should be a CEII or other process to ensure that this information is adequately protected.
Response: The determination of when interrupting Non-Consequential Load and/or Firm Transmission Service is permitted to meet Table 1 performance requirements service is based solely on the lowest voltage level of Facilities disconnected by design for the planning event studied and not based on the monitored Facilities. Although not unanimous, the majority of the SDT and industry stakeholders believe the 300 kV and higher Systems (EHV) generally represent the backbone of many Systems in the various Interconnections and that the EHV breakpoint and the more stringent requirements are appropriately defined. Changes were made to footnote 1 to better clarify the SDT's intent and it now reads: **Table 1, footnote 1**: If the event analyzed involves BES elements at multiple System voltage levels, the lowest System voltage level of the element(s) removed for the analyzed event determines the stated performance criteria regarding allowances for interruptions of Firm Transmission Service and Non-Consequential Load Loss. Part 2.9 has been deleted based on industry responses.	
American Transmission Company	We propose the following changes and following questions:New R2.1 We suggest that R2.6 be relocated to the R2.1 position to allow the preferred style of backward references to text that occurs earlier in a document, rather than forward references to text that appears later in a document.

Organization	Comments for Question 2
	R2.1.3 As noted above, we suggest that R1.1.2 be removed and that R2.1.3 be revised to state that "Known outages of generation or Transmission Facilities with a duration of at least six months be simulated along with P1 events for the System peak or Off-Peak conditions when the outages are scheduled to occur." We interpret that simulation of known outages of at least six months should refer only to individual outages with duration of six months or more have to be simulated and not a set of sequential (back-to-back) outages where each individual outage is less than six months, but the composite duration of the set is more than six months. We also interpret that if two or more known outages with duration of at least six months are overlapping that the outage would be simulated as simultaneous for the System peak or Off-Peak conditions when the overlapping outages are scheduled to occur. R2.1.4 The terms of "credible" and "measurable change" are ambiguous and not defined. Therefore, we suggest that these terms be defined or more clearly described to avoid the risk of different and possibly contradictory interpretations by TPs, PCs, and auditors.R2.1.4 bullet items We suggest that the number and description of the bullet items in R2.1.4 match the bullet points in R2.4.3. Otherwise, please explain the reasons for any differences between the bullet items in R2.1.4 and R2.4.3. R2.1.4 bullet #2 & # 5 We suggest that the wording of bulletin #2 be changed to "Expected transfers and other generation dispatch scenarios". This modification would put the transfer and dispatch element, which are complementary, together in the same bullet item, rather than grouping the "generation dispatch" (operating level) element together with the generation capacity elements in bullet item #5. R2.1.4 bullet #7 We propose replacing the adjective "planned" with "known" for consistency with R2.1.3 and any other "known" references in the standard. R2.1.5 We propose replacing the term "major Transmission" with "BES" because BES is a well defined term, while "major Transmission" is not. New R2.3.1 We suggest the addition of new R2.3.1 to emulate the distinction between the requirement to perform a short circuit assessment and conduct required studies or analysis to support the assessment (e.g. R2.1/R2.1.1 and R2.2/R2.2.1). We propose wording such as, "Perform an analysis for at least one year in the Near Term Transmission Planning Horizon." This requirement would set an expectation that an analysis should be conducted to at least one or more years in the near-term planning horizon, rather than imply that an analysis of all five years in the near-term planning horizon must be conducted. R2.4.1 - The terms of "study area" and "represents" are ambiguous and not defined. Therefore, we suggest that these terms be more clearly described to avoid the risk of different and possibly contradictory interpretations by TPs, PCs, and auditors. R2.4.3 The terms of "credible" and "measurable change" are ambiguous and not defined. Therefore, we suggest that these terms be defined or more clearly described to avoid the risk of different and possibly contradictory interpretations by TPs, PCs, and auditors.R2.4.3 bullet items We suggest that the number and description of the bullet items in R2.1.4 match the bullet points in R2.1.4. Otherwise, please explain the reasons for any differences. R2.4.3 bullet #2 & # 5 We suggest that the wording of bulletin #2 be changed to "Expected transfers and other generation dispatch scenarios". This would place these similar items in the same bullet item #2, rather than having the "other generation dispatch" in bullet item #5.

Organization	Comments for Question 2
	R2.4.3 bullet #3 We suggest that the wording of "new or modified Transmission Facilities" to agree with the wording in bulletin #3 of R2.1.4. R2.6 As noted earlier, we suggest that the numbering of this requirement be changing it to R2.1 to avoid the style of forward references. Add R2.7.1 Item #7 - We propose the addition of the following bullet item to R2.7.1 because any requirement in the head notes or foot motes of Table 1 should occur within the body of standard. Item #7 could read, "Planned System adjustments such as Transmission configuration changes and redispatch of generation are allowed if such adjustments are executable within the time duration of the Facility Ratings." Note "e" in the Planning Events, Steady State & Stability section is stated in the form of a Requirement (e.g. use the verb "shall"), but all requirements should be included in the Requirements section and not introduced (and basically hidden) in the performance notes of Table 1. [After bullet item #7 is added, Note "e" under "Steady State & Stability section of Table 1 should refer to R2.7.1] R2.7.2 " We suggest using the term, "mitigation actions", to more clearly distinguish that this requirement is not asking for the development of "Corrective Action Plans", such as those that are needed for inability to meet base case performance requirements.R2.7.6 We suggest that the wording of R2.7.6 be the same as R.2.8.2. Otherwise, we propose that R2.7.6 and R2.8.2 be revised with wording like, ". . . implementation status of identified Corrective Action Plans for System Facilities and Operating Procedures." to clarify that the identified system facilities and operating procedures refer only to those that were in the previous year's Corrective Action Plans. R2.9 We still propose that this requirement be removed because annually stating the single, largest expected, Consequential Load Loss due to a P1 or P2 event in the TP or PC system is not needed to provide reliable BES performance or assure open and transparent Transmission planning peer review.

Response: The SDT reviewed the order of Parts 2.1 and 2.6 and declines to modify it as suggested because it does not add additional clarity.

Part 2.1.3 covers known long duration outages, for example, taking a 230 kV Transmission line out of service to rebuild it to operate at 500 kV. These cases are to simulate System conditions with the Facility in question out of service as Category P0 (or N-0). For the next outage, the System performance will need to meet requirements for Category P1. This is not the same as requirements for Category P6, which assumes that the outage for the first Facility would be of shorter duration than 6 months. Part 2.1.3 has been revised to read "P1 events in Table 1 with known outages modeled, as in Requirement R1, part 1.1.2 under those System peak or Off-Peak conditions when known outages are scheduled" to provide more clarity. The SDT agrees that if two or more known outages with duration of at least six months are overlapping that the outage should be simulated as simultaneous for the conditions when the overlapping outages are scheduled to occur. This is consistent with the requirement to simulate the System conditions as it is expected to operate.

For Parts 2.1.4 and 2.4.3, the SDT envisions that "credible", "sufficient", "stressed" conditions and "measurable change" are to be defined by the responsible Planning Coordinator or Transmission Planner because each System is different. The SDT reviewed Parts 2.1.4 and 2.4.3. The third bullet in Part 2.4.3 has been modified. The remaining differences between the two parts are intended. The SDT developed the lists contained within Parts 2.1.4 and 2.4.3 to address those situations which it believed were the most relevant for the steady state evaluations and Stability evaluations, respectively.

Requirement R2, part 2.4.3, **bullet #3**: Expected in service dates of new or modified Transmission Facilities

Organization	Comments for Question 2
	The SDT declines to change the second and fifth bullets in Part 2.4.3 because the existing arrangement will keep the generator scenarios together. Expected transfers are not always associated with generation dispatch. In Part 2.1.4, bullet #7, the SDT declines to replace "planned" with "known" as suggested in "Duration or timing of planned Transmission outages". Part 2.1.4 covers sensitivity scenarios and reflects uncertainty in planning assumptions. The intent of this bullet is to cover unexpected changes in plans, for example, a potential delay in returning a Transmission line back to service after a planned outage of 6 months or more for rebuilding to a higher capacity line. If the outage is "known", then there would not be any need to perform this study as a sensitivity. In Part 2.1.5, the SDT declines to replace the term "major Transmission equipment" with "BES equipment" because the intent is to investigate the unavailability of major pieces of equipment in the Transmission System. Transmission is defined in the NERC Glossary as, "An interconnected group of lines and associated equipment for the movement or transfer of electric energy between points of supply and points at which it is transformed for delivery to customers or is delivered to other electric systems". Part 2.3 is silent on the year of study within the Near-Term Transmission Planning Horizon. Therefore, it is up to the Transmission Planner or Planning Coordinator to select the study years most suited to the System in question. In addition, Part 2.3 only requires an annual Planning Assessment, which is to be supported by annual current or qualified past studies. As such, the SDT believes it is inappropriate to make the change as suggested Part 2.4.1: The SDT believes that the terms of "study area" and "represents" should be defined by the Planning Coordinator or Transmission Planner performing the study, and should be part of the coordination between the entities. For Parts 2.1.4 and 2.4.3, The SDT envisions that "credible", "sufficient", "stressed" conditions and "measurable change" are to be defined by the responsible Planning Coordinator or Transmission Planner because each System is different. The SDT reviewed Parts 2.1.4 and 2.4.3. The third bullet in Part 2.4.3 has been modified. The remaining differences between the two parts are intended. The SDT developed the lists contained within Parts 2.1.4 and 2.4.3 to address those situations which it believed were the most relevant for the steady state evaluations and stability evaluations, respectively. **Requirement R2, part 2.4.3**, **bullet #3**: Expected in service dates of new or modified Transmission Facilities The SDT declines to change the second and fifth bullets in Part 2.4.3 because the existing arrangement will keep the generator scenarios together. Expected transfers are not always associated with generation dispatch. The SDT reviewed the order of Part 2.1 and Part 2.6 and declines to modify it as suggested because it does not add additional clarity. Note e in Table 1 is a condition for allowance of planned System adjustments, which could include Operating Plans such as re-dispatch. Part 2.7.1 is a list of examples, so it could include more items than listed, including Note e in Table 1. The SDT declines to make the suggested change. Part 2.7.2 provides for development of a Corrective Action Plan if a number of sensitivity studies result in the same potential problem. For example, if only one sensitivity study results in potential problems or if the probability of occurrences of the sensitivity scenarios is low, then this could be the rationale to state that corrective action plan would not be necessary. Part 2.9 has been deleted as suggested.
PJM	R2 should use the term –dynamics analysis- instead of –stability analysis-. A dynamics study is used to determine stability like a power flow study is used to determine overloads or voltage violations. In R2.1.1 is -System peak Load- seasonal peak load or the peaking season of that region? For example, if I'm a summer peaking

Organization	Comments for Question 2
	region, must I do a summer peak study and a winter peak study or just a summer peak study? In R2.1.3, change -for known outages, as modeled in- to –with known outages modeled, as required in-. R2.1.5 should be made clear that only one piece of equipment should be taken out at a time for each sensitivity. No matter what FERC says, this requirement should be deleted because this analysis serves no purpose. If a spare equipment strategy is required, please tell us so in a spare equipment standard, not hidden here in a performance standard. R2.4.3 – Please delete the words -for the list of items shown below- at the end of the first sentence. There is an implication in this sentence, as originally worded, that a sensitivity must be performed for the entire list of sensitivities instead of how it is explained in the second sentence. R2.6.2 – Please reword -the study shall not include any material changes- to –a study with material changes shall not be used- The old sentence sounded like you just exclude the material changes and you are good to go. R2.7.1 – Please change -List System deficiencies- to –List performance deficiencies-. R2.7.1 – 3rd Bullet – I would lump this under Special Protection Systems, also why is runback not allowed for dynamics problems, seems there are some restrictions buried here. R2.7.1 – 6th Bullet – What is a –rate application-? R2.7.2 – This is pushing us to plan the system for scenarios that may never happen. Pushing us to some higher level of reliability will cost significant money. Should the ratepayers be burdened with this excess? I say no, remove this requirement. R2.8.1 – Change -List System deficiencies- to –List short circuit deficiencies-.

Response: The SDT declines to replace "Stability analysis" with "dynamic analysis" because it does not add additional clarity.

The intent of Part 2.1.1 is to assess those System conditions under peak Load conditions when the System is reasonably stressed. It is envisioned that the Planning Coordinator or Transmission Planner will determine the System conditions for its planning studies.

Part 2.1.3 has been revised as suggested.

> **Requirement R2, part 2.1.3**: P1 events in Table 1 with known outages modeled, as in Requirement R1, part 1.1.2 under those System peak or Off-Peak conditions when known outages are scheduled.

Part 2.1.5 only requires that the Planning Coordinator or Transmission Planner plans for the potential unavailability of long lead time major Transmission equipment in accordance with its spare equipment strategy. For example, if an entity's spare equipment strategy is to have a spare transformer on site, then the unavailability of a similar transformer (due to outages) would be limited to the time it would take to energize the spare transformer. Assuming that this time is no more than that required to return a similar outaged transformer back in service, Part 2.1.5 can be satisfied without performing additional planning studies. If on the other hand, the transformer would have to be purchased, then it would take more than a year to replace. In this case, P0 should be modeled with the transformer in question out of service.

Part 2.4.3 has been revised as suggested.

> **Requirement R2, part 2.4.3**: For each of the studies described in Requirement R2, parts 2.4.1 and 2.4.2, sensitivity case(s) shall be utilized to demonstrate the impact of changes to the basic assumptions used in the model. To accomplish this, the sensitivity analysis in the Planning Assessment must vary one or more of

Organization	Comments for Question 2
	the following conditions not already included in the studies by a sufficient amount to stress the System within a range of credible conditions that demonstrate a measurable change in performance: Part 2.6.2 has been revised as suggested. **Requirement R2, part 2.6.2**: For steady state, short circuit, or Stability analysis: the System represented in the study shall not include any material changes unless a technical rationale can be provided to demonstrate that System changes do not impact the performance results in the study area. The SDT declines to revise Part 2.7.1 as suggested because it does not add additional clarity. The SDT declines to combine the third bullet with Special Protection Schemes (SPS) because automatic generation tripping does not always have to be part of an SPS. In any case, this list contains examples only. It is envisioned that run-back would take a longer time period and would not fit in the transient Stability study period. Part 2.7.1, sixth bullet, “rate application” can be regulatory incentives, such as demand response, distributed generation, etc. Part 2.7.2 provides for development of a Corrective Action Plan if a number of sensitivity studies result in the same potential problem. For example, if only one sensitivity study results in potential problems or if the probability of occurrences of the sensitivity scenarios is low, then this could be the rationale to state that corrective action plan would not be necessary. In addition, Part 2.7.1 allows the use of lower cost alternatives, such as operating procedures, among other things to correct potential performance deficiencies identified. The SDT declines to revise Part 2.8.1 because the language as written is clear.

3. Requirement R3 – Please provide any specific comments on the requirement text, VRF, Time Horizon, measure associated with the requirement, data retention associated with the requirement, and/or the VSL associated with the requirement.

Summary Consideration: The SDT has modified the wording of several parts of Requirement R3 to increase clarity as requested by many industry comments and shown below. Requirement R3, part 3.6 was deleted in response to industry comments as it is not a performance oriented requirement.

Requirement R3, part 3.3: Contingency analyses for Requirement R3, Parts 3.1 & 3.2 shall:

Requirement R3, part 3.3.2: Trip generators where simulations show generator bus voltages or high side of the GSU voltages are less than known or assumed minimum generator steady state or ride through voltage limitations. Include in the assessment any assumptions made.

Requirement R3, part 3.3.3: Trip Transmission elements when relay loadability limits are exceeded.

Requirement R3, part 3.5: Those extreme events in Table 1 that are expected to produce more severe System impacts shall be identified and a list of those events to be evaluated for System performance in Requirement R3, part 3.2 created. The rationale for those Contingencies selected for evaluation shall be available as supporting information. If the analysis concludes there is Cascading caused by the occurrence of extreme events, an evaluation of possible actions designed to reduce the likelihood or mitigate the consequences and adverse impacts of the event(s) shall be conducted.

Requirement R3, part 3.6:

Requirement R3, data retention: The studies performed in support of its Planning Assessments since the last compliance audit in accordance with Requirement R3 and Measure M3.

Organization	Comments for Question 3
Independent Electricity System Operator	(1) R3 has become more of a “how to” requirement than a “what” requirement, as illustrated below. (a) Part 3.3 is overly prescriptive. A requirement that says contingency analysis shall be performed which reflect proper operation of all Protection Systems and actions of all automatic devices would suffice. If necessary, some examples such as those listed in Part 3.3.4 may be added as illustration. (b) The parts that ask for creating a list of contingencies and having rationale available as supporting information, in Part 3.4 for example, are overly prescriptive and unnecessary. These are documentation requirements, not reliability requirements. If one asked the question: will reliability be adversely affected if the responsible entity failed to document the list and the rationale for choosing this list? If the answer is no, then they don’t rise up to a reliability standard. To meet the intent of Part 3.4, a simple requirement that asks the responsible entity to demonstrate acceptable system performance for the applicable planning events in Table 1 would suffice. Table 1 already stipulates the events that must be considered in the analysis. We do not see the need to go into such details as “some events are expected to produce more severe impacts”, and the need to ask the planners to

Organization	Comments for Question 3
	create a list of these more impactive contingencies for subsequent evaluation. Similar observation is made for Part 3.5 on the extreme event list and for Part 3.6 for the amount of generation loss, and the rationale. (2) We have no comments on the measure, VRF and Time Horizon. However, there is no VSL for Part 3.6.
Response: R3: The SDT disagrees with the comment. The parts of Requirement R3 specify the components required for a compliant study. No change made. Part 3.4 & Part 3.5: Require the planning entity to identify which Contingencies are chosen to be simulated in the study, and explain why these are chosen. The SDT assumes that the Planning Coordinator/Transmission Planner, applying experience of past studies and knowledge of its System, is in the best position to determine which Contingencies in Table 1 are most relevant, as it is impossible to study all Contingencies especially the multiple Contingency events. No change made. Part 3.6: The SDT has deleted Requirement R3, part 3.6 in response to industry comments as it is not a performance oriented requirement affecting the reliability of the BES. VSL for Part 3.6: The SDT has deleted Part 3.6.	
ERCOT ISO	* Will any agreements made in R7 override the “each TP and PC” requirement? To clarify this, the requirement could be rephrased: "In accordance to the responsibilities assigned in R7, the responsible Transmission Planners and Planning Coordinators shall perform?. "* Section 3.1 and 3.4 appear to be related. Confusing references can be eliminated by combining them and removing 3.4 as follows: "3.1. Those planning events in Table 1 that are expected to produce more severe System impacts on its portion of the BES shall be identified and studies shall be performed for planning events to determine whether the BES meets the performance requirements in Table 1. A list of those Contingencies and the rationale for those Contingencies selected for evaluation shall be available as supporting information".* Similarly, Section 3.2 and 3.5 appear to be related. Confusing references can be eliminated by combining them and removing 3.5: "3.2. Those extreme events in Table 1 that are expected to produce more severe System impacts shall be identified and studies shall be performed to assess the impact of the extreme events. If the analysis concludes there are cascading outages caused by the occurrence of extreme events, an evaluation of possible actions designed to reduce the likelihood or mitigate the consequences and adverse impacts of the event(s) shall be conducted A list of the events and the rationale for those Contingencies selected for evaluation shall be available as supporting information."
Response: R7: The agreements required by Requirement R7 are intended to clarify the responsibilities among the Planning Coordinator and Transmission Planner. The SDT believes this is clear in the existing language. No change made. Parts 3.1 & 3.4: The SDT does not believe that combining the requirements provides any significant advantage. No change made. Parts 3.2 & 3.5: The SDT does not believe that combining the requirements provides any significant advantage. No change made.	
Northeast Utilities	[R3.3.2] Traditionally, transmission planners have assumed that generators would ride through low voltages associated with Planning Events, which is generally adequate for non-wind generators. If this standard is going to require its incorporation into the assessments, there should be a MOD standard developed requiring the generator owners to provide the necessary

Organization	Comments for Question 3
	information prior to its inclusion as a requirement in this standard. [R3.3.3] This requirement is already addressed in NERC Standard PRC-023 and reflected in facility ratings and therefore, should be removed from TPL-001-1. [R3.5] This requirement needs clarification as to what is specifically required for the "evaluation of possible actions". Otherwise the following is recommended: It should be clear that an evaluation does not require solution development for all Extreme Events. Change "an evaluation of possible actions" to "where appropriate, reasonably practicable actions designed to reduce the likelihood or mitigate the consequences and adverse impacts of the event(s) shall be considered." [R3.6] Why the need to report the amount of "Consequential Generation Loss" since TPL-001-1 does not impose any limit or reliability consequence? We recommend that this requirement be deleted from the standard.
Response: Part 3.3.2: Where test data is not available, the SDT believes that most Transmission Planners/Planning Coordinators currently assume generators ride through low voltage based on extensive field experience. There is a project (Project 2007-09 — Generator Verification) that will provide the required generator data to validate the assumptions. For this standard, all that is required is to identify the assumptions concerning voltage limitations of the unit and ensure that the simulation models the generator response as it will react in the real world. If voltage ride through limits would cause a generator to trip in the real world, the study must determine if the performance requirements are met for the initiating event and subsequent generator trip. No change made for this comment. Part 3.3.3: The SDT changed the wording to further clarify the action required when relay loadability limits are exceeded. The SDT believes this wording change should alleviate any perceived conflicts with the relay loadability standard. **Requirement R3, part 3.3.3**: Trip Transmission elements when relay loadability limits are exceeded Part 3.5: The requirement is to evaluate possible actions which, if implemented, could reduce the likelihood or mitigate the consequences of an extreme event. The SDT believes that what these "possible actions" are should be left to the judgment of the Planning Coordinator/Transmission Planner who has knowledge of their System. Part 3.6: The SDT has deleted Requirement R3, part 3.6 in response to industry comments as it is not a performance oriented requirement affecting the reliability of the BES.	
Central Maine Power Company	3.2 Item 3.2 should be deleted. The requirements for sensitivity analysis already address issues going beyond what is expected to meet reliability requirements. Requiring extreme event analysis is requiring two layers of event analysis beyond what is required and there is no requirement for corrective action if anything is identified. Therefore Extreme Event analysis no longer provides any value in this standard. 3.3.2 This requirement is not practical unless a MOD is created so that known minimum generator steady state or ride through voltage limitations are used instead of assumed values. To create a MOD, collect the data, and incorporate the information into the studies will take time, which necessitates the need for an implementation period. Absent accepting this suggestion with respect to creating an MOD, please provide assumed minimum generator steady state or ride through voltage limitations as a standard reference for this analysis. 3.3.3 There appears to be a compliance double-jeopardy issue related to relay loadability. Relay loadability is handled in

Organization	Comments for Question 3
	greater detail (as it should be) under the proposed PRC-023 standard, so any reference here should be deleted. 3.4 It is suggested that this requirement is made a sub-bullet of Requirement 3.1 to keep the related requirements together. 3.5 and 4.5 Both of these requirements need clarification as to what is specifically required for the "evaluation of possible actions." 3.5 It is suggested that this be made a sub-bullet of Requirement 3.2 to keep the related requirements together. 3.6 Item 3.6 should be deleted since there is no limit defined in the standard.
ISO New England	3.2 Item 3.2 should be deleted. The requirements for sensitivity analysis already address issues going beyond what is expected to meet reliability requirements. Requiring extreme event analysis is requiring two layers of event analysis beyond what is required and there is no requirement for corrective action if anything is identified. Therefore Extreme Event analysis no longer provides any value in this standard. 3.3.2 This requirement is not practical unless a MOD is created so that known minimum generator steady state or ride through voltage limitations are used instead of assumed values. To create a MOD, collect the data, and incorporate the information into the studies will take time, which necessitates the need for an implementation period. Absent accepting this suggestion with respect to creating an MOD, please provide assumed minimum generator steady state or ride through voltage limitations as a standard reference for this analysis. 3.3.3 There appears to be a compliance double-jeopardy issue related to relay loadability. Relay loadability is handled in greater detail (as it should be) under the proposed PRC-023 standard, so any reference here should be deleted. 3.4 It is suggested that this requirement is made a sub-bullet of Requirement 3.1 to keep the related requirements together. 3.5 and 4.5 Both of these requirements need clarification as to what is specifically required for the "evaluation of possible actions." 3.5 It is suggested that this be made a sub-bullet of Requirement 3.2 to keep the related requirements together. 3.6 Item 3.6 should be deleted since there is no limit defined in the standard.
United Illuminating	3.2 Item 3.2 should be deleted. The requirements for sensitivity analysis already address issues going beyond what is expected to meet reliability requirements. Requiring extreme event analysis is requiring two layers of event analysis beyond what is required and there is no requirement for corrective action if anything is identified. Therefore Extreme Event analysis no longer provides any value in this standard. 3.3.2 This requirement is not practical unless a MOD is created so that known minimum generator steady state or ride through voltage limitations are used instead of assumed values. To create a MOD, collect the data, and incorporate the information into the studies will take time, which necessitates the need for an implementation period. Absent accepting this suggestion with respect to creating an MOD, please provide assumed minimum generator steady state or ride through voltage limitations as a standard reference for this analysis. 3.3.3 There appears to be a compliance double-jeopardy issue related to relay loadability. Relay loadability is handled in

Organization	Comments for Question 3
	greater detail (as it should be) under the proposed PRC-023 standard, so any reference here should be deleted. 3.4 It is suggested that this requirement is made a sub-bullet of Requirement 3.1 to keep the related requirements together. 3.5 and 4.5 Both of these requirements need clarification as to what is specifically required for the "evaluation of possible actions." 3.5 It is suggested that this be made a sub-bullet of Requirement 3.2 to keep the related requirements together. 3.6 Item 3.6 should be deleted since there is no limit defined in the standard.
Response: Part 3.2: The SDT disagrees and believes there is value in running extreme event analysis to test the robustness of the System. No change made. Part 3.3.2: Where test data is not available, the SDT believes that most Transmission Planners/Planning Coordinators currently assume generators ride through low voltage based on extensive field experience. There is a project (Project 2007-09 — Generator Verification) that will provide the required generator data to validate the assumptions. For this standard, all that is required is to identify the assumptions concerning voltage limitations of the unit and ensure that the simulation models the generator response as it will react in the real world. If voltage ride through limits would cause a generator to trip in the real world, the study must determine if the performance requirements are met for the initiating event and subsequent generator trip. No change made. Part 3.3.3: The SDT changed the wording to further clarify the action required when relay loadability limits are exceeded. The SDT believes this wording change should alleviate any perceived conflicts with the relay loadability standard. **Requirement R3, part 3.3.3**: Trip Transmission elements when relay loadability limits are exceeded Part 3.4: The SDT does not believe that combining the requirements provides any significant advantage. No change made. Parts 3.5 & 4.5 The requirement is to evaluate possible actions which, if implemented, could reduce the likelihood or mitigate the consequences of an extreme event. The SDT believes that what these "possible actions" are should be left to the judgment of the Planning Coordinator/Transmission Planner whose has knowledge of their System. Part 3.5: The SDT does not believe that combining the requirements provides any significant advantage. No change made. Part 3.6: Part 3.6: The SDT has deleted part 3.6 in response to industry comments as it is not a performance oriented requirement affecting the reliability of the BES.	
Florida Municipal Power Agency, and its Member Cities	3.3.1, is the intent of the SDT that extreme events that may cause loading beyond relay trip settings (especially Zone 3) be simulated? There is no need for 3.3.3 since the Facility Ratings should already take this into account (FAC-008, R1.2.1 The scope of equipment addressed shall include, but not be limited to, " relay protective devices, "). This adds unneeded burden to transmission planners in developing evidence for this that already exists elsewhere. In other words, by respecting Facility Ratings, we respect relay loadability.
Response: Part 3.3.1: The intent of the SDT is for the planner to simulate the Protection System operation so that all elements that the Protection System is designed to remove (breaker to breaker) are removed in the simulation for the list of Contingencies the planner has developed in Requirement R3, parts 3.4 (planning events)	

Organization	Comments for Question 3
and 3.5 (extreme events). Part 3.3.3: The SDT changed the wording to further clarify the action required when relay loadability limits are exceeded. The SDT believes this wording change should alleviate any perceived conflicts. **Requirement R3, part 3.3.3**: Trip Transmission elements when relay loadability limits are exceeded.	
Oncor Electric Delivery	3.3.2 Do we want to be able to trip gen? 3.3.3 Relay loadability covered in PRC-023 3.6 Why is this information reported if there is no limit or reliability consequence. 3.3.3 This requirement is already addressed in NERC Standard PRC-023 and reflected in the facility's rating and should be removed from TPL-001-1. 3.4 It is strongly suggested that this requirement is made a sub-bullet of Requirement 3.1 to keep the related requirements together. 3.5 and 4.5 Both of these requirements need clarification as to what is specifically required for the "evaluation of possible actions." 3.5 It is strongly suggested that this be made a sub-bullet of Requirement 3.2 to keep the related requirements together. 3.6 It is recommended that the "consequential generation" loss is excluded from the amount documented. [Why?]
Response: Part 3.3.2: In order to ensure performance requirements are met in cases where System conditions could cause a generator to trip, Requirement R3, part 3.3.2 requires that the entity trip a generator at locations where bus voltages in the simulation fall below known or assumed generator steady state or ride through voltage limits. No change made. Part 3.3.3: The SDT changed the wording to further clarify the action required when relay loadability limits are exceeded. The SDT believes this wording change should alleviate any perceived conflicts with the relay loadability standard. **Requirement R3, part 3.3.3**: Trip Transmission elements when relay loadability limits are exceeded. Part 3.4: The SDT does not believe that combining the requirements provides any significant advantage. No change made. Parts 3.5 & 4.5 The requirement is to evaluate possible actions which, if implemented, could reduce the likelihood or mitigate the consequences of an extreme event. The SDT believes that what these "possible actions" are should be left to the judgment of the Planning Coordinator/Transmission Planner who has knowledge of their System. Part 3.5: The SDT does not believe that combining the requirements provides any significant advantage. No change made. Part 3.6: The SDT has deleted Requirement R3, part 3.6 in response to industry comments as it is not a performance oriented requirement affecting the reliability of the BES.	

Organization	Comments for Question 3
FirstEnergy Corp	A. The inclusion of sub-part 3.3.3 of Requirement R3 that reads "Ensure relay loadability limits are respected" is not needed as it is duplicative with standard PRC-023, and indirectly redundant with the facility rating standards FAC-008 and FAC-009. Additionally, the introductory notes of performance Table 1 item "f" is clear that Facility Ratings shall not be exceeded and PRC-023 makes it clear that relay loadability must be accounted for in Facility Ratings. In NERC's three-year assessment, Attachment 2 it clearly indicates that one goal of NERC's standards development work plan is " ...retiring redundant requirements ..." (Please reference page 4, the 6th bullet under plan objectives). To that end, we should not knowingly create redundant requirements that lead to double jeopardy issues for industry stakeholders. If a "belts and suspenders" is the goal here, it's suggested that a footnote be added to item "f" of the introductory notes that would clarify that PRC-023 must be adhered to with regard to Facility ratings. B. If the generator bus is modeled at the generator voltage, then this should be the reference voltage point. If the generator is modeled directly connected to the BES, then the transmission voltage should be the reference voltage. Either way, the reference point should be consistent. In addition, 3.3.2 requires the unit to be tripped. It should be noted that the minimum voltage point may be overly-conservative, since the minimum voltage that a unit can stay on line is MVA output dependent. For base load units, determining a generator minimum voltage should be relatively straightforward, however, peaking and regulating units, not so. Our experience has been that generating units at manned locations generally do not have undervoltage protection or alarms, so FE is not certain how this Requirement to trip those units matches the "real world". C. We suggest the team discontinue the use of "Coordinate with adjacent transmission planners" in regards to sub-part 3.4.1 related to the inclusion of contingencies from adjacent systems. The "coordination" type of requirements creates a need to develop compliance evidence such as e-mail correspondence, meeting minutes etc that serve no real reliability purpose. The requirement should simply be that the TP shall include adjacent System contingencies expected to produce the more severe System impacts on their system. In fact, sub-part 3.4 already includes that language. We suggest the team append the sentence "The planning event contingencies shall include:" to the end of sub-part 3.4 followed by two bullets that indicate 1) events within the TP's system and 2) events on adjacent transmission Systems.
Response: Part 3.3.3: The SDT changed the wording to further clarify the action required when relay loadability limits are exceeded. The SDT believes this wording change should alleviate any perceived conflicts with the relay loadability standard. **Requirement R3, part 3.3.3**: Trip Transmission elements when relay loadability limits are exceeded. Part 3.3.2: Where test data is not available, the SDT believes that most Transmission Planners/Planning Coordinators currently assume generators ride through low voltage based on extensive field experience. There is a project (Project 2007-09 — Generator Verification) that will provide the required generator data to validate the assumptions. For this standard, all that is required is to identify the assumptions concerning voltage limitations of the unit and ensure that the simulation models the generator response as it will react in the real world. If voltage ride through limits would cause a generator to trip in the real world, the study must determine if the performance requirements are met for the initiating event and subsequent generator trip. No change made. Part 3.4.1: SDT believes that it is necessary for the planner to coordinate with adjacent planners to identify contingencies in adjacent systems that could impact the planners system. No change made.	
Progress Energy Florida, Inc.	As PEF is opposed to TPL-001-1 as a whole, PEF will have no further comment on this issue other than to encourage all

Organization	Comments for Question 3
	appropriate parties to review PEF's previous comments to this effect.
Response: Throughout the drafting process, the SDT has carefully considered your comments as well as comments from other industry members.	
CenterPoint Energy	CenterPoint Energy recommends references to "Long-Term Transmission Planning Horizon" be revised to contain comparable language as in the existing TPL standards that limit Long-Term studies to marginal system conditions requiring longer lead times. See CenterPoint Energy's comments regarding part 2.2 for the rationale behind this recommendation. CenterPoint Energy also recommends deleting part 3.4.1 as being overly prescriptive and difficult to demonstrate in an audit.
Response: Long-Term Transmission Planning Horizon: The SDT believes there is value in taking a long range view in planning to assess the general trend. Since the Long-Term planning horizon is year 6 – year 10, the Planning Coordinator or Transmission Planner can for example, select year 6 in the Long-Term Planning Horizon and then use this study as the past study to supplement the Near-Term year 5 study requirement the following year. No change made. Part 3.4.1: SDT believes that it is necessary for the planner to coordinate with adjacent planners to identify Contingencies in adjacent Systems that could impact the planners System. No change made**.**	
ITC Holdings	Comments: Assumptions regarding Low Voltage Ride Through (LVRT) capability are risky and not well understood. If the SDT feels this is a critical requirement that merits corrective action then we believe LVRT characteristics for various machine types should be developed through a NERC process. Without such "standards", it will be difficult to justify CAPs based on LVRT assumptions. For example, would the Transmission Owner (TO) or Generator Owner be responsible for the cost of VAR CAPs if an LVRT assumption were violated. Can a TO require an LSE to install automatic load shedding for an LVRT assumption when cascade or local load loss result from an LVRT assumption? In addition, as the SDT has already indicated, the industry is still in a learning curve regarding the dynamic behavior of certain loads. If LVRT capability is considered as a critical requirement, then what about High Voltage Ride Through (HVRT) capability? The violation of HVRT could also cause certain damages to the system. R3.4.1 (contingency list coordination with neighbors) It's unclear as to the "measure" for this requirement. Do you give your neighbor a list of "contingencies" in your area. Should it include all categories (p1 thru p7 for example)? Does your neighbor have to study a cascade situation in his system caused by an outage in your system? Are joint studies merited? More importantly, if an outage in a neighboring system requires a CAP, who's responsible, particularly if the CAP involves the neighboring system. Does the neighbor have to have a CAP, according to this standard, if the violation is in your system, and the CAP is in his? Who pays? Are you putting a study burden on your neighbor when you do this? Do you include additional contingencies to ensure that you do not miss a contingency that might impact your neighbors system to avoid any potential compliance implication on you?
Response: Part 3.3.2: Where test data is not available, the SDT believes that most Transmission Planners/Planning Coordinators currently assume generators ride through low voltage based on extensive field experience. There is a project (Project 2007-09 — Generator Verification) that will provide the required generator data to validate the assumptions. For this standard, all that is required is to identify the assumptions concerning voltage limitations of the unit and ensure that the simulation models the generator response as it will react in the real world. If voltage ride through limits would cause a generator to trip in the real world, the study must determine	

Organization	Comments for Question 3
if the performance requirements are met for the initiating event and subsequent generator trip. No change made. If tripping of a generator results in performance which does not meet the requirements in Table 1, Requirement R2, part 2.6 requires the planner to develop a Corrective Action Plan. The allocation of costs to implement such a plan is beyond the scope of this standard. The SDT has decided not to include a requirement for high voltage ride through. Part 3.4.1: SDT believes that it is necessary for the planner to coordinate with adjacent planners to identify Contingencies in adjacent Systems that could impact the planners System. No change made. The SDT believes that the methodology for determining the appropriate Contingencies in the adjacent Systems is best left to the judgment of each planner. This could include Contingencies from all planning event categories (P1 to P7) if it is judged they could have an impact. Similarly, the neighboring System would select categories in adjacent Systems to study. The requirement does not mandate joint studies. If a performance deficiency is found in the planner's System due to a Contingency in an adjacent System, it is up to the planner in whose System the deficiency exists to develop the CAP. Cost allocation for the CAP is beyond the scope of this standard.	
FRCC Transmission Working Group	Comments: With regard to the Moderate VSL, consider deleting "utilizing data" in order to avoid penalizing twice for failing to meet R1. Please provide clarity to 3.3.2 which states that a Planning Assessment "it must perform simulation that show generator ride through voltage limitation". However, ride through is only performed through stability simulation.The references within the requirements are very confusing. 3.1 refers to a contingency list created in 3.4 which refers back to 3.1. Similarly 3.2 refers to a contingency list created in 3.5 which refers back to 3.2. These should be combined into one requirement bullet. Please provide clarity to 3.3.1. Is the intent of the drafting team that extreme events that may cause loading beyond relay trip settings (zone 3) be simulated?
Response: VSL: Requirement R1 requires you to maintain System models. Requirement R4 requires you to use that model data for your Stability studies. These are two different things requiring two VSLs. No change made. Part 3.3.2: Generators can trip when bus voltage drops below minimum generator steady state voltage limits. The SDT believes that the voltage ride through test is applicable in post-Contingency steady-state where the planner would know if post-contingency bus voltage violates generator trip points. If a trip point is violated, Requirement R3, part 3.3.2 would require the planner to remove the generator in the post-Contingency case to assess if performance is met with the generator removed. No change made. Parts 3.1 & 3.4; 3.2 & 3.5: The SDT does not believe that combining the requirements provides any significant advantage. No change made. Part 3.3.1: The intent of the SDT is for the planner to simulate the Protection System operation so that all elements that the Protection System is designed to remove (breaker to breaker) are removed in the simulation for the list of Contingencies the planner has developed in Requirement R3, parts 3.4 (planning events) and 3.5 (extreme events). Requirement R3, Part 3.3 wording has been modified to add to clarify the intent. **Requirement R3, part 3.3**: Contingency analyses for Requirement R3, parts 3.1 & 3.2 shall:	
Gainesville Regional Utilities	Even though I do assess my portion of the BES, I do so, not in an isolated, detached vacuum, but in light of its active connection to the rest of the FRCC Region and how, if at all possible, my small system could in any way be determined at the region level

Organization	Comments for Question 3
	to have any impact in any of the functional areas of the entire region. So the requirements in this section are considered and assessed as "a part of the whole".
Response: As you have not referenced a specific section, the SDT can not provide a response.	
Utility System Efficiencies, Inc. (USE)	For clarity I suggest that the wording in R3.3.3 be changed to "Ensure the power flows in the simulations are no higher than actual relay loadability limits.
Bonneville Power Administration	For clarity we suggest that the wording in R3.3.3 be changed to "Ensure the power flows in the simulations are no higher than actual relay loadability limits.
Idaho Power	For clarity we suggest that the wording in R3.3.3 be changed to "Ensure the power flows in the simulations are no higher than actual relay loadability limits.
NV Energy	For clarity we suggest that the wording in R3.3.3 be changed to "Ensure the power flows in the simulations are no higher than actual relay loadability limits."
San Diego Gas & Electric Co	For clarity we suggest that the wording in R3.3.3 be changed to "Ensure the power flows in the simulations are no higher than actual relay loadability limits.
Southern California Edison (SCE)	For clarity we suggest that the wording in R3.3.3 be changed to "Ensure the power flows in the simulations are no higher than actual relay loadability limits."
SRP	For clarity we suggest that the wording in R3.3.3 be changed to "Ensure the power flows in the simulations are no higher than actual relay loadability limits."
Western Area Power Adm - RMR	For clarity, I suggest that the wording in R3.3.3 be changed to "Ensure the power flows in the simulations are no higher than actual relay loadability limits."
Deseret Power	Comments: For clarity we suggest that the wording in R3.3.3 be changed to "Ensure the power flows in the simulations are no higher than actual relay loadability limits.
Response: Part 3.3.3: The SDT changed the wording to further clarify the action required when relay loadability limits are exceeded. The SDT believes this wording change should alleviate any perceived conflicts with the relay loadability standard. **Requirement R3, part 3.3.3**: Trip Transmission elements when relay loadability limits are exceeded.	
TVA System Planning	In R3.3.3, TVA believes that relay loadability is already covered in PRC-023. TVA is concerned that including this requirement could result in possible double jeopardy if a utility was found non compliant with PRC-023. Is the SDT proposing that relay

Organization	Comments for Question 3
	loadability be covered for all BES facilities or just those facilities identified in PRC-023?
Response: Part 3.3.3: The SDT changed the wording to further clarify the action required when relay loadability limits are exceeded. The SDT believes this wording change should alleviate any perceived conflicts with the relay loadability standard. **Requirement R3, part 3.3.3**: Trip Transmission elements when relay loadability limits are exceeded. The SDT intent is that Requirement R3, part 3.3.3 applies to those BES elements where relay loadability limit is defined by PRC-023.	
Modesto Irrigation District Transmission Planning	For clarity we suggest that the wording in R3.3.3 be changed to "Ensure the power flows in the simulations are no higher than actual relay loadability limits. Also please define relay loadability limit.
Response: Part 3.3.3: The SDT changed the wording to further clarify the action required when relay loadability limits are exceeded. The SDT believes this wording change should alleviate any perceived conflicts with the relay loadability standard. **Requirement R3, part 3.3.3**: Trip Transmission elements when relay loadability limits are exceeded. R3.3.3: Relay loadability is defined in PRC-023-1.	
MidAmerican Energy Company	MidAmerican commends the SDT for their hard work on this standard. MidAmerican does have comments about this requirement though. MidAmerican recommends the data retention for R3 and M3 be revised to change "All" to "The". The word "All" is unnecessary and could encourage over-the-top compliance monitoring and enforcement. The revised data retention would read as follows: "THE studies performed in support". The word in all caps is a word suggested to be added.
Response: Data Retention: The SDT agrees with your suggestion. The wording in "data retention" for R3 has been changed. Measure M3 already use the word "the". **Requirement R3, data retention:** The studies performed in support of its Planning Assessments since the last compliance audit in accordance with Requirement R3 and Measure M3.	
Progress Energy Carolinas	PEC believes that R3.3.3 "Ensure relay loadability limits are respected" is unnecessary. The requirement to stay within Facility Limits is much more bounding. Several footnote references from Table 1 to the footnotes are incorrect.
Response: Part 3.3.3: The SDT changed the wording to further clarify the action required when relay loadability limits are exceeded. The SDT believes this wording change should alleviate any perceived conflicts with the relay loadability standard. **Requirement R3, part 3.3.3**: Trip Transmission elements when relay loadability limits are exceeded Table1: The SDT has corrected the footnote references.	

Organization	Comments for Question 3
Oklahoma Gas & Electric	R 3.4, R3.5 There appear to be no standards of directions on identifying severe or extreme system impacts. OG&E does not like being held accountable to nebulas standards. Need more specific information.
Response: Parts 3.4 & 3.5: The SDT assumes that the Planning Coordinator/Transmission Planner applying experience of past studies and knowledge of its System is in the best position to determine which Contingencies in Table 1 are most relevant, as it is impossible to study all Contingencies especially the multiple Contingencies. No changes made.	
SRC of ISO/RTO	R3 has become more of a "how to" requirement than a "what" requirement as illustrated below. (a) Part 3.3 is overly prescriptive. A requirement that says contingency analysis shall be performed which reflect proper operation of all Protection Systems and actions of all automatic devices would suffice. If necessary, some examples such as those listed in Part 3.3.4 may be added as illustration. (b) The parts that ask for creating a list of contingencies and having rationale available as supporting information, in Part 3.4 for example, are overly prescriptive and unnecessary. These are documentation requirements, not reliability requirements. If one ask the question: Will reliability be adversely affected if the responsible entity failed to document the list and teh rationale for choosing the list? and the answer is no, then the requirement does not rise up to a reliability standard. To meet the intent of Part 3.4, a simple requirement that asks the responsible entity to demonstrate acceptable system performance for the applicable planning event in Table 1 would suffice. Table 1 already stipulates the event that must be considered in the analysis. We do not see the need to go into such details as "some events are expected to produce more severe impacts...", and the need to ask the planners to create a list of these more impactive contingencies for subsequent evaluation. Similar observation is made for Part 3.5 on the extreme event list and for Part 3.6 for the amount of generation loss, and the rationale. AESO does not comment on VSLs or VRFs>
Response: R3: The SDT disagrees with the comment. The parts of Requirement R3 specify the components required for a compliant study. No change made. Part 3.4 & Part 3.5: Require the planning entity to identify which contingencies are chosen to be simulated in the study, and explain why these are chosen. The SDT assumes that the Planning Coordinator/Transmission Planner, applying experience of past studies and knowledge of its System, is in the best position to determine which Contingencies in Table 1 are most relevant, as it is impossible to study all Contingencies especially the multiple Contingency events. No change made. Part 3.6: The SDT has deleted Requirement R3, part 3.6 in response to industry comments as it is not a performance oriented requirement affecting the reliability of the BES. VSL: The SDT does not understand the reference to AESO.	
Manitoba Hydro	R3.2: Recommend changing “the list” to “the Contingency list” to add clarity and consistency.
Response: Part 3.2: SDT does not believe clarity is improved by adding the word "contingency" to the word "list". No change made.	

Organization	Comments for Question 3
MRO NERC Standards Review Subcommittee	R3.3.1 Revise the wording to add, ". . . including the simulation of transmission circuit loadability protection." The Protection System actions should be included in this requirement regarding proper Protection System simulation, rather than as a separate requirement in R3.3.3. Otherwise there would be in double jeopardy of violating R3.3.1. and R3.3.3 when circuit loadability protection is not properly simulated. R3.3.2 The MRO NSRS suggests that this requirement be removed because it is premature to requirement Transmission Planners to simulate under voltage tripping until the MOD standards require it. If the drafting team does not remove this requirement the MRO NSRS proposes revised wording to qualify which generating units to consider and which voltage limits to simulate, "Trip generating units that are connected to the BES when actual or assumed minimum generator steady state or ride through voltage limits are known and simulations show voltages may fall below the voltage limit. If assumed voltage limits are used, then they should be included in the assessment". The requirement should not apply to all relevant generating units until one of the MOD standards requires all Generator Owners to provide their minimum generating unit voltage limits to the TP and PC. If the wording of R3.3.2 must be different from its counterpart, R4.3.2, then please explain the reasons for any differences. R3.3.3 As noted above, The MRO NSRS suggests that R3.3.3 be removed and this System Protection simulation requirement should be included in R3.3.1, which is the requirement to properly simulate Protection System actions. Add R3.3.5 The MRO NSRS suggests the addition of R3.3.5, "Applicable System Operating Limits for the planning horizon shall not be exceeded." because Note "a" and "b" under "Steady State Only" at the beginning of Table 1 are stated in the form of a Requirement (e.g. uses the verb, "shall") and all Requirements should be explicitly stated under Requirements and not be introduced (and hidden) in the performance notes of Table 1. [After R3.3.5 is added, Note "a" should be revised and refer to R3.3.5.] Add R3.3.6 The MRO NSRS suggests the addition of R3.3.6, "The response of voltage sensitive Load including Load that is disconnected from the System by end-user equipment associated with an event shall not be used to steady state voltage requirements." because Note "d" under "Steady State Only" at the beginning of Table 1 is stated in the form of a Requirement (e.g. uses the verb, "shall") and all Requirements should be explicitly stated under Requirements and not be introduced (and hidden) in the performance notes of Table 1. [After R3.3.6 is added, Note "d" should be revised to refer to R3.3.6.] R3.4.1 The MRO NSRS suggests that the word "coordinate" and the reference to the Transmission Planner be removed and offer the following revised text, "the Planning Coordinator shall provide the list of contingencies that are simulated in the adjacent Planning Coordinator area to the respective Planning Coordinator for review and feedback.". Standard Drafting Teams are generally instructed not to use the word "coordinate". The MRO NSRS suggests that this requirement apply to the PC because the PC would share with any affected Transmission Planners. R3.6 The MRO NSRS suggests the wording of this requirement be revised to, "Manual or automatic generation runback or tripping is permitted to meet steady state performance requirements for planning events P1 through P7 in Table 1." because Reliability Standard PRC-015-1 already includes requirements regarding the review and approval of Special Protection Systems. Therefore, the Planning Assessment does not need to duplicate description of the design and intent of the Special Protection System. M3 & R3 Data Retention - The MRO NSRS proposes that the wording in these elements be revised to change "All" to "The". The word "All" is unnecessary and could encourage over-the-top compliance monitoring and enforcement. The revised data

Organization	Comments for Question 3
	retention would read as follows: "The studies performed in support".?
Response: Part 3.3.1: The intent of this requirement is to remove elements that the Protection System would remove to clear a fault (breaker-to-breaker). The Transmission circuit loadability protection could trip un-faulted lines due to the post fault System loadings. Adding the suggested wording "including the simulation of transmission circuit loadability protection." would change the intent of Requirement R3, part 3.1.1. No change made. Part 3.3.2: Where test data is not available, the SDT believes that most Transmission Planners/Planning Coordinators currently assume generators ride through low voltage based on extensive field experience. There is a project (Project 2007-09 — Generator Verification) that will provide the required generator data to validate the assumptions. For this standard, all that is required is to identify the assumptions concerning voltage limitations of the unit and ensure that the simulation models the generator response as it will react in the real world. If voltage ride through limits would cause a generator to trip in the real world, the study must determine if the performance requirements are met for the initiating event and subsequent generator trip. No change made. The SDT added the phrase "or high side of the GSU voltages" to make Requirement R3, part 3.3.2 consistent with Requirement R4, part 4.3.2. Part 3.3.3: The SDT changed the wording to further clarify the action required when relay loadability limits are exceeded. The SDT believes this wording change should alleviate any perceived conflicts with the relay loadability standard. **Requirement R3, part 3.3.3**: Trip Transmission elements when relay loadability limits are exceeded Part 3.3.5 Proposed: The SDT believes that a new requirement is not needed. Requirement R3, part 3.1 states "Studies shall be performed for planning events to determine whether the BES meets the performance requirements in Table 1." Header notes are part of Table 1 and therefore included in Requirement R3. Part 3.3.6 Proposed: The SDT believes that a new requirement is not needed. Requirement R3, part 3.1 states "Studies shall be performed for planning events to determine whether the BES meets the performance requirements in Table 1.". Header notes are part of Table 1 and therefore included in Requirement R3. Part 3.4.1: The SDT believes that it is necessary for the planner to coordinate with adjacent planners to identify Contingencies in adjacent systems that could impact the planners System. Both the Transmission Planner and Planning Coordinator have this responsibility. No change made. Part 3.6: The SDT has deleted Requirement R3, part 3.6 in response to industry comments as it is not a performance oriented requirement affecting the reliability of the BES. Data Retention: The SDT agrees with your suggestion. The wording in "data retention" for Requirement R3 has been changed. Measure M3 already uses the word "the". **Requirement R3, data retention:** The studies performed in support of its Planning Assessments since the last compliance audit in accordance with Requirement R3 and Measure M3.	
SERC Dynamics Review Subcommittee (DRS)	R3.3.1: We propose to add "permanently" before "disconnect".
Response: Part 3.3.1: The SDT believes that adding the word "permanently" has no significance for the steady state simulation of fault clearing. No change made.	
MAPP	R3.3.2 - We suggest that this requirement be removed because it is premature to require Transmission Planners to simulate under voltage tripping until the MOD standards require it. If the drafting team does not remove this requirement we propose revised wording to qualify which generating units to consider and which voltage limits to simulate, "Trip generating units that are

Organization	Comments for Question 3
	connected to the BES when actual or assumed minimum generator steady state or ride through voltage limits are known and simulations show voltages may fall below the voltage limit. If assumed voltage limits are used, then they should be included in the assessment". 3.3.3 We suggest that R3.3.3 be removed and this System Protection simulation requirement should be included in R3.3.1, which is the requirement to properly simulate Protection System actions Add R3.3.5 We suggest the addition of R3.3.5, Applicable System Operating Limits for the planning horizon shall not be exceeded. because Note "a" and "b" under "Steady State Only" at the beginning of Table 1 are stated in the form of a Requirement (e.g. uses the verb, "shall") and all Requirements should be explicitly stated under Requirements and not be introduced (and hidden) in the performance notes of Table 1. [After R3.3.5 is added, Note "a" should be revised and refer to R3.3.5.] Add R3.3.6 We suggest the addition of R3.3.6, ?The response of voltage sensitive Load including Load that is disconnected from the System by end-user equipment associated with an event shall not be used to steady state voltage requirements. because Note "d" under "Steady State Only" at the beginning of Table 1 is stated in the form of a Requirement (e.g. uses the verb, "shall") and all Requirements should be explicitly stated under Requirements and not be introduced (and hidden) in the performance notes of Table 1. [After R3.3.6 is added, Note "d" should be revised to refer to R3.3.6.] R3.4.1: Remove the Transmission Planner and change "coordinate" to "provide" information to adjacent PC. We are working on other standards to remove "coordinate" and we should avoid it here. Coordinate requires interaction between two entities (or more), so if one does not respond, the other could be found to be non-compliant for something they cannot control.

Response: Part 3.3.2: Where test data is not available, the SDT believes that most Transmission Planners/Planning Coordinators currently assume generators ride through low voltage based on extensive field experience. There is a project (Project 2007-09 — Generator Verification) that will provide the required generator data to validate the assumptions. For this standard, all that is required is to identify the assumptions concerning voltage limitations of the unit and ensure that the simulation models the generator response as it will react in the real world. If voltage ride through limits would cause a generator to trip in the real world, the study must determine if the performance requirements are met for the initiating event and subsequent generator trip. No change made

Part 3.3.3: The SDT changed the wording to further clarify the action required when relay loadability limits are exceeded.

Requirement R3, part 3.3.3: Trip Transmission elements when relay loadability limits are exceeded

The intent of Requirement R3, part 3.3.1 is to remove elements that the Protection System would remove to clear a fault (breaker-to-breaker). The Transmission circuit loadability protection could trip unfaulted lines due to the post fault System loadings. Adding the suggested wording "including the simulation of transmission circuit loadability protection." would change the intent of Requirement R3, part 3.1.1. No change made.

Part 3.3.5 Proposed: The SDT believes that a new requirement is not needed. Requirement R3, part 3.1 states "Studies shall be performed for planning events to determine whether the BES meets the performance requirements in Table 1.". Header notes are part of Table 1 and therefore included in Requirement R3.

Part 3.3.6 Proposed: The SDT believes that a new requirement is not needed. Requirement R3, part 3.1 states "Studies shall be performed for planning events to determine whether the BES meets the performance requirements in Table 1.". Header notes are part of Table 1 and therefore included in Requirement R3.

Part 3.4.1: SDT believes that it is necessary for the planner to coordinate with adjacent planners to identify contingencies in adjacent systems that could impact the

Organization	Comments for Question 3
planners system. Both the Transmission Planner and Planning Coordinator have this responsibility. No change made.	
NYISO	R3.3.3 This requirement is already addressed in NERC Standard PRC-023 and reflected in the facility's rating and should be removed. R3.5. - The Extreme Events testing in Table 1 should be removed from this standard since there is no requirement to develop a Corrective Action Plan to address unacceptable consequences and the requirements are very general or vague. At a minimum, testing should only be required for EHV facilities or facilities specified by the Regional Entity for example, NPCC designates facilities that can have consequences outside an area as bulk power system facilities. If this remains, the NYISO requests that the phrase "evaluation of possible actions" be greatly clarified. R3.6 The NYISO seeks greater clarification of the phrase "consequential generation."
Response: Part 3.3.3: The SDT changed the wording to further clarify the action required when relay loadability limits are exceeded. The SDT believes this wording change should alleviate any perceived conflicts with the relay loadability standard. **Requirement R3, part 3.3.3**: Trip Transmission elements when relay loadability limits are exceeded Part 3.5: The SDT believes, and the majority of the industry agrees as seen in the comments, that continuing to study these possible scenarios is a valuable planning exercise. The requirement is to evaluate possible actions which, if implemented, could reduce the likelihood or mitigate the consequences of an extreme event. No change made. Part 3.6: The term "consequential generation" is not used in Requirement R3, part 3.6. The SDT has deleted Requirement R3, part 3.6 in response to industry comments as it is not a performance oriented requirement affecting the reliability of the BES.	
Xcel Energy	R3.3.3 Xcel does not believe that relay loadability limits is a valid system planning performance criterion because we are unsure how transmission relay loadability settings developed in accordance with PRC-023 can be more limiting than the Facility Ratings. Note that the purpose of PRC-023 standard is "Protective relay settings shall not limit transmission loadability" and it requires that the relay settings be higher than the "highest seasonal Facility Rating of a circuit". If relay settings limit the transmission loadability below its Facility Rating, then it is a violation of PRC-023. Requirements R3.4 and R3.5 appear to be related to and set the limits for R3.1 and R3.2 respectively. Suggest moving both Requirements R3.4 and R3.5 into R3.1 and R3.2, allowing these sub-Requirements (R3.4 and 3.5) to be deleted. R3.3 It is unclear from the wording in R3.3 whether the Contingency analyses need to be performed for all planning events or the more severe events referenced in R3.1 and R3.2. Please clarify the wording of R3.3.
Response: Part 3.3.3: The SDT changed the wording to further clarify the action required when relay loadability limits are exceeded. The SDT believes this wording change should alleviate any perceived conflicts with the relay loadability standard. **Requirement R3, part 3.3.3**: Trip Transmission elements when relay loadability limits are exceeded The SDT agrees that relay loadability limits would exceed Facility ratings except in cases where exceptions to the loadability standard exist.	

Organization	Comments for Question 3
Part 3.4: The SDT does not believe that combining the requirements provides any significant advantage. No change made. Part 3.5: The SDT does not believe that combining the requirements provides any significant advantage. No change made. Part 3.3: The SDT revised the wording of Part 3.3 as shown below to make it clear that it applies to both planning and extreme events: **Requirement R3, part 3.3**: Contingency analyses for Requirement R3, parts 3.1 & 3.2 shall:	
Sacramento Municipal Utility District	R3.3.3: To implement this requirement, the standard appears to call for one more facility rating which is based on Relay Loadability. Is the intent to also model the protection system actions if this limit is violated? Should such a requirement be moved to the MOD or FAC standard with conformance subject to Note (f) of Table 1 (Facility ratings shall not be exceeded) and R3.3.1 (simulate the removal of all elements that the Protection System and other " are expected to disconnect")?
Response: Part 3.3.3: The SDT changed the wording to further clarify the action required when relay loadability limits are exceeded. The SDT believes this wording change should alleviate any perceived conflicts with the relay loadability standard. **Requirement R3, part 3.3.3**: Trip Transmission elements when relay loadability limits are exceeded Part 3.3.1: The intent of this requirement is to remove elements that the Protection System would remove to clear a fault (breaker-to-breaker). The Transmission circuit loadability protection could trip un-faulted lines due to the post fault System loadings. Adding the suggested wording "including the simulation of transmission circuit loadability protection." would change the intent of Requirement R3, part 3.1.1.	
Puget Sound Energy, Inc.	R3.41 requires clarification. With respect to these "Contingencies on adjacent systems," the responsibility of listing and analyzing these events needs to be clarified. Should the event simulation be the responsibility of the "neighboring" system (where the event would occur) or the adjacent system that may feel the impact of this event? Per the developed rationale from R3.4, the neighboring system may determine that a particular event is "less severe" and hence not studied, even though this event may potentially impact a neighbor. Further, for these "Contingencies on adjacent systems" that result in system performance outside one's own operating limits, it is unclear who is responsible for mitigating these contingencies. It is potentially awkward in that one entity may be planning another entity's system improvements.
Response: R3.4.1: The intent is for the Planning Coordinator/ Transmission Planner to include in their Contingency lists Contingencies from adjacent Systems which may impact their System, and to run these Contingencies. The Planning Coordinator/Transmission Planner is responsible for mitigation of performance deficiencies in their System caused by Contingencies on their list, including the Contingencies from adjacent Systems.	
Duke Energy	R3.5 includes the phrase "cascading outages". We believe that the word "cascading" should be the capitalized NERC-defined term "Cascading".
Response: R3.5: The SDT agrees. The phrase "cascading outages" has been changed to "Cascading" to align with the NERC Glossary of Terms. **Requirement R3, part 3.5**: Those extreme events in Table 1 that are expected to produce more severe System impacts shall be identified and a list of those events to be evaluated for System performance in Requirement R3, part 3.2 created. The rationale for those Contingencies selected for evaluation shall be	

Organization	Comments for Question 3
available as supporting information. If the analysis concludes there is Cascading caused by the occurrence of extreme events, an evaluation of possible actions designed to reduce the likelihood or mitigate the consequences and adverse impacts of the event(s) shall be conducted.	
Northeast Power Coordinating Council--RSC	Requirement 3.2: This requirement should be deleted. The requirements for sensitivity analysis already address issues going beyond what is expected to meet reliability requirements. Requiring extreme event analysis is requiring two layers of event analysis beyond what is required and there is no requirement for corrective action if anything is identified. Therefore Extreme Event analysis no longer provides any value in this standard. Requirement 3.3.3: This requirement is already addressed in NERC Standard PRC-023 and reflected in the facility's rating and should be removed from TPL-001-1 since the standard already requires observance of facility ratings. Relay Loadability is handled in greater detail (as it should be) under the proposed PRC-023 standard, so no reference should be made in this standard, thereby introducing a double jeopardy issue. Requirement 3.4: It is strongly suggested that this requirement is made a sub-bullet of Requirement 3.1 to keep the related requirements together. Requirements 3.5--This requirement needs clarification as to what is specifically required for the "evaluation of possible actions." The list associated with Requirement 2. part 2.7.1 provides examples of possible actions, and leaving "evaluation" undefined offers the Planning Coordinator and Transmission Planner the leeway to use judgment in making their evaluations. Requirement 3.5 NPCC strongly suggests making this a sub-bullet of Requirement 3.2 to keep the related requirements together.Provide clarification as to what is specifically required for the "evaluation of possible actions". Requirement 3.6 Currently this requirement is not clear, and does not address any reliability issue. Clarification should be added that the "consequential generation" loss be excluded from the amount documented. Without the clarification, the Requirement should be deleted.
Response: Part 3.2: The SDT disagrees and believes there is value in running extreme event analysis to test the robustness of the System. No change made. Part 3.3.3: The SDT changed the wording to further clarify the action required when relay loadability limits are exceeded. The SDT believes this wording change should alleviate any perceived conflicts with the relay loadability standard. **Requirement R3, part 3.3.3**: Trip Transmission elements when relay loadability limits are exceeded Part 3.4: The SDT does not believe that combining the requirements provides any significant advantage. No change made. Part 3.5 The requirement is to evaluate possible actions which, if implemented, could reduce the likelihood or mitigate the consequences of an extreme event. The SDT believes that what these "possible actions" are should be left to the judgment of the Planning Coordinator/Transmission Planner who has knowledge of their System. Part 3.5: The SDT does not believe that combining the requirements provides any significant advantage. No change made. Part 3.6: The SDT has deleted Requirement R3, part 3.6 in response to industry comments as it is not a performance oriented requirement affecting the reliability of the BES.	
Midwest ISO	Requirement R3.6: With regards to the Generation Runback MW reporting; if no action is required then why require the entities

Organization	Comments for Question 3
	to provide this. Will it matter if 10MW or 100MW is part of the generation runback scheme tripped with the line? This is a system design issue which is not addressed by the standards, if this requirement is kept how is an entity expected to demonstrate compliance for this? This requirement is an administrative burden and we propose to remove R3.6 all together considering that there is not a reliability-related need for this information and it is unnecessary.
Response: Part 3.6: The SDT has deleted Requirement R3, part 3.6 in response to industry comments as it is not a performance oriented requirement affecting the reliability of the BES**.**	
Hydro-Québec TransEnergie (HQT)	Requirements 3.5 and 4.5 Both of these requirements need clarification as to what is specifically required for the "evaluation of possible actions." Requirement 3.3.3 This requirement is already addressed in NERC Standard PRC-023 and reflected in the facility's rating and should be removed from TPL-001-1 since the standard already requires observance of facility ratings. Requirement 3.4 HQT, as does NPCC, strongly suggests making this requirement a sub-bullet of Requirement 3.1 to keep the related requirements together. Requirement 3.5 HQT, as does NPCC, strongly suggests making this a sub-bullet of Requirement 3.2 to keep the related requirements together. Requirement 3.6 ?Currently this requirement is not clear. HQT, as does NPCC, recommends clarification be added that the "consequential generation" loss is excluded from the amount documented.
Response: Part 3.5 The requirement is to evaluate possible actions which, if implemented, could reduce the likelihood or mitigate the consequences of an extreme event. The SDT believes that what these "possible actions" are should be left to the judgment of the Planning Coordinator/Transmission Planner whose has knowledge of their System. Part 3.3.3: The SDT changed the wording to further clarify the action required when relay loadability limits are exceeded. The SDT believes this wording change should alleviate any perceived conflicts with the relay loadability standard. **Requirement R3, part 3.3.3**: Trip Transmission elements when relay loadability limits are exceeded Part 3.4: The SDT does not believe that combining the requirements provides any significant advantage. No change made. Part 3.5: The SDT does not believe that combining the requirements provides any significant advantage. No change made. Part 3.6: The SDT has deleted Requirement R3, part 3.6 in response to industry comments as it is not a performance oriented requirement affecting the reliability of the BES.	
Pacific Gas and Electric Co.	Requirements R3.4 and R3.5 appear to be related to and set the limits for R3.1 and R3.2 respectively. Suggest moving both Requirements R3.4 and R3.5 into R3.1 and R3.2, allowing these sub-Requirements (R3.4 and 3.5) to be deleted. It is unclear from the wording in R3.3 whether the Contingency analyses need to be performed for all planning events or the more severe events referenced in R3.1 and R3.2. Please clarify the wording of R3.3.

Organization	Comments for Question 3
	For clarity we suggest that the wording in R3.3.3 be changed to "Ensure the power flows in the simulations are no higher than actual relay loadability limits.
Response: Part 3.4: The SDT does not believe that combining the requirements provides any significant advantage. No change made. Part 3.5: The SDT does not believe that combining the requirements provides any significant advantage. No change made. Part 3.3: The SDT revised the wording of Requirement R3, part 3.3 as shown below to make it clear that it applies to both planning and extreme events: **Requirement R3, part 3.3**: Contingency analyses for Requirement R3, parts 3.1 & 3.2 shall: Part 3.3.3: The SDT changed the wording to further clarify the action required when relay loadability limits are exceeded. **Requirement R3, part 3.3.3**: Trip Transmission elements when relay loadability limits are exceeded	
National Grid	Sub-Requirement 3.2: This requirement should be deleted. The requirements for sensitivity analysis already address issues going beyond what is expected to meet reliability requirements. Requiring extreme event analysis is requiring two layers of event analysis beyond what is required and there is no requirement for corrective action if anything is identified. Therefore Extreme Event analysis no longer provides any value in this standard. Sub-Requirement 3.3.3: Relay Loadability is handled in greater detail (as it should be) under the proposed PRC-023 standard, so no reference should be made in this standard. It indicates a double jeopardy. Sub-Requirement 3.4: It is strongly suggested that this requirement is made a sub-bullet of Requirement 3.1 to keep the related requirements together. Sub-Requirement 3.5: It is strongly suggested that this requirement is made a sub-bullet of Requirement 3.2 to keep the related requirements together. Provide clarification as to what is specifically required for the "evaluation of possible actions." Sub-Requirement 3.6: This requirement does not address any reliability issue should be deleted. If it is to be kept, it is recommended that the "consequential generation" loss be excluded from the amount documented.
Response: Part 3.2: The SDT disagrees and believes there is value in running extreme event analysis to test the robustness of the System. No change made. Part 3.3.3: The SDT changed the wording to further clarify the action required when relay loadability limits are exceeded. The SDT believes this wording change should alleviate any perceived conflicts with the relay loadability standard. **Requirement R3, part 3.3.3**: Trip Transmission elements when relay loadability limits are exceeded Part 3.4: The SDT does not believe that combining the requirements provides any significant advantage. No change made. Part 3.5: The SDT does not believe that combining the requirements provides any significant advantage. No change made. Part 3.5: The requirement is to evaluate possible actions which, if implemented, could reduce the likelihood or mitigate the consequences of an extreme event. The SDT believes that determining these "possible actions" should be left to the judgment of the Planning Coordinator/Transmission Planner who has knowledge of their	

Organization	Comments for Question 3
System. Part 3.6: The SDT has deleted Requirement R3, part 3.6 in response to industry comments as it is not a performance oriented requirement affecting the reliability of the BES.	
Tri-State Generation and Transmission Association	Thank you for removing the requirement to explain why "non-studied contingencies" would produce less severe results." Don't say "R3, part 3.4". Instead, for much easier referencing of sections, just say "R3.4". This applies throughout the entire Standard." R3.5 In the phrase "extreme events in Table 1 that are expected to produce more severe System impacts", the term "extreme events" seems redundant with "more severe". If Extreme Events were capitalized, it would be apparent that the TP should choose more severe events typified by details listed in the Extreme Events section of Table 1.
Response: R3, part 3.4: NERC has directed that the new terminology be adopted for all parts of a requirement. No changes made. R3.5: The SDT disagrees that the suggested changes add clarity. No change made. R3.5: The extreme events are listed in Table 1. Some of these events will have a greater impact than others on a given System. The SDT's expectation is that the planner knows his system and would use judgment to select the extreme events that would have a more severe impact on his System. No change made.	
Ameren	The readability of R3.3 could be improved with the following wording changes:3.3 Contingency analyses shall be performed: 3.3.1 To simulate the removal? 3.3.2 To simulate tripping generators where simulations show? 3.3.3 And results reviewed to ensure relay loadability limits? 3.3.4 To simulate the expected? Requirement R3.3.1 needs to include language regarding the automatic restoration of facilities. The following language is suggested: To simulate the removal of all elements that the Protection System is expected to disconnect and the restoration of all elements that the automatic controls are expected to restore for each Contingency without operator intervention. Requirement R3.6: What is the purpose of this Requirement? We do not see how the reporting of this information adds to system reliability, and believe that this is more of a market issue. For those systems that are planned based on a single contingency, it is believed that numerous generation facilities would be impacted by the N-2 planning events and particularly those involving transmission facilities in the vicinity of power plant switchyards. Documenting manual or automatic generation runback or tripping of generation for the proposed P1 and P2 events is not unreasonable, but it is expected that developing runback or tripping schemes for the proposed P3-P7 events and reporting those contingencies and the amount of generation curtailed on an annual basis is of little value. Further, what information is to be reported for the P6 events for R3.6? As P6 events allow system adjustment following the first contingency (P1 event) to prepare for the second contingency (P1 event), is the runback information to be reported the generation that is to be curtailed after the first event (which should already be reported for the P1 category), after the second

Organization	Comments for Question 3
	event, or after both events? In real-time operations, security constrained economic redispatch continually adjusts generation to maintain transmission facility loadings within ratings anticipating the next single contingency event. Does the Standards Drafting Team intend for the industry to report the amount of curtailed generation in anticipation of the next P1 event?
Response: Part 3.3: The SDT has not adopted your suggested wording, but has made wording revisions to improve clarity as follows: **Requirement R3, part 3.3**: Contingency analyses for Requirement R3, parts 3.1 & 3.2 shall: Part 3.3.3: The SDT changed the wording to further clarify the action required when relay loadability limits are exceeded. The SDT believes this wording change should alleviate any perceived conflicts with the relay loadability standard. **Requirement R3, part 3.3.3**: Trip Transmission elements when relay loadability limits are exceeded. Part 3.3.1: The reference to “other automatic controls” is intended to include other tripping means such as cross-tripping and not automatic restoration devices. No change made. Part 3.6: The SDT has deleted Requirement R3, part 3.6 in response to industry comments as it is not a performance oriented requirement affecting the reliability of the BES.	
Florida Power and Light	The requirement clearly states that "For the steady state portion of the Planning Assessment" it must perform simulations that show generator ride through voltage limitations under 3.3.2. However, ride through limitations are performed through stability simulations not steady state as required by R3. This is confusing as currently drafted, please provide clarity. Additionally, 3.2 requires studies to be performed to assess the impact of the extreme events. Yet, 3.3 requires analyses shall be performed but does not specify the events intended to study. Suggested language for 3.3 should say "Contingency analyses shall be performed to assess the impact of the extreme events and:" Under 3.3.1 it states that the Planner must simulate the removal of all elements that the Protection System would be expected to disconnect. Language should be included to allow the Planner to provide a rationale to assess more severe system conditions without needing to simulate the effects of Protection Systems. This would capture the intent of this requirement.
Response: Part 3.3.2: Generators can trip when bus voltage drops below minimum generator steady state voltage limits. The SDT believes that the voltage ride through test is applicable in post-contingency steady-state where the planner would know if post-Contingency bus voltage violates generator trip points. If a trip point is violated, Requirement R3, part 3.3.2 would require the planner to remove the generator in the post-Contingency case to assess if performance is met with the generator removed. No change made. Part 3.3: The SDT revised the wording of Requirement R3, part 3.3 as shown below to make it clear that it applies to both planning and extreme events: **Requirement R3, part 3.3**: Contingency analyses for Requirement R3, parts 3.1 & 3.2 shall: Part 3.3.1: Consistent with FERC Order 693, the intent of the SDT is for the planner to simulate the Protection System operation so that all elements that the Protection System is designed to remove (breaker to breaker) are removed in the simulation for the list of Contingencies the planner has developed in Requirement R3, parts 3.4 (planning events) and 3.5 (extreme events). The requirement does not preclude the Planning Coordinator/Transmission Planner from studying more severe scenarios. No change made.	

Organization	Comments for Question 3
NorthWestern Energy	The wording in R3.3.3 should be changed to "Ensure the power flows in the simulations are no higher than actual relay loadability limits. In R3.3.3 The term "loadability" needs to be defined. R3.5 needs to be modified. It would be better to combine R3.2 with R3.5. The first part of the requirement requires identification of events that produce more severe System impacts. The presumed reason that the other contingencies were not selected is because they were deemed to be less severe or non-credible. In any case, theoretically, there can always be examples of more severe Extreme Contingencies than the one selected for study. This can be achieved by simply choosing events that are even less credible. For example, if the Extreme Contingency studied was a simultaneous loss of 3 transmission lines with the failure of a redundant RAS (SPS), then an event resulting in the simultaneous loss of 4 lines with the failure of 2 sets of redundant RASs would be even more severe. Listing all possible extreme events could result in a limitless list.
Response: Part 3.3.3: The SDT changed the wording to further clarify the action required when relay loadability limits are exceeded. The SDT believes this wording change should alleviate any perceived conflicts with the relay loadability standard. **Requirement R3, part 3.3.3**: Trip Transmission elements when relay loadability limits are exceeded Part 3.3.3: Relay loadability is defined in NERC Standard PRC-023-1. R3.5: The SDT agrees that there could be an endless list of possible extreme events, The requirement has been written to allow the Planning Coordinator/Transmission Planner to use experience and the knowledge of their System to select relevant extreme events that have some reasonable probability of occurring. The SDT does not believe that combining Requirement R3, part 3.5 with Requirement R3, part 3.2 provides any significant advantage. No change made.	
American Transmission Company	We propose the following changes and questions: R3.3.1 The term of "controls" is ambiguous and not defined, unlike the term, "Protection Systems", which is defined. Therefore, we suggest that this item be defined or more clearly described to avoid the risk of different and possibly contradictory interpretations by TPs, PCs, and auditors. R3.3.1 Add the wording, ". . . including the simulation of transmission circuit loadability protection." to this requirement, rather than have a separate R3.3.3 requirement for recognizing overload protection. Overload protection is simply one of the types of automatic Protection System that may remove one or more elements from service. R3.3.2 - We suggest qualifying which generating units to consider and which voltage limits to simulate with revised wording like, "Trip generating units that are connected to the BES when actual or assumed minimum generator steady state or ride through voltage limits are known and simulations show voltages may fall below the voltage limit. If assumed voltage limits are used, then they should be included in the assessment". The requirement should not apply to all relevant generating units until one of the MOD standards requires all Generator Owners to provide their minimum generating unit voltage limits to the TP and PC. If the wording of R3.3.2 must be different from its counterpart, R4.3.2, then please explain the reasons for any differences. R3.3.3 As noted above, we suggest that R3.3.3 be removed and that this System Protection loadability simulation requirement is included in R3.3.1 because overload protection is simply one type of automatic Protection System actions.

Organization	Comments for Question 3
	Add R3.3.5 We suggest the addition of R3.3.5 because any requirement in the head notes or foot notes of Table 1 should occur within the body of standard. The text of R3.3.5 should read, "Applicable System Operating Limits for the planning horizon shall not be exceeded." Presently, Note "a" and "b" under "Steady State Only" at the beginning of Table 1 are stated in the form of a Requirement (e.g. uses the verb, "shall") and all Requirements should be explicitly stated under Requirements and not be introduced (and basically hidden) in the performance notes of Table 1. [After R3.3.5 is added, Note "a" should be revised and refer to R3.3.5.] Add R3.3.6 ? We suggest the addition of R3.3.6 because any requirement in the head notes or foot motes of Table 1 should occur within the body of standard. The text of R3.3.6 should read, "The response of voltage sensitive Load including Load that is disconnected from the System by end-user equipment associated with an event shall not be used to steady state voltage requirements." because Note "d" under "Steady State Only" at the beginning of Table 1 is stated in the form of a Requirement (e.g. uses the verb, "shall") and all Requirements should be explicitly stated under Requirements and not be introduced (and basically hidden) in the performance notes of Table 1. [After R3.3.6 is added, Note "d" should be revised to refer to R3.3.6.] R3.5 - We interpret that R3.5 requires the TP and PC to conduct an evaluation of possible actions to reduce the likelihood or impact of extreme events, which produce the more severe impacts, if cascading outages may occur. Does the drafting team intend for the TP and PC to fulfill this requirement for at least one event in each of the five categories (i.e. 3 steady state and 2 stability) or in each of the 21 categories/sub-categories (i.e. 14 steady state and 7 stability). Also, if the resulting cascading outages do not result in any overloads, under-voltages, voltage collapse, or loss of generator synchronization, then should the evaluation of possible actions to reduce likelihood or impact be required? R3.6 We suggest the wording of this requirement be revised to, "Manual or automatic generation runback or tripping is permitted to meet steady state performance requirements for planning events P1 through P7 in Table 1." because Reliability Standard PRC-015-1 already includes requirements regarding the review and approval of Special Protection Systems. Therefore, the Planning Assessment does not need to duplicate description of the design and intent of the Special Protection System.

Response: Part 3.3.1: The SDT believes that the meaning of "controls" is clear in the context it is used - "Protection Systems and Other automatic controls" (such as a cross-trip scheme) that disconnect elements to clear a fault". No change made.

Part 3.3.1: The intent of this requirement is to remove elements that the Protection System would remove to clear a fault (breaker-to-breaker). The Transmission circuit loadability protection could trip un-faulted lines due to the post fault system loadings. Adding the suggested wording "including the simulation of transmission circuit loadability protection." would change the intent of Requirement R3, part 3.1.1. No change made.

Part 3.3.2: Where test data is not available, the SDT believes that most Transmission Planners/Planning Coordinators currently assume generators ride through low voltage based on extensive field experience. There is a project (Project 2007-09 — Generator Verification) that will provide the required generator data to validate the assumptions. For this standard, all that is required is to identify the assumptions concerning voltage limitations of the unit and ensure that the simulation models the generator response as it will react in the real world. If voltage ride through limits would cause a generator to trip in the real world, the study must determine if the performance requirements are met for the initiating event and subsequent generator trip. No change made.

The phrase "or high side of the GSU voltages" was added to Requirement R3, part 3.3.2 to make the wording in Requirement R3, part 3.3.2 the same as in Requirement R4, part 4.3.2.

Requirement R3, part 3.3.2: Trip generators where simulations show generator bus voltages or high side of the GSU voltages are less than known or assumed

Organization	Comments for Question 3
	minimum generator steady state or ride through voltage limitations. Include in the assessment any assumptions made. Part 3.3.3: The SDT changed the wording to further clarify the action required when relay loadability limits are exceeded. The SDT believes this wording change should alleviate any perceived conflicts with the relay loadability standard. Combining Requirement R3, part 3.3.3 with Requirement R3, part 3.3.1 would change the intent of Requirement R3, part 3.3.1. **Requirement R3, part 3.3.3**: Trip Transmission elements when relay loadability limits are exceeded Part 3.3.5 Proposed: The SDT believes that a new requirement is not needed. Requirement R3, part 3.1 states "Studies shall be performed for planning events to determine whether the BES meets the performance requirements in Table 1.". Header notes are part of Table 1 and therefore included in Requirement R3. Part 3.3.6 Proposed: The SDT believes that a new requirement is not needed. Requirement R3, part 3.1 states "Studies shall be performed for planning events to determine whether the BES meets the performance requirements in Table 1." Header notes are part of Table 1 and therefore included in Requirement R3. Part 3.5: Requires the planning entity to identify which contingencies are chosen to be simulated in the study, and explain why these are chosen. The SDT assumes that the Planning Coordinator/Transmission Planner, applying experience of past studies and knowledge of its System, is in the best position to determine which Contingencies in Table 1 are most relevant, as it is impossible to study all Contingencies especially the multiple Contingency events. Requirement R3, part 3.5 requires "an evaluation of possible actions designed to reduce the likelihood or mitigate the consequences and adverse impacts" if cascading outages - the trigger for evaluation of possible mitigating actions is cascading outages, not "overloads, under-voltages, voltage collapse, or loss of generator synchronization". No change made. Part 3.6: The SDT has deleted Requirement R3, part 3.6 in response to industry comments as it is not a performance oriented requirement affecting the reliability of the BES. The SDT notes that generator runback or tripping is not prohibited by the standard.
PJM	In R3.3.2, low voltage protection, like practically all generator protection, is not commonly collected, at least by MMWG, and will take a great deal of time and effort to gather. R3.3.3 – Relay loadability should not be evaluated in a performance standard. A separate line rating and protection setting evaluation can determine if relay loadability is exceeded. If kept, this protection information, is not commonly collected, at least by MMWG, and will take a great deal of time and effort to gather. R3.5 – Needs a 3.5.1 similar to 3.4.1. R3.6 needs some words about sending up a red flag is the generation tripped or runback is greater than the largest single contingency. Like –The Reliability Coordinator, Transmission Operator and Balancing Authority must be notified if the planned generation tripped or runback scheme is greater than the largest single contingency.-
Response: Part 3.3.2: Where test data is not available, the SDT believes that most Transmission Planners/Planning Coordinators currently assume generators ride through low voltage based on extensive field experience. There is a project (Project 2007-09 — Generator Verification) that will provide the required generator data to validate the assumptions. For this standard, all that is required is to identify the assumptions concerning voltage limitations of the unit and ensure that the simulation models the generator response as it will react in the real world. If voltage ride through limits would cause a generator to trip in the real world, the study must determine if the performance requirements are met for the initiating event and subsequent generator trip. No change made. Part 3.3.3: The SDT changed the wording to further clarify the action required when relay loadability limits are exceeded.	

Organization	Comments for Question 3
	Requirement R3, part 3.3.3: Trip Transmission elements when relay loadability limits are exceeded Part 3.5.1 Proposed: The SDT has not included a requirement on the Planning Coordinator/ Transmission Planner to coordinate with adjacent Systems to identify extreme Contingencies in these adjacent Systems that would impact the Planning Coordinator/Transmission Planner's System. Part 3.6: The SDT has deleted Requirement R3, part 3.6 in response to industry comments as it is not a performance oriented requirement affecting the reliability of the BES.

4. Requirement R4 – Please provide any specific comments on the requirement text, VRF, Time Horizon, measure associated with the requirement, data retention associated with the requirement, and/or the VSL associated with the requirement.

Summary Consideration: Many commenters expressed concerns that the new "relaying" requirements that were added to draft 4 would essentially require modeling every zone 3 relay in each Interconnection. The requirements do not necessarily require modeling of specific relays. Some dynamic simulation programs include a generic relay model which can easily be applied to every branch in the simulation. If this model shows impedance swings in a branch element, then one can either take action according to the generic model results or investigate the characteristics of the relays actually used on that branch.

In response to several commenters, Part 4.1.2 was modified to no longer require tripping of out-of-step generators in the simulations.

Clarifications to the requirements were made as follows:

Requirement R3, part 3.3.2 - Trip generators where simulations show generator bus voltages or high side of the GSU voltages are less than known or assumed minimum generator steady state or ride through voltage limitations. Include in the assessment any assumptions made.

Requirement R4, part 4.1.2 - For planning events P2 through P7: When a generator pulls out of synchronism in the simulations, the resulting apparent impedance swings shall not result in the tripping of any Transmission system elements other than the generating unit and its directly connected Facilities.

Requirement R4, part 4.3 - Contingency analyses for Requirement R4, Parts 4.1 and 4.2 shall :

Requirement R4, part 4.5 - Those extreme events in Table 1 that are expected to produce more severe System impacts shall be identified and a list of those events to be evaluated for System performance in Requirement R4, part 4.2 created. The rationale for those Contingencies selected for evaluation shall be available as supporting information. If the analysis concludes there is Cascading caused by the occurrence of extreme events, an evaluation of possible actions designed to reduce the likelihood or mitigate the consequences of the event(s) shall be conducted.

Organization	Comments for Question 4
Independent Electricity System Operator	(1) Part 4.3: Similar comments on Part 3.3 provided under Q3 also apply here. (2) Parts 4.4 and 4.5: similar comments on Parts 3.4 and 3.5 provided under Q3 also apply here.(3) We do not have any comments on the measure, VRF, Time Horizon and VSLs.
SRC of ISO/RTO	1. Part 4.3: Similar comments as for Part 3.3 (i.e. overly prescriptive, etc...) provided under question 3 also apply here. 2. Parts 4.4 and 4.5: Similar comments on Part 3.4 and 3.5 provided under question 3 also apply here.

Organization	Comments for Question 4
	AESO does not comment on VSLs or VRFs.
Response: See response to your comments on Requirement R3, part 3.3. See response to your comments on Requirement R3, parts 3.4 and 3.5.	
ERCOT ISO	* Will any agreements made in R7 override the "each TP and PC" requirement? To clarify this, the requirement could be rephrased: "In accordance to the responsibilities assigned in R7, the responsible Transmission Planners and Planning Coordinators shall perform?. "* Similar to comments provided in R3, Section 4.1 and 4.4 appear to be related. Confusing references can be eliminated by combining them and removing 4.4: "4.1. Those planning events in Table 1that are expected to produce more severe System impacts on its portion of the BES, shall be identified and studies shall be performed for planning events to determine whether the BES meets the performance requirements in Table 1. A list of those Contingencies and the rationale for those Contingencies selected for evaluation shall be available as supporting information. "* Similarly, Section 4.2 and 4.5 appear to be related. Confusing references can be eliminated by combining them and removing 4.5: "4.2. Those extreme events in Table 1 that are expected to produce more severe System impacts shall be identified and studies shall be performed to assess the impact of the extreme events. If the analysis concludes there are cascading outages caused by the occurrence of extreme events, an evaluation of possible actions designed to reduce the likelihood or mitigate the consequences of the event(s) shall be conducted. A list of those events and the rationale for those Contingencies selected for evaluation shall be available as supporting information. "
Response: The agreements required by Requirement R7 are intended to clarify the responsibilities among the Planning Coordinator and Transmission Planners. The SDT believes this is clear in the existing language. Requirement R4, parts 4.1 & 4.4: The SDT does not believe that combining the requirements serves any purpose. No change made. Requirement R4, parts 4.2 & 4.5: The SDT does not believe that combining the requirements serves any purpose. No change made.	
Northeast Utilities	[R4.1.1] This requirement needs better clarification. Does it mean that a generator that trips on any other condition apart from tripping on out-of-synchronism is acceptable? Example if the generator is not able to ride through a low voltage condition created by a fault. We recommend that this requirement is dropped from TPL-001-1 standard. [R4.1.2] This approach will require a different modeling technique from current practice and will require an implementation period. [R4.3.2] Refer to comment for Requirement R3.3.2. [R4.5] This requirement needs clarification as to what is specifically required for the "evaluation of possible actions". Otherwise the following is recommended:" It should be clear that an evaluation does not require solution development for all Extreme Events" Change "an evaluation of possible actions" to "where appropriate, reasonably practicable actions designed to reduce the likelihood or mitigate the consequences and adverse impacts of the event(s) shall be considered."

Organization	Comments for Question 4
Response: Part 4.1.1: The requirement will not be dropped. The requirement states that for event P1, no generating unit shall pull out of synchronism. If the event results in a unit tripping due to fault clearing action or due to an SPS action, this is acceptable. Low voltage ride-through is handled in a separate requirement (Requirement R4, part 4.3.2). Part 4.1.2: Tripping the generator is no longer required. The SDT has modified Requirement R4, part 4.1.2. **Requirement R4, part 4.1.2** - For planning events P2 through P7: When a generator pulls out of synchronism in the simulations, the resulting apparent impedance swings shall not result in the tripping of any Transmission system elements other than the generating unit and its directly connected Facilities. Part 4.3.2: See response to your comment on Requirement R3, part 3.3.2. Part 4.5: The requirement is to evaluate possible actions which could reduce the likelihood or mitigate the consequences of the event. The standard should not prescribe those actions. It is up to your judgment what those possible actions could be. No change made.	
Central Maine Power Company	4.1.1 This should be revised to only be applicable to generators interconnected to the BES. This may need an implementation period as not all existing units are interconnected in accordance with the standard as proposed. As written this applies to small generators and doesn't necessarily reflect reliability of the network. 20 MW is a recommended generator minimum size. 4.1.2 This will require implementation period. 4.2 Item 4.2 should be deleted. The requirements for sensitivity analysis already address issues going beyond what is expected to meet reliability requirements. Requiring extreme event analysis is requiring two layers of event analysis beyond what is required and there is no requirement for corrective action if anything is identified. Therefore Extreme Event analysis no longer provides any value in this standard. 4.4 It is suggested that this requirement is made a sub-bullet of Requirement 4.1 to keep the related requirements together. 4.5 It is suggested that this requirement is made a sub-bullet of Requirement 4.2 to keep the related requirements together.
ISO New England	4.1.1 This should be revised to only be applicable to generators interconnected to the BES. This may need an implementation period as not all existing units are interconnected in accordance with the standard as proposed. As written this applies to small generators and doesn't necessarily reflect reliability of the network. 20 MW is a recommended generator minimum size. 4.1.2 This will require implementation period. 4.2 Item 4.2 should be deleted. The requirements for sensitivity analysis already address issues going beyond what is expected to meet reliability requirements. Requiring extreme event analysis is requiring two layers of event analysis beyond what is required and there is no requirement for corrective action if anything is identified. Therefore Extreme Event analysis no longer provides any value in this standard. 4.4 It is suggested that this requirement is made a sub-bullet of Requirement 4.1 to keep the related requirements together. 4.5 It is suggested that this requirement is made a sub-bullet of Requirement 4.2 to keep the related requirements together.
United Illuminating	4.1.1 This should be revised to only be applicable to generators interconnected to the BES. This may need an implementation

Organization	Comments for Question 4
	period as not all existing units are interconnected in accordance with the standard as proposed. As written this applies to small generators and doesn't necessarily reflect reliability of the network. 20 MW is a recommended generator minimum size. 4.1.2 This will require implementation period. 4.2 Item 4.2 should be deleted. The requirements for sensitivity analysis already address issues going beyond what is expected to meet reliability requirements. Requiring extreme event analysis is requiring two layers of event analysis beyond what is required and there is no requirement for corrective action if anything is identified. Therefore Extreme Event analysis no longer provides any value in this standard. 4.4 It is suggested that this requirement is made a sub-bullet of Requirement 4.1 to keep the related requirements together. 4.5 It is suggested that this requirement is made a sub-bullet of Requirement 4.2 to keep the related requirements together.
Response: Part 4.1.1: The standard applies only to the BES and therefore, without revision, does not place this requirement on generators not directly connected to the BES. The SDT believes that generators smaller than 20 MW also need to be stable for single Contingencies (P1). No change made. Part 4.1.2: Tripping the generator is no longer required. The SDT has modified Requirement R4, part 4.1.2. **Requirement R4, part 4.1.2** - For planning events P2 through P7: When a generator pulls out of synchronism in the simulations, the resulting apparent impedance swings shall not result in the tripping of any Transmission system elements other than the generating unit and its directly connected Facilities. Part 4.2: The SDT disagrees and believes there is value in running extreme event analysis. No change made. Part 4.4: The SDT does not believe that combining the requirements serves any purpose. No change made. Part 4.5: The SDT does not believe that combining the requirements serves any purpose. No change made.	
Florida Municipal Power Agency, and its Member Cities	4.1.1, suggest rewording "(a) generator being disconnected from the Bulk Electric System ", system as defined in the Glossary includes distribution, and we do not believe that is the intent of the SDT. 4.1.2, 4.3.1 and 4.3.3 essentially require modeling every Zone 3 (or higher, such as Zone 5) relay in each Interconnection (or at least in the Region under study and adjacent regions) because, in order to simulate the impact of a power swing on a distance relay, one would need to know the characteristics of the distance relay and how long the transient swing remains within that characteristic, which means modeling the relay. Is that the intent of the SDT? If so, FMPA suggests limiting these bullets to Facilities 230 kV and higher.
Response: Part 4.1.1: The standard applies only to the BES and therefore, without revision, does not place this requirement on generators not directly connected to the BES. No change made. Parts 4.1.2, 4.3.1, & 4.3.3: This does not necessarily require modeling of specific relays. Some dynamic simulation programs include a generic relay model which can easily be applied to every branch in the simulation. If this model shows impedance swings in a branch element, then either take action according to the generic model results or investigate the characteristics of the relays actually used on that line. No change made.	

Organization	Comments for Question 4
Xcel Energy	4.3 Does the requirement allow it to be optional as to whether an entity chooses to include generator exciter controls, PSS, etc.? To what degree must a device impact the study area, in order for it to be required to be included in the simulation? Requirements R4.4 and R4.5 appear to be related to and set the limits for R4.1 and R4.2 respectively. Suggest moving both Requirements R4.4 and R4.5 into R4.1 and R4.2, allowing these sub-Requirements (R4.4 and 4.5) to be deleted. R4.3 It is unclear from the wording in R4.3 whether the Contingency analyses need to be performed for all planning events or the more severe events referenced in R4.1 and R4.2. Please clarify the wording of R4.3. R4.3.1 appears to require an assessment of both successful and unsuccessful high-speed reclosing. Successful reclosing is a much less severe event, so it seems unnecessary to assess both. If it is the intent to require that entities assess both, we suggest including the assessment in the list of sensitivities.
Response: Part 4.3: If generator exciter controls and PSS do not affect the study area, it is not necessary to model them. However, most Transmission Planners will have them in their simulations because these controls are already included in their model. It is up to your judgment as to what control devices have an impact on the study area. Parts 4.4 & 4.5: The SDT does not believe that combining the requirements serves any purpose. No change made. Part 4.3: The Contingency analyses in Requirement R4, part 4.3 refer to the studies in Requirement R4, parts 4.1 and 4.2. However, for additional clarity, Requirement R4, part 4.3 has been modified. **Requirement R4, part 4.3** - Contingency analyses for Requirement R4, parts 4.1 and 4.2 shall : Part 4.3.1: The Standard requires you to study only the events which produce more severe System impacts. If two Systems are swinging apart, then successful high speed reclosing could show a more severe impact. However, if successful reclosing is not expected to produce a more severe impact, you are not required to study it. No change made.	
FirstEnergy Corp	A. The SDT should bring consistency to the text used for sub-part 4.3.2 of R4 and sub-part 3.3.2 of R3. In R4 it indicates "generator bus voltages or high-side of GSU" as the reference voltage point whereas 3.3.2 only indicates "generator bus voltage" as the point of reference. If the generator bus is modeled at the generator voltage, then this should be the reference voltage point. If the generator is modeled directly connected to the BES (no transformer is explicitly modeled), then the transmission voltage should be the reference voltage. B. Requirement R4, sub-part 4.3.2 is well intentioned, but problematic for those performing dynamic simulations. Does a Guide or Practice exist to determine the dynamic undervoltage capability of a synchronous machine? Most excitation systems contain "field forcing" functions to maintain stability through fault conditions (1 second or so of capability), but FE is not aware of any published, readily available quantities or formulas that can be used to determine this highly time dependent function. Application of the steady state minimum voltage is grossly over-conservative. FE questions why low voltage limits should even be considered in dynamic simulations, since the primary concern for generating equipment during events of this nature and duration are metallurgical, not thermal (voltage). C. Requirement R3 sub-part 4.3.3 is troublesome since the modeling detail needed for Protection Systems within traditional stability programs is not available. It is expected that software adjustments will be needed from the software vendors before this

Organization	Comments for Question 4
	requirement can be met. The implementation plan of 24 months may be insufficient in regards to 4.3.3. In draft 3 Progress Energy and Ameren in the Q11 comments indicated that more time is needed for Protection System modeling required by TPL-001-1. The SDT responded "The standard does not require detailed modeling of Relay Protection Systems. It only requires that the impacts of those systems be reflected in the modeling of Contingencies and the evaluation of the resulting System performance. This is no different than the current standards." The inclusion of sub-part 4.3.3 in Draft 4 does not appear to align with this response. Please clarify the intent of 4.3.3 and respond regarding FE's belief that more time is needed for software improvements. D. We suggest the team discontinue the use of "Coordinate with adjacent transmission planners" in regards to sub-part 4.4.1 related to the inclusion of contingencies from adjacent systems. The "coordination" type of requirements creates a need to develop compliance evidence such as e-mail correspondence, meeting minutes etc that serve no real reliability purpose. The requirement should simply be that the TP shall include adjacent contingencies expected to produce the more severe System impacts on their systems. In fact, sub-part 4.4 already includes that language. We suggest the team append the sentence "The planning event contingencies shall include:" to the end of sub-part 4.4 followed by two bullets that indicate 1) events within the TP's system and 2) events on adjacent transmission Systems.
Response: A. Part 4.3.2: To be consistent with Requirement R4, part 4.3.2., Requirement R3, part 3.3.2 has been modified to also allow the use of voltages on the high side of the GSU. The use of voltages on the high side of the GSU allows greater flexibility in applying voltage ride-through capability of generators - some of which are defined on the high side of the GSU. **Requirement R3, part 3.3.2** - Trip generators where simulations show generator bus voltages or high side of the GSU voltages are less than known or assumed minimum generator steady state or ride through voltage limitations. Include in the assessment any assumptions made. B. Part 4.3.2: The purpose of Requirement R4, part 4.3.2 is to take into account the low voltage ride-through capability of generators in the studies. There is a reliability standard (PRC-024) under development which will require Generator Owners to provide information about the low voltage ride through capability of their generators based on relay settings. Requirement R4, part 4.3.2 requires you to include in the assessment how you analyzed voltage ride-through capability. If complete information on the ride-through capability is not available, then you should document your assumptions regarding ride-through capability for the assessment. No change made. C. Part 4.3.3: This does not necessarily require modeling of specific relays. Some dynamic simulation programs include a generic relay model which can easily be applied to every branch in the simulation. If this model shows impedance swings in a branch element, then either take action according to the generic model results or investigate the characteristics of the relays actually used on that line. Therefore, the SDT does not believe that more time is needed in the Implementation Plan. No change made. D. Part 4.4.1: The SDT strongly disagrees with your suggestion. It is much easier to coordinate with adjacent Transmission Planners for Stability simulations. A requirement to study Contingencies on adjacent Systems creates an enormous burden for Stability simulations which have to take into account substation configurations and relaying times. A much better method is to coordinate with neighbors as to which Contingencies on their System could impact your System and then study only those Contingencies on the neighbor's System. No change made.	
Gainesville Regional Utilities	As generation and transmission elements are added to our small system, we evaluate the stability impact as part of its feasibility and impact studies. After installation and in each year of a critical conditions study at the regional level, our elements are considered in the regional priority listings to determine if any stability issues need additional or continuous evaluation. Again, as a "part of the whole" our elements are considered and our assessment is based on these and other findings. Again, this revision

Organization	Comments for Question 4
	seems to add clarity to this requirement and its parts. Good Job!
Response: Thanks for your comment.	
Progress Energy Florida, Inc.	As PEF is opposed to TPL-001-1 as a whole, PEF will have no further comment on this issue other than to encourage all appropriate parties to review PEF's previous comments to this effect.
Response: Throughout the drafting process, the SDT has carefully considered your comments as well as comments from other industry members.	
CenterPoint Energy	CenterPoint Energy recommends deleting part 4.4.1 as being overly prescriptive and difficult to demonstrate in an audit.
Response: Part 4.4.1: The SDT disagrees that this requirement is prescriptive and difficult to demonstrate compliance. There is a need to consider Contingencies on a neighbor's System which may impact your System. It is much easier to coordinate with adjacent Transmission Planners for Stability simulations than to study them all yourself. A requirement to study Contingencies on adjacent Systems creates an enormous burden for Stability simulations which have to take into account substation configurations and relaying times. A much better method is to coordinate with neighbors as to which Contingencies on their System could impact your System and then study only those Contingencies on the neighbor's System. For the audit you should show documentation where you asked and received these Contingencies from your neighbors. No change made.	
Deseret Power	Comments: Requirements R4.4 and R4.5 appear to be related to and set the limits for R4.1 and R4.2 respectively. Suggest moving both Requirements R4.4 and R4.5 into R4.1 and R4.2, allowing these sub-Requirements (R4.4 and 4.5) to be deleted. It is unclear from the wording in R4.3 whether the Contingency analyses need to be performed for all planning events or the more severe events referenced in R4.1 and R4.2. Please clarify the wording of R4.3. R4.3.1 appears to require an assessment of both successful unsuccessful high-speed reclosing. Successful reclosing is a much less severe event, so it seems unnecessary to assess both. If the intent is to make entities assess both we suggest including the assessment in the list of sensitivities.
Response: Parts 4.4 & 4.5: The SDT does not believe that combining the requirements serves any purpose. No change made. Part 4.3: The Contingency analyses in Requirement R4, part 4.3 refer to the studies in Requirement R4, parts 4.1 and 4.2. However, for additional clarity, Requirement R4, part 4.3 has been modified. **Requirement R4, part 4.3** - Contingency analyses for Requirement R4, parts 4.1 and 4.2 shall : Part 4.3.1: The Standard requires you to study only the events which produce more severe System impacts. If two Systems are swinging apart, then successful high speed reclosing could show a more severe impact. However, if successful reclosing is not expected to produce a more severe impact, you are not required to study it. No change made.	
ITC Holdings	Comments:On R4.3.2:Assumptions regarding Low Voltage Ride Through (LVRT) capability are risky and not well understood. If the SDT feels this is a critical requirement that merits corrective action then we believe LVRT characteristics for various machine types should be developed through a NERC process. Without such "standards", it will be difficult to justify CAPs based on LVRT

Organization	Comments for Question 4
	assumptions. For example, would the Transmission Owner (TO) or Generator Owner be responsible for the cost of VAR CAPs if an LVRT assumption were violated. Can a TO require an LSE to install automatic load shedding for an LVRT assumption when cascade or local load loss result from an LVRT assumption? In addition, as the SDT has already indicated, the industry is still in a learning curve regarding the dynamic behavior of certain loads. If LVRT capability is considered as a critical requirement, then what about High Voltage Ride Through (HVRT) capability? The violation of HVRT could also cause certain damages to the system. R4.4.1 - (contingency list coordination with neighbors) It's unclear as to the "measure" for this requirement. Do you give your neighbor a list of "contingencies" in your area. Should it include all categories (p1 thru p7 for example)? Does your neighbor have to study a cascade situation in his system caused by an outage in your system? Are joint studies merited? More importantly, if an outage in a neighboring system requires a CAP, who's responsible, particularly if the CAP involves the neighboring system. Does the neighbor have to have a CAP, according to this standard, if the violation is in your system, and the CAP is in his? Who pays? Are you putting a study burden on your neighbor when you do this? Do you include additional contingencies to ensure that you do not miss a contingency that might impact your neighbors system to avoid any potential compliance implication on you?
Response: Part 4.3.2: There is a reliability standard (PRC-024) under development which will require Generator Owners to provide information about the low voltage ride through capability of their generators based on relay settings. Requirement R4, part 4.3.2 requires you to include in the assessment how you analyzed voltage ride-through capability. If complete information on the ride-through capability is not available, then you should document your assumptions regarding ride-through capability for the assessment. And yes, you can make System improvements based on reasonable assumptions. The SDT does not believe that high voltage ride through of generators has been an issue in past events like low voltage ride through has been. Thus, there is no need to include it in the standard. Part 4.4.1: The intent of the requirement is to give your neighbor a list of Contingencies (P1-P7) for which you have observed an impact to the neighbor's System. Your neighbor will then study those Contingencies. Joint studies are not required. If a Contingency on a neighbor's System causes a problem on your System, you must find a solution and the reverse situation is the same.	
TVA System Planning	For R4.1.2. Suggested change: For planning events P2 through P7: A generator that pulls out of synchronism shall be considered in the simulations and the resulting apparent impedance swings shall not result in the tripping of any Transmission System elements other than the generating unit and its directly connected Facilities." [Since often tripping a out of step generator reduces impedance swings, if the simulation shows acceptable impedance swings and voltage levels without tripping the generator, why would we be required to determine the tripping time and simulate tripping in each of the simulations that we have to run for these event categories? Without the suggested change involving the word "considered", significant extra effort would be required to perform simulations for small generators with no added benefit in achieving the purpose of assuring that impedance swings from generators are not passing through lines on the Bulk Electric System for events P2-P7. 4.3.3. Suggested change: Simulate the impact of transient swings on Protection System operation for Transmission lines and transformers when such devices impact the study area. Without this change, a significant amount of effort would be required (with no added benefit) to evaluate protection systems all over the grid that have little or no impact on the study area.

Organization	Comments for Question 4
	R4.3.1: add "if reclosing is actually used as part of a protection system" to the end of the sentence.
Response: Part 4.1.2: The SDT agrees with the concern and has modified Requirement R4, part 4.1.2. **Requirement R4, part 4.1.2** - For planning events P2 through P7: When a generator pulls out of synchronism in the simulations, the resulting apparent impedance swings shall not result in the tripping of any Transmission system elements other than the generating unit and its directly connected Facilities Part 4.3.3: This does not necessarily require modeling of specific relays all over the grid. Some dynamic simulation programs include a generic relay model which can easily be applied to every branch in the simulation. If this model shows impedance swings in a branch element, then either take action according to the generic model results or investigate the characteristics of the relays actually used on that line. Therefore, the SDT does not see a need to add words that specifically limit the simulation of these impacts to the study area. No change made. Part 4.3.1: The requirement is to consider the impact of high speed reclosing. This does not mean that you need to study high speed reclosing if you are not using it. No change made.	
SERC Dynamics Review Subcommittee (DRS)	It is not clear as to the expectations of standard drafting team for dynamic modeling of relays. Parts 4.1.2 and 4.3.3 imply that all transmission relays may need to be explicitly modeled in the dynamic simulations. Is this the team's intent, please clarify? For R4.1.2. Suggested change: Replace word "tripped" with "considered". Reasoning: Since often tripping an out-of-step generator reduces impedance swings, if the simulation shows acceptable impedance swings and voltage levels without tripping the generator, why would we be required to determine the tripping time and simulate tripping in each of the simulations that we have to run for these event categories? Without the suggested change involving the word "considered", significant extra effort would be required to perform simulations for small generators with no added benefit in achieving the purpose of assuring that impedance swings from generators are not passing through lines on the Bulk Electric System for events P2-P7. Part 4.3.1: add "when used as part of a protection system" to the end of the sentence. Part 4.3.3: add "when such devices affect the study area" to the end of the sentence. Part 4.4: place a space between words "Table 1" and "that".
Response: Parts 4.1.2 & 4.3.3: This does not necessarily require modeling of specific relays. Some dynamic simulation programs include a generic relay model which can easily be applied to every branch in the simulation. If this model shows impedance swings in a branch element, then either take action according to the generic model results or investigate the characteristics of the relays actually used on that line. Part 4.1.2: The SDT agrees with the concern and has modified Requirement R4, part 4.1.2. **Requirement R4, part 4.1.2** - For planning events P2 through P7: When a generator pulls out of synchronism in the simulations, the resulting apparent impedance swings shall not result in the tripping of any Transmission system elements other than the generating unit and its directly connected Facilities Part 4.3.1: The requirement is to consider the impact of high speed reclosing. This does not mean that you need to study high speed reclosing if you are not using it. No change made. Part 4.3.3: As stated above, a generic relay model can be used to meet this requirement. Therefore, the SDT does not see a need to add words that specifically limit the simulation of these impacts to the study area. No change made.	

Organization	Comments for Question 4
Part 4.4: The typo has been corrected.	
SERC Planning Standards Subcommittee	It is not clear as to the expectations of standard drafting team for dynamic modeling of relays. Parts 4.1.2 and 4.3.3 imply that transmission relays may need to be explicitly modeled in the dynamic simulations. Is this the team's intent, please clarify? Part 4.3.1: add "when used as part of a protection system" to the end of the sentence. Part 4.3.3: add "when such devices affect the study area" to the end of the sentence.
Response: Parts 4.1.2 & 4.3.3: This does not necessarily require modeling of specific relays. Some dynamic simulation programs include a generic relay model which can easily be applied to every branch in the simulation. If this model shows impedance swings in a branch element, then either take action according to the generic model results or investigate the characteristics of the relays actually used on that line. Part 4.3.1: The requirement is to consider the impact of high speed reclosing. This does not mean that you need to study high speed reclosing if you are not using it. No change made. Part 4.3.3: As stated above, a generic relay model can be used to meet this requirement. Therefore, the SDT does not see a need to add words that specifically limit the simulation of these impacts to the study area. No change made.	
Ameren	It is not clear as to the expectations of the standard drafting team for dynamic modeling of relays. Requirements 4.1.2 and 4.3.3 imply that transmission relays may need to be explicitly modeled in the dynamic simulations. Is this the team's intent? If so, has the team given consideration to the availability of relay models in the commonly used Power System simulation software programs, and considered the cost and effort required for such implementation versus the expected benefits? Is there any historical experience that would imply that such modeling is crucial to the reliability of the BES? It is suggested that generators that pull out of synchronism be given consideration for their effects on the system, without requiring simulation of generator tripping in R4.1.2. Requirement R4.3.1 needs to include some additional language regarding the automatic restoration of facilities and allowance of high-speed reclosing. The following language is suggested: Simulate the removal of all elements that the Protection System is expected to disconnect and the restoration of all elements that the automatic controls are expected to restore for each Contingency without operator intervention while also considering the impact of successful or unsuccessful high-speed reclosing, if high-speed reclosing is employed. R4.3.3: Suggested wording addition: "for those devices relevant to the study area." A space needs to be added between "Table 1" and "that" in Requirement 4.4.
Response: Parts 4.1.2 & 4.3.3: This does not necessarily require modeling of specific relays. Some dynamic simulation programs include a generic relay model which can easily be applied to every branch in the simulation. If this model shows impedance swings in a branch element, then either take action according to the generic model results or investigate the characteristics of the relays actually used on that line. Part 4.1.2: The SDT agrees with the concern and has modified 4.1.2.	

Organization	Comments for Question 4
Requirement R4, part 4.1.2 - For planning events P2 through P7: When a generator pulls out of synchronism in the simulations, the resulting apparent impedance swings shall not result in the tripping of any Transmission system elements other than the generating unit and its directly connected Facilities Part 4.3.1: The SDT does not see the need for the standard to specify other automatic controls. No change made. Part 4.3.3: As stated above, a generic relay model can be used to meet this requirement. Therefore, the SDT does not see a need to add words that specifically limit the simulation of these impacts to the study area. No change made. Part 4.4: The typo has been corrected.	
Utility System Efficiencies, Inc. (USE)	It is unclear from the wording in R4.3 whether the Contingency analyses need to be performed for all planning events or the more severe events referenced in R4.1 and R4.2. Please clarify the wording of R4.3. R4.3.1 appears to require an assessment of both successful unsuccessful high-speed reclosing. Successful reclosing is a much less severe event, so it seems unnecessary to assess both. If the intent is to make entities assess both we suggest including the assessment in the list of sensitivities.
Response: Part 4.3: The Contingency analyses in Requirement R4, part 4.3 refer to the studies in Requirement R4, parts 4.1 and 4.2. However, for additional clarity, Requirement R4, part 4.3 has been modified. **Requirement R4, part 4.3** - Contingency analyses for Requirement R4, Parts 4.1 and 4.2 shall : Part 4.3.1: The Standard requires you to study only the events which produce more severe System impacts. If two Systems are swinging apart, then successful high speed reclosing could show a more severe impact. However, if successful reclosing is not expected to produce a more severe impact, you are not required to study it.	
MidAmerican Energy Company	MidAmerican commends the SDT for their hard work on this standard. MidAmerican does have comments about this requirement though. MidAmerican urges that the SDT delete 4.1.1 which requires that no generating unit shall pull out of synchronism during a stability analysis. A generating unit pulling out of synchronism does not necessarily result in thermal, voltage, or stability violations and does not necessarily result in cascading, instability, or uncontrolled separation. The loss of synchronism and tripping of a generator is in effect no different than tripping due to mechanical issues such as tube leaks. Present electric grid design that allows tripping for out-of-synchronism is reliable and secure. Adding the requirement that no unit may pull out of synchronism goes well beyond current grid design practices. MidAmerican believes that 4.1.2 and 4.3.3 as written would require responsible entities in the industry to add additional modeling of relaying in dynamic stability models of our system. MidAmerican suggests that 4.3.3 be limited to transient swings on facilities 345 kV and above so as to limit this part of requirement 4 to those situations that are most likely to result in cascading. If the SDT determines not to add such a limitation, MidAmerican asks that the implementation time for R4 to be increased. MidAmerican believes that many responsible entities would need 3 years to add these relaying models to system stability models so that the fourth year additional transmission planning analysis in this respect is conducted. MidAmerican urges that the SDT increase the implementation time for R4 from 2 years to 4 years. (MidAmerican also made this comment under Question 11.)? 4.3.1 indicates that for stability contingency analysis shall be performed to “Simulate the removal of all elements that the

Organization	Comments for Question 4
	Protection System and other automatic controls are expected to disconnect for each Contingency without operator intervention while also considering the impact of successful or unsuccessful high speed reclosing." MidAmerican believes that it is over-kill to provide this as a general requirement as written. In such a case, such successful or unsuccessful high speed reclosing analysis conceivably would need to be performed for numerous unnecessary situations given the generally wide spread use of high speed reclosing on transmissions systems. MidAmerican urges the SDT to revise this requirement to only require the study of successful and unsuccessful high speed reclosing where high speed reclosing has been added to resolve a specific stability issue such as a breaker closing angle issue." 4.5 MidAmerican believes that the extreme events that should be studied are the more credible ones. The credible events are those that the planner considers credible when considering both how severe the event is and how likely it is. For example, while a tornado might be the most severe event, its likelihood of hitting key facilities is low. It is more likely to have a severe thunderstorm that hits key facilities but causes less impact on the system. The planner should plan for the severe thunderstorm but perhaps should not plan for the tornado. MidAmerican recommends that 4.5 be revised to indicate that a list of those events that "produce more severe System impacts AND ARE MORE LIKELY" (the words in all caps are suggested words to be added) be studied as being more credible events. Then the purpose of the last sentence in 4.5 is clearer in that possible actions that reduce the likelihood or mitigate the consequences of the events shall be reviewed for those contingencies where likelihood in combination with consequences justify such evaluation. MidAmerican recommends the data retention for R4 and M4 be revised to change "All" to "The". The word "All" is unnecessary and could encourage over-the-top compliance monitoring and enforcement. The revised data retention would read as follows: "THE studies performed in support". The word in all caps is a word suggested to be added.

Response: Part 4.1.1: The SDT disagrees. A unit's pulling out of synchronism for a normally cleared fault is an indication of a weak Transmission System or insufficient relaying. A corrective action should be developed. No change made.

Parts 4.1.2 & 4.3.3: This does not necessarily require modeling of specific relays. Some dynamic simulation programs include a generic relay model which can easily be applied to every branch in the simulation. If this model shows impedance swings in a branch element, then either take action according to the generic model results or investigate the characteristics of the relays actually used on that line.

Part 4.3.3: As stated above, a generic relay model can be used to meet this requirement. Therefore, the SDT does not see a need to add words that specifically limit the simulation of these impacts to only high voltage lines. No change made.

Part 4.3.3: Because this requirement does not necessarily require modeling of specific relays (as described directly above), the SDT does not agree that a longer time is needed in the Implementation Plan. No change made.

Part 4.3.1: The SDT disagrees. The requirement is to consider the impact of high speed reclosing. This does not mean that you need to study high speed reclosing if you are not using it. If you are using it, then it should be covered in the studies. No change made.

Part 4.5: The extreme events for Stability analysis cover Contingencies like 3-phase fault with stuck breaker or a 3-phase fault after an element has gone out of service prior to System adjustments. These events are less likely to occur than the Planning Events. The SDT does not see any need to add the suggested qualifier "are more likely" because by definition none of the extreme events are more likely.

The SDT agrees and has made the suggested change.

Organization	Comments for Question 4
TIS	Nowhere in the stability requirements is it necessary for evaluating the loss of all generators in a station; it is included in the steady state requirements. The standard should require examination of all units in a generating station where single line-to-ground faults on generation station buses could cause the clearing of the entire station. Further, single phase faults with delayed clearing (or stuck breaker) are not included. Often, such exclusion of stability analysis for loss of all generators at a station these are things that happen!
Response: The SDT excluded loss of all units at a generating station as an extreme event for Stability. In general there are no Contingencies that could cause this to happen in a Stability time frame of interest. If there are faults or faults with breaker failure which could cause the loss of all generators at a plant, then that event is required to be studied under the other planning or extreme events. Single phase faults with stuck breaker are included in planning event P4.	
Southern Company	Part 4.3.1: add "when used on the system" to the end of the sentence. This is needed to clarify that you don't have to study high speed reclosing if you don't utilize it.
Response: Part 4.3.1: The requirement is to consider the impact of high speed reclosing. This does not mean that you need to study high speed reclosing if you are not using it. No change made**.**	
Oklahoma Gas & Electric	R4 OG&E believes the Transmission Coordinator be held accountable for R4. The Transmission Coordinator should coordinate this type of study with the Transmission Planner for a regional look of the whole system. For example Southwest Power Pool should coordinate this type of study with the members of the Southwest Power Pool to better examine the entire region of the Southwest Power Pool. We do not see the need to duplicate the work. R4.4 & R4.5 There appear to be no standards of directions on identifying severe or extreme system impacts. OG&E does not like being held accountable to nebulas standards. Need more specific information.
Response: R4: The SDT assumes you meant to say Planning Coordinator rather than Transmission Coordinator (which is not in the Functional Model). Requirement R7 requires the Planning Coordinator and Transmission Planner to work out who will be conducting what studies. Parts 4.4 & 4.5: Use your engineering judgment to determine which Contingencies could produce more severe results. For example, it could be argued that faults close in to generating plants would be more severe than faults two busses away from the plant.	
MAPP	R4.1.1 & R4.1.2 - We propose that these sub-requirements be removed. The generating unit loss of synchronism does not necessary result in a thermal, voltage, or stability violations. R4.3.2 We suggest that this requirement be removed because it is premature to require Transmission Planners to simulate under voltage tripping until the MOD standards require it. If the drafting team does not remove this requirement we propose wording like, "Trip generating units that are connected to the BES when actual or assumed minimum generator transient voltage limits are known and simulations show voltages may fall below the voltage limit. If assumed voltage limits are used, then they should be included in the assessment". The requirement should not apply to all relevant generating units until one of the MOD standards

Organization	Comments for Question 4
	requires all Generator Owners to provide their minimum generating unit voltage limits to the TP and PC. If the wording of R4.3.2 must be different from its counterpart, R3.3.2, then please explain the reasons for any differences. Add R4.3.5 We suggest the addition of R4.3.5, "Applicable System Operating Limits for the planning horizon shall not be exceeded." because Note "a" and "b" under "Stability Only" at the beginning of Table 1 are stated in the form of a Requirement (e.g. uses the verb, "shall") and all Requirements should be explicitly stated under Requirements and not be introduced (and hidden) in the performance notes of Table 1. [After R4.3.5 is added, Note "a" should revised and refer to R4.3.5.]
Response: Parts 4.1.1 & 4.1.2: The SDT disagrees. A unit's pulling out of synchronism for a normally cleared fault is an indication of a weak Transmission System or insufficient relaying. A corrective action should be developed. The SDT sees no reason to delete Requirement R4, parts 4.1.1 and 4.1.2. Part 4.3.2: The purpose of Requirement R4, part 4.3.2 is to take into account the low voltage ride-through capability of generators in the studies. There is a reliability standard (PRC-024) under development which will require Generator Owners to provide information about the low voltage ride through capability of their generators based on relay settings. Requirement R4, part 4.3.2 requires you to include in the assessment how you analyzed voltage ride-through capability. If complete information on the ride-through capability is not available, then you should document your assumptions regarding ride-through capability for the assessment. Your proposed wording is not significantly different from the existing wording. No change made. Part 4.3.2: To be consistent with Requirement R4, part 4.3.2, Requirement R3, part 3.3.2 has been modified to also allow the use of voltages on the high side of the GSU. The use of voltages on the high side of the GSU allows greater flexibility in applying voltage ride-through capability of generators - some of which are defined on the high side of the GSU. **Requirement R3, part 3.3.2** - Trip generators where simulations show generator bus voltages or high side of the GSU voltages are less than known or assumed minimum generator steady state or ride through voltage limitations. Include in the assessment any assumptions made. Part 4.3.5: The SDT does not see a need for making these header notes into requirements. These apply more directly as qualifiers for the results of the simulations and therefore, they fit better as header notes to the Table. No change made.	
NERC Standards Review Subcommittee	R4.1.1 & R4.1.2 The MRO NSRS proposes that these sub-requirements be removed. The generating unit loss of synchronism does not necessary result in a thermal, voltage, or stability violations.R4.1.1 - Wording from R4.1.1 about no generating unit pulling out of synchronism should be deleted. The simple loss of synchronism of a unit or even multiple units does not necessarily result in thermal, voltage, or stability. All standards and requirements should demonstrate a reliability related basis. There is no direct reliability or security requirement that prevents a unit from loosing synchronism. The loss of a unit from synchronism is no different than the regular loss of the unit for mechanical reasons, therefore this requirement unnecessarily results in FERC directing utilities to build infrastructure beyond what is needed for system security. R4.1.3 The MRO NSRS proposes that this sub-requirement be removed because there are no NERC power system damping standards. R.4.3.2 The MRO NSRS suggests that this requirement be removed because it is premature to requirement Transmission Planners to simulate under voltage tripping until the MOD standards require it. If the drafting team does not remove this requirement the MRO NSRS proposes wording like, "Trip generating units that are connected to the BES when actual or assumed minimum generator transient voltage limits are known and simulations show voltages may fall below the voltage limit. If assumed voltage limits are used, then they should be included in the assessment". The requirement should not apply to all relevant

Organization	Comments for Question 4
	generating units until one of the MOD standards requires all Generator Owners to provide their minimum generating unit voltage limits to the Transmission Planner and Planning Coordinator. If the wording of R4.3.2 must be different from its counterpart, R3.3.2, then please explain the reasons for any differences. R4.3.3 Every dynamic event simulation involves power system transient swings. What are the size and scope of the transient swings and what is the scope of the system to be examined, to which this requirement is referring? Please reword this requirement to give the industry a better understanding of what is intended. As written R4.3.3, it might be interpreted to require responsible entities to add the modeling of all relaying instead of just pertinent. Perhaps, R4.3.3 should be limited to transient swings on facilities 345 kV and above so as to limit this part of requirement 4 to those situations that are most likely to result in cascading. If the SDT determines not to add such a limitation, the MRO NSRS proposes that the implementation time for R4 to be increased. The MRO NSRS believes that many responsible entities would need 3 years to add these relaying models to system stability models so that the fourth year additional transmission planning analysis in this respect is conducted. The MRO NSRS urges that the SDT increase the implementation time for R4 from 2 years to 4 years. When it may actually respond or triggered. R 4.3.1 This requirement refers to high speed reclosing and the MRO NSRS presumes that this is special high speed reclosing that is completed in several cycles, rather than the normal high speed reclosing that is completed in a number of seconds. The MRO NSRS recommends that the term high speed reclosing be defined for this sub-requirement with an angular stability component. R4.5 - The MRO NSRS believes that the extreme events that should be studied are the more credible ones. The credible events are those that the planner considers credible when considering both how severe the event is and how likely it is. For example, while a tornado might be the most severe event, its likelihood of hitting key facilities is quite low. It is more likely to have a severe thunderstorm that hits key facilities but causes less impact on the system. The planner should plan for the severe thunderstorm but perhaps should not plan for the tornado. The MRO NSRS recommends that 4.5 be revised to indicate that a list of those events that "produce more severe System impacts and are more likely" (the bolded words are suggested words to be added) be studied as being more credible events. Then the purpose of the last sentence in 4.5 is clearer in that possible actions that reduce the likelihood or mitigate the consequences of the events shall be reviewed for those contingencies where likelihood in combination with consequences justify such evaluation.
Response: Parts 4.1.1 & 4.1.2: The SDT disagrees. A unit's pulling out of synchronism for a normally cleared fault is an indication of a weak Transmission System or insufficient relaying. A corrective action should be developed. The SDT sees no reason to delete Requirement R4, parts 4.1.1 and 4.1.2. Part 4.1.3: Requirement R4, part 4.1.3 requires the Planning Coordinator and Transmission Planner to use their engineering judgment on what constitutes acceptable damping. The SDT did not think it appropriate to prescribe what acceptable damping is. Most Planning Coordinator's and Transmission Planner's should already have this kind of criteria for their systems. No change made. Part 4.3.2: The purpose of Requirement R4, part 4.3.2 is to take into account the low voltage ride-through capability of generators in the studies. There is a reliability standard (PRC-024) under development which will require Generator Owners to provide information about the low voltage ride through capability of their generators based on relay settings. Requirement R4, part 4.3.2 requires you to include in the assessment how you analyzed voltage ride-through capability. If complete information on the ride-through capability is not available, then you should document your assumptions regarding ride-through capability for the assessment. Your proposed	

Organization	Comments for Question 4
wording is not significantly different from the existing wording. No change made. Part 4.3.2: To be consistent with Requirement R4, part 4.3.2., Requirement R3, art 3.3.2 has been modified to also allow the use of voltages on the high side of the GSU. The use of voltages on the high side of the GSU allows greater flexibility in applying voltage ride-through capability of generators - some of which are defined on the high side of the GSU. **Requirement R3, part 3.3.2** - Trip generators where simulations show generator bus voltages or high side of the GSU voltages are less than known or assumed minimum generator steady state or ride through voltage limitations. Include in the assessment any assumptions made. Part 4.3.3: This does not necessarily require modeling of specific relays. Some dynamic simulation programs include a generic relay model which can easily be applied to every branch in the simulation. If this model shows impedance swings in a branch element, then either take action according to the generic model results or investigate the characteristics of the relays actually used on that line. Therefore, the SDT does not believe this should be limited to only high voltage lines. Because this requirement does not necessarily require modeling of specific relays, the SDT also does not agree that a longer time is needed in the Implementation Plan. Part 4.3.1: The SDT believes that there is general understanding in the industry that reclosing that is accomplished in a number of seconds is not high speed reclosing. It is just known as reclosing. High speed reclosing would occur within a second after fault clearing. Part 4.5: The extreme events for Stability analysis cover Contingencies like 3-phase fault with stuck breaker or a 3-phase fault after an element has gone out of service prior to System adjustments. These events are less likely to occur than the planning events. The SDT does not see any need to add the suggested qualifier "are more likely" because by definition none of the extreme events are more likely.	
Sacramento Municipal Utility District	R4.1.1: There appears to be a conflict between what is not allowed for a generator in R4.1.1 and what is allowed in Note (b) of Table 1 (consequential generation loss " which is an undefined term " and hence can be interpreted as one sees fit). R4.3.3: It is unclear what is expected from this requirement. Are Protection personnel to take the results of the transient stability simulation and determine its impact on the Protection System? Or, is it that the Protection System should be properly modeled in stability simulations? If it is the latter, this requirement is already covered by R4.3.1 (simulate the removal of all elements). R4.3.2: If done right, this requirement should be already complied with under R4.3.1. If it needs to be spelled out, a better place may be in the MOD Standards. R4.4 and R4.5: Requirements R4.4 and R4.5 appear to be related to and set the limits for R4.1 and R4.2 respectively. Suggest moving both Requirements R4.4 and R4.5 into R4.1 and R4.2, allowing these sub-Requirements (R4.4 and 4.5) to be deleted. It is unclear from the wording in R4.3 whether the Contingency analyses need to be performed for all planning events or the more severe events referenced in R4.1 and R4.2. Please clarify the wording of R4.3.R4.3.1 appears to require an assessment of both successful and unsuccessful high-speed reclosing. Successful reclosing is a much less severe event, so it seems unnecessary to assess both. If the intent is to make entities assess both, we suggest including the assessment in the list of sensitivities.
Response: Part 4.1.1: The generation loss referred to in note b is the generation that is disconnected from the System by fault clearing action. This is completely different from a generator pulling out of synchronism. Part 4.3.3: The requirement is to take into account the impact of transient swings. This does not necessarily require modeling of specific relays. Some dynamic	

Organization	Comments for Question 4
simulation programs include a generic relay model which can easily be applied to every branch in the simulation. If this model shows impedance swings in a branch element, then either take action according to the generic model results or investigate the characteristics of the relays actually used on that line. Part 4.3.2: Requirement R4, part 4.3.1 requires simulating the removal of elements which must be removed to clear the fault. Requirement R4, part 4.3.2 involves generator low voltage ride-through and tripping the generator when voltages are too low. These are two completely different things. Parts 4.4 & 4.5: The SDT does not believe that combining the requirements serves any purpose. No change made. Part 4.3: The Contingency analyses in Requirement R4, part 4.3 refer to the studies in Requirement R4, parts 4.1 and 4.2. However, for additional clarity, Requirement R4, part 4.3 has been modified. **Requirement R4, part 4.3** - Contingency analyses for Requirement R4, parts 4.1 and 4.2 shall : Part 4.3.1: The Standard requires you to study only the events which produce more severe System impacts. If two Systems are swinging apart, then successful high speed reclosing could show a more severe impact. However, if successful reclosing is not expected to produce a more severe impact, you are not required to study it.	
Manitoba Hydro	R4.1.2: For P2 events, a generator that pulls out of synchronism must be tripped. Tripping of the generator could result in Interruption of Firm Transmission Service unless redispatch is allowed - Footnote 9 should be allowed. R4.1.3 states that “power oscillation shall exhibit acceptable damping as established by the PC and TP”. There is no requirement for the PC or TP to develop criteria for acceptable damping. Requirement R5 or R6 should be expanded to require the PC and TP to establish criteria for acceptable power oscillation damping. R4.2: Recommend changing “the list” to “the Contingency list” to add clarity and consistency.
Response: The SDT agrees and has changed Table 1 so that footnote 9 applies to planning event P2. Part 4.1.3: There doesn't have to be a specific requirement for the Planning Coordinator and Transmission Planner to establish damping criteria. Most should already have such a criteria. No change made. Part R4.2: The SDT does not see any value in adding the word "Contingency" to the word "list". No change made.	
Duke Energy	R4.3.3 must be clarified regarding what method is to be used for assessing the impact of transient swings on Protection System operation. For example, how is this to be included in models, is this referring to a post simulation evaluation comparing results to actual relay settings, etc?? R4.5 includes the phrase “cascading outages”. We believe that the word “cascading” should be the capitalized NERC-defined term “Cascading”.
Response: Part 4.3.3: The requirement is to take into account the impact of transient swings. This does not necessarily require modeling of specific relays. Some dynamic simulation programs include a generic relay model which can easily be applied to every branch in the simulation. If this model shows impedance swings in a branch element, then either take action according to the generic model results or investigate the characteristics of the relays actually used on that line. Part 4.5: The SDT has modified Requirement R4, part 4.5 to use the term "Cascading" rather than "cascading outages."	

Organization	Comments for Question 4
Requirement R4, part 4.5 - Those extreme events in Table 1 that are expected to produce more severe System impacts shall be identified and a list of those events to be evaluated for System performance in Requirement R4, part 4.2 created. The rationale for those Contingencies selected for evaluation shall be available as supporting information. If the analysis concludes there is Cascading caused by the occurrence of extreme events, an evaluation of possible actions designed to reduce the likelihood or mitigate the consequences of the event(s) shall be conducted.	
NorthWestern Energy	R4.4 and R4.5 appear to be related to and set the limits for R4.1 and R4.2 respectively. We suggest moving both R4.4 and R4.5 into R4.1 and R4.2, then R4.4 and R4.5 could be deleted. R4.3 is unclear whether the Contingency analyses need to be performed for all planning events or only the more severe events referenced in R4.1 and R4.2. R4.3 needs clarification. R4.3.1 requires considering the impact of both successful and unsuccessful high-speed reclosing. Since successful reclosing is a much less severe event, it seems unnecessary to assess both. If entities need to assess both, the assessment could be in the list of sensitivities. R4.5 needs to be modified. It would be better to combine R4.2 and R4.5. The first part of the requirement requires identification of events that produce more severe System impacts. The presumed reason that the other contingencies were not selected is because they were less severe or non-credible. In any case, theoretically, there can always be examples of more severe Extreme Contingencies than the one selected for study. This can be achieved by simply choosing events that are even less credible. For example, if the Extreme Contingency studied was a simultaneous loss of 3 transmission lines with the failure of redundant RAS (SPS), then an event resulting in the simultaneous loss of 4 lines with the failure of 2 sets of redundant RASs would be even more severe. Listing all possible extreme events could result in a limitless list.
Response: Parts 4.4 & 4.5: The SDT does not believe that combining the requirements serves any purpose. No change made. Part 4.3: The Contingency analyses in Requirement R4, part 4.3 refer to the studies in Requirement R4, parts 4.1 and 4.2. However, for additional clarity, Requirement R4, part 4.3 has been modified. **Requirement R4, part 4.3** - Contingency analyses for Requirement R4, parts 4.1 and 4.2 shall : Part 4.3.1: The Standard requires you to study only the events which produce more severe System impacts. If two Systems are swinging apart, then successful high speed reclosing could show a more severe impact. However, if successful reclosing is not expected to produce a more severe impact, you are not required to study it. Part 4.5: Requirement R4, Part 4.5 refers to the Contingency events listed in the extreme event Stability section of Table 1. Your example does not fall into the events listed. For this analysis you don't just keep adding more and more outaged elements. You only have to do the ones listed in the Table that would be expected to produce more severe results.	
Northeast Power Coordinating Council--RSC	Requirement 4.1.1: This should be revised to only be applicable to generators interconnected to the BES. This may need an implementation period as not all existing units are interconnected in accordance with the standard as proposed. As written this applies to small generators and doesn't necessarily reflect reliability of the network. 20 MW is a recommended generator minimum size. Requirement 4.1.2: Simulating the tripping of a generator that pulls out of synchronism is presently not modeled and will require

Organization	Comments for Question 4
	an implementation period. Requirement 4.2: This requirement should be deleted. The requirements for sensitivity analysis already address issues going beyond what is expected to meet reliability requirements. Requiring extreme event analysis is requiring two layers of event analysis beyond what is required and there is no requirement for corrective action if anything is identified. Therefore Extreme Event analysis no longer provides any value in this standard. Requirement 4.4 NPCC strongly suggests making this requirement a sub-bullet of Requirement 4.1 to keep the related requirements together. Requirement 4.5 NPCC strongly suggests making this requirement a sub-bullet of Requirement 4.2 to keep the related requirements together. This requirement needs clarification as to what is specifically required for the "evaluation of possible actions." The list associated with Requirement 2. part 2.7.1 provides examples of possible actions, and leaving "evaluation" undefined offers the Planning Coordinator and Transmission Planner the leeway to use judgment in making their evaluations.
Response: Part 4.1.1: The standard applies only to the BES as defined by your Region.. No change made. Part 4.1.2: Tripping the generator is no longer required. The SDT has modified Requirement R4, part 4.1.2. **Requirement R4, part 4.1.2** - For planning events P2 through P7: When a generator pulls out of synchronism in the simulations, the resulting apparent impedance swings shall not result in the tripping of any Transmission system elements other than the generating unit and its directly connected Facilities. Part 4.2: The SDT disagrees and believes there is value in running extreme event analysis. No change made. Part 4.4: The SDT does not believe that combining the requirements serves any purpose. No change made. Part 4.5: The SDT does not believe that combining the requirements serves any purpose. No change made. The requirement is to evaluate possible actions which could reduce the likelihood or mitigate the consequences of the event. The standard should not prescribe those actions. It is up to your judgment what those possible actions could be.	
Midwest ISO	Requirement R4.3.1: Please consider adding the following language to the end of the sentence "when used as part of a protection system". Requirement R4.3.1: Please consider adding the following language to the end of the sentence "when such devices affect the study area".
Response: Part 4.3.1: The requirement is to consider the impact of high speed reclosing. This does not mean that you need to study high speed reclosing if you are not using it. No change made. Part 4.3.1: High speed reclosing would be considered only for the line you are studying. Therefore, it always impacts the study area. No change made.	
Hydro-Québec TransEnergie	Requirements 3.5 and 4.5 Both of these requirements need clarification as to what is specifically required for the "evaluation of

Organization	Comments for Question 4
(HQT)	possible actions." Requirement 4.4 HQT, as does NPCC, strongly suggests making this requirement a sub-bullet of Requirement 4.1 to keep the related requirements together. Requirement 4.5 HQT, as does NPCC, strongly suggests making this requirement a sub-bullet of Requirement 4.2 to keep the related requirements together.
Response: Part 4.5: "An evaluation of actions designed to reduce" means looking for ways to reduce the probability of the event occurring or reducing the magnitude of the consequences of that event. For example, if a three phase fault with a bus differential failing to operate results in the collapse of a large Load area, a possible action would be to add a redundant bus differential relay. This reduces the probability of the event occurring. Or if a three phase fault with a stuck breaker results in a large area of the System pulling out of synchronism, an SPS could be used to trip a generator and keep the rest of the System in synchronism. This would reduce the magnitude of the consequences of the event. The evaluation would be comparing potential solutions and their cost with the consequences of the event to determine the best course of action to take (if any). Part 4.4: The SDT does not believe that combining the requirements serves any purpose. No change made. Part 4.5: The SDT does not believe that combining the requirements serves any purpose. No change made.	
Bonneville Power Administration	Requirements R4.4 and R4.5 appear to be related to and set the limits for R4.1 and R4.2 respectively. Suggest moving both Requirements R4.4 and R4.5 into R4.1 and R4.2, allowing these sub-Requirements (R4.4 and 4.5) to be deleted. It is unclear from the wording in R4.3 whether the Contingency analyses need to be performed for all planning events or the more severe events referenced in R4.1 and R4.2. Please clarify the wording of R4.3. R4.3.1 appears to require an assessment of both successful unsuccessful high-speed reclosing. Successful reclosing is a much less severe event, so it seems unnecessary to assess both. If the intent is to make entities assess both we suggest including the assessment in the list of sensitivities.
Idaho Power	Requirements R4.4 and R4.5 appear to be related to and set the limits for R4.1 and R4.2 respectively. Suggest moving both Requirements R4.4 and R4.5 into R4.1 and R4.2, allowing these sub-Requirements (R4.4 and 4.5) to be deleted. It is unclear from the wording in R4.3 whether the Contingency analyses need to be performed for all planning events or the more severe events referenced in R4.1 and R4.2. Please clarify the wording of R4.3. R4.3.1 appears to require an assessment of both successful and unsuccessful high-speed reclosing. Successful reclosing is a much less severe event, so it seems unnecessary to assess both. If the intent is to make entities assess both we suggest including the assessment in the list of sensitivities.
Modesto Irrigation District Transmission Planning	Requirements R4.4 and R4.5 appear to be related to and set the limits for R4.1 and R4.2 respectively. Suggest moving both Requirements R4.4 and R4.5 into R4.1 and R4.2, allowing these sub-Requirements (R4.4 and 4.5) to be deleted. It is unclear from the wording in R4.3 whether the Contingency analyses need to be performed for all planning events or the more

Organization	Comments for Question 4
	severe events referenced in R4.1 and R4.2. Please clarify the wording of R4.3. R4.3.1 appears to require an assessment of both successful unsuccessful high-speed reclosing. Successful reclosing is a much less severe event, so it seems unnecessary to assess both. If the intent is to make entities assess both we suggest including the assessment in the list of sensitivities.
NV Energy	Requirements R4.4 and R4.5 appear to be related to and set the limits for R4.1 and R4.2 respectively. Suggest moving both Requirements R4.4 and R4.5 into R4.1 and R4.2, allowing these sub-Requirements (R4.4 and 4.5) to be deleted. It is unclear from the wording in R4.3 whether the Contingency analyses need to be performed for all planning events or the more severe events referenced in R4.1 and R4.2. Please clarify the wording of R4.3. R4.3.1 appears to require an assessment of both successful unsuccessful high-speed reclosing. Successful reclosing is a much less severe event, so it seems unnecessary to assess both. If the intent is to make entities assess both we suggest including the assessment in the list of sensitivities.
Pacific Gas and Electric Co.	Requirements R4.4 and R4.5 appear to be related to and set the limits for R4.1 and R4.2 respectively. Suggest moving both Requirements R4.4 and R4.5 into R4.1 and R4.2, allowing these sub-Requirements (R4.4 and 4.5) to be deleted. It is unclear from the wording in R4.3 whether the Contingency analyses need to be performed for all planning events or the more severe events referenced in R4.1 and R4.2. Please clarify the wording of R4.3. R4.3.1 appears to require an assessment of both successful unsuccessful high-speed reclosing. Successful reclosing is a much less severe event, so it seems unnecessary to assess both. If the intent is to make entities assess both we suggest including the assessment in the list of sensitivities.
Puget Sound Energy, Inc.	Requirements R4.4 and R4.5 appear to be related to and set the limits for R4.1 and R4.2 respectively. Suggest moving both Requirements R4.4 and R4.5 into R4.1 and R4.2, allowing these sub-Requirements (R4.4 and 4.5) to be deleted. It is unclear from the wording in R4.3 whether the Contingency analyses need to be performed for all planning events or the more severe events referenced in R4.1 and R4.2. Please clarify the wording of R4.3. R4.41 requires clarification. With respect to these “Contingencies on adjacent systems,” the responsibility of listing and analyzing these events needs to be clarified. Should the event simulation be the responsibility of the “neighboring” system (where the event would occur) or the adjacent system that may feel the impact of this event? Per the developed rationale from R4.4, the neighboring system may determine that a particular event is “less severe” and hence not studied, even though this event may potentially impact a neighbor. Further, for these “Contingencies on adjacent systems” that result in system performance outside one’s own operating limits, it is unclear who is responsible for mitigating these contingencies. It is potentially awkward in that one entity may be planning another entity’s system improvements.
San Diego Gas & Electric Co	Requirements R4.4 and R4.5 appear to be related to and set the limits for R4.1 and R4.2 respectively. Suggest moving both Requirements R4.4 and R4.5 into R4.1 and R4.2, allowing these sub-Requirements (R4.4 and 4.5) to be deleted.

Organization	Comments for Question 4
	It is unclear from the wording in R4.3 whether the Contingency analyses need to be performed for all planning events or the more severe events referenced in R4.1 and R4.2. Please clarify the wording of R4.3. R4.3.1 appears to require an assessment of both successful unsuccessful high-speed reclosing. Successful reclosing is a much less severe event, so it seems unnecessary to assess both. If the intent is to make entities assess both we suggest including the assessment in the list of sensitivities.
Southern California Edison (SCE)	Requirements R4.4 and R4.5 appear to be related to and set the limits for R4.1 and R4.2 respectively. Suggest moving both Requirements R4.4 and R4.5 into R4.1 and R4.2, allowing these sub-Requirements (R4.4 and 4.5) to be deleted. t is unclear from the wording in R4.3 whether the Contingency analyses need to be performed for all planning events or the more severe events referenced in R4.1 and R4.2. Please clarify the wording of R4.3. R4.3.1 appears to require an assessment of both successful unsuccessful high-speed reclosing. Successful reclosing is a much less severe event, so it seems unnecessary to assess both. If the intent is to make entities assess both we suggest including the assessment in the list of sensitivities.
SRP	Requirements R4.4 and R4.5 appear to be related to and set the limits for R4.1 and R4.2 respectively. Suggest moving both Requirements R4.4 and R4.5 into R4.1 and R4.2, allowing these sub-Requirements (R4.4 and 4.5) to be deleted. It is unclear from the wording in R4.3 whether the Contingency analyses need to be performed for all planning events or the more severe events referenced in R4.1 and R4.2. Please clarify the wording of R4.3. R4.3.1 appears to require an assessment of both successful unsuccessful high-speed reclosing. Successful reclosing is a much less severe event, so it seems unnecessary to assess both. If the intent is to make entities assess both we suggest including the assessment in the list of sensitivities.
Western Area Power Adm - RMR	Requirements R4.4 and R4.5 appear to be related to and set the limits for R4.1 and R4.2, respectively. I Suggest moving both Requirements R4.4 and R4.5 into R4.1 and R4.2, allowing these sub-Requirements (R4.4 and 4.5) to be deleted. It is unclear from the wording in R4.3 whether the Contingency analyses need to be performed for all planning events or the more severe events referenced in R4.1 and R4.2. Please clarify the wording of R4.3. R4.3.1 appears to require an assessment of both successful and unsuccessful high-speed reclosing. Successful reclosing is a much less severe event, so it seems unnecessary to assess both.

Response: Parts 4.4 & 4.5: The SDT does not believe that combining the requirements serves any purpose. No change made.

Part 4.3: The Contingency analyses in Requirement R4, part 4.3 refer to the studies in Requirement R4, parts 4.1 and 4.2. However, for additional clarity, Requirement R4, part 4.3 has been modified.

Requirement R4, part 4.3 - Contingency analyses for Requirement R4, parts 4.1 and 4.2 shall :

Part 4.3.1: The Standard requires you to study only the events which produce more severe System impacts. If two Systems are swinging apart, then successful high

Organization	Comments for Question 4
speed reclosing could show a more severe impact. However, if successful reclosing is not expected to produce a more severe impact, you are not required to study it. No change made.	
National Grid	Sub-Requirement 4.1.1: This should be revised to only be applicable to generators interconnected to the BES. This may need an implementation period as not all existing units are interconnected in accordance with the standard as proposed. As written this applies to small generators and doesn't necessarily reflect reliability of the network. 20 MW is a recommended generator minimum size. Sub-Requirement 4.1.2: Simulating the tripping of a generator that pulls out of synchronism is presently not modeled and will require implementation period. Sub-Requirement 4.2: This requirement should be deleted. The requirements for sensitivity analysis already address issues going beyond what is expected to meet reliability requirements. Requiring extreme event analysis is requiring two layers of event analysis beyond what is required and there is no requirement for corrective action if anything is identified. Therefore Extreme Event analysis no longer provides any value in this standard. Sub-Requirement 4.4: It is strongly suggested that this requirement is made a sub-bullet of Requirement 4.1 to keep the related requirements together. Sub-Requirement 4.5: It is strongly suggested that this requirement is made a sub-bullet of Requirement 4.2 to keep the related requirements together. Provide clarification as to what is specifically required for the "evaluation of possible actions."
Response: Part 4.1.1: The standard applies only to the BES as defined by your Region. No change made. Part 4.1.2: Tripping the generator is no longer required. The SDT has modified Requirement R4, part 4.1.2. **Requirement R4, part 4.1.2** - For planning events P2 through P7: When a generator pulls out of synchronism in the simulations, the resulting apparent impedance swings shall not result in the tripping of any Transmission system elements other than the generating unit and its directly connected Facilities. Part 4.2: The SDT disagrees and believes there is value in running extreme event analysis. No change made. Part 4.4: The SDT does not believe that combining the requirements serves any purpose. No change made. Part 4.5: The SDT does not believe that combining the requirements serves any purpose. No change made. Part 4.5: "An evaluation of actions designed to reduce" means looking for ways to reduce the probability of the event occurring or reducing the magnitude of the consequences of that event. For example, if a three phase fault with a bus differential failing to operate results in the collapse of a large Load area, a possible action would be to add a redundant bus differential relay. This reduces the probability of the event occurring. Or if a three phase fault with a stuck breaker results in a large area of the system pulling out of synchronism, an SPS could be used to trip a generator and keep the rest of the system in synchronism. This would reduce the magnitude of the consequences of the event. The evaluation would be comparing potential solutions and their cost with the consequences of the event to determine the best course of action to take (if any).	
Tri-State Generation and	The standard needs to use the term "Dynamic Stability", not just "Stability", to differentiate between dynamic and voltage stability

Organization	Comments for Question 4
Transmission Association	considerations. R4.1 contains the phrase "based on the Contingency list created in Requirement R4.4". The contingency list is referred to in R4.4 (and R3.4), but is not created there. In R4.3.1 the requirement for additional evaluation of "successful or unsuccessful high speed reclosing" is an additional performance requirement. Whether this refers to the possibility of reclosing mechanism failure, or the effectiveness of reclosing operations (there is some ambiguity here). The reference to high speed reclosing in R4.3.1 is a good addition. For ease in auditing, it should be listed as a separate requirement (or sub-requirement).
Response: The SDT does not see any need to use that term as it does not provide any needed clarity. No change made. Parts 4.1 & 4.4: The Contingency list is created in Requirement R4, part 4.4. The SDT does not understand your comment. Part 4.3.1: The SDT does not see any value in making this a separate requirement. No change made.	
American Transmission Company	We propose the following changes and pose the following questions: R4.1.1 We suggest that there should be some qualification of which generating units are referred to in this requirement. We propose that the requirement say, "No generating unit connected to the BES shall pull out of synchronism." For example, some utilities include smaller generation units that are connected at voltages below 100 kV and even down to distribution voltage in their base cases. R4.1.2 We propose that the wording of this requirement be revised to reflect the same BES qualification of the generating unit that we noted in R4.1.1 above. 4.3.1 This requirement refers to high speed reclosing and we presume that this is special high speed reclosing that is completed in several cycles, rather than the normal high speed reclosing that is completed in a number of seconds. We recommend that the term high speed reclosing be defined for this sub-requirement.R. 4.3.2 We suggest qualifying which generating units to consider and which voltage limits to simulate with revised wording like, "Trip generating units that are connected to the BES when actual or assumed minimum generator transient voltage limits are known and simulations show voltages may fall below the voltage limit. If assumed voltage limits are used, then they should be included in the assessment". The requirement should not apply to all relevant generating units until one of the MOD standards requires all Generator Owners to provide their minimum generating unit voltage limits to the TP and PC. If the wording of R4.3.2 must be different from its counterpart, R3.3.2, then please explain the reasons for any differences. R4.3.3 Every dynamic event simulation involves power system transient swings. What are the size and scope of the transient swings and what is the scope of the system to be examined, to which this requirement is referring? Please reword this requirement to give the industry a better understanding of what is intended. Add R4.3.5 We suggest the addition of R4.3.5, "Applicable System Operating Limits for the planning horizon shall not be exceeded." Note "a" and "b" under "Stability Only" at the beginning of Table 1 are stated in the form of a Requirement (e.g. uses the verb, "shall") and all Requirements should be explicitly stated under Requirements and not be introduced (and basically

Organization	Comments for Question 4
	hidden) in the performance notes of Table 1. [After R4.3.5 is added, Note "a" should be revised and refer to R4.3.5.] Add R4.3.5 We suggest the addition of R4.3.5, "Applicable System Operating Limits for the planning horizon shall not be exceeded." because Note "a" and "b" under "Steady State Only" at the beginning of Table 1 is stated in the form of a Requirement (e.g. note usage of the verb, "shall") and all Requirements should be clearly included in the body of the standard and not be introduced (and basically hidden) in the performance notes of Table 1. [After R3.3.5 is added, Note "a" should allude to R3.3.5.]
Response: Part 4.1.1: The standard applies only to the BES as defined by your Region. No change made. Part 4.1.2: The standard applies only to the BES as defined by your region. No change made. Part 4.3.1: The SDT believes that there is general understanding in the industry that reclosing that is accomplished in a number of seconds is not high speed reclosing. It is just known as reclosing. High speed reclosing would occur within a second after fault clearing. Part 4.3.2: The purpose of Requirement R4, part 4.3.2 is to take into account the low voltage ride-through capability of generators in the studies. There is a reliability standard (PRC-024) under development which will require Generator Owners to provide information about the low voltage ride through capability of their generators based on relay settings. Requirement R4, part 4.3.2 requires you to include in the assessment how you analyzed voltage ride-through capability. If complete information on the ride-through capability is not available, then you should document your assumptions regarding ride-through capability for the assessment. Your proposed wording is not significantly different from the existing wording. No change made. Part 4.3.2: To be consistent with Requirement R4, part 4.3.2, Requirement R3, part 3.3.2 has been modified to also allow the use of voltages on the high side of the GSU. The use of voltages on the high side of the GSU allows greater flexibility in applying voltage ride-through capability of generators - some of which are defined on the high side of the GSU. **Requirement R3, part 3.3.2** - Trip generators where simulations show generator bus voltages or high side of the GSU voltages are less than known or assumed minimum generator steady state or ride through voltage limitations. Include in the assessment any assumptions made. Part 4.3.3: The requirement is to take into account the impact of transient swings. This does not necessarily require modeling of specific relays. Some dynamic simulation programs include a generic relay model which can easily be applied to every branch in the simulation. If this model shows impedance swings in a branch element, then either take action according to the generic model results or investigate the characteristics of the relays actually used on that line. Part 4.3.5: The SDT does not see a need for making these header notes into requirements. These apply more directly as qualifiers for the results of the simulations and therefore, they fit better as header notes to the Table.	
American Electric Power	We recommend inserting "unstable" in the requirement language as follows: "Simulate the impact of unstable transient swings on Protection System operation?" Our perception is that the wording of 4.3.3 is almost certain to require the representation of impedance relay characteristics on both ends of all lines in a study area in order to satisfy an audit, and would eventually require representation on both ends of all BES lines as all areas would be studied at some point. This sub-requirement would place a huge burden on transmission planning and protection engineering staff. Experience has shown that tripping of transmission lines or transformers on stable swings is extremely rare. The burden this sub-requirement would cause as presently worded is not commensurate with the expected benefit.
Response: Part 4.3.3: The requirement is to take into account the impact of transient swings. This does not necessarily require modeling of specific relays. Some dynamic simulation programs include a generic relay model which can easily be applied to every branch in the simulation. If this model shows impedance swings in a	

Organization	Comments for Question 4
branch element, then either take action according to the generic model results or investigate the characteristics of the relays actually used on that line. The SDT does not agree to insert the word "unstable" before "transient swings" because some stable swings can get into relay characteristics.	
FRCC Transmission Working Group	With regard to the Moderate VSL, consider deleting “utilizing data” in order to avoid penalizing twice for failing to meet R1. 4.1.1, suggest rewording “(a) generator being disconnected from the Bulk Electric System “, system as defined in the Glossary includes distribution, and we do not believe that is the intent of the SDT. 4.1.2, 4.3.1 and 4.3.3 essentially requirerequires modeling every Zone 3 (or higher, such as Zone 5) relay in each Interconnection (or at least in the Region under study and adjacent regions) because, in order to simulate the impact of a power swing on a distance relay, one would need to know the characteristics of the distance relay and how long the transient swing remains within that characteristic, which means modeling the relay. Is that the intent of the SDT?
Response: Requirement R1 requires you to maintain System models. Requirement R4 requires you to use that model data for your Stability studies. These are two different things requiring two VSLs. No change made. Part 4.1.1: The standard applies only to the BES as defined by your Region. No change made. Parts 4.1.2, 4.3.1, & 4.3.3: This does not necessarily require modeling of specific relays. Some dynamic simulation programs include a generic relay model which can easily be applied to every branch in the simulation. If this model shows impedance swings in a branch element, then either take action according to the generic model results or investigate the characteristics of the relays actually used on that line.	
E.ON U.S.	With respect to Category P6, a Multiple Contingency event (the overlapping occurrence of two or more single events) allows Non-Consequential Load Loss. The "System adjustments" do not list yet do not exclude Load Shedding. E.ON U.S believes that Load Shedding should be included as an option in similar manner to Curtailment of Firm Transmission Service. If the SDT disagrees with this recommendation, then E.ON U.S. suggests that the SDT clearly state the allowed use of Load Shedding. E.ON U.S. observes that in the case of Extreme Events the SDT provided the following response to a previous comment:Extreme event 2d and 3a are similar in that each covers the loss of all generating units at a single plant location. However, in 3a, two plants are reviewed. In each case, all units are to be outaged regardless of the BES voltage level to which they connect.E.ON U.S. recommends that the word "station" in event 2d to be changed "plant".
Response: In Event P6 the term System adjustments has a reference to footnote 9. This footnote clearly states that System adjustments do not include the shedding of firm Demand. The allowable loss of Non-Consequential Load for event P6 refers to after the second Contingency has occurred. The SDT agrees that there needs to be consistency and has changed the word "plants" to "stations" in extreme event 3a.	
Oncor Electric Delivery	Within “stability requirements” there is no requirement for evaluating the loss of all generators in a station; it is included in the steady state requirements. We recommend that the standard require examination of all units in a generating station where single line-to-ground faults on generation station buses could result in clearing of the entire station. Furthermore, single phase faults with delayed clearing (or stuck breaker) are not included. Often, such exclusion of stability

Organization	Comments for Question 4
	analysis for loss of all generators at a station these are things that happen! 4.1.1 This should be dropped. As written, this applies to small generators and doesn't necessarily reflect reliaiblity of the network. 4.1.2 This is not presently modeled and will require implementation period 4.2 Why do we need to do study extreme events? The requirements for sensitivity analysis already address issues going beyond what is expected to meet reliability requirements. Requiring extreme event analysis is requiring two layers of event analysis beyond what is required and there is no requirement for corrective action if anything is identified. 4.4 It is strongly suggested that this requirement is made a sub-bullet of Requirement 4.1 to keep the related requirements together. 4.5 It is strongly suggested that this requirement is made a sub-bullet of Requirement 4.2 to keep the related requirements together.
Response: The SDT excluded loss of all units at a generating station as an extreme event for Stability. In general there are no Contingencies that could cause this to happen in a Stability time frame of interest. If there are faults or faults with breaker failure which could cause the loss of all generators at a plant, then that event is required to be studied under the other planning or extreme Events. No change made. Single phase faults with stuck breaker are included in planning event P4. Part 4.1.1: The SDT believes that Part 4.1.1 is required for BES reliability. The standard applies only to the BES as defined by your Region. The SDT believes that all generators directly connected to the BES need to be stable for single Contingencies (P1). No change made. Part 4.1.2: Tripping the generator is no longer required. The SDT has modified Requirement R4, part 4.1.2. **Requirement R4, part 4.1.2** - For planning events P2 through P7: When a generator pulls out of synchronism in the simulations, the resulting apparent impedance swings shall not result in the tripping of any Transmission system elements other than the generating unit and its directly connected Facilities. Part 4.2: The SDT disagrees and believes there is value in running extreme event analysis. No change made. Part 4.4: The SDT does not believe that combining the requirements serves any purpose. No change made. Part 4.5: The SDT does not believe that combining the requirements serves any purpose. No change made.	
PJM	in R4.1.2 – It should be made clear when the unit should be tripped. Timing is important in dynamics studies. Actual protection made need to be modeled to cover this item completely. In R4.3.3 - This protection information, is not commonly collected, at least by MMWG, and will take a great deal of time and effort to gather. R4.5 – Needs a 4.5.1 similar to 4.4.1.
Response: Part 4.1.2: Tripping the generator is no longer required. The SDT has modified Requirement R4, part 4.1.2. **Requirement R4, part 4.1.2** - For planning events P2 through P7: When a generator pulls out of synchronism in the simulations, the resulting apparent	

Organization	Comments for Question 4
	impedance swings shall not result in the tripping of any Transmission system elements other than the generating unit and its directly connected Facilities Part 4.3.3: This does not necessarily require modeling of specific relays. Some dynamic simulation programs include a generic relay model which can easily be applied to every branch in the simulation. If this model shows impedance swings in a branch element, then either take action according to the generic model results or investigate the characteristics of the relays actually used on that line. The SDT believes the time allotted in the Implementation Plan is appropriate. Part 4.5: The SDT does not agree that a similar requirement is needed for extreme events. No change made.

5. Requirement R5 – Please provide any specific comments on the requirement text, VRF, Time Horizon, measure associated with the requirement, data retention associated with the requirement, and/or the VSL associated with the requirement. (Note – This is a new requirement.)

Summary Consideration: Several commenters expressed concern with potential double jeopardy between this standard and the VAR standards. From the ERO Rules of Procedure, Appendix 4B- Sanction Guidelines, Section 3.10 Multiple Violations: "Strictly speaking, NERC or the regional entity can determine and levy a separate penalty or sanction, or direct remedial action, upon a violator for each individual violation. However, in instances of multiple violations related to a single act or common incidence of noncompliance, NERC or the regional entity will generally determine and issue a single aggregate penalty, sanction, or remedial action directive bearing reasonable relationship to the aggregate of the related violations. The penalty, sanction, or remedial action will not be that determined individually for the least serious of the violations; it will generally be at least as large or expansive as what would be called for individually for the most serious of the violations." The existing VAR standards (VAR-001-1a and VAR-002-1b) address the operational time horizon but do not address the planning horizon. NERC Standards Project 2008-1 is under development and the SAR addresses the planning horizon. As this project moves forward, the Standards Drafting Team for Project 2008-1 will more fully develop the requirements for reactive planning and will evaluate whether those requirements should reside in the TPL standard or the VAR standards.

Several commenters expressed concern that the requirement to develop a transient voltage response criterion was not limited to establishing a low voltage threshold. The SDT clarified that the minimum requirement for establishing a transient voltage response criterion was to establish a low voltage level and the maximum length of time that the transient voltages may remain below that level. To clarify the SDT's intent, the wording of R5 has been modified as follows:

R5. Each Transmission Planner and Planning Coordinator shall define and document, within its Planning Assessment, criteria for acceptable System steady state voltage limits, post-Contingency voltage deviations, and the transient voltage response for its System. For transient voltage response, the criteria shall at a minimum, specify a low voltage level and a maximum length of time that transient voltages may remain below that level.

Requirement R5 data retention: The documentation specifying the criteria since the last compliance audit in accordance with Requirement R5 and Measure M5.

Organization	Comments for Question 5
Independent Electricity System Operator	(1) We do not have any concern with the requirement as written, but suggest the SDT consider adding "and associated reactive power requirements" after "acceptable System steady state voltage limits" to take care of the concern raised in the recently posted SAR for a new VAR standard. We do not think a new standard is required for stipulating reactive power requirements as they are best addressed in the planning assessment criteria and the SOL/IROL determination requirements. (2) We do not have any comments on the measure, VRF, Time Horizon and VSL.
Response: 1) The SDT declines to add "and associated reactive power requirements". The Voltage and Reactive Planning and Control Project (2008-1) will more	

Organization	Comments for Question 5
fully develop the requirements for reactive planning and will evaluate whether those requirements should reside in the TPL standard or the VAR standards. 2) Thank you.	
MAPP	A voltage criterion is addressed by the VAR standards where they are applicable to TOs and TOPs. Including a voltage requirement in the planning standards appears to be creating a double-jeopardy exposure.
Response: As for the double jeopardy comment - From the ERO Rules of Procedure, Appendix 4B- Sanction Guidelines, Section 3.10 Multiple Violations: "Strictly speaking, NERC or the regional entity can determine and levy a separate penalty or sanction, or direct remedial action, upon a violator for each individual violation. However, in instances of multiple violations related to a single act or common incidence of noncompliance, NERC or the regional entity will generally determine and issue a single aggregate penalty, sanction, or remedial action directive bearing reasonable relationship to the aggregate of the related violations. The penalty, sanction, or remedial action will not be that determined individually for the least serious of the violations; it will generally be at least as large or expansive as what would be called for individually for the most serious of the violations." The existing VAR standards (VAR-001-1a and VAR-002-1b) address the operational time horizon but do not address the planning horizon. NERC Standards Project 2008-1 is under development and the SAR addresses the planning horizon. As this project moves forward, the Standards Drafting Team for Project 2008-1 will more fully develop the requirements for reactive planning and will evaluate whether those requirements should reside in the TPL standard or the VAR standards.	
NERC Standards Review Subcommittee	A. The MRO NSRS recommends the data retention for R5 and M5 be revised to change "All" to "The". The word "All" is unnecessary and could encourage over-the-top compliance monitoring and enforcement. The revised data retention would read as follows: "The documentation specifying the criteria since". B. This requirement should not include the criterion, "post-Contingency voltage deviation", because this criterion is not used widely enough in the industry to be a well established criterion.
Response: A. The SDT has modified the data retention for Requirement R5 to strike the word "All" and has replaced it with the word "The". **Requirement R5 data retention**: The documentation specifying the criteria since the last compliance audit in accordance with Requirement R5 and Measure M5. B. The SDT believes that the reference to 'post-Contingency voltage deviation' is widely used and is an acceptable reference in the standard. No change made.	
Progress Energy Florida, Inc.	As PEF is opposed to TPL-001-1 as a whole, PEF will have no further comment on this issue other than to encourage all appropriate parties to review PEF's previous comments to this effect.
Response: Throughout the drafting process, the SDT has carefully considered your comments as well comments from other industry members.	
Idaho Power	As worded R5 is unclear. I interpret R5 to require entities to specify minimum voltage levels that must not be exceeded for more than a specific period of time. High transient voltages are typically not a problem. I suggest changing the second sentence of R5 to read: "For transient voltage response, the criteria shall at a minimum, specify a voltage level and a maximum length of time that transient voltage may remain below that level."

Organization	Comments for Question 5
Bonneville Power Administration	As worded R5 is unclear. We interpret R5 to require entities to specify minimum voltage levels that must not be exceeded for more than a specific period of time. High transient voltages are typically not a problem. We suggest changing the second sentence of R5 to read: "For transient voltage response, the criteria shall at a minimum, specify a voltage level and a maximum length of time that transient voltage may remain below that level."
NV Energy	As worded R5 is unclear. We interpret R5 to require entities to specify minimum voltage levels that must not be exceeded for more than a specific period of time. High transient voltages are typically not a problem. We suggest changing the second sentence of R5 to read: "For transient voltage response, the criteria shall at a minimum, specify a voltage level and a maximum length of time that transient voltage may remain below that level."
Pacific Gas and Electric Co.	As worded R5 is unclear. We interpret R5 to require entities to specify minimum voltage levels that must not be exceeded for more than a specific period of time. High transient voltages are typically not a problem. We suggest changing the second sentence of R5 to read: "For transient voltage response, the criteria shall at a minimum, specify a voltage level and a maximum length of time that transient voltage may remain below that level."
Puget Sound Energy, Inc.	As worded R5 is unclear. We interpret R5 to require entities to specify minimum voltage levels that must not be exceeded for more than a specific period of time. High transient voltages are typically not a problem. We suggest changing the second sentence of R5 to read: "For transient voltage response, the criteria shall at a minimum, specify a voltage level and a maximum length of time that transient voltage may remain below that level."
Sacramento Municipal Utility District	As worded R5 is unclear. We interpret R5 to require entities to specify minimum voltage levels that must not be exceeded for more than a specific period of time. High transient voltages are typically not a problem. We suggest changing the second sentence of R5 to read: "For transient voltage response, the criteria shall at a minimum, specify a voltage level and a maximum length of time that transient voltage may remain below that level."
San Diego Gas & Electric Co	As worded R5 is unclear. We interpret R5 to require entities to specify minimum voltage levels that must not be exceeded for more than a specific period of time. High transient voltages are typically not a problem. We suggest changing the second sentence of R5 to read: "For transient voltage response, the criteria shall at a minimum, specify a voltage level and a maximum length of time that transient voltage may remain below that level."
Southern California Edison (SCE)	As worded R5 is unclear. We interpret R5 to require entities to specify minimum voltage levels that must not be exceeded for more than a specific period of time. High transient voltages are typically not a problem. We suggest changing the second sentence of R5 to read: "For transient voltage response, the criteria shall at a minimum, specify a voltage level and a maximum length of time that transient voltage may remain below that level."
SRP	As worded R5 is unclear. We interpret R5 to require entities to specify minimum voltage levels that must not be exceeded for more than a specific period of time. High transient voltages are typically not a problem. We suggest changing the second sentence of R5 to read: "For transient voltage response, the criteria shall at a minimum, specify a voltage level and a maximum

Organization	Comments for Question 5
	length of time that transient voltage may remain below that level."
Western Area Power Adm - RMR	As worded, R5 is unclear. I interpret R5 to require entities to specify minimum voltage levels that must not be exceeded for more than a specific period of time. High transient voltages are typically not a problem. I suggest changing the second sentence of R5 to read: "For transient voltage response, the criteria shall at a minimum, specify a voltage level and a maximum length of time that transient voltage may remain below that level."
Response: The SDT clarified that the minimum for establishing a transient voltage response criterion was to establish a low voltage level and the maximum length of time that the transient voltages may remain below that level. **R5**. Each Transmission Planner and Planning Coordinator shall define and document, within its Planning Assessment, criteria for acceptable System steady state voltage limits, post-Contingency voltage deviations, and the transient voltage response for its System. For transient voltage response, the criteria shall at a minimum, specify a low voltage level and a maximum length of time that transient voltages may remain below that level.	
CenterPoint Energy	CenterPoint Energy is not familiar with the phrase "post-Contingency voltage deviations" and recommends that this phrase be deleted. Alternatively, the text should be revised to read "steady state post-contingency voltage limits." Including both phrases is unnecessary and confusing.
American Transmission Company	R5 This requirement should not include the criteria item, "post-Contingency voltage deviation", because this criteria is not used widely enough in the industry to be a well established criteria.
Response: The SDT believes that the term is widely used and believes that it is appropriate for inclusion in this standard. No change made.	
Deseret Power	Comments: As worded R5 is unclear. We interpret R5 to require entities to specify minimum voltage levels that must not be exceeded for more than a specific period of time. High transient voltages are typically not a problem. We suggest changing the second sentence of R5 to read: "For transient voltage response, the criteria shall at a minimum, specify a voltage level and a maximum length of time that transient voltage may remain below that level."
Response: The SDT clarified that the minimum for establishing a transient voltage response criterion was to establish a low voltage level and the maximum length of time that the transient voltages may remain below that level. **R5**. Each Transmission Planner and Planning Coordinator shall define and document, within its Planning Assessment, criteria for acceptable System steady state voltage limits, post-Contingency voltage deviations, and the transient voltage response for its System. For transient voltage response, the criteria shall at a minimum, specify a low voltage level and a maximum length of time that transient voltages may remain below that level.	
Omaha Public Power District	In the first sentence of the requirement text, change "voltage limits" to "voltage".
Response: The SDT believes that the use of "voltage limits" is correct. No change made.	

Organization	Comments for Question 5
TVA System Planning	In the VSL associated with R5, we believe that failure to define and document one of the criteria should be a moderate VSL, failure to define and document two criteria should me a high VSL, while failure to define and document three criteria should be a severe VSL. Otherwise failing to document only one criteria would result in a severe VSL.
Response: The SDT believes that establishing the criteria for acceptable voltage deviations should be a binary VSL. No change made.	
MidAmerican Energy Company	MidAmerican commends the SDT for their hard work on this standard. MidAmerican does have comments about this requirement though. MidAmerican recommends the data retention for R5 and M5 be revised to change "All" to "The". The word "All" is unnecessary and could encourage over-the-top compliance monitoring and enforcement. The revised data retention would read as follows: "THE documentation specifying the criteria since". The word in all caps is a word suggested to be added.
Response: The SDT has modified the data retention for R5 to strike the word "All" and has replaced it with the word "The". **Requirement R5 data retention**: The documentation specifying the criteria since the last compliance audit in accordance with Requirement R5 and Measure M5.	
NorthWestern Energy	R5 could be interpreted to address both high voltage and low voltage criteria. We suggest changing the second sentence of R5 to read: "For transient voltage response, the criteria shall at a minimum, specify a voltage level and a maximum length of time that transient voltage may remain below that level." This way high voltage is definitely excluded.
Modesto Irrigation District Transmission Planning	R5 is unclear. We interpret R5 to require entities to specify minimum voltage levels that must not be exceeded for more than a specific period of time. High transient voltages are typically not a problem. We suggest changing the second sentence of R5 to read: For transient voltage response, the criteria shall at a minimum, specify a voltage level and a maximum length of time that transient voltage may remain below that level.
Response: The SDT clarified that the minimum for establishing a transient voltage response criterion was to establish a low voltage level and the maximum length of time that the transient voltages may remain below that level. **R5**. Each Transmission Planner and Planning Coordinator shall define and document, within its Planning Assessment, criteria for acceptable System steady state voltage limits, post-Contingency voltage deviations, and the transient voltage response for its System. For transient voltage response, the criteria shall at a minimum, specify a low voltage level and a maximum length of time that transient voltages may remain below that level.	
Oklahoma Gas & Electric	R5 OG&E believes the Transmission Coordinator be held accountable for the transient voltage response portion of R5. The Transmission Coordinator should coordinate this type of voltage criteria with the Transmission Planner for a regional look of the whole system. For example Southwest Power Pool should coordinate this type of study with a stakeholder developed voltage criteria within the members of the Southwest Power Pool to better examine the entire region of the Southwest Power Pool. We do not see the need to duplicate the work.
Response: The SDT disagrees that only the transmission coordinator should be responsible for having a transient voltage response. Every planner, whether a	

Organization	Comments for Question 5
Transmission Planner or Planning Coordinator, needs to have a transient voltage response criterion to fully evaluate its portion of the BES.	
Midwest ISO	Requirement R5: Not all Transmission Planners have delta voltage criteria which this requirement will now require them to have. Looks like this requirement is not a one shoe fits all requirement.
Response: The SDT agrees that voltage criteria may not be a "one size fits all" criteria. This requirement requires each Transmission Planner and Planning Coordinator to have criteria for acceptable voltage limits.	
SERC Dynamics Review Subcommittee (DRS)	The content in the severe VSL column should be split among the lower, moderate, and high categories, with failure to include one element as Moderate and two elements as High. It is stated that the Transmission Planner and Planning Coordinator shall have criteria specifying voltage limits, post-contingency voltage deviations, and transient voltage response. How would an nteraction with a third party system be handled? For example a contingency causes a voltage deviation on one system that is within thevoltage deviation criteria, but causes a voltage deviation violation on a neighboring system that has a more stringent criterion.
SERC Planning Standards Subcommittee	The content in the severe VSL column should be split among the lower, moderate, and high categories, with failure to include one element as Moderate and two elements as High. It is stated that the Transmission Planner and Planning Coordinator shall have criteria specifying voltage limits, post-Contingency voltage deviations, and transient voltage response. How would an interaction with a third party system be handled? For example a contingency that occurs on a system that is within their voltage deviation criteria, but causes a voltage deviation violation on a neighboring system that has a more stringent criteria.
Response: The SDT believes that establishing the criteria for acceptable voltage deviations should be a binary VSL. No change made. This standard places the requirement for performance on each entity's portion of the BES (Requirement R2). In addition, Requirement R3, part 3.4.1 and Requirement R4, part 4.4.1 require the coordination of the Contingencies and Requirement R8 requires the distribution of the Planning Assessment. These requirements will ensure that third party impacts are identified.	
Lafayette Utilities System	The modified version resolves the confusion noted by several commenters in the earlier draft.
Response: Thank you.	
US Bureau of Reclamation	The requirement in Table 1 is for Planning Authority and Transmission Planner to establish accceptable voltage deviations and limits. The requirement only indicates the that each shall have a criteria. That does not imply an agreement on a single limit or deviation allowable under a System Steady State post-contingency condition.
Response: The SDT agrees with your statement.	
Progress Energy Carolinas	There appears to be a double-jeopardy issue related to voltage performance criteria related to the VAR Standards. The voltage and var criteria will also be required in VAR-001 and 002.

Organization	Comments for Question 5
TIS	There appears to be a double-jeopardy issue related to voltage performance criteria related to the VAR Standards.
National Grid	Voltage criteria are addressed by the VAR standards. Including a voltage requirement in the planning standards appears to be creating a double-jeopardy exposure. Also, implementing transient voltage criteria will require time.Replace "Each Transmission Planner and Planning Coordinator" with "Each Transmission Planner OR Planning Coordinator".
Northeast Power Coordinating Council--RSC	Voltage criteria are addressed by the VAR standards. Including a voltage requirement in the planning standards appears to be creating a double-jeopardy exposure. Also, implementing transient voltage criteria will require time.Replace "Each Transmission Planner and Planning Coordinator" with "Each Transmission Planner OR Planning Coordinator".
Response: As for the double jeopardy comment - From the ERO Rules of Procedure, Appendix 4B- Sanction Guidelines, Section 3.10 Multiple Violations: "Strictly speaking, NERC or the regional entity can determine and levy a separate penalty or sanction, or direct remedial action, upon a violator for each individual violation. However, in instances of multiple violations related to a single act or common incidence of noncompliance, NERC or the regional entity will generally determine and issue a single aggregate penalty, sanction, or remedial action directive bearing reasonable relationship to the aggregate of the related violations. The penalty, sanction, or remedial action will not be that determined individually for the least serious of the violations; it will generally be at least as large or expansive as what would be called for individually for the most serious of the violations." The existing VAR standards (VAR-001-1a and VAR-002-1b) address the operational time horizon but do not address the planning horizon. NERC Standards Project 2008-1 is under development and the SAR addresses the planning horizon. As this project moves forward, the Standards Drafting Team for Project 2008-1 will more fully develop the requirements for reactive planning and will evaluate whether those requirements should reside in the TPL standard or the VAR standards.	
Gainesville Regional Utilities	Voltage considerations can get lost in the various studies. This requirement brings focus to the voltage component which it rightly deserves.
Response: Thank you.	
Central Maine Power Company	Voltage criteria is addressed by the VAR standards. Including a voltage requirement in the planning standards appears to be creating a double-jeopardy exposure.R5. Change to Read "Each Transmission Planner OR Planning Coordinator " Need time to implement transient voltage criteria.
ISO New England	Voltage criteria is addressed by the VAR standards. Including a voltage requirement in the planning standards appears to be creating a double-jeopardy exposure.R5. Change to Read "Each Transmission Planner OR Planning Coordinator " Need time to implement transient voltage criteria.
United Illuminating	Voltage criteria is addressed by the VAR standards. Including a voltage requirement in the planning standards appears to be creating a double-jeopardy exposure.R5. Change to Read "Each Transmission Planner OR Planning Coordinator " Need time to implement transient voltage criteria.

Organization	Comments for Question 5
Response: As for the double jeopardy comment - From the ERO Rules of Procedure, Appendix 4B- Sanction Guidelines, Section 3.10 Multiple Violations: "Strictly speaking, NERC or the regional entity can determine and levy a separate penalty or sanction, or direct remedial action, upon a violator for each individual violation. However, in instances of multiple violations related to a single act or common incidence of noncompliance, NERC or the regional entity will generally determine and issue a single aggregate penalty, sanction, or remedial action directive bearing reasonable relationship to the aggregate of the related violations. The penalty, sanction, or remedial action will not be that determined individually for the least serious of the violations; it will generally be at least as large or expansive as what would be called for individually for the most serious of the violations." The existing VAR standards (VAR-001-1a and VAR-002-1b) address the operational time horizon but do not address the planning horizon. NERC Standards Project 2008-1 is under development and the SAR addresses the planning horizon. As this project moves forward, the Standards Drafting Team for Project 2008-1 will more fully develop the requirements for reactive planning and will evaluate whether those requirements should reside in the TPL standard or the VAR standards. The implementation Plan allows 24 months before Requirement R5 becomes effective.	
Oncor Electric Delivery	Voltage criteria is addressed within the VAR standards. This appears to be redundant.
Response: The existing VAR standards (VAR-001-1a and VAR-002-1b) address the operational time horizon but do not address the planning horizon. NERC Standards Project 2008-1 is under development and the SAR addresses the planning horizon. As this project moves forward, the Standards Drafting Team for Project 2008-1 will more fully develop the requirements for reactive planning and will evaluate whether those requirements should reside in the TPL standard or the VAR standards to ensure that it is not a redundant requirement.	
American Electric Power	We believe that it is appropriate to eliminate the reference to transient voltage response as it is duplicative and unnecessary. System stability is already better addressed by other performance requirements defined in this standard.
Response: The SDT believes that a criterion should be established for transient voltage response by each Transmission Planner and Planning Coordinator and that it is complementary to the other performance requirements in this standard, not duplicative.	
FirstEnergy Corp	We concur with the inclusion of R5 and the criteria needed for steady-state voltage limits, post-contingency deviations and the transient voltage response for its System. In regards to the transient voltage criteria, its our understanding that the this criteria is for planning purposes only and not intended for operation time horizon evaluations being performed by the TOP.
Response: The SDT agrees that the requirement for criteria for transient voltage responses is for planning studies and does not address operating studies since they are outside the scope of this standard.	
Ameren	With respect to specifying a voltage level and maximum duration for transient voltage response, does it make sense for each Transmission Planner to have their own criteria? Should we be meeting an industry standard such as the ITI (CBEMA) Curve published by the Technical Committee 3 (TC3) of the Information Technology Industry Council (ITI, formerly known as the Computer & Business Equipment manufacturer's Association) and available at www.itic.org? Meeting any of the criteria to be developed for Requirement R5 will depend on the load model assumptions used.It is stated that the Transmission Planner and Planning Coordinator shall have criteria specifying voltage limits, pos-Contingency voltage deviations, and transient voltage response. How would an interaction with a third party be handled, particularly if one entity has more stringent criteria?

Organization	Comments for Question 5
	The content in the severe VSL column should be split among the lower, moderate, and high categories.
Response: The SDT believes that each Transmission Planner and Planning Coordinator should have a criteria and has not placed bounds on how to establish the criteria. This standard places the requirement for performance on each entity's portion of the BES (Requirement R2). In addition, Requirement R3, part 3.4.1 and Requirement R4, part 4.4.1 require the coordination of the Contingencies and Requirement R8 requires the distribution of the Planning Assessment. These requirements will ensure that third party impacts are identified. The SDT believes that establishing the criteria for acceptable voltage deviations should be a binary VSL. No change made.	
PJM	Remove any mention of transient voltage response. Very few entities can perform this type of analysis.
Response: The SDT believes that a criterion should be established for transient voltage response by each Transmission Planner and Planning Coordinator and disagrees with the assertion that very few entities have the capability to complete this type of analysis. No change made.	

6. Requirement R6 – Please provide any specific comments on the requirement text, VRF, Time Horizon, measure associated with the requirement, data retention associated with the requirement, and/or the VSL associated with the requirement.

Summary Consideration: The SDT has made clarifying changes based on industry comments as follows: **R6**. Each Transmission Planner and Planning Coordinator shall define and document, within their Planning Assessment, any criteria or methodology used in the analysis to identify System instability for conditions such as Cascading , voltage instability, or uncontrolled islanding**M6**. Each Transmission Planner and Planning Coordinator shall provide evidence, such as electronic or hard copies of documentation specifying any criteria or methodology used in the analysis to identify System instability that was utilized in preparing the Planning Assessment in accordance with Requirement R6. **Requirement R6, data retention** - The documentation specifying any criteria or methodology utilized in support of its Planning Assessments since the last compliance audit in accordance with Requirement R6 and Measure M6.

Organization	Comments for Question 6
Progress Energy Florida, Inc.	As PEF is opposed to TPL-001-1 as a whole, PEF will have no further comment on this issue other than to encourage all appropriate parties to review PEF's previous comments to this effect.
Response: Throughout the drafting process, the SDT has carefully considered your comments as well as comments from other industry members.	
Florida Municipal Power Agency, and its Member Cities	FMPA suggests adding the word "potential" into " identify the potential for System instability". The criteria and methodology may be used to determine if further analysis is warranted, e.g., if steady state voltages fall below 0.9 per unit, then do a voltage stability study, or something like that. Going below 0.9 does not mean voltage collapse, but, it may be an indicator to study it; hence, the word "potential".
FRCC Transmission Working Group	For R6 please consider the following revision: "Each TP and PC shall define and document within their planning assessment any criteria or methodology used in their analysis to identify system instability /deleted/ for /deleted/ conditions such as cascading outages, voltage instability, or uncontrolled islanding." As written originally it could be taken to be the methods for determining if you have instability during a cascading outage, rather then the methods for determining if you are at risk for instability like a cascading outage. the word "potential" into "identify the potential for System instability ". The criteria and methodology may be used to determine if further analysis is warranted, e.g., if steady state voltages fall below 0.9 per unit, then duedo a voltage stability study. Going below 0.9 does not mean voltage collapse, but, it may be an indicator to study it; hence, the word "potential".
Response: The SDT disagrees with your suggestion of adding the term 'potential' in Requirement R6. The Standard does not preclude the application of criteria or methodology to determine potential instability. No change made.	
Orlando Utilities Commission	For R6 please consider the following revision: "Each TP and PC shall define and document within their planning assessment any criteria or methodology used in <<their>> analysis to identify system instability //for// conditions such as cascading outages, voltage instability, or uncontrolled islanding." Adding the text in <<>> and deleting the text in ////. As written originally it could

Organization	Comments for Question 6
	be taken to be the methods for determining if you have instability during a cascading outage, rather then the methods for determining if you are at risk for instability like a cascading outage.
Response: The SDT disagrees with your assessment that the language of "… criteria or methodology used in the analysis to identify System instability for conditions such as cascading outages, voltage instability, or uncontrolled islanding" is misleading. The System instability applies to the cascading outages, voltage instability, OR uncontrolled islanding, not just to cascading outages. No change made.	
Gainesville Regional Utilities	I believe that this requirement is better defined and documented at the regional level with all involved parties contributing. If consensus is not achievable, then the exception utilities can create their own knowing that they need technically valid references to support their position.
Response: The SDT disagrees as it is better to allow the individual a Transmission Planner or Planning Coordinator to determine this versus the region as the region could be quite varied. The Requirement does not preclude the region from doing as you suggest with coordination in the region. No change made.	
FirstEnergy Corp	If an entity is required to adhere to its Facility Ratings, how is it feasible that a cascade violation would occur? FirstEnergy questions the need for this review based on Table 1 performance requirements and the need to adhere to Facility Ratings.
Response: This may not be an issue in the application of this criteria or methodology for planning events P0 through P7, however, this needs to be available when evaluating System response when applying extreme events.	
Arizona Public Service Co.	It is not clear who this applies to. Is it both TP and PC individually, or one of the two, or both jointly?
Response: The requirement is for both.	
American Electric Power	M6 does not appear to align with the content of R6. M6 needs to be reworded to reference documentation of criteria or methodology rather than studies. Corresponding changes will also need to be made to the corresponding bullet under Data Retention.
Manitoba Hydro	The R6 text does not match the Data Retention 6th bullet text "studies performed". The Retention 6th bullet text should be updated to reflect the R6 text "criteria or methodology used in the analysis to identify System instability".The R6 text does not match the M6 text. The M6 text should be revised as follows: replace "studies utilized in preparing the Planning Assessment" with "criteria and methodology to identify System instability used within its analysis".
Response: The SDT agrees and has changed the language of Measure M6 and also the language for Data Retention. **M6**. Each Transmission Planner and Planning Coordinator shall provide evidence, such as electronic or hard copies of documentation specifying any criteria or methodology used in the analysis to identify System instability that was utilized in preparing the Planning Assessment in accordance with Requirement R6. **Requirement R6, data retention** - The documentation specifying any criteria or methodology utilized in support of its Planning Assessments since the last	

Organization	Comments for Question 6
compliance audit in accordance with Requirement R6 and Measure M6.	
Ameren	M6: The wording on this measure appears to have been copied from M3 or M4 but is not appropriate since R6 addresses criteria and methodology and not a study.
SERC Dynamics Review Subcommittee (DRS)	M6: The wording on this measure appears to have been copied from M3 or M4 but is not appropriate since R6 addresses criteria and methodology but not a study.
Southern Company	M6: The wording on this measure appears to have been copied from M3 or M4 but is not appropriate since R6 addresses criteria and methodology and not a study. Replace the word "studies" with "criteria or methodology".
TVA System Planning	M6: The wording on this measure appears to have been copied from M3 or M4 but is not appropriate since R6 addresses criteria and methodology and not a study.
SERC Planning Standards Subcommittee	Comments: M6: The wording on this measure appears to have been copied from M3 or M4 but is not appropriate since R6 addresses criteria and methodology and not a study.
Response: The SDT agrees and has changed the language of Measure M6. **M6**. Each Transmission Planner and Planning Coordinator shall provide evidence, such as electronic or hard copies of documentation specifying any criteria or methodology used in the analysis to identify System instability that was utilized in preparing the Planning Assessment in accordance with Requirement R6.	
MidAmerican Energy Company	MidAmerican commends the SDT for their hard work on this standard. MidAmerican does have comments about this requirement though. MidAmerican recommends the data retention for R6 and M6 be revised to change “All” to “The”. The word “All” is unnecessary and could encourage over-the-top compliance monitoring and enforcement. The revised data retention would read as follows: “THE studies performed in support”. The word in caps is a word suggested to be added.
NERC Standards Review Subcommittee	The MRO NSRS recommends the data retention for R6 and M6 be revised to change “All” to “The”. The word “All” is unnecessary and could encourage over-the-top compliance monitoring and enforcement. The revised data retention would read as follows: “The studies performed in support”.
Response: The SDT agrees with your suggestion of changing the “All” to “The” in the data retention section for Requirement R6 and Measure M6. **M6**. Each Transmission Planner and Planning Coordinator shall provide evidence, such as electronic or hard copies of documentation specifying any criteria or methodology used in the analysis to identify System instability that was utilized in preparing the Planning Assessment in accordance with Requirement R6. **Requirement R6, data retention** - The documentation specifying any criteria or methodology utilized in support of its Planning Assessments since the last compliance audit in accordance with Requirement R6 and Measure M6.	
Duke Energy	R6 includes the phrase “cascading outages”. We believe that the word “cascading” should be the capitalized NERC-defined

Organization	Comments for Question 6
	term "Cascading".
Response: The SDT agrees with your suggestion of changing "cascading" to Cascading". **R6**. Each Transmission Planner and Planning Coordinator shall define and document, within their Planning Assessment, any criteria or methodology used in the analysis to identify System instability for conditions such as Cascading , voltage instability, or uncontrolled islanding.	
Oklahoma Gas & Electric	R6 OG&E believes the Transmission Coordinator be held accountable for R6. The Transmission Coordinator should coordinate this type of study/documentation with the Transmission Planner for a regional look of the whole system. For example Southwest Power Pool should coordinate this type of study/documentation with the members of the Southwest Power Pool to better examine the entire region of the Southwest Power Pool. We do not see the need to duplicate the work.
Response: The SDT assumes that you mean Planning Coordinator. The requirement is for both entities.	
Tri-State Generation and Transmission Association	R6 seems OK but check M6. Should this refer to R2 and not R6?
Independent Electricity System Operator	We do not have any comments on the requirement, VRF, Time Horizon and the VSL. However, Measure M6 (which refers to "studies utilized in preparing the Planning Assessment") does not seem to be relevant to Requirement R6, which deals with defining and documenting the criteria and methodology used in the analysis to identify System instability.
Response: The SDT agrees and has changed the language of Measure M6. **M6**. Each Transmission Planner and Planning Coordinator shall provide evidence, such as electronic or hard copies of documentation specifying any criteria or methodology used in the analysis to identify System instability that was utilized in preparing the Planning Assessment in accordance with Requirement R6.	
MAPP	Suggest removing "Transmission Planner" since the PC performs the assessment.
Response: The SDT disagrees with your comment as both entities should be documenting their criteria.	

7. Requirement R7 – Please provide any specific comments on the requirement text, VRF, Time Horizon, measure associated with the requirement, data retention associated with the requirement, and/or the VSL associated with the requirement.

Summary Consideration: The SDT modified Measure M7 to clarify the supporting documentation used to establish the individual and joint responsibilities for performing the required studies. The SDT also clarified the data retention associated with Requirement R7. Measure M7 and the data retention associated with Requirement R7 now read:

M7. Each Planning Coordinator, in conjunction with each of its Transmission Planners, shall provide dated documentation on roles and responsibilities, such as meeting minutes, agreements, and e-mail correspondence that identifies that agreement has been reached on individual and joint responsibilities for performing the required studies and Assessments in accordance with Requirement R7.

Requirement R7 data retention: The current, in force documentation for the agreement(s) on roles and responsibilities, as well as all such documentation for the agreements in force since the last compliance audit, in accordance with Requirement R7 and Measure M7.

Organization	Comments for Question 7
ERCOT ISO	* Will any agreements made in R7 override the "each TP and PC" requirement? Would it be appropriate to say: "Each Planning Coordinator, in conjunction with each of its Transmission Planners, shall determine and identify each entity's individual and joint responsibilities for performing the required studies and assessments."* What kind of documentation will be acceptable to demonstrate "each entity's individual and joint responsibilities"?
Response: The SDT sees no additional clarity being provided by your suggested wording. No change made. To address your concerns the SDT has changed Measure M7 to clarify the type of supporting documentation that could be used to establish individual and joint responsibilities for performing the required studies. **M7.** Each Planning Coordinator, in conjunction with each of its Transmission Planners, shall provide dated documentation on roles and responsibilities, such as meeting minutes, agreements, and e-mail correspondence that identifies that agreement has been reached on individual and joint responsibilities for performing the required studies and Assessments in accordance with Requirement R7.	
American Transmission Company	Revise part of the requirement text to read, ". . . identify each entity's individual and joint responsibilities . . ." to provide better clarity. Perhaps this requirement should be listed at the beginning of the Requirements section, instead being mentioned near the end of this section.
Response: The SDT sees no additional clarity being provided by your suggested wording. No change made. The SDT discussed the change and based on industry input decided not to change the order of the requirements.	

Organization	Comments for Question 7
Progress Energy Florida, Inc.	As PEF is opposed to TPL-001-1 as a whole, PEF will have no further comment on this issue other than to encourage all appropriate parties to review PEF's previous comments to this effect.
Response: Throughout the drafting process, the SDT has carefully considered your comments as well as comments from other industry members.	
CenterPoint Energy	CenterPoint Energy believes R7 relates to matters best addressed through registration, such as JROs or delegation agreements. If other commenters agree, CenterPoint Energy recommends that R7 be deleted.
Response: This requirement was inserted to address industry concern regarding the potential for duplication of work. No change made.	
TVA System Planning	In the VSL associated with R7, we believe that failure to determine and identify one responsibility should be a moderate VSL, failure to determine and identify two responsibilities should me a high VSL, while failure to determine and identify three responsibilities should be a severe VSL. Otherwise failing to document only one responsibility would result in a severe VSL.
Response: The SDT believes that procedurally, Requirement R7 is binary. No change made.	
MidAmerican Energy Company	MidAmerican commends the SDT for their hard work on this standard. MidAmerican does have comments about this requirement though. MidAmerican recommends the data retention for R7 and M7 be revised to delete "All". The word "All" is unnecessary and could encourage over-the-top compliance monitoring and enforcement. The revised data retention would read as follows: "The current, in force agreement on identified responsibilities, as well as such agreements in force".
NERC Standards Review Subcommittee	The MRO NSRS recommends the data retention for R7 and M7 be revised to delete "All". The word "All" is unnecessary and could encourage over-the-top compliance monitoring and enforcement. The revised data retention would read as follows: "The current, in force agreement on identified responsibilities, as well as such agreements in force".
Response: The SDT agrees that the proposed change to Measure M7 and the data retention removes the potential for an unintended interpretation. **M7.** Each Planning Coordinator, in conjunction with each of its Transmission Planners, shall provide dated documentation on roles and responsibilities, such as meeting minutes, agreements, and e-mail correspondence that identifies that agreement has been reached on individual and joint responsibilities for performing the required studies and Assessments in accordance with Requirement R7. **Requirement R7 data retention:** The current, in force documentation for the agreement(s) on roles and responsibilities, as well as all such documentation for the agreements in force since the last compliance audit, in accordance with Requirement R7 and Measure M7.	
Tri-State Generation and Transmission Association	R7 - Duties of the Planning Coordinator are being created and changed as we go along, like changing rules of a flag football game as it is played. Is there any requirement that every TP have a PC? As far as we know, the PC was introduced as an additional authority level for regional or inter-utility study work. Previous R7 wording asked PCs and TPs to work together. The present wording implies that every TP must have a PC which is a separate entity, and that PC would dictate study responsibilities. The wording of R4.4.1 seems much better in this regard.

Organization	Comments for Question 7
Response: It does not create the requirement that each Transmission Planner report to a Planning Coordinator, that relationship is defined in the Functional Model This requirement specifies that, if there is a relationship between a Transmission Planner and Planning Coordinator there is no need for duplicate analysis if each entity agrees on the delegation of work. No change made.	
NYISO	R7. - The NYISO requests clarification as to whether the PC will be expected to distribute the TP Planning Assessments as part of its coordination requirement?
Response: This standard does not require the Planning Coordinator to distribute the individual Transmission Planner assessments.	
MAPP	Suggest moving this requirement to the head of the list. It's a basis for the rest of this standard.
Response: The SDT discussed the change and based on industry input decided not to change the order of the requirements.	
Orlando Utilities Commission	The intent is much clearer, thank you for revising this.
Oklahoma Gas & Electric	We agree that it should be clearly stated who does what between the Transmission Planner and the Planning Coordinator. We feel like this will eliminate duplication of work and create a better overall regional examination of the electric grid.
Gainesville Regional Utilities	Looks good.
Response: Thank you.	
Florida Municipal Power Agency, and its Member Cities	The Measure and Data Retention for R7 is ambiguous. While the measure could be interpreted as not requiring a contract, the data retention uses the words "in force agreement" which implies a formal contract, where roles and responsibilities could very well be assigned in regional planning committee minutes and ensuing e-mail correspondence. Suggest changing the words to "Documentation of agreement on roles and responsibilities, such as meeting minutes, agreements, and e-mail correspondence" in both locations.
Response: The SDT agrees that the proposed changes to Measure M7 and the data retention remove the potential for an unintended interpretation. Measure M7 and the data retention associated with Requirement R7 now read: **M7.** Each Planning Coordinator, in conjunction with each of its Transmission Planners, shall provide dated documentation on roles and responsibilities, such as meeting minutes, agreements, and e-mail correspondence that identifies that agreement has been reached on individual and joint responsibilities for performing the required studies and Assessments in accordance with Requirement R7. **Requirement R7 data retention:** The current, in force documentation for the agreement(s) on roles and responsibilities, as well as all such documentation for the agreements in force since the last compliance audit, in accordance with Requirement R7 and Measure M7.	

8. Requirement R8 – Please provide any specific comments on the requirement text, VRF, Time Horizon, measure associated with the requirement, data retention associated with the requirement, and/or the VSL associated with the requirement.

Summary Consideration: The SDT believes revisions to Requirement R3, parts 3.4 and Requirement R4, part 4.4 will clarify the expectation that Transmission Planners and Planning Coordinators analyze Table 1 events outside their Systems for reliability impacts. The proposed, new Requirement R8 (old Requirement R7) requirement (below), will ensure appropriate information is exchanged between Transmission Planners and Planning Coordinators for sharing of information, review, and coordination of plans in conformance with Order 693 paragraph 1755 and 1756 expectations. The SDT believes the NERC Rules and Procedures and delegation agreements cover existing TPL-005 & -006 assessment requirements for regional and inter-regional assessments. The aggregate effect of the above items will be an overlapping assessment of BES reliability from each Transmission Planner area up through each Interconnection.

R8. Each Planning Coordinator and Transmission Planner shall distribute its Planning Assessment results to adjacent Planning Coordinators, adjacent Transmission Planners, and any functional entity that has a reliability related need and submits a written request for the information.

R8 data retention. Three calendar years of the notices and other documentation employed in accordance with Requirement R8 and Measure M8

R8 VSL	The responsible entity failed to distribute the results of its Planning Assessment to one of its adjacent Transmission Planners or adjacent Planning Coordinators, and to one functional entity that has a reliability related need and has submitted a written request for the information, respectively in accordance with Requirement R8.	N/A	The responsible entity failed to distribute the results of its Planning Assessment to its adjacent Transmission Planners or adjacent Planning Coordinators, and to any functional entity that has a reliability related need and has submitted a written request for the information, respectively in accordance with Requirement R8.	The responsible entity failed to provide a documented response to a recipient of the Planning Assessment results who provided documented comments on the results within 90 calendar days of receipt of those comments in accordance with Requirement R8.

Organization	Comments for Question 8
Independent Electricity System Operator	(1) No comments on the requirement, measure, VRF and Time Horizon. 3) VSLs:(a) We do not agree with the Severe VSL condition. In our view, distributing planning assessment results is the intent of the requirement; it is more important to share results than to field questions from recipients of the results. Assigning a Severe VSL for failing Part 8.1 puts the driver at the wrong place.(b) The condition under Low and High seems to be the same. In the Low, failing to distribute the results to ANY ONE of the TPs and PCs means none, which is the same as the condition for High unless the condition under Low really means failing to distribute the results to ONE of the TPs and PCs whereas the High really means failing to distribute the results to two or more of the TPs and PCs. If this is the proper interpretation, then we'd suggest the VSLs be revised as follows:Low: failing to respond to comments within 90 daysHigh: failing to distribute the results to one of the TPs and PCsSevere: failing to distribute the results to two or more of the TPs and PCs.Alternatively, a Moderate can be added to capture the condition for failing to distribute the results to two of the TPs and PCs, while the Severe can become failure to distribute the results to three of the TPs and PCs.

Response: The SDT disagrees because the requirement's focus is on coordination of planning. If questions/concerns are not responded to, coordination of planning is not being accomplished. The VSLs related to failing to distribute results are appropriate. However, the SDT agrees that the Lower VSL is unclear and will make a change to delete the word "any". In addition, the SDT has modified the Lower and High VSL wording to be clearer.

R8 VSL	The responsible entity failed to distribute the results of its Planning Assessment to one of its adjacent Transmission Planners or adjacent Planning Coordinators, and to one functional entity that has a reliability related need and has submitted a written request for the information, respectively in accordance with Requirement R8.	N/A	The responsible entity failed to distribute the results of its Planning Assessment to its adjacent Transmission Planners or adjacent Planning Coordinators, and to any functional entity that has a reliability related need and has submitted a written request for the information, respectively in accordance with Requirement R8.	The responsible entity failed to provide a documented response to a recipient of the Planning Assessment results who provided documented comments on the results within 90 calendar days of receipt of those comments in accordance with Requirement R8.

ERCOT ISO	* Will any agreements made in R7 override the "each TP and PC" requirement? To clarify this, the requirement could be rephrased: "In accordance to the responsibilities assigned in R7, the responsible Transmission Planners and Planning Coordinators shall distribute?. "* Include "within the interconnection" such as: "distribute its Planning Assessment results to adjacent Planning Coordinators and Transmission Planners within the interconnection and to any functional entity that indicates a reliability related need for the Planning Assessment results"* Should "reliability related need" be defined? This appears in multiple standards.

Response: No, the agreements made in Requirement R7 pertain to performance of the required studies and will not override the Planning Coordinator and Transmission Planner's responsibilities under Requirement R8 relating to distribution of Planning Assessments.

Organization	Comments for Question 8
The SDT does not believe the suggested language adds any clarity. No change made. A definition is not required. The present wording is in other approved standards and is sufficiently clear based on experience to date. No change made.	
Northeast Utilities	[R8.1] There is no statute of limitation for comments, nor is there a limit on the number of comments. There is also potential conflict with the deadline for completing a study and when comments may be submitted. If this requirement is retained the following is suggested: "Each Planning Coordinator and Transmission Planner shall distribute its Planning Assessment results to their adjacent Planning Coordinators and Transmission Planners, respectively, and to the functional entities that the Planning Coordinator recognizes as having a reliability need for the Planning Assessment results".
Response: The SDT disagrees that there should be a statute of limitation for asking questions related to coordination of planning and believes parties will act appropriately. The SDT disagrees that there should be a limit to the number of questions allowed related to coordination of planning and believes parties will act appropriately. The requirement is to distribute the results of the completed Planning Assessments associated with this standard therefore all related supporting studies are complete and there is no potential conflict. The word "indicates" has been changed to "has" to be clearer. This revised wording has the same meaning as the suggested wording and is sufficiently clear. Both the Transmission Planner and Planning Coordinator may be asked for their Planning Assessment by an entity with a reliability related need. Therefore the statement must apply to both the Transmission Planner and Planning Coordinator. **R8**. Each Planning Coordinator and Transmission Planner shall distribute its Planning Assessment results to adjacent Planning Coordinators, adjacent Transmission Planners, and any functional entity that has a reliability related need and submits a written request for the information.	
Oncor Electric Delivery	8.1 This requirement should be removed because it appears redundant to FERC 890. (suggest having one statement or the other) However, if it isn't, then the Term "documented" in R8.1 the term documented needs to be defined. Suggest adding the qualifier "written " i.e., "If a recipient of the Planning Assessment results provides "documented written" comments on the results, the respective Planning Coordinator or Transmission Planner shall provide a "documented written" response to that recipient within 90 calendar days of receipt of those comments. The requirement to distribute reports to entities with "need" has very significant CEII implications. This should be tightened to a "bona fide reliability need" for the information, requiring CEII or confidential material handling procedures. R8, 8.1, and Measurement M8 There is no statute of limitation for comments (Suggest clarifying what we mean here assume we are note referring to the NERC Standards Commenting Process), nor is there a limit on the number of comments. There is also potential conflict with the deadline for completing a study and when comments may be submitted (e.g. comments are received the day before the study is to be completed. If this requirement is retained the following is suggested: Each Planning Coordinator and Transmission Planner shall distribute its Planning Assessment results to their adjacent Planning Coordinators and Transmission Planners, respectively, and to functional entities that demonstrated a reliability need with concurrence from their planning coordinator for the Planning Assessment results. [I think there are issues still with this language. I think it needs to say "and to the functional entities that the Planning Coordinator recognizes as having a reliability need for the Planning Assessment results."]

Organization	Comments for Question 8
	Compliance 1.4 Data Retention, last bullet - this relates back to Requirements R8, 8.1, and Measurement M8. This seems to be a nuisance requirement to get in trouble for. [Requirement is to keep 3 years of notifications related to R8 & 8.1.]
Response: The SDT seeks to retire the existing TPL-005 & -006 while continuing to meet the purpose of their requirements. FERC Order 693 and 890 each provide expectations and direction to the ERO regarding enhancement of regional coordination and planning. The SDT believes the inclusion of Requirement R8 in the standard and performance of the regional assessments required under NERC delegation agreements will meet these objectives. The present wording is in other approved standards and is sufficiently clear based on experience to date. Bona fide does not add significant clarity. Control of CEII and control of competitive market information per Standards of Conduct are a fundamental expectation of all industry participants and is not required in the standard. The SDT disagrees that there should be a statute of limitation for asking questions related to coordination of planning and believes parties will act appropriately. The SDT also disagrees that there should be a limit to the number of questions allowed related to coordination of planning and believes parties will act appropriately. The requirement is to distribute the results of the completed Planning Assessments associated with this standard therefore all related supporting studies are complete and there is no potential conflict. The SDT agrees the wording is somewhat unclear and will clarify by adding “adjacent” before Transmission Planner. The word "indicates" has been changed to “has” to be clearer. This revised wording has the same meaning as the suggested wording and is sufficiently clear. **R8**. Each Planning Coordinator and Transmission Planner shall distribute its Planning Assessment results to adjacent Planning Coordinators, adjacent Transmission Planners, and any functional entity that has a reliability related need and submits a written request for the information. The SDT believes that retaining the documentation for 3 years is consistent with other standards and appropriate for audit purposes. No change made.	
Progress Energy Florida, Inc.	As PEF is opposed to TPL-001-1 as a whole, PEF will have no further comment on this issue other than to encourage all appropriate parties to review PEF’s previous comments to this effect.
Response: Throughout the drafting process, the SDT has carefully considered your comments as well as comments from other industry members.	
CenterPoint Energy	CenterPoint Energy believes R8 is over-reaching and recommends deleting it. CenterPoint Energy is particularly concerned about requiring assessments to be distributed to “any functional entity that indicates a reliability related need”. There is already a process in place for entities to request and receive the FERC Form 715 submittals of other entities. FERC’s process appropriately recognizes and addresses CEII issues and imposes a requirement that the entity demonstrate need for the information and that the industry complies with certain security-related requirements. Beyond CEII matters, transmission planning information can have implications for market entities bidding on congestion rights in competitive energy markets. Therefore, the dissemination of transmission planning information may be governed by the regulatory authority having jurisdiction over the market functions, which is not necessarily FERC in all cases. In any case, given the availability of the FERC 715 process, there is no need for a somewhat duplicative requirement in this standard. Accordingly, CenterPoint Energy recommends that R8 be deleted in its entirety.
Response: Requirement R8 is necessary to ensure that appropriate coordination of planning occurs and supports regional assessments performed under NERC delegation agreements. Control of CEII is a fundamental expectation of all industry participants and the "reliability related need" restriction ensures only appropriate parties must be given	

Organization	Comments for Question 8
planning assessments. Control of competitive market information per Standards of Conduct is a fundamental expectation of all industry participants and the "reliability related need" restriction ensures only appropriate parties must be given planning assessments. The SDT seeks to retire the existing TPL-005 & -006 while continuing to meet the purpose of their requirements. FERC Orders 693 and 890 each provide expectations and direction to the ERO regarding enhancement of regional coordination and planning. The SDT believes the inclusion of Requirement R8 in the standard and performance of the regional assessments required under NERC delegation agreements will meet these objectives. FERC 715 is not adequate to achieve these objectives. No change made.	
Bonneville Power Administration	Clarity is needed in the phrase functional entity in R8. Is this referring to the entities identified in the Functional Model or something else?
Modesto Irrigation District Transmission Planning	Clarity is needed in the phrase functional entity in R8. Is this referring to the entities identified in the Functional Model or something else?
NV Energy	Clarity is needed in the phrase functional entity in R8. Is this referring to the entities identified in the Functional Model or something else?
Pacific Gas and Electric Co.	Clarity is needed in the phrase functional entity in R8. Is this referring to the entities identified in the Functional Model or something else?
Puget Sound Energy, Inc.	Clarity is needed in the phrase functional entity in R8. Is this referring to the entities identified in the Functional Model or something else?
Sacramento Municipal Utility District	Clarity is needed in the phrase functional entity in R8. Is this referring to the entities identified in the Functional Model or something else?
San Diego Gas & Electric Co	Clarity is needed in the phrase functional entity in R8. Is this referring to the entities identified in the Functional Model or something else?
Southern California Edison (SCE)	Clarity is needed in the phrase functional entity in R8. Is this referring to the entities identified in the Functional Model or something else?
SRP	Clarity is needed in the phrase functional entity in R8. Is this referring to the entities identified in the Functional Model or something else?
Utility System Efficiencies, Inc. (USE)	Clarity is needed in the phrase functional entity in R8. Is this referring to the entities identified in the Functional Model or something else?

Organization	Comments for Question 8
Western Area Power Adm - RMR	Clarity is needed in the phrase functional entity in R8. Is this referring to the entities identified in the Functional Model or something else?
Deseret Power	Comments: Clarity is needed in the phrase functional entity in R8. Is this referring to the entities identified in the Functional Model or something else?
Response: Yes - The NERC Reliability Functional Model defines the meaning of the term "functional entity".	
SERC Planning Standards Subcommittee	Comments: R8: It is not clear whether the assessment results must be distributed to all parties of interest, or if it would be sufficient to post the assessment at a central location, and distribute information to access the information. Also, FERC Standards of Conduct issues would come into play in assuring that the information is available only to appropriate personnel. R8: It is not clear if the requirement to provide assessment results to adjacent PCs and TPs is required, or only upon a reliability related request.R8: The PC and TP responsibilities should be stated separately for clarity. Part 8.1: It is not clear what the form of the response to the comments should be " would an acknowledgement be sufficient, or would it be necessary to pursue a process of examining comments in detail and revising and reissuing the corresponding assessment"The requirement needs to be revised to make the above points clear.
Response: The standard does not specify the mechanics of distribution of the information, only that it must occur. The method proposed would be acceptable as long as it met Measure M8 and Section 1.4 under compliance monitoring. Control of competitive market information per Standards of Conduct is a fundamental expectation of all industry participants and the "reliability related need" restriction ensures only appropriate parties must be given planning assessments. The SDT agrees and will clarify by adding "adjacent" before Transmission Planner and added wording requiring a written request. The word "indicates" has been changed to "has" to be clearer. **R8**. Each Planning Coordinator and Transmission Planner shall distribute its Planning Assessment results to adjacent Planning Coordinators, adjacent Transmission Planners, and any functional entity that has a reliability related need and submits a written request for the information. The standard should not specify the means of providing and responding to comments, but ensures that appropriate communication is initiated. No change made.	
Orlando Utilities Commission	Excellent requirement, thank you for revising this
Response: Thank you.	
Southern Company	For additional clarity in who should receive the assessment, we recommend replacing "indicates" with "has" and adding words to the end of the sentence so that it states the following: "and to any functional entity that has a reliability related need for the Planning Assessment results and provides a written request." For Part 8.1, we do not believe the intent is for casual emails to be documented and formally responded to. And we do not believe that anyone who happens to receive the assessment should be able to comment. Therefore, we recommend the following wording: "If one of the above named entities provides formal written comments on the results, the respective Planning Coordinator or

Organization	Comments for Question 8
	Transmission Planner shall provide a documented response to that recipient within 90 calendar days of receipt of those comments." If these recommendations are accepted, then the wording of M8 would have to change accordingly.
Response: The SDT agrees and will clarify by adding "adjacent" before Transmission Planner and added wording requiring a written request. **R8**. Each Planning Coordinator and Transmission Planner shall distribute its Planning Assessment results to adjacent Planning Coordinators, adjacent Transmission Planners, and any functional entity that has a reliability related need and submits a written request for the information. The standard should not specify the means of providing and responding to comments, but ensures that appropriate communication is initiated. The SDT has altered the wording of Requirement R8 to provide clarity and to attempt to alleviate your concern.	
Manitoba Hydro	Is there a need to retain comments and responses to comments for Requirement R8?
Response: Yes, see Measure M8 and the following changes to 1.4 Data Retention**.** **R8 data retention**. Three calendar years of the notices and other documentation employed in accordance with Requirement R8 and Measure M8	
SCE&G	It is not clear if the requirement to provide assessment results to adjacent Planning Coordinators and Transmission Planners is always required or only upon a reliability related request.
Response: The SDT considers the distribution to Planning Coordinators and Transmission Planners as mandatory and has changed the wording of Requirement R8 to address the wording for other functional entities. **R8**. Each Planning Coordinator and Transmission Planner shall distribute its Planning Assessment results to adjacent Planning Coordinators, adjacent Transmission Planners, and any functional entity that has a reliability related need and submits a written request for the information.	
MidAmerican Energy Company	MidAmerican commends the SDT for their hard work on this standard. MidAmerican does have comments about this requirement though. MidAmerican asks that the SDT revise R8 to limit the need to provide the Planning Assessment as follows “adjacent Planning Coordinators and ADJACENT Transmission Planners and to any REGISTERED functional entity”? The words in all caps are words that MidAmerican suggests are added to the requirement to clarify that the word adjacent also applies to Transmission Planners and to clarify that the functional entity must be registered in order for the requirement to provide the Planning Assessment to apply. MidAmerican asks that the low VSL for R8 be revised to delete the word “any” from the requirement so that the requirement will read “The responsible entity failed to distribute the results of its Planning Assessment to one of its adjacent Transmission Planners”.
Response: The SDT agrees and will clarify by adding "adjacent" before Transmission Planner, but the SDT believes adding “registered” is unnecessary because it is understood that it relates to NERC Reliability Standards. **R8**. Each Planning Coordinator and Transmission Planner shall distribute its Planning Assessment results to adjacent Planning Coordinators, adjacent Transmission Planners, and any functional entity that has a reliability related need and submits a written request for the information.	

Organization	Comments for Question 8

The SDT agrees and will make change to delete the word "any".

R8 VSL	The responsible entity failed to distribute the results of its Planning Assessment to one of its adjacent Transmission Planners or adjacent Planning Coordinators, and to one functional entity that has a reliability related need and has submitted a written request for the information, respectively in accordance with Requirement R8.	N/A	The responsible entity failed to distribute the results of its Planning Assessment to its adjacent Transmission Planners or adjacent Planning Coordinators, and to any functional entity that has a reliability related need and has submitted a written request for the information, respectively in accordance with Requirement R8.	The responsible entity failed to provide a documented response to a recipient of the Planning Assessment results who provided documented comments on the results within 90 calendar days of receipt of those comments in accordance with Requirement R8.

Progress Energy Carolinas	Need to define "adjacent" Planning Coordinators. Does this mean a neighbor with at least one joint interconnection? The requirement to provide the Planning Assessment "to any functional entity that indicates a reliability related need" should be made subject to applicable confidentiality and CEII provisions.

Response: The SDT believes "adjacent" is an understood term and would apply to any neighbor with a joint Interconnection. No change made.

Control of CEII is a fundamental expectation of all industry participants and the "reliability related need" restriction ensures only appropriate parties must be given planning assessments**.** No change made**.**

Tri-State Generation and Transmission Association	R8 - We find that web-site posting would be sufficient distribution if it were not for the need for auditability. Please consider a way to qualify web-posting as an acceptable distribution method.

Response: The standard does not specify the mechanics of distribution of the information, only that it must occur. The method proposed would be acceptable as long as it met Measure M8 and 1.4 under compliance monitoring. No change made.

NYISO	R8- It should be made clear that a TP should not be required to send their assessment to adjacent PCs. Likewise the PCs should not be required to send their assessment to TPs not in their footprint. R8.1: This should not be required until the Assessment is complete and posted. Additionally, this could be an administratively intense task to respond to each and every comment and document that a response is made within 90 days. Is there any room for an extension to this requirement?

Response: The SDT disagrees, the broader communication is necessary to achieve appropriate coordination. No change made.

The requirement is to distribute the results of completed Planning Assessments, then respond to comments. Therefore the assessment is posted and complete before

Organization	Comments for Question 8
comments can be received and responded to. The SDT recognizes this fact and believes 90 days should be sufficient to develop a response. No change made.	
Oklahoma Gas & Electric	R8 OG&E believes the Transmission Coordinator be held accountable for R8 and coordinate this type of data exchange to ensure a regional coordination effort is achieved.
Response: The SDT believes you were referring to Planning Coordinator in your comment. The SDT believes both the Transmission Planner and Planning Coordinator must distribute their assessments to meet the overall intent of Requirement R8 and achieve appropriate coordination. No change made.	
Xcel Energy	R8 Xcel Energy appreciates the language stating "reliability need" however it is unclear as to what constitutes this or who would make that determination. Please clarify so as to avoid future disputes on providing or obtaining the information.
Response: The present wording is in other approved standards and is sufficiently clear based on experience to date. No change made.	
Central Maine Power Company	R8, 8.1, and Measurement M8 This standard should not be used to remedy deficiencies in meeting the coordination requirements of FERC Order 890. Therefore these should be deleted. If this requirement is retained the following is suggested:"Each Planning Coordinator and Transmission Planner shall distribute its Planning Assessment results to their adjacent Planning Coordinators and Transmission Planners, respectively, and to the functional entities that the Planning Coordinator and Transmission Planner recognizes as having a reliability need for the Planning Assessment results." Additionally, there is no deadline for comments. There is also potential conflict with the deadline for completing a study and when comments may be submitted (e.g. comments are received the day before the study is to be completed.) These issues must be addressed. 1.4 Data Retention: The last bullet is unnecessary and should be deleted from the standard.
ISO New England	R8, 8.1, and Measurement M8 This standard should not be used to remedy deficiencies in meeting the coordination requirements of FERC Order 890. Therefore these should be deleted. If this requirement is retained the following is suggested: Each Planning Coordinator and Transmission Planner shall distribute its Planning Assessment results to their adjacent Planning Coordinators and Transmission Planners, respectively, and to the functional entities that the Planning Coordinator and Transmission Planner recognizes as having a reliability need for the Planning Assessment results. Additionally, there is no statute of limitation for comments. There is also potential conflict with the deadline for completing a study and when comments may be submitted (e.g. comments are received the day before the study is to be completed.) These issues must be addressed. 1.4 Data Retention: The last bullet is unnecessary and should be deleted from the standard.
Response: The SDT seeks to retire the existing TPL-005 & -006 while continuing to meet the purpose of their requirements. FERC Orders 693 and 890 each provide expectations and direction to the ERO regarding enhancement of regional coordination and planning. The SDT believes the inclusion of Requirement R8 in the standard	

Organization	Comments for Question 8
and performance of the regional assessments required under NERC delegation agreements will meet these objectives. No change made. This revised wording has the same meaning as the suggested wording and is sufficiently clear. The SDT disagrees that there should be a statute of limitation for asking questions related to coordination of planning and believes parties will act appropriately. The requirement is to distribute the results of the completed Planning Assessments associated with this standard therefore all related supporting studies are complete and there is no potential conflict. No change made. The SDT believes that data retention is a necessary function as outlined in the guidelines. No change made.	
United Illuminating	R8, 8.1, and Measurement M8 This standard should not be used to remedy deficiencies in meeting the coordination requirements of FERC Order 890. Therefore these should be deleted. If this requirement is retained the following is suggested:"Each Planning Coordinator and Transmission Planner shall distribute its Planning Assessment results to their adjacent Planning Coordinators and Transmission Planners, respectively, and to the functional entities that the Planning Coordinator and Transmission Planner recognizes as having a reliability need for the Planning Assessment results." Additionally, there is no statute of limitation for comments. There is also potential conflict with the deadline for completing a study and when comments may be submitted (e.g. comments are received the day before the study is to be completed.) These issues must be addressed. Measures M1:It is not practical to retain system model information in a hard copy form. This provision could be dropped. Compliance: D 1.1.4 Data Retention: The Transmission Planner and the Planning Coordinator may not be using the same software. If both are required to store the data, do they both have to have the software to use the data? Can this be changed to an "or" such that one of them must retain the data and it can be up to them as to who it is. Also, the last bullet is unnecessary and should be deleted from the standard.
Response: The SDT seeks to retire the existing TPL-005 & -006 while continuing to meet the purpose of their requirements. FERC Orders 693 and 890 each provide expectations and direction to the ERO regarding enhancement of regional coordination and planning. The SDT believes the inclusion of Requirement R8 in the standard and performance of the regional assessments required under NERC delegation agreements will meet these objectives. No change made. This revised wording has the same meaning as the suggested wording and is sufficiently clear. No change made. The SDT disagrees that there should be a statute of limitation for asking questions related to coordination of planning and believes parties will act appropriately. No change made. The requirement is to distribute the results of the completed Planning Assessments associated with this standard therefore all related supporting studies are complete and there is no potential conflict. Since Measure M1 states that either electronic OR hard copy format is required, the SDT believes that no changes are required since either of the formats is acceptable. An example of a hard copy of a system model is having printouts of each individual bus showing Load, Transmission line, generator, capacitors, etc., connected to that bus with associated impedances, ratings, etc. The SDT believes that both the Transmission Planner and Planning Coordinator have this responsibility for the data retention. Therefore the SDT believes that the	

Organization	Comments for Question 8
existing language is adequate and that no changes are required. The SDT believes that both should have the necessary software for using the data.	
Ameren	R8: It is not clear whether the assessment results must be distributed to all parties of interest, or if it would be sufficient to post the assessment at a central location, and distribute information to access the information. Also, FERC Standards of Conduct issues would come into play in assuring that the information is available only to appropriate personnel. R8.1: It is not clear what the form of the response to the comments should be " would an acknowledgement be sufficient, or would it be necessary to pursue a process of examining comments in detail and revising and reissuing the corresponding assessment" The audience of those able to provide comments to the assessments should be appropriately limited, and not open to anyone who wishes to comment.
Response: The standard does not specify the mechanics of distribution of the information, only that it must occur. The method proposed would be acceptable as long as it met Measure M8 and Section 1.4 under compliance monitoring. Control of competitive market information per Standards of Conduct is a fundamental expectation of all industry participants and the "reliability related need" restriction ensures only appropriate parties must be given planning assessments. The standard should not specify the means of providing and responding to comments, but ensures that appropriate communication is initiated. The SDT believes that the requirement limiting distribution to adjacent Planning Coordinator/Transmission Planner's and other functional entities with a reliability related need who request it appropriately limits those commenting. No change made.	
SERC Dynamics Review Subcommittee (DRS)	R8: It is not clear whether the assessment results must be distributed to all parties of interest, or if it would be sufficient to post the assessment at a central location, and distribute information to access the information. Also, FERC Standards of Conduct issues would come into play in assuring that the information is available only to appropriate personnel. For additional clarity in who should receive the assessment, we recommend replacing "indicates" with "has" and adding words to the end of the sentence so that it states the following: "and to any functional entity that has a reliability related need for the Planning Assessment results and provides a written request. "R8: The PC and TP responsibilities should be stated separately for clarity. Part 8.1: It is not clear what the form of the response to the comments should be. Would an acknowledgement be sufficient, or would it be necessary to pursue a process of examining comments in detail and revising and reissuing the corresponding assessment? The requirement needs to be revised to make the above point clear.? For Part 8.1, we do not believe the intent is for casual emails to be documented and formally responded to. And we do not believe that anyone who happens to receive the assessment should be able to comment. Therefore, we recommend the following wording: "If one of the above named entities provides formal written comments on the results, the respective Planning Coordinator or Transmission Planner shall provide a documented response to that recipient within 90 calendar days of receipt of those comments." If these recommendations are accepted, then the wording of M8 would have to change accordingly.

Organization	Comments for Question 8
Response: The standard does not specify the mechanics of distribution of the information, only that it must occur. The method proposed would be acceptable as long as it met Measure M8 and Section 1.4 under compliance monitoring. Control of competitive market information per Standards of Conduct is a fundamental expectation of all industry participants and the "reliability related need" restriction ensures only appropriate parties must be given planning assessments. The word "indicates" has been changed to “has” to be clearer. The other revised wording has the same meaning as the suggested wording and is sufficiently clear. **R8**. Each Planning Coordinator and Transmission Planner shall distribute its Planning Assessment results to adjacent Planning Coordinators, adjacent Transmission Planners, and any functional entity that has a reliability related need and submits a written request for the information. The standard should not specify the means of providing and responding to comments, but ensures that appropriate communication is initiated. The SDT believes that the requirement limiting distribution to adjacent Planning Coordinator/Transmission Planner's and other functional entities with a reliability related need who request it appropriately limits those commenting. The revised wording has the same meaning as the suggested wording which is sufficiently clear.	
MAPP	R8: Remove Transmission Planners: Each PC shall distribute it Planning Assessment to adjacent PC and to any registered function entity that indicates a reliability need for the Planning Assessment results. R8.1 Remove Transmission Planners from subrequirement.
Response: The SDT believes both the Transmission Planner and Planning Coordinator must distribute their assessments and respond to comments to meet the overall intent of Requirement R8 and achieve appropriate coordination. No change made.	
Midwest ISO	Requirement R8- It should be made clear that a TP should not be required to send their assessment to adjacent PCs. Likewise the PCs should be required to send their assessment to TPs not in their footprint. Please consider the following language change for R8:Each Planning Coordinator shall distribute its planning assessment results to adjacent Planning Coordinators and to any other Planning Coordinators who indicate they have a reliability related need for the planning assessment results. Each Transmission Planner shall distribute its planning assessment results to adjacent Transmission Planner and to any other Transmission Planner who indicates they have a reliability related need for the planning assessment results. Requirement R8.1: This should be clarified such that this requirement is only required on Assessments that are completed and posted as final. If not, this could be an administratively burdensome task for an entity to have to respond to each and every comment and then document that they did respond within 90 days. Please consider the following language changes for R8.1If a recipient of the Planning Assessment’s final results provides documented comments on the results, the respective Planning Coordinator or Transmission Planner shall provide a documented response to that recipient within 90 calendar days of receipt of those comments.
Response: The SDT disagrees with the suggested limitations and believes both the Transmission Planner and Planning Coordinator must distribute their assessments to the applicable entities cited in the requirement to meet the overall intent of Requirement R8 and achieve appropriate coordination. No change made. The Requirement R8 requirement is to distribute Planning Assessment results associated with this standard. Therefore Requirement R8, part 8.1 only requires response to comments on the applicable assessment results. No change in wording is necessary.	

Organization	Comments for Question 8
Northeast Power Coordinating Council--RSC	Requirements R8, 8.1, and Measure M8--There are a number of concerns with these requirements. There needs to be a specified time period upon which comments must be received. As written, there is no sunset on when comments may be made and therefore they must be responded to. Additionally, it is not clear if the 90-day response time may extend beyond the end of the year to maintain and maintain annual compliance. R8 also causes redundancy of distribution of assessments. There is no statute of limitation for comments. There is also potential conflict with the deadline for completing a study and when comments may be submitted (e.g. comments are received the day before the study is to be completed.) These issues must be addressed. This standard should not be used to remedy deficiencies in meeting the requirements of FERC Order 890. Therefore these should be deleted. If this requirement is retained the following revision to Requirement 8 is suggested:"Each Planning Coordinator and Transmission Planner shall distribute its Planning Assessment results to their adjacent Planning Coordinators and Transmission Planners, respectively, and to the functional entities that the Planning Coordinator and Transmission Planner recognize as having a reliability need for the Planning Assessment results." Compliance: 1.4 Data Retention: The Transmission Planner and the Planning Coordinator may not be using the same software. If both are required to store the data, do they both have to have the software to use the data? Can this be changed to an "or" such that one of them must retain the data and it can be up to them as to who it is? 1.4 Data Retention, last bullet - this relates back to Requirements R8, 8.1, and Measure M8. "Three calendar years of the notifications" seems to be an unnecessary requirement, and should be deleted. As an alternative to deletion, the implementation of a rolling three calendar years of notifications could be considered.

Response: The SDT disagrees that there should be a statute of limitation for asking questions related to coordination of planning and believes parties will act appropriately. The SDT's intent is that compliance would be judged by whether the comment was responded to in the required 90 days.

The SDT disagrees, this communication is necessary to achieve appropriate coordination.

The SDT disagrees that there should be a statute of limitation for asking questions related to coordination of planning and believes parties will act appropriately. The requirement is to distribute the results of the completed Planning Assessments associated with this standard therefore all related supporting studies are complete and there is no potential conflict.

The SDT seeks to retire the existing TPL-005 & -006 while continuing to meet the purpose of their requirements. FERC Orders 693 and 890 each provide expectations and direction to the ERO regarding enhancement of regional coordination and planning. The SDT believes the inclusion of Requirement R8 in the standard and performance of the regional assessments required under NERC delegation agreements will meet these objectives. No change made.

The SDT agrees the wording could be clearer and will clarify by adding "adjacent" before Transmission Planner. The word "indicates" has been changed to "has" to be clearer. The other revised wording has the same meaning as the suggested wording.

R8. Each Planning Coordinator and Transmission Planner shall distribute its Planning Assessment results to adjacent Planning Coordinators, adjacent

Organization	Comments for Question 8
Transmission Planners, and any functional entity that has a reliability related need and submits a written request for the information. The SDT believes that both the Transmission Planner and Planning Coordinator have the responsibility for data retention. Therefore, the SDT believes that the existing language is adequate and that no changes are required. The SDT believes that both should have the necessary software for using the data. The SDT believes that retaining the documentation for 3 years is consistent with other standards and appropriate for audit purposes.	
Hydro-Québec TransEnergie (HQT)	Requirements R8, 8.1, and Measurement M8 There are a number of concerns with these requirements. There needs to be a specified time period upon which comments must be received. As written, there is no sunset on when comments may be made and therefore they must be responded to. Additionally, it is not clear if the 90-day response time may extend beyond the end of the year to maintain and maintain annual compliance. R8 also causes redundancy of distribution of assessments.Suggested revised Requirement R8 to say: Each Planning Coordinator and Transmission Planner shall distribute its Planning Assessment results to their adjacent Planning Coordinators and Transmission Planners, respectively, and to functional entities that demonstrated a reliability need with concurrence from their planning coordinator for the Planning Assessment results.
Response: The SDT disagrees that there should be a statute of limitation for asking questions related to coordination of planning and believes parties will act appropriately. The SDT's intent is that compliance would be judged by whether the comment was responded to in the required 90 days. The SDT believes both the Transmission Planner and Planning Coordinator must distribute their assessments to meet the overall intent of Requirement R8 and achieve appropriate coordination. No change made.	
US Bureau of Reclamation	Results of the Planning Assessments should be coordinated with all owner entities who all share in system reliability. Any owner that may choose to implement a Corrective ACtion Plan item should have access to the basis for the need.
Response: The SDT agrees and believes Requirement R8 facilitate the necessary interaction between reliability related entities. No change made.	
TIS	Term “document” in R8.1 the term documented needs to be defined. TIS suggests using the term “written “ i.e., “If a recipient of the Planning Assessment results provides documented written comments on the results, the respective Planning Coordinator or Transmission Planner shall provide a documented written response to that recipient within 90 calendar days of receipt of those comments. ”The requirement to distribute reports to entities with “need” has very significant CEII implications. This should be tightened to a “bona fide reliability need” for the information, requiring CEII or confidential material handling procedures. Other general comments:1. Footnotes on P3 and P4 (101 & 19) should be 9 and 10, respectively. This merely appears to be a typo in the latest draft.
Response: The present wording is in other approved standards and is sufficiently clear based on experience to date. Control of CEII is a fundamental expectation of all industry participants and the "reliability related need" restriction ensures only appropriate parties must be given	

Organization	Comments for Question 8
planning assessments. Several footnote reference errors were reflected in Table 1 when migrating from Draft 3 to Draft 4 that led to unfortunate confusion. In Draft 5, the SDT has corrected the footnote references and a detailed explanation of the changes required is summarized in the Summary Considerations for Question 10.	
NERC Standards Review Subcommittee	The MRO NSRS asks that the SDT revise R8 to limit the need to provide the Planning Assessment as follows "adjacent Planning Coordinators and adjacent Transmission Planners and to any registered functional entity"? This MRO NSRS suggestion is added to the requirement to clarify that the word adjacent also applies to Transmission Planners and to clarify that the functional entity must be registered in order for the entity to be applicable to the requirement.
Response: The SDT agrees and will clarify by adding "adjacent" before Transmission Planner, but the SDT believes adding "registered" is unnecessary because it is understood as it relates to NERC Reliability Standards. **R8**. Each Planning Coordinator and Transmission Planner shall distribute its Planning Assessment results to adjacent Planning Coordinators, adjacent Transmission Planners, and any functional entity that has a reliability related need and submits a written request for the information.	
Florida Power and Light	The requirement to distribute the Planning Assessment should not mandate distribution of a document but should be more flexible and allow for making the Planning Assessment available, such that those entities that need the information can have it readily available. R8 should be modified as follows: Each Planning Coordinator and Transmission Planner shall make available its Planning Assessment results to adjacent Planning Coordinators and Transmission Planners and to any functional entity that indicates a reliability related need for the Planning Assessment results.
Response: The SDT believes Requirement R8 must be a standards requirement and ensures communication of information necessary for regional assessments**.** No change made**.**	
NorthWestern Energy	The term "functional entity" needs to be defined.
Response: The NERC Reliability Functional Model defines the term "functional entity".	
Gainesville Regional Utilities	The wording could be a little better to indicate that the PC and TP should always get each others planning assessments, but other entities need to indicate a reliability related need to get the same. I suggest making a second sentence and eliminating the word "and".
Response: The SDT agrees that the wording could be a little better and will clarify by adding "adjacent" before Transmission Planner. **R8**. Each Planning Coordinator and Transmission Planner shall distribute its Planning Assessment results to adjacent Planning Coordinators, adjacent Transmission Planners, and any functional entity that has a reliability related need and submits a written request for the information.	
National Grid	This standard should not be used to remedy deficiencies in meeting the requirements of FERC Order 890. Therefore these should be deleted.

Organization	Comments for Question 8
	If this requirement is retained the following is suggested: Each Planning Coordinator and Transmission Planner shall distribute its Planning Assessment results to their adjacent Planning Coordinators and Transmission Planners, respectively, and to the functional entities that the Planning Coordinator and Transmission Planner recognizes as having a reliability need for the Planning Assessment results. Additionally, there is no statute of limitation for comments. There is also potential conflict with the deadline for completing a study and when comments may be submitted (e.g. comments are received the day before the study is to be completed.) These issues must be addressed. Compliance: 1.4 Data Retention: The Transmission Planner and the Planning Coordinator may not be using the same software. If both are required to store the data, do they both have to have the software to use the data? Can this be changed to an "or" such that one of them must retain the data and it can be up to them as to who is it. 1.4 Data Retention, last bullet - this relates back to Requirements R8, 8.1, and Measurement M8. "Three calendar years of notification" seems to be a nuisance requirement to get in trouble for. This is unnecessary and should be deleted.
Response: The SDT seeks to retire the existing TPL-005 & -006 while continuing to meet the purpose of their requirements. FERC Orders 693 and 890 each provide expectations and direction to the ERO regarding enhancement of regional coordination and planning. The SDT believes the inclusion of Requirement R8 in the standard and performance of the regional assessments required under NERC delegation agreements will meet these objectives. No change made. The SDT agrees and will clarify by adding "adjacent" before Transmission Planner. The word "indicates" has been changed to "has" to be clearer. The other revised wording has the same meaning as the suggested wording which is sufficiently clear. **R8**. Each Planning Coordinator and Transmission Planner shall distribute its Planning Assessment results to adjacent Planning Coordinators, adjacent Transmission Planners, and any functional entity that has a reliability related need and submits a written request for the information. The SDT disagrees that there should be a statute of limitation for asking questions related to coordination of planning and believes parties will act appropriately. No change made. The requirement is to distribute the results of the completed Planning Assessments associated with this standard therefore all related supporting studies are complete and there is no potential conflict. The SDT believes that both the Transmission Planner and Planning Coordinator have this responsibility for the data retention. Therefore the SDT believes that the existing language is adequate and that no changes are required. The SDT believes that both should have the necessary software for using the data. No change made. The SDT believes that retaining the documentation for 3 years is consistent with other standards and appropriate for audit purposes.	
TVA System Planning	TVA believes that the TP and PC are unnecessarily duplicating work as shown in R8 and in M8. TVA believes that just the PC should be responsible for this coordination. R8: It is not clear whether the assessment results must be distributed to all parties of interest, or if it would be sufficient to post the assessment at a central location, and distribute information necessary to access the results. Also, FERC Standards of Conduct issues would come into play in assuring that the information is available only to appropriate

Organization	Comments for Question 8
	personnel. R8.1: It is not clear what the form of the response to the comments should be " would an acknowledgement be sufficient, or would it be necessary to pursue a process of examining comments in detail and revising and reissuing the corresponding assessment"
Response: The SDT believes both the Transmission Planner and Planning Coordinator must distribute their assessments to meet the overall intent of Requirement R8 and achieve appropriate coordination. The standard does not specify the mechanics of distribution of the information, only that it must occur. The method proposed would be acceptable as long as it met Measure M8 and Section 1.4 under compliance monitoring. Control of competitive market information per Standards of Conduct is a fundamental expectation of all industry participants and the "reliability related need" restriction ensures only appropriate parties must be given planning assessments. The standard should not specify the means of providing and responding to comments, but ensures that appropriate communication is initiated. No change made.	
SRC of ISO/RTO	Under R8 it should be made clear that a TP should not be required to send their assessment to adjacent PCs and that PCs should not be required to send their assessments to TPs not in their footprint. Under R8.1: If a recipient of the Planning Assessment results provides documented comments on the results, the respective Planning Coordinator or Transmission Planner shall provide a documented response to that recipient within 90 calendar days of receipt of those comments.This should not be required until the Assessment is final and could be an administrative intense task. The following wording is suggested for R8:R8. Each Planning Coordinator shall distribute its planning assessment results to adjacent Planning Coordinators and to any Planning Coordinator who indicates a reliability related need for the planning assessment results. Each Transmission Planner shall distribute its planning assessment results to adjacent Transmission Planners and to any other Transmission Planner who indicates they have a reliability need for the planning assessment results. R8.1 If a recipient of the Planning Assessment final results provides documented comments on the results, the respective Planning Coordinator or Transmission Planner shall provide a documented response to such recipient within 90 calendar days of receipt of those comments. AESO does not comment on VSLs or VRFs.
Response: The SDT believes both the Transmission Planner and Planning Coordinator must broadly distribute their assessments to meet the overall intent of Requirement R8 and achieve appropriate coordination. No change made. The requirement is to distribute the results of the completed Planning Assessments associated with this standard therefore all related supporting studies are complete and there is no potential conflict. The SDT recognizes this fact and believes 90 days should be sufficient to develop a response. The SDT disagrees with the suggested limitations and believes both the Transmission Planner and Planning Coordinator must distribute their assessments to the applicable entities cited in the requirement to meet the overall intent of Requirement R8 and achieve appropriate coordination. No change made.	
Pepco Holdings, Inc. - Affiliates	While the SDT has stated in the Description of Current Draft that the issues of TPL-005 and TPL-006 have been addressed. It is not clear to PHI Affiliates that this is true. It is not evident how wide area planning is performed. Requirement 2 states Each

Organization	Comments for Question 8
PHI	Transmission Planner and Planning Coordinator shall prepare an annual Planning Assessment of its portion of the BES.

Response: The SDT seeks to retire the existing TPL-005 & -006 while continuing to meet the purpose of their requirements. FERC Orders 693 and 890 each provide expectations and direction to the ERO regarding enhancement of regional coordination and planning. The SDT believes the inclusion of Requirement R8 in the standard and performance of regional assessments will meet these objectives.

FRCC Transmission Working Group	With regards to the High VSL, what about entities that indicate a reliability related need for the Planning Assessment? Should this be part of the High VSL? Consider changing the requirement to distribute the Planning Assessment to become more flexible and allow for making the Planning Assessment available to those entities that indicates a need. Consider revising as follows:Each Planning Coordinator and Transmission Planner shall make available its Planning Assessment results to adjacent Planning Coordinators and Transmission Planners and to any functional entity that indicates a reliability related need for the Planning Assessment results. The definition of "Known Commitments" should explain how that would diferentiate between Planned Commitments

Response: The SDT agrees and will add those with a reliability related need to the Lower and High VSL.

R8 VSL	The responsible entity failed to distribute the results of its Planning Assessment to one of its adjacent Transmission Planners or adjacent Planning Coordinators, and to one functional entity that has a reliability related need and has submitted a written request for the information, respectively in accordance with Requirement R8.	N/A	The responsible entity failed to distribute the results of its Planning Assessment to its adjacent Transmission Planners or adjacent Planning Coordinators, and to any functional entity that has a reliability related need and has submitted a written request for the information, respectively in accordance with Requirement R8.	The responsible entity failed to provide a documented response to a recipient of the Planning Assessment results who provided documented comments on the results within 90 calendar days of receipt of those comments in accordance with Requirement R8.

The proposed revised wording is essentially the same as the current wording and does not provide any additional clarity. No change made.

The SDT believes that the existing language regarding known commitments is adequate and no further change is required.

9. The SDT has revised the definitions in response to industry comments to the third posting. Do you agree with these definition changes? If not, please clearly indicate which definition you disagree with and provide specific comments.

Summary Consideration: The SDT received several comments on definitions. The following summarizes the questions and response on the definitions. Planning Assessment: The SDT considered the comment, but feels that a Corrective Action Plan includes the 'do nothing' option, which would address the concern and decided not to change the definition.

Non-Consequential Load Loss: To improve clarity, the SDT has revised the definition.

The SDT believes the exclusion of voltage sensitive load belongs in the Non-Consequential Load Loss definition because it is not Non-Consequential load.

Consequential Load Loss: Due to comments in prior postings, the SDT has elected to define Consequential Load specific to Load that is lost due to a fault. Non-Consequential Load has been defined to be all else, except as noted. That which has been noted is excluded from coverage by the standard. So it is not necessary to include the noted exclusions from the Non-Consequential Load Loss definition in the Consequential Load Loss definition.

Planning Horizon: The only location where planning horizon didn't specify Near-Term or Long-Term was in the 'Purpose'. The SDT didn't feel that this reference needed to be specific or was sufficient to warrant a definition. No changes have been made.

Year One: The SDT believes the definition will capture both a summer and winter peak and is necessary to provide a clear starting point for the planning horizon.

Year One is not considered to be the immediate year following the current year, as suggested by some, because if the study were completed at the end of the year, then there would be no time to implement a Corrective Action Plan. Also, that following year is in the Operational Planning time frame.

The SDT doesn't see a problem with entities having slightly different study periods. This situation exists under the current TPL Standards.

With regards to any possible inconsistencies within the practices of any entity, the SDT believes that the requirements as defined are required for a Planning Assessment. How these requirements are met is beyond the scope of this standard and should be discussed within the responsible entities.

Consequential Generation Loss: Generation run-back and tripping is acceptable. It is up to the Planning Coordinator and the Transmission Planner to determine how many units or cumulative MW may be interrupted due to either a consequential or non-consequential action. Therefore it isn't necessary for the SDT to define Consequential Generation Loss.

Note 'b' has been revised to clarify the issue. Consequential Load Loss as well as generation loss is acceptable as a consequence of any planning or extreme event excluding P0.

Bus-Tie Breaker: The SDT has elected to define a Bus-Tie Breaker. If the SDT were to also define what is not a Bus-Tie Breaker, then anything that was missed would not be defined. To be comprehensive, the SDT has to limit the definition to what a Bus-Tie Breaker is to avoid further complexity.

Steady State: 'Steady State' was changed to 'steady state', so no definition is required.

The following definition was changed for clarity due to industry comments:

Non-Consequential Load Loss: Non-Interruptible Load loss that does not include: (1) Consequential Load Loss, (2) the response of voltage sensitive Load, or (3) Load that is disconnected from the System by end-user equipment.

Note 'b': Consequential Load Loss as well as generation loss is acceptable as a consequence of any planning or extreme event excluding P0.

Organization	Yes or No	Comments for Question 9
FRCC Transmission Working Group		Consider the following definition for clarification: Planning Assessment: Documented evaluation of (1) studies of future Transmission System performance and (2) Corrective Action Plans (included in studies) to remedy identified deficiencies. Non-Consequential Load Loss: Non-Interruptible Load loss that does not include: (1) Consequential Load Loss, or (2) the response of voltage sensitive Load that is disconnected from the System by end-user equipment.
Response: Planning Assessment: The SDT considered the comment, but feels that a Corrective Action Plan includes the 'do nothing' option, which would address the concern and decided not to change the definition. Non-Consequential Load Loss: To improve clarity, the SDT has revised the definition for Non-Consequential Load Loss. **Non-Consequential Load Loss:** Non-Interruptible Load loss that does not include: (1) Consequential Load Loss, (2) the response of voltage sensitive Load, or (3) Load that is disconnected from the System by end-user equipment.		
ERCOT ISO	No	* Planning horizon is not formally defined but used many times throughout the standards. If there is a need to define the Near- and Long-term Transmission Planning Horizons, then the transmission planning horizon itself also should be defined. Additional confusion on this issue is the use of Long-term Planning as a planning horizon of one year or longer, also not formally defined. We finally found this referenced in the NERC Drafting Team guideline, which is not an obvious place to look for a definition. * Year One is only used two times " once to define Near-term Transmission Planning Horizon and once in the TPL standard. If this is not used throughout the NERC standards, it should not be defined. As an alternative, the transmission planning horizon could be formally defined, with Near- and Long-term Transmission Planning Horizons defined as subsets of the main definition. This would eliminate the need for a formal definition of Year One. If Year One stays as a new definition, it seems to be too broad, potentially allowing for omission of a peak season in the study. For example, if Year One is the period 12 to 18 months from the end of 2009, then Year One is currently 2011. Why is the year 2010 not considered to be Year One.*

Organization	Yes or No	Comments for Question 9
		Non-Consequential Load Loss is confusing " due to the base word "consequence". Consequential Load Loss is intended to be a load loss that is a result, or consequence, of the isolation. Non-Consequential Load Loss seems intended to imply it was not a consequence of the isolation. Although the standard attempts to define the term, this definition does not agree with the common English definition of the term. "Non-consequential" (or "Inconsequential") implies that the load loss is unimportant, minor or insignificant. This is the opposite intent of how this term is used in the standard, where it is used to mean the load that it is unacceptable to lose for a particular event. Alternatives could be "Direct Load loss" and "Indirect Load loss" to replace the two concepts that are included as Consequential and Non-Consequential respectively.
Response: Planning Horizon: The only location where planning horizon didn't specify Near-Term or Long-Term was in the 'Purpose'. The SDT didn't feel that this reference needed to be specific or was sufficient to warrant a definition. No changes have been made. Year One: Year One is not considered to be the immediate year following the current year because if the study were completed at the end of the year, then there would be no time to implement a Corrective Action Plan. Also, that following year is in the Operational Planning time frame. No changes have been made. As you have indicated, the terms 'consequential' and 'non-sequential' can be interpreted consistent with the intent of the SDT. Further the use has been accepted by NERC and seems to have been accepted by the industry in the multiple postings to date. By changing 'Non-consequential' (or not-consequential) to 'inconsequential' you have changed the meaning. The SDT is content with the terms and has focused on the clarity of the definition, which also seems to be the focus of the comments from the industry. The SDT has decided to stay with the existing terms rather than changing them as this late date. No changes have been made.		
Northeast Utilities	No	[Comment on Year One Definition] This still defines Year One as both a particular year AND a window. It cannot be both. We suggest rewording the second sentence to read: "This is further defined as the beginning 12-18 months from the end of the current year".
Hydro-Québec TransEnergie (HQT)	No	Definitions " Year One " This still defines Year One as both a particular year AND a window. It cannot be both. Suggest rewording the second sentence to read: "This is further defined as beginning 12-18 months from the end of the current year."
Response: The SDT does not agree that there is an issue and has not changed the definition.		
Platte River Power Authority	No	1. Please make the definition for Non-Consequential Load Loss simple and straightforward. For example, Non-Consequential Load Loss: The planned shedding of firm load.(Note that phrases "firm load" and "firm load shedding" are used frequently in a dozen other standards.) 2. Move the remainder of the sentence about "the response of voltage sensitive Load including...by end-user equipment." from the Non-Consequential Load Loss definition to the Consequential Load Loss definition.
Response: Non-Consequential Load Loss; Due to comments received in earlier postings, the SDT believes that the definition can not be that simple. The SDT believes the exclusion of voltage sensitive load belongs in the Non-Consequential Load Loss definition because it is not Non-Consequential Load. Therefore, any reduction in load due to sensitivity to low voltage would not result in a compliance violation. No change made.		

Organization	Yes or No	Comments for Question 9
To improve clarity, the SDT has revised the definition for Non-Consequential Load Loss. **Non-Consequential Load Loss:** Non-Interruptible Load loss that does not include: (1) Consequential Load Loss, (2) the response of voltage sensitive Load, or (3) Load that is disconnected from the System by end-user equipment.		
NERC Standards Review Subcommittee	No	A. Add a Consequential Generation Loss definition, which would be a complement to the Consequential Load Loss definition. Both consequential load loss and consequential generation loss are referred to in note "b" of the Steady State & Stability section of Table 1, but only consequential load loss is defined. The MRO NSRS suggests text of: Consequential Generation Loss: All Generation that is no longer delivered to any Transmission Facilities as a result of the Transmission Facilities removal from service by the operation of the installed Protection Systems designed to isolate fault conditions or otherwise protect the Transmission Facilities from abnormal operating conditions. B. The MRO NSRS offers the following comment to one of the proposed definitions of TPL-001. Non-Consequential Load Loss: Non-Interruptible Load loss other than Consequential Load Loss that is the result of the response of voltage sensitive Load including Load that is disconnected from the System by end-user equipment. C. Add a Planning Horizon definition. This term is used in this proposed standard, in the FAC-010-2 standard, and possibly in other future standards, but it has not been defined yet. D. The SDT is to be commended for working on the Year one definition, however, concerns exist that if the standard is adopted as written, it is incompatible with the eastern interconnection wide ERAG model process. E. If the SDT intends to change the planning processes and model building processes throughout NERC in this regard, then the SDT should explain the benefits of changing this process and verify that it does not sabotage the normal model building and study process.
Response: A. Generation run-back and tripping is acceptable. It is up to the Planning Coordinator and the Transmission Planner to determine how many units or cumulative MW may be interrupted due to either a consequential or non-consequential action. Therefore it isn't necessary for the SDT to define Consequential Generation Loss. Note 'b' has been revised to clarify the issue. **Note 'b':** Consequential Load Loss as well as generation loss is acceptable as a consequence of any planning or extreme event excluding P0. B. To improve clarity, the SDT has revised the definition for Non-Consequential Load Loss. **Non-Consequential Load Loss:** Non-Interruptible Load loss that does not include: (1) Consequential Load Loss, (2) the response of voltage sensitive Load, or (3) Load that is disconnected from the System by end-user equipment C. The only location where planning horizon didn't specify Near-Term or Long-Term was in the 'Purpose'. The SDT didn't feel that this reference needed to be specific or was sufficient to warrant a definition. No changes have been made. D & E. With regards to any possible inconsistencies within the practices of any entity, the SDT believes that the requirements as defined are required for a Planning		

Organization	Yes or No	Comments for Question 9
Assessment. How these requirements are met is beyond the scope of this standard and should be discussed within the responsible entities.		
MAPP	No	Add a Consequential Generation Loss definition, which would be a complement to the Consequential Load Loss definition. Both consequential load loss and consequential generation loss are referred to in note "b" of the Steady State & Stability section of Table 1, but only consequential load loss is defined. We suggest text of: "Consequential Generation Loss: All Generation that is no longer delivered to any Transmission Facilities as a result of the Transmission Facilities removal from service by the operation of the installed Protection Systems designed to isolate fault conditions or otherwise protect the Transmission Facilities from abnormal operating conditions. Add a Planning Horizon definition. This term is used in this proposed standard, in the FAC-010-2 standard, and possibly in other future standards, but it has not been defined yet.
Response: Consequential Generation Loss: Generation run-back and tripping is acceptable. It is up to the Planning Coordinator and the Transmission Planner to determine how many units or cumulative MW may be interrupted due to either a consequential or non-consequential action. Therefore it isn't necessary for the SDT to define Consequential Generation Loss. Note 'b' has been revised to clarify the issue. **Note 'b':** Consequential Load Loss as well as generation loss is acceptable as a consequence of any planning or extreme event excluding P0. Planning Horizon: The only location where planning horizon didn't specify Near-Term or Long-Term was in the 'Purpose'. The SDT didn't feel that this reference needed to be specific or was sufficient to warrant a definition. No changes have been made.		
United Illuminating	No	As currently defined "Non-Consequential Load Loss" could allow widespread or cascading motor stall. The language in the definition cannot be this generic. The text is broad enough that it could allow a voltage collapse, the definition is incompatible with Table 1a (BES Transmission voltage instability, cascading outages, and uncontrolled islanding shall not occur). The definition for the non-consequential load loss combined with Table 1 would prohibit any customer from tripping its own load for contingencies that indicate 'no' in the non-consequential load loss column. This is not practical and appears to be an unintended consequence of the change in definition. This requires a change in the definition or the table.We suggest clearly defining exactly what Non-Consequential Load Loss is as "intended post-Contingency loss of load caused by operator or SPS (RAS) action."
Central Maine Power Company	No	As currently defined Non-Consequential Load Loss could allow widespread or cascading motor stall. The language in the definition cannot be this generic. The text is broad enough that it could allow a voltage collapse; the definition is incompatible with Table 1a (BES Transmission voltage instability, cascading outages, and uncontrolled islanding shall not occur). The definition for the non-consequential load loss combined with Table 1 would prohibit any customer from tripping its own load for contingencies that indicate 'no' in the non-consequential load loss column. This is not practical and appears to be an unintended consequence of the change in definition. This requires a change in the definition or the table.We suggest defining Non-

Organization	Yes or No	Comments for Question 9
		Consequential Load Loss as "intended post-Contingency loss of load caused by operator or SPS (RAS) action."
ISO New England	No	As currently defined Non-Consequential Load Loss could allow widespread or cascading motor stall. The language in the definition cannot be this generic. The text is broad enough that it could allow a voltage collapse, the definition is incompatible with Table 1a (BES Transmission voltage instability, cascading outages, and uncontrolled islanding shall not occur). The definition for the non-consequential load loss combined with Table 1 would prohibit any customer from tripping its own load for contingencies that indicate 'no' in the non-consequential load loss column. This is not practical and appears to be unintended consequencetof the change in definition. This requires a change in the definition or the table.We suggest defining Non-Consequential Load Loss as "intended post-Contingency loss of load caused by operator or SPS (RAS) action."
National Grid	No	As currently defined Non-Consequential Load Loss could allow widespread or cascading motor stall. The language in the definition cannot be this generic. The text is broad enough that it could allow a voltage collapse, the definition is incompatible with Table 1a (BES Transmission voltage instability, cascading outages, and uncontrolled islanding shall not occur). The definition for the non-consequential load loss combined with Table 1 would prohibit any customer from tripping its own load for contingencies that indicate 'no' in the non-consequential load loss column. This is not practical and appears to be unintended consequent of the change in definition. This requires a change in the definition or the table.It is suggested to redefine Non-Consequential Load Loss as "intended post-Contingency loss of load caused by operator or SPS (RAS) action."
Response: The SDT added Requirement R5 to require that every Transmission Planner and Planning Coordinator has a voltage criteria. The voltage criteria should prevent the exposure to widespread or cascading motor stall and should limit any potential misinterpretation that the Non-Consequential Load Loss would allow such events. Table 1a (BES Transmission voltage instability, Cascading, and uncontrolled islanding shall not occur) supports Requirement R5 and reinforces the point that the definition for Non-Consequential Load Loss should not be read so broadly as to allow for unacceptable events. The definition for the Non-Consequential Load Loss excludes end-user actions, which disconnect the Load from the system. So Table 1 does not apply to such Load. The proposed definition is too narrow and would only capture anticipated Load losses for predefined conditions. It would not capture unanticipated loss of Load, which still needs to be accounted for within the definition. To improve clarity, the SDT has revised the definition for Non-Consequential Load Loss. **Non-Consequential Load Loss:** Non-Interruptible Load loss that does not include: (1) Consequential Load Loss, (2) the response of voltage sensitive Load, or (3) Load that is disconnected from the System by end-user equipment		
Progress Energy Florida, Inc.	No	As PEF is opposed to TPL-001-1 as a whole, PEF will have no further comment on this issue other than to encourage all appropriate parties to review PEF's previous comments to this effect.
Response: Throughout the drafting process, the SDT has carefully considered your comments as well as comments from other industry members.		

Organization	Yes or No	Comments for Question 9
Deseret Power	No	Comments: The definition of Non-Consequential Load is in need of clarification. As written, it could be interpreted that load that is disconnected from the System by end-user equipment would not be allowed for certain contingencies. Suggested revision to the language follows Non-Interruptible Load loss other than: "Consequential Load Loss" the response of voltage sensitive Load ? Load that is disconnected from the System by end-user equipment. This version uses the same wording but clarifies that the term "other than" applies to all three things.
Response: Non-Consequential Load Loss: To improve clarity, the SDT has revised the definition for Non-Consequential Load Loss **Non-Consequential Load Loss:** Non-Interruptible Load loss that does not include: (1) Consequential Load Loss, (2) the response of voltage sensitive Load, or (3) Load that is disconnected from the System by end-user equipment.		
Sacramento Municipal Utility District	No	Definition of Non-Consequential Load (Non-CLL): This definition excludes from the "Non-Consequential Load" only the "Interruptible" portion of Demand Response. The last SDT response to a comment on Draft #3 stated that there is no ceiling on the amount of DSM that can be utilitized (see Reference 1 below). Since Demand Response is more than just "Interruptible" demand, it is recommended that the exclusion in the definition for Non-CLL be broadened to include other relevant categories (see Reference 2 below) of Demand Response / DSM that is acceptable. Reference 1: pdf page 310, 337: SDT response related to DSM at http://www.nerc.com/docs/standards/sar/ATFNSDT_third_posting_comment_responses_2009Sept16.pdf Reference 2: http://www.nerc.com/docs/pc/drdtf/DADS_Phase_III_Final_090109.pdf, Figure 3 at pdf page 16, block under Capacity; and, associated definitions in Appendix III at pdf page 46 Use of the defined term "Planning Assessment" throughout the standard: Since the definition includes both performance evaluation (assessment) and corrective action to remedy identified deficiencies, its usage throughout the standard should be reviewed to ensure that it does not mandate corrective actions where the minimum requirement may be calling only for an assessment. The SDT should consider including a definition for "Spare Equipment Strategy". The SDT's comments on "spare equipment strategy" (at pdf page 122 of Consideration of Comments on 3rd Draft) state that it is based on a directive from FERC Order 693. Directives that impact reliability should be translated in to a requirement in a Standard. Even the proposed scope of MOD-010-0 (reference http://www.nerc.com/files/2010-2012_RS-Development-Plan_Volume-I_II.pdf page 223) makes a reference to the strategy, but does not require it.
Response: DSM: The SDT believes that any Load that is interruptible should be so under an agreement or tariff provision, which excludes it from the constraints of the TPL standard. No changes have been made. Non-Consequential Load Loss: To improve clarity, the SDT has revised the definition for Non-Consequential Load Loss. **Non-Consequential Load Loss:** Non-Interruptible Load loss that does not include: (1) Consequential Load Loss, (2) the response of voltage sensitive Load, or (3) Load that is disconnected from the System by end-user equipment Planning Assessment: The SDT considered the comment, but feels that a Corrective Action Plan includes the 'do nothing' option, which would address the concern		

Organization	Yes or No	Comments for Question 9
and decided not to change the definition. Spare equipment strategy: The SDT believes that spare equipment strategy can be managed by individual Transmission Owners and that the term does not have to be defined in the Standard. The SDT further believes it has satisfied the intent of the directive of FERC Order 693 by including Requirement R2, part 2.1.5. No changes have been made.		
Midwest ISO	No	Definition Section: The definition for "Bus Tie Breaker" should be revised to clarify whether a breaker in a standard ring bus or breaker and one-half scheme should be considered a "bus tie breaker". Definition Section: We believe that the "Year One" definition changes have clarified what is intended. Definition Section: We suggest having the following definition of Consequential Generation Loss added to the definition section. Consequential Generation Loss - All generation that is no longer connected to the transmission system as a result of Transmission Facilities being removed from service by a Protection System operation designed to isolate the fault.
Response: Bus-Tie Breaker: The SDT has elected to define a Bus-Tie Breaker. If the SDT were to also define what is not a Bus-Tie Breaker, then anything that was missed would not be defined. To be comprehensive, the SDT has to limit the definition to what a Bus-Tie Breaker is to avoid further complexity. No changes have been made. Consequential Generation Loss: Generation run-back and tripping is acceptable. It is up to the Planning Coordinator and the Transmission Planner to determine how many units or cumulative MW may be interrupted due to either a consequential or non-consequential action. Therefore it isn't necessary for the SDT to define Consequential Generation Loss. Note 'b' has been revised to clarify the issue. Consequential Load Loss as well as generation loss is acceptable as a consequence of any planning or extreme event excluding P0. **Note 'b':** Consequential Load Loss as well as generation loss is acceptable as a consequence of any planning or extreme event excluding P0.		
Northeast Power Coordinating Council--RSC	No	Definitions " Year One " This still defines Year One as both a particular year AND a window. It cannot be both. Suggest rewording the second sentence to read: "This is further defined as beginning 12-18 months from the end of the current year." As currently defined Non-Consequential Load Loss could allow widespread or cascading motor stall. The language in the definition cannot be this generic. The text is broad enough that it could allow a voltage collapse. The definition is incompatible with Table 1a (BES Transmission voltage instability, cascading outages, and uncontrolled islanding shall not occur). The definition for the non-consequential load loss combined with Table 1 would prohibit any customer from tripping its own load for contingencies that indicate 'no' in the non-consequential load loss column. This is not practical and appears to be an unintended consequence of the change in definition. This requires a change in the definition or the table.It is suggested to redefine Non-Consequential Load Loss as "intended post-Contingency loss of load caused by operator or SPS (RAS) action."

Organization	Yes or No	Comments for Question 9
Response: Year One: The SDT does not agree that there is an issue and has not changed the definition. No change made. Non-Consequential Load Loss: The SDT added Requirement R5 to require that every Transmission Planner and Planning Coordinator has a voltage criteria. The voltage criteria should prevent the exposure to widespread or cascading motor stall and should limit any potential misinterpretation that the Non-Consequential Load Loss would allow such events. Table 1a (BES Transmission voltage instability, Cascading, and uncontrolled islanding shall not occur) supports Requirement R5 and reinforces the point that the definition for Non-Consequential Load Loss should not be read so broadly as to allow for unacceptable events. The definition for the Non-Consequential Load Loss excludes end-user actions, which disconnect the Load from the system. So Table 1 does not apply to such Load. The proposed definition is too narrow and would only capture anticipated Load losses for predefined conditions. It would not capture unanticipated loss of Load, which still needs to be accounted for within the definition. To improve clarity, the SDT has revised the definition for Non-Consequential Load Loss. **Non-Consequential Load Loss:** Non-Interruptible Load loss that does not include: (1) Consequential Load Loss, (2) the response of voltage sensitive Load, or (3) Load that is disconnected from the System by end-user equipment.		
Gainesville Regional Utilities	No	I still find the Non-Consequential Load Loss definition vague. But, I presently do not have anything better to offer and thus I can live with it.
Response: Thank you for your response.		
SRC of ISO/RTO	No	In note b of the steady state and stability section of Table 1, consequential generation loss is referenced; however, there is no definition of such. A definition of consequential generation loss that is defined similar to "consequential load loss" should be added. The definition for "Bus Tie Breaker" should be revised to clarify whether a breaker in a standard ring bus or breaker and one-half scheme should be considered a "bus tie breaker". "year one" definition changes have clarified what is intended. AESO does not comment on VSLs or VRFs.
Response: Consequential Generation Loss: Generation run-back and tripping is acceptable. It is up to the Planning Coordinator and the Transmission Planner to determine how many units or cumulative MW may be interrupted due to either a consequential or non-consequential action. Therefore it isn't necessary for the SDT to define Consequential Generation Loss. Note 'b' has been revised to clarify the issue. **Note 'b':** Consequential Load Loss as well as generation loss is acceptable as a consequence of any planning or extreme event excluding P0. Bus Tie Breaker: The SDT has elected to define a Bus Tie Breaker. If the SDT were to also define what is not a Bus Tie Breaker, then anything that was missed would not be defined. To be comprehensive the SDT has to limit the definition to what a Bus Tie Breaker is to avoid further complexity.		

Organization	Yes or No	Comments for Question 9
The SDT does not see the difference between what is in the draft and what is proposed and does not agree that there is an issue. No change has been made to the definition.		
TVA System Planning	No	Is the 12-18 months referenced in the Year One definition actually from the start of the TA or the anticipated completion date of the same TA? Suggest revising the Non-Consequential Load Loss definition: Non-Interruptible Load loss other than (1) Consequential Load Loss, (2) the response of voltage sensitive Load including Load that is disconnected from the System by end-user equipment, and (3) utility loads such as pump storage loads, compressed air generating pumping loads, and scrubber loads, etc when such loads do not result in tripping of a generating unit.
Response: Year One: Year One begins 12-18 months from the end of the calendar year. No change made. Non-Consequential Load Loss: To improve clarity, the SDT has revised the definition for Non-Consequential Load Loss. **Non-Consequential Load Loss:** Non-Interruptible Load loss that does not include: (1) Consequential Load Loss, (2) the response of voltage sensitive Load, or (3) Load that is disconnected from the System by end-user equipment. The SDT interpreted utility loads such as pump storage loads, compressed air generating pumping loads, and scrubber loads as interruptible loads, which don't need to be highlighted separately. As a result, no changes were made to include this list.		
NYISO	No	Question # 9 The SDT has revised the definitions in response to industry comments to the third posting. Do you agree with these definition changes? If not, please clearly indicate which definition you disagree with and provide specific comments. No. Need to define "Steady State" and "Consequential Load" as well as other phrases included throughout the NYISO's response.
Response: 'Steady State' was changed to 'steady state', so no definition is required. No change made. No instances of 'Consequential Load' were identified in the draft standard. All of the references were to 'Consequential Load Loss', which is defined. No change made.		
Oklahoma Gas & Electric	No	R 3.4, R3.5, R4.4 & R4.5 There appear to be no standards of directions on identifying severe or extreme system impacts. This may need to be defined. Extreme events evaluated (last page of Table 1) OG&E needs more specific information on what is defined to be an extreme event before offering support. It appears the number of possible combinations and permutations that could be run make any compressive study overwhelming to perform and would provide very limited benefits. This needs to be clarified.
Response: Extreme event: The SDT agrees that extreme event analysis could be overwhelming if all possible combinations and permutations were evaluated. However that is not the expectation. Requirement R3, part 3.5 of the standard requires only those extreme events "that are expected to produce more severe System Impacts". Therefore this is a judgment call with a corollary expectation that one can provide an explanation of the thoughts behind the judgment for selecting the events.		

Organization	Yes or No	Comments for Question 9
Duke Energy	No	Reword the definition of Non-Consequential Load Loss as follows: Non-Interruptible Load loss other than Consequential Load Loss and other than the response of voltage sensitive Load including Load that is disconnected from the System by end-user equipment.
Response: Non-Consequential Load Loss: To improve clarity, the SDT has revised the definition for Non-Consequential Load Loss. **Non-Consequential Load Loss:** Non-Interruptible Load loss that does not include: (1) Consequential Load Loss, (2) the response of voltage sensitive Load, or (3) Load that is disconnected from the System by end-user equipment.		
Florida Power and Light	No	The definition of "Known Commitments" should explain how that would differentiate between Planned Commitments Planning Assessment definition should be clarified as follows: Planning Assessment: Documented evaluation of (1) studies of future Transmission System performance and (2) Corrective Action Plans (included in studies) to remedy identified deficiencies. Non-Consequential Load Loss definition should be clarified as follows: Non-Consequential Load Loss: Non-Interruptible Load loss that does not include: (1) Consequential Load Loss, or (2) the response of voltage sensitive Load that is disconnected from the System by end-user equipment. The SDT should do a search through the document (and Table 1) on “cascading” and capitalize the “C” and delete “outages” where it appears after “Cascading”.
Response: Known Commitments: The SDT believes that the existing language is adequate and no further change is required. If you do not have any known Firm Transmission Service as an example, then this fact should just be documented. Planning Assessment: The SDT considered the comment, but feels that a Corrective Action Plan includes the ‘do nothing’ option, which would address the concern and decided not to change the definition. Non-Consequential Load Loss: To improve clarity, the SDT has revised the definition for Non-Consequential Load Loss. **Non-Consequential Load Loss:** Non-Interruptible Load loss that does not include: (1) Consequential Load Loss, (2) the response of voltage sensitive Load, or (3) Load that is disconnected from the System by end-user equipment. The SDT did change, “cascading outages” to “Cascading” throughout the standard as suggested.		
Ameren	No	The definition of Bus-tie Breaker is unclear. This definition needs to be made clearer to remove issues regarding P2 and P5 planning events. We suggest the following additional language: A breaker in a standard breaker-and-a-half or ring bus configuration is not a Bus-tie Breaker. Suggest rewording Non-Consequential Load Loss definition: Non-Interruptible Load loss other than Consequential Load Loss. Non-Consequential Load Loss does not include the response of voltage sensitive

Organization	Yes or No	Comments for Question 9
		Load or Load that is disconnected from the System by end-user equipment.
Response: Bus-Tie Breaker: The SDT has elected to define a Bus-Tie Breaker. If the SDT were to also define what is not a Bus-Tie Breaker, then anything that was missed would not be defined. To be comprehensive the SDT has to limit the definition to what a Bus-Tie Breaker is to avoid further complexity. Non-Consequential Load Loss: To improve clarity, the SDT has revised the definition for Non-Consequential Load Loss. **Non-Consequential Load Loss:** Non-Interruptible Load loss that does not include: (1) Consequential Load Loss, (2) the response of voltage sensitive Load, or (3) Load that is disconnected from the System by end-user equipment.		
Arizona Public Service Co.	No	The definition of Non-Consequential Load is confusing. It is not clear whether the response of voltage sensitive load and the load that is disconnected by the end user is included or not included. It is suggested that all items that are excluded be itemized and that there be no ambiguity.
Response: Non-Consequential Load Loss: To improve clarity, the SDT has revised the definition for Non-Consequential Load Loss. **Non-Consequential Load Loss:** Non-Interruptible Load loss that does not include: (1) Consequential Load Loss, (2) the response of voltage sensitive Load, or (3) Load that is disconnected from the System by end-user equipment.		
Bonneville Power Administration	No	The definition of Non-Consequential Load is in need of clarification. As written, it could be interpreted that load that is disconnected from the System by end-user equipment would not be allowed for certain contingencies. Suggested revision to the language followsNon-Interruptible Load loss other than: " Consequential Load Loss " the response of voltage sensitive Load " Load that is disconnected from the System by end-user equipment.This version uses the same wording but clarifies that the term "other than" applies to all three things.
Idaho Power	No	The definition of Non-Consequential Load is in need of clarification. As written, it could be interpreted that load that is disconnected from the System by end-user equipment would not be allowed for certain contingencies. Suggested revision to the language followsNon-Interruptible Load loss other than: " Consequential Load Loss " the response of voltage sensitive Load ? Load that is disconnected from the System by end-user equipment.This version uses the same wording but clarifies that the term "other than" applies to all three things.
Modesto Irrigation District Transmission Planning	No	The definition of Non-Consequential Load is in need of clarification. As written, it could be interpreted that load that is disconnected from the System by end-user equipment would not be allowed for certain contingencies. Suggested revision to the language followsNon-Interruptible Load loss other than: " Consequential Load Loss " the response of voltage sensitive Load " Load that is disconnected from the System by end-user equipment.This version uses the same wording but clarifies that the term "other than" applies to all three things.
NV Energy	No	The definition of Non-Consequential Load is in need of clarification. As written, it could be interpreted that load that is disconnected from the System by end-user equipment would not be allowed for certain contingencies. Suggested revision to the language followsNon-Interruptible Load loss other than: " Consequential Load Loss " the response of voltage sensitive Load ? Load that is disconnected from the System by end-user

Organization	Yes or No	Comments for Question 9
		equipment.This version uses the same wording but clarifies that the term “other than” applies to all three things.
Pacific Gas and Electric Co.	No	The definition of Non-Consequential Load is in need of clarification. As written, it could be interpreted that load that is disconnected from the System by end-user equipment would not be allowed for certain contingencies. Suggested revision to the language followsNon-Interruptible Load loss other than: “ Consequential Load Loss “ the response of voltage sensitive Load ? Load that is disconnected from the System by end-user equipment.This version uses the same wording but clarifies that the term “other than” applies to all three things.
Puget Sound Energy, Inc.	No	The definition of Non-Consequential Load is in need of clarification. As written, it could be interpreted that load that is disconnected from the System by end-user equipment would not be allowed for certain contingencies. Suggested revision to the language followsNon-Interruptible Load loss other than: “ Consequential Load Loss “ the response of voltage sensitive Load ? Load that is disconnected from the System by end-user equipment.This version uses the same wording but clarifies that the term “other than” applies to all three things.
San Diego Gas & Electric Co	No	The definition of Non-Consequential Load is in need of clarification. As written, it could be interpreted that load that is disconnected from the System by end-user equipment would not be allowed for certain contingencies. Suggested revision to the language followsNon-Interruptible Load loss other than: “ Consequential Load Loss “ the response of voltage sensitive Load ? Load that is disconnected from the System by end-user equipment.
Southern California Edison (SCE)	No	The definition of Non-Consequential Load is in need of clarification. As written, it could be interpreted that load that is disconnected from the System by end-user equipment would not be allowed for certain contingencies. Suggested revision to the language followsNon-Interruptible Load loss other than: “ Consequential Load Loss “ the response of voltage sensitive Load ? Load that is disconnected from the System by end-user equipment.This version uses the same wording but clarifies that the term “other than” applies to all three things.
SRP	No	The definition of Non-Consequential Load is in need of clarification. As written, it could be interpreted that load that is disconnected from the System by end-user equipment would not be allowed for certain contingencies. Suggested revision to the language followsNon-Interruptible Load loss other than: “ Consequential Load Loss “ the response of voltage sensitive Load ? Load that is disconnected from the System by end-user equipment.This version uses the same wording but clarifies that the term “other than” applies to all three things.
Utility System Efficiencies, Inc. (USE)	No	The definition of Non-Consequential Load is in need of clarification. As written, it could be interpreted that load that is disconnected from the System by end-user equipment would not be allowed for certain contingencies. Suggested revision to the language followsNon-Interruptible Load loss other than: “ Consequential Load Loss “ the response of voltage sensitive Load ? Load that is disconnected from the System by end-user equipment.This version uses the same wording but clarifies that the term “other than” applies to all three things.
Western Area Power Adm - RMR	No	The definition of Non-Consequential Load is in need of clarification. As written, it could be interpreted that load that is disconnected from the System by end-user equipment would not be allowed for certain contingencies.

Organization	Yes or No	Comments for Question 9
		Suggested revision to the language follows:Non-Interruptible Load loss other than: " Consequential Load Loss " the response of voltage sensitive Load ? Load that is disconnected from the System by end-user equipment.This version uses the same wording but clarifies that the term "other than" applies to all three things.
Xcel Energy	No	The definition of Non-Consequential Load is in need of clarification. As written, it could be interpreted that load that is disconnected from the System by end-user equipment would not be allowed for certain contingencies. Suggested revision to the language followsNon-Interruptible Load loss other than: " Consequential Load Loss " the response of voltage sensitive Load ? Load that is disconnected from the System by end-user equipment.This version uses the same wording but clarifies that the term "other than" applies to all three things.
NorthWestern Energy	No	The definition of Non-Consequential Load needs clarification. A possible revision is to list bulleted items in the definition: Non-Interruptible Load loss other than: " Consequential Load Loss " the response of voltage sensitive Load ? Load that is disconnected from the System by end-user equipment.This way "other than" applies to all three bullets.
Response: Non-Consequential Load Loss: To improve clarity, the SDT has revised the definition for Non-Consequential Load Loss. **Non-Consequential Load Loss:** Non-Interruptible Load loss that does not include: (1) Consequential Load Loss, (2) the response of voltage sensitive Load, or (3) Load that is disconnected from the System by end-user equipment.		
Omaha Public Power District	No	The definition of Non-Consequential Load Loss is not clear. It's not clear whether "the response of voltage sensitive Load including Load that is disconnected from the System by end-user equipment" is considered to be Non-Consequential Load Loss or not. Based on previous drafts, it appears that the SDT's intent is that "the response of voltage sensitive Load including Load that is disconnected from the System by end-user equipment" is considered to be a special type of Consequential Load Loss--a type that transmission-planning entities are not allowed to rely upon to meet steady-state performance requirements. Comments on this fourth draft from one commenter seemed to indicate that he was interpreting the definition of Non-Consequential Load Loss to mean that "the response of voltage sensitive Load including Load that is disconnected from the System by end-user equipment" is considered to be Non-Consequential Load Loss. Consider breaking the definition of Non-Consequential Load Loss into two or more sentences to prevent misinterpretation and confusion. Also consider including a reference to "the response of voltage sensitive Load including Load that is disconnected from the System by end-user equipment" in the definition of Consequential Load Loss if this type of load loss is considered to be a special type of Consequential Load Loss. If this type of load loss is considered to be a special type of Consequential Load Loss, add the following sentence to the end of Note "b" at the top of Table 1: However, see Note "i" for a restriction that applies to steady state performance.
Response: Non-Consequential Load Loss: To improve clarity, the SDT has revised the definition for Non-Consequential Load Loss. **Non-Consequential Load Loss:** Non-Interruptible Load loss that does not include: (1) Consequential Load Loss, (2) the response of voltage sensitive Load, or (3) Load that is disconnected from the System by end-user equipment.		

Organization	Yes or No	Comments for Question 9
The SDT believes the reference to exclude voltage sensitive load belongs in the Non-Consequential Load Loss definition because this is neither Consequential nor Non-Consequential. No change was made to Note 'b' or 'i' for this issue.		
NERC System Protection and Control Subcommittee (SPCS)	No	The Drafting Team should change the definition of Consequential Load Loss to clarify that load lost due to operation of remote backup protection is not Consequential Load Loss. Operation of remote backup protection is not Normal Clearing for a fault.Consequential Load Loss: All Load that is no longer served by the Transmission System as a result of Transmission Facilities being removed from service by Normal Clearing initiated by the a Protection System operation designed to isolate the fault.
Response: Consequential Load Loss considering operation of remote backup protection: For the purpose of the Transmission Planning Standard the remote backup protection is still operating to isolate the fault and the SDT is interpreting the subsequent loss of Load to be Consequential Load Loss. No change was made.		
MidAmerican Energy Company	No	The SDT is to be commended for working on the Year One definition, however, MidAmerican continues to be concerned that if the standard is adopted with the Year One definition as written, it is incompatible with the eastern interconnection wide ERAG model process.The definition as currently provided in the draft standard states that Year One of analysis should begin 12-18 months from the end of the current calendar year. This contradicts the time frames that models are currently made available in the MRO as a result of the process for building models through the ERAG. For example, the models developed through the MRO and ERAG model building process in 2009 include cases for the years 2010, 2011, 2015, and 2020. According to the definition of Year One, the 2011 cases in the 2009 series models would be representative of Year One during the 2009 calendar year. However the ERAG models are not provided until late 2009, and some data sets may not be available until early 2010. With this Year One definition, there would be limited or no time where the ERAG model series would include cases representing Year One as defined in the draft standard. MidAmerican urges the SDT to delete the Year One definition altogether. Since the development of regional models are tied to ERAG models and since ERAG model timing is set at the interconnection-wide level, it is likely that nearly all Transmission Planners and Planning Coordinators are working with similar models that are available at similar times. It seems to MidAmerican that this detail on what Year One is can be easily controlled interconnection-wide through the ERAG and which models they provide when.However, if the SDT believes that the Year One definition is necessary, MidAmerican urges the SDT to revised the Year One definition from stating "12-18 months from the end of the current calendar year" to stating "0-18 months from the end of the current calendar year". This revised definition would be at least compatible with the current ERAG process.
Response: Year One: The SDT believes the definition will capture both a summer and winter peak and is necessary to provide a clear starting point for the planning horizon. With regards to any possible inconsistencies within the practices of any entity, the SDT believes that the requirements as defined are required for a Planning Assessment. How these requirements are met is beyond the scope of this standard and should be discussed within the responsible entities. No changes were made.		
Tri-State Generation and Transmission Association	No	The SDT removed definitions of Extreme Events and Load Reduction. We still need to have some scale to differentiate N-1 from less likely but possibly higher impact events. However, we do understand that such a

Organization	Yes or No	Comments for Question 9
		criteria will take some time to develop, and should perhaps be a separate subject addressed by a new SAR. Year One has a flexible definition. It does not seem very intuitive. We can't say whether this is good or bad, although one entity's year one could overlap with another's year two.
Response: The SDT doesn't see a problem with entities having slightly different study periods. This situation exists under the current TPL Standards.		
US Bureau of Reclamation	No	The term "Consequential Load Loss" and "Planning Assessment" contain the terms "Transmission System" and/or "Transmission Facilities". The terms "Transmission System and Transmission Facilities are not defined in the NERC Glossary of Terms. The terms should either be in lower case or a definition added. The Term "Non-Consequential Load Loss" refers to a "Non-Interruptible Load" loss which is other than Consequential Load Loss. There is no mention in the Consequential Load Loss definition of the type of load (interruptible or non-interruptible). This adds confusion to what appears to be the distinction in the differences between the two, that one was the result of a fault and the other was the result of voltage.
Response: Transmission system: The SDT was unable to find a reference to 'Transmission System'. The SDT believes the references to 'Transmission system' were used correctly and no change was made. Transmission Facility: 'Facility' is a defined term in the NERC Glossary. The SDT believes the references to 'Transmission Facilities' are used correctly and no change was made. Non- Interruptible Load: Consequential Load Loss can be either interruptible or Non-Interruptible, so the distinction is not required. Non-Consequential is not a concern if it is interrupting interruptible load, but is a concern if it is inappropriately interrupting Non-Interruptible load. So the definition for Non-Consequential Load Loss is specific to Non-Interruptible load. The SDT disagrees with your statement that the loss of Non-Consequential load is the result of voltage. Load Loss as a result of voltage sensitivity is excluded from Non-Consequential Load Loss by the definition. No changes have been made.		
American Transmission Company	No	We suggest the following changes: Add a Consequential Generation Loss definition, which would be a complement to the Consequential Load Loss definition. Both consequential load loss and consequential generation loss are referred to in note "b" of the Steady State & Stability section of Table 1, but only consequential load loss is defined. We suggest text of: "Consequential Generation Loss: All Generation that is no longer delivered to any Transmission Facilities as a result of the Transmission Facilities removal from service by the operation of the installed Protection Systems designed to isolate fault conditions or otherwise protect the Transmission Facilities from abnormal operating conditions. Revise the Consequential Load Loss definition to include protection for abnormal operating conditions. We suggest text of: "Consequential Load Loss: All Load that is no longer served by any Transmission Facilities as a result of the Transmission Facilities removal from service by the operation of the installed Protection Systems designed to isolate fault conditions or otherwise protect the Transmission Facilities from abnormal operating conditions."Revise the Planning Assessment definition to more explicitly apply to the BES and the TPL-001 requirements. We suggest text of: "Planning Assessment: Documented evaluation of future Transmission System performance and Corrective Action Plans to remedy identified deficiencies in the BES from the steady

Organization	Yes or No	Comments for Question 9
		state and stability performance requirements set forth in the TPL-001 standard." Add a Planning Horizon definition. This term is used in this proposed standard, in the FAC-010-2 standard, and possibly in other future standards, but it has not been defined yet.
Response: Consequential Generation Loss: Generation run-back and tripping is acceptable. It is up to the Planning Coordinator and the Transmission Planner to determine how many units or cumulative MW may be interrupted due to either a consequential or non-consequential action. Therefore it isn't necessary for the SDT to define Consequential Generation Loss. Note 'b' has been revised to clarify the issue. Consequential Load Loss as well as generation loss is acceptable as a consequence of any planning or extreme event excluding P0. **Note 'b':** Consequential Load Loss as well as generation loss is acceptable as a consequence of any planning or extreme event excluding P0. Consequential Load Loss: The SDT disagrees with your proposed revision to the definition for Consequential Load Loss because it would provide for the use of an SPS or RAS to trip Consequential Load for an undefined 'abnormal condition', which is not an acceptable definition. No change is made. Applicability to BES: It is stated in the Purpose that the Standard applies to the BES. Therefore, the SDT doesn't see the need to have to repeat that throughout the document. Therefore no change is made. Planning Horizon: The only location where planning horizon didn't specify Near-Term or Long-Term was in the 'Purpose'. The SDT didn't feel that this reference needed to be specific or was sufficient to warrant a definition. No changes have been made.		
SERC Dynamics Review Subcommittee (DRS)	No	With the simplified definition for Bus-tie Breaker, would a breaker in a standard ring bus or breaker-and-a-half scheme be considered a Bus-tie Breaker? Request the definition be revised to clarify as follows: Add this sentence to the end of the definition: "A breaker in a standard breaker"and-a-half or ring bus configuration is not a Bus-tie Breaker. Suggest revising the Non-Consequential Load Loss definition to: Non-Interruptible Load loss other than (1) Consequential Load Loss and (2) the response of voltage sensitive Load including Load that is disconnected from the System by end-user equipment.
SERC Planning Standards Subcommittee	No	With the simplified definition for Bus-tie Breaker, would a breaker in a standard ring bus or breaker-and-a-half scheme be considered a Bus-tie Breaker? Request the definition be revised to clarify this. Suggest revising the Non-Consequential Load Loss definition: Non-Interruptible Load loss other than (1) Consequential Load Loss and (2) the response of voltage sensitive Load including Load that is disconnected from the System by end-user equipment.
Response: Bus-Tie Breaker: A breaker in a ring bus or a breaker-and-a half scheme would not be considered Bus-tie breakers. The SDT has elected to define a Bus-Tie Breaker. If the SDT were to also define what is not a Bus-Tie Breaker, then anything that was missed would not be defined. To be comprehensive the SDT has to limit the definition to what a Bus-Tie Breaker is to avoid further complexity. Non-Consequential Load Loss: To improve clarity, the SDT has revised the definition for Non-Consequential Load Loss.		

Organization	Yes or No	Comments for Question 9
Non-Consequential Load Loss: Non-Interruptible Load loss that does not include: (1) Consequential Load Loss, (2) the response of voltage sensitive Load, or (3) Load that is disconnected from the System by end-user equipment.		
American Electric Power	Yes	
British Columbia Transmission Corp	Yes	
Exelon Transmission Planning	Yes	
FirstEnergy Corp	Yes	
Florida Municipal Power Agency, and its Member Cities	Yes	
Independent Electricity System Operator	Yes	
Manitoba Hydro	Yes	
Pepco Holdings, Inc. - Affiliates PHI	Yes	
Progress Energy Carolinas	Yes	
SCE&G	Yes	
TIS	Yes	
Orlando Utilities Commission	Yes	I agree, but that is based on not having seen any proposed changes from others that might change my mind.
Lafayette Utilities System	Yes	LUS generally supports the changes to the definitions and the changes to the rest of the standard. We appreciate the efforts of the SDT in responding to the many comments that were filed in response to version 3, and in crafting what appears to LUS to be a reasonable attempt to attain a consensus position, at least as we understand the result.
ITC Holdings	Yes	None

Organization	Yes or No	Comments for Question 9
PJM	Yes	
Response: Thank you.		
Oncor Electric Delivery	Yes	(Motor stall should not be included in this section) The language in the definition cannot be this generic. This becomes open to interpretation in Table 1. Localized load may not be an issue, but the text is broad enough that it could allow a voltage collapse.
Response: Non-Consequential Load Loss: The SDT added Requirement R5 to require that every Transmission Planner and Planning Coordinator has a voltage criteria. The voltage criteria should prevent the exposure to widespread or cascading motor stall and should limit any potential misinterpretation that the Non-Consequential Load Loss would allow such events. Table 1a (BES Transmission voltage instability, Cascading, and uncontrolled islanding shall not occur) supports Requirement R5 and reinforces the point that the definition for Non-Consequential Load Loss should not be read so broadly as to allow for unacceptable events. The definition for the Non-Consequential Load Loss excludes end-user actions, which disconnect the Load from the system. So Table 1 does not apply to such Load. To improve clarity, the SDT has revised the definition for Non-Consequential Load Loss. **Non-Consequential Load Loss:** Non-Interruptible Load loss that does not include: (1) Consequential Load Loss, (2) the response of voltage sensitive Load, or (3) Load that is disconnected from the System by end-user equipment.		
Southern Company	Yes	Suggest revising the Non-Consequential Load Loss definition for additional clarity to the following: Non-Interruptible Load loss other than (1) Consequential Load Loss and (2) the response of voltage sensitive Load including Load that is disconnected from the System by end-user equipment.
Response: Non-Consequential Load Loss: To improve clarity, the SDT has revised the definition for Non-Consequential Load Loss. **Non-Consequential Load Loss:** Non-Interruptible Load loss that does not include: (1) Consequential Load Loss, (2) the response of voltage sensitive Load, or (3) Load that is disconnected from the System by end-user equipment.		

10. Do you agree with the changes in the performance elements and notes in Table 1? If not, please provide specific comments by note number, note alpha character, or performance category.

Summary Consideration: Several footnote reference errors were reflected in Table 1 when migrating from Draft 3 to Draft 4 that led to unfortunate confusion. Final edits failed to correctly show footnote renumbering needed for removal of the Draft 3 footnote 1 which was moved to Requirement R4. All references to the prior Draft 3 footnote 1 should have been removed in Draft 4 and the remaining footnote references as shown in Draft 3 should have been decremented by a value of one. In Draft 5, the SDT has corrected the footnote references and the changes made are summarized as follows:

Table Area Reference	Footnote Reference Errors in Draft 4	Comment
Header notes	Yes	For item "j" the footnote reference to footnote "1" is now removed.
Title Row, Planning Events	No	All footnote references were shown correctly in Draft 4. No changes required in Draft 5.
Planning Event P0	No	No footnote references are used in this row in Draft 4. No changes required in Draft 5.
Planning Event P1	No	All footnote references were shown correctly in Draft 4. No changes required in Draft 5.
Planning Event P2	No	All footnote references were shown correctly in Draft 4. No changes required in Draft 5.
Planning Event P3	Yes	Footnote references to "19" should have been "9".
Planning Event P4	Yes	In the column titled "Category" the footnote reference to "101" should have been "10". In the column titled "Interruption of Firm Transmission Service Allowed" the footnote reference to "10" should have been "9."
Planning Event P5	Yes	In the column titled "Interruption of Firm Transmission Service Allowed" the footnote reference to "19" should have been "9".
Planning Event P6	No	All footnote references were shown correctly in Draft 4. No changes required in Draft 5.
Planning Event P7	No	All footnote references were shown correctly in Draft 4. No changes required in Draft 5.
Extreme Events Steady-State 2a & 2b	Yes	Footnote references to "12" should have been "11".

Table Area Reference	Footnote Reference Errors in Draft 4	Comment
Extreme Events Stability 2a, 2b, 2c, 2d	Yes	Footnote references to "11" should have been "10".
Extreme Events Stability 2e	Yes	Footnote references to "11" should have been removed.

A number of commenters indicated that some planning events will result in the same elements being removed from service and sought clarification on whether or not each event required analysis. The SDT acknowledges that different initiating events may result in identical Facilities being removed by protection action. While there may be some overlap in the steady-state timeframe, care must be taken to ensure proper reviews are made in the Stability timeframe where warranted due to delayed clearing modes that may result from the initiating event. For example, a bus fault and a stuck breaker may each clear a bus; however, the stuck breaker will have different reaction times due to the delayed clearing mode and therefore may warrant a review in a Stability environment. The standard allows the Transmission Planner and Planning Coordinator flexibility in using engineering judgment for the Table 1 events it studies for both the steady-state and Stability environments. Both Requirements R3 (steady-state study) and R4 (Stability study) include text indicating the Transmission Planner and Planning Coordinator are to study those events "…that are expected to produce more severe System impacts on its portion of the BES, shall be identified and a list of those Contingencies to be evaluated for System performance …" If a Transmission Planner/Planning Coordinator can justify that certain events are duplicative for a given timeframe then at their discretion they may elect to limit their Contingency list so long as their entire Contingency list covers the events that "produce the more severe impacts" for their System. Planning event P2-1 was renamed to "Opening of a line section w/o a fault" to better clarify the SDT's intended analysis. This was in response to some commenters who remained confused by the P2-1 event and felt a detailed breaker model may be necessary. The drafting team clarifies here that a detailed breaker model is not needed. Conforming changes were also made to footnote 7 to make clear the intent of this planning event.

The P5 Protection System Failure event description was changed in support of stakeholders who indicated that multiple element outages may not always result from a P5 event and that it may only result in Delayed Fault Clearing of the faulted Transmission element/Facility. The P5 event now states "Failure of a single Protection System that results in Delayed Fault Clearing on one of the following:"

Footnote 9 is now applied to all "No" items for the column "Interruption of Firm Transmission Service Allowed". Footnote 9 clarifies that Firm Transmission Service can be interrupted so long as appropriate re-dispatch of resources are available and obligated to re-dispatch without any firm Load loss and that Facility ratings are maintained.

Some commenters expressed confusion on whether or not an event is classified as an EHV or HV event. This is an important concept to understand as it directly relates to the stated Table 1 criteria for Interruption of Firm Transmission Service and Non-Consequential Load Loss. The event is classified as EHV or HV based on the lowest nominal system voltage level of all the Facilities removed by the event studied and regardless of the fault location. For example, a fault that removes a 345/138kV

transformer is classified as a high-voltage (HV) event and the HV criteria apply. Changes to footnotes 1 and 5 were made to aid understanding in this regard.

Note changes are as follows:

Header note 'f': Applicable Facility Ratings shall not be exceeded.

Header note 'g': System steady state voltages and post-Contingency voltage deviations shall be within acceptable limits as established by the Planning Coordinator and the Transmission Planner.

Footnote 1 - If the event analyzed involves BES elements at multiple System voltage levels, the lowest System voltage level of the element(s) removed for the analyzed event determines the stated performance criteria regarding allowances for interruptions of Firm Transmission Service and Non-Consequential Load Loss.

Footnote 2 - Unless specified otherwise, simulate Normal Clearing of faults. Single line to ground (SLG) or three phase (3Ø) are the fault types that must be evaluated in Stability simulations for the event described. A 3Ø or a double line to ground fault study indicating the criteria are being met is sufficient evidence that a SLG condition would also meet the criteria.

Footnote 3 - Bulk Electric System (BES) level references include extra-high voltage (EHV) Facilities defined as greater than 300kV and high voltage (HV) Facilities defined as the 300kV and lower voltage Systems. The designation of EHV and HV is used to distinguish between stated performance criteria allowances for interruption of Firm Transmission Service and Non-Consequential Load Loss.

Footnote 5 - For non-Generator Step Up transformer outage events, the reference voltage, as used in footnote 1, applies to the low-side winding (excluding tertiary windings). For generator and Generator Step Up transformer outage events, the reference voltage applies to the BES connected voltage (high-side of the Generator Step Up transformer). Requirements which are applicable to transformers also apply to variable frequency transformers and phase shifting transformers.

Footnote 7 - Opening one end of a line section without a fault on a normally networked Transmission circuit such that the line is possibly serving Load radial from a single source point.

In addition, the definition of Non-Consequential Load Loss was revised to provide greater clarity:

Non-Consequential Load Loss: Non-Interruptible Load loss that does not include: (1) Consequential Load Loss, (2) the response of voltage sensitive Load, or (3) Load that is disconnected from the System by end-user equipment.

Organization	Yes or No	Comments for Question 10
FRCC Transmission Working Group		Please clearly indicate for P3 and P5 that note 1 and note 9 apply. Consider using a comma, not a note 19 that does not exist. The P2-1 event needs to be clarified with its intent. In the SDT Consideration of Comments to the 3rd DRAFT posting, the response to Transmission Planning clarified that "There is no need to show a line energized up to the

Organization	Yes or No	Comments for Question 10
		breakers that opened. The intent is simply to look for low voltage or thermal problems while supplying Load from one end of a normally networked line." This could be accomplished by adding this to footnote 7 or re-naming the event "Opening of a Line Section w/o fault".
Response: Several footnote reference errors were reflected in Table 1 when migrating from Draft 3 to Draft 4 that led to unfortunate confusion. In Draft 5, the SDT has corrected the footnote references and a detailed explanation of the changes required is summarized in the above Summary Considerations for Question 10. The SDT has accepted the commenter's suggestion to better clarify the P2-1 planning event. The Event description in Table 1 for the P2-1 planning event has been re-titled "Opening of a line section w/o a Fault[7]" and the corresponding footnote number 7 has been revised to read as follows: **Footnote 7** - Opening one end of a line section without a fault on a normally networked Transmission circuit such that the line is possibly serving Load radial from a single source point.		
SRP	No	: As currently drafted, several outages identified in Categories P2, P4, and P5 appear to potentially result in the same elements being removed from service, so therefore the same event, even though the initiating event is different. We believe that the drafting team needs to conduct a workshop prior to balloting to educate the industry on what outages are required to be simulated for which Categories. Additionally there are footnotes numbered 12, 19, and 101, which do not relate to any foot note in the document, and some other footnotes seem to be misplaced. We encourage the drafting team to carefully review all footnotes to ensure accuracy prior to balloting this standard.
Response: The SDT agrees that some planning events will result in the same elements being removed from service. However, the similarities may only be valid from a steady-state view point and care must be taken to review the events in the Stability timeframe due to delayed clearing modes that may result from the initiating event. For example, a bus fault and a stuck breaker may each clear a bus; however, the stuck breaker will have different reaction times due to the delayed clearing mode and therefore may warrant a review in a Stability environment. The standard allows the Transmission Planner and Planning Coordinator flexibility in using engineering judgment for the Table 1 events in which it studies for both the steady-state and Stability environments. Both Requirements R3 (steady-state study) and R4 (Stability study) include text indicating the Transmission Planner and Planning Coordinator are to study those events "…that are expected to produce more severe System impacts on its portion of the BES, shall be identified and a list of those Contingencies to be evaluated for System performance …" If a Transmission Planner/Planning Coordinator can justify that certain events are duplicative for a given timeframe then at their discretion they may elect to limit their Contingency list so long as their entire Contingency list covers the events that "produce the more severe impacts" for their System. At this time the SDT does not plan to conduct a workshop as suggested by the commenter. If Regional Entities wish to conduct seminars on the standard, SDT members from that region could be made available as participants in the discussions. Several footnote reference errors were reflected in Table 1 when migrating from Draft 3 to Draft 4 that led to unfortunate confusion. In Draft 5, the SDT has corrected the footnote references and a detailed explanation of the changes required is summarized in the above Summary Considerations for Question 10.		
Northeast Utilities	No	[Comment on Non-Consequential Load Allowed for certain Planning Events] We recommend that the standard as written should not allow non-consequential load loss to be used to resolve violations arising from the planning events in Table 1. We believe that planning for a reliable power system should discourage mitigation by load loss. Therefore, Non-Consequential Load Loss should not be allowed in a future looking system plan.

Organization	Yes or No	Comments for Question 10
		[Comment on Table 1 Item e, under Steady State & Stability] Our understanding here is that we should be able to redispatch after the first contingency (using fast start generation) to secure the system in anticipation of a second contingency and not redispatch to fix first contingency violations. Is this interpretation correct?Further, this standard doesn't specify which units can be adjusted following the contingency. This seems to stress the fact that the standard needs to address the definition of what is a base case. Also, the standard should be clear on whether we can or cannot rely on generation redispatch after the first contingency, i.e., should the failure of a fast start generator to start up be included in the contingency, or is this another level of contingency? [Comments on Footnotes] Footnotes 1, 10, 11, 19 and 101 need to be fixed. They are either mislabeled or do not point to any item.
Response: The SDT disagrees with the commenter's view related to disallowing Non-Consequential Load Loss for any planning event. The SDT believes they have made the appropriate expectations in not permitting its use for some Contingency planning events involving EHV Facilities. A Transmission Planner/Planning Coordinator may implement a more conservative planning approach beyond what TPL-001-1 requires if they believe one is warranted. The standard in Requirement R2, sub-part 2.7.1 (Corrective Action Plans) indicates that generation curtailment, tripping and re-dispatch are permissible Corrective Action Plans for both single and multiple Contingency events. Therefore, the SDT does not agree with Northeast Utilities view in this regard. The standard does not include prescriptive expectations for a "base case" conditions and allows flexibility to the TP/PC in this regard. See requirement R1 for initial model (P0 starting conditions) requirements. Starting of a "fast-start" generation unit appears to be viewed in the context of a Corrective Action solution to a studied planning event. There may situations like this that lend themselves to sensitivity analysis as required by the TPL-001-1 standard. Several footnote reference errors were reflected in Table 1 when migrating from Draft 3 to Draft 4 that led to unfortunate confusion. In Draft 5, the SDT has corrected the footnote references and a detailed explanation of the changes required is summarized in the above Summary Considerations for Question 10.		
British Columbia Transmission Corp	No	1. Table 1 event indicates loss of one of the equipment. It appears to be silent on the event classification regarding multiple equipments within the same protection zone. Is this considered as a single contingency or multiple contingencies? Please clarify. 2. Table 1 P5 refers to the event on loss of multiple elements caused by the failure of a single protection system while clearing a fault on one contingency. For systems equipped with dual or redundant protections, is a protection failure still a valid concern? Shouldn't this contingency analysis be excluded from the requirement? Please clarify. 3. Table 1 Extreme Events under Stability section, there is a reference to protection failure during fault clearing. Again for systems equipped with dual or redundant protections the requirement should be reconsidered. Please confirm. 4. Table 1 Extreme Events under both Steady State and Stability sections, there is a reference to loss of transmission lines on a common right-of-way. Please consider adding a Footnote to define the common right-of-way using minimum length similar to the one used for circuits on common structure (Footnote 12).

Organization	Yes or No	Comments for Question 10
		5. Performance Table 1 Footnote Item 1 on definition of angular stability, it states "For Planning Event P1: No generating unit or units shall be allowed to pull out of synchronism." o The requirement of no unit pull out of sync is not clear. Does this apply to small generators connected to distribution or lower voltage class lines? Or this is only applicable to generators connected to BEC (i.e. 100kV and above) without intermediary transmission voltage line connections? 6. Table 1 Footnote Item 6 refers to the "reference voltage" for transformers. What is the purpose of a reference voltage? Is this used to determine a valid transformer contingency? If so, according to the present definition a 3 phase fault on the 138kV side of a 138/66kV transformer is not considered a valid contingency to be assessed. Is this the intent?
Response: 1. The P1 Event is a single Contingency condition. A P1 Event may or may not remove other BES Facilities with it depending on the Protection System design. For example, a fault on a Transmission line (single Contingency) may also remove a BES transformer if no high-side transformer protection device is installed. 2. A P5 Event with a redundant Protection System will be covered by the analogous single Contingency event from a steady-state view. However, even with redundant Protection System designs there may be a delayed clearing mode that may need to be considered with the Stability timeframe. The standard allows the Transmission Planner and Planning Coordinator flexibility in using engineering judgment for the Table 1 events in which it studies for both the steady-state and Stability environments. Both Requirements R3 (steady-state study) and R4 (Stability study) include text indicating the Transmission Planner and Planning Coordinator are to study those events "…that are expected to produce more severe System impacts on its portion of the BES, shall be identified and a list of those Contingencies to be evaluated for System performance …" If a Transmission Planner/Planning Coordinator can justify that certain events are duplicative for a given timeframe then at their discretion they may elect to limit their Contingency list so long as their entire Contingency list covers the events that "produce the more severe impacts" for their System. 3. See response to item 2. 4. The commenter appears to have referenced a Draft 3 version of the standard. The change requested was included in Draft 4. Footnote 11 in draft 4 reads as follows: "Excludes circuits that share a common structure or common Right-of-Way for 1 mile or less". 5. The commenter appears to have referenced a Draft 3 version of the standard as the former Draft 3 footnote 1 was moved to Requirement R4, part 4.1.1 in draft 4. The applicability of the NERC Reliability Standards unless otherwise stated is the Bulk Electric System and Part 4.1.1 applies only to BES generating units. **6.** The commenter appears to have referenced a Draft 3 version of the standard and the question is related to footnote 5 of the Draft 4 standard. The term "reference voltage" is used in determining if a transformer is classified as EHV or HV for the BES. This classification then ties to footnote 1 in regards to provisions for the interruption of Firm Transmission Service and Non-Consequential Load Loss. For example, if a 345/138 kV TR is outaged for the Event studied, the high-voltage (HV) allowances for interruption of Firm Transmission Service and loss of Non-Consequential Load would apply. The 138/66 kV transformer may not be classified as a BES Facility, your Regional Entity definition of the BES should be consulted for an official position.		
NERC Standards Review Subcommittee	No	A. P3 Modify the P3 Category performance criteria to apply only to the loss of two generators because the probability of the loss of two base load generators is an order of magnitude greater than the loss of a generator and any other transmission element. The MRO NSRS suggests the listing of: the loss of transmission circuit, transformer, shunt device, and single pole of DC line be removed from the P3 Events column. Move the

Organization	Yes or No	Comments for Question 10
		"generator + another element" events to the P6 Category by adding "1. Generator" to the listing in the Initial System Condition (Loss of . . .) column. B. The SDT should be commended for the changes that were made to Table 1. However, the MRO NSRS does recommend a few editorial changes. On page 16 under the Steady State and Stability heading is item d. Simulate Normal Clearing unless otherwise specified. This is also listed as footnote 2 to the table. The MRO NSRS recommends that item d under the Steady State and Stability heading be deleted. C. Why is there a footnote 1 indicator to note j. under Stability only? The MRO NSRS suggests that this footnote 1 indicator be deleted. D. Item i. under Steady State only states that "the response of voltage sensitive Load that is disconnected from the System by end-user equipment" is not to be used to meet steady state requirements. However, the non-consequential load loss says yes meaning it is allowed for some events in the table and non-consequential load loss definition includes the "response of voltage sensitive Load that is disconnected from the System by end-user equipment." This seems to be a direct contradiction. The MRO NSRS suggests that Item i. under steady state only be deleted. E. The MRO NSRS does not understand why there is a footnote 19 indicator for P3 and P5 EHV in the table when no footnote 19 exists. Perhaps the SDT meant footnotes 1 and 9 but The MRO NSRS recommends that this be corrected.F. The MRO NSRS does not understand why there is a footnote 12 indicator for Item 2 a and 2 b. on page 19. Perhaps the SDT meant footnotes 1 and 2 apply but The MRO NSRS recommends that this be corrected.

Response:

A. The SDT disagrees with the proposed adjustment of moving select generator Contingency outages to new planning event designations. The Table 1 planning event order regarding outage probability is somewhat subjective and the SDT believes appropriate expectations were made for generation outages within the P3 event. No changes made.

B. The SDT appreciates the support for changes made. The SDT decided to keep both references to "simulate normal clearing unless otherwise specified". While redundant, we believe it is important information and should aid to ensure industry is aware of the intent.

C. The reference to footnote 1 in Table note "j" should have been deleted in Draft 4. The SDT has fixed a number of footnote reference errors in Draft 5.

D. The Draft 4 definition of Non-Consequential Load Loss confused some stakeholders in that some thought the voltage sensitive Load was "inclusive" to this type of Load. The definition was changed to better clarify the SDT's intent that customer sensitive Load and Load disconnected by the end-user is not included within the definition. With that change the perception of a conflict is now resolved.

> **Non-Consequential Load Loss:** Non-Interruptible Load loss that does not include: (1) Consequential Load Loss, (2) the response of voltage sensitive Load, or (3) Load that is disconnected from the System by end-user equipment.

E. Several footnote reference errors were reflected in Table 1 when migrating from Draft 3 to Draft 4 that led to unfortunate confusion. In Draft 5, the SDT has corrected the footnote references and a detailed explanation of the changes required is summarized in the above Summary Considerations for Question 10.

Organization	Yes or No	Comments for Question 10
Bonneville Power Administration	No	As currently drafted, several outages identified in Categories P2, P4, and P5 appear to potentially result in the same elements being removed from service, so therefore the same event, even though the initiating event is different. We believe that the drafting team needs to conduct a workshop prior to balloting to educate the industry on what outages are required to be simulated for which Categories. Additionally there are footnotes numbered 12, 19, and 101, which do not relate to any foot note in the document, and some other footnotes seem to be misplaced. We encourage the drafting team to carefully review all footnotes to ensure accuracy prior to balloting this standard. Table 1, the second to last column: Please clarify what is meant by "Interruption of Firm Transmission Service." Planning studies do not differentiate firm and non-firm transmission services. Planning studies model a load forecast, a generation dispatch, and the system topography. Interruption of firm transmission service is a commercial issue and is not related to assessing reliability of the system. If an assumed transfer is interrupted in a power flow case due to a contingency, and if no consequential load loss were allowed and all criteria were met, the system would still be exhibiting reliable performance. We believe interruption of firm transmission service should be allowed for all planning events P1 through P5 when assessing the reliability of the transmission system. At a minimum, footnote 9 in Table 1 should apply to all events in category's P1 through P5 that do not allow interruption of firm transmission service.The NERC definition of Firm Transmission Service states "highest quality of service offered to customers under a filed rate schedule that anticipates no planned interruption." Planning events required to be evaluated in Table 1 are unplanned interruptions by nature since they are studied to determine mitigation should they occur unexpectedly. This is inconsistent with the definition Table 1, P1.4, P3.4, P4.4, P5.4, and P6.3: Shunt devices are not required to be in service at all times. It does not make sense to include it in the events column. How would you assess it while several of these devices are not deployed because they are not needed for the conditions studied? Table 1, P1 & P2: What is the rational for having two categories for single contingency? Table 1, P2.1 (Opening of a breaker without a fault): Please clarify what constitutes opening a breaker without a fault mean? Planning for these events will be time consuming (modeling every breaker position open) and expensive to mitigate for events that occur solely due to human error and should be removed for the table. Table 1, P2.2, P2.3, and P2.4: These are not single contingency events and should be moved to P3.

Response: The SDT agrees that some planning events will result in the same elements being removed from service. However, the similarities may only be valid from a steady-state view point and care must be taken to review the events in the Stability timeframe due to delayed clearing modes that may result from the initiating event. For example, a bus fault and a stuck breaker may each clear a bus; however, the stuck breaker will have different reaction times due to the delayed clearing mode and therefore may warrant a review in a Stability environment. The standard allows the Transmission Planner and Planning Coordinator flexibility in using engineering judgment for the Table 1 events in which it studies for both the steady-state and Stability environments. Both Requirements R3 (steady-state study) and R4 (Stability study) include text indicating the Transmission Planner and Planning Coordinator are to study those events "…that are expected to produce more severe System impacts on its portion of the BES, shall be identified and a list of those Contingencies to be evaluated for System performance …" If a Transmission

Organization	Yes or No	Comments for Question 10
Planner/Planning Coordinator can justify that certain events are duplicative for a given timeframe then at their discretion they may elect to limit their Contingency list so long as their entire Contingency list covers the events that "produce the more severe impacts" for their System. At this time the SDT does not plan to conduct a workshop as suggested by the commenter. As an alternative, the SDT will ask WECC area SDT member(s) to discuss this matter via appropriate WECC technical committees utilizing SDT members as participants in the discussions. Several footnote reference errors were reflected in Table 1 when migrating from Draft 3 to Draft 4 that led to unfortunate confusion. In Draft 5, the SDT has corrected the footnote references and a detailed explanation of the changes required is summarized in the above Summary Considerations for Question 10. The SDT agreed with the commenter regarding the Table 1 performance requirements related to the Interruption of Firm Transmission Service. The team has applied footnote 9 to all Events that indicated "No" in this column. The Firm Transmission Service within the context of a planning horizon are long-term service arrangements from one Balancing Authority area to another that should be reflected within the planning model and net-interchange. The standard allows engineering judgment and flexibility to exclude certain Contingencies that may not be pertinent for the conditions studied. Both Requirements R3 (steady-state study) and R4 (Stability study) include text indicating the Transmission Planner and Planning Coordinator are to study those events "…that are expected to produce more severe System impacts on its portion of the BES, shall be identified and a list of those Contingencies to be evaluated for System performance …" If a Transmission Planner/Planning Coordinator can justify that certain events not pertinent for a given study then at their discretion they may elect to limit their Contingency list so long as their entire Contingency list covers the events that "produce the more severe impacts" for their System. The two Contingency categories are used to delineate between higher ranked P1 single Contingencies and the lower ranked, yet high impact P2 single Contingency events. In P2, the team chose to differentiate between the EHV and HV in regards to performance expectations whereas in P1 the performance requirements for both EHV and HV are the same. The SDT believes the P2.1 event is important for review and it remains in Draft 5. Inadvertent relay operation that trips a breaker(s) is the primary reason forced outage cause for a P2.1 event. The condition could also be a planned (maintenance) event. The P2.1 event has been renamed "opening of a line section w/o a fault" to better align with the team's intent. Additionally, footnote 7 was revised to better clarify the need to study the P2.1 event. Footnote 7 now reads: **Footnote 7** - Opening one end of a line section without a fault on a normally networked Transmission circuit such that the line is possibly serving Load radial from a single source point. The P2.2, P2.3, and P2.4 planning events are less likely yet higher impact single Contingency events. While its true that these events will likely result in multiple elements being disconnected from the System they are classified as single Contingency since they are a common mode event resulting from a single fault with normal Protection System clearing. As stated above, the SDT does not treat the P2 events in the same manner as P1 events and there are unique expectations in performance for P2 events that result in HV element outages versus solely EHV element outages.		
Idaho Power	No	As currently drafted, several outages identified in Categories P2, P4, and P5 appear to potentially result in the same elements being removed from service, so therefore the same event, even though the initiating event is different. I believe that the drafting team needs to conduct a workshop prior to balloting to educate the industry on what outages are required to be simulated for which Categories. Additionally there are footnotes numbered 12, 19, and 101, which do not relate to any foot note in the document, and some other footnotes seem to be misplaced. We encourage the drafting team to carefully review all footnotes

Organization	Yes or No	Comments for Question 10
		to ensure accuracy prior to balloting this standard.
Southern California Edison (SCE)	No	As currently drafted, several outages identified in Categories P2, P4, and P5 appear to potentially result in the same elements being removed from service, so therefore the same event, even though the initiating event is different. We believe that the drafting team needs to conduct a workshop prior to balloting to educate the industry on what outages are required to be simulated for which Categories. Additionally there are footnotes numbered 12, 19, and 101, which do not relate to any foot note in the document, and some other footnotes seem to be misplaced. We encourage the drafting team to carefully review all footnotes to ensure accuracy prior to balloting this standard.
Utility System Efficiencies, Inc. (USE)	No	As currently drafted, several outages identified in Categories P2, P4, and P5 appear to potentially result in the same elements being removed from service. Simulations of these outages would then be the same, even though the initiating event is different. I believe that the drafting team needs to conduct a workshop prior to balloting to educate the industry on what outages are required to be simulated for which Categories. Additionally there are footnotes numbered 12, 19, and 101, which do not relate to any footnote in the document, and some other footnotes seem to be misplaced. I would encourage drafting team to carefully review all footnotes to ensure accuracy prior to balloting this standard.
Western Area Power Adm - RMR	No	As currently drafted, several outages identified in Categories P2, P4, and P5 appear to potentially result in the same elements being removed from service, so therefore the same event, even though the initiating event is different. I believe that the drafting team needs to conduct a workshop prior to balloting to educate the industry on what outages are required to be simulated for which Categories. Additionally there are footnotes numbered 12, 19, and 101, which do not relate to any footnote in the document, and some other footnotes seem to be misplaced.I encourage the drafting team to carefully review all footnotes to ensure accuracy prior to balloting this standard.
Response: The SDT agrees that some planning events will result in the same elements being removed from service. However, the similarities may only be valid from a steady-state view point and care must be taken to review the events in the Stability timeframe due to delayed clearing modes that may result from the initiating event. For example, a bus fault and a stuck breaker may each clear a bus; however, the stuck breaker will have different reaction times due to the delayed clearing mode and therefore may warrant a review in a Stability environment. The standard allows the Transmission Planner and Planning Coordinator flexibility in using engineering judgment for the Table 1 events in which it studies for both the steady-state and Stability environments. Both Requirements R3 (steady-state study) and R4 (Stability study) include text indicating the Transmission Planner and Planning Coordinator are to study those events "…that are expected to produce more severe System impacts on its portion of the BES, shall be identified and a list of those Contingencies to be evaluated for System performance …" If a Transmission		

Organization	Yes or No	Comments for Question 10
Planner/Planning Coordinator can justify that certain events are duplicative for a given timeframe then at their discretion they may elect to limit their Contingency list so long as their entire Contingency list covers the events that "produce the more severe impacts" for their System. At this time the SDT does not plan to conduct a workshop as suggested by the commenter. As an alternative, the SDT will ask WECC area SDT member(s) to discuss this matter via appropriate WECC technical committees utilizing SDT members as participants in the discussions. Several footnote reference errors were reflected in Table 1 when migrating from Draft 3 to Draft 4 that led to unfortunate confusion. In Draft 5, the SDT has corrected the footnote references and a detailed explanation of the changes required is summarized in the above Summary Considerations for Question 10.		
Modesto Irrigation District Transmission Planning	No	As currently drafted, several outages identified in Categories P2, P4, and P5 appear to potentially result in the same elements being removed from service, so therefore the same event, even though the initiating event is different. We believe that the drafting team needs to conduct a workshop prior to balloting to educate the industry on what outages are required to be simulated for which Categories. Additionally there are footnotes numbered 12, 19, and 101, which do not relate to any foot note in the document, and some other footnotes seem to be misplaced. We encourage the drafting team to carefully review all footnotes to ensure accuracy prior to balloting this standard. please define "post contingency" and "post transient" Why was the previous version footnote 1 defining "angular stability eliminated?
Response: The SDT agrees that some planning events will result in the same elements being removed from service. However, the similarities may only be valid from a steady-state view point and care must be taken to review the events in the Stability timeframe due to delayed clearing modes that may result from the initiating event. For example, a bus fault and a stuck breaker may each clear a bus; however, the stuck breaker will have different reaction times due to the delayed clearing mode and therefore may warrant a review in a Stability environment. The standard allows the Transmission Planner and Planning Coordinator flexibility in using engineering judgment for the Table 1 events in which it studies for both the steady-state and Stability environments. Both Requirements R3 (steady-state study) and R4 (Stability study) include text indicating the Transmission Planner and Planning Coordinator are to study those events "…that are expected to produce more severe System impacts on its portion of the BES, shall be identified and a list of those Contingencies to be evaluated for System performance …" If a Transmission Planner/Planning Coordinator can justify that certain events are duplicative for a given timeframe then at their discretion they may elect to limit their Contingency list so long as their entire Contingency list covers the events that "produce the more severe impacts" for their System. At this time the SDT does not plan to conduct a workshop as suggested by the commenter. As an alternative, the SDT will ask WECC area SDT member(s) to discuss this matter via appropriate WECC technical committees utilizing SDT members as participants in the discussions. Several footnote reference errors were reflected in Table 1 when migrating from Draft 3 to Draft 4 that led to unfortunate confusion. In Draft 5, the SDT has corrected the footnote references and a detailed explanation of the changes required is summarized in the above Summary Considerations for Question 10. The SDT did not receive a substantial appeal from industry to define the terms proposed by the commenter and these terms are widely used and accepted in the industry. The proposed definitions were not added in Draft 5. The prior footnote 1 regarding angular stability was moved into the requirements section of the standard under Requirement R4 per the request of various		

Organization	Yes or No	Comments for Question 10
stakeholders in prior drafts.		
NV Energy	No	As currently drafted, several outages identified in Categories P2, P4, and P5 appear to potentially result in the same elements being removed from service, so therefore the same event, even though the initiating event is different. We believe that the drafting team needs to conduct a workshop prior to balloting to educate the industry on what outages are required to be simulated for which Categories. Additionally there are footnotes numbered 12, 19, and 101, which do not relate to any foot note in the document, and some other footnotes seem to be misplaced. We encourage the drafting team to carefully review all footnotes to ensure accuracy prior to balloting this standard.
Pacific Gas and Electric Co.	No	As currently drafted, several outages identified in Categories P2, P4, and P5 appear to potentially result in the same elements being removed from service, so therefore the same event, even though the initiating event is different. We believe that the drafting team needs to conduct a workshop prior to balloting to educate the industry on what outages are required to be simulated for which Categories. Additionally there are footnotes numbered 12, 19, and 101, which do not relate to any foot note in the document, and some other footnotes seem to be misplaced. We encourage the drafting team to carefully review all footnotes to ensure accuracy prior to balloting this standard.
Puget Sound Energy, Inc.	No	As currently drafted, several outages identified in Categories P2, P4, and P5 appear to potentially result in the same elements being removed from service, so therefore the same event, even though the initiating event is different. We believe that the drafting team needs to conduct a workshop prior to balloting to educate the industry on what outages are required to be simulated for which Categories. Additionally there are footnotes numbered 12, 19, and 101, which do not relate to any foot note in the document, and some other footnotes seem to be misplaced. We encourage the drafting team to carefully review all footnotes to ensure accuracy prior to balloting this standard.
Deseret Power	No	Comments: As currently drafted, several outages identified in Categories P2, P4, and P5 appear to potentially result in the same elements being removed from service, so therefore the same event, even though the initiating event is different. We believe that the drafting team needs to conduct a workshop prior to balloting to educate the industry on what outages are required to be simulated for which Categories. Additionally there are footnotes numbered 12, 19, and 101, which do not relate to any foot note in the document,

Organization	Yes or No	Comments for Question 10
		and some other footnotes seem to be misplaced. We encourage the drafting team to carefully review all footnotes to ensure accuracy prior to balloting this standard.
NorthWestern Energy	No	Several outages identified in Categories P2, P4, and P5 seem to result in the same elements being removed from service, even though the initiating event is different. Thus, the same scenario is evaluated more than once. Also, the footnote numbering is not correct. We would like the drafting team to conduct a workshop before this standard goes to ballot to educate the industry on what outages are required to be simulated for which Categories.
Response: The SDT agrees that some planning events will result in the same elements being removed from service. However, the similarities may only be valid from a steady-state view point and care must be taken to review the events in the Stability timeframe due to delayed clearing modes that may result from the initiating event. For example, a bus fault and a stuck breaker may each clear a bus; however, the stuck breaker will have different reaction times due to the delayed clearing mode and therefore may warrant a review in a Stability environment. The standard allows the Transmission Planner and Planning Coordinator flexibility in using engineering judgment for the Table 1 events in which it studies for both the steady-state and Stability environments. Both Requirements R3 (steady-state study) and R4 (Stability study) include text indicating the Transmission Planner and Planning Coordinator are to study those events "…that are expected to produce more severe System impacts on its portion of the BES, shall be identified and a list of those Contingencies to be evaluated for System performance …" If a Transmission Planner/Planning Coordinator can justify that certain events are duplicative for a given timeframe then at their discretion they may elect to limit their Contingency list so long as their entire Contingency list covers the events that "produce the more severe impacts" for their System. At this time the SDT does not plan to conduct a workshop as suggested by the commenter. If Regional Entities wish to conduct seminars on the standard, SDT members from that region could be made available as participants in the discussions. Several footnote reference errors were reflected in Table 1 when migrating from Draft 3 to Draft 4 that led to unfortunate confusion. In Draft 5, the SDT has corrected the footnote references and a detailed explanation of the changes required is summarized in the above Summary Considerations for Question 10.		
Sacramento Municipal Utility District	No	As currently drafted, several outages identified in Categories P2, P4, and P5 appear to potentially result in the same elements being removed from service, so therefore the same event, even though the initiating event is different. Comments on notes have been provided with associated requirements.
San Diego Gas & Electric Co	No	As currently drafted, several outages identified in Categories P2, P4, and P5 appear to potentially result in the same elements being removed from service, so therefore the same event, even though the initiating event is different.
Response: The SDT agrees that some planning events will result in the same elements being removed from service. However, the similarities may only be valid from a steady-state view point and care must be taken to review the events in the Stability timeframe due to delayed clearing modes that may result from the initiating event. For example, a bus fault and a stuck breaker may each clear a bus; however, the stuck breaker will have different reaction times due to the delayed clearing mode and therefore may warrant a review in a Stability environment. The standard allows the Transmission Planner and Planning Coordinator flexibility in using engineering judgment for the Table 1 events in which it studies for both the steady-state and Stability environments. Both Requirements R3 (steady-state study) and R4 (Stability study) include text indicating the Transmission Planner and Planning Coordinator are to study those events "…that are expected to produce more severe		

Organization	Yes or No	Comments for Question 10
System impacts on its portion of the BES, shall be identified and a list of those Contingencies to be evaluated for System performance …" If a Transmission Planner/Planning Coordinator can justify that certain events are duplicative for a given timeframe then at their discretion they may elect to limit their Contingency list so long as their entire Contingency list covers the events that "produce the more severe impacts" for their System.		
Progress Energy Florida, Inc.	No	As PEF is opposed to TPL-001-1 as a whole, PEF will have no further comment on this issue other than to encourage all appropriate parties to review PEF's previous comments to this effect.
Response: Throughout the drafting process, the SDT has carefully considered your comments as well as comments from other industry members.		
Pepco Holdings, Inc. - Affiliates PHI	No	Category P5 should be more appropriately titled DELAYED CLEARING OR Loss of multiple elements caused by the failure of a single Protection System while clearing a fault on one of the following....A protection system failure does not necessarily lead to loss of multiple power system elements. Sometimes it may just be delayed clearing of the faulted element. The recommended change is based on the SDT's response to comments submitted to Draft #2 of the standard? -A number of commenters expressed concern related to Planning Event P5 "Protection System Failure" and the need to evaluate a single component failure of a BES Protection System; particularly a failure of a station battery. The SDT has revised the P5 Planning Event description to remove the reference to "single component failure" and the event description was changed to match what is stated in the currently approved TPL standards under Category C6 through C9. --The intent of P5 is to evaluate a failure of a single Protection System design that introduces a delayed clearing mode that may also include additional electrical Facilities being removed when compared to normal fault clearing.-- A Protection System failure resulting in loss of the substation (one voltage level plus transformers) would not qualify as a P5 Planning Event since that event is considered an Extreme Event. Also, the phrase "failure of a single Protection System" should be defined. Draft #1 language used the term -single component failure- of a protection system. Based on a number of comments that were received, that term was subsequently replaced with the term -failure of a single Protection System-. To avoid confusion, this term needs to be defined within this standard and / or examples provided. If not, there will be confusion on how to study this category of events. This issue has been raised by numerous commenters throughout the standard development process. That fact that it continues to be expressed through numerous drafts indicates a lack of clarity as to exactly what protection system failures are to be studied.For example - Assume there are two protection systems on a facility (Scheme A and Scheme B). Assume one publishes a clearing time for Scheme A, and a slower clearing time for Scheme B. The TPL standard, as written, could imply that for a P5 failure of a single Protection System (scheme A or B fails) you would study the event assuming the worst case clearing time (i.e., using the slower clearing time for Scheme B.) Is that what is intended? If so, it should be so stated. However, that interpretation assumes the failure of a single Protection System would not effect the operation of the second Protection System. In other words it would not address single component points of failure, which could disable both Scheme A and Scheme B. Suppose both schemes were fed from the same set of CT's, VT's, battery, etc. Since the phrase "single component failure of the protection system" was eliminated, does this mean failure of both schemes due to a single component failure is not required to be studied under the P5 category? The standard must be very clear as to what contingency (i.e., what kind of protection system failure) is

Organization	Yes or No	Comments for Question 10
		to be studied. It should not be silent on this point, nor should it refer to another standard for guidance on what contingencies to study.
Response: The SDT agrees with points raised by the commenter and has changed the event description of the P5 planning event to better clarify the intent of simulating this Contingency. The SDT did not agree with the proposal to add a definition for the phrase "failure of a single Protection System". The SDT believes the description modification in the Event column of Table 1 suffices in this regard. The P5 planning event remains unchanged in the study work intended by the SDT and the description modifications are aimed only at clarifying our intent. The SDT confirms that the intent of P5 is not to study the loss of both Scheme A and Scheme B for the example provided by the commenter and that the expectation would be the study of the slower clearing time scheme (Scheme B).		
Oklahoma Gas & Electric	No	Category P7 OG&E supports as long as footnote 11 is included. Category P6 is an N-2 situation. OG&E does not support the wholesale study of every N-2 combination of contingencies even though one is allowed for the interruption of firm transmission service and non-consequential load loss. Establishing and maintaining operating guides associated with every N-2 set of contingencies is oppressive and would provide limited value. OG&E understands the need for targeted N-2 contingency studies; such as breaker failure. Category P5 Need more specific description of "Protection System failure" before receiving OG&E's support. Category P4 OG&E supports performing studies. OG&E also supports the differentiation between "DHV" and "HV". OG&E does not support developing operating guides for every voltage or overload issue discovered. Category P3 OG&E is concerned about the value of P3. Information about the expected value of performing studies for the category is needed before receiving OG&E support. Category P2 OG&E supports even though there are a few minor issues. Category P1 OG&E supportsOG&E will need every bit of the 60 months time mentioned on page 3 under "Effective Date" to implement all indicated upgrades. There is benefit in hardening the OG&E electrical system for such protection system failures, such as P4 & P5, but it may not be cost effective. Comments Stability AnalysisStability Analysis Recommend Planning Coordinator will be responsible for running the stability analysis to assure NERC compliance. The Planning Coordinator and Transmission Planner should work together to prepare the data.
Response: In P7, footnote 11 remains, thanks for your support. In P6 not every possible combination would be expected to be studied, especially for a Transmission Planner/Planning Coordinator covering a very large geographic footprint. The standard allows engineering judgment and flexibility to exclude certain Contingencies that may not be pertinent for the conditions studied. Both Requirements R3 (steady-state study) and R4 (Stability study) include text indicating the Transmission Planner and Planning Coordinator are to study those events "…that are expected to produce more severe System impacts on its portion of the BES, shall be identified and a list of those Contingencies to be evaluated for System performance …" If a Transmission Planner/Planning Coordinator can justify that certain events are not pertinent for a given study then at their discretion they may		

Organization	Yes or No	Comments for Question 10
elect to limit their Contingency list so long as their entire Contingency list covers the events that "produce the more severe impacts" for their System. Based on feedback from some commenters the SDT made changes to the P5 planning event description as shown in Table 1. The changes are not substantive, do not alter the team's prior intent and aimed at clarification only. Regarding the comments provided on P4. The SDT appreciates the commenter's support in regard to the bifurcated approach of performance expectations related to the BES. The SDT believes all performance deficiencies related to thermal ratings and voltage ratings require corrective actions and the standard provides the Transmission Planner/Planning Coordinator a wide range of alternatives, including but not limited to Operating Procedures. As stated above, the Contingencies studied are expected to be those that have the most severe impact on a particular Facility and not necessarily every possible scenario. The SDT's review of outage events associated with various System conditions revealed that the potential for a generating unit outage being coincident with a variety of other Contingency conditions requires close evaluation. Again, study of some your largest units in combination with other events may suffice to cover the "more severe" conditions for your System and flexibility is afforded to the Transmission Planner to ensure proper coverage without the needed to study each and every combination. We appreciate your support on planning event P1 & P2 expectations. Regarding the proposal for Stability to be covered by the Planning Coordinator. The standard in P7 requires the Transmission Planner and Planning Coordinator to determine and identify individual or joint responsibilities for performing required studies. The Transmission Planner may rely on work being preformed by its Planning Coordinator but each is responsible for showing auditable compliance for the TPL-001-1 study requirements including Stability.		
SERC Planning Standards Subcommittee	No	Comments: Some of the footnote superscripts do not appear to have a corresponding reference in the footnotes, in the case of number 19 at several locations in the Firm Transmission Service column, and number 101 in the P4 cell in the Category column.
Southern Company	Yes	Some of the footnote superscripts do not appear to have a corresponding reference in the footnotes, in the case of number 19 at several locations in the Firm Transmission Service column (should be 9), and number 101 in the P4 cell in the Category column (should be 10). In header note j, the reference to footnote 1 should be removed. In steady state extreme events 2a and 2b, the reference to footnote 12 should be to footnote 11. In stability extreme events 2a through 2e, the reference to footnote 11 should be to footnote 10.
Lafayette Utilities System	Yes	While LUS remains concerned as to the way in which what is now footnote 9 may be followed in operation in areas where there have been historic problems with the old "footnote b", we appreciate the clarifications that have been made, and recognize that this may be the best way to resolve an issue for the industry. Please note that there remains what appears to be a typographical error in Table 1, Category P3, under "Initial System Condition" in that the footnote reference is to footnote 19, which does not exist. The reference was to footnote 10 in v.3 and we assume that the correct reference here is to footnote 9, which used to be footnote 10.
Response: Several footnote reference errors were reflected in Table 1 when migrating from Draft 3 to Draft 4 that led to unfortunate confusion. In Draft 5, the SDT		

Organization	Yes or No	Comments for Question 10
has corrected the footnote references and a detailed explanation of the changes required is summarized in the above Summary Considerations for Question 10.		
US Bureau of Reclamation	No	Consequential Load Loss was defined, however, consequential generator loss was not. It may be easier to define "consequential loss" and let it apply to either.
Response: The SDT does not believe a definition to differentiate between consequential or non-consequential generation loss is needed since generation tripping and re-dispatch is permitted as a corrective action for all planning events as stated in Requirement R2, part 2.7.1.		
Tri-State Generation and Transmission Association	No	Extreme Events detailed at the end of Table 1 should be itemized in the same way as for so-called "Planning Events" at the beginning of Table 1. Steady State Extreme Event 1 would be EP1, Dynamic Stability Extreme Event 1 would be ED1, etc. Also, please use the term Dynamic Stability, not just Stability, as explained above. It would be helpful if descriptions had unique identifiers, for example Dynamic Extreme Event 1 could be called N-1-1. For Dynamic Extreme Event 1, the phrase "With an initial condition" conflicts with the phrase "prior to System adjustments" at the end of the sentence. The term "initial condition" suggests a maintenance outage, or at least an outage that has sustained long enough for the system to have responded/adjusted. Footnote text does not line-up with the body text in the Extreme Event Table. It seems to us that a bus-tie breaker would have the same chance of failure as another breaker. Therefore differentiation is not needed in Table 1.
Response: The SDT recognizes a minority position to label the extreme events in a manner similar to the planning events for a short-hand notation. However, based on lack of a significant majority objection to the extreme event table layout the team determined no changes were needed in this regard. The SDT believes the references to Stability in the extreme events portion of the table are sufficient. No changes made. The SDT does not believe that a conflict exists for extreme event 1 in regards to "With an initial condition" and "prior to system adjustment". No changes made. Several footnote reference errors were reflected in Table 1 when migrating from Draft 3 to Draft 4 that led to unfortunate confusion. In Draft 5, the SDT has corrected the footnote references and a detailed explanation of the changes required is summarized in the above Summary Considerations for Question 10. The SDT agrees that any breaker has an equal chance for failure due to a fault. However, when lumped together with all the BES line breakers and transformer breakers, the Bus-tie Breaker application is much less prevalent within the BES when considering all beaker fault possibilities. The SDT recognizes that Bus-tie Breaker applications are used to lessen the impact of a bus fault outage (P2.2). Therefore, in regards to meeting the single Contingency breaker fault condition, the SDT felt it was necessary to differentiate between performance expectations between bus-tie and non bus-tie breakers. See P2.3 and P2.4 planning events.		
Omaha Public Power District	No	If "the response of voltage sensitive Load including Load that is disconnected from the System by end-user equipment" is considered to be a special type of Consequential Load Loss, add the following sentence to the end

Organization	Yes or No	Comments for Question 10
		of Note "b": However, see Note "i" for a restriction that applies to steady state performance. In Note "g", change "voltage limits" to "voltages". In Note "j", it appears that the reference to Footnote 1 is not needed. For Category P3, should the reference to Footnote 19 in the second column be a reference to Footnote 9? For Categories P3, P4, and P5, in the column labeled "Interruption of Firm Transmission Service Allowed", are the references to Footnotes 19 and 10 needed? For Category P4, should the reference to Footnote 101 in the first column be a reference to Footnote 10? For Category P4, should the reference to Footnote 11 in the third column be a reference to Footnote 10? In Items 2a and 2b of the "Steady State" subsection of the "Extreme Events" section, should the references to Footnote 12 be references to Footnote 11? In Footnote 1, change "loss of Non-Consequential Load" to either "Non-Consequential loss of Load" or "Non-Consequential Load Loss". (The point here is that the adjective "Non-Consequential" applies to the word "loss" rather the word "Load".) In the first sentence of Footnote 2, change "Normal Clearing faults" to "Normal Clearing of faults". In the second sentence of Footnote 2, remove the comma following the word "types". In Footnote 3, change "Non-Consequential Load" to either "Non-Consequential loss of Load" or "Non-Consequential Load Loss". (The point here is that the adjective "Non-Consequential" applies to the word "loss" rather the word "Load".) In the second sentence of Footnote 5, change "generator Step Up" to "Generator Step Up" to be consistent with the rest of the footnote.

Response: Load removed by end-user action or voltage sensitive Load that trips while the Transmission Planner/Planning Coordinator transient voltage criteria is being met is NOT a special case on Consequential Load Loss. No changes made.

The SDT agrees with the proposed change to note "g" in Table 1.

> **Header note 'g'**: System steady state voltages and post-Contingency voltage deviations shall be within acceptable limits as established by the Planning Coordinator and the Transmission Planner.

Several footnote reference errors were reflected in Table 1 when migrating from Draft 3 to Draft 4 that led to unfortunate confusion. In Draft 5, the SDT has corrected the footnote references and a detailed explanation of the changes required is summarized in the above Summary Considerations for Question 10.

The SDT agrees with the proposed wording change to footnote 1. The SDT also made other changes to footnote 1 for clarity and it now reads:

> **Footnote 1 -** If the event analyzed involves BES elements at multiple System voltage levels, the lowest System voltage level of the element(s) removed for the analyzed event determines the stated performance criteria regarding allowances for interruptions of Firm Transmission Service and Non-Consequential Load

Organization	Yes or No	Comments for Question 10
Loss. The SDT agrees with the proposed wording change to footnote 2. **Footnote 2** - Unless specified otherwise, simulate Normal Clearing of faults. Single line to ground (SLG) or three phase (3Ø) are the fault types that must be evaluated in Stability simulations for the event described. A 3Ø or a double line to ground fault study indicating the criteria are being met is sufficient evidence that a SLG condition would also meet the criteria. The SDT agrees with the proposed wording change to footnote 3. The team also made other changes to footnote 3 for clarity and it now reads: **Footnote 3** - Bulk Electric System (BES) level references include extra-high voltage (EHV) Facilities defined as greater than 300kV and high voltage (HV) Facilities defined as the 300kV and lower voltage Systems. The designation of EHV and HV is used to distinguish between stated performance criteria allowances for interruption of Firm Transmission Service and Non-Consequential Load Loss. The SDT agrees with the proposed wording change to footnote 5. Footnote 5 now indicates: **Footnote 5** - For non-Generator Step Up transformer outage events, the reference voltage, as used in footnote 1, applies to the low-side winding (excluding tertiary windings). For generator and Generator Step Up transformer outage events, the reference voltage applies to the BES connected voltage (high-side of the Generator Step Up transformer). Requirements which are applicable to transformers also apply to variable frequency transformers and phase shifting transformers.		
TVA System Planning	No	In Header note j - the reference to footnote #1 should be removed. Are batteries included as part of Protection System for P5 events? P3 reference to footnote #19 under Initial System Condition and for Interruption of Firm Transmission Service Allowed should actually be footnote #9. P5 reference to footnote #19 for Interruption of Firm Transmission Service Allowed should actually be footnote #9. The reference to footnote #101 in the P4 category should actually be to #10. For Steady State notes under Extreme Events, events 2a and 2b should reference footnote #11 instead of #12. For Stability notes, event 2 should refer to footnote #10 instead of #11.In footnote #3, should there be an "or" before "as defined by the Regional Entity"?
Response: Several footnote reference errors were reflected in Table 1 when migrating from Draft 3 to Draft 4 that led to unfortunate confusion. In Draft 5, the SDT has corrected the footnote references and a detailed explanation of the changes required is summarized in the above Summary Considerations for Question 10. The P5 event is not a review of individual Protection System components but rather evaluates the loss of a "single Protection System" scheme or design. It is acceptable to simulate that a local (at the same substation) alternate Protection System scheme is still operational when performing a P5 review. The SDT chose this language to align with the SAR titled: Reliability of Protection Systems (Project 2009-7). The SDT believes that the individual component level evaluation of Protection Systems and redundancy requirements should be covered under the PRC standards and has only addressed a single protection scheme failure in the Planning Assessment required for the TPL standard. A Protection System component failure (i.e., battery) that removes multiple Protection System schemes is beyond the P5		

Organization	Yes or No	Comments for Question 10
planning event. Based on feedback from some commenters, the SDT made changes to the P5 planning event description as shown in Table 1. The changes are not substantive, do not alter the team's prior intent, and are aimed at clarification only.		
Arizona Public Service Co.	No	Note a: It would be helpful if there was a clear understanding of what constitutes voltage instability for the purpose of this standard. Is TP expected to have its own criteria for voltage stability? Are the dynamic and angle stabilities intentionally excluded? P3 refers to foot note 19 but there is no foot note 19. P4 refers to foot note 11, but the foot note does not seem to be applicable. Foot notes in second to last column of the table are confusing.
Response: In Requirement R5 the Transmission Planner/Planning Coordinator is expected to have documented its criteria for transient voltage response. It is expected that this criteria would reflect what would be considered voltage instability. Related to the question on dynamic and angle stabilities, the standard provides a requirement for what is considered a stable System in Requirement R4, part 4.1. Several footnote reference errors were reflected in Table 1 when migrating from Draft 3 to Draft 4 that led to unfortunate confusion. In Draft 5, the SDT has corrected the footnote references and a detailed explanation of the changes required is summarized in the above Summary Considerations for Question 10.		
Lakeland Electric	No	Recommended the following changes to the HV definition:Bulk Electric System (BES) level references include extra-high voltage (EHV) Facilities defined as greater than 300kV and high voltage (HV) Facilities defined as the 300kV and lower voltage Systems, per the Regional Entity's BES criteria/definition. Bulk Electric System (BES) level references include extra-high voltage (EHV) Facilities defined as greater than 300kV and high voltage (HV) Facilities defined as the 300kV and lower voltage Systems, per the Regional Entity's BES criteria/definition.
Response: The SDT has retained the same delineation of the Bulk Electric System (EHV and HV) in Draft 5. No changes made.		
Duke Energy	No	Reword Steady State Only: f. as follows: "Applicable Facility Ratings shall not be exceeded." P3 Initial System Conditions footnote should be 9, not 19. Also, P4 footnote should not be 101. Please check all footnote references.
Response: The SDT agrees with the proposed wording change to header note "f" and it now reads: **Header note 'f':** Applicable Facility Ratings shall not be exceeded. Several footnote reference errors were reflected in Table 1 when migrating from Draft 3 to Draft 4 that led to unfortunate confusion. In Draft 5, the SDT has corrected the footnote references and a detailed explanation of the changes required is summarized in the above Summary Considerations for Question 10.		

Organization	Yes or No	Comments for Question 10
Ameren	No	Some of the footnote superscripts do not appear to have a corresponding reference in the footnotes, in the case of number 19 at several locations in the Firm Transmission Service column, which should be changed to number 9, and numbers 11 and 101 in the P4 cell in the Category column that should be changed to 10. Table 1 - Steady State and Stability Performance - Planning Events, note c., and Table 1 - Steady State & Stability Performance - Extreme Events, note a. will need to be revised to address the restoration of facilities as described above in comments to Questions 3 and 5. A header is needed on the third page of Table 1 Steady State & Stability Performance. Table 1 Steady State and Stability Performance Extreme Events - Steady State: Superscripts on items 2a and 2b should be 11 rather than 12. Similarly, for the Extreme Events - Stability items 2a through 2f, the superscript should be 10 rather than 11.
Response: Several footnote reference errors were reflected in Table 1 when migrating from Draft 3 to Draft 4 that led to unfortunate confusion. In Draft 5, the SDT has corrected the footnote references and a detailed explanation of the changes required is summarized in the above Summary Considerations for Question 10. As stated in the SDT's response to comments made by Ameren in Question 3, in Requirement R3, part 3.3.1 the reference to "other automatic controls" is intended to include other tripping means such as cross-tripping and not automatic restoration devices. No change made. Ameren comments to Question 5 do not appear pertinent to "automatic restoration" of facilities. No change made. The SDT agrees that an appropriate page header is needed on for each page of the Table and has worked with NERC staff to correct this in Draft 5.		
SERC Dynamics Review Subcommittee (DRS)	No	Some of the footnote superscripts do not appear to have a corresponding reference in the footnotes, in the case of: Table 1 Planning Events P3 superscripts should be 9 and not 19. Table 1 P5 superscript 19 should also be 9. Table 1 Planning Events P4 superscript 101 should be 10, superscript 11 should also be 10. Table 1 Extreme Events steady state items 2A and 2B superscript should be 11, not 12. Table 1 Extreme Events stability items 2A-2F superscript should be 10, not 11. No header on third page of Table 1 Planning Events. Table 1, Planning Events, wherever it says "no" in the "interruptions of firm transmission service" column, generation tripping by fault clearing action should be allowed.
Response: Several footnote reference errors were reflected in Table 1 when migrating from Draft 3 to Draft 4 that led to unfortunate confusion. In Draft 5, the SDT has corrected the footnote references and a detailed explanation of the changes required is summarized in the above Summary Considerations for Question 10. The SDT agrees that an appropriate page header is needed on for each page of the Table and has worked with NERC staff to correct this in Draft 5. The SDT agrees with the commenter regarding the suggestion to permit generation re-dispatch when a "No" is indicated in the Table 1 column titled "Interruption of		

Organization	Yes or No	Comments for Question 10
Firm Transmission Service Allowed" and footnote 9 is now reflected on each occurrence.		
SRC of ISO/RTO	No	Table 1 should appear right after the requirements and before the VSLs. AESO does not comment on VSLs or VRFs.
Response: The SDT agrees with the commenter's recommendation to move Table 1 within the standard so that it follows directly after the requirements. This change was made in Draft 5.		
ERCOT ISO	No	The references to the footnotes need commas there are several references to footnote 19 and at least one to footnote 101.
Several footnote reference errors were reflected in Table 1 when migrating from Draft 3 to Draft 4 that led to unfortunate confusion. In Draft 5, the SDT has corrected the footnote references and a detailed explanation of the changes required is summarized in the above Summary Considerations for Question 10.		
MidAmerican Energy Company	No	The SDT should be commended for the changes that were made to Table 1. However, MidAmerican does recommend a few editorial changes. On page 16 under the Steady State and Stability heading is item d. Simulate Normal Clearing unless otherwise specified. This is also listed as footnote 2 to the table. MidAmerican recommends that item d under the Steady State and Stability heading be deleted. Why is there a footnote 1 indicator to note j. under Stability only? MidAmerican suggests that this footnote 1 indicator be deleted.? Item i. under Steady State only states that "the response of voltage sensitive Load that is disconnected form the System by end-user equipment" is not to be used to meet steady state requirements. However, the non-consequential load loss says yes meaning it is allowed for some events in the table and non-consequential load loss definition includes the "response of voltage sensitive Load that is disconnected from the System by end-user equipment." This seems to be a direct contradiction. MidAmerican suggest that Item i. under steady state only be deleted. MidAmerican does not understand why there is a footnote 19 indicator for P3 and P5 EHV in the table when no footnote 19 exists. Perhaps the SDT meant footnotes 1 and 9 but MidAmerican recommends that this be corrected. MidAmerican does not understand why there is a footnote 12 indicator for Item 2 a and 2 b. on page 19. Perhaps the SDT meant footnotes 1 and 2 apply but MidAmerican recommends that this be corrected.
Response: While the SDT agrees that the phrase appears twice, it does not create any confusion or unnecessary redundancy. Footnote 2 is just a more detailed explanation of what needs to be done in Stability studies. No change made. The footnote 1 indication has been deleted as suggested.		

Organization	Yes or No	Comments for Question 10
The definition of Non-Consequential Load Loss has been revised to provide greater clarity as to the SDT's intent. **Non-Consequential Load Loss:** Non-Interruptible Load loss that does not include: (1) Consequential Load Loss, (2) the response of voltage sensitive Load, or (3) Load that is disconnected from the System by end-user equipment. Several footnote reference errors were reflected in Table 1 when migrating from Draft 3 to Draft 4 that led to unfortunate confusion. In Draft 5, the SDT has corrected the footnote references and a detailed explanation of the changes required is summarized in the above Summary Considerations for Question 10.		
Xcel Energy	No	There are references to footnote 12 on page 19, and footnote 101 on page 17, yet no such footnotes exist on page 20. Some of the other footnotes seem to be misplaced. Please review and validate all footnote references.
Midwest ISO	No	Table 1 Steady State & Stability Performance Planning Events, Note "b": It states that consequential generation loss is acceptable; however, there is no definition of this in the definition section. We suggest having the following definition of Consequential Generation Loss added to the definition section. Table 1 There appears to be a few typos on P3, P4 and P5 note references because there are no Note 19 nor Note 101. Please clarify this. Table 1 Steady State & Stability Performance Planning Events: We believe that this table should appear right after the requirements but before the VSLs.
Response: It appears the commenter intended to suggest a definition for consequential generation loss but neglected to include its proposed definition. Regardless, the SDT considered the need for such a definition and concluded no definition was needed. No change made. Several footnote reference errors were reflected in Table 1 when migrating from Draft 3 to Draft 4 that led to unfortunate confusion. In Draft 5, the SDT has corrected the footnote references and a detailed explanation of the changes required is summarized in the above Summary Considerations for Question 10. The SDT agrees with the commenter's recommendation to move Table 1 within the standard so that it follows directly after the requirements. This change was made in Draft 5.		
Florida Municipal Power Agency, and its Member Cities	No	Table 1, under Steady State & Stability, "a" states: "BES Transmission voltage instability, cascading outages and uncontrolled islanding shall not occur." There are small portions of the grid where there may be three long lines feeding a load, and if two of those two lines were lost (P6 for instance), the remaining line would go into voltage collapse losing a few hundred MWs of consequential load with no impact to the BES. FMPA suggests that the wording be appended by: "BES Transmission voltage instability, cascading outages and uncontrolled islanding shall not occur for P0 through P2. BES Transmission voltage instability, cascading outages and uncontrolled islanding causing a supply / demand mismatch of more than the largest single loss of source shall not occur." FMPA does not understand why a bus-tie breaker would be treated differently than another breaker. They both have the same chance of failure.
Response: The SDT considered the proposed change to note "a" but did not accept the proposed change. For the situation described, System adjustments are permitted between the outages of a P6 event to minimize the impact. Additionally, following the second outage the use of an SPS could be used to further minimize		

Organization	Yes or No	Comments for Question 10
the impact and avoid an unstable System condition. The team agrees that any breaker has an equal chance for failure due to a fault. However, when lumped together with all the BES line breakers and transformer breakers, the Bus-tie Breaker application is much less prevalent within the BES when considering all beaker fault possibilities. The SDT recognizes that Bus-tie Breaker applications are used to lessen the impact of a bus fault outage (P2.2). Therefore, in regards to meeting the single Contingency breaker fault condition the SDT felt it was necessary to differentiate between performance expectations between bus-tie and non bus-tie breakers. See P2.3 and P2.4 planning events.		
Manitoba Hydro	No	Table 1:1. When two (or more) footnotes apply simultaneously they should be separated by commas; ot are these typos? 2. The P2 contingency "opening of a breaker without a fault" could be moved up to a P1 contingency. This is a higher probability event then a bus section fault. 3. P4, Event column: The 11 superscript, after the phrase "Loss of multiple elements....", should be a 10. In P3, should 19 be 9? 4. Footnote 9: The drafting team clearly permits generator redispatch coupled with curtailment of firm transmission service for multiple contingencies (P3-P5). We believe generator redispatch is appropriate for P1 and P2 as well. R2.7.1 lists several actions that are permitted to be used as corrective plans including Special Protection Systems, automatic generator tripping or manual generator runback to respond to both single and multiple contingencies. Any loss of generation will require redispatch to ensure emergency generation reserves are replenished and the system is ready for the next contingency. For contingency P1, loss of generator, load will not be lost because there are generation reserves, however redispatch will be required to restore these reserves. Footnote 9 should apply to P1 and P2 contingencies. 5. Footnote 11: This note is a reference for a common tower outage. I think the words "or common Right-of-Way" should be deleted from the sentence. It is obvious that circuits on a common tower must be on a common Right-of-Way. 6. Note b: Consequential generation loss could use a definition similar to consequential and non-consequential load loss to add clarity. The standard as written in R4.1.2 permits cascade tripping of generators due to pulling out of synchronism. Typically this has been defined as instability or cascade tripping and not permitted in the past. 7. Note i: note i implies that any voltage sensitive load or load dropped by end-user equipment shall not be used to meet steady-state performance requirements. However, given that this note is not included under the stability portion, does this mean that voltage sensitive load or load that is dropped by end-user equipment can be used to meet the TC and PC planning criteria established in R5? Induction motors could trip in the stability analysis if the transient voltage is low enough (non-consequential load loss). The R5 criteria will be met as long as the load is manually switched back in and the post-disturbance steady state loading is acceptable. Can the drafting team

Organization	Yes or No	Comments for Question 10
		clarify the intent of Note i?

Response:

1. Several footnote reference errors were reflected in Table 1 when migrating from Draft 3 to Draft 4 that led to unfortunate confusion. In Draft 5, the SDT has corrected the footnote references and a detailed explanation of the changes required is summarized in the above Summary Considerations for Question 10.
2. The SDT did not accept the proposed change for the placement of the P2.1 planning event into the P1 group.
3. As noted above, errors in reference to various Table 1 footnotes are recognized by the SDT and have been corrected in Draft 5.
4. The SDT agreed with the commenter and footnote 9 was added to the P1 and P2 events in regard to the column titled "Interruption of Firm Transmission Service Allowed"
5. Common structure may be interpreted as common ROW but Common ROW does not necessarily equate to common structure. Since the wording is 'or', it covers both circumstances. No change made.
6. The SDT does not believe a definition to differentiate between consequential or non-consequential generation loss is needed since generation tripping and re-dispatch is permitted as a corrective action for all planning events as stated in Requirement R2, part 2.7.1.
7. Table 1, note "i" is intended to clarify that even if it is known that an end-user who implements a more conservative practice than that of the Transmission Planner/Planning Coordinator regarding steady-state voltage criteria and chooses to interrupt its own Load, the end-use Load must still be represented in the steady-state timeframe. The Load tripping is permitted in a Stability review, however, it should be assumed that a customer will react quickly to restore its Load and therefore the standard requires the Load be represented in the steady-state timeframe. Only actions (manual or automatic) taken by the Transmission Planner/Planning Coordinator are permitted for consideration for a steady-state review.

NERC System Protection and Control Subcommittee (SPCS)	No	The Drafting Team should modify the P5 Category column in Table 1 to read "P5 Multiple Contingency (Fault plus Protection System failure to operate). "This addition will focus the P5 Category on the overall Protection System failure to operate." The Drafting Team should include requirements in P5 of Table 1 for simulating both single-phase and 3-phase fault types for Protection System failures to operate.P4 and P5 call for simulations with SLG faults. Prolonged clearing times that result from breaker failures or Protection System failures to operate increase the probability that the fault may evolve from single-phase to multi-phase, and that probability further increases in EHV substations due to the closer clearances of bus work and equipment.Whereas Breaker Failure times are more likely to be known and mitigated through Breaker Failure Protection Systems, the clearing times associated with Protection System failures to operate may be much longer, increasing the probability of evolving in to multi-phase faults. The phrase "or a protection system failure" should be removed from items 2a through 2e in the Extreme Event table following Table 1.If the initializing event is the SLG fault, its evolution to a multi-phase fault alone (due to a Protection System failure to operate) should not be considered an Extreme Event for stability analysis.

Response: While the SDT did not accept the proposed P5 description change a change has been made for clarity. Based on feedback from some commenters the

Organization	Yes or No	Comments for Question 10
SDT made changes to the P5 planning event description as shown in Table 1. The changes are not substantive, do not alter the team's prior intent, and are aimed at clarification only. In regards to include both a SLG and 3-phase for the P5 planning event the SDT respectfully disagrees with the commenter. Based on the SDT's review of historical outage data the SDT believes that a SLG event evolving to a 3-phase item is less likely and that 3-phase fault with Protection System failure is appropriately treated with the standard as an extreme event under extreme event Stability item 2a through 2d. No change made.		
Florida Power and Light	No	The P2-1 event needs to be clarified with its intent. In the SDT Consideration of Comments to the 3rd DRAFT posting, the response to Transmission Planning clarified that "There is no need to show a line energized up to the breakers that opened. The intent is simply to look for low voltage or thermal problems while supplying Load from one end of a normally networked line." This could be accomplished by adding this to footnote 7 or re-naming the event "Opening of a Line Section w/o fault".
Response: The SDT agrees with comments in regard to the P2-1 planning event. A relay mis-operation that inadvertently trips a breaker is the primary reason forced outage cause for a P2.1 event. The condition could also be a planned (maintenance) event. P2.1 has been renamed "opening of a line section w/o a fault" to better align with the teams intent. Additionally, footnote 7 was revised to better clarify the need to study the P2.1 event. Footnote 7 now reads: **Footnote 7** - Opening one end of a line section without a fault on a normally networked Transmission circuit such that the line is possibly serving Load radial from a single source point.		
MAPP	No	The table needs to match the stated requirements in R3 & R4
Response: The standard explicitly references Table 1 in both Requirements R3 and R4 regarding the need to address the planning events and extreme events from both a steady-state (Requirement R3) and stability (Requirement R4) timeframe. The standard is written in a manner where both the standard requirements and Table 1 work jointly together to describe study expectations. In short, Table 1 is part and parcel to the standard.		
Hydro-Québec TransEnergie (HQT)	No	There is confusion in interpretation of the Table 1 When the voltages class of the contingency element and the monitored element are different (one is HV and the other is EHV), to which voltage class is the allowance for shedding of non-consequential load applied. For example if the fault is on the 138-kV side of a 345/138-kV autotransformer, are you allowed to shed load to keep the 345-kV from overloading? Conversely, if the fault is on the 345-kV side of a 345/138-kV autotransformer, are you allowed to shed load to keep the 138-kV from overloading? Footnotes on P3 and P4 (101 & 19) should be 9 and 10, respectively. This merely appears to be a typo in the latest draft. Other footnotes appear to be mislabeled as well. If Extreme Events are not deleted from the standard, then a different number for the table for Extreme Events should be used. Extreme Events 2a need to define towerline. Add language to replace towerline with structure. Table 1 Footnotes require a close editorial review. There are two number ones, and multiple items pointing to the

Organization	Yes or No	Comments for Question 10
		wrong footnote or footnotes that don't exist (19, 101), etc. Several instances are discussed below but this is not an exhaustive list. Table 1 Steady State & Stability Performance Planning Events - Note (a) this note is placed under "Steady State & Stability" but issues of voltage instability, cascading outages, and uncontrolled islanding apply only to stability. NPCC suggests this note be relocated to "Stability Only." Table 1 Steady State & Stability Performance Planning Events - Note (i) this indicates that one cannot meet steady state requirements by depending on end-user owned equipment. Please clarify the purpose and performance requirement on this note with respect to end-user schemes and possible arrangements already in place to trip end-user equipment. Table 1, P4 footnote reference in Category column needs to change from 101 to 10. Footnote reference in Event column lead-in description needs to change from 11 to 10. Table 1, P5 As written, this requirement replicates a fault causing a loss of station anywhere that there is only one protection system. This is overly severe and would lead to the requirement for fully redundant protection systems at many stations. The use of the term "Protection System" in P5 is unacceptably inconsistent with the NERC definition of Protection System because it does not exclude the battery and its associated series elements. Battery systems should not be included. Table 1, P7 for Event 1 (the loss of two adjacent circuits), this needs to specify if these are the same phase or different phases.Table 1 Steady State & Stability Performance Extreme Events It appears that for Steady state, item 2, that item (a) is encompassed by (b). It if is not, what makes it different? Table 1, footnote #2 typo there is an erroneous comma in the phrase "are the fault types, that must be evaluated." Please remove said comma. Table 1, footnote #3, HQT, as does NPCC, has asked NERC to put a lower bound on the HV but it seems that this remains unaddressed.More stringent performance requirements should be applied to Facilities that represent the backbone of the electric power grid and act as the medium for moving large amounts of power from production to various Load centers, rather than to those Facilities that directly serve end-use Load customers. However, as had been commented in preceding postings, the EHV breakpoint for these more stringent requirements, defined in note 3 of table 1 as "all Facilities greater than 300 kV", is not appropriately defined and should be reviewed. A uniform voltage-level threshold has not been shown to adequately cover all of the different power systems in North America, and significant additional costs will be incurred without proportional or measurable reliability benefits if this definition is not changed.The following is a proposed modification to the EHV definition "all Facilities greater than 300 kV" :"Facilities representing the backbone of the System, generally operating at voltages greater than 300 kV, as determined by the Planning Coordinator and approved by Regional Entity." In using such language, we believe that the extra investment required would go towards real improvement of the reliability of the Interconnected System. Furthermore, HQT believe that untill the BES/BPS definition debate is settled at NERC and FERC level, the proposed definition permits the use of the performance base methodology to determine the BPS element subjected to this standard. The way the standard is actually

Organization	Yes or No	Comments for Question 10
		written, it can be interpreted as 300 kV and above, wheter it is part of BPS or not. HQT believe it is overly prescriptive and leaves no leeway.

Response: The determination of when interrupting Non-Consequential Load and/or Firm Transmission Service is permitted to meet Table 1 performance requirements service is based solely on the lowest voltage level of Facilities disconnected by design for the planning event studied and not based on the monitored Facilities. For the example provided, the HV provisions would apply since a 345/138kV transformer is considered a HV Facility that is removed from service regardless of where the fault originated. Changes were made to footnote 1 to better clarify the SDT's intent and it now reads:

> **Footnote 1 -** If the event analyzed involves BES elements at multiple System voltage levels, the lowest System voltage level of the element(s) removed for the analyzed event determines the stated performance criteria regarding allowances for interruptions of Firm Transmission Service and Non-Consequential Load Loss.

Several footnote reference errors were reflected in Table 1 when migrating from Draft 3 to Draft 4 that led to unfortunate confusion. In Draft 5, the SDT has corrected the footnote references and a detailed explanation of the changes required is summarized in the above Summary Considerations for Question 10.

The SDT has retained extreme events and believe it is important to review the extreme events for potential Cascading and if identified complete an evaluation of possible actions designed to reduce the likelihood or mitigate the consequences and adverse impacts of the extreme event(s). The SDT retained the same table reference area for extreme events.

The SDT believes that towerline is a commonly understood term and that the use of "structure" over "tower line" is not a substantive change. No change made in Draft 5 in this regard.

As noted above, errors in reference to Table 1 footnotes are recognized by the SDT and have been corrected in Draft 5.

The SDT disagrees with the commenter's view that Table 1 note "a" is not valid for the steady-state timeframe. The standard in Requirement R6 requires a Transmission Planner/Planning Coordinator to define and document, within their Planning Assessment, any criteria or methodology used in the analysis to identify System instability for conditions such as Cascading, voltage instability, or uncontrolled islanding. A steady-state review is not prohibited by the standard and may be included within the criteria used.

Table 1 note "i" is intended to clarify that even if it is known that an end-user who implements a more conservative practice than that of the Transmission Planner/Planning Coordinator regarding steady-state voltage criteria and chooses to interrupt its own Load, the end-use Load must still be represented in the steady-state timeframe. The Load tripping is permitted in a Stability review, however, it should be assumed that a customer will react quickly to restore its Load and therefore the standard requires the Load be represented in the steady-state timeframe. Only actions (manual or automatic) taken by the Transmission Planner/Planning Coordinator are permitted for consideration for a steady-state review.

As noted above, errors in reference to Table 1 footnotes are recognized by the SDT and have been corrected in Draft 5.

The P5 event is not a review of individual Protection System components but rather evaluates the loss of a "single Protection System" scheme or design. It is acceptable to simulate that a local (at the same substation) alternate Protection System scheme is still operational when performing a P5 review. The SDT chose this language to align with the SAR titled: Reliability of Protection Systems (Project 2009-7). The SDT believes that the individual component level evaluation of Protection Systems and redundancy requirements should be covered under the PRC standards and has only addressed a single protection scheme failure in the Planning Assessment required for the TPL standard. A Protection System component failure (i.e., battery) that removes multiple Protection System schemes is beyond the P5 planning event. Based on feedback from some commenters, the SDT made changes to the P5 planning event description as shown in Table 1. The P5 is now described as shown below. The changes are not substantive, do not alter the team's prior intent and aimed at clarification only.

Organization	Yes or No	Comments for Question 10
The standard does not specify common or different phase for the P7 planning event and is left to the engineering judgment of the Transmission Planner/Planning Coordinator. No change made. Extreme event 2a does not cover 2b when two or more tower lines are contained in the same Right-of-Way. Extreme event item "2a" is 3 or more circuits on the same tower line or structure. Extreme event item "2b" considers loss of multiple Transmission lines located on a different tower line but within the same the same Right-of-Way. The erroneous comma in footnote 2 has been removed as suggested by the commenter. The SDT has retained the same delineation of the Bulk Electric System (EHV and HV) in Draft 5. No changes made.		
National Grid	No	There is confusion in interpretation of the Table 1 When the voltages class of the contingency element and the monitored element are different (one is HV and the other is EHV), to which voltage class is the allowance for shedding of non-consequential load applied. For example if the fault is on the 138-kV side of a 345/138-kV autotransformer, are you allowed to shed load to keep the 345-kV from overloading? Conversely, if the fault is on the 345-kV side of a 345/138-kV autotransformer, are you allowed to shed load to keep the 138-kV from overloading? Footnotes on P3 and P4 (101 & 19) should be 9 and 10, respectively. This merely appears to be a typo in the latest draft. Other footnotes appear to be mislabeled as well. If Extreme Events are not deleted from the standard, then a different number for the table for Extreme Events should be used. Table 1, P5: The use of the term "Protection System" in P5 is unacceptably inconsistent with the NERC definition of Protection System because it does not exclude the battery and its associated series elements. Extreme Events 2a need to define towerline. Add language to replace towerline with structure. Table 1, footnote #3, change Regional Entity to Regional Reliability Organization.
Response: The determination of when interrupting Non-Consequential Load and/or Firm Transmission Service is permitted to meet Table 1 performance requirements service is based solely on the lowest voltage level of Facilities disconnected by design for the planning event studied and not based on the monitored Facilities. For the example provided, the HV provisions would apply since a 345/138kV transformer is considered a HV Facility that is removed from service regardless of where the fault originated. Changes were made to footnote 1 to better clarify the SDT's intent and it now reads: **Footnote 1 -** If the event analyzed involves BES elements at multiple System voltage levels, the lowest System voltage level of the element(s) removed for the analyzed event determines the stated performance criteria regarding allowances for interruptions of Firm Transmission Service and Non-Consequential Load Loss. Several footnote reference errors were reflected in Table 1 when migrating from Draft 3 to Draft 4 that led to unfortunate confusion. In Draft 5, the SDT has corrected the footnote references and a detailed explanation of the changes required is summarized in the above Summary Considerations for Question 10. The SDT has retained extreme events and believe it is important to review the extreme events for potential Cascading and if identified complete an evaluation of possible actions designed to reduce the likelihood or mitigate the consequences and adverse impacts of the extreme event(s). The SDT retained the same table		

Organization	Yes or No	Comments for Question 10
reference area for extreme events. The P5 event is not a review of individual Protection System components but rather evaluates the loss of a "single Protection System" scheme or design. It is acceptable to simulate that a local (at the same substation) alternate Protection System scheme is still operational when performing a P5 review. The SDT chose this language to align with the SAR titled: Reliability of Protection Systems (Project 2009-7). The SDT believes that the individual component level evaluation of Protection Systems and redundancy requirements should be covered under the PRC standards and has only addressed a single protection scheme failure in the Planning Assessment required for the TPL standard. A Protection System component failure (i.e., battery) that removes multiple Protection System schemes is beyond the P5 planning event Based on feedback from some commenters, the SDT made changes to the P5 planning event description as shown in Table 1. The changes are not substantive, do not alter the team's prior intent and aimed at clarification only. The SDT disagrees with the commenter that the P5 event is a misuse of the defined Protection System term. The SDT believes that tower line is a commonly understood term and that the use of "structure" over "tower line" is not a substantive change. No change made in Draft 5 in this regard. The SDT concluded that the use of Regional Entity is not necessary. Other changes have been made to footnote for clarity based on other comments. **Footnote 3** - Bulk Electric System (BES) level references include extra-high voltage (EHV) Facilities defined as greater than 300kV and high voltage (HV) Facilities defined as the 300kV and lower voltage Systems. The designation of EHV and HV is used to distinguish between stated performance criteria allowances for interruption of Firm Transmission Service and Non-Consequential Load Loss.		
Northeast Power Coordinating Council--RSC	No	There is confusion in interpretation of the Table 1 When the voltages class of the contingency element and the monitored element are different (one is HV and the other is EHV), to which voltage class is the allowance for shedding of non-consequential load applied. For example if the fault is on the 138-kV side of a 345/138-kV autotransformer, are you allowed to shed load to keep the 345-kV from overloading? Conversely, if the fault is on the 345-kV side of a 345/138-kV autotransformer, are you allowed to shed load to keep the 138-kV from overloading? Footnotes on P3 and P4 (101 & 19) should be 9 and 10, respectively. This merely appears to be a typo in the latest draft. Other footnotes appear to be mislabeled as well. If Extreme Events are not deleted from the standard, then a different number for the table for Extreme Events should be used. Extreme Events 2a need to define towerline. Add language to replace towerline with structure. Table 1 Footnotes require a close editorial review. There are two number ones, and multiple items pointing to the wrong footnote or footnotes that don't exist (19, 101), etc. Several instances are discussed below but this is not an exhaustive list. Table 1 Steady State & Stability Performance Planning Events - Note (a) this note is placed under "Steady State & Stability" but issues of voltage instability, cascading outages, and uncontrolled islanding apply only to stability. NPCC suggests this note be relocated to "Stability Only." Table 1 Steady State & Stability Performance Planning Events - Note (i) this indicates that one cannot meet steady state requirements by depending on end-user owned equipment. Please clarify the purpose and performance requirement on this note with respect to end-user schemes and possible arrangements already in

Organization	Yes or No	Comments for Question 10
		place to trip end-user equipment. Table 1, P4 footnote reference in Category column needs to change from 101 to 10. Footnote reference in Event column lead-in description needs to change from 11 to 10. Table 1, P5 As written, this requirement replicates a fault causing a loss of station anywhere that there is only one protection system. This is overly severe and would lead to the requirement for fully redundant protection systems at many stations. The use of the term "Protection System" in P5 is unacceptably inconsistent with the NERC definition of Protection System because it does not exclude the battery and its associated series elements. Battery systems should not be included. Table 1, P7 for Event 1 (the loss of two adjacent circuits), this needs to specify if these are the same phase or different phases. Table 1 Steady State & Stability Performance Extreme EventsIt appears that for Steady state, item 2, that item (a) is encompassed by (b). It if is not, what makes it different? Table 1, footnote #2 typo there is an erroneous comma in the phrase "are the fault types, that must be evaluated." Please remove said comma. Table 1, footnote #3, NPCC has asked NERC to put a lower bound on the HV but it seems that this remains unaddressed.More stringent performance requirements should be applied to Facilities that represent the backbone of the electric power grid and act as the medium for moving large amounts of power from production to various Load centers, rather than to those Facilities that directly serve end-use Load customers. However, as had been commented in preceding postings, the EHV breakpoint for these more stringent requirements, defined in note 3 of table 1 as "all Facilities greater than 300 kV", is not appropriately defined and should be reviewed. A uniform voltage-level threshold has not been shown to adequately cover all of the different power systems in North America, and significant additional costs will be incurred without proportional or measurable reliability benefits if this definition is not changed.The following is a proposed modification to the EHV definition "all Facilities greater than 300 kV"?: "Facilities representing the backbone of the System, generally operating at voltages greater than 300 kV, as determined by the Planning Coordinator and approved by Regional Entity." In using such language, we believe that the extra investment required would go towards real improvement of the reliability of the Interconnected System.

Response: The determination of when interrupting Non-Consequential Load and/or Firm Transmission Service is permitted to meet Table 1 performance requirements service is based solely on the lowest voltage level of Facilities disconnected by design for the planning event studied and not based on the monitored facilities. For the example provided, the HV provisions would apply since a 345/138kV transformer is considered a HV Facility that is removed from service regardless of where the fault originated. Changes were made to footnote 1 to better clarify the SDT's intent and it now reads:

> **Footnote 1 -** If the event analyzed involves BES elements at multiple System voltage levels, the lowest System voltage level of the element(s) removed for the analyzed event determines the stated performance criteria regarding allowances for interruptions of Firm Transmission Service and Non-Consequential Load Loss.

Several footnote reference errors were reflected in Table 1 when migrating from Draft 3 to Draft 4 that led to unfortunate confusion. In Draft 5, the SDT has corrected

Organization	Yes or No	Comments for Question 10
		the footnote references and a detailed explanation of the changes required are summarized in the above Summary Considerations for Question 10. The SDT has retained extreme events and believe it is important to review the extreme events for potential Cascading and if identified complete an evaluation of possible actions designed to reduce the likelihood or mitigate the consequences and adverse impacts of the extreme event(s). The SDT retained the same table reference area for extreme events. The SDT believes that tower line is a commonly understood term and that the use of "structure" over "tower line" is not a substantive change. No change made. As noted above, errors in reference to Table 1 footnotes are recognized by the SDT and have been corrected in Draft 5. The SDT disagrees with the commenter's view that Table 1 note "a" is not valid for the steady-state timeframe. The standard in requirement R6 requires a Transmission Planner/Planning Coordinator to define and document, within their Planning Assessment, any criteria or methodology used in the analysis to identify System instability for conditions such as Cascading outages, voltage instability, or uncontrolled islanding. A steady-state review is not prohibited by the standard and may be included within the criteria used. Table 1 note "i" is intended to clarify that even if it is known that an end-user who implements a more conservative practice than that of the TP/PC regarding steady-state voltage criteria and chooses to interrupt its own Load, the end-use Load must still be represented in the steady-state timeframe. The Load tripping is permitted in a Stability review, however, it should be assumed that a customer will react quickly to restore its Load and therefore the standard requires the Load be represented in the steady-state timeframe. Only actions (manual or automatic) taken by the Transmission Planner/Planning Coordinator are permitted for consideration for a steady-state review. As noted above, errors in reference to Table 1 footnotes are recognized by the SDT and have been corrected in Draft 5. The P5 event is not a review of individual Protection System components but rather evaluates the loss of a "single Protection System" scheme or design. It is acceptable to simulate that a local (at the same substation) alternate Protection System scheme is still operational when performing a P5 review. The SDT chose this language to align with the SAR titled: Reliability of Protection Systems (Project 2009-7). The SDT believes that the individual component level evaluation of Protection Systems and redundancy requirements should be covered under the PRC standards and has only addressed a single protection scheme failure in the Planning Assessment required for the TPL standard. A Protection System component failure (i.e., battery) that removes multiple Protection System schemes is beyond the P5 planning event Based on feedback from some commenters, the SDT made changes to the P5 planning event description as shown in Table 1. The changes are not substantive, do not alter the team's prior intent and aimed at clarification only. The standard does not specify common or different phase for the P7 planning event and is left to the engineering judgment of the Transmission Planner/Planning Coordinator. No changes made. Extreme event 2a does not cover 2b when two or more tower lines are contained in the same Right-of-Way. Extreme event item "2a" is 3 or more circuits on the <u>same tower line or structure.</u> Extreme event item "2b" considers loss of multiple Transmission lines located on a different tower line but within the same the same Right-of-Way. The erroneous comma in footnote 2 has been removed as suggested by the commenter. The SDT has retained the same delineation of the Bulk Electric System (EHV and HV) in Draft 5. No change made.
ISO New England	No	We generally agree with the table however our issues are as follows:Footnotes on P3 and P4 (101 & 19) should be 9 and 10, respectively. This merely appears to be a typo in the latest draft. Other footnotes appear to be mislabeled as well.

Organization	Yes or No	Comments for Question 10
		If Extreme Events are not deleted from the standard, then a different number for the table for Extreme Events should be used. There is confusion in interpretation of the Table 1 When the voltages class of the contingency element and the monitored element are different (one is HV and the other is EHV), to which voltage class is the allowance for shedding of non-consequential load applied. For example if the fault is on the 138-kV side of a 345/138-kV autotransformer, are you allowed to shed load to keep the 345-kV from overloading? Conversely, if the fault is on the 345-kV side of a 345/138-kV autotransformer, are you allowed to shed load to keep the 138-kV from overloading"P5 "The use of the term "Protection System" in P5 is unacceptably inconsistent with the NERC definition of Protection System because it does not exclude the battery and its associated series elements. Extreme Events 2a need to define tower line. Add language to replace "tower line" with "structure". Table 1, footnote #3, change Regional Entity to Regional Reliability Organization.
United Illuminating	No	We generally agree with the table however our issues are as follows:Footnotes on P3 and P4 (101 & 19) should be 9 and 10, respectively. This merely appears to be a typo in the latest draft. Other footnotes appear to be mislabeled as well. If Extreme Events are not deleted from the standard, then a different number for the table for Extreme Events should be used. There is confusion in interpretation of the Table 1 When the voltages class of the contingency element and the monitored element are different (one is HV and the other is EHV), to which voltage class is the allowance for shedding of non-consequential load applied. For example if the fault is on the 138-kV side of a 345/138-kV autotransformer, are you allowed to shed load to keep the 345-kV from overloading? Conversely, if the fault is on the 345-kV side of a 345/138-kV autotransformer, are you allowed to shed load to keep the 138-kV from overloading?P5 The use of the term "Protection System" in P5 is unacceptably inconsistent with the NERC definition of Protection System because it does not exclude the battery and its associated series elements. Extreme Events 2a need to define tower line. Add language to replace "tower line" with "structure". Table 1, footnote #3, change Regional Entity to Regional Reliability Organization.
Central Maine Power Company	No	We generally agree with the table, however our issues are as follows:Footnotes on P3 and P4 (101 & 19) should be 9 and 10, respectively. This merely appears to be a typo in the latest draft. Other footnotes appear to be mislabeled as well. If Extreme Events are not deleted from the standard, then a different number for the table for Extreme Events should be used. There is confusion in interpretation of the Table 1 When the voltages class of the contingency element and the monitored element are different (one is HV and the other is EHV), to which voltage class is the allowance for shedding of non-consequential load applied. For example if the fault is on the 138-kV side of a 345/138-kV

Organization	Yes or No	Comments for Question 10
		autotransformer, are you allowed to shed load to keep the 345-kV from overloading? Conversely, if the fault is on the 345-kV side of a 345/138-kV autotransformer, are you allowed to shed load to keep the 138-kV from overloading?P5 The use of the term "Protection System" in P5 is unacceptably inconsistent with the NERC definition of Protection System because it does not exclude the battery and its associated series elements. Extreme Events 2a need to define tower line. Add language to replace "tower line" with "structure". Table 1, footnote #3 change Regional Entity to Regional Reliability Organization.
Response: Several footnote reference errors were reflected in Table 1 when migrating from Draft 3 to Draft 4 that led to unfortunate confusion. In Draft 5, the SDT has corrected the footnote references and a detailed explanation of the changes required is summarized in the above Summary Considerations for Question 10. The SDT has retained extreme events and believe it is important to review the extreme events for potential Cascading and if identified complete an evaluation of possible actions designed to reduce the likelihood or mitigate the consequences and adverse impacts of the extreme event(s). The SDT retained the same table reference area for extreme events The determination of when interrupting Non-Consequential Load and/or Firm Transmission Service is permitted to meet Table 1 performance requirements service is based solely on the lowest voltage level of Facilities disconnected by design for the planning event studied and not based on the monitored Facilities. For the example provided, the HV provisions would apply since a 345/138kV transformer is considered a HV Facility that is removed from service regardless of where the fault originated. Changes were made to footnote 1 to better clarify the SDT's intent and it now reads: **Footnote 1 -** If the event analyzed involves BES elements at multiple System voltage levels, the lowest System voltage level of the element(s) removed for the analyzed event determines the stated performance criteria regarding allowances for interruptions of Firm Transmission Service and Non-Consequential Load Loss. The SDT believes that tower line is a commonly understood term and that the use of "structure" over "tower line" is not a substantive change. No change made in Draft 5 in this regard. The SDT concluded that the use of Regional Entity in footnote 3 is not necessary. No change made to reflect the proposed Regional Reliability Organization as proposed by the commenter**.** **Footnote 3** - Bulk Electric System (BES) level references include extra-high voltage (EHV) Facilities defined as greater than 300kV and high voltage (HV) Facilities defined as the 300kV and lower voltage Systems. The designation of EHV and HV is used to distinguish between stated performance criteria allowances for interruption of Firm Transmission Service and Non-Consequential Load Loss.		
American Transmission Company	No	We suggest the following changes:Note "e" in the Planning Events, Steady State & Stability section – After bulletin item #7 is added to R2.7.1 as proposed above, refer to this bulletin item with wording like, ". . . applicable to the Facility Ratings (as noted in R2.7.1).". Note "a" and Note "b" in the Planning Events, Steady State Only section Both of these notes are stated in the form of a Requirement (e.g. use the verb "shall"), but all requirements should be included in the Requirements section and not introduced (hidden) in the performance notes of Table 1. After R3.3.5 is added as proposed above, replace Note "a" and "b" with wording from R3.3.5, "Applicable System

Organization	Yes or No	Comments for Question 10
		Operating Limits for the planning horizon shall not be exceeded, as stated in R3.3.5.". Note "a" and "b" can be combined and replaced with a single Note because the observance of System Operating Limits related to steady state conditions covers both items. Note "d" in the Planning Events, Steady State Only section This note is stated in the form of a Requirement (e.g. use the verb "shall"), but all requirements should be included in the Requirements section and not introduced in the performance notes of Table 1. After R3.3.6 is added as proposed above, replace Note "d" with wording from R3.3.6, The response of voltage sensitive Load including Load that is disconnected from the System by end-user equipment associated with an event shall not be used to steady state voltage requirements, as stated in R3.3.6. Note "a" and Note "b" in the Planning Events, Stability Only section Both of these notes are stated in the form of a Requirement (e.g. use the verb "shall"), but all requirements should be included in the Requirements section and not introduced in the performance notes of Table 1. After R4.3.5 is added as proposed above, replace Note "a" and "b" with wording from R4.3.5, "Applicable System Operating Limits for the planning horizon shall not be exceeded, as stated in R4.3.5.". Note "a" and "b" can be combined and replaced with a single Note because the observance of System Operating Limits related to stability covers both items P3 Modify the P3 Category performance criteria to apply only to the loss of two generators because the probability of the loss of two base load generators is an order of magnitude greater than the loss of a generator and any other transmission element. We suggest the listing of: the loss of transmission circuit, transformer, shunt device, and single pole of DC line be removed from the P3 Events column. Move the "generator + another element" events to the P6 Category by adding "1. Generator" to the listing in the Initial System Condition (Loss of . . .) column. Item 2.a in the Extreme Events, Steady State section Clarify the meaning of the loss of multiple circuits in Item 2.a by using wording similar to P7. We suggest this text: "a. Loss of three or more circuits that share a common tower." Item 3.b of the Extreme Events, Steady State section " Clarify the reference to actual, historical operating experience in Item 3.b. We suggest this text: "b. Other events based upon actual operating experience that may result in wide area disturbances." Item 2.i of the Extreme Events, Stability State section " Clarify the reference to actual, historical operating experience in Item 2.i. We suggest this text that is similar to Steady State, Item 3.b: "i. Other events based upon actual operating experience that may result in wide area disturbances." Extreme Event sections are not updated to reflect the new footnote numbering (for instance Item 2a and Item 2b of the Steady State column). Footnote 6 " Further clarify the applicable shunt devices in Footnote 6 with this suggested text: "6. Requirements

Organization	Yes or No	Comments for Question 10
		which are applicable to shunt devices, also apply to FACTS devices that are connected to ground, but not instrument voltage transformers or surge arresters."
Response: The SDT in ATC's Q2 comments declined to add the suggested 7th bullet to Requirement R2, part 2.7.1. The list in Requirement R2, part 2.7.1 provides examples of potential corrective actions and includes references to the use of generation tripping/runback when used to meet steady-state or Stability performance requirements. The note "e" in Table 1 is a condition for allowance of planned System adjustments, which could include Operating Plans such as re-dispatch and qualifies that the operating actions must be achievable with the timeframe of an applicable ratings. No change made. The Table 1 performance requirements are tied to the standard through Requirements R3 and R4. For example in Requirement R3, part 3.1 the requirement indicates "Studies shall be performed for planning events to determine whether the BES meets the performance requirements in Table 1..". Header notes are part of Table 1 and therefore included in part 3.1 of requirement R3. No change made. The proposed Requirement R3, part 3.3.5 was not adopted by the SDT. No change made. Regarding note "d" comment - the Table 1 performance requirements are tied to the standard through Requirements R3 and R4. The proposed Requirement R3, part 3.3.6 was not adopted by the SDT. No change made. There are no notes "a" and "b" in the Stability only section. The correct reference is "j" and "k". The Table 1 performance requirements are tied to the standard through Requirements R3 and R4. No change made. The SDT disagrees with the proposed adjustment of moving select generator Contingency outages to new planning event designations. The Table 1 planning event order is somewhat subjective and the SDT believes appropriate expectations were made for generation outages within the P3 event. No changes made. Item 2.a in the Extreme Events, steady-state the language as shown in Draft 4 already indicates the text requested by the commenter. It's possible that an earlier draft of TPL-001-1 was referenced when making the comment. No change required. Item 3b in the Extreme Events, steady-state the language as shown in Draft 4 already indicates the text requested by the commenter. It's possible that an earlier draft of TPL-001-1 was referenced when making the comment. No change required. Item 2i in the Extreme Events, Stability language was revised to "2f" in Draft 4 and already indicates the text requested by the commenter. It's possible that an earlier draft of TPL-001-1 was referenced when making the comment. No change required. Several footnote reference errors were reflected in Table 1 when migrating from Draft 3 to Draft 4 that led to unfortunate confusion. In Draft 5, the SDT has corrected the footnote references and a detailed explanation of the changes required is summarized in the above Summary Considerations for Question 10. Regarding footnote 6, the SDT believes the footnote is sufficient. Based on lack of support for the proposed change from other stakeholders the SDT determined no change was needed.		
Oncor Electric Delivery	Yes	Errata Changes - Footnotes on P3 and P4 (101 & 19) should be 9 and 10, respectively. Other Footnotes appear to be mislabeled as well. There is lack of clarity in the interpretation of Table 1 When the voltages class of the contingency element and the monitored element are different (one is HV and the other is EHV), to which voltage class is the allowance for shedding of non-consequential load applied. For example if the fault is on the 138-kV side of a 345/138-kV autotransformer, are you allowed to shed load to keep the 345-kV from exceeding its load rating? Conversely, if

Organization	Yes or No	Comments for Question 10
		the fault is on the 345-kV side of a 345/138-kV autotransformer, are you allowed to shed load to keep the 138-kV from exceeding its load rating? Table I, item "e" ?It doesn't specify which units can be adjusted following the contingency. This seems to be similar to the fact that the standard doesn't address the base case. Should the standard be clear that you can or cannot rely on generation redispatch? Should failure of a fast start generator to start up be included in the contingency, or is this another level of contingency? Table I, non-consequential load loss under no circumstance is it acceptable to shed non-consequential load to address issues in a future looking system plan. Table 1 Steady State & Stability Performance Planning Events - Note (i) this indicates that one cannot meet steady state requirements by depending on end-user owned equipment. Please clarify the purpose and performance requirement on this note with respect to end-user UVLS scheme and possible contractual arrangement already in place to trip end-user equipment. Table 1, P7 for the DCT, are these the same phase? Table 1 Steady State & Stability Performance Extreme EventsSteady state, item 2, isn't (a) covered by (b) Table 1, footnote #3, NPCC has asked NERC to put a lower bound on the HV but it seems that this remains unaddressed. P5 This test is overly severe since it could assume the total protection system failure and the system would have to rely on remote end clearing. Part of the problem seems to be that the battery is part of the protection system. The intent seems to have been to fail part of one system, not the battery. If the battery is to be excluded, then it should be clearly stated. Extreme Events 2a The term "towerline" should be defined. We agree with the SDT that more stringent performance requirements be applied for the Facilities that do not directly serve end-use load but rather represent the backbone of the electric power grid and act as the medium for moving large amounts of power from production to various load centers.However, as HQT commented on previous draft, we strongly believe that the EHV breakpoint for these more stringent requirements, defined in note 3 of table 1 as "all Facilities greater than 300 kV" is not appropriately defined and should be reviewed. The SDT have not demonstrated that a uniform voltage-level threshold could adequately covers all different power system types in North America and we strongly believe that significant, additional costs will be incurred without proportional or measurable reliability benefits if this definition is not changed.We propose to modify EHV definition "all Facilities greater than 300 kV" by the following " Facilities representing the backbone of the System, generally at voltage greater than 300 kV, as determined by the Planning Coordinator and approved by Regional Entity." In using such a language, we believe that the additional investment required would facilitate real improvement of the reliability of the interconnected System.
Response: Several footnote reference errors were reflected in Table 1 when migrating from Draft 3 to Draft 4 that led to unfortunate confusion. In Draft 5, the SDT		

Organization	Yes or No	Comments for Question 10
		has corrected the footnote references and a detailed explanation of the changes required is summarized in the above Summary Considerations for Question 10. The determination of when interrupting Non-Consequential Load and/or Firm Transmission Service is permitted to meet Table 1 performance requirements service is based solely on the lowest voltage level of Facilities disconnected by design for the planning event studied and not based on the monitored Facilities. For the example provided, the HV provisions would apply since a 345/138kV transformer is considered a HV Facility that is removed from service regardless of where the fault originated. Changes were made to footnote 1 to better clarify the SDT's intent and it now reads: **Footnote 1 -** If the event analyzed involves BES elements at multiple System voltage levels, the lowest System voltage level of the element(s) removed for the analyzed event determines the stated performance criteria regarding allowances for interruptions of Firm Transmission Service and Non-Consequential Load Loss. Regarding the note "e" reference to re-dispatch. The re-dispatch of any generation permissible for re-dispatch having impact on the Transmission Planner/Planning Coordinator area. The SDT believes that the standard is clear in Requirement R2, sub-part 2.7.1 (Corrective Action Plans) that generation curtailment, tripping and re-dispatch are permissible Corrective Action Plans for both single and multiple Contingency events. Starting of a "fast-start" generation unit appears to be viewed in the context of a corrective action solution to a studied planning event. There may situations like this that lend themselves to sensitivity analysis as required by the TPL-001-1 standard. The SDT respectfully disagrees with the commenter's view related to disallowing Non-Consequential Load Loss for any planning event. The SDT believes they have made the appropriate expectations in not permitting its use for some Contingency planning events involving EHV facilities. A Transmission Planner/Planning Coordinator may implement a more conservative planning approach beyond what TPL-001-1 requires if they believe one is warranted. Table 1 note "i" is intended to clarify that even if it is known that an end-user who implements a more conservative practice than that of the TP/PC regarding steady-state voltage criteria and chooses to interrupt its own Load, the end-use Load must still be represented in the steady-state timeframe. The Load tripping is permitted in a Stability review, however, it should be assumed that a customer will react quickly to restore its Load and therefore the standard requires the Load be represented in the steady-state timeframe. Only actions (manual or automatic) taken by the Transmission Planner/Planning Coordinator are permitted for consideration for a steady-state review. Interruptible Load agreements are permissible and the Load dropped through contractual arrangements with the end-user can be reflected in the steady-state analysis. The standard does not specify common or different phase for the P7 planning event and is left to the engineering judgment of the Transmission Planner/Planning Coordinator. No change made. Extreme event 2a does not cover 2b when two or more tower lines are contained in the same Right-of-Way. Extreme event item "2a" is 3 or more circuits on the <u>same tower line or structure.</u> Extreme event item "2b" considers loss of multiple Transmission lines located on a different tower line but within the same the same Right-of-Way. The SDT believes that tower line is a commonly understood term and that the use of "structure" over "tower line" is not a substantive change. No change made in Draft 5 in this regard. The SDT has retained the same delineation of the Bulk Electric System (EHV and HV) in Draft 5. No changes made.
TIS	Yes	Footnotes on P3 and P4 (101 & 19) should be 9 and 10, respectively. This merely appears to be a typo in the latest draft. There is confusion in interpretation of the Table 1 When the voltages class of the contingency element and the

Organization	Yes or No	Comments for Question 10
		monitored element are different (one is HV and the other is EHV), to which voltage class is the allowance for shedding of non-consequential load applied?. Please see additional comments provided for R2.
Response: Several footnote reference errors were reflected in Table 1 when migrating from Draft 3 to Draft 4 that led to unfortunate confusion. In Draft 5, the SDT has corrected the footnote references and a detailed explanation of the changes required is summarized in the above Summary Considerations for Question 10. The determination of when interrupting Non-Consequential Load and/or Firm Transmission Service is permitted to meet Table 1 performance requirements service is based solely on the lowest voltage level of Facilities disconnected by design for the planning event studied and not based on the monitored Facilities. For the example provided, the HV provisions would apply since a 345/138kV transformer is considered a HV Facility that is removed from service regardless of where the fault originated. Changes were made to footnote 1 to better clarify the SDT's intent and it now reads: **Footnote 1 -** If the event analyzed involves BES elements at multiple System voltage levels, the lowest System voltage level of the element(s) removed for the analyzed event determines the stated performance criteria regarding allowances for interruptions of Firm Transmission Service and Non-Consequential Load Loss. See the SDT's response to your comments provided for Requirement R2.		
Platte River Power Authority	Yes	If clarity is given for the "Non-Consequential Load Loss Allowed" column of Yes/No that it refers to the planned shedding of firm load. (see my comment on Definition)
Response: See the SDT's response to your comment in Q9.		
American Electric Power	Yes	In Table 1, footnotes 19 and 101 should probably read 9 and 10. Also, we suggest adding table borders in P4 to more clearly align the columns that correspond to Event 6 (similar use of table borders as was done in P2).
Response: Several footnote reference errors were reflected in Table 1 when migrating from Draft 3 to Draft 4 that led to unfortunate confusion. In Draft 5, the SDT has corrected the footnote references and a detailed explanation of the changes required is summarized in the above Summary Considerations for Question 10. The SDT has made changes to the table borders for the P4 planning event per your recommendation.		
Orlando Utilities Commission	Yes	Note 2 regarding three phase faults being sufficient evidence for SLG faults is an excellent addition, thank you. For P3 and P5 it should be made clearer that note 1 AND note 9 apply, maybe by using a comma in-between, not a note 19 that I wasn't able to locate. For Note 9, reading the context it applies only to P3, P5 and P6, but not to P1. To apply this to actual study methodology, in responding to a P1 event Note 9 can not be applied when returning the system to a continuous (sustainable) state. However after those adjustments are made if additional adjustments are needed to make the system "secure", that is prepared for the next event in the P3 or P6 contingency, then note 9 can be applied? Is

Organization	Yes or No	Comments for Question 10
		this a correct understanding?
Response: Several footnote reference errors were reflected in Table 1 when migrating from Draft 3 to Draft 4 that led to unfortunate confusion. In Draft 5, the SDT has corrected the footnote references and a detailed explanation of the changes required is summarized in the above Summary Considerations for Question 10. Footnote 9 is now applied to all "No" items for the column "Interruption of Firm Transmission Service Allowed". Footnote 9 clarifies that Firm Transmission Service can be interrupted so long as appropriate re-dispatch of resources are available and obligated to re-dispatch without any firm Load loss and that Facility ratings are maintained. Planning events P0, P1, and P2 now also include footnote 9 and is allowed both as a System adjustment to prepare for the next event and as a corrective action to the event studied. Please refer to the footnote for more details.		
NYISO	Yes	Question #10. Do you agree with the changes in the performance elements and notes in Table 1? If not, please provide specific comments by note number, note alpha character, or performance category. Yes
Exelon Transmission Planning	Yes	
FirstEnergy Corp	Yes	
Gainesville Regional Utilities	Yes	
Independent Electricity System Operator	Yes	
Progress Energy Carolinas	Yes	
SCE&G	Yes	
PJM	Yes	
ITC Holdings	Yes	none
Response: Thank you for your support of the SDT's work.		

11. The SDT has provided a revised Implementation Plan as part of this posting. Do you agree with the revisions to the Plan? If not, please provide specific comments.

Summary Consideration: There were 5 main comments associated with this question.

1. Thirteen commenters requested clarification to better define the 60 month effective date for certain "raising the bar" performance requirements. The SDT believes that the current language in Section A. 5 of the Standard, with a minor change that the SDT will incorporate in the next draft, is clear. That section, as modified, will state that the five year period starts "beginning on the first day of the first calendar quarter following applicable regulatory approval" of the revised standard.

2. Four commenters indicated that 60 months is not enough time to build major lines, especially if up to 24 months is needed to do the Planning Assessment and develop a Corrective Action Plan. The SDT considered this issue when TPL-001-1, draft 3 was prepared, and the SDT again discussed its position in light of the comments received from this posting. The SDT continues to believe that extending the 60 month implementation period would water down the standard by potentially delaying some corrective actions that could be implemented in 60 months or less. The current draft of TPL-001-1 does in fact recognize the distinct possibility that major construction projects could take more than 60 months, in which case Requirement R2, part 2.7.3 would apply.

3. The relevant portion of that requirement states: "If situations arise that are beyond the control of the Transmission Planner or Planning Coordinator that prevent the implementation of a Corrective Action Plan in the required timeframe, then the Transmission Planner or Planning Coordinator is permitted to utilize Non-Consequential Load Loss and curtailment of Firm Transmission Service to correct the situation that would normally not be permitted in Table 1, provided that the Transmission Planner or Planning Coordinator documents that they are taking actions to resolve the situation. …." This provision could be applied when formulating the original Corrective Action Plan when it is known in advance that the permitting and construction process will require longer than 60 months or after the plan is formulated and unexpected delays arise outside the Transmission Planner's or Planning Coordinator's control.
   Four commenters believe that it is inappropriate or in violation of Energy Policy Act 2005 for the revised standard to require building new facilities and some also question the requirement to self-report inability to meet Corrective Action Plan requirements. The Corrective Action Plan, however, does not require construction of facilities per se and, therefore, the SDT does not believe that the language in the current draft violates the Energy Policy Act of 2005. Other choices available as part of the Corrective Action Plan besides constructing new facilities include use of interruptible Load contracts, implementation of Demand Side Management programs, and the addition of generation. The SDT understands that there may be certain circumstances where the only viable solution to a performance deficiency is to add a new Transmission Facility. This is no different than situations that Transmission Planners have faced under the current TPL standards as well as voluntary criteria that have existed for many years. The SDT also points out that should a Transmission Planner or Planning Coordinator find that they can not meet the performance requirements by the end of the 60 month transition period, they would need to submit a mitigation plan to their Regional Entity. As long as an acceptable mitigation plan is offered, the intent of the SDT is that the reporting entity will not be subject to penalties.

3. Four commenters pointed out a typographical error that reversed the numbering of Requirements R7 and R8 in the Implementation Plan. The implementation plan has been corrected to reflect the SDT's original intent that Requirements R1 and R7 (not Requirement R8) become effective 12 months after approval and Requirements R2 through R6 plus Requirement R8 (not Requirement R7), with the noted exceptions, become effective 24 months after approval.

4. Three commenters asked for clarification of the parenthetical language applicable to Events P1-2 and P1-3. The parenthetical phrase related to P1-2 and P1-3 is intended to limit the application of the 60 calendar month exception to those situations where footnote b of the existing standards was interpreted to mean that controlled interruption of electric supply to local network customers connected to or supplied by the faulted element is permitted. The SDT took this position in recognition of the fact that a significant number of entities interpret footnote 'b' in this manner and, therefore, the revised standard represents a "raising of the bar" for them.

Organization	Yes or No	Comments for Question 11
Lafayette Utilities System		LUS remains concerned as to the length of time permitted for implementation, and believes that it should be shorter, but would not oppose adoption of version 4, as it has now been clarified, if that is the only issue of concern. There may be ways, outside the standard development process, to limit the financial harms caused to others as a result of the failure to meet the clarified standard during the implementation period.
Response: Many industry entities have expressed concern that the stated implementation period may not be sufficient, particularly for major projects. The SDT believes it has struck the right balance between the differing views, and does not plan to shorten the time permitted for implementation as you have suggested.		
FRCC Transmission Working Group		The implementation plan needs to be clarified that during the first year the existing TPL standards are still in effect. As written it appears that only R1 and R8 are in effect and the existing TPL standards are not.Assessments are a year long process and are based on a year or more worth of studies, the study work and assessment are not executed in a single day. R2 through R7 is unclear what "coming into effect means". Please consider adding the following paragraph:"Entities are not required to alter their annual schedule based on the R2-R7 requirements going into place or have duplicate efforts at assessments in the year the old and new standard overlap. Therefore any assessment performed prior to R2-R7 going into effect shall meet R1, R8 and the prior TPL standards; an assessment under the revised standard is not required until the following annual cycle. An assessment performed after R2-R7 are in effect shall meet these new TPL Standard. The date the assessment is "performed" for the purposes of this phase in, shall be determined by the date the entity began formally sharing results with its neighbors under R8." Please clarify the parenthetical for P1-2 and P1-3. Is the intent of this parenthetical referring to Consequential Load Loss that is allowed for P1 events?
Response: The Implementation Plan has been corrected to reflect the SDT's original intent that Requirements R1 and R7 (not Requirement R8) become effective 12		

Organization	Yes or No	Comments for Question 11
months after approval and Requirements R2 through R6 plus Requirement R8 (not Requirement R7), with the noted exceptions, become effective 24 months after approval. The SDT does not believe that a clarification, as you suggested, is needed to cover the one-year period for months 13 through 24. The NERC standards process is clear that an existing standard that is being revised remains in force until the revised standard becomes effective. The SDT has reviewed your suggested addition to the paragraph that addresses the effective date for Requirements R2 through R6 plus Requirement R8. The SDT does not believe that your suggestion provides further clarification and the SDT has determined that no further change is warranted. The parenthetical phrase related to P1-2 and P1-3 is intended to limit the application of the 60 calendar month exception to those situations where footnote b of the existing standards was interpreted to mean that controlled interruption of electric supply to local network customers connected to or supplied by the Faulted element is permitted. The SDT took this position in recognition of the fact that a significant number of entities interpret footnote b in this manner and, therefore, the revised standard represents a "raising of the bar" for them.		
ERCOT ISO	No	* The implementation plan references revisions to the MOD standards. Should the team submit a SAR for the revision of the MOD standards to ensure TPL needs are considered? As stated in the comments for R1 " if the MOD standards are properly updated, there is no need to state MOD requirements in TPL-001.* Definition comments from Question 9 apply to implementation plan.* The Implementation Plan references R1 and R8 to be effective within 12 months of regulatory approval. R8 per the implementation plan state that the responsibilities of the PC and TP will be defined. This appears to be R7 of Draft 4 and the requirement language does not align. Conversely, the Effective Date should be revised to ensure the references to the requirements align properly. As written it states the assessment should be available before the assessment is complete. * During the 24 month transition period, any entity that can prove compliance with the revised TPL-001 should not have to prove compliance to the old TPL-001 through TPL-004. * The SAR should state that TPL-005 and TPL-006 are to be retired. The only place this has been found is within the implementation plan. It is not an intuitive place to find this information.
Response: The SDT referenced revisions to the MOD standards to establish a record of the need to fill a gap in the overall coordination among the Reliability Standards. The SDT does not intend to submit a SAR; rather the expectation is that NERC will take the necessary action to follow through to address this need at the appropriate point in time. See the SDT's response to your definition comments in Question 9. The Implementation Plan has been corrected to reflect the SDT's original intent that Requirements R1 and R7 (not Requirement R8) become effective 12 months after approval and Requirements R2 through R6 plus Requirement R8 (not Requirement R7), with the noted exceptions, become effective 24 months after approval. The SDT disagrees with your comment regarding demonstration of compliance during the 24 month transition period. At any point in time, one and only one set of TPL related requirements will be in force. It is those requirements that the Planning Coordinator and Transmission Planner must comply with and not future requirements that have not yet become effective. The SDT assumes that in your last comment the reference to SAR should have been Standard (or more precisely "Standard Development Roadmap"). (A Supplemental SAR was posted for comment and added to this project that does address the possibility of retiring TPL-005 and TPL-006.) The SDT agrees with your		

Organization	Yes or No	Comments for Question 11
suggestion, and the Roadmap has been modified to state: "TPL-005 & -006 issues are addressed in the fourth draft and those standards will also be replaced by TPL-001-1. (See page 1, last sentence of section titled "Proposed Action Plan and Description of Current Draft:" In addition, the "Version History" has been updated to indicate that requirements from TPL-005-0 and TPL-006-0 have been incorporated into TPL-001-1.		
NERC Standards Review Subcommittee	No	A. In the implementation plan, the provision which indicates if an entity doesn't construct in time that entity has to report itself as noncompliant. This is a violation of the energy policy act. Since FERC can't force an entity to built, this provision should be deleted. B. This standard does not contain any requirements regarding the implementation of the Corrective Action Plans. So, the wording in this section of "Any entity that cannot fully implement . . . ", should be replaced with wording like, "If the Corrective Action Plans to eliminate the need . . . can not be implemented within 60 calendar months . . . then the Transmission Planner and Planning Authority should work with the applicable Transmission Owner (s) and Regional entity(s) to develop mitigation plans for revised Corrective Action Plans until the implementation issue is resolved". C. The proposed standard implies that the 24 month time period (for R2-R7) and 60 month time period (for specific allowances for selected event categories) run in parallel rather than sequentially. As currently proposed, the effective date for performing analyses and developing subsequent Corrective Action Plans is 24 months. If the identification of new needs and action plans take 24 months, then only 36 months would be left to implement the new corrective action plans. It may not be feasible to install some BES facilities, especially above 300 kV, in less than 3 years. Some EHV projects can take 5 to 10 years to implement depending on the size, complexity, and controversial nature of the project. D. The MRO NSRS suggests that the effective date be stated in more "implementation dependent" terms for this "one time" transient period, rather than specific and possibly inappropriate "fixed timeframe" terms. Consider wording such as "tripping of Non-Consequential Load or curtailment of Firm Transmission Service (in accordance with Requirement R2, part 2.7.5) is allowed until Corrective Action Plans that are based on TPL-001-1 analyses can be implemented".
Response: A. The SDT disagrees with your characterization of the Corrective Action Plan. The Corrective Action Plan does not require construction of facilities per se and, therefore, the SDT does not believe that the language in the current draft violates the Energy Policy Act of 2005. Other choices available as part of the Corrective Action Plan besides constructing new facilities include use of interruptible load contracts, implementation of Demand Side management programs, and the addition of generation. The SDT understands that there may be certain circumstances where the only viable solution to a performance deficiency is to add a new transmission facility. This is no different than situations that Transmission Planners have faced under the current TPL standards as well as voluntary criteria that have existed for many years. The SDT also points out that should a Transmission Planner or Planning Coordinator find that they can not meet the performance requirements by the end of the 60 month transition period, they would need to submit a mitigation plan to their Regional Entity. As long as an acceptable mitigation plan is offered, the intent of the SDT is that the reporting entity will not be considered non-compliant nor will penalties be imposed. The SDT has modified the Implementation Plan to clarify the wording. B. The SDT believes that the requirement language is clear that the Corrective Action Plan shall be implemented. In Requirement 2, part 2.7.5 reference is made to "implementation of a Corrective Action Plan," and in Requirement R2, part 2.7.6 there is a requirement to review "implementation status."		

Organization	Yes or No	Comments for Question 11
C. Your interpretation that the 24 month and 60 month time periods run in parallel is correct. The SDT understands that some large projects that are part of the Corrective Action Plan may take more than 60 months to complete. However, the SDT also believes that some time limit must be placed on the Corrective Action Plan and 60 months was chosen to strike a balance between those commenters who requested more time and those who would like to see corrective actions completed sooner. The SDT also provided a procedure for mitigation in those situations where 60 months was insufficient. It is the intent of the SDT that the development of an acceptable mitigation plan will avoid penalties. D. The SDT considered your suggested restatement of effective dates during the transition period. The SDT does not believe that such a change would materially improve the standard language. In fact, your specific example would be problematic because Requirement R2, part 2.7.5 applies universally not just to the transition period.		
Progress Energy Florida, Inc.	No	As PEF is opposed to TPL-001-1 as a whole, we cannot comment on the details of the Implementation Plan, other than to say that given the fundamental inadequacies of TPL-001-1, PEF does not believe the Standard should be implemented at all.Given that the wording of Question 12 appears to imply that any general comments made in the Question 12 comments section would be unwelcome and disregarded, PEF would respectfully like to make the following comments regarding our overall position on TPL-001-1:PEF filed extensive comments for the 1st, 2nd and 3rd drafts of TPL-001-1 and voiced serious concerns about the consequences that Transmission Owners and ratepayers will undoubtedly face if TPL-001-1 were to be implemented. PEF respectfully asks the SDT to review PEFs previous comments, particularly from the perspective of the ratepayers. The average ratepayer in the U.S. is already experiencing high electricity bills based on fuel pass-through charges and electric utilities? needs to raise rates to successfully operate and maintain the system. Furthermore, the ratepayers have not been involved in this Standard drafting process, and indeed have not even been informed at even the most cursory level. PEF has pointed this out in previous comments, and the SDTs response has been inadequate. Given the erroneous approach of Table 1 in TPL-001-1 to gauge reliability based on whether or not firm transmission service or non-consequential load will be curtailed, implementation of the Standard will dramatically increase ratepayers? already-high rates with little or no appreciable reliability improvement. Additionally, Transmission Owners will be forced to reduce ATC in order to prevent compliance violations, thus shutting out Power Marketers and potentially resulting in construction of more new generation than is really needed. Another major conflict that TPL-001-1 will cause is a rift between the FERC/NERC regulatory environment and the various states? Public Service Commissions (PSC). The major transmission projects that TPL-001-1 will mandate (especially those mandated due to the overly burdensome and unnecessary > 300 kV section) will have to be approved for permitting and funding through Determination of Need hearings at the PSC. When questioned by the PSC on the need for such projects, Transmission Owners will be obligated to admit that the projects really aren't needed but for NERC's new TPL-001-1 Standard, which will undoubtedly result in the PSCs denial of approval. PEF also would like to note that the SDT still has not provided sufficient reason for the need to implement a new TPL Standard. PEF and its fellow members in FRCC have historically demonstrated excellent reliability while performing long-term Transmission Planning under the existing TPL Standards. There simply is no practical reason for improvement on the existing Standards. PEF is aware of the history of the drafting of a new TPL

Organization	Yes or No	Comments for Question 11
		Standard, however, having reviewed FERCs direction to NERC in this matter. Regarding this, PEF feels that NERC should have pointed out the likely consequences to merely following FERCs directions in their entirety; instead, NERC formed a SDT which proceeded to draft a new TPL Standard that satisfied each and every direction FERC had given. This approach has resulted in a draft Standard that is much too stringent, not conducive to significant reliability improvement and prohibitively expensive to implement.In conclusion, PEF strenuously opposes TPL-001-1, and feels the implementation of TPL-001-1 is unfair, irresponsible and unnecessary. PEF furthermore feels that it has sufficiently proven this in previous comments, and will continue to seek additional avenues to ensure that said comments are given proper consideration. TPL-001-1 is thus not in a condition to go to ballot, and it would be highly inappropriate to send this Standard to ballot given the major concerns that PEF and numerous other utilities within NERC have raised.
Response: The wording in Question 12 has created confusion among many commenters and was not intended to imply that if you checked the YES box, the SDT would not consider your comments. The SDT is obligated to consider all comments, make changes in the drafts that the SDT, as representatives of the entire industry, believe need to be made and provide responses to all comments. The SDT has carefully considered the PEF comments throughout the drafting process and has made changes to the drafts based on your comments and those received from the other commenters. Throughout the process, the SDT has been attempting to iterate toward a standard that the industry, as a whole, can support. The SDT, FERC, and the majority of the industry (through their comments) support the need to improve the TPL standards.		
Florida Power and Light	No	Do not understand the parenthetical for P1-2 and P1-3. The language is confusing and needs to be clarified. Isn't it referring to Consequential Load Loss that is allowed for P1 events?
Response: The parenthetical phrase related to P1-2 and P1-3 is intended to limit the application of the 60 calendar month exception to those situations where footnote b of the existing standards was interpreted to mean that controlled interruption of electric supply to local network customers connected to or supplied by the Faulted element is permitted. The SDT took this position in recognition of the fact that a significant number of entities interpret footnote b in this manner and, therefore, the revised standard represents a "raising of the bar" for them.		
MidAmerican Energy Company	No	MidAmerican commends the SDT for changes that improved the Implementation Plan, however, MidAmerican does have a comment about the plan. MidAmerican urges the SDT to modify the implementation plan where it is indicated that any "entity which cannot fully implement their Corrective Action Plan to eliminate the need to trip Non-Consequential Load or curtail Firm Transmission Service for these performance elements by that date shall self report themselves as being unable to meet the performance requirements of the Reliability Standard." This is essentially requiring an entity to self report for failing to build facilities. The Energy Policy Act of 2005 did not give FERC and therefore, NERC, the authority to require construction of electric facilities. Therefore, this implementation plan is implying an authority that is not given to FERC or NERC. This provision of the implementation plan should be completely deleted from the standard, the provision to state that one is non-compliant for this should be deleted from the standard, or there should be a statement that such a requirement is subject to limitations of the Energy Policy Act of 2005. This is a deal-killer for MidAmerican with regard to voting on this standard. MidAmerican believes that 4.1.2 and 4.3.3 as written would require responsible entities in the industry to add

Organization	Yes or No	Comments for Question 11
		additional modeling of relaying in dynamic stability models of our system. MidAmerican suggests that 4.3.3 be limited to transient swings on facilities 345 kV and above so as to limit this part of requirement 4 to those situations that are most likely to result in cascading. If the SDT determines not to add such a limitation, MidAmerican asks that the implementation time for R4 to be increased. MidAmerican believes that many responsible entities would need 3 years to add these relaying models to system stability models so that the fourth year additional transmission planning analysis in this respect is conducted. MidAmerican urges that the SDT increase the implementation time for R4 from 2 years to 4 years. (MidAmerican may this comment in response to Question 4 as well.)
Response: The SDT disagrees with your characterization of the Corrective Action Plan. The Corrective Action Plan does not require construction of facilities per se and, therefore, the SDT does not believe that the language in the current draft violates the Energy Policy Act of 2005. Other choices available as part of the Corrective Action Plan besides constructing new facilities include use of interruptible load contracts, implementation of Demand Side management programs, and the addition of generation. The SDT understands that there may be certain circumstances where the only viable solution to a performance deficiency is to add a new transmission facility. This is no different than situations that Transmission Planners have faced under the current TPL standards as well as voluntary criteria that have existed for many years. The SDT also points out that should a Transmission Planner or Planning Coordinator find that they can not meet the performance requirements by the end of the 60 month transition period, they would need to submit a mitigation plan to their Regional Entity. As long as an acceptable mitigation plan is offered, the intent of the SDT is that the reporting entity will not be considered non-compliant nor will penalties be imposed. The SDT has modified the Implementation Plan to clarify the wording. Requirement R4, parts 4.1.2 and 4.3.3 do not necessarily require modeling of specific relays. Commercially available software includes a generic relay model which can easily be applied to every branch in the simulation. This generic relay includes assumed zone 1, 2, and 3 characteristics based on the branch impedance. If this model shows impedance swings in a branch element, then the Transmission Planner or Planning Coordinator can either take action according to the generic model results or investigate the characteristics of the relays actually used on that line. The SDT agrees that studying the impact of swings should be limited to the study area. However, the SDT does not believe this should be limited to only high voltage lines. Because Requirement R4, part 4.3.3 does not necessarily require modeling of specific relays (as described directly above), the SDT does not agree that a longer time is needed in the Implementation Plan.		
Oklahoma Gas & Electric	No	OG&E will need every bit of the 60 months time mentioned on page 3 under “Effective Date” to implement all indicated upgrades. There is benefit in hardening the OG&E electrical system for such protection system failures, such as P4 & P5, but it may not be cost effective.
Response: Thank you for your comment.		
Manitoba Hydro	No	Requirement R8, as the standard is currently written, doesn't match the language on page 2 of the discussion provided by the drafting team (i.e. related to determining individual and joint assessments). The drafting team should flip Requirements R7 and R8 so that the implementation plan matches the intent or modify the implementation plan.
Response: The implementation plan has been corrected to reflect the SDT’s original intent that Requirements R1 and R7 (not Requirement R8) become effective 12 months after approval and Requirements R2 through R6 plus Requirement R8 (not Requirement R7), with the noted exceptions, become effective 24 months after approval.		

Organization	Yes or No	Comments for Question 11
Bonneville Power Administration	No	Revisions are necessary to the Effective Date language to clarify the 60 calendar months language for Corrective Action Plans. It is unclear if the entity has five years from the day they identify the problem or five years from the modeled year or five years from the effective date of this standard.
Idaho Power	No	Revisions are necessary to the Effective Date language to clarify the 60 calendar months language for Corrective Action Plans. It is unclear if the entity has five years from the day they identify the problem or five years from the modeled year or five years from the effective date of this standard.
Modesto Irrigation District Transmission Planning	No	Revisions are necessary to the Effective Date language to clarify the 60 calendar months language for Corrective Action Plans. It is unclear if the entity has five years from the day they identify the problem or five years from the modeled year or five years from the effective date of this standard.
NV Energy	No	Revisions are necessary to the Effective Date language to clarify the 60 calendar months language for Corrective Action Plans. It is unclear if the entity has five years from the day they identify the problem or five years from the modeled year or five years from the effective date of this standard.
Pacific Gas and Electric Co.	No	Revisions are necessary to the Effective Date language to clarify the 60 calendar months language for Corrective Action Plans. It is unclear if the entity has five years from the day they identify the problem or five years from the modeled year or five years from the effective date of this standard.
Puget Sound Energy, Inc.	No	Revisions are necessary to the Effective Date language to clarify the 60 calendar months language for Corrective Action Plans. It is unclear if the entity has five years from the day they identify the problem or five years from the modeled year or five years from the effective date of this standard.
Sacramento Municipal Utility District	No	Revisions are necessary to the Effective Date language to clarify the 60 calendar months language for Corrective Action Plans. It is unclear if the entity has five years from the day they identify the problem or five years from the modeled year or five years from the effective date of this standard.
San Diego Gas & Electric Co	No	Revisions are necessary to the Effective Date language to clarify the 60 calendar months language for Corrective Action Plans. It is unclear if the entity has five years from the day they identify the problem or five years from the modeled year or five years from the effective date of this standard.
Southern California Edison (SCE)	No	Revisions are necessary to the Effective Date language to clarify the 60 calendar months language for Corrective Action Plans. It is unclear if the entity has five years from the day they identify the problem or five years from the modeled year or five years from the effective date of this standard.
SRP	No	Revisions are necessary to the Effective Date language to clarify the 60 calendar months language for Corrective Action Plans. It is unclear if the entity has five years from the day they identify the problem or five

Organization	Yes or No	Comments for Question 11
		years from the modeled year or five years from the effective date of this standard.
Western Area Power Adm - RMR	No	Revisions are necessary to the Effective Date language to clarify the 60 calendar months language for Corrective Action Plans. It is unclear if the entity has five years from the day they identify the problem or five years from the modeled year or five years from the Effective Date of this standard.
Xcel Energy	No	Revisions are necessary to the Effective Date language to clarify the 60 calendar months language for Corrective Action Plans. It is unclear if the entity has five years from the day they identify the problem, or five years from the modeled year, or five years from the effective date of this standard.
Deseret Power	No	Comments: Revisions are necessary to the Effective Date language to clarify the 60 calendar months language for Corrective Action Plans. It is unclear if the entity has five years from the day they identify the problem or five years from the modeled year or five years from the effective date of this standard.
NorthWestern Energy	No	In the Effective Date section, 60 calendar months is allowed for Corrective Action Plans. When does the 60 month period start? From the day the problem is identified? From the modeled year? Or from the effective date of the standard?
Response: The SDT believes that the current language in Section A. 5 of the Standard, with a minor change that the SDT will incorporate in the next draft, is clear. That section, as modified, will state that the five year period begins "on the first day of the first calendar quarter following applicable regulatory approval" of the revised standard.		
MAPP	No	The last part of the Effective Date section deals with the requirement to submit a Corrective Action Plan, and then to submit a mitigation plan to be approved by the Regional Entity and NERC. Failure do get those done would result in the initiation of "settlement proceedings." This means that entities may be found non-compliant for failure to build facilities. That seems to fly in the face of the EPAct of 2005.
Response: The SDT disagrees with your characterization of the Corrective Action Plan. The Corrective Action Plan does not require construction of facilities per se and, therefore, the SDT does not believe that the language in the current draft violates the Energy Policy Act of 2005. Other choices available as part of the Corrective Action Plan besides constructing new facilities include use of interruptible load contracts, implementation of Demand Side management programs, and the addition of generation. The SDT understands that there may be certain circumstances where the only viable solution to a performance deficiency is to add a new transmission facility. This is no different than situations that Transmission Planners have faced under the current TPL standards as well as voluntary criteria that have existed for many years. The SDT also points out that should a Transmission Planner or Planning Coordinator find that they can not meet the performance requirements by the end of the 60 month transition period, they would need to submit a mitigation plan to their Regional Entity. As long as an acceptable mitigation plan is offered, the intent of the SDT is that the reporting entity will not be considered non-compliant nor will penalties be imposed.		
SERC Dynamics Review Subcommittee (DRS)	No	There is a concern about the last paragraph in the Implementation Plan. It is easy to interpret this language to state that the entity is noncompliant if the performance requirements are not completed within 5 years. The concern is that the 5 year window for meeting the "raising the bar" requirements is still not adequate. For

Organization	Yes or No	Comments for Question 11
		instance, it typically takes 7 to 10 years to build a new 500-kV transmission line - including time required for such processes as federally mandated NEPA environmental reviews. We strongly suggest increasing this time window to 10 years.
Response: The SDT understands that some large projects that are part of the Corrective Action Plan may take more than 60 months to complete. However, the SDT also believes that some time limit must be placed on the Corrective Action Plan and 60 months was chosen to strike a balance between those commenters who requested more time and those who would like to see corrective actions completed sooner. The SDT also provided a procedure for mitigation in those situations where 60 months was insufficient. It is the intent of the SDT that the development of an acceptable mitigation plan will avoid penalties.		
TVA System Planning	No	TVA agrees with the inclusion of P1-2 and P1-3 in the 60 month implementation window. However TVA also strongly suggests that all Planning Events be included in the same implementation window where local load was allowed to be dropped in the past in footnotes b and c of the existing TPL standards. In the first bullet under Effective Date, both Non-Consequential Load Loss and curtailment of Firm Transmission Service can be permitted for certain events up to 60 months. However these actions are not useful for stability related issues. TVA suggests that out of step relaying or other protection method be allowed in for stability related issues when situations do arise that are beyond the control of the TP or PC. TVA is very concerned about the last paragraph in the Implementation Plan. TVA interprets this language to state that the entity is basically noncompliant if the mentioned Corrective Action Plans are not implemented within 60 calendar months. Due to the large amount of work that some utilities will have to meet these new requirements, TVA strongly suggests that the utilities be found compliant if the utilities are still putting a good faith effort forward in trying to meet the new standards, such as for constructing a long 500-kV transmission line that may take at least 10 years to construct TVA still believes that since breaker duty was not included in the previous TPL standards, this should also have a 60 month implementation window as well due to this now becoming a new TPL compliance issue. TVA noted this same comment in Posting #3; however, TVA requests that this be reconsidered due to being a new official TPL requirement like the other new requirements have with the 60 month implementation window. TVA is concerned that the 60 calendar month window for meeting the “raising the bar” requirements is still not adequate. For instance, it typically takes TVA 7 to 10 years to build a new 500-kV transmission line - including time required for such processes as federally mandated NEPA environmental reviews. Strongly suggest increasing this time window to 10 years.
Response: The SDT believes that footnote ‘c’ conditions in the current TPL standards are adequately addressed in the revised standard. The SDT disagrees that Non-Consequential Load Loss is not useful for Stability related issues. The tripping of such Load as part of an SPS could be accomplished quickly enough to improve Stability margins. Furthermore, there is nothing in the revised standard that precludes the use of out of step relaying. The SDT believes that your interpretation of the last paragraph of the Implementation Plan is incorrect. Should a Transmission Planner or Planning Coordinator find that they can not meet the performance requirements by the end of the 60 month transition period, they would need to provide a mitigation plan to their Regional		

Organization	Yes or No	Comments for Question 11
Entity. Although the SDT agrees that the breaker duty requirement is new to this revision of the standard, the SDT does not believe that there is a need to allow a 60 month transition period for this requirement to become effective. Replacing over-dutied circuit breakers can often be accomplished within the 24 month period provided by the effective date of the requirement. In those cases where the replacement could take longer, there are other approaches available to mitigate the over-duty condition. The SDT understands that some large projects that are part of the Corrective Action Plan may take more than 60 months to complete. However, the SDT also believes that some time limit must be placed on the Corrective Action Plan and 60 months was chosen to strike a balance between those commenters who requested more time and those who would like to see corrective actions completed sooner.		
Ameren	No	We appreciate that the Standards Drafting Team has proposed delayed effective dates to allow tripping of Non-Consequential Load or curtailment of Firm Transmission Service for a number of categories of contingency events to allow more time to become compliant. However, we do not look forward to having to self-report non-compliance because the industry and the government changed the planning rules in the middle of the game.
Response: Please note that should a Transmission Planner or Planning Coordinator find that they can not meet the performance requirements by the end of the 60 month transition period, they would need to submit a mitigation plan to their Regional Entity. It is the intent of the SDT that the development of an acceptable mitigation plan will avoid penalties.		
FirstEnergy Corp	No	We disagree with the proposed Implementation Plan. The implementation period for the TPL-001-1 transmission planning standard should be limited to the time needed to transition to the new study requirements. The proposed 5-year implementation for the "raise the bar" aspects of this standard delves into project management and review of capital construction progress which should remain outside the scope of this standard. The standard should only consider if an entity has completed the required studies and has developed Corrective Action Plans to ensure performance criteria is being maintained.Implementation of transmission system action plans depends on the actions of many other functional entities, other than PCs or TPs. PCs and TPs should not be held responsible for the implementation of action plans since they have little or no control over the activities related to implementation. For example, an RTO/ISO may act as both the PC and the TP for its transmission owner or transmission operator membership, however, the RTO/ISO should not be subject to compliance sanctions for incomplete projects that it does not have direct responsibility.FirstEnergy suggests that a new TPL standard is required to successfully accomplish the vision and endpoint that this drafting team has in mind. It is our opinion that the TO, TOP, DP and GO are needed as applicable entities to bring to fruition the capital enforcement projects or operating procedures that are identified by the PC/TP. This TPL-001-1 standard should stop at the conclusion of studies, assessments and development of Corrective Action Plans and a new TPL standard should be developed to address implementation of Corrective Action Plans.
Response: The SDT has considered your position and still believes that the requirement to implement the Corrective Action Plan is appropriate. Furthermore, the SDT does not believe that the standard should apply to additional entities beyond the Transmission Planner and Planning Coordinator. In fact, doing so would tend to make implementation of the Corrective Action Plan more difficult by reducing clarity as to who is the responsible entity. Where the Transmission Planner or Planning Coordinator is an RTO, agreements between the RTO and its members, which typically include the entities you describe, require those members to implement plans		

Organization	Yes or No	Comments for Question 11
developed by the RTO. Where the Transmission Planner or Planning Coordinator is not an RTO, in most cases, they are a vertically integrated utility that includes all of the entities that you describe. In other cases, the Transmission Planner and Planning Coordinator can establish agreements with the entities for which they are providing those services to specify responsibilities for implementation of the Corrective Action Plan.		
American Transmission Company	No	We offer the following comments.This standard does not contain any requirements regarding the implementation of the Corrective Action Plans. So, the wording in this section of "Any entity that cannot fully implement . . . ", should be replaced with wording like, "If the Corrective Action Plans to eliminate the need . . . can not be implemented within 60 calendar months . . . then the TP and PA should work with the applicable TO(s) and Re(s) to develop mitigation plans for revised Corrective Action Plans until the implementation issue is resolved". The proposed standard implies that the 24 month time period (for R2-R7) and 60 month time period (for specific allowances for selected event categories) run in parallel rather than sequentially. As currently proposed, the effective date for performing analyses and developing subsequent Corrective Action Plans is 24 months. If the identification of new needs and action plans take 24 months, then only 36 months would be left to implement the new corrective action plans. It may not be feasible to install some BES facilities, especially above 300 kV, in less than 3 years. Some EHV projects can take 5 to 10 years to implement depending on the size, complexity, and controversial nature of the project. We suggest that the effective date be stated in more "implementation dependent" terms for this "one time" transient period, rather than specific and possibly inappropriate "fixed timeframe" terms. Consider wording such as "tripping of Non-Consequential Load or curtailment of Firm Transmission Service (in accordance with Requirement R2, part 2.7.5) is allowed until Corrective Action Plans that are based on TPL-001-1 analyses can be implemented".The "implementation dependent" approach may allow the removal of all or part of the text on implementation exceptions and mitigation procedures that do not appear to be suitable in an Effective Date section.
Response: The SDT believes that the requirement language is clear that the Corrective Action Plan shall be implemented. In Requirement 2, part 2.7.3 reference is made to "implementation of a Corrective Action Plan," and in Requirement R2, part 2.7.4 there is a requirement to review "implementation status." Your interpretation that the 24 month and 60 month time periods run in parallel is correct. The SDT understands that some large projects that are part of the Corrective Action Plan may take more than 60 months to complete. However, the SDT also believes that some time limit must be placed on the Corrective Action Plan and 60 months was chosen to strike a balance between those commenters who requested more time and those who would like to see corrective actions completed sooner. The SDT also provided a procedure to submit a mitigation plan to their Regional Entity where 60 months was insufficient. It is the intent of the SDT that the development of an acceptable mitigation plan will avoid penalties. The SDT has modified the Implementation Plan to clarify the wording. The SDT also considered your suggested restatement of effective dates during the transition period. The SDT does not believe that such a change would materially improve the standard language. In fact, your specific example would be problematic because Requirement R2, part 2.7.5 applies universally not just to the transition period.		
Tri-State Generation and Transmission Association	No	Yes and No. We see some potential problems.12 months after BOT adoption, R1 maintain system models - becomes effective. Why delay Also 12 months after adoption, R8 distribute planning assessment results - becomes effective. As an assessment cannot be distributed before it is completed, this must be coordinated with R2.24 months after BOT adoption R2 Annual Planning Assessment - timing must coordinate with R8 above.

Organization	Yes or No	Comments for Question 11
Response: The SDT attempted to strike a balance between those commenters who requested more time and those who would like to see some requirements become effective earlier. In the case of Requirement R1, the SDT saw little value in making this requirement effective before 12 months. Furthermore, doing so would break the standard effective dates into yet another time period possibly leading to confusion as to which portions of the revised and old standards are in effect. The implementation plan has been corrected to reflect the SDT's original intent that Requirements R1 and R7 (not Requirement R8) become effective 12 months after approval and Requirements R2 through R6 plus Requirements R8 (not Requirement R7), with the noted exceptions, become effective 24 months after approval.		
American Electric Power	Yes	
British Columbia Transmission Corp	Yes	
Central Maine Power Company	Yes	
Exelon Transmission Planning	Yes	
Florida Municipal Power Agency, and its Member Cities	Yes	
Gainesville Regional Utilities	Yes	
Hydro-Québec TransEnergie (HQT)	Yes	
Independent Electricity System Operator	Yes	
ISO New England	Yes	
Northeast Power Coordinating Council--RSC	Yes	
Northeast Utilities	Yes	
Oncor Electric Delivery	Yes	
Pepco Holdings, Inc. - Affiliates PHI	Yes	

Organization	Yes or No	Comments for Question 11
Progress Energy Carolinas	Yes	
SCE&G	Yes	
SERC Planning Standards Subcommittee	Yes	
Southern Company	Yes	
SRC of ISO/RTO	Yes	
TIS	Yes	
United Illuminating	Yes	
US Bureau of Reclamation	Yes	
Utility System Efficiencies, Inc. (USE)	Yes	
ITC Holdings	Yes	none
National Grid	Yes	None.
NYISO	Yes	Question #11 The SDT has provided a revised Implementation Plan as part of this posting. Do you agree with the revisions to the Plan? If not, please provide specific comments. Yes
Response: Thank you for your input.		
Orlando Utilities Commission	Yes	The phasing in of the higher performance criteria is a very reasonable approach. The implementation plan needs to be painfully clear that during the first year the existing TPL standards are still in effect, and that R1 and R8 are in effect in addition. Most NERC standards have one revision take effect on a specific date, make the old version out of date. In this case however if TPL 001 retires the prior standards, then only R1 and R8 would need to be performed in the first year, which I do not believe that is the intent. In addition to this, further clarification may be needed for the application of R2-R7, even if they were to come into effect the first year. Assessments are a year long process and published once a annually. As an example many entities "publish" or finish the Assessment in December, that being the culmination of months of work. If R2-R7 are effective on June 2011 then the intended application seems to be that the assessment in Dec 2011 should comply with the new

Organization	Yes or No	Comments for Question 11
		standard. Is that the intent, or would there need to be a valid assessment based on the new standard available the day the standard is in effect? Maybe phrasing to this effect. "Entities are not required to alter there annual schedule based on the R2-R7 requirements going into place or have duplicate efforts at assessments in the annual period the old and new standard overlap. Any assessment completed (as determined by the date that the entity formally shared results under R8) after the effective date for R2-R7 shall comply with those requirements."
Response: First, it should be noted that the Implementation Plan has been corrected to reflect the SDT's original intent that Requirements R1 and R7 (not Requirement R8) become effective 12 months after approval and Requirements R2 through R6 plus Requirement R8 (not Requirement R7), with the noted exceptions, become effective 24 months after approval. The SDT does not believe that a clarification is needed to cover the one-year period for months 13 through 24 when Requirements R1 and R7 plus the existing standard will be in effect because Requirements R1 and R7 are new requirements that do not replace any requirements in the existing standards. The NERC standards process is clear that an existing standard that is being revised remains in force until replaced by revised standard requirements becomes effective. The SDT believes that sufficient flexibility was provided in the definition of Year One to permit Transmission Planners and Planning Coordinators to maintain their current assessment schedule if they desire. It is the SDT's expectation that any assessment initiated 24 months or more after the effective date of Requirements R2 through R6 plus Requirement R8 would adhere to the revised standard requirements.		
Duke Energy	Yes	Yes, however we don't understand the meaning of this phrase which follows P1-2 and P1-3: "for controlled interruption of electric supply to local network customers connected to or supplied by the Faulted element".
Response: The parenthetical phrase related to P1-2 and P1-3 is intended to limit the application of the 60 calendar month exception to those situations where footnote b of the existing standards was interpreted to mean that controlled interruption of electric supply to local network customers connected to or supplied by the Faulted element is permitted. The SDT took this position in recognition of the fact that a significant number of entities interpret footnote b in this manner and, therefore, the revised standard represents a "raising of the bar" for them.		
PJM	No	The timeframe to gather additional protection and dynamic load modeling data is too short. Millions of pieces of new data will need to be collected and validated before valid models will be available. Extend the period to 24 months.
Response: The SDT does not intend that detailed protection and dynamic Load models will be required for all Transmission elements and Loads in the System models used for the assessments. In particular, Requirement R2, part 2.4.1 states that "An aggregate System Load model which represents the overall dynamic behavior of the Load is acceptable." Furthermore, there is no explicit requirement in Requirement R1 for representation of protection schemes. To the extent such detail is needed, it would apply to the Stability studies required as part of Requirement R4. Requirements R2 and R4 are already specified to be effective in 24 months following regulatory approval.		

12. Do you believe that this standard is ready to go to ballot? (if 'No' is checked here, the SDT will consider that comments raised on the other questions drove that decision.)

Summary Consideration: The initial response of the majority of the commenters was that this standard is not ready to go to ballot. The reasons for the negative responses included: 1) a desire to have a sample detailed Planning Assessment, 2) concern over the value of the "raising the bar" for EHV Facilities, 3) concern with excessive study or documentation requirements, 4) concern that the Implementation Plan could be interpreted to require construction (contrary to the Energy Policy Act of 2005), and 5) concern that some of the requirements are not clear and contain ambiguous language. The SDT learned that some commenters voted 'No' to ensure that their comments would be reviewed and considered by the SDT. Other commenters stated that this draft was ready to go to ballot and the remaining commenters stated that it was ready for ballot with favorable consideration of the comments provided.

The SDT has responded to all of these concerns in the responses to the comments. The majority of the issues raised about unclear and ambiguous language were clarified without material changes to the draft. The SDT evaluated the comments provided in response to this draft and has determined that the majority of the remaining 'No' votes are because the commenters disagree with the position(s) taken by the SDT and not because the standard is unclear or unenforceable. The issues that were raised about increased performance requirements, increased study requirements, and increased documentation have been vetted by the industry and the SDT through four posting periods over the last 3 years.

The SDT has posted this standard for four posting periods over the last 3 years. In the previous three postings, the SDT has developed more than 1300 pages of comments and responses. The form of the main requirements and sub-parts has changed in response to industry comment, but the substance of the main requirements and sub-parts has not changed substantially in the last two postings.

The SDT has not made any substantive or contextual changes with this posting and has determined that this standard is ready to go to ballot.

Organization	Yes or No	Comments for Question 12
Sacramento Municipal Utility District		The SDT should develop a detailed sample assessment prior to balloting so that the SDT's hard work can be voted on by an informed ballot pool.
Platte River Power Authority	No	No, not until there is some form of common understanding, among the people reading this draft, of how to interpret from Table 1 (Planned and Extreme) all the contingency scenarios that will be required to demonstrate full compliance with the standard. It would be helpful if the Drafting Team spearheaded some workshops to walk us through how this might be done.
Response: The SDT agrees that it is important to have an informed ballot pool; however, the SDT does not plan to develop a sample assessment prior to balloting. The SDT has taken several steps to inform the industry and will continue those outreach efforts.		

Organization	Yes or No	Comments for Question 12
FRCC Transmission Working Group		We the FRCC TWG feel that the standard is very close to ballot, but the drafting team still needs to address several issues raised in the comments before balloting.
CenterPoint Energy	No	CenterPoint Energy is well aware of the diligence of the SDT in preparing this major consolidation and rewrite of the existing TPL standards. CenterPoint Energy believes this latest version is almost ready for ballot. CenterPoint Energy respectfully requests consideration by the SDT of the refinements to this latest draft proposed by CenterPoint Energy.
FirstEnergy Corp	No	FirstEnergy does not believe the proposed TPL-001-1 standard is ready for ballot until our primary concern with the Implementation Plan as identified in our comment to Q11 is addressed. Additionally, our most pressing secondary concern is the modeling required for Protection Systems related to 4.3.3. Finally, we believe the standard is overly burdensome related to the annual near-term study requirements as stated in 2.1.1 as noted by our Q2 comments.
SERC Dynamics Review Subcommittee (DRS)	No	If the revisions recommended above are adopted, the standard would then be ready for ballot. We commend the drafting team for their efforts in preparing this draft standard for ballot.
SERC Planning Standards Subcommittee	No	If the revisions recommended above are adopted, the standard would then be ready for ballot. We commend the drafting team for their efforts in preparing this draft standard for ballot.
Midwest ISO	No	Only if the proposed changes and questions are adequately addressed.
NorthWestern Energy	No	Since the definition section needs to be changed, some wording in the requirements needs to be modified, and the footnote numbering in Table 1 need to be corrected, we believe another draft should be issued before taking this standard to ballot.
US Bureau of Reclamation	No	The definitions require revisions. Additional work is required to clarify Corrective Action plan items, agreement on votlage limits and acceptable deviations, as well as coordination of Planning Assessment results with owner entities.
SRC of ISO/RTO	No	The proposed changes and comments need to be adequately addressed before any ballot.
Independent Electricity System Operator	No	The standard has become overly prescriptive and unnecessary (see our comments under Q2, Q3 and Q4 on Part 2.1.4, Parts 3.3 to 3.6, Parts 4.3 to 4.5. Much work is needed to condense or remove these requirements.
Hydro-Québec TransEnergie (HQT)	No	There are still issues as indicated in the submitted comments that need to be addressed before this standard should go to ballot.
Northeast Power Coordinating	No	There are still issues as indicated in the submitted comments that need to be addressed before this standard

Organization	Yes or No	Comments for Question 12
Council--RSC		should go to ballot.
Orlando Utilities Commission	Yes	I have not seen all the comments of other entities, so there may be some comments that would require the standard be reposted. Assuming I have correctly read the standard, all of my comments would improve the communication of the existing intent, not alter the requirement.
American Electric Power	Yes	The SDT has done an exceptional job working through complex issues and varying perspectives to arrive at this solid draft. This version has significantly improved the standard and has raised the bar where appropriate to do so. With favorable consideration of comments from this round, the revised draft should be ready for ballot.
Duke Energy	Yes	Yes, assuming our comments are addressed effectively.
American Transmission Company	Yes	Yes, if the proposed changes and questions are adequately addressed.
Response: Please see the comment responses for each question to see how the SDT addressed the issues raised in your comments.		
Xcel Energy	No	As currently drafted, several outages identified in Categories P2, P4, and P5 appear to potentially result in the same elements being removed from service, so therefore the same event, even though the initiating event is different.
Response: The SDT agrees that some planning events will result in the same elements being removed from service. However, the similarities may only be valid from a steady-state view point and care must be taken to review the events in the Stability timeframe due to delayed clearing modes that may result from the initiating event. For example, a bus fault and a stuck breaker may each clear a bus; however, the stuck breaker will have different reaction times due to the delayed clearing mode and therefore may warrant a review in a Stability environment. The standard allows the Transmission Planner and Planning Coordinator flexibility in using engineering judgment for the Table 1 events in which it studies for both the steady-state and Stability environments. Both Requirements R3 (steady-state study) and R4 (Stability study) include text indicating the Transmission Planner and Planning Coordinator are to study those events "…that are expected to produce more severe System impacts on its portion of the BES, shall be identified and a list of those Contingencies to be evaluated for System performance …" If a Transmission Planner/Planning Coordinator can justify that certain events are duplicative for a given timeframe then at their discretion they may elect to limit their Contingency list so long as their entire Contingency list covers the events that "produce the more severe impacts" for their System.		
SCE&G	No	As per our comments.
British Columbia Transmission Corp	No	
Florida Power and Light	No	
Manitoba Hydro	No	

Organization	Yes or No	Comments for Question 12
Northeast Utilities	No	
Pepco Holdings, Inc. - Affiliates PHI	No	
Progress Energy Florida, Inc.	No	
United Illuminating	No	
PJM	No	
Bonneville Power Administration	No	Based on the unclear or ambiguous language identified in the comments above as well as the confusion noted in the Table 1 regarding outages and footnotes, we believe modifications are necessary prior to taking this standard to ballot.
Idaho Power	No	Based on the unclear or ambiguous language identified in the comments above as well as the confusion noted in the Table 1 regarding outages and footnotes, I believe modifications are necessary prior to taking this standard to ballot.
Modesto Irrigation District Transmission Planning	No	Based on the unclear or ambiguous language identified in the comments above as well as the confusion noted in the Table 1 regarding outages and footnotes, we believe modifications are necessary prior to taking this standard to ballot.
NV Energy	No	Based on the unclear or ambiguous language identified in the comments above as well as the confusion noted in the Table 1 regarding outages and footnotes, we believe modifications are necessary prior to taking this standard to ballot.
Pacific Gas and Electric Co.	No	Based on the unclear or ambiguous language identified in the comments above as well as the confusion noted in the Table 1 regarding outages and footnotes, we believe modifications are necessary prior to taking this standard to ballot.
Puget Sound Energy, Inc.	No	Based on the unclear or ambiguous language identified in the comments above as well as the confusion noted in the Table 1 regarding outages and footnotes, we believe modifications are necessary prior to taking this standard to ballot.
San Diego Gas & Electric Co	No	Based on the unclear or ambiguous language identified in the comments above as well as the confusion noted in the Table 1 regarding outages and footnotes, we believe modifications are necessary prior to taking this standard to ballot.

Organization	Yes or No	Comments for Question 12
Southern California Edison (SCE)	No	Based on the unclear or ambiguous language identified in the comments above as well as the confusion noted in the Table 1 regarding outages and footnotes, we believe modifications are necessary prior to taking this standard to ballot.
Utility System Efficiencies, Inc. (USE)	No	Based on the unclear or ambiguous language identified in the comments above as well as the confusion noted in the Table 1 regarding outages and footnotes, I believe additional modifications are necessary prior to taking this standard to ballot.
Western Area Power Adm - RMR	No	Based on the unclear or ambiguous language identified in the comments above as well as the confusion noted in the Table 1 regarding outages and footnotes, I believe modifications are necessary prior to taking this standard to ballot.
Deseret Power	No	Comments: Based on the unclear or ambiguous language identified in the comments above as well as the confusion noted in the Table 1 regarding outages and footnotes, we believe modifications are necessary prior to taking this standard to ballot.
SRP	No	: Based on the unclear or ambiguous language identified in the comments above as well as the confusion noted in the Table 1 regarding outages and footnotes, we believe modifications are necessary prior to taking this standard to ballot.
Response: Please see the comment responses for each question to see how the SDT addressed the issues raised in your comments, including the clarifications that the SDT made concerning the Table 1 outages and footnotes.		
Ameren	No	Certainly the proposed assessment and documentation requirements are more comprehensive and the performance standards are more rigorous than the existing TPL-001 through TPL-004 reliability standards. But, by performing the proposed additional required studies and documenting the results, how much additional reliability will be provided to the System? None, but we will be auditably compliant. More planning engineers will need to be hired to perform the studies and develop the assessments, more librarians will need to be hired to keep track of all the paperwork and computer file storage, and more trees will be killed printing the paper to send to all those that need to review the documents and provide comments. Is this the most effective way to improve transmission system reliability from a planning perspective? What measurable benefits are to be accrued for providing an EHV system that would not result in the loss of non-consequential load for P2-2, P2-3, P4 1-5, and P5 1-5 planning events, all of which are rare and infrequent? What is the estimated cost for this incremental "improvement" to cover the System's short-comings? The EHV system is already the most reliable portion of the BES with an availability of approximately 99% and can withstand extreme events without widespread outages.
Response: The SDT believes that the added clarity of the proposed standard is very important to ensure that entities can clearly understand the requirements. Even though EHV outages are less frequent than outages of lower voltage Transmission Facilities, the SDT believes that there should not be Non-Consequential Load Loss		

Organization	Yes or No	Comments for Question 12
for the single Contingencies in P2 and for the failure of a circuit breaker or Protection Systems in the P4 and P5 events.		
ITC Holdings	No	Comments: In addition to our other comments, ITC offers the following feedback. The requirements are rather complex, yet the measures seem extremely simple. Have they been discussed in any detail and are they sufficiently described to insure and understanding of just what is expected (ie., Are the requirements sufficient as measures in and of themselves?) R2.1.5 for example discusses "spare equipment strategy for long-lead time facilities". If I have a 2p.u. xfmr, can I assume it spares all similar category transformers or would I have to study P0,P1 and P2 contingencies if it replaces a 3 p.u. xfmr. If I don't have a spare and can't meet P0,P1 or P2 contingencies without load shedding, do I need a CAP. See also our comments under R3.4.1. We haven't reviewed all requirements and all measures in this fashion but suggest the SDT do so.
Response: The SDT has reviewed the measures and believe that they are sufficient to measure compliance with the requirements. The issues raised about transformer assumptions are System specific and are, therefore, not addressed by the standard. If you do not have a spare for a piece of equipment with a long lead time and your System cannot meet the performance requirements without that piece of equipment, you must have a Corrective Action Plan to address that deficiency. Part 3.4.1: See response to Q3.		
ERCOT ISO	No	ERCOT recognizes that much effort has been put into this standard. However, a lot of effort will be required to ensure documentation for the standard is sufficient, yet the benefit of the additional documentation effort required is marginal. For a standard like this, stating every possible issue and studying every possible scenario is not realistic and potentially will lead to complacency very little planning outside the scope of this standard will be done regardless of the system needs.
Response: The SDT has attempted to clarify areas where the existing standard is ambiguous. In this effort to clarify, the SDT has introduced new areas where documentation is required; however, in most instances, this documentation was already implicitly required. The SDT believes that it has limited the documentation requirements to the minimum required to ensure thorough evaluation of BES reliability. While the SDT has expanded the scenario analysis required with additional study year requirements and sensitivity requirements, the SDT has not developed an exhaustive list of studies or analysis that the planner must conduct. The SDT believes that the requirements contained within the standard are the minimum requirements necessary to evaluate BES reliability, while continuing to give the planner latitude in the portfolio of studies that the planner will conduct.		
NERC System Protection and Control Subcommittee (SPCS)	No	Inclusion of the changes proposed by the System Protection and Control Subcommittee (SPCS) drove the belief that the standard is not ready to go to ballot. Such changes would be substantial enough to invoke another round of comments by the Industry.
Response: Please see the comment responses for each question to see how the SDT addressed the issues raised in your comments. The SDT has not made substantial changes based on the comments.		
Central Maine Power Company	No	It is closer, but there are still some unacceptable issues that need to be addressed.

Organization	Yes or No	Comments for Question 12
ISO New England	No	It is closer, but there are still some unacceptable issues that need to be addressed. The single most important comment is to define the base assumptions for use in studies.
National Grid	No	It is closer, but there are still some unacceptable issues that need to be addressed.
Response: The SDT has made changes based on the comments. Please see the individual comment responses to see how the SDT addressed the issues raised in your comments.		
MAPP	No	MAPPCOR urges the SDT to modify the effective date where it is indicated that any "entity that cannot fully implement its Corrective Action Plan to eliminate the need to trip Non-Consequential Load or curtail Firm Transmission Service for the above listed performance elements within 60 calendar months of the compliance date for Requirements R2 through R4 shall self report itself as being unable to meet the performance requirements of this Reliability Standard." This is essentially requiring an entity to self report for failing to build facilities. The Energy Policy Act of 2005 did not give FERC and therefore, NERC, the authority to require construction of electric facilities. Therefore, this implementation plan is implying an authority that is not given to FERC or NERC. This provision of the effective date should be completely deleted from the standard, the provision to state that one is non-compliant for this should be deleted from the standard, or there should be a statement that such a requirement is subject to limitations of the Energy Policy Act of 2005.
Response: The SDT has modified the language in the Implementation Plan to address this concern. Additionally, the last paragraph of the effective date section of the standard was eliminated to address this concern.		
NERC Standards Review Subcommittee	No	More discussion is needed pertaining to this standard.
Response: The SDT believes with the clarifications made in Draft 5 that the standard is ready for ballot.		
Portland General Electric Co.	No	PGE believes that this standard should not go to ballot without revisions to restrict the scope of the standard as outlined above.
Response: The SDT has not restricted the standard to Facilities >200 kV, as proposed in your comment to Q2. The Facilities that make up the Bulk Electric System (BES) are defined by each Regional Entity and this standard must address all of the BES Facilities to ensure reliability of the BES.		
NYISO	No	Question #12 Do you believe that this standard is ready to go to ballot? (if "No" is checked here, the SDT will consider that comments raised on the other questions drove that decision.) No. Too many significant questions and key definitions remain unanswered.

Organization	Yes or No	Comments for Question 12
		Table 1 - General comment - Footnotes needs significant clean-up Page 16 Note (a) this note is placed under "Steady State & Stability" but issues of voltage instability, cascading outages, and uncontrolled islanding apply only to stability Note (f) Does this refer to "Normal Ratings"? Please provide clarity. Note (g) "System steady state" should be defined by applicable regional entity. Note (i) indicates that one cannot meet steady state requirements by depending on end-user owned equipment. Please clarify the purpose and performance requirement on this note with respect to end-user schemes and possible arrangements already in place to trip end-user equipment. Page 17 P5 As written, this requirement replicates a fault causing a loss of station anywhere that there is only one protection system. This is overly severe and would lead to the requirement for fully redundant protection systems at many stations. Page 18 P7 for Event 1 (the loss of two adjacent circuits), this needs to specify if these are the same phase or different phasesPage 19How could any system planner reasonably and accurately portray what contingencies might occur from any single or combination of extreme events listed? PAGE 20 Is the one mile exclusion in footnote 14 a contiguous mile, or a total of one mile for the entire length of the lines? (i.e. Are multiple instances of common towers or common rights of way exempt if each instance is less than a mile?)General Comment:The NYISO would like to align itself in supporting the following comment submitted by the NPCC: We agree with the SDT that more stringent performance requirements be applied for Facilities that do not directly serve end-use Load customers but rather represent the backbone of the electric power grid and act as the medium for moving large amounts of power from production to various Load centers.However, as HQT commented on previous draft, we strongly believe that the EHV breakpoint for these more stringent requirements, defined in note 3 of table 1 as "all Facilities greater than 300 kV" is not appropriately defined and should be reviewed. The SDT have not demonstrated that a uniform voltage-level threshold could adequately covers all different power system types in North America and we strongly believe that significant additional costs will be incurred without proportional or measurable reliability benefits if this definition is not changed.We propose to modify EHV definition "all Facilities greater than 300 kV" by the following "Facilities representing the backbone of the System, generally at voltage greater than 300 kV, as determined by the Planning Coordinator and approved by Regional Entity." In using such a language, we believe that the extra investment required would go towards real improvement of the reliability of the interconnected System.

Response: Footnote references were corrected.

The SDT does not agree that Header Note "a" should only apply in the Stability section, since these conditions should not be allowed to occur in any timeframe.

Header Note "f" is not limited to normal ratings. Facility Ratings are defined in the NERC Glossary as: The maximum or minimum voltage, current, frequency, or real or reactive power flow through a facility that does not violate the applicable equipment rating of any equipment comprising the facility. Since these ratings are time

Organization	Yes or No	Comments for Question 12
dependent, a rating higher than a normal rating can be utilized, as long as Header Note "e" is maintained. Header Note "g" – The SDT believes that it is appropriate for each Transmission Planner and Planning Coordinator to define the acceptable Steady state voltages. Header Note "i" – The purpose of the restriction is to ensure that the planner develops the System so that all of the Load, including voltage sensitive Load, can be served after an event. The P5 event is a Category C event in the existing Table, and the SDT changed the requirement for >300 kV so that Non-Consequential Load Loss is not acceptable. For the P7 event, it is the responsibility of the planner to evaluate the loss of adjacent circuits as the planner believes is appropriate for their System. For footnote 14, the SDT intends to limit the exposure for multiple circuits to less than 1 mile total. It does not matter whether the exposure is contiguous or not. The SDT declines to add "generally" to the requirements that apply to Facilities operated at greater than 300 kV as that would make the requirements unmeasurable.		
Lakeland Electric	No	The effective section needs more clarification:The assessment and supporting studies in accordance with the new standard is not effective until two years after this new standard is approved, however, it is required (R8) that PCs and TPs distribute its planning Assessment and results to adjacent PCs and TPs one year after the standard is effective. Which standard does the SDT intend for the (the old TPL standards or the new TPL standard) PCs and TPs to use to assess their system during the first year after the standard is approved? R2 thru R7 (assessments and studies) becomes effective 2 yrs after regulatory approval. That means that utilities have three years left to build/upgrade the projects identified in the studies/assessment (which was not effective until the 2nd year). Three years might not be enough to build long EHV or HV lines to meet the standard requirement.What happens between year 5 and year 7? After year 5, utilities are not allowed to trip Non-Consequential Load or curtailment of Firm Transmission Service for those specific contingency listed. However, the utilities do not have to self report until year 7 ("60 months of the compliance date for R2 through R4")
Response: A number of commenters pointed out a typographical error that reversed the numbering of Requirements R7 and R8 in the Implementation Plan. The implementation plan has been corrected to reflect the SDT's original intent that Requirements R1 and R7 (not Requirement R8) become effective 12 months after approval and Requirements R2 through R6 plus Requirement R8 (not Requirement R7), with the noted exceptions, become effective 24 months after approval. Changes were made to the Standard and the Implementation Plan document. Consequently, the revised assessment requirements and Requirement R8 are all effective 24 months after applicable regulatory approval. During the one-year period after Requirements R1 and R7 become effective and before the remaining requirements become effective, Transmission Planners and Planning Coordinators should conduct their assessments based on the current requirements. The SDT considered the concerns of a number of commenters as to whether 60 months will be sufficient to complete major projects when TPL-001-1, draft 3 was prepared, and the SDT again discussed its position in light of the comments received from this posting. The SDT continues to believe that extending the 60 month implementation period would water down the standard by potentially delaying some corrective actions that could be implemented in 60 months or less. The current draft of TPL-001-1 does in fact recognize the distinct possibility that major construction projects could take more than 60 months, in which case Requirement R2, part 2.7.3 would apply. The relevant portion of that requirement states: "If situations arise that are beyond the control of the Transmission Planner or Planning Coordinator that prevent the implementation of a Corrective Action Plan in the required timeframe, then the Transmission Planner or Planning Coordinator is permitted to utilize Non-Consequential Load Loss and curtailment of Firm Transmission Service to correct the situation that would normally not be permitted in Table 1, provided that the		

Organization	Yes or No	Comments for Question 12
Transmission Planner or Planning Coordinator documents that they are taking actions to resolve the situation. ….” This provision could be applied when formulating the original Corrective Action Plan when it is known in advance that the permitting and construction process will require longer than 60 months or after the plan is formulated and unexpected delays arise outside the Transmission Planner’s or Planning Coordinator’s control. All parts of the revised standard will be in effect 60 months after applicable regulatory approval, so there are no unique requirements that exist only between year 5 and year 7.		
Tri-State Generation and Transmission Association	No	The SDT needs to look at the Measures section more closely. Please consider: In what jurisdiction could it be developed, and would it be possible to develop estimates of costs to meet the new requirements contained in this draft TPL by Reliability Area, then have utilities examine whether there will be a corresponding increase in Bulk Transmission System reliability?The primary directive of NERC Reliability Standards is to improve system reliability and thus minimize potential cascading of the Bulk Electric System. This developing TPL Standard will provide some needed clarification and perhaps better uniformity of Planning Study work. Any Standard that would move us toward the primary goal should be attended to meticulously. The SDT must endeavor to ensure this standard moves us in that direction and does not simply give us more structure. That said, please use this guiding test as we put final touches on this standard: Will each Requirement decrease the potential of cascading outages and increase service reliability?
Response: Throughout the development process, the SDT has been cognizant of the changes in the requirements and their potential impact on BES reliability. The SDT believes that all of the requirements and their sub-parts contained in this standard address the NERC directive of ensuring Bulk Electric System reliability.		
Oklahoma Gas & Electric	No	This document needs to be cyrstal clear because of compliance requirements. It still needs some work to clarify some definitions and address duplication of work (between the Transmission Planner and Planning Coordinator).
Response: The SDT has worked diligently to make the requirements very clear and unambiguous. See responses to Q9 for changes made to the definitions in this draft. The SDT has written the standard such that each Transmission Planner and each Planning Coordinator is responsible for each requirement and its sub-parts.		
TVA System Planning	No	TVA is very concerned about the tremendous amount of additional work that has been proposed for both the steady state and for stability analysis. TVA believes that there will be very little payoff for these additional studies. TVA is concerned that the costs to meet the new requirements contained in this draft TPL will amount to between $1 billion to $2 billion with very little impact overall on the reliability of the Bulk transmission system. TVA is also very concerned about the increase in customer rates that will be required to support these new facilities.
Response: The SDT has made efforts to ensure that new study requirements in the proposed standard contribute to the completeness of Planning Assessments and remove the ambiguity in the existing standards. The SDT believes that the higher performance requirements are necessary to ensure a reliable BES.		
Gainesville Regional Utilities	Yes	
Oncor Electric Delivery	Yes	

Organization	Yes or No	Comments for Question 12
Progress Energy Carolinas	Yes	
Southern Company	Yes	
TIS	Yes	
Exelon Transmission Planning	Yes	Concern is with the issues raised in Question 2. Performance requirements should be based on the voltage level of the overloaded element.
Response: Please see the comment responses for Q2 to see how the SDT addressed the issues raised in your comments. The SDT disagrees that the voltage level of the overloaded element should be used to determine acceptable performance.		
Lafayette Utilities System	Yes	LUS believes that the current draft of the standard is a significant improvement on the previous draft, and that the standard is ready to go to ballot. While there are elements of the standard which we consider to be short of the ideal, we recognize that this has been a consensus-building process and that the version 4, as explained and clarified, is a compromise which may be the best attainable for the industry at the moment.
Response: Thank you for your comment.		

VRF and VSL Statement for Project 2006-02: Assess Transmission Future Needs

The proposed reliability standard includes Violation Risk Factors ("VRFs") and Violation Severity Levels ("VSLs") that are specific to individual Requirements. The ranges of penalties for violations of standards are based on the applicable VRFs and VSLs and will be administered based on the Sanctions Table and supporting penalty determination process described in FERC-approved NERC Sanction Guidelines, Appendix 4B in NERC's Rules of Procedure. The assignment of VRFs and VSLs included consideration of the NERC guidelines. Consistent with NERC's August 10, 2009 informational filing, assignments of VRFs and VSLs were made at the main requirement level of each standard.

VRF assignments were based on the criteria stated in the guidelines:

- High — A requirement that, if violated, could directly cause or contribute to Bulk Electric System (BES) instability, separation, or a cascading sequence of failures, or could place the BES at an unacceptable risk of instability, separation, or cascading failures.
- Medium — A requirement that, if violated, could directly affect the electrical state or the capability of the BES, or the ability to effectively monitor and control the BES. However, violation of a medium risk requirement is unlikely to lead to BES instability, separation, or cascading failures.
- Low — A requirement that, if violated, would not be expected to adversely affect the electrical state or capability of the BES, or the ability to effectively monitor and control the BES. A requirement that is administrative in nature.

Utilizing these criteria, the VRFs for TPL-001-1 were assigned as follows:

- Since this is a planning standard, dealing with items in the Long-term Planning Timing Horizon, no requirements were assigned a high VRF.
- A medium VRF was assigned to those requirements dealing with the Planning Assessment and its constituent parts. Therefore, a medium VRF was assigned to Requirements R1 through R5. .
- A lower VRF was assigned to Requirements R6, R7, and R8 which were seen as mainly administrative in nature.

VSLs have been assigned consistent with the established guidelines as can be seen in the following table.

TPL-001-1				
R#	Guideline 1 Violation Severity Level Assignments Should Not Have the Unintended Consequence of Lowering the Current Level of Compliance	Guideline 2 Violation Severity Level Assignments Should Ensure Uniformity and Consistency in the Determination of Penalties Guideline 2a: The Single Violation Severity Level Assignment Category for "Binary" Requirements Is Not Consistent Guideline 2b: Violation Severity Level Assignments that Contain Ambiguous Language	Guideline 3 Violation Severity Level Assignment Should Be Consistent with the Corresponding Requirement	Guideline 4 Violation Severity Level Assignment Should Be Based on A Single Violation, Not on A Cumulative Number of Violations
R1.	This is a new requirement and is more stringent than previous performance.	The VSLs are clear and unambiguous and can only be interpreted one way. The VSLs cover all possible scenarios.	The VSLs do not add to the requirement and cover all elements of the requirement	The VSLs are based on a single violation and not cumulative violations.
R2.	This is a new requirement and is more stringent than previous performance.	The VSLs are clear and unambiguous and can only be interpreted one way. The VSLs cover all possible scenarios.	The VSLs do not add to the requirement and cover all elements of the requirement	The VSLs are based on a single violation and not cumulative violations.
R3.	This is a new requirement and is more stringent than previous performance.	The VSL is binary and the only possibility is Severe.	The VSLs do not add to the requirement and cover all elements of the requirement	The VSLs are based on a single violation and not cumulative violations.
R4.	This is a new requirement and is more stringent than previous performance.	The VSLs are clear and unambiguous and can only be interpreted one way. The VSLs cover all possible scenarios.	The VSLs do not add to the requirement and cover all elements of the requirement	The VSLs are based on a single violation and not cumulative violations.
R5.	This is a new requirement and is more stringent than previous performance.	The VSL is binary and the only possibility is Severe.	The VSLs do not add to the requirement and cover all elements of the requirement	The VSLs are based on a single violation and not cumulative violations.

TPL-001-1				
R#	Guideline 1 Violation Severity Level Assignments Should Not Have the Unintended Consequence of Lowering the Current Level of Compliance	Guideline 2 Violation Severity Level Assignments Should Ensure Uniformity and Consistency in the Determination of Penalties Guideline 2a: The Single Violation Severity Level Assignment Category for "Binary" Requirements Is Not Consistent Guideline 2b: Violation Severity Level Assignments that Contain Ambiguous Language	Guideline 3 Violation Severity Level Assignment Should Be Consistent with the Corresponding Requirement	Guideline 4 Violation Severity Level Assignment Should Be Based on A Single Violation, Not on A Cumulative Number of Violations
R6.	This is a new requirement and is more stringent than previous performance.	The VSL is binary and the only possibility is Severe.	The VSLs do not add to the requirement and cover all elements of the requirement	The VSLs are based on a single violation and not cumulative violations.
R7.	This is a new requirement and is more stringent than previous performance.	The VSL is binary and the only possibility is Severe.	The VSLs do not add to the requirement and cover all elements of the requirement	The VSLs are based on a single violation and not cumulative violations.
R8.	This is a new requirement and is more stringent than previous performance.	The VSLs are clear and unambiguous and can only be interpreted one way. The VSLs cover all possible scenarios.	The VSLs do not add to the requirement and cover all elements of the requirement	The VSLs are based on a single violation and not cumulative violations.

Source	Standard No.	Project No	Language	Resolution
FERC Order 693	TPL Family	2006-02	1691 - Further, the proposed modifications are intended to ensure that the planning requirements are specific enough to promote rigor and consistency in assessments and provide clear and measurable rules for mandatory and enforceable Reliability Standards. The Commission therefore agrees with SDG&E's comments in this regard and on the need to balance "appropriateness" and "specificity."	TPL-001-1, Requirements R1-R8 & Table 1 - The standard strikes the desired balance between specific requirements (for example, Table 1 event descriptions and performance requirements) and appropriateness where the individual System concerns necessitates variations (for example, Requirement R2, part 2.4.3 addressing what sensitivities should be addressed) so that the standard ensures reliability is maintained
FERC Order 693	TPL Family	2006-02	1692 - Consider integrating TPL-001 through TPL-004 into one standard.	TPL-001-1 incorporates TPL-001-0 through TPL-004-
FERC Order 693	TPL Family	N/A	1693 -Submit an informational filing, in addition to regional criteria, all utility and RTO/ISO differences in transmission planning criteria that are more stringent than those specified by the TPL standards.	The data has been collected and distributed to the SDT and reviewed for consideration. Detailed discussions are contained in the SDT meeting minutes.
FERC Order 693	TPL Family	2006-02	1694, 1704, & 1706 - Consider the full range of variables when determining critical system conditions but only those deemed to be significant need to be assessed and documentation provided that explain the rationale for selection.	TPL-001-1, Requirement R3, part 3.4 & Requirement R4, part 4.4
FERC Order 693	TPL Family	2006-02	1716 - System performance should be assessed based on contingencies that mimic what happens in real-time.	TPL-001-1, Requirement R1
FERC Order 693	TPL Family	2006-02	1719 - Consider appropriate revisions to the reliability standards to deal with cyber security events.	Cyber security events have been added to the list of Extreme Events as #3a.v
FERC Order 693	TPL Family	N/A	Entities that have planned and designed their systems on the basis of a different approach to single contingencies should work with NERC in developing plans to transition to this new approach.	This is not an SDT issue. No action taken.
FERC Order 693 – TPL General Comments	TPL-001-0	2006-02	1693 - Submit an informational filing, in addition to regional criteria, all utility and RTO/ISO differences in transmission planning criteria that are more stringent than those specified by the TPL standards.	The data has been collected and distributed to the SDT and reviewed for consideration. Detailed discussions are contained in the SDT meeting minutes.
FERC Order 693	TPL-001-0	2006-02	1694, 1704, & 1706 - Determine critical system conditions and study years by conducting sensitivity analysis with due consideration of the factors outlined by the Commission.	TPL-001-1, Requirement R2, part 2.1.4
FERC Order 693 – TPL General Comments	TPL-001-0	2006-02	1694, 1704, & 1706 - Consider the full range of variables when determining critical system conditions but only those deemed to be significant need to be assessed and documentation provided that explain the rational for selection.	TPL-001-1, Requirement R3, part 3.4 & Requirement R4, part 4.4

Source	Standard No.	Project No	Language	Resolution
FERC Order 693 – TPL General Comments	TPL-001-0	2006-02	1716 - System performance should be assessed based on contingencies that mimic what happens in real-time.	TPL-001-1, Requirement R1
FERC Order 693 – TPL General Comments	TPL-001-0	2006-02	1719 - Consider appropriate revisions to the reliability standards to deal with cyber security events.	Cyber security events have been added to the list of Extreme Events as #3a.v
FERC Order 693	TPL-001-0	2006-02	1751 - Require a peer review of planning assessments with neighboring entities	TPL-001-1, Requirement R3, part 4.1, R4, part 4.2 and Requirement R8: R3 and R4 address the concern expressed about sharing and coordination of System Contingencies that may affect neighboring Systems. Order 693 uses the term 'neighboring' while the proposed Reliability Standard uses 'adjacent'. 'Adjacent' is actually a more encompassing term as it would pick up embedded cooperatives, municipals, etc., and thus is more stringent than the Order 693 terminology. Additionally, the term 'adjacent' clarifies the intent to cover Transmission Systems that interconnect to the entity System whereas neighbor is vague and could include Systems in the vicinity of an entity's System, but not directly connected.
			Continuation of 1751	Requirement R8 continues to address the appropriate sharing of information with neighboring Systems. Distribution is a better approach than just a peer review as an entity could always decline an offer to participate in a peer review even if they should have participated. The distribution approach means that they will receive the Planning Assessment regardless. R8 ensures that information is shared with those affected and input from those Systems is received, without dictating how the two-way sharing must take place, such as peer review. Due to the continuing cycle of Planning Assessments, comments from other entities at the end of a planning cycle will be utilized at the beginning of the next cycle as the planner moves forward in time. This approach tells entities what to do without stating how to do it but still makes certain that the goal is achieved. This is

Source	Standard No.	Project No	Language	Resolution
			Continuation of 1751	To cover those “neighboring” Systems that may not be adjacent, the standard requires the Transmission Planner and Planning Coordinator to distribute the Planning Assessment to additional “neighbors” who show a “reliability related need” who have requested information in writing and requires a documented response to their comments. This is an equally, effective manner to provide for the appropriate sharing of
FERC Order 693	TPL-001-0	2006-02	1759 - Modify requirement R1.3 to substitute the reference to regional reliability organization with regional entity.	References to RRO have been removed
FERC Order 693	TPL-001-0	2006-02	1786 - Require assessments of outages of critical long lead time equipment, consistent with an entity’s spare equipment strategy	TPL-001-1, Requirement R2, part 2.1.5
FERC Order 693	TPL-001-0	2006-02	1797 - Address concerns with footnote (a) of Table 1 with regard to applicability of emergency ratings and consistency of normal ratings and voltages with values obtained from other reliability standards and concerns raised by International Transmission with reg	TPL-001-1, Table 1, header note 'e'
FERC Order 693 – TPL General Comments	TPL-001-0	2006-02	Entities that have planned and designed their systems on the basis of a different approach to single contingencies should work with NERC in developing plans to transition to this new approach.	This is not an SDT issue. No action taken.
FERC Order 693 – TPL General Comments	TPL-001-0	2006-02	Consider integrating TPL-001 through TPL-004 into one standard.	TPL-001-1 incorporates TPL-001-0 through TPL-004-0
Fill in the Blank Team	TPL-001-0	2006-02	No action needed	No action taken.
Other	TPL-001-0	2006-02	Modify standard to conform to the latest version of NERC’s Reliability Standards Development Procedure, the NERC Standard Drafting Team Guidelines, and the ERO Rules of Procedure.	The SDT is working against the latest set of procedures
Phase III/IV Team	TPL-001-0	2006-02	Add a requirement to verify that there are sufficient reactive resources	TPL-001-1, Requirement R1, part 1.1.3
Phase III/IV Team	TPL-001-0	2006-02	Add a requirement to identify where UVLS should be installed	Not considered appropriate for TPL-001-1
Team Comments	TPL-001-0	2006-02	Provide clarity where the Planning Authority is mentioned	Planning Authority is now Planning Coordinator and clarity has been provided in each requirement as needed
Version 0 Team	TPL-001-0	2006-02	Need to address deliverability to load	TPL-001-1, Table 1, Footnote 10

Source	Standard No.	Project No	Language	Resolution
Version 0 Team	TPL-001-0	2006-02	Clarify use of applicable ratings in Table 1, note ‘a’	TPL-001-1, Table 1, header note 'e'
Version 0 Team	TPL-001-0	2006-02	Clarify timing for submittal of corrective plan	TPL-001-1, Requirement R2, part 2.7
Version 0 Team	TPL-001-0	2006-02	Several semantic issues	The standard has been compeletly rewritten.
Version 0 Team	TPL-001-0	2006-02	Define critical system conditions	This terminology is no longer used.
Version 0 Team	TPL-001-0	2006-02	Having all projected firm transfers modeled may not be practical to achieve in a single shapshot of a powerflow model. The requirement should allow engineering judgment to determine the appropriate level of system utilization to assess reliability considering all projected firm uses.	TPL-001-1, Requirement R1
Version 0 Team	TPL-001-0	2006-02	Table 1, note ‘b’ – clarify when to curtail firm deliveries	TPL-001-1, Table 1, Interruption of Firm Transmission Service Allowed column added
Version 0 Team	TPL-001-0	2006-02	Table 1 – C.5 goes beyond double circuit outage criteria	TPL-001-1, Table 1, P7
Version 0 Team	TPL-001-0	2006-02	Does planned facilities include just those under construction?	This terminology has been cleared up in TPL-001-1, Requirement R1, part 1.1.2
Version 0 Team	TPL-001-0	2006-02	Table 1, items 6, 7, 8 & 9 need footnote stating that they do not apply to generator breaker failure	Table 1 has been rewritten
Version 0 Team	TPL-001-0	2006-02	Need to include multiple time frames	TPL-001-1, Requirement R2
Version 0 Team	TPL-001-0	2006-02	What is a major load center?	This terminology is no longer used.
VRFs Team	TPL-001-0	2006-02	R1 – time horizon should be long-term planning	All time horizons have been adjusted to Long-term Planning.
FERC Order 693	TPL-002-0	2006-02	1694, 1704, & 1706 - Determine critical system conditions in the same manner as proposed in TPL-001.	This terminology is no longer used.
FERC Order 693	TPL-002-0	2006-02	1773 - Footnote (b) should not allow for firm load shedding or curtailment of firm transfers as part of the system adjustments.	TPL-001-1, Table 1, P1 - associated footnote has been removed
FERC Order 693	TPL-002-0	2006-02	1773 - Clarify the phrase “permit operating steps necessary to maintain system control” in the footnote (a) and the use of emergency ratings.	TPL-001-1, Table 1, header note 'e'
FERC Order 693	TPL-002-0	2006-02	1773 - Clarifies footnote (b) in regard to load loss following a single contingency specifying the amount and duration of consequential load loss and system adjustments permitted after the first contingency to return the system to a normal operating state. NERC	TPL-001-1, Table 1, footnote 9.

Source	Standard No.	Project No	Language	Resolution
FERC Order 693	TPL-002-0	2006-02	1786 - Requires assessment of planned outages of long lead time critical equipment consistent with the entity's spare equipment strategy.	TPL-001-1, Requirement R2, part 2.1.5
FERC Order 693	TPL-002-0	2006-02	1787 - Requires all generators to ride through the same set of category B and C contingencies as required by wind generators in Order No. 661, or to simulate without this capability as tripping.	TPL-001-1, Requirement R3, part 3.3.2 & Requirement R4, part 4.3.2
FERC Order 693	TPL-002-0	2006-02	1788 - Consider NRC's comments regarding clarifying the N-1 state as being always applicable to the current conditions as part of the standards development process.	TPL-001-1, Table 1 & Requirement R1
FERC Order 693	TPL-002-0	2006-02	1789 - Document the load models used in system studies and the rationale for their use.	TPL-001-1, Requirement R1
FERC Order 693	TPL-002-0	2006-02	1794 - Standard should be clarified to not allow an entity to plan for the loss of non-consequential load in the event of a single contingency.	TPL-001-1, Table 1, P1
FERC Order 693	TPL-002-0	2006-02	1795 - Commission, therefore, suggests that the ERO consider developing a ceiling on the amount and duration of consequential load loss that will be acceptable. If the ERO determines that such a ceiling is appropriate, it should be developed through the ERO's Reliability Standards development process	and duration and if it "is appropriate" to develop the ceiling through the standards development process. Originally, the SDT debated the appropriateness and the need for a ceiling and after much debate determined that a single ceiling was not appropriate for the continent-wide standard. The SDT was divided on the reliability need for this item and vetting with industry was determined to be the best course of action. The directive was then further addressed in other stages of the project to determine if another equally effective method could be developed. The SDT added requirements covering the reporting of the magnitude and duration of Consequential Load Loss. In earlier postings, industry overwhelming protested the
			Continuation of 1795	duration than magnitude so the SDT attempted a compromise position. The duration element of the requirement was deleted and a revised requirement covering only magnitude was crafted and posted for comment. Again, the SDT was overwhelmed by industry comments pushing back about the inclusion of an administrative task without a reliability need in a Reliability Standard. At this point, the SDT discussed the matter at length and decided to delete the requirement in its entirety. The SDT addressed the directive to "consider developing a ceiling" as directed in Order 693 as evidenced in meeting notes and by its attempt to include the requirements for an equally effective method in the Reliability Standard. Therefore, the SDT
Fill in the Blank Team	TPL-002-0	2006-02	No action required	No action taken

Source	Standard No.	Project No	Language	Resolution
Phase III/IV Team	TPL-002-0	2006-02	Add a requirement to verify that there are sufficient reactive resources	TPL-001-1, Requirement R1, part 1.1.3
Phase III/IV Team	TPL-002-0	2006-02	Add a requirement to identify where UVLS should be installed	Not considered appropriate for TPL-001-1
Team Comments	TPL-002-0	2006-02	Provide clarity where the Planning Authority is mentioned	Planning Authority is now Planning Coordinator and clarity has been provided in each requirement
Version 0 Team	TPL-002-0	2006-02	Must study all contingencies and multiple demand levels & time frames	TPL-001-1, Requirement R3, part 3.4 &Requirement R4, part R4.4, & Requirement R2
Version 0 Team	TPL-002-0	2006-02	Define critical system conditions	This terminology is no longer used.
Version 0 Team	TPL-002-0	2006-02	Clarify timing for corrective plan	TPL-001-1, Requirement R2, part2.7
Version 0 Team	TPL-002-0	2006-02	Address deliverability of generation to load	TPL-001-1, Table 1, Footnote 9
Version 0 Team	TPL-002-0	2006-02	Don’t include generation runback or redispatch	Clarified usage in TPL-001-1, header note 'e & footnote 9
Version 0 Team	TPL-002-0	2006-02	Don’t include planning outage	Clarified in TPL-001-1, Requirement R1, part 1.1.1
Version 0 Team	TPL-002-0	2006-02	Single terminals are not included	Clarified in TPL-001-1, Table 1, P2.1 & footnote 8
Version 0 Team	TPL-002-0	2006-02	Clarify applicable ratings in Table 1, note ‘a’	TPL-001-1, Table 1, header note 'e'
VRFs Team	TPL-002-0	2006-02	Time horizon should be long-term planning and R2.2 – redundant with R1.3.8	All time horizons have been adjusted to Long-term Planning.
FERC Order 693	TPL-003-0	2006-02	1765 - Determine critical system conditions in the same manner as proposed in TPL-001.	TPL-001-1, Requirement R1 & Requirement R2, part 2.1.4
FERC Order 693	TPL-003-0	2006-02	1769 - Address LPPA’s concerns on changes to footnotes of Table 1 through the standard development process.	The Table & the footnotes have been completely rewritten.
FERC Order 693	TPL-003-0	2006-02	1788 - Address NRC concerns as described in TPL-002 through the standards development process.	TPL-001-1, Table 1 re-write
FERC Order 693	TPL-003-0	2006-02	1806 - Clarify the term “controlled load interruption”.	The terminology is no longer utilized.
FERC Order 693	TPL-003-0	2006-02	1820 - Applicable entities must define and document the proxies necessary to simulate cascading outages.	TPL-001-1, Requirement R6
FERC Order 693	TPL-003-0	2006-02	1821 - Tailor the purpose statement to reflect the specific goal of the standard.	The purpose statement of TPL-001-1 has been rewritten.
FERC Order 693	TPL-003-0	2006-02	1824 - Consider the comments on major load pockets as part of the standards development process.	In light of these comments, the Commission does not intend to recommend action on this issue at this time. - No action taken for this revision.

Source	Standard No.	Project No	Language	Resolution
Fill in the Blank Team	TPL-003-0	2006-02	No action required	No action taken
Phase III/IV Team	TPL-003-0	2006-02	Add a requirement to verify that there are sufficient reactive resources	TPL-001-1, Requirement R1, part 1.1.3
Phase III/IV Team	TPL-003-0	2006-02	Add a requirement to identify where UVLS should be installed	Not considered appropriate for TPL-001-1
Team Comments	TPL-003-0	2006-02	Provide clarity where the Planning Authority is mentioned	Planning Authority is now Planning Coordinator and clarity has been provided in each requirement
Version 0 Team	TPL-003-0	2006-02	Don't base penalties on low probability, low consequence events	VSLs have been added
Version 0 Team	TPL-003-0	2006-02	Use NERC Compliance Reporting Process	The Compliance section has been rewritten according to the latest rules
Version 0 Team	TPL-003-0	2006-02	Same as TPL-001 & 002	See TPL-001
Version 0 Team	TPL-003-0	2006-02	Clearly identify outages	TPL-001-1, Requirement R1, part 1.1.1, Requirement R3, part 3.4, & Requirement R4, part 4.4
Version 0 Team	TPL-003-0	2006-02	Development of mitigation plans requires subsequent studies, and may actually be done by a different entity than the entity performing the assessment (the TO instead of the RTO who may have done the assessment)	Assessments are performed by Transmission Planner or Planning Coordinator
VRFs Team	TPL-003-0	2006-02	R2.2 - lack of consistency with TPL-001 & TPL-007	All VRFs have been rewritten
VRFs Team	TPL-003-0	2006-02	R2.1.3 - lack of consistency with TPL-001 & TPL-006	TPL-006 will be retired
VRFs Team	TPL-003-0	2006-02	R2.1.2 - lack of consistency with TPL-001 & TPL-005	TPL-005 is being retired
VRFs Team	TPL-003-0	2006-02	R2.1.1 - lack of consistency with TPL-001 & TPL-004	TPL-004 has been merged into TPL-001-1
VRFs Team	TPL-003-0	2006-02	Time horizon should be long-term planning	All time horizons have been adjusted to Long-term Planning.
VRFs Team	TPL-003-0	2006-02	R2.1 - lack of consistency with TPL-001	TPL-003 has been merged into TPL-001-1
VRFs Team	TPL-003-0	2006-02	R2 – lack of consistency with TPL-001 & TPL-002	TPL-003 has been merged into TPL-001-1
FERC Order 693	TPL-004-0	2006-02	1765 - Determine critical system conditions in the same manner as proposed in TPL-001.	TPL-001-1, Requirement R2, part 2.1.4
FERC Order 693	TPL-004-0	2006-02	1835 - Tailor the purpose statement to reflect the specific goal of the standard.	The purpose statement of TPL-001-1 has been rewritten.
FERC Order 693	TPL-004-0	2006-02	1836 - Expand the list of category D events to include recent actual events.	The list of Extreme Events has been expanded to include wide-area events.
FERC Order 693	TPL-004-0	2006-02	1836 - Identify options for reducing the probability or impacts of extreme events that cause cascading.	TPL-001-1, Requirement R3, part 3.5 & Requirement R4, part 4.5
Fill in the Blank Team	TPL-004-0	2006-02	No action required	No action taken
Phase III/IV Team	TPL-004-0	2006-02	Add a requirement to verify that there are sufficient reactive resources	TPL-001-1, Requirement R1, part 1.1.3

Source	Standard No.	Project No	Language	Resolution
Phase III/IV Team	TPL-004-0	2006-02	Add a requirement to identify where UVLS should be installed	Not considered appropriate for TPL-001-1
Team Comments	TPL-004-0	2006-02	Provide clarity where the Planning Authority is mentioned	Planning Authority is now Planning Coordinator and clarity has been provided in each requirement
Version 0 Team	TPL-004-0	2006-02	Same as TPL-001	See TPL-001
Version 0 Team	TPL-004-0	2006-02	Perform analysis on credible contingency	Contingencies required to be analyzed are defined in Requirement R3, parts 3.1 & 3.4 as well as Requirement R4, parts 4.1 & 4.4
Version 0 Team	TPL-004-0	2006-02	R1.3.9 – remove from extreme events	Extreme events has been rewritten.
Version 0 Team	TPL-004-0	2006-02	TO should determine which events to study	TPL-001-1, Requirement R3, parts3.1 & 3.4 & Requirement R4, parts 4.1 & 4.4
FERC Order 693	TPL-005-0	2006-02	1841 - Encourages NERC to utilize input from the Commission's technical conferences on regional planning as directed in Order No. 890 to improve this standard.	TPL-001-1, Requirement R8
Fill in the Blank Team	TPL-005-0	2006-02	New SAR needed	Supplemental SAR was written before the current SDT began work in 2007
Version 0 Team	TPL-005-0	2006-02	Define fuel adequacy	Terminology no longer employed
Version 0 Team	TPL-005-0	2006-02	An RRO can't make a mandatory request for another RRO to perform a study	All references to RRO have been removed
Fill in the Blank Team	TPL-006-0	2006-02	No action required	No action taken

Implementation Plan for TPL-001-1

Prerequisite Approvals

There are no other Reliability Standards or Standard Authorization Requests (SARs), in progress or approved, that must be implemented before this standard can be implemented.

TPL-001-1 — Transmission System Planning Performance Requirements

In revising the TPL standards, the SDT is assuming that planners will receive valid data from the MOD standards link described in TPL-001-1, Requirement R1. Furthermore, there is a tacit assumption that future revisions of the MOD standards will include steps to validate MOD based data.

Revision to Sections of Approved Standards and Definitions

There are multiple new definitions in the proposed standard.

Bus-tie Breaker: A circuit breaker that is positioned to connect two individual substation bus configurations.

Consequential Load Loss: All Load that is no longer served by the Transmission system as a result of Transmission Facilities being removed from service by a Protection System operation designed to isolate the fault.

Long-Term Transmission Planning Horizon: Transmission planning period that covers years six through ten or beyond when required to accommodate any known longer lead time projects that may take longer than ten years to complete.

Near-Term Transmission Planning Horizon: Transmission planning period that covers Years One through five.

Non-Consequential Load Loss: Non-Interruptible Load loss that does not include: (1) Consequential Load Loss, (2) the response of voltage sensitive Load, or (3) Load that is disconnected from the System by end-user equipment.

Planning Assessment: Documented evaluation of future Transmission System performance and Corrective Action Plans to remedy identified deficiencies.

Year One: The first year that a Planning Coordinator or a Transmission Planner is responsible for assessing. This is further defined as the planning window that begins 12-18 months from the end of the current calendar year.

Compliance with Standards

Standard	Functions That Must Comply With the Associated Requirements	
TPL-001-1 — Transmission System Planning Performance Requirements	Transmission Planner	Planning Coordinator
	X	X

Effective Dates

The effective date is the date entities are expected to meet the performance identified in this standard.

Except as indicated below**,** all Requirements and associated parts shall become effective on the first day of the first calendar quarter, 24 months after applicable regulatory approval. In those jurisdictions where no regulatory approval is required, all requirements go into effect on the first day of the first calendar quarter, 24 months after Board of Trustees adoption.

TPL-001-0, TPL-002-0a, TPL-003-0a, and TPL-004-0 are being retired as they are replaced in their entirety by TPL-001-1. TPL-005-0 and TPL-006-0 are being retired because their requirements are adequately covered by the revised TPL-001-1 and NERC's Rules of Procedure, Section 800. However, during this 24-month period, all aspects of TPL-001-0 through TPL-006-0 shall remain in effect for compliance monitoring. This 24 month period is to allow entities to develop, perform and/or validate new and/or modified studies, methodologies, assessments, procedures, etc. necessary to implement and meet the TPL-001-1 requirements. The specified effective dates are expected to allow sufficient time for proper assessment of the available options necessary to create a viable Corrective Action Plan that is compliant with the new Standard.

> R1. This Requirement is related to maintaining System models and the data needed to do so. This requirement shall become effective on the first day of the first calendar quarter, 12 months after applicable regulatory approval. In those jurisdictions where no regulatory approval is required, this requirement goes into effect on the first day of the first calendar quarter, 12 months after Board of Trustees adoption.
>
> R7. This Requirement identifies an obligation to determine individual and joint responsibilities for performing studies needed to do the Planning Assessment. This requirement shall become effective on the first day of the first calendar quarter, 12 months after applicable regulatory approval. In those jurisdictions where no regulatory approval is required, this requirement goes into effect on the first day of the first calendar quarter, 12 months after Board of Trustees adoption.

TPL-001-1 'raises the bar' in several areas where performance requirements have been changed in the new Standard versus those in existing TPL-001-0, TPL-002-0a, TPL-003-0a and TPL-004-0 because loss of Non-Consequential Load or interruption of firm transfers is no longer allowed for certain events, whereas the existing Standards were interpreted by many to allow such actions. As shown in Table 1 of TPL-001-1, the performance requirements associated with the following events represent "raising the bar":

- P1-2 (for controlled interruption of electric supply to local network customers connected to or supplied by the Faulted element)
- P1-3 (for controlled interruption of electric supply to local network customers connected to or supplied by the Faulted element)
- P2-1
- P2-2 (above 300 kV)
- P2-3 (above 300 kV)
- P3-1 through P3-5
- P4-1 through P4-5 (above 300 kV)
- P5 (above 300 kV)

This "raising the bar" is beyond the control of the Transmission Planner and Planning Coordinator and may have significant budget, siting, permitting, and construction impacts on many Transmission Owners. To provide stakeholders with sufficient time to implement changes, a timeframe coincident with the end of the Near-Term Transmission Planning Horizon will be provided as follows:

- For 60 months after the first day of the first calendar quarter following applicable regulatory approval, Corrective Action Plans applying to performance elements P1-2 and P1-3 (for controlled interruption of electric supply to local network customers connected to or supplied by the Faulted element), P2-1, P2-2 (above 300 kV), P2-3 (above 300 kV), P3-1 through P3-5, P4-1 through P4-5 (above 300 kV), and P5 (above 300 kV) are allowed to include tripping of Non-Consequential Load and curtailment of Firm Transmission Service (in accordance with Requirement R2.7.3) that would not otherwise be permitted by the requirements of TPL-001-1.

Any entity which cannot eliminate the need to trip Non-Consequential Load or curtail Firm Transmission Service for these performance elements by that date shall submit a mitigation plan to its Regional Entity outlining the steps it will take to correct the problem . If the entities follow the established ERO procedure for mitigation, it is the intent of the SDT that no penalties will be assessed.

Implementation Plan for TPL-001-1

Prerequisite Approvals

There are no other Reliability Standards or Standard Authorization Requests (SARs), in progress or approved, that must be implemented before this standard can be implemented.

TPL-001-1 —~~–~~ Transmission System Planning Performance Requirements

In revising the TPL standards, the SDT is assuming that planners will receive valid data from the MOD standards link described in TPL-001-1, Requirement R1. Furthermore, there is a tacit assumption that future revisions of the MOD standards will include steps to validate MOD based data.

Revision to Sections of Approved Standards and Definitions

There are multiple new definitions in the proposed standard.

Bus-tie Breaker: A circuit breaker that is positioned to connect two individual substation bus configurations.

Consequential Load Loss: ~~–~~All Load that is no longer served by the Transmission ~~S~~system as a result of Transmission Facilities being removed from service by a Protection System operation designed to isolate the fault.

Long-Term Transmission Planning Horizon: Transmission planning period that covers years six through ten or beyond when required to accommodate any known longer lead time projects that may take longer than ten years to complete.

Near-Term Transmission Planning Horizon: Transmission planning period that covers Years One through five.

Non-Consequential Load Loss: Non-Interruptible Load loss that does not include: (1) ~~other than~~ Consequential Load Loss, (2) ~~and~~ the response of voltage sensitive Load, or (3) ~~including~~ Load that is disconnected from the System by end-user equipment.~~.~~

Planning Assessment: Documented evaluation of future Transmission System performance and Corrective Action Plans to remedy identified deficiencies.

Year One: The first year that a Planning Coordinator or a Transmission Planner is responsible for assessing. This is further defined as the planning window that begins 12-18 months from the end of the current calendar year.

Compliance with Standards

Standard	Functions That Must Comply With the Associated Requirements	
TPL-001-1 — Transmission System Planning Performance Requirements	Transmission Planner	Planning Coordinator
	X	X

Effective Dates

The effective date is the date entities are expected to meet the performance identified in this standard.

Except as indicated below**,** all Requirements and associated ~~sub-requirements~~parts shall become effective on the first day of the first calendar quarter, 24 months after ~~the first day of the first calendar quarter following~~ applicable regulatory approval. In those jurisdictions where no regulatory approval is required, all requirements go into effect on the first day of the first calendar quarter, 24 months after Board of Trustees adoption.

TPL-001-0, TPL-002-0a, TPL-003-0a, and TPL-004-0 are being retired as they are replaced in their entirety by TPL-001-1. TPL-005-0 and TPL-006-0 are being retired because their requirements are adequately covered by the revised TPL-001-1 and NERC's Rules of Procedure, Section 800. However, during this 24-month period, all aspects of TPL-001-0 through TPL-006-0 shall remain in effect for compliance monitoring. This 24 month period is to allow entities to develop, perform and/or validate new and/or modified studies, methodologies, assessments, procedures, etc. necessary to implement and meet the TPL-001-1 requirements. The specified effective dates are expected to allow sufficient time for proper assessment of the available options necessary to create a viable Corrective Action Plan that is compliant with the new Standard.

R1. This Requirement is related to maintaining System models and the data needed to do so. This requirement shall become effective on the first day of the first calendar quarter, 12 months after ~~the first day of the first calendar quarter following~~ applicable regulatory approval. In those jurisdictions where no regulatory approval is required, this requirement goes into effect on the first day of the first calendar quarter, 12 months after Board of Trustees adoption.

R7. This Requirement identifies an obligation to determine individual and joint responsibilities for performing studies needed to do the Planning Assessment. This requirement shall become effective on the first day of the first calendar quarter, 12 months after ~~the first day of the first calendar quarter following~~ applicable regulatory approval. In those jurisdictions where no regulatory approval is required, this requirement goes into effect on the first day of the first calendar quarter, 12 months after Board of Trustees adoption.

TPL-001-1 'raises the bar' in several areas where performance requirements have been changed in the new Standard versus those in existing TPL-001-0, TPL-002-0a, TPL-003-0a and TPL-004-0 because loss of Non-Consequential Load or interruption of firm transfers is no longer allowed for certain events, whereas the existing Standards were interpreted by many to allow such actions. As shown in Table 1 of TPL-001-1, the performance requirements associated with the following events represent "raising the bar":

- P1-2 -(for controlled interruption of electric supply to local network customers connected to or supplied by the Faulted element)
- P1-3 (for controlled interruption of electric supply to local network customers connected to or supplied by the Faulted element)
- P2-1
- P2-2 (above 300 kV)
- P2-3 (above 300 kV)
- P3-1 through P3-5
- P4-1 through P4-5 (above 300 kV)
- P5 (above 300 kV)

This "raising the bar" is beyond the control of the Transmission Planner and Planning Coordinator and may have significant budget, siting, permitting, and construction impacts on many Transmission Owners. ~~In question 14 of the second posting of the revised standard, the SDT requested input from industry on the amount of time required to implement the Corrective Action Plans needed to address the 'raise the bar' issues. The SDT has studied the responses and determined that~~ To provide stakeholders with sufficient time to implement changes, a timeframe coincident with the end of the Near-Term Transmission Planning Horizon ~~would be the appropriate~~will be provided as follows:~~ amount of time to implement the changes. Therefore,~~

- F~~f~~or 60 months after the first day of the first calendar quarter following applicable regulatory approval, Corrective Action Plans applying to performance elements P1-2 and P1-3 (for controlled interruption of electric supply to local network customers connected to or supplied by the Faulted element), P2-1, P2-2 (above 300 kV), P2-3 (above 300 kV), P3-1 through P3-5, P4-1 through P4-5 (above 300 kV), and P5 (above 300 kV) are allowed to include tripping of Non-Consequential Load ~~or~~and curtailment of Firm Transmission Service (in accordance with Requirement R2.7.3) that would not otherwise be permitted by the requirements of TPL-001-1.

Any entity which cannot ~~fully implement their Corrective Action Plan to~~ eliminate the need to trip Non-Consequential Load or curtail Firm Transmission Service for these performance elements by that date shall ~~self report themselves as being unable to meet the performance requirements of the Reliability Standard. The entities will~~ submit a mitigation plan to ~~their~~ its Regional Entity outlining the steps ~~they~~ it will take to correct the problem ~~to become compliant and the date they anticipate becoming compliant~~. ~~The Regional Entity and NERC will review the mitigation plan and the Regional Entity/NERC will either approve it or remand it back for changes (this could include dates, steps, etc.). If the mitigation plan is approved by the Regional Entity and NERC and the entity completes the mitigation plan by the date contained within the~~

~~mitigation plan,~~ If the entities follow the established ERO procedure for mitigation, it is the intent of the SDT that no penalties will be assessed. ~~Those entities who do not meet the date outlined in the mitigation plan will begin settlement proceedings at that date.~~

Standard Development Roadmap

This section is maintained by the drafting team during the development of the standard and will be removed when the standard becomes effective.

Development Steps Completed:

1. Version 1 of SAR posted for comment from April 2, 2002 through May 3, 2002.
2. Version 2 of SAR posted for comment from May 5, 2004 through June 5, 2004.
3. Version 3 of SAR posted on November 18, 2005.
4. SAR approved on April 30, 2006.
5. Version 1 of Supplemental SAR posted for comment from February 15, 2007 through March 16, 2007.
6. Version 2 of Supplemental SAR posted on April 9, 2007.
7. Version 1 of revised standard(s) posted for comment on September 17, 2007.
8. Version 2 of the revised standards posted for comment on August 15, 2008.
9. Version 3 of the revised standards posted for comment on May 26, 2009.
10. Version 4 of the revised standards posted for comment on September 16, 2009.

Proposed Action Plan and Description of Current Draft:

The SDT has established a schedule of meetings and conference calls that allows for steady progress through the standards development process in anticipation of completing their assignment in 1Q10. The current draft is the second iteration of the revision of existing standards TPL-001 through TPL-006 and includes one revised standard, TPL-001-1, replacing TPL-001-0, TPL-002-0, TPL-003-0 and TPL-004-0. TPL-005 & -006 issues are addressed in this fifth draft and those standards will also be replaced by TPL-001-1.

Future Development Plan:

Anticipated Actions	Anticipated Date
1. Submit standard(s) to BOT.	2Q10
2. Submit to regulatory authorities for approval.	3Q10

Definitions of Terms Used in Standard

This section includes all newly defined or revised terms used in the proposed standard. Terms already defined in the Reliability Standards Glossary of Terms are not repeated here. New or revised definitions listed below become approved when the proposed standard is approved. When the standard becomes effective, these defined terms will be removed from the individual standard and added to the Glossary.

Bus-tie Breaker: A circuit breaker that is positioned to connect two individual substation bus configurations.

Consequential Load Loss: All Load that is no longer served by the Transmission system as a result of Transmission Facilities being removed from service by a Protection System operation designed to isolate the fault.

Long-Term Transmission Planning Horizon: Transmission planning period that covers years six through ten or beyond when required to accommodate any known longer lead time projects that may take longer than ten years to complete.

Near-Term Transmission Planning Horizon: Transmission planning period that covers Years One through five.

Non-Consequential Load Loss: Non-Interruptible Load loss that does not include: (1) Consequential Load Loss, (2) the response of voltage sensitive Load, or (3) Load that is disconnected from the System by end-user equipment.

Planning Assessment: Documented evaluation of future Transmission system performance and Corrective Action Plans to remedy identified deficiencies.

Year One: The first year that a Planning Coordinator or a Transmission Planner is responsible for assessing. This is further defined as the planning window that begins 12-18 months from the end of the current calendar year.

A. Introduction

1. **Title:** **Transmission System Planning Performance Requirements**

2. **Number:** **TPL-001-1**

3. **Purpose:** Establish Transmission system planning performance requirements within the planning horizon to develop a Bulk Electric System (BES) that will operate reliably over a broad spectrum of System conditions and following a wide range of probable Contingencies.

4. **Applicability:**

   4.1. Functional Entity

   4.1.1. Planning Coordinator.

   4.1.2. Transmission Planner.

5. **Effective Date:** Requirements R1 and R7 shall become effective on the first day of the first calendar quarter, 12 months after applicable regulatory approval. In those jurisdictions where no regulatory approval is required, Requirements R1 and R7 become effective on the first day of the first calendar quarter, 12 months after Board of Trustees adoption.

   Except as indicated below, Requirements R2 through R6 and Requirement R8 shall become effective on the first day of the first calendar quarter, 24 months after applicable regulatory approval. In those jurisdictions where no regulatory approval is required, all requirements, except as noted below, go into effect on the first day of the first calendar quarter, 24 months after Board of Trustees adoption.

   - For 60 calendar months beginning the first day of the first calendar quarter following applicable regulatory approval, Corrective Action Plans applying to the following categories of Contingencies and events identified in TPL-001-1, Table 1 are allowed to include Non-Consequential Load Loss and curtailment of Firm Transmission Service (in accordance with Requirement R2, part 2.7.3.) that would not otherwise be permitted by the requirements of TPL-001-1:
     - P1-2 (for controlled interruption of electric supply to local network customers connected to or supplied by the Faulted element)
     - P1-3 (for controlled interruption of electric supply to local network customers connected to or supplied by the Faulted element)
     - P2-1, P2-2 (above 300 kV)
     - P2-3 (above 300 kV)
     - P3-1 through P3-5
     - P4-1 through P4-5 (above 300 kV)
     - P5 (above 300 kV)

B. Requirements

R1. Each Transmission Planner and Planning Coordinator shall maintain System models within its respective area for performing the studies needed to complete its Planning

Assessment. The models shall use the latest data consistent with that provided in accordance with the MOD-010 and MOD-012 standards, supplemented by other sources as needed, including items represented in the Corrective Action Plan, and shall represent projected System conditions. *[Violation Risk Factor: Medium] [Time Horizon: Long-term Planning]*

1.1. System models shall represent:

1.1.1. Existing Facilities

1.1.2. Known outage(s) of generation or Transmission Facility(ies) with a duration of at least six months.

1.1.3. New planned Facilities and changes to existing Facilities

1.1.4. Real and reactive Load forecasts

1.1.5. Known commitments for Firm Transmission Service and Interchange

1.1.6. Resources (supply or demand side) required for Load

R2. Each Transmission Planner and Planning Coordinator shall prepare an annual Planning Assessment of its portion of the BES. This Planning Assessment shall use current or past studies, document assumptions, summarize documented results, and cover steady state analyses, short circuit analyses, and Stability analyses. *[Violation Risk Factor: Medium] [Time Horizon: Long-term Planning]*

2.1. The Near-Term Transmission Planning Horizon portion of the steady state analysis shall be assessed annually and be supported by the following annual current studies, supplemented with qualified past studies as indicated in Requirement R2, part 2.6:

2.1.1. System peak Load for either Year One or year two, and for year five.

2.1.2. System Off-Peak Load for one of the five years.

2.1.3. P1 events in Table 1 with known outages modeled, as in Requirement R1, part 1.1.2 under those System peak or Off-Peak conditions when known outages are scheduled.

2.1.4. For each of the studies described in Requirement R2, parts 2.1.1 and 2.1.2, sensitivity case(s) shall be utilized to demonstrate the impact of changes to the basic assumptions used in the model. To accomplish this, the sensitivity analysis in the Planning Assessment must vary one or more of the following conditions not already included in the studies by a sufficient amount to stress the System within a range of credible conditions that demonstrate a measurable change in performance:

- Real and reactive forecasted Load.
- Expected transfers.
- Expected in service dates of new or modified Transmission Facilities.
- Reactive resource capability.
- Generation additions, retirements, or other dispatch scenarios.

- Controllable Loads and Demand Side Management.
- Duration or timing of planned Transmission outages.

2.1.5. When an entity's spare equipment strategy could result in the unavailability of major Transmission equipment that has a lead time of one year or more (such as a transformer), the impact of this possible unavailability on System performance shall be assessed. The Planning Assessment shall reflect the P0, P1, and P2 categories identified in Table 1 during the conditions that the System is expected to experience due to the possible unavailability of the long lead time equipment.

2.2. The Long-Term Transmission Planning Horizon portion of the steady state analysis shall be assessed annually and be supported by the following annual current study, supplemented with qualified past studies as indicated in Requirement R2, part 2.6:

2.2.1. A current study assessing expected System peak Load conditions for one of the years in the Long-Term Transmission Planning Horizon and the rationale for why that year was selected.

2.3. The short circuit analysis portion of the Planning Assessment shall be conducted annually addressing the Near-Term Transmission Planning Horizon and can be supported by current or past studies as qualified in Requirement R2, part 2.6. The analysis shall be used to determine whether circuit breakers have interrupting capability for Faults that they will be expected to interrupt using the System short circuit model with any planned generation and Transmission Facilities in service which could impact the study area.

2.4. The Near-Term Transmission Planning Horizon portion of the Stability analysis shall be assessed annually and be supported by current or past studies as qualified in Requirement R2, part2.6. The following studies are required:

2.4.1. System peak Load for one of the five years. System peak Load levels shall include a Load model which represents the dynamic behavior of Loads that could impact the study area, considering the behavior of induction motor Loads. An aggregate System Load model which represents the overall dynamic behavior of the Load is acceptable.

2.4.2. System Off-Peak Load for one of the five years.

2.4.3. For each of the studies described in Requirement R2, parts 2.4.1 and 2.4.2, sensitivity case(s) shall be utilized to demonstrate the impact of changes to the basic assumptions used in the model. To accomplish this, the sensitivity analysis in the Planning Assessment must vary one or more of the following conditions not already included in the studies by a sufficient amount to stress the System within a range of credible conditions that demonstrate a measurable change in performance:

- Load level, Load forecast, or dynamic Load model assumptions.
- Expected transfers.
- Expected in service dates of new or modified Transmission Facilities.

- Reactive resource capability.
- Generation additions, retirements, or other dispatch scenarios.

2.5. The Long-Term Transmission Planning Horizon portion of the Stability analysis shall be assessed to address the impact of proposed generation additions or changes in that timeframe and be supported by current or past studies as qualified in Requirement R2, part 2.6.

2.6. Past studies may be used to support the Planning Assessment if they meet the following requirements:

2.6.1. For steady state, short circuit, or Stability analysis: the study shall be five calendar years old or less, unless a technical rationale can be provided to demonstrate that the results of an older study are still valid.

2.6.2. For steady state, short circuit, or Stability analysis: the System represented in the study shall not include any material changes unless a technical rationale can be provided to demonstrate that System changes do not impact the performance results in the study area.

2.7. For planning events shown in Table 1, when the analysis indicates an inability of the System to meet the performance requirements in Table 1, the Planning Assessment shall include Corrective Action Plan(s) addressing how the performance requirements will be met. Revisions to the Corrective Action Plan(s) are allowed in subsequent Planning Assessments but the planned System shall continue to meet the performance requirements in Table 1. Corrective Action Plan(s) do not need to be developed solely to meet the performance requirements for a single sensitivity case analyzed in accordance with Requirements R2, parts 2.1.4 and 2.4.3. The Corrective Action Plan(s) shall:

2.7.1. List System deficiencies and the associated actions needed to achieve required System performance. Such actions may include:

- Installation, modification, retirement, or removal of Transmission and generation Facilities and any associated equipment.
- Installation, modification, or removal of Protection Systems or Special Protection Systems
- Installation or modification of automatic generation tripping as a response to a single or multiple Contingency to mitigate Stability performance violations.
- Installation or modification of manual and automatic generation runback/tripping as a response to a single or multiple Contingency to mitigate steady state performance violations.
- Use of Operating Procedures specifying how long they will be needed as part of the Corrective Action Plan.
- Use of rate applications, DSM, new technologies, or other initiatives.

2.7.2. Include actions to resolve performance deficiencies identified in multiple sensitivity studies or provide a rationale for why actions were not necessary.

2.7.3. If situations arise that are beyond the control of the Transmission Planner or Planning Coordinator that prevent the implementation of a Corrective Action Plan in the required timeframe, then the Transmission Planner or Planning Coordinator is permitted to utilize Non-Consequential Load Loss and curtailment of Firm Transmission Service to correct the situation that would normally not be permitted in Table 1, provided that the Transmission Planner or Planning Coordinator documents that they are taking actions to resolve the situation. The Transmission Planner or Planning Coordinator shall document the situation causing the problem, alternatives evaluated, and the use of Non-Consequential Load Loss or curtailment of Firm Transmission Service.

2.7.4. Be reviewed in subsequent annual Planning Assessments for continued validity and implementation status of identified System Facilities and Operating Procedures.

2.8. For short circuit analysis, if the short circuit current interrupting duty on circuit breakers determined in Requirement R2, part 2.3 exceeds their Equipment Rating, the Planning Assessment shall include a Corrective Action Plan to address the Equipment Rating violations. The Corrective Action Plan shall:

2.8.1. List System deficiencies and the associated actions needed to achieve required System performance.

2.8.2. Be reviewed in subsequent annual Planning Assessments for continued validity and implementation status.

R3. For the steady state portion of the Planning Assessment, each Transmission Planner and Planning Coordinator shall perform studies for the Near-Term and Long-Term Transmission Planning Horizons in Requirement R2, parts 2.1, and 2.2. The studies shall be based on computer simulation models using data provided in Requirement R1. *[Violation Risk Factor: Medium] [Time Horizon: Long-term Planning]*

3.1. Studies shall be performed for planning events to determine whether the BES meets the performance requirements in Table 1 based on the Contingency list created in Requirement R3, part 3.4.

3.2. Studies shall be performed to assess the impact of the extreme events which are identified by the list created in Requirement R3, part 3.5.

3.3. Contingency analyses for Requirement R3, Parts 3.1 & 3.2 shall:

3.3.1. Simulate the removal of all elements that the Protection System and other automatic controls are expected to disconnect for each Contingency without operator intervention.

3.3.2. Trip generators where simulations show generator bus voltages or high side of the Generation Step Up (GSU) transformer voltages are less than known or assumed minimum generator steady state or ride

through voltage limitations. Include in the assessment any assumptions made.

3.3.3. Trip Transmission elements when relay loadability limits are exceeded.

3.3.4. Simulate the expected automatic operation of existing and planned devices designed to provide steady state control of electrical system quantities when such devices impact the study area. These devices may include equipment such as phase-shifting transformers, load tap changing transformers, and switched capacitors and inductors.

3.4. Those planning events in Table 1, that are expected to produce more severe System impacts on its portion of the BES, shall be identified and a list of those Contingencies to be evaluated for System performance in Requirement R3, part 3.1 created. The rationale for those Contingencies selected for evaluation shall be available as supporting information.

3.4.1. The Planning Coordinator and Transmission Planner shall coordinate with adjacent Planning Coordinators and Transmission Planners to ensure that Contingencies on adjacent Systems which may impact their Systems are included in the Contingency list.

3.5. Those extreme events in Table 1 that are expected to produce more severe System impacts shall be identified and a list of those events to be evaluated for System performance in Requirement R3, part 3.2 created. The rationale for those Contingencies selected for evaluation shall be available as supporting information. If the analysis concludes there is Cascading caused by the occurrence of extreme events, an evaluation of possible actions designed to reduce the likelihood or mitigate the consequences and adverse impacts of the event(s) shall be conducted.

R4. For the Stability portion of the Planning Assessment, as described in Requirement R2, parts 2.4 and 2.5, each Transmission Planner and Planning Coordinator shall perform the Contingency analyses listed in Table 1. The studies shall be based on computer simulation models using data provided in Requirement R1. *[Violation Risk Factor: Medium] [Time Horizon: Long-term Planning]*

4.1. Studies shall be performed for planning events to determine whether the BES meets the performance requirements in Table 1 based on the Contingency list created in Requirement R4, part 4.4.

4.1.1. For planning event P1: No generating unit shall pull out of synchronism. A generator being disconnected from the System by fault clearing action or by a Special Protection System is not considered pulling out of synchronism.

4.1.2. For planning events P2 through P7: When a generator pulls out of synchronism in the simulations, the resulting apparent impedance swings shall not result in the tripping of any Transmission system elements other than the generating unit and its directly connected Facilities.

4.1.3. For planning events P1 through P7: Power oscillations shall exhibit acceptable damping as established by the Planning Coordinator and Transmission Planner.

4.2. Studies shall be performed to assess the impact of the extreme events which are identified by the list created in Requirement R4, part 4.5.

4.3. Contingency analyses for Requirement R4, parts 4.1 and 4.2 shall :

4.3.1. Simulate the removal of all elements that the Protection System and other automatic controls are expected to disconnect for each Contingency without operator intervention while also considering the impact of successful or unsuccessful high speed reclosing.

4.3.2. Trip generators where simulations show generator bus voltages or high side of the GSU transformer voltages are less than known or assumed generator low voltage ride through capability. Include in the assessment any assumptions made.

4.3.3. Simulate the impact of transient swings on Protection System operation for Transmission lines and transformers.

4.3.4. Simulate the expected automatic operation of existing and planned devices designed to provide dynamic control of electrical system quantities when such devices impact the study area. These devices may include equipment such as generation exciter control and power system stabilizers, static var compensators, power flow controllers, and DC Transmission controllers.

4.4. Those planning events in Table 1 that are expected to produce more severe System impacts on its portion of the BES, shall be identified, and a list of those Contingencies to be evaluated for System performance in Requirement R4, part 4.1 created. The rationale for those Contingencies selected for evaluation shall be available as supporting information.

4.4.1. Each Planning Coordinator and Transmission Planner shall coordinate with adjacent Planning Coordinators and Transmission Planners to ensure that Contingencies on adjacent Systems which may impact their Systems are included in the Contingency list.

4.5. Those extreme events in Table 1 that are expected to produce more severe System impacts shall be identified and a list of those events to be evaluated for System performance in Requirement R4, part 4.2 created. The rationale for those Contingencies selected for evaluation shall be available as supporting information. If the analysis concludes there is Cascading caused by the occurrence of extreme events, an evaluation of possible actions designed to reduce the likelihood or mitigate the consequences of the event(s) shall be conducted.

R5. Each Transmission Planner and Planning Coordinator shall define and document, within its Planning Assessment, criteria for acceptable System steady state voltage limits, post-Contingency voltage deviations, and the transient voltage response for its System. For transient voltage response, the criteria shall at a minimum, specify a low voltage level and a maximum length of time that transient voltages may remain below that level. *[Violation Risk Factor: Medium] [Time Horizon: Long-term Planning]*

R6. Each Transmission Planner and Planning Coordinator shall define and document, within its Planning Assessment, any criteria or methodology used in the analysis to identify System instability for conditions such as Cascading , voltage instability, or uncontrolled islanding. *[Violation Risk Factor: Low] [Time Horizon: Long-term Planning]*

R7. Each Planning Coordinator, in conjunction with each of its Transmission Planners, shall determine and identify each entity's individual and joint responsibilities for performing the required studies for the Planning Assessment. *[Violation Risk Factor: Low] [Time Horizon: Long-term Planning]*

R8. Each Planning Coordinator and Transmission Planner shall distribute its Planning Assessment results to adjacent Planning Coordinators, adjacent Transmission Planners, and any functional entity that has a reliability related need and submits a written request for the information. *[Violation Risk Factor: Low] [Time Horizon: Long-term Planning]*

8.1. If a recipient of the Planning Assessment results provides documented comments on the results, the respective Planning Coordinator or Transmission Planner shall provide a documented response to that recipient within 90 calendar days of receipt of those comments.

Table 1 – Steady State & Stability Performance
Planning Events

Steady State & Stability:

a. BES Transmission voltage instability, Cascading, and uncontrolled islanding shall not occur.

b. Consequential Load Loss as well as generation loss is acceptable as a consequence of any planning or extreme event excluding P0.

c. Simulate the removal of all elements that Protection Systems and other controls are expected to automatically disconnect for each event.

d. Simulate Normal Clearing unless otherwise specified.

e. For all planning events, planned System adjustments such as Transmission configuration changes and re-dispatch of generation are allowed if such adjustments are executable within the time duration applicable to the Facility Ratings.

Steady State Only:

f. Applicable Facility Ratings shall not be exceeded.

g. System steady state voltages and post-Contingency voltage deviations shall be within acceptable limits as established by the Planning Coordinator and the Transmission Planner.

h. Planning event P0 is applicable to steady state only.

i. The response of voltage sensitive Load including Load that is disconnected from the System by end-user equipment associated with an event shall not be used to meet steady state performance requirements.

Stability Only:

j. The System shall remain stable.

k. Transient voltage response shall be within acceptable limits established by the Planning Coordinator and the Transmission Planner.

Category	Initial System Condition	Event [1]	Fault Type [2]	BES Level [3]	Interruption of Firm Transmission Service Allowed [4]	Non-Consequential Load Loss Allowed
P0 No Contingency	Normal System	None	N/A	EHV, HV	No[9]	No
P1 Single Contingency	Normal System	Loss of one of the following: 1. Generator 2. Transmission Circuit 3. Transformer [5] 4. Shunt Device [6]	3Ø	EHV, HV	No[9]	No
		5. Single Pole of a DC line	SLG			
P2 Single Contingency	Normal System	1. Opening of a line section w/o a fault [7]	N/A	EHV, HV	No[9]	No
		2. Bus Section Fault	SLG	EHV	No[9]	No
				HV	Yes	Yes
		3. Internal Breaker Fault [8] (Non Bus-tie)	SLG	EHV	No[9]	No
				HV	Yes	Yes
		4. Internal Breaker Fault (Bus-tie) [8]	SLG	EHV, HV	Yes	Yes

Category	Initial System Condition	Event [1]	Fault Type [2]	BES Level [3]	Interruption of Firm Transmission Service Allowed [4]	Non-Consequential Load Loss Allowed
P3 Multiple Contingency	Loss of generator unit followed by System adjustments[9]	Loss of one of the following: 1. Generator 2. Transmission Circuit 3. Transformer [5] 4. Shunt Device [6]	3Ø	EHV, HV	No[9]	No
		5. Single pole of a DC line	SLG			
P4 Multiple Contingency *(Fault plus stuck breaker[10])*	Normal System	Loss of multiple elements caused by a stuck breaker [10](non-Bus-tie) attempting to clear a Fault on one of the following: 1. Generator 2. Transmission Circuit 3. Transformer [5] 4. Shunt Device [6] 5. Bus Section	SLG	EHV	No[9]	No
				HV	Yes	Yes
		6. Loss of multiple elements caused by a stuck breaker[10] (Bus-tie) attempting to clear a Fault on the associated bus	SLG	EHV, HV	Yes	Yes
P5 Multiple Contingency *(Fault plus Protection System failure to operate)*	Normal System	Failure of a single Protection System that results in Delayed Fault Clearing on one of the following: 1. Generator 2. Transmission Circuit 3. Transformer [5] 4. Shunt Device [6] 5. Bus Section	SLG	EHV	No[9]	No
				HV	Yes	Yes
P6 Multiple Contingency *(Two overlapping singles)*	Loss of one of the following followed by System adj.[9]: 1. Transmission Circuit 2. Transformer [5] 3. Shunt Device[6] 4. Single pole of a DC line	Loss of one of the following: 1. Transmission Circuit 2. Transformer [5] 3. Shunt Device [6]	3Ø	EHV, HV	Yes	Yes
		4. Single pole of a DC line	SLG	EHV, HV	Yes	Yes
P7 Multiple Contingency *(Common Structure)*	Normal System	The loss of: 1. Any two adjacent (vertically or horizontally) circuits on common structure [11] 2. Loss of a bipolar DC line	SLG	EHV, HV	Yes	Yes

Table 1 – Steady State & Stability Performance

<table>
<tr><th colspan="2">Extreme Events</th></tr>
<tr><td colspan="2">Steady State & Stability
For all extreme events evaluated:
a. Simulate the removal of all elements that Protection Systems and automatic controls are expected to disconnect for each Contingency.
b. Simulate Normal Clearing unless otherwise specified.</td></tr>
<tr><td>Steady State
1. Loss of a single generator, Transmission Circuit, single pole of a DC Line, shunt device, or transformer forced out of service followed by another single generator, Transmission Circuit, single pole of a different DC Line, shunt device, or transformer forced out of service prior to System adjustments.
2. Local area events affecting the Transmission System such as:
a. Loss of a tower line with three or more circuits.[11]
b. Loss of all Transmission lines on a common Right-of-Way[11].
c. Loss of a switching station or substation (loss of one voltage level plus transformers).
d. Loss of all generating units at a station.
e. Loss of a large Load or major Load center.
3. Wide area events affecting the Transmission System based on System topology such as:
a. Loss of two generating stations resulting from conditions such as:
i. Loss of a large gas pipeline into a region or multiple regions that have significant gas-fired generation.
ii. Loss of the use of a large body of water as the cooling source for generation.
iii. Wildfires.
iv. Severe weather, e.g., hurricanes, tornadoes, etc.
v. A successful cyber attack.
vi. Shutdown of a nuclear power plant(s) and related facilities for a day or more for common causes such as problems with similarly designed plants.
b. Other events based upon operating experience that may result in wide area disturbances.</td>
<td>Stability
1. With an initial condition of a single generator, Transmission circuit, single pole of a DC line, shunt device, or transformer forced out of service, apply a 3Ø fault on another single generator, Transmission circuit, single pole of a different DC line, shunt device, or transformer prior to System adjustments.
2. Local or wide area events affecting the Transmission System such as:
a. 3Ø fault on generator with stuck breaker[10] or a Protection System failure resulting in Delayed Fault Clearing.
b. 3Ø fault on Transmission circuit with stuck breaker[10] or a Protection System failure resulting in Delayed Fault Clearing.
c. 3Ø fault on transformer with stuck breaker[10] or a Protection System failure resulting in Delayed Fault Clearing.
d. 3Ø fault on bus section with stuck breaker[10] or a Protection System failure resulting in Delayed Fault Clearing.
e. 3Ø internal breaker fault.
f. Other events based upon operating experience, such as consideration of initiating events that experience suggests may result in wide area disturbances</td></tr>
</table>

Table 1 – Steady State & Stability Performance Footnotes (Planning Events and Extreme Events)
1. If the event analyzed involves BES elements at multiple System voltage levels, the lowest System voltage level of the element(s) removed for the analyzed event determines the stated performance criteria regarding allowances for interruptions of Firm Transmission Service and Non-Consequential Load Loss.
2. Unless specified otherwise, simulate Normal Clearing of faults. Single line to ground (SLG) or three-phase (3Ø) are the fault types that must be evaluated in Stability simulations for the event described. A 3Ø or a double line to ground fault study indicating the criteria are being met is sufficient evidence that a SLG condition would also meet the criteria.
3. Bulk Electric System (BES) level references include extra-high voltage (EHV) Facilities defined as greater than 300kV and high voltage (HV) Facilities defined as the 300kV and lower voltage Systems. The designation of EHV and HV is used to distinguish between stated performance criteria allowances for interruption of Firm Transmission Service and Non-Consequential Load Loss.
4. Curtailment of Conditional Firm Transmission Service is allowed when the conditions and/or events being studied formed the basis for the Conditional Firm Transmission Service.
5. For non-Generator Step Up transformer outage events, the reference voltage, as used in footnote 1, applies to the low-side winding (excluding tertiary windings). For generator and Generator Step Up transformer outage events, the reference voltage applies to the BES connected voltage (high-side of the Generator Step Up transformer). Requirements which are applicable to transformers also apply to variable frequency transformers and phase shifting transformers.
6. Requirements which are applicable to shunt devices also apply to FACTS devices that are connected to ground.
7. Opening one end of a line section without a fault on a normally networked Transmission circuit such that the line is possibly serving Load radial from a single source point.
8. An internal breaker fault means a breaker failing internally, thus creating a System fault which must be cleared by protection on both sides of the breaker.
9. Curtailment of Firm Transmission Service, when coupled with the appropriate re-dispatch of resources obligated to re-dispatch, is allowed both as a System adjustment (as identified in the column entitled 'Initial System Conditions') and a corrective action, where it can be demonstrated that Facilities remain within applicable Facility Ratings and those adjustments do not result in the shedding of any firm Demand. Where limited options for re-dispatch exist, sensitivities associated with the availability of those resources should be considered. Where Facilities external to the Transmission Planner's planning region are relied upon, Facility Ratings in those regions should also be respected.
10. A stuck breaker means that for a gang-operated breaker, all three phases of the breaker have remained closed. For an independent pole operated (IPO) or an independent pole tripping (IPT) breaker, only one pole is assumed to remain closed. A stuck breaker results in Delayed Fault Clearing.
11. Excludes circuits that share a common structure or common Right-of-Way for 1 mile or less.

C. Measures

M1. Each Transmission Planner and Planning Coordinator shall provide evidence, in electronic or hard copy format, that it is maintaining System models within its respective area, using the latest data consistent with MOD-010 and MOD-012, including items represented in the Corrective Action Plan, representing projected System conditions, and that the models represent the required information in accordance with Requirement R1.

M2. Each Transmission Planner and Planning Coordinator shall provide evidence, such as electronic or hard copies of its annual Planning Assessment, that it has prepared an annual Planning Assessment of its portion of the BES in accordance with Requirement R2.

M3. Each Transmission Planner and Planning Coordinator shall provide evidence, such as electronic or hard copies of the studies utilized in preparing the Planning Assessment, in accordance with Requirement R3.

M4. Each Transmission Planner and Planning Coordinator shall provide evidence, such as electronic or hard copies of the studies utilized in preparing the Planning Assessment in accordance with Requirement R4.

M5. Each Transmission Planner and Planning Coordinator shall provide evidence such as electronic or hard copies of the documentation specifying the criteria for acceptable System steady state voltage limits, post-Contingency voltage deviations, and the transient voltage response for its System in accordance with Requirement R5.

M6. Each Transmission Planner and Planning Coordinator shall provide evidence, such as electronic or hard copies of documentation specifying any criteria or methodology used in the analysis to identify System instability that was utilized in preparing the Planning Assessment in accordance with Requirement R6.

M7. Each Planning Coordinator, in conjunction with each of its Transmission Planners, shall provide dated documentation on roles and responsibilities, such as meeting minutes, agreements, and e-mail correspondence that identifies that agreement has been reached on individual and joint responsibilities for performing the required studies and the Planning Assessments in accordance with Requirement R7.

M8. Each Planning Coordinator and Transmission Planner shall provide evidence, such as email notices, documentation of updated web pages, postal receipts showing recipient, date, and contents, or a demonstration of a public posting, that it has distributed its Planning Assessment results to adjacent Planning Coordinators, adjacent Transmission Planners, and any functional entity that has indicated a reliability need and has provided a documented response to comments received on Planning Assessment results within 90 calendar days of receipt of those comments in accordance with Requirement R8.

D. Compliance

1. Compliance Monitoring Process

1.1 Compliance Enforcement Authority

Regional Entity.

1.2 Compliance Monitoring Period and Reset Timeframe

Not applicable.

1.3 Compliance Monitoring and Enforcement Processes:

Compliance Audits

Self-Certifications

Spot Checking

Compliance Violation Investigations

Self-Reporting

Complaints

1.4 Data Retention

The Transmission Planner and Planning Coordinator shall each retain data or evidence to show compliance as identified unless directed by its Compliance Enforcement Authority to retain specific evidence for a longer period of time as part of an investigation:

- The models utilized in the current Planning Assessment and one previous Planning Assessment in accordance with Requirement R1 and Measure M1.
- The Planning Assessments performed since the last compliance audit in accordance with Requirement R2 and Measure M2.
- The studies performed in support of its Planning Assessments since the last compliance audit in accordance with Requirement R3 and Measure M3.
- The studies performed in support of its Planning Assessments since the last compliance audit in accordance with Requirement R4 and Measure M4.
- The documentation specifying the criteria since the last compliance audit in accordance with Requirement R5 and Measure M5.
- The documentation specifying any criteria or methodology utilized in support of its Planning Assessments since the last compliance audit in accordance with Requirement R6 and Measure M6.
- The current, in force documentation for the agreement(s) on roles and responsibilities, as well as all such documentation for the agreements in force since the last compliance audit, in accordance with Requirement R7 and Measure M7.
- Three calendar years of the notices and other documentation employed in accordance with Requirement R8 and Measure M8.

1.5 Additional Compliance Information

None.

2 Violation Severity Levels

	Lower VSL	Moderate VSL	High VSL	Severe VSL
R1	The responsible entity's System model failed to represent one of the Requirement R1, parts 1.1.1 through 1.1.6.	The responsible entity's System model failed to represent two of the Requirement R1, parts 1.1.1 through 1.1.6. OR The responsible entity's System model did not use the latest data consistent with the data provided in accordance with the MOD-010 and MOD-012 standards and other sources, including items represented in the Corrective Action Plan.	The responsible entity's System model failed to represent three of the Requirement R1, parts 1.1.1 through 1.1.6.	The responsible entity's System model failed to represent four or more of the Requirement R1, parts 1.1.1 through 1.1.6. OR The responsible entity's System model did not represent projected System conditions as described in Requirement R1.
R2	The responsible entity failed to comply with Requirement R2, part 2.6.	The responsible entity failed to comply with Requirement R2, part 2.3 or part 2.8.	The responsible entity failed to comply with one of the following parts of Requirement R2: part 2.1, part 2.2, part 2.4, part 2.5, or part 2.7.	The responsible entity failed to comply with two or more of the following parts of Requirement R2: part 2.1, part 2.2, part 2.4, or part 2.7.
R3	The responsible entity did not identify planning events as described in Requirement R3, part 3.4 or extreme events as described in Requirement R3, part 3.5.	The responsible entity did not perform studies as specified in Requirement R3, part 3.1 to determine that the BES meets the performance requirements for one of the categories (P2 through P7) in Table 1. OR The responsible entity did not perform studies as specified in Requirement R3, part 3.2 to assess	The responsible entity did not perform studies as specified in Requirement R3, part 3.1 to determine that the BES meets the performance requirements for two of the categories (P2 through P7) in Table 1. OR The responsible entity did not perform Contingency analysis as described in Requirement R3, part	The responsible entity did not perform studies as specified in Requirement R3, part 3.1 to determine that the BES meets the performance requirements for three or more of the categories (P2 through P7) in Table 1. OR The responsible entity did not perform studies to determine that the BES meets the performance requirements for the P0

	Lower VSL	Moderate VSL	High VSL	Severe VSL
		the impact of extreme events. OR The responsible entity did not base its studies on computer simulation models using data provided in Requirement R1.	3.3.	or P1 categories in Table 1.
R4	The responsible entity did not identify planning events as described in Requirement R4, part 4.4 or extreme events as described in Requirement R4, part 4.5.	The responsible entity did not perform studies as specified in Requirement R4, part 4.1 to determine that the BES meets the performance requirements for one of the categories (P1 through P7) in Table 1. OR The responsible entity did not perform studies as specified in Requirement R4, part 4.2 to assess the impact of extreme events. OR The responsible entity did not base its studies on computer simulation models using data provided in Requirement R1.	The responsible entity did not perform studies as specified in Requirement R4, part 4.1 to determine that the BES meets the performance requirements for two of the categories (P1 through P7) in Table 1. OR The responsible entity did not perform Contingency analysis as described in Requirement R4, part 4.3.	The responsible entity did not perform studies as specified in Requirement R4, part 4.1 to determine that the BES meets the performance requirements for three or more of the categories (P1 through P7) in Table 1.
R5	N/A	N/A	N/A	The responsible entity failed to define and document its criteria for acceptable System steady state voltage limits, post-Contingency voltage deviations, or the transient voltage response for its System.

	Lower VSL	Moderate VSL	High VSL	Severe VSL
R6	N/A	N/A	N/A	The responsible entity failed to define and document the criteria or methodology for System instability used within its analysis as described in Requirement R6.
R7	N/A	N/A	N/A	The Planning Coordinator, in conjunction with each of its Transmission Planners, failed to determine and identify individual or joint responsibilities for performing required studies.
R8	The responsible entity failed to distribute the results of its Planning Assessment to one of its adjacent Transmission Planners or adjacent Planning Coordinators, and to one functional entity that has a reliability related need and has submitted a written request for the information, respectively in accordance with Requirement R8.	N/A	The responsible entity failed to distribute the results of its Planning Assessment to its adjacent Transmission Planners or adjacent Planning Coordinators, and to any functional entity that has a reliability related need and has submitted a written request for the information, respectively in accordance with Requirement R8.	The responsible entity failed to provide a documented response to a recipient of the Planning Assessment results who provided documented comments on the results within 90 calendar days of receipt of those comments in accordance with Requirement R8.

E. Regional Variances

None.

Version History

Version	Date	Action	Change Tracking
1	TBD	Revision of TPL-001-0 as per Project 2006-02; includes merging requirements of TPL-001-0, TPL-002-0, TPL-003-0, TPL-004-0, TPL-005, and TPL-006-0 into one, single, comprehensive, coordinated standard: TPL-001-1	Not employed due to scope of revision

Standard Development Roadmap

This section is maintained by the drafting team during the development of the standard and will be removed when the standard becomes effective.

Development Steps Completed:

1. Version 1 of SAR posted for comment from April 2, 2002 through May 3, 2002.
2. Version 2 of SAR posted for comment from May 5, 2004 through June 5, 2004.
3. Version 3 of SAR posted on November 18, 2005.
4. SAR approved on April 30, 2006.
5. Version 1 of Supplemental SAR posted for comment from February 15, 2007 through March 16, 2007.
6. Version 2 of Supplemental SAR posted on April 9, 2007.
7. Version 1 of revised standard(s) posted for comment on September 17, 2007.
8. Version 2 of the revised standards posted for comment on August 15, 2008.
9. Version 3 of the revised standards posted for comment on May 26, 2009.
10. Version 4 of the revised standards posted for comment on September 16, 2009.

Proposed Action Plan and Description of Current Draft:

The SDT has established a schedule of meetings and conference calls that allows for steady progress through the standards development process in anticipation of completing their assignment in 1Q10. The current draft is the second iteration of the revision of existing standards TPL-001 through TPL-006 and includes one revised standard, TPL-001-1, replacing TPL-001-0, TPL-002-0, TPL-003-0 and TPL-004-0. TPL-005 & -006 issues are addressed in this fifth draft and those standards will also be replaced by TPL-001-1.

Future Development Plan:

Anticipated Actions	Anticipated Date
1. Submit standard(s) to BOT.	2Q10
2. Submit to regulatory authorities for approval.	3Q10

Definitions of Terms Used in Standard

This section includes all newly defined or revised terms used in the proposed standard. Terms already defined in the Reliability Standards Glossary of Terms are not repeated here. New or revised definitions listed below become approved when the proposed standard is approved. When the standard becomes effective, these defined terms will be removed from the individual standard and added to the Glossary.

Bus-tie Breaker: A circuit breaker that is positioned to connect two individual substation bus configurations.

Consequential Load Loss: All Load that is no longer served by the Transmission ~~S~~system as a result of Transmission Facilities being removed from service by a Protection System operation designed to isolate the fault~~-~~.

Long-Term Transmission Planning Horizon: Transmission planning period that covers years six through ten or beyond when required to accommodate any known longer lead time projects that may take longer than ten years to complete.

Near-Term Transmission Planning Horizon: Transmission planning period that covers Years One through five.

Non-Consequential Load Loss: Non-Interruptible Load loss that does not include: (1) ~~other than~~ Consequential Load Loss, (2) ~~and~~ the response of voltage sensitive Load, or (3) ~~including~~ Load that is disconnected from the System by end-user equipment.

Planning Assessment: Documented evaluation of future Transmission ~~S~~system performance and Corrective Action Plans to remedy identified deficiencies.

Year One: The first year that a Planning Coordinator or a Transmission Planner is responsible for assessing. This is further defined as the planning window that begins 12-18 months from the end of the current calendar year.

A. Introduction

1. **Title:** **Transmission System Planning Performance Requirements**

2. **Number:** **TPL-001-1**

3. **Purpose:** Establish Transmission ~~S~~system planning performance requirements within the planning horizon to develop a Bulk Electric System (BES) that will operate reliably over a broad spectrum of System conditions and following a wide range of probable Contingencies.

4. **Applicability:**

   4.1. Functional Entity

   4.1.1. Planning Coordinator.

   4.1.2. Transmission Planner.

5. **Effective Date:** Requirements R1 and R~~8~~7 shall become effective on the first day of the first calendar quarter, 12 months after applicable regulatory approval. In those jurisdictions where no regulatory approval is required, Requirements R1 and R~~8~~7 become effective on the first day of the first calendar quarter, 12 months after Board of Trustees adoption.

   Except as indicated below, Requirements R2 through R~~7~~6 and Requirement R8 shall become effective on the first day of the first calendar quarter, 24 months after applicable regulatory approval. In those jurisdictions where no regulatory approval is required, all requirements, except as noted below, go into effect on the first day of the first calendar quarter, 24 months after Board of Trustees adoption.

   - For 60 calendar months ~~after~~beginning the first day of the first calendar quarter following applicable regulatory approval, Corrective Action Plans applying to the following categories of Contingencies and events identified in TPL-001-1, Table 1 are allowed to include ~~tripping of~~ Non-Consequential Load Loss ~~or~~and curtailment of Firm Transmission Service (in accordance with Requirement R2, part 2.7.~~5~~3.) that would not otherwise be permitted by the requirements of TPL-001-1:
     - P1-2 (for controlled interruption of electric supply to local network customers connected to or supplied by the Faulted element)
     - P1-3 (for controlled interruption of electric supply to local network customers connected to or supplied by the Faulted element)
     - P2-1, P2-2 (above 300 kV)
     - P2-3 (above 300 kV)
     - P3-1 through P3-5
     - P4-1 through P4-5 (above 300 kV)
     - P5 (above 300 kV)

   ~~Any entity that cannot fully implement its Corrective Action Plan to eliminate the need to trip Non-Consequential Load or curtail Firm Transmission Service for the above listed performance elements within 60 calendar months of the compliance date for Requirements R2 through R4 shall self report itself as being unable to meet~~

~~performance requirements of this Reliability Standard. Any such entity shall submit a mitigation plan to its Regional Entity outlining the steps it will take to become compliant and the date it anticipates becoming compliant. The Regional Entity and NERC shall review the mitigation plan and the Regional Entity/NERC will either approve it or remand it for changes (this could include dates, steps, etc.). If the mitigation plan is approved by the Regional Entity and NERC and the entity completes the mitigation plan by the date contained within the mitigation plan, the intent of the SDT is that no penalties will be assessed. Those entities that do not meet the date outlined in an approved mitigation plan will begin settlement proceedings at that date.~~

B. Requirements

R1. Each Transmission Planner and Planning Coordinator shall maintain System models within its respective area for performing the studies needed to complete its Planning Assessment. The models shall use the latest data consistent with that provided in accordance with the MOD-010 and MOD-012 standards, supplemented by other sources as needed, including items represented in the Corrective Action Plan, and shall represent projected System conditions. *[Violation Risk Factor: Medium] [Time Horizon: Long-term Planning]*

1.1. System models shall represent:

1.1.1. Existing Facilities

1.1.2. Known outage(s) of generation or Transmission Facility(ies) with a duration of at least six months.

1.1.3. New planned Facilities and changes to existing Facilities

1.1.4. Real and reactive Load forecasts

1.1.5. Known commitments for Firm Transmission Service and Interchange

1.1.6. Resources (supply or demand side) required ~~to supply~~for Load

R2. Each Transmission Planner and Planning Coordinator shall prepare an annual Planning Assessment of its portion of the BES. This Planning Assessment shall use current or past studies, document assumptions, summarize documented results, and cover steady state analyses, short circuit analyses, and Stability analyses. *[Violation Risk Factor: Medium] [Time Horizon: Long-term Planning]*

2.1. The Near-Term Transmission Planning Horizon portion of the steady state analysis shall be assessed annually and be supported by the following annual current studies, supplemented with qualified past studies as indicated in Requirement R2, part 2.6:

2.1.1. System peak Load for either Year One or year two, and for year five.

2.1.2. System Off-Peak Load for one of the five years.

2.1.3. P1 events in Table 1 ~~for~~with known outages modeled, as ~~modeled~~ in Requirement R1, part 1.1.2 under those System peak or Off-Peak conditions when known outages are scheduled.

2.1.4. For each of the studies described in Requirement R2, parts 2.1.1 and 2.1.2, sensitivity case(s) shall be utilized to demonstrate the impact of

changes to the basic assumptions used in the model~~ for the list of items shown below~~. To accomplish this, the sensitivity analysis in the Planning Assessment must vary one or more of the following conditions not already included in the studies by a sufficient amount to stress the System within a range of credible conditions that demonstrate a measurable change in performance~~.~~:

- Real and reactive forecasted Load.
- Expected transfers.
- Expected in service dates of new or modified Transmission Facilities.
- Reactive resource capability.
- Generation additions, retirements, or other dispatch scenarios.
- Controllable Loads and Demand Side Management.
- Duration or timing of planned Transmission outages.

2.1.5. When an entity's spare equipment strategy could result in the unavailability of major Transmission equipment that has a lead time of one year or more (such as a transformer), ~~an analysis of~~ the impact of this possible unavailability on System performance shall be assessed. The Planning Assessment shall reflect the P0, P1, and P2 categories identified in Table 1 during the conditions that the System is expected to experience due to the possible unavailability of the long lead time equipment.

2.2. The Long-Term Transmission Planning Horizon portion of the steady state analysis shall be assessed annually and be supported by the following annual current study, supplemented with qualified past studies as indicated in Requirement R2, part 2.6:

2.2.1. A current study assessing expected System peak Load conditions for one of the years in the Long-Term Transmission Planning Horizon and the rationale for why that year was selected.

2.3. The short circuit analysis portion of the Planning Assessment shall be conducted annually addressing the Near-Term Transmission Planning Horizon and can be supported by current or past studies as ~~indicated~~ qualified in Requirement R2, part 2.6. The analysis shall be used to determine whether circuit breakers have interrupting capability for Faults that they will be expected to interrupt using the System short circuit model with any planned generation and Transmission Facilities in service which could impact the study area.

2.4. The Near-Term Transmission Planning Horizon portion of the Stability analysis shall be assessed annually and be supported by current or past studies as ~~indicated~~qualified in Requirement R2, part2.6. The following studies are required:

2.4.1. System peak Load for one of the five years. System peak Load levels shall include a Load model which represents the dynamic behavior of

Loads that could impact the study area, considering the behavior of induction motor Loads. An aggregate System Load model which represents the overall dynamic behavior of the Load is acceptable.

2.4.2. System Off-Peak Load for one of the five years.

2.4.3. For each of the studies described in Requirement R2, parts 2.4.1 and 2.4.2, sensitivity case(s) shall be utilized to demonstrate the impact of changes to the basic assumptions used in the model~~ for the list of items shown below~~. To accomplish this, the sensitivity analysis in the Planning Assessment must vary one or more of the following conditions not already included in the studies by a sufficient amount to stress the System within a range of credible conditions that demonstrate a measurable change in performance~~.~~:

- Load level, Load forecast, or dynamic Load model assumptions.
- Expected transfers.
- Expected in service dates of new or modified Transmission Facilities.
- Reactive resource capability.
- Generation additions, retirements, or other dispatch scenarios.

2.5. The Long-Term Transmission Planning Horizon portion of the Stability analysis shall be assessed to address the impact of proposed generation additions or changes in that timeframe and be supported by current or past studies as qualified in Requirement R2, part 2.6.

2.6. Past studies may be used to support the Planning Assessment if they meet the following requirements:

2.6.1. For steady state, short circuit, or Stability analysis: the study shall be five calendar years old or less, unless a technical rationale can be provided to demonstrate that the results of an older study are still valid.

2.6.2. For steady state, short circuit, or Stability analysis: the System represented in the study shall not include any material changes unless a technical rationale can be provided to demonstrate that System changes do not impact the performance results in the study area.

2.7. For planning events shown in Table 1, when the analysis indicates an inability of the System to meet the performance requirements in Table 1, the Planning Assessment shall include Corrective Action Plan(s) addressing how the performance requirements will be met. Revisions to the Corrective Action Plan(s) are allowed in subsequent Planning Assessments but the planned System shall continue to meet the performance requirements in ~~-~~Table 1. Corrective Action Plan(s) do not need to be developed solely to meet the performance requirements for a single sensitivity ~~run~~case analyzed in accordance with Requirements R2, parts 2.1.4 and 2.4.3. The Corrective Action Plan(s) shall:

2.7.1. List System deficiencies and the associated actions needed to achieve required System performance. Such actions may include:

- Installation, modification, retirement, or removal of Transmission and generation Facilities and any associated equipment.
- Installation, modification, or removal of Protection Systems or Special Protection Systems
- Installation or modification of automatic generation tripping as a response to a single or multiple Contingency to mitigate Stability performance violations.
- Installation or modification of manual and automatic generation runback/tripping as a response to a single or multiple Contingency to mitigate ~~S~~steady ~~S~~state performance violations.
- Use of Operating Procedures specifying how long they will be needed as part of the Corrective Action Plan.
- Use of rate applications, DSM, new technologies, or other initiatives.

2.7.2. Include actions to resolve performance deficiencies identified in multiple sensitivity studies or provide a rationale for why actions were not necessary.

2.7.3. If situations arise that are beyond the control of the Transmission Planner or Planning Coordinator that prevent the implementation of a Corrective Action Plan in the required timeframe, then the Transmission Planner or Planning Coordinator is permitted to utilize Non-Consequential Load Loss and curtailment of Firm Transmission Service to correct the situation that would normally not be permitted in Table 1, provided that the Transmission Planner or Planning Coordinator documents that they are taking actions to resolve the situation. The Transmission Planner or Planning Coordinator shall document the situation causing the problem, alternatives evaluated, and the use of Non-Consequential Load Loss or curtailment of Firm Transmission Service.

2.7.4. Be reviewed in subsequent annual Planning Assessments for continued validity and implementation status of identified System Facilities and Operating Procedures.

2.8. For short circuit analysis, if the short circuit current interrupting duty on circuit breakers determined in Requirement R2, part 2.3 exceeds their Equipment Rating, the Planning Assessment shall include a Corrective Action Plan to address the Equipment Rating violations. The Corrective Action Plan shall:

2.8.1. List System deficiencies and the associated actions needed to achieve required System performance.

~~**2.8.2.**~~Be reviewed in subsequent annual Planning Assessments for continued validity and implementation status.

~~**2.9.**~~**2.8.2.** ~~The Planning Assessment shall provide the expected largest Consequential Load Loss (megawatt Demand) identified by the analysis of P1 and P2 events in Table 1.~~

R3. For the steady state portion of the Planning Assessment, each Transmission Planner and Planning Coordinator shall perform studies for the Near-Term and Long-Term Transmission Planning Horizons in Requirement R2, parts 2.1, and -2.2. The studies shall be based on computer simulation models using data provided in Requirement R1. *[Violation Risk Factor: Medium] [Time Horizon: Long-term Planning]*

3.1. Studies shall be performed for planning events to determine whether the BES meets the performance requirements in Table 1 based on the Contingency list created in Requirement R3, part 3.4.

3.2. Studies shall be performed to assess the impact of the extreme events which are identified by the list created in Requirement R3, part 3.5.

3.3. Contingency analyses for Requirement R3, ~~p~~Parts 3.1 & 3.2 shall ~~be performed and~~:

3.3.1. Simulate the removal of all elements that the Protection System and other automatic controls are expected to disconnect for each Contingency without operator intervention.

3.3.2. -Trip generators where simulations show generator bus voltages or high side of the Generation Step Up (GSU) transformer voltages are less than known or assumed minimum generator steady state or ride through voltage limitations. Include in the assessment any assumptions made.

3.3.3. ~~Ensure~~ Trip Transmission elements when relay loadability limits are ~~respected~~ exceeded.

3.3.4. Simulate the expected automatic operation of existing and planned devices designed to provide ~~S~~steady ~~S~~state control of electrical system quantities when such devices impact the study area. These devices may include equipment such as phase-shifting transformers, load tap changing transformers, and switched capacitors and inductors.

3.4. Those planning events in Table 1, that are expected to produce more severe System impacts on its portion of the BES, shall be identified and a list of those Contingencies to be evaluated for System performance in Requirement R3, part 3.1 created. The rationale for those Contingencies selected for evaluation shall be available as supporting information.

3.4.1. The Planning Coordinator and Transmission Planner shall coordinate with adjacent Planning Coordinators and Transmission Planners to ensure that Contingencies on adjacent Systems which may impact their Systems are included in the Contingency list.

~~**3.5.**~~Those extreme events in Table 1 that are expected to produce more severe System impacts shall be identified and a list of those events to be evaluated for System performance in Requirement R3, part 3.2 created. The rationale for those Contingencies selected for evaluation shall be available as supporting information. If the analysis concludes there ~~are~~is ~~c~~Cascading ~~outages~~ caused by the occurrence of extreme events, an evaluation of possible actions designed to reduce the likelihood or mitigate the consequences and adverse impacts of the event(s) shall be conducted.

~~3.6.~~3.5. ~~When manual or automatic generation runback or tripping is used to meet steady state performance requirements for planning events P1 through P7 in Table 1, the amount of generation lost shall be documented in the Planning Assessment with a description of why the generation was runback or tripped for each event.~~

R4. For the Stability portion of the Planning Assessment, as described in Requirement R2, parts 2.4 and 2.5, each Transmission Planner and Planning Coordinator shall perform the Contingency analyses listed in Table 1. The studies shall be based on computer simulation models using data provided in Requirement R1. ~~—~~ *[Violation Risk Factor: Medium] [Time Horizon: Long-term Planning]*

4.1. Studies shall be performed for planning events to determine whether the BES meets the performance requirements in Table 1 based on the Contingency list created in Requirement R4, part 4.4.

4.1.1. For planning event P1: No generating unit shall pull out of synchronism. A generator being disconnected from the System by fault clearing action or by a Special Protection System is not considered pulling out of synchronism.

4.1.2. For planning events P2 through P7: When ~~A~~a generator ~~that~~ pulls out of synchronism ~~shall be tripped~~ in the simulations, ~~and~~ the resulting apparent impedance swings shall not result in the tripping of any Transmission ~~S~~system elements other than the generating unit and its directly connected Facilities.

4.1.3. For planning events P1 through P7: Power oscillations shall exhibit acceptable damping as established by the Planning Coordinator and Transmission Planner.

4.2. Studies shall be performed to assess the impact of the extreme events which are identified by the list created in Requirement R4, part 4.5.

4.3. Contingency analyses for Requirement R4, parts 4.1 and 4.2 shall ~~be performed and~~:

4.3.1. Simulate the removal of all elements that the Protection System and other automatic controls are expected to disconnect for each Contingency without operator intervention while also considering the impact of successful or unsuccessful high speed reclosing.

4.3.2. Trip generators where simulations show generator bus voltages or high side of the GSU transformer voltages are less than known or assumed generator low voltage ride through capability. Include in the assessment any assumptions made.

4.3.3. Simulate the impact of transient swings on Protection System operation for Transmission lines and transformers.

4.3.4. Simulate the expected automatic operation of existing and planned devices designed to provide dynamic control of electrical system quantities when such devices impact the study area. These devices may include equipment such as generation exciter control and power

system stabilizers, static var compensators, power flow controllers, and DC Transmission controllers.

4.4. Those planning events in Table 1 that are expected to produce more severe System impacts on its portion of the BES, shall be identified, and a list of those Contingencies to be evaluated for System performance in Requirement R4, part 4.1 created. The rationale for those Contingencies selected for evaluation shall be available as supporting information.

4.4.1. Each Planning Coordinator and Transmission Planner shall coordinate with adjacent Planning Coordinators and Transmission Planners to ensure that Contingencies on adjacent Systems which may impact their Systems are included in the Contingency list.

4.5. Those extreme events in Table 1 that are expected to produce more severe System impacts shall be identified and a list of those events to be evaluated for System performance in Requirement R4, part 4.2 created. The rationale for those Contingencies selected for evaluation shall be available as supporting information. If the analysis concludes there ~~are~~is ~~c~~Cascading ~~outages~~ caused by the occurrence of extreme events, an evaluation of possible actions designed to reduce the likelihood or mitigate the consequences of the event(s) shall be conducted.

R5. Each Transmission Planner and Planning Coordinator shall ~~have~~define and document, within its Planning Assessment, criteria for acceptable System steady state voltage limits, post-Contingency voltage deviations, and the transient voltage response for its System. For transient voltage response, the criteria shall at a minimum, specify a low voltage level and a maximum length of time that transient voltages may remain ~~outside~~below that level. *[Violation Risk Factor: Medium] [Time Horizon: Long-term Planning]*

R6. Each Transmission Planner and Planning Coordinator shall define and document, within ~~their~~ its Planning Assessment, any criteria or methodology used in the analysis to identify System instability for conditions such as ~~c~~Cascading ~~outages~~, voltage instability, or uncontrolled islanding. *[Violation Risk Factor: Low] [Time Horizon: Long-term Planning]*

R7. Each Planning Coordinator, in conjunction with each of its Transmission Planners, shall determine and identify each entity's individual and joint responsibilities for performing the required studies for the Planning Assessment. *[Violation Risk Factor: Low] [Time Horizon: Long-term Planning]*

R8. Each Planning Coordinator and Transmission Planner shall distribute its Planning Assessment results to adjacent Planning Coordinators, ~~and~~ adjacent Transmission Planners, and ~~to~~ any functional entity that ~~indicates~~ has a reliability related need ~~for the Planning Assessment results~~and submits a written request for the information. *[Violation Risk Factor: Low] [Time Horizon: Long-term Planning]*

8.1. If a recipient of the Planning Assessment results provides documented comments on the results, the respective Planning Coordinator or Transmission Planner shall provide a documented response to that recipient within 90 calendar days of receipt of those comments.

Table 1 – Steady State & Stability Performance Planning Events

Steady State & Stability:

a. BES Transmission voltage instability, ~~c~~Cascading ~~outages~~, and uncontrolled islanding shall not occur.

b. Consequential Load Loss ~~and~~as well as ~~consequential~~ generation loss ~~are~~is acceptable as a consequence of any planning or extreme event excluding P0.

c. Simulate the removal of all elements that Protection Systems and other controls are expected to automatically disconnect for each event.

d. Simulate Normal Clearing unless otherwise specified.

e. For all planning events, planned System adjustments such as Transmission configuration changes and re-dispatch of generation are allowed if such adjustments are executable within the time duration applicable to the Facility Ratings.

Steady State Only:

f. Applicable Facility Ratings shall not be exceeded.

g. System steady state voltages ~~limits~~ and post-Contingency voltage deviations shall be within acceptable limits as established by the Planning Coordinator and the Transmission Planner.

h. Planning event P0 is applicable to steady state only.

i. The response of voltage sensitive Load including Load that is disconnected from the System by end-user equipment associated with an event shall not be used to meet steady state performance requirements.

Stability Only:

j. The System shall remain stable.[1] ~~.~~

k. Transient voltage response shall be within acceptable limits established by the Planning Coordinator and the Transmission Planner.

Category	Initial System Condition	Event [1]	Fault Type [2]	BES Level [3]	Interruption of Firm Transmission Service Allowed [4]	Non-Consequential Load Loss Allowed
P0 No Contingency	Normal System	None	N/A	EHV, HV	No[9]	No
P1 Single Contingency	Normal System	Loss of one of the following: 1. Generator 2. Transmission Circuit 3. Transformer [5] 4. Shunt Device [6]	3Ø	EHV, HV	No[9]	No
		5. Single Pole of a DC line	SLG			
P2 Single Contingency	Normal System	1. Opening of ~~Breaker(s)~~ a line section w/o a fault [7]	N/A	EHV, HV	No[9]	No
		2. Bus Section Fault	SLG	EHV	No[9]	No
				HV	Yes	Yes
		3. Internal Breaker Fault [8] (Non Bus-tie)	SLG ~~SLG~~	EHV	No[9]	No
				HV	Yes	Yes
		4. Internal Breaker Fault (Bus-tie) [8]	SLG	EHV, HV	Yes	Yes

Category	Initial System Condition	Event [1]	Fault Type [2]	BES Level [3]	Interruption of Firm Transmission Service Allowed [4]	Non-Consequential Load Loss Allowed
P3 Multiple Contingency	Loss of generator unit followed by System adjustments[~~10~~9]	Loss of one of the following: 1. Generator 2. Transmission Circuit 3. Transformer [5] 4. Shunt Device [6]	3Ø	EHV, HV	No[~~10~~9]	No
		5. Single pole of a DC line	SLG			
P4 Multiple Contingency *(Fault plus stuck breaker[~~10~~10])*	Normal System	Loss of multiple elements caused by a stuck breaker [~~11~~10](non-Bus-tie) attempting to clear a Fault on one of the following: 1. Generator 2. Transmission Circuit 3. Transformer [5] 4. Shunt Device [6] 5. Bus Section	SLG	EHV	No[~~10~~9]	No
				HV	Yes	Yes
		6. Loss of multiple elements caused by a stuck breaker[10] (Bus-tie) attempting to clear a Fault on the associated bus	SLG	EHV, HV	Yes	Yes
P5 Multiple Contingency *(Fault plus Protection System failure to operate)*	Normal System	~~Loss of multiple elements caused by the~~ ~~f~~Failure of a single Protection System that results in Delayed Fault ~~while~~ ~~c~~Clearing ~~a fault~~ on one of the following: 1. Generator 2. Transmission Circuit 3. Transformer [5] 4. Shunt Device [6] 5. Bus Section	SLG	EHV	No[~~10~~9]	No
				HV	Yes	Yes
P6 Multiple Contingency *(Two overlapping singles)*	Loss of one of the following followed by System adj.[9]: 1. Transmission Circuit 2. Transformer [5] 3. Shunt Device[6] 4. Single pole of a DC line	Loss of one of the following: 1. Transmission Circuit 2. Transformer [5] 3. Shunt Device [6]	3Ø	EHV, HV	Yes	Yes
		4. Single pole of a DC line	SLG	EHV, HV	Yes	Yes
P7 Multiple Contingency *(Common Structure)*	Normal System	The loss of: 1. Any two adjacent (vertically or horizontally) circuits on common structure [11] 2. Loss of a bipolar DC line	SLG	EHV, HV	Yes	Yes

Table 1 – Steady State & Stability Performance Extreme Events	
Steady State & Stability For all extreme events evaluated: a. Simulate the removal of all elements that Protection Systems and automatic controls are expected to disconnect for each Contingency. b. Simulate Normal Clearing unless otherwise specified.	
Steady State 1. Loss of a single generator, Transmission Circuit, single pole of a DC Line, shunt device, or transformer forced out of service followed by another single generator, Transmission Circuit, single pole of a different DC Line, shunt device, or transformer forced out of service prior to System adjustments. 2. Local area events affecting the Transmission ~~s~~System such as: a. Loss of a tower line with three or more circuits.[~~12~~11] b. Loss of all Transmission lines on a common Right-of-Way[~~12~~11]. c. Loss of a switching station or substation (loss of one voltage level plus transformers). d. Loss of all generating units at a station. e. Loss of a large Load or major Load center. 3. Wide area events affecting the Transmission ~~s~~System based on System topology such as: a. Loss of two generating ~~plants~~stations resulting from conditions such as: i. Loss of a large gas pipeline into a region or multiple regions that have significant gas-fired generation. ii. Loss of the use of a large body of water as the cooling source for generation. iii. Wildfires. iv. Severe weather, e.g., hurricanes, tornadoes, etc. v. A successful cyber attack. vi. Shutdown of a nuclear power plant(s) and related facilities for a day or more for common causes such as problems with similarly designed plants. b. Other events based upon operating experience that may result in wide area disturbances.	**Stability** 1. With an initial condition of a single generator, Transmission circuit, single pole of a DC line, shunt device, or transformer forced out of service, apply a 3Ø fault on another single generator, Transmission circuit, single pole of a different DC line, shunt device, or transformer prior to System adjustments. 2. Local or wide area events affecting the Transmission ~~s~~System such as: a. 3Ø fault on generator with stuck breaker[~~11~~10] or a Protection System failure resulting in Delayed Fault Clearing. b. 3Ø fault on Transmission circuit with stuck breaker[~~11~~10] or a Protection System failure resulting in Delayed Fault Clearing. c. 3Ø fault on transformer with stuck breaker[~~11~~10] or a Protection System failure resulting in Delayed Fault Clearing. d. 3Ø fault on bus section with stuck breaker[~~11~~10] or a Protection System failure resulting in Delayed Fault Clearing. e. 3Ø internal breaker fault[~~11~~]. f. Other events based upon operating experience, such as consideration of initiating events that experience suggests may result in wide area disturbances

Table 1 – Steady State & Stability Performance Footnotes (Planning Events and Extreme Events)
1. If the event analyzed involves BES elements at multiple System voltage levels, the lowest System voltage level of the element(s) removed for the analyzed event ~~for~~determines the stated performance criteria ~~applies~~ regarding allowances for interruptions of Firm Transmission Service and ~~loss of~~ Non-Consequential Load Loss.
2. Unless specified otherwise, simulate Normal Clearing of faults. Single line to ground (SLG) or three-~~-~~phase (3Ø) are the fault ~~types, that~~types that must be evaluated in Stability simulations for the event described. A 3Ø or a double line to ground fault study indicating the criteria are being met ~~-~~is sufficient evidence that a SLG condition would also meet the criteria.
3. Bulk Electric System (BES) level references include extra-high voltage (EHV) Facilities defined as greater than 300kV and high voltage (HV) Facilities defined as the 300kV and lower voltage Systems~~ as defined by the Regional Entity~~. The designation of EHV and HV is used to distinguish between stated performance criteria allowances for interruption~~s~~ of Firm Transmission Service and Non-Consequential Load Loss.
4. Curtailment of Conditional Firm Transmission Service is allowed when the conditions and/or events being studied formed the basis for the Conditional Firm Transmission Service.
5. For non-Generator Step Up transformer outage events, the reference voltage, as used in footnote 1, applies to the low-side winding (excluding tertiary windings). For generator and ~~g~~Generator Step Up transformer outage events, the reference voltage applies to the BES connected voltage (high-side of the Generator Step Up transformer). Requirements which are applicable to transformers also apply to variable frequency transformers and phase shifting transformers.
6. Requirements which are applicable to shunt devices also apply to FACTS devices that are connected to ground.
7. Opening ~~breaker(s)~~ one end of a line section without a fault on ~~one end of~~ a normally networked Transmission circuit such that the line is ~~now open at that end and~~ possibly serving Load radial from a single source point.
8. An internal breaker fault means a breaker failing internally, thus creating a System fault which must be cleared by protection on both sides of the breaker.
9. Curtailment of Firm Transmission Service, when coupled with the appropriate re-dispatch of resources obligated to re-dispatch, is allowed both as a System adjustment (as identified in the column entitled 'Initial System Conditions') and a corrective action, where it can be demonstrated that Facilities remain within applicable Facility Ratings and those adjustments do not result in the shedding of any firm Demand. Where limited options for re-dispatch exist, sensitivities associated with the availability of those resources should be considered. Where Facilities external to the Transmission Planner's planning region are relied upon, Facility Ratings in those regions should also be respected.
10. A stuck breaker means that for a gang-operated breaker, all three phases of the breaker have remained closed. For an independent pole operated (IPO) or an independent pole tripping (IPT) breaker, only one pole is assumed to remain closed. A stuck breaker results in Delayed Fault Clearing.
11. Excludes circuits that share a common structure or common Right-of-Way for 1 mile or less.

C. Measures

M1. Each Transmission Planner and Planning Coordinator shall provide evidence, in electronic or hard copy format, that it is maintaining System models within its respective area, using the latest data consistent with MOD-010 and MOD-012, including items represented in the Corrective Action Plan, representing projected System conditions, and that the models represent the required information in accordance with Requirement R1.

M2. Each Transmission Planner and Planning Coordinator shall provide evidence, such as electronic or hard copies of its annual Planning Assessment, that it has prepared an annual Planning Assessment of its portion of the BES in accordance with Requirement R2.

M3. Each Transmission Planner and Planning Coordinator shall provide evidence, such as electronic or hard copies of the studies utilized in preparing the Planning Assessment, in accordance with Requirement R3.

M4. Each Transmission Planner and Planning Coordinator shall provide evidence, such as electronic or hard copies of the studies utilized in preparing the Planning Assessment in accordance with Requirement R4.

M5. Each Transmission Planner and Planning Coordinator shall provide evidence such as electronic or hard copies of the documentation specifying the criteria for acceptable System steady state voltage limits, post-Contingency voltage deviations, and the transient voltage response for its System in accordance with Requirement R5.

M6. Each Transmission Planner and Planning Coordinator shall provide evidence, such as electronic or hard copies of ~~the studies~~ documentation specifying any criteria or methodology used in the analysis to identify System instability that was utilized in preparing the Planning Assessment in accordance with Requirement R6.

M7. Each Planning Coordinator, in conjunction with each of its Transmission Planners, shall provide ~~evidence, such as a~~ dated documentation~~, that identifies that agreement~~ on roles and responsibilities, such as meeting minutes, agreements, and e-mail correspondence that identifies that agreement has been reached on individual and joint responsibilities for performing the required studies ~~for~~and the Planning Assessments in accordance with Requirement R7.

~~**M8.**~~Each Planning Coordinator and Transmission Planner shall provide evidence, such as email notices, documentation of updated web pages, postal receipts showing recipient, date, and contents, or a demonstration of a public posting, that it has distributed its Planning Assessment results to adjacent Planning Coordinators, ~~and~~ adjacent Transmission Planners, and any functional entity ~~who~~ that has indicated a reliability need and has provided a documented response to comments received on Planning Assessment results within 90 calendar days of receipt of those comments in accordance with Requirement R8.

M8.

D. ~~D.~~ Compliance

1. Compliance Monitoring Process

1.1 Compliance Enforcement Authority

Regional Entity.

1.2 Compliance Monitoring Period and Reset Timeframe

Not applicable.

1.3 Compliance Monitoring and Enforcement Processes:

Compliance Audits

Self-Certifications

Spot Checking

Compliance Violation Investigations

Self-Reporting

Complaints

1.4 Data Retention

The Transmission Planner and Planning Coordinator shall each retain data or evidence to show compliance as identified unless directed by its Compliance Enforcement Authority to retain specific evidence for a longer period of time as part of an investigation:

- The models utilized in the current Planning Assessment and one previous Planning Assessment in accordance with Requirement R1 and Measure M1.
- ~~All~~The Planning Assessments performed since the last compliance audit in accordance with Requirement R2 and Measure M2.
- ~~All~~The studies performed in support of its Planning Assessments since the last compliance audit in accordance with Requirement R3 and Measure M3.
- ~~All~~The studies performed in support of its Planning Assessments since the last compliance audit in accordance with Requirement R4 and Measure M4.
- ~~All~~The documentation specifying the criteria since the last compliance audit in accordance with Requirement R5 and Measure M5.
- ~~All~~The ~~studies performed~~ documentation specifying any criteria or methodology utilized in support of its Planning Assessments since the last compliance audit in accordance with Requirement R6 and Measure M6.
- The current, in force documentation for the agreement(s) on ~~identified~~roles and responsibilities, as well as all such documentation for the agreements in force since the last compliance audit, in accordance with Requirement R7 and Measure M7.
- ~~The Planning Coordinator shall retain data or evidence to show compliance as identified unless directed by its Compliance Enforcement Authority to retain specific evidence for a longer period of time as part of an investigation:~~

- Three calendar years of the ~~notifications~~ notices and other documentation employed in accordance with Requirement R8 and Measure M8.
-

1.5 Additional Compliance Information

None.

2 Violation Severity Levels

	Lower VSL	Moderate VSL	High VSL	Severe VSL
R1	The responsible entity's System model failed to represent one of the Requirement R1, parts 1.1.1 through 1.1.6.	The responsible entity's System model failed to represent two of the Requirement R1, parts 1.1.1 through 1.1.6. OR The responsible entity's System model did not use the latest data consistent with the data provided in accordance with the MOD-010 and MOD-012 standards and other sources, including items represented in the Corrective Action Plan.	The responsible entity's System model failed to represent three of the Requirement R1, parts 1.1.1 through 1.1.6.	The responsible entity's System model failed to represent four or more of the Requirement R1, parts 1.1.1 through 1.1.6. OR The responsible entity's System model did not represent projected System conditions as described in Requirement R1.
R2	The responsible entity failed to comply with ~~Requirement R2, part 2.9 or~~ Requirement R2, part 2.6.	The responsible entity failed to comply with Requirement R2, part 2.3 or part 2.8.	The responsible entity failed to comply with one of the following parts of Requirement R2: part 2.1, part 2.2, part 2.4, part 2.5, or part 2.7.	The responsible entity failed to comply with two or more of the following parts of Requirement R2: part 2.1, part 2.2, part 2.4, or part 2.7.
R3	The responsible entity did not identify planning events as described in Requirement R3, part 3.4 or extreme events as described in Requirement R3, part 3.5.	The responsible entity did not perform studies as specified in Requirement R3, part 3.1 to determine that the BES meets the performance requirements for one of the categories (P2 through P7) in Table 1. OR The responsible entity did not perform studies as specified in Requirement R3, part 3.2 to assess	The responsible entity did not perform studies as specified in Requirement R3, part 3.1 to determine that the BES meets the performance requirements for two of the categories (P2 through P7) in Table 1. OR The responsible entity did not perform Contingency analysis as described in Requirement R3, part	The responsible entity did not perform studies as specified in Requirement R3, part 3.1 to determine that the BES meets the performance requirements for three or more of the categories (P2 through P7) in Table 1. OR The responsible entity did not perform studies to determine that the BES meets the performance requirements for the P0

	Lower VSL	Moderate VSL	High VSL	Severe VSL
		the impact of extreme events. OR The responsible entity did not base its studies on computer simulation models using data provided in Requirement R1.	3.3.	or P1 categories in Table 1.
R4	The responsible entity did not identify planning events as described in Requirement R4, part 4.4 or extreme events as described in Requirement R4, part 4.5.	The responsible entity did not perform studies as specified in Requirement R4, part 4.1 to determine that the BES meets the performance requirements for one of the categories (P1 through P7) in Table 1. OR The responsible entity did not perform studies as specified in Requirement R4, part 4.2 to assess the impact of extreme events. OR The responsible entity did not base its studies on computer simulation models using data provided in Requirement R1.	The responsible entity did not perform studies as specified in Requirement R4, part 4.1 to determine that the BES meets the performance requirements for two of the categories (P1 through P7) in Table 1. OR The responsible entity did not perform Contingency analysis as described in Requirement R4, part 4.3.	The responsible entity did not perform studies as specified in Requirement R4, part 4.1 to determine that the BES meets the performance requirements for three or more of the categories (P1 through P7) in Table 1.
R5	N/A	N/A	N/A	The responsible entity ~~does not have~~ failed to define and document its criteria for acceptable System steady state voltage limits, post-Contingency voltage deviations, or the transient voltage response for its System.

	Lower VSL	Moderate VSL	High VSL	Severe VSL
R6	N/A	N/A	N/A	The responsible entity failed to define and document the criteria or methodology for System instability used within its analysis as described in Requirement R6.
R7	N/A	N/A	N/A	The Planning Coordinator, in conjunction with each of its Transmission Planners, failed to determine and identify individual or joint responsibilities for performing required studies.
R8	The responsible entity failed to distribute the results of its Planning Assessment to ~~any~~ one of its adjacent Transmission Planners ~~and~~or adjacent Planning Coordinators, and to one functional entity that has a reliability related need and has submitted a written request for the information, respectively in accordance with Requirement R8.	N/A	The responsible entity failed to distribute the results of its Planning Assessment to its adjacent Transmission Planners ~~and~~or adjacent Planning Coordinators, and to any functional entity that has a reliability related need and has submitted a written request for the information, respectively in accordance with Requirement R8.	The responsible entity failed to provide a documented response to a recipient of the Planning Assessment results who provided documented comments on the results within 90 calendar days of receipt of those comments in accordance with Requirement R8.

E. Regional Variances

None.

Version History

Version	Date	Action	Change Tracking
1	TBD	Revision of TPL-001-0 as per Project 2006-02; includes merging requirements of TPL-001-0, TPL-002-0, TPL-003-0, TPL-004-0, TPL-005, and TPL-006-0 into one, single, comprehensive, coordinated standard: TPL-001-1	Not employed due to scope of revision

NERC
NORTH AMERICAN ELECTRIC RELIABILITY CORPORATION

Standards Announcement

Ballot Pool and Pre-ballot Window
January 20–February 19, 2010

Now available at: https://standards.nerc.net/BallotPool.aspx

Project 2006-02: Assess Transmission Future Needs

The proposed standard TPL-001-1 — Transmission System Planning Performance Requirements and its associated implementation plan are posted for a 30-day pre-ballot review. Registered Ballot Body members may join the ballot pool to be eligible to vote on these items **until 8 a.m. EST on February 19, 2010**.

During the pre-ballot window, members of the ballot pool may communicate with one another by using their "ballot pool list server." (Once the balloting begins, ballot pool members are prohibited from using the ballot pool list servers.) The list server for this ballot pool is: bp-2006-02_ATFNSDT_TPL_in@nerc.com

Next Steps

Voting will begin shortly after the pre-ballot review closes.

Project Background

The purpose of the proposed standard is to establish transmission system planning performance requirements within the planning horizon to develop a bulk electric system that will operate reliably over a broad spectrum of system conditions and following a wide range of probable contingencies. TPL-001-1 — Transmission System Planning Performance Requirements is an update and consolidation of the following standards:

- TPL-001-0 — System Performance under Normal Conditions
- TPL-002-0 — System Performance Following Loss of a Single BES Element
- TPL-003-0 — System Performance Following Loss of Two or More BES Elements
- TPL-004-0 — System Performance Following Extreme BES Events
- TPL-005-0 — Regional and Interregional Self-Assessment Reliability Reports
- TPL-006-0 — Data from the Regional Reliability Organization Needed to Assess Reliability

More information is available on the project page: http://www.nerc.com/filez/standards/Assess-Transmission-Future-Needs.html

Applicability of Standards in Project

Planning Coordinator
Transmission Planner

Proposed Additions to Glossary of Terms

Bus-tie Breaker
Consequential Load Loss
Long-Term Transmission Planning Horizon
Near-Term Transmission Planning Horizon
Non-Consequential Load Loss
Planning Assessment
Year One

Standards Development Process

The Reliability Standards Development Procedure contains all the procedures governing the standards development process. The success of the NERC standards development process depends on stakeholder participation. We extend our thanks to all those who participate.

NERC
NORTH AMERICAN ELECTRIC RELIABILITY CORPORATION

Standards Announcement

Initial Ballot Window Open
February 19–March 1, 2010

Now available at: https://standards.nerc.net/CurrentBallots.aspx

Project 2006-02: Assess Transmission Future Needs

An initial ballot window for proposed standard TPL-001-1 — Transmission System Planning Performance Requirements and its associated implementation plan is now open **until 8 p.m. EST on March 1, 2010**.

Instructions

Members of the ballot pool associated with this project may log in and submit their votes from the following page: https://standards.nerc.net/CurrentBallots.aspx

Next Steps

Voting results will be posted and announced after the ballot window closes.

Project Background

The purpose of the proposed standard is to establish transmission system planning performance requirements within the planning horizon to develop a bulk electric system that will operate reliably over a broad spectrum of system conditions and following a wide range of probable contingencies. TPL-001-1 — Transmission System Planning Performance Requirements is an update and consolidation of the following standards:

- TPL-001-0 — System Performance under Normal Conditions
- TPL-002-0 — System Performance Following Loss of a Single BES Element
- TPL-003-0 — System Performance Following Loss of Two or More BES Elements
- TPL-004-0 — System Performance Following Extreme BES Events
- TPL-005-0 — Regional and Interregional Self-Assessment Reliability Reports
- TPL-006-0 — Data from the Regional Reliability Organization Needed to Assess Reliability

More information is available on the project page: http://www.nerc.com/filez/standards/Assess-Transmission-Future-Needs.html

Applicability of Standards in Project

Planning Coordinator
Transmission Planner

Proposed Additions to Glossary of Terms

Bus-tie Breaker
Consequential Load Loss
Long-Term Transmission Planning Horizon
Near-Term Transmission Planning Horizon
Non-Consequential Load Loss
Planning Assessment

Year One

Standards Development Process

The Reliability Standards Development Procedure contains all the procedures governing the standards development process. The success of the NERC standards development process depends on stakeholder participation. We extend our thanks to all those who participate.

For more information or assistance,
please contact Shaun Streeter at shaun.streeter@nerc.net or at 609.452.8060.

NERC
NORTH AMERICAN ELECTRIC RELIABILITY CORPORATION

Ballot Results

Ballot Name:	Project 2006-02 - Assess Transmission Future Needs - TPL-001-1_in
Ballot Period:	2/19/2010 - 3/1/2010
Ballot Type:	Initial
Total # Votes:	265
Total Ballot Pool:	290
Quorum:	**91.38 % The Quorum has been reached**
Weighted Segment Vote:	35.36 %
Ballot Results:	**The standard will proceed to recirculation ballot.**

Summary of Ballot Results

Segment	Ballot Pool	Segment Weight	Affirmative # Votes	Affirmative Fraction	Negative # Votes	Negative Fraction	Abstain # Votes	No Vote
1 - Segment 1.	90	1	23	0.284	58	0.716	2	7
2 - Segment 2.	12	1	5	0.455	6	0.545	1	0
3 - Segment 3.	66	1	20	0.345	38	0.655	2	6
4 - Segment 4.	18	1	4	0.308	9	0.692	2	3
5 - Segment 5.	53	1	16	0.364	28	0.636	4	5
6 - Segment 6.	33	1	9	0.29	22	0.71	1	1
7 - Segment 7.	0	0	0	0	0	0	0	0
8 - Segment 8.	6	0.4	2	0.2	2	0.2	1	1
9 - Segment 9.	4	0.2	1	0.1	1	0.1	1	1
10 - Segment 10.	8	0.6	2	0.2	4	0.4	1	1
Totals	**290**	**7.2**	**82**	**2.546**	**168**	**4.654**	**15**	**25**

Individual Ballot Pool Results

Segment	Organization	Member	Ballot	Comments
1	Allegheny Power	Rodney Phillips	Affirmative	
1	Ameren Services	Kirit S. Shah	Negative	View
1	American Electric Power	Paul B. Johnson	Affirmative	View
1	American Transmission Company, LLC	Jason Shaver	Negative	View
1	Arizona Public Service Co.	Robert D Smith	Negative	View
1	Associated Electric Cooperative, Inc.	John Bussman		
1	Austin Energy	James Armke	Negative	View
1	Avista Corp.	Scott Kinney	Affirmative	View

1	BC Transmission Corporation	Gordon Rawlings	Affirmative	
1	Beaches Energy Services	Joseph S. Stonecipher	Negative	View
1	Black Hills Corp	Eric Egge	Negative	View
1	Bonneville Power Administration	Donald S. Watkins	Negative	View
1	Brazos Electric Power Cooperative, Inc.	Tony Kroskey	Abstain	
1	CenterPoint Energy	Paul Rocha	Negative	View
1	Central Maine Power Company	Brian Conroy	Negative	View
1	City of Vero Beach	Randall McCamish	Negative	
1	City Utilities of Springfield, Missouri	Jeff Knottek	Negative	
1	Cleco Power LLC	Danny McDaniel	Negative	
1	Commonwealth Edison Co.	Daniel Brotzman	Negative	View
1	Consolidated Edison Co. of New York	Christopher L de Graffenried	Negative	View
1	Dairyland Power Coop.	Robert W. Roddy	Negative	
1	Deseret Power	James Tucker	Negative	View
1	Dominion Virginia Power	William L. Thompson	Affirmative	View
1	Duke Energy Carolina	Douglas E. Hils	Negative	
1	E.ON U.S. LLC	Larry Monday	Negative	
1	East Kentucky Power Coop.	George S. Carruba		
1	El Paso Electric Company	Dennis Malone	Affirmative	View
1	Empire District Electric Co.	Ralph Frederick Meyer	Negative	View
1	Entergy Corporation	George R. Bartlett	Affirmative	View
1	FirstEnergy Energy Delivery	Robert Martinko	Affirmative	View
1	Florida Keys Electric Cooperative Assoc.	Dennis Minton	Negative	
1	Gainesville Regional Utilities	Luther E. Fair	Negative	View
1	Georgia Transmission Corporation	Harold Taylor, II	Negative	View
1	Great River Energy	Gordon Pietsch	Negative	View
1	Hydro One Networks, Inc.	Ajay Garg	Negative	View
1	Hydro-Quebec TransEnergie	Bernard Pelletier	Negative	View
1	Idaho Power Company	Ronald D. Schellberg	Affirmative	View
1	ITC Transmission	Elizabeth Howell	Negative	View
1	JEA	Ted E Hobson	Negative	
1	Kansas City Power & Light Co.	Michael Gammon		
1	Keys Energy Services	Stan T. Rzad	Negative	
1	Lakeland Electric	Larry E Watt	Negative	View
1	Lee County Electric Cooperative	John W Delucca	Negative	
1	Long Island Power Authority	Jonathan Appelbaum	Negative	
1	Los Angeles Department of Water & Power	Chuan-Hsier Wu		
1	Manitoba Hydro	Michelle Rheault	Affirmative	
1	MEAG Power	Danny Dees	Negative	
1	MidAmerican Energy Co.	Terry Harbour	Negative	View
1	Minnesota Power, Inc.	Randi Woodward	Negative	View
1	National Grid	Saurabh Saksena	Affirmative	View
1	New York State Electric & Gas Corp.	Henry G. Masti	Negative	View
1	Northeast Utilities	David H. Boguslawski	Negative	View
1	Northern Indiana Public Service Co.	Kevin M Largura	Negative	
1	NorthWestern Energy	John Canavan	Negative	View
1	Ohio Valley Electric Corp.	Robert Mattey	Affirmative	
1	Oklahoma Gas and Electric Co.	Marvin E VanBebber	Negative	View
1	Omaha Public Power District	Lorees Tadros	Negative	View
1	Oncor Electric Delivery	Michael T. Quinn	Affirmative	
1	Orlando Utilities Commission	Brad Chase	Negative	View
1	Otter Tail Power Company	Lawrence R. Larson	Negative	
1	Pacific Gas and Electric Company	Chifong L. Thomas	Affirmative	View
1	PacifiCorp	Mark Sampson	Negative	View
1	PECO Energy	Ronald Schloendorn	Negative	
1	Platte River Power Authority	John C. Collins	Negative	View
1	Potomac Electric Power Co.	Richard J. Kafka	Affirmative	
1	PowerSouth Energy Cooperative	Larry D. Avery	Negative	
1	PPL Electric Utilities Corp.	Brenda L Truhe	Negative	View
1	Progress Energy Carolinas	Sammy Roberts		
1	Public Service Electric and Gas Co.	Kenneth D. Brown	Affirmative	
1	Puget Sound Energy, Inc.	Catherine Koch		
1	Sacramento Municipal Utility District	Tim Kelley	Affirmative	
1	Salt River Project	Robert Kondziolka	Affirmative	
1	San Diego Gas & Electric	Linda Brown	Affirmative	View
1	Santee Cooper	Terry L. Blackwell	Negative	View
1	SCE&G	Henry Delk, Jr.	Negative	View

1	Seattle City Light	Pawel Krupa		
1	Sierra Pacific Power Co.	Richard Salgo	Negative	View
1	South Texas Electric Cooperative	Richard McLeon	Affirmative	
1	Southern California Edison Co.	Dana Cabbell	Affirmative	View
1	Southern Company Services, Inc.	Horace Stephen Williamson	Affirmative	
1	Southwest Transmission Cooperative, Inc.	James L. Jones	Negative	View
1	Southwestern Power Administration	Gary W Cox	Affirmative	
1	Tampa Electric Co.	Thomas J. Szelistowski	Abstain	
1	Tennessee Valley Authority	Larry Akens	Negative	View
1	Tri-State G & T Association Inc.	Keith V. Carman	Negative	View
1	Tucson Electric Power Co.	John Tolo	Negative	View
1	United Illuminating Co.	Robert Pellegrini	Negative	View
1	Westar Energy	Allen Klassen	Negative	
1	Western Area Power Administration	Brandy A Dunn	Negative	View
1	Xcel Energy, Inc.	Gregory L Pieper	Negative	
2	Alberta Electric System Operator	Jason L. Murray	Affirmative	View
2	BC Transmission Corporation	Faramarz Amjadi	Affirmative	
2	California ISO	Timothy VanBlaricom	Affirmative	View
2	Electric Reliability Council of Texas, Inc.	Chuck B Manning	Negative	
2	Florida Municipal Power Pool	Thomas E Washburn	Abstain	
2	Independent Electricity System Operator	Kim Warren	Affirmative	View
2	ISO New England, Inc.	Kathleen Goodman	Negative	View
2	Midwest ISO, Inc.	Jason L Marshall	Negative	View
2	New Brunswick System Operator	Alden Briggs	Negative	View
2	New York Independent System Operator	Gregory Campoli	Negative	View
2	PJM Interconnection, L.L.C.	Tom Bowe	Affirmative	View
2	Southwest Power Pool	Charles H Yeung	Negative	View
3	Alabama Power Company	Bobby Kerley	Affirmative	
3	American Electric Power	Raj Rana	Affirmative	View
3	Arizona Public Service Co.	Thomas R. Glock		
3	Atlantic City Electric Company	James V. Petrella	Affirmative	
3	BC Hydro and Power Authority	Pat G. Harrington	Negative	View
3	Black Hills Power	Andy Butcher		
3	Blue Ridge Power Agency	Duane S. Dahlquist	Affirmative	
3	Bonneville Power Administration	Rebecca Berdahl	Negative	View
3	City of Bartow, Florida	Matt Culverhouse	Negative	
3	City of Clewiston	Lynne Mila	Negative	
3	City of Green Cove Springs	Gregg R Griffin	Negative	
3	Cleco Utility Group	Bryan Y Harper	Negative	
3	ComEd	Bruce Krawczyk	Negative	
3	Consolidated Edison Co. of New York	Peter T Yost	Negative	View
3	Consumers Energy	David A. Lapinski	Affirmative	
3	Cowlitz County PUD	Russell A Noble		
3	Delmarva Power & Light Co.	Michael R. Mayer	Affirmative	
3	Detroit Edison Company	Kent Kujala	Abstain	View
3	Dominion Resources, Inc.	Jalal (John) Babik	Affirmative	View
3	Duke Energy Carolina	Henry Ernst-Jr	Negative	View
3	East Kentucky Power Coop.	Sally Witt	Abstain	
3	Entergy Services, Inc.	Matt Wolf	Affirmative	
3	FirstEnergy Solutions	Kevin Querry	Affirmative	View
3	Florida Municipal Power Agency	Joe McKinney	Negative	
3	Florida Power & Light Co.	W. R. Schoneck	Negative	View
3	Florida Power Corporation	Lee Schuster	Negative	View
3	Georgia Power Company	Anthony L Wilson	Affirmative	
3	Georgia System Operations Corporation	R Scott S. Barfield-McGinnis	Negative	
3	Grays Harbor PUD	Wesley W Gray	Negative	
3	Great River Energy	Sam Kokkinen	Negative	
3	Gulf Power Company	Gwen S Frazier	Affirmative	
3	Hydro One Networks, Inc.	Michael D. Penstone	Negative	View
3	JEA	Garry Baker	Negative	View
3	Kansas City Power & Light Co.	Charles Locke	Negative	View
3	Kissimmee Utility Authority	Gregory David Woessner	Negative	
3	Lakeland Electric	Mace Hunter	Negative	View
3	Lincoln Electric System	Bruce Merrill	Negative	View
3	Louisville Gas and Electric Co.	Charles A. Freibert	Negative	View
3	Manitoba Hydro	Greg C Parent	Affirmative	
3	MidAmerican Energy Co.	Thomas C. Mielnik	Negative	View

3	Mississippi Power	Don Horsley	Affirmative	
3	New York Power Authority	Marilyn Brown	Negative	
3	Niagara Mohawk (National Grid Company)	Michael Schiavone	Affirmative	View
3	Northern Indiana Public Service Co.	William SeDoris	Negative	
3	Ocala Electric Utility	David T. Anderson	Negative	
3	Orlando Utilities Commission	Ballard Keith Mutters	Negative	View
3	PacifiCorp	John Apperson	Negative	View
3	PECO Energy an Exelon Co.	Vincent J. Catania	Negative	
3	Platte River Power Authority	Terry L Baker	Affirmative	
3	Potomac Electric Power Co.	Robert Reuter	Affirmative	
3	Progress Energy Carolinas	Sam Waters	Negative	View
3	Public Service Electric and Gas Co.	Jeffrey Mueller	Affirmative	
3	Public Utility District No. 1 of Chelan County	Kenneth R. Johnson	Affirmative	
3	Public Utility District No. 2 of Grant County	Greg Lange	Negative	View
3	Sacramento Municipal Utility District	James Leigh-Kendall	Affirmative	
3	Salt River Project	John T. Underhill	Affirmative	
3	San Diego Gas & Electric	Scott Peterson		
3	Santee Cooper	Zack Dusenbury	Negative	View
3	Seattle City Light	Dana Wheelock		
3	South Carolina Electric & Gas Co.	Hubert C. Young	Negative	View
3	Southern California Edison Co.	David Schiada		
3	Southern Indiana Gas and Electric Co.	Fred Frederick	Negative	View
3	Tampa Electric Co.	Ronald L Donahey	Negative	
3	Tri-State G & T Association Inc.	Janelle Marriott	Negative	View
3	Wisconsin Public Service Corp.	Gregory J Le Grave	Negative	View
3	Xcel Energy, Inc.	Michael Ibold	Negative	View
4	Arkansas Electric Cooperative Corporation	Ricky Bittle	Affirmative	
4	City of Clewiston	Kevin McCarthy	Negative	
4	City of New Smyrna Beach Utilities Commission	Timothy Beyrle	Negative	
4	Consumers Energy	David Frank Ronk	Affirmative	
4	Detroit Edison Company	Daniel Herring	Abstain	View
4	Florida Municipal Power Agency	Frank Gaffney	Negative	View
4	Fort Pierce Utilities Authority	Thomas W. Richards	Negative	View
4	Georgia System Operations Corporation	Guy Andrews	Negative	
4	Integrys Energy Group, Inc.	Christopher Plante	Negative	View
4	Madison Gas and Electric Co.	Joseph G. DePoorter	Negative	View
4	Northern California Power Agency	Fred E. Young		
4	Ohio Edison Company	Douglas Hohlbaugh	Affirmative	View
4	Old Dominion Electric Coop.	Mark Ringhausen	Negative	View
4	Public Utility District No. 1 of Douglas County	Henry E. LuBean		
4	Sacramento Municipal Utility District	Mike Ramirez	Affirmative	
4	Seattle City Light	Hao Li		
4	Seminole Electric Cooperative, Inc.	Steven R Wallace	Negative	
4	Wisconsin Energy Corp.	Anthony Jankowski	Abstain	
5	AEP Service Corp.	Brock Ondayko	Affirmative	View
5	Amerenue	Sam Dwyer	Negative	
5	Avista Corp.	Edward F. Groce	Affirmative	
5	Bonneville Power Administration	Francis J. Halpin	Negative	View
5	City of Tallahassee	Alan Gale	Negative	
5	City Water, Light & Power of Springfield	Karl E. Kohlrus	Affirmative	
5	Cleco Power LLC	Grant Bryant	Negative	
5	Consolidated Edison Co. of New York	Edwin E Thompson		
5	Consumers Energy	James B Lewis	Affirmative	
5	Dairyland Power Coop.	Warren Schaefer	Negative	
5	Detroit Edison Company	Ronald W. Bauer	Affirmative	
5	Dominion Resources, Inc.	Mike Garton	Affirmative	View
5	Duke Energy	Robert Smith		
5	Dynegy	Greg Mason	Negative	
5	Entergy Corporation	Stanley M Jaskot	Affirmative	
5	Exelon Nuclear	Michael Korchynsky	Negative	
5	FirstEnergy Solutions	Kenneth Dresner	Affirmative	View
5	Florida Municipal Power Agency	David Schumann	Negative	
5	Great River Energy	Cynthia E Sulzer	Negative	
5	Invenergy LLC	Alan Beckham	Abstain	
5	JEA	Donald Gilbert	Negative	View
5	Kansas City Power & Light Co.	Scott Heidtbrink	Negative	

5	Kissimmee Utility Authority	Mike Blough	Negative	
5	Lakeland Electric	Thomas J Trickey	Negative	View
5	Lincoln Electric System	Dennis Florom	Negative	View
5	Louisville Gas and Electric Co.	Charlie Martin	Negative	View
5	Luminant Generation Company LLC	Mike Laney	Negative	View
5	Manitoba Hydro	Mark Aikens	Affirmative	
5	MidAmerican Energy Co.	Christopher Schneider	Abstain	
5	New York Power Authority	Gerald Mannarino	Negative	
5	Northern Indiana Public Service Co.	Michael K Wilkerson	Negative	
5	Orlando Utilities Commission	Richard Kinas	Negative	View
5	Pacific Gas and Electric Company	Richard J. Padilla	Affirmative	View
5	PacifiCorp	Sandra L. Shaffer	Negative	View
5	Portland General Electric Co.	Gary L Tingley		
5	PPL Generation LLC	Mark A. Heimbach	Negative	View
5	Progress Energy Carolinas	Wayne Lewis	Negative	View
5	PSEG Power LLC	David Murray	Affirmative	
5	Reedy Creek Energy Services	Bernie Budnik		
5	RRI Energy	Thomas J. Bradish	Affirmative	View
5	Sacramento Municipal Utility District	Bethany Wright	Affirmative	
5	Salt River Project	Glen Reeves	Affirmative	
5	Seattle City Light	Michael J. Haynes	Abstain	
5	Seminole Electric Cooperative, Inc.	Brenda K. Atkins	Negative	
5	South California Edison Company	Ahmad Sanati		
5	South Carolina Electric & Gas Co.	Richard Jones	Negative	View
5	Tenaska, Inc.	Scott M. Helyer	Affirmative	
5	Tennessee Valley Authority	George T. Ballew	Negative	View
5	Tri-State G & T Association Inc.	Barry Ingold	Negative	
5	U.S. Army Corps of Engineers Northwestern Division	Karl Bryan	Affirmative	
5	U.S. Bureau of Reclamation	Martin Bauer P.E.	Abstain	
5	Wisconsin Public Service Corp.	Leonard Rentmeester	Negative	
5	Xcel Energy, Inc.	Liam Noailles	Negative	View
6	AEP Marketing	Edward P. Cox	Affirmative	View
6	Black Hills Corp	Tyson Taylor	Negative	
6	Bonneville Power Administration	Brenda S. Anderson	Negative	View
6	Cleco Power LLC	Matthew D Cripps	Negative	
6	Consolidated Edison Co. of New York	Nickesha P Carrol	Negative	View
6	Constellation Energy Commodities Group	Chris Lyons	Affirmative	
6	Dominion Resources, Inc.	Louis S Slade	Affirmative	View
6	Duke Energy Carolina	Walter Yeager	Negative	
6	Entergy Services, Inc.	Terri F Benoit	Affirmative	
6	Exelon Power Team	Pulin Shah	Negative	
6	FirstEnergy Solutions	Mark S Travaglianti	Affirmative	View
6	Florida Power & Light Co.	Silvia P Mitchell	Negative	View
6	Great River Energy	Donna Stephenson	Negative	
6	Kansas City Power & Light Co.	Thomas Saitta	Negative	View
6	Lakeland Electric	Paul Shipps	Negative	View
6	Lincoln Electric System	Eric Ruskamp	Negative	View
6	Louisville Gas and Electric Co.	Daryn Barker	Negative	View
6	Manitoba Hydro	Daniel Prowse	Affirmative	
6	New York Power Authority	Thomas Papadopoulos	Negative	
6	Northern Indiana Public Service Co.	Joseph O'Brien	Negative	
6	Omaha Public Power District	David Ried	Negative	
6	PacifiCorp	Gregory D Maxfield	Negative	View
6	Progress Energy	James Eckelkamp	Negative	
6	PSEG Energy Resources & Trade LLC	James D. Hebson	Affirmative	
6	Public Utility District No. 1 of Chelan County	Hugh A. Owen		
6	RRI Energy	Trent Carlson	Affirmative	
6	Santee Cooper	Suzanne Ritter	Negative	View
6	Seattle City Light	Dennis Sismaet	Abstain	
6	Seminole Electric Cooperative, Inc.	Trudy S. Novak	Negative	
6	South Carolina Electric & Gas Co.	Matt H Bullard	Negative	View
6	SunGard Data Systems	Christopher K Heisler	Affirmative	
6	Tennessee Valley Authority	Marjorie S. Parsons	Negative	View
6	Xcel Energy, Inc.	David F. Lemmons	Negative	View
8		James A Maenner	Abstain	
8	Edward C Stein	Edward C Stein		

8	JDRJC Associates	Jim D. Cyrulewski	Negative	
8	Power Energy Group LLC	Peggy Abbadini	Affirmative	
8	Roger C Zaklukiewicz	Roger C Zaklukiewicz	Negative	View
8	Volkmann Consulting, Inc.	Terry Volkmann	Affirmative	
9	California Energy Commission	William Mitchell Chamberlain		
9	Commonwealth of Massachusetts Department of Public Utilities	Donald E. Nelson	Affirmative	
9	Maine Public Utilities Commission	Jacob A McDermott	Abstain	
9	North Carolina Utilities Commission	Kimberly J. Jones	Negative	View
10	Electric Reliability Council of Texas, Inc.	Kent Saathoff	Negative	
10	Florida Reliability Coordinating Council	Linda Campbell	Abstain	
10	Midwest Reliability Organization	Dan R. Schoenecker	Negative	View
10	New York State Reliability Council	Alan Adamson	Negative	View
10	Northeast Power Coordinating Council, Inc.	Guy V. Zito	Affirmative	
10	ReliabilityFirst Corporation	Jacquie Smith	Negative	View
10	SERC Reliability Corporation	Carter B Edge		
10	Western Electricity Coordinating Council	Louise McCarren	Affirmative	

Legal and Privacy : 609.452.8060 voice : 609.452.9550 fax : 116-390 Village Boulevard : Princeton, NJ 08540-5721
Washington Office: 1120 G Street, N.W. : Suite 990 : Washington, DC 20005-3801

Account Log-In/Register

Copyright © 2009 by the North American Electric Reliability Corporation. : All rights reserved.
A New Jersey Nonprofit Corporation

NERC
NORTH AMERICAN ELECTRIC RELIABILITY CORPORATION

Standards Announcement
Initial Ballot Results

Now available at: https://standards.nerc.net/Ballots.aspx

Project 2006-02: Assess Transmission Future Needs
The initial ballot for proposed standard TPL-001-1 — Transmission System Planning Performance Requirements and its associated implementation plan ended on March 1, 2010.

Ballot Results
Voting statistics are listed below, and the Ballot Results Web page provides a link to the detailed results:

Quorum: 91.38%
Approval: 35.36%

Since at least one negative ballot included a comment, these results are not final. A second (or recirculation) ballot must be conducted. Ballot criteria are listed at the end of the announcement.

Next Steps
As part of the recirculation ballot process, the drafting team must draft and post responses to voter comments. The drafting team will also determine whether or not to make revisions to the balloted item(s). Should the team decide to make revisions, the revised item(s) will return to the initial ballot phase.

Project Background
The purpose of the proposed standard is to establish transmission system planning performance requirements within the planning horizon to develop a bulk electric system that will operate reliably over a broad spectrum of system conditions and following a wide range of probable contingencies. TPL-001-1 — Transmission System Planning Performance Requirements is an update and consolidation of the following standards:

- TPL-001-0 — System Performance under Normal Conditions
- TPL-002-0 — System Performance Following Loss of a Single BES Element
- TPL-003-0 — System Performance Following Loss of Two or More BES Elements
- TPL-004-0 — System Performance Following Extreme BES Events
- TPL-005-0 — Regional and Interregional Self-Assessment Reliability Reports
- TPL-006-0 — Data from the Regional Reliability Organization Needed to Assess Reliability

More information is available on the project page: http://www.nerc.com/filez/standards/Assess-Transmission-Future-Needs.html

Applicability of Standards in Project
Planning Coordinator
Transmission Planner

Proposed Additions to Glossary of Terms

Bus-tie Breaker
Consequential Load Loss
Long-Term Transmission Planning Horizon
Near-Term Transmission Planning Horizon
Non-Consequential Load Loss
Planning Assessment
Year One

Standards Development Process

The *Reliability Standards Development Procedure* contains all the procedures governing the standards development process. The success of the NERC standards development process depends on stakeholder participation. We extend our thanks to all those who participate.

Ballot Criteria

Approval requires both a (1) quorum, which is established by at least 75% of the members of the ballot pool for submitting either an affirmative vote, a negative vote, or an abstention, and (2) A two-thirds majority of the weighted segment votes cast must be affirmative; the number of votes cast is the sum of affirmative and negative votes, excluding abstentions and nonresponses. If there are no negative votes with reasons from the first ballot, the results of the first ballot shall stand. If, however, one or more members submit negative votes with reasons, a second ballot shall be conducted.

For more information or assistance,
please contact Shaun Streeter at shaun.streeter@nerc.net or at 609.452.8060.

Consideration of Comments on Initial Ballot — Assess Transmission Future Needs (Project 2006-02)

Summary Consideration: Due to industry comments, the SDT has made a number of changes to the standard as shown below. In making these changes, the SDT has attempted to be responsive to the information provided in the initial ballot comments while continuing to be responsive to the FERC Order 693 directives. Please note that footnote 12 on non-consequential load loss is currently being utilized as a placeholder. The resolution of this issue will be provided in Project 2010-11. When that resolution is reached, the content will be copied to TPL-001-2.

Year One: The first twelve month period that a Planning Coordinator or a Transmission Planner is responsible for assessing. For the Planning Assessment started in a given calendar year, Year One must include the forecasted peak Load period for one of the following two calendar years. For example, if a Planning Assessment was started in 2011, then Year One must include the forecasted peak Load period for either 2012 or 2013.

Requirement R1 - Each Transmission Planner and Planning Coordinator shall maintain System models within its respective area for performing the studies needed to complete its Planning Assessment. The models shall use the latest data consistent with that provided in accordance with the MOD-010 and MOD-012 standards, supplemented by other sources as needed, including items represented in the Corrective Action Plan, and shall represent projected System conditions. This establishes the normal system condition in Table 1.

Requirement R2 - Each Transmission Planner and Planning Coordinator shall prepare an annual Planning Assessment of its portion of the BES. This Planning Assessment shall use current or qualified past studies, document assumptions, summarize documented results, and cover steady state analyses, short circuit analyses, and Stability analyses.

Requirement R2, part 2.1 - The Near-Term Transmission Planning Horizon portion of the steady state analysis shall be assessed annually and be supported by current annual studies or qualified past studies as indicated in Requirement R2, part 2.6, as follows:

Requirement R2, part 2.1.4 - For each of the studies described in Requirement R2, parts 2.1.1 and 2.1.2, sensitivity case(s) shall be utilized to demonstrate the impact of changes to the basic assumptions used in the model. To accomplish this, the sensitivity analysis in the Planning Assessment must vary one or more of the following conditions by a sufficient amount to stress the System within a range of credible conditions that demonstrate a measurable change in performance:

Requirement R2, part 2.1.5 - When an entity's spare equipment strategy could result in the unavailability of major Transmission equipment that has a lead time of one year or more (such as a transformer), the impact of this possible unavailability on System performance shall be studied. The studies shall be performed for the P0, P1, and P2 categories identified in Table 1 with the conditions that the System is expected to experience during the possible unavailability of the long lead time equipment.

Requirement R2, part 2.4.1 - System peak Load for one of the five years. System peak Load levels shall include a Load model which represents the expected dynamic behavior of Loads that could impact the study area, considering the behavior of induction motor Loads. An aggregate System Load model which represents the overall dynamic behavior of the Load is acceptable.

Requirement R2, part 2.4.3 - For each of the studies described in Requirement R2, parts 2.4.1 and 2.4.2, sensitivity case(s) shall be utilized to demonstrate the impact of changes to the basic assumptions used in the model. To accomplish this, the sensitivity analysis in the Planning Assessment must vary one or more of the following conditions by a sufficient amount to stress the System within a range of credible conditions that demonstrate a measurable change in performance:

Requirement R2, part 2.5 - The Long-Term Transmission Planning Horizon portion of the Stability analysis shall be assessed to address the impact of proposed material generation additions or changes in that timeframe and be supported by current or past studies as qualified in Requirement R2, part2.6. The technical rationale for determining material changes shall be documented.

Requirement R3, part 3.3.1 - Simulate the removal of all elements that the Protection System and other automatic controls are expected to disconnect for each Contingency without operator intervention. The analyses shall include the impact of subsequent:

- Tripping of generators where simulations show generator bus voltages or high side of the Generation Step Up (GSU) voltages are less than known or assumed minimum generator steady state or ride through voltage limitations. Include in the assessment any assumptions made.
- Tripping of Transmission elements where relay loadability limits are exceeded.

Requirement R3, part 3.5 - Those extreme events in Table 1 that are expected to produce more severe System impacts shall be identified and a list created of those events to be evaluated in Requirement R3, part 3.2. The rationale for those Contingencies selected for evaluation shall be available as supporting information. If the analysis concludes there is Cascading caused by the occurrence of extreme events, an evaluation of possible actions designed to reduce the likelihood or mitigate the consequences and adverse impacts of the event(s) shall be conducted.

Requirement R4, part 4.3.1 - Simulate the removal of all elements that the Protection System and other automatic controls are expected to disconnect for each Contingency without operator intervention. The analyses shall include the impact of subsequent:

- Successful high speed reclosing and unsuccessful high speed reclosing into a Fault.
- Tripping of generators where simulations show generator bus voltages or high side of the GSU voltages are less than known or assumed generator low voltage ride through capability. Include in the assessment any assumptions made.
- Tripping of Transmission lines and transformers where transient swings cause Protection System operation based on generic or actual relay models.

Requirement R4, part 4.4 - Those planning events in Table 1 that are expected to produce more severe System impacts on its portion of the BES, shall be identified, and a list created of those Contingencies to be evaluated in Requirement R4, part 4.1. The rationale for those Contingencies selected for evaluation shall be available as supporting information.

Requirement R4, part 4.5 - Those extreme events in Table 1 that are expected to produce more severe System impacts shall be identified and a list created of those events to be evaluated in Requirement R4, part 4.2. The rationale for those Contingencies selected for evaluation shall be available as supporting information. If the analysis concludes there is Cascading caused by the occurrence of extreme events, an evaluation of possible actions designed to reduce the likelihood or mitigate the consequences of the event(s) shall be conducted.

Header note 'a': The System shall remain stable. Cascading and uncontrolled islanding shall not occur.

Header note 'b': Consequential Load Loss as well as generation loss is acceptable as a consequence of any event excluding P0.

Header note 'e': Planned System adjustments such as Transmission configuration changes and re-dispatch of generation are allowed if such adjustments are executable within the time duration applicable to the Facility Ratings.

P5. Delayed Fault Clearing due to the failure of a relay[13] protecting the Faulted element to operate as designed, for a Fault on one of the following:

Extreme event 2d. Loss of all generating units at a generating station.

11. Excludes circuits that share a common structure (Planning event P7, Extreme event steady state 2a) or common Right-of-Way (Extreme event, steady state 2b) for 1 mile or less.

12. Note: Non-Consequential Load Loss is being decided in Project 2010-11. When that project is finalized, the resolution will be copied here.

13. Applies to the following relay functions or types: pilot (#85), distance (#21), differential (#87), current (#50, 51, and 67), voltage (#27 & 59), directional (#32, & 67), and tripping (#86, & 94).

M6. Each Transmission Planner and Planning Coordinator shall provide evidence, such as electronic or hard copies of documentation specifying any criteria or methodology used in the analysis to identify System instability for conditions such as Cascading, voltage instability, or uncontrolled islanding that was utilized in preparing the Planning Assessment in accordance with Requirement R6.

M8. Each Planning Coordinator and Transmission Planner shall provide evidence, such as email notices, documentation of updated web pages, postal receipts showing recipient and date; or a demonstration of a public posting, that it has distributed its Planning Assessment results to adjacent Planning Coordinators, adjacent Transmission Planners, and any functional entity who has indicated a reliability need and that functional entity has provided a documented response to comments received on Planning Assessment results within 90 calendar days of receipt of those comments in accordance with Requirement R8.

R8 VSL	The responsible entity failed to distribute the results of its Planning Assessment to one of its adjacent Transmission Planners, one adjacent Planning Coordinator, or to one functional entity that has a reliability related need and that has submitted a written request for the information, respectively in accordance with Requirement R8.	N/A	The responsible entity failed to distribute the results of its Planning Assessment to more than one of its adjacent Transmission Planners, adjacent Planning Coordinators, or functional entities that have a reliability related need and that have submitted a written request for the information, respectively in accordance with Requirement R8.	The responsible entity failed to provide a documented response to a recipient of the Planning Assessment results who provided documented comments on the results within 90 calendar days of receipt of those comments in accordance with Requirement R8.

If you feel that the drafting team overlooked your comments, please let us know immediately. Our goal is to give every comment serious consideration in this process. If you feel there has been an error or omission, you can contact the Vice President and Director of Standards, Herbert Schrayshuen, at 609-452-8060 or at herb.schrayshuen@nerc.net. In addition, there is a NERC Reliability Standards Appeals Process.[1]

[1] The appeals process is in the Reliability Standards Development Procedure: http://www.nerc.com/files/RSDP_V6_1_12Mar07.pdf.

Voter	Entity	Segment	Vote	Comment
Kent Kujala	Detroit Edison Company	3	Abstain	Document is overly complex.
Daniel Herring	Detroit Edison Company	4	Abstain	I don't believe this end product from the consolidation of the TPL standards into one standard turned out the way the industry was hoping it would. This standard is long, complex, and difficult to follow.
Response: The standard covers a number of complex issues and problems. The SDT has made every attempt to avoid unnecessary complexity. No change made.				
Paul Rocha	CenterPoint Energy	1	Negative	CenterPoint Energy believes the proposed standard has strayed far from its original intent as indicated in the 2002 Version 1 SAR and that this proposed standard is now overly prescriptive. CenterPoint Energy also will not support the proposed expansion of mandatory, auditable long term planning requirements beyond the requirements found in the existing TPL standards and the intent reflected in the 2002 version 1 SAR. This concern is exacerabated by the expansion of stability studies and corrective action plan requirements applied to the long term planning horizon.
Response: The SDT is providing clarity around all of the requirements consistent with the intent of the existing standards, the approved 2002 SAR, and the approved 2006 Supplemental SAR. No change made.				
Gregory L. Pieper	Xcel Energy	1	Negative	No comment.
Response: Without any specific comments to address, the SDT is unable to further address your concerns. No change made.				
Charles Locke	Kansas City Power & Light Co.	3	Negative	The standards are overly prescriptive and will increase industry costs substantially without materially improving customer service or reliability, and I believe they go significantly beyond the original standard. If the reason for a new standard is to clarify interpretation problems with Table I performance, that should be addressed without all the additional requirements that are added in the new standard.
Thomas Saitta	Kansas City Power & Light Co.	6	Negative	
Response: The SDT is providing clarity around all of the requirements consistent with the intent of the existing standards. The SDT has attempted to balance				

Voter	Entity	Segment	Vote	Comment
reliability versus cost based on responses to comments in previous postings. No change made.				
Saurabh Saksena	National Grid	1	Affirmative	1. An annual study shouldn't be required for all areas. A documented assessment based on past studies should be adequate for some areas. 2. Years 5 and 10 need to be defined. It appears that the difference between Year One and year 5 is only 3 years. 3. In Table 1, event P5 is not clear enough to communicate that it doesn't include the failure of a single element such as a battery, which is included in the NERC glossary definition for a Protection System. 4. Part 2.7.2 should include Runback or tripping of HVDC in the list of possible actions. 5. Parts 2.1.4 & 2.4.3 should be revised from ' … the sensitivity analysis in the Planning Assessment must vary one or more of the following conditions not already included in the studies ….' to ' … the sensitivity analysis in the Planning Assessment must vary one or more of the following original conditions in the studies ….'. This will provide a reference similar to a Base Case definition as a reference for the sensitivities and will eliminate the implication of infinitely adding one more sensitivity to the list of sensitivities. 6. The implementation window for part 2.4.1needs to be increased from 24 to 36 months.
Michael Schiavone	Niagara Mohawk (National Grid Company)	3	Affirmative	
Response: 1. The intent of the SDT wasn't that annual studies are required but that an annual Planning Assessment is required. However, the SDT agrees that the words may have been somewhat confusing. Therefore, the SDT has clarified the wording of Requirement R2 and Part 2.1. **Requirement R2** - Each Transmission Planner and Planning Coordinator shall prepare an annual Planning Assessment of its portion of the BES. This Planning Assessment shall use current or qualified past studies, document assumptions, summarize documented results, and cover steady state analyses, short circuit analyses, and Stability analyses. **Requirement R2, part 2.1.4 -** For each of the studies described in Requirement R2, parts 2.1.1 and 2.1.2, sensitivity case(s) shall be utilized to demonstrate the impact of changes to the basic assumptions used in the model. To accomplish this, the sensitivity analysis in the Planning Assessment must vary one or more of the following conditions by a sufficient amount to stress the System within a range of credible conditions that demonstrate a measurable change in performance: **Requirement R2, part 2.4.3 -** For each of the studies described in Requirement R2, parts 2.4.1 and 2.4.2, sensitivity case(s) shall be utilized to demonstrate the impact of changes to the basic assumptions used in the model. To accomplish this, the sensitivity analysis in the Planning Assessment must vary one or more of the following conditions by a sufficient amount to stress the System within a range of credible conditions that demonstrate a measurable change in performance:				

Voter	Entity	Segment	Vote	Comment
2. The SDT believes that this concern is alleviated by the revised definition for Year One. **Year One:** The first twelve month period that a Planning Coordinator or a Transmission Planner is responsible for assessing. For the Planning Assessment started in a given calendar year, Year One must include the forecasted peak Load period for one of the following two calendar years. For example, if a Planning Assessment was started in 2011, then Year One must include the forecasted peak Load period for either 2012 or 2013. Then Year 5 would be four years after Year One and Year 10 would be nine years after Year One. Using the example in the definition of Year One, Year 5 would be the 12 month period that includes the forecasted peak load period of either 2016 or 2017, respectively, and Year 10 would be 2021 or 2022, respectively. 3. The SDT has changed the text for the P5 event and added a footnote 13 as a result of your (and others') comments to address these concerns. **P5**. Delayed Fault Clearing due to the failure of a relay[13] protecting the Faulted element to operate as designed, for a Fault on one of the following: **13**. Applies to the following relay functions or types: pilot (#85), distance (#21), differential (#87), current (#50, 51, and 67), voltage (#27 & 59), directional (#32, & 67), and tripping (#86, & 94). 4. The SDT assumes that you meant Requirement R2, Part 2.7.1. As stated, the list is not all inconclusive but a list of possible actions. The SDT agrees that runback or tripping of HVDC would be allowable actions. No change made. 5. The SDT agrees that the current wording may be confusing and has made a change to promote clarity in this area. **Requirement R2** - Each Transmission Planner and Planning Coordinator shall prepare an annual Planning Assessment of its portion of the BES. This Planning Assessment shall use current or qualified past studies, document assumptions, summarize documented results, and cover steady state analyses, short circuit analyses, and Stability analyses. **Requirement R2, part 2.1.4 -** For each of the studies described in Requirement R2, parts 2.1.1 and 2.1.2, sensitivity case(s) shall be utilized to demonstrate the impact of changes to the basic assumptions used in the model. To accomplish this, the sensitivity analysis in the Planning Assessment must vary one or more of the following conditions by a sufficient amount to stress the System within a range of credible conditions that demonstrate a measurable change in performance: **Requirement R2, part 2.4.3 -** For each of the studies described in Requirement R2, parts 2.4.1 and 2.4.2, sensitivity case(s) shall be utilized to demonstrate the impact of changes to the basic assumptions used in the model. To accomplish this, the sensitivity analysis in the Planning Assessment must vary one or more of the following conditions by a sufficient amount to stress the System within a range of credible conditions that demonstrate a measurable change in performance: 6. The SDT has reviewed similar comments from earlier drafts and believes that the implementation timeframe for this item is appropriate. Without any further specific reasons, the SDT is unable to address your concerns. No change made.				

Voter	Entity	Segment	Vote	Comment
Linda Brown	San Diego Gas & Electric	1	Affirmative	1. The new standard is supposed to be a performance based standard, but goes beyond performance by suggesting solutions (2.7.1). 2. The new standard is an overly wordy and poorly organized version of the original four TPLs. In order to understand a requirement, the reader must jump to different sections in the document. 3. The new standard is poorly written making it confusing. For example, R2.1.1 says "System peak Load for either Year One or year two, and for year five". I think it means, "study the system as it may exists 5 years from now and as it may exist either one year from now, or two years from now." 4. Section R2.1.4 of the new standard requires Real and Reactive forecasted load. This makes no sense. To my knowledge, no one forecasts reactive load. They assume a power factor and using the real power load and the assumed power factor, they calculate the reactive load. 5. The load modeling requirement may take some time to achieve. 6. It asks for sensitivities that assume generation that may never be built. 7. The Corrective Action Plan doesn't define who gets the plan. It just says to make one. 8. The new standard makes requirements out of practices. For example, section 3.3.3 requires relay loading actions to be part of the analysis. Any competent transmission planning engineer does this.

Response: 1. The proposed standard clarifies allowable solutions but doesn't mandate any particular solution without deviating from performance-based requirements. No change made.

2. Without any specific comments to address, the SDT is unable to further address your concerns. No change made.

3. The SDT does not think the requirement is poorly worded nor are there other comments about this particular wording. Your assumption is correct but does not add any additional clarity. No change made.

4. Since the reactive Load is based on a forecast of the real Load, the SDT chose to characterize both real and reactive Loads as forecasts. No change made.

5. The SDT assumes that you are referring to the induction motor Load modeling required for Stability studies. The standard permits an aggregate model assumption that can be applied for a given system that is not substation specific. The SDT believes that 24 months is an adequate time period to accomplish this task. No change made.

6. The SDT has made a change to the requirements to promote clarity in this area. Generation is just one of the examples of what could be studied.

> **Requirement R2** - Each Transmission Planner and Planning Coordinator shall prepare an annual Planning Assessment of its portion of the BES. This Planning Assessment shall use current or qualified past studies, document assumptions, summarize documented results, and cover steady state analyses, short circuit analyses, and Stability analyses.

Voter	Entity	Segment	Vote	Comment
				Requirement R2, part 2.1.4 - For each of the studies described in Requirement R2, parts 2.1.1 and 2.1.2, sensitivity case(s) shall be utilized to demonstrate the impact of changes to the basic assumptions used in the model. To accomplish this, the sensitivity analysis in the Planning Assessment must vary one or more of the following conditions by a sufficient amount to stress the System within a range of credible conditions that demonstrate a measurable change in performance: **Requirement R2, part 2.4.3 -** For each of the studies described in Requirement R2, parts 2.4.1 and 2.4.2, sensitivity case(s) shall be utilized to demonstrate the impact of changes to the basic assumptions used in the model. To accomplish this, the sensitivity analysis in the Planning Assessment must vary one or more of the following conditions by a sufficient amount to stress the System within a range of credible conditions that demonstrate a measurable change in performance: 7. The Corrective Action Plan isn't delivered separately as it is part of the Planning Assessment. Requirement R8 specifies availability of Planning Assessments. No change made. 8. The SDT wrote the requirements for the proposed standard based on reliability-based needs for a continent-wide standard for transmission planning purposes and have been vetted through multiple industry comment periods. Requirements are often based on existing practices. No change made.
Dana Cabbell	Southern California Edison Co.	1	Affirmative	1. We recommend moving the EHV and HV definition from the Performance Table footnote to "Definitions of Terms used in Standard" section. 2. While draft 5 of this proposed standard is a substantial improvement over the previous drafts and the existing TPL standards, there are still areas where additional clarity is needed. We believe that a workshop, after FERC approval of the standard, where issues can be discussed and clarified will go a long way towards smooth implementation of this proposed standard. Some of the areas that require additional clarification are: o Application of consequential and non-consequential load and the EHV and HV voltage levels o Discussion on what is needed to study the various Planning Events. One example is P5, which involves "failure of a single protection system." 3. We recommend the following slight modification to the specified subrequirements of R2 to include clarifying references to R3 and R4 as follows: o 2.1. The Near-Term Transmission Planning Horizon portion of the steady state analysis shall be assessed annually and be supported by the following annual current studies in accordance with R3, supplemented with qualified past studies as indicated in Requirement R2, part 2.6: o 2.2. The Long-Term Transmission Planning Horizon portion of the steady state analysis shall be assessed annually and be supported by the following annual current study in accordance with R3, supplemented with qualified past studies as indicated in Requirement R2, part 2.6:

Voter	Entity	Segment	Vote	Comment
				o 2.4. The Near-Term Transmission Planning Horizon portion of the Stability analysis shall be assessed annually and be supported by current or past studies as qualified in Requirement R2, part 2.6. The following studies are required in accordance with R4: o 2.5. The Long-Term Transmission Planning Horizon portion of the Stability analysis shall be assessed to address the impact of proposed generation additions or changes in that timeframe and be supported in accordance with R4 by current or past studies as qualified in Requirement R2, part 2.6
Response: 1. The EHV/HV differentiation is not meant to be a definition in that it only applies to this standard. No change made. 2. The SDT has held several webinars on this project and may well hold another before the project is complete. In addition, the SDT has performed numerous outreach activities to regional entities, sub-committees, etc., on the details of the standard. The project has been presented several times at the NERC Standards Workshops. Once the standard is approved by FERC, the SDT ceases to exist. Therefore, any activities subsequent to that approval would be under general NERC jurisdiction. The SDT suggests that you broach this idea with NERC staff. Also, the SDT has clarified P5 in this revision. 2.1 & 2.2 – The SDT feels that the linkage between requirements is properly cited in Requirement R3 going back to Requirement R2 and the additional language suggested is not necessary and does not add clarity. No change made. 2.4 – Part 2.4 is already part of Requirement R2 so no additional reference is required. No change made. 2.5 - The SDT feels that the linkage between requirements is properly cited in Requirement R4 going back to Requirement R2 and the additional language suggested is not necessary and does not add clarity. No change made.				
Thomas J. Bradish	RRI Energy	5	Affirmative	I support the WECC position paper on this subject. Namely: 1. While draft 5 of this proposed standard is a substantial improvement over the previous drafts and the existing TPL standards, there are still areas where additional clarity is needed. We believe that a workshop, after FERC approval of the standard, where issues can be discussed and clarified will go a long way towards smooth implementation of this proposed standard. Some of the areas that require additional clarification are: o Application of consequential and non-consequential load and the EHV and HV voltage levels o Discussion on what is needed to study the various Planning Events. One example is P5, which
Scott Kinney	Avista Corp.	1	Affirmative	
Dennis Malone	El Paso Electric Company	1	Affirmative	

Voter	Entity	Segment	Vote	Comment
Richard J. Padilla	Pacific Gas and Electric Company	5	Affirmative	involves "failure of a single protection system." 2. We recommend the following slight modification to the specified subrequirements of R2 to include clarifying references to R3 and R4 as follows: o 2.1. The Near-Term Transmission Planning Horizon portion of the steady state analysis shall be assessed annually and be supported by the following annual current studies in accordance with R3, supplemented with qualified past studies as indicated in Requirement R2, part 2.6: o 2.2. The Long-Term Transmission Planning Horizon portion of the steady state analysis shall be assessed annually and be supported by the following annual current study in accordance with R3, supplemented with qualified past studies as indicated in Requirement R2, part 2.6: o 2.4. The Near-Term Transmission Planning Horizon portion of the Stability analysis shall be assessed annually and be supported by current or past studies as qualified in Requirement R2, part 2.6. The following studies are required in accordance with R4: o 2.5. The Long-Term Transmission Planning Horizon portion of the Stability analysis shall be assessed to address the impact of proposed generation additions or changes in that timeframe and be supported in accordance with R4 by current or past studies as qualified in Requirement R2, part 2.6
Response: 1. The SDT has held several webinars on this project and may well hold another before the project is complete. In addition, the SDT has performed numerous outreach activities to regional entities, sub-committees, etc., on the details of the standard. The project has been presented several times at the NERC Standards Workshops. Once the standard is approved by FERC, the SDT ceases to exist. Therefore, any activities subsequent to that approval would be under general NERC jurisdiction. The SDT suggests that you broach this idea with NERC staff. 2.1 & 2.2 – The SDT feels that the linkage between requirements is properly cited in Requirement R3 going back to Requirement R2 and the additional language suggested is not necessary and does not add clarity. No change made. 2.4 – Part 2.4 is already part of Requirement R2 so no additional reference is required. No change made. 2.5 - The SDT feels that the linkage between requirements is properly cited in Requirement R4 going back to Requirement R2 and the additional language suggested is not necessary and does not add clarity. No change made.				
Chifong L. Thomas	Pacific Gas and Electric Company	1	Affirmative	1. While draft 5 of this proposed standard is a substantial improvement over the previous drafts and the existing TPL standards, there are still areas where additional clarity is needed. We believe that a workshop, after FERC approval of the standard, where issues can be discussed and clarified will go a long way towards smooth implementation of this proposed standard.

Voter	Entity	Segment	Vote	Comment
				Some of the areas that require additional clarification are: o Application of consequential and non-consequential load and the EHV and HV voltage levels o Discussion on what is needed to study the various Planning Events. One example is P5, which involves "failure of a single protection system." 2. We recommend the following slight modification to the specified sub-requirements of R2 to inserting "in accordance with R3" or "in accordance with R4" to clarify references to R3 and R4, respectively, as follows: o 2.1. The Near-Term Transmission Planning Horizon portion of the steady state analysis shall be assessed annually and be supported by the following annual current studies in accordance with R3, supplemented with qualified past studies as indicated in Requirement R2, part 2.6: o 2.2. The Long-Term Transmission Planning Horizon portion of the steady state analysis shall be assessed annually and be supported by the following annual current study in accordance with R3, supplemented with qualified past studies as indicated in Requirement R2, part 2.6: o 2.4. The Near-Term Transmission Planning Horizon portion of the Stability analysis shall be assessed annually and be supported by current or past studies as qualified in Requirement R2, part 2.6. The following studies are required in accordance with R4: o 2.5. The Long-Term Transmission Planning Horizon portion of the Stability analysis shall be assessed to address the impact of proposed generation additions or changes in that timeframe and be supported in accordance with R4 by current or past studies as qualified in Requirement R2, part 2.6 3. As proposed, Non-Consequential Load Loss is defined as "Non-Interruptible Load loss that does not include: (1) Consequential Load Loss, (2) the response of voltage sensitive Load, or (3) Load that is disconnected from the System by end-user equipment". As voltage at the fault goes to zero, and voltages in the parts of the system near the fault become very low, some voltage sensitive Loads may be tripped, and, as a result may not "ride through" the fault. Would this types of Load loss be covered under item (2), "the response of voltage sensitive Load" during the transient dynamic study, as long as the TP and PC model these Loads as connected to the system in the post-contingency steady state power flow representation?
Response: 1. The SDT has held several webinars on this project and may well hold another before the project is complete. In addition, the SDT has performed numerous outreach activities to regional entities, sub-committees, etc., on the details of the standard. The project has been presented several times at the NERC Standards Workshops. Once the standard is approved by FERC, the SDT ceases to exist. Therefore, any activities subsequent to that approval would be under				

Voter	Entity	Segment	Vote	Comment
general NERC jurisdiction. The SDT suggests that you broach this idea with NERC staff. 2.1 & 2.2 – The SDT feels that the linkage between requirements is properly cited in Requirement R3 going back to Requirement R2 and the additional language suggested is not necessary and does not add clarity. No change made. 2.4 – Part 2.4 is already part of Requirement R2 so no additional reference is required. No change made. 2.5 - The SDT feels that the linkage between requirements is properly cited in Requirement R4 going back to Requirement R2 and the additional language suggested is not necessary and does not add clarity. No change made. Yes, your assumptions are correct.				
Timothy VanBlaricom	California ISO	2	Affirmative	2.1 The Near-Term Transmission Planning Horizon portion of the steady state analysis shall be assessed annually and be supported by current or past studies as qualified in Requirement R2, part 2.6: 2.2 The Long-Term Transmission Planning Horizon portion of the steady state analysis shall be assessed annually and be supported by current or past studies as qualified in Requirement R2, part 2.6:
Response: 2.1 & 2.2 – The SDT feels that the linkage between requirements is properly cited in Requirement R3 going back to Requirement R2 and the additional language suggested is not necessary and does not add clarity. No change made.				
Paul B. Johnson	American Electric Power	1	Affirmative	AEP appreciates the extensive efforts by the SDT to develop the version of this standard that is presently before the industry for ballot. The proposed version addresses much of the confusion that exists with the current standards that it will replace. The SDT should be commended for having gone to great lengths to explain the interpretation of this revised standard as part of its reply to industry comments. Adherence to this standard should result in a sufficiently reliable system by narrowing the broad interpretations that have been made of the requirements in the existing standards. AEP believes that the SDT has satisfied enough of FERC's concerns so that FERC will approve this standard if passed by the industry. Therefore, AEP supports approval of this standard. AEP would like to make a suggestion that any future revision of TPL-001-1 should place appropriate restrictions on the use of Special Protection Systems as a permanent solution in the Corrective Action Plan. While AEP recognizes that there are acceptable applications of SPS on a permanent basis, we are concerned that in highly interconnected portions of the grid the use of multiple SPS can cause complex interactions that would be difficult to predict and could lead to unintended consequences. AEP also recognizes that an SPS may be the only practical option on an interim basis.
Raj Rana	American Electric Power	3	Affirmative	
Brock Ondayko	AEP Service Corp.	5	Affirmative	
Edward P. Cox	AEP Marketing	6	Affirmative	

Voter	Entity	Segment	Vote	Comment
Response: Thank you for your response. The SDT will enter a comment in the official NERC issues database on your concern about permanent SPS solutions. That will assure that a future drafting team will address your concern.				
George R. Bartlett	Entergy Corporation	1	Affirmative	Entergy appreciates the work of the drafting team and recognizes the challenges associated with complexities of this effort. Entergy is voting "Affirmative" on the proposed standard but would appreciate the SDT consideration of the following comments in any further efforts to improve the standard: 1. The implementation plan is simply too aggressive. Locating and building transmission facilities continues to become more time consuming. Even lower voltage facilities can take 5 to 7 years to navigate through the various technical and regulatory challenges associated with building these facilities. Entergy would propose extending the implementation plan to 7 years for 230 kV and below, and 10 years for above 230 kV where transmission lines must be constructed. While the SDT has the intent that no penalties be imposed where facilities can not be constructed by the end of the implementation plan, we are concerned that ambiguity may exist may lead to issues should enforcement be left to interpret what is "beyond the control of the Transmission Planner or Planning Coordinator" in R2.7.3 2. 2. P5 in the new table is simply not defined to the extent that a consistent analysis method can be applied throughout the industry. While the process of identifying single points of failure will be time consuming and manpower intensive, it is feasible to complete. However, the consequences of those single points of failure can not be defined with consistency across the industry. Consequences of protection system failures are dependent on fault types, initial system conditions, and other factors which are not and can not be tracked in traditional planning tools. The ambiguities associated with P5 will almost certainly lead to additional standards needs and numerous requests for interpretation. Entergy would propose industry standardized proxies be allowed in lieu of detailed analysis of the interface between protection systems and the delivery aspects of the BES. Proxies could be developed to ensure the industry identifies and avoids events which have recently been associated with single points of failure in a protection system. 3. Entergy believes that more clarity is needed in R2.1.4 and R2.7 concerning sensitivity studies. The determination of when sensitivity study results should warrant mitigation should be left to the Transmission Planner and/or Planning Coordinator. The requirement to document the studies and their results will proved transparency and allow for transmission improvements through normal stakeholder and regulatory processes.

Voter	Entity	Segment	Vote	Comment
Response: 1. The SDT has changed the majority of the implementation timeframe from 60 to 84 months as per your (and others') suggestion. Since problems may not be seen until after the assessments are completed and there is a 24 month implementation for assessments, the total time for items P2-1, P2-2 and P2-3 (above 300 kV), P3-1 through P3-5, P4-1 through P4-5 (above 300 kV), and P5 (above 300 KV) has been increased to 84 months. P1-2 and P1-3 were not increased since they are already being covered by the implementation plan for Project 2010-11: TPL Table 1 Order. Requirement R2, part 2.7.3 - If an entity can demonstrate that they have made a best faith effort to implement the planned solution then there should not be a concern. The wording of the requirement allows an entity this flexibility. 2. The SDT has changed the text for the P5 event as a result of your (and others) comments to address these concerns. **P5**. Delayed Fault Clearing due to the failure of a relay[13] protecting the Faulted element to operate as designed, for a Fault on one of the following: **13**. Applies to the following relay functions or types: pilot (#85), distance (#21), differential (#87), current (#50, 51, and 67), voltage (#27 & 59), directional (#32, & 67), and tripping (#86, & 94). 3. The SDT did not receive any other comments in this regard and believes that the wording is clear. No change made.				
Robert Martinko	FirstEnergy Energy Delivery	1	Affirmative	FirstEnergy appreciates the dedication of the Assess Transmission and Future Needs Standards Drafting Team commends the group for their hard work to bring the proposed TPL-001-1 standard to industry for consideration. The TPL-001-1 standard provides greater compliance clarity than what presently exists in vague and open for interpretation TPL standards. The project appropriately consolidates six existing TPL standards into a single standard, while driving the industry to needed robust planning reviews. The team has carefully considered the industry feedback during the standards development and made many adjustments to better clarify the requirement language. The team is also commended for the improvements made to the Performance Table describing steady-state and stability performance expectations and creating the distinction between Planning Events and Extreme Events. FirstEnergy is voting to AFFIRM the standard and offers the following suggestions to the standards drafting team for areas of improvement and a more appropriate transition to the TPL-001-1 standard. 1) YearOne Definition: FirstEnergy requests that the team consider a change so that Year One is the planning window that begins 12-18 months from the "start" of the current calendar year, and not
Kevin Querry	FirstEnergy Solutions	3	Affirmative	
Douglas Hohlbaugh	Ohio Edison Company	4	Affirmative	
Kenneth Dresner	FirstEnergy Solutions	5	Affirmative	

Voter	Entity	Segment	Vote	Comment
Mark S Travaglianti	FirstEnergy Solutions	6	Affirmative	from the "end" of the calendar year. This change is needed so that minimal adjustments are needed to the ERAG MMWG model building process, which is the basis for planning models used by many within the Eastern Interconnection. The change would still meet the team's intent of requiring the industry to plan beyond current year load periods which are appropriately considered an operating timeframe in the context of TPL-001-1. If the team does not agree to this change for use in the TPL-001-1 standard, we ask the team to consider adding an Entity Variance that would permit the proposed change within the Eastern Interconnection. 2) Implementation Plan: The 60-month transition, as reflected in the team's Implementation Plan, may not be sufficient time for completion of new transmission facilities that may be needed as part of a Corrective Action Plan. The Implementation Plan calls for a 60-month period that is in parallel to the 24-month transition period for completing new model and study expectations per the TPL-001-1 standard. The proposed standard raises study expectations in a number of areas such as removing load shedding for n-1 conditions, more detailed load modeling regarding induction motor loads, developing and documenting transient voltage criterion, etc. FirstEnergy believes it is more appropriate for the 60-month transition for completed Corrective Action Plans to be sequential to the 24-month transitional items. It will take industry some time to transition to the new model and study expectations and industry should be allotted a full 60 months for the completion of major transmission infrastructure that may be included in Corrective Action Plans. 3) Two Near-Term Studies: FirstEnergy supports a need for "fresh" annual steady-state studies being completed for both the Near-Term and Long-Term planning horizons as reflected in requirement 2.1 which states "... be supported by the following annual current studies ...". However, we continue to stress that the need for two studies in the Near-Term horizon (requirement R2.1.1) creates unnecessary burden on industry resources, especially in light that sensitivity analyses are required for each study year. The focus should be that the Transmission Planner needs to cover the entire planning horizon through past and present (current annual) studies and allow the Transmission Planner more latitude to pick the current annual studies. A single present year study within the Near-term and Long-Term planning horizons, supplemented with past studies should be sufficient to effectively interpolate and extrapolate results to cover the entire planning horizon. To the extent a past study remains a qualified past study (as described in the standard in R2.6) we believe the transmission planner should still have discretion to continue to use those studies as their study time period moves forward.

Response: 1. Based on your comment and those of others, the SDT has revised the definition of Year One.

Year One: The first twelve month period that a Planning Coordinator or a Transmission Planner is responsible for assessing. For the Planning Assessment started in a given calendar year, Year One must include the forecasted peak Load period for one of the following two calendar years. For

Voter	Entity	Segment	Vote	Comment
example, if a Planning Assessment was started in 2011, then Year One must include the forecasted peak Load period for either 2012 or 2013. 2. The SDT has changed the majority of the implementation timeframe from 60 to 84 months as per your (and others') suggestion. Since problems may not be seen until after the assessments are completed and there is a 24 month implementation for assessments, the total time for items P2-1, P2-2 and P2-3 (above 300 kV), P3-1 through P3-5, P4-1 through P4-5 (above 300 kV), and P5 (above 300 KV) has been increased to 84 months. P1-2 and P1-3 were not increased since they are already being covered by the implementation plan for Project 2010-11: TPL Table 1 Order. 3. The intent of the SDT wasn't that annual studies are required but that an annual Planning Assessment is required. However, the SDT agrees that the words may have been somewhat confusing. Therefore, the SDT has clarified the wording of Requirement R2 and part 2.1. **Requirement R2** - Each Transmission Planner and Planning Coordinator shall prepare an annual Planning Assessment of its portion of the BES. This Planning Assessment shall use current or qualified past studies, document assumptions, summarize documented results, and cover steady state analyses, short circuit analyses, and Stability analyses. **Requirement R2, part 2.1 -** The Near-Term Transmission Planning Horizon portion of the steady state analysis shall be assessed annually and be supported by current annual studies or qualified past studies as indicated in Requirement R2, part 2.6, as follows:				
William L. Thompson	Dominion Virginia Power	1	Affirmative	o Effective Date - For those raising the bar standards, corrective action plans must be implemented by 60 calendar months. We believe as we have commented previously that for new EHV facilities, this may be difficult to achieve. Our recommendation was to add an additional 24 months to that timeframe. However, they have added Requirement R2.7.3 which allows for situations out of our control to use non-consequential load loss to temporarily resolve violations until the corrective action plans are implemented. Although this does cover us as long as we have a legitimate reason, it does leave to the interpretation of the auditor that the reason is "valid". We therefore still believe more time should be allowed. o Requirement R3.3.2 - Dominion does not agree that the low voltage ride through is a steady-state issue as included in requirement R3.3.2. We foresee demonstrating compliance for this requirement as a difficult if not impossible task hence subjecting the industry to undue non-compliance risk. Furthermore, we believe that low voltage ride through is a dynamic modeling issue covered in requirement R4.3.2. o Assessment time and documentation - Although we do see the need and improvements in the standard, it is clear to Planning that more assessments and documentation will be the end result. It is difficult to determine how much time and resource requirements this will take until we begin implementing the standard. Planning does have a concern that additional resources will be required and have heard this from others in the industry.
Jalal (John) Babik	Dominion Resources, Inc.	3	Affirmative	
Mike Garton	Dominion Resources, Inc.	5	Affirmative	
Louis S Slade	Dominion Resources, Inc.	6	Affirmative	

Voter	Entity	Segment	Vote	Comment
Response: The SDT has changed the majority of the implementation timeframe from 60 to 84 months as per your (and others') suggestion. Since problems may not be seen until after the assessments are completed and there is a 24 month implementation for assessments, the total time for items P2-1, P2-2 and P2-3 (above 300 kV), P3-1 through P3-5, P4-1 through P4-5 (above 300 kV), and P5 (above 300 KV) has been increased to 84 months. P1-2 and P1-3 were not increased since they are already being covered by the implementation plan for Project 2010-11: TPL Table 1 Order. Requirement R2, part 2.7.3 - If an entity can demonstrate that they have made a best faith effort to implement the planned solution then there should not be a concern. The wording of the requirement allows an entity this flexibility. The SDT voltage ride through is not confined to the dynamic period. There are protection requirements that could result in generator tripping and that must be considered in the steady-state analysis. The SDT has clarified the wording of the requirement. **Requirement R3, part 3.3.1 -** Simulate the removal of all elements that the Protection System and other automatic controls are expected to disconnect for each Contingency without operator intervention. The analyses shall include the impact of subsequent: • Tripping of generators where simulations show generator bus voltages or high side of the generation step up (GSU) voltages are less than known or assumed minimum generator steady state or ride through voltage limitations. Include in the assessment any assumptions made. • Tripping of Transmission elements where relay loadability limits are exceeded. The SDT is sensitive to this issue and that is why there is a staggered Implementation Plan. The timeframes are designed to allow entities time to catch up to the new requirements and were derived from a specific question asked of the industry.				
Kim Warren	Independent Electricity System Operator	2	Affirmative	On page 3 of the Implementation Plan it is stated: "For 60 months after the first day of the first calendar quarter following applicable regulatory approval, Corrective Action Plans..." It is unclear how this should be interpreted in those jurisdictions where no regulatory approval is required. For consistency, we recommend the following wording: "For 60 months after the first day of the first calendar quarter following applicable regulatory approval, or, in those jurisdictions where no regulatory approval is required, 60 months after the first day of the first calendar quarter following Board of Trustees adoption, Corrective Action Plans..."
Response: As pointed out in the comment, the wording on page 3 of the Implementation Plan should agree with the wording on page 2. The SDT has made this change. However, due to other comments, the 60 month period has been changed to 84 months. For 84 months after the first day of the first calendar quarter following applicable regulatory approval, or in those jurisdictions where no regulatory approval is required on the first day of the first calendar quarter, 84 months after Board of Trustees adoption, Corrective Action Plans applying to performance elements...				

Voter	Entity	Segment	Vote	Comment
Tom Bowe	PJM Interconnection, L.L.C.	2	Affirmative	PJM is supports the standard because it helps to remove the ambiguity in the existing TPL standards and it promotes actions that will result in an improvement in the reliability of the Bulk Electric System. PJM believes that the draft standard addresses the issues raised in the SAR and by FERC orders 672 and 693. The industry wide webinars conducted during the drafting process were particularly helpful in providing the industry with an additional vehicle to better understand the proposed modifications to the TPL standards and provided an additional avenue for industry feedback to the Standard Drafting Team. While supportive of the standard PJM believes additional clarifying language should be added to the following requirements: R 2.1. The Near-Term Transmission Planning Horizon portion of the steady state analysis shall be assessed annually and be supported by the following annual current studies, supplemented with qualified past studies as indicated in Requirement R2, part 2.6: R 2.1.1. System peak Load for either Year One or year two, and for year five. It should be made clear the intent of the requirement for a "Year One or year two" assessment is to "dovetail" with the operational horizon in order to assess the steady state impact of changes from the system as planned. As currently written, the intent and required depth of the additional "Year One or year two" study is ambiguous.
Response: Part 2.1 is already part of Requirement R2 so no additional reference is required. No change made. Based on your comment and those of others, the SDT has revised the definition of Year One. **Year One:** The first twelve month period that a Planning Coordinator or a Transmission Planner is responsible for assessing. For the Planning Assessment started in a given calendar year, Year One must include the forecasted peak Load period for one of the following two calendar years. For example, if a Planning Assessment was started in 2011, then Year One must include the forecasted peak Load period for either 2012 or 2013.				
Ronald D. Schellberg	Idaho Power Company	1	Affirmative	Recommend the following slight modification to the specified subrequirements of R2 to include clarifying references to R3 and R4 as follows: o 2.1. ...by the following annual current studies in accordance with R3, ... o 2.2. ...by the following annual current study in accordance with R3, ... o 2.4. ... The following studies are required in accordance with R4: o 2.5. ...and be supported in accordance with R4 by current or past studies ...

Voter	Entity	Segment	Vote	Comment
Response: 2.1 & 2.2 – The SDT feels that the linkage between requirements is properly cited in Requirement R3 going back to Requirement R2 and the additional language suggested is not necessary and does not add clarity. No change made. 2.4 – Part 2.4 is already part of Requirement R2 so no additional reference is required. No change made. 2.5 - The SDT feels that the linkage between requirements is properly cited in Requirement R4 going back to Requirement R2 and the additional language suggested is not necessary and does not add clarity. No change made.				
Jason L. Murray	Alberta Electric System Operator	2	Affirmative	While voting affirmative on this standard we agree with the following WECC comments: 1. While draft 5 of this proposed standard is a substantial improvement over the previous drafts and the existing TPL standards, there are still areas where additional clarity is needed. We believe that a workshop, after FERC approval of the standard, where issues can be discussed and clarified will go a long way towards smooth implementation of this proposed standard. Some of the areas that require additional clarification are: o Application of consequential and non-consequential load and the EHV and HV voltage levels o Discussion on what is needed to study the various Planning Events. One example is P5, which involves "failure of a single protection system." 2. We recommend the following slight modification to the specified subrequirements of R2 to include clarifying references to R3 and R4 as follows: o 2.1. The Near-Term Transmission Planning Horizon portion of the steady state analysis shall be assessed annually and be supported by the following annual current studies in accordance with R3, supplemented with qualified past studies as indicated in Requirement R2, part 2.6: o 2.2. The Long-Term Transmission Planning Horizon portion of the steady state analysis shall be assessed annually and be supported by the following annual current study in accordance with R3, supplemented with qualified past studies as indicated in Requirement R2, part 2.6: o 2.4. The Near-Term Transmission Planning Horizon portion of the Stability analysis shall be assessed annually and be supported by current or past studies as qualified in Requirement R2, part 2.6. The following studies are required in accordance with R4: o 2.5. The Long-Term Transmission Planning Horizon portion of the Stability analysis shall be assessed to address the impact of proposed generation additions or changes in that timeframe and be supported in accordance with R4 by current or past studies as qualified in Requirement R2, part 2.6.

Voter	Entity	Segment	Vote	Comment
				The AESO would also like to add that due to provincial acts, regulations, policies and market structure in Alberta, the AESO and Alberta entities involved in the standards process will consider modifications to this standard when adopting it as an Alberta Reliability Standard. In particular we may need to consider rewording the requirements concerning the use of RAS as mitigation for single and multiple contingencies.
Response: 1. The SDT has held several webinars on this project and may well hold another before the project is complete. In addition, the SDT has performed numerous outreach activities to regional entities, sub-committees, etc., on the details of the standard. The project has been presented several times at the NERC Standards Workshops. Once the standard is approved by FERC, the SDT ceases to exist. Therefore, any activities subsequent to that approval would be under general NERC jurisdiction. The SDT suggests that you broach this idea with NERC staff. 2.1 & 2.2 – The SDT feels that the linkage between requirements is properly cited in Requirement R3 going back to Requirement R2 and the additional language suggested is not necessary and does not add clarity. No change made. 2.4 – Part 2.4 is already part of Requirement R2 so no additional reference is required. No change made. 2.5 - The SDT feels that the linkage between requirements is properly cited in Requirement R4 going back to Requirement R2 and the additional language suggested is not necessary and does not add clarity. No change made. Thank you for this information.				
Richard Jones	South Carolina Electric & Gas Co.	5	Negative	"SCE&G appreciates the efforts of the Standard Drafting Team and believes this version of the TPL standard has addressed most of the significant issues found in previous versions. However, SCE&G believes there are several significant issues that need modification or further explanation. 1. SCE&G agrees with other submitted comments that the requirement to complete new transmission construction to meet new performance requirements within 60 months is too short. SCE&G believes that 84 months is more reasonable. 2. SCE&G agrees with comments submitted by Duke Energy that the requirement prohibiting loss of non-consequential load for P1, P2.1 and P3 events is an overreach by the standard into local load quality of service issues, does not provide any real benefit to Bulk Electric System (BES) reliability, and may have unintended negative consequences on reliability and service quality. In many

Voter	Entity	Segment	Vote	Comment
Matt H Bullard	South Carolina Electric & Gas Co.	6	Negative	instances, it may be in the best interest of all involved parties from an overall cost/benefit point of view to allow loss of non-consequential load. The standard should continue to allow Transmission Planners to use discretion regarding loss of non-consequential load, such that Transmission Planners, customers, and local regulators jointly control the decision making when BES reliability is not an issue. 3. SCE&G believes there are still different interpretations of Consequential and Non-Consequential Load loss and how each should be applied or not applied. The Standard drafting team should provide several examples in its response to these comments showing how to apply and not apply Consequential and Non-Consequential Load Loss. Without clear examples, SCE&G believes many request for interpretation will be submitted to NERC by the industry."
Response: 1. The SDT has changed the majority of the implementation timeframe from 60 to 84 months as per your (and others') suggestion. Since problems may not be seen until after the assessments are completed and there is a 24 month implementation for assessments, the total time for items P2-1, P2-2 and P2-3 (above 300 kV), P3-1 through P3-5, P4-1 through P4-5 (above 300 kV), and P5 (above 300 KV) has been increased to 84 months. P1-2 and P1-3 were not increased since they are already being covered by the implementation plan for Project 2010-11: TPL Table 1, footnote b order. 2. The SDT has added footnote #12 to P1, P2-1, and P3 to address your and others' concerns in this area. 12. Note: Non-Consequential Load Loss is being decided in Project 2010-11. When that project is finalized, the resolution will be copied here. 3. The SDT has clarified the issue of Non-Consequential Load Loss as shown above. Providing examples here of what is Non-Consequential Load Loss versus Consequential Load Loss would have no bearing. The words are what matter and the SDT feels that the clarification provided should alleviate your concern.				
Randi Woodward	Minnesota Power, Inc.	1	Negative	1. Requirement 2 - This requirement states that Stability analyses must be performed as part of the annual Planning Assessments. We would like to see the term "Stability analysis" more clearly defined as there are several different types of stability related analysis that can be performed for power systems including: transient stability, voltage stability and small signal stability. 2. Requirement 2.5 - This requirement states that "Stability analysis shall be assessed to address the impact of proposed generation additions or changes." We would like to see the term "proposed generation" more clearly defined. It is our opinion that only planned generation should be included in the Long-Term Transmission Planning Horizon assessment. In most generation queues there is a very large amount of proposed generation which would be impractical to study. These proposed generation additions are typically included in a System Impact Study which ultimately determines the transmission upgrades required for interconnection. 3. Requirement 2.1.5 - This requirement states that potential impact of the unavailability of major Transmission equipment be assessed annually for equipment (such as transformers) with long

Voter	Entity	Segment	Vote	Comment
				delivery lead times. We believe that it should be acceptable for a Transmission Owner to maintain a spare equipment plan that includes a reliability assessment. This plan would be reviewed and updated annually. We don't believe that a detailed assessment, as part of the Near-Term Transmission Planning Horizon assessment is warranted. 4. Requirement 4.1.2 - This requirement states that apparent impedance swings resulting from generator loss of synchronism shall not result in the tripping of any Transmission System elements. We believe that this requirement, as worded, precludes the use of transmission line out-of-step tripping relays to effectively island or isolate larger blocks of generation that have lost synchronism with the BES. 5. Requirement 4.3.3 - This requirement states that the assessments should simulate the impact of transient swings on Protection System operation. This would imply that detailed models of all transmission protection elements be included in the stability analysis. We believe that this is impractical due to the large number of relays that would need to be modeled. The standard should state that the use of a relay scanning model is an acceptable alternative to using detailed relay models. A scanning model typically monitors the apparent impedance for an established set of transmission lines and flags when the apparent impedances encroach on a classical 3-zone set of distance relay characteristics based on the monitored line impedance.

Response: 1. The SDT intended for the term Stability analysis to include system Stability and unit Stability analyses. These analyses could include all three aspects of Stability that you mentioned. It is left up to the judgment of the Planning Coordinator/Transmission Planner to decide which aspects of Stability may produce more severe results and therefore, must be analyzed. No change made.

2. Each Transmission Planner is governed by rules for when and how proposed generation units will be included in analyses. The current wording of the requirement is to allow for this degree of flexibility to remain part of the planning process. No change made.

3. The SDT has clarified the requirement based on your comments and those of others.

> **Requirement R2, part 2.1.5** - When an entity's spare equipment strategy could result in the unavailability of major Transmission equipment that has a lead time of one year or more (such as a transformer), the impact of this possible unavailability on System performance shall be studied. The studies shall be performed for the P0, P1, and P2 categories identified in Table 1 with the conditions that the System is expected to experience during the possible unavailability of the long lead time equipment.

4. Requirement R4, part 4.1.2 – The SDT agrees that you can't use an out-of-step relay and that the situation you described is a system Stability issue and is considered an application for an SPS which is allowed by the standard. No change made.

5. The SDT has revised Requirement R4, part 4.3.1, bullet #3 to address this concern.

> **Requirement R4, part 4.3.1 -** Simulate the removal of all elements that the Protection System and other automatic controls are expected to disconnect

Voter	Entity	Segment	Vote	Comment
for each Contingency without operator intervention. The analyses shall include the impact of subsequent: • Successful high speed reclosing and unsuccessful high speed reclosing into a Fault. • Tripping of generators where simulations show generator bus voltages or high side of the GSU voltages are less than known or assumed generator low voltage ride through capability. Include in the assessment any assumptions made. • Tripping of Transmission lines and transformers where transient swings cause Protection System operation based on generic or actual relay models.				
Robert Pellegrini	United Illuminating Co.	1	Negative	1. Section 2 of the standard requires annual assessment of the system regardless of whether system conditions are essentially unchanged from year to year. This creates unnecessary study work and must be changed in order for UI to support the standard. 2. In Table 1 - Steady State & Stability Performance Planning Events, Category P5 wording for the EHV contingency continues to call for no loss of load in the event of the loss of a single protection system. This requirement as currently worded goes well beyond the intent of the Standard Committee as stated in response to comments as follows: "A Protection System component failure (i.e., battery) that removes multiple Protection System schemes is beyond the P5 planning event". It is UI's opinion that similar language excluding battery system failures should be incorporated into this requirement. 3. UI is concerned that the standard is completely silent regarding base case assumptions and stress levels (loads and interface transfers). The standard should provide some direction or statement of objective regarding base case development and sensitivity testing requirements. For example, the standard should include some statement(s) such as, "base cases(and/or) sensitivity testing must include consideration of reasonable unplanned and planned generation outages". On the other hand UI does not suggest trying to precisely describe the number of generators that should be assumed out of service in this national standard.
Response: 1. The intent of the SDT wasn't that annual studies are required but that an annual Planning Assessment is required. However, the SDT agrees that the words may have been somewhat confusing. Therefore, the SDT has clarified the wording of Requirement R2 and part 2.1. **Requirement R2** - Each Transmission Planner and Planning Coordinator shall prepare an annual Planning Assessment of its portion of the BES. This Planning Assessment shall use current or qualified past studies, document assumptions, summarize documented results, and cover steady state analyses, short circuit analyses, and Stability analyses. **Requirement R2, part 2.1 -** The Near-Term Transmission Planning Horizon portion of the steady state analysis shall be assessed annually and be supported by current annual studies or qualified past studies as indicated in Requirement R2, Part 2.6, as follows:				

Voter	Entity	Segment	Vote	Comment
2. The SDT has changed the text for the P5 event as a result of your (and others) comments to address these concerns. **P5**. Delayed Fault Clearing due to the failure of a relay[13] protecting the Faulted element to operate as designed, for a Fault on one of the following: **13**. Applies to the following relay functions or types: pilot (#85), distance (#21), differential (#87), current (#50, 51, and 67), voltage (#27 & 59), directional (#32, & 67), and tripping (#86, & 94). 3. The SDT is trying to provide guidance without being overly prescriptive. Projected System conditions as well as the types of sensitivities that need to be studied are described. No change made.				
Dan R. Schoenecker	Midwest Reliability Organization	10	Negative	1. Section 2.5 proposed generation is too broad and overly inclusive. It should be replaced with planned or committed. 2. We have a concern that the timeframe of 60-month (5 year) for implementing Corrective Action Plans (CAP), is insufficient. We believe that the implementation timeframe must be extended to seven (7) years. We are aware of Requirement 2.7.3, which covers situations that arise beyond the control of the Transmission Planner (TP) or Planning Coordinator (PC), but believes that the proposed language is ambiguous and maybe problematic for compliance. 3. We believe the spare equipment language doesn't belong in the standard. Whether a Transmission Owner has spare equipment is a risk for that Transmission Owner to evaluate and then take responsibility for the decision. For the Planning Coordinator, inclusion of the spare equipment language would mean that for each Transmission Owner's piece of equipment that cannot be replaced within one year 3 more base cases would need to be run for each season and load level, which may lead to an excessive amount of base case development with little resulting benefit to reliability.
Response: 1. Each Transmission Planner is governed by rules for when and how proposed generation units will be included in analyses. The current wording of the requirement is to allow for this degree of flexibility to remain part of the planning process. No change made. 2. The SDT has changed the majority of the implementation timeframe from 60 to 84 months as per your (and others') suggestion. Since problems may not be seen until after the assessments are completed and there is a 24 month implementation for assessments, the total time for items P2-1, P2-2 and P2-3 (above 300 kV), P3-1 through P3-5, P4-1 through P4-5 (above 300 kV), and P5 (above 300 KV) has been increased to 84 months. P1-2 and P1-3 were not increased since they are already being covered by the implementation plan for Project 2010-11: TPL Table 1 Order. Requirement R2, part 2.7.3 - If an entity can demonstrate that they have made a best faith effort to implement the planned solution then there should not be a concern. The wording of the requirement allows an entity this flexibility. 3. The SDT has clarified the requirement based on your comments and those of others. **Requirement R2, part 2.1.5** - When an entity's spare equipment strategy could result in the unavailability of major Transmission equipment that has a				

Voter	Entity	Segment	Vote	Comment
lead time of one year or more (such as a transformer), the impact of this possible unavailability on System performance shall be studied. The studies shall be performed for the P0, P1, and P2 categories identified in Table 1 with the conditions that the System is expected to experience during the possible unavailability of the long lead time equipment.				
Roger C Zaklukiewicz	Roger C Zaklukiewicz	8	Negative	1. There does not appear to be a resolution to the issue of BES definition 2. A concern that too many years are required to be studied annually. Are this many studies required especially if there are no substantial transmission infrastructure additions or modifications and virtually no generation resource additions or retirements. 3. At state siting hearings, the Standard has to address the appropriate use of 90/10 or 50/50 peak load forecasts, the requirement to maintain established intra- and inter-transfer limit levels under stressed conditions. Also, more specific requirements regarding appropriate generation dispatches for area studies and large area or regional load flow and voltage studies. 4. Re-think the need or justification for modeling loads dynamically. Simulations of actual system disturbances have represented past actual system responses with a high degree of accuracy.

Response: 1. The SDT does not believe that it needs to define BES. In their March 18th orders, FERC suggested a continent-wide definition of BES. No change made.

2. The intent of the SDT wasn't that annual studies are required but that an annual Planning Assessment is required. However, the SDT agrees that the words may have been somewhat confusing. Therefore, the SDT has clarified the wording of Requirement R2 and part 2.1.

> **Requirement R2** - Each Transmission Planner and Planning Coordinator shall prepare an annual Planning Assessment of its portion of the BES. This Planning Assessment shall use current or qualified past studies, document assumptions, summarize documented results, and cover steady state analyses, short circuit analyses, and Stability analyses.
>
> **Requirement R2, part 2.1 -** The Near-Term Transmission Planning Horizon portion of the steady state analysis shall be assessed annually and be supported by current annual studies or qualified past studies as indicated in Requirement R2, part 2.6, as follows:

3. The SDT is trying to provide guidance without being overly prescriptive. Projected System conditions as well as the types of sensitivities that need to be studied are described. No change made.

4. Dynamic load modeling is important for correct dynamic simulations. Industry has acknowledged the need for accurate Load modeling and the SDT has codified this need in the proposed standard. No change made.

Voter	Entity	Segment	Vote	Comment
James Tucker	Deseret Power	1	Negative	1. While draft 5 of this proposed standard is a substantial improvement over the previous drafts and the existing TPL standards, there are still areas where additional clarity is needed. We believe that a workshop, after FERC approval of the standard, where issues can be discussed and clarified will go a long way towards smooth implementation of this proposed standard. Some of the areas that require additional clarification are: o Application of consequential and non-consequential load and the EHV and HV voltage levels o Discussion on what is needed to study the various Planning Events. One example is P5, which involves "failure of a single protection system." 2. We recommend the following slight modification to the specified subrequirements of R2 to include clarifying references to R3 and R4 as follows: o 2.1. The Near-Term Transmission Planning Horizon portion of the steady state analysis shall be assessed annually and be supported by the following annual current studies in accordance with R3, supplemented with qualified past studies as indicated in Requirement R2, part 2.6: o 2.2. The Long-Term Transmission Planning Horizon portion of the steady state analysis shall be assessed annually and be supported by the following annual current study in accordance with R3, supplemented with qualified past studies as indicated in Requirement R2, part 2.6: o 2.4. The Near-Term Transmission Planning Horizon portion of the Stability analysis shall be assessed annually and be supported by current or past studies as qualified in Requirement R2, part 2.6. The following studies are required in accordance with R4: o 2.5. The Long-Term Transmission Planning Horizon portion of the Stability analysis shall be assessed to address the impact of proposed generation additions or changes in that timeframe and be supported in accordance with R4 by current or past studies as qualified in Requirement R2, part 2.6 3. Table 1-P5 Multiple Contingencies (Fault plus Protection System failure to operate) Normal System. There is a significant change in the system normal performance required for EHV systems from the current performance required in TPL-003 (Category C). This TPL-001-1 version does not allow any Non-Consequential load loss (table 1) or firm Demand (note 9) for EHV systems in the event of protection system failure and delayed clearing. This performance requirement would thus preclude use of existing protection systems that rely on remote clearing of interconnected EHV lines or stations if they provide local load service. As written the standard essentially now requires Category B performance rather than Category C performance for multiple contingencies. It is Deseret's opinion

Voter	Entity	Segment	Vote	Comment
				that loss of Non-Consequential load or firm Demand should be allowed for the rare event involving multiple contingencies stated in P5 as long at the load or firm Demand loss is contained and controlled in the local load service area and the event does not impact other interconnected utilities or their loads. 4) Table 1 - Steady State & Stability Performance Planning Events Category P5 (Multiple Contingency (Fault plus Protection System failure to operate). Category P5 requires responsible entities to study the Event titled Failure of a single Protection System that results in Delayed Fault Clearing on one of the following: Generator, Transmission Circuit, Transformer, Shunt Device, or Bus Section. It appears that this requirement is an indication that multiple protection system failure is not allowed under the proposed TPL-001-1. This appears to be a requirement for redundant protection systems for all possible events on all voltage levels of the transmission system. It also appears that this requirement is attempting to define what comprises an adequate protection system. As the draft standard is presently written it appears that multiple protection system failures are not included in this part or any part of the draft TPL-001-1 standard. As written, it is Deseret's view that any multiple protection system failure would be categorized as an Extreme Event under the draft TPL-001-1 standard. Deseret contends that the many and varied issues associated with designing appropriate protection systems should be done in the context of the development of a protection system standard and not in the context of TPL-001-1. In fact, there is currently a proposed standard going through the NERC standards development process which goal is exactly that. If the standards drafting team intends to require responsible entities to have 100% redundant protection systems on all of its BES facilities, Deseret contends that this fact should be stated up front in the standard so that all interested parties may become aware of this requirement and provide informed comment. Deseret believes that it is appropriate to wait until the current protection system redundancy standard under development proceeds through the SAR process and approval system, given that this in an important generic issue that affects the entire industry. Notwithstanding the inappropriateness of raising the protection system issue in the context of a planning standard, Deseret believes that any planning requirement that includes the failure of a single protection system that results in delayed fault clearing must have a very clear definition of the terms "single protection system" and "delayed fault clearing" in or for entities to determine what compliance with the standard requires. The draft TPL-001-1 standard does not have clear definitions of these terms, leaving room for considerable latitude for interpretation by various responsible entities, auditors, and compliance enforcement authorities. Clear, specific, and technically defensible language is needed for these terms.
Response: 1. The SDT has held several webinars on this project and may well hold another before the project is complete. In addition, the SDT has performed numerous outreach activities to regional entities, sub-committees, etc., on the details of the standard. The project has been presented several times at the NERC Standards Workshops. Once the standard is approved by FERC, the SDT ceases to exist. Therefore, any activities subsequent to that approval would be under				

Voter	Entity	Segment	Vote	Comment
general NERC jurisdiction. The SDT suggests that you broach this idea with NERC staff. The SDT feels that the linkage between requirements is properly cited in Requirement R3 going back to Requirement R2 and the additional language suggested is not necessary and does not add clarity. No change made. Part 2.4 is already part of Requirement R2 so no additional reference is required. No change made. The SDT feels that the linkage between requirements is properly cited in Requirement R4 going back to Requirement R2 and the additional language suggested is not necessary and does not add clarity. No change made. The SDT agrees that the bar has been raised for the EHV system in that no planned Load shedding (Non-Consequential Load Loss) is permitted for the P5 condition beyond Protection System clearing that responds to the studied P5 event. All Load removed by the Protection System isolating the Fault is Consequential Load Loss for the event. The SAR for this standard recognized FERC orders which indicated a need to "raise the bar" for the industry. The SDT agrees with this premise and is attempting to do this in a reasonable fashion. No change made. The SDT has changed the text for the P5 event as a result of your (and others) comments to address these concerns. **P5**. Delayed Fault Clearing due to the failure of a relay[13] protecting the Faulted element to operate as designed, for a Fault on one of the following: **13**. Applies to the following relay functions or types: pilot (#85), distance (#21), differential (#87), current (#50, 51, and 67), voltage (#27 & 59), directional (#32, & 67), and tripping (#86, & 94).				
Bernard Pelletier	Hydro-Quebec TransEnergie	1	Negative	The reason for the No vote cast by HQT is that HQT still believe that the EHV and HV threshold defined as a fixed voltage (300 kV) on footnote 3 of Table 1 is too prescriptive, and unnecessary, for NPCC Members using a performance base methodology to determine elements of the BPS. HQT believes that if the 300 kV threshold was introduced as a necessity to reduce the BES portion of the system subject to the Standard in some region with a 100 kV bright line definition of BES so that entities in these regions do not incur prohibitive spending to respect this Standard, there should also be a way to accommodate NPCC Member's use of a performance methodology to determine on which elements to apply the Standards without having entities guessing the way Compliance will be implemented for this Standard in regard to specific voltage threshold. For HQT's system, EHV should correspond to 735 kV since more than half of our 315 kV substations directly supply load. The SDT gave this answer as the rational for choosing the 300 kV threshold when they replied to HQT concerns about the EHV voltage definition as 300 kV and over, in the first posting of the Standard : Â« Systems operated above 300 kV generally do not directly serve end-use Load customers but rather act as the medium for moving large amounts of power from production to various Load centers where the energy is then delivered by other Transmission or sub-Transmission Systems to end use customers... Obviously the intent of the SDT when choosing a 300 kV threshold do not correspond to the reality of HQTs system characteristic. HQT agrees with the intent of the SDT to raise the bar in that important Standard but disagree with having to systematically apply the

Voter	Entity	Segment	Vote	Comment
				Standard to all 300 kV and above system. One way to clarify the Standard would be to mentioned in the footnote 3 that :`` In the region where there is a performance base methodology to determine BES element, these BES elements would be subject to the Standard; in other region, the 300 kV threshold would apply.
Response: This standard applies to the BES. If there are areas of your system that are not BES, then the standard doesn't apply to them. This would be true even if those elements are above 300 kV. No change made.				
Donald Gilbert	JEA	5	Negative	Although this proposed standard places additional burden of proof upon JEA's Transmission Planning process, JEA finds the overall direction of the standard requirements prudent. JEA appreciates the allowance of Non-Consequential Load Loss afforded in provision 2.7.3 where documented circumstances outside the control of the TP or PC suffice; however, JEA is concerned that there are some limited prudent cases where consumers, local jurisdictions, and state jurisdictions may find it prudent to plan on some Non-Consequential Load Loss in order to defer building transmission infrastructure (just for the purpose to serve speculative load growth) for the overall benefit of the consumer. Therefore, concerning the prohibition of Non-Consequential Load Loss, JEA proposes the addition to the standard that allows the use of Non-Consequential Load Loss for local area load for planning events where it is not presently allowed. In Â¶1794 of Order 693, FERC stated "Regarding the comments of Entergy and Northern Indiana that the Reliability Standard should allow entities to plan for the loss of firm service for a single contingency, the Commission finds that their comments may be considered through the Reliability Standards development process. However, we strongly discourage an approach that reflects the lowest common denominator." Clearly, FERC did not direct NERC to eliminate "all" use of Non-Consequential Load Loss for single contingencies, but rather stated that its use should be "considered through the Reliability Standards development process". Therefore, the SDT should define "local area" where load loss is allowed and either set limits on how much load can be lost or a reporting requirement to ensure transparency concerning this planning practice. I propose that the standard should define "local area" as the load that is located on a single loop between two BES sources and limit the Non-Consequential Load Loss to the amount of Consequential Load Loss that would occur if the networked loop of load serving stations were sectionalized such that the loop operated as two radial circuits. The Standard could further require the TP or PC to document the results of both simulations with and without the sectionalization of the loop comparing the levels of Non-Consequential Load Loss to the level of Consequential load loss." This approach would clearly not be "a least common denominator approach", but rather a practical manner to allow the balance between transmission expansion costs and the limited risk to the local load within an area.

Voter	Entity	Segment	Vote	Comment
Response: The SDT has added footnote #12 to P1, P2-1, and P3 to address your and others concerns in this area. 12. Note: Non-Consequential Load Loss is being decided in Project 2010-11. When that project is finalized, the resolution will be copied here.				
Kirit S. Shah	Ameren Services	1	Negative	Ameren appreciates the diligence and dedication of the Standard Drafting Team and commends the group for their hard work to bring the proposed standard TPL-001-1 to this level. We have seen considerable improvements to the proposed standard from earlier versions and note the positive changes to many of the requirements. We also recognize that the overall language of the standard has improved to enhance its readability and the language and format of the Tables now provides a clear understanding of acceptable System performance for the various Planning Events. However, inasmuch as the proposed Standard has improved, we cannot support the approval of this document at this time. 1. We disagree with the proposed definition of Year One. We believe that Year One should be the planning window that begins 12-18 months from the start of the current calendar year, and not from the end of the calendar year. We believe that following this modification to the definition would require minimal adjustments to the ERAG MMWG model building process, which we all use as the basis for our planning models. Following the proposed definition would require additional models to be built by the MMWG or lead to holes in the model building effort for both the operating and planning horizons. 2. We do not believe that 60 months is a reasonable time period to build transmission facilities to meet the new performance requirements. Building a transmission line in Illinois is estimated to take 7 years (84 months) from the time the project is authorized. Though requirement R2.7.3 is included to address situations beyond the control of the Transmission Planner, it leaves to the interpretation of the auditor whether the appropriate actions are being taken to resolve the issue that would continue to allow dropping of Non-Consequential Load or curtailment of Firm Transmission Service. 3. We have concerns for including induction motor representations in the load models without any study or bench-marking activities to meet the requirements of R2.4.1. Although the proposed standard offers that an aggregate System Load model which represents the overall dynamic behavior of the Load is acceptable (to relieve the burden of trying to develop specific induction motor load representation at each load bus), we believe that the modeled System response will be considerably different compared to the actual System response in some parts of the System which will open up the industry to additional scrutiny, such as the Compliance Inquiry (CIQ) and/or Compliance Violation Investigation (CVI). 4. We do not agree that low voltage ride-through is a steady-state issue as included in requirement

Voter	Entity	Segment	Vote	Comment
				R3.3.2. We believe that low voltage ride-through is a dynamic modeling issue as correctly included in requirement R4.3.2. 5. We have concerns that the dynamics models cannot support the additional data requirements to include actual impedance relay models for all transmission facilities to meet the requirements of R4.1.2 and R4.3.3. In an attempt to relieve our concerns, the SERC presenters indicated that generic PSS/E impedance relay models could be included in the dynamics models. However, we also have concerns for using generic PSS/E impedance relay models as the actual impedance relays may be set differently than the generic PSS/E relay models which will open up the industry to additional scrutiny, such as the Compliance Inquiry (CIQ) and/or Compliance Violation Investigation (CVI).

Response: 1. Based on your comment and those of others, the SDT has revised the definition of Year One.

> **Year One:** The first twelve month period that a Planning Coordinator or a Transmission Planner is responsible for assessing. For the Planning Assessment started in a given calendar year, Year One must include the forecasted peak Load period for one of the following two calendar years. For example, if a Planning Assessment was started in 2011, then Year One must include the forecasted peak Load period for either 2012 or 2013.

2. The SDT has changed the majority of the implementation timeframe from 60 to 84 months as per your (and others') suggestion. Since problems may not be seen until after the assessments are completed and there is a 24 month implementation for assessments, the total time for items P2-1, P2-2 and P2-3 (above 300 kV), P3-1 through P3-5, P4-1 through P4-5 (above 300 kV), and P5 (above 300 KV) has been increased to 84 months. P1-2 and P1-3 were not increased since they are already being covered by the implementation plan for Project 2010-11: TPL Table 1 Order. Requirement R2, part 2.7.3 - If an entity can demonstrate that they have made a best faith effort to implement the planned solution then there should not be a concern. The wording of the requirement allows an entity this flexibility.

3. The SDT assumes that you are referring to the induction motor Load modeling required for Stability studies. The standard permits an aggregate model assumption that can be applied for a given system that is not substation specific. The SDT believes that 24 months is an adequate time period to accomplish this task. Dynamic load modeling is important for correct dynamic simulations. Industry has acknowledged the need for accurate Load modeling and the SDT has codified this need in the proposed standard. No change made.

4. The SDT voltage ride through is not confined to the dynamic period. There are protection requirements that could result in generator tripping and that must be considered in the steady-state analysis. The SDT has clarified the wording of the requirement.

> **Requirement R3, part 3.3.1 -** Simulate the removal of all elements that the Protection System and other automatic controls are expected to disconnect for each Contingency without operator intervention. The analyses shall include the impact of subsequent:
>
> - Tripping of generators where simulations show generator bus voltages or high side of the generation step up (GSU) voltages are less than known or assumed minimum generator steady state or ride through voltage limitations. Include in the assessment any assumptions made.
> - Tripping of Transmission elements where relay loadability limits are exceeded.

Voter	Entity	Segment	Vote	Comment
5. 4.3.3 - The SDT has revised Requirement R4, part 4.3.1, bullet #3 to address this concern. **Requirement R4, part 4.3.1 -** Simulate the removal of all elements that the Protection System and other automatic controls are expected to disconnect for each Contingency without operator intervention. The analyses shall include the impact of subsequent: • Successful high speed reclosing and unsuccessful high speed reclosing into a Fault. • Tripping of generators where simulations show generator bus voltages or high side of the GSU voltages are less than known or assumed generator low voltage ride through capability. Include in the assessment any assumptions made. • Tripping of Transmission lines and transformers where transient swings cause Protection System operation based on generic or actual relay models.				
Robert D Smith	Arizona Public Service Co.	1	Negative	APS proposes that the standard allows the use of Non-Consequential Load Loss for local area load for P1 events. The current requirements may pose significant burden without appropriate benefits. As currently written APS does not believe that 60 months is a reasonable time period to build transmission facilities to meet the new performance requirements. Building a transmission line can often take more than 5 years to complete from the time the project is authorized. Though requirement R2.7.3 is included to address situations beyond the control of the Transmission Planner, it leaves to the interpretation of the audit whether the appropriate actions are being taken to resolve the issue. APS proposes that the requirement be changed to 84 months.
Response: The SDT has added footnote #12 to P1, P2-1, and P3 to address your and others concerns in this area. 12. Note: Non-Consequential Load Loss is being decided in Project 2010-11. When that project is finalized, the resolution will be copied here. The SDT has changed the majority of the implementation timeframe from 60 to 84 months as per your (and others') suggestion. Since problems may not be seen until after the assessments are completed and there is a 24 month implementation for assessments, the total time for items P2-1, P2-2 and P2-3 (above 300 kV), P3-1 through P3-5, P4-1 through P4-5 (above 300 kV), and P5 (above 300 KV) has been increased to 84 months. P1-2 and P1-3 were not increased since they are already being covered by the implementation plan for Project 2010-11: TPL Table 1 Order. Requirement R2, part 2.7.3 - If an entity can demonstrate that they have made a best faith effort to implement the planned solution then there should not be a concern. The wording of the requirement allows an entity this flexibility.				
John Tolo	Tucson Electric Power Co.	1	Negative	As currently written it is believed that 60 months is not a reasonable time period to build transmission facilities to meet the new performance requirements. Regional and local planning and review process, permitting, siting, legal challenges, routing, and system path rating process can often take more than 5 years to complete from the time the project is authorized. Category P2 requires responsible entities to study the opening of a line section without a fault. The

Voter	Entity	Segment	Vote	Comment
				standard as written states that the opening of this line section will not result in consequential load loss and no voltage or thermal violations will occur on the BES. This requirement should not be applicable to all HV facilities. From a reliability perspective, a more effective and efficient method would be a bifurcated functional requirement rather than a voltage requirement. This TPL-001-1 version does not allow any Non-Consequential load loss (table 1) or firm Demand (note 9) for EHV systems in the event of protection system failure and delayed clearing. This performance requirement would thus preclude use of existing protection systems that rely on remote clearing of interconnected EHV lines or stations if they provide local load service. Category P5 requires responsible entities to study the Event titled Failure of a single Protection System that results in Delayed Fault Clearing on one of the following: Generator, Transmission Circuit, Transformer, Shunt Device, or Bus Section. It appears that this requirement is an indication that multiple protection system failure is not allowed under the proposed TPL-001-1. This appears to be a requirement for redundant protection systems for all possible events on all voltage levels of the transmission system. It also appears that this requirement is attempting to define what comprises an adequate protection system. Many and varied issues associated with designing appropriate protection systems should be done in the context of the development of a protection system standard and not in the context of TPL-001-1. TPL-001-1 has added requirement 2.1.5 discussing spare equipment and lead times and inclusion in the "Planning Assessment". The standard in this section is not performance based requirement but an activity based requirement as currently stated under R2 2.1.5. The standard should be revised and 2.1.5 removed as it does not directly improve the systems performance requirements nor compliance stated in Table 1.

Response: The SDT has changed the majority of the implementation timeframe from 60 to 84 months as per your (and others') suggestion. Since problems may not be seen until after the assessments are completed and there is a 24 month implementation for assessments, the total time for items P2-1, P2-2 and P2-3 (above 300 kV), P3-1 through P3-5, P4-1 through P4-5 (above 300 kV), and P5 (above 300 KV) has been increased to 84 months. P1-2 and P1-3 were not increased since they are already being covered by the implementation plan for Project 2010-11: TPL Table 1 Order.

The SDT believes that the addition of footnote 12 (when it is finalized) will address your concern.

The SDT has added footnote #12 to P1, P2-1, and P3 to address your and others concerns in this area.

12. Note: Non-Consequential Load Loss is being decided in Project 2010-11. When that project is finalized, the resolution will be copied here.

The SDT has clarified the requirement based on your comments and those of others.

Requirement R2, part 2.1.5 - When an entity's spare equipment strategy could result in the unavailability of major Transmission equipment that has a lead time of one year or more (such as a transformer), the impact of this possible unavailability on System performance shall be studied. The studies shall

Voter	Entity	Segment	Vote	Comment
be performed for the P0, P1, and P2 categories identified in Table 1 with the conditions that the System is expected to experience during the possible unavailability of the long lead time equipment.				
Brandy A Dunn	Western Area Power Administration	1	Negative	As drafted the standard TPL-001-1 has added requirement 2.1.5 discussing spare equipment strategy and lead times and inclusion in the “Planning Assessment”. The standard in this section is not a performance based requirement but an activity based requirement as currently stated under R2 2.1.5. We recommend that the standard be revised and 2.1.5 removed as it does not directly improve the systems performance requirements nor compliance stated in Table 1.
Joseph S. Stonecipher	Beaches Energy Services	1	Negative	We believe that requirement 2.1.5 on spare equipment strategy is discriminatory for smaller entities. For many smaller entities, having a spare transformer is not a practical solution and makes far less sense and has significantly more customer rate impacts than for a larger utility. Yes, it may be possible to arrange an agreement with a neighboring entity for use of their spare, but that assumes that the neighboring entity's transformer specifications are similar enough for use as a spare, which may not be the case. Order 693 states at Paragraph 1725: "... the Commission directs the ERO to modify the planning Reliability Standards to require the assessment of planned outages consistent with the entity’s spare equipment strategy". The standard oversteps this direction by not including a consideration of planned outages versus forced outages in requirement 2.1.5, in other words, if an entity has no plans for a long term outage of a transformer, it should be excluded from the assessment of 2.1.5. Such a condition would allow an entity to assess things like gas in oil analysis to predict when a long term outage might be planned, and the flexibility between start and end dates of that planned outage.
Bruce Merrill	Lincoln Electric System	3	Negative	Requirement 2.1.5 should only address known planned outages of major Transmission equipment that has a lead time of one year or more. As currently drafted requirement 2.1.5 does not specify whether it includes both forced outages and planned outages. Requirement 2.1.5 also does not specify that system adjustments are allowed since adjustments are not allowed in categories P0, P1, and P2. Without system adjustments the requirement 2.1.5 would always produce more severe System impacts than the categories P0, P1, and P2 in Table 1. Allowing System adjustments would make requirement 2.1.5 (P1) match category P6, yet requirement 2.1.5 (P2) would still result in more
Dennis Florom	Lincoln Electric System	5	Negative	

Voter	Entity	Segment	Vote	Comment
Eric Ruskamp	Lincoln Electric System	6	Negative	severe System impacts than currently contemplated in the TPL-001-1 Standard. It appears that requirement 2.1.5 would greatly increase the study work by requiring a new base case for each unique Transmission equipment and repeating the associated contingency analysis. Would Correction Action Plans be required for requirement 2.1.5, whereas, they do not need to be developed solely to meet the performance requirements for a single sensitivity?
Response: The SDT has clarified the requirement based on your comments and those of others. **Requirement R2, part 2.1.5** - When an entity's spare equipment strategy could result in the unavailability of major Transmission equipment that has a lead time of one year or more (such as a transformer), the impact of this possible unavailability on System performance shall be studied. The studies shall be performed for the P0, P1, and P2 categories identified in Table 1 with the conditions that the System is expected to experience during the possible unavailability of the long lead time equipment.				
Elizabeth Howell	ITC Transmission	1	Negative	As written, the balloted standard is a significant advancement over the past planning standards. It raises the bar for the EHV system (>300kV) and is a significant step forward toward the desired improvement in the North American electric grid. The detailed requirements along with the Table 1 performance expectations for Planning Events should result in Corrective Action Plans that improve the electric grid in measurable ways. The additional specifications to insure that load will not be lost, intentionally or otherwise, during relatively routine system outages reinforces the value of reliability standards. While ITC recognizes the significant improvement in the Planning Standard and applauds the Standard Drafting Team (SDT) for constructing this new document, we believe minor changes are still needed to provide clarity to the standard to avoid possible miss-interpretation of the intent of the SDT during compliance audits and the potential for unnecessary duplication of study effort in areas if differences between the studies conditions are relatively small. Minimally, ITC feels additional guidelines need to be supplied for some of the decisions left to engineering judgment, such as in R2.5 where it is clear as to the need for studies of "new" generation, no "minimum" size is indicated. Additional guidelines should be added to the standard and the Reliability Standard Audit Worksheet (RSAW) should be completed prior to balloting the standard. ITC is concerned about the mandatory need for the three distinct studies as required in R2.1 and R2.2 if the differences between the prevalent conditions are projected to be small. For example, if a systems load changes are insignificant between years 1 or 2 and year 5, and other conditions changes such as generation additions, power flow patterns and other are small for the system under study. The same issue may exist between year 5 and years 6 through 10 Under such conditions these studies may not be prudent and necessary to thoroughly evaluate the systems performance. ITC

Voter	Entity	Segment	Vote	Comment
				agrees with the SDT that the three studies make sense and are prudent when a system's conditions are changing. A review of how this section in the standard might be warranted. While a spare equipment strategy is a good idea, R2.1.5, the requirement should be clear to avoid compliance violations for the implications of a major piece of equipment failure with or without spare equipment. Until this is clearer for both Planners and auditors or an RSAW is available, there is a greater likelihood for compliance issues. ITC also has concerns regarding requirements R3.3.2 and R4.3.2 regarding Low Voltage Ride Through (LVRT). Both require tripping of generators when "voltages are less than known or assumed generator low voltage ride through capability". This means the planner either knows the limit or assumes one. For ITC, we only trip for "known" limits, such as those for wind generators. Our policy is to not "assume" LVRT. A concern is if a LVRT is not assumed for all plants will a transmission company be found not compliant. This should be made clearer either in the standard or in an RSAW. For these reasons, ITC is voting no at this time. ITC would like to see the SDT add clarity to the sections identified above or develop a Reliability Standard Audit Worksheet to accompany the standard being ballotted. Please feel free to contact us if you have questions regarding our comments.

Response: The SDT has clarified the requirement wording to address your concern.

> **Requirement R2, part 2.5 -** The Long-Term Transmission Planning Horizon portion of the Stability analysis shall be assessed to address the impact of proposed material generation additions or changes in that timeframe and be supported by current or past studies as qualified in Requirement R2, part2.6. The technical rationale for determining material changes shall be documented.

The intent of the SDT wasn't that annual studies are required but that an annual Planning Assessment is required. However, the SDT agrees that the words may have been somewhat confusing. Therefore, the SDT has clarified the wording of Requirement R2 and part 2.1.

> **Requirement R2** - Each Transmission Planner and Planning Coordinator shall prepare an annual Planning Assessment of its portion of the BES. This Planning Assessment shall use current or qualified past studies, document assumptions, summarize documented results, and cover steady state analyses, short circuit analyses, and Stability analyses.

> **Requirement R2, part 2.1 -** The Near-Term Transmission Planning Horizon portion of the steady state analysis shall be assessed annually and be supported by current annual studies or qualified past studies as indicated in Requirement R2, part 2.6, as follows:

The SDT has clarified the requirement based on your comments and those of others.

> **Requirement R2, part 2.1.5** - When an entity's spare equipment strategy could result in the unavailability of major Transmission equipment that has a lead time of one year or more (such as a transformer), the impact of this possible unavailability on System performance shall be studied. The studies shall be performed for the P0, P1, and P2 categories identified in Table 1 with the conditions that the System is expected to experience during the possible

Voter	Entity	Segment	Vote	Comment
unavailability of the long lead time equipment The SDT voltage ride through is not confined to the dynamic period. There are protection requirements that could result in generator tripping and that must be considered in the steady-state analysis. The SDT has clarified the wording of the requirement. **Requirement R3, part 3.3.1 -** Simulate the removal of all elements that the Protection System and other automatic controls are expected to disconnect for each Contingency without operator intervention. The analyses shall include the impact of subsequent: • Tripping of generators where simulations show generator bus voltages or high side of the Generation Step Up (GSU) voltages are less than known or assumed minimum generator steady state or ride through voltage limitations. Include in the assessment any assumptions made. • Tripping of Transmission elements where relay loadability limits are exceeded. The development of an RSAW is more properly the purview of the Compliance Dept. No change made.				
Jason Shaver	American Transmission Company, LLC	1	Negative	ATC believes that the Standard is moving in the right direction, but has identified the following concern which is preventing us from voting "affirmative". Our concern is that the timeframe of 60-month (5 year) for implementing Corrective Action Plans (CAP), is insufficient. We believe that the implementation timeframe must be extended to seven (7) years. ATC is aware of Requirement 2.7.3, which covers situations that arise beyond the control of the Transmission Planner (TP) or Planning Coordinator (PC), but believes that the proposed language is ambiguous. Clarity needed (R 2.7.3): 1) An auditor could identify many things that could reasonably be within the "control" of a TP or PC but are not covered by NERC standards or a TP / PC's process, procedures or criteria. This wide area of discretion leaves entities open to possible non-compliance violation based on an auditor's perception of what they believe should be in the TP / PC's control. 2) In addition, we believe that the concept of "control" must be limited to an entities compliance obligation as a Transmission Planner and/or Planning Coordinator. In other words entities must be allowed the ability identify situation which fall under its "control" as a Transmission Owner, Transmission Operator, Generator Owner or Generator Operator etc. but is beyond the responsibility of its Transmission Planner or Planning Coordinator functions. . Suggested footnote: A TP or PC is in compliance with this requirement if the situation being documented is not covered in its internal processes, procedures or criteria required for NERC/Regional compliance obligations assigned to the TP or PC functions. Transmission Planners and Planning Coordinators are responsible for the identification of a CAP but it is the Transmission Owner that is ultimately responsible for implementing the CAP.
Gregory J Le Grave	Wisconsin Public Service Corp.	3	Negative	

Voter	Entity	Segment	Vote	Comment
				Additional areas of concern: ATC requested that the SDT re-examine the following concerns which we have been previously identified: 1. R1.1.2 "known outages of at least six months in duration" - The present wording in inconsistent between R1.1.2 and R2.1.3. We suggest that this requirement be removed because the “known outage(s)” are only to be included in the models when P1 events are simulated, as specified in R2.1.3. We suggest that the intent of this requirement can be more simply handled by stating in R2.1.3 that “known outages be simulated along with P1 events for the System peak or Off-Peak conditions when the outages are scheduled to occur”. 2. R2.1.4 & R2.4.3 "range of credible conditions that demonstrate a measurable change in performance" - We suggest that the terms "credible" and "measurable" be define or use words that more definitively describe the requirement. 3. Table 1 - Requirements are “buried” in the Performance Table, rather than being included in the Requirement Section - a. Add R2.7.5 - We believe that all requirements should appear in the Requirements section and not be "buried" in the performance tables. We propose the addition of the following bullet item to R2.7.5. It could read, “Planned System adjustments such as Transmission configuration changes and redispatch of generation are allowed if such adjustments are executable within the time duration of the Facility Ratings.” Note “e” in the Planning Events, Steady State & Stability section is stated in the form of a Requirement (e.g. use the verb “shall”), but all requirements should be included in the Requirements section and not introduced (and basically hidden) in the performance notes of Table 1. [After bullet item #7 is added, Note “e” under “Steady State & Stability section of Table 1 should refer to R2.7.5] b. Add R3.3.5 - We believe that all requirements should appear in the Requirements section and not be "buried" in the performance tables. We suggest the addition of R3.3.5. The text of R3.3.5 should read, “Applicable System Operating Limits for the planning horizon shall not be exceeded.” Presently, Note “a” and “b” under “Steady State Only” at the beginning of Table 1 are stated in the form of a Requirement (e.g. uses the verb, “shall”) and all Requirements should be explicitly stated under Requirements and not be introduced (and basically hidden) in the performance notes of Table 1. [After R3.3.5 is added, Note “a” should be revised and refer to R3.3.5.] c. Add R3.6 - We believe that all requirements should appear in the Requirements section and not be "buried" in the performance tables. We suggest the addition of R3.3.6. The text of R3.3.6 should read, “The response of voltage sensitive Load including Load that is disconnected from the System by end-user equipment associated with an event shall not be used to steady state voltage requirements.” because Note “d” under “Steady State Only” at the beginning of Table 1 is stated in the form of a Requirement (e.g. uses the verb, “shall”) and all Requirements should be explicitly

Voter	Entity	Segment	Vote	Comment
				stated under Requirements and not be introduced (and basically hidden) in the performance notes of Table 1. [After R3.3.6 is added, Note "d" should be revised to refer to R3.3.6.] 4. R2.7.2 - "include actions to resolve performance deficiencies identified in multiple sensitivity studies" - We do not think that mitigation plans should be required for deficiencies found in multiple sensitivity studies because the conditions in some sensitivity studies are more extreme and less likely than base case conditions. Some of the sensitivity study conditions are not credible or plausible enough to warrant the implementation of mitigation measures. What is the interpretation of multiple studies - more than one or a majority of the number that were studied? 5. R3.5 - We interpret that R3.5 requires the TP and PC to conduct an evaluation of possible actions to reduce the likelihood or impact of extreme events, which produce the more severe impacts, if cascading outages may occur. Does the drafting team intend for the TP and PC to fulfill this requirement for at least one event in each of the five categories (i.e. 3 steady state and 2 stability) or in each of the 21 categories/sub-categories (i.e. 14 steady state and 7 stability). Also, if the resulting cascading outages do not result in any overloads, under-voltages, voltage collapse, or loss of generator synchronization, then should the evaluation of possible actions to reduce likelihood or impact still be required?

Response: The SDT has changed the majority of the implementation timeframe from 60 to 84 months as per your (and others') suggestion. Since problems may not be seen until after the assessments are completed and there is a 24 month implementation for assessments, the total time for items P2-1, P2-2 and P2-3 (above 300 kV), P3-1 through P3-5, P4-1 through P4-5 (above 300 kV), and P5 (above 300 KV) has been increased to 84 months. P1-2 and P1-3 were not increased since they are already being covered by the implementation plan for Project 2010-11: TPL Table 1 Order. Requirement R2, part 2.7.3 - If an entity can demonstrate that they have made a best faith effort to implement the planned solution then there should not be a concern. The wording of the requirement allows an entity this flexibility.

The SDT believes the existing wording is clear and that the suggested wording is equivalent without providing any additional clarity. No change made.

Requirement R2, part 2.1.4 is part of Requirement R2 which mandates that an entity must document all assumptions utilized in the Planning Assessment. No change made.

The suggested change would move header note 'e to new Requirement R2, part 2.7.5 on the premise that it is a buried requirement. The phrasing of header note 'e' does not indicate that it is a mandatory requirement. It is a statement of allowed actions consistent with other notes. No change made.

The SDT does not believe that the items mentioned are buried requirements; rather they are statements of system performance that are better placed in the performance table. Requirements R3 & R4 specifically refer to the table which makes the table part and parcel of the requirements. No change made.

The SDT believes that it is more effective to state this as a header note instead of repeating it multiple times throughout the table. It is not a buried requirement but a description of what is utilized in the simulation. No change made.

Voter	Entity	Segment	Vote	Comment
Requirement R2, part 2.7.2 already states that an entity must supply the rationale for when actions were not necessary so the SDT believes that your concerns have already been addressed. No change made. The requirement states that an entity must supply the rationale for those events selected so the SDT believes that your concern has already been addressed. It provides the necessary guidance while allowing needed flexibility and not being overly prescriptive. No change made.				
Larry E Watt	Lakeland Electric	1	Negative	Below are some proposed changes and requests for clarification concerning the new TPL-001-1 standard. R2.6.2 The phrase "material changes" is not explicitly defined, and it is unclear what changes constitute a "material" change. It is asked that more precise wording or a definition of the word "material change" be provided. R3.3.2 The words "...known or assumed minimum generator steady state or ride through voltage limitations..." could be (and were) read as a series, with "known", "assumed minimum generator steady state", and "ride through voltage limitations" interpreted as three items in the series. For clarity, it is suggested that the standard be rewritten as such: Trip generators where simulations show generator bus voltages or high side of the Generation Step Up (GSU) transformer voltages are less than the known or assumed minimum generator steady state, or the known or assumed ride through voltage limitations. Include in the assessment any assumptions made. Here, the comma separates the two items in the series, with the words "known" and "assumed" modifying each of the items. R4.3.2 Following the changes made to requirement 3.3.2, it is suggested that requirement 4.3.2 be changed to the following: Trip generators where simulations show generator bus voltages or high side of the Generation Step Up (GSU) transformer voltages are less than the known or assumed minimum generator low voltage ride through capability. Include in the assessment any assumptions made. R4.3.3 An issue has been raised as to whether the word "simulate" denotes the modeling of all relays that protect transmission lines and transformers within a power flow/transiant simulator. It is suggested that this word be changed to "assess," to clarify that this requirement does not compel the Planning Coordinator and Transmission Planner to conduct PSS/E simulations to study the above conditions. The revised requirement can read: Assess the impact of transient swings on Protection System operation for Transmission lines and transformers. R4.4.1 There are two concerns with this requirement. The first is that this requirement makes no provision for the adjacent Planning Coordinator (PC) and Transmission Planner (TP) with a System Contingency to notify the PC and TP of the impacted System. Instead, the responsibility falls on the

Voter	Entity	Segment	Vote	Comment
				PC and TP of the impacted System to confer with each of their adjacent PCs and TPs to verify if a contingency on an adjacent System impacts the formers System. Or, it can cause the PC and TP to perform exhaustive contingency analyses (P0-P7) on all adjacent systems to determine which contingency/contingencies can impact their system to include them in their Contingency list. The second is that the term "impact" is not defined. A concern is should a Contingency cause a line on an adjacent System to load from 99% to 101% of its SOL rating, does this 2% constitute an "impact"? Conversely, would a Contingency that causes a significant increase to an adjacent System's line of 5% or more, without violating that line's SOL rating, be considered as having "impacted" the adjacent System? The proposed change to this requirement is: Adjacent Planning Coordinators and adjacent Transmission Planners will coordinate the identification of those Contingencies within their Systems and determine which, if any, impact the adjacent System. Those identified Contingencies may then be added to the adjacent Planning Coordinators and Transmission Planners' Contingency List. With this change, PCs and TPs of both Systems are responsible for coordinating their efforts, and the definition of "impact" is left to the coordinating PCs and TPs to decide. R8 It is unclear whether the adjacent Planning Coordinators and adjacent Transmission Planners must submit a written request for the information, or if the written request applies only to the functional entity that has a reliability related need. If the adjacent Planning Coordinators and adjacent Transmission Planners do not need to submit a written request, should the Planning Assessment be sent to them automatically?

Response: Material change is system specific and difficult to define on a continent-wide basis and is left to engineering judgment with a documented technical rationale as stated in the requirement. No change made.

The SDT does not see any real difference in the suggested wording from what is already there. No change made.

The SDT does not see any real difference in the suggested wording from what is already there. No change made.

The SDT has clarified the requirement to address your concerns.

Requirement R4, part 4.3.1 - Simulate the removal of all elements that the Protection System and other automatic controls are expected to disconnect for each Contingency without operator intervention. The analyses shall include the impact of subsequent:

- Successful high speed reclosing and unsuccessful high speed reclosing into a Fault.
- Tripping of generators where simulations show generator bus voltages or high side of the GSU voltages are less than known or assumed generator low voltage ride through capability. Include in the assessment any assumptions made.
- Tripping of Transmission lines and transformers where transient swings cause Protection System operation based on generic or actual

Voter	Entity	Segment	Vote	Comment
				relay models. Since the requirement is written for each Planning Coordinator and Transmission Planner, it covers the exchange of information on critical Contingencies and their impacts among all Planning Coordinators and Transmission Planners and thus distributes the responsibility and work load. No change made. The SDT does not see any real difference in the suggested wording from what is already there. No change made. The requirement clearly states that the entity must have a reliability-based need for the information so that unauthorized requests won't be made and the request for the information must be in writing. No change made.
Eric Egge	Black Hills Corp	1	Negative	BHC does not believe that 60 months is a reasonable time period to build transmission facilities to meet the new performance requirements. Building a transmission line varies significantly in regional and local planning and review process, permitting, siting, legal challenges, routing, and system path rating process can often take more than 5 years to complete from the time the project is authorized. Though requirement R2.7.3 is included to address situations beyond the control of the Transmission Planner, it leaves to the interpretation of the audit whether the appropriate actions are being taken to resolve the issue that would continue to allow dropping of Non-Consequential Load or curtailment of Firm Transmission Service. As drafted the standard TPL-001-1 has added requirement 2.1.5 discussing spare equipment and lead times and inclusion in the "Planning Assessment". The standard in this section is not performance based requirement but an activity based requirement as currently stated under R2 2.1.5. PacifiCorp recommends that the standard should be revised and 2.1.5 removed as it does not directly improve the systems performance requirements nor compliance stated in Table 1.
Response: The SDT has changed the majority of the implementation timeframe from 60 to 84 months as per your (and others') suggestion. Since problems may not be seen until after the assessments are completed and there is a 24 month implementation for assessments, the total time for items P2-1, P2-2 and P2-3 (above 300 kV), P3-1 through P3-5, P4-1 through P4-5 (above 300 kV), and P5 (above 300 KV) has been increased to 84 months. P1-2 and P1-3 were not increased since they are already being covered by the implementation plan for Project 2010-11: TPL Table 1 Order. Requirement R2, part 2.7.3 - If an entity can demonstrate that they have made a best faith effort to implement the planned solution then there should not be a concern. The wording of the requirement allows an entity this flexibility. Requirement R2, part 2.7.3 requires an entity to document their actions. Therefore, it is up to the entity to ensure that the documentation sufficiently explains their position. No change made. The SDT has clarified the requirement based on your comments and those of others. **Requirement R2, part 2.1.5** - When an entity's spare equipment strategy could result in the unavailability of major Transmission equipment that has a lead time of one year or more (such as a transformer), the impact of this possible unavailability on System performance shall be studied. The studies shall				

Voter	Entity	Segment	Vote	Comment
be performed for the P0, P1, and P2 categories identified in Table 1 with the conditions that the System is expected to experience during the possible unavailability of the long lead time equipment.				
Janelle Marriott	Tri-State G & T Association Inc.	3	Negative	Definitions section- Add a definition to this standard, which would revise the definition of "Stability" in the NERC glossary to read: "Stability: Unless qualified specifically as Voltage Stability, the term Stability shall mean the ability of system generators to maintain angular equilibrium, also known as Dynamic stability." Definitions section- The definition for Year One is vague. If the definition is intended to capture both a summer and winter season and is necessary to provide a clear starting point for the planning horizon, then this should be stated explicitly in the definition. We recommend inserting the phrase "12-month" before the phrase "planning window" R2.1 The word "current" can mean either "electrical current" - a physical measure of electron movement, or "at the present time" - most recent or up-to-date. If you must use the term "current" in R2.1, say "current annual studies" rather than "annual current studies". R2.1.4 Part 2.1.4 should be removed from the requirement. The benefits of requiring one or more of these is unclear. Which of the listed conditions does an entity choose? There are no criteria for selection of one of the listed sensitivity topics as most-significant to a particular system. It is not apparent how particular sensitivities would increase BES reliability. If this part is not deleted, we recommend removing the phrase "not already included in the studies". Also, this requirement must state how one could determine validity of chosen sensitivity conditions. R2.1.5 We suggest adding the word "individually" to the end of the first sentence of part R2.1.5: "impact of this possible unavailability on System performance shall be assessed individually." In R2.4.1, it is left to the utility what level of load modeling detail is used. This is good because it gives the utility flexibility to select and use appropriate models. However, is it not clear what behavior of induction motors is targeted here. We recommend deleting the phrase "considering the behavior of induction motor loads", or else please specify what behavior is of concern. Part 2.4.3 should be removed from the requirement. As commented in our response to part 2.1.4, the benefit of requiring one or more of these is unclear - which of the listed conditions does an entity choose? There are no criteria for selection of one of the listed sensitivity topics as most-significant to a particular system. It is not apparent how this would increase BES reliability. If this part is not deleted, we recommend removing the phrase "not already included in the studies". Also, this requirement must state how one could determine validity of chosen sensitivity conditions. R2.6.2 We suggest that 2.6.2 be modified to read: "the System represented in the study has not
Keith V. Carman	Tri-State G & T Association Inc.	1	Negative	

Voter	Entity	Segment	Vote	Comment
				materially changed, or a technical rationale can be given that the changes do not impact performance in the study area." If 2.1.4 and 2.4.3 are removed as we suggest, then this sentence in part 2.7 should be removed: "Corrective Action Plan(s) do not need to be developed solely to meet the performance requirements for a single sensitivity case analyzed in accordance with Requirement R2, parts 2.1.4 and 2.4.3." In part 2.7.1, remove the second sentence and all bullets. These are not measurable performance criteria. R3.5 asks for evaluation of actions designed to reduce the likelihood of potential cascading caused by extreme events, but 1) does not require documentation of results, and 2) does not require that the evaluation show that proposed actions would affect or limit cascading. R4.1 Insert "compliance with" in R4.1 text, which will then read "based on the Contingency list created in compliance with Requirement R4, part 4.4." There is no list in part 4.4. Part 4.4 requires a list of more severe contingencies (Table 1 planning events) to be created. R4.1.2 is unrealistic. Utilities implement out-of-step tripping schemes to limit the extent of impacts of such events that cause out-of-step conditions. Some of these occurrences can be mitigated better by tripping transmission elements and not generation. The decision to trip either transmission or generation should not be predetermined in the standard. We recommend that part 4.1.2 be reworked. R4.1.3 Does this preclude the regional reliability organization from choosing to establish damping criteria at some time in the future? R4.3.1 It is unclear whether this refers to the possibility of reclosing system failure, or the impacts of reclosing into a still-faulted system. R4.3.2 This is an admirable goal, and we applaud the SDT's vision. However, modeling all Protection Systems may be beyond the capabilities of presently used dynamic modeling tools. The number of impedance and overcurrent relays that would need to be included for lines and transformers would likely overwhelm these programs. We are concerned that the programs in use may not have the capability to model important relay characteristics such as load encroachment or out-of-step operating characteristics. R4.3.4 The phrase "of electrical system quantities" is unclear and can be removed without changing the intent of the requirement. R6 Remove the "for conditions such as ..." list.

Voter	Entity	Segment	Vote	Comment
				Does Table 1, Category P5, require consideration of clearing from all remote terminals and evaluating those time delays assuming no tripping is available locally? Table 1 Extreme Events List- In the Stability section of the Table 1 Extreme Events List, use the term Dynamic Stability, not just Stability - or insert a revised Stability definition as noted above. M8, part 1.4 Simplify by changing "current, in force documentation" to "operative documentation". "Current" is redundant with "in force". Table 1 - Headnotes to Planning Events o Table 1, Headnote b - Delete “or extreme” since this headnote is for Planning Events. o Table 1, Headnote e - You may omit the phrase “For all planning events,” since this headnote is for Planning Events. o Table 1, Headnote i - It is unclear what is meant by “end-user equipment associated with an event”. o Table 1, Headnote h -We suggest this be moved to a footnote for P0: “Planning Event Category P0 is applicable to steady state only. No Dynamic Stability Analysis is required.” o Headnote j - It is not clear why this falls under “Stability Only”, and suggest that “dynamic stability” be included with headnote “a” Table 1 - Footnotes o Table 1, Footnote 2 - We suggest this footnote is not needed. R2.3 covers this sufficiently. o Table 1, new footnote- We suggest a footnote be added to the column labeled “Initial System Condition” indicating that “Normal System means all transmission elements are in service and all portions of the BES within the study area are performing within specified operating limits”. Table 1 - Planning Events o Event P2 is categorized as ‘Single Contingency’; however the listed events would typically result in the loss of more than one element. In other words, Category P2 contingencies are those in which a single system element is removed from service due to one of the listed initiating events. We are concerned because it appears that all events listed for the single-contingency Category P2 are not covered under other multiple-contingency Categories. For example, a faulted Bus Section. o Events P2 and P5 are described in terms of the elements initiating a fault, while the others are in terms of number of elements out-of-service due to a contingency. Event P4 is described in terms of

Voter	Entity	Segment	Vote	Comment
				both - the elements lost and the initiating fault. It would be helpful to have additional notes explaining the apparent inconsistent wording of Planning Events. o The distinction between 'Single Contingency' and 'Multiple Contingency' Category classifications for an event must be clear. Categories A through D have worked well for the industry to this point, and it would be helpful if the transitio

Response: The SDT feels that the current definition fits the intent of the standard. Modifying the definition could have unintended consequences on other standards. No change made.

Based on your comment and those of others, the SDT has revised the definition of Year One.

> **Year One:** The first twelve month period that a Planning Coordinator or a Transmission Planner is responsible for assessing. For the Planning Assessment started in a given calendar year, Year One must include the forecasted peak Load period for one of the following two calendar years. For example, if a Planning Assessment was started in 2011, then Year One must include the forecasted peak Load period for either 2012 or 2013.

The SDT agrees and has made the change.

> **Requirement R2, part 2.1 -** The Near-Term Transmission Planning Horizon portion of the steady state analysis shall be assessed annually and be supported by current annual studies or qualified past studies as indicated in Requirement R2, part 2.6, as follows:

The SDT has deleted the suggested phrase.

> **Requirement R2, part 2.1.4 -** For each of the studies described in Requirement R2, parts 2.1.1 and 2.1.2, sensitivity case(s) shall be utilized to demonstrate the impact of changes to the basic assumptions used in the model. To accomplish this, the sensitivity analysis in the Planning Assessment must vary one or more of the following conditions by a sufficient amount to stress the System within a range of credible conditions that demonstrate a measurable change in performance:

The SDT has clarified the requirement based on your comments and those of others although the term 'individually' was not added as the SDT did not see that it added any clarity.

> **Requirement R2, part 2.1.5** - When an entity's spare equipment strategy could result in the unavailability of major Transmission equipment that has a lead time of one year or more (such as a transformer), the impact of this possible unavailability on System performance shall be studied. The studies shall be performed for the P0, P1, and P2 categories identified in Table 1 with the conditions that the System is expected to experience during the possible unavailability of the long lead time equipment

The SDT has clarified the requirement.

> **Requirement R2, part 2.4.1** - System peak Load for one of the five years. System peak Load levels shall include a Load model which represents the

Voter	Entity	Segment	Vote	Comment
				expected dynamic behavior of Loads that could impact the study area, considering the behavior of induction motor Loads. An aggregate System Load model which represents the overall dynamic behavior of the Load is acceptable. The SDT has deleted the suggested phrase. **Requirement R2, part 2.4.3 -** For each of the studies described in Requirement R2, parts 2.4.1 and 2.4.2, sensitivity case(s) shall be utilized to demonstrate the impact of changes to the basic assumptions used in the model. To accomplish this, the sensitivity analysis in the Planning Assessment must vary one or more of the following conditions by a sufficient amount to stress the System within a range of credible conditions that demonstrate a measurable change in performance: The SDT does not see that the suggested change adds clarity. No change made. Parts 2.1.4 or 2.4.3 were not removed so no change is needed here. The listed items are simply that – a list of actions that would be included. This is an allowable and encouraged format for Reliability Standards. No change made. Requirement R3, part 3.5 is part of Requirement R3 which links back to Requirement R2 where the documentation is required. No change made. The SDT believes that the present wording is correct. No change made. Requirement R4, part 4.1.2, deals with a single generator pulling out of synchronism. The situation you described is a system Stability issue and is considered an application for an SPS which is allowed by the standard. No change made. Nothing in this standard precludes a region from adopting an additional requirement in the future. No change made. The SDT modified the language of the requirement to address your concern. **Requirement R4, part 4.3.1 -** Simulate the removal of all elements that the Protection System and other automatic controls are expected to disconnect for each Contingency without operator intervention. The analyses shall include the impact of subsequent: • Successful high speed reclosing and unsuccessful high speed reclosing into a Fault. • Tripping of generators where simulations show generator bus voltages or high side of the GSU voltages are less than known or assumed generator low voltage ride through capability. Include in the assessment any assumptions made. • Tripping of Transmission lines and transformers where transient swings cause Protection System operation based on generic or actual relay models. The SDT believes that your comment is for requirement R4, part 4.3.3. The SDT has modified the wording of this requirement to address your concern. **Requirement R4, part 4.3.1 -** Simulate the removal of all elements that the Protection System and other automatic controls are expected to disconnect for each Contingency without operator intervention. The analyses shall include the impact of subsequent: • Successful high speed reclosing and unsuccessful high speed reclosing into a Fault.

Voter	Entity	Segment	Vote	Comment
				• Tripping of generators where simulations show generator bus voltages or high side of the GSU voltages are less than known or assumed generator low voltage ride through capability. Include in the assessment any assumptions made. • Tripping of Transmission lines and transformers where transient swings cause Protection System operation based on generic or actual relay models. The SDT does not see any reason to delete the phrase as it is not causing any confusion. No change made. The SDT believes that the present wording is appropriate. No change made. You need to model the way that Protective System is expected to operate; if there is no local backup, then remote clearing will have to be simulated. No change made. All aspects of Stability are to be considered. No change made. The present language is common in many standards and the SDT sees no reason to change it here. There may be a difference between 'current' and 'in force' due to effective dates. No change made. The SDT has made a clarifying change to the note. **Header note 'b':** Consequential Load Loss as well as generation loss is acceptable as a consequence of any event excluding P0. The SDT agrees and has modified the note accordingly. **e**. Planned System adjustments such as Transmission configuration changes and re-dispatch of generation are allowed if such adjustments are executable within the time duration applicable to the Facility Ratings. End-user equipment is that equipment owned and operated by an end-user over which an entity has no control. No change made. This is simply a matter of preference as the suggested change would not alter the meaning or intent. No change made. The SDT agrees and has deleted header note 'j'. Dynamic stability is covered in the requirements and no reference is needed in the header notes. This footnote is referring to Stability studies and not short circuit analysis. No change made. System normal, or P0, is the starting system condition for the projected study conditions per the model developed in accordance with Requirement R1. The SDT has adjusted Requirement R1 to provide this clarity. **Requirement R1 -** Each Transmission Planner and Planning Coordinator shall maintain System models within its respective area for performing the studies needed to complete its Planning Assessment. The models shall use the latest data consistent with that provided in accordance with the MOD-010 and MOD-012 standards, supplemented by other sources as needed, including items represented in the Corrective Action Plan, and shall represent projected System conditions. This establishes the normal system condition in Table 1. The category descriptions are meant to characterize the events. A single event may remove more than one element from service and that has been addressed in Header note 'c'. The SDT does not believe that there are inconsistencies within the table. The P2 category describes single events that may result in multiple

Voter	Entity	Segment	Vote	Comment
elements being removed from service. The P2 events differ from the multiple event categories which consider two or more sequential events. No change made. The SDT agrees that the structure of the descriptions are different because they are describing dissimilar types of events but the SDT does not feel that they are inconsistent or causing any confusion. No change made. The change was made since the table is now event based and because the four existing standards were consolidated into one standard. The industry has supported these changes. No change made.				
Fred Frederick	Southern Indiana Gas and Electric Co.	3	Negative	Definitions, Year One - Vectren disagrees with the proposed definition of Year One. Vectren believes that Year One should be the planning window that begins 12-18 months from the start of the current calendar year, and not from the end of the calendar year. Section 5 - Effective Date, the allowance of 60 calendar months for Corrective Action Plan implementation is too short. Recommend this be extended to 84 months to allow for proper planning, budgeting, right-of-way acquisition and construction. R2.4.1 - System peak Load levels shall include a Load model which represents the dynamic behavior of Loads that could impact the study area, considering the behavior of induction motor Loads. An aggregate System Load model which represents the overall dynamic behavior of the Load is acceptable. Vectren has concern with this requirement. The concern is that Vectren will be held to strict interpretation of this standard with regard to an actual event occurring that was not exactly reproduced by the Vectren model. R2.7.2 - The term "include actions to resolve performance deficiencies identified in multiple sensitivity studies" causes concern. Mitigation plans should not necessarily be required for deficiencies found in multiple sensitivity studies because the conditions in some sensitivity studies are typically extreme and less likely than base case conditions. Some of the sensitivity study conditions may not be credible or plausible enough to warrant the implementation of mitigation plans. Also, what is the interpretation of multiple studies? Is that more than one, a majority, 2/3 of the number that were studied, or some other number? R2.7.3 - The term “beyond the control of the Transmission Planner or Planning Coordinator” needs to be better defined. An auditor could interpret a situation to be within the “control” of a TP or PC but are not covered by NERC standards or a TP / PC’s process, procedures or criteria. This leaves entities open to possible non-compliance violations based on an auditor’s perception of what they believe should be in the TP / PC’s control. Also, Vectren is not in agreement that Non-Consequential Load Loss should not be allowed for any case. There may be cases, especially future year studies that indicate a need for building transmission infrastructure, to serve speculative load growth. In these cases the consumers, local

Voter	Entity	Segment	Vote	Comment
				jurisdictions, and state jurisdictions may find it a prudent plan to assume some Non-Consequential Load Loss in order to defer building transmission infrastructure. R3.3.3 - Trip Transmission elements when relay loadability limits are exceeded. Vectren has concerns that system models (or software applications) cannot support the requirements of R3.3.3. Another concern is that Vectren will be held to strict interpretation of this standard with regard to an actual event occurring that was not exactly reproduced by the Vectren model. R4.1.3 - For planning events P1 through P7: Power oscillations shall exhibit acceptable damping as established by the Planning Coordinator and Transmission Planner. Vectren has concerns with this requirement. What if the PC and the TP cannot reach an agreement in the definition of "acceptable damping"? R4.1.2 - When a generator pulls out of synchronism in the simulations, the resulting apparent impedance swings shall not result in the tripping of any Transmission system elements other than the generating unit and its directly connected Facilities. Vectren has concerns that dynamics models (or software applications) cannot support the requirements of R4.1.2. Another concern is that Vectren will be held to strict interpretation of this standard with regard to an actual event occurring that was not exactly reproduced by the Vectren model. R4.3.3 - Simulate the impact of transient swings on Protection System operation for Transmission lines and transformers. Vectren has concerns that dynamics models (or software applications) cannot support the requirements of R4.3.3. Another concern is that Vectren will be held to strict interpretation of this standard with regard to an actual event occurring that was not exactly reproduced by the Vectren model. Table 1 - Steady State & Stability Performance, Planning Events, k. Transient voltage response shall be within acceptable limits established by the Planning Coordinator and the Transmission Planner. What if the PC and the TP cannot reach an agreement in the definition of "acceptable limits"? Table 1 - Steady State & Stability Performance, Extreme Events, V. A successful cyber attack. This requirement is too vague. It could be interpreted in any number of ways.

Response: Based on your comment and those of others, the SDT has revised the definition of Year One.

> **Year One:** The first twelve month period that a Planning Coordinator or a Transmission Planner is responsible for assessing. For the Planning Assessment started in a given calendar year, Year One must include the forecasted peak Load period for one of the following two calendar years. For example, if a Planning Assessment was started in 2011, then Year One must include the forecasted peak Load period for either 2012 or 2013.

The SDT has changed the majority of the implementation timeframe from 60 to 84 months as per your (and others') suggestion. Since problems may not be seen

Voter	Entity	Segment	Vote	Comment
until after the assessments are completed and there is a 24 month implementation for assessments, the total time for items P2-1, P2-2 and P2-3 (above 300 kV), P3-1 through P3-5, P4-1 through P4-5 (above 300 kV), and P5 (above 300 KV) has been increased to 84 months. P1-2 and P1-3 were not increased since they are already being covered by the implementation plan for Project 2010-11: TPL Table 1 Order. Requirement R2, part 2.7.3 - If an entity can demonstrate that they have made a best faith effort to implement the planned solution then there should not be a concern. The wording of the requirement allows an entity this flexibility. 2.4.1 – The SDT has added the word 'expected' to the text to alleviate your concern. Planning models are based on the best information available to the planners at the time of the study and it is well understood that they may not exactly represent actual conditions at any given time. The results of on-going benchmarking and model development activities can be incorporated when those activities yield more representative results. **Requirement R2, part 2.4.1** - System peak Load for one of the five years. System peak Load levels shall include a Load model which represents the expected dynamic behavior of Loads that could impact the study area, considering the behavior of induction motor Loads. An aggregate System Load model which represents the overall dynamic behavior of the Load is acceptable. Requirement R2, part 2.7.2 already states that an entity must supply the rationale for when actions were not necessary so the SDT believes that your concerns have already been addressed. No change made. If an entity can demonstrate that they have made a best faith effort to implement the planned solution then there should not be a concern. The wording of the requirement allows an entity this flexibility. No change made. The SDT has added footnote #12 to P1, P2-1, and P3 to address your and others concerns in this area. 12. Note: Non-Consequential Load Loss is being decided in Project 2010-11. When that project is finalized, the resolution will be copied here. The expectation of this requirement is that relay tripping would be handled consistent with their PRC-023 expectations. Planning models are based on the best information available to the planners at the time of the study and it is well understood that they may not exactly represent actual conditions at any given time. No change made. Requirement R4, part 4.1.3 does not state that the criteria are set jointly. If such an item became an issue, the SDT believes that it is covered in Requirement R7. No change made. The SDT believes that the necessary tools are readily available. Planning models are based on the best information available to the planners at the time of the study and it is well understood that they may not exactly represent actual conditions at any given time. No change made. The table does not state that the limits are set jointly. If such an item became an issue, the SDT believes that it is covered in Requirement R7. No change made. The event is the loss of two generating stations. A successful cyber attack is simply an example of a cause of the event. No change made.				
Liam Noailles	Xcel Energy, Inc.	5	Negative	Xcel Energy appreciates the hard work of the Standard Drafting Team and commends the group for making substantial improvements in every successive draft of the TPL-001-1 standard to bring it to the proposed version for balloting. However, in as much as the proposed TPL-001-1 standard has

Voter	Entity	Segment	Vote	Comment
Michael Ibold	Xcel Energy, Inc.	3	Negative	improved, we cannot support its approval at this time for the following reasons: 1. Implementation Plan: Xcel Energy does not believe that 60 months is a reasonable time period to build transmission facilities to meet the new "raise-the bar" performance requirements. Building a transmission line in Xcel Energy's service area spanning eight-states (and two RTO's) varies significantly in regional and local planning and review process, regulatory approval process, permitting and routing process, legal challenges, etc. These processes can often take more than 5 years to complete from the time the project is conceived as a proposed solution. Though requirement R2.7.3 is included in the standard to address situations beyond the control of the Transmission Planner, we are concerned that it leaves to the interpretation and judgment of the auditor whether the Transmission Planner is taking appropriate actions to resolve the situation and consequently whether the interim solution of dropping Non-Consequential Load or curtailment of Firm Transmission Service is acceptable. Xcel Energy will be comfortable supporting the standard if the 60 months time-frame is increased to 84 months. 2. Intended Scope of Planning Event P5: Xcel Energy is unsure of what comprises the scope of "Failure of a single Protection System" - does it imply studying the failure to operate of the relay or communication channel utilized in the primary protection scheme for an equipment (e.g. transmission line), or does it also include studying the failure of other single Protection System components such as current/voltage transformer or station battery? Note that the former interpretation will result in delayed clearing of the faulted transmission element only, consistent with operation of the local backup protection (typically zone 2 operation of line distance relays). On the other hand, the failure of current/voltage transformer or station battery could compromise the operation of both primary and local backup protection schemes for the faulted equipment, thus requiring the remote backup protection to clear the fault, which results in longer-duration delayed clearing and the loss of more than one transmission element. In Table 1, characterizing P5 as a multiple contingency event (like P4 or P7) also contributes to the scope confusion. As discussed above, a primary protection relay failure will typically result in the loss of a single (faulted) element only, not the outage of multiple elements (that always occurs in P4 or P7 events). Then, should the P5 event be construed to study the failure of CT/PT and/or station battery which, as discussed above, will typically result in the loss of multiple elements? If yes, isn't the standard implicitly requiring redundant CTs/PTs or station batteries to enable meeting the EHV performance requirement? If no, shouldn't the P5 event description reflect the intended scope more clearly? This may presumably be achieved by modifying P5 to read "Failure of primary protective relay that results in Delayed Fault Clearing on one of the following:" 3. Steady-state Performance of Planning Event P5 versus P1: Assuming that the intent of the P5 event is to study the operation failure of primary protection scheme (failure of the relay or its communication channel), the delayed clearing time associated with local backup protection scheme is
David F. Lemmons	Xcel Energy, Inc.	6	Negative	

Voter	Entity	Segment	Vote	Comment
				only relevant to the stability performance. If the post-contingency outcome for P5 consists of the loss of the faulted transmission element only, can the post-contingency steady state system condition for event P5 be any different than for event P1? We contend that both events will result in the same post-contingency steady-state system condition since the only difference is the normal versus delayed clearing time. If so, should the steady-state performance requirements for event P5 be any different than for event P1? For steady-state analysis, the HV level performance requirements for P5 in Table 1 become contradictory to those for P1. This is another example of why the intended scope of P5 event needs to be specified more clearly. 4. Ambiguities and Inconsistencies: Xcel Energy is providing the following editorial comments for your consideration to improve the consistency and clarity of the standard. Several, but not all, of the ambiguities and/or inconsistencies are confusing enough to qualify as show-stoppers since they prevent the standard's intent and scope to come across clearly. 4.1 Table 1 - Headnotes to Planning Events o Headnote b - At a minimum, delete "or extreme" since it is out of place in this headnote. Consider truncating at "... generation loss is acceptable." since the headnote is by default applicable to all planning events, and P0 exclusion is implicit in the context. o Headnote e - Consider omitting the phrase "For all planning events," since the headnote is by default applicable to all planning events. o Headnote i - Consider re-wording to remove the unintended association of equipment with event being implied at "...by end-user equipment associated with an event...". Suggest deleting the redundant phrase "associated with an event" since the headnote is by default applicable to all planning events. Alternatively, modify to read as follows: "Load loss resulting from an event due to the response of voltage sensitive Load or due to Load that is disconnected from the System by end-user equipment shall not be used to meet steady state performance requirements." o Headnote h - Unlike other headnotes, this does not describe a system performance but offers a clarification on applicability. Therefore, like other clarifications/qualifications, it belongs in the footnotes - suggest changing it to footnote assigned to P0. o Headnote j - It is not clear why this falls under Stability Only, and it also lacks specificity in expected stability performance. Note that the generic 'stable' is an umbrella term that includes all types of system (in)stability including voltage (in)stability, frequency (in)stability and cascading facility outages, not simply angular (in)stability. Considering that headnote 'a' includes most varieties of system (in)stability, we suggest adding "angular instability" in headnote "a" and deleting this

Voter	Entity	Segment	Vote	Comment
				headnote. 4.2 Table 1 - Footnotes Footnote 2 - Suggest deletion of “Unless specified otherwise, simulate normal clearing of faults” since it is redundant with Headnote ‘d’ for Planning Events and Headnote ‘b’ for Extreme Events. Alternatively, delete both Headnotes and do not change Footnote 2. 4.3 Table 1 - Planning Events - Column 2 - Initial System Condition - Normal System What are the attributes of Normal System? Is this term intended to be synonymous with “system intact” or N-0 system topology? Is the event P0 intended to be identical to the existing Category A? The intent is not clear and needs to be explicitly stated. We suggest that the first occurrence of the term be modified as follows: “Normal System (all Facilities in service)” to explicitly convey the intent. Note that the qualifier in parenthesis is the verbiage for Category A used in the existing TPL standards. However, we also note that if P0 is intended to be synonymous with “system intact”, then it does not appear that the base case system model built as per Requirement R1, part 1.1, will always be compatible with P0 - due to the known outages to be included in the model (part 1.1.2). Does the standard envisage P0 and “system intact” to connote “All Facilities in service minus the known outages”? If so, this must be clearly stated. .4 Table 1 - Planning Events - Column 1 - Category What is the significance of ‘Single Contingency’ or ‘Multiple Contingency’ qualifier for an event? Is it intended to characterize the number of elements outaged due to the initiating event, or is it intended to convey the number of equipment failures/faults comprising the initiating event? The NERC glossary definition of Contingency “The unexpected failure or outage of a system component, such as a generator, transmission line, circuit breaker, switch or other electrical element.” does not help remove this ambiguity. Regardless of the chosen interpretation, inconsistency arises for the following events: Event P2 - Wouldn’t initiating events P2-2, P2-3 and P2-4 typically result in the loss of more than one element? So qualifying P2 as single contingency appears to correspond with the equipment fault/failure description in the Event column but does not correspond to the total number of elements outaged due to the initiating event. Event P3 - Per the description in the Event column, the events P3-1 to P3-5 result in the loss of one element. So qualifying P3 as a multiple contingency appears to correspond with the total number of elements outaged, after including the (overlapping) prior outage. But the multiple contingency qualification is not consistent with the initiating event description in the Event column. Event P6 - Same comment as P3. Event P1 - Can the loss of only one element be presumed as an outcome of normal clearing of a fault, which appears to be the implicit initiating event here? How about the case of a normally cleared fault on a transformer-terminated line that is not breakered at the transformer end? Or the case of a normally cleared fault on a line-connected shunt reactor that is not breakered to the line? The resulting loss of two elements is not consistent

Voter	Entity	Segment	Vote	Comment
				with the event description. And by characterizing the event in terms of loss of one element, it is also inconsistent with headnote c that requires removal of all elements expected to automatically disconnect for each event. 4.5 Table 1 - Planning Events - Column 3 - Event Descriptions for events P1, P3, P6 and P7 are in terms of number of elements (one or multiple) outaged due to the contingency, whereas events P2 and P5 are described in terms of the initiating fault only. The exception is event P4 which is described in terms of both - the elements lost and the initiating fault. Is there a good reason why the event descriptions are not consistently worded? We note that the contingency descriptions in column 2 of the existing Table I are expressed in terms of "Initiating Event(s) and Contingency Element(s)." We think this issue is closely correlated to the previous comment on the apparent lack of consistency between the contingency terminology in column 1 and the event description in column 3.

Response: 1. The SDT has changed the majority of the implementation timeframe from 60 to 84 months as per your (and others') suggestion. Since problems may not be seen until after the assessments are completed and there is a 24 month implementation for assessments, the total time for items P2-1, P2-2 and P2-3 (above 300 kV), P3-1 through P3-5, P4-1 through P4-5 (above 300 kV), and P5 (above 300 KV) has been increased to 84 months. P1-2 and P1-3 were not increased since they are already being covered by the implementation plan for Project 2010-11: TPL Table 1 Order. Requirement R2, part 2.7.3 - If an entity can demonstrate that they have made a best faith effort to implement the planned solution then there should not be a concern. The wording of the requirement allows an entity this flexibility.

2. The SDT has changed the text for the P5 event as a result of your (and others) comments to address these concerns.

> **P5**. Delayed Fault Clearing due to the failure of a relay[13] protecting the Faulted element to operate as designed, for a Fault on one of the following:
>
> **13**. Applies to the following relay functions or types: pilot (#85), distance (#21), differential (#87), current (#50, 51, and 67), voltage (#27 & 59), directional (#32, & 67), and tripping (#86, & 94).

3. A P5 event is different and will not duplicate a P1 event for steady state if the entity does not have fully redundant Protection Systems. No change made.

The SDT agrees and has made a clarifying change.

> **Header note 'b':** Consequential Load Loss as well as generation loss is acceptable as a consequence of any event excluding P0.

The SDT agrees and has modified the note accordingly.

> **Header note 'e'**. Planned System adjustments such as Transmission configuration changes and re-dispatch of generation are allowed if such adjustments are executable within the time duration applicable to the Facility Ratings.

While technically correct, the suggested change does not create additional clarity and the existing wording doe not cause any confusion in the eyes of the SDT. No change made.

Voter	Entity	Segment	Vote	Comment
This is simply a matter of preference as the suggested change would not alter the meaning or intent. No change made. The SDT agrees and has deleted header note 'j'. This is simply a matter of preference. While somewhat duplicative, it may add clarity and hasn't seemed to cause any confusion. No change made. System normal is the starting system condition for the projected study conditions per the model developed in accordance with Requirement R1. The SDT has adjusted Requirement R1 to provide this clarity. **Requirement R1 -** Each Transmission Planner and Planning Coordinator shall maintain System models within its respective area for performing the studies needed to complete its Planning Assessment. The models shall use the latest data consistent with that provided in accordance with the MOD-010 and MOD-012 standards, supplemented by other sources as needed, including items represented in the Corrective Action Plan, and shall represent projected System conditions. This establishes the normal system condition in Table 1. The category descriptions are meant to characterize the events. A single event may remove more than one element from service and that has been addressed in Header note 'c'. The SDT does not believe that there are inconsistencies within the table. No change made. The SDT agrees that the structure of the descriptions are different because they are describing dissimilar types of events but the SDT does not feel that they are inconsistent or causing any confusion. No change made.				
Henry Ernst-Jr	Duke Energy Carolina	3	Negative	Duke appreciates the hard work that has been done by the Standard Drafting Team to get the standard to this point. Duke is supportive of the standard as it helps to remove some of the 'grey' in the existing TPL standards, as well as driving actions that will improve the reliability of the Bulk Electric System. However, Duke believes that two areas in the standard need to be improved in order for Duke to vote to approve the standard. 1. Duke does not believe that 60 months is a reasonable time period to build transmission facilities to meet the new performance requirements. In an email to the registered ballot body, Ameren stated " Building a transmission line in Illinois is estimated to take 7 years (84 months) from the time the project is authorized." Duke agrees with the point that Ameren is making that building of a new EHV transmission line can be a very lengthy process. Duke thinks that a more appropriate time frame would be 84 months. 2. Duke believes that the requirement prohibiting loss of non-consequential load for P1, P2.1 and P3 events is an overreach by the standard into local load quality of service issues, does not provide any real benefit to Bulk Electric System (BES) reliability, and may have unintended negative consequences on reliability. Often, corrective actions to mitigate these events are local in nature and only require minor additional loss of local load to avoid major projects. In many instances, it may be in the best interest of all involved parties from an overall cost/benefit point of view to allow loss of non-consequential load. The standard should continue to allow Transmission Planners to use

Voter	Entity	Segment	Vote	Comment
				discretion regarding loss of non-consequential load, such that Transmission Planners, customers, and local regulators jointly control the decision making when BES reliability is not an issue. The transparency requirements of the new standard facilitate this type of decision making. In addition, the prohibition on non-consequential load loss for these events creates an incentive for Transmission Planners to remove lines serving load from network (serve the loads radially) so that they are characterized as consequential load. The unintended consequence of the standard would be a reduction in reliability for service to local load.
Response: 1. The SDT has changed the majority of the implementation timeframe from 60 to 84 months as per your (and others') suggestion. Since problems may not be seen until after the assessments are completed and there is a 24 month implementation for assessments, the total time for items P2-1, P2-2 and P2-3 (above 300 kV), P3-1 through P3-5, P4-1 through P4-5 (above 300 kV), and P5 (above 300 KV) has been increased to 84 months. P1-2 and P1-3 were not increased since they are already being covered by the implementation plan for Project 2010-11: TPL Table 1 Order. 2. The SDT has added footnote #12 to P1, P2-1, and P3 to address your and others concerns in this area. 12. Note: Non-Consequential Load Loss is being decided in Project 2010-11. When that project is finalized, the resolution will be copied here.				
Charles A. Freibert	Louisville Gas and Electric Co.	3	Negative	E.ON U.S. suggests that Extreme Event 2e be clarified by adding: if generating was added in front of station, "Loss of all generating units at a generating station." This would distinguish from a loss of all units at a transmission station. Also, it is consistent with 3a, "Loss of two generating stations ...". E.ON U.S. objects to the modification of P2-1 to only include "Opening of a line section w/o a fault". Footnote 7 indicates that this is to ensure that radial load that would have tripped with a fault can be served. This is a new criteria that opens a line without an actual fault and may result in converting some of these lines to radials to comply with this requirement which could decrease overall reliability.
Charlie Martin	Louisville Gas and Electric Co.	5	Negative	
Daryn Barker	Louisville Gas and Electric Co.	6	Negative	
Response: The SDT assumes that you meant 2d and of so, agrees and has made the change. **Extreme event 2d.** Loss of all generating units at a generating station. This is not a new criterion as this is exactly what was in TPL-002-0, Table 1, Category B "Loss of an Element without a Fault." No change made.				
Luther E. Fair	Gainesville Regional Utilities	1	Negative	Even though I am voting negative on this version of the standard, I want to acknowledge the considerable effort that the SDT has put into developing this change to the NERC Standard TPL-001, Transmission System Planning Performance Requirements. I do consider it, in most part, an improvement to the existing standard, but I feel it falls short by not providing more clarity and less ambiguity. As a very small utility that happens to have chosen a 138 kV loop to circle its city to serve

Voter	Entity	Segment	Vote	Comment
				its citizens, we feel unreasonably burdened at times to accomplish the documentation task at hand. I offer the following as a few examples of concern: GRU believes that requirement 2.1.5 on spare equipment strategy is discriminatory for smaller entities. For many smaller entities, having a spare transformer is not a practical solution and makes far less sense and has significantly more customer rate impacts than for a larger utility. Yes, it may be possible to arrange an agreement with a neighboring entity for use of their spare, but that assumes that the neighboring entity's transformer specifications are similar enough for use as a spare, which may not be the case. Order 693 states at Paragraph 1725: "... the Commission directs the ERO to modify the planning Reliability Standards to require the assessment of planned outages consistent with the entity's spare equipment strategy". Next, Requirement 3.3.3 as written would require modeling of nearly every phase distance relay, especially when studying extreme events. The requirement ought to have the flexibility afforded in 3.3.2 where the planner can use a conservative assumption and screening methods (e.g., the proposed curves of PRC-024) for relay loadability (e.g., the requirements of PRC-023). Requirement 4.3.1 would also require modeling of nearly every phase distance relay in the Interconnection, again because it applies to extreme events and we will not know ahead of time where the power swings will traverse distance relay characteristics. I look forward to the next generation of this standard's development. L. Earl Fair

Response: The SDT has clarified the requirement based on your comments and those of others.

> **Requirement R2, part 2.1.5** - When an entity's spare equipment strategy could result in the unavailability of major Transmission equipment that has a lead time of one year or more (such as a transformer), the impact of this possible unavailability on System performance shall be studied. The studies shall be performed for the P0, P1, and P2 categories identified in Table 1 with the conditions that the System is expected to experience during the possible unavailability of the long lead time equipment

The SDT agrees that a planner should be able to utilize conservative assumptions and screening methods and doesn't believe that there is anything in the requirement that precludes an entity from doing so. The SDT disagrees that the modeling of phase distance relays is required. No change made.

The SDT has revised Requirement R4, part 4.3.1, bullet #3 to address this concern.

> **Requirement R4, part 4.3.1 -** Simulate the removal of all elements that the Protection System and other automatic controls are expected to disconnect for each Contingency without operator intervention. The analyses shall include the impact of subsequent:
>
> - Successful high speed reclosing and unsuccessful high speed reclosing into a Fault.
> - Tripping of generators where simulations show generator bus voltages or high side of the GSU voltages are less than known or assumed generator low voltage ride through capability. Include in the assessment any assumptions made.

Voter	Entity	Segment	Vote	Comment
• Tripping of Transmission lines and transformers where transient swings cause Protection System operation based on generic or actual relay models.				
Daniel Brotzman	Commonwealth Edison Co.	1	Negative	Exelon is concerned with the use of the term 'Protection System' in Category P5 of the Table 1 performance criteria. 'Protection System' is a defined term in the NERC Glossary (Protection System - Protective relays, associated communication systems, voltage and current sensing devices, station batteries and DC control circuitry). Thus, a potential interpretation of the standard as currently proposed would be that the loss of a station battery is to be included in analysis as a valid single contingency. We understand that the SDT response to previous comments on this issue indicates that the battery contingency was not intended to be part of the P5 contingencies. However, no changes or clarifications were subsequently made to the proposed Standard to clarify the requirements and exclude this interpretation. This leaves open the potential for multiple interpretations of the Standard and creates ambiguity for the functional entities that will have to implement the revised Standard. Additionally, Exelon is concerned that performance criteria in the draft Standard is based on the voltage level of the contingency element rather than the monitored element.
Response: The SDT has changed the text for the P5 event as a result of your (and others) comments to address these concerns. **P5**. Delayed Fault Clearing due to the failure of a relay[13] protecting the Faulted element to operate as designed, for a Fault on one of the following: **13**. Applies to the following relay functions or types: pilot (#85), distance (#21), differential (#87), current (#50, 51, and 67), voltage (#27 & 59), directional (#32, & 67), and tripping (#86, & 94). The SDT placed greater emphasis on the facility being removed than the monitored remaining intact Facilities. The outage of an EHV Facility will typically be of greater concern for the potential of transferring power flow to lower voltage parallel paths than the reverse. No change made.				
Pat G. Harrington	BC Hydro and Power Authority	3	Negative	File: NERC_Std_TPL-001_Draft05_Ballot_Comments_BCH20100226.doc A. GENERAL COMMENTS The standard needs to better define the pre- and post-contingency generation dispatch conditions and stipulate that the worst-case combination of possible load levels and generation dispatch must be studied. For example, the portion of a transmission network connecting a “generation-rich” region (ie, a region with much more generating capacity than local load) to the rest of the BES, should be able to operate within normal voltage level limits without overloading any elements under normal system conditions (N-0). If there are intermittent resources like wind parks or run-of-the-river hydro plants that the system is not depending on to supply dependable generating capacity (or at least not to the full nameplate rating of those resources), generation shedding or run-back can be permitted for single-contingencies (N 1 situation). The amount of generation shedding should be limited to the difference between the aggregate maximum generating capacity of the region and the aggregate

Voter	Entity	Segment	Vote	Comment
				dependable generating capacity of the region and there should be further limits defined for generation shedding/run-back as described below. Add the following definitions: o 1. Consequential Generation Loss: All Generation that is no longer served by the Transmission system as a result of Transmission Facilities being removed from service by a Protection System operation designed to isolate the fault. o 2. Non-Consequential Generation Loss: Dependable Generating Capacity Loss that does not include: (1) Consequential Generation Loss, (2) Generation loss due to low voltage or (3) Generation loss due to protective relays of the generating unit or its step-up transformer. o 3. Dependable Generating Capacity: The level of generating capacity of a plant or unit that the system operator can count on to serve Non-Interruptible Load by virtue of the plant or unit's fuel supply being available to provide that level of generating capacity more than 97% of the time. "EHV" and "HV" need to be defined because they are not defined in the NERC Glossary (NERC Glossary (use "Edit, Find on this page..." and look for "Glossary": http://www.nerc.com/elibrary.php?doc_class=&doc_dept=&submit=Filter) B. SPECIFIC COMMENTS R2, 2.2.1: The system configuration of the last year of the planning period should be studied as well as at least one other year that is most-likely to fail to meet planning criteria with an explanation for why that year is considered the worst case. As it is written, it would be quite acceptable for the TP and/or TC to simply study the year immediately following a major system upgrade with the rationale being that it would likely be the least likely system condition to fail any reliability standards. As it is written, there is no requirement that the rationale provided be logical or reasonable. R2, 2.4: "Stability analysis" does not cover all of the dynamic criteria that need to be met. A more general term, like "Stability and dynamic simulation studies" should be used. "Stability" is defined by NERC as just, "The ability of an electric system to maintain a state of equilibrium during normal and abnormal conditions or disturbances", but the assessments done in what people term "Stability" studies involve more than a check on the electromechanical stability (equilibrium) of the system. Voltage sags and swells, frequency deviations and short term overloading of equipment (eg, transient and dynamic current fluctuations through series capacitors that would provide an indication of the voltage stress across the capacitor dielectric) are usually included in "Stability" studies. R2, 2.4.1: "...for one of the five years" should be changed to "...for the most critical year of the 5 year Near-Term planning period". R2, 2.4.2: This requirement needs to be better defined. Is this requirement meant to demonstrate acceptable system performance during maintenance outages over the daily peak load periods of the off-peak season (ie, summertime for a winter-peaking region) or is this intended to address light-load

Voter	Entity	Segment	Vote	Comment
				issues like over-voltages and frequency deviations? R3, 3.2 The performance requirements for extreme events need to be defined in more detail. The criteria for acceptable system performance for extreme events seems to be only described vaguely in R3 item 3.5. R3, 3.5: Change "Those extreme events in Table 1 that are expected to produce more severe System impacts shall be identified and a list of those events to be evaluated for System performance in Requirement R3, part 3.2 created" to, "Those extreme events in Table 1 that are expected to produce more severe System impacts most likely to cause Cascading,, equipment damage or pose a significant risk to public or worker safety [needs to be further defined] shall be identified and a list of those events to be evaluated for System performance in Requirement R3, part 3.2 created" Also, simply providing "an evaluation of possible actions designed to reduce the likelihood or mitigate the consequences of the event(s)" is inadequate. One or more SPSs should be defined and studies should demonstrate that they prevent cascading outages and isolate, in a pre-planned controlled manner, the portion of the system experiencing the extreme event to minimize the extent of the disturbance. If necessary, an SPS should be provided that isolates the control area experiencing the extreme event from the rest of the interconnected system. R4, 4.1.1: Add (referring to the additional text suggested below for Note e of Table 1), "The amount of generating capacity disconnected or "run-back" by a Special Protection Scheme (SPS) shall be limited in accordance with Note e of Table 1". R4, 4.1.2: Add, "Studies shall be conducted to demonstrate that all circuit breakers that may be called upon to trip for an out-of-step condition (180 degrees across the open breaker) are properly rated for this duty considering the worst case voltage on any isolated transmission circuits due to trapped charge." R4, 4.1.3: Acceptable damping should be defined (eg, "studies must show that any oscillations are damped to less than 10% of their initial magnitude within 30 seconds") [or develop a different specific requirement that can be measured]. R4. 4.5" Change "Those extreme events in Table 1 that are expected to produce more severe System impacts shall be identified and a list of those events to be evaluated for System performance in Requirement R4, part 4.2 created" to, "Those extreme events in Table 1 that are expected to produce more severe System impacts most likely to cause Cascading, equipment damage or pose a significant risk to public or worker safety [needs to be further defined] shall be identified and a list of those events to be evaluated for System performance in Requirement R4, part 4.2 created".

Voter	Entity	Segment	Vote	Comment
				Also, simply providing "an evaluation of possible actions designed to reduce the likelihood or mitigate the consequences of the event(s)" is inadequate. One or more SPSs should be defined and studies should demonstrate that they prevent cascading outages and isolate, in a pre-planned controlled manner, the portion of the system experiencing the extreme event to minimize the extent of the disturbance. If necessary, an SPS should be provided that isolates the control area experiencing the extreme event. R5 & R6: Shouldn't the Load Serving Entities (LSEs) define system performance criteria instead of the Transmission Planner or the Planning Coordinator? The LSEs have an obligation to their customers and must demonstrate to their regulators that they are providing acceptable system performance and reliability of supply to their customers. The Transmission Planner and Planning Coordinator have less incentive to provide high levels of system performance. Due to regulatory difficulties in getting approvals for transmission system upgrades, there

Response: The standard requires a normal System model, P0, be developed that projects anticipated conditions for the period under study. Any additional stress of the System prior to loss of an element would be handled through sensitivity analysis as required in Requirement R2. In addition, the SDT explored the possibility of placing limits on the amount of generation runback and the industry clearly indicated in comments that they did not support such limits. No change made.

The EHV/HV differentiation is not meant to be a definition in that it only applies to this standard. No change made.

One can always study additional years if so desired. The SDT believes that "rationale" implies logic and reason. No change made.

The SDT intended for the term Stability analysis to include system Stability and unit Stability analyses. These analyses could include all aspects of Stability that you mentioned. It is left up to the judgment of the Planning Coordinator/Transmission Planner to decide which aspects of Stability may produce more severe results and therefore, must be analyzed. No change made.

The critical year can only be determined after reviewing the entire portfolio of current and past studies and is not a pre-determined condition. The SDT expectation is that an entity is building a portfolio over time that covers the entire planning horizon and thus determines any critical periods. No change made.

The requirement was intended to cover all conditions that could occur during Off-Peak periods. No change made.

Requirement R3, part 3.2 contains no performance obligations. It is simply a requirement to assess the impacts. No change made.

The SDT made a clarifying change to the requirement.

> **Requirement R3, part 3.5 -** Those extreme events in Table 1 that are expected to produce more severe System impacts shall be identified and a list created of those events to be evaluated in Requirement R3, part 3.2. The rationale for those Contingencies selected for evaluation shall be available as supporting information. If the analysis concludes there is Cascading caused by the occurrence of extreme events, an evaluation of possible actions designed to reduce the likelihood or mitigate the consequences and adverse impacts of the event(s) shall be conducted.

Voter	Entity	Segment	Vote	Comment
Due to the complexity associated with extreme events, the SDT believes it is inappropriate to require any more than a list of possible actions. An SPS could be a solution but it is not the only one. No change made. The SDT explored the possibility of placing limits on the amount of generation runback and the industry clearly indicated in comments that they did not support such limits. No change made. This standard is not intended to address engineering specifications such as proposed here. No change made. There is no single definition; the SDT has left it up to each Planning Coordinator or Transmission Planner to define. No change made. The SDT has made a clarifying change to the requirement. **Requirement R4, part 4.5 -** Those extreme events in Table 1 that are expected to produce more severe System impacts shall be identified and a list created of those events to be evaluated in Requirement R4, part 4.2. The rationale for those Contingencies selected for evaluation shall be available as supporting information. If the analysis concludes there is Cascading caused by the occurrence of extreme events, an evaluation of possible actions designed to reduce the likelihood or mitigate the consequences of the event(s) shall be conducted. Due to the complexity associated with extreme events, the SDT believes it is inappropriate to require any more than a list of possible actions. An SPS could be a solution but it is not the only one. No change made. These are System requirements for the BES and properly belong to the Planning Coordinator and Transmission Planner. No change made.				
Paul Shipps	Lakeland Electric	6	Negative	Five years is not enough time in many circumstances to build significant new transmission lines.
Joseph G. DePoorter	Madison Gas and Electric Co.	4	Negative	Our concern is that the timeframe of 60-month (5 year) for implementing Corrective Action Plans (CAP), is insufficient. We believe that the implementation timeframe must be extended to seven (7) years.
Response: The SDT has changed the majority of the implementation timeframe from 60 to 84 months as per your (and others') suggestion. Since problems may not be seen until after the assessments are completed and there is a 24 month implementation for assessments, the total time for items P2-1, P2-2 and P2-3 (above 300 kV), P3-1 through P3-5, P4-1 through P4-5 (above 300 kV), and P5 (above 300 KV) has been increased to 84 months. P1-2 and P1-3 were not increased since they are already being covered by the implementation plan for Project 2010-11: TPL Table 1 Order.				

Voter	Entity	Segment	Vote	Comment
W. R. Schoneck	Florida Power & Light Co.	3	Negative	FPL Comments on TPL-001-1 Standard FPL believes the Standard requirements need to be clear and unambiguous. The SDT has addressed many of the gray areas of Draft four in their consideration of comments however these comments are not part of the Standard that is currently out for ballot. Incorporating these types of clarifing comments with the use of footnotes in the Standard to help clarify the intent would be a significant improvement for anyone interpreting the Standard including an auditor or investigator. The definition of Year One is an unnecessary departure from the planning practices used in most of the Eastern Interconnection. It is recommended the phrase end of the current calendar year be changed to the current calendar year. This change will allow PAs to begin their near term analysis with either next year or the year after as deemed appropriate. The performance requirements of Table 1 do not allow the loss of non-consequential load for single and multiple contingency events. The disallowance of load loss does not provide any real benefit to the reliability of the BES and is an unnecessary overreach into local quality of service issues that are best addressed by State, Provincial or Municipal authorities. There may be circumstances such as high local transmission costs or local opposition to transmission construction where prohibition of non-consequential load loss represents a poor cost/benefit or quality of life tradeoff. Providing a quantitative cap in non-consequential load loss such as 100 MW may be rationale compromise in the goal of limiting load loss for the more probable outage events. Our preference would be to retain the capability of limited non-consequential load loss. Absent this, the 60 calendar month phase in period described in the Introduction section is too short for transmission facilities rated above 300 kV. Approval and permitting of EHV transmission lines is extremely difficult and time consuming in most parts of the Eastern Interconnection. The phrase any material changes used in requirement R.2.6.2 will effectively cause all Planning Authorities to run all studies every year regardless of minor changes in the model. The overwhelming majority of PAs use a 10 year set of planning models developed annually by Regions or Subregions. These annual sets of planning models will always have some changes. The annual study requirement is especially problematic for Stability and Short circuit studies that require much more engineering time to complete and are mush less likely to have results impacted by minor model changes such as different load forecasts. Uncertainty with audit review of technical rationale documentation will serve to focus Transmission Planning engineering resources on short term compliance to an extent that is counter productive. Requirement 2.5 represents a significant expansion of Stability Studies into the Long Term horizon. In many cases the stability issue in long term scenarios will be with the response of new generating plants to fault scenarios such as a breaker failure event. The protection upgrades needed to mitigate performance issues are easily

Voter	Entity	Segment	Vote	Comment
				accomplished in the short term. The uncertainty of compliance judgement of rationale documentation will force a tremendous amount of unnecessary study work. It is recommend Requirement 2.5 be removed. We concur with the SDT's opinion expressed in the most recent consideration of comments that the individual component level evaluation of protection systems and redundancy requirements should be covered under the PRC standards and that the intent of the protection failure contingencies specified in Table 1 is to simulation the failure of a single protection scheme. The event description for the P5 contingency was revised in draft 5 but it continues to reflect a range of protection component failures that greatly exceed the intent of the SDT. The term Protection System is in direct conflict with the intent of the SDT, as it is defined in the Glossary to include components such as station batteries. The term Protection System should be replaced with Protection Scheme in Table 1. Requirement 4.3.1 can be interpreted to require dynamic simulation analysis of multiple fault event scenarios for transmission lines with high speed reclosing enabled. This additional analysis may be advisable for certain rare special situations but is unnecessary and burdensome as a general requirement for transmission planning contingency analysis. As such, requirement 4.3.1 will discourage application of high speed reclosing. This would be an unfortunate outcome given the benefits of high speed reclosing both for transmission reliability and customer power quality. It is recommended that 4.3.1 be reworded as follows; Simulate the operation of Protection Systems and other automatic controls as they would be expected for each contingency. The SDT has indicated in their responses to previous comments on requirement R4.3.3 that generic relay models could be used for screening purposes. While we agree with this as a practical method, the language of R4.3.3 could be interpreted to require explicit modeling of all protection and controls which is neither practicable nor an effective use of engineering resources. It is recommended that R4.3.3 be deleted.

Response: Based on your comment and those of others, the SDT has revised the definition of Year One.

> **Year One:** The first twelve month period that a Planning Coordinator or a Transmission Planner is responsible for assessing. For the Planning Assessment started in a given calendar year, Year One must include the forecasted peak Load period for one of the following two calendar years. For example, if a Planning Assessment was started in 2011, then Year One must include the forecasted peak Load period for either 2012 or 2013.

The SDT has added footnote #12 to P1, P2-1, and P3 to address your and others concerns in this area.

> 12. Note: Non-Consequential Load Loss is being decided in Project 2010-11. When that project is finalized, the resolution will be copied here.

Material change is system specific and difficult to define on a continent-wide basis and is left to engineering judgment with a documented technical rationale as

Voter	Entity	Segment	Vote	Comment

stated in the requirement. No change made.

The SDT has clarified the requirement to address your concern.

> **Requirement R2, part 2.5 -** The Long-Term Transmission Planning Horizon portion of the Stability analysis shall be assessed to address the impact of proposed material generation additions or changes in that timeframe and be supported by current or past studies as qualified in Requirement R2, part2.6. The technical rationale for determining material changes shall be documented.

The SDT has changed the text for the P5 event as a result of your (and others) comments to address these concerns.

> **P5**. Delayed Fault Clearing due to the failure of a relay[13] protecting the Faulted element to operate as designed, for a Fault on one of the following:
>
> **13**. Applies to the following relay functions or types: pilot (#85), distance (#21), differential (#87), current (#50, 51, and 67), voltage (#27 & 59), directional (#32, & 67), and tripping (#86, & 94).

The SDT has revised Requirement R4, part 4.3.1, bullet #3 to address this concern.

> **Requirement R4, part 4.3.1 -** Simulate the removal of all elements that the Protection System and other automatic controls are expected to disconnect for each Contingency without operator intervention. The analyses shall include the impact of subsequent:
>
> - Successful high speed reclosing and unsuccessful high speed reclosing into a Fault.
> - Tripping of generators where simulations show generator bus voltages or high side of the GSU voltages are less than known or assumed generator low voltage ride through capability. Include in the assessment any assumptions made.
> - Tripping of Transmission lines and transformers where transient swings cause Protection System operation based on generic or actual relay models.

4.3.3 - The SDT has revised Requirement R4, part 4.3.1, bullet #3 to address this concern.

> **Requirement R4, part 4.3.1 -** Simulate the removal of all elements that the Protection System and other automatic controls are expected to disconnect for each Contingency without operator intervention. The analyses shall include the impact of subsequent:
>
> - Successful high speed reclosing and unsuccessful high speed reclosing into a Fault.
> - Tripping of generators where simulations show generator bus voltages or high side of the GSU voltages are less than known or assumed generator low voltage ride through capability. Include in the assessment any assumptions made.
> - Tripping of Transmission lines and transformers where transient swings cause Protection System operation based on generic or actual relay models.

Voter	Entity	Segment	Vote	Comment
Thomas W. Richards	Fort Pierce Utilities Authority	4	Negative	FPUA believes that 5 years is not enough time in many circumstances to build significant new transmission lines. Seven years is a more appropriate lead time for the implementation plan / effective date. FPUA believes that requirement 2.1.5 on spare equipment strategy is discriminatory for smaller entities. For many smaller entities, having a spare transformer is not a practical solution and makes far less sense and has significantly more customer rate impacts than for a larger utility. Order 693 states at Paragraph 1725: "... the Commission directs the ERO to modify the planning Reliability Standards to require the assessment of planned outages consistent with the entity's spare equipment strategy". The standard oversteps this direction by not including a consideration of planned outages versus forced outages in requirement 2.1.5, in other words, if an entity has no plans for a long term outage of a transformer, it should be excluded from the assessment of 2.1.5. Such a condition would allow an entity to assess things like gas in oil analysis to predict when a long term outage might be planned, and the flexibility between start and end dates of that planned outage. Requirement 3.3.3 as written would require modeling of nearly every phase distance relay, especially when studying extreme events. The requirement ought to have the flexibility afforded in 3.3.2 where the planner can use a conservative assumption (e.g., the proposed curves of PRC-024) for relay loadability (e.g., the requirements of PRC-023). Requirement 4.3.1 would also require modeling of nearly every phase distance relay in the Interconnection, again because it applies to extreme events and we will not know ahead of time where the power swings will traverse distance relay characteristics. FPUA agrees with Ameren's concerns about the ability of the programs to actually be able to model this requirement and FPUA fears that we are setting ourselves up for failure. We suppose that "generic" relays could be modeled to observe what distance relay characteristics are actually crossed by power swings and then, for that simulation, go back and individually model the actual relays for that specific simulation, but, that is a labor intensive process, not to mention the level of effort that would be required to maintain an interconnection wide database of relay settings. FPUA believes that the SDT ought to evaluate the perceived increase in accuracy that is intended with these requirements. It is FPUA's belief that the expected increase in accuracy is lost when considering other simulation inaccuracies that we really cannot improve (e.g., load modeling, load level modeled, dispatch modeled, etc., versus what would happen in an actual event) until much more work is done on improving our understanding of dynamic load behavior, benchmarking the model to actual system events, and possibly improvements on the ability to perform "real-time" stability analyses so that we have more practical operating experience to insert into our planning processes. Let's be practical in understanding the level of accuracy we can reasonably achieve in our simulations and model in accordance with that level of accuracy.

Voter	Entity	Segment	Vote	Comment
Response: The SDT has changed the majority of the implementation timeframe from 60 to 84 months as per your (and others') suggestion. The SDT has clarified the requirement based on your comments and those of others. **Requirement R2, part 2.1.5** - When an entity's spare equipment strategy could result in the unavailability of major Transmission equipment that has a lead time of one year or more (such as a transformer), the impact of this possible unavailability on System performance shall be studied. The studies shall be performed for the P0, P1, and P2 categories identified in Table 1 with the conditions that the System is expected to experience during the possible unavailability of the long lead time equipment The SDT agrees that a planner should be able to utilize conservative assumptions and screening methods and doesn't believe that there is anything in the requirement that precludes an entity from doing so. No change made. The SDT has revised Requirement R4, part 4.3.1, bullet #3 to address this concern. **Requirement R4, part 4.3.1 -** Simulate the removal of all elements that the Protection System and other automatic controls are expected to disconnect for each Contingency without operator intervention. The analyses shall include the impact of subsequent: • Successful high speed reclosing and unsuccessful high speed reclosing into a Fault. • Tripping of generators where simulations show generator bus voltages or high side of the GSU voltages are less than known or assumed generator low voltage ride through capability. Include in the assessment any assumptions made. • Tripping of Transmission lines and transformers where transient swings cause Protection System operation based on generic or actual relay models.				
Harold Taylor, II	Georgia Transmission Corporation	1	Negative	Georgia Transmission Corporation (GTC) supports the efforts of the study team and believes that their efforts to improve the Standard are moving in the right direction. However, we have identified the following concerns which prevent us from voting "affirmative". 1. GTC echoes ATC's concerns with the use of the word "control" in R2.7.3. (ref. ATC email; From: Shaver, Jason To: Gilbert, Don C. Manager, Electric System Planning ; bp-2006-02_ATFNSDT_TPL_in@nerc.com Sent: Wed Feb 24 09:43:11 2010 Subject: RE: Comments on TPL-001-1, Project 2006-02) An auditor could identify many things that may reasonably be within the "control" of a TP or PC, that are not covered by NERC standards or a TP / PC's process, procedures or criteria. This wide area of discretion leaves entities open to findings of possible non-compliance based solely on an auditor's perception of what he or she believes should be in the TP / PC's control. In addition, the concept of "control" must be limited to an entity's compliance obligation as a Transmission Planner and/or Planning Coordinator. In other words, an entity must be allowed the ability to identify situations which fall under its "control" as a Transmission Owner, Transmission Operator, Generator Owner or Generator Operator etc. but is beyond the responsibility of its

Voter	Entity	Segment	Vote	Comment
				Transmission Planner or Planning Coordinator functions. 2. R2.7.2 - "include actions to resolve performance deficiencies identified in multiple sensitivity studies" - Mitigation plans should not be required for deficiencies found in multiple sensitivity studies because the conditions in some sensitivity studies are more extreme and less likely than base case conditions. Some of the sensitivity study conditions are not credible or plausible enough to warrant the implementation of mitigation measures. It is not clear if the interpretation of multiple studies is more than one or a majority of the number that were studied. 3. Throughout the Standard there are circular references that make the interpretation confusing. We recommend that all references should refer back to previous sections and not to future sections, thereby avoiding circular references. 4. We disagree with the proposed definition of Year One. Year One should be the planning window that begins 12-18 months from the start of the calendar year, and not from the end of the calendar year. This would require minimal adjustments to the ERAG MMWG model building process. The proposed definition would force additional models to be built by the MMWG. 5. We agree with others that the timeframe of 60-month (5 year) for implementing Corrective Action Plans (CAP), is insufficient. We believe that the implementation timeframe must be extended to seven (7) years. GTC is aware of Requirement 2.7.3, which covers situations that arise beyond the control of the Transmission Planner (TP) or Planning Coordinator (PC), but believes that the proposed language is ambiguous. 6. We have concerns for including induction motor representations in the load models without any study or bench-marking activities to meet the requirements of R2.4.1. This information should be supplied by the LSE as part of the MOD standard. We understand that the proposed standard will accept an aggregate system load model which represents the overall dynamic behavior of the load to relieve the burden of trying to develop specific induction motor load representation at each load bus. However this modeled system response will be considerably different compared to the actual system response which will open up the industry to unwarranted scrutiny and possible compliance violation investigations. 7. We disagree with the inclusion of low voltage ride-through in requirement R3.3.2. Low voltage ride-through is a dynamic modeling issue as correctly included in requirement R4.3.2. 8. "EHV" and "HV" need to be defined in the NERC Glossary. 9. Requirement R2.4.2 needs to be better defined. It is not clear if this requirement is meant to demonstrate acceptable system performance during maintenance outages over the daily peak load

Voter	Entity	Segment	Vote	Comment
				periods of the off-peak season or intended to address light-load issues like over-voltages and frequency deviations. 10. A better definition for Consequential Load Loss is needed. The Non-Consequential Load Loss definition conflicts with the Consequential Load Loss definition. The Response of Voltage Sensitive Load exception under the Non-Consequential Load definition is a circular reference. It is not clear whether Voltage Sensitive Load is Consequential Load Loss or Non-Consequential Load Loss. 11. It is not clear if Consequential Load Loss is intended to be limited to: a) Load between two open (breaker/switches) protective devices and b) Protective devices (breakers/switches) for radial load. 12. Requirement R1.1.5 states that the system model shall represent "Known commitments for Firm Transmission Service and Interchange". GTC requests clarification of how to represent "Known commitments" whose collective magnitude can exceed the Load requirements.

Response: 1. If an entity can demonstrate that it has made a best faith effort to implement the planned solution then there should not be a concern. The wording of the requirement allows an entity this flexibility.

2. Requirement R2, part 2.7.2 already states that an entity must supply the rationale for when actions were not necessary so the SDT believes that your concerns have already been addressed. No change made.

3. The SDT has made every attempt to make the standard as easy to follow as possible and believes that all references cited in the standard are correct. No change made.

4. Based on your comment and those of others, the SDT has revised the definition of Year One.

> **Year One:** The first twelve month period that a Planning Coordinator or a Transmission Planner is responsible for assessing. For the Planning Assessment started in a given calendar year, Year One must include the forecasted peak Load period for one of the following two calendar years. For example, if a Planning Assessment was started in 2011, then Year One must include the forecasted peak Load period for either 2012 or 2013.

5. The SDT has changed the majority of the implementation timeframe from 60 to 84 months as per your (and others') suggestion. Since problems may not be seen until after the assessments are completed and there is a 24 month implementation for assessments, the total time for items P2-1, P2-2 and P2-3 (above 300 kV), P3-1 through P3-5, P4-1 through P4-5 (above 300 kV), and P5 (above 300 KV) has been increased to 84 months. P1-2 and P1-3 were not increased since they are already being covered by the implementation plan for Project 2010-11: TPL Table 1 Order. Requirement R2, part 2.7.3 - If an entity can demonstrate that they have made a best faith effort to implement the planned solution then there should not be a concern. The wording of the requirement allows an entity this flexibility.

6. The SDT does not disagree that the Load Serving Entity may provide the initial information but someone needs to be responsible for adapting the model accordingly and that entity has to be the Transmission Planner or Planning Coordinator. No change made.

7. The SDT voltage ride through is not confined to the dynamic period. There are protection requirements that could result in generator tripping and that must be

Voter	Entity	Segment	Vote	Comment
considered in the steady-state analysis. The SDT has clarified the wording of the requirement. **Requirement R3, part 3.3.1 -** Simulate the removal of all elements that the Protection System and other automatic controls are expected to disconnect for each Contingency without operator intervention. The analyses shall include the impact of subsequent: • Tripping of generators where simulations show generator bus voltages or high side of the Generation Step Up (GSU) voltages are less than known or assumed minimum generator steady state or ride through voltage limitations. Include in the assessment any assumptions made. • Tripping of Transmission elements where relay loadability limits are exceeded. 8. The EHV/HV differentiation is not meant to be a definition in that it only applies to this standard. No change made. 9. The requirement was intended to cover all conditions that could occur during Off-Peak periods. No change made. 10. The definitions are not in conflict as the definition of Non-Consequential Load Loss specifically states that it doesn't include Consequential Load Loss. The response of Load to voltage is not classified as Consequential or Non-Consequential Load Loss. This standard articulates how voltage sensitive Load should be treated during different time periods of a simulation. No change made. 11. Both examples provided are Consequential Load Loss per the definition. 12. The SDT does not believe that a continent-wide standard should proscribe a single approach. Requirement R1 states that an entity must document its assumptions. No change made.				
Gordon Pietsch	Great River Energy	1	Negative	GRE recommends the following revision to the wording in subrequirement 2.5: "…the impact of proposed generation additions that have made a commitment to interconnect with the Bulk Electric System…" In addition, it appears that the drafting team has inadvertently included additional compliance requirements in the language of Table 1. The net result of this is that these requirements are effectively buried in the Table 1 language. GRE does not take exception to these additional requirements but believes that they should be included in the Requirements section of the Standard. Having the Table 1 language written as it is presents additional risks for non-compliance that would not otherwise be there if these requirements would be included in the Requirements section.
Response: The SDT has clarified this requirement based on industry comments. **Requirement R2, part 2.5 -** The Long-Term Transmission Planning Horizon portion of the Stability analysis shall be assessed to address the impact of proposed material generation additions or changes in that timeframe and be supported by current or past studies as qualified in Requirement R2, part2.6. The technical rationale for determining material changes shall be documented.				

Voter	Entity	Segment	Vote	Comment
Without any specific comments to address, the SDT is unable to further address your concerns. No change made.				
Jacquie Smith	ReliabilityFirst Corporation	10	Negative	In R1.1.6 is OR the proper desciption of resources? Shouldn't this be AND? Resources are both supply AND demand side. Is R4.1.2 too stringent. At the least, shouldn't there be an exception for Special Protection Systems and Remedial Action Schemes to trip for apparent impedance swings? In 4.3.1 shouldn't the analysis be for both successful high speed reclosing and for unsuccessful high speed reclosing, (AND instead of OR) In Measure 8, the mixture of OR and AND is confusing. As presently written, as long as no entity makes a written request for the information they pass the test. Thus, as long as your neighbors do not complain about not receiving the information an entity is compliant. Better wording would be: The responsible entity failed to distribute the results of its Planning Assessment to one of its adjacent Transmission Planners, or one of its adjacent Planning Coordinators, or to one functional entity ..... The responsible entity failed to distribute the results of its Planning Assessment to two or more of its adjacent Transmission Planners, adjacent Planning Coordinators, functional entity ..... Also, I think failure to distribute results is more severe than failing to respond to comments. Failing to give their neighbors an opportunity to comment is less severe than failing to acknowledge comments. I presume that the documented response to comments can be nothing more than "Thank you for your comments." All of the above are minor compared to this next problem. (I believe this needs to be addressed before we can vote yes.) The level of detail of Planning Assessment results is missing from the requirements. Is a message to your neighbors stating that you have performed a Planning Assessment and everything is OK, enough to meet the requirement, or does it need to be more detailed? The minimum contents of the Planning Assessment results shared with Transmission Planners, Planning Authorities, and other functional entities needs to be clearly stated. Also, the RRO is not a functional entity. As written, can this standard be used as justification for not sending detailed Reliability Assessment information to the ReliabilityFirst? Would requiring sharing with Stakeholders with a reliability need be better than limiting the required sharing to functional entities?
Response: The SDT believes that ‘or’ is appropriate. This allows for an entity to model supply or demand or both as appropriate. No change made. Requirement R4, part 4.1.2, deals with a single generator pulling out of synchronism. The situation you described is a system Stability issue and is considered an				

Voter	Entity	Segment	Vote	Comment

application for an SPS which is allowed by the standard. No change made.

The SDT has clarified the language of Requirement 4, part 4.3.1, bullet #1 to address your concerns and those of others.

> **Requirement R4, part 4.3.1 -** Simulate the removal of all elements that the Protection System and other automatic controls are expected to disconnect for each Contingency without operator intervention. The analyses shall include the impact of subsequent:
>
> - Successful high speed reclosing and unsuccessful high speed reclosing into a Fault.
> - Tripping of generators where simulations show generator bus voltages or high side of the GSU voltages are less than known or assumed generator low voltage ride through capability. Include in the assessment any assumptions made.
> - Tripping of Transmission lines and transformers where transient swings cause Protection System operation based on generic or actual relay models.

Measure M8 had a typo which has been corrected. The remainder of the comment seems to be directed to VSLs and the SDT reviewed the VSLs and has made a clarifying change.

> **M8**. Each Planning Coordinator and Transmission Planner shall provide evidence, such as email notices, documentation of updated web pages, postal receipts showing recipient and date; or a demonstration of a public posting, that it has distributed its Planning Assessment results to adjacent Planning Coordinators, adjacent Transmission Planners, and any functional entity who has indicated a reliability need and that functional entity has provided a documented response to comments received on Planning Assessment results within 90 calendar days of receipt of those comments in accordance with Requirement R8.

R8 VSL	The responsible entity failed to distribute the results of its Planning Assessment to one of its adjacent Transmission Planners, one adjacent Planning Coordinator, or to one functional entity that has a reliability related need and that has submitted a written request for the information, respectively in accordance with Requirement R8.	N/A	The responsible entity failed to distribute the results of its Planning Assessment to more than one of its adjacent Transmission Planners, adjacent Planning Coordinators, or functional entities that have a reliability related need and that have submitted a written request for the information, respectively in accordance with Requirement R8.	The responsible entity failed to provide a documented response to a recipient of the Planning Assessment results who provided documented comments on the results within 90 calendar days of receipt of those comments in accordance with Requirement R8.

The definition of Planning Assessment details what must be exchanged. No change made.

Voter	Entity	Segment	Vote	Comment
Any functional entity such as a Regional Entity or Reliability Assurer would qualify which would allow RFC to get the information. No change made.				
Kathleen Goodman	ISO New England, Inc.	2	Negative	ISO New England is submitting a negative vote on the TPL-001 standard, because: 1. Section 2 of the standard requires annual assessment of the system regardless of whether system conditions are essentially unchanged from year to year. This creates unnecessary study work and must be changed in order for ISO NE to support the standard. 2. In Table 1 - Steady State & Stability Performance Planning Events, Category P5 wording for the EHV contingency continues to call for no loss of load in the event of the loss of a single protection system. This requirement as currently worded goes well beyond the intent of the Standard Committee as stated in response to comments as follows: "A Protection System component failure (i.e., battery) that removes multiple Protection System schemes is beyond the P5 planning event". It is ISO New England's opinion that similar language to the comment response should be incorporated into this requirement. 3. ISO New England has additional reservations about the standard that should be addressed in subsequent revisions however items 1 and 2 here must be addressed for ISO New England to support the standard.

Response: 1. The intent of the SDT wasn't that annual studies are required but that an annual Planning Assessment is required. However, the SDT agrees that the words may have been somewhat confusing. Therefore, the SDT has clarified the wording of Requirement R2 and part 2.1.

> **Requirement R2** - Each Transmission Planner and Planning Coordinator shall prepare an annual Planning Assessment of its portion of the BES. This Planning Assessment shall use current or qualified past studies, document assumptions, summarize documented results, and cover steady state analyses, short circuit analyses, and Stability analyses.
>
> **Requirement R2, part 2.1 -** The Near-Term Transmission Planning Horizon portion of the steady state analysis shall be assessed annually and be supported by current annual studies or qualified past studies as indicated in Requirement R2, part 2.6, as follows:

2. The SDT has changed the text for the P5 event as a result of your (and others) comments to address these concerns.

> **P5**. Delayed Fault Clearing due to the failure of a relay[13] protecting the Faulted element to operate as designed, for a Fault on one of the following:
>
> **13**. Applies to the following relay functions or types: pilot (#85), distance (#21), differential (#87), current (#50, 51, and 67), voltage (#27 & 59), directional (#32, & 67), and tripping (#86, & 94).

3. Without any specific comments to address, the SDT is unable to further address your concerns at this time. No change made.

Voter	Entity	Segment	Vote	Comment
Brian Conroy	Central Maine Power Company	1	Negative	Issues with TPL-001-1 draft 5 in ballot: R 1 & 2 - There is insufficient direction/specification regarding base case development and sensitivity testing. Only "known outage(s) of generation" is specified. R2.1.1 - Year One or year two are operating time frame studies. Year five, particularly with additional load from load growth, is appropriate for system planning. There should not be a requirement for any more than one short-term and one long-term steady-state assessment. 2.1.5 - The 'spare equipment strategy' requirement effectively amounts to a N-1-1 analysis, but without the system adjustment between contingencies. A N-1-1 analysis should be sufficient. R2 - An annual assessment of the system is required regardless of whether system conditions are essentially unchanged from year to year. Note that R2.6 is only for 'support' and are 'supplementation.' This creates unnecessary study work and must be changed in order for ISO NE to support the standard. R2.4.1 - The dynamic load model must consider the behavior of induction motor Loads in the stability assessment. The behavior of customers' induction motor loads is not known. Table 1, Category P5, EHV - loss of load in the event of a fault plus the loss of a protection system, should be allowed. This requirement as currently worded goes well beyond the intent of the Standard Committee as stated in response to comments as follows: "A Protection System component failure (i.e., battery) that removes multiple Protection System schemes is beyond the P5 planning event". The draft standard is too prescriptive in some areas and too open to various interpretations in others.

Response: System normal, or P0, is the starting system condition for the projected study conditions per the model developed in accordance with Requirement R1. Requirement R1 contains more than just 'known outages of generation' that need to be considered. The SDT has adjusted Requirement R1 to provide this clarity. The SDT believes that sufficient direction on sensitivities is in the requirement but the SDT has made a slight clarifying change to the requirement.

> **Requirement R1 -** Each Transmission Planner and Planning Coordinator shall maintain System models within its respective area for performing the studies needed to complete its Planning Assessment. The models shall use the latest data consistent with that provided in accordance with the MOD-010 and MOD-012 standards, supplemented by other sources as needed, including items represented in the Corrective Action Plan, and shall represent projected System conditions. This establishes the normal system condition in Table 1.

The SDT has changed the definition of Year One to more clearly show the SDT's intent. The SDT believes that two near-term studies are necessary in order to calibrate the planning assumptions against operations (Year One or year two) and to provide an additional data point for interpolation (Year One or year two and

Voter	Entity	Segment	Vote	Comment
year five). **Year One:** The first twelve month period that a Planning Coordinator or a Transmission Planner is responsible for assessing. For the Planning Assessment started in a given calendar year, Year One must include the forecasted peak Load period for one of the following two calendar years. For example, if a Planning Assessment was started in 2011, then Year One must include the forecasted peak Load period for either 2012 or 2013. The SDT has clarified the requirement based on your comments and those of others. **Requirement R2, part 2.1.5** - When an entity's spare equipment strategy could result in the unavailability of major Transmission equipment that has a lead time of one year or more (such as a transformer), the impact of this possible unavailability on System performance shall be studied. The studies shall be performed for the P0, P1, and P2 categories identified in Table 1 with the conditions that the System is expected to experience during the possible unavailability of the long lead time equipment An annual Planning Assessment is required but it can be supported by current or past studies. The SDT has clarified Requirement R2, part 2.1 accordingly. **Requirement R2, part 2.1 -** The Near-Term Transmission Planning Horizon portion of the steady state analysis shall be assessed annually and be supported by current annual studies or qualified past studies as indicated in Requirement R2, part 2.6, as follows: The SDT has changed Requirement R2, part 2.1 as indicated above to address your concern. 2.4.1 The standard permits an aggregate model assumption that can be applied for a given system that is not substation specific. No change made. The SDT disagrees that Non-Consequential Load Loss should be allowed for EHV. The SDT feels that it was appropriate to raise the bar on situations that would impact the reliability and performance of the System and considered above 300 kV as the backbone of the System and thus needs to be extremely reliable and was an appropriate place for raising of the bar. The SDT has changed the text for the P5 event as a result of comments. **P5**. Delayed Fault Clearing due to the failure of a relay[13] protecting the Faulted element to operate as designed, for a Fault on one of the following: **13**. Applies to the following relay functions or types: pilot (#85), distance (#21), differential (#87), current (#50, 51, and 67), voltage (#27 & 59), directional (#32, & 67), and tripping (#86, & 94).				

Voter	Entity	Segment	Vote	Comment
Lorees Tadros	Omaha Public Power District	1	Negative	It's unclear what the intent of the SDT was in Requirement R6, especially when R6 is considered in conjunction with Measurement M6. R6 includes the phrase "for conditions such as Cascading, voltage instability, or uncontrolled islanding", while M6 does not. R6 and M6 should use parallel language, similar to the way R5 and M5 use parallel language. Additionally, why is "System instability" mentioned in R6 for conditions such as Cascading, voltage instability, or uncontrolled islanding, when in Note "a" at the top of Table 1, the requirement that Cascading, voltage instability, and uncontrolled islanding not occur applies to both steady-state and stability analysis? In Note "f" at the top of Table 1, the word "applicable" was inserted in front of the term "Facility Ratings". The word "applicable" is unnecessary and should be struck. Inclusion of it could lead to certain Planning Coordinators and Transmission Planners interpreting it in ways that were never intended by the SDT. The word "applicable" should also be struck from Footnote 9 of Table 1. A reference to Footnote 9 was added to each occurrence of the word "No" in the second-to-last column of Table 1. This is confusing, because a "No" in this column means that interruption of firm transmission service is not allowed, while Footnote 9 says that curtailment of firm transmission service is allowed. This needs to be clarified.

Response: The SDT agrees and has revised the wording accordingly.

> **M6.** Each Transmission Planner and Planning Coordinator shall provide evidence, such as electronic or hard copies of documentation specifying any criteria or methodology used in the analysis to identify System instability for conditions such as Cascading, voltage instability, or uncontrolled islanding that was utilized in preparing the Planning Assessment in accordance with Requirement R6.

Requirement R6 is documentation for criteria and methodology for risk exposure to those items. The SDT does not believe it is in conflict with header note 'a'. This is parallel to using thermal ratings to determine if lines become overloaded during the analysis. No change made.

The word 'applicable' is correct as ratings vary over time and the standard must accommodate this situation. No change made.

As a general rule, curtailment is not allowed. The footnote sets out exceptions to that as long as the conditions in the footnote are met. The SDT believes that this is the proper method to present the concept. No change made.

Voter	Entity	Segment	Vote	Comment
Garry Baker	JEA	3	Negative	JEA is concerned that there are some limited prudent cases where consumers, local jurisdictions, and state jurisdictions may find it prudent to plan on some Non-Consequential Load Loss in order to defer building transmission infrastructure for the overall benefit of the consumer. Therefore, JEA proposes the addition to the standard that allows the use of Non-Consequential Load Loss for local area planning.
Brad Chase	Orlando Utilities Commission	1	Negative	OUC appreciates that hard work of the STD and of the industry in reviewing and commenting on these standards. The STD has worked hard to try to address the concerns of the industry. OUC is voting against these standards. The proposed standard raise the bar in terms of study and performance requirements, an increase that will result in a non trivial increase in costs for utilities to meet the standards. The change in the standard did address some ambiguities in the old standard, but also introduced some new ones. Reviewing the new standard against the old OUC finds that our cost and that of our neighbors will increase to meet these standards. However OUC does not believe there will be a real increase in reliability on either the bulk system or at the individual user level due to these increased costs. In the current environment the direction from our customers is to keep rates as low as possible, and from our regulatory agency it is to have as little environmental impact as possible. The customers and regulatory agency do look at outages, but transmission is very rarely a contributor to those outages and funds expended can be better spent elsewhere, like on the distribution system or hurricane hardening, then on studying and constructing redundant transmission facilities that provide little to no increase in the end user's reliability. The standard also reduces the range of circumstances where non-consequential load loss is acceptable. OUC does not generally rely on consequential load loss for these circumstances, but this is a choice made based on feedback from our customers and local regulatory authorities. Consequential load loss, when confined to a limited area, is not a Bulk Electric System reliability issue. It is an issue best addressed locally where the cost in terms of capital facilities, condemnation, environmental impacts, probability of event and severity of event can be evaluated and a decision made that addresses these issues. A miniscule decrease in the risk of an outage would often be desirable to the community due to the subsequent rate increase and the impact of constructing power lines through their wetlands, scenic and urban areas. Since such an outage is not even noticeable at a regional scale, the choice should be left to those impacted, not mandated by NERC.
Richard Kinas	Orlando Utilities Commission	5	Negative	
Ballard Keith Mutters	Orlando Utilities Commission	3	Negative	
Kimberly J. Jones	North Carolina Utilities Commission	9	Negative	The NC Utilities Commission is concerned that the requirement prohibiting loss of non-consequential load for events in Table 1 of TPL-001-1 is an inappropriate overreach into service issues that are more appropriately addressed by state regulatory commissions. This requirement does not provide any benefit to reliability of the bulk electric system and could undermine state efforts to balance

Voter	Entity	Segment	Vote	Comment
				reliability issues with cost of service issues. Requiring remediation by a date certain could frustrate the coordinated siting of new lines with other planned infrastructure upgrades such as highways or bridges. The standard should continue to allow Transmission Planners to use discretion regarding loss of non-consequential load, understanding that state commissions are positioned to force electric utilities to address service quality issues on an expedited basis, should it be necessary and in the public interest.
Response: The SDT has added footnote #12 to P1, P2-1, and P3 to address your and others concerns in this area. 12. Note: Non-Consequential Load Loss is being decided in Project 2010-11. When that project is finalized, the resolution will be copied here.				
Mike Laney	Luminant Generation Company LLC	5	Negative	Luminant supports the concept of a more robust transmission planning criteria as described in TPL-001-1, but has serious concerns about the timeline being proposed. The 60-month implementation timeframe associated with the elimination of non-consequential load loss does not have any mechanisms to respect the base level of construction activity already underway in the various NERC regions that may materially impact compliance with a 60-month timeline. In ERCOT, the Public Utility Commission of Texas (PUCT) has mandated the construction of over 4,400 circuit miles of transmission within the next five years to support over 18,000 MW of wind generation. The PUCT Competitive Renewable Energy Zones (CREZs) build out plan requires the ERCOT 345 kV transmission network to be expanded by ~51% (in terms of total circuit miles), necessitating complex coordination of transmission clearances for construction of new lines, making it difficult to economically operate in a secure manner. These new CREZ transmission facilities are scheduled for completion by 2014 (i.e., within the next 5 years). The concurrent implementation of TPL-001-01 will compete with the CREZ build-outs and other on-going transmission upgrades needed to support load growth in the ERCOT region, which has historically experienced higher load growth rates than other parts of the country. Given that these major activities (including CREZ) reflect the most aggressive transmission build out plan in the history of ERCOT and that the implementation of TPL-001-1 will only add to that, Luminant is concerned that adding the implementation of TPL-001-1 on top of these activities will not provide adequate clearance windows to economically or reliably implement this plan within the proposed 60-month implementation window. In light of these concerns, Luminant proposes a 120 month implementation timeline of TPL001-1 for the ERCOT region Additionally, Luminant would like to see safeguards added to TPL-001-1 that acknowledge that each NERC region must complete all of the identified transmission upgrades associated with implementation of TPL-001-1 before NERC regions are required to begin operating with this level of security constraints enforced. Given that it is not possible to operate a NERC region any more securely than it is planned to be operated, this type of safeguard may readily apparent, but explicitly

Voter	Entity	Segment	Vote	Comment
				stating it would still be helpful. With the modifications outlined above, Luminant could support TPL-001-1. Thanks for the opportunity to comment.
Response: The SDT has changed the majority of the implementation timeframe from 60 to 84 months as per your (and others') suggestion. Since problems may not be seen until after the assessments are completed and there is a 24 month implementation for assessments, the total time for items P2-1, P2-2 and P2-3 (above 300 kV), P3-1 through P3-5, P4-1 through P4-5 (above 300 kV), and P5 (above 300 KV) has been increased to 84 months. P1-2 and P1-3 were not increased since they are already being covered by the implementation plan for Project 2010-11: TPL Table 1 Order. The SDT has extended the implementation plan as described above and that Requirement R2, part 2.7.3 provides sufficient latitude for entities to accommodate your concern. No change made.				
Terry Harbour	MidAmerican Energy Co.	1	Negative	MidAmerican find P5 confusing. What analysis is required? Does P5 specify the analysis of individual components of a System Protection system, the entire protection system as a whole, or something else? Do the benefits justify the requirement?
Response: The SDT has changed the text for the P5 event as a result of your (and others) comments to address these concerns. **P5**. Delayed Fault Clearing due to the failure of a relay[13] protecting the Faulted element to operate as designed, for a Fault on one of the following: **13**. Applies to the following relay functions or types: pilot (#85), distance (#21), differential (#87), current (#50, 51, and 67), voltage (#27 & 59), directional (#32, & 67), and tripping (#86, & 94).				
John Canavan	NorthWestern Energy	1	Negative	NorthWestern Energy Rationale for our Vote NO: Below are NorthWestern's Comments on TPL-001-1 Draft 5: January 6, 2010: While this document has improved slightly with each successive draft, there are still several flaws that persist that NorthWestern finds to be unacceptable: 1. The definition of a Bus-tie Breaker is vague. As a practical matter any breaker could qualify. 2. The definition of Non-Consequential Load Loss doesn't fit its name. 3. The idea of a Planning Assessment (developed throughout the document) is loose enough that it seems always to be asking the Transmission Planner to "do another comprehensive study anyway just to be sure you won't get sanctioned". There were numerous discussions about this, but the Drafting team has not cleaned up the language on this. The original idea was that a TP whose comprehensive study was not rendered unusable by the developments of a single year could perform an Assessment, and reasonably re-use the results of that study for the following year. The language in R2.1 contains the language: "The Near-Term Transmission Planning Horizon portion of the steady state analysis shall be assessed annually and be supported by the following current studies, supplemented with qualified past studies as indicated in Requirement R2, part 2.6:" This language

Voter	Entity	Segment	Vote	Comment
				convinces any Transmission Planning person that an annual analytical study complete with power flow simulations is required. This requirement is onerous, since there is a significant waste of manpower and resources involved in conducting such a study when for most years a bi-annual study program would clearly be sufficient. NorthWestern considers that this one issue is worthy of a NO vote based on the excessive nature of the requirement. 4. The language in R2.3 requires a short circuit analysis to be conducted annually. As with our comment 3 above, we find this excessive. This level of vigilance is not commensurate with the potential threat of a situation where fault duty could exceed breaker interrupting capability. 5. The stricter requirements in the table for EHV lines certainly "raise the bar" for these facilities. They are also likely to reduce the enthusiasm for building such facilities. The outcome of this may be unintended consequences that are far more onerous to society that the amount of load loss that is avoided by the standard. It is not clear that this addition to the standard is well reasoned. 6. NorthWestern is concerned about the potential for uneven treatment by various auditors as they follow this standard. While there is some risk of this for any standard, we believe the language in this standard is still weak. 7. The 60 month time limit for implementing Corrective Action Plans may be quite unrealistic in the Montana transmission line environment. It really is not clear what is in the Transmission Planner's "control" in this arena. 8. The definition of "year one" is problematic. Presently the WECC does not produce base cases that are well suited to this choice. We would like to encourage the Drafting Team to work to "tighten up" the language in the standard. This particular standard is so important to the general reliability of the transmission system (BES) that it deserves an extra effort at clarity, conciseness, and thoughtful language to achieve truly beneficial practices in the design of the BES. We believe that a "NO" vote is our best recourse to promote this extra effort. We understand that this standard has been a "long time in the making". That is because it is truly a difficult drafting challenge, not because of a poor effort.

Response: 1. The definition has been iterated several times based on industry comments in the past and seems to have been accepted by the overwhelming majority of the industry to date. No change made.

2. The use of non-consequential is in line with the previously used term 'consequential' and doesn't imply that it isn't important. No change made.

3. The intent of the SDT wasn't that annual studies are required but that an annual Planning Assessment is required. However, the SDT agrees that the words may have been somewhat confusing. Therefore, the SDT has clarified the wording of Requirement R2 and part 2.1.

Voter	Entity	Segment	Vote	Comment
				Requirement R2 - Each Transmission Planner and Planning Coordinator shall prepare an annual Planning Assessment of its portion of the BES. This Planning Assessment shall use current or qualified past studies, document assumptions, summarize documented results, and cover steady state analyses, short circuit analyses, and Stability analyses. **Requirement R2, part 2.1 -** The Near-Term Transmission Planning Horizon portion of the steady state analysis shall be assessed annually and be supported by current annual studies or qualified past studies as indicated in Requirement R2, part 2.6, as follows: 4. Past studies are allowed as long as they qualify as per Requirement R2, part 2.6 and that should alleviate your concern. No change made. 5. There are many other factors over and above this standard that will determine what entities build in the future. The SDT and many stakeholders believe that it is important to raise the bar for reliability. No change made. 6. The SDT has made every attempt to make this standard clear, unambiguous, and enforceable. Without any specific comments to address, the SDT is unable to further address your concerns. No change made. 7. The SDT has changed the majority of the implementation timeframe from 60 to 84 months as per your (and others') suggestion. Since problems may not be seen until after the assessments are completed and there is a 24 month implementation for assessments, the total time for items P2-1, P2-2 and P2-3 (above 300 kV), P3-1 through P3-5, P4-1 through P4-5 (above 300 kV), and P5 (above 300 KV) has been increased to 84 months. P1-2 and P1-3 were not increased since they are already being covered by the implementation plan for Project 2010-11: TPL Table 1 Order. 8. Based on your comment and those of others, the SDT has revised the definition of Year One. **Year One:** The first twelve month period that a Planning Coordinator or a Transmission Planner is responsible for assessing. For the Planning Assessment started in a given calendar year, Year One must include the forecasted peak Load period for one of the following two calendar years. For example, if a Planning Assessment was started in 2011, then Year One must include the forecasted peak Load period for either 2012 or 2013.
David H. Boguslawski	Northeast Utilities	1	Negative	NU votes to oppose TPL-001-1 with the following comments: Northeast Utilities (NU) is very appreciative of the effort of the SDT in preparing TPL-001-1. NU believes that this effort has resulted in a new TPL standard that shows improvement over the existing TPL standards. However, there are still some important concerns that NU believes should be addressed prior to the adoption of TPL-001-1. Therefore, in its present state NU can not vote for the acceptance of the draft standard and votes to REJECT the proposed standard (TPL-001-1). NU would like the SDT to re-visit and address the concerns listed below: 1. The use of Non-Consequential Load Loss to mitigate violations arising from certain planning events: NU has objected to this requirement in comments submitted for previous drafts of TPL-001-1. NU believes that Non-Consequential Load Loss should not be considered for P1 to P7 events to achieve the level of reliability needed when planning the electric power system. The amount of load that could be shed is open ended in TPL-001-1 and this will lead to different interpretations which can be detrimental to the stakeholders. To put it simply the standard as currently drafted will lead to

Voter	Entity	Segment	Vote	Comment
				confusion as Transmission Owners, Regional Reliability Organizations, along with state and federal agencies will need to come to agreement on what the standard allows and what it doesn't. Ultimately, a standard that does not have clear measurable criteria will lead to difficulty in developing and obtaining approval for projects to achieve the required level of reliability. If the SDT and NERC believe that allowing the use of Non-Consequential Load Loss for multiple element contingencies (e.g., N-1-1 or P6 planning events) is necessary in achieving system reliability then NERC should specify that the amount should be minimal, such as less than 100 MW. 2. The use of past study reports to satisfy Requirement R2, parts R2.1 and R2.2: The language of Requirement R2, parts R2.1, R2.2 and R2.6 is confusing and will lead to different interpretations from different stakeholders. While Requirements R2.1 and R2.2 indicate that annual studies should be conducted and to be supplemented by past studies, Requirement R2.6 seems to suggest that past studies could be used instead. The SDT's response to NU's comment on this issue supports the assertion that annual studies should always be conducted even if there are no changes in the system conditions and past studies should be used for the years within the assessment period but not called out by the standard. If studies are conducted every year then why the need to use past studies. This creates unnecessary study work and should be changed. 3. Table 1 - Steady State & Stability Performance Planning Events, Category P5 Events: This requirement as currently worded goes well beyond the intent of the Standard Committee as stated in response to comments as follows: "A Protection System component failure (i.e., battery) that removes multiple Protection System schemes is beyond the P5 planning event". It is NU's opinion that similar language to the comment response should be incorporated into this requirement to avoid any confusion. 4. Base case initial conditions: NU believes that a great deal of confusion and uncertainty will be eliminated or reduced if the standard attempts to define the nature of initial base cases that should be used in planning studies. As it stands now this issue is left to interpretation, which can lead to confusion when determining appropriate planning projects to achieve a reliable power system. Depending upon the interpretation of the base case dispatches and the level of interface flows (level of stress) they may reveal reliability violations in the power system. Non-uniformity in developing base cases for an area or region may mask real reliability problems in the system. This is one of the primary weaknesses of the existing TPL standards. 5. Items 1, 2, 3 and 4 are Northeast Utilities primary concerns which should be addressed prior to NU accepting the standard. NU has additional reservations about the standard that should be addressed in subsequent revisions. 6. NU also supports the comments from other transmission owners that 60 months may not be

Voter	Entity	Segment	Vote	Comment
				sufficient to complete construction of transmission facilities.

Response: 1. The SDT has added footnote #12 to P1, P2-1, and P3 to address your and others' concerns in this area.

12. Note: Non-Consequential Load Loss is being decided in Project 2010-11. When that project is finalized, the resolution will be copied here.

2. The intent of the SDT wasn't that annual studies are required but that an annual Planning Assessment is required. However, the SDT agrees that the words may have been somewhat confusing. Therefore, the SDT has clarified the wording of Requirement R2 and part 2.1.

Requirement R2 - Each Transmission Planner and Planning Coordinator shall prepare an annual Planning Assessment of its portion of the BES. This Planning Assessment shall use current or qualified past studies, document assumptions, summarize documented results, and cover steady state analyses, short circuit analyses, and Stability analyses.

Requirement R2, part 2.1 - The Near-Term Transmission Planning Horizon portion of the steady state analysis shall be assessed annually and be supported by current annual studies or qualified past studies as indicated in Requirement R2, part 2.6, as follows:

3. The SDT has changed the text for the P5 event as a result of your (and others') comments to address these concerns.

P5. Delayed Fault Clearing due to the failure of a relay[13] protecting the Faulted element to operate as designed, for a Fault on one of the following:

13. Applies to the following relay functions or types: pilot (#85), distance (#21), differential (#87), current (#50, 51, and 67), voltage (#27 & 59), directional (#32, & 67), and tripping (#86, & 94).

4. The SDT is trying to provide guidance without being overly prescriptive. Projected System conditions as well as the types of sensitivities that need to be studied are described. No change made.

5. Without any specific comments to address, the SDT is unable to further address your concerns. No change made.

6. The SDT has changed the majority of the implementation timeframe from 60 to 84 months as per your (and others') suggestion. ince problems may not be seen until after the assessments are completed and there is a 24 month implementation for assessments, the total time for items P2-1, P2-2 and P2-3 (above 300 kV), P3-1 through P3-5, P4-1 through P4-5 (above 300 kV), and P5 (above 300 KV) has been increased to 84 months. P1-2 and P1-3 were not increased since they are already being covered by the implementation plan for Project 2010-11: TPL Table 1 Order.

Henry G. Masti	New York State Electric & Gas Corp.	1	Negative	NYSEG supports the NYISO comments and also offer: The standard requires that dynamic load models be used that take into account induction motor effects. This information is generally not available and therefore it would be unworkable to develop an accurate model. The standard requires relays be modeled into the dynamic simulation. While standard mho, distance, or reactance distance relay model may exist, manufacturer-specific relay models often do not. Since this modeling is generally not available, it would be unworkable to develop an accurate dynamic model to test relay loadabilitiy.

Voter	Entity	Segment	Vote	Comment
Response: The standard permits an aggregate model assumption that can be applied for a given system that is not substation specific so this is not unworkable. No change made. The SDT has clarified Requirement R4, part 4.3.1, bullet #3 to address your concerns. **Requirement R4, part 4.3.1 -** Simulate the removal of all elements that the Protection System and other automatic controls are expected to disconnect for each Contingency without operator intervention. The analyses shall include the impact of subsequent: • Successful high speed reclosing and unsuccessful high speed reclosing into a Fault. • Tripping of generators where simulations show generator bus voltages or high side of the GSU voltages are less than known or assumed generator low voltage ride through capability. Include in the assessment any assumptions made. • Tripping of Transmission lines and transformers where transient swings cause Protection System operation based on generic or actual relay models.				
Marvin E VanBebber	Oklahoma Gas and Electric Co.	1	Negative	Oklahoma Gas & Electric (OG&E) Comments on Proposed NERC TPL-001-1 1.) OG&E feels that the effective dates of R1 and R7 shall become effective 18 months and not 12 months. Some entities budgeting cycles may not be based on 12 months and expenditures may be required by some to be compliant. 2.) OG&E feels that the effective dates of R2 through R6 shall become effective 30 months and not 24 months. This will allow entities adequate time to budget (personnel & tools), train, and perform the required studies. 3.) As others have mentioned, OG&E would like the 60 months extended to 84 months. 4.) Further examination should be conducted to evaluate the feasibility of performing the stability analysis every two years and not annually. 5.) OG&E has concerns for including induction motor representations in the load models without any study or bench-marking activities to meet the requirements of R2.4.1. 6.) The abbreviations of HV and EHV used in Table 1 shall be defined in the “Definitions of Terms Used in Standard” section. 7.) Although Table 1 has been improved, further work is needed to make Table 1 more intuitive. The notes at the beginning and ending of Table 1 seem awkward within the document.
Response: 1. The SDT believes that 12 months is sufficient. This isn’t a completely new requirement – entities should be doing this work now for the existing TPL				

Voter	Entity	Segment	Vote	Comment
standards. No change made. 2. The SDT believes that 24 months is sufficient. This isn't a completely new requirement – entities should be doing this work now for the existing TPL standards. No change made. 3. The SDT has changed the majority of the implementation timeframe from 60 to 84 months as per your (and others') suggestion. Since problems may not be seen until after the assessments are completed and there is a 24 month implementation for assessments, the total time for items P2-1, P2-2 and P2-3 (above 300 kV), P3-1 through P3-5, P4-1 through P4-5 (above 300 kV), and P5 (above 300 KV) has been increased to 84 months. P1-2 and P1-3 were not increased since they are already being covered by the implementation plan for Project 2010-11: TPL Table 1 Order. 4. The requirement is for an annual assessment and past studies can be used if qualified as per Requirement R2, part 2.6. No change made. 5. The standard permits an aggregate model assumption that can be applied for a given system that is not substation specific. No change made. 6. The EHV/HV differentiation is not meant to be a definition in that it only applies to this standard. No change made. 7. Without any specific comments to address, the SDT is unable to further address your concerns. No change made.				
Mark Sampson	PacifiCorp	1	Negative	PacifiCorp appreciates the diligence and dedication of the Standard Drafting Team and commends the group for their hard work to bring the proposed standard TPL-001-1 to this level. PacifiCorp believes the overall language of the standard has improved to enhance its readability and the language and format of the Tables now provides some improvement in the understanding of acceptable System performance for the various Planning Events. However, inasmuch as the proposed Standard has improved, we cannot support the approval of this document at this time. The following comments and suggestions are provided in support of a no vote on the TPL-001-1 standard as currently proposed proposed. 1) As currently written our Company does not believe that 60 months is a reasonable time period to build transmission facilities to meet the new performance requirements. Building a transmission line in PacifiCorp's 6 state service areas varies significantly in regional and local planning and review process, permitting, siting, legal challenges, routing, and system path rating process can often take more than 5 years to complete from the time the project is authorized. Though requirement R2.7.3 is included to address situations beyond the control of the Transmission Planner, it leaves to the interpretation of the auditor whether the appropriate actions are being taken to resolve the issue that would continue to allow dropping of Non-Consequential Load or curtailment of Firm Transmission Service. Table 1 - Steady State & Stability Performance Planning Events Category P2 (Single Contingency). Category P2 requires responsible entities to study the opening of a line section without a fault. The standard as written states that the opening of this line section will not result in consequential load
John Apperson	PacifiCorp	3	Negative	
Sandra L. Shaffer	PacifiCorp	5	Negative	
Gregory D Maxfield	PacifiCorp	6	Negative	

Voter	Entity	Segment	Vote	Comment
				loss and no voltage or thermal violations will occur on the BES. . This requirement is applicable to EHV (above 300 kV) and HV (100-300 kV) facilities. PacifiCorp believes that this requirement should not be applicable to all HV facilities. From a reliability perspective, a more effective and efficient method would be a bifurcated functional requirement rather than a voltage requirement. In PacifiCorp's system, and in much of the Western Interconnection, a breaker that opens without a fault in the 115/138 kV system almost never has the potential to cause impacts beyond the local area. In most cases this extremely rare event (the unplanned opening of a breaker without a fault) cannot impact the EHV Bulk Electric System. As such, this requirement (P2-1) is not appropriate at the HV voltage levels. A more appropriate requirement for P2-1 would be to require this performance level only for the EHV portion of the BES and the HV facilities that perform a transmission service in addition to local load service. This should not be a requirement for HV facilities that only provide local load service. 2) Table 1-P5 Multiple Contingencies (Fault plus Protection System failure to operate) Normal System. There is a significant change in the system normal performance required for EHV systems from the current performance required in TPL-003 (Category C). This TPL-001-1 version does not allow any Non-Consequential load loss (table 1) or firm Demand (note 9) for EHV systems in the event of protection system failure and delayed clearing. This performance requirement would thus preclude use of existing protection systems that rely on remote clearing of interconnected EHV lines or stations if they provide local load service. As written the standard essentially now requires Category B performance rather than Category C performance for multiple contingencies. It is PacifiCorp's opinion that loss of Non-Consequential load or firm Demand should be allowed for the rare event involving multiple contingencies stated in P5 as long at the load or firm Demand loss is contained and controlled in the local load service area and the event does not impact other interconnected utilities or their loads. 3) Table 1 - Steady State & Stability Performance Planning Events Category P5 (Multiple Contingency (Fault plus Protection System failure to operate). Category P5 requires responsible entities to study the Event titled Failure of a single Protection System that results in Delayed Fault Clearing on one of the following: Generator, Transmission Circuit, Transformer, Shunt Device, or Bus Section. It appears that this requirement is an indication that multiple protection system failure is not allowed under the proposed TPL-001-1. This appears to be a requirement for redundant protection systems for all possible events on all voltage levels of the transmission system. It also appears that this requirement is attempting to define what comprises an adequate protection system. As the draft standard is presently written it appears that multiple protection system failures are not included in this part or any part of the draft TPL-001-1 standard. As written, it is PacifiCorp's view that any multiple protection system failure would be categorized as an Extreme Event under the draft TPL-001-1

Voter	Entity	Segment	Vote	Comment
				standard. PacifiCorp contends that the many and varied issues associated with designing appropriate protection systems should be done in the context of the development of a protection system standard and not in the context of TPL-001-1. In fact, there is currently a proposed standard going through the NERC standards development process which goal is exactly that. If the standards drafting team intends to require responsible entities to have 100% redundant protection systems on all of its BES facilities, PacifiCorp contends that this fact should be stated up front in the standard so that all interested parties may become aware of this requirement and provide informed comment. PacifiCorp believes that it is appropriate to wait until the current protection system redundancy standard under development proceeds through the SAR process and approval system, given that this in an important generic issue that affects the entire industry. Notwithstanding the inappropriateness of raising the protection system issue in the context of a planning standard, PacifiCorp believes that any planning requirement that includes the failure of a single protection system that results in delayed fault clearing must have a very clear definition of the terms "single protection system" and "delayed fault clearing" in or for entities to determine what compliance with the standard requires. The draft TPL-001-1 standard does not have clear definitions of these terms, leaving room for considerable latitude for interpretation by various responsible entities, auditors, and compliance enforcement authorities. Clear, specific, and technically defensible language is needed for these terms. 4) As drafted the standard TPL-001-1 has added requirement 2.1.5 discussing spare equipment and lead times and inclusion in the "Planning Assessment". The standard in this section is not performance based requirement but an activity based requirement as currently stated under R2 2.1.5. PacifiCorp recommends that the standard should be revised and 2.1.5 removed as it does not directly improve the systems performance requirements nor compliance stated in Table 1.

Response: The SDT has changed the majority of the implementation timeframe from 60 to 84 months as per your (and others') suggestion. Since problems may not be seen until after the assessments are completed and there is a 24 month implementation for assessments, the total time for items P2-1, P2-2 and P2-3 (above 300 kV), P3-1 through P3-5, P4-1 through P4-5 (above 300 kV), and P5 (above 300 KV) has been increased to 84 months. P1-2 and P1-3 were not increased since they are already being covered by the implementation plan for Project 2010-11: TPL Table 1 Order. Requirement R2, part 2.7.3 - If an entity can demonstrate that they have made a best faith effort to implement the planned solution then there should not be a concern. The wording of the requirement allows an entity this flexibility.

The SDT believes that the addition of footnote 12 (when it is finalized) will address your concern.

The SDT has added footnote #12 to P1, P2-1, and P3 to address your and others concerns in this area.

12. Note: Non-Consequential Load Loss is being decided in Project 2010-11. When that project is finalized, the resolution will be copied here.

The SDT has changed the text for the P5 event as a result of your (and others) comments to address these concerns.

Voter	Entity	Segment	Vote	Comment
				P5. Delayed Fault Clearing due to the failure of a relay[13] protecting the Faulted element to operate as designed, for a Fault on one of the following: **13**. Applies to the following relay functions or types: pilot (#85), distance (#21), differential (#87), current (#50, 51, and 67), voltage (#27 & 59), directional (#32, & 67), and tripping (#86, & 94). The SDT has clarified the requirement based on your comments and those of others. **Requirement R2, part 2.1.5** - When an entity's spare equipment strategy could result in the unavailability of major Transmission equipment that has a lead time of one year or more (such as a transformer), the impact of this possible unavailability on System performance shall be studied. The studies shall be performed for the P0, P1, and P2 categories identified in Table 1 with the conditions that the System is expected to experience during the possible unavailability of the long lead time equipment
John C. Collins	Platte River Power Authority	1	Negative	Platte River appreciates the efforts and perseverance of the Drafting Team on this important standard. A "no" vote is cast because the following requirements are not clear and have RISKS for different interpretations that could result in non-compliance. (1) Table 1 Planning Events, column for Initial System Condition. Does "Loss of" refer to a planned outage or forced outage? (2) Table 1, Extreme Events, column for Stability. In Stability Event 1, what is the fault type for the first forced outage? (The second forced outage is specified as 3-phase.) (3) Contingency lists required for Planning Events in Table 1. The required scope of contingency analysis for each Category is not clear. P1. Create a list of Contingencies only for the more severe P1 type, or create lists for each of P1-1 through P1-5 types? P2. Create a list of Contingencies only for the more severe P2 type, or create lists for each of P2-1 through P2-4 types? P3. Create a list of Contingencies only for the more severe P3 type, or create lists for each of P3-1 through P3-5 types? P4. Create a list of Contingencies only for the more severe P4 type, or create lists for each of P4-1 through P4-6 types? P5. Create a list of Contingencies only for the more severe P5 type, or create lists for each of P5-1 through P5-5 types? P6. Create a list of Contingencies only for the more severe P6 type, or create lists for each of P6-1-1 through P6-4-4 types, 16 possible combinations? P7. Create a list of Contingencies only for the more severe P7 type, or create lists for each of P7-1 through P7-2 types? (4) Contingency lists required for Extreme Events in Table 1. The required scope of contingency analysis for each Steady State and Stability columns is not clear. Create a list of Contingencies only for the more severe type, or create lists for each of the "such as" types? (5) Table 1, compare footnotes 1, 3, and 5. Does a P4-3 or P5-3 contingency involving an EHV-HV transformer and causing deficiencies on the EHV allow Non-Consequential Load Loss to correct since

Voter	Entity	Segment	Vote	Comment
				the HV is the lowest voltage and override the "No" in the column for Non-Consequential Load Loss Allowed for EHV? (6) What is a "sufficient amount" and how much is a "measurable change" for sensitivity case stressing? See parts 2.1.4 and 2.4.3. (7) Are the actions associated with single vs. multiple sensitivity studies in part 2.7.2 Corrective Action Plans? (8) Are Long-term stability analyses required only if there are generation additions or changes in the long-term horizon? See part 2.5.
Response: 1. Planned outages of six months or more should be incorporated into the P0 condition as per the requirements. The events cited are forced outages. 2. It doesn't matter what type of Fault creates the first outage condition as it is the second outage that is studied. 3. The SDT believes that an entity only needs a list for those types of events that are more severe for your study area. 4. An entity doesn't need a list for each 'such as'. The rationale for those selected must be documented as stated in the requirements. 5. For an outage of an EHV/HV transformer, performance requirements specified as HV must be met. 6. Requirement R2, part 2.1.4 is part of Requirement R2 which mandates that an entity must document all assumptions utilized in the Planning Assessment. No change made. 7. Requirement R2, part 2.7.2 is for multiple sensitivities. Requirement R2, part 2.7 states that Corrective Action Plans are not required for single sensitivities. 8. Yes, it is required only if there are additions or changes in the long term.				
Christopher L de Graffenried	Consolidated Edison Co. of New York	1	Negative	Reword Table 1 Note (i) as follows: The response of voltage sensitive load that is disconnected from the system by end-user equipment associated with an event shall not be used to meet steady state performance requirements Reword Requirement R 1.1.5 as follows: Known commitments for Firm Transmission Service, and, additionally, other types of transactions provided they have been demonstrated to not violate existing reliability constraints
Nickesha P Carrol	Consolidated Edison Co. of New York	6	Negative	
Peter T Yost	Consolidated Edison Co. of New York	3	Negative	

Voter	Entity	Segment	Vote	Comment
Response: The header note is not just for disconnections by end-user equipment but would also cover the natural response of Load for voltage reduction. The suggested wording changes the intent of the SDT. No change made. The SDT believes that the defined term 'Interchange' covers other transfers as described in your comment. No change made.				
Henry Delk, Jr.	SCE&G	1	Negative	SCE&G appreciates the efforts of the Standard Drafting Team and believes this version of the TPL standard has addressed most of the significant issues found in previous versions. However, SCE&G believes there are several significant issues that need modification or further explanation. 1. SCE&G agrees with other submitted comments that the requirement to complete new transmission construction to meet new performance requirements within 60 months is too short. SCE&G believes that 84 months is more reasonable. 2. SCE&G agrees with comments submitted by Duke Energy that the requirement prohibiting loss of non-consequential load for P1, P2.1 and P3 events is an overreach by the standard into local load quality of service issues, does not provide any real benefit to Bulk Electric System (BES) reliability, and may have unintended negative consequences on reliability and service quality. In many instances, it may be in the best interest of all involved parties from an overall cost/benefit point of view to allow loss of non-consequential load. The standard should continue to allow Transmission Planners to use discretion regarding loss of non-consequential load, such that Transmission Planners, customers, and local regulators jointly control the decision making when BES reliability is not an issue. 3. SCE&G believes there are still different interpretations of Consequential and Non-Consequential Load loss and how each should be applied or not applied. The Standard drafting team should provide several examples in its response to these comments showing how to apply and not apply Consequential and Non-Consequential Load Loss. Without clear examples, SCE&G believes many request for interpretation will be submitted to NERC by the industry.
Hubert C. Young	South Carolina Electric & Gas Co.	3	Negative	
Response: The SDT has changed the majority of the implementation timeframe from 60 to 84 months as per your (and others') suggestion. Since problems may not be seen until after the assessments are completed and there is a 24 month implementation for assessments, the total time for items P2-1, P2-2 and P2-3 (above 300 kV), P3-1 through P3-5, P4-1 through P4-5 (above 300 kV), and P5 (above 300 KV) has been increased to 84 months. P1-2 and P1-3 were not increased since they are already being covered by the implementation plan for Project 2010-11: TPL Table 1 Order. The SDT has added footnote #12 to P1, P2-1, and P3 to address your and others concerns in this area. 12. Note: Non-Consequential Load Loss is being decided in Project 2010-11. When that project is finalized, the resolution will be copied here. The SDT has clarified the issue of Non-Consequential Load Loss as shown above. Providing examples here of what is Non-Consequential Load Loss versus				

Voter	Entity	Segment	Vote	Comment
Consequential Load Loss would have no bearing on eventual compliance findings. The words are what matter and the SDT feels that the clarification provided should alleviate your concern.				
Charles H Yeung	Southwest Power Pool	2	Negative	SPP recommends the standards drafting team review the IRC SRC comments submitted in Oct 2009 and reassess those concerns.
Response: The SDT addressed the comments of the IRC SRC in its responses to the last posting which were captured in the Consideration of Comments report. Without any new specific comments to address, the SDT is unable to further address your concerns. No change made.				
James L. Jones	Southwest Transmission Cooperative, Inc.	1	Negative	SWTC Comments: The SDT has done a lot of good work in developing the TPL 001 standard. However, I agree with the comments of others and suggest that another draft should be produced before the standard is sent to a ballot. SWTC forsees a problem with manpower and the cost of studies for small entities such as ourselves. This will be an extra burden and costs that will ultimately be borne by the consumer who is already not very happy lately. In part 2.7.1, remove the second sentence and all bullets. These are not measurable performance criteria. EHV" and "HV" need to be defined because they are not defined in the NERC Glossary. R4.3.2 This is an admirable goal, and we applaud the SDT's vision. However, modeling all Protection Systems may be beyond the capabilities of presently used dynamic modeling tools. The number of impedance and overcurrent relays that would need to be included for lines and transformers would likely overwhelm these programs. We are concerned that the programs in use may not have the capability to model important relay characteristics such as load encroachment or out-of-step operating characteristics. R5 & R6: Shouldn't the Load Serving Entities (LSEs) define system performance criteria instead of the Transmission Planner or the Planning Coordinator? The LSEs have an obligation to their customers and must demonstrate to their regulators that they are providing acceptable system performance and reliability of supply to their customers. The Transmission Planner and Planning Coordinator have less incentive to provide high levels of system performance. Due to regulatory difficulties in getting approvals for transmission system upgrades, there may be a tendency on the part of TPs and TCs to avoid proposing transmission upgrades, letting system performance degrade instead by abandoning traditional planning criteria and defining less stringent standards for themselves. R6 Remove the "for conditions such as ..." list.

Voter	Entity	Segment	Vote	Comment
Response: The SDT has clarified Requirement R2 and part 2.1 to make it clearer that qualified past studies can be utilized. **Requirement R2** - Each Transmission Planner and Planning Coordinator shall prepare an annual Planning Assessment of its portion of the BES. This Planning Assessment shall use current or qualified past studies, document assumptions, summarize documented results, and cover steady state analyses, short circuit analyses, and Stability analyses. **Requirement R2, part 2.1 -** The Near-Term Transmission Planning Horizon portion of the steady state analysis shall be assessed annually and be supported by current annual studies or qualified past studies as indicated in Requirement R2, part 2.6, as follows: The listed items are simply that – a list of actions that would be included. This is an allowable and encouraged format for Reliability Standards. No change made. The EHV/HV differentiation is not meant to be a definition in that it only applies to this standard. No change made. The SDT believes that your comment is for Requirement R4, part 4.3.3. The SDT has modified the wording of this requirement to address your concern. **Requirement R4, part 4.3.1 -** Simulate the removal of all elements that the Protection System and other automatic controls are expected to disconnect for each Contingency without operator intervention. The analyses shall include the impact of subsequent: • Successful high speed reclosing and unsuccessful high speed reclosing into a Fault. • Tripping of generators where simulations show generator bus voltages or high side of the GSU voltages are less than known or assumed generator low voltage ride through capability. Include in the assessment any assumptions made. • Tripping of Transmission lines and transformers where transient swings cause Protection System operation based on generic or actual relay models. These are System requirements for the BES and properly belong to the Planning Coordinator and Transmission Planner. No change made.				
Donald S. Watkins	Bonneville Power Administration	1	Negative	The Bonneville Power Administration (BPA) acknowledges and appreciates the hard work and diligence of the Standards Drafting team on such a large effort. BPA respectfully submits the following comments.

Voter	Entity	Segment	Vote	Comment
Rebecca Berdahl	Bonneville Power Administration	3	Negative	1. Requirement R1.1.2: BPA recommends that system models should only represent outages with a duration of one year or more. The planning horizon should not cover an outage less than one year because there is not adequate time for developing and implementing any necessary mitigation plan. Known outages with duration less than one year should be dealt with in the Operations horizon. In addition, the near term steady state studies represent year one or year two and year five as required by R2.1.1. Therefore it is not consistent with the rest of the standard to require modeling outages less than one year. 2. Requirement R3.5: BPA recommends removing the requirement to evaluate possible actions designed to reduce the likelihood or mitigate the consequences and adverse impacts of the extreme events. o This is more stringent than the existing requirement without providing any increased reliability benefit. The new standard already requires a significant increase of study cases and this additional requirement results in an undue study burden on utilities without adding any benefit. o In addition, Table 1, Extreme Events, should be reduced to a more prudent list of possible events to evaluate risks and consequences. It is obvious that several of the events, especially under item 3 (Wide Area Events), would cause cascading and it is not practical to evaluate possible mitigation plans for such extreme events. 3. Table 1: The category P2 Single Contingency should be removed. o Events P2.2, P2.3 and P2.4 should be moved to category P4 since these events are not single contingencies. P2 is a single contingency category, which by definition takes one system component out of service. Bus section faults and bus-tie breaker faults are multiple contingencies since they are events that take multiple system components out of service. o Event P2.1 “opening of a line section w/o a fault” should not be included in the planning standard. At a minimum Event P2.1 should be moved to Category P1 since it is a single contingency and it should allow Interruption of Firm Transmission Service and Non-Consequential Load Loss for the HV ((<300 kV) BES level. Many of the HV (115-kV) lines have taps that serve loads and are designed to remove all elements that the protection system and other automatic controls are expected to disconnect. This is consistent with Requirement 3.3.1 which states “Simulate the removal of all elements that the Protection System and other automatic controls are expected to disconnect for each Contingency without operator intervention.” Inadvertent opening of one end of an HV line section without a fault almost never has the potential to cause impacts beyond the local area, yet has a low probability of occurrence and would be very costly in some cases to mitigate. 4. Footnote 11: BPA recommends removing the reference to common Right-of-Way. This could be mis-interpreted that a common Right-of-Way longer than 1mile should be planned for under Category
Francis J. Halpin	Bonneville Power Administration	5	Negative	
Brenda S. Anderson	Bonneville Power Administration	6	Negative	

Voter	Entity	Segment	Vote	Comment
				P7. The NERC standards only include common Right-of-Way under extreme events and in this footnote. So, it would be consistent with the rest of the standard to remove this reference from the footnote and possibly make a specific reference in the Extreme Events category where it applies. 5. Requirement R2.4.1: BPA agrees with other commenter's concerns that requiring Load models that consider the behavior of induction motor Loads is premature without adequate development and benchmarking efforts. In addition, specific types of models and data required for analysis should not be mentioned here, but should be specified and submitted through the appropriate MOD Standard's. 6. Requirement R4.3.3: BPA agrees with other commenter's concerns regarding simulating the impact of transient swings on Protection System operation for Transmission lines and transformers. It would be an extremely burdensome task to model relay impedance characteristics for all elements with little or no benefit, and it is questionable whether the simulation programs would support this effort.

Response: 1. The time frame is for future outages in the planning horizon and last for at least six months. No change made.

2. The SDT disagrees as this is effectively the same requirement as presently stated in TPL-004. No change made.

The SDT does not agree that these conditions obviously will create Cascading. The SDT reminds the commenter that not all events must be studied. No change made.

3. The category descriptions are meant to characterize the events. A single event may remove more than one element from service and that has been addressed in Header note 'c'. The SDT does not believe that there are inconsistencies within the table. The P2 category describes single events that may result in multiple elements being removed from service. The P2 events differ from the multiple event categories which consider two or more sequential events. No change made.

4. The SDT has revised the footnote to provide additional clarity based on your comment.

> **11.** Excludes circuits that share a common structure (Planning event P7, Extreme event steady state 2a) or common Right-of-Way (Extreme event, steady state 2b) for 1 mile or less.

5. The standard permits an aggregate model assumption that can be applied for a given system that is not substation specific. No change made.

6. The SDT has revised Requirement R4, part 4.3.1, bullet #3 to address this concern.

> **Requirement R4, part 4.3.1 -** Simulate the removal of all elements that the Protection System and other automatic controls are expected to disconnect for each Contingency without operator intervention. The analyses shall include the impact of subsequent:
>
> - Successful high speed reclosing and unsuccessful high speed reclosing into a Fault.
> - Tripping of generators where simulations show generator bus voltages or high side of the GSU voltages are less than known or assumed generator low voltage ride through capability. Include in the assessment any assumptions made.
> - Tripping of Transmission lines and transformers where transient swings cause Protection System operation based on generic or actual

Voter	Entity	Segment	Vote	Comment
relay models.				
Ralph Frederick Meyer	Empire District Electric Co.	1	Negative	The Empire District Electric Company appreciates the dedication of the Standards Drafting Team Empire cannot support the approval of the proposed standard as written. Empire finds exception to the proposed standards in the following areas: 1) We disagree with the proposed requirement 2.1.5 on spare equipment strategy in that it is discriminatory for smaller entities like Empire. Having a spare transformer is not practical and makes far less sense for a smaller entity but yet has a significant rate impact to our customers. 2) We disagree with requirement 3.3.3 as written would require modeling of nearly every phase distance relay, especially when studying extreme events. The requirement deserves flexibility as allowed in requirement 3.3.2 3) We do not believe 60 months is a reasonable time period to build transmission facilities to meet the new performance requirements. Our suggestion to the drafting team would be some amount of time greater than 7 years (84 months).

Response: The SDT has clarified the requirement based on your comments and those of others.

> **Requirement R2, part 2.1.5** - When an entity's spare equipment strategy could result in the unavailability of major Transmission equipment that has a lead time of one year or more (such as a transformer), the impact of this possible unavailability on System performance shall be studied. The studies shall be performed for the P0, P1, and P2 categories identified in Table 1 with the conditions that the System is expected to experience during the possible unavailability of the long lead time equipment

The SDT agrees that a planner should be able to utilize conservative assumptions and screening methods and doesn't believe that there is anything in the requirement that precludes an entity from doing so. No change made.

The SDT has changed the majority of the implementation timeframe from 60 to 84 months as per your (and others') suggestion. Since problems may not be seen until after the assessments are completed and there is a 24 month implementation for assessments, the total time for items P2-1, P2-2 and P2-3 (above 300 kV), P3-1 through P3-5, P4-1 through P4-5 (above 300 kV), and P5 (above 300 KV) has been increased to 84 months. P1-2 and P1-3 were not increased since they are already being covered by the implementation plan for Project 2010-11: TPL Table 1 Order.

Voter	Entity	Segment	Vote	Comment
Frank Gaffney	Florida Municipal Power Agency	4	Negative	The Florida Municipal Power Agency (FMPA) appreciates the hard work of the SDT, but, we believe there are significant issues that remain with the standard. FMPA believes that 5 years is not enough time to build significant new transmission lines and believes that 7 years is a more appropriate lead time. FMPA believes that the requirement prohibiting loss of non-consequential load for P1, P2.1 and P3 events is an overreach by the standard into local quality of service issues and does not provide any real benefit to BES reliability. The standard ought to separate what an entity chooses to do for the benefit of its own customers and the impacts it may on the reliability of the BES. FMPA believes that an entity has the right to choose to utilize the existing footnote "b" in the version 0 standards if that choice does not detrimentally impact the ability to provide transmission service to others. FMPA believes that requirement 2.1.5 on spare equipment strategy is discriminatory to smaller entities. Also, Order 693 at Paragraph 1725 states: "... the Commission directs the ERO to modify the planning Reliability Standards to require the assessment of planned outages consistent with the entity's spare equipment strategy". The standard oversteps this direction by not including a consideration of planned outages versus forced outages. Requirements 3.3.3 and 4.3.1 would require modeling of nearly every phase distance relay in the Interconnection. It is questionable whether we have the software tools to do so, and this would require a huge level of effort to maintain an interconnection wide database of relay settings for questionable benefit. FMPA believes that the SDT ought to evaluate the perceived increase in accuracy that is intended with these requirements. It is FMPA's belief that the expected increase in accuracy is lost when considering other simulation inaccuracies that we really cannot improve (e.g., load modeling) until much more work is done on improving our understanding of dynamic load behavior and benchmarking the model to actual system events.

Response: The SDT has changed the majority of the implementation timeframe from 60 to 84 months as per your (and others') suggestion. Since problems may not be seen until after the assessments are completed and there is a 24 month implementation for assessments, the total time for items P2-1, P2-2 and P2-3 (above 300 kV), P3-1 through P3-5, P4-1 through P4-5 (above 300 kV), and P5 (above 300 KV) has been increased to 84 months. P1-2 and P1-3 were not increased since they are already being covered by the implementation plan for Project 2010-11: TPL Table 1 Order.

The SDT has added footnote #12 to P1, P2-1, and P3 to address your and others concerns in this area.

12. Note: Non-Consequential Load Loss is being decided in Project 2010-11. When that project is finalized, the resolution will be copied here.

The SDT has clarified the requirement based on your comments and those of others.

Requirement R2, part 2.1.5 - When an entity's spare equipment strategy could result in the unavailability of major Transmission equipment that has a

Voter	Entity	Segment	Vote	Comment
lead time of one year or more (such as a transformer), the impact of this possible unavailability on System performance shall be studied. The studies shall be performed for the P0, P1, and P2 categories identified in Table 1 with the conditions that the System is expected to experience during the possible unavailability of the long lead time equipment The SDT agrees that a planner should be able to utilize conservative assumptions and screening methods and doesn't believe that there is anything in the requirement that precludes an entity from doing so. No change made. The SDT has revised Requirement R4, part 4.3.1, bullet #3 to address this concern. **Requirement R4, part 4.3.1 -** Simulate the removal of all elements that the Protection System and other automatic controls are expected to disconnect for each Contingency without operator intervention. The analyses shall include the impact of subsequent: • Successful high speed reclosing and unsuccessful high speed reclosing into a Fault. • Tripping of generators where simulations show generator bus voltages or high side of the GSU voltages are less than known or assumed generator low voltage ride through capability. Include in the assessment any assumptions made. • Tripping of Transmission lines and transformers where transient swings cause Protection System operation based on generic or actual relay models.				
Alden Briggs	New Brunswick System Operator	2	Negative	The NBSO applauds the efforts of the Drafting Team on this very important TPL standard. However, we feel that it is not quit ready for acceptance but with a few tweeks and some much needed clarity it would be. NBSO believes the BES versus BPS needs resolution as we much prefer standards that applicable to the bulk power system based on an impact assessment opposed to an arbitrary voltage level. The standard should be more flexible allowing for any trade off between temporarily shedding small amounts of load to recover from a single contingency where the alternative which may force significant transmission upgrades. The standard gives preference to a single line feeding a local area versus two lines, where the loss of one of two under high loading conditions should allow for portions of load to be shed to maintain voltage. The standard considers demand side management as an option but no allowance for instantaneous and temporary load loss that could be required before DSM could be activated. The standard should be clear that if in agreement with a distribution provider some portions of the distribution load (non-consequential load loss) may be shed for a single contingency for undervoltage and underfrequency conditions. The requirements for load models should be clarified so capture dynamic behaviour within reason.

Voter	Entity	Segment	Vote	Comment
				There should be a Q&A guide to allow for examples to clarify the requirements.
Response: The SDT does not believe that it needs to define BES. In its March 18th order, FERC suggested a continent-wide definition of the BES. No change made. The SDT has added footnote #12 to P1, P2-1, and P3 to address your and others concerns in this area. **12.** Note: Non-Consequential Load Loss is being decided in Project 2010-11. When that project is finalized, the resolution will be copied here. DSM is permitted because it is pre-arranged with the customer. For transmission systems, DSM is expected to be used in anticipation of the next transmission system Contingency, not in response to the transmission system Contingency. UVLS & UFLS are intended safety nets for operations and should not be relied upon in transmission planning. No change made. The standard permits an aggregate model assumption that can be applied for a given system that is not substation specific. Dynamic load modeling is important for correct dynamic simulations. Industry has acknowledged the need for accurate Load modeling and the SDT has codified this need in the proposed standard. No change made. While a Q&A providing examples may be helpful it would have no official bearing and such an effort is not in the project schedule.				
Gregory Campoli	New York Independent System Operator	2	Negative	The New York Independent System Operator (NYISO) believes this proposed standard is moving in the right direction with the right intentions, and while we truly appreciate the expertise and hard work that the standards drafting team (SDT) has consistently exhibited throughout this lengthy process, we have voted no on the adoption of this balloted version of the proposed NERC Standard TPL-001-1 for the following reasons: 1. The proposed Standard would significantly, and unnecessarily, shift responsibilities away from the Transmission Owner (TO). The proposal would require that for the Bulk Electric System (BES) throughout the New York Control Area (NYCA) the NYISO would annually evaluate: specified contingency events, all corrective action plans, and all spare equipment strategies. As we are not a BES facility owner, we believe that facility specific requirements should stay with facility owners. 2. The proposed Standard requires that Corrective Action Plans are included in each Planning Assessment and states “Such actions may include...” followed by a list of actions. Restricting allowable actions, and excluding runback/tripping of HVDC would have a direct impact on multiple existing facilities in New York and would adversely impact the reliability planning of the NYCA. 3. The proposed Standard would require the PC & TP to assess the impact and probability of the possible unavailability of any piece of equipment with a lead time of one year or more. Such an evaluation of spare equipment strategies would require significant additional resources and data, but

Voter	Entity	Segment	Vote	Comment
				provide no benefit to system reliability, as it is redundant to the existing N-1-1 contingency requirement (P6). 4. The proposed Standard would require an "annual" assessment of the system in order for it to be considered "current." The NYISO has a biennial reliability planning process and does not find it necessary to perform all studies annually in order to be current. We see no reliability benefit to requiring this to be done annually; in fact, dilution of planning efforts and resources is in itself a reliability risk. 5. The proposed Standard lacks a clear definition of the first year of the planning horizon. It is defined as the planning window that begins 12-18 months from the end of the current calendar year. If "Year One" is two calendar years out, what is year two? year five? This ambiguity poses an unacceptable risk to compliance. 6. For steady-state and stability analysis, the proposed Standard creates a limited list of required sensitivities, and may require sensitivities with no useful objective. The Standard should instead provide a list of suggested sensitivities to allow the planning entity to use its judgment to study sensitivities pertinent to its system. Furthermore, in the absence of a definition of base case conditions, it is difficult to determine, from a compliance standpoint, what is a "stressed" system. 7. The proposed Standard requires stability models to represent the dynamic behavior of loads, including the consideration of the behavior of induction motor loads. The NYISO, along with many other systems, has not determined a need to model dynamic loads, and therefore has not benchmarked any such models. The NYISO recommends that prior to this requirement being in place, a modeling standard should exist that is specific to dynamic loads.

Response: 1. Planning the system is the responsibility of the Planning Coordinator and Transmission Planner as per the Functional Model. The Planning Coordinator or Transmission Planner simply needs to account for those strategies and facility specific items that are passed to them by asset owners. No change made.

2. The list is not all inconclusive but a list of possible actions. The SDT agrees that runback or tripping of HVDC would be allowable actions. No change made.

3. The SDT has clarified the requirement based on your comments and those of others.

> **Requirement R2, part 2.1.5** - When an entity's spare equipment strategy could result in the unavailability of major Transmission equipment that has a lead time of one year or more (such as a transformer), the impact of this possible unavailability on System performance shall be studied. The studies shall be performed for the P0, P1, and P2 categories identified in Table 1 with the conditions that the System is expected to experience during the possible unavailability of the long lead time equipment

4. The intent of the SDT wasn't that annual studies are required but that an annual Planning Assessment is required. However, the SDT agrees that the words

Voter	Entity	Segment	Vote	Comment
may have been somewhat confusing. Therefore, the SDT has clarified the wording of Requirement R2 and part 2.1. **Requirement R2** - Each Transmission Planner and Planning Coordinator shall prepare an annual Planning Assessment of its portion of the BES. This Planning Assessment shall use current or qualified past studies, document assumptions, summarize documented results, and cover steady state analyses, short circuit analyses, and Stability analyses. **Requirement R2, part 2.1 -** The Near-Term Transmission Planning Horizon portion of the steady state analysis shall be assessed annually and be supported by current annual studies or qualified past studies as indicated in Requirement R2, part 2.6, as follows: 5. Based on your comment and those of others, the SDT has revised the definition of Year One. **Year One:** The first twelve month period that a Planning Coordinator or a Transmission Planner is responsible for assessing. For the Planning Assessment started in a given calendar year, Year One must include the forecasted peak Load period for one of the following two calendar years. For example, if a Planning Assessment was started in 2011, then Year One must include the forecasted peak Load period for either 2012 or 2013. 6. The SDT has made clarifying changes to Requirements R1 and R2, part 2.1.4 to address your concerns. **Requirement R1 -** Each Transmission Planner and Planning Coordinator shall maintain System models within its respective area for performing the studies needed to complete its Planning Assessment. The models shall use the latest data consistent with that provided in accordance with the MOD-010 and MOD-012 standards, supplemented by other sources as needed, including items represented in the Corrective Action Plan, and shall represent projected System conditions. This establishes the normal system condition in Table 1. **Requirement R2, part 2.1.4 -** For each of the studies described in Requirement R2, parts 2.1.1 and 2.1.2, sensitivity case(s) shall be utilized to demonstrate the impact of changes to the basic assumptions used in the model. To accomplish this, the sensitivity analysis in the Planning Assessment must vary one or more of the following conditions by a sufficient amount to stress the System within a range of credible conditions that demonstrate a measurable change in performance: 7. The standard permits an aggregate model assumption that can be applied for a given system that is not substation specific. Dynamic load modeling is important for correct dynamic simulations. Industry has acknowledged the need for accurate Load modeling and the SDT has codified this need in the proposed standard. No change made.				

Voter	Entity	Segment	Vote	Comment
Alan Adamson	New York State Reliability Council	10	Negative	The New York State Reliability Council (NYSRC) appreciates the hard work and time the drafting team has devoted during its preparation this standard. The present version represents a significant improvement over the present transmission planning TPL standards. However, the TPL-001-1 standard needs further improvement in several areas before the NYSRC can vote to approve the standard, as follows: 1. The standard requires annual assessment of the system regardless of whether system conditions are essentially unchanged from year to year. This may require unnecessary study work. 2. Testing requirements are rigidly defined in the standard, but specifically what is to be tested is loosely defined. 3. The standard requires analyses of a specific list of sensitivities. Instead, the standard should provide a list of suggested sensitivities and allow the planning entity to use its judgment to study those sensitivities that may be more pertinent to its system. 4. The standard requires stability models to represent the dynamic behavior of loads, considering the behavior of induction motor loads. New York has not modeled dynamic loads, and such modeling has never been benchmarked. For many years, simulations of actual system disturbances have been represented with excellent accuracy, without modeling loads dynamically. 5. The definition of BES (100kv bright line) is uncertain at this time. Therefore, until this definition and its application is resolved, it is not possible to know - without a clarifying provision in the standard - which portion of a system that presently has a performance based methodology, such as the New York State Power System, is subject to the TPL-001-1 standard.

Response: 1. The intent of the SDT wasn't that annual studies are required but that an annual Planning Assessment is required. However, the SDT agrees that the words may have been somewhat confusing. Therefore, the SDT has clarified the wording of Requirement R2 and part 2.1.

> **Requirement R2** - Each Transmission Planner and Planning Coordinator shall prepare an annual Planning Assessment of its portion of the BES. This Planning Assessment shall use current or qualified past studies, document assumptions, summarize documented results, and cover steady state analyses, short circuit analyses, and Stability analyses.
>
> **Requirement R2, part 2.1 -** The Near-Term Transmission Planning Horizon portion of the steady state analysis shall be assessed annually and be supported by current annual studies or qualified past studies as indicated in Requirement R2, part 2.6, as follows:

2. What needs to be tested is the transmission system that is under the purview of the Planning Coordinator or Transmission Planner.

3. The SDT has made clarifying changes to Requirement R2, part 2.1.4 to address your concerns.

> **Requirement R2, part 2.1.4 -** For each of the studies described in Requirement R2, parts 2.1.1 and 2.1.2, sensitivity case(s) shall be utilized to

Voter	Entity	Segment	Vote	Comment
demonstrate the impact of changes to the basic assumptions used in the model. To accomplish this, the sensitivity analysis in the Planning Assessment must vary one or more of the following conditions by a sufficient amount to stress the System within a range of credible conditions that demonstrate a measurable change in performance: 4. The SDT assumes that you are referring to the induction motor Load modeling required for Stability studies. The standard permits an aggregate model assumption that can be applied for a given system that is not substation specific. Dynamic load modeling is important for correct dynamic simulations. Industry has acknowledged the need for accurate Load modeling and the SDT has codified this need in the proposed standard. No change made. 5. The SDT does not believe that it needs to define BES. In its March 18th orders, FERC suggested a continent-wide definition of BES. No change made.				
James Armke	Austin Energy	1	Negative	The proposed TPL-001-1 Standard needs to be revised regarding the comments submitted by Ameren, Duke, and JEA.
Response: Please see responses to Ameren, Duke, and JEA.				
Silvia P Mitchell	Florida Power & Light Co.	6	Negative	The SDT has addressed many of the gray areas of Draft four in their consideration of comments however these comments are not part of the Standard that is currently out for ballot. Incorporating these type of clarifying comments in the Standard with the use of footnotes to clarify the intent would be a significant improvement for anyone interpreting the Standard including an auditor or investigator. The definition of Year One is an unnecessary departure from the planning practices used in most of the Eastern Interconnection. It is recommended the phrase end of the current calendar year be changed to the current calendar year. This change will allow PAs to begin their near term analysis with either next year or the year after as deemed appropriate. The performance requirements of Table 1 do not allow the loss of non-consequential load for single and multiple contingency events. The disallowance of load loss does not provide any real benefit to the reliability of the BES and is an unnecessary overreach into local quality of service issues that are best addressed by State, Provincial or Municipal authorities. There may be circumstances such as high local transmission costs or local opposition to transmission construction where prohibition of non-consequential load loss represents a poor cost/benefit or quality of life tradeoff. Providing a quantitative cap in non-consequential load loss such as 100 MW may be rationale compromise in the goal of limiting load loss for the more probable outage events. Our preference would be to retain the capability of limited non-consequential load loss. Absent this, the 60 calendar month phase in period described in the Introduction section is too short for transmission facilities rated above 300 kV. Approval and permitting of EHV transmission lines is

Voter	Entity	Segment	Vote	Comment
				extremely difficult and time consuming in most parts of the Eastern Interconnection. The phrase any material changes used in requirement R.2.6.2 will effectively cause all Planning Authorities to run all studies every year regardless of minor changes in the model. The overwhelming majority of PAs use a 10 year set of planning models developed annually by Regions or Subregions. These annual sets of planning models will always have some changes. The annual study requirement is especially problematic for Stability and Short circuit studies that require much more engineering time to complete and are much less likely to have results impacted by minor model changes such as different load forecasts. Uncertainty with audit review of technical rationale documentation will serve to focus Transmission Planning engineering resources on short term compliance to an extent that is counterproductive. Requirement 2.5 represents a significant expansion of Stability Studies into the Long Term horizon. In many cases the stability issue in long term scenarios will be with the response of new generating plants to fault scenarios such as a breaker failure event. The protection upgrades needed to mitigate performance issues are easily accomplished in the short term. The uncertainty of compliance judgment of rationale documentation will force a tremendous amount of unnecessary study work. It is recommend Requirement 2.5 be removed. We concur with the SDT's opinion expressed in the most recent consideration of comments that the individual component level evaluation of protection systems and redundancy requirements should be covered under the PRC standards and that the intent of the protection failure contingencies specified in Table 1 is to simulation the failure of a single protection scheme. The event description for the P5 contingency was revised in draft 5 but it continues to reflect a range of protection component failures that greatly exceed the intent of the SDT. The term Protection System is in direct conflict with the intent of the SDT, as it is defined in the Glossary to include components such as station batteries. The term Protection System should be replaced with Protection Scheme in Table 1. Requirement 4.3.1 can be interpreted to require dynamic simulation analysis of multiple fault event scenarios for transmission lines with high speed reclosing enabled. This additional analysis may be advisable for certain rare special situations but is unnecessary and burdensome as a general requirement for transmission planning contingency analysis. As such, requirement 4.3.1 will discourage application of high speed reclosing. This would be an unfortunate outcome given the benefits of high speed reclosing both for transmission reliability and customer power quality. It is recommended that 4.3.1 be reworded as follows; Simulate the operation of Protection Systems and other automatic controls as they would be expected for each contingency. The SDT has indicated in their responses to previous comments on requirement R4.3.3 that generic relay models could be used for screening purposes. While we agree with this as a practical method,

Voter	Entity	Segment	Vote	Comment
				the language of R4.3.3 could be interpreted to require explicit modeling of all protection and controls which is neither practicable nor an effective use of engineering resources. It is recommended that R4.3.3 be deleted.

Response: The SDT has made every attempt to fully clarify the intent of the requirements in response to official specific comments. Without specific references, the SDT is unable to act on your comment. No change made.

Based on your comment and those of others, the SDT has revised the definition of Year One.

> **Year One:** The first twelve month period that a Planning Coordinator or a Transmission Planner is responsible for assessing. For the Planning Assessment started in a given calendar year, Year One must include the forecasted peak Load period for one of the following two calendar years. For example, if a Planning Assessment was started in 2011, then Year One must include the forecasted peak Load period for either 2012 or 2013.

The SDT has added footnote #12 to P1, P2-1, and P3 to address your and others concerns in this area.

> 12. Note: Non-Consequential Load Loss is being decided in Project 2010-11. When that project is finalized, the resolution will be copied here.

The SDT has changed the majority of the implementation timeframe from 60 to 84 months as per your (and others') suggestion. Since problems may not be seen until after the assessments are completed and there is a 24 month implementation for assessments, the total time for items P2-1, P2-2 and P2-3 (above 300 kV), P3-1 through P3-5, P4-1 through P4-5 (above 300 kV), and P5 (above 300 KV) has been increased to 84 months. P1-2 and P1-3 were not increased since they are already being covered by the implementation plan for Project 2010-11: TPL Table 1 Order.

Material change is system specific and difficult to define on a continent-wide basis and is left to engineering judgment with a documented technical rationale as stated in the requirement. No change made.

The SDT has clarified Requirement R2, part 2.5 to address your concerns.

> **Requirement R2, part 2.5 -** The Long-Term Transmission Planning Horizon portion of the Stability analysis shall be assessed to address the impact of proposed material generation additions or changes in that timeframe and be supported by current or past studies as qualified in Requirement R2, part2.6. The technical rationale for determining material changes shall be documented.

The SDT has changed the text for the P5 event as a result of your (and others) comments to address these concerns.

> **P5**. Delayed Fault Clearing due to the failure of a relay[13] protecting the Faulted element to operate as designed, for a Fault on one of the following:
>
> **13**. Applies to the following relay functions or types: pilot (#85), distance (#21), differential (#87), current (#50, 51, and 67), voltage (#27 & 59), directional (#32, & 67), and tripping (#86, & 94).

The SDT has revised Requirement R4, part 4.3.1, bullet #3 to address this concern.

> **Requirement R4, part 4.3.1 -** Simulate the removal of all elements that the Protection System and other automatic controls are expected to disconnect for each Contingency without operator intervention. The analyses shall include the impact of subsequent:

Voter	Entity	Segment	Vote	Comment
				• Successful high speed reclosing and unsuccessful high speed reclosing into a Fault. • Tripping of generators where simulations show generator bus voltages or high side of the GSU voltages are less than known or assumed generator low voltage ride through capability. Include in the assessment any assumptions made. • Tripping of Transmission lines and transformers where transient swings cause Protection System operation based on generic or actual relay models. 4.3.3 - The SDT has revised Requirement R4, part 4.3.1, bullet #3 to address this concern. **Requirement R4, part 4.3.1 -** Simulate the removal of all elements that the Protection System and other automatic controls are expected to disconnect for each Contingency without operator intervention. The analyses shall include the impact of subsequent: • Successful high speed reclosing and unsuccessful high speed reclosing into a Fault. • Tripping of generators where simulations show generator bus voltages or high side of the GSU voltages are less than known or assumed generator low voltage ride through capability. Include in the assessment any assumptions made. • Tripping of Transmission lines and transformers where transient swings cause Protection System operation based on generic or actual relay models.
Christopher Plantev	Integrys Energy Group, Inc.	4	Negative	The Standard is moving in the right direction, but the following concern is preventing us from voting "affirmative". The timeframe of 60-months (5 year) for implementing Corrective Action Plans (CAP), is insufficient. We believe that the implementation timeframe must be extended to seven (7) years. Requirement 2.7.3, which covers situations that arise beyond the control of the Transmission Planner (TP) or Planning Coordinator (PC), but the proposed language is ambiguous. An auditor could identify many things that could reasonably be within the "control" of a TP or PC but are not covered by NERC standards or a TP / PC's process, procedures or criteria. This discretion leaves entities open to possible non-compliance violation based on an auditor's perception of what they believe should be in the TP / PC's control. In addition, the concept of "control" must be limited to an entities' compliance obligation as a Transmission Planner and/or Planning Coordinator. In other words entities must be allowed the ability identify situations which fall under its "control" as a Transmission Owner, Transmission Operator, Generator Owner or Generator Operator etc. but is beyond the responsibility of its Transmission Planner or Planning Coordinator functions.
Response: The SDT has changed the majority of the implementation timeframe from 60 to 84 months as per your (and others') suggestion. Since problems may not be seen until after the assessments are completed and there is a 24 month implementation for assessments, the total time for items P2-1, P2-2 and P2-3 (above 300 kV), P3-1 through P3-5, P4-1 through P4-5 (above 300 kV), and P5 (above 300 KV) has been increased to 84 months. P1-2 and P1-3 were not increased since they are already being covered by the implementation plan for Project 2010-11: TPL Table 1 Order. Requirement R2, part 2.7.3 - If an entity can				

Voter	Entity	Segment	Vote	Comment
demonstrate that they have made a best faith effort to implement the planned solution then there should not be a concern. The wording of the requirement allows an entity this flexibility. If an entity can demonstrate that it has made a best faith effort to implement the planned solution then there should not be a concern. The wording of the requirement allows an entity this flexibility.				
Thomas J Trickey	Lakeland Electric	5	Negative	The timeframe of 60-month (5 year) for implementing Corrective Action Plans (CAP), is insufficient, recomend that the implementation timeframe be extended to seven (7) years.
Response: The SDT has changed the majority of the implementation timeframe from 60 to 84 months as per your (and others') suggestion. Since problems may not be seen until after the assessments are completed and there is a 24 month implementation for assessments, the total time for items P2-1, P2-2 and P2-3 (above 300 kV), P3-1 through P3-5, P4-1 through P4-5 (above 300 kV), and P5 (above 300 KV) has been increased to 84 months. P1-2 and P1-3 were not increased since they are already being covered by the implementation plan for Project 2010-11: TPL Table 1 Order.				
Greg Lange	Public Utility District No. 2 of Grant County	3	Negative	There appears to be many questions about the correct planning long-term horizon. This alone is enough to vote no and ask the drafting team to reconsider that language and their thought process. Grant also has an issue with section 2.1.5. We are struggling with the phrase "major Transmission equipment" and the example of "a transformer". We think it is very important for equipment that is necessary for bulk transfers on the system or one that if lost would cause harm to a neighboring system to be considered in this planning standard. We don't believe a BPS standard should force prescriptive behavior onto an entity, for customer service issues. If the loss of a transformer only impacts local load, this standard should not contemplate or prescribe what the local entity should do. This leaves to much interpretation up to the auditor. The standard could easily become. "You must have spare transformers in inventory to pass compliance with this requirement". Grant is aware that this standard in version zero addressed customer load. Shame on us for not being more proactive and correcting that issue then. We have a new opportunity to correct it now and we would like to see it done. This and all standards should leave local customer service issues alone and concentrate on performance of the major transfers between generation and large load centers. This is not to say that our utilites will choose to leave load off for a year, just that the decision for how to solve this local problem should remain local.
Response: The SDT is unaware of many questions being raised on the long term horizon. Without specific comments, the SDT is unable to address your concern. No change made. The SDT has clarified the requirement based on your comments and those of others.				

Voter	Entity	Segment	Vote	Comment
Requirement R2, part 2.1.5 - When an entity's spare equipment strategy could result in the unavailability of major Transmission equipment that has a lead time of one year or more (such as a transformer), the impact of this possible unavailability on System performance shall be studied. The studies shall be performed for the P0, P1, and P2 categories identified in Table 1 with the conditions that the System is expected to experience during the possible unavailability of the long lead time equipment FERC has been quite clear that this standard needs to address the issue of Non-Consequential Load Loss. The SDT has added footnote 12 to address your concerns. 12. Note: Non-Consequential Load Loss is being decided in Project 2010-11. When that project is finalized, the resolution will be copied here.				
Mace Hunter	Lakeland Electric	3	Negative	There are two requirements in this Standard that could be interpreted in many different ways and will greatly complicate dynamic simulation studies. 4.3.1. Simulate the removal of all elements that the Protection System and other automatic controls are expected to disconnect for each Contingency without operator intervention while also considering the impact of successful or unsuccessful high speed reclosing. 4.3.3. Simulate the impact of transient swings on Protection System operation for Transmission lines and transformers. Most problematic is 4.3.3 which can be interpreted as requiring discrete models of all relays protecting transmission lines and transformers. This is an impossible task. Developing explicit relay models for simulations of even a small subset of BES equipment would be an enormous engineering effort with little or no benefit. The SDT's response to this criticism is, "This does not necessarily require modeling of specific relays. Some dynamic simulation programs include a generic relay model which can easily be applied to every branch in the simulation. If this model shows impedance swings in a branch element, then either take action according to the generic model results or investigate the characteristics of the relays actually used on that line." There are two problems with this response. First, if the SDT wishes to allow for the use of screening methods then this allowance needs to be part of the Standard language. The Standard development comments and responses have no standing once the Standard is approved by FERC as law. A narrow, strict interpretation of the Standard based on requirement language is to be expected from auditors and investigators. A second problem with the above SDT response is that applicability of generic models is subject to technical challenge. The generic model available within PSS/E sets up circular characteristics for each branch element that are fixed percentages of the branch impedance. These fixed, non adjustable percentages are 46% for zone A, 75% for zone B and 110% for zone C. These generic reaches are significantly smaller than loadability limits allowed under the PRC-023-1. The intent of Requirement 4.3.3 would be better served if reworded as follows; "R4.3.3 Consider the impact of dynamic swings on protection systems and model protection operation where appropriate" Requirement 4.3.1 can be

Voter	Entity	Segment	Vote	Comment
				interpreted to require dynamic simulation analysis of multiple fault event scenarios for transmission lines with high speed reclosing enabled. This additional analysis may be advisable for certain rare special situations but is unnecessary and burdensome as a general requirement for transmission planning contingency analysis. As such, requirement 4.3.1 will discourage application of high speed reclosing. This would be an unfortunate outcome given the benefits of high speed reclosing both for transmission reliability and customer power quality. It is recommended that 4.3.1 be reworded as follows; "4.3.1 Simulate the removal of all elements that the Protection System and other automatic controls are expected to disconnect for each contingency."

Response: The SDT has modified the requirement to address your concern.

Requirement R4, part 4.3.1 - Simulate the removal of all elements that the Protection System and other automatic controls are expected to disconnect for each Contingency without operator intervention. The analyses shall include the impact of subsequent:

- Successful high speed reclosing and unsuccessful high speed reclosing into a Fault.
- Tripping of generators where simulations show generator bus voltages or high side of the GSU voltages are less than known or assumed generator low voltage ride through capability. Include in the assessment any assumptions made.
- Tripping of Transmission lines and transformers where transient swings cause Protection System operation based on generic or actual relay models.

The SDT has revised Requirement R4, part 4.3.1, bullet #3 to address this concern.

Requirement R4, part 4.3.1 - Simulate the removal of all elements that the Protection System and other automatic controls are expected to disconnect for each Contingency without operator intervention. The analyses shall include the impact of subsequent:

- Successful high speed reclosing and unsuccessful high speed reclosing into a Fault.
- Tripping of generators where simulations show generator bus voltages or high side of the GSU voltages are less than known or assumed generator low voltage ride through capability. Include in the assessment any assumptions made.
- Tripping of Transmission lines and transformers where transient swings cause Protection System operation based on generic or actual relay models.

Voter	Entity	Segment	Vote	Comment
Larry Akens	Tennessee Valley Authority	1	Negative	TVA appreciates the work of the ATFN drafting team over the last several years in drafting this new standard. TVA does have concerns on several issues that need to be corrected as we move forward with this standard. Therefore TVA is voting “Negative” on this proposed standard due to the following issues: 1. TVA believes that the 5 year implementation plan allowed for “Raising the bar” facilities does not allow sufficient time for TVA to construct the required new facilities. TVA average time for constructing a new 500-kV line is approximately 7 to 10 years, given the lead time on ROW and following all NEPA requirements. If the 5 year implementation plan is not increased, TVA is also concerned about the extensive outages that must take in upgrading 500-kV facilities in order to meet the 5 year requirement. This would require multiple 500-kV outages in the same timeframe which could have a detrimental effect on the overall Bulk Electric System reliability during this construction phase. TVA does understand that the team has added language regarding the TP or PC inability to get the projects completed through no fault of its own; however, there is no guarantee that TVA will be found compliant if all the work cannot be accomplished in this time frame. 2. TVA believes that the footnotes b and c that allow for local load drop in the current TPL standards should still be allowed. TVA understands that this is addressed in FERC Order 693; however, the capital improvements to fix many of these issues will have no overall reliability gain for the Bulk Electric System. 3. TVA is concerned that no generating unit shall pull out of synchronism for Planning Event P1, while the standard does allow generator runback/tripping for the same event. TVA believes that this requirement is overly burdensome without providing any material improvement in system reliability. Additionally, R4.1.1 directly conflicts with Table 1, Note a (applicable to both Steady State & Stability) which states "Consequential Load as well as generation loss is acceptable as a consequence of any planning event ... excluding P0." TVA strongly suggests that this loss of synchronism be allowed for P1 or at least add the ability to trip these units for this P1 event by out of step relaying - since other means of tripping the units are allowed - such as thru the use of other actions including Special Protection Schemes as long as the instability does not spread beyond a local area. 4. TVA is concerned with the inclusion of battery failures being included in event P5. P5 states “Multiple Contingency Fault plus Protection System failure to operate”. TVA understands that the drafting team believes that batteries are not intended to be included in this event; however, station batteries are presently included in the NERC Glossary definition of “Protection Systems.” TVA believes that specific language excluding batteries is required for this P5 event in order to prevent future compliance issues regarding this.
George T. Ballew	Tennessee Valley Authority	5	Negative	
Marjorie S. Parsons	Tennessee Valley Authority	6	Negative	

Voter	Entity	Segment	Vote	Comment
Response: 1. The SDT has changed the majority of the implementation timeframe from 60 to 84 months as per your (and others') suggestion. Since problems may not be seen until after the assessments are completed and there is a 24 month implementation for assessments, the total time for items P2-1, P2-2 and P2-3 (above 300 kV), P3-1 through P3-5, P4-1 through P4-5 (above 300 kV), and P5 (above 300 KV) has been increased to 84 months. P1-2 and P1-3 were not increased since they are already being covered by the implementation plan for Project 2010-11: TPL Table 1 Order. 2. The SDT has added footnote #12 to P1, P2-1, and P3 to address your and others concerns in this area. 12. Note: Non-Consequential Load Loss is being decided in Project 2010-11. When that project is finalized, the resolution will be copied here. 3. The SDT believes that if an entity has a known condition that identifies a generation unit(s) is prone to trip for a single Contingency event then the entity should proactively trip the unit(s) rather than relying on out-of-step protection to trip the unit. The SDT takes this position because of the concern of the possible detrimental effects of loss of synchronism on the overall reliability of the BES. No change made. 4. The SDT has changed the text for the P5 event as a result of your (and others) comments to address these concerns. **P5**. Delayed Fault Clearing due to the failure of a relay[13] protecting the Faulted element to operate as designed, for a Fault on one of the following: **13**. Applies to the following relay functions or types: pilot (#85), distance (#21), differential (#87), current (#50, 51, and 67), voltage (#27 & 59), directional (#32, & 67), and tripping (#86, & 94).				
Lee Schuster	Florida Power Corporation	3	Negative	We appreciate the challenging and time-consuming work that has been done by the Standard Drafting Team (SDT) to draft TPL-001-1 according to the specific requests made by FERC in Order 693. We are supportive of planning, constructing, operating and maintaining the most reliable Bulk Electric System (BES) that is reasonably feasible. We believe that collectively the industry has exhibited excellent BES reliability under existing NERC TPL Standards. For this reason and for others detailed below, we will vote "no" on the proposed standard. 1. We do not believe that 60 months is a reasonable time period to build transmission facilities to meet the new performance requirements. This is especially true of EHV projects. Ameren recently stated in an email to the RBB that "[b]uilding a transmission line in Illinois is estimated to take 7 years (84 months) from the time the project is authorized." In our own experience, we have been limited by permitting and local government processes to the extent that even 69 kV, 115 kV and 230 kV line projects are taking longer than 60 months. We therefore agree with Ameren's point that building of a new EHV transmission line can be a very lengthy process. We think that a more
Sam Waters	Progress Energy Carolinas	3	Negative	

Voter	Entity	Segment	Vote	Comment
Wayne Lewis	Progress Energy Carolinas	5	Negative	appropriate time frame would be 84 months, with provisions to limit or waive fines if a Transmission Owner can demonstrate that the implementation process was unavoidably impeded by permitting, environmental or governmental processes. 2. As has been stated in all four commenting periods by Progress as well as certain other registered entities, we believe that the requirement prohibiting loss of non-consequential load for events in Table 1 of TPL-001-1 is an inappropriate overreach by the standard into local load quality of service issues that are already adequately regulated by states' Public Service/Utility Commissions, and does not provide any benefit to BES reliability. The approach of prohibiting the shedding of even a single distribution feeder amounts to feeder reliability rather than BES reliability. This approach, if allowed to be in the Standard, may result in unintended negative results in BES reliability. We therefore appeal to the SDT to discuss this issue with NERC and FERC given the numerous utilities that share this concern. The standard should continue to allow Transmission Planners to use discretion regarding loss of non-consequential load. 3. Requirement R4.1.1 states in part that "for planning event P1: No generating unit shall pull out of synchronism." This requirement is overly burdensome without providing any material improvement in system reliability. Additionally, R4.1.1 directly conflicts with Table 1, Note (a) (applicable to both Steady State & Stability) which states "Consequential Load as well as generation loss is acceptable as a consequence of any planning event ... excluding P0." Clearly, the intent the TPL-001-1 standard is to maintain the integrity and reliability of the overall grid, not any particular element. In other words, throughout the standard it is acceptable to lose any generator, load, line or other element as long as more wide reaching consequences are precluded (i.e., cascading outages, non-consequential load loss, etc. is not allowed). As written, R4.1.1 would not allow the use of out of step protective relaying as a solution to trip an unstable generator for a P1 event. It does allow tripping of the same generator due to "fault clearing action" (such as for a fault on the generator terminals) or "by a Special Protection System". Therefore the loss of the generator itself must be acceptable. The notion that preventing loss of synchronism events is the only acceptable means of also precluding more widespread (and unacceptable) consequences resulting from the effect of stability swings is not valid. For some generating units (particularly small, remotely located units) these other unacceptable consequences may not even occur. Also, other means, such as out of step blocking of transmission lines applied in conjunction with out of step generator tripping, may be an effective solution. Any of these solutions is allowed for events P2 through P7 in requirement R4.1.2. We recommend that Requirement R4.1.1 be deleted and R.4.1.2 be revised to include events P1 through P7. Given the concerns raised above, we respectfully request that the SDT make the suggested improvements to TPL-001-1 and continue the process toward approval of the Standard.

Voter	Entity	Segment	Vote	Comment
Response: The SDT has changed the majority of the implementation timeframe from 60 to 84 months as per your (and others') suggestion. Since problems may not be seen until after the assessments are completed and there is a 24 month implementation for assessments, the total time for items P2-1, P2-2 and P2-3 (above 300 kV), P3-1 through P3-5, P4-1 through P4-5 (above 300 kV), and P5 (above 300 KV) has been increased to 84 months. P1-2 and P1-3 were not increased since they are already being covered by the implementation plan for Project 2010-11: TPL Table 1 Order. The SDT has added footnote #12 to P1, P2-1, and P3 to address your and others concerns in this area. 12. Note: Non-Consequential Load Loss is being decided in Project 2010-11. When that project is finalized, the resolution will be copied here. 3. The SDT believes that if an entity has a known condition that identifies a generation unit(s) is prone to trip for a single Contingency event then the entity should proactively trip the unit(s) rather than relying on out-of-step protection to trip the unit. The SDT takes this position because of the concern of the possible detrimental effects of loss of synchronism on the overall reliability of the BES. No change made.				
Jason L Marshall	Midwest ISO, Inc.	2	Negative	We are voting negative for several reasons. 1. We believe Requirement 2, Part 2.1.5 is an administrative requirement that is not consistent with the NERC BOT approved results/performance based standards effort. Furthermore, the additional reliability benefit is not clear to us. 2. We believe that Requirement 2, Part 2.3 should only be implemented when there is another requirement in the PRC standards for Transmission Owners and Generation Owners to supply the necessary protection information. 3. We believe that that Requirement 2, Part 2.4.1 needs to be further clarified that the dynamic behavior of load model is an estimate only based on engineering assumptions. As written now, it is not clear how much deviation is allowed from actual system operation. 4. We believe Requirement 4, Part 4.3.2 should not be implemented until there is a requirement for the Generator Owners/Operators to supply their generator low voltage ride through capability. 5. We believe Requirement 4, Part 4.3.3 should be further refined to clarify that the purpose is to screen zone 3 relay issues. As written now, it appears that zone 3 relays must be modeled in detail because it is not clear that the intent is to only screen potential problems. We are basing our comments on the drafting team's responses to previous comments that they view using generic zone 3 relay models in PSS/E is acceptable.
Response: 1. The SDT disagrees that this is an administrative requirement as it does not state that you must develop a strategy; it states that you must consider the strategy in your planning. Therefore, it has a direct bearing on the reliability of the BES. No change made. 2. This standard describes what must be done and not how to do it. The SDT expects that the information cited could be obtained through several different				

Voter	Entity	Segment	Vote	Comment
mechanisms such as delegation agreements or data requests. No change made. 3. The SDT has added the word 'expected' to the text to alleviate your concern. Planning models are based on the best information available to the planners at the time of the study and it is well understood that they may not exactly represent actual conditions at any given time. The results of on-going benchmarking and model development activities can be incorporated when those activities yield more representative results. **Requirement R2, part 2.4.1** - System peak Load for one of the five years. System peak Load levels shall include a Load model which represents the expected dynamic behavior of Loads that could impact the study area, considering the behavior of induction motor Loads. An aggregate System Load model which represents the overall dynamic behavior of the Load is acceptable. 4. This standard describes what must be done and not how to do it. The SDT expects that the information cited could be obtained through several different mechanisms such as delegation agreements or data requests. No change made. 5. In the summary considerations in draft 4 of this project, the SDT indicated that generic relay models can be applied. If this model shows impedance swings in a branch element, then one can either take action according to the generic model results or investigate the characteristics of the relays actually used on that branch. In this draft, the SDT has clarified the requirement for the use of generic relay models. **Requirement R4, part 4.3.1 -** Simulate the removal of all elements that the Protection System and other automatic controls are expected to disconnect for each Contingency without operator intervention. The analyses shall include the impact of subsequent: • Successful high speed reclosing and unsuccessful high speed reclosing into a Fault. • Tripping of generators where simulations show generator bus voltages or high side of the GSU voltages are less than known or assumed generator low voltage ride through capability. Include in the assessment any assumptions made. • Tripping of Transmission lines and transformers where transient swings cause Protection System operation based on generic or actual relay models.				
Brenda L Truhe	PPL Electric Utilities Corp.	1	Negative	We are voting 'no' on this ballot as this revision proposes to expand contingency requirements beyond traditional planning levels (example - stuck breaker AND protection failure).
Mark A. Heimbach	PPL Generation LLC	5	Negative	
Response: The SDT agrees that new expectations are contained within the requirements aimed at improving BES reliability. An implementation plan has been created to allow for the industry to comply with the new requirements.				
Terry L. Blackwell	Santee Cooper	1	Negative	We disagree with the proposed definition of Year One. We believe that Year One should be the planning window that begins 12-18 months from the start of the current calendar year, and not from

Voter	Entity	Segment	Vote	Comment
Zack Dusenbury	Santee Cooper	3	Negative	the end of the calendar year. We believe that following this modification to the definition would require minimal adjustments to the ERAG MMWG model building process, which we all use as the basis for our planning models. Following the proposed definition would require additional models to be built by the MMWG or lead to holes in the model building effort for both the operating and planning horizons. SCPSA does not believe that 60 months is a reasonable time period to build transmission facilities to meet the new performance requirements. In an email to the registered ballot body, Ameren stated " Building a transmission line in Illinois is estimated to take 7 years (84 months) from the time the project is authorized." SCPSA agrees with the point that Ameren is making that building of a new EHV transmission line can be a very lengthy process. SCPSA thinks that a more appropriate time frame would be 84 months. SCPSA believes that the requirement prohibiting loss of non-consequential load for P1, P2.1 and P3 events is an overreach by the standard into local load quality of service issues, does not provide any real benefit to Bulk Electric System (BES) reliability, and may have unintended negative consequences on reliability. Often, corrective actions to mitigate these events are local in nature and only require minor additional loss of local load to avoid major projects. The standard should continue to allow Transmission Planners to use discretion regarding loss of non-consequential load, such that Transmission Planners, customers, and local regulators jointly control the decision making when BES reliability is not an issue. The transparency requirements of the new standard facilitate this type of decision making. In addition, the prohibition on non-consequential load loss for these events creates an incentive for Transmission Planners to remove lines serving load from network (serve the loads radially) so that they are characterized as consequential load. The unintended consequence of the standard would be a reduction in reliability for service to local load.
Suzanne Ritter	Santee Cooper	6	Negative	

Response: Based on your comment and those of others, the SDT has revised the definition of Year One.

> **Year One:** The first twelve month period that a Planning Coordinator or a Transmission Planner is responsible for assessing. For the Planning Assessment started in a given calendar year, Year One must include the forecasted peak Load period for one of the following two calendar years. For example, if a Planning Assessment was started in 2011, then Year One must include the forecasted peak Load period for either 2012 or 2013.

The SDT has changed the majority of the implementation timeframe from 60 to 84 months as per your (and others') suggestion. Since problems may not be seen until after the assessments are completed and there is a 24 month implementation for assessments, the total time for items P2-1, P2-2 and P2-3 (above 300 kV), P3-1 through P3-5, P4-1 through P4-5 (above 300 kV), and P5 (above 300 KV) has been increased to 84 months. P1-2 and P1-3 were not increased since they are already being covered by the implementation plan for Project 2010-11: TPL Table 1 Order.

The SDT has added footnote #12 to P1, P2-1, and P3 to address your and others concerns in this area.

Voter	Entity	Segment	Vote	Comment
12. Note: Non-Consequential Load Loss is being decided in Project 2010-11. When that project is finalized, the resolution will be copied here.				
Thomas C. Mielnik	MidAmerican Energy Co.	3	Negative	We find P5, Multiple Contingency (Fault plus Protection System failure to operate) to be confusing. What analysis is required for this? Analysis of individual Protection System component failures or something else? Do the benefits justify this requirement?
Response: The SDT has changed the text for the P5 event as a result of your (and others) comments to address these concerns. **P5**. Delayed Fault Clearing due to the failure of a relay[13] protecting the Faulted element to operate as designed, for a Fault on one of the following: **13**. Applies to the following relay functions or types: pilot (#85), distance (#21), differential (#87), current (#50, 51, and 67), voltage (#27 & 59), directional (#32, & 67), and tripping (#86, & 94).				
Ajay Garg	Hydro One Networks, Inc.	1	Negative	We thank the Standard Drafting Team for their long and dedicated effort to develop this standard. At this time, Hydro One has decided to cast a negative vote with the following comments: 1. Note 3 in Table 1 refers to EHV Facilities (above 300 kV) and HV (300 kV and lower voltage systems) The standards uses this threshold to distinguish between stated performance criteria allowances for interruption of Firm Transmission Service and Non-Consequential Load Loss. We suggest the following be added to this note: "In the region(s) or area where there is a performance based methodology in place to determine Bulk Electric System (BES) elements (e.g. NPCC), only the BES portion of the system is subject to the Standard." 2. The Standard repeatedly uses the capitalized term "Firm Transmission Service (FTS)." The NERC Glossary of Terms defines FTS as "The highest quality (priority) service offered to customers under a filed rate schedule that anticipates no planned interruption." We believe that the use of this term and that of "Transmission Service" in TPL-001-1 should be revised as they do not have the same meaning in all jurisdictions. A clarification within the standard will eliminate this confusion. 3. The Effective Date Section in the proposed standard gives a time of 60 months to implement certain Corrective Actions. We believe this Standard should not explicitly define timelines (5 years in this case) for transmission projects. Regulatory approvals for new or modified transmission systems may take a significant time in some jurisdictions. We suggest changing the wording to say that Transmission mitigation measures for the reliability of the Bulk Electric System must be implemented as soon as practical exercising due diligence. Progress of and/or delays associated with critical project(s) impacting BES reliability should be submitted to the respective regions and NERC. We recognize that Requirement 2.7.3 covers situations that arise beyond the control of the Transmission Planner (TP) or Planning Coordinator (PC), but we believe that the proposed 60 months timeline
Michael D. Penstone	Hydro One Networks, Inc.	3	Negative	

Voter	Entity	Segment	Vote	Comment
				should be removed.
Response: This standard applies to the BES. If there are areas of your system that are not BES, then the standard doesn't apply to them. This would be true even if those elements are above 300 kV. No change made. The SDT reviewed the use of Firm Transmission Service and believes that the term is used correctly in the standard. No change made. The SDT has changed the majority of the implementation timeframe from 60 to 84 months as per your (and others') suggestion. Since problems may not be seen until after the assessments are completed and there is a 24 month implementation for assessments, the total time for items P2-1, P2-2 and P2-3 (above 300 kV), P3-1 through P3-5, P4-1 through P4-5 (above 300 kV), and P5 (above 300 KV) has been increased to 84 months. P1-2 and P1-3 were not increased since they are already being covered by the implementation plan for Project 2010-11: TPL Table 1 Order. Requirement R2, part 2.7.3 - If an entity can demonstrate that they have made a best faith effort to implement the planned solution then there should not be a concern. The wording of the requirement allows an entity this flexibility.				
Mark Ringhausen	Old Dominion Electric Coop.	4	Negative	While the SDT has made progress in their changes from the first draft, there are still some areas that need to be clarified. Others are proving more specific comments (PJM) so look for their comments and address.
Response: Please see response to PJM.				

Voter	Entity	Segment	Vote	Comment
Richard Salgo	Sierra Pacific Power Co.	1	Negative	While we greatly appreciate the work of the SDT, and feel that this Standard has achieved significant improvement, there are a number of issues precluding our approval as written: Spare Equipment: need a clarification on what the "assessment" of the impact of equipment availability entails. For instance, is the assessment a simple narrative of the necessary operational mitigation, engineering analysis of the impact, or on the other extreme, is it a full repeat of the NERC study work for all potential permutations of long lead-time equipment? We have difficulty accepting the language regarding the loss of non-consequential load. As written, this creates a disincentive for the implementation of incremental reliability improvements in the network; ie, creation of a parallel path that does not fully provide redundancy to load service would drive a violation of the requirement. Lastly, the treatment of firm transmission service from the standpoint that it cannot be curtailed under various contingencies is problematic. As written, it would appear that the single-contingency loss of a contract transmission path would require continuance of the firm transmission service via some alternate parallel path. Such methodology would require all such paths to have redundancy via parallel transmission or result in dramatic reductions in transfer ratings.

Response: The SDT has clarified the wording of the requirement and believes that this will address your concern.

> **Requirement R2, part 2.1.5** - When an entity's spare equipment strategy could result in the unavailability of major Transmission equipment that has a lead time of one year or more (such as a transformer), the impact of this possible unavailability on System performance shall be studied. The studies shall be performed for the P0, P1, and P2 categories identified in Table 1 with the conditions that the System is expected to experience during the possible unavailability of the long lead time equipment.

The SDT has added footnote #12 to P1, P2-1, and P3 to address your and others concerns in this area.

> 12. Note: Non-Consequential Load Loss is being decided in Project 2010-11. When that project is finalized, the resolution will be copied here.

Footnote 9 states the conditions for when Firm Transmission Service may be curtailed. If what you are describing is actually Conditional Firm, then see footnote 4. No change made.

Unofficial Comment Form for Informal Comment Period on 5th Draft of Standard TPL-001-2 — Assess Transmission Future Needs (Project 2006-02)

Please **DO NOT** use this form. Please use the electronic form located at the link below to submit comments on the 5th draft of the TPL-001-2 standard for Assess Transmission Future Needs (Project 2006-02). The electronic comment form must be completed by **September 2, 2010. This is a 30-day informal comment period.** That means that for each question asked on this comment form:

- The drafting team will provide a summary response to indicate whether stakeholders who submitted comments support the modification made to the standard following the initial ballot.
- The drafting team will identify any additional modifications made to the standard based on stakeholder comments submitted in response to that question.
- The team will not provide a response to each individual comment submitted.

If you have questions please contact Ed Dobrowolski at ed.dobrowolski@nerc.net or by telephone at 609-947-3673.

http://www.nerc.com/filez/standards/Assess-Transmission-Future-Needs.html

Background Information
TPL-001-1 Transmission System Planning Performance Requirements
Comments on the initial ballot of the TPL-001-1 (now TPL-001-2) Transmission System Planning Performance Requirements standard were received from the industry through March 1, 2010. The Drafting Team received feedback on a number of issues, and the SDT appreciates the tremendous industry participation in the ballot process. Below is a brief overview of the 5th draft of the standard highlighting areas where the SDT made changes based on stakeholder feedback from the initial ballot. The team's objectives remain unchanged - to create a single Transmission planning standard: 1) with clear, concise requirements set at an appropriate level to ensure reliability, and 2) that fully addresses all issues raised by FERC Orders 693 and 890, and industry inputs, including the SAR scope document.

5th Draft Overview:

1. The Implementation Plan has been revised to provide more time for entities to become compliant.
2. The definition for Year One was changed and an example provided to clarify the intent of the SDT.
3. The following requirements were changed:
    a. R1 – To provide a reference for normal system conditions.
    b. R2 – To indicate that 'qualified' past studies can be utilized.
    c. R2, Part 2.1 – To indicate that 'qualified' past studies can be utilized.
    d. R2, Part 2.1.4 and Part 2.4.3 – To clarify the sensitivity analysis.
    e. R2, Part 2.1.5 – Semantic change for clarity.
    f. R2, Part 2.4.1 – Clarification of what is expected for dynamic load models.

   g. R2, Part 2.5 – Clarification of what is meant by ‘material’.
   h. R3, Part 3.3.1 & R4, Part 4.3.1 – Semantic re-arrangement of conditions for clarity.
   i. R3, part 3.5, R4, part 4.4, & R4, part 4.5 – Semantic change for clarity.
4. Header note changes:
   a. Semantic change for clarity in ‘a’.
   b. Deletion of redundant phrasing in ‘e’.
   c. Move of ‘j’ to ‘a’.
5. Performance table changes:
   a. Addition of footnote 12 reference in P1, P2-1, and P3.
   b. Description change in P5 and addition of footnote 13 for relay reference.
6. Extreme event – steady state 2d – Addition of ‘generating’ for clarity.
7. Footnote changes:
   a. #11 – Specific references supplied.
   b. #12 – Clarification of Non-Consequential Load Loss (pending resolution in Project 2010-11).
   c. #13 – Relay references supplied.
8. Measurement changes:
   a. M6 – Matching language to requirement.
   b. M8 – Semantic change for clarity.
9. R8 VSL – Semantic change for clarity and strict adherence to guidelines.

The SDT is interested in tracking comments to the changes made in response to the initial ballot comments and thus has asked only questions that refer solely and directly to those changes.

1. The SDT has revised the Implementation Plan based on industry comments to the initial ballot. Do you support this change? If you do not support this change, please specify why you disagree and include specific alternative language to resolve your concern.

   ☐ Yes

   ☐ No

   Comments:

2. The SDT has revised the definition of Year One based on industry comments to the initial ballot. Do you support this change? If you do not support this change, please specify why you disagree and include specific alternative language to resolve your concern.

   ☐ Yes

   ☐ No

   Comments:

3. The SDT has revised the Requirements language based on industry comments to the initial ballot. Do you support these changes? If you do not support these changes, please specify why you disagree and include specific alternative language to resolve your concern.

   Requirement R1 – normal conditions:

   ☐ Yes

   ☐ No

   Comments:

   3.1 Requirement R2 and Part 2.1 – past studies:

   ☐ Yes

   ☐ No

   Comments:

   3.2 Requirement R2, Parts 2.1.4 & 2.4.3 – sensitivity analysis:

   ☐ Yes

   ☐ No

   Comments:

   3.3 Requirement R2, Part 2.4.1 – dynamic load models:

   ☐ Yes

   ☐ No

   Comments:

   3.4 Requirement R2, Part 2.5 – material clarification:

   ☐ Yes

☐ No

Comments:

4. The SDT has revised the header notes based on industry comments to the initial ballot. If you do not support these changes, please specify why you disagree and include specific alternative language to resolve your concern.

   ☐ Yes

   ☐ No

   Comments:

5. The SDT has revised the performance table (including the list of extreme events and footnotes) based on industry comments to the initial ballot. If you do not support these changes, please specify why you disagree and include specific alternative language to resolve your concern.

   ☐ Yes

   ☐ No

   Comments:

6. The SDT has revised the Measures based on industry comments to the initial ballot. If you do not support these changes, please specify why you disagree and include specific alternative language to resolve your concern.

   ☐ Yes

   ☐ No

   Comments:

7. The SDT has revised the Requirement R8 VSL based on industry comments to the initial ballot. If you do not support these changes, please specify why you disagree and include specific alternative language to resolve your concern.

   ☐ Yes

   ☐ No

   Comments:

Implementation Plan for TPL-001-1

Prerequisite Approvals

There are no other Reliability Standards or Standard Authorization Requests (SARs), in progress or approved, that must be implemented before this standard can be implemented.

TPL-001-1 — Transmission System Planning Performance Requirements

In revising the TPL standards, the SDT is assuming that planners will receive valid data from the MOD standards link described in TPL-001-1, Requirement R1. Furthermore, there is a tacit assumption that future revisions of the MOD standards will include steps to validate MOD based data.

Revision to Sections of Approved Standards and Definitions

There are multiple new definitions in the proposed standard.

Bus-tie Breaker: A circuit breaker that is positioned to connect two individual substation bus configurations.

Consequential Load Loss: All Load that is no longer served by the Transmission system as a result of Transmission Facilities being removed from service by a Protection System operation designed to isolate the fault.

Long-Term Transmission Planning Horizon: Transmission planning period that covers years six through ten or beyond when required to accommodate any known longer lead time projects that may take longer than ten years to complete.

Near-Term Transmission Planning Horizon: Transmission planning period that covers Years One through five.

Non-Consequential Load Loss: Non-Interruptible Load loss that does not include: (1) Consequential Load Loss, (2) the response of voltage sensitive Load, or (3) Load that is disconnected from the System by end-user equipment.

Planning Assessment: Documented evaluation of future Transmission System performance and Corrective Action Plans to remedy identified deficiencies.

Year One: The first twelve month period that a Planning Coordinator or a Transmission Planner is responsible for assessing. For the Planning Assessment started in a given calendar year, Year One must include the forecasted peak Load period for one of the following two calendar years. For example, if a Planning Assessment was started in 2011, then Year One must include the forecasted peak Load period for either 2012 or 2013.

Compliance with Standards

Standard	Functions That Must Comply With the Associated Requirements	
TPL-001-1 — Transmission System Planning Performance Requirements	Transmission Planner	Planning Coordinator
	X	X

Effective Dates

The effective date is the date entities are expected to meet the performance identified in this standard.

Except as indicated below**,** all Requirements and associated parts shall become effective on the first day of the first calendar quarter, 24 months after applicable regulatory approval. In those jurisdictions where no regulatory approval is required, all requirements go into effect on the first day of the first calendar quarter, 24 months after Board of Trustees adoption.

TPL-001-0, TPL-002-0a, TPL-003-0a, and TPL-004-0 are being retired as they are replaced in their entirety by TPL-001-1. TPL-005-0 and TPL-006-0 are being retired because their requirements are adequately covered by the revised TPL-001-1 and NERC's Rules of Procedure, Section 800. However, during this 24-month period, all aspects of TPL-001-0 through TPL-006-0 shall remain in effect for compliance monitoring. This 24 month period is to allow entities to develop, perform and/or validate new and/or modified studies, methodologies, assessments, procedures, etc. necessary to implement and meet the TPL-001-1 requirements. The specified effective dates are expected to allow sufficient time for proper assessment of the available options necessary to create a viable Corrective Action Plan that is compliant with the new Standard.

> R1. This Requirement is related to maintaining System models and the data needed to do so. This requirement shall become effective on the first day of the first calendar quarter, 12 months after applicable regulatory approval. In those jurisdictions where no regulatory approval is required, this requirement goes into effect on the first day of the first calendar quarter, 12 months after Board of Trustees adoption.
>
> R7. This Requirement identifies an obligation to determine individual and joint responsibilities for performing studies needed to do the Planning Assessment. This requirement shall become effective on the first day of the first calendar quarter, 12 months after applicable regulatory approval. In those jurisdictions where no regulatory approval is required, this requirement goes into effect on the first day of the first calendar quarter, 12 months after Board of Trustees adoption.

TPL-001-1 'raises the bar' in several areas where performance requirements have been changed in the new Standard versus those in existing TPL-001-0, TPL-002-0a, TPL-003-0a and TPL-004-0 because loss of Non-Consequential Load or interruption of firm transfers is no longer allowed for certain events, whereas the existing Standards were interpreted by many to allow such actions. As shown in Table 1 of TPL-001-1, the performance requirements associated with the following events represent "raising the bar":

- P1-2 (for controlled interruption of electric supply to local network customers connected to or supplied by the Faulted element)
- P1-3 (for controlled interruption of electric supply to local network customers connected to or supplied by the Faulted element)
- P2-1
- P2-2 (above 300 kV)
- P2-3 (above 300 kV)
- P3-1 through P3-5
- P4-1 through P4-5 (above 300 kV)
- P5 (above 300 kV)

This "raising the bar" is beyond the control of the Transmission Planner and Planning Coordinator and may have significant budget, siting, permitting, and construction impacts on many Transmission Owners. To provide stakeholders with sufficient time to implement changes, a timeframe coincident with the end of the Near-Term Transmission Planning Horizon will be provided as follows:

- For 84 months after the first day of the first calendar quarter following applicable regulatory approval, or in those jurisdictions where no regulatory approval is required on the first day of the first calendar quarter, 84 months after Board of Trustees adoption, Corrective Action Plans applying to performance elements P1-2 and P1-3 (for controlled interruption of electric supply to local network customers connected to or supplied by the Faulted element), P2-1, P2-2 (above 300 kV), P2-3 (above 300 kV), P3-1 through P3-5, P4-1 through P4-5 (above 300 kV), and P5 (above 300 kV) are allowed to include tripping of Non-Consequential Load and curtailment of Firm Transmission Service (in accordance with Requirement R2.7.3) that would not otherwise be permitted by the requirements of TPL-001-1.

Any entity which cannot eliminate the need to trip Non-Consequential Load or curtail Firm Transmission Service for these performance elements by that date shall submit a mitigation plan to its Regional Entity outlining the steps it will take to correct the problem. If the entities follow the established ERO procedure for mitigation, it is the intent of the SDT that no penalties will be assessed.

Implementation Plan for TPL-001-1

Prerequisite Approvals

There are no other Reliability Standards or Standard Authorization Requests (SARs), in progress or approved, that must be implemented before this standard can be implemented.

TPL-001-1 — Transmission System Planning Performance Requirements

In revising the TPL standards, the SDT is assuming that planners will receive valid data from the MOD standards link described in TPL-001-1, Requirement R1. Furthermore, there is a tacit assumption that future revisions of the MOD standards will include steps to validate MOD based data.

Revision to Sections of Approved Standards and Definitions

There are multiple new definitions in the proposed standard.

Bus-tie Breaker: A circuit breaker that is positioned to connect two individual substation bus configurations.

Consequential Load Loss: All Load that is no longer served by the Transmission system as a result of Transmission Facilities being removed from service by a Protection System operation designed to isolate the fault.

Long-Term Transmission Planning Horizon: Transmission planning period that covers years six through ten or beyond when required to accommodate any known longer lead time projects that may take longer than ten years to complete.

Near-Term Transmission Planning Horizon: Transmission planning period that covers Years One through five.

Non-Consequential Load Loss: Non-Interruptible Load loss that does not include: (1) Consequential Load Loss, (2) the response of voltage sensitive Load, or (3) Load that is disconnected from the System by end-user equipment.

Planning Assessment: Documented evaluation of future Transmission System performance and Corrective Action Plans to remedy identified deficiencies.

Year One: The first ~~year~~twelve month period that a Planning Coordinator or a Transmission Planner is responsible for assessing. ~~This is further defined as the planning window that begins 12-18 months from the end of the current calendar year~~For the Planning Assessment started in a given calendar year, Year One must include the forecasted peak Load period for one of the following two calendar years. For example, if a Planning Assessment was started in 2011, then Year One must include the forecasted peak Load period for either 2012 or 2013.

Compliance with Standards

Standard	Functions That Must Comply With the Associated Requirements	
TPL-001-1 — Transmission System Planning Performance Requirements	Transmission Planner	Planning Coordinator
	X	X

Effective Dates

The effective date is the date entities are expected to meet the performance identified in this standard.

Except as indicated below**,** all Requirements and associated parts shall become effective on the first day of the first calendar quarter, 24 months after applicable regulatory approval. In those jurisdictions where no regulatory approval is required, all requirements go into effect on the first day of the first calendar quarter, 24 months after Board of Trustees adoption.

TPL-001-0, TPL-002-0a, TPL-003-0a, and TPL-004-0 are being retired as they are replaced in their entirety by TPL-001-1. TPL-005-0 and TPL-006-0 are being retired because their requirements are adequately covered by the revised TPL-001-1 and NERC's Rules of Procedure, Section 800. However, during this 24-month period, all aspects of TPL-001-0 through TPL-006-0 shall remain in effect for compliance monitoring. This 24 month period is to allow entities to develop, perform and/or validate new and/or modified studies, methodologies, assessments, procedures, etc. necessary to implement and meet the TPL-001-1 requirements. The specified effective dates are expected to allow sufficient time for proper assessment of the available options necessary to create a viable Corrective Action Plan that is compliant with the new Standard.

> R1. This Requirement is related to maintaining System models and the data needed to do so. This requirement shall become effective on the first day of the first calendar quarter, 12 months after applicable regulatory approval. In those jurisdictions where no regulatory approval is required, this requirement goes into effect on the first day of the first calendar quarter, 12 months after Board of Trustees adoption.
>
> R7. This Requirement identifies an obligation to determine individual and joint responsibilities for performing studies needed to do the Planning Assessment. This requirement shall become effective on the first day of the first calendar quarter, 12 months after applicable regulatory approval. In those jurisdictions where no regulatory approval is required, this requirement goes into effect on the first day of the first calendar quarter, 12 months after Board of Trustees adoption.

TPL-001-1 'raises the bar' in several areas where performance requirements have been changed in the new Standard versus those in existing TPL-001-0, TPL-002-0a, TPL-003-0a and TPL-004-0 because loss of Non-Consequential Load or interruption of firm transfers is no longer allowed for certain events, whereas the existing Standards were interpreted by many to allow such actions. As shown in Table 1 of TPL-001-1, the performance requirements associated with the following events represent "raising the bar":

- P1-2 (for controlled interruption of electric supply to local network customers connected to or supplied by the Faulted element)
- P1-3 (for controlled interruption of electric supply to local network customers connected to or supplied by the Faulted element)
- P2-1
- P2-2 (above 300 kV)
- P2-3 (above 300 kV)
- P3-1 through P3-5
- P4-1 through P4-5 (above 300 kV)
- P5 (above 300 kV)

This "raising the bar" is beyond the control of the Transmission Planner and Planning Coordinator and may have significant budget, siting, permitting, and construction impacts on many Transmission Owners. To provide stakeholders with sufficient time to implement changes, a timeframe coincident with the end of the Near-Term Transmission Planning Horizon will be provided as follows:

- For ~~60~~84 months after the first day of the first calendar quarter following applicable regulatory approval, or in those jurisdictions where no regulatory approval is required on the first day of the first calendar quarter, 84 months after Board of Trustees adoption, Corrective Action Plans applying to performance elements P1-2 and P1-3 (for controlled interruption of electric supply to local network customers connected to or supplied by the Faulted element), P2-1, P2-2 (above 300 kV), P2-3 (above 300 kV), P3-1 through P3-5, P4-1 through P4-5 (above 300 kV), and P5 (above 300 kV) are allowed to include tripping of Non-Consequential Load and curtailment of Firm Transmission Service (in accordance with Requirement R2.7.3) that would not otherwise be permitted by the requirements of TPL-001-1.

Any entity which cannot eliminate the need to trip Non-Consequential Load or curtail Firm Transmission Service for these performance elements by that date shall submit a mitigation plan to its Regional Entity outlining the steps it will take to correct the problem~~-~~. If the entities follow the established ERO procedure for mitigation, it is the intent of the SDT that no penalties will be assessed.

Standard Development Roadmap

This section is maintained by the drafting team during the development of the standard and will be removed when the standard becomes effective.

Development Steps Completed:

1. Version 1 of SAR posted for comment from April 2, 2002 through May 3, 2002.
2. Version 2 of SAR posted for comment from May 5, 2004 through June 5, 2004.
3. Version 3 of SAR posted on November 18, 2005.
4. SAR approved on April 30, 2006.
5. Version 1 of Supplemental SAR posted for comment from February 15, 2007 through March 16, 2007.
6. Version 2 of Supplemental SAR posted on April 9, 2007.
7. Version 1 of revised standard(s) posted for comment on September 17, 2007.
8. Version 2 of the revised standards posted for comment on August 15, 2008.
9. Version 3 of the revised standards posted for comment on May 26, 2009.
10. Version 4 of the revised standards posted for comment on September 16, 2009.
11. Initial ballot completed on March 1, 2010.

Proposed Action Plan and Description of Current Draft:
The SDT has established a schedule of meetings and conference calls that allows for steady progress through the standards development process in anticipation of completing their assignment in 1Q10. The current draft is the second iteration of the revision of existing standards TPL-001 through TPL-006 and includes one revised standard, TPL-001-1, replacing TPL-001-0, TPL-002-0, TPL-003-0 and TPL-004-0. TPL-005 & -006 issues are addressed in this fifth draft and those standards will also be replaced by TPL-001-2.

Future Development Plan:

Anticipated Actions	Anticipated Date
1. Post fifth version of standard.	3Q10
2. Conduct ballot	TBD
3. Respond to comments and determine next step	TBD
4. Submit standard(s) to BOT.	2Q11
5. Submit to regulatory authorities for approval.	3Q11

Definitions of Terms Used in Standard

This section includes all newly defined or revised terms used in the proposed standard. Terms already defined in the Reliability Standards Glossary of Terms are not repeated here. New or revised definitions listed below become approved when the proposed standard is approved. When the standard becomes effective, these defined terms will be removed from the individual standard and added to the Glossary.

Bus-tie Breaker: A circuit breaker that is positioned to connect two individual substation bus configurations.

Consequential Load Loss: All Load that is no longer served by the Transmission system as a result of Transmission Facilities being removed from service by a Protection System operation designed to isolate the fault.

Long-Term Transmission Planning Horizon: Transmission planning period that covers years six through ten or beyond when required to accommodate any known longer lead time projects that may take longer than ten years to complete.

Near-Term Transmission Planning Horizon: Transmission planning period that covers Years One through five.

Non-Consequential Load Loss: Non-Interruptible Load loss that does not include: (1) Consequential Load Loss, (2) the response of voltage sensitive Load, or (3) Load that is disconnected from the System by end-user equipment.

Planning Assessment: Documented evaluation of future Transmission system performance and Corrective Action Plans to remedy identified deficiencies.

Year One: The first twelve month period that a Planning Coordinator or a Transmission Planner is responsible for assessing. For the Planning Assessment started in a given calendar year, Year One must include the forecasted peak Load period for one of the following two calendar years. For example, if a Planning Assessment was started in 2011, then Year One must include the forecasted peak Load period for either 2012 or 2013.

A. Introduction

1. Title: **Transmission System Planning Performance Requirements**

2. Number: **TPL-001-2**

3. Purpose: Establish Transmission system planning performance requirements within the planning horizon to develop a Bulk Electric System (BES) that will operate reliably over a broad spectrum of System conditions and following a wide range of probable Contingencies.

4. Applicability:

4.1. Functional Entity

4.1.1. Planning Coordinator.

4.1.2. Transmission Planner.

5. Effective Date: Requirements R1 and R7 shall become effective on the first day of the first calendar quarter, 12 months after applicable regulatory approval. In those jurisdictions where no regulatory approval is required, Requirements R1 and R7 become effective on the first day of the first calendar quarter, 12 months after Board of Trustees adoption.

Except as indicated below, Requirements R2 through R6 and Requirement R8 shall become effective on the first day of the first calendar quarter, 24 months after applicable regulatory approval. In those jurisdictions where no regulatory approval is required, all requirements, except as noted below, go into effect on the first day of the first calendar quarter, 24 months after Board of Trustees adoption.

- For 84 calendar months beginning the first day of the first calendar quarter following applicable regulatory approval, Corrective Action Plans applying to the following categories of Contingencies and events identified in TPL-001-2, Table 1 are allowed to include Non-Consequential Load Loss and curtailment of Firm Transmission Service (in accordance with Requirement R2, Part 2.7.3.) that would not otherwise be permitted by the requirements of TPL-001-2:
  - P1-2 (for controlled interruption of electric supply to local network customers connected to or supplied by the Faulted element)
  - P1-3 (for controlled interruption of electric supply to local network customers connected to or supplied by the Faulted element)
  - P2-1, P2-2 (above 300 kV)
  - P2-3 (above 300 kV)
  - P3-1 through P3-5
  - P4-1 through P4-5 (above 300 kV)
  - P5 (above 300 kV)

B. Requirements

R1. Each Transmission Planner and Planning Coordinator shall maintain System models within its respective area for performing the studies needed to complete its Planning Assessment. The models shall use the latest data consistent with that provided in accordance with the MOD-010 and MOD-012 standards, supplemented by other sources as needed, including items represented in the Corrective Action Plan, and shall represent projected System conditions. This establishes the normal system condition in Table 1. *[Violation Risk Factor: Medium] [Time Horizon: Long-term Planning]*

1.1. System models shall represent:

1.1.1. Existing Facilities

1.1.2. Known outage(s) of generation or Transmission Facility(ies) with a duration of at least six months.

1.1.3. New planned Facilities and changes to existing Facilities

1.1.4. Real and reactive Load forecasts

1.1.5. Known commitments for Firm Transmission Service and Interchange

1.1.6. Resources (supply or demand side) required for Load

R2. Each Transmission Planner and Planning Coordinator shall prepare an annual Planning Assessment of its portion of the BES. This Planning Assessment shall use current or qualified past studies (as indicated in Requirement R2, Part 2.6), document assumptions, summarize documented results, and cover steady state analyses, short circuit analyses, and Stability analyses. *[Violation Risk Factor: Medium] [Time Horizon: Long-term Planning]*

2.1. The Near-Term Transmission Planning Horizon portion of the steady state analysis shall be assessed annually and be supported by current annual studies or qualified past studies as indicated in Requirement R2, Part 2.6, as follows:

2.1.1. System peak Load for either Year One or year two, and for year five.

2.1.2. System Off-Peak Load for one of the five years.

2.1.3. P1 events in Table 1, with known outages modeled as in Requirement R1, Part 1.1.2, under those System peak or Off-Peak conditions when known outages are scheduled.

2.1.4. For each of the studies described in Requirement R2, Parts 2.1.1 and 2.1.2, sensitivity case(s) shall be utilized to demonstrate the impact of changes to the basic assumptions used in the model. To accomplish this, the sensitivity analysis in the Planning Assessment must vary one or more of the following conditions by a sufficient amount to stress the System within a range of credible conditions that demonstrate a measurable change in performance:

- Real and reactive forecasted Load.
- Expected transfers.
- Expected in service dates of new or modified Transmission Facilities.
- Reactive resource capability.
- Generation additions, retirements, or other dispatch scenarios.
- Controllable Loads and Demand Side Management.
- Duration or timing of planned Transmission outages.

2.1.5. When an entity's spare equipment strategy could result in the unavailability of major Transmission equipment that has a lead time of one year or more (such as a transformer), the impact of this possible unavailability on System performance shall be studied. The studies shall be performed for the P0, P1, and P2 categories identified in Table 1 with the conditions that the System is expected to experience during the possible unavailability of the long lead time equipment.

2.2. The Long-Term Transmission Planning Horizon portion of the steady state analysis shall be assessed annually and be supported by the following annual current study, supplemented with qualified past studies as indicated in Requirement R2, Part 2.6:

2.2.1. A current study assessing expected System peak Load conditions for one of the years in the Long-Term Transmission Planning Horizon and the rationale for why that year was selected.

2.3. The short circuit analysis portion of the Planning Assessment shall be conducted annually addressing the Near-Term Transmission Planning Horizon and can be supported by current or past studies as qualified in Requirement R2, Part 2.6. The analysis shall be used to determine whether circuit breakers have interrupting capability for Faults that they will be expected to interrupt using the System short circuit model with any planned generation and Transmission Facilities in service which could impact the study area.

2.4. The Near-Term Transmission Planning Horizon portion of the Stability analysis shall be assessed annually and be supported by current or past studies as qualified in Requirement R2, Part2.6. The following studies are required:

2.4.1. System peak Load for one of the five years. System peak Load levels shall include a Load model which represents the expected dynamic behavior of Loads that could impact the study area, considering the behavior of induction motor Loads. An aggregate System Load model which represents the overall dynamic behavior of the Load is acceptable.

2.4.2. System Off-Peak Load for one of the five years.

2.4.3. For each of the studies described in Requirement R2, Parts 2.4.1 and 2.4.2, sensitivity case(s) shall be utilized to demonstrate the impact of changes to the basic assumptions used in the model. To accomplish this, the sensitivity analysis in the Planning Assessment must vary one or more of the following conditions by a sufficient amount to stress the System within a range of credible conditions that demonstrate a measurable change in performance:

- Load level, Load forecast, or dynamic Load model assumptions.
- Expected transfers.
- Expected in service dates of new or modified Transmission Facilities.
- Reactive resource capability.
- Generation additions, retirements, or other dispatch scenarios.

2.5. The Long-Term Transmission Planning Horizon portion of the Stability analysis shall be assessed to address the impact of proposed material generation additions or changes in that timeframe and be supported by current or past studies as qualified in Requirement R2, Part2.6 and shall include documentation to support the technical rationale for determining material changes.

2.6. Past studies may be used to support the Planning Assessment if they meet the following requirements:

2.6.1. For steady state, short circuit, or Stability analysis: the study shall be five calendar years old or less, unless a technical rationale can be provided to demonstrate that the results of an older study are still valid.

2.6.2. For steady state, short circuit, or Stability analysis: the System represented in the study shall not include any material changes unless a technical rationale can be provided to demonstrate that System changes do not impact the performance results in the study area.

2.7. For planning events shown in Table 1, when the analysis indicates an inability of the System to meet the performance requirements in Table 1, the Planning Assessment shall include Corrective Action Plan(s) addressing how the performance requirements will be met. Revisions to the Corrective Action Plan(s) are allowed in subsequent Planning Assessments but the planned System shall continue to meet the performance requirements in Table 1. Corrective Action Plan(s) do not need to be developed solely to meet the performance requirements for a single sensitivity case analyzed in accordance with Requirements R2, Parts 2.1.4 and 2.4.3. The Corrective Action Plan(s) shall:

2.7.1. List System deficiencies and the associated actions needed to achieve required System performance. Such actions may include:

- Installation, modification, retirement, or removal of Transmission and generation Facilities and any associated equipment.
- Installation, modification, or removal of Protection Systems or Special Protection Systems
- Installation or modification of automatic generation tripping as a response to a single or multiple Contingency to mitigate Stability performance violations.
- Installation or modification of manual and automatic generation runback/tripping as a response to a single or multiple Contingency to mitigate steady state performance violations.
- Use of Operating Procedures specifying how long they will be needed as part of the Corrective Action Plan.
- Use of rate applications, DSM, new technologies, or other initiatives.

2.7.2. Include actions to resolve performance deficiencies identified in multiple sensitivity studies or provide a rationale for why actions were not necessary.

2.7.3. If situations arise that are beyond the control of the Transmission Planner or Planning Coordinator that prevent the implementation of a Corrective Action Plan in the required timeframe, then the Transmission Planner or Planning Coordinator is permitted to utilize Non-Consequential Load Loss and curtailment of Firm Transmission Service to correct the situation that would normally not be permitted in Table 1, provided that the Transmission Planner or Planning Coordinator documents that they are taking actions to resolve the situation. The Transmission Planner or Planning Coordinator shall document the situation causing the problem, alternatives evaluated, and the use of Non-Consequential Load Loss or curtailment of Firm Transmission Service.

2.7.4. Be reviewed in subsequent annual Planning Assessments for continued validity and implementation status of identified System Facilities and Operating Procedures.

2.8. For short circuit analysis, if the short circuit current interrupting duty on circuit breakers determined in Requirement R2, Part 2.3 exceeds their Equipment Rating, the Planning Assessment shall include a Corrective Action Plan to address the Equipment Rating violations. The Corrective Action Plan shall:

2.8.1. List System deficiencies and the associated actions needed to achieve required System performance.

2.8.2. Be reviewed in subsequent annual Planning Assessments for continued validity and implementation status.

R3. For the steady state portion of the Planning Assessment, each Transmission Planner and Planning Coordinator shall perform studies for the Near-Term and Long-Term Transmission Planning Horizons in Requirement R2, Parts 2.1, and 2.2. The studies shall be based on computer simulation models using data provided in Requirement R1. *[Violation Risk Factor: Medium] [Time Horizon: Long-term Planning]*

3.1. Studies shall be performed for planning events to determine whether the BES meets the performance requirements in Table 1 based on the Contingency list created in Requirement R3, Part 3.4.

3.2. Studies shall be performed to assess the impact of the extreme events which are identified by the list created in Requirement R3, Part 3.5.

3.3. Contingency analyses for Requirement R3, Parts 3.1 & 3.2 shall:

3.3.1. Simulate the removal of all elements that the Protection System and other automatic controls are expected to disconnect for each Contingency without operator intervention. The analyses shall include the impact of subsequent:

- Tripping of generators where simulations show generator bus voltages or high side of the generation step up (GSU) voltages are less than known or assumed minimum generator steady state or ride through voltage limitations. Include in the assessment any assumptions made.
- Tripping of Transmission elements where relay loadability limits are exceeded.

3.3.2. Simulate the expected automatic operation of existing and planned devices designed to provide steady state control of electrical system quantities when such devices impact the study area. These devices may include equipment such as phase-shifting transformers, load tap changing transformers, and switched capacitors and inductors.

3.4. Those planning events in Table 1, that are expected to produce more severe System impacts on its portion of the BES, shall be identified and a list of those Contingencies to be evaluated for System performance in Requirement R3, Part 3.1 created. The rationale for those Contingencies selected for evaluation shall be available as supporting information.

3.4.1. The Planning Coordinator and Transmission Planner shall coordinate with adjacent Planning Coordinators and Transmission Planners to ensure that Contingencies on adjacent Systems which may impact their Systems are included in the Contingency list.

3.5. Those extreme events in Table 1 that are expected to produce more severe System impacts shall be identified and a list created of those events to be evaluated in Requirement R3, Part 3.2. The rationale for those Contingencies selected for

evaluation shall be available as supporting information. If the analysis concludes there is Cascading caused by the occurrence of extreme events, an evaluation of possible actions designed to reduce the likelihood or mitigate the consequences and adverse impacts of the event(s) shall be conducted.

R4. For the Stability portion of the Planning Assessment, as described in Requirement R2, Parts 2.4 and 2.5, each Transmission Planner and Planning Coordinator shall perform the Contingency analyses listed in Table 1. The studies shall be based on computer simulation models using data provided in Requirement R1. *[Violation Risk Factor: Medium] [Time Horizon: Long-term Planning]*

4.1. Studies shall be performed for planning events to determine whether the BES meets the performance requirements in Table 1 based on the Contingency list created in Requirement R4, Part 4.4.

4.1.1. For planning event P1: No generating unit shall pull out of synchronism. A generator being disconnected from the System by fault clearing action or by a Special Protection System is not considered pulling out of synchronism.

4.1.2. For planning events P2 through P7: When a generator pulls out of synchronism in the simulations, the resulting apparent impedance swings shall not result in the tripping of any Transmission system elements other than the generating unit and its directly connected Facilities.

4.1.3. For planning events P1 through P7: Power oscillations shall exhibit acceptable damping as established by the Planning Coordinator and Transmission Planner.

4.2. Studies shall be performed to assess the impact of the extreme events which are identified by the list created in Requirement R4, Part 4.5.

4.3. Contingency analyses for Requirement R4, Parts 4.1 and 4.2 shall :

4.3.1. Simulate the removal of all elements that the Protection System and other automatic controls are expected to disconnect for each Contingency without operator intervention. The analyses shall include the impact of subsequent:

- Successful high speed reclosing and unsuccessful high speed reclosing into a Fault.
- Tripping of generators where simulations show generator bus voltages or high side of the GSU voltages are less than known or assumed generator low voltage ride through capability. Include in the assessment any assumptions made.
- Tripping of Transmission lines and transformers where transient swings cause Protection System operation based on generic or actual relay models.

4.3.2. Simulate the expected automatic operation of existing and planned devices designed to provide dynamic control of electrical system quantities when such devices impact the study area. These devices may include equipment such as generation exciter control and power system stabilizers, static var compensators, power flow controllers, and DC Transmission controllers.

4.4. Those planning events in Table 1 that are expected to produce more severe System impacts on its portion of the BES, shall be identified, and a list created of those Contingencies to be evaluated in Requirement R4, Part 4.1. The rationale for those Contingencies selected for evaluation shall be available as supporting information.

4.4.1. Each Planning Coordinator and Transmission Planner shall coordinate with adjacent Planning Coordinators and Transmission Planners to ensure that Contingencies on adjacent Systems which may impact their Systems are included in the Contingency list.

4.5. Those extreme events in Table 1 that are expected to produce more severe System impacts shall be identified and a list created of those events to be evaluated in Requirement R4, Part 4.2. The rationale for those Contingencies selected for evaluation shall be available as supporting information. If the analysis concludes there is Cascading caused by the occurrence of extreme events, an evaluation of possible actions designed to reduce the likelihood or mitigate the consequences of the event(s) shall be conducted.

R5. Each Transmission Planner and Planning Coordinator shall have criteria for acceptable System steady state voltage limits, post-Contingency voltage deviations, and the transient voltage response for its System. For transient voltage response, the criteria shall at a minimum, specify a low voltage level and a maximum length of time that transient voltages may remain below that level. *[Violation Risk Factor: Medium] [Time Horizon: Long-term Planning]*

R6. Each Transmission Planner and Planning Coordinator shall define and document, within their Planning Assessment, any criteria or methodology used in the analysis to identify System instability for conditions such as Cascading, voltage instability, or uncontrolled islanding. *[Violation Risk Factor: Low] [Time Horizon: Long-term Planning]*

R7. Each Planning Coordinator, in conjunction with each of its Transmission Planners, shall determine and identify each entity's individual and joint responsibilities for performing the required studies for the Planning Assessment. *[Violation Risk Factor: Low] [Time Horizon: Long-term Planning]*

R8. Each Planning Coordinator and Transmission Planner shall distribute its Planning Assessment results to adjacent Planning Coordinators, adjacent Transmission Planners, and any functional entity that has a reliability related need and that functional entity submits a written request for the information. *[Violation Risk Factor: Low] [Time Horizon: Long-term Planning]*

8.1. If a recipient of the Planning Assessment results provides documented comments on the results, the respective Planning Coordinator or Transmission Planner shall provide a documented response to that recipient within 90 calendar days of receipt of those comments.

Table 1 – Steady State & Stability Performance Planning Events

Steady State & Stability:

a. The System shall remain stable. Cascading and uncontrolled islanding shall not occur.
b. Consequential Load Loss as well as generation loss is acceptable as a consequence of any event excluding P0.
c. Simulate the removal of all elements that Protection Systems and other controls are expected to automatically disconnect for each event.
d. Simulate Normal Clearing unless otherwise specified.
e. Planned System adjustments such as Transmission configuration changes and re-dispatch of generation are allowed if such adjustments are executable within the time duration applicable to the Facility Ratings.

Steady State Only:

f. Applicable Facility Ratings shall not be exceeded.
g. System steady state voltages and post-Contingency voltage deviations shall be within acceptable limits as established by the Planning Coordinator and the Transmission Planner.
h. Planning event P0 is applicable to steady state only.
i. The response of voltage sensitive Load including Load that is disconnected from the System by end-user equipment associated with an event shall not be used to meet steady state performance requirements.

Stability Only:

j. Transient voltage response shall be within acceptable limits established by the Planning Coordinator and the Transmission Planner.

Category	Initial System Condition	Event [1]	Fault Type [2]	BES Level [3]	Interruption of Firm Transmission Service Allowed [4]	Non-Consequential Load Loss Allowed
P0 No Contingency	Normal System	None	N/A	EHV, HV	No[9]	No
P1 Single Contingency	Normal System	Loss of one of the following: 1. Generator 2. Transmission Circuit 3. Transformer [5] 4. Shunt Device [6]	3Ø	EHV, HV	No[9]	No[12]
		5. Single Pole of a DC line	SLG			
P2 Single Contingency	Normal System	1. Opening of a line section w/o a fault [7]	N/A	EHV, HV	No[9]	No[12]
		2. Bus Section Fault	SLG	EHV	No[9]	No
				HV	Yes	Yes
		3. Internal Breaker Fault [8]	SLG	EHV	No[9]	No

		(Non Bus-tie)		HV	Yes	Yes
		4. Internal Breaker Fault (Bus-tie) [8]	SLG	EHV, HV	Yes	Yes
Category	**Initial System Condition**	**Event [1]**	**Fault Type [2]**	**BES Level [3]**	**Interruption of Firm Transmission Service Allowed [4]**	**Non-Consequential Load Loss Allowed**
P3 Multiple Contingency	Loss of generator unit followed by System adjustments[9]	Loss of one of the following: 1. Generator 2. Transmission Circuit 3. Transformer [5] 4. Shunt Device [6]	3Ø	EHV, HV	No[9]	No[12]
		5. Single pole of a DC line	SLG			
P4 Multiple Contingency *(Fault plus stuck breaker[10])*	Normal System	Loss of multiple elements caused by a stuck breaker [10](non-Bus-tie) attempting to clear a Fault on one of the following: 1. Generator 2. Transmission Circuit 3. Transformer [5] 4. Shunt Device [6] 5. Bus Section	SLG	EHV	No[9]	No
				HV	Yes	Yes
		6. Loss of multiple elements caused by a stuck breaker[10] (Bus-tie) attempting to clear a Fault on the associated bus	SLG	EHV, HV	Yes	Yes
P5 Multiple Contingency *(Fault plus relay failure to operate)*	Normal System	Delayed Fault Clearing due to the failure of a relay[13] protecting the Faulted element to operate as designed, for one of the following: 1. Generator 2. Transmission Circuit 3. Transformer [5] 4. Shunt Device [6] 5. Bus Section	SLG	EHV	No[9]	No
				HV	Yes	Yes
P6 Multiple Contingency *(Two*	Loss of one of the following followed by System adj.[9]: 1. Transmission Circuit	Loss of one of the following: 1. Transmission Circuit 2. Transformer [5] 3. Shunt Device [6]	3Ø	EHV, HV	Yes	Yes

overlapping singles)	2. Transformer [5] 3. Shunt Device[6] 4. Single pole of a DC line					
		4. Single pole of a DC line	SLG	EHV, HV	Yes	Yes
P7 Multiple Contingency *(Common Structure)*	Normal System	The loss of: 1. Any two adjacent (vertically or horizontally) circuits on common structure [11] 2. Loss of a bipolar DC line	SLG	EHV, HV	Yes	Yes

Table 1 – Steady State & Stability Performance Extreme Events	
Steady State & Stability For all extreme events evaluated: a. Simulate the removal of all elements that Protection Systems and automatic controls are expected to disconnect for each Contingency. b. Simulate Normal Clearing unless otherwise specified.	
Steady State 1. Loss of a single generator, Transmission Circuit, single pole of a DC Line, shunt device, or transformer forced out of service followed by another single generator, Transmission Circuit, single pole of a different DC Line, shunt device, or transformer forced out of service prior to System adjustments. 2. Local area events affecting the Transmission System such as: a. Loss of a tower line with three or more circuits.[11] b. Loss of all Transmission lines on a common Right-of-Way[11]. c. Loss of a switching station or substation (loss of one voltage level plus transformers). d. Loss of all generating units at a generating station. e. Loss of a large Load or major Load center. 3. Wide area events affecting the Transmission System based on System topology such as: a. Loss of two generating stations resulting from conditions such as:	**Stability** 1. With an initial condition of a single generator, Transmission circuit, single pole of a DC line, shunt device, or transformer forced out of service, apply a 3Ø fault on another single generator, Transmission circuit, single pole of a different DC line, shunt device, or transformer prior to System adjustments. 2. Local or wide area events affecting the Transmission System such as: a. 3Ø fault on generator with stuck breaker[10] or a Protection System failure resulting in Delayed Fault Clearing. b. 3Ø fault on Transmission circuit with stuck breaker[10] or a Protection System failure resulting in Delayed Fault Clearing. c. 3Ø fault on transformer with stuck breaker[10] or a Protection System failure resulting in Delayed Fault Clearing. d. 3Ø fault on bus section with stuck breaker[10] or a Protection System failure resulting in Delayed Fault Clearing. e. 3Ø internal breaker fault.

i. Loss of a large gas pipeline into a region or multiple regions that have significant gas-fired generation. ii. Loss of the use of a large body of water as the cooling source for generation. iii. Wildfires. iv. Severe weather, e.g., hurricanes, tornadoes, etc. v. A successful cyber attack. vi. Shutdown of a nuclear power plant(s) and related facilities for a day or more for common causes such as problems with similarly designed plants. b. Other events based upon operating experience that may result in wide area disturbances.	f. Other events based upon operating experience, such as consideration of initiating events that experience suggests may result in wide area disturbances

Table 1 – Steady State & Stability Performance Footnotes (Planning Events and Extreme Events)
1. If the event analyzed involves BES elements at multiple System voltage levels, the lowest System voltage level of the element(s) removed for the analyzed event determines the stated performance criteria regarding allowances for interruptions of Firm Transmission Service and Non-Consequential Load Loss.
2. Unless specified otherwise, simulate Normal Clearing of faults. Single line to ground (SLG) or three-phase (3Ø) are the fault types that must be evaluated in Stability simulations for the event described. A 3Ø or a double line to ground fault study indicating the criteria are being met is sufficient evidence that a SLG condition would also meet the criteria.
3. Bulk Electric System (BES) level references include extra-high voltage (EHV) Facilities defined as greater than 300kV and high voltage (HV) Facilities defined as the 300kV and lower voltage Systems. The designation of EHV and HV is used to distinguish between stated performance criteria allowances for interruption of Firm Transmission Service and Non-Consequential Load Loss.
4. Curtailment of Conditional Firm Transmission Service is allowed when the conditions and/or events being studied formed the basis for the Conditional Firm Transmission Service.
5. For non-generator step up transformer outage events, the reference voltage, as used in footnote 1, applies to the low-side winding (excluding tertiary windings). For generator and Generator Step Up transformer outage events, the reference voltage applies to the BES connected voltage (high-side of the Generator Step Up transformer). Requirements which are applicable to transformers also apply to variable frequency transformers and phase shifting transformers.
6. Requirements which are applicable to shunt devices also apply to FACTS devices that are connected to ground.
7. Opening one end of a line section without a fault on a normally networked Transmission circuit such that the line is possibly serving Load radial from a single source point.
8. An internal breaker fault means a breaker failing internally, thus creating a System fault which must be cleared by protection on both sides of the breaker.
9. Curtailment of Firm Transmission Service, when coupled with the appropriate re-dispatch of resources obligated to re-dispatch, is allowed both as a System adjustment (as identified in the column entitled 'Initial System Conditions') and a corrective action, where it can be demonstrated that Facilities remain within applicable Facility Ratings and those adjustments do not result in the shedding of any firm Demand. Where limited options for re-dispatch exist, sensitivities associated with the availability of those resources should be considered. Where Facilities external to the Transmission Planner's planning region are relied upon, Facility Ratings in those regions should also be respected.
10. A stuck breaker means that for a gang-operated breaker, all three phases of the breaker have remained closed. For an independent pole operated (IPO) or an independent pole tripping (IPT) breaker, only one pole is assumed to remain closed. A stuck breaker results in Delayed Fault Clearing.
11. Excludes circuits that share a common structure (Planning event P7, Extreme event steady state 2a) or common Right-of-Way (Extreme event, steady state 2b) for 1 mile or less.
12. Note: Non-Consequential Load Loss is being decided in Project 2010-11. When that project is finalized, the resolution will be copied here.
13. Applies to the following relay functions or types: pilot (#85), distance (#21), differential (#87), current (#50, 51, and 67), voltage (#27 & 59), directional (#32, & 67), and tripping (#86, & 94).

C. Measures

M1. Each Transmission Planner and Planning Coordinator shall provide evidence, in electronic or hard copy format, that it is maintaining System models within their respective area, using the latest data consistent with MOD-010 and MOD-012, including items represented in the Corrective Action Plan, representing projected System conditions, and that the models represent the required information in accordance with Requirement R1.

M2. Each Transmission Planner and Planning Coordinator shall provide evidence, such as electronic or hard copies of its annual Planning Assessment, that it has prepared an annual Planning Assessment of its portion of the BES in accordance with Requirement R2.

M3. Each Transmission Planner and Planning Coordinator shall provide evidence, such as electronic or hard copies of the studies utilized in preparing the Planning Assessment, in accordance with Requirement R3.

M4. Each Transmission Planner and Planning Coordinator shall provide evidence, such as electronic or hard copies of the studies utilized in preparing the Planning Assessment in accordance with Requirement R4.

M5. Each Transmission Planner and Planning Coordinator shall provide evidence such as electronic or hard copies of the documentation specifying the criteria for acceptable System steady state voltage limits, post-Contingency voltage deviations, and the transient voltage response for its System in accordance with Requirement R5.

M6. Each Transmission Planner and Planning Coordinator shall provide evidence, such as electronic or hard copies of documentation specifying any criteria or methodology used in the analysis to identify System instability for conditions such as Cascading, voltage instability, or uncontrolled islanding that was utilized in preparing the Planning Assessment in accordance with Requirement R6.

M7. Each Planning Coordinator, in conjunction with each of its Transmission Planners, shall provide dated documentation on roles and responsibilities, such as meeting minutes, agreements, and e-mail correspondence that identifies that agreement has been reached on individual and joint responsibilities for performing the required studies and Assessments in accordance with Requirement R7.

M8. Each Planning Coordinator and Transmission Planner shall provide evidence, such as email notices, documentation of updated web pages, postal receipts showing recipient and date; or a demonstration of a public posting, that it has distributed its Planning Assessment results to adjacent Planning Coordinators, adjacent Transmission Planners, and any functional entity who has indicated a reliability need and that functional entity has provided a documented response to comments received on Planning Assessment results within 90 calendar days of receipt of those comments in accordance with Requirement R8.

D. Compliance

1. Compliance Monitoring Process

1.1 Compliance Enforcement Authority

Regional Entity

1.2 Compliance Monitoring Period and Reset Timeframe

Not applicable.

1.3 Compliance Monitoring and Enforcement Processes:

Compliance Audits

Self-Certifications

Spot Checking

Compliance Violation Investigations

Self-Reporting

Complaints

1.4 Data Retention

The Transmission Planner and Planning Coordinator shall each retain data or evidence to show compliance as identified unless directed by its Compliance Enforcement Authority to retain specific evidence for a longer period of time as part of an investigation:

- The models utilized in the current Planning Assessment and one previous Planning Assessment in accordance with Requirement R1 and Measure M1.
- The Planning Assessments performed since the last compliance audit in accordance with Requirement R2 and Measure M2.
- The studies performed in support of its Planning Assessments since the last compliance audit in accordance with Requirement R3 and Measure M3.
- The studies performed in support of its Planning Assessments since the last compliance audit in accordance with Requirement R4 and Measure M4.
- The documentation specifying the criteria since the last compliance audit in accordance with Requirement R5 and Measure M5.
- The documentation specifying any criteria or methodology utilized in support of its Planning Assessments since the last compliance audit in accordance with Requirement R6 and Measure M6.
- The current, in force documentation for the agreement(s) on roles and responsibilities, as well as all such documentation for the agreements in force since the last compliance audit, in accordance with Requirement R7 and Measure M7.

The Planning Coordinator shall retain data or evidence to show compliance as identified unless directed by its Compliance Enforcement Authority to retain specific evidence for a longer period of time as part of an investigation:

- Three calendar years of the notifications employed in accordance with Requirement R8 and Measure M8.

If a Transmission Planner or Planning Coordinator is found non-compliant, it shall keep information related to the non-compliance until found compliant or the time periods specified above, whichever is longer.

1.5 Additional Compliance Information

None.

2. Violation Severity Levels

	Lower VSL	Moderate VSL	High VSL	Severe VSL
R1	The responsible entity's System model failed to represent one of the Requirement R1, Parts 1.1.1 through 1.1.6.	The responsible entity's System model failed to represent two of the Requirement R1, Parts 1.1.1 through 1.1.6. OR The responsible entity's System model did not use the latest data consistent with the data provided in accordance with the MOD-010 and MOD-012 standards and other sources, including items represented in the Corrective Action Plan.	The responsible entity's System model failed to represent three of the Requirement R1, Parts 1.1.1 through 1.1.6.	The responsible entity's System model failed to represent four or more of the Requirement R1, Parts 1.1.1 through 1.1.6. OR The responsible entity's System model did not represent projected System conditions as described in Requirement R1.
R2	The responsible entity failed to comply with Requirement R2, Part 2.6.	The responsible entity failed to comply with Requirement R2, Part 2.3 or Part 2.8.	The responsible entity failed to comply with one of the following Parts of Requirement R2: Part 2.1, Part 2.2, Part 2.4, Part 2.5, or Part 2.7.	The responsible entity failed to comply with two or more of the following Parts of Requirement R2: Part 2.1, Part 2.2, Part 2.4, or Part 2.7.
R3	The responsible entity did not identify planning events as described in Requirement R3, Part 3.4 or extreme events as described in Requirement R3, Part 3.5.	The responsible entity did not perform studies as specified in Requirement R3, Part 3.1 to determine that the BES meets the performance requirements for one of the categories (P2 through P7) in Table 1. OR The responsible entity did not perform studies as specified in Requirement R3, Part 3.2 to assess the impact of extreme events. OR The responsible entity did not base its	The responsible entity did not perform studies as specified in Requirement R3, Part 3.1 to determine that the BES meets the performance requirements for two of the categories (P2 through P7) in Table 1. OR The responsible entity did not perform Contingency analysis as described in Requirement R3, Part 3.3.	The responsible entity did not perform studies as specified in Requirement R3, Part 3.1 to determine that the BES meets the performance requirements for three or more of the categories (P2 through P7) in Table 1. OR The responsible entity did not perform studies to determine that the BES meets the performance requirements for the P0 or P1 categories in Table 1.

	Lower VSL	Moderate VSL	High VSL	Severe VSL
		studies on computer simulation models using data provided in Requirement R1.		
R4	The responsible entity did not identify planning events as described in Requirement R4, Part 4.4 or extreme events as described in Requirement R4, Part 4.5.	The responsible entity did not perform studies as specified in Requirement R4, Part 4.1 to determine that the BES meets the performance requirements for one of the categories (P1 through P7) in Table 1. OR The responsible entity did not perform studies as specified in Requirement R4, Part 4.2 to assess the impact of extreme events. OR The responsible entity did not base its studies on computer simulation models using data provided in Requirement R1.	The responsible entity did not perform studies as specified in Requirement R4, Part 4.1 to determine that the BES meets the performance requirements for two of the categories (P1 through P7) in Table 1. OR The responsible entity did not perform Contingency analysis as described in Requirement R4, Part 4.3.	The responsible entity did not perform studies as specified in Requirement R4, Part 4.1 to determine that the BES meets the performance requirements for three or more of the categories (P1 through P7) in Table 1.
R5	N/A	N/A	N/A	The responsible entity does not have criteria for acceptable System steady state voltage limits, post-Contingency voltage deviations, or the transient voltage response for its System.
R6	N/A	N/A	N/A	The responsible entity failed to define and document the criteria or methodology for System instability used within its analysis as described in Requirement R6.
R7	N/A	N/A	N/A	The Planning Coordinator, in conjunction with each of its

	Lower VSL	Moderate VSL	High VSL	Severe VSL
				Transmission Planners, failed to determine and identify individual or joint responsibilities for performing required studies.
R8	The responsible entity failed to distribute the results of its Planning Assessment to one of its adjacent Transmission Planners, one adjacent Planning Coordinator, or to one functional entity that has a reliability related need and that has submitted a written request for the information, respectively in accordance with Requirement R8.	N/A	The responsible entity failed to distribute the results of its Planning Assessment to more than one of its adjacent Transmission Planners, adjacent Planning Coordinators, or functional entities that have a reliability related need and that have submitted a written request for the information, respectively in accordance with Requirement R8.	The responsible entity failed to provide a documented response to a recipient of the Planning Assessment results who provided documented comments on the results within 90 calendar days of receipt of those comments in accordance with Requirement R8.

E. Regional Variances

None.

Version History

Version	Date	Action	Change Tracking
1	TBD	Revision of TPL-001-0 as per Project 2006-02; includes merging requirements of TPL-001-0, TPL-002-0, TPL-003-0, and TPL-004-0 into one, single, comprehensive, coordinated standard: TPL-001-1	Not employed due to scope of revision

Standard Development Roadmap

This section is maintained by the drafting team during the development of the standard and will be removed when the standard becomes effective.

Development Steps Completed:

1. Version 1 of SAR posted for comment from April 2, 2002 through May 3, 2002.
2. Version 2 of SAR posted for comment from May 5, 2004 through June 5, 2004.
3. Version 3 of SAR posted on November 18, 2005.
4. SAR approved on April 30, 2006.
5. Version 1 of Supplemental SAR posted for comment from February 15, 2007 through March 16, 2007.
6. Version 2 of Supplemental SAR posted on April 9, 2007.
7. Version 1 of revised standard(s) posted for comment on September 17, 2007.
8. Version 2 of the revised standards posted for comment on August 15, 2008.
9. Version 3 of the revised standards posted for comment on May 26, 2009.
10. Version 4 of the revised standards posted for comment on September 16, 2009.
11. Initial ballot completed on March 1, 2010.

Proposed Action Plan and Description of Current Draft:
The SDT has established a schedule of meetings and conference calls that allows for steady progress through the standards development process in anticipation of completing their assignment in 1Q10. The current draft is the second iteration of the revision of existing standards TPL-001 through TPL-006 and includes one revised standard, TPL-001-1, replacing TPL-001-0, TPL-002-0, TPL-003-0 and TPL-004-0. TPL-005 & -006 issues are addressed in this fifth draft and those standards will also be replaced by TPL-001-2.

Future Development Plan:

Anticipated Actions	Anticipated Date
1. Post fifth version of standard.	3Q10
2. Conduct ballot	TBD
3. Respond to comments and determine next step	TBD
4. Submit standard(s) to BOT.	2Q11
5. Submit to regulatory authorities for approval.	3Q11

Definitions of Terms Used in Standard

This section includes all newly defined or revised terms used in the proposed standard. Terms already defined in the Reliability Standards Glossary of Terms are not repeated here. New or revised definitions listed below become approved when the proposed standard is approved. When the standard becomes effective, these defined terms will be removed from the individual standard and added to the Glossary.

Bus-tie Breaker: A circuit breaker that is positioned to connect two individual substation bus configurations.

Consequential Load Loss: All Load that is no longer served by the Transmission system as a result of Transmission Facilities being removed from service by a Protection System operation designed to isolate the fault.

Long-Term Transmission Planning Horizon: Transmission planning period that covers years six through ten or beyond when required to accommodate any known longer lead time projects that may take longer than ten years to complete.

Near-Term Transmission Planning Horizon: Transmission planning period that covers Years One through five.

Non-Consequential Load Loss: Non-Interruptible Load loss that does not include: (1) Consequential Load Loss, (2) the response of voltage sensitive Load, or (3) Load that is disconnected from the System by end-user equipment.

Planning Assessment: Documented evaluation of future Transmission system performance and Corrective Action Plans to remedy identified deficiencies.

Year One: The first ~~year~~twelve month period that a Planning Coordinator or a Transmission Planner is responsible for assessing. ~~This is further defined as the planning window that begins 12-18 months from the end of the current calendar year.~~For the Planning Assessment started in a given calendar year, Year One must include the forecasted peak Load period for one of the following two calendar years. For example, if a Planning Assessment was started in 2011, then Year One must include the forecasted peak Load period for either 2012 or 2013.

A. Introduction

1. **Title:** **Transmission System Planning Performance Requirements**

2. **Number:** **TPL-001-~~1~~2**

3. **Purpose:** Establish Transmission system planning performance requirements within the planning horizon to develop a Bulk Electric System (BES) that will operate reliably over a broad spectrum of System conditions and following a wide range of probable Contingencies.

4. **Applicability:**

   4.1. Functional Entity

   4.1.1. Planning Coordinator.

   4.1.2. Transmission Planner.

5. **Effective Date:** Requirements R1 and R7 shall become effective on the first day of the first calendar quarter, 12 months after applicable regulatory approval. In those jurisdictions where no regulatory approval is required, Requirements R1 and R7 become effective on the first day of the first calendar quarter, 12 months after Board of Trustees adoption.

   Except as indicated below, Requirements R2 through R6 and Requirement R8 shall become effective on the first day of the first calendar quarter, 24 months after applicable regulatory approval. In those jurisdictions where no regulatory approval is required, all requirements, except as noted below, go into effect on the first day of the first calendar quarter, 24 months after Board of Trustees adoption.

   - For ~~60~~84 calendar months beginning the first day of the first calendar quarter following applicable regulatory approval, Corrective Action Plans applying to the following categories of Contingencies and events identified in TPL-001-~~1~~2, Table 1 are allowed to include Non-Consequential Load Loss and curtailment of Firm Transmission Service (in accordance with Requirement R2, ~~part~~Part 2.7.3.) that would not otherwise be permitted by the requirements of TPL-001-~~1~~2:
     - P1-2 (for controlled interruption of electric supply to local network customers connected to or supplied by the Faulted element)
     - P1-3 (for controlled interruption of electric supply to local network customers connected to or supplied by the Faulted element)
     - P2-1, P2-2 (above 300 kV)
     - P2-3 (above 300 kV)
     - P3-1 through P3-5
     - P4-1 through P4-5 (above 300 kV)
     - P5 (above 300 kV)

B. Requirements

R1. Each Transmission Planner and Planning Coordinator shall maintain System models within its respective area for performing the studies needed to complete its Planning Assessment. The models shall use the latest data consistent with that provided in accordance with the MOD-010 and MOD-012 standards, supplemented by other sources as needed, including items represented in the Corrective Action Plan, and shall represent projected System conditions. This establishes the normal system condition in Table 1. *[Violation Risk Factor: Medium] [Time Horizon: Long-term Planning]*

1.1. System models shall represent:

1.1.1. Existing Facilities

1.1.2. Known outage(s) of generation or Transmission Facility(ies) with a duration of at least six months.

1.1.3. New planned Facilities and changes to existing Facilities

1.1.4. Real and reactive Load forecasts

1.1.5. Known commitments for Firm Transmission Service and Interchange

1.1.6. Resources (supply or demand side) required for Load

R2. Each Transmission Planner and Planning Coordinator shall prepare an annual Planning Assessment of its portion of the BES. This Planning Assessment shall use current or qualified past studies (as indicated in Requirement R2, Part 2.6), document assumptions, summarize documented results, and cover steady state analyses, short circuit analyses, and Stability analyses. *[Violation Risk Factor: Medium] [Time Horizon: Long-term Planning]*

2.1. The Near-Term Transmission Planning Horizon portion of the steady state analysis shall be assessed annually and be supported by ~~the following~~ current annual ~~current~~ studies~~, supplemented with~~ or qualified past studies as indicated in Requirement R2, ~~part~~ Part 2.6, as follows:

2.1.1. System peak Load for either Year One or year two, and for year five.

2.1.2. System Off-Peak Load for one of the five years.

2.1.3. P1 events in Table 1, with known outages modeled~~,~~ as ~~-~~in Requirement R1, ~~part~~Part 1.1.2, under those System peak or Off-Peak conditions when known outages are scheduled.

2.1.4. For each of the studies described in Requirement R2, ~~parts~~ Parts 2.1.1 and 2.1.2, sensitivity case(s) shall be utilized to demonstrate the impact of changes to the basic assumptions used in the model. To accomplish this, the sensitivity analysis in the Planning Assessment must vary one or more of the following conditions ~~not already included in the studies~~ by a sufficient amount to stress the System within a range of credible conditions that demonstrate a measurable change in performance:

- Real and reactive forecasted Load.
- Expected transfers.
- Expected in service dates of new or modified Transmission Facilities.
- Reactive resource capability.
- Generation additions, retirements, or other dispatch scenarios.
- Controllable Loads and Demand Side Management.
- Duration or timing of planned Transmission outages.

2.1.5. When an entity's spare equipment strategy could result in the unavailability of major Transmission equipment that has a lead time of one year or more (such as a transformer), the impact of this possible unavailability on System performance shall be ~~assessed~~studied. The ~~Planning Assessment~~ studies shall ~~reflect~~be performed for the P0, P1, and P2 categories identified in

Table 1 ~~during~~with the conditions that the System is expected to experience ~~due to~~during the possible unavailability of the long lead time equipment.

2.2. The Long-Term Transmission Planning Horizon portion of the steady state analysis shall be assessed annually and be supported by the following annual current study, supplemented with qualified past studies as indicated in Requirement R2, ~~part~~Part 2.6:

2.2.1. A current study assessing expected System peak Load conditions for one of the years in the Long-Term Transmission Planning Horizon and the rationale for why that year was selected.

2.3. The short circuit analysis portion of the Planning Assessment shall be conducted annually addressing the Near-Term Transmission Planning Horizon and can be supported by current or past studies as qualified in Requirement R2, ~~part~~ Part 2.6. The analysis shall be used to determine whether circuit breakers have interrupting capability for Faults that they will be expected to interrupt using the System short circuit model with any planned generation and Transmission Facilities in service which could impact the study area.

2.4. The Near-Term Transmission Planning Horizon portion of the Stability analysis shall be assessed annually and be supported by current or past studies as qualified in Requirement R2, ~~part~~Part2.6. The following studies are required:

2.4.1. System peak Load for one of the five years. System peak Load levels shall include a Load model which represents the expected dynamic behavior of Loads that could impact the study area, ~~-~~considering the behavior of induction motor Loads. An aggregate System Load model which represents the overall dynamic behavior of the Load is acceptable.

2.4.2. System Off-Peak Load for one of the five years.

2.4.3. For each of the studies described in Requirement R2, ~~part~~Parts 2.4.1 and 2.4.2, sensitivity case(s) shall be utilized to demonstrate the impact of changes to the basic assumptions used in the model. To accomplish this, the sensitivity analysis in the Planning Assessment must vary one or more of the following conditions ~~not already included in the studies~~ by a sufficient amount to stress the System within a range of credible conditions that demonstrate a measurable change in performance:

- Load level, Load forecast, or dynamic Load model assumptions.
- Expected transfers.
- Expected in service dates of new or modified Transmission Facilities.
- Reactive resource capability.
- Generation additions, retirements, or other dispatch scenarios.

2.5. The Long-Term Transmission Planning Horizon portion of the Stability analysis shall be assessed to address the impact of proposed material generation additions or changes in that timeframe and be supported by current or past studies as qualified in Requirement R2, ~~part~~Part2.6~~.~~ and shall include documentation to support the technical rationale for determining material changes.

2.6. Past studies may be used to support the Planning Assessment if they meet the following requirements:

2.6.1. For steady state, short circuit, or Stability analysis: the study shall be five calendar years old or less, unless a technical rationale can be provided to demonstrate that the results of an older study are still valid.

2.6.2. For steady state, short circuit, or Stability analysis: the System represented in the study shall not include any material changes unless a technical rationale can be provided to demonstrate that System changes do not impact the performance results in the study area.

2.7. For planning events shown in Table 1, when the analysis indicates an inability of the System to meet the performance requirements in Table 1, the Planning Assessment shall include Corrective Action Plan(s) addressing how the performance requirements will be met. Revisions to the Corrective Action Plan(s) are allowed in subsequent Planning Assessments but the planned System shall continue to meet the performance requirements in Table 1. Corrective Action Plan(s) do not need to be developed solely to meet the performance requirements for a single sensitivity case analyzed in accordance with Requirements R2, ~~part~~Parts 2.1.4 and 2.4.3. The Corrective Action Plan(s) shall:

2.7.1. List System deficiencies and the associated actions needed to achieve required System performance. Such actions may include:

- Installation, modification, retirement, or removal of Transmission and generation Facilities and any associated equipment.
- Installation, modification, or removal of Protection Systems or Special Protection Systems
- Installation or modification of automatic generation tripping as a response to a single or multiple Contingency to mitigate Stability performance violations.
- Installation or modification of manual and automatic generation runback/tripping as a response to a single or multiple Contingency to mitigate steady state performance violations.
- Use of Operating Procedures specifying how long they will be needed as part of the Corrective Action Plan.
- Use of rate applications, DSM, new technologies, or other initiatives.

2.7.2. Include actions to resolve performance deficiencies identified in multiple sensitivity studies or provide a rationale for why actions were not necessary.

2.7.3. If situations arise that are beyond the control of the Transmission Planner or Planning Coordinator that prevent the implementation of a Corrective Action Plan in the required timeframe, then the Transmission Planner or Planning Coordinator is permitted to utilize Non-Consequential Load Loss and curtailment of Firm Transmission Service to correct the situation that would normally not be permitted in Table 1, provided that the Transmission Planner or Planning Coordinator documents that they are taking actions to resolve the situation. The Transmission Planner or Planning Coordinator shall document the situation causing the problem, alternatives evaluated, and the use of Non-Consequential Load Loss or curtailment of Firm Transmission Service.

2.7.4. Be reviewed in subsequent annual Planning Assessments for continued validity and implementation status of identified System Facilities and Operating Procedures.

2.8. For short circuit analysis, if the short circuit current interrupting duty on circuit breakers determined in Requirement R2, ~~part~~Part 2.3 exceeds their Equipment Rating, the Planning Assessment shall include a Corrective Action Plan to address the Equipment Rating violations. The Corrective Action Plan shall:

2.8.1. List System deficiencies and the associated actions needed to achieve required System performance.

2.8.2. Be reviewed in subsequent annual Planning Assessments for continued validity and implementation status.

R3. For the steady state portion of the Planning Assessment, each Transmission Planner and Planning Coordinator shall perform studies for the Near-Term and Long-Term Transmission Planning Horizons in Requirement R2, ~~part~~Parts 2.1, and 2.2. The studies shall be based on computer simulation models using data provided in Requirement R1. *[Violation Risk Factor: Medium] [Time Horizon: Long-term Planning]*

3.1. Studies shall be performed for planning events to determine whether the BES meets the performance requirements in Table 1 based on the Contingency list created in Requirement R3, ~~part~~Part 3.4.

3.2. Studies shall be performed to assess the impact of the extreme events which are identified by the list created in Requirement R3, ~~part~~Part 3.5.

3.3. Contingency analyses for Requirement R3, ~~part~~Parts 3.1 & 3.2 shall:

3.3.1. Simulate the removal of all elements that the Protection System and other automatic controls are expected to disconnect for each Contingency without operator intervention. The analyses shall include the impact of subsequent:

~~3.3.2.~~• Tripping of generators where simulations show generator bus voltages or high side of the ~~G~~generation ~~S~~step ~~U~~up (GSU) voltages are less than known or assumed minimum generator steady state or ride through voltage limitations. Include in the assessment any assumptions made.

~~3.3.3.~~• Tripping of Transmission elements ~~when~~where relay loadability limits are exceeded.

~~3.3.4.~~3.3.2. Simulate the expected automatic operation of existing and planned devices designed to provide steady state control of electrical system quantities when such devices impact the study area. These devices may include equipment such as phase-shifting transformers, load tap changing transformers, and switched capacitors and inductors.

3.4. Those planning events in Table 1, that are expected to produce more severe System impacts on its portion of the BES, shall be identified and a list of those Contingencies to be evaluated for System performance in Requirement R3, ~~part~~Part 3.1 created. The rationale for those Contingencies selected for evaluation shall be available as supporting information.

3.4.1. The Planning Coordinator and Transmission Planner shall coordinate with adjacent Planning Coordinators and Transmission Planners to ensure that Contingencies on adjacent Systems which may impact their Systems are included in the Contingency list.

3.5. Those extreme events in Table 1 that are expected to produce more severe System impacts shall be identified and a list created of those events to be evaluated ~~for System performance~~ in Requirement R3, ~~part~~Part 3.2~~ created~~. The rationale for those Contingencies selected for evaluation shall be available as supporting information. If the analysis concludes there is Cascading caused by the occurrence of extreme events, an evaluation of possible actions designed to reduce the likelihood or mitigate the consequences and adverse impacts of the event(s) shall be conducted.

R4. For the Stability portion of the Planning Assessment, as described in Requirement R2, ~~part~~Parts 2.4 and 2.5, each Transmission Planner and Planning Coordinator shall perform the Contingency analyses listed in Table 1. The studies shall be based on computer simulation models using data provided in Requirement R1. *[Violation Risk Factor: Medium] [Time Horizon: Long-term Planning]*

4.1. Studies shall be performed for planning events to determine whether the BES meets the performance requirements in Table 1 based on the Contingency list created in Requirement R4, ~~part~~Part 4.4.

4.1.1. For planning event P1: No generating unit shall pull out of synchronism. A generator being disconnected from the System by fault clearing action or by a Special Protection System is not considered pulling out of synchronism.

4.1.2. For planning events P2 through P7: When a generator pulls out of synchronism in the simulations, the resulting apparent impedance swings shall not result in the tripping of any Transmission system elements other than the generating unit and its directly connected Facilities.

4.1.3. For planning events P1 through P7: Power oscillations shall exhibit acceptable damping as established by the Planning Coordinator and Transmission Planner.

4.2. Studies shall be performed to assess the impact of the extreme events which are identified by the list created in Requirement R4, ~~part~~Part 4.5.

4.3. Contingency analyses for Requirement R4, ~~part~~Parts 4.1 and 4.2 shall :

4.3.1. Simulate the removal of all elements that the Protection System and other automatic controls are expected to disconnect for each Contingency without operator intervention. The analyses shall include the impact of subsequent:

- ~~while also considering the impact of s~~Successful high speed reclosing ~~or~~and unsuccessful high speed reclosing into a Fault.
- ~~4.3.2.~~ Tripping of generators where simulations show generator bus voltages or high side of the GSU voltages are less than known or assumed generator low voltage ride through capability. Include in the assessment any assumptions made.
- ~~4.3.3.~~ ~~Simulate~~Tripping of Transmission lines and transformers ~~the impact of~~where transient swings ~~on~~ cause Protection System operation ~~for Transmission lines and transformers~~ based on generic or actual relay models.

~~4.3.4.~~4.3.2. Simulate the expected automatic operation of existing and planned devices designed to provide dynamic control of electrical system quantities when such devices impact the study area. These devices may include equipment such as generation exciter control and power system stabilizers,

static var compensators, power flow controllers, and DC Transmission controllers.

4.4. Those planning events in Table 1 that are expected to produce more severe System impacts on its portion of the BES, shall be identified, and a list created of those Contingencies to be evaluated ~~for System performance~~ in Requirement R4, ~~part~~Part 4.1~~ created~~. The rationale for those Contingencies selected for evaluation shall be available as supporting information.

4.4.1. Each Planning Coordinator and Transmission Planner shall coordinate with adjacent Planning Coordinators and Transmission Planners to ensure that Contingencies on adjacent Systems which may impact their Systems are included in the Contingency list.

4.5. Those extreme events in Table 1 that are expected to produce more severe System impacts shall be identified and a list created of those events to be evaluated ~~for System performance~~ in Requirement R4, ~~part~~Part 4.2~~ created~~. The rationale for those Contingencies selected for evaluation shall be available as supporting information. If the analysis concludes there is Cascading caused by the occurrence of extreme events, an evaluation of possible actions designed to reduce the likelihood or mitigate the consequences of the event(s) shall be conducted.

R5. Each Transmission Planner and Planning Coordinator shall have criteria for acceptable System steady state voltage limits, post-Contingency voltage deviations, and the transient voltage response for its System. For transient voltage response, the criteria shall at a minimum, specify a low voltage level and a maximum length of time that transient voltages may remain below that level. *[Violation Risk Factor: Medium] [Time Horizon: Long-term Planning]*

R6. Each Transmission Planner and Planning Coordinator shall define and document, within their Planning Assessment, any criteria or methodology used in the analysis to identify System instability for conditions such as Cascading, voltage instability, or uncontrolled islanding. *[Violation Risk Factor: Low] [Time Horizon: Long-term Planning]*

R7. Each Planning Coordinator, in conjunction with each of its Transmission Planners, shall determine and identify each entity's individual and joint responsibilities for performing the required studies for the Planning Assessment. *[Violation Risk Factor: Low] [Time Horizon: Long-term Planning]*

R8. Each Planning Coordinator and Transmission Planner shall distribute its Planning Assessment results to adjacent Planning Coordinators, adjacent Transmission Planners, and ~~-~~any functional entity that has a reliability related need and that functional entity submits a written request for the information. *[Violation Risk Factor: Low] [Time Horizon: Long-term Planning]*

8.1. If a recipient of the Planning Assessment results provides documented comments on the results, the respective Planning Coordinator or Transmission Planner shall provide a documented response to that recipient within 90 calendar days of receipt of those comments.

Table 1 – Steady State & Stability Performance Planning Events

Steady State & Stability:

a. ~~BES Transmission voltage instability,~~The System shall remain stable. Cascading~~,~~ and uncontrolled islanding shall not occur.

b. Consequential Load Loss as well as generation loss is acceptable as a consequence of any ~~planning or extreme~~ event excluding P0.

c. Simulate the removal of all elements that Protection Systems and other controls are expected to automatically disconnect for each event.

d. Simulate Normal Clearing unless otherwise specified.

e. ~~For all planning events, p~~Planned System adjustments such as Transmission configuration changes and re-dispatch of generation are allowed if such adjustments are executable within the time duration applicable to the Facility Ratings.

Steady State Only:

f. Applicable Facility Ratings shall not be exceeded.

g. System steady state voltages and post-Contingency voltage deviations shall be within acceptable limits as established by the Planning Coordinator and the Transmission Planner.

h. Planning event P0 is applicable to steady state only.

i. The response of voltage sensitive Load including Load that is disconnected from the System by end-user equipment associated with an event shall not be used to meet steady state performance requirements.

~~j.~~Stability Only:~~The System shall remain stable.~~

~~k.~~j. Transient voltage response shall be within acceptable limits established by the Planning Coordinator and the Transmission Planner.

Category	Initial System Condition	Event [1]	Fault Type [2]	BES Level [3]	Interruption of Firm Transmission Service Allowed [4]	Non-Consequential Load Loss Allowed
P0 No Contingency	Normal System	None	N/A	EHV, HV	No[9]	No
P1 Single Contingency	Normal System	Loss of one of the following: 1. Generator 2. Transmission Circuit 3. Transformer [5] 4. Shunt Device [6]	3Ø	EHV, HV	No[9]	No[12]
		5. Single Pole of a DC line	SLG			
P2 Single Contingency	Normal System	1. Opening of a line section w/o a fault [7]	N/A	EHV, HV	No[9]	No[12]
		2. Bus Section Fault	SLG	EHV	No[9]	No
				HV	Yes	Yes
		3. Internal Breaker Fault [8]	SLG	EHV	No[9]	No

		(Non Bus-tie)		HV	Yes	Yes
		4. Internal Breaker Fault (Bus-tie) [8]	SLG	EHV, HV	Yes	Yes
Category	**Initial System Condition**	**Event** [1]	**Fault Type** [2]	**BES Level** [3]	**Interruption of Firm Transmission Service Allowed** [4]	**Non-Consequential Load Loss Allowed**
P3 Multiple Contingency	Loss of generator unit followed by System adjustments[9]	Loss of one of the following: 1. Generator 2. Transmission Circuit 3. Transformer [5] 4. Shunt Device [6]	3Ø	EHV, HV	No[9]	No[12]
		5. Single pole of a DC line	SLG			
P4 Multiple Contingency *(Fault plus stuck breaker[10])*	Normal System	Loss of multiple elements caused by a stuck breaker [10](non-Bus-tie) attempting to clear a Fault on one of the following: 1. Generator 2. Transmission Circuit 3. Transformer [5] 4. Shunt Device [6] 5. Bus Section	SLG	EHV	No[9]	No
				HV	Yes	Yes
		6. Loss of multiple elements caused by a stuck breaker[10] (Bus-tie) attempting to clear a Fault on the associated bus	SLG	EHV, HV	Yes	Yes
P5 Multiple Contingency *(Fault plus ~~Protection System~~ relay failure to operate)*	Normal System	~~Failure of a single Protection System that results in~~ Delayed Fault Clearing ~~on~~ due to the failure of a relay[13] protecting the Faulted element to operate as designed, for one of the following: 1. Generator 2. Transmission Circuit 3. Transformer [5] 4. Shunt Device [6] 5. Bus Section	SLG	EHV	No[9]	No
				HV	Yes	Yes
P6 Multiple Contingency *(Two*	Loss of one of the following followed by System adj.[9]: 1. Transmission Circuit	Loss of one of the following: 1. Transmission Circuit 2. Transformer [5] 3. Shunt Device [6]	3Ø	EHV, HV	Yes	Yes

overlapping singles)	2. Transformer [5] 3. Shunt Device[6] 4. Single pole of a DC line					
		4. Single pole of a DC line	SLG	EHV, HV	Yes	Yes
P7 Multiple Contingency *(Common Structure)*	Normal System	The loss of: 1. Any two adjacent (vertically or horizontally) circuits on common structure [11] 2. Loss of a bipolar DC line	SLG	EHV, HV	Yes	Yes

Table 1 – Steady State & Stability Performance Extreme Events	
Steady State & Stability For all extreme events evaluated: a. Simulate the removal of all elements that Protection Systems and automatic controls are expected to disconnect for each Contingency. b. Simulate Normal Clearing unless otherwise specified.	
Steady State 1. Loss of a single generator, Transmission Circuit, single pole of a DC Line, shunt device, or transformer forced out of service followed by another single generator, Transmission Circuit, single pole of a different DC Line, shunt device, or transformer forced out of service prior to System adjustments. 2. Local area events affecting the Transmission System such as: a. Loss of a tower line with three or more circuits.[11] b. Loss of all Transmission lines on a common Right-of-Way[11]. c. Loss of a switching station or substation (loss of one voltage level plus transformers). d. Loss of all generating units at a generating station. e. Loss of a large Load or major Load center. 3. Wide area events affecting the Transmission System based on System topology such as: a. Loss of two generating stations resulting from conditions such as:	**Stability** 1. With an initial condition of a single generator, Transmission circuit, single pole of a DC line, shunt device, or transformer forced out of service, apply a 3Ø fault on another single generator, Transmission circuit, single pole of a different DC line, shunt device, or transformer prior to System adjustments. 2. Local or wide area events affecting the Transmission System such as: a. 3Ø fault on generator with stuck breaker[10] or a Protection System failure resulting in Delayed Fault Clearing. b. 3Ø fault on Transmission circuit with stuck breaker[10] or a Protection System failure resulting in Delayed Fault Clearing. c. 3Ø fault on transformer with stuck breaker[10] or a Protection System failure resulting in Delayed Fault Clearing. d. 3Ø fault on bus section with stuck breaker[10] or a Protection System failure resulting in Delayed Fault Clearing. e. 3Ø internal breaker fault.

i. Loss of a large gas pipeline into a region or multiple regions that have significant gas-fired generation. ii. Loss of the use of a large body of water as the cooling source for generation. iii. Wildfires. iv. Severe weather, e.g., hurricanes, tornadoes, etc. v. A successful cyber attack. vi. Shutdown of a nuclear power plant(s) and related facilities for a day or more for common causes such as problems with similarly designed plants. b. Other events based upon operating experience that may result in wide area disturbances.	f. Other events based upon operating experience, such as consideration of initiating events that experience suggests may result in wide area disturbances

Table 1 – Steady State & Stability Performance Footnotes (Planning Events and Extreme Events)
1. If the event analyzed involves BES elements at multiple System voltage levels, the lowest System voltage level of the element(s) removed for the analyzed event determines the stated performance criteria regarding allowances for interruptions of Firm Transmission Service and Non-Consequential Load Loss.
2. Unless specified otherwise, simulate Normal Clearing of faults. Single line to ground (SLG) or three-phase (3Ø) are the fault types that must be evaluated in Stability simulations for the event described. A 3Ø or a double line to ground fault study indicating the criteria are being met is sufficient evidence that a SLG condition would also meet the criteria.
3. Bulk Electric System (BES) level references include extra-high voltage (EHV) Facilities defined as greater than 300kV and high voltage (HV) Facilities defined as the 300kV and lower voltage Systems. The designation of EHV and HV is used to distinguish between stated performance criteria allowances for interruption of Firm Transmission Service and Non-Consequential Load Loss.
4. Curtailment of Conditional Firm Transmission Service is allowed when the conditions and/or events being studied formed the basis for the Conditional Firm Transmission Service.
5. For non-~~G~~generator ~~S~~step ~~U~~up transformer outage events, the reference voltage, as used in footnote 1, applies to the low-side winding (excluding tertiary windings). For generator and Generator Step Up transformer outage events, the reference voltage applies to the BES connected voltage (high-side of the Generator Step Up transformer). Requirements which are applicable to transformers also apply to variable frequency transformers and phase shifting transformers.
6. Requirements which are applicable to shunt devices also apply to FACTS devices that are connected to ground.
7. Opening ~~-~~one end of a line section without a fault on a normally networked Transmission circuit such that the line is possibly serving Load radial from a single source point.
8. An internal breaker fault means a breaker failing internally, thus creating a System fault which must be cleared by protection on both sides of the breaker.
9. Curtailment of Firm Transmission Service, when coupled with the appropriate re-dispatch of resources obligated to re-dispatch, is allowed both as a System adjustment (as identified in the column entitled 'Initial System Conditions') and a corrective action, where it can be demonstrated that Facilities remain within applicable Facility Ratings and those adjustments do not result in the shedding of any firm Demand. Where limited options for re-dispatch exist, sensitivities associated with the availability of those resources should be considered. Where Facilities external to the Transmission Planner's planning region are relied upon, Facility Ratings in those regions should also be respected.
10. A stuck breaker means that for a gang-operated breaker, all three phases of the breaker have remained closed. For an independent pole operated (IPO) or an independent pole tripping (IPT) breaker, only one pole is assumed to remain closed. A stuck breaker results in Delayed Fault Clearing.
11. Excludes circuits that share a common structure (Planning event P7, Extreme event steady state 2a) or common Right-of-Way (Extreme event, steady state 2b) for 1 mile or less.
12. Note: Non-Consequential Load Loss is being decided in Project 2010-11. When that project is finalized, the resolution will be copied here.
~~12.~~13. Applies to the following relay functions or types: pilot (#85), distance (#21), differential (#87), current (#50, 51, and 67), voltage (#27 & 59), directional (#32, & 67), and tripping (#86, & 94).

C. Measures

M1. Each Transmission Planner and Planning Coordinator shall provide evidence, in electronic or hard copy format, that it is maintaining System models within their respective area, using the latest data consistent with MOD-010 and MOD-012, including items represented in the Corrective Action Plan, representing projected System conditions, and that the models represent the required information in accordance with Requirement R1.

M2. Each Transmission Planner and Planning Coordinator shall provide evidence, such as electronic or hard copies of its annual Planning Assessment, that it has prepared an annual Planning Assessment of its portion of the BES in accordance with Requirement R2.

M3. Each Transmission Planner and Planning Coordinator shall provide evidence, such as electronic or hard copies of the studies utilized in preparing the Planning Assessment, in accordance with Requirement R3.

M4. Each Transmission Planner and Planning Coordinator shall provide evidence, such as electronic or hard copies of the studies utilized in preparing the Planning Assessment in accordance with Requirement R4.

M5. Each Transmission Planner and Planning Coordinator shall provide evidence such as electronic or hard copies of the documentation specifying the criteria for acceptable System steady state voltage limits, post-Contingency voltage deviations, and the transient voltage response for its System in accordance with Requirement R5.

M6. Each Transmission Planner and Planning Coordinator shall provide evidence, such as electronic or hard copies of documentation specifying any criteria or methodology used in the analysis to identify System instability for conditions such as Cascading, voltage instability, or uncontrolled islanding that was utilized in preparing the Planning Assessment in accordance with Requirement R6.

M7. Each Planning Coordinator, in conjunction with each of its Transmission Planners, shall provide dated documentation on roles and responsibilities, such as meeting minutes, agreements, and e-mail correspondence that identifies that agreement has been reached on individual and joint responsibilities for performing the required studies and Assessments in accordance with Requirement R7.

M8. Each Planning Coordinator and Transmission Planner shall provide evidence, such as email notices, documentation of updated web pages, postal receipts showing recipient~~,~~ and date~~,~~; ~~and contents,~~ or a demonstration of a public posting, that it has distributed its Planning Assessment results to adjacent Planning Coordinators, adjacent Transmission Planners, and any functional entity who has indicated a reliability need and that functional entity has provided a documented response to comments received on Planning Assessment results within 90 calendar days of receipt of those comments in accordance with Requirement R8.

D. Compliance

1. Compliance Monitoring Process

1.1 Compliance Enforcement Authority

Regional Entity

1.2 Compliance Monitoring Period and Reset Timeframe

Not applicable.

1.3 Compliance Monitoring and Enforcement Processes:

Compliance Audits

Self-Certifications

Spot Checking

Compliance Violation Investigations

Self-Reporting

Complaints

1.4 Data Retention

The Transmission Planner and Planning Coordinator shall each retain data or evidence to show compliance as identified unless directed by its Compliance Enforcement Authority to retain specific evidence for a longer period of time as part of an investigation:

- The models utilized in the current Planning Assessment and one previous Planning Assessment in accordance with Requirement R1 and Measure M1.
- The Planning Assessments performed since the last compliance audit in accordance with Requirement R2 and Measure M2.
- The studies performed in support of its Planning Assessments since the last compliance audit in accordance with Requirement R3 and Measure M3.
- The studies performed in support of its Planning Assessments since the last compliance audit in accordance with Requirement R4 and Measure M4.
- The documentation specifying the criteria since the last compliance audit in accordance with Requirement R5 and Measure M5.
- The documentation specifying any criteria or methodology utilized in support of its Planning Assessments since the last compliance audit in accordance with Requirement R6 and Measure M6.
- The current, in force documentation for the agreement(s) on roles and responsibilities, as well as all such documentation for the agreements in force since the last compliance audit, in accordance with Requirement R7 and Measure M7.

The Planning Coordinator shall retain data or evidence to show compliance as identified unless directed by its Compliance Enforcement Authority to retain specific evidence for a longer period of time as part of an investigation:

- Three calendar years of the notifications employed in accordance with Requirement R8 and Measure M8.

If a Transmission Planner or Planning Coordinator is found non-compliant, it shall keep information related to the non-compliance until found compliant or the time periods specified above, whichever is longer.

1.5 Additional Compliance Information

None.

2. Violation Severity Levels

	Lower VSL	Moderate VSL	High VSL	Severe VSL
R1	The responsible entity's System model failed to represent one of the Requirement R1, ~~part~~Parts 1.1.1 through 1.1.6.	The responsible entity's System model failed to represent two of the Requirement R1, ~~part~~Parts 1.1.1 through 1.1.6. OR The responsible entity's System model did not use the latest data consistent with the data provided in accordance with the MOD-010 and MOD-012 standards and other sources, including items represented in the Corrective Action Plan.	The responsible entity's System model failed to represent three of the Requirement R1, ~~part~~Parts 1.1.1 through 1.1.6.	The responsible entity's System model failed to represent four or more of the Requirement R1, ~~part~~Parts 1.1.1 through 1.1.6. OR The responsible entity's System model did not represent projected System conditions as described in Requirement R1.
R2	The responsible entity failed to comply with Requirement R2, ~~part~~Part 2.6.	The responsible entity failed to comply with Requirement R2, ~~part~~Part 2.3 or ~~part~~Part 2.8.	The responsible entity failed to comply with one of the following ~~part~~Parts of Requirement R2: ~~part~~Part 2.1, ~~part~~Part 2.2, ~~part~~Part 2.4, ~~part~~Part 2.5, or ~~part~~Part 2.7.	The responsible entity failed to comply with two or more of the following ~~part~~Parts of Requirement R2: ~~part~~Part 2.1, ~~part~~Part 2.2, ~~part~~Part 2.4, or ~~part~~Part 2.7.
R3	The responsible entity did not identify planning events as described in Requirement R3, ~~part~~Part 3.4 or extreme events as described in Requirement R3, ~~part~~Part 3.5.	The responsible entity did not perform studies as specified in Requirement R3, ~~part~~Part 3.1 to determine that the BES meets the performance requirements for one of the categories (P2 through P7) in Table 1. OR The responsible entity did not perform studies as specified in Requirement R3, ~~part~~Part 3.2 to assess the impact of extreme events. OR The responsible entity did not base its	The responsible entity did not perform studies as specified in Requirement R3, ~~part~~Part 3.1 to determine that the BES meets the performance requirements for two of the categories (P2 through P7) in Table 1. OR The responsible entity did not perform Contingency analysis as described in Requirement R3, ~~part~~Part 3.3.	The responsible entity did not perform studies as specified in Requirement R3, ~~part~~Part 3.1 to determine that the BES meets the performance requirements for three or more of the categories (P2 through P7) in Table 1. OR The responsible entity did not perform studies to determine that the BES meets the performance requirements for the P0 or P1 categories in Table 1.

	Lower VSL	Moderate VSL	High VSL	Severe VSL
		studies on computer simulation models using data provided in Requirement R1.		
R4	The responsible entity did not identify planning events as described in Requirement R4, ~~part~~Part 4.4 or extreme events as described in Requirement R4, ~~part~~Part 4.5.	The responsible entity did not perform studies as specified in Requirement R4, ~~part~~Part 4.1 to determine that the BES meets the performance requirements for one of the categories (P1 through P7) in Table 1. OR The responsible entity did not perform studies as specified in Requirement R4, ~~part~~Part 4.2 to assess the impact of extreme events. OR The responsible entity did not base its studies on computer simulation models using data provided in Requirement R1.	The responsible entity did not perform studies as specified in Requirement R4, ~~part~~Part 4.1 to determine that the BES meets the performance requirements for two of the categories (P1 through P7) in Table 1. OR The responsible entity did not perform Contingency analysis as described in Requirement R4, ~~part~~Part 4.3.	The responsible entity did not perform studies as specified in Requirement R4, ~~part~~Part 4.1 to determine that the BES meets the performance requirements for three or more of the categories (P1 through P7) in Table 1.
R5	N/A	N/A	N/A	The responsible entity does not have criteria for acceptable System steady state voltage limits, post-Contingency voltage deviations, or the transient voltage response for its System.
R6	N/A	N/A	N/A	The responsible entity failed to define and document the criteria or methodology for System instability used within its analysis as described in Requirement R6.
R7	N/A	N/A	N/A	The Planning Coordinator, in conjunction with each of its

	Lower VSL	Moderate VSL	High VSL	Severe VSL
				Transmission Planners, failed to determine and identify individual or joint responsibilities for performing required studies.
R8	The responsible entity failed to distribute the results of its Planning Assessment to one of its adjacent Transmission Planners, ~~or~~ one adjacent Planning Coordinator~~s~~, ~~and~~ or to one functional entity that has a reliability related need and that ~~functional entity~~ has submitted a written request for the information, respectively in accordance with Requirement R8.	N/A	The responsible entity failed to distribute the results of its Planning Assessment to more than one of its adjacent Transmission Planners, ~~or~~ adjacent Planning Coordinators, ~~and~~ or ~~to any~~ functional entit~~y~~ies that ~~has~~have a reliability related need and that ~~functional entity has~~have submitted a written request for the information, respectively in accordance with Requirement R8.	The responsible entity failed to provide a documented response to a recipient of the Planning Assessment results who provided documented comments on the results within 90 calendar days of receipt of those comments in accordance with Requirement R8.

E. Regional Variances

None.

Version History

Version	Date	Action	Change Tracking
1	TBD	Revision of TPL-001-0 as per Project 2006-02; includes merging requirements of TPL-001-0, TPL-002-0, TPL-003-0, and TPL-004-0 into one, single, comprehensive, coordinated standard: TPL-001-1	Not employed due to scope of revision

NERC
NORTH AMERICAN ELECTRIC RELIABILITY CORPORATION

Standards Announcement

Informal Comment Period Open
August 3–September 2, 2010

Now available at: http://www.nerc.com/filez/standards/Assess-Transmission-Future-Needs.html

Project 2006-02: Assess Transmission Future Needs

The Assess Transmission Future Needs Standard Drafting Team is seeking comments on the following documents **until 8 p.m. EDT on September 2, 2010**:

- Draft five of TPL-001-1 — Transmission System Planning Performance Requirements
- Revised implementation plan

TPL-001-1 is designed to be a single, comprehensive, and coordinated standard that merges the requirements of four existing standards: TPL-001-0, TPL-002-0, TPL-003-0, and TPL-004-0. The proposed standard includes several new definitions.

This is the fifth comment period for the proposed standard and includes revisions based on industry comments submitted during the initial ballot for the standard and its implementation plan conducted from February 9–March 1, 2010. The team's response to initial ballot comments has been posted for stakeholder review on the drafting team web site.

Instructions

Please use this electronic form to submit comments. If you experience any difficulties in using the electronic form, please contact Courtney.camburn@nerc.net. An off-line, unofficial copy of the comment form is posted on the project page: http://www.nerc.com/filez/standards/Assess-Transmission-Future-Needs.html.

Next Steps

The drafting team will draft and post responses to comments received during this period. This is an informal comment period – for each question asked on the comment form, the drafting team will provide a summary response to indicate whether stakeholders support the proposed revision and to identify any additional changes made based on stakeholder comments. The team will not provide an individual response to each comment submitted. After reviewing the comments, the drafting team will determine whether to post the standard for an additional comment period or seek approval from the Standards Committee to proceed to balloting.

Project Background

The purpose of the proposed standard is to establish transmission system planning performance requirements within the planning horizon to develop a bulk electric system that will operate reliably over a broad spectrum of system conditions and following a wide range of probable contingencies. TPL-001-1 — Transmission System Planning Performance Requirements is an update and consolidation of the following standards:

- TPL-001-0 — System Performance under Normal Conditions
- TPL-002-0 — System Performance Following Loss of a Single BES Element
- TPL-003-0 — System Performance Following Loss of Two or More BES Elements
- TPL-004-0 — System Performance Following Extreme BES Events
- TPL-005-0 — Regional and Interregional Self-Assessment Reliability Reports
- TPL-006-0 — Data from the Regional Reliability Organization Needed to Assess Reliability

More information is available on the project page: http://www.nerc.com/filez/standards/Assess-Transmission-Future-Needs.html

Applicability of Standards in Project

Planning Coordinator
Transmission Planner

Proposed Additions to Glossary of Terms

Bus-tie Breaker
Consequential Load Loss
Long-Term Transmission Planning Horizon
Near-Term Transmission Planning Horizon
Non-Consequential Load Loss
Planning Assessment
Year One

Standards Development Process

The Reliability Standards Development Procedure contains all the procedures governing the standards development process. The success of the NERC standards development process depends on stakeholder participation. We extend our thanks to all those who participate.

For more information or assistance,
please contact Courtney Camburn at Courtney.camburn@nerc.net

Individual or group. (69 Responses)
Name (51 Responses)
Organization (51 Responses)
Group Name (18 Responses)
Lead Contact (18 Responses)
Question 1 (62 Responses)
Question 1 Comments (69 Responses)
Question 2 (63 Responses)
Question 2 Comments (69 Responses)
Question 3 (65 Responses)
Question 3 Comments (69 Responses)
Question 3.1 (64 Responses)
Question 3.1 Comments (69 Responses)
Question 3.2 (64 Responses)
Question 3.2 Comments (69 Responses)
Question 3.3 (65 Responses)
Question 3.3 Comments (69 Responses)
Question 3.4 (58 Responses)
Question 3.4 Comments (69 Responses)
Question 4 (64 Responses)
Question 4 Comments (69 Responses)
Question 5 (0 Responses)
Question 5 Comments (69 Responses)
Question 6 (51 Responses)
Question 6 Comments (69 Responses)
Question 7 (53 Responses)
Question 7 Comments (69 Responses)

-
Individual
Ray Mason
ReliabilityFirst
No
TPL-001-2 Draft 5 is much better than Draft 4. There is still one significant concern, that I do not believe the drafting team adequately addressed. It is unclear as to what “Planning Assessment results” and “results of its Planning Assessment” entail. The Draft 5 response that “Planning Assessment” is a defined term does not fully address this concern. “Planning Assessment results” or “results of its Planning Assessment” is not necessarily the same thing as “Planning Assessment”. As written, “Planning Assessment results” or “results of its Planning Assessment” could be anything from a single sentence, to a few brief high level paragraphs, to a detailed and technically complete Planning Assessment. The Standard needs to more clearly state what is required in the report to other entities. Based on the drafting team response in Draft 4, it seems that replacement of “Planning Assessment results” or “results of its

Planning Assessment" with the term "Planning Assessment" or "its Planning Assessment" would be appropriate. Violation Severity Levels: R8 The failure to provide documented responses to documented comments to "Planning Assessment results" is deemed to be a higher severity level than failing to distribute "results of its Planning Assessment". Failure to distribute denies functional entities an opportunity to comment, and could prevent coordinated planning, and thus should be deemed to be more severe than failing to provide documented responses to documented comments.
Individual
Greg Rowland
Duke Energy
Yes
Yes
Yes
Yes
Yes
Yes
Yes
Yes
We support the changes.
Yes
Yes
Individual
Catherine Mathews
NorthWestern Energy (NWMT)
Yes
Yes
Yes
Yes
Yes
Yes
Yes

Yes
Table 1, P5 currently requires the study of “[d]elayed Fault Clearing due to the failure of a relay13 protecting the Faulted element to operate as designed”. As written, this requirement does not recognize the use of redundant relays for primary protection. In some cases side by side relays are used to provide primary fault tripping if one relay fails to operate. Per the requirement as stated, the redundant relay would provide no value in meeting this requirement. Please revise to acknowledge backup relays: “Single failure of a protection relay13 protecting the Faulted element to operate as designed, resulting in backup relay actions or Delayed Fault Clearing, for one of the following”. In Table 1, P2 and P3, the last column “Non-Consequential Load Loss Allowed” where the requirement "No12" appears, and in footnote 12, the standard as proposed does not allow for any Non-Consequential Load Loss. When the Non-Consequential Load Loss (footnote b) issue is clarified in Project 2010-11 this requirement may be changed. Therefore, if this proposed Standard is enforced before Project 2010-11 is completed, entities will be required to meet this No Non-Consequential Load Loss requirement without the exception allowed in the existing TPL-002-0, footnote “b”. This will require immediate redesigns to meet this particular requirement. The unintended consequence could be that operators of local systems that are currently networked may opt to begin operation as radial systems, and future designs for local systems may be radial, at any voltage level. We suggest that the proposed footnote 12 include a provision to default to the existing footnote “b” in TPL-002-0 until Project 2010-11 is decided. Please revise footnote 12 to read, “Note: Non-Consequential Load Loss is being decided in Project 2010-11. When that project is finalized, the resolution will be copied here. In the interim, planned or controlled interruption of electric supply to radial customers or some local Network customers, connected to or supplied by the Faulted element or by the affected area, may occur in certain areas without impacting the overall reliability of the interconnected transmission systems. To prepare for the next contingency, system adjustments are permitted, including curtailments of contracted Firm (non-recallable reserved) electric power Transfers.”
No
Measure M6 is too vague. It is unclear how to identify the conditions of Cascading, voltage instability, or uncontrolled islanding. The Glossary of Terms defines Cascading as “The uncontrolled successive loss of system elements triggered by an incident at any location. Cascading results in widespread electric service interruption that cannot be restrained from sequentially spreading beyond an area predetermined by studies.” Does the loss of system elements have to extend beyond the Control Area to be considered “Cascading”? Is there a Megawatt threshold that must be satisfied? Is there a time duration involved? Also, “cascading outages” needs to be defined. In addition, “voltage instability” and “uncontrolled islanding” should both be defined.
Yes
Individual
Phuong Tran
Lakeland Electric
Yes
Shouldn’t the “Implementation Plan for TPL-001-1” document be for TPL-001-2? Also, “TPL-001-1” is referenced throughout the document.
No
“the latest” is not needed from the second sentence of R1, since the sentence already ended with “..shall represent projected System conditions”. R1 Part 1.1.2 Suggest adding this clarification at the end “… six months during the period under study”. This language addition helps clarify the point that if an outage occurs during the summer and the entity’s system peak occurs in the winter, then the system peak Load study case (model) does not have to include this particular outage.
No
Please consider removing R.2.6.2
No

A “measureable change in performance” can be interpreted as not meeting one of the performance requirements as specified in Table 1 in order for the condition to be selected as a sensitivity. This will cause utilities to perform sensitivity analysis for all system conditions listed in R2.1.4 to determine which one fails to meet one of the performance requirements in Table 1, as one may not be able to tell performance impact until after the studies are performed. Suggested change: “…one of the following conditions by a sufficient amount…system conditions that may demonstrate a measurable change in system response.”
Yes
No
Please consider removing R2.6.2. The “any material change” language can cause utilities perform studies due to material changes outside of and remote to its system.
Yes
The performance requirements of Table 1 do not allow the loss of non-consequential load for single and multiple contingency events. The disallowance of load loss does not provide any real benefit to the reliability of the BES and is an unnecessary overreach into local quality of service issues that are best addressed by State, Provincial or Municipal authorities. There may be circumstances such as high local transmission costs or local opposition to transmission construction where prohibition of non-consequential load loss represents a poor cost/benefit or quality of life tradeoff. Having a provision at the regional level that a PA or TP can have a certain amount of non-consequential load loss designed or planned in to its system that would be reasonable if it is acceptable to the RE and does not have an adverse impact on the remaining BES. In lieu of such a RE provision, providing a quantitative cap in non-consequential load loss such as 100 MW may be rationale compromise in the goal of limiting load loss for the more probable outage events. Our preference would be to retain the capability of limited non-consequential load loss.It is our understanding that footnote 9 is under consideration as part of Project 2010-11 and should be noted as such for clarification.
No
please consider remove “the latest” from M1
No
The requirement to distribute the Planning Assessment should be more flexible and allow for making the Planning Assessment available, such that those entities that desire the information can have it readily available. R8 should be modified as follows: Each Planning Coordinator and Transmission Planner shall make available its Planning Assessment results to adjacent Planning Coordinators and Transmission Planners and to any functional entity that indicates a reliability related need for the Planning Assessment results.
Individual
Tom Duane
PNM
Yes
We commend the SDT for its work to continue the improvement on the proposed TPL-001-1. We were not able to find a place to include comment on Requirement R4; therefore, we have included our comments here: Section R4.3.1, bullet point 3 requires the stability analyses to include the impact of subsequent “[t]ripping of Transmission lines and transformers where transient swings cause Protection System operation based on generic or actual relay models”. As written, this bullet could be interpreted as requiring the inclusion of these relay models in stability data bases. We do not have generic or actual relay models in our dynamics data bases for tripping line faults on lines and transformers represented. We represent actual relay response and tripping times of relays, communications, and breakers to faults in tripping transmission lines and transformers. Requiring the inclusion of generic or actual relay models for all relays that can trip lines and transformers would add a large burden to the development and maintenance of accurate dynamics model files that would add little or no benefit. Please change this bullet to read: “Tripping of Transmission lines and transformers where transient swings cause Protection

System operation based on known Protection System response”.
Yes
Yes
Yes
Yes
Yes
Yes
Table 1, P5 currently requires the study of “[d]elayed Fault Clearing due to the failure of a relay13 protecting the Faulted element to operate as designed”. As written, this requirement does not recognize the use of redundant relays for primary protection. In some cases side by side relays are used to provide primary fault tripping if one relay fails to operate. Per the requirement as stated, the redundant relay would provide no value in meeting this requirement. Please revise to acknowledge backup relays: “Single failure of a protection relay13 protecting the Faulted element to operate as designed, resulting in backup relay actions or Delayed Fault Clearing, for one of the following”. In Table 1, P2 and P3, the last column “Non-Consequential Load Loss Allowed” where the requirement "No12" appears, and in footnote 12, the standard as proposed does not allow for any Non-Consequential Load Loss. When the Non-Consequential Load Loss (footnote b) issue is clarified in Project 2010-11 this requirement may be changed. Therefore, if this proposed Standard is enforced before Project 2010-11 is completed, entities will be required to meet this No Non-Consequential Load Loss requirement without the exception allowed in the existing TPL-002-0, footnote “b”. This will require immediate redesigns to meet this particular requirement. The unintended consequence could be that operators of local systems that are currently networked may opt to begin operation as radial systems, and future designs for local systems may be radial, at any voltage level. We suggest that the proposed footnote 12 include a provision to default to the existing footnote “b” in TPL-002-0 until Project 2010-11 is decided. Please revise footnote 12 to read, “Note: Non-Consequential Load Loss is being decided in Project 2010-11. When that project is finalized, the resolution will be copied here. In the interim, planned or controlled interruption of electric supply to radial customers or some local Network customers, connected to or supplied by the Faulted element or by the affected area, may occur in certain areas without impacting the overall reliability of the interconnected transmission systems. To prepare for the next contingency, system adjustments are permitted, including curtailments of contracted Firm (non-recallable reserved) electric power Transfers.” Timing of this project and project 2010-11 is critical. It would be very difficult to vote to approve the proposed TPL-001-2 prior to knowing the outcome of Project 2010-11 (footnote b issue).
Group
NERC Staff
Mallory Huggins
Yes
NERC staff supports the change to allow Corrective Action Plans to include tripping of Non-Consequential Load and curtailment of Firm Transmission Service for 7 years. This seems long, but staff understands the stakeholder concern that it could take that long to plan, site, and construct facilities required for compliance with the standard.
Yes
NERC staff supports the revisions to the definition of Year One. However, we believe an associated

change should be made where this term is used in part 2.1.1 of Requirement 2 which requires modeling of “System peak Load for either Year One or year two, and for year five.” It seems the new definition of Year One would negate the need to refer to year two. NERC staff recommends that part 2.1.1 be changed to “System peak Load for Year One and for year five.”
No
NERC staff suggests that the added sentence in R1 be deleted and “Normal System” in Table 1 be replaced with “No unplanned Element outages.” We have a problem with R1 establishing “normal system condition.” “Normal” is not defined, but the system condition that most people would define as “normal” is the System operating within its limits. There are no checks required on the projected system conditions to guarantee “operation within limits.” Staff realizes that if this were the case, the categories tested would all pass their respective tests. (In other words, the category tests may define operating limits that in turn define “normal” from a planning perspective.) Thus, the added sentence in R1 should be deleted. In Table 1, the use of the term “Normal System” in the column “Initial System Condition” really means “No unplanned Element outages.” All Elements that do not have a planned outage are assumed in-service (for transmission Elements) or available for dispatch (for generators). Contrast the term “Normal System” with categories P3 and P6, which have the loss of an Element (which is unplanned) followed by the loss of a second Element (also unplanned). “Normal System” should be replaced with “No unplanned Element outages.”
Yes
NERC staff supports the use of qualified past studies for the Near Term horizon.
Yes
NERC staff supports removing the phrase “not already included in the studies” from the parts 2.1.4 and 2.4.3 of Requirement R2. We believe that the requirement is more clear and less subject to interpretation without this phrase.
No
NERC staff understands why the SDT has inserted the word “expected” before “dynamic behavior of Loads,” but we have concerns with this addition. We understand that a PC or TP that models the best current industry understanding of load behavior should not need to worry about compliance if that model does not match actual load response for all possible system conditions. However, we are concerned that this change to part 2.4.1 of Requirement R2 may be too accommodating. If a PC or TP has unrealistic expectations about load behavior, would this permit the use of unrealistic models? While we have struggled to develop an alternative proposal, we hope that the SDT will identify a way to address this concern.
Yes
NERC staff supports inserting the word “material” in the reference to assessing the impact of proposed generation. We have some concern that this change leaves this part of the requirement open to interpretation, but we also understand the need to permit some degree of engineering judgment to be applied. It would not be appropriate to require that every potential generation addition be included in the assessment where some proposed additions may by inspection be deemed to be immaterial due to size and/or interconnection location.
Yes
NERC staff supports the changes to the header notes in Table 1.
NERC staff is concerned with P5 and footnote 9 and thus cannot support these changes in their entirety. First, a revision to the Draft 4 definition of P5 should be used in lieu of the current Draft 5 version: “Loss of multiple elements caused by the Fault clearing consistent with failure of a single Protection System while clearing a fault on one of the following: . . .” After reviewing the P5 contingency throughout various drafts of this standard, along with existing Table 1 for TPL-001 through TPL-004, NERC staff’s primary concern is that this most recent version is going in the wrong direction by becoming too limiting regarding which Protection System component failures are covered. Draft 5 is an improvement because it removes the reference to loss of multiple elements in Draft 4 (which defined P5 as “Loss of multiple elements caused by the failure of a single Protection System while clearing a fault on one of the following: . . .”). Draft 5 takes a step backward, however, by referring to Delayed Fault Clearing. The advantage of not referring to Delayed Fault Clearing is that for cases where redundant protection systems are provided,

the fault clearing may not be delayed even when a single Protection System failure occurs. Ideally, NERC staff believes that P5 should refer to “failure of any component of a Protection System,” but NERC staff recognizes that we cannot get there until the term Protection System is redefined and Project 2009-07—Reliability of Protection Systems is underway. Until that change is possible, NERC staff encourages the SDT to use the revised version of P5 proposed above. A second concern is with footnote 9, which is used numerous times in Table 1. System adjustments may be used in two different settings: the first is to address the aftermath of a particular Contingency; the second is to prepare for the next Contingency. Staff suggests that the current footnote 9 have this language added: “Post-Contingency Ccurtailment of Firm Transmission Service to address the simulated contingency, when coupled with ….” Footnote 9 is used in the column labeled “Interruption of Firm Transmission Service Allowed” whenever a “No” is provided. The footnote 9 in this column has to do with System adjustments that address the aftermath of the Contingency that is being simulated. Therefore, no footnote 9 appears appropriate for category P0 (No Contingency). The reference in footnote 9 to no load loss and staying within applicable Facility rating, including those on a neighboring system, is sufficient for addressing the aftermath of the Contingency being simulated. To address next Contingency, an additional footnote is needed in the “Initial System Condition” column for category P3 and category P6. The following is suggested: “System adjustments to prepare for the next Contingency must be completed within 30 minutes.” Footnote 9 is used in the column labeled “Initial System Condition” for category P3 and category P6, and these two categories define the loss of an Element “followed by System adjustments” and then followed by the loss of a second Element. It is unclear whether the intent in footnote 9 in these two cases is meant to address the same issue referenced above (i.e. the aftermath of the Contingency being simulated) or whether it is intended to address the next Contingency. Thus, both situations need to be addressed using the suggestions indicated above.
Yes
NERC staff supports the changes to the Measures.
Yes
NERC staff supports the changes to the VSL for Requirement R8.
Individual
Doug Hohlbaugh
FirstEnergy
Yes
We appreciate the effort of the standard drafting team and the changes reflected in the current draft of the TPL-001-1 standard. The changes are improvements that should move the standard towards greater industry consensus. The extended Implementation Plan aligns with suggestions in FE’s prior ballot comments. We support the Implementation Plan change made by the team.
Yes
The change in the Year One definition provides greater flexibility for the industry and also addresses a prior FE comment during the 1st ballot. We appreciate the team’s careful consideration of the industry feedback and support the change.
Yes
Yes
Yes
Yes
Yes
Yes

Table 1, P5 currently requires the study of “[d]elayed Fault Clearing due to the failure of a relay (footnote 13) protecting the Faulted element to operate as designed”. To the extent fully redundant relaying exists with no expected delay in Fault Clearing its understood that the P5 event would not be a concern for the redundant system design. The drafting team has taken appropriate steps within the TPL standard to focus on relaying failures to provide clarity in what is required for P5 planning event.
Yes
Yes
Individual
John Collins
Platte River Power Authority
Yes
We commend the SDT for its work to continue the improvement on the proposed TPL-001-1. We were not able to find a place to include comment on Requirement R4; therefore, we have included our comments here: Section R4.3.1, bullet point 3 requires the stability analyses to include the impact of subsequent “[t]ripping of Transmission lines and transformers where transient swings cause Protection System operation based on generic or actual relay models”. As written, this bullet could be interpreted as requiring the inclusion of these relay models in stability data bases. We do not have generic or actual relay models in our dynamics data bases for tripping line faults on lines and transformers represented. We represent actual relay response and tripping times of relays, communications, and breakers to faults in tripping transmission lines and transformers. Requiring the inclusion of generic or actual relay models for all relays that can trip lines and transformers would add a large burden to the development and maintenance of accurate dynamics model files that would add little or no benefit. Please change this bullet to read: “Tripping of Transmission lines and transformers where transient swings cause Protection System operation based on known Protection System response”.
Yes
Yes
No
I like that you have requirements for qualifying past studies, but Part 2.6.2 is confusing. Please change Part 2.6.2 to read something like: “For steady state, short circuit or Stability analysis: no material changes have occurred to the System represented in the study or, if material changes have occurred, a technical rationale can be provided to explain that the changes do not impact the performance results in the study area.”
Yes
Yes
For consistency, use the qualifier “expected” in the second sentence of Part 2.4.1 also, such that it reads “…represents the overall expected dynamic behavior…”
Yes
I like the flexibility you give the PC and TP to define what ‘material’ means in their ‘documentation to support the technical rationale for determining material changes.’ In Part 2.5 this rationale will decide whether or not any Long-Term Stability studies are required for the Planning Assessment. And in Part 2.6.2 this rationale will be a factor in qualifying a past study.
Yes
I like the flexibility you give the PC and TP in Requirements R3 and R4 to develop their rationale for the Contingencies they select for evaluation.
No. Table 1, P5 currently requires the study of “[d]elayed Fault Clearing due to the failure of a relay13 protecting the Faulted element to operate as designed”. As written, this requirement does not recognize

the use of redundant relays for primary protection. In some cases side by side relays are used to provide primary fault tripping if one relay fails to operate. Per the requirement as stated, the redundant relay would provide no value in meeting this requirement. Please revise to acknowledge backup relays: “Single failure of a protection relay13 protecting the Faulted element to operate as designed, resulting in backup relay actions or Delayed Fault Clearing, for one of the following”. In Table 1, P2 and P3, the last column “Non-Consequential Load Loss Allowed” where the requirement "No12" appears, and in footnote 12, the standard as proposed does not allow for any Non-Consequential Load Loss. When the Non-Consequential Load Loss (footnote b) issue is clarified in Project 2010-11 this requirement may be changed. Therefore, if this proposed Standard is enforced before Project 2010-11 is completed, entities will be required to meet this No Non-Consequential Load Loss requirement without the exception allowed in the existing TPL-002-0, footnote “b”. This will require immediate redesigns to meet this particular requirement. The unintended consequence could be that operators of local systems that are currently networked may opt to begin operation as radial systems, and future designs for local systems may be radial, at any voltage level. We suggest that the proposed footnote 12 include a provision to default to the existing footnote “b” in TPL-002-0 until Project 2010-11 is decided. Please revise footnote 12 to read, “Note: Non-Consequential Load Loss is being decided in Project 2010-11. When that project is finalized, the resolution will be copied here. In the interim, planned or controlled interruption of electric supply to radial customers or some local Network customers, connected to or supplied by the Faulted element or by the affected area, may occur in certain areas without impacting the overall reliability of the interconnected transmission systems. To prepare for the next contingency, system adjustments are permitted, including curtailments of contracted Firm (non-recallable reserved) electric power Transfers.” Timing of this project and project 2010-11 is critical. It would be very difficult to vote to approve the proposed TPL-001-2 prior to knowing the outcome of Project 2010-11 (footnote b issue). In Table 1 – Planning Events – Suggest changing the description for Events P2-3, P2-4, P4 and P4-6 to use the term ‘Bus-tie Breaker’ or ‘non-Bus-tie Breaker’ as applicable. In Table 1 – Extreme Events – Stability – Items 2a-2d, do you mean ‘Protection System failure’ here, or do you want to change to ‘relay failure’ to be consistent with changes in P5?
Yes
Yes
Group
SERC Planning Standards Subcommittee
Philip Kleckley
Yes
Yes
No
The definition does not adequately address normal (pre-contingency) operating procedures or system configurations. Language should be added to the requirement (perhaps as R1.1.7) to include normal operating procedures or system configurations in place prior to any contingency occurring.
Yes
Yes
Yes
Yes
Yes

Yes
Yes
Comments: We wish to make a comment on R4.3.1: it appears that this requires stability simulations of both successful and unsuccessful high-speed reclosing for all contingency simulations regardless of whether high-speed reclosing is used on the faulted line. We suggest the following wording be used to replace the first bullet: “Successful high-speed reclosing and unsuccessful high-speed reclosing onto a fault, where such reclosing is applied, and where such additional simulations are deemed appropriate by the PC or TP.” We wish to make a comment on the stability extreme event table: Changes were made in planning event P5 to narrow the focus to specific relay failures. The same changes are needed for stability extreme event 2a, 2b, 2c, and 2d.
Individual
Aaron Staley
Orlando Utilities Commission
Yes
Yes
Yes
No
Allowing the use of past studies in lieu of new studies for part or all of an assessment when the underlying system hasn't changed in a signficant change if very prudent. However the wording in 2.6.2 of "unless a technical rationale can be provided to demonstrate that System changes do not impact the performance results in the study area" is of concern. By this wording is it intended that the planner must demonstrate that every material change has no impact? In essence doing more work to prove that a study isn't required then the study would take? Or that the planner must essentially have a technical rationale (overarching) for determining when a material change is "material enough" to impact system perofrmance?
No
What is meant by "measurable change in performance"? Is this a measure that the sensistivty should move the system from meeting the performance requirements to not meeting the performance requirements? Or just a measurable change in system response, IE the loading was 45% on this corridor but is now 76%.
Yes
No
I agree with what I think is the intent. The word "Material" is meant to allow for changes in model to occur that are "small" relative to the TP/PC. For example the 400 MW generator that might be built in 10 years by another utility over a hundred miles, several dozen buses and generators away to not force new study work. However as written in 2.5 it requires you to define what a material change is, and could be applied to mean every change must be identified and explained rather then an overarching rationale that would only have you looking for changes that meet the material criteria. But then in 2.6.2 the word material is used with no obligation to explain what material is, only to explain if a material change would not impact the results in a study area. I recommend leaving the term material, but setting a requirement, measure, or definition that requires the TP/PC to define what they consider material specific to their system and circumstance. Since this will by the hetreogenous nature of the grid be different for each it may not be reasonable to pre-define what is realibale. Just as was done with many items in the ATC (MOD) standards, require that it be documented and questions on that rationale be answered. If a specific level

of technical oversight is desired, consider requiring that description to be on file with the regional entity and approved by their planning committee. I think the team is heading in a good direction, it's just how the words will be applied that concern me. This may be a case where an Example or two would go a long way towards providing guidance to entities and auditors.
Yes
I am assuming you mean the header notes on the performance table
I generally agree with the direction the team has gone. Footnote 9 should also be highlighted as being part of the project 2010-11 discussion just as footnote 12 is.
Yes
No
R8 should require that the PC and TP make available it's planning assessment results when requested, rather then requring the preemptive transmittal. There is no reliablity purpose served by providing unsolicited information.
Individual
Kasia Mihalchuk
Manitoba Hydro
Yes
Yes
Yes
Yes
Yes
No
The last two sentences “System peak Load levels shall include a Load model which represents the expected dynamic behavior of Loads that could impact the study area, considering the behavior of induction motor Loads. An aggregate System Load model which represents the overall dynamic behavior of the Load is acceptable.” belong in the MOD standards. They are not required in TPL-001-2.
No
Adding the word “material” does not clarify Part 2.5. The word “material” can be interpreted in many ways and is subjective. In order to have a consistent approach by all TPs, the drafting team should add a definition of the term “material”. One TP may consider a new 200 MW unit as not being material because there are several larger units in the TPs system.
Yes
In point g, violations are noted in terms of post-Contingency voltage deviations rather than post-Contingency voltage limits. This may lead to confusion, as some utilities evaluate performance based on a post-Contingency voltage deviation criterion while other utilities evaluate performance based on post-Contingency voltage limits. This same comment applies to Requirement R5. Suggested rewording for point g: System steady state voltages and post-Contingency voltages or voltage deviations shall be within acceptable limits as established by the Planning Coordinator and the Transmission Planner. Suggested rewording for the first sentence in Requirement R5: Each Transmission Planner and Planning Coordinator shall have criteria for acceptable System steady state voltage limits, post-Contingency voltages or voltage deviations, and the transient voltage response for its System. Note 12 states that an outstanding issue related to non-consequential load loss is being discussed. This will create a lot of uncertainty. Manitoba Hydro could not support this standard unless the resolution of Note B is known.

Yes
Yes
Individual
Randi Woodward
Minnesota Power
Yes
Yes
Yes
No
Requirement 2 - This requirement states that Stability analyses be performed as part of the annual Planning Assessments. Minnesota Power would like to see the term "Stability analysis" more clearly defined as there are several different types of stability related analysis that can be performed for power systems including: transient stability, voltage stability and small signal stability.
Yes
Yes
Yes
Yes
None.
Yes
Yes
Group
Northeast Power Coordinating Council
Guy Zito
No
Requirement R1 Part 1.1 and following states “System models shall represent:… 1.1.5. Known commitments for firm Transmission Service and Interchange. It was commented during a previous posting that 1.1.5 should be reworded to read: Known commitments for Firm Transmission Service, and, additionally, other types of transactions provided they have been demonstrated to not violate existing reliability constraints. The response was that “The SDT believes that the defined term ‘Interchange’ covers other transfers as described in your comment. No change made.” It is agreed that known Interchanges should be modeled. However, it is imperative that existing reliability constraints not be violated in the process. That is, Interchange relating to economic transactions should not drive planning studies. Reliability related investments should not be driven by congestion related to economic transactions incorporated into planning models. Following is a preferred/revised wording: • 1.1.5. Known commitments for firm Transmission Service and Interchange. Interchange is meant to refer to energy transactions other than firm Transmission Service. While rigorous planning studies have been conducted to permit the uninterrupted implementation of firm Transmission Service without jeopardizing the reliable operation of the Interconnected System, other types of energy transaction only take place whenever

system conditions permit them. They are usually of very short duration relative to planning assessment periods (usually spanning for a few hours to a few days) and deemed highly interruptible subject to reliability issues that may arise during operation of the system. In other words, the term Interchange refers to economic transactions that are permitted when the system is secure and there are reasonable reliability margins to effect dispatch changes to lower operating costs. As such, Interchange should not be reflected in system representation meant to assess system reliability in adherence to reliability criteria delineated in documents such as TPL-001.
No
The definition of Year One could be eliminated, and its wording used in place of Year One within the text of the requirement. The proposed definition has now added ambiguity with respect to “year two” and “year five” which are not defined. Year two could be deleted and R.2.1.1 modified as follows: System peak Load representing a point in time 12-24 months and another point in time 48-65 months into the future from the time the study is initiated. Define Year Five as the twelve month period 4 to 6 calendar years from the date of the Planning Assessment.
Yes
No
The revisions made to Requirement R2 Part 2.1 appear to resolve the concern that past studies could not be used to comply with the short-term steady state study requirements. This revision must be carried through to other sections (R2.2, 2.2.1). However, the language of Requirement R2 Part 2.2 still seems to suggest that current annual studies are always required for the long-term steady state assessment to be compliant. This may have been an oversight, for consistency Requirement R2 Part 2.2 should be modified to similarly read as Requirement R2, Part 2.1. Regarding R2.2, the language should be consistent with 2.1. For example, use "current or qualified past studies" instead of "the following annual current study". Revisions made to Requirement R2.1.5 have made it worse than was originally drafted. This would require the PC & TP to study (meaning performing a technical analysis) of the impact and probability of the possible unavailability of any piece of equipment with a lead time of one year or more. Such an evaluation of spare equipment strategies would require significant additional resources and data, but provide no benefit to system reliability, as it is redundant to the existing N-1-1 contingency requirement (P6). R2.7 requires that Corrective Action Plans are included in each Planning Assessment and states “Such actions may include…” followed by a list of actions. Restricting allowable actions, and excluding runback/tripping of HVDC would have a direct impact on multiple existing facilities in New York and would adversely impact the reliability planning of the NYCA. Runback/tripping of HVDC must be added to the list, and also suggest revising to “Such actions may include but not be limited to:”.
No
Part 2.1.4, requires an entity to vary one or more conditions to demonstrate a change in performance. If the cases were initially stressed, this may force an entity to simulate conditions with less severe stresses. At this point, there is limited to no value to this additional workload. Having a requirement to test at least one sensitivity as a blanket requirement may not be informative by itself and is more unclear since sensitivities are being required on an undefined base set of conditions. If an entity does a case with a stressed set of assumptions, is it necessary to do a non-stressed case? Additionally, our concern involves wording under 2.1.4 and 2.4.3 that sensitivities are required varying one or more conditions. Subsequently, in requirement 2.7.2 corrective action plans need to be developed to resolve performance deficiencies “only” if identified in multiple conditions or require a rationalization why no corrective action plan is necessary. Multiple conditions sensitivities under 2.1.4 and 2.4.3 are necessary to satisfy requirement 2.7.2. Requirement 2.7.2 adds ambiguity and should be removed. If not, a suggested revision to Requirement 2.7.2 as follows: 2.7.2. Corrective Action Plans are not required for performance deficiencies identified in a sensitivity analysis. In general, the scope of this requirement is too broad and non-specific, and only results in undue study burden. Is it necessary for sensitivity analysis to be included in requirements since in accordance with good engineering practices a conservative approach should be used in studies? The standard is referring to requirements for sensitivity and other issues without a reference to base assumptions as commented in issue #3. The standard must describe base assumptions. To define a sensitivity condition, NERC must define base assumptions.

No
There is insufficient information and experience regarding dynamic load modeling. It may also be included as a “sensitivity” analysis in 3.2, rather than requiring and expecting accurate representation of a dynamic load model. If this requirement is kept, a modeling standard must be written that is specific to dynamic loads. Change belongs in a modeling standard, not in TPL-001.
Yes
No
Header note (i) in the first Table 1 (p. 10) could imply that voltage-varying load shall not be used to meet steady state performance requirements. Steady state load models in use include voltage-varying loads. The explicit representation of (voltage-dependent) load models is perfectly consistent with the requirements defined in R1 (which calls for a comprehensive representation of system components and their expected operating status in the planning assessment period) and the impetus to the creation of more specific load models in dynamic assessments found Requirement 2.4 of this draft of TPL-001-2. It is a known that depressed voltage conditions cause certain system elements to perform below their rated capacity. For example, capacitors provide less voltage support and voltage controlling transformers are impeded by their finite tap range to direct VAR flow into areas affected by low voltage conditions. Certain load types, on the other hand, provide a self-compensating relief to depressed voltage by naturally decreasing demand in a manner proportional to their characteristics, without operator intervention. Choosing to negate the voltage-dependence of one of these system elements (load, in our case) results in an inaccurate system representation that, in turn, may lead to erroneous assessments of the reliability state of the interconnected system and, potentially, to the implementation of unwarranted system upgrades. This note should be revised to only reference loads which are disconnected due to voltage.
To support the change to P5, other items need to also be modified. In Table 1 - Steady State & Stability Performance Extreme Events (p. 12), in the Stability Section, the language should be made similar to wording in P5. Protection System should be removed and replaced with the words “relay failure”. This change should be made for 2a through 2d: 2. Local or wide area events affecting the Transmission System such as: a. 3Ø fault on generator with stuck breaker10 or a relay failure resulting in Delayed Fault Clearing. b. 3Ø fault on Transmission circuit with stuck breaker10 or a relay failure resulting in Delayed Fault Clearing. c. 3Ø fault on transformer with stuck breaker10 or a relay failure resulting in Delayed Fault Clearing. d. 3Ø fault on bus section with stuck breaker10 or a relay failure resulting in Delayed Fault Clearing. Note 11 (p. 14) needs clarification as shown: Excludes circuits that share a common structure (Planning event P7, Extreme event steady state 2a) or common Right-of-Way (Extreme event, steady state 2b) for a total of 1 mile or less. There are two tables labeled “Table 1”. Suggest that the extreme events table be renamed “Table 2”.
Yes
No
Requirement 8 is an administrative burden to TPs and PCs that adds no value to Bulk Power System reliability. PCs should be including TPs, neighboring PCs and interested parties in its planning processes when developing the Planning Assessments. Therefore, the inclusion of a set of VSLs for Requirement 8 is unnecessary. Should the VSLs for Requirement 8 remain, Requirement 8.1 should be revised to reflect that comments only to the final Assessment (not drafts developed during a process) need a response as follows: If a recipient of the planning assessment final results provides documented comments on the results, the respective Planning Coordinator or Transmission Planner shall provide a documented response to such recipient within 90 calendar days of receipt of those comments. If Requirement 8 and 8.1 are retained, they should be revised to reflect that comments only to the final Assessment (not drafts developed during a process) need a response and there should be a limit on the comment period as follows: If a recipient of the planning assessment final results provides documented comments on the results within 90 days of receipt, the respective Planning Coordinator or Transmission Planner shall provide a documented response to such recipient within 90 calendar days of receipt of those comments. Other comments not addressed by this Comment Form as follows: Section 3.3 - The last sentence of 3.3.1 should be removed. This is addressed in PRC-023. Line ratings are addressed in PRC-023. PRC-

023 requires coordination with the Reliability Coordinator. Remove “Tripping of Transmission elements where relay loadability limits are exceeded.” Section 4.3 - High speed reclosing is not defined, and to help eliminate any confusion that it may introduce into the standard it will be worthwhile for the SDT to define this term. Several specific examples from previous comments on sensitivity analysis and guidance for base case assumptions: The requirements for sensitivity analysis already address issues going beyond what is expected to meet reliability requirements. Requiring extreme event analysis is requiring two layers of event analysis beyond what is required and there is no requirement for corrective action if anything is identified. The standard is referring to requirements for sensitivity and other issues without a reference to base assumptions. The standard must describe base assumptions. To define a sensitivity condition, NERC must define base assumptions. As for allowing con-consequential load loss for Categories P1 through P5, suggest approval at the Regional level, with a concept of allowing it in a “local area” that does not impact BPS reliability. All references to 300 kV in document should be replaced with EHV (for example in the Introduction, Section 5). The first phrase of Note 3 on p. 14 should be revised as follows: “Bulk Electric System (BES) level references include extra-high voltage (EHV) Facilities defined as those representing the backbone of the System, generally at voltage greater than 300 kV, and high voltage (HV) Facilities defined as those not representing the backbone of the System, as determined by the Planning Coordinator and approved by Regional Entity.”

Individual

Martin Bauer

US Bureau of Reclamation

Yes

With exception of the definitions.

No

The language implies a requirement. The language "Year One must include the forecasted peak Load period for one of the following two calendar years" is a requirement and not a statement of clarification. If the definition is that “Year One” can also be the period used for forecast peak load, then it should be stated so. It is suggested that either the language in the definition is modified or the language is deleted from the definition and moved to the body of the standard.

Yes

No

The question is misleading in that R2 also include current studies. The overall structure of the standard could be greatly improved if the standard were segmented into Near Term and Long Term with sub segments for each specific type of analysis to be performed. Second, the standard does not use consistent terms. The Planning Assessment is to include Near Term and Long Term portions which must have steady state analysis, short circuit analysis, and stability analysis (ref. R2). Requirement R 2.1 introduces sensitivity analysis for the Near Term portion, and then refers to the Planning Analysis which is in reality both Near Term and Long Term portions. That implies that sensitivity analysis must be required for both? The standard repeats the requirement for annual stability studies in 2.4 which was already a requirement for Planning Assessments. The requirement 2.1.5 is one the most problematic requirements in this standard. This requirement implies that an entity must have spare equipment and a strategy to employ it. That is beyond the scope of the Energy Policy Act 2005. Spare equipment is not on-line and does not contribute to the reliability of the existing system. The Energy Policy Act of 2005 specifically prohibits the requirement to enhance or modify the system. The use, application, or requirement to have spare equipment violates that prohibition. This section should be removed. In addition, this requirement suffers from an ability to implement. In the first case, the requirement is invoked if the spare equipment strategy could result in unavailability of transmission equipment. How is that determined? There is no nexus to that determination. The unavailability may have already occurred once the transmission equipment has failed. The only way to avoid unavailability if the transmission equipment that fails has a hot stand-by with automatic fail-over. The presence or not of a suitable replacement will still result in unavailability by virtue of the failure o the first piece of transmission equipment. Next problem, who will second guess the owner of the replacement. Where is the requirement to make the replacement strategy available? The standard should focus on system

performance with existing equipment to meet current and future loads.
No
Sensitivity analysis is not included in R2. This gets back to the structure of the standard. There should a clear indication of the studies that are to be included in the Near-Term and Long-Term portions of the Planning Assessments.
No
Not included in R2. See response to Question 3.2
No
The term "material" is arbitrary. It is suggested that a specific value be used to trigger the assessment.
No
The language implies that the responsible entity may choose to not distribute it is feels the entity making the request does not have a "reliability related need". It is not clear why that distinction is being made?
Group
Exelon Transmission Planning
Eric Mortenson
Yes
Yes
Yes
Yes
Yes
No
There is not an industry consensus around best practices for modeling the dynamic behavior or characteristics of load. It is premature to make this a requirement in an enforceable standard which would be held to this degree of subjective auditing.
No
The term ‘material changes’ is subjective. It is very difficult to determine a base case to study combinations of generator additions on a changing transmission network in the 6 to 10 year time period to be used for dynamic simulations. Dynamic studies should be performed whenever new generator interconnections are proposed and it is at that time where meaningful calculations can be performed. The long term six to ten year out dynamic studies for groupings of potential units should be done at a high level, if at all.
Yes
Comments: The term ‘HV’ in the performance table should be defined as ‘Bulk Electric System elements up to 300 kV, not simply all elements ‘below 300 kV’. Footnote 12 should be clarified to specifically state the requirements before voting takes place. The performance criteria should be based on the voltage level of the element experiencing stress due to the contingency, not based on the voltage level of the outaged element. It does not seem to make sense that the loss of a 500 kV bus would not allow for any non-consequential load shedding unless the bus contained a 500 to 230 kV transformer, in which case additional load shedding would be allowed. If outages on a 230 kV system, such as bus fault with stuck breaker, were to cause overloads on a 500 kV network it is acceptable to shed load, but if the outages

were on the 500 kV system originally it would not be acceptable to shed additional load. It seems as if it should be the severity of the situation and the elements involved that would dictate allowable remedial actions and not the initial cause of the disturbance. If, for example, there was a 500 kV contingency outage that caused problems on the 230 kV system there would be a problem that may require load shedding on the 230 kV system. If there were a 230 kV contingency or series of contingencies that caused overloads on the 500 kV system, it would be more difficult to find enough lower voltage load to shed to bring the 500 kV system back to applicable ratings or conditions. The inability to shed non-consequential load could theoretically be resolved by hanging a small EHV / HV transformer on a particular bus, or by tapping a EHV line with an auto transformer.
Yes
Yes
Individual
Paul Rocha
CenterPoint Energy
No
The SDT did not incorporate CenterPoint Energy's previous comment regarding R1; therefore, CenterPoint Energy's concerns remain.
No
The SDT did not incorporate CenterPoint Energy's previous comments regarding R2; therefore, CenterPoint Energy's concerns remain.
No
The SDT did not incorporate CenterPoint Energy's previous comments regarding R2; therefore, CenterPoint Energy's concerns remain.
No
The SDT did not incorporate CenterPoint Energy's previous comments regarding R2; therefore, CenterPoint Energy's concerns remain.
No
The SDT did not incorporate CenterPoint Energy's previous comments regarding R2; therefore, CenterPoint Energy's concerns remain.
Yes
CenterPoint Energy appreciates the effort put forth by the SDT in revising the performance table. The current draft of P5 is preferable to previous versions.
Individual
Tim Ponseti, VP
TVA Transmission Planning & Compliance
Yes
TVA supports the change from five years to seven years for the implementation plan period.
Yes
TVA supports the change in the Year One definition - but would suggest that the word “started” should be changed to “completed” since a Planning Assessment may be started in one calendar year and finished in the next calendar year.
Yes

Yes
Yes
Yes
Yes
Yes
TVA is concerned about footnote 12 (known as footnote b in existing TPL standards). TVA believes that utilities should be given some freedom in dropping local load in response to N-1 events as long as overall BES reliability is not impacted. Otherwise significant capital improvements will be required that will have no overall reliability gain for the Bulk Electric System. TVA does agree with the revisions made specifically to the P5 event. TVA wishes to make a comment on the stability extreme event table: Changes were made in planning event P5 to narrow the focus to specific relay failures. The same changes are needed for stability extreme event 2a, 2b, 2c, and 2d.
Yes
Yes
Additional TVA comments: TVA wishes to make a comment on R4.3.1: it appears that this requires stability simulations of both successful and unsuccessful high-speed reclosing for all contingency simulations. Does high speed reclosing occur in less than 60 cycles or 60 seconds? If a utility does not have reclosing on a transmission line - then must the utility still perform stability studies assuming that there is reclosing? TVA suggests the following wording be used to replace the first bullet: “Successful high-speed reclosing and unsuccessful high-speed reclosing onto a fault, where such reclosing is applied, and where such additional simulations are deemed appropriate by the PC or TP.” In R4.1.1, TVA is concerned that no generating unit shall pull out of synchronism in a local area only (thus not impacting the overall reliability of the BES) for Planning Event P1, while the standard does allow generator runback/tripping for the same event. Thus the generating unit may be tripped by a special protection scheme - but may not be tripped by an out of step relay. TVA believes that out of step relaying should be allowed for this unit tripping as long as this does not affect the overall reliability of the BES.
Individual
Dan Rochester
Independent Electricity System Operator
Yes
We agree with this change. We further suggest that this change and the additional wording: “or in those jurisdictions where no regulatory approval is required on the first day of the first calendar quarter, 84 months after Board of Trustees adoption” be added to P. 3 of the standard that starts with “For 84 calendar months…” to be totally consistent.
Yes
Yes
Yes
Yes
Yes

Yes
We do not have a concern with this change but we don't think it is necessary. It is not a requirement, and appropriate wording in the Measures can take care of it.
Yes
Yes
Yes
Group
Southern Company
Andy Tillery
Yes
Yes
No
The definition does not adequately address normal (pre-contingency) operating procedures or system configurations. Language should be added to the requirement (perhaps as R1.1.7) to include normal operating procedures or system configurations in place prior to any contingency occurring.
Yes
Yes
Yes
Yes
Yes
NO We wish to make a comment on the stability extreme event table: Changes were made in planning event P5 to narrow the focus to specific relay failures. The same changes are needed for stability extreme event 2a, 2b, 2c, and 2d.
Yes
No
We wish to make a comment on R4.3.1: it appears that this requires stability simulations of both successful and unsuccessful high-speed reclosing for all contingency simulations regardless of whether high-speed reclosing is used on the faulted line. We suggest the following wording be used to replace the first bullet: "Successful high-speed reclosing and unsuccessful high-speed reclosing onto a fault, where such reclosing is applied, and where such additional simulations are deemed appropriate by the PC or TP." Also, we wish to make a comment on footnote #13 of Table 1. 13. Applies to any of the following relay functions or types: pilot (#85), distance (#21), differential (#87), current (#50, 51, & 67), voltage (#27 & 59), directional (#32 & 67), and associated tripping (#86 & 94) relays.
Group
Hydro One Networks Inc.

David Kiguel
Yes
Yes
Yes
Yes
No
The scope of this requirement is too broad and non-specific and only results in undue study burden.
No
There is insufficient information and experience regarding dynamic load modeling. Hence, this should not be a requirement but a guide or an item to be considered to the extent possible. It may also be included as a “sensitivity” analysis in 3.2, rather than requiring and expecting accurate representation of dynamic load model.
Yes
Yes
No selection boxes in this question. Yes, we support.
Yes
Yes
Requirement 8 is an administrative burden and adds little or no value to the BPS reliability. Therefore, the inclusion of a set of VSLs for Requirement 8 is unnecessary.
Group
jWestern Electricity Coordinating Council
Steve Rueckert
Yes
We commend the SDT for its work to continue the improvement on the proposed TPL-001-1. We were not able to find a place to include comment on various requirements not identified in the questions below; therefore, we have included our comments here: Requirement and 2.6 and 2.6.1: A study that is five years old is very likely to be out of date. The entity's BES may have not changed much in five years but the entity cannot be certain whether or not their neighbor’s system may have changed. Changes outside the immediate entity's system can impact results of studies within their system. Suggest that two years is a maximum that past studies should be allowed. Requirement 3.4.1 and 4.4.1 require PCs and TPs to coordinate with adjacent PCs and TPs to ensure that Contingencies on adjacent Systems which may impact their Systems are included in the Contingency list. Please clarify whether this means that a PC or TP must coordinate with others to identify contingencies on other Systems that the PC or TP must now include on their Contingency list to simulate and address any performance violations on their own System, or does it mean that the PC or TP must coordinate with others to identify contingencies on their System that the PC or TP must now include on their Contingency list to simulate and address any performance violations on other Systems. In either case, the standard does not seem to clearly state what must be done, or whose responsibility it is to mitigate, if a contingency in one System causes a performance violation in another System. Requirement R4.3.1, bullet point 3 requires the stability analyses to include the impact of subsequent “[t]ripping of Transmission lines and transformers where transient swings cause Protection System operation based on generic or actual relay models”. As written, this bullet could be interpreted as requiring the inclusion of these relay models in stability data bases. We do not have generic or actual relay models in our dynamics data bases for tripping line faults on lines and

transformers represented. We represent actual relay response and tripping times of relays, communications, and breakers to faults in tripping transmission lines and transformers. Requiring the inclusion of generic or actual relay models for all relays that can trip lines and transformers would add a large burden to the development and maintenance of accurate dynamics model files that would add little or no benefit. Please change this bullet to read: “Tripping of Transmission lines and transformers where transient swings cause Protection System operation based on known Protection System response”.
No
We recognize that the drafting team made changes to the definition of Year One based on industry comments. However, we believe that the revised language could allow for a situation where an entity could use its next season’s operating study as its Year One planning study. For example, if the entity does its study in the fall of 2011, the proposed definition would allow the entity to use its summer 2012 operating study as its Year One study. This is a very short period to address any issued identified. Suggest working into the requirement that Planning Studies must look out at least 12 months beyond when the study is performed. This would still allow for the provision in the current definition example (“if a Planning Assessment was started in 2011, then Year One must include the forecasted peak Load period for either 2012 or 2013) because the entity would be able to use their 2013 Load period, but it would prevent the entity from using the 2012 Load period if they started the assessment late in 2011.
Yes
Yes
Yes
Yes
Yes

Table 1, P5 currently requires the study of “[d]elayed Fault Clearing due to the failure of a relay13 protecting the Faulted element to operate as designed”. As written, this requirement does not recognize the use of redundant relays for primary protection. In some cases side by side relays are used to provide primary fault tripping if one relay fails to operate. Per the requirement as stated, the redundant relay would provide no value in meeting this requirement. Please revise to acknowledge backup relays: “Single failure of a protection relay13 protecting the Faulted element to operate as designed, resulting in backup relay actions or Delayed Fault Clearing, for one of the following”. In Table 1, P2 and P3, the last column “Non-Consequential Load Loss Allowed” where the requirement "No12" appears, and in footnote 12, the standard as proposed does not allow for any Non-Consequential Load Loss. When the Non-Consequential Load Loss (footnote b) issue is clarified in Project 2010-11 this requirement may be changed. Therefore, if this proposed Standard is enforced before Project 2010-11 is completed, entities will be required to meet this No Non-Consequential Load Loss requirement without the exception allowed in the existing TPL-002-0, footnote “b”. This will require immediate redesigns to meet this particular requirement. The unintended consequence could be that operators of local systems that are currently networked may opt to begin operation as radial systems, and future designs for local systems may be radial, at any voltage level. We suggest that the proposed footnote 12 include a provision to default to the existing footnote “b” in TPL-002-0 until Project 2010-11 is decided. Please revise footnote 12 to read, “Note: Non-Consequential Load Loss is being decided in Project 2010-11. When that project is finalized, the resolution will be copied here. In the interim, planned or controlled interruption of electric supply to radial customers or some local Network customers, connected to or supplied by the Faulted element or by the affected area, may occur in certain areas without impacting the overall reliability of the interconnected transmission systems. To prepare for the next contingency, system adjustments are permitted, including curtailments of contracted Firm (non-recallable reserved) electric power Transfers.” Timing of this project and project 2010-11 is critical. It would be very difficult to vote to approve the proposed TPL-001-2 prior to knowing the outcome of Project 2010-11 (footnote b issue).
Individual
Dilip Mahendra
SMUD
R2.7.1, last bullet: Please provide specifics on the types of acceptable ‘Corrective Actions’ covered by ‘rate applications and DSM’ and the planning horizon for which they are considered acceptable. As an alternative, NERC should develop a process by which what is considered acceptable is published and continuously updated. (With due apologies for not raising this point earlier).
What is the significance of changing the wording for section R2.1.5 from ‘assessed’ to ‘studied’ and ‘Planning Assessments’ to ‘studies’?
For the Western Interconnection, the performance level for a Bus-tie breaker fault under TPL-001-2, Table 1, Item P2-4, Notes (a) and (f), requires no thermal overloads and no cascading. While, FAC-010-2.1, R1.2, R2.5-R2.6, as modified by E1.1, E1.1.7, E1.3, and E1.3.1 requires a different performance level of no cascading. Please explain why this regional variance is not included under TPL-001-2, Item E.
Group
Arizona Public Service Company
Jana Van Ness, Director Regulatory Compliance

Yes
We commend the SDT for its work to continue the improvement on the proposed TPL-001-1. We were not able to find a place to include comment on Requirement R4; therefore, we have included our comments here: Section R4.3.1, bullet point 3 requires the stability analyses to include the impact of subsequent “[t]ripping of Transmission lines and transformers where transient swings cause Protection System operation based on generic or actual relay models”. As written, this bullet could be interpreted as requiring the inclusion of these relay models in stability data bases. We do not have generic or actual relay models in our dynamics data bases for tripping line faults on lines and transformers represented. We represent actual relay response and tripping times of relays, communications, and breakers to faults in tripping transmission lines and transformers. Requiring the inclusion of generic or actual relay models for all relays that can trip lines and transformers would add a large burden to the development and maintenance of accurate dynamics model files that would add little or no benefit. Please change this bullet to read: “Tripping of Transmission lines and transformers where transient swings cause Protection System operation based on known Protection System response”.
Yes
Yes
Yes
Yes
Yes
Yes
Table 1, P5 currently requires the study of “[d]elayed Fault Clearing due to the failure of a relay13 protecting the Faulted element to operate as designed”. As written, this requirement does not recognize the use of redundant relays for primary protection. In some cases side by side relays are used to provide primary fault tripping if one relay fails to operate. Per the requirement as stated, the redundant relay would provide no value in meeting this requirement. Please revise to acknowledge backup relays: “Single failure of a protection relay13 protecting the Faulted element to operate as designed, resulting in backup relay actions or Delayed Fault Clearing, for one of the following”. In Table 1, P2 and P3, the last column “Non-Consequential Load Loss Allowed” where the requirement "No12" appears, and in footnote 12, the standard as proposed does not allow for any Non-Consequential Load Loss. When the Non-Consequential Load Loss (footnote b) issue is clarified in Project 2010-11 this requirement may be changed. Therefore, if this proposed Standard is enforced before Project 2010-11 is completed, entities will be required to meet this No Non-Consequential Load Loss requirement without the exception allowed in the existing TPL-002-0, footnote “b”. This will require immediate redesigns to meet this particular requirement. The unintended consequence could be that operators of local systems that are currently networked may opt to begin operation as radial systems, and future designs for local systems may be radial, at any voltage level. We suggest that the proposed footnote 12 include a provision to default to the existing footnote “b” in TPL-002-0 until Project 2010-11 is decided. Please revise footnote 12 to read, “Note: Non-Consequential Load Loss is being decided in Project 2010-11. When that project is finalized, the resolution will be copied here. In the interim, planned or controlled interruption of electric supply to radial customers or some local Network customers, connected to or supplied by the Faulted element or by the affected area, may occur in certain areas without impacting the overall reliability of the interconnected transmission systems. To prepare for the next contingency, system adjustments are permitted, including curtailments of contracted Firm (non-recallable reserved) electric power Transfers.” Timing of this project and project 2010-11 is critical. It would be very difficult to vote to approve the proposed TPL-001-2 prior to knowing the outcome of Project 2010-11 (footnote b issue).

Individual
RoLynda Shumpert
South Carolina and Gas
Yes
Yes
Yes
Yes
Yes
Yes
Yes
Yes
Yes
Yes
Yes
We wish to make a comment on the revisions to R4.3.1. We believe that the analysis of both successful and unsuccessful high speed reclosing for all cases is not justified and should be left to the discretion of the Transmission Planner.
Individual
Brian Keel
SRP
Yes
We commend the SDT for its work to continue the improvement on the proposed TPL-001-1. We were not able to find a place to include comment on Requirement R4; therefore, we have included our comments here: Section R4.3.1, bullet point 3 requires the stability analyses to include the impact of subsequent “[t]ripping of Transmission lines and transformers where transient swings cause Protection System operation based on generic or actual relay models”. As written, this bullet could be interpreted as requiring the inclusion of these relay models in stability data bases. We do not have generic or actual relay models in our dynamics data bases for tripping line faults on lines and transformers represented. We represent actual relay response and tripping times of relays, communications, and breakers to faults in tripping transmission lines and transformers. Requiring the inclusion of generic or actual relay models for all relays that can trip lines and transformers would add a large burden to the development and maintenance of accurate dynamics model files that would add little or no benefit. Please change this bullet to read: “Tripping of Transmission lines and transformers where transient swings cause Protection System operation based on known Protection System response”.
Yes
Yes

Yes
Yes
Yes
Yes
Yes
Table 1, P5 currently requires the study of “[d]elayed Fault Clearing due to the failure of a relay13 protecting the Faulted element to operate as designed”. As written, this requirement does not recognize the use of redundant relays for primary protection. In some cases side by side relays are used to provide primary fault tripping if one relay fails to operate. Per the requirement as stated, the redundant relay would provide no value in meeting this requirement. Please revise to acknowledge backup relays: “Single failure of a protection relay13 protecting the Faulted element to operate as designed, resulting in backup relay actions or Delayed Fault Clearing, for one of the following”. In Table 1, P2 and P3, the last column “Non-Consequential Load Loss Allowed” where the requirement "No12" appears, and in footnote 12, the standard as proposed does not allow for any Non-Consequential Load Loss. When the Non-Consequential Load Loss (footnote b) issue is clarified in Project 2010-11 this requirement may be changed. Therefore, if this proposed Standard is enforced before Project 2010-11 is completed, entities will be required to meet this No Non-Consequential Load Loss requirement without the exception allowed in the existing TPL-002-0, footnote “b”. This will require immediate redesigns to meet this particular requirement. The unintended consequence could be that operators of local systems that are currently networked may opt to begin operation as radial systems, and future designs for local systems may be radial, at any voltage level. We suggest that the proposed footnote 12 include a provision to default to the existing footnote “b” in TPL-002-0 until Project 2010-11 is decided. Please revise footnote 12 to read, “Note: Non-Consequential Load Loss is being decided in Project 2010-11. When that project is finalized, the resolution will be copied here. In the interim, planned or controlled interruption of electric supply to radial customers or some local Network customers, connected to or supplied by the Faulted element or by the affected area, may occur in certain areas without impacting the overall reliability of the interconnected transmission systems. To prepare for the next contingency, system adjustments are permitted, including curtailments of contracted Firm (non-recallable reserved) electric power Transfers.” Timing of this project and project 2010-11 is critical. It would be very difficult to vote to approve the proposed TPL-001-2 prior to knowing the outcome of Project 2010-11 (footnote b issue).
Individual
Darcy O'Connell
California ISO
Yes
Yes
Yes
Yes
No
Requirement 2.7.2 could be revised as follows: 2.7.2. Corrective Action Plans are not required for

performance deficiencies identified in a sensitivity analysis. If a Planning Coordinator includes Corrective Action Plans to resolve performance deficiencies identified in multiple sensitivity analysis, the Planning Coordinator shall provide documentation to support those Plans.
Yes
Yes
Yes
We support these changes, although we suggest that the proposed footnote 12 include an interim provision to default to the existing footnote “b” in TPL-002-0 until Project 2010-11 is decided. Please revise footnote 12 to read, “Note: Non-Consequential Load Loss is being decided in Project 2010-11. When that project is finalized, the resolution will be copied here. In the interim, planned or controlled interruption of electric supply to radial customers or some local Network customers, connected to or supplied by the Faulted element or by the affected area, may occur in certain areas without impacting the overall reliability of the interconnected transmission systems. To prepare for the next contingency, system adjustments are permitted, including curtailments of contracted Firm (non-recallable reserved) electric power Transfers.”
Yes
No
Requirement 8 is an administrative burden to TPs and PCs that adds no value to reliability. PCs should be including TPs, neighboring PCs and interested parties in its planning processes when developing the Planning Assessments. Therefore, the inclusion of a set of VSLs for Requirement 8 is unnecessary. Should the SDT decide to leave the VSLs for Requirement 8, Requirement 8.1 should be revised to reflect that comments only to the final Assessment (not drafts developed during a process) need a response as follows: 8.1 If a recipient of the planning assessment final results provides documented comments on the results, the respective Planning Coordinator or Transmission Planner shall provide a documented response to such recipient within 90 calendar days of receipt of those comments. For a Planning Coordinator (PC) who distributes the Planning Assessment to many different entities (to adjacent PCs, TPs, and other functional entities), a concern regarding the Requirement R8 VSL is that it is overly restrictive to apply a violation for failing to distribute the results of its Planning Assessment to only one PC, TP, or functional entity (and to apply a High VSL for failing to distribute to more than one entity), particularly since an entity’s contact is subject to change over time, and since Measure M8 allows for publicly posting the results of its Planning Assessment to its website. Should the SDT decide to include the VSLs for Requirement 8, would recommend revising to use a percentage approach rather than applying a violation to a Planning Coordinator who fails to provide the results of its Planning Assessment to one PC, TP, or other functional entity (or applying a High VSL for failing to distribute to more than one entity.) Recommend applying a similar percentage approach to the VSLs drafted by NERC Staff for Project #2007-23 VSLs (e.g., for FAC-013-1) to be considered for the TPL-001-2 R8 VSLs. For example, • Lower VSL: The responsible entity failed to provide the Planning Assessment final results to 5% or less of the required entities. • Moderate VSL: The responsible entity failed to provide the Planning Assessment final results to more than 5% up to (and including) 10% of the required entities. • High VSL: The responsible entity failed to provide the Planning Assessment final results to more than 10% up to (and including) 15% of the required entities. • Severe VSL: The responsible entity failed to provide the Planning Assessment final results to more than 15% of the required entities OR [the existing language for the Severe VSL]. Explanation: The VSLs were modified for consistency with other standards and VSLs. Reference: Link to VSLs drafted by NERC Staff for Project #2007-23 VSLs (e.g., for FAC-013-1): http://www.nerc.com/docs/standards/sar/Staff_Proposed_VSLs_2010July27.pdf
Individual
Scott Inglebritson
Seattle City Light

Yes
No
The definition of Year One is now too flexible and does not meet the intent of the standard. For example, our system peak is generally in January of the year. If I perform TPL studies in November 2011, studying the peak in January 2012 is acceptable according to the new definition. This is only two months from the date of the study. The intent of the TPL standard should be that entities must study and plan for inadequacies found in the studies. A one- or two-month lead time is not adequate to address any problems identified. Year One should be the year containing the first peak 12 months or more from the current date. Otherwise, TPL studies become merely seasonal operational studies, not planning studies. Alternative Language: "For the Planning Assessment started in a given year, Year One should contain the first system peak that occurs twelve months or more after the date of the Planning Assessment."
Yes
Yes
Yes
Yes
Yes
Yes
Table 1, P5 does not recognize the existence of redundant (or backup) relays. These are an integral part of the protection system design and should be considered in analysis of SLG faults. The TPL standard should encourage redundant, fail-safe systems, not ignore them. In Table 1, P2 and P3, we have a concern about not allowing non-consequential load loss. Project 2010-11 is deciding on this issue, but is not completed (see footnote 12). Should the standard become effective before this project is completed, no non-consequential load loss would be allowed, requiring many transmission additions and reconfigurations. Please change the "NO" in the last column to "YES" until the completion of Project 2010-11.
Yes
Yes
Individual
Ean O'Neill
California Energy Commission
Yes
We commend the SDT for its work to continue the improvement on the proposed TPL-001-1. We were not able to find a place to include comment on Requirement R4; therefore, we have included our comments here: Section R4.3.1, bullet point 3 requires the stability analyses to include the impact of subsequent “[t]ripping of Transmission lines and transformers where transient swings cause Protection System operation based on generic or actual relay models”. As written, this bullet could be interpreted as requiring the inclusion of these relay models in stability data bases. We do not have generic or actual relay models in our dynamics data bases for tripping line faults on lines and transformers represented. We represent actual relay response and tripping times of relays, communications, and breakers to faults in tripping transmission lines and transformers. Requiring the inclusion of generic or actual relay models for all relays that can trip lines and transformers would add a large burden to the development and

maintenance of accurate dynamics model files that would add little or no benefit. Please change this bullet to read: “Tripping of Transmission lines and transformers where transient swings cause Protection System operation based on known Protection System response”.
Yes
Yes
Yes
Yes
Yes
Yes
Yes
No. Table 1, P5 currently requires the study of “[d]elayed Fault Clearing due to the failure of a relay13 protecting the Faulted element to operate as designed”. As written, this requirement does not recognize the use of redundant relays for primary protection. In some cases side by side relays are used to provide primary fault tripping if one relay fails to operate. Per the requirement as stated, the redundant relay would provide no value in meeting this requirement. Please revise to acknowledge backup relays: “Single failure of a protection relay13 protecting the Faulted element to operate as designed, resulting in backup relay actions or Delayed Fault Clearing, for one of the following”. In Table 1, P2 and P3, the last column “Non-Consequential Load Loss Allowed” where the requirement "No12" appears, and in footnote 12, the standard as proposed does not allow for any Non-Consequential Load Loss. When the Non-Consequential Load Loss (footnote b) issue is clarified in Project 2010-11 this requirement may be changed. Therefore, if this proposed Standard is enforced before Project 2010-11 is completed, entities will be required to meet this No Non-Consequential Load Loss requirement without the exception allowed in the existing TPL-002-0, footnote “b”. This will require immediate redesigns to meet this particular requirement. The unintended consequence could be that operators of local systems that are currently networked may opt to begin operation as radial systems, and future designs for local systems may be radial, at any voltage level. We suggest that the proposed footnote 12 include a provision to default to the existing footnote “b” in TPL-002-0 until Project 2010-11 is decided. Please revise footnote 12 to read, “Note: Non-Consequential Load Loss is being decided in Project 2010-11. When that project is finalized, the resolution will be copied here. In the interim, planned or controlled interruption of electric supply to radial customers or some local Network customers, connected to or supplied by the Faulted element or by the affected area, may occur in certain areas without impacting the overall reliability of the interconnected transmission systems. To prepare for the next contingency, system adjustments are permitted, including curtailments of contracted Firm (non-recallable reserved) electric power Transfers.” Timing of this project and project 2010-11 is critical. It would be very difficult to vote to approve the proposed TPL-001-2 prior to knowing the outcome of Project 2010-11 (footnote b issue).
Individual
Kathleen Goodman
ISO New England Inc.
Yes
No
The definition of Year One could be deleted and used in place of Year One within the text of the

requirement. The proposed definition has now added ambiguity with respect to “year two” and “year five” which are not defined. Year two could be deleted and R.2.1.1 modified as follows: System peak Load representing a point in time 12-24 months and another point in time 48-65 months into the future from the time the study is initiated.
No
R1.1 Part 1.1.2. With respect to known outages, there needs to be greater flexibility in the standards (e.g. more tolerance to non-consequential load shedding or limitations to the contingencies that need to be considered (e.g. P0, P1, & P2)). Regional allowances for load shedding under this condition should be approved. Duration of known outages should be increased from six months to one year; R1.1 Part 1.1.6 Delete "required for Load". Resources may also be used for export to other areas, not just internal load.
No
We can agree with R2.1 however with respect to R2.2 Language should be consistent with 2.1 for example - use "current or qualified past studies" instead of "the following annual current study."
No
Part 2.1.4, requires an entity to vary one or more conditions to demonstrate a change in performance. If the cases were initially stressed, this may force an entity to simulate conditions with less severe stresses. At this point, there is limited to no value to this additional workload. Having a requirement to test at least one sensitivity as a blanket requirement may not be informative by itself and is more unclear since sensitivities are being required on an undefined base set of conditions. Additionally, our concern involves wording under 2.1.4 and 2.4.3 that sensitivities are required varying one or more conditions. Subsequently, in requirement 2.7.2 corrective action plans need to be developed to resolve performance deficiencies “only” if identified in multiple conditions or require a rationalization why no corrective action plan is necessary. Multiple conditions sensitivities under 2.1.4 and 2.4.3 are necessary to satisfy requirement 2.7.2. Requirement 2.7.2 adds ambiguity and should be removed. Requirement 2.7.2 should be revised as follows: 2.7.2. Corrective Action Plans are not required for performance deficiencies identified in a sensitivity analysis.
Yes
Yes
Yes
We are supportive of the change to P5. However, in making this modification, other items need to also be changed. In Table 1 – Stability, the language should be made similar to wording in P5. Protection System should be removed and replaced with the words “relay failure”. This change should be made for 2a through 2d: 2. Local or wide area events affecting the Transmission System such as: a. 3Ø fault on generator with stuck breaker10 or a relay failure resulting in Delayed Fault Clearing. b. 3Ø fault on Transmission circuit with stuck breaker10 or a relay failure resulting in Delayed Fault Clearing. c. 3Ø fault on transformer with stuck breaker10 or a relay failure resulting in Delayed Fault Clearing. d. 3Ø fault on bus section with stuck breaker10 or a relay failure resulting in Delayed Fault Clearing. We also believe that Note 11 needs clarifying wording as shown below: "Excludes circuits that share a common structure (Planning event P7, Extreme event steady state 2a) or common Right-of-Way (Extreme event, steady state 2b) for a total of 1 mile or less"
Yes
Yes
Requirement 8 and 8.1, should be revised to reflect that comments only to the final Assessment (not drafts developed during a process) need a response and there should be a limit on the comment period as follows: If a recipient of the planning assessment final results provides documented comments on the results within 90 days of receipt, the respective Planning Coordinator or Transmission Planner shall provide a documented response to such recipient within 90 calendar days of receipt of those comments. We have other comments not addressed by this Comment Form as follows - Sections 2.7, 3.3, 4.3 and

overall. R2.7 requires that Corrective Action Plans are included in each Planning Assessment and states “Such actions may include…” followed by a list of actions. Runback/tripping of HVDC should be added to the list. Section 3.3 - We feel that the last sentence of 3.3.1 should be removed. This is handled by PRC-023. Line ratings are addressed by PRC-023. PRC-023 requires coordination with the Reliability Coordinator. Remove “Tripping of Transmission elements where relay loadability limits are exceeded.” Section 4.3 - High speed reclosing needs to be defined.
Individual
Oscar Herrera
Los Angeles Department of Water and Power
Yes
We commend the SDT for its work to continue the improvement on the proposed TPL-001-1. We were not able to find a place to include comment on Requirement R4; therefore, we have included our comments here: Section R4.3.1, bullet point 3 requires the stability analyses to include the impact of subsequent “[t]ripping of Transmission lines and transformers where transient swings cause Protection System operation based on generic or actual relay models”. As written, this bullet could be interpreted as requiring the inclusion of these relay models in stability data bases. We do not have generic or actual relay models in our dynamics data bases for tripping line faults on lines and transformers represented. We represent actual relay response and tripping times of relays, communications, and breakers to faults in tripping transmission lines and transformers. Requiring the inclusion of generic or actual relay models for all relays that can trip lines and transformers would add a large burden to the development and maintenance of accurate dynamics model files that would add little or no benefit. Please change this bullet to read: “Tripping of Transmission lines and transformers where transient swings cause Protection System operation based on known Protection System response”.
Yes
Yes
Yes
Yes
Yes
Yes
No. Table 1, P5 currently requires the study of “[d]elayed Fault Clearing due to the failure of a relay13 protecting the Faulted element to operate as designed”. As written, this requirement does not recognize the use of redundant relays for primary protection. In some cases side by side relays are used to provide primary fault tripping if one relay fails to operate. Per the requirement as stated, the redundant relay would provide no value in meeting this requirement. Please revise to acknowledge backup relays: “Single failure of a protection relay13 protecting the Faulted element to operate as designed, resulting in backup relay actions or Delayed Fault Clearing, for one of the following”. In Table 1, P2 and P3, the last column “Non-Consequential Load Loss Allowed” where the requirement "No12" appears, and in footnote 12, the standard as proposed does not allow for any Non-Consequential Load Loss. When the Non-Consequential Load Loss (footnote b) issue is clarified in Project 2010-11 this requirement may be changed. Therefore, if this proposed Standard is enforced before Project 2010-11 is completed, entities will be required to meet this No Non-Consequential Load Loss requirement without the exception allowed in the existing TPL-002-0, footnote “b”. This will require immediate redesigns to meet this particular requirement. The unintended consequence could be that operators of local systems that are currently

networked may opt to begin operation as radial systems, and future designs for local systems may be radial, at any voltage level. We suggest that the proposed footnote 12 include a provision to default to the existing footnote “b” in TPL-002-0 until Project 2010-11 is decided. Please revise footnote 12 to read, “Note: Non-Consequential Load Loss is being decided in Project 2010-11. When that project is finalized, the resolution will be copied here. In the interim, planned or controlled interruption of electric supply to radial customers or some local Network customers, connected to or supplied by the Faulted element or by the affected area, may occur in certain areas without impacting the overall reliability of the interconnected transmission systems. To prepare for the next contingency, system adjustments are permitted, including curtailments of contracted Firm (non-recallable reserved) electric power Transfers.” Timing of this project and project 2010-11 is critical. It would be very difficult to vote to approve the proposed TPL-001-2 prior to knowing the outcome of Project 2010-11 (footnote b issue).
Yes
Yes
Individual
Orlando A Ciniglio
Idaho Power Co
Yes
We were not able to find a place to include comment on Requirement R4; therefore, we have included our comments here: Section R4.3.1, bullet point 3 requires the stability analyses to include the impact of subsequent “[t]ripping of Transmission lines and transformers where transient swings cause Protection System operation based on generic or actual relay models”. As written, this bullet could be interpreted as requiring the inclusion of these relay models in stability data bases. We do not have generic or actual relay models in our dynamics data bases for tripping line faults on lines and transformers represented. We represent actual relay response and tripping times of relays, communications, and breakers to faults in tripping transmission lines and transformers. Requiring the inclusion of generic or actual relay models for all relays that can trip lines and transformers would add a large burden to the development and maintenance of accurate dynamics model files that would add little or no benefit. Please change this bullet to read: “Tripping of Transmission lines and transformers where transient swings cause Protection System operation based on known Protection System response”.
Yes
Yes
Yes
Yes
Yes
Yes
Yes
Table 1, P5 currently requires the study of “[d]elayed Fault Clearing due to the failure of a relay13 protecting the Faulted element to operate as designed”. As written, this requirement does not recognize the use of redundant relays for primary protection. In some cases side by side relays are used to provide primary fault tripping if one relay fails to operate. Per the requirement as stated, the redundant relay would provide no value in meeting this requirement. Please revise to acknowledge redundant relays for primary protection: “Single failure of a protection relay13 protecting the Faulted element to operate as

designed, resulting in backup relay actions or Delayed Fault Clearing, for one of the following". In Table 1, P2 and P3, the last column "Non-Consequential Load Loss Allowed" where the requirement "No12" appears, and in footnote 12, the standard as proposed does not allow for any Non-Consequential Load Loss. When the Non-Consequential Load Loss (footnote b) issue is clarified in Project 2010-11 this requirement may be changed. Therefore, if this proposed Standard is enforced before Project 2010-11 is completed, entities will be required to meet this No Non-Consequential Load Loss requirement without the exception allowed in the existing TPL-002-0, footnote "b". This will require immediate redesigns to meet this particular requirement. The unintended consequence could be that operators of local systems that are currently networked may opt to begin operation as radial systems, and future designs for local systems may be radial, at any voltage level. We suggest that the proposed footnote 12 include a provision to default to the existing footnote "b" in TPL-002-0 until Project 2010-11 is decided. Please revise footnote 12 to read, "Note: Non-Consequential Load Loss is being decided in Project 2010-11. When that project is finalized, the resolution will be copied here. In the interim, planned or controlled interruption of electric supply to radial customers or some local Network customers, connected to or supplied by the Faulted element or by the affected area, may occur in certain areas without impacting the overall reliability of the interconnected transmission systems. To prepare for the next contingency, system adjustments are permitted, including curtailments of contracted Firm (non-recallable reserved) electric power Transfers."
Yes
Yes
Individual
David Bradt
United Illuminating
Yes
No
Year One should be used within the text of the requirement. Do not have a definition for Year One.
No
For R1 Ambiguity regarding base case assumptions, in combination with lack of clarity and clear direction of purpose regarding the sensitivity analysis, undermines the objectives of the standard; R1.1 Part 1.1.2. With respect to known outages, there needs to be greater flexibility in the standards (e.g. more tolerance to non-consequential load shedding or limitations to the contingencies that need to be considered (e.g. P0, P1, & P2)). Regional allowances for load shedding under this condition should be approved. Duration of known outages should be increased from six months to one year; R1.1 Part 1.1.6 Delete "required for Load". Resources may also be used for export to other areas, not just internal load.
No
We can agree with R2.1 however with respect to R2.2 Language should be consistent with 2.1 for example - use "current or qualified past studies" instead of "the following annual current study".
No
If an entity does a stressed set of assumptions do they always need to do a non-stressed case?
Yes
Yes
Yes
In Table 1 – Stability, Make language similar to wording in P5. "Protection System" should be removed and replaced with the words "relay failure". This would avoid future interpretation issues about the intent of this requirement (as we understand it) to exclude more severe though less likely failures such as

battery systems. This change should be made for 2a through 2d on page 12). In Note 11 (page 14) ADD the wording shown in "quotes" below: Excludes circuits that share a common structure (Planning event P7, Extreme event steady state 2a) or common Right-of-Way (Extreme event, steady state 2b) for "a total of" 1 mile or less.
Yes
Yes
General Comment: We have other comments not addressed by this Comment Form as follows - Section 3.3, Section 4.3 and overall Section 3.3 - We feel that the last sentence of 3.3.1 should be removed. This is handled by PRC-023. Line ratings are addressed by PRC-023. PRC-023 requires coordination with the Reliability Coordinator. Remove “Tripping of Transmission elements where relay loadability limits are exceeded.” Section 4.3 - High speed reclosing is not defined. Overall – ISO New England and New England Transmission Owners have previously made comments which have not been addressed in the current version of the proposed standard. Support for the standard can at most be limited without addressing comments. We have previously commented on sensitivity analysis and guidance for base case assumptions. Also, extreme event analysis should not be mandated in this standard as no corrective action is required.
Group
Transmission Issues Subcommittee
Bob Cummings
No Comment
No Comment
Yes
No Comment
No comment
No
TIS believes that the term “expected” leaves the question as to “whose expectation.” It should be stated as to “expected…by the Transmission Planner.”
No comment
No
Delete the word “voltage” from the last header note J concerning Stability Only. All types of transient stability must be observed.
No comment
No comment
No comment
Group
SERC Dynamics Review Subcommittee
Robert Jones
Yes
“The comments expressed herein represent a consensus of the views of the above named members of the SERC Engineering Committee Dynamics Review Subcommittee only and should not be construed as the position of SERC Reliability Corporation, its board or its officers.”
Yes
Yes
Yes

Yes
Yes
Yes
Yes
Yes. The SERC DRS supports the revisions.
Yes
Yes
We wish to make a comment on R4.3.1: it appears that this requires stability simulations of both successful and unsuccessful high-speed reclosing for all contingency simulations regardless of whether high-speed reclosing is used on the faulted line. We suggest the following wording be used to replace the first bullet: “Successful high-speed reclosing and unsuccessful high-speed reclosing onto a fault, where such reclosing is applied." We wish to make a comment on the stability extreme event table: Changes were made in planning event P5 to narrow the focus to specific relay failures. The same changes are needed for stability extreme event 2a, 2b, 2c, and 2d.
Individual
John Sullivan
Ameren
Yes
Yes
No
The definition does not adequately address normal (pre-contingency) operating procedures or system configurations. Language should be added to the requirement (perhaps as R1.1.7) to include normal operating procedures or system configurations in place prior to any contingency occurring.
Yes
Yes
No
Industry needs guidance regarding how to provide reasonable induction motor representation as opposed to generic models.
Yes
Yes
No
For measurements M3 and M4, there is some question as to what is to be provided as evidence of a study. Would the study results alone provide sufficient evidence, or does the entire powerflow, stability, or short circuit effort need to be documented in a formal study report? There are no measures for the creation and coordination of contingency lists that are to be developed in R3.4, R3.5, R4.4, and R4.5. Are these contingency lists required to be a documented part of the study?

No
The sharing issues of requirement R8 are still not clear, therefore the R8 VSL is not clear. It is not clear if the intent of the SDT is for the PC to share the assessments with PCs and TPs are to share the assessments with TPs, or whether the intent is for the TP to share its assessments with its PC. Will posting the assessment to a secure web-site meet the intent of the requirement? Although the comment form is not designed to allow for such, we need to comment on R4.3.1: As written, it appears that this requires stability simulations of both successful and unsuccessful high-speed reclosing for all contingency simulations, regardless of whether high-speed reclosing is actually implemented. A suggested wording change for the first bullet: “Successful high-speed reclosing and unsuccessful high-speed reclosing onto a fault, where such reclosing is applied, and where such additional simulations are deemed appropriate by the PC or TP.” Another comment needs to be made regarding the stability extreme event table: Changes were made in planning event P5 to concentrate on specific relay failures. The same changes need to be made for stability extreme events 2a, 2b, 2c, and 2d. The proposed standard will significantly increase the amount of work required to develop more detailed and complex system models, to perform and document the engineering studies to meet the performance requirements, and to develop the assessments necessary for compliance. All of these increased engineering activities are perceived to provide marginal benefit to the reliability of the bulk electric system, but will require significant increases in manpower across the industry. Further, the manpower is presently not available to develop these more detailed models and to perform these studies with any reasonable assuredness. It will be a continuing challenge to the industry to obtain and keep the engineering talent needed to perform these compliance activities for such marginal benefits.
Individual
Si Truc PHAN
Hydro-Quebec TransEnergie
Yes
Yes
Yes
No
Requirement R2 Part 2.2 should be modified to read as 2.1 (not impose current annual studies as the only requirement for assessment)
No
It is questionable that sensitivity analysis be included in Requirements since a conservative approach should already be used in studies, in accordance with good engineering practices.
No
There is insufficient data available to accurately model system wide motor loads.
Yes
Yes
In table 1 on page 12 (Stability section), Relay failure should replace Protection System
Yes
Yes
• All references to 300 kV in document should be replaced with EHV (In the introduction, section 5) • The first phrase of Note 3 on p 14 should be revised as follows: “Bulk Electric System (BES) level references include extra-high voltage (EHV) Facilities defined as those representing the backbone of the System, generally at voltage greater than 300 kV, and high voltage (HV) Facilities defined as those not

representing the backbone of the System, as determined by the Planning Coordinator and approved by Regional Entity.”
Group
MRO's NERC Standards Review Subcommittee
Carol Gerou
Yes
Yes
Yes
We propose the following changes and questions: R1 – We offer the minor suggestion of replacing the wording of “maintain System models within their respective areas” with “maintain System models of elements that are interconnected to any portion of the BES that is owned or operated by the TP or PC”. This wording would avoid the ambiguity that can occur when a BA that is associated primarily with one TP declares ownership of a bus in another TP’s geographic area, but expects its primary TP to maintain the BA’s model data for the remote generation or load. R1.1.2 – We request the SDT opinion on how two individual outages should be modeled if they are both in excess of six months duration and they overlap by less than six months. Should the overlapping condition only be modeled if the condition is expected to last more than six months?
Yes
R2.1.3 – We offer the minor suggestion of revising R2.1.3 to state, “Known outages of generation or Transmission Facilities with a duration of at least six months be simulated along with P1 events for the System peak or Off-Peak conditions when the outages are scheduled to occur.” We interpret that the requirement should only call for the simulation of individual outages with duration of six months or more and not imply the simulation of sequential (back-to-back) outages where each individual outage is less than six months, but the composite duration of the back-to-back outages is more than six months. We also interpret that if two or more known outages with duration of at least six months are overlapping, then the overlapping outage condition would only be simulated for the conditions when the overlapping outages are scheduled to occur if the duration of the overlapping condition is at least six months. R2.1.5 – We offer a major suggestion regarding the phrase “could result in the unavailability of major transmission equipment” because this phrase is ambiguous and not defined. So, there is a significant risk of different and possibly contradictory interpretations by TPs, PCs, and auditors. We proposed adding that the TP and PC “shall provide documentation to support the technical rationale for defining unavailability of major transmission equipment” similar to R2.5.
No
R2.1.4 & R2.4.3 – We offer a major suggestion regarding the terms of ‘credible’ and ‘measurable change” because these terms are ambiguous and not defined. So, there is a significant risk of different and possibly contradictory interpretations by TPs, PCs, and auditors. We proposed adding that the TP and PC “shall provide documentation to support the technical rationale for determining the range of credible conditions and measurable change in performance” similar to R2.5. R2.1.4 & R2.4.3 bullet items – We offer the minor suggestion that the number and description of the bullet items in R2.1.4 match the bullet points in R2.4.3. Otherwise, please explain the reasons for any differences between the bullet items in R2.1.4 and R2.4.3. R2.1.4 bullet #2 & # 5 – We suggest that the wording in bullet #2 be changed to “Expected transfers and other generation dispatch scenarios”. This modification would put the transfer and dispatch element, which are complementary, together in the same bullet item, rather than grouping the ‘generation dispatch’ (operating level) element together with the generation capacity elements in bullet item #5. R2.1.4 bullet #7 – We offer the minor suggestion that the term “planned” be replaced with “known” to be consistent with R1.1.2 and R2.1.3. Besides the term “planned outage” has a specific meaning in the Reliability Standards that are specific to the Operating horizon. R2.7.2 – With regard to "include actions to resolve performance deficiencies identified in multiple sensitivity studies", we do not think that mitigation plans should be required for deficiencies found in multiple sensitivity studies because the conditions in some sensitivity studies are more extreme and less likely than base case conditions. It’s impractical to require corrective actions for longer term horizon sensitivities due to how fast the electric

grid changes. We believe sensitivity analyses are valuable to improving the development of mitigation plans to address base case performance limit concerns. Some of the sensitivity study conditions are not credible or plausible enough to warrant the implementation of mitigation measures. What is the interpretation of multiple sensitivity studies - more than one or a majority of the number that were studied?
Yes
Yes
Yes
We offer the major suggestion that Requirements not be created in the Performance Table and be absent from the Requirement section. Requirements should only be referred to in the Performance Table after they already exist in the Requirement section. a. Notes “f” and “g” under “Steady State Only” section in the Table 1 header create requirements (e.g. use the verb, “shall”) that do not appear in the Requirements section. We suggest adding R3.3.5, which could read, “Applicable System Operating Limits for the planning horizon shall not be exceeded.” [After R3.3.5 is added, Notes “f” and “g” should be revised and refer to R3.3.5.]. b. Note “i” under “Steady State Only” section in the Table 1 header creates a requirement (e.g. use the verb, “shall”) that does not appear in the Requirements section. We suggest adding R3.3.6, which could read, “The response of voltage sensitive Load including Load that is disconnected from the System by end-user equipment associated with an event shall not be used to meet steady state voltage requirements.” [After R3.3.6 is added, Note “d” should be revised to refer to R3.3.6. c. Note “j” under the “Stability Only” section in the Table 1 header creates a requirement (e.g. use the verb, “shall”) that does not appear in the Requirements section. We suggest adding R4.1.4, which could read, “Transient voltage response shall be within acceptable limits established by the Planning Coordinator and the Transmission Planner”. [After R4.1.4 is added, Note “j” should be revised to refer to R4.1.4.]
We offer the major suggestion that the P3 Category performance criteria be modified to apply only to the loss of two generators. The SDT properly recognizes that generator outages are significantly more probable than line or transformer outages and should be “higher” in the category list. However given the clearly higher probability of generator outages, the probability of the loss of two generators is clearly higher than the loss of a generator and line or the loss of a generator and transformer. Therefore, if the loss of two generators is in the P3 category, then the loss of a generator and line or transformer should be clearly “lower” in the category list. We suggest the listing of: the loss of a generator and some other element (e.g. transmission circuit, transformer, shunt device, and single pole of DC line) be moved to a lower event category, such as the P6 Category by adding “1. Generator” to the listing in the Initial System Condition (Loss of . . .) column. Item 2.a in the Extreme Events, Steady State section – Clarify the meaning of the loss of multiple circuits in Item 2.a by using wording similar to P7. We suggest this text: “a. Loss of three or more circuits that share a common structure.” Footnote 6 – Further clarify the applicable shunt devices in Footnote 6 with this suggested text: “6. Requirements which are applicable to shunt devices, also apply to FACTS devices that are connected to ground, but not instrument voltage transformers or surge arresters.”
Yes
Yes
Other Comments: 1. How are backup relays handled (TPL-002-0, R1.3.10 & TPL-001-2 R1 & P5)? What does FERC construe as normal system for a protection system. The TPL-001-2 R1 & P5, this standard doesn’t appear to address primary protection and how this handled. 2. Revise the Planning Assessment definition to more explicitly apply to the BES and the TPL-001 requirements. We suggest text of: “Planning Assessment: Documented evaluation of future Transmission System performance and Corrective Action Plans to remedy identified deficiencies in the BES from the steady state and stability performance requirements set forth in the TPL-001 standard.” 3. R2.1.5 – We propose replacing the term ‘major Transmission’ with “BES” because BES is a well defined term, while the term, ‘major Transmission‘, is not. 4. Add R2.3.1 – We suggest the addition of a R2.3.1 requirement to emulate the

distinction between the requirement to perform a short circuit assessment and conduct required studies or analysis to support the assessment (e.g. R2.1/R2.1.1 and R2.2/R2.2.1). We propose wording such as, “Perform an analysis for at least one year in the Near Term Transmission Planning Horizon.” This requirement would set an expectation that an analysis should be conducted to at least one or more years in the near-term planning horizon, rather than imply that an analysis of all five years in the near-term planning horizon must be conducted. 5. R2.7.4 – We suggest that the wording of R2.7.4 be the same as R.2.8.2. Otherwise, we propose that R2.7.4 and R2.8.2 be revised with wording like, “. . . implementation status of identified Corrective Action Plans for System Facilities and Operating Procedures.” to clarify that the identified system facilities and operating procedures refer only to those that were in the previous year’s Corrective Action Plans. 6. R3.3.1 – The term of ‘controls’ is ambiguous and not defined, unlike the term, ’Protection Systems’, which is defined. Therefore, we suggest that this item be defined or more clearly described to avoid the risk of different and possibly contradictory interpretations by TPs, PCs, and auditors. 7. R3.3.1, bullet #1 - We suggest qualifying which generating units to consider and which voltage limits to simulate with revised wording like, “Trip generating units that are connected to the BES when actual or assumed minimum generator steady state or ride through voltage limits are known and simulations show voltages may fall below the voltage limit. If assumed voltage limits are used, then they should be included in the assessment“. The requirement should not apply to all relevant generating units until one of the MOD standards requires all Generator Owners to provide their minimum generating unit voltage limits to the TP and PC. If the wording of R3.3.1 bullet #1 must be different from its counterpart, R4.3.1 bullet #2, then please explain the reasons for any differences. 8. R3.4.1 – Compliance with the requirement “to coordinate” is problematic and non-measureable We suggest replacing it with the requirement “to communicate”. 9. R3.5 - We interpret that R3.5 requires the TP and PC to conduct an evaluation of possible actions to reduce the likelihood or impact of extreme events, which produce the more severe impacts, if cascading outages may occur. Does the drafting team intend for the TP and PC to fulfill this requirement for at least one event in each of the five categories (i.e. 3 steady state and 2 stability) or in each of the 21 categories/sub-categories (i.e. 14 steady state and 7 stability). Also, if the resulting cascading outages do not result in any overloads, under-voltages, voltage collapse, or loss of generator synchronization, then should the evaluation of possible actions to reduce likelihood or impact be required? 10. R4.1.1 – We suggest that there should be some qualification of which generating units are referred to in this requirement. We propose that the requirement say, “No generating unit connected to the BES shall pull out of synchronism.” For example, some utilities include smaller generation units that are connected at voltages below 100 kV and even down to distribution voltage in their base cases. 11. R4.1.2 – We propose that the wording of this requirement be revised to reflect the same BES qualification of the generating unit that we noted in R4.1.1 above. 12. R4.3.1 – This requirement refers to high speed reclosing and we presume that this is special high speed reclosing that is completed in several cycles, rather than the normal high speed reclosing that is completed in a number of seconds. We recommend that the term high speed reclosing be more clearly defined for this sub-requirement. 13. R5 – This requirement should remove the criterion item, “post-Contingency voltage deviation”, because this criterion is not used widely enough in the industry to be well established criterion. 14. R8 – This requirement should be revised to limit the need to provide the Planning Assessment as follows “adjacent Planning Coordinators and adjacent Transmission Planners and to any registered functional entity…” This suggestion is added to the requirement to clarify that the word adjacent also applies to Transmission Planners and to clarify that the functional entity must be registered in order for the entity to be applicable to the requirement.
Individual
Sergio Garza
LCRA TSC
Yes
Yes
Yes

Yes
No
The first bullet item in Section 3.3.1 should be the same as the second bullet in Section 4.3.1. The wording is somewhat confusing in both. Also, the wording as proposed does not recognize that a high voltage limit could also be violated. Edits to the item as shown below are suggested. Tripping of generators where simulations show generation bus voltages or high side generation step up (GSU) voltages are outside known limits, or assumed to be outside generator steady state limits, or have reached the generator ride through voltage limit. Include in the assessment any assumptions made.
Yes
No
The third bullet of 4.3.1 requires the addition of relay models for stability studies. This type of analysis is performed today by scripting the tripping of multiple lines due to breaker failure events. The inclusion of relay models into the stability study will result in added complexity and an over reliance on relay models for system stability assessment. The stability assessment should assess stability resulting from the operation of relays as opposed to reliance on a relay model for proper system representations. Assurance of the proper operation of relays results from the analysis performed to set relays not from stability studies. From Section 4.3.1: “Tripping of Transmission lines and transformers where transient swings cause Protection System operation based on generic or actual relay models.” Section 4.5 requires that “The rationale for those Contingencies selected for evaluation shall be available as supporting information.” This will have to be developed. Requirement R5 requires the establishment of criteria for transient voltage response of the system. This seems unnecessary given the proposed changes to Table 1. The proposed changes to table 1 seem to make clear the type of system response that is allowable through its specification of what is allowable in terms of interruptions to Firm Transmission and Non-Consequential loads. R5 states: “Each Transmission Planner and Planning Coordinator shall have criteria for acceptable System steady state voltage limits, post-Contingency voltage deviations, and the transient voltage response for its System. For transient voltage response, the criteria shall at a minimum, specify a low voltage level and a maximum length of time that transient voltages may remain below that level.”
An important footnote to Table 1 is omitted from this proposed revision. This omission prevents adequate evaluation of the footnote. Footnote 12 in Table 1 is no longer applied to P2.1, P2.2, P2.3, P4, and P5. The footnote states: “Non-Consequential Load Loss is being decided in Project 2010-11. When that project is finalized, the resolution will be copied here.” The footnote should be removed from the proposed revision until Project 2010-11 is concluded.
Individual
Saurabh Saksena
National Grid
Yes
No
Year One should be used within the text of the requirement. Do not have a definition for Year One. Year two could be deleted and R.2.1.1 modified as follows: For the Planning Assessment started in a given calendar year, the first year that is studied must include the forecasted peak Load period for one of the following two calendar years. An additional Near-term study must be performed that is four calendar years beyond the first year that is studied.
No
For R1: Ambiguity regarding base case assumptions, in combination with lack of clarity and clear

direction of purpose regarding the sensitivity analysis, undermines the objectives of the standard; R1.1 Part 1.1.2. With respect to known outages, there needs to be greater flexibility in the standards (e.g. more tolerance to non-consequential load shedding or limitations to the contingencies that need to be considered (e.g. P0, P1, & P2)). Regional allowances for load shedding under this condition should be approved. Duration of known outages should be increased from six months to one year; R1.1 Part 1.1.6 Delete "required for Load". Resources may also be used for export to other areas, not just internal load.
No
We can agree with R2.1 however with respect to R2.2 Language should be consistent with 2.1 for example - use "current or qualified past studies" instead of "the following annual current study".
No
If an entity does a stressed set of assumptions do they always need to do a non-stressed case?
Yes
Yes
Yes
In Table 1 – Stability, Make language similar to wording in P5. Protection System should be removed and replaced with the words relay failure. This change should be made for 2a through 2d: 2. Local or wide area events affecting the Transmission System such as: a. 3Ø fault on generator with stuck breaker10 or a relay failure resulting in Delayed Fault Clearing. b. 3Ø fault on Transmission circuit with stuck breaker10 or a relay failure resulting in Delayed Fault Clearing. c. 3Ø fault on transformer with stuck breaker10 or a relay failure resulting in Delayed Fault Clearing. d. 3Ø fault on bus section with stuck breaker10 or a relay failure resulting in Delayed Fault Clearing. In Note 11 change wording as shown below: Excludes circuits that share a common structure (Planning event P7, Extreme event steady state 2a) or common Right-of-Way (Extreme event, steady state 2b) for a total of 1 mile or less
Yes
Yes
Other Comments: Section 3.3 - We feel that the last sentence of 3.3.1 should be removed. This is handled by PRC-023. Line ratings are addressed by PRC-023. PRC-023 requires coordination with the Reliability Coordinator. Remove “Tripping of Transmission elements where relay loadability limits are exceeded.” Section 4.3 - High speed reclosing is not defined. We have previously commented on sensitivity analysis and guidance for base case assumptions. Also, extreme event analysis should not be mandated in this standard as no corrective action is required.
Individual
Charles Lawrence
American Transmission Company
Yes
Yes
No
We propose the following changes and questions: R1 – We offer the minor suggestion of replacing the wording of “maintain System models within their respective areas” with “maintain System models of elements that are interconnected to any portion of the BES that is owned or operated by the TP or PC”. This wording would avoid the ambiguity that can occur when a BA that is associated primarily with one TP declares ownership of a bus in another TP’s geographic area, but expects its primary TP to maintain the BA’s model data for the remote generation or load. R1.1.2 – We request a SDT opinion on how two individual outages should be modeled if they are both in excess of six months duration and they overlap by less than six months. Should the overlapping condition only be modeled if the condition is expected to

last more than six months?
No
R2.1.3 – We offer the minor suggestion of revising R2.1.3 to state, “Known outages of generation or Transmission Facilities with a duration of at least six months be simulated along with P1 events for the System peak or Off-Peak conditions when the outages are scheduled to occur.” We interpret that the requirement should only call for the simulation of individual outages with duration of six months or more and not imply the simulation of sequential (back-to-back) outages where each individual outage is less than six months, but the composite duration of the back-to-back outages is more than six months. We also interpret that if two or more known outages with duration of at least six months are overlapping, then the overlapping outage condition would only be simulated for the conditions when the overlapping outages are scheduled to occur if the duration of the overlapping condition is at least six months.
No
R2.1.4 & R2.4.3 – We offer a major suggestion regarding the terms of ‘credible’ and ‘measurable change” because these terms are ambiguous and not defined. So, there is a significant risk of different and possibly contradictory interpretations by TPs, PCs, and auditors. We proposed adding that the TP and PC “shall provide documentation to support the technical rationale for determining the range of credible conditions and measurable change in performance” similar to R2.5. R2.1.4 & R2.4.3 bullet items – We offer the minor suggestion that the number and description of the bullet items in R2.1.4 match the bullet points in R2.4.3. Otherwise, please explain the reasons for any differences between the bullet items in R2.1.4 and R2.4.3. R2.1.4 bullet #7 – We offer the minor suggestion that the term “planned” be replaced with “known” to be consistent with R1.1.2 and R2.1.3. Besides the term “planned outage” has a specific meaning in the Reliability Standards that are specific to the Operating horizon. R2.7.2 – With regard to "include actions to resolve performance deficiencies identified in multiple sensitivity studies", we do not think that mitigation plans should be required for deficiencies found in multiple sensitivity studies because the conditions in sensitivity studies are more extreme and less likely than base case conditions. Some sensitivity study conditions are not credible or plausible enough to warrant the implementation of mitigation measures. What is the SDT interpretation of multiple studies - more than one or a majority of the sensitivities that were studied?
Yes
Yes
No
We offer the major suggestion that Requirements not be created in the Performance Table and be absent from the Requirement section. Requirements should only be referred to in the Performance Table after they already exist in the Requirement section. (a.) Notes “f” and “g” under “Steady State Only” section in the Table 1 header create requirements (e.g. use the verb, “shall”) that do not appear in the Requirements section. We suggest adding R3.3.5, which could read, “Applicable System Operating Limits for the planning horizon shall not be exceeded.” [After R3.3.5 is added, Note “a” should be revised and refer to R3.3.5.]. (b.) Note “i” under “Steady State Only” section in the Table 1 header creates a requirement (e.g. use the verb, “shall”) that does not appear in the Requirements section. We suggest adding R3.3.6, which could read, “The response of voltage sensitive Load including Load that is disconnected from the System by end-user equipment associated with an event shall not be used to steady state voltage requirements.” [After R3.3.6 is added, Note “i” should be revised to refer to R3.3.6.]. (c.) Note “j” under the “Stability Only” section in the Table 1 header creates a requirement (e.g. use the verb, “shall”) that does not appear in the Requirements section. We suggest adding R4.1.4, which could read, “Transient voltage response shall be within acceptable limits established by the Planning Coordinator and the Transmission Planner”. [After R4.1.4 is added, Note “j” should be revised to refer to R4.1.4.]
We offer the major suggestion that the P3 Category performance criteria be modified to apply only to the loss of two generators. The SDT properly recognizes that generator outages are significantly more probable than line or transformer outages and should be “higher” in the category list. However given the clearly higher probability of generator outages, the probability of the loss of two generators is clearly

higher than the loss of a generator and line or the loss of a generator and transformer. Therefore, if the loss of two generators is in the P3 category, then the loss of a generator and line or transformer should be clearly “lower” in the category list. We suggest the listing of: the loss of a generator and some other element (e.g. transmission circuit, transformer, shunt device, and single pole of DC line) be moved to a lower event category, such as the P6 Category by adding “1. Generator” to the listing in the Initial System Condition (Loss of . . .) column. We offer the minor suggestion that Item 2.a in the Extreme Events, Steady State section – Clarify the meaning of the loss of multiple circuits in Item 2.a by using wording similar to P7. We suggest this text: “a. Loss of three or more circuits that share a common structure.” We offer the minor suggestion that Footnote 6 – Further clarify the applicable shunt devices in Footnote 6 with this suggested text: “6. Requirements which are applicable to shunt devices, also apply to FACTS devices that are connected to ground, but not instrument voltage transformers or surge arresters.” ATC has significant concerns with Q3.2 (R2.1.4 & R2.4.3), Q4 (Table requirements) and Q5 (P3 scope), as noted above. In addition, ATC offers the following suggestions to promote proper Reliability Standard quality and content. (1.) Revise the Planning Assessment definition to more explicitly apply to the BES and the TPL-001 requirements. We suggest text of: “Planning Assessment: Documented evaluation of future Transmission System performance and Corrective Action Plans to remedy identified deficiencies in the BES from the steady state and stability performance requirements set forth in the TPL-001 standard.” (2.) R2.1.5 – We propose replacing the term ‘major Transmission’ with “BES” because BES is a well defined term, while the term ‘major Transmission‘ is not. (3.) Add R2.3.1 – We suggest the addition of a R2.3.1 requirement to emulate the distinction between the requirement to perform a short circuit assessment and conduct required studies or analysis to support the assessment (e.g. R2.1/R2.1.1 and R2.2/R2.2.1). We propose wording such as, “Perform an analysis for at least one year in the Near Term Transmission Planning Horizon.” This requirement would set an expectation that an analysis should be conducted to at least one or more years in the near-term planning horizon, rather than imply that an analysis of all five years in the near-term planning horizon must be conducted. (4.) R2.7.4 – We suggest that the wording of R2.7.4 be the same as R.2.8.2. Otherwise, we propose that R2.7.4 and R2.8.2 be revised with wording like, “. . . implementation status of identified Corrective Action Plans for System Facilities and Operating Procedures.” to clarify that the identified system facilities and operating procedures refer only to those that were in the previous year’s Corrective Action Plans. (5.) R3.3.1 – The term of ‘controls’ is ambiguous and not defined, unlike the term, ’Protection Systems’, which is defined. Therefore, we suggest that this item be defined or more clearly described to avoid the risk of different and possibly contradictory interpretations by TPs, PCs, and auditors. (6.) R3.3., bullet #1 - We suggest qualifying which generating units to consider and which voltage limits to simulate with revised wording like, “Trip generating units that are connected to the BES when actual or assumed minimum generator steady state or ride through voltage limits are known and simulations show voltages may fall below the voltage limit. If assumed voltage limits are used, then they should be included in the assessment“. The requirement should not apply to all relevant generating units until one of the MOD standards requires all Generator Owners to provide their minimum generating unit voltage limits to the TP and PC. If the wording of R3.3.1, bullet #1 must be different from its counterpart, R4.3.1, then please explain the reasons for any differences. (7.) R3.4.1 – Compliance with the requirement “to coordinate” is problematic and non-measurable. We suggest replacing it with the requirement “to communicate”. (8.) R3.5 - We interpret that R3.5 requires the TP and PC to conduct an evaluation of possible actions to reduce the likelihood or impact of extreme events, which produce the more severe impacts, if cascading outages may occur. Does the drafting team intend for the TP and PC to fulfill this requirement for at least one event in each of the five categories (i.e. 3 steady state and 2 stability) or in each of the 21 categories/sub-categories (i.e. 14 steady state and 7 stability). Also, if the resulting cascading outages do not result in any overloads, under-voltages, voltage collapse, or loss of generator synchronization, then should the evaluation of possible actions to reduce likelihood or impact be required? (9.) R4.1.1 – We suggest that there should be some qualification of which generating units are referred to in this requirement. We propose that the requirement say, “No generating unit connected to the BES shall pull out of synchronism.” For example, some utilities include smaller generation units that are connected at voltages below 100 kV and even down to distribution voltage in their base cases. (10.) R4.1.2 – We propose that the wording of this requirement be revised to reflect the same BES qualification of the generating unit that we noted in R4.1.1 above. (11.) R4.3.1 – This requirement refers to high speed reclosing and we presume that this is special high speed reclosing that is completed in several cycles,

rather than the normal high speed reclosing that is completed in a number of seconds. We recommend that the term high speed reclosing be more clearly defined for this sub-requirement. (12.) R5 – We propose removing the criteria item, “post-Contingency voltage deviation”, because this criterion has not been developed and used widely enough in the industry to be introduced into the standards. (13.) R7 - Revise part of the requirement text to read, “. . . identify each entity’s individual and joint responsibilities . . .“ to provide better clarity. Perhaps this requirement should be listed at the beginning of the Requirements section, instead being mentioned near the end of this section. (14.) Change the forward referencing to backward referencing. We agree with R2.6, R3.1, R3.5, R4.1, and 4.2. However, we suggest that the requirements be ordered so that all of the references refer back to earlier text, rather later text to be consistent with the rest of this standard and other referencing in this standard (e.g. R2.1.3, R2.1.4, R2.4.3, R3, R3.3, R3.5, R4, R4.3, R4.4, R4.5), as well as other standards.
Yes
Yes
Individual
Thad Ness
American Electric Power (AEP)
Yes
Yes
Yes
Yes
R2, Part 2.1 – idicates that ‘qualified’ past studies can be utilized. This is an ambiguous term and we suggest the SDT consider the implications.
Yes
Yes
Yes
Yes
Yes
Yes
Individual
Bill Middaugh
Tri-State Generation & Transmission
Yes
No
Comments: The Year One definition is somewhat clearer now, but there is still some ambiguity. We recommend the removal of the term “Year One, year two, and year five” from R2.1.1. and deletion of the

Year One definition (definitions are not required for year two and year five, for instance). The Year One concept can be integrated into the definition of Near-Term Transmission Planning Horizon, which we suggest changing to “The period beginning with the first year following the operating horizon, as determined by the Transmission Planner or Planning Coordinator, through the fifth year.” Then, rather than say “Year One, year two, and year five”, we can use the phrase “at least one of the first two years of the Near-Term Transmission Planning Horizon, and the fifth year”. This will require corresponding changes in R2.1.1 and R2.1.2.
No
We suggest changing the added sentence to “This establishes the Category P0, No Contingency, Initial System Conditions in Table 1.”
No
2.1.5 – Change “shall be performed for” to “shall have been performed for.”
Yes
No
Rather than specifically call out induction motor loads, we recommend changing the second sentence to “Stability analysis shall include models that represent the expected dynamic behavior of system elements that could impact the study area.”
Yes
Yes
Table 1, P5 does not seem to account for redundant relays in the Protection System to mitigate potential relay failure. We recommend changing the “Event” to “Delayed Fault Clearing due to the failure of a relay to operate as designed, if that is the only relay protecting the Faulted element, for one of the following:” In Table 1, P2 and P3, the last column “Non-Consequential Load Loss Allowed” where the requirement "No12" appears, and in footnote 12, the standard as proposed does not allow for any Non-Consequential Load Loss. When the Non-Consequential Load Loss (footnote b) issue is clarified in Project 2010-11 this requirement may be changed. Therefore, if this proposed Standard is enforced before Project 2010-11 is completed, entities will be required to meet this No Non-Consequential Load Loss requirement without the exception allowed in the existing TPL-002-0, footnote “b”. This will require immediate redesigns to meet this particular requirement. The unintended consequence could be that operators of local systems that are currently networked may opt to begin operation as radial systems, and future designs for local systems may be radial, at any voltage level. We suggest that the proposed footnote 12 include a provision to default to the existing footnote “b” in TPL-002-0 until Project 2010-11 is decided. Please revise footnote 12 to read, “Note: Non-Consequential Load Loss is being decided in Project 2010-11. When that project is finalized, the resolution will be copied here. In the interim, planned or controlled interruption of electric supply to radial customers or some local Network customers, connected to or supplied by the Faulted element or by the affected area, may occur in certain areas without impacting the overall reliability of the interconnected transmission systems. To prepare for the next contingency, system adjustments are permitted, including curtailments of contracted Firm (non-recallable reserved) electric power Transfers.” Timing of this project and project 2010-11 is critical. It would be very difficult to vote to approve the proposed TPL-001-2 prior to knowing the outcome of Project 2010-11 (footnote b issue). Second, we are unclear why voltage relays are included in footnote 13 and think they can be removed. Third, in the Extreme Events – Stability section of Table 1, items 2a-2d “Protection System failure” should be changed to “relay failure” to be consistent with Table 1, Category P5.
Yes
Yes
None regarding R8. The following comments refer to parts of the proposed standard for which no questions are asked. R4, Part 4.1.2: The response to our previous comment indicated that our description was for a system Stability issue. R4 is addressing system Stability and we believe the

comment still applies and that it was not answered in the response. We have two issues with 4.1.2: Sometimes out-of-step (loss of generator synchronism) is better mitigated through islanding by tripping transmission rather than by tripping generators; the second point is that the ability of present modeling programs does not include the capability to model all types of impedance relays and their associated OOS blocking and tripping capabilities that are available. R4, Part 4.3.1: The third bullet implies that all impedance relays (and perhaps others) will need to be modeled in the stability databases. We question whether the existing simulation programs can accommodate this large magnitude of data inclusion and whether there is any benefit to BES reliability. Certainly using generic models rather than actual models would be of no benefit. We recommend changing the third bullet to “Evaluation of Protection System behavior when transient power swings are detected or predicted to have impedance characteristics that may approach relay operating characteristics.”
Individual
David Miller
Lakeland Electric
Yes
No
While the definition of Year One addresses the time span this year occupies, it does not address when that time span begins. The example which was added to the definition suggests that Year One begins twelve months from the start of the Planning Assessment, but it does not appear to be specifically stated. The following language is recommended: "The first twelve month period that a Planning Coordinator or a Transmission Planner is responsible for assessing, beginning twelve months from the planned completion date of the Planning Assessment."
No
Consider removing “…the latest…” from R1 and changing R1.1.2 to state “…six months during the period of study.”
No
No, the phrase any material changes used in requirement R.2.6.2 will effectively cause all Planning Authorities to run all studies every year regardless of minor changes in the model. The overwhelming majority of PAs use a 10 year set of planning models developed annually by Regions or Subregions. These annual sets of planning models will always have some changes. The annual study requirement is especially problematic for Stability and Short circuit studies that require much more engineering time to complete and are much less likely to have results impacted by minor model changes such as different load forecasts. Uncertainty with audit review of technical rationale documentation will serve to focus Transmission Planning engineering resources on short term compliance to an extent that is counter productive. Please consider removing R.2.6.2
No
It is recommended that the phrase “…measureable change in performance…” be changed to “…measurable change in system response…” A change in performance is unclear, and could suggest that a sensitivity study is valid only if the System is stressed to the point that it no longer performs within the criteria established by Table 1. In addition, it is recommended that the following text appear after the last sentence of 2.4.3: “The condition or conditions to be varied shall be left to the discretion of the Transmission Planner or Planning Coordinator, provided they are selected from the list below.”
Yes
Yes
Yes
The performance requirements of Table 1 do not allow the loss of non-consequential load for single and multiple contingency events. The disallowance of load loss does not provide any real benefit to the

reliability of the BES and is an unnecessary overreach into local quality of service issues that are best addressed by State, Provincial or Municipal authorities. There may be circumstances such as high local transmission costs or local opposition to transmission construction where prohibition of non-consequential load loss represents a poor cost/benefit or quality of life tradeoff. Having a provision at the regional level that a PA or TP can have a certain amount of non-consequential load loss designed or planned in to its system that would be reasonable if it is acceptable to the RE and does not have an adverse impact on the remaining BES. In lieu of such a RE provision, providing a quantitative cap in non-consequential load loss such as 100 MW may be rationale compromise in the goal of limiting load loss for the more probable outage events. Our preference would be to retain the capability of limited non-consequential load loss. It is our understanding that footnote 9 is under consideration as part of Project 2010-11 and should be noted as such for clarification.
No
Consider removing “the latest” from M1.
No
The requirement to distribute the Planning Assessment should be more flexible and allow for making the Planning Assessment available, such that those entities that desire the information can have it readily available. R8 should be modified as follows: Each Planning Coordinator and Transmission Planner shall make available its Planning Assessment results to adjacent Planning Coordinators and Transmission Planners and to any functional entity that indicates a reliability related need for the Planning Assessment results.
Group
E.ON U.S.
Brent.Ingebrigtson@eon-us.com
No
Comments: 2.2.1. A current study assessing expected System peak Load conditions for one of the years in the Long-Term Transmission Planning Horizon and the rationale for why that year was selected. E.ON U.S. believes the scope of the ‘current study’ should be defined. It is not clear whether the scope is the same as outlined in section 2.1.
No
In the statement: “the Planning Coordinator and Transmission Planner shall coordinate with adjacent Planning Coordinators and Transmission Planners to ensure that Contingencies on adjacent Systems which may impact their Systems are included in the Contingency list.” E.ON U.S. believes that the use of the pronoun “their” in the quoted section above is confusing. “Their” could be read as applying to the adjacent Planning Coordinators and not to the Planning Coordinator to whom the standard applies. E.ON U.S. recommends that the word “their” should be changed to “the Planning Coordinator’s and Transmission Planner’s” in order to make it clear.
E.ON U.S. believes that Table 1 should be formatted to avoid having the tables split by page breakers. In addition, tables spanning across multiple pages should have headers at the top of each page.
Individual
Steve Stafford
GTC
Yes

Yes
Yes
Yes
Yes
No
We have concerns for including induction motor representations in the load models without any study or bench-marking activities to meet the requirements of R2.4.1. This information should be supplied by the LSE as part of the MOD standard. We understand that the proposed standard will accept an aggregate system load model which represents the overall dynamic behavior of the load to relieve the burden of trying to develop specific induction motor load representation at each load bus. However this modeled system response will be considerably different compared to the actual system response which will open up the industry to unwarranted scrutiny and possible compliance violation investigations.
Yes
Yes
Yes
Yes
Individual
Chifong Thomas
Pacific Gas and Electric Company
Yes
We commend the SDT for its work to continue the improvement on the proposed TPL-001-1. We were not able to find a place to include comment on Requirement R3 or R4; therefore, we have included our comments here: Section R4.3.1, bullet point 3 requires the stability analyses to include the impact of subsequent “[t]ripping of Transmission lines and transformers where transient swings cause Protection System operation based on generic or actual relay models”. As written, this bullet could be interpreted as requiring the inclusion of these relay models in stability data bases. We do not have generic or actual relay models in our dynamics data bases for tripping line faults on lines and transformers represented. We represent actual relay response and tripping times of relays, communications, and breakers to faults in tripping transmission lines and transformers. Requiring the inclusion of generic or actual relay models for all relays that can trip lines and transformers would add a large burden to the development and maintenance of accurate dynamics model files that would add little or no benefit. Please change this bullet to read: “Tripping of Transmission lines and transformers where transient swings cause Protection System operation based on known Protection System response”. Section 3.4.1 and 4.4.1 require PCs and TPs to coordinate with adjacent PCs and TPs to ensure that Contingencies on adjacent Systems which may impact their Systems are included in the Contingency list. Please clarify whether this means 1) that a PC or TP must coordinate with others to identify contingencies on other Systems that the PC or TP must now include on their Contingency list to simulate and address any performance violations on their own System, or 2) that the PC or TP must coordinate with others to identify contingencies on their System that this PC or TP must now include on their Contingency list to simulate and address any performance violations on the other Systems. In either case, the standard does not seem to clearly state what must be done, or whose responsibility it is to develop the corrective action plan, if a contingency in

one System causes a performance violation in another System.
We recognize that the drafting team made changes to the definition of Year One based on industry comments. However, we believe that the revised language could allow for a situation where an entity could use its next season's operating study as its Year One planning study. For example, if the entity does its study in the fall of 2011, the proposed definition would allow the entity to use its summer 2012 operating study as its Year One study. This is a very short period to address any issued identified. Suggest working into the requirement that Planning Studies must look out at least 12 months beyond when the study is performed. This would still allow for the provision in the current definition example ("if a Planning Assessment was started in 2011, then Year One must include the forecasted peak Load period for either 2012 or 2013) because the entity would be able to use their 2013 Load period, but it would prevent the entity from using the 2012 Load period if they started the assessment late in 2011.
Yes
Yes
Yes
Yes
Yes
PG&E does not support the performance table, as currently revised. Table 1, P5 currently requires the study of "[d]elayed Fault Clearing due to the failure of a relay13 protecting the Faulted element to operate as designed". As written, this requirement does not recognize the use of redundant relays for primary protection. In some cases side by side relays are used to provide primary fault tripping if one relay fails to operate. Per the requirement as stated, the redundant relay would provide no value in meeting this requirement. Please revise to acknowledge backup relays: "Single failure of a protection relay13 protecting the Faulted element to operate as designed, resulting in backup relay actions or Delayed Fault Clearing, for one of the following". In Table 1, P2 and P3, the last column "Non-Consequential Load Loss Allowed" where the requirement "No12" appears, and in footnote 12, the standard as proposed does not allow for any Non-Consequential Load Loss. When the Non-Consequential Load Loss (footnote b) issue is clarified in Project 2010-11 this requirement may be changed. Therefore, if this proposed Standard is enforced before Project 2010-11 is completed, entities will be required to meet this No Non-Consequential Load Loss requirement without the exception allowed in the existing TPL-002-0, footnote "b". This will require immediate redesigns to meet this particular requirement. The unintended consequence could be that operators of local systems that are currently networked may opt to begin operation as radial systems, and future designs for local systems may be radial, at any voltage level. We suggest that the proposed footnote 12 include a provision to default to the existing footnote "b" in TPL-002-0 until Project 2010-11 is decided. Please revise footnote 12 to read, "Note: Non-Consequential Load Loss is being decided in Project 2010-11. When that project is finalized, the resolution will be copied here. In the interim, planned or controlled interruption of electric supply to radial customers or some local Network customers, connected to or supplied by the Faulted element or by the affected area, may occur in certain areas without impacting the overall reliability of the interconnected transmission systems. To prepare for the next contingency, system adjustments are permitted, including curtailments of contracted Firm (non-recallable reserved) electric power Transfers." Timing of this project and project 2010-11 is critical. It would be very difficult to vote to approve the proposed TPL-001-2 prior to knowing the outcome of Project 2010-11 (footnote b issue).
Yes
Yes

Group
Florida Reliability Coordinating Council, Inc - Transmission Working Group
Richard BEcker
Yes
No
No, because it is worded to be dependent upon when an assessment is started rather than when the assessment is completed and valid. Assessments don't typically include a "start date". An assessment completed on a calendar date should include (be valid for) the forecasted peak load for a timeframe that begins no more than 24 months from the date that the assessment was completed.
No
No, Since "the latest" data may become available after the study is complete, a planner may not be able to ever complete a study. Please consider removing "the latest" from the second sentence.
No
No, Please consider removing R.2.6.2. The overwhelming majority of PAs use a 10 year set of planning models developed annually by Regions or Subregions. These annual sets of planning models will always have some changes. The annual study requirement is especially problematic for Stability and Short circuit studies that require much more engineering time to complete and are much less likely to have results impacted by minor model changes such as different load forecasts. Uncertainty with audit review of technical rationale documentation will serve to focus Transmission Planning engineering resources on short term compliance to an extent that is counter productive.
No
This change does not clarify the required sensitivity analysis. A measureable change in performance is unclear? Instead of a measurable change in performance, a measureable change in contingency response of the Bulk Electric System would be more appropriate. A change in performance implies not meeting one of the performance requirements as specified in Table 1.
Yes
No
This change does not clarify material. Material should be quantified somehow. We recommend changing the phrase "material generation additions or changes" to "generation in the vicinity with additions of changes larger than 200 MW".
Yes
We support the changes to the performance tables.
Footnote 12 performance requirements of Table 1 should allow the loss of non-consequential load for all contingency categories except for P0. The disallowance of load loss does not provide any real benefit to the reliability of the BES and is an unnecessary overreach into local quality of service issues that are best addressed by State, Provincial or Municipal authorities. There may be circumstances such as high local transmission costs or local opposition to transmission construction where prohibition of non-consequential load loss represents a poor cost/benefit or quality of life tradeoff. Having a provision at the regional level that a PA or TP can have a certain amount of non-consequential load loss designed or planned in to its system that would be reasonable if it is acceptable to the RE and does not have an adverse impact on the remaining BES. In lieu of such a RE provision, providing a quantitative cap in non-consequential load loss such as 100 MW may be rationale compromise in the goal of limiting load loss for the more probable outage events. Our preference would be to retain the capability of limited non-consequential load loss. Footnote 9 should also be under consideration as part of Project 2010-11 and should be noted as such for clarification.
No
It appears that there is a disagreement between R8 and M8, regarding public posting. We Agree with M8 posting option.
No

The requirement to distribute the Planning Assessment should be more flexible and allow for making the Planning Assessment available, such that those entities that desire the information can have it readily available. R8 should be modified to replace distribute with “make available:, so the new requirement would read as follows: Each Planning Coordinator and Transmission Planner shall make available its Planning Assessment results to adjacent Planning Coordinators and Transmission Planners and to any functional entity that indicates a reliability related need for the Planning Assessment results.
Individual
Michael R. Lombardi
Northeast Utilities
Yes
No
NU does not support the revised definition of Year One as we believe it leads to confusion. Our suggestion is that Year One should be the Peak Load Year after the study is initiated. The subsequent years should be counted from Year One (e.g., a study that is started in year 2010 with peak load in 2011 will have Year One as 2011 and Year Two as 2012, etc.).
No
NU believes that the Normal System Conditions as stated in Requirement R1 should establish the base case conditions to be used for the assessment studies. More guidelines for developing base cases should be addressed in the requirements. What the statement in Requirement R1 lacks is the manner of creating generation dispatches and the level of interface flows (level of stress), which are central to any base case to be used to assess the reliability of the electric power network. Depending upon how the base case dispatches and the level of interface flows are created, a study may reveal reliability violations in the power system. This is a weakness of the existing TPL standards. NU, however, will support the idea of developing regional guidelines in regard to the nature of the base cases to be used for the NERC reliability studies. Comment on Requirement R1.1, Part 1.1.2: With respect to known outages NU requests that the six month duration listed by the requirement should be changed to one year duration. Requirement R1.1 Part 1.1.6: The phrase "required for Load" should be deleted as this confuses the issue [since resources may also be used for export to other areas and not just internal load].
No
The revisions made to Requirement R2 Part 2.1 appear to resolve the concern that past studies could not be used to comply with the short-term steady state study requirements. However, the language of Requirement R2 Part 2.2 still seems to suggest that current annual studies are always required for the long-term steady state assessment to be compliant. This may have been an oversight, for consistency Requirement R2 Part 2.2 should be modified to similarly read as Requirement R2, Part 2.1.
No
The standard is referring to requirements for sensitivity and other issues without a reference to base assumptions as commented in Question #3. The standard must describe base assumptions. To define a sensitivity condition, NERC must define base assumptions.
Yes
Yes
Yes
Checked "No" NU agrees with the changes that have been made to the language of P5. However, for Table 1 (Steady State and Stability Performance Extreme Events) – Stability, the wording “Protection Systems failure” should be changed to “relay failure” similarly to the change in P5. This change should be made for items 2a through 2d.
Yes

Yes
No comments on Question 7. Other Comments: As detailed below, NU has other comments that are not addressed by this Comment Form as follows – Section 3.3, Section 4.3, Non-Consequential Load Loss as referenced in the events Table 1 and studies using extreme event contingencies. Section 3.3 – NU believes that the last sentence of Part 3.3.1 should be removed since this is handled by PRC-023. Line ratings are addressed by PRC-023 which requires coordination with the Reliability Coordinator. NU suggests the removal of the following sentence: “Tripping of Transmission elements where relay loadability limits are exceeded.” Section 4.3 - High speed reclosing is not defined and to help eliminate any confusion that it may introduce into the standard it will be worthwhile for the SDT to define this term. Non-Consequential Load Loss – Depending upon the resolution of “Project 2010-11, TPL Table 1, Footnote b” NU may have additional comments regarding this issue. Studies Using Extreme Event Contingencies: The requirements for sensitivity analysis already address issues going beyond what is expected to meet the reliability requirements of the standard. Therefore, requiring extreme event analysis is requiring two layers of event analysis beyond what is required and there is no requirement for corrective action if a concern is identified.
Individual
Christopher L. de Graffenried
Consolidated Edison Co. of New York, Inc.
No
Requirement R1 Part 1.1 and following states “System models shall represent:… 1.1.5. Known commitments for firm Transmission Service and Interchange. It was commented during a previous posting that 1.1.5 should be reworded to read: Known commitments for Firm Transmission Service, and, additionally, other types of transactions provided they have been demonstrated to not violate existing reliability constraints. The response was that “The SDT believes that the defined term ‘Interchange’ covers other transfers as described in your comment. No change made.” It is agreed that known Interchange should be modeled. However, it is imperative that existing reliability constraints not be violated in the process. That is, Interchange relating to economic transactions should not drive planning studies. Reliability-related investments should not be driven by congestion related to economic transactions incorporated into planning models. Con Edison’s Preferred approach: • 1.1.5. Known commitments for firm Transmission Service and Interchange. Interchange is meant to refer to energy transactions other than firm Transmission Service. While rigorous planning studies have been conducted to permit the uninterrupted implementation of firm Transmission Service without jeopardizing the reliable operation of the Interconnected System, other types of energy transaction only take place whenever system conditions permit them. They are usually of very short duration relative to planning assessment periods (usually spanning for a few hours to a few days) and deemed highly interruptible subject to reliability issues that may arise during operation of the system. In other words, the term Interchange refers to economic transactions that are permitted when the system is secure and there are reasonable reliability margins to effect dispatch changes to lower operating costs. As such, Interchange should not be reflected in system representation meant to assess system reliability in adherence to reliability criteria delineated in documents such as TPL-001.
No
See NPCC comments
Yes
No
See NPCC comments
No
See NPCC comments
No
There is insufficient information and experience regarding dynamic load modeling. It may also be included as a “sensitivity” analysis in 3.2, rather than requiring and expecting accurate representation of a dynamic load model. If this requirement is kept, a modeling standard should be written that is specific

to dynamic loads. This change belongs in a modeling standard, not in TPL-001.
Yes
No
• Header note (i) in the first Table 1 (p. 10) The explicit representation of (voltage-dependent) load models is perfectly consistent with the requirements defined in R1 (which calls for a comprehensive representation of system components and their expected operating status in the planning assessment period) and the impetus to the creation of more specific load models in dynamic assessments found Requirement 2.4 of this draft of TPL-001-2. It is a known that depressed voltage conditions cause certain system elements to perform below their rated capacity. For example, capacitors provide less voltage support and voltage controlling transformers are impeded by their finite tap range to direct VAR flow into areas affected by low voltage conditions. Certain load types, on the other hand, provide a self-compensating relief to depressed voltage by naturally decreasing demand in a manner proportional to their characteristics, without operator intervention. Choosing to negate the voltage-dependence of one of these system elements (load, in this case) results in an inaccurate system representation that, in turn, may lead to erroneous assessments of the reliability state of the interconnected system and, potentially, to the implementation of unwarranted system upgrades.
See NPCC comments
Yes
No
See NPCC comments
Individual
Spencer Tacke
Modesto Irrigation District
Yes
We commend the SDT for its work to continue the improvement on the proposed TPL-001-1. We were not able to find a place to include comment on Requirement R4; therefore, we have included our comments here: Section R4.3.1, bullet point 3 requires the stability analyses to include the impact of subsequent “[t]ripping of Transmission lines and transformers where transient swings cause Protection System operation based on generic or actual relay models”. As written, this bullet could be interpreted as requiring the inclusion of these relay models in stability data bases. We do not have generic or actual relay models in our dynamics data bases for tripping line faults on lines and transformers represented. We represent actual relay response and tripping times of relays, communications, and breakers to faults in tripping transmission lines and transformers. Requiring the inclusion of generic or actual relay models for all relays that can trip lines and transformers would add a large burden to the development and maintenance of accurate dynamics model files that would add little or no benefit. Please change this bullet to read: “Tripping of Transmission lines and transformers where transient swings cause Protection System operation based on known Protection System response”.
No
The definition as it is in the current standards is fine. The new proposed definition is unclear.
Yes
Yes
No
This new requirement will expand the scope of the study work beyond a reasonable extent.
Yes

Yes
Table 1, P5 currently requires the study of “[d]elayed Fault Clearing due to the failure of a relay13 protecting the Faulted element to operate as designed”. As written, this requirement does not recognize the use of redundant relays for primary protection. In some cases side by side relays are used to provide primary fault tripping if one relay fails to operate. Per the requirement as stated, the redundant relay would provide no value in meeting this requirement. Please revise to acknowledge backup relays: “Single failure of a protection relay13 protecting the Faulted element to operate as designed, resulting in backup relay actions or Delayed Fault Clearing, for one of the following”. In Table 1, P2 and P3, the last column “Non-Consequential Load Loss Allowed” where the requirement "No12" appears, and in footnote 12, the standard as proposed does not allow for any Non-Consequential Load Loss. When the Non-Consequential Load Loss (footnote b) issue is clarified in Project 2010-11 this requirement may be changed. Therefore, if this proposed Standard is enforced before Project 2010-11 is completed, entities will be required to meet this No Non-Consequential Load Loss requirement without the exception allowed in the existing TPL-002-0, footnote “b”. This will require immediate redesigns to meet this particular requirement. The unintended consequence could be that operators of local systems that are currently networked may opt to begin operation as radial systems, and future designs for local systems may be radial, at any voltage level. We suggest that the proposed footnote 12 include a provision to default to the existing footnote “b” in TPL-002-0 until Project 2010-11 is decided. Please revise footnote 12 to read, “Note: Non-Consequential Load Loss is being decided in Project 2010-11. When that project is finalized, the resolution will be copied here. In the interim, planned or controlled interruption of electric supply to radial customers or some local Network customers, connected to or supplied by the Faulted element or by the affected area, may occur in certain areas without impacting the overall reliability of the interconnected transmission systems. To prepare for the next contingency, system adjustments are permitted, including curtailments of contracted Firm (non-recallable reserved) electric power Transfers.” Timing of this project and project 2010-11 is critical. It would be very difficult to vote to approve the proposed TPL-001-2 prior to knowing the outcome of Project 2010-11 (footnote b issue).
Group
Pepco Holings, Inc - Affiliates
Richard Kafka
Yes
Yes
Yes
Yes
Yes
Yes
Yes
Yes
Yes

Yes
Individual
Alex Rost
NBSO
Yes
No
To avoid confusion, the formal definition for Year One should be eliminated and wording used to describe Year One be placed within the appropriate requirement. For example, R2.1.1 could be re-written to state: System peak Load representing a point in time 12-24 months and another point in time 48-65 months into the future from the time the study is initiated.
No
R1 should have some language to state that base case assumptions should be made such that they appropriately stress the system to be tested and are in accordance with good engineering practice.
No
NBSO agrees with the language for R2.1, but the language with R2.2 should be changed to be consistent with R2.1. NBSO disagrees with the revisions to R2.1.5. Requiring PAs to study instead of assess the possible unavailability of equipment with a lead time of a year or more will result in significant demand on resources with little impact on system reliability. NBSO also questions what additional value such studies will bring in addition to the N-1-1 requirements (P6).
No
Base case assumptions should be made such that they appropriately stress the system to be tested and are in accordance with good engineering practice. If the base cases are already stressed, the requirement to study sensitivity cases may result in the study of less severe conditions, and thus require additional time and resources while providing little additional value to the overall assessment.
No
By implication, the response of induction motor load would need to be considered when modeling the expected dynamic behaviour of loads that could impact the study area. NBSO suggests re-wording parts of R2.4.1 as follows: System peak load levels shall include a model which represents the expected dynamic behaviour of loads that could impact the study area. An aggregate system load model which represents the overall expected dynamic behaviour of load is acceptable.
Yes
Yes
For consistency, 'Protection System' should be replaced with 'relay' on Table 1 (p12) Stability Section, items 2a-2d.
Yes
Yes
NBSO suggests considering rewording the VSL so that they address the failure to distribute the final results of planning assessments.
Individual
Curtis A. Beveridge
Central Maine Power Company
Yes

No
The added clarification to the definition of Year One serves to remove most ambiguity with respect to Year One. However, the revision has added further ambiguity to the terms “year two” and “year five” which are not defined. For the Planning Assessment started in a given calendar year, the first year that is studied must include the forecasted peak Load period for one of the following two calendar years. An additional Near-term study must be performed that is four calendar years beyond the first year that is studied. We recommend defining Year Five as the twelve month period 4 to 6 calendar years from the date of the Planning Assessment. We further recommend revising R2.1.1 as follows: “System peak Load for Year One and for Year Five.” Alternatively, the definition of Year One could be eliminated and described within the text of the requirements.
No
For R1 Ambiguity regarding base case assumptions, in combination with lack of clarity and clear direction of purpose regarding the sensitivity analysis, undermines the objectives of the standard; R1.1 Part 1.1.2. With respect to known outages, there needs to be greater flexibility in the standards (e.g. more tolerance to non-consequential load shedding or limitations to the contingencies that need to be considered (e.g. P0, P1, & P2)). Regional allowances for load shedding under this condition should be approved. Duration of known outages should be increased from six months to one year; R1.1 Part 1.1.6 Delete "required for Load". Resources may also be used for export to other areas, not just internal load.
No
We completely agree with the revision to R2.1, but this revision must be carried through to other sections (R2.2, 2.2.1) and R2.2 language should be consistent with 2.1 for example - use "current or qualified past studies" instead of "the following annual current study". Revisions made to Requirement R2.1.5 have made it worse than as originally drafted. This would require the PC & TP to study, or in other words perform technical analysis of, the impact and probability of the possible unavailability of any piece of equipment with a lead time of one year or more. Such an evaluation of spare equipment strategies would require significant additional resources and data, but provide no benefit to system reliability, as it is redundant to the existing N-1-1 contingency requirement (P6).
No
These sensitivities need to be considered if not already included in the base case assumptions.
No
We have not determined a need to model dynamic loads, and therefore have not benchmarked any such models. We recommend that prior to this requirement being in place, a modeling standard should exist that is specific to dynamic loads.
Yes
No
Header note (i) in the first Table 1 could imply that voltage-varying load shall not be used to meet steady state performance requirements. NYISO steady state load models include voltage-varying loads. This note should be revised to only reference loads which are disconnected due to voltage.
In Table 1 – Stability, Make language similar to wording in P5. Protection System should be removed and replaced with the words relay failure. This change should be made for 2a through 2d: 2. Local or wide area events affecting the Transmission System such as: a. 3Ø fault on generator with stuck breaker10 or a relay failure resulting in Delayed Fault Clearing. b. 3Ø fault on Transmission circuit with stuck breaker10 or a relay failure resulting in Delayed Fault Clearing. c. 3Ø fault on transformer with stuck breaker10 or a relay failure resulting in Delayed Fault Clearing. d. 3Ø fault on bus section with stuck breaker10 or a relay failure resulting in Delayed Fault Clearing. In Note 11 change wording as shown below to include the words “a total of”: Excludes circuits that share a common structure (Planning event P7, Extreme event steady state 2a) or common Right-of-Way (Extreme event, steady state 2b) for a total of 1 mile or less
Yes
No

Requirement 8 is an administrative burden to TPs and PCs that adds no value to reliability. PCs should be including TPs, neighboring PCs and interested parties in its planning processes when developing the Planning Assessments. Therefore, the inclusion of a set of VSLs for Requirement 8 is unnecessary. Furthermore, the requirement lacks a specified time frame to receive comments, thereby implying that TPs and PCs would be required to reply to comments forever following the finalization of a Planning Assessment. The NYISO proposes a limit of six months. Should the SDT decide to leave the VSLs for Requirement 8, Requirement 8.1 should be revised to reflect that comments only to the final Assessment (not drafts developed during a process) need a response as follows: If a recipient of the planning assessment final results provides documented comments on the results within 180 calendar days of the issuance of those final results, the respective Planning Coordinator or Transmission Planner shall provide a documented response to such recipient within 90 calendar days of receipt of those comments. We also have other comments not addressed by this Comment Form as follows – Section 2.7, Section 3.3, Section 4.3, and overall: Section 2.7 requires that Corrective Action Plans are included in each Planning Assessment and states “Such actions may include…” followed by a list of actions. Restricting allowable actions, and excluding runback/tripping of HVDC would have a direct impact on multiple existing facilities in New York and would adversely impact the reliability planning of the NYCA. Runback/tripping of HVDC must be added to the list. Section 3.3 - We feel that the last sentence of 3.3.1 should be removed. This is handled by PRC-023. Line ratings are addressed by PRC-023. PRC-023 requires coordination with the Reliability Coordinator. Remove “Tripping of Transmission elements where relay loadability limits are exceeded.” Section 4.3 - High speed reclosing is not defined. Overall – We have previously made comments which have not been addressed in the current version of the proposed standard. Support for the standard can at most be limited without addressing comments. We have previously commented on sensitivity analysis and guidance for base case assumptions. Also, extreme event analysis should not be mandated in this standard as no corrective action is required. The requirements for sensitivity analysis already address issues going beyond what is expected to meet reliability requirements. Requiring extreme event analysis is requiring two layers of event analysis beyond what is required, and there is no requirement for corrective action if anything is identified. The standard is referring to requirements for sensitivity and other issues without a reference to base assumptions. The standard must describe base assumptions. To define a sensitivity condition, NERC must define base assumptions.

Group

Western Area Power Administration

Brandy A. Dunn

Yes

The whole bullet point section in the Effective Date section referring to Corrective Action Plans could be deleted and instead captured by Requirement R2.7.3. A seven year grace period is probably not favorable to FERC, and a better solution could be developed to meet industry needs. In R2.7.3, a possible example of "beyond the control of the Transmission Planner" could be that the physics of a significant percentage of induction motors in low inertia air-conditioning loads would tend to pull out for certain N-1 events. This may in significant part occur because such motors may have nearly no dynamic stability margin to withstand such N-1 events as close-in 3-phase faults with normal clearing during peak load conditions. So until the Transmission Planner has been able to institute changes in the industry to address the basic physics of such loads, this Requirement 2.7.3 would permit the use of such "Non-Consequential" Load Loss and curtailment of Firm Transmission Service. In this example, it may take longer than a seven year time period to fix the problem. On the other hand, some examples of Non-Consequential Load Loss could perhaps be mitigated in a shorter timeframe. Provided that an entity has a good technical justification and defined margin for “Non-Consequential” Load Loss or curtailment of Firm Transfers, then it may be acceptable. Requirement R2.7.3 seems to move in this direction. Section R4.3.1, bullet point 3 requires the stability analyses to include the impact of subsequent “[t]ripping of Transmission lines and transformers where transient swings cause Protection System operation based on generic or actual relay models”. As written, this bullet could be interpreted as requiring the inclusion of these relay models in stability data bases. We do not have generic or actual relay models in our dynamics data bases for tripping line faults on lines and transformers represented. We represent actual relay response and tripping times of relays, communications, and breakers to faults in tripping

transmission lines and transformers. Requiring the inclusion of generic or actual relay models for all relays that can trip lines and transformers would add a large burden to the development and maintenance of accurate dynamics model files that would add little or no benefit. Please change this bullet to read: “Tripping of Transmission lines and transformers where transient swings cause Protection System operation based on known Protection System response”.
Yes
Yes, this clarification helps. The drafting team could also define “year five”.
No
It’s difficult to tell whether Requirement R1 is intended to require only one base case or whether it was intended to require creation of separate models for each possible N-0 condition (“normal system condition”) under a variety of stressing scenarios. The inserted language does not seem to provide additional clarity. Suggested language may be ”This establishes the initial 'Normal System' condition corresponding to category P0 in Table 1.” Also, in Requirement R1.1.5, how are the Firm Transmission Service commitments supposed to be modeled in Power Flow Cases? Are they just to be modeled as loads, generation, and control area interchanges? Suppose a POR or POD is not at a generator or load bus. What selection of generation and load would represent the projected system conditions for this Firm Transmission Service commitment?
No
R 2.1.5: The issue in this Requirement is studied in the Operations next-day; next-week; next-month studies required under the TOP Standards; and are also covered by processes such as the Operational Transfer Capability Policy Committee (OTCPC) seasonal study process within the WECC. It would be quite onerous to run a complete power flow simulation on separate base cases for each transformer (or other equipment with long lead time) initially out of service. The revision in language from “Planning Assessment” to “studies” does not clarify that a power flow simulation is not necessarily required for each situation. A valid assessment could include other methods such as using sound technical reasoning to relate the initial out-of-service condition to a condition that has already been studied. This condition may have taken place in previous operational studies. The language in the standard could be improved to make this clarification – perhaps reference R2.6. Additionally, this Requirement still needs further clarification. Currently the scope of equipment applicable to the requirement could be misinterpreted as larger than that contemplated by FERC. The standard as written seems to say that the responsible entity needs to study the spare equipment strategy for all "major transmission equipment" with long lead times. In the directive to include this requirement, FERC used the term "critical facilities". In the NOPR to Order No. 693 they stated, "Critical facilities are those facilities that impact IROLs and deliverability of generation to firm load" (P1081). In Order No. 693 FERC also said, "if an entity’s spare equipment strategy for the permanent loss of a transformer is to use a 'hot spare' or to relocate a transformer from another location in a timely manner, the outage of the transformer need not be assessed under peak system conditions" (P1725). Finally, the drafting team could clarify if this requirement applies to radial branches (such as generator step-ups or step-down to load). Such branches may be construed as “critical facilities” but the impediment to deliverability of generation to firm load is consequential to the initial outage.
Yes
In Requirement 2.1.4, "Sensitivity Analysis”. How much change does it take in any of the modeling assumptions (load, generation, voltage support, topology, etc.) to significantly stress the system within a range of credible condition? As this Requirement relates to R2.7, Would it be necessary to have Corrective Action Plan(s) if needed to meet all the Sensitivity Cases? How many Sensitivities before must have Corrective Action Plan? Also – why is it essential to use the qualifier “annual” for “current studies” in Part 2.1? Can a study be considered current if it is conducted less frequently than once per year? Note that Parts 2.3, 2.4 and 2.5 do not use the “annual” qualifier, nor does Requirement R2. Recommend deleting this apparently non-essential qualifier in both R2.1 and R2.2. We are unable to appreciate why the wording in Part 2.3 is not consistent with that in Part 2.1, 2.2, 2.4 or 2.5. Note that the semantics of the wording “… (steady state / stability) analysis shall be assessed annually…” can be interpreted to be much different than the semantics of the Part 2.3 wording “The short circuit analysis…. shall be conducted annually …”. The former requires the analysis to be *assessed* annually but 2.3 requires the analysis to be *conducted* annually without explicitly requiring it be assessed –- is the usage

of “conducted” instead of ‘assessed” consistent with the intent? In Part 2.6.2, the intent is awkwardly conveyed within the phrase “…the System represented in the study shall not include any material changes unless…”. In the context of a *past* study, how can the System represented possibly include any material changes (that would have presumably occurred after the study)? Suggest modifying Part 2.6.2 to read “For steady state, short circuit or Stability analysis: no material changes have occurred in the System represented in the study or, if material changes have occurred, a technical rationale shall be provided to explain why they do not significantly impact the study results.”

Yes

Yes

The drafting team could provide guidance on what is "material". In Part 2.5, should “annually” be inserted after “shall be assessed” to make it consistent with Parts 2.1, 2.2, 2.3 and 2.4? If the omission is intentional in 2.5, please explain why.

Yes

Following is a suggested re-ordering of header notes to replace of the three categories concept – same information: a. Applicable Facility Ratings shall not be exceeded. The System shall remain stable. Cascading and uncontrolled islanding shall not occur. b. Planning event P0 is applicable to steady state only. c. Consequential Load Loss as well as generation loss is acceptable as a consequence of any event except P0. d. The response of voltage sensitive Load including Load that is disconnected from the System by end-user equipment as a consequence of any event shall not be used to meet steady state performance requirements. e. System steady state voltages and post-Contingency voltage deviations shall be within acceptable limits established by the Planning Coordinator and Transmission Planner. f. Transient voltage response shall be within acceptable limits as established by the Planning Coordinator and Transmission Planner. g. Planned System adjustments such as Transmission configuration changes and re-dispatch of generation are allowed if such adjustments are executable within the time duration applicable to the Facility Ratings. h. Simulate the removal of all elements that Protection Systems and other controls are expected to automatically disconnect for each event. Simulate Normal Clearing unless otherwise specified.

In footnotes 9 and 12, two critical issues are being addressed in large part via these "clarifying" footnotes. These are curtailment of "Firm Transmission Service" (which seems primarily to be a contract/scheduling issue) and the loss of "Non-Consequential Load." Perhaps these issues should receive more attention in the actual requirements. In P5 the term “Protection System” was removed and replaced with “relay”. How are protection system elements other than relays accounted for? In studying a multiple contingency event with a communication system or control circuitry failure would it be necessary demonstrate P1 performance levels? These details could become critical as industry deals with issues such as FERC’s interpretation of TPL-002-0 Requirement R1.3.10 (RM10-6-000). In Table 1 – Extreme Events – Stability – Items 2a-2d, change “Protection System failure” to “relay failure” to be consistent with changes in P5. Table 1, P5 currently requires the study of “[d]elayed Fault Clearing due to the failure of a relay13 protecting the Faulted element to operate as designed”. As written, this requirement does not recognize the use of redundant relays for primary protection. In some cases side by side relays are used to provide primary fault tripping if one relay fails to operate. Per the requirement as stated, the redundant relay would provide no value in meeting this requirement. Please revise to acknowledge backup relays: “Single failure of a protection relay13 protecting the Faulted element to operate as designed, resulting in backup relay actions or Delayed Fault Clearing, for one of the following”. Footnote 13 – Delete “voltage (#27, #59)” since the under/over voltage relays are not called upon to provide the primary protection for fault clearing on Transmission elements. Suggest modifying Event P4 description to be more consistent with Event P5 description by including Delayed Fault Clearing in the description in lieu of “Loss of multiple elements”. Suggested Event P4 description is: “Delayed Fault Clearing caused by a stuck non Bus-tie Breaker attempting to clear a fault on one of the following:” In Table 1, P2 and P3, the last column “Non-Consequential Load Loss Allowed” where the requirement "No12" appears, and in footnote 12, the standard as proposed does not allow for any Non-Consequential Load Loss. When the Non-Consequential Load Loss (footnote b) issue is clarified in Project 2010-11 this requirement may be changed. Therefore, if this proposed Standard is enforced before Project 2010-11 is completed, entities will be required to meet this No Non-Consequential Load Loss requirement without the exception allowed

in the existing TPL-002-0, footnote “b”. This will require immediate redesigns to meet this particular requirement. The unintended consequence could be that operators of local systems that are currently networked may opt to begin operation as radial systems, and future designs for local systems may be radial, at any voltage level. We suggest that the proposed footnote 12 include a provision to default to the existing footnote “b” in TPL-002-0 until Project 2010-11 is decided. Please revise footnote 12 to read, “Note: Non-Consequential Load Loss is being decided in Project 2010-11. When that project is finalized, the resolution will be copied here. In the interim, planned or controlled interruption of electric supply to radial customers or some local Network customers, connected to or supplied by the Faulted element or by the affected area, may occur in certain areas without impacting the overall reliability of the interconnected transmission systems. To prepare for the next contingency, system adjustments are permitted, including curtailments of contracted Firm (non-recallable reserved) electric power Transfers.” Timing of this project and project 2010-11 is critical. It would be very difficult to vote to approve the proposed TPL-001-2 prior to knowing the outcome of Project 2010-11 (footnote b issue).
Yes
Yes
Individual
Darryl Curtis
Oncor Electric Delivery
Yes
Yes
Yes
Yes
Yes
Yes
Yes
Yes
Yes
Yes
Group
IRC Standards Review Committee
Ben Li
Yes
Yes

Yes
Yes
No
The primary concern involves wording under 2.1.4 and 2.4.3 that sensitivities are required by varying one or more conditions. Subsequently, in requirement 2.7.2 corrective action plans need to be developed to resolve performance deficiencies “only” if identified in multiple conditions or require a rationalization why no corrective action plan is necessary. Multiple conditions sensitivities under 2.1.4 and 2.4.3 are necessary to satisfy requirement 2.7.2. Requirement 2.7.2 adds ambiguity and should be removed. Alternatively, Requirement 2.7.2 could be revised as follows: 2.7.2. Corrective Action Plans are not required for performance deficiencies identified in a sensitivity analysis. If a Planning Coordinator includes Corrective Action Plans to resolve performance deficiencies identified in multiple sensitivity analysis, the Planning Coordinator shall provide documentation to support those Plans.
Yes
Yes
However, the requirement infers that a subjective judgment from a compliance auditor will be required.
Yes
Yes
No
(AESO is not a party to the following comments since its VSLs are set by the Alberta regulatory authority.) Requirement 8 is an administrative burden to TPs and PCs that adds no value to reliability. PCs should be including TPs, neighboring PCs and interested parties in its planning processes when developing the Planning Assessments. Therefore, the inclusion of a set of VSLs for Requirement 8 is unnecessary. Should the SDT decide to leave the VSLs for Requirement 8, Requirement 8.1 should be revised to reflect that comments only to the final Assessment (not drafts developed during a process) need a response as follows: 8.1 If a recipient of the planning assessment final results provides documented comments on the results, the respective Planning Coordinator or Transmission Planner shall provide a documented response to such recipient within 90 calendar days of receipt of those comments. For a Planning Coordinator (PC) who distributes the Planning Assessment to many different entities (to adjacent PCs, TPs, and other functional entities), a concern regarding the Requirement R8 VSL is that it is overly restrictive to apply a violation for failing to distribute the results of its Planning Assessment to only one PC, TP, or functional entity (and to apply a High VSL for failing to distribute to more than one entity), particularly since an entity’s contact is subject to change over time, and since Measure M8 allows for publicly posting the results of its Planning Assessment to its website. Should the SDT decide to include the VSLs for Requirement 8, we would recommend revising to use a percentage approach rather than applying a violation to a Planning Coordinator who fails to provide the results of its Planning Assessment to one PC, TP, or other functional entity (or applying a High VSL for failing to distribute to more than one entity.) Recommend applying a similar percentage approach to the VSLs drafted by NERC Staff for Project #2007-23 VSLs (e.g., for FAC-013-1) to be considered for the TPL-001-2 R8 VSLs. For example, • Lower VSL: The responsible entity failed to provide the Planning Assessment final results to 5% or less of the required entities. • Moderate VSL: The responsible entity failed to provide the Planning Assessment final results to more than 5% up to (and including) 10% of the required entities. • High VSL: The responsible entity failed to provide the Planning Assessment final results to more than 10% up to (and including) 15% of the required entities. • Severe VSL: The responsible entity failed to provide the Planning Assessment final results to more than 15% of the required entities OR [the existing language for the Severe VSL]. Explanation: The VSLs were modified for consistency with other standards and VSLs. Reference: Link to VSLs drafted by NERC Staff for

Project #2007-23 VSLs (e.g., for FAC-013-1): http://www.nerc.com/docs/standards/sar/Staff_Proposed_VSLs_2010July27.pdf
Individual
Jeffrey McKinney
New York State Electric & Gas Corp
Yes
No
The added clarification to the definition of Year One serves to remove most ambiguity with respect to Year One. However, the revision has added further ambiguity to the terms “year two” and “year five” which are not defined. For the Planning Assessment started in a given calendar year, the first year that is studied must include the forecasted peak Load period for one of the following two calendar years. An additional Near-term study must be performed that is four calendar years beyond the first year that is studied. We recommend defining Year Five as the twelve month period 4 to 6 calendar years from the date of the Planning Assessment. We further recommend revising R2.1.1 as follows: “System peak Load for Year One and for Year Five.” Alternatively, the definition of Year One could be eliminated and described within the text of the requirements.
No
For R1 Ambiguity regarding base case assumptions, in combination with lack of clarity and clear direction of purpose regarding the sensitivity analysis, undermines the objectives of the standard; R1.1 Part 1.1.2. With respect to known outages, there needs to be greater flexibility in the standards (e.g. more tolerance to non-consequential load shedding or limitations to the contingencies that need to be considered (e.g. P0, P1, & P2)). Regional allowances for load shedding under this condition should be approved. Duration of known outages should be increased from six months to one year; R1.1 Part 1.1.6 Delete "required for Load". Resources may also be used for export to other areas, not just internal load.
No
We completely agree with the revision to R2.1, but this revision must be carried through to other sections (R2.2, 2.2.1) and R2.2 language should be consistent with 2.1 for example - use "current or qualified past studies" instead of "the following annual current study". Revisions made to Requirement R2.1.5 have made it worse than as originally drafted. This would require the PC & TP to study, or in other words perform technical analysis of, the impact and probability of the possible unavailability of any piece of equipment with a lead time of one year or more. Such an evaluation of spare equipment strategies would require significant additional resources and data, but provide no benefit to system reliability, as it is redundant to the existing N-1-1 contingency requirement (P6).
No
These sensitivities need to be considered if not already included in the base case assumptions.
No
We have not determined a need to model dynamic loads, and therefore have not benchmarked any such models. We recommend that prior to this requirement being in place, a modeling standard should exist that is specific to dynamic loads.
Yes
No
Header note (i) in the first Table 1 could imply that voltage-varying load shall not be used to meet steady state performance requirements. NYISO steady state load models include voltage-varying loads. This note should be revised to only reference loads which are disconnected due to voltage.
In Table 1 – Stability, Make language similar to wording in P5. Protection System should be removed and replaced with the words relay failure. This change should be made for 2a through 2d: 2. Local or wide area events affecting the Transmission System such as: a. 3Ø fault on generator with stuck breaker10 or a relay failure resulting in Delayed Fault Clearing. b. 3Ø fault on Transmission circuit with stuck breaker10 or a relay failure resulting in Delayed Fault Clearing. c. 3Ø fault on transformer with stuck

breaker10 or a relay failure resulting in Delayed Fault Clearing. d. 3Ø fault on bus section with stuck breaker10 or a relay failure resulting in Delayed Fault Clearing. In Note 11 change wording as shown below to include the words “a total of”: Excludes circuits that share a common structure (Planning event P7, Extreme event steady state 2a) or common Right-of-Way (Extreme event, steady state 2b) for a total of 1 mile or less
Yes
No
Requirement 8 is an administrative burden to TPs and PCs that adds no value to reliability. PCs should be including TPs, neighboring PCs and interested parties in its planning processes when developing the Planning Assessments. Therefore, the inclusion of a set of VSLs for Requirement 8 is unnecessary. Furthermore, the requirement lacks a specified time frame to receive comments, thereby implying that TPs and PCs would be required to reply to comments forever following the finalization of a Planning Assessment. The NYISO proposes a limit of six months. Should the SDT decide to leave the VSLs for Requirement 8, Requirement 8.1 should be revised to reflect that comments only to the final Assessment (not drafts developed during a process) need a response as follows: If a recipient of the planning assessment final results provides documented comments on the results within 180 calendar days of the issuance of those final results, the respective Planning Coordinator or Transmission Planner shall provide a documented response to such recipient within 90 calendar days of receipt of those comments. We also have other comments not addressed by this Comment Form as follows – Section 2.7, Section 3.3, Section 4.3, and overall: Section 2.7 requires that Corrective Action Plans are included in each Planning Assessment and states “Such actions may include…” followed by a list of actions. Restricting allowable actions, and excluding runback/tripping of HVDC would have a direct impact on multiple existing facilities in New York and would adversely impact the reliability planning of the NYCA. Runback/tripping of HVDC must be added to the list. Section 3.3 - We feel that the last sentence of 3.3.1 should be removed. This is handled by PRC-023. Line ratings are addressed by PRC-023. PRC-023 requires coordination with the Reliability Coordinator. Remove “Tripping of Transmission elements where relay loadability limits are exceeded.” Section 4.3 - High speed reclosing is not defined. Overall – We have previously made comments which have not been addressed in the current version of the proposed standard. Support for the standard can at most be limited without addressing comments. We have previously commented on sensitivity analysis and guidance for base case assumptions. Also, extreme event analysis should not be mandated in this standard as no corrective action is required. The requirements for sensitivity analysis already address issues going beyond what is expected to meet reliability requirements. Requiring extreme event analysis is requiring two layers of event analysis beyond what is required, and there is no requirement for corrective action if anything is identified. The standard is referring to requirements for sensitivity and other issues without a reference to base assumptions. The standard must describe base assumptions. To define a sensitivity condition, NERC must define base assumptions.
Individual
Bart White
Progress Energy
Yes
Yes
Yes
No
While PE does not disagree with the basic premise of 2.1, PE disagrees with the language to the extent that 2.1 is qualified by language in 2.6 and 2.6.2. The issue of managing modeling of case data is already adequately handled in MOD Standards. Furthermore, PE does not feel that the term “material” can be defined with any mutually agreed-upon boundaries, and could be construed to require any and all

Transmission Planners and/or Planning Authorities to make multiple revisions of base cases each year. PE therefore appeals to the SDT to remove the language referring to R2 Part 2.6.2 and furthermore appeals for the deletion of R2.6.2. Furthermore, PE appeals to the SDT to modify R2.6.1 to say “For steady state, short circuit, or Stability analysis: the study shall be five calendar years old or less, unless a technical rationale can be provided to demonstrate the validity of the results of any studies older than five years or any studies using cases containing major modeling differences from other submitted studies.”
No
PE does not have concerns in general with either 2.1.4 or 2.4.3. PE does, however, disagree with the wording at the end of the main paragraph of 2.4.3. Whether or not analysis qualifies as sensitivity analysis should not be predicated upon the end results; rather, it should be based upon major case modeling differences. PE therefore recommends that the phrase “…that demonstrate a measurable change in performance” be removed so that the last sentence in the main paragraph read “…by a sufficient amount to stress the System within a range of credible conditions.”
Yes
No
PE agrees in general with the changes made to R2.5. PE disagrees, however, with the language stipulating that current and past studies be qualified by the language in R2.6 Part 2.6.2 (see notes for Question 3.1 regarding recommending changes with regard to R2.6.2).
Yes
PE assumes the term “header notes” is referring to the “Planning Performance Events” at the top of Table 1. If this is the case, PE has no concerns with the present language.
PE remains concerned with the present draft of TPL-001-2 regarding the presence or absence of footnotes in particular events. PE believes that, for all events in Table 1 except P0, any “No” designation in the “Non-Consequential Load Loss allowed” column should have Footnote 12 appended to it. Several events do append footnote 12 to a “No” answer, but several do not. PE does not see why certain events should be denied the use of Footnote 12 as long as Footnote 12 is worded in a manner such that the BES will not be adversely affected. PE has additional concerns regarding two Footnotes. Footnote 9 contains language regarding firm transmission service that is very similar to language presently under review in NERC Project 2010-11. PE feels that Footnote 9 should have had a statement at the end similar to that of Footnote 12, such as “Note: Firm Transmission Service is being decided in Project 2010-11. When that project is finalized, the resolution will be copied into Footnote 9.” Without such a statement, PE cannot understand why the Firm Transmission language in footnote (b) under Project 2010-11 is being reviewed, while it is apparently no longer being reviewed in Project 2006-02. Footnote 12 contains the following language as a place holder: “Note: Non-Consequential Load Loss is being decided in Project 2010-11. When that project is finalized, the resolution will be copied here.” PE has filed substantial comments on the footnote (b) issue in previous drafts, pointing out that disallowance of curtailment of non-consequential load is a local load issue and not a BES concern. PE therefore cannot make any positive determination as to whether the draft Standard, TPL-001-2, and its associated Table 1, will be a viable Standard until the language in Footnote 12 is resolved via Project 2010-11. Given the potential for unresolved and confusing issues regarding the parallel development of Project 2006-02 and 2010-11, PE encourages NERC to resolve all issues within Project 2010-11 before taking the draft Standard TPL-001-2 to ballot in Project 2006-02.
Yes
Yes
Group
Bonneville Power Administration
Denise Koehn
Yes

Yes
No
Please clarify R1.1.2 to state “Known outage(s) of generation or Transmission Facility(ies) during the Planning Horizon with a duration of of at least six months.”
Yes
Yes
Yes
Yes
It should be noted that if there is more generation proposed in an area than there load and export capability, all proposed material generation additions would not be represented. Determining what future generation additions to include in the Long-Term Transmission Planning Horizon may be based on a non-technical rationale rather than a technical rationale.
Yes
Table 1, P5 currently requires the study of “[d]elayed Fault Clearing due to the failure of a relay13 protecting the Faulted element to operate as designed”. As written, this requirement does not recognize the use of redundant relays for primary protection. In some cases side by side relays are used to provide primary fault tripping if one relay fails to operate. Per the requirement as stated, the redundant relay would provide no value in meeting this requirement. Please revise to acknowledge backup relays: “Single failure of a protection relay13 protecting the Faulted element to operate as designed, resulting in backup relay actions or Delayed Fault Clearing, for one of the following”. In Table 1, P2 and P3, the last column “Non-Consequential Load Loss Allowed” where the requirement "No12" appears, and in footnote 12, the standard as proposed does not allow for any Non-Consequential Load Loss. When the Non-Consequential Load Loss (footnote b) issue is clarified in Project 2010-11 this requirement may be changed. Therefore the proposed footnote 12 should include a provision to default to the existing footnote “b” in TPL-002-0 until Project 2010-11 is decided. Please revise footnote 12 to read, “Note: Non-Consequential Load Loss is being decided in Project 2010-11. When that project is finalized, the resolution will be copied here. In the interim, planned or controlled interruption of electric supply to radial customers or some local Network customers, connected to or supplied by the Faulted element or by the affected area, may occur in certain areas without impacting the overall reliability of the interconnected transmission systems. To prepare for the next contingency, system adjustments are permitted, including curtailments of contracted Firm (non-recallable reserved) electric power Transfers.”
Individual
L Zotter, M Morais, J Billo, J Conto, S Jue, JC Culberson, J Teixeira, G Gnanam, S Myers
ERCOT ISO
Yes
Yes
Yes
No
Previous Comment unaddressed: Requirement 2.1.5: Including the spare equipment strategy will be difficult for a PC that doesn’t own or manage the transmission equipment or the strategies. This

requirement should only be applicable to TP. Furthermore, R7 should be deleted and the responsibilities of each entity should be explicitly stated within the specific requirements.
No
The stress test requirements should be deleted. The purpose of this proposed Standard is to establish planning performance standards that support reliable operation. This is achieved by imposing performance requirements relative to specific conditions and contingencies. Compliance with the performance metrics within these boundaries is presumably indicative of a reliable system. It is unclear what value is added by stress testing the system in accordance with undefined, vague parameters, as required by Requirements 2.1.4 and 2.4.3. The criteria in the relevant requirements that govern the stress testing are defined by the following ambiguous phrase: 1) “by a sufficient amount”; 2) “range of credible conditions”; and 3) “measurable change of performance”. Application of these criteria introduces uncertainty for both the regulated community and the relevant compliance enforcement authorities, which, in turn, creates audit risks for regulated entities. Furthermore, there is no reliability value because the stress test requirements do not establish objective criteria and do not prescribe any actions based on the stress test results. Reliability Standards should set specific obligations that are readily discernible and achievable on a consistent basis. The existing Standard does this by setting specific performance obligations relative to specific conditions and contingencies. Conversely, the stress test requirements introduce ambiguity and uncertainty with no reliability benefit; the only apparent effect is unnecessary audit liability risk for regulated entities. Accordingly, ERCOT believes that these requirements should be deleted.
No
ERCOT ISO suggests adding “best available” as a descriptor to load models. Distribution Providers (DPs)/Load Serving Entities (LSEs) are the appropriate NERC functional entities to provide dynamic load data. Accordingly, Planning Coordinators (PCs) and Transmission Planners (TPs) must rely on those entities for that data. Despite reliance on DPs/LSEs for this data, the Standard proposes to impose an obligation on PCs and TPs to include a load model representative of “expected” dynamic behavior. Simply put, PCs and TPs do not have this information and should not be subject to compliance liability risk for an issue that is beyond their control. This change will still accomplish the goal of reflecting dynamic data in the relevant models, while mitigating PC/TP compliance risk by basing their compliance on information that is within their control – i.e. the “best available” information. Based on this change, the language should read - “System peak Load levels shall include best available Load models which represent the expected dynamic behavior of Loads that could impact the study area, considering the behavior of induction motor Loads”. This language is also a more accurate reflection of the Consideration of Comments by the Standard Drafting Team after the March 2010 comment period. To address this issue in the most appropriate manner, the Standard should be revised to establish an appropriate process for collection, reporting and use of dynamic data based on assigning obligations to the appropriate functional entities. In essence, DPs/LSEs should be required to collect the data and report it to TPs. Because TP models are the basis for PC models, the dynamic data will be included in PC models as part of the process. However, DPs and TPs should still only be required to use the “best available” data. Continued use of this language will mitigate the liability risk associated with a requirement related to data that is within the control of a third party. Even under a construct where DPs/LSEs are required to collect and report dynamic data, there is no guarantee they will do so and PCs/TPs should not be held accountable in those circumstances. Accordingly, PC/TP compliance risk will be mitigated by use of a “best available” standard.
Yes
Yes
Yes
Yes
ADDITIONAL COMMENTS: Short circuit analysis (R2.3 and R2.8) should only be applicable to TPs.

Fault duty issues are typically local in nature and it would be an overlap for PCs to perform this same analysis done by the local Transmission Planner. Furthermore, R7 should be deleted and the responsibilities of each entity should be explicitly stated within the specific requirements. Previous Comment Unaddressed : Requirement 2.6.2: Reads as if a change is being made to an existing study. It is confusing. Possibly restate: "2.6.2 For steady state, short circuit, or stability analysis: previous studies can be used only if a material change to the system has not occurred or if a change that did occur does not impact the study area." R4.1.2 – Planning Coordinators do not perform protection coordination nor do they have access to the relay settings information required to do this analysis. This requirement should apply to Transmission Planners only because they perform system protection. The substantive scope of the standard is relative to Long-Term Transmission Planning Horizon and Near-Term Transmission Planning Horizon. The Purpose section is described in terms of the “planning horizon” generally. It may be worthwhile aligning the two to mitigate the potential for any confusion. ERCOT proposes the following revisions to the Purpose section: 3.Purpose: Establish Transmission system planning performance requirements within the relevant planning horizon (i.e. Long-Term or Near-Term) to develop a Bulk Electric System (BES) that will operate reliably over a broad spectrum of System conditions and following a wide range of probable Contingencies. In addition, the “Time Horizon” for the Standard is “Long-Term Planning”. Obviously, this necessarily encompasses both Long-Term and Near-Term Transmission Planning Horizons. However, the scope of the Long-Term Planning time horizon is not readily apparent. ERCOT recommends appropriate revisions that clearly define the applicable time horizons.

Individual

Gary Trent

Tucson Electric Power Company

Yes

We commend the SDT for its work to continue the improvement on the proposed TPL-001-1. We have included additional comments here since we were not able to find a place to include comments on the following: Requirement R4; Requirement, Parts 2.1.5, 2.3, and 2.8; Requirement 3, Part 3.3.2; and Requirement 4, Parts 4.3.1and Part 4.3.2 Requirement 2, Part 2.1.5: The spare equipment strategy does not improve reliability performance. If an outage of a long lead time piece of equipment occurs, the system should still be able to operate in a reliable manner that meets the performance measures of Categories P3 and P6. If an entity cannot meet its performance requirements under this standard, a capital project is indicated. Spare equipment being available would not mitigate this need it only increases expenses until the item is needed. Requirement 2, Parts 2.3 and 2.8: Short circuit fault duty is a localized phenomena that is mainly impacted by the addition of new generation or transmission facilities. Due to proprietary concerns of generation and transmission interconnection requests, short circuit studies are performed in forums outside the annual Planning Assessment. Normally, these studies will be conducted before the projects can be included in regional base cases. As such, short circuit analysis should not be included in this Standard since it would provided limited benefit. Requirement 3, Part 3.3.2 and Requirement 4, Part 4.3.2 Steady state response of dynamic control devices should also be included in the Part 3.3.2. and the list of possible devices included should be removed from Part 3.3.2 and 4.3.2. Section R4.3.1, bullet point 3 requires the stability analyses to include the impact of subsequent “[t]ripping of Transmission lines and transformers where transient swings cause Protection System operation based on generic or actual relay models”. As written, this bullet could be interpreted as requiring the inclusion of these relay models in stability data bases. We do not have generic or actual relay models in our dynamics data bases for tripping line faults on lines and transformers represented. We represent actual relay response and tripping times of relays, communications, and breakers to faults in tripping transmission lines and transformers. Requiring the inclusion of generic or actual relay models for all relays that can trip lines and transformers would add a large burden to the development and maintenance of accurate dynamics model files that would add little or no benefit. Please change this bullet to read: “Tripping of Transmission lines and transformers where transient swings cause Protection System operation based on known Protection System response”.

No

A seasonal reference should be included in the example. Alternative language beginning with the second sentence: For the Planning Assessment started in a given calendar year, Year One must include the forecasted peak load period for the forecasted peak load season that is between 12 and 24 months into

the future from the current season. For example, if a Planning Assessment was started in 2011 prior to the forecasted peak season, then Year One must include the forecasted peak load for 2012. If the Planning Assessment was started in 2011 during or after the forecasted peak season, then Year One must include the forecasted peak load for 2013.
No
Proposed changes 1.1.1 Existing Facilities that will not be changed before the study year 1.1.3 New planned Facilities and planned changes to existing facilities
Yes
No
TEP agrees with removing the phrase "not already included in the studies." However, TEP does not understand the purpose of sensitivity studies. TEP is concerned that imposing additional sensitivity studies could lead to requirements that exceed the proposed standards. TEP recommends removing sesnitivity analysis from the standard.
Yes
No
If a material change (generator addition/retirement, new generator models based on unit testing, or transmission line or non-distribution transformer addition) is not planned for the longer-term planning horizon, do the longer-term stability studies need to be performed? TEP's agreement/disagreement with Part 2.4.1 is dependent on the response to this question. If the answer is the studies do not need to be performed, then TEP supports these changes.
Yes
Table 1, P5 currently requires the study of “[d]elayed Fault Clearing due to the failure of a relay13 protecting the Faulted element to operate as designed”. As written, this requirement does not recognize the use of redundant relays for primary protection. In some cases side by side relays are used to provide primary fault tripping if one relay fails to operate. Per the requirement as stated, the redundant relay would provide no value in meeting this requirement. Please revise to acknowledge backup relays: “Single failure of a protection relay13 protecting the Faulted element to operate as designed, resulting in backup relay actions or Delayed Fault Clearing, for one of the following”. In Table 1, P2 and P3, the last column “Non-Consequential Load Loss Allowed” where the requirement "No12" appears, and in footnote 12, the standard as proposed does not allow for any Non-Consequential Load Loss. When the Non-Consequential Load Loss (footnote b) issue is clarified in Project 2010-11 this requirement may be changed. Therefore, if this proposed Standard is enforced before Project 2010-11 is completed, entities will be required to meet this No Non-Consequential Load Loss requirement without the exception allowed in the existing TPL-002-0, footnote “b”. This will require immediate redesigns to meet this particular requirement. The unintended consequence could be that operators of local systems that are currently networked may opt to begin operation as radial systems, and future designs for local systems may be radial, at any voltage level. We suggest that the proposed footnote 12 include a provision to default to the existing footnote “b” in TPL-002-0 until Project 2010-11 is decided. Please revise footnote 12 to read, “Note: Non-Consequential Load Loss is being decided in Project 2010-11. When that project is finalized, the resolution will be copied here. In the interim, planned or controlled interruption of electric supply to radial customers or some local Network customers, connected to or supplied by the Faulted element or by the affected area, may occur in certain areas without impacting the overall reliability of the interconnected transmission systems. To prepare for the next contingency, system adjustments are permitted, including curtailments of contracted Firm (non-recallable reserved) electric power Transfers.” Timing of this project and project 2010-11 is critical. It would be very difficult to vote to approve the proposed TPL-001-2 prior to knowing the outcome of Project 2010-11 (footnote b issue). Non-Consequential Load Loss and curtailment of Firm Transmission Service should be allowed for loss of EHV BES elements for Category P4 and P5 events.
Yes

Yes
Individual
Gregory Campoli
New York Independent System Operator
Yes
No
The added clarification to the definition of Year One serves to remove most ambiguity with respect to Year One. However, the revision has added further ambiguity to the terms “year two” and “year five” which are not defined. NYISO recommends defining Year Five as the twelve month period 4 to 6 calendar years from the date of the Planning Assessment. NYISO further recommends revising R2.1.1 as follows: “System peak Load for Year One and for Year Five.” Alternatively, the definition of Year One could be eliminated and described within the text of the requirements.
Yes
No
NYISO completely agrees with the revision to R2.1, but this revision must be carried through to other sections (R2.2, 2.2.1). Revisions made to Requirement R2.1.5 have made it worse than as originally drafted. This would require the PC & TP to study, or in other words perform technical analysis of, the impact and probability of the possible unavailability of any piece of equipment with a lead time of one year or more. Such an evaluation of spare equipment strategies would require significant additional resources and data, but provide no benefit to system reliability, as it is redundant to the existing N-1-1 contingency requirement (P6). R2.7 requires that Corrective Action Plans are included in each Planning Assessment and states “Such actions may include…” followed by a list of actions. Restricting allowable actions, and excluding runback/tripping of HVDC would have a direct impact on multiple existing facilities in New York and would adversely impact the reliability planning of the NYCA. Runback/tripping of HVDC must be added to the list.
No
Our concern involves wording under 2.1.4 and 2.4.3 that sensitivities are required varying one or more conditions. Subsequently, in requirement 2.7.2 corrective action plans need to be developed to resolve performance deficiencies “only” if identified in multiple conditions or require a rationalization why no corrective action plan is necessary. Multiple conditions sensitivities under 2.1.4 and 2.4.3 are necessary to satisfy requirement 2.7.2. Requirement 2.7.2 adds ambiguity and should be removed. Requirement 2.7.2 should be revised as follows: 2.7.2. Corrective Action Plans are not required for performance deficiencies identified in a sensitivity analysis.
No
The NYISO, along with many other systems, has not determined a need to model dynamic loads, and therefore has not benchmarked any such models. The NYISO recommends that prior to this requirement being in place, a modeling standard should exist that is specific to dynamic loads.
Yes
No
Header note (i) in the first Table 1 could imply that voltage-varying load shall not be used to meet steady state performance requirements. NYISO steady state load models include voltage-varying loads. This note should be revised to only reference loads which are disconnected due to voltage.
There are two tables labeled “Table 1”. The extreme events table should be renamed “Table 2”.
Yes

No
Requirement 8 is an administrative burden to TPs and PCs that adds no value to reliability. PCs should be including TPs, neighboring PCs and interested parties in its planning processes when developing the Planning Assessments. Therefore, the inclusion of a set of VSLs for Requirement 8 is unnecessary. Furthermore, the requirement lacks a specified time frame to receive comments, thereby implying that TPs and PCs would be required to reply to comments forever following the finalization of a Planning Assessment. The NYISO proposes a limit of six months. Should the SDT decide to leave the VSLs for Requirement 8, Requirement 8.1 should be revised to reflect that comments only to the final Assessment (not drafts developed during a process) need a response as follows: If a recipient of the planning assessment final results provides documented comments on the results within 180 calendar days of the issuance of those final results, the respective Planning Coordinator or Transmission Planner shall provide a documented response to such recipient within 90 calendar days of receipt of those comments.
Group
PacifiCorp
Sandra Shaffer
Yes
Yes
Yes
Yes
Yes
Yes
Yes
Yes
Under Category P2 (Single Contingency) and Normal System Conditions, the performance table indicates that, for both HV and EHV, interruption of firm transmission service and non-consequential load loss are not allowed following the opening of a line section without a fault. This section of the performance table should distinguish between EHV and HV – performance requirements following the opening of a line section without a fault should be the same as those for a bus section fault. As with the bus section fault, interruption of firm transmission service and non-consequential load loss should be allowed for HV.
Yes
No
The language for Requirement R8 is ambiguous with regard to which adjacent entities must request in writing the results of the Planning Assessment. The language should be clarified to read: “Upon request made in writing, each Planning Coordinator and Transmission Planner shall distribute its Planning Assessment results to adjacent Planning Coordinators, adjacent Transmission Planners, and any other functional entity that has a reliability related need.” The Requirement R8 VSL language should also be revised accordingly.
Individual
Claudiu Cadar
GDS Associates, Inc.

No
We disagree with the Implementation Plan and we suggest changes as follows: - The title should read “Implementation Plan for TPL-001-2” - With regards to the Prerequisite Approvals, NERC project #2010-11 still in progress (Table 1, Footnote ‘b’) must be implemented before this current TPL-001-2 standard gets implemented. However, while the 2010-11 NERC project does not define any of the new terms such as consequential / non-consequential load, the footnote ‘b’ cannot be just copied into the new standard (see TPL-001-2 standard Table 1, note 12). Note ‘b’ may further change to reflect the verbiage in the TPL-001-2 standard. - Not sure what is the intent of the last paragraph. While the proposed changes to Table 1, footnote ‘b’ are quite precise, are we still open a door to those entities that will continue to trip Non-Consequential Load and curtail Firm Transmission Service? If no penalties for such practices while the proposed standard allows a sufficient time frame to correct any deficiencies, then what is the point to all the effort behind the development of a new TPL standard?
No
The definition it seem both incomplete and exhaustive: - If taken out of the planning assessment context, the definition is missing the matter that is supposed to identify. We suggest changing the first sentence such as “The first twelve month period to which the functional entity is responsible for the assessment of Transmission System Planning performance.” - While it will be a burdensome task to define each year that follows Year One, the definition of Year One may include a sentence that define the rule for the following years such as “All of the twelve months period following Year One shall commence immediately after the end of the preceding twelve months period.” - The definition should not include examples.
No
The Time Horizon should be for both Near-Term and Long-Term Planning.
Yes
No
The requirements are extremely burdensome. We recommend changing the last sentence of 2.1.4 requirement by removing “by a sufficient amount to stress the System within a range of credible conditions that demonstrate a measurable change in performance:” because there are instances where listed conditions may not result in measurable changes in performance (Ex. An increase in load in a well built system may not cause any measurable changes in performance because there is sufficient transmission capacity to serve the load).
No
We disagree with the content of this requirement based on several facts: - We believe that the dynamic behavior of the load cannot be accurately estimated beyond current time. We are concern about the effort required to ascertain the dynamic response of the load - The requirement references “Loads that could impact the study area” without specifying how an entity will identify these loads. Perhaps the standard should provide guidelines to determine which loads would impact the study area.
No
We are not sure what will be included in these “material generation additions or changes”. Perhaps the standard should provide guidelines to determine what are these material changes or additions?
Yes
Individual
Terry Harbour
MidAmerican Energy
Yes
Yes

No
There are concerns over the FERC outstanding March order on TPL and how FERC interprets “normal” or base case conditions and “assuming” an entities primary protection system is out of service and must rely on its backup protection system to operate. This concept combined with the new tables cannot be perpetuated.
Yes
Yes
R2.1.4 bullet #7 – Replace the adjective “planned” with “known” for consistency with R1.1.2 and R2.1.3. R2.3 Replace “conducted” with “assess” for consistency with R1.1.2 and R2.1.3. R2.4 Replace “current or past studies as qualified” with “current or qualified past studies as indicated” for consistency with R2
No
MidAmerican questions if the widespread use of composite load models really provides significant benefits to additional dynamic analyses over generic load conversion assumptions which have been historically used. The use of composite load models may result in more precise individual load models, but no more accurate dynamic simulations. This poorly worded requirement should be deleted in its entirety as providing additional burden without any additional reliability benefits. If the composite load model requirement must be kept, it should be modified to include the following bolded text: “…System peak Load levels shall include a Load model which represents the expected dynamic behavior of Loads that could impact the study area, considering the behavior of induction motor Loads, but without requiring a detailed load survey be conducted…”
Yes
No
The reference to BES should be placed back into Note a in the header above table 1.
Voting "no" - Footnote 6 – Further clarify the applicable shunt devices in Footnote 6 with this suggested text: 6. Requirements which are applicable to shunt devices, also apply to FACTS devices that are connected to ground, but not instrument voltage transformers or surge arresters
No
Revise measures to be consistent with requirements. 1. R6 Delete “any”. The use of the word any in standards should not be allowed. 2. Revise the Planning Assessment definition to more explicitly apply to the BES and the TPL-001 requirements. We suggest text of: “Planning Assessment: Documented evaluation of future Transmission System performance and Corrective Action Plans to remedy identified deficiencies in the BES from the steady state and stability performance requirements set forth in the TPL-001 standard.” 3. R2.1.5 – We propose replacing the term ‘major Transmission’ with “BES” because BES is a well defined term, while the term, ‘major Transmission‘, is not. 4. Add R2.3.1 – We suggest the addition of a R2.3.1 requirement to emulate the distinction between the requirement to perform a short circuit assessment and conduct required studies or analysis to support the assessment (e.g. R2.1/R2.1.1 and R2.2/R2.2.1). We propose wording such as, “Perform an analysis for at least one year in the Near Term Transmission Planning Horizon.” This requirement would set an expectation that an analysis should be conducted to at least one or more years in the near-term planning horizon, rather than imply that an analysis of all five years in the near-term planning horizon must be conducted. 5. R2.7.2 – Delete 2.7.2. With regard to "include actions to resolve performance deficiencies identified in multiple sensitivity studies", mitigation plans should not be required for deficiencies found in multiple sensitivity studies because the conditions in some sensitivity studies are more extreme and less likely than base case conditions. Some of the sensitivity study conditions are not credible. 6. R2.7.4 – We suggest that the wording of R2.7.4 be the same as R.2.8.2. 7. R3.5 - We interpret that R3.5 requires the TP and PC to conduct an evaluation of possible actions to reduce the likelihood or impact of extreme events, which produce the more severe impacts, if cascading outages may occur. Does the drafting team intend for the TP and PC to fulfill this requirement for at least one event in each of the five categories (i.e. 3 steady state and 2 stability) or in each of the 21 categories/sub-categories (i.e. 14 steady state and 7 stability).

Also, if the resulting cascading outages do not result in any overloads, under-voltages, voltage collapse, or loss of generator synchronization, then should the evaluation of possible actions to reduce likelihood or impact be required? 8. R4.1.1 – We suggest that there should be some qualification of which generating units are referred to in this requirement. We propose that the requirement say, “No generating unit with a Point of Interconnection connected to the BES shall pull out of synchronism.” For example, some utilities include smaller generation units that are connected at voltages below 100 kV and even down to distribution voltage in their base cases. 9. R4.1.2 – We propose that the wording of this requirement be revised to reflect the same BES qualification of the generating unit that we noted in R4.1.1 above. 10. R4.3.1 – This requirement refers to high speed reclosing and we presume that this is special high speed reclosing that is completed in several cycles, rather than the normal high speed reclosing that is completed in a number of seconds. We recommend that the term high speed reclosing be more clearly defined for this sub-requirement. 11. R.4.3.2 – We suggest qualifying which generating units to consider and which voltage limits to simulate with revised wording like, “Trip generating units that are connected to the BES when actual or assumed minimum generator transient voltage limits are known and simulations show voltages may fall below the voltage limit. If assumed voltage limits are used, then they should be included in the assessment“. The requirement should not apply to all relevant generating units until one of the MOD standards requires all Generator Owners to provide their minimum generating unit voltage limits to the TP and PC. If the wording of R4.3.2 must be different from its counterpart, R3.3.2, then please explain the reasons for any differences. 12. R5 – This requirement should allow the applicable entity (such as the TOP / TO) to define a “Post-Contingency Voltage Deviation” as this criteria is not used widely enough in the industry to be a well established criteria. 13. Revise R8 to limit the need to provide the Planning Assessment as follows “adjacent Planning Coordinators and adjacent Transmission Planners and to any registered functional entity…” 14. Data Retention for R3, R5, R6, & R7 - The MRO NSRS proposes that the wording in these elements be revised to change “All” to “The”. The word “All” is unnecessary and could encourage over-the-top compliance monitoring and enforcement. The revised data retention would read as follows: “The studies performed in support….”
Yes
Individual
Catherine Koch
Puget Sound Energy
Yes
We commend the SDT for its work to continue the improvement on the proposed TPL-001-1. We were not able to find a place to include comment on Requirement R4; therefore, we have included our comments here: Section R4.3.1, bullet point 3 requires the stability analyses to include the impact of subsequent “[t]ripping of Transmission lines and transformers where transient swings cause Protection System operation based on generic or actual relay models”. As written, this bullet could be interpreted as requiring the inclusion of these relay models in stability data bases. We do not have generic or actual relay models in our dynamics data bases for tripping line faults on lines and transformers represented. We represent actual relay response and tripping times of relays, communications, and breakers to faults in tripping transmission lines and transformers. Requiring the inclusion of generic or actual relay models for all relays that can trip lines and transformers would add a large burden to the development and maintenance of accurate dynamics model files that would add little or no benefit. Please change this bullet to read: “Tripping of Transmission lines and transformers where transient swings cause Protection System operation based on known Protection System response”.
Yes
Yes
Yes
Yes

Yes
Yes
Table 1, P5 currently requires the study of “[d]elayed Fault Clearing due to the failure of a relay13 protecting the Faulted element to operate as designed”. As written, this requirement does not recognize the use of redundant relays for primary protection. In some cases side by side relays are used to provide primary fault tripping if one relay fails to operate. Per the requirement as stated, the redundant relay would provide no value in meeting this requirement. Please revise to acknowledge backup relays: “Single failure of a protection relay13 protecting the Faulted element to operate as designed, resulting in backup relay actions or Delayed Fault Clearing, for one of the following”. In Table 1, P2 and P3, the last column “Non-Consequential Load Loss Allowed” where the requirement "No12" appears, and in footnote 12, the standard as proposed does not allow for any Non-Consequential Load Loss. When the Non-Consequential Load Loss (footnote b) issue is clarified in Project 2010-11 this requirement may be changed. Therefore, if this proposed Standard is enforced before Project 2010-11 is completed, entities will be required to meet this No Non-Consequential Load Loss requirement without the exception allowed in the existing TPL-002-0, footnote “b”. This will require immediate redesigns to meet this particular requirement. The unintended consequence could be that operators of local systems that are currently networked may opt to begin operation as radial systems, and future designs for local systems may be radial, at any voltage level. We suggest that the proposed footnote 12 include a provision to default to the existing footnote “b” in TPL-002-0 until Project 2010-11 is decided. Please revise footnote 12 to read, “Note: Non-Consequential Load Loss is being decided in Project 2010-11. When that project is finalized, the resolution will be copied here. In the interim, planned or controlled interruption of electric supply to radial customers or some local Network customers, connected to or supplied by the Faulted element or by the affected area, may occur in certain areas without impacting the overall reliability of the interconnected transmission systems. To prepare for the next contingency, system adjustments are permitted, including curtailments of contracted Firm (non-recallable reserved) electric power Transfers.” Timing of this project and project 2010-11 is critical. It would be very difficult to vote to approve the proposed TPL-001-2 prior to knowing the outcome of Project 2010-11 (footnote b issue).
Individual
Joe Tarantino
Sacramento Municipal Utility District
Yes
We commend the SDT for its work to continue the improvement on the proposed TPL-001-1. We were not able to find a place to include comment on Requirement R4; therefore, we have included our comments here: Section R4.3.1, bullet point 3 requires the stability analyses to include the impact of subsequent “[t]ripping of Transmission lines and transformers where transient swings cause Protection System operation based on generic or actual relay models”. As written, this bullet could be interpreted as requiring the inclusion of these relay models in stability data bases. We do not have generic or actual relay models in our dynamics data bases for tripping line faults on lines and transformers represented. We represent actual relay response and tripping times of relays, communications, and breakers to faults in tripping transmission lines and transformers. Requiring the inclusion of generic or actual relay models for all relays that can trip lines and transformers would add a large burden to the development and maintenance of accurate dynamics model files that would add little or no benefit. Please change this bullet to read: “Tripping of Transmission lines and transformers where transient swings cause Protection System operation based on known Protection System response”.
Yes

Yes
Yes
Yes
Yes
Yes
Yes
Table 1, P5 currently requires the study of “[d]elayed Fault Clearing due to the failure of a relay13 protecting the Faulted element to operate as designed”. As written, this requirement does not recognize the use of redundant relays for primary protection. In some cases side by side relays are used to provide primary fault tripping if one relay fails to operate. Per the requirement as stated, the redundant relay would provide no value in meeting this requirement. Please revise to acknowledge backup relays: “Single failure of a protection relay13 protecting the Faulted element to operate as designed, resulting in backup relay actions or Delayed Fault Clearing, for one of the following”. In Table 1, P2 and P3, the last column “Non-Consequential Load Loss Allowed” where the requirement "No12" appears, and in footnote 12, the standard as proposed does not allow for any Non-Consequential Load Loss. When the Non-Consequential Load Loss (footnote b) issue is clarified in Project 2010-11 this requirement may be changed. Therefore, if this proposed Standard is enforced before Project 2010-11 is completed, entities will be required to meet this No Non-Consequential Load Loss requirement without the exception allowed in the existing TPL-002-0, footnote “b”. This will require immediate redesigns to meet this particular requirement. The unintended consequence could be that operators of local systems that are currently networked may opt to begin operation as radial systems, and future designs for local systems may be radial, at any voltage level. We suggest that the proposed footnote 12 include a provision to default to the existing footnote “b” in TPL-002-0 until Project 2010-11 is decided. Please revise footnote 12 to read, “Note: Non-Consequential Load Loss is being decided in Project 2010-11. When that project is finalized, the resolution will be copied here. In the interim, planned or controlled interruption of electric supply to radial customers or some local Network customers, connected to or supplied by the Faulted element or by the affected area, may occur in certain areas without impacting the overall reliability of the interconnected transmission systems. To prepare for the next contingency, system adjustments are permitted, including curtailments of contracted Firm (non-recallable reserved) electric power Transfers.” Timing of this project and project 2010-11 is critical. It would be very difficult to vote to approve the proposed TPL-001-2 prior to knowing the outcome of Project 2010-11 (footnote b issue).
Individual
Patrick Farrell
Southern California Edison Company
Yes
Yes
Yes
Yes

Yes
Yes
Yes
Yes
SCE supports the revised performance table.
Yes
Yes
Individual
John Mayhan
Omaha Public Power District
Why is Footnote 12 used for some occurrences of the word "No" in the last column of Table 1 but not other occurrences of the word "No"?

CHECKBOX

Informal Comments on Assess Transmission Future Needs – Project 2006-02.

The TPL-001-2 standard for Assess Transmission Future Needs (Project 2006-02) Drafting Team thanks all commenters who submitted comments on the fifth draft overview. These standards were posted for a 30-day public comment period from August 3, 2010 through September 2, 2010. The stakeholders were asked to provide feedback on the standards through a special Electronic Comment Form. There were 7 sets of comments, including comments from 77 different people from approximately 69 companies representing 6 of the 10 Industry Segments as shown in the table on the following pages.

http://www.nerc.com/filez/standards/Assess-Transmission-Future-Needs.html

The SDT has completed the review of the informal comments from industry for Project 2006-02: Assess Transmission Future Needs. Each and every comment was reviewed and considered by the SDT regardless of whether there is a formal written response shown. The majority of the cases where the SDT did not make a change or provide a written response was because the SDT had already responded to the issue or the SDT did not believe that the proposed revision added clarity or otherwise improved the quality of the proposed standard.

The SDT made a number of changes due to the comments received from industry and drafting team discussions arising from those comments as highlighted below:

- Year One definition – deleted 'must'
- Conforming changes to the language in the Effective Date – made language consistent with the Implementation Plan
- Requirement R1 and M1 – changed, ". . . the latest data consistent with . . ." to "data consistent with. . . " and established P0 as normal System condition in Table 1
- Requirement R2, part 2.1.4 – replaced 'performance' with 'System response' and changed last bullet from ". . . planned Transmission outages" to ". . . known Transmission outages"
- Requirement R2, part 2.6.2 – require documentation explaining material changes
- Requirement R2, part 2.7.1 – made it clear that statement is not all inclusive
- Requirement R2, part 2.8.2 – made language consistent with Requirement R2, part 2.7.4
- Requirement R4, part 4.3.1, bullet #1 – added qualifier for high speed reclosing
- Requirement R6 and M6 and data retention for R6 – changed 'any' to 'the'
- Table 1, header note 'i' – deleted 'including Load'
- Table 1, P0 – delete superscript in column 6
- Table 1, P2 – added 'Breaker' to description
- Table 1, P4 – added 'Breaker' to description
- Table 1, P5: added 'non-redundant'
- Table 1, extreme events – Stability: made language consistent with Table 1, P5
- Measure M8 – spelled out the functional entity involved
- Data retention for Requirement R7 – deleted 'all such'
- Changed, "Initial System Conditions" to "Initial Conditions" in column heading of Table 1 and Table 1 Note 9
- Deleted section, "Compliance Monitoring and Reset Timeframe as this is no longer included in the standard template.

The SDT believes that with these changes, the industry concerns have been addressed except for Footnote 12 (content of existing footnote b). Until the issues with footnote 'b' in Project 2010-11: TPL Table 1 are resolved, the SDT will not request the Standards Committee to move the project to the ballot phase. This could mean that Project 2006-02 may sit in limbo for several months pending the outcome of the Project 2010-11 deliberations. So that industry can see what has transpired with regard to their comments on Project 2006-02, the SDT is requesting that the consideration of comments document, along with the redlined version of TPL-001-2 corresponding to those comment responses be posted immediately. In this way, the industry can see what the SDT has decided in response to comments while the content of the comments is still fresh in the minds of the commenters. The SDT encourages anyone reading the posted documents to reach out to members of the SDT for informal discussions of posted documents.

Once Project 2010-11 is resolved, the wording for footnote 'b' will be essentially copied to TPL-001-2. The SDT realizes that this cannot be a simple cut and paste due to format differences between the old standard and the revised TPL-001-2 and will take appropriate actions to make things fit correctly. Once this has been accomplished, the SDT expects to ask the Standards Committee to move Project 2006-02 to the ballot stage.

If you feel that your comment has been overlooked, please let us know immediately. Our goal is to give every comment serious consideration in this process! If you feel there has been an error or omission, you can contact the Vice President and Director of Standards, Herb Schrayshuen, at 609-452-8060 or at herb.schrayshuen@nerc.net. In addition, there is a NERC Reliability Standards Appeals Process.[1]

[1] The appeals process is in the Reliability Standards Development Procedures: http://www.nerc.com/standards/newstandardsprocess.html.

Index to Questions, Comments, and Responses

1. The SDT has revised the Implementation Plan based on industry comments to the initial ballot. Do you support this change? If you do not support this change, please specify why you disagree and include specific alternative language to resolve your concern. 10

2. The SDT has revised the definition of Year One based on industry comments to the initial ballot. Do you support this change? If you do not support this change, please specify why you disagree and include specific alternative language to resolve your concern. 20

3. The SDT has revised the Requirements language based on industry comments to the initial ballot. Do you support these changes? If you do not support these changes, please specify why you disagree and include specific alternative language to resolve your cncern. 28

3.1 Requirement R2 and Part 2.1 – past studies..... 36

3.2 Requirement R2, Parts 2.1.4 & 2.4.3 – sensitivity analysis:..... 47

3.3 Requirement R2, Part 2.4.1 – dynamic load models: 57

3.4 Requirement R2, Part 2.5 – material clarification: 64

4. The SDT has revised the header notes based on industry comments to the initial ballot. If you do not support these changes, please specify why you disagree and include specific alternative language to resolve your concern. 70

5. The SDT has revised the performance table (including the list of extreme events and footnotes) based on industry comments to the initial ballot. If you do not support these changes, please specify why you disagree and include specific alternative language to resolve your concern. 78

6. The SDT has revised the Measures based on industry comments to the initial ballot. If you do not support these changes, please specify why you disagree and include specific alternative language to resolve your concern. 95

7. The SDT has revised the Requirement R8 VSL based on industry comments to the initial ballot. If you do not support these changes, please specify why you disagree and include specific alternative language to resolve your concern. 102

The Industry Segments are:

1 — Transmission Owners
2 — RTOs, ISOs
3 — Load-serving Entities
4 — Transmission-dependent Utilities
5 — Electric Generators
6 — Electricity Brokers, Aggregators, and Marketers
7 — Large Electricity End Users
8 — Small Electricity End Users
9 — Federal, State, Provincial Regulatory or other Government Entities
10 — Regional Reliability Organizations, Regional Entities

Group/Individual		Commenter	Organization	Registered Ballot Body Segment									
				1	2	3	4	5	6	7	8	9	10
1.	Group	Mallory Huggins	NERC Staff										
2.	Group	Philip Kleckley	SERC Planning Standards Subcommittee	X		X		X					
3.	Group	Guy Zito	Northeast Power Coordinating Council										X
4.	Group	David Kiguel	Hydro One Networks Inc.	X		X							
5.	Group	Bob Cummings	Transmission Issues Subcommittee										
6.	Group	Robert Jones	SERC Dynamics Review Subcommittee	X									X
7.	Group	Carol Gerou	MRO's NERC Standards Review Subcommittee										X
8.	Group	Richard Kafka	Pepco Holdings, Inc - Affiliates	X		X		X	X				
9.	Group	Ben Li	IRC Standards Review Committee		X								

Group/Individual		Commenter	Organization	Registered Ballot Body Segment									
				1	2	3	4	5	6	7	8	9	10
10.	Group	Denise Koehn	Bonneville Power Administration	X		X		X	X				
11.	Individual	Eric Mortenson	Exelon Transmission Planning	X									
12.	Individual	Andy Tillery	Southern Company	X		X							
13.	Individual	Steve Rueckert	Western Electricity Coordinating Council										X
14.	Individual	Jana Van Ness, Director Regulatory Compliance	Arizona Public Service Company	X		X		X					
15.	Individual	Brent.Ingebrigtson@eon-us.com	E.ON U.S.	X		X		X	X				
16.	Individual	Richard Becker	Florida Reliability Coordinating Council, Inc - Transmission Working Group	X	X	X	X						X
17.	Individual	Brandy A. Dunn	Western Area Power Administration	X					X				
18.	Individual	Sandra Shaffer	PacifiCorp	X		X		X	X				
19.	Individual	Ray Mason	ReliabilityFirst										X
20.	Individual	Greg Rowland	Duke Energy	X		X		X	X				
21.	Individual	Catherine Mathews	NorthWestern Energy (NWMT)	X									
22.	Individual	Phuong Tran	Lakeland Electric	X		X		X					
23.	Individual	Tom Duane	PNM	X		X							

Group/Individual		Commenter	Organization	Registered Ballot Body Segment									
				1	2	3	4	5	6	7	8	9	10
24.	Individual	Doug Hohlbaugh	FirstEnergy	X		X	X	X	X				
25.	Individual	John Collins	Platte River Power Authority	X		X			X				
26.	Individual	Aaron Staley	Orlando Utilities Commission	X									
27.	Individual	Kasia Mihalchuk	Manitoba Hydro	X		X		X	X				
28.	Individual	Randi Woodward	Minnesota Power	X									
29.	Individual	Martin Bauer	US Bureau of Reclamation					X					
30.	Individual	Paul Rocha	CenterPoint Energy	X									
31.	Individual	Tim Ponseti, VP	TVA Transmission Planning & Compliance									X	
32.	Individual	Dan Rochester	Independent Electricity System Operator		X								
33.	Individual	Dilip Mahendra	SMUD	X		X	X	X					
34.	Individual	RoLynda Shumpert	South Carolina and Gas	X		X		X	X				
35.	Individual	Brian Keel	SRP	X									
36.	Individual	Darcy O'Connell	California ISO		X								
37.	Individual	Scott Inglebritson	Seattle City Light	X		X	X	X		X			
38.	Individual	Ean O'Neill	California Energy Commission									X	
39.	Individual	Kathleen Goodman	ISO New England Inc.		X								

Group/Individual		Commenter	Organization	Registered Ballot Body Segment									
				1	2	3	4	5	6	7	8	9	10
40.	Individual	Oscar Herrera	Los Angeles Department of Water and Power	X		X		X	X				
41.	Individual	Orlando A Ciniglio	Idaho Power Co	X		X							
42.	Individual	David Bradt	United Illuminating	X		X							
43.	Individual	John Sullivan	Ameren	X		X		X	X				
44.	Individual	Si Truc PHAN	Hydro-Quebec TransEnergie	X									
45.	Individual	Sergio Garza	LCRA TSC	X									
46.	Individual	Saurabh Saksena	National Grid	X		X							
47.	Individual	Charles Lawrence	American Transmission Company	X									
48.	Individual	Thad Ness	American Electric Power (AEP)	X		X		X	X				
49.	Individual	Bill Middaugh	Tri-State Generation & Transmission	X									
50.	Individual	David Miller	Lakeland Electric	X		X		X					
51.	Individual	Steve Stafford	GTC	X									
52.	Individual	Chifong Thomas	Pacific Gas and Electric Company	X		X		X					
53.	Individual	Michael R. Lombardi	Northeast Utilities	X		X		X					
54.	Individual	Christopher L. de	Consolidated Edison Co. of New York, Inc.	X									

Group/Individual		Commenter	Organization	Registered Ballot Body Segment									
				1	2	3	4	5	6	7	8	9	10
		Graffenried											
55.	Individual	Spencer Tacke	Modesto Irrigation District			X	X						
56.	Individual	Alex Rost	NBSO		X								
57.	Individual	Curtis A. Beveridge	Central Maine Power Company	X									
58.	Individual	Darryl Curtis	Oncor Electric Delivery	X									
59.	Individual	Jeffrey McKinney	New York State Electric & Gas Corp	X									
60.	Individual	Bart White	Progress Energy	X		X		X	X				
61.	Group	L Zotter, M Morais, J Billo, J Conto, S Jue, JC Culberson, J Teixeira, G Gnanam, S Myers	ERCOT ISO		X								
62.	Individual	Gary Trent	Tucson Electric Power Company	X		X		X					
63.	Individual	Gregory Campoli	New York Independent System Operator		X								
64.	Individual	Claudiu Cadar	GDS Associates, Inc.	X									
65.	Individual	Terry Harbour	MidAmerican Energy	X									
66.	Individual	Catherine Koch	Puget Sound Energy	X									
67.	Individual	Joe Tarantino	Sacramento Municipal Utility District	X		X	X	X					

Group/Individual		Commenter	Organization	Registered Ballot Body Segment									
				1	2	3	4	5	6	7	8	9	10
68.	Individual	Patrick Farrell	Southern California Edison Company	X		X		X	X				
69.	Individual	John Mayhan	Omaha Public Power District	X		X		X	X				
70.	Individual	Jon Kapitz	Xcel Energy	X		X		X	X				

1. **The SDT has revised the Implementation Plan based on industry comments to the initial ballot. Do you support this change? If you do not support this change, please specify why you disagree and include specific alternative language to resolve your concern.**

Summary Consideration:

The majority of respondents agree with the changes to the Implementation Plan and no further changes to the Implementation Plan are deemed necessary.

The SDT fully realizes that Project 2010-11 (Table 1 - footnote "b") must reach resolution prior to finalizing TPL-001-2 and stated the same in the information attached with the fifth posting of Project 2006-02.

The SDT reviewed the comment on consistency of language in the Implementation Plan and the Roadmap and agrees with the comment. The paragraph under Effective Date in the standard has been changed accordingly.

> For 84 calendar months beginning the first day of the first calendar quarter following applicable regulatory approval, or in those jurisdictions where no regulatory approval is required on the first day of the first calendar quarter 84 months after Board of Trustees adoption, Corrective Action Plans applying to the following categories of Contingencies and events identified in TPL-001-2, Table 1 are allowed to include Non-Consequential Load Loss and curtailment of Firm Transmission Service (in accordance with Requirement R2, Part 2.7.3.) that would not otherwise be permitted by the requirements of TPL-001-2:

The SDT did not pose questions for items that were not redlined, i.e., changed, in this posting since those items not redlined were considered by the SDT as sufficiently vetted by the industry through the various phases of the project to date. However, the SDT has reviewed all comments regardless of whether specific questions were asked and has considered the comments. In many of the cases relating to the comments, the SDT has already responded to similar comments and those responses are quoted here for convenience:

1.1.5 – "The SDT believes that the base cases should include any area interchange that is planned between utilities." In addition, non-firm transactions are not required to be modeled.

2.1.5 – "When a piece of long lead-time Equipment is unavailable, System adjustments will need to be made. The System, after it is adjusted to accommodate that piece of Equipment out of service will be treated as the "normal" (P0) condition in Table 1 and the rest of Table 1 will be applied as stated. This requirement is intended for the Planning Coordinator and/or Transmission Planner to take into account its spare equipment strategy for long lead time Equipment when assessing the performance of its System. If the loss of a piece of major Equipment can be replaced within a reasonable period of time, planning studies for the following year can assume that that piece of Equipment will be replaced. If not, its impact of unavailability would need to be assessed. Actions such as out of merit dispatch, operational restrictions, System reconfiguration can be part of a Corrective Action Plan if the System cannot meet performance requirements without the Facility in service."

2.3/2.8 – "is intended for the Planning Coordinator and/or Transmission Planner to assess whether circuit breakers supporting the BES have interrupting capability for Faults that they will be expected to interrupt. Even though the effects of short circuit capability are localized and may be related to new planned Facilities, it is important to BES reliability."

3.4.1/4.4.1 – "The SDT has determined that it is necessary for the Planning Coordinator and Transmission Planner to coordinate with adjacent Planning Coordinators and Transmission Planners to ensure that Contingencies on adjacent Systems which may impact their Systems are included in the Contingency list created." In addition, the SDT wants to make it clear that an entity is responsible for corrective actions on its own System.

4.3.1 – "does not require modeling of Protection System equipment. It just requires you to have simulations which include the effects of Protection System equipment operation. You don't have to specifically model a relay to simulate the effect of clearing a fault at 3 cycles. If you need to model a relay to capture its effect, then model that relay. And certainly engineering judgment should be used to determine which relay effects should be included in the simulations."

References to TPL-001-1 are a typo and will be cleaned up. The correct reference, as pointed out, is TPL-001-2.

Organization	Yes or No	Question 1 Comment
Northeast Power Coordinating Council Consolidated Edison Co. of New York, Inc	No	Requirement R1 Part 1.1 and following states "System models shall represent:... 1.1.5. Known commitments for firm Transmission Service and Interchange. It was commented during a previous posting that 1.1.5 should be reworded to read: Known commitments for Firm Transmission Service, and, additionally, other types of transactions provided they have been demonstrated to not violate existing reliability constraints. The response was that "The SDT believes that the defined term 'Interchange' covers other transfers as described in your comment. No change made."It is agreed that known Interchanges should be modeled. However, it is imperative that existing reliability constraints not be violated in the process. That is, Interchange relating to economic transactions should not drive planning studies. Reliability related investments should not be driven by congestion related to economic transactions incorporated into planning models. Following is a preferred/revised wording: o 1.1.5. Known commitments for firm Transmission Service and Interchange. Interchange is meant to refer to energy transactions other than firm Transmission Service. While rigorous planning studies have been conducted to permit the uninterrupted implementation of firm Transmission Service without jeopardizing the reliable operation of the Interconnected System, other types of energy transaction only take place whenever system conditions permit them. They are usually of very short duration relative to planning assessment periods (usually spanning for a few hours to a few days) and deemed highly interruptible subject to reliability issues that may arise during operation of the system. In other words, the term Interchange refers to economic transactions that are permitted when the system is secure and there are reasonable reliability margins to effect dispatch changes to lower operating costs. As such, Interchange should not be reflected in system representation meant to assess system reliability in adherence to reliability criteria delineated in documents such as TPL-001.

Organization	Yes or No	Question 1 Comment
GDS Associates, Inc.	No	We disagree with the Implementation Plan and we suggest changes as follows:- The title should read "Implementation Plan for TPL-001-2"- With regards to the Prerequisite Approvals, NERC project #2010-11 still in progress (Table 1, Footnote 'b') must be implemented before this current TPL-001-2 standard gets implemented. However, while the 2010-11 NERC project does not define any of the new terms such as consequential / non-consequential load, the footnote 'b' cannot be just copied into the new standard (see TPL-001-2 standard Table 1, note 12). Note 'b' may further change to reflect the verbiage in the TPL-001-2 standard.- Not sure what is the intent of the last paragraph. While the proposed changes to Table 1, footnote 'b' are quite precise, are we still open a door to those entities that will continue to trip Non-Consequential Load and curtail Firm Transmission Service? If no penalties for such practices while the proposed standard allows a sufficient time frame to correct any deficiencies, then what is the point to all the effort behind the development of a new TPL standard?
SMUD		R2.7.1, last bullet: Please provide specifics on the types of acceptable 'Corrective Actions' covered by 'rate applications and DSM' and the planning horizon for which they are considered acceptable. As an alternative, NERC should develop a process by which what is considered acceptable is published and continuously updated. (With due apologies for not raising this point earlier).
Western Electricity Coordinating Council	Yes	We commend the SDT for its work to continue the improvement on the proposed TPL-001-1. We were not able to find a place to include comment on various requirements not identified in the questions below; therefore, we have included our comments here: Requirement and 2.6 and 2.6.1: A study that is five years old is very likely to be out of date. The entity's BES may have not changed much in five years but the entity cannot be certain whether or not their neighbor's system may have changed. Changes outside the immediate entity's system can impact results of studies within their system. Suggest that two years is a maximum that past studies should be allowed. Requirement 3.4.1 and 4.4.1 require PCs and TPs to coordinate with adjacent PCs and TPs to ensure that Contingencies on adjacent Systems which may impact their Systems are included in the Contingency list. Please clarify whether this means that a PC or TP must coordinate with others to identify contingencies on other Systems that the PC or TP must now include on their Contingency list to simulate and address any performance violations on their own System, or does it mean that the PC or TP must coordinate with others to identify contingencies on their System that the PC or TP must now include on their Contingency list to simulate and address any performance violations on other Systems. In either case, the standard does not seem to clearly state what must be done, or whose responsibility it is to mitigate, if a contingency in one System causes a performance violation in another System. Requirement R4.3.1, bullet point 3 requires the stability analyses to include the impact of subsequent "[t]ripping

Organization	Yes or No	Question 1 Comment
		of Transmission lines and transformers where transient swings cause Protection System operation based on generic or actual relay models". As written, this bullet could be interpreted as requiring the inclusion of these relay models in stability data bases. We do not have generic or actual relay models in our dynamics data bases for tripping line faults on lines and transformers represented. We represent actual relay response and tripping times of relays, communications, and breakers to faults in tripping transmission lines and transformers. Requiring the inclusion of generic or actual relay models for all relays that can trip lines and transformers would add a large burden to the development and maintenance of accurate dynamics model files that would add little or no benefit. Please change this bullet to read: "Tripping of Transmission lines and transformers where transient swings cause Protection System operation based on known Protection System response".
Tucson Electric Power Company	Yes	We commend the SDT for its work to continue the improvement on the proposed TPL-001-1. We have included additional comments here since we were not able to find a place to include comments on the following: Requirement R4; Requirement, Parts 2.1.5, 2.3, and 2.8; Requirement 3, Part 3.3.2; and Requirement 4, Parts 4.3.1and Part 4.3.2 Requirement 2, Part 2.1.5:The spare equipment strategy does not improve reliability performance. If an outage of a long lead time piece of equipment occurs, the system should still be able to operate in a reliable manner that meets the performance measures of Categories P3 and P6. If an entity cannot meet its performance requirements under this standard, a capital project is indicated. Spare equipment being available would not mitigate this need it only increases expenses until the item is needed. Requirement 2, Parts 2.3 and 2.8:Short circuit fault duty is a localized phenomena that is mainly impacted by the addition of new generation or transmission facilities. Due to proprietary concerns of generation and transmission interconnection requests, short circuit studies are performed in forums outside the annual Planning Assessment. Normally, these studies will be conducted before the projects can be included in regional base cases. As such, short circuit analysis should not be included in this Standard since it would provided limited benefit. Requirement 3, Part 3.3.2 and Requirement 4, Part 4.3.2Steady state response of dynamic control devices should also be included in the Part 3.3.2. and the list of possible devices included should be removed from Part 3.3.2 and 4.3.2. Section R4.3.1, bullet point 3 requires the stability analyses to include the impact of subsequent "[t]ripping of Transmission lines and transformers where transient swings cause Protection System operation based on generic or actual relay models". As written, this bullet could be interpreted as requiring the inclusion of these relay models in stability data bases. We do not have generic or actual relay models in our dynamics data bases for tripping line faults on lines and transformers represented. We represent actual relay response and tripping times of relays, communications, and breakers to faults in tripping transmission lines and transformers. Requiring

Organization	Yes or No	Question 1 Comment
		the inclusion of generic or actual relay models for all relays that can trip lines and transformers would add a large burden to the development and maintenance of accurate dynamics model files that would add little or no benefit. Please change this bullet to read: “Tripping of Transmission lines and transformers where transient swings cause Protection System operation based on known Protection System response”.
Western Area Power Administration	Yes	The whole bullet point section in the Effective Date section referring to Corrective Action Plans could be deleted and instead captured by Requirement R2.7.3. A seven year grace period is probably not favorable to FERC, and a better solution could be developed to meet industry needs. In R2.7.3, a possible example of "beyond the control of the Transmission Planner" could be that the physics of a significant percentage of induction motors in low inertia air-conditioning loads would tend to pull out for certain N-1 events. This may in significant part occur because such motors may have nearly no dynamic stability margin to withstand such N-1 events as close-in 3-phase faults with normal clearing during peak load conditions. So until the Transmission Planner has been able to institute changes in the industry to address the basic physics of such loads, this Requirement 2.7.3 would permit the use of such "Non-Consequential" Load Loss and curtailment of Firm Transmission Service. In this example, it may take longer than a seven year time period to fix the problem. On the other hand, some examples of Non-Consequential Load Loss could perhaps be mitigated in a shorter timeframe. Provided that an entity has a good technical justification and defined margin for “Non-Consequential” Load Loss or curtailment of Firm Transfers, then it may be acceptable. Requirement R2.7.3 seems to move in this direction. Section R4.3.1, bullet point 3 requires the stability analyses to include the impact of subsequent “[t]ripping of Transmission lines and transformers where transient swings cause Protection System operation based on generic or actual relay models”. As written, this bullet could be interpreted as requiring the inclusion of these relay models in stability data bases. We do not have generic or actual relay models in our dynamics data bases for tripping line faults on lines and transformers represented. We represent actual relay response and tripping times of relays, communications, and breakers to faults in tripping transmission lines and transformers. Requiring the inclusion of generic or actual relay models for all relays that can trip lines and transformers would add a large burden to the development and maintenance of accurate dynamics model files that would add little or no benefit. Please change this bullet to read: “Tripping of Transmission lines and transformers where transient swings cause Protection System operation based on known Protection System response”.
NERC staff	Yes	NERC staff supports the change to allow Corrective Action Plans to include tripping of Non-Consequential Load and curtailment of Firm Transmission Service for 7 years. This seems long, but staff understands the stakeholder concern that it could take that long to plan, site, and construct facilities required for compliance with the standard.
SERC Dynamics Review	Yes	“The comments expressed herein represent a consensus of the views of the above named members of the SERC Engineering Committee Dynamics Review Subcommittee only and should not be construed as the

Organization	Yes or No	Question 1 Comment
Subcommittee		position of SERC Reliability Corporation, its board or its officers."
Lakeland Electric	Yes	Shouldn't the "Implementation Plan for TPL-001-1" document be for TPL-001-2? Also, "TPL-001-1" is referenced throughout the document.
FirstEnergy	Yes	We appreciate the effort of the standard drafting team and the changes reflected in the current draft of the TPL-001-1 standard. The changes are improvements that should move the standard towards greater industry consensus. The extended Implementation Plan aligns with suggestions in FE's prior ballot comments. We support the Implementation Plan change made by the team.
US Bureau of Reclamation	Yes	With exception of the definitions.
TVA Transmission Planning & Compliance	Yes	TVA supports the change from five years to seven years for the implementation plan period.
Independent Electricity System Operator	Yes	We agree with this change. We further suggest that this change and the additional wording: "or in those jurisdictions where no regulatory approval is required on the first day of the first calendar quarter, 84 months after Board of Trustees adoption" be added to P. 3 of the standard that starts with "For 84 calendar months..." to be totally consistent.
Pacific Gas and Electric Company	Yes	We commend the SDT for its work to continue the improvement on the proposed TPL-001-1. We were not able to find a place to include comment on Requirement R3 or R4; therefore, we have included our comments here: Section R4.3.1, bullet point 3 requires the stability analyses to include the impact of subsequent "[t]ripping of Transmission lines and transformers where transient swings cause Protection System operation based on generic or actual relay models". As written, this bullet could be interpreted as requiring the inclusion of these relay models in stability data bases. We do not have generic or actual relay models in our dynamics data bases for tripping line faults on lines and transformers represented. We represent actual relay response and tripping times of relays, communications, and breakers to faults in tripping transmission lines and transformers. Requiring the inclusion of generic or actual relay models for all relays that can trip lines and transformers would add a large burden to the development and maintenance of accurate dynamics model files that would add little or no benefit. Please change this bullet to read: "Tripping of Transmission lines and transformers where transient swings cause Protection System operation based on known Protection System response". Section 3.4.1 and 4.4.1 require PCs and TPs to coordinate with adjacent PCs and TPs to ensure that Contingencies on adjacent Systems which may impact their Systems are included in the Contingency list. Please clarify whether this means 1) that a PC or TP must coordinate with others to identify contingencies on other

Organization	Yes or No	Question 1 Comment
		Systems that the PC or TP must now include on their Contingency list to simulate and address any performance violations on their own System, or 2) that the PC or TP must coordinate with others to identify contingencies on their System that this PC or TP must now include on their Contingency list to simulate and address any performance violations on the other Systems. In either case, the standard does not seem to clearly state what must be done, or whose responsibility it is to develop the corrective action plan, if a contingency in one System causes a performance violation in another System.
Puget Sound Energy Sacramento Municipal Utility District Modesto Irrigation District Los Angeles Department of Water and Power Idaho Power Co California Energy Commission SRP Platte River Power Authority PNM Arizona Public Service Company	Yes	We commend the SDT for its work to continue the improvement on the proposed TPL-001-1. We were not able to find a place to include comment on Requirement R4; therefore, we have included our comments here: Section R4.3.1, bullet point 3 requires the stability analyses to include the impact of subsequent "[t]ripping of Transmission lines and transformers where transient swings cause Protection System operation based on generic or actual relay models". As written, this bullet could be interpreted as requiring the inclusion of these relay models in stability data bases. We do not have generic or actual relay models in our dynamics data bases for tripping line faults on lines and transformers represented. We represent actual relay response and tripping times of relays, communications, and breakers to faults in tripping transmission lines and transformers. Requiring the inclusion of generic or actual relay models for all relays that can trip lines and transformers would add a large burden to the development and maintenance of accurate dynamics model files that would add little or no benefit. Please change this bullet to read: "Tripping of Transmission lines and transformers where transient swings cause Protection System operation based on known Protection System response".
SERC Planning Standards Subcommittee	Yes	
Hydro One Networks Inc.	Yes	
MRO's NERC Standards Review Subcommittee	Yes	
Pepco Holings, Inc - Affiliates	Yes	
IRC Standards Review	Yes	

Organization	Yes or No	Question 1 Comment
Committee		
Bonneville Power Administration	Yes	
Exelon Transmission Planning	Yes	
Southern Company	Yes	
Florida Reliability Coordinating Council, Inc - Transmission Working Group	Yes	
PacifiCorp	Yes	
Duke Energy	Yes	
NorthWestern Energy (NWMT)	Yes	
Orlando Utilities Commission	Yes	
Manitoba Hydro	Yes	
Minnesota Power	Yes	
South Carolina and Gas	Yes	
California ISO	Yes	
Seattle City Light	Yes	
ISO New England Inc.	Yes	
United Illuminating	Yes	

Organization	Yes or No	Question 1 Comment
Ameren	Yes	
Xcel Energy	Yes	
Hydro-Quebec TransEnergie	Yes	
National Grid	Yes	
American Transmission Company	Yes	
American Electric Power (AEP)	Yes	
Tri-State Generation & Transmission	Yes	
Lakeland Electric	Yes	
GTC	Yes	
Northeast Utilities	Yes	
NBSO	Yes	
Central Maine Power Company	Yes	
Oncor Electric Delivery	Yes	
New York State Electric & Gas Corp	Yes	
Progress Energy	Yes	
ERCOT ISO	Yes	

Organization	Yes or No	Question 1 Comment
New York Independent System Operator	Yes	
MidAmerican Energy	Yes	
Southern California Edison Company	Yes	

2. The SDT has revised the definition of Year One based on industry comments to the initial ballot. Do you support this change? If you do not support this change, please specify why you disagree and include specific alternative language to resolve your concern.

Summary Consideration:

The majority of respondents agree with the changes to the Year One definition but there was one change made due to industry comments for consistency of terminology.

> **Year One:** The first twelve month period that a Planning Coordinator or a Transmission Planner is responsible for assessing. For the Planning Assessment started in a given calendar year, Year One ~~must~~ includes the forecasted peak Load period for one of the following two calendar years. For example, if a Planning Assessment was started in 2011, then Year One ~~must~~ includes the forecasted peak Load period for either 2012 or 2013.

The SDT acknowledges the concerns expressed by a minority of commenters on ambiguity of wording, embedding the definition in the requirements, and use of operating horizon studies. However, the SDT believes that the definition has been vetted through numerous industry comment periods and that it now represents a reasonable definition for a continent-wide standard while still providing a level of flexibility for the planner.

The SDT did not pose questions for items that were not redlined, i.e., changed, in this posting since those items not redlined were considered by the SDT as sufficiently vetted by the industry through the various phases of the project to date. However, the SDT has reviewed all comments regardless of whether specific questions were asked and has considered the comments.

Organization	Yes or No	Question 2 Comment
Northeast Power Coordinating Council	No	The definition of Year One could be eliminated, and its wording used in place of Year One within the text of the requirement. The proposed definition has now added ambiguity with respect to “year two” and “year five” which are not defined. Year two could be deleted and R.2.1.1 modified as follows: System peak Load representing a point in time 12-24 months and another point in time 48-65 months into the future from the time the study is initiated. Define Year Five as the twelve month period 4 to 6 calendar years from the date of the Planning Assessment.
ISO New England Inc.	No	The definition of Year One could be deleted and used in place of Year One within the text of the requirement. The proposed definition has now added ambiguity with respect to “year two” and “year five” which are not defined. Year two could be deleted and R.2.1.1 modified as follows: System peak Load representing a point in time 12-24 months and another point in time 48-65 months into the future from the time the study is initiated.

Organization	Yes or No	Question 2 Comment
Western Electricity Coordinating Council	No	We recognize that the drafting team made changes to the definition of Year One based on industry comments. However, we believe that the revised language could allow for a situation where an entity could use its next season's operating study as its Year One planning study. For example, if the entity does its study in the fall of 2011, the proposed definition would allow the entity to use its summer 2012 operating study as its Year One study. This is a very short period to address any issued identified. Suggest working into the requirement that Planning Studies must look out at least 12 months beyond when the study is performed. This would still allow for the provision in the current definition example ("if a Planning Assessment was started in 2011, then Year One must include the forecasted peak Load period for either 2012 or 2013) because the entity would be able to use their 2013 Load period, but it would prevent the entity from using the 2012 Load period if they started the assessment late in 2011.
E.ON U.S.	No	Comments: 2.2.1. A current study assessing expected System peak Load conditions for one of the years in the Long-Term Transmission Planning Horizon and the rationale for why that year was selected. E.ON U.S. believes the scope of the 'current study' should be defined. It is not clear whether the scope is the same as outlined in section 2.1.
Florida Reliability Coordinating Council, Inc - Transmission Working Group	No	No, because it is worded to be dependent upon when an assessment is started rather than when the assessment is completed and valid. Assessments don't typically include a "start date". An assessment completed on a calendar date should include (be valid for) the forecasted peak load for a timeframe that begins no more than 24 months from the date that the assessment was completed.
Lakeland Electric	No	"the latest" is not needed from the second sentence of R1, since the sentence already ended with "..shall represent projected System conditions". R1 Part 1.1.2 Suggest adding this clarification at the end "... six months during the period under study". This language addition helps clarify the point that if an outage occurs during the summer and the entity's system peak occurs in the winter, then the system peak Load study case (model) does not have to include this particular outage.
Seattle City Light	No	The definition of Year One is now too flexible and does not meet the intent of the standard. For example, our system peak is generally in January of the year. If I perform TPL studies in November 2011, studying the peak in January 2012 is acceptable according to the new definition. This is only two months from the date of the study. The intent of the TPL standard should be that entities must study and plan for inadequacies found in the studies. A one- or two-month lead time is not adequate to address any problems identified. Year One should be the year containing the first peak 12 months or more from the current date. Otherwise, TPL studies become merely seasonal operational studies, not planning studies. Alternative Language: "For the Planning Assessment started in a given year, Year One should contain the first system peak that occurs twelve months or more after the date

Organization	Yes or No	Question 2 Comment
		of the Planning Assessment."
US Bureau of Reclamation	No	The language implies a requirement. The language "Year One must include the forecasted peak Load period for one of the following two calendar years" is a requirement and not a statement of clarification. If the definition is that “Year One” can also be the period used for forecast peak load, then it should be stated so. It is suggested that either the language in the definition is modified or the language is deleted from the definition and moved to the body of the standard.
United Illuminating	No	Year One should be used within the text of the requirement. Do not have a definition for Year One.
National Grid	No	Year One should be used within the text of the requirement. Do not have a definition for Year One. Year two could be deleted and R.2.1.1 modified as follows: For the Planning Assessment started in a given calendar year, the first year that is studied must include the forecasted peak Load period for one of the following two calendar years. An additional Near-term study must be performed that is four calendar years beyond the first year that is studied.
Tri-State Generation & Transmission	No	Comments: The Year One definition is somewhat clearer now, but there is still some ambiguity. We recommend the removal of the term “Year One, year two, and year five” from R2.1.1. and deletion of the Year One definition (definitions are not required for year two and year five, for instance). The Year One concept can be integrated into the definition of Near-Term Transmission Planning Horizon, which we suggest changing to “The period beginning with the first year following the operating horizon, as determined by the Transmission Planner or Planning Coordinator, through the fifth year.” Then, rather than say “Year One, year two, and year five”, we can use the phrase “at least one of the first two years of the Near-Term Transmission Planning Horizon, and the fifth year”.This will require corresponding changes in R2.1.1 and R2.1.2.
Lakeland Electric	No	While the definition of Year One addresses the time span this year occupies, it does not address when that time span begins. The example which was added to the definition suggests that Year One begins twelve months from the start of the Planning Assessment, but it does not appear to be specifically stated. The following language is recommended: "The first twelve month period that a Planning Coordinator or a Transmission Planner is responsible for assessing, beginning twelve months from the planned completion date of the Planning Assessment."
Northeast Utilities Consolidated Edison Co. of New York, Inc.	No	NU does not support the revised definition of Year One as we believe it leads to confusion. Our suggestion is that Year One should be the Peak Load Year after the study is initiated. The subsequent years should be counted from Year One (e.g., a study that is started in year 2010 with peak load in 2011 will have Year One as

Organization	Yes or No	Question 2 Comment
		2011 and Year Two as 2012, etc.).
Modesto Irrigation District	No	The definition as it is in the current standards is fine. The new proposed definition is unclear.
NBSO	No	To avoid confusion, the formal definition for Year One should be eliminated and wording used to describe Year One be placed within the appropriate requirement. For example, R2.1.1 could be re-written to state: System peak Load representing a point in time 12-24 months and another point in time 48-65 months into the future from the time the study is initiated.
Central Maine Power Company New York State Electric & Gas Corp New York Independent System Operator	No	The added clarification to the definition of Year One serves to remove most ambiguity with respect to Year One. However, the revision has added further ambiguity to the terms “year two” and “year five” which are not defined. For the Planning Assessment started in a given calendar year, the first year that is studied must include the forecasted peak Load period for one of the following two calendar years. An additional Near-term study must be performed that is four calendar years beyond the first year that is studied. We recommend defining Year Five as the twelve month period 4 to 6 calendar years from the date of the Planning Assessment. We further recommend revising R2.1.1 as follows: “System peak Load for Year One and for Year Five.”Alternatively, the definition of Year One could be eliminated and described within the text of the requirements.
Tucson Electric Power Company	No	A seasonal reference should be included in the example. Alternative language beginning with the second sentence: For the Planning Assessment started in a given calendar year, Year One must include the forecasted peak load period for the forecasted peak load season that is between 12 and 24 months into the future from the current season. For example, if a Planning Assessment was started in 2011 prior to the forecasted peak season, then Year One must include the forecasted peak load for 2012. If the Planning Assessment was started in 2011 during or after the forecasted peak season, then Year One must include the forecasted peak load for 2013.
GDS Associates, Inc.	No	The definition it seem both incomplete and exhaustive:- If taken out of the planning assessment context, the definition is missing the matter that is supposed to identify. We suggest changing the first sentence such as “The first twelve month period to which the functional entity is responsible for the assessment of Transmission System Planning performance.”- While it will be a burdensome task to define each year that follows Year One, the definition of Year One may include a sentence that define the rule for the following years such as “All of the twelve months period following Year One shall commence immediately after the end of the preceding twelve months period.”- The definition should not include examples.
Pacific Gas and Electric Company		We recognize that the drafting team made changes to the definition of Year One based on industry comments. However, we believe that the revised language could allow for a situation where an entity could use its next season’s operating study as its Year One planning study. For example, if the entity does its study in the fall of

Organization	Yes or No	Question 2 Comment
		2011, the proposed definition would allow the entity to use its summer 2012 operating study as its Year One study. This is a very short period to address any issued identified. Suggest working into the requirement that Planning Studies must look out at least 12 months beyond when the study is performed. This would still allow for the provision in the current definition example ("if a Planning Assessment was started in 2011, then Year One must include the forecasted peak Load period for either 2012 or 2013) because the entity would be able to use their 2013 Load period, but it would prevent the entity from using the 2012 Load period if they started the assessment late in 2011.
NERC staff	Yes	NERC staff supports the revisions to the definition of Year One. However, we believe an associated change should be made where this term is used in part 2.1.1 of Requirement 2 which requires modeling of "System peak Load for either Year One or year two, and for year five." It seems the new definition of Year One would negate the need to refer to year two. NERC staff recommends that part 2.1.1 be changed to "System peak Load for Year One and for year five."
Western Area Power Administration	Yes	Yes, this clarification helps. The drafting team could also define "year five".
FirstEnergy	Yes	The change in the Year One definition provides greater flexibility for the industry and also addresses a prior FE comment during the 1st ballot. We appreciate the team's careful consideration of the industry feedback and support the change.
TVA Transmission Planning & Compliance	Yes	TVA supports the change in the Year One definition - but would suggest that the word "started" should be changed to "completed" since a Planning Assessment may be started in one calendar year and finished in the next calendar year.
SERC Planning Standards Subcommittee	Yes	
Hydro One Networks Inc.	Yes	
SERC Dynamics Review Subcommittee	Yes	
MRO's NERC Standards Review Subcommittee	Yes	

Organization	Yes or No	Question 2 Comment
Pepco Holings, Inc - Affiliates	Yes	
IRC Standards Review Committee	Yes	
Bonneville Power Administration	Yes	
Exelon Transmission Planning	Yes	
Southern Company	Yes	
Arizona Public Service Company	Yes	
PacifiCorp	Yes	
Duke Energy	Yes	
NorthWestern Energy (NWMT)	Yes	
PNM	Yes	
Platte River Power Authority	Yes	
Orlando Utilities Commission	Yes	
Manitoba Hydro	Yes	
Minnesota Power	Yes	
Independent Electricity System Operator	Yes	
South Carolina and Gas	Yes	

Organization	Yes or No	Question 2 Comment
SRP	Yes	
California ISO	Yes	
California Energy Commission	Yes	
Los Angeles Department of Water and Power	Yes	
Idaho Power Co	Yes	
Ameren	Yes	
Hydro-Quebec TransEnergie	Yes	
LCRA TSC	Yes	
American Transmission Company	Yes	
American Electric Power (AEP)	Yes	
GTC	Yes	
Oncor Electric Delivery	Yes	
Progress Energy	Yes	
ERCOT ISO	Yes	
MidAmerican Energy	Yes	
Puget Sound Energy	Yes	

Organization	Yes or No	Question 2 Comment
Sacramento Municipal Utility District	Yes	
Xcel Energy	Yes	
Southern California Edison Company	Yes	

3.

The SDT has revised the Requirements language based on industry comments to the initial ballot. Do you support these changes? If you do not support these changes, please specify why you disagree and include specific alternative language to resolve your concern.

Summary Consideration:

Due to various industry comments, the SDT made the following clarifying change to Requirement R1:

> **R1**. Each Transmission Planner and Planning Coordinator shall maintain System models within its respective area for performing the studies needed to complete its Planning Assessment. The models shall use ~~the latest~~ data consistent with that provided in accordance with the MOD-010 and MOD-012 standards, supplemented by other sources as needed, including items represented in the Corrective Action Plan, and shall represent projected System conditions. This establishes P0 as the normal ~~s~~System condition in Table 1.

The SDT believes that 6 months is the correct number in Requirement R1, Part 1.1.2 because the planner is evaluating longer term periods, and shorter duration outages, which have scheduling flexibility, are addressed by Operations Planning. Outages six months or longer will typically be over the study periods (peak and Off-Peak) addressed in Requirement R2, Part 2.1.3.

Requirement R1, Part 1.1.6 – An issue was raised that resources could be used for export to other areas. The SDT did not make a change to the requirement since exports to other areas are covered in Requirement R1, Part 1.1.5.

The majority of respondents agree with the posted changes to these requirements and no other changes have been made based on stakeholder comments.

The SDT did not pose questions for items that were not redlined, i.e., changed, in this posting since those items not redlined were considered by the SDT as sufficiently vetted by the industry through the various phases of the project to date. However, the SDT has reviewed all comments regardless of whether specific questions were asked and has considered the comments.

Organization	Yes or No	Question 3 Comment
NERC staff	No	NERC staff suggests that the added sentence in R1 be deleted and “Normal System” in Table 1 be replaced with “No unplanned Element outages.” We have a problem with R1 establishing “normal system condition.” “Normal” is not defined, but the system condition that most people would define as “normal” is the System operating within its limits. There are no checks required on the projected system conditions to guarantee “operation within limits.” Staff realizes that if this were the case, the categories tested would all pass their respective tests. (In other words, the category tests may define operating limits that in turn define “normal” from a planning perspective.) Thus, the added sentence in R1 should be deleted. In Table 1, the use of the term “Normal System” in the column “Initial System Condition” really means “No unplanned Element outages.” All Elements that do not have a planned outage are assumed in-service (for transmission Elements) or available for dispatch (for generators).

Organization	Yes or No	Question 3 Comment
		Contrast the term “Normal System” with categories P3 and P6, which have the loss of an Element (which is unplanned) followed by the loss of a second Element (also unplanned). “Normal System” should be replaced with “No unplanned Element outages.”
SERC Planning Standards Subcommittee Southern Company Ameren	No	The definition does not adequately address normal (pre-contingency) operating procedures or system configurations. Language should be added to the requirement (perhaps as R1.1.7) to include normal operating procedures or system configurations in place prior to any contingency occurring.
Bonneville Power Administration	No	Please clarify R1.1.2 to state “Known outage(s) of generation or Transmission Facility(ies) during the Planning Horizon with a duration of of at least six months.”
E.ON U.S.	No	In the statement: “the Planning Coordinator and Transmission Planner shall coordinate with adjacent Planning Coordinators and Transmission Planners to ensure that Contingencies on adjacent Systems which may impact their Systems are included in the Contingency list.”E.ON U.S. believes that the use of the pronoun “their” in the quoted section above is confusing. “Their” could be read as applying to the adjacent Planning Coordinators and not to the Planning Coordinator to whom the standard applies. E.ON U.S. recommends that the word “their” should be changed to “the Planning Coordinator’s and Transmission Planner’s” in order to make it clear.
Florida Reliability Coordinating Council, Inc - Transmission Working Group	No	No, Since “the latest” data may become available after the study is complete, a planner may not be able to ever complete a study. Please consider removing “the latest” from the second sentence.
Western Area Power Administration	No	It’s difficult to tell whether Requirement R1 is intended to require only one base case or whether it was intended to require creation of separate models for each possible N-0 condition (“normal system condition”) under a variety of stressing scenarios. The inserted language does not seem to provide additional clarity. Suggested language may be “This establishes the initial 'Normal System' condition corresponding to category P0 in Table 1.” Also, in Requirement R1.1.5, how are the Firm Transmission Service commitments supposed to be modeled in Power Flow Cases? Are they just to be modeled as loads, generation, and control area interchanges? Suppose a POR or POD is not at a generator or load bus. What selection of generation and load would represent the projected system conditions for this Firm Transmission Service commitment?
CenterPoint Energy	No	The SDT did not incorporate CenterPoint Energy's previous comment regarding R1; therefore, CenterPoint Energy's concerns remain.

Organization	Yes or No	Question 3 Comment
United Illuminating National Grid Central Maine Power Company New York State Electric & Gas Corp	No	For R1 Ambiguity regarding base case assumptions, in combination with lack of clarity and clear direction of purpose regarding the sensitivity analysis, undermines the objectives of the standard; R1.1 Part 1.1.2. With respect to known outages, there needs to be greater flexibility in the standards (e.g. more tolerance to non-consequential load shedding or limitations to the contingencies that need to be considered (e.g. P0, P1, & P2)). Regional allowances for load shedding under this condition should be approved. Duration of known outages should be increased from six months to one year; R1.1 Part 1.1.6 Delete "required for Load". Resources may also be used for export to other areas, not just internal load.
ISO New England Inc.	No	R1.1 Part 1.1.2. With respect to known outages, there needs to be greater flexibility in the standards (e.g. more tolerance to non-consequential load shedding or limitations to the contingencies that need to be considered (e.g. P0, P1, & P2)). Regional allowances for load shedding under this condition should be approved. Duration of known outages should be increased from six months to one year; R1.1 Part 1.1.6 Delete "required for Load". Resources may also be used for export to other areas, not just internal load.
American Transmission Company	No	We propose the following changes and questions: R1 - We offer the minor suggestion of replacing the wording of “maintain System models within their respective areas” with “maintain System models of elements that are interconnected to any portion of the BES that is owned or operated by the TP or PC”. This wording would avoid the ambiguity that can occur when a BA that is associated primarily with one TP declares ownership of a bus in another TP’s geographic area, but expects its primary TP to maintain the BA’s model data for the remote generation or load. R1.1.2 - We request a SDT opinion on how two individual outages should be modeled if they are both in excess of six months duration and they overlap by less than six months. Should the overlapping condition only be modeled if the condition is expected to last more than six months?
Tri-State Generation & Transmission	No	We suggest changing the added sentence to “This establishes the Category P0, No Contingency, Initial System Conditions in Table 1.”
Lakeland Electric	No	Consider removing “...the latest...” from R1 and changing R1.1.2 to state “...six months during the period of

Organization	Yes or No	Question 3 Comment
		study."
Northeast Utilities	No	NU believes that the Normal System Conditions as stated in Requirement R1 should establish the base case conditions to be used for the assessment studies. More guidelines for developing base cases should be addressed in the requirements. What the statement in Requirement R1 lacks is the manner of creating generation dispatches and the level of interface flows (level of stress), which are central to any base case to be used to assess the reliability of the electric power network. Depending upon how the base case dispatches and the level of interface flows are created, a study may reveal reliability violations in the power system. This is a weakness of the existing TPL standards. NU, however, will support the idea of developing regional guidelines in regard to the nature of the base cases to be used for the NERC reliability studies. Comment on Requirement R1.1, Part 1.1.2: With respect to known outages NU requests that the six month duration listed by the requirement should be changed to one year duration. Requirement R1.1 Part 1.1.6: The phrase "required for Load" should be deleted as this confuses the issue [since resources may also be used for export to other areas and not just internal load].
NBSO	No	R1 should have some language to state that base case assumptions should be made such that they appropriately stress the system to be tested and are in accordance with good engineering practice.
Tucson Electric Power Company	No	Proposed changes1.1.1 Existing Facilities that will not be changed before the study year 1.1.3 New planned Facilities and planned changes to existing facilities
GDS Associates, Inc.	No	The Time Horizon should be for both Near-Term and Long-Term Planning.
MidAmerican Energy	No	There are concerns over the FERC outstanding March order on TPL and how FERC interprets "normal" or base case conditions and "assuming" an entities primary protection system is out of service and must rely on its backup protection system to operate. This concept combined with the new tables cannot be perpetuated.
Xcel Energy	No	Although we support the change conceptually, we believe the sentence added in R1 needs more specificity to ensure a better correlation to the relevant portions of Table 1. Please make it clear that the system model created as per R1 corresponds to Category P0 by explicitly referring to it. Suggested language is: 'This establishes the "Normal System" initial condition corresponding to category P0 in Table 1.' Further, consider omitting the word "System" in Table 1 Column 2 heading by calling it "Initial Condition" – the redundancy produced by its usage in both heading and entry does not appear to provide any

Organization	Yes or No	Question 3 Comment
		value. Alternative suggested language is: 'This establishes the "Normal" initial system condition corresponding to category P0 in Table 1." This alternative approach envisages changing the Column 2 entries to "Normal" since the word "System" is now retained in the heading.
MRO's NERC Standards Review Subcommittee	Yes	We propose the following changes and questions:R1 - We offer the minor suggestion of replacing the wording of "maintain System models within their respective areas" with "maintain System models of elements that are interconnected to any portion of the BES that is owned or operated by the TP or PC". This wording would avoid the ambiguity that can occur when a BA that is associated primarily with one TP declares ownership of a bus in another TP's geographic area, but expects its primary TP to maintain the BA's model data for the remote generation or load. R1.1.2 - We request the SDT opinion on how two individual outages should be modeled if they are both in excess of six months duration and they overlap by less than six months. Should the overlapping condition only be modeled if the condition is expected to last more than six months?
Northeast Power Coordinating Council	Yes	
Hydro One Networks Inc.	Yes	
Transmission Issues Subcommittee	Yes	
SERC Dynamics Review Subcommittee	Yes	
Pepco Holings, Inc - Affiliates	Yes	
IRC Standards Review Committee	Yes	
Exelon Transmission Planning	Yes	

Organization	Yes or No	Question 3 Comment
Western Electricity Coordinating Council	Yes	
Arizona Public Service Company	Yes	
PacifiCorp	Yes	
Duke Energy	Yes	
NorthWestern Energy (NWMT)	Yes	
PNM	Yes	
FirstEnergy	Yes	
Platte River Power Authority	Yes	
Orlando Utilities Commission	Yes	
Manitoba Hydro	Yes	
Minnesota Power	Yes	
US Bureau of Reclamation	Yes	
TVA Transmission Planning & Compliance	Yes	
Independent Electricity System Operator	Yes	
South Carolina and Gas	Yes	
SRP	Yes	

Organization	Yes or No	Question 3 Comment
California ISO	Yes	
Seattle City Light	Yes	
California Energy Commission	Yes	
Los Angeles Department of Water and Power	Yes	
Idaho Power Co	Yes	
Hydro-Quebec TransEnergie	Yes	
LCRA TSC	Yes	
American Electric Power (AEP)	Yes	
GTC	Yes	
Pacific Gas and Electric Company	Yes	
Consolidated Edison Co. of New York, Inc.	Yes	
Modesto Irrigation District	Yes	
Oncor Electric Delivery	Yes	
Progress Energy	Yes	
ERCOT ISO	Yes	
New York Independent System	Yes	

Organization	Yes or No	Question 3 Comment
Operator		
Puget Sound Energy	Yes	
Sacramento Municipal Utility District	Yes	
Southern California Edison Company	Yes	

3.1 Requirement R2 and Part 2.1 – past studies

Summary Consideration:

The majority of respondents agree with the changes to these requirements and only the changes to these requirements noted below have been made.

The SDT believes that the supposed inconsistencies mentioned in the language are not inconsistencies at all but necessary qualifiers. No change made.

Based on comments received, the SDT has modified Requirement R2, part 2.6.2 as follows to provide additional clarity:

> **2.6.2** For steady state, short circuit, or Stability analysis: no material changes have occurred to the System represented in the study. ~~shall not include any material changes unless a technical rationale can be provided to demonstrate that System changes do not impact the performance results in the study area.~~ Documentation to support the technical rationale for determining material changes shall be included.

The following change was made to clarify that the list following the statement is not all inclusive:

> **2.7.1** List System deficiencies and the associated actions needed to achieve required System performance. Examples of ~~S~~such actions ~~may~~ include:

The SDT did not pose questions for items that were not redlined, i.e., changed, in this posting since those items not redlined were considered by the SDT as sufficiently vetted by the industry through the various phases of the project to date. However, the SDT has reviewed all comments regardless of whether specific questions were asked and has considered them. In some of the cases relating to the above comments, the SDT has already responded to similar comments and those responses are quoted here for convenience:

2.1.5 – "When a piece of long lead-time Equipment is unavailable, System adjustments will need to be made. The System, after it is adjusted to accommodate that piece of Equipment out of service will be treated as the "normal" (P0) condition in Table 1 and the rest of Table 1 will be applied as stated. This requirement is intended for the Planning Coordinator and/or Transmission Planner to take into account their spare equipment strategy for long lead time Equipment when assessing the performance of their System. If the loss of a piece of major Equipment can be replaced within a reasonable period of time, planning studies for the following year can assume that that piece of Equipment will be replaced. If not, its impact of unavailability would need to be assessed. Actions such as out of merit dispatch, operational restrictions, System reconfiguration can be part of a Corrective Action Plan if the System cannot meet performance requirements without the Facility in service."

Organization	Yes or No	Question 4 Comment
Northeast Power Coordinating Council Consolidated Edison Co. of New York, Inc.	No	The revisions made to Requirement R2 Part 2.1 appear to resolve the concern that past studies could not be used to comply with the short-term steady state study requirements. This revision must be carried through to other sections (R2.2, 2.2.1). However, the language of Requirement R2 Part 2.2 still seems to suggest that current annual studies are always required for the long-term steady state assessment to be compliant. This may have been an oversight, for consistency Requirement R2 Part 2.2 should be modified to similarly read as Requirement R2, Part 2.1. Regarding R2.2, the language should be consistent with 2.1. For example, use "current or qualified past studies" instead of "the following annual current study". Revisions made to Requirement R2.1.5 have made it worse than was originally drafted. This would require the PC & TP to study (meaning performing a technical analysis) of the impact and probability of the possible unavailability of any piece of equipment with a lead time of one year or more. Such an evaluation of spare equipment strategies would require significant additional resources and data, but provide no benefit to system reliability, as it is redundant to the existing N-1-1 contingency requirement (P6). R2.7 requires that Corrective Action Plans are included in each Planning Assessment and states “Such actions may include...” followed by a list of actions. Restricting allowable actions, and excluding runback/tripping of HVDC would have a direct impact on multiple existing facilities in New York and would adversely impact the reliability planning of the NYCA. Runback/tripping of HVDC must be added to the list, and also suggest revising to “Such actions may include but not be limited to:”.
Florida Reliability Coordinating Council, Inc - Transmission Working Group	No	No, Please consider removing R.2.6.2. The overwhelming majority of PAs use a 10 year set of planning models developed annually by Regions or Subregions. These annual sets of planning models will always have some changes. The annual study requirement is especially problematic for Stability and Short circuit studies that require much more engineering time to complete and are much less likely to have results impacted by minor model changes such as different load forecasts. Uncertainty with audit review of technical rationale documentation will serve to focus Transmission Planning engineering resources on short term compliance to an extent that is counter productive.
Western Area Power Administration	No	R 2.1.5: The issue in this Requirement is studied in the Operations next-day; next-week; next-month studies required under the TOP Standards; and are also covered by processes such as the Operational Transfer Capability Policy Committee (OTCPC) seasonal study process within the WECC. It would be quite onerous to run a complete power flow simulation on separate base cases for each transformer (or other equipment with long lead time) initially out of service. The revision in language from “Planning Assessment” to “studies” does not clarify that a power flow simulation is not necessarily required for each situation. A valid assessment could include other methods such as using sound technical reasoning to relate the initial out-of-service

Organization	Yes or No	Question 4 Comment
		condition to a condition that has already been studied. This condition may have taken place in previous operational studies. The language in the standard could be improved to make this clarification - perhaps reference R2.6. Additionally, this Requirement still needs further clarification. Currently the scope of equipment applicable to the requirement could be misinterpreted as larger than that contemplated by FERC. The standard as written seems to say that the responsible entity needs to study the spare equipment strategy for all "major transmission equipment" with long lead times. In the directive to include this requirement, FERC used the term "critical facilities". In the NOPR to Order No. 693 they stated, "Critical facilities are those facilities that impact IROLs and deliverability of generation to firm load" (P1081). In Order No. 693 FERC also said, "if an entity's spare equipment strategy for the permanent loss of a transformer is to use a 'hot spare' or to relocate a transformer from another location in a timely manner, the outage of the transformer need not be assessed under peak system conditions" (P1725).Finally, the drafting team could clarify if this requirement applies to radial branches (such as generator step-ups or step-down to load). Such branches may be construed as "critical facilities" but the impediment to deliverability of generation to firm load is consequential to the initial outage.
Lakeland Electric	No	Please consider removing R.2.6.2
Platte River Power Authority	No	I like that you have requirements for qualifying past studies, but Part 2.6.2 is confusing. Please change Part 2.6.2 to read something like: "For steady state, short circuit or Stability analysis: no material changes have occurred to the System represented in the study or, if material changes have occurred, a technical rationale can be provided to explain that the changes do not impact the performance results in the study area."
Orlando Utilities Commission	No	Allowing the use of past studies in lieu of new studies for part or all of an assessment when the underlying system hasn't changed in a signficant change if very prudent. However the wording in 2.6.2 of "unless a technical rationale can be provided to demonstrate that System changes do not impact the performance results in the study area" is of concern. By this wording is it intended that the planner must demonstrate that every material change has no impact? In essence doing more work to prove that a study isn't required then the study would take? Or that the planner must essentially have a technical rationale (overarching) for determining when a material change is "material enough" to impact system perofrmance?
Minnesota Power	No	Requirement 2 - This requirement states that Stability analyses be performed as part of the annual Planning Assessments. Minnesota Power would like to see the term "Stability analysis" more clearly defined as there are several different types of stability related analysis that can be performed for power systems including: transient stability, voltage stability and small signal stability.
US Bureau of Reclamation	No	The question is misleading in that R2 also include current studies. The overall structure of the standard

Organization	Yes or No	Question 4 Comment
		could be greatly improved if the standard were segmented into Near Term and Long Term with sub segments for each specific type of analysis to be performed. Second, the standard does not use consistent terms. The Planning Assessment is to include Near Term and Long Term portions which must have steady state analysis, short circuit analysis, and stability analysis (ref. R2). Requirement R 2.1 introduces sensitivity analysis for the Near Term portion, and then refers to the Planning Analysis which is in reality both Near Term and Long Term portions. That implies that sensitivity analysis must be required for both? The standard repeats the requirement for annual stability studies in 2.4 which was already a requirement for Planning Assessments. The requirement 2.1.5 is one the most problematic requirements in this standard. This requirement implies that an entity must have spare equipment and a strategy to employ it. That is beyond the scope of the Energy Policy Act 2005. Spare equipment is not on-line and does not contribute to the reliability of the existing system. The Energy Policy Act of 2005 specifically prohibits the requirement to enhance or modify the system. The use, application, or requirement to have spare equipment violates that prohibition. This section should be removed. In addition, this requirement suffers from an ability to implement. In the first case, the requirement is invoked if the spare equipment strategy could result in unavailability of transmission equipment. How is that determined? There is no nexus to that determination. The unavailability may have already occurred once the transmission equipment has failed. The only way to avoid unavailability if the transmission equipment that fails has a hot stand-by with automatic fail-over. The presence or not of a suitable replacement will still result in unavailability by virtue of the failure o the first piece of transmission equipment. Next problem, who will second guess the owner of the replacement. Where is the requirement to make the replacement strategy available? The standard should focus on system performance with existing equipment to meet current and future loads.
CenterPoint Energy	No	The SDT did not incorporate CenterPoint Energy's previous comments regarding R2; therefore, CenterPoint Energy's concerns remain.
ISO New England Inc. United Illuminating National Grid	No	We can agree with R2.1 however with respect to R2.2 Language should be consistent with 2.1 for example - use "current or qualified past studies" instead of "the following annual current study."
Northeast Utilities	No	The revisions made to Requirement R2 Part 2.1 appear to resolve the concern that past studies could not be used to comply with the short-term steady state study requirements. However, the language of Requirement R2 Part 2.2 still seems to suggest that current annual studies are always required for the long-term steady state assessment to be compliant. This may have been an oversight, for consistency Requirement R2 Part

Organization	Yes or No	Question 4 Comment
		2.2 should be modified to similarly read as Requirement R2, Part 2.1.
Hydro-Quebec TransEnergie	No	Requirement R2 Part 2.2 should be modified to read as 2.1 (not impose current annual studies as the only requirement for assessment)
American Transmission Company	No	R2.1.3 - We offer the minor suggestion of revising R2.1.3 to state, "Known outages of generation or Transmission Facilities with a duration of at least six months be simulated along with P1 events for the System peak or Off-Peak conditions when the outages are scheduled to occur." We interpret that the requirement should only call for the simulation of individual outages with duration of six months or more and not imply the simulation of sequential (back-to-back) outages where each individual outage is less than six months, but the composite duration of the back-to-back outages is more than six months. We also interpret that if two or more known outages with duration of at least six months are overlapping, then the overlapping outage condition would only be simulated for the conditions when the overlapping outages are scheduled to occur if the duration of the overlapping condition is at least six months.
Tri-State Generation & Transmission	No	2.1.5 - Change "shall be performed for" to "shall have been performed for."
Lakeland Electric	No	No, the phrase any material changes used in requirement R.2.6.2 will effectively cause all Planning Authorities to run all studies every year regardless of minor changes in the model. The overwhelming majority of PAs use a 10 year set of planning models developed annually by Regions or Subregions. These annual sets of planning models will always have some changes. The annual study requirement is especially problematic for Stability and Short circuit studies that require much more engineering time to complete and are much less likely to have results impacted by minor model changes such as different load forecasts. Uncertainty with audit review of technical rationale documentation will serve to focus Transmission Planning engineering resources on short term compliance to an extent that is counter productive. Please consider removing R.2.6.2
NBSO	No	NBSO agrees with the language for R2.1, but the language with R2.2 should be changed to be consistent with R2.1. NBSO disagrees with the revisions to R2.1.5. Requiring PAs to study instead of assess the possible unavailability of equipment with a lead time of a year or more will result in significant demand on resources with little impact on system reliability. NBSO also questions what additional value such studies will bring in addition to the N-1-1 requirements (P6).

Organization	Yes or No	Question 4 Comment
Central Maine Power Company New York State Electric & Gas Corp	No	We completely agree with the revision to R2.1, but this revision must be carried through to other sections (R2.2, 2.2.1) and R2.2 language should be consistent with 2.1 for example - use "current or qualified past studies" instead of "the following annual current study". Revisions made to Requirement R2.1.5 have made it worse than as originally drafted. This would require the PC & TP to study, or in other words perform technical analysis of, the impact and probability of the possible unavailability of any piece of equipment with a lead time of one year or more. Such an evaluation of spare equipment strategies would require significant additional resources and data, but provide no benefit to system reliability, as it is redundant to the existing N-1-1 contingency requirement (P6).
Progress Energy	No	While PE does not disagree with the basic premise of 2.1, PE disagrees with the language to the extent that 2.1 is qualified by language in 2.6 and 2.6.2. The issue of managing modeling of case data is already adequately handled in MOD Standards. Furthermore, PE does not feel that the term “material” can be defined with any mutually agreed-upon boundaries, and could be construed to require any and all Transmission Planners and/or Planning Authorities to make multiple revisions of base cases each year. PE therefore appeals to the SDT to remove the language referring to R2 Part 2.6.2 and furthermore appeals for the deletion of R2.6.2. Furthermore, PE appeals to the SDT to modify R2.6.1 to say “For steady state, short circuit, or Stability analysis: the study shall be five calendar years old or less, unless a technical rationale can be provided to demonstrate the validity of the results of any studies older than five years or any studies using cases containing major modeling differences from other submitted studies.”
ERCOT ISO	No	Previous Comment unaddressed: Requirement 2.1.5: Including the spare equipment strategy will be difficult for a PC that doesn’t own or manage the transmission equipment or the strategies. This requirement should only be applicable to TP. Furthermore, R7 should be deleted and the responsibilities of each entity should be explicitly stated within the specific requirements.
New York Independent System Operator	No	NYISO completely agrees with the revision to R2.1, but this revision must be carried through to other sections (R2.2, 2.2.1). Revisions made to Requirement R2.1.5 have made it worse than as originally drafted. This would require the PC & TP to study, or in other words perform technical analysis of, the impact and probability of the possible unavailability of any piece of equipment with a lead time of one year or more. Such an evaluation of spare equipment strategies would require significant additional resources and data, but provide no benefit to system reliability, as it is redundant to the existing N-1-1 contingency requirement (P6).

Organization	Yes or No	Question 4 Comment
		R2.7 requires that Corrective Action Plans are included in each Planning Assessment and states "Such actions may include..." followed by a list of actions. Restricting allowable actions, and excluding runback/tripping of HVDC would have a direct impact on multiple existing facilities in New York and would adversely impact the reliability planning of the NYCA. Runback/tripping of HVDC must be added to the list.
Xcel Energy	No	Specifically, the phrase "as follows" at the end of Part 2.1 does not appear to be an appropriate lead-in for the sub-parts under 2.1. Please consider re-wording Part 2.1 consistent with Part 2.4 to use the lead-in "The following studies are required:" Why is it essential to use the qualifier "annual" for "current studies" in Part 2.1? Can a study be considered current if it is conducted less frequently than once every year? Note that Parts 2.3, 2.4 and 2.5 do not use the "annual" qualifier, nor does Requirement R2. Recommend deleting this apparently non-essential qualifier in both 2.1 and 2.2 to improve consistency. In Part 2.5, should "annually" be inserted after "shall be assessed" to make it consistent with Parts 2.1, 2.2, 2.3 and 2.4? If the omission is intentional in 2.5, please explain why. To improve semantics and consistency, please modify 2.2.1 as follows to make it consistent with 2.1.1 and 2.4.1 "System peak Load for one of the years in the…" We are unable to appreciate why the wording in Part 2.3 is not consistent with that in Part 2.1, 2.2, 2.4 or 2.5. Note that the semantics of the wording "… (steady state / stability) analysis shall be assessed annually…" can be interpreted to be much different than the semantics of the Part 2.3 wording "The short circuit analysis…. shall be conducted annually …". The former requires the analysis to be *assessed* annually but 2.3 requires the analysis to be *conducted* annually without explicitly requiring it be assessed –- is the usage of "conducted" instead of 'assessed" consistent with the intent? It is unclear why the stipulation to use "current or qualified past studies" needs to be repeated in each of the Parts 2.1, 2.2, 2.3, 2.4 and 2.5 when it is already specified in Requirement R2 at the highest hierarchy level. Suggest eliminating redundant usage by deleting from the parts under R2. In Part 2.6.2, the intent is awkwardly conveyed within the phrase "…the System represented in the study shall not include any material changes unless…". In the context of a *past* study, how can the System represented possibly include any material changes (that would have presumably occurred after the study)? Suggest modifying Part 2.6.2 to read "For steady state, short circuit or Stability analysis: no material changes have occurred in the System represented in the study or, if material changes have occurred, a technical rationale shall be provided to explain why they do not significantly impact the study results." In Parts 2.6.1 and 2.6.2, the lead-in phrase "For steady state, short circuit or Stability analysis:" does not appear to be essential. Even in the absence of this phrase, wouldn't these two attributes of a qualified past study apply (by default) to all types of analysis? Suggest deleting this seemingly redundant phrase in both 2.6.1 and 2.6.2.

Organization	Yes or No	Question 4 Comment
		Perhaps this comment is more persuasive when considered together with the next comment. Recommend moving Part 2.6 to the first part under R2 (Part 2.1) because it defines the qualified past studies which are applicable to all types of analysis (steady state, stability and short circuit) that are detailed in the subsequent parts.
MRO's NERC Standards Review Subcommittee	Yes	R2.1.3 - We offer the minor suggestion of revising R2.1.3 to state, “Known outages of generation or Transmission Facilities with a duration of at least six months be simulated along with P1 events for the System peak or Off-Peak conditions when the outages are scheduled to occur.” We interpret that the requirement should only call for the simulation of individual outages with duration of six months or more and not imply the simulation of sequential (back-to-back) outages where each individual outage is less than six months, but the composite duration of the back-to-back outages is more than six months. We also interpret that if two or more known outages with duration of at least six months are overlapping, then the overlapping outage condition would only be simulated for the conditions when the overlapping outages are scheduled to occur if the duration of the overlapping condition is at least six months. R2.1.5 - We offer a major suggestion regarding the phrase “could result in the unavailability of major transmission equipment” because this phrase is ambiguous and not defined. So, there is a significant risk of different and possibly contradictory interpretations by TPs, PCs, and auditors. We proposed adding that the TP and PC “shall provide documentation to support the technical rationale for defining unavailability of major transmission equipment” similar to R2.5.
NERC staff	Yes	NERC staff supports the use of qualified past studies for the Near Term horizon.
American Electric Power (AEP)	Yes	R2, Part 2.1 - idicates that ‘qualified’ past studies can be utilized. This is an ambiguous term and we suggest the SDT consider the implications.
SERC Planning Standards Subcommittee	Yes	
Hydro One Networks Inc.	Yes	
SERC Dynamics Review Subcommittee	Yes	
Pepco Holings, Inc - Affiliates	Yes	

Organization	Yes or No	Question 4 Comment
IRC Standards Review Committee	Yes	
Bonneville Power Administration	Yes	
Exelon Transmission Planning	Yes	
Southern Company	Yes	
Western Electricity Coordinating Council	Yes	
Arizona Public Service Company	Yes	
PacifiCorp	Yes	
Duke Energy	Yes	
NorthWestern Energy (NWMT)	Yes	
PNM	Yes	
FirstEnergy	Yes	
Manitoba Hydro	Yes	
TVA Transmission Planning & Compliance	Yes	
Independent Electricity System Operator	Yes	
South Carolina and Gas	Yes	

Organization	Yes or No	Question 4 Comment
SRP	Yes	
California ISO	Yes	
Seattle City Light	Yes	
California Energy Commission	Yes	
Los Angeles Department of Water and Power	Yes	
Idaho Power Co	Yes	
Ameren	Yes	
LCRA TSC	Yes	
GTC	Yes	
Pacific Gas and Electric Company	Yes	
Modesto Irrigation District	Yes	
Oncor Electric Delivery	Yes	
Tucson Electric Power Company	Yes	
GDS Associates, Inc.	Yes	
MidAmerican Energy	Yes	
Puget Sound Energy	Yes	

Organization	Yes or No	Question 4 Comment
Sacramento Municipal Utility District	Yes	
Southern California Edison Company	Yes	

3.2 Requirement R2, Parts 2.1.4 & 2.4.3 – sensitivity analysis:

Summary Consideration:

The SDT intent is that multiple condition sensitivities will be assessed since you are required to run the cases for peak and Off-peak conditions, multiple years, etc. If the problem exists in two or more of these cases, it would be an indication of 'multiple' problems. No change made.

The SDT understands that running sensitivities may require additional work for some entities. The sensitivities studied should be used to compare system response to different conditions to provide a broader perspective for the planner and the SDT believes that this is important enough to justify the additional work.

The SDT has made a clarifying change to the words in Requirement R2, part 2.1.4 based on comments received:

> **2.1.4** For each of the studies described in Requirement R2, Parts 2.1.1 and 2.1.2, sensitivity case(s) shall be utilized to demonstrate the impact of changes to the basic assumptions used in the model. To accomplish this, the sensitivity analysis in the Planning Assessment must vary one or more of the following conditions by a sufficient amount to stress the System within a range of credible conditions that demonstrate a measurable change in System response~~performance~~:

The SDT has made the language in Requirement R2, part 2.7, bullet 7 consistent with the other parts of the standard as follows:

- List System deficiencies and the associated actions needed to achieve required System performance. Examples of ~~S~~such actions ~~may~~ include:

The majority of respondents agree with the changes to these requirements and only the changes to the requirements noted above have been made in response to stakeholder comments.

The SDT did not pose questions for items that were not redlined, i.e., changed, in this posting since those items not redlined were considered by the SDT as sufficiently vetted by the industry through the various phases of the project to date. However, the SDT has reviewed all comments regardless of whether specific questions were asked and has considered the comments.

Organization	Yes or No	Question 5 Comment
Northeast Power Coordinating Council Consolidated Edison Co. of New York, Inc.	No	Part 2.1.4, requires an entity to vary one or more conditions to demonstrate a change in performance. If the cases were initially stressed, this may force an entity to simulate conditions with less severe stresses. At this point, there is limited to no value to this additional workload. Having a requirement to test at least one sensitivity as a blanket requirement may not be informative by itself and is more unclear since sensitivities are being required on an undefined base set of conditions. If an entity does a case with a stressed set of assumptions, is it

Organization	Yes or No	Question 5 Comment
		necessary to do a non-stressed case? Additionally, our concern involves wording under 2.1.4 and 2.4.3 that sensitivities are required varying one or more conditions. Subsequently, in requirement 2.7.2 corrective action plans need to be developed to resolve performance deficiencies "only" if identified in multiple conditions or require a rationalization why no corrective action plan is necessary. Multiple conditions sensitivities under 2.1.4 and 2.4.3 are necessary to satisfy requirement 2.7.2. Requirement 2.7.2 adds ambiguity and should be removed. If not, a suggested revision to Requirement 2.7.2 as follows:2.7.2. Corrective Action Plans are not required for performance deficiencies identified in a sensitivity analysis. In general, the scope of this requirement is too broad and non-specific, and only results in undue study burden. Is it necessary for sensitivity analysis to be included in requirements since in accordance with good engineering practices a conservative approach should be used in studies? The standard is referring to requirements for sensitivity and other issues without a reference to base assumptions as commented in issue #3. The standard must describe base assumptions. To define a sensitivity condition, NERC must define base assumptions.
Hydro One Networks Inc.	No	The scope of this requirement is too broad and non-specific and only results in undue study burden.
MRO's NERC Standards Review Subcommittee	No	R2.1.4 & R2.4.3 - We offer a major suggestion regarding the terms of 'credible' and 'measurable change" because these terms are ambiguous and not defined. So, there is a significant risk of different and possibly contradictory interpretations by TPs, PCs, and auditors. We proposed adding that the TP and PC "shall provide documentation to support the technical rationale for determining the range of credible conditions and measurable change in performance" similar to R2.5. R2.1.4 & R2.4.3 bullet items - We offer the minor suggestion that the number and description of the bullet items in R2.1.4 match the bullet points in R2.4.3. Otherwise, please explain the reasons for any differences between the bullet items in R2.1.4 and R2.4.3. R2.1.4 bullet #2 & # 5 - We suggest that the wording in bullet #2 be changed to "Expected transfers and other generation dispatch scenarios". This modification would put the transfer and dispatch element, which are complementary, together in the same bullet item, rather than grouping the 'generation dispatch' (operating level) element together with the generation capacity elements in bullet item #5. R2.1.4 bullet #7 - We offer the minor suggestion that the term "planned" be replaced with "known" to be consistent with R1.1.2 and R2.1.3. Besides the term "planned outage" has a specific meaning in the Reliability Standards that are specific to the Operating horizon. R2.7.2 - With regard to "include actions to resolve performance deficiencies identified in multiple sensitivity

Organization	Yes or No	Question 5 Comment
		studies", we do not think that mitigation plans should be required for deficiencies found in multiple sensitivity studies because the conditions in some sensitivity studies are more extreme and less likely than base case conditions. It's impractical to require corrective actions for longer term horizon sensitivities due to how fast the electric grid changes. We believe sensitivity analyses are valuable to improving the development of mitigation plans to address base case performance limit concerns. Some of the sensitivity study conditions are not credible or plausible enough to warrant the implementation of mitigation measures. What is the interpretation of multiple sensitivity studies - more than one or a majority of the number that were studied?
IRC Standards Review Committee	No	The primary concern involves wording under 2.1.4 and 2.4.3 that sensitivities are required by varying one or more conditions. Subsequently, in requirement 2.7.2 corrective action plans need to be developed to resolve performance deficiencies "only" if identified in multiple conditions or require a rationalization why no corrective action plan is necessary. Multiple conditions sensitivities under 2.1.4 and 2.4.3 are necessary to satisfy requirement 2.7.2. Requirement 2.7.2 adds ambiguity and should be removed. Alternatively, Requirement 2.7.2 could be revised as follows:2.7.2. Corrective Action Plans are not required for performance deficiencies identified in a sensitivity analysis. If a Planning Coordinator includes Corrective Action Plans to resolve performance deficiencies identified in multiple sensitivity analysis, the Planning Coordinator shall provide documentation to support those Plans.
Florida Reliability Coordinating Council, Inc - Transmission Working Group	No	This change does not clarify the required sensitivity analysis. A measureable change in performance is unclear? Instead of a measurable change in performance, a measureable change in contingency response of the Bulk Electric System would be more appropriate. A change in performance implies not meeting one of the performance requirements as specified in Table 1.
Lakeland Electric	No	A "measureable change in performance" can be interpreted as not meeting one of the performance requirements as specified in Table 1 in order for the condition to be selected as a sensitivity. This will cause utilities to perform sensitivity analysis for all system conditions listed in R2.1.4 to determine which one fails to meet one of the performance requirements in Table 1, as one may not be able to tell performance impact until after the studies are performed. Suggested change: "...one of the following conditions by a sufficient amount...system conditions that may demonstrate a measurable change in system response."
Orlando Utilities Commission	No	What is meant by "measurable change in performance"? Is this a measure that the sensistivty should move the system from meeting the performance requirements to not meeting the performance requirements? Or just a measurable change in system response, IE the loading was 45% on this corridor but is now 76%.
US Bureau of Reclamation	No	Sensitivity analysis is not included in R2. This gets back to the structure of the standard. There should a clear indication of the studies that are to be included in the Near-Term and Long-Term portions of the Planning

Organization	Yes or No	Question 5 Comment
		Assessments.
CenterPoint Energy	No	The SDT did not incorporate CenterPoint Energy's previous comments regarding R2; therefore, CenterPoint Energy's concerns remain.
California ISO	No	Requirement 2.7.2 could be revised as follows:2.7.2. Corrective Action Plans are not required for performance deficiencies identified in a sensitivity analysis. If a Planning Coordinator includes Corrective Action Plans to resolve performance deficiencies identified in multiple sensitivity analysis, the Planning Coordinator shall provide documentation to support those Plans.
ISO New England Inc.	No	Part 2.1.4, requires an entity to vary one or more conditions to demonstrate a change in performance. If the cases were initially stressed, this may force an entity to simulate conditions with less severe stresses. At this point, there is limited to no value to this additional workload. Having a requirement to test at least one sensitivity as a blanket requirement may not be informative by itself and is more unclear since sensitivities are being required on an undefined base set of conditions Additionally, our concern involves wording under 2.1.4 and 2.4.3 that sensitivities are required varying one or more conditions. Subsequently, in requirement 2.7.2 corrective action plans need to be developed to resolve performance deficiencies “only” if identified in multiple conditions or require a rationalization why no corrective action plan is necessary. Multiple conditions sensitivities under 2.1.4 and 2.4.3 are necessary to satisfy requirement 2.7.2. Requirement 2.7.2 adds ambiguity and should be removed. Requirement 2.7.2 should be revised as follows:2.7.2. Corrective Action Plans are not required for performance deficiencies identified in a sensitivity analysis.
United Illuminating National Grid	No	If an entity does a stressed set of assumptions do they always need to do a non-stressed case?
Hydro-Quebec TransEnergie	No	It is questionable that sensitivity analysis be included in Requirements since a conservative approach should already be used in studies, in accordance with good engineering practices.
American Transmission Company	No	R2.1.4 & R2.4.3 - We offer a major suggestion regarding the terms of ‘credible’ and ‘measurable change” because these terms are ambiguous and not defined. So, there is a significant risk of different and possibly contradictory interpretations by TPs, PCs, and auditors. We proposed adding that the TP and PC “shall provide documentation to support the technical rationale for determining the range of credible conditions and measurable change in performance” similar to R2.5. R2.1.4 & R2.4.3 bullet items - We offer the minor suggestion that the number and description of the bullet items in R2.1.4 match the bullet points in R2.4.3. Otherwise, please explain the reasons for any differences between

Organization	Yes or No	Question 5 Comment
		the bullet items in R2.1.4 and R2.4.3. R2.1.4 bullet #7 - We offer the minor suggestion that the term “planned” be replaced with “known” to be consistent with R1.1.2 and R2.1.3. Besides the term “planned outage” has a specific meaning in the Reliability Standards that are specific to the Operating horizon. R2.7.2 - With regard to "include actions to resolve performance deficiencies identified in multiple sensitivity studies", we do not think that mitigation plans should be required for deficiencies found in multiple sensitivity studies because the conditions in sensitivity studies are more extreme and less likely than base case conditions. Some sensitivity study conditions are not credible or plausible enough to warrant the implementation of mitigation measures. What is the SDT interpretation of multiple studies - more than one or a majority of the sensitivities that were studied?
Lakeland Electric	No	It is recommended that the phrase “...measureable change in performance...” be changed to “...measurable change in system response...” A change in performance is unclear, and could suggest that a sensitivity study is valid only if the System is stressed to the point that it no longer performs within the criteria established by Table 1. In addition, it is recommended that the following text appear after the last sentence of 2.4.3: “The condition or conditions to be varied shall be left to the discretion of the Transmission Planner or Planning Coordinator, provided they are selected from the list below.”
Northeast Utilities	No	The standard is referring to requirements for sensitivity and other issues without a reference to base assumptions as commented in Question #3. The standard must describe base assumptions. To define a sensitivity condition, NERC must define base assumptions.
Modesto Irrigation District	No	This new requirement will expand the scope of the study work beyond a reasonable extent.
NBSO	No	Base case assumptions should be made such that they appropriately stress the system to be tested and are in accordance with good engineering practice. If the base cases are already stressed, the requirement to study sensitivity cases may result in the study of less severe conditions, and thus require additional time and resources while providing little additional value to the overall assessment.
Central Maine Power Company New York State Electric & Gas	No	These sensitivities need to be considered if not already included in the base case assumptions.

Organization	Yes or No	Question 5 Comment
Corp		
Progress Energy	No	PE does not have concerns in general with either 2.1.4 or 2.4.3. PE does, however, disagree with the wording at the end of the main paragraph of 2.4.3. Whether or not analysis qualifies as sensitivity analysis should not be predicated upon the end results; rather, it should be based upon major case modeling differences. PE therefore recommends that the phrase "...that demonstrate a measurable change in performance" be removed so that the last sentence in the main paragraph read "...by a sufficient amount to stress the System within a range of credible conditions."
ERCOT ISO	No	The stress test requirements should be deleted. The purpose of this proposed Standard is to establish planning performance standards that support reliable operation. This is achieved by imposing performance requirements relative to specific conditions and contingencies. Compliance with the performance metrics within these boundaries is presumably indicative of a reliable system. It is unclear what value is added by stress testing the system in accordance with undefined, vague parameters, as required by Requirements 2.1.4 and 2.4.3. The criteria in the relevant requirements that govern the stress testing are defined by the following ambiguous phrase: 1) "by a sufficient amount"; 2) "range of credible conditions"; and 3) "measurable change of performance". Application of these criteria introduces uncertainty for both the regulated community and the relevant compliance enforcement authorities, which, in turn, creates audit risks for regulated entities. Furthermore, there is no reliability value because the stress test requirements do not establish objective criteria and do not prescribe any actions based on the stress test results. Reliability Standards should set specific obligations that are readily discernible and achievable on a consistent basis. The existing Standard does this by setting specific performance obligations relative to specific conditions and contingencies. Conversely, the stress test requirements introduce ambiguity and uncertainty with no reliability benefit; the only apparent effect is unnecessary audit liability risk for regulated entities. Accordingly, ERCOT believes that these requirements should be deleted.
Tucson Electric Power Company	No	TEP agrees with removing the phrase "not already included in the studies." However, TEP does not understand the purpose of sensitivity studies. TEP is concerned that imposing additional sensitivity studies could lead to requirements that exceed the proposed standards. TEP recommends removing sesnitivity analysis from the standard.
New York Independent System Operator	No	Our concern involves wording under 2.1.4 and 2.4.3 that sensitivities are required varying one or more conditions. Subsequently, in requirement 2.7.2 corrective action plans need to be developed to resolve performance deficiencies "only" if identified in multiple conditions or require a rationalization why no corrective action plan is necessary. Multiple conditions sensitivities under 2.1.4 and 2.4.3 are necessary to satisfy requirement 2.7.2.

Organization	Yes or No	Question 5 Comment
		Requirement 2.7.2 adds ambiguity and should be removed. Requirement 2.7.2 should be revised as follows:2.7.2. Corrective Action Plans are not required for performance deficiencies identified in a sensitivity analysis.
GDS Associates, Inc.	No	The requirements are extremely burdensome. We recommend changing the last sentence of 2.1.4 requirement by removing "by a sufficient amount to stress the System within a range of credible conditions that demonstrate a measurable change in performance:" because there are instances where listed conditions may not result in measurable changes in performance (Ex. An increase in load in a well built system may not cause any measurable changes in performance because there is sufficient transmission capacity to serve the load).
SMUD		What is the significance of changing the wording for section R2.1.5 from 'assessed' to 'studied' and 'Planning Assessments' to 'studies'?
Western Area Power Administration	Yes	In Requirement 2.1.4, "Sensitivity Analysis". How much change does it take in any of the modeling assumptions (load, generation, voltage support, topology, etc.) to significantly stress the system within a range of credible condition? As this Requirement relates to R2.7, Would it be necessary to have Corrective Action Plan(s) if needed to meet all the Sensitivity Cases? How many Sensitivities before must have Corrective Action Plan? Also - why is it essential to use the qualifier "annual" for "current studies" in Part 2.1? Can a study be considered current if it is conducted less frequently than once per year? Note that Parts 2.3, 2.4 and 2.5 do not use the "annual" qualifier, nor does Requirement R2. Recommend deleting this apparently non-essential qualifier in both R2.1 and R2.2. We are unable to appreciate why the wording in Part 2.3 is not consistent with that in Part 2.1, 2.2, 2.4 or 2.5. Note that the semantics of the wording "... (steady state / stability) analysis shall be assessed annually..." can be interpreted to be much different than the semantics of the Part 2.3 wording "The short circuit analysis.... shall be conducted annually ...". The former requires the analysis to be *assessed* annually but 2.3 requires the analysis to be *conducted* annually without explicitly requiring it be assessed -- is the usage of "conducted" instead of 'assessed" consistent with the intent? In Part 2.6.2, the intent is awkwardly conveyed within the phrase "...the System represented in the study shall not include any material changes unless...". In the context of a *past* study, how can the System represented possibly include any material changes (that would have presumably occurred after the study)? Suggest modifying Part 2.6.2 to read "For steady state, short circuit or Stability analysis: no material changes have occurred in the System represented in the study or, if material changes have occurred, a technical rationale shall be provided to explain why they do not significantly impact the study results."

Organization	Yes or No	Question 5 Comment
NERC staff	Yes	NERC staff supports removing the phrase “not already included in the studies” from the parts 2.1.4 and 2.4.3 of Requirement R2. We believe that the requirement is more clear and less subject to interpretation without this phrase.
MidAmerican Energy	Yes	R2.1.4 bullet #7 - Replace the adjective “planned” with “known” for consistency with R1.1.2 and R2.1.3.R2.3 Replace “conducted” with “assess” for consistency with R1.1.2 and R2.1.3.R2.4 Replace “current or past studies as qualified” with “current or qualified past studies as indicated” for consistency with R2
SERC Planning Standards Subcommittee	Yes	
SERC Dynamics Review Subcommittee	Yes	
Pepco Holings, Inc - Affiliates	Yes	
Bonneville Power Administration	Yes	
Exelon Transmission Planning	Yes	
Southern Company	Yes	
Western Electricity Coordinating Council	Yes	
Arizona Public Service Company	Yes	
PacifiCorp	Yes	
Duke Energy	Yes	
NorthWestern Energy (NWMT)	Yes	
PNM	Yes	

Organization	Yes or No	Question 5 Comment
FirstEnergy	Yes	
Platte River Power Authority	Yes	
Manitoba Hydro	Yes	
Minnesota Power	Yes	
TVA Transmission Planning & Compliance	Yes	
Independent Electricity System Operator	Yes	
South Carolina and Gas	Yes	
SRP	Yes	
Seattle City Light	Yes	
California Energy Commission	Yes	
Los Angeles Department of Water and Power	Yes	
Idaho Power Co	Yes	
Ameren	Yes	
LCRA TSC	Yes	
American Electric Power (AEP)	Yes	
Tri-State Generation &	Yes	

Organization	Yes or No	Question 5 Comment
Transmission		
GTC	Yes	
Pacific Gas and Electric Company	Yes	
Oncor Electric Delivery	Yes	
Puget Sound Energy	Yes	
Sacramento Municipal Utility District	Yes	
Xcel Energy	Yes	
Southern California Edison Company	Yes	

3.3 Requirement R2, Part 2.4.1 – dynamic load models:

Summary Consideration:

The majority of respondents agree with the changes to these requirements and no changes to these requirements have been made in response to stakeholder comments.

The SDT does not intend that detailed dynamic Load models will be required for Loads in the System models used for the assessments. In particular, Requirement R2, part 2.4.1 states that an aggregate System Load model which represents the overall dynamic behavior of the Load is acceptable.

The SDT has placed this requirement in TPL standards because it is not presently covered in MOD standards.

Organization	Yes or No	Question 6 Comment
NERC staff	No	NERC staff understands why the SDT has inserted the word “expected” before “dynamic behavior of Loads,” but we have concerns with this addition. We understand that a PC or TP that models the best current industry understanding of load behavior should not need to worry about compliance if that model does not match actual load response for all possible system conditions. However, we are concerned that this change to part 2.4.1 of Requirement R2 may be too accommodating. If a PC or TP has unrealistic expectations about load behavior, would this permit the use of unrealistic models? While we have struggled to develop an alternative proposal, we hope that the SDT will identify a way to address this concern.
Northeast Power Coordinating Council	No	There is insufficient information and experience regarding dynamic load modeling. It may also be included as a “sensitivity” analysis in 3.2, rather than requiring and expecting accurate representation of a dynamic load model. If this requirement is kept, a modeling standard must be written that is specific to dynamic loads. Change belongs in a modeling standard, not in TPL-001.
Hydro One Networks Inc.	No	There is insufficient information and experience regarding dynamic load modeling. Hence, this should not be a requirement but a guide or an item to be considered to the extent possible. It may also be included as a “sensitivity” analysis in 3.2, rather than requiring and expecting accurate representation of dynamic load model.
Transmission Issues Subcommittee	No	TIS believes that the term “expected” leaves the question as to “whose expectation.” It should be stated as to “expected...by the Transmission Planner.”

Organization	Yes or No	Question 6 Comment
Exelon Transmission Planning	No	There is not an industry consensus around best practices for modeling the dynamic behavior or characteristics of load. It is premature to make this a requirement in an enforceable standard which would be held to this degree of subjective auditing.
Manitoba Hydro	No	The last two sentences "System peak Load levels shall include a Load model which represents the expected dynamic behavior of Loads that could impact the study area, considering the behavior of induction motor Loads. An aggregate System Load model which represents the overall dynamic behavior of the Load is acceptable." belong in the MOD standards. They are not required in TPL-001-2.
US Bureau of Reclamation	No	Not included in R2. See response to Question 3.2
CenterPoint Energy	No	The SDT did not incorporate CenterPoint Energy's previous comments regarding R2; therefore, CenterPoint Energy's concerns remain.
Ameren	No	Industry needs guidance regarding how to provide reasonable induction motor representation as opposed to generic models.
Hydro-Quebec TransEnergie	No	There is insufficient data available to accurately model system wide motor loads.
LCRA TSC	No	The first bullet item in Section 3.3.1 should be the same as the second bullet in Section 4.3.1. The wording is somewhat confusing in both. Also, the wording as proposed does not recognize that a high voltage limit could also be violated. Edits to the item as shown below are suggested. Tripping of generators where simulations show generation bus voltages or high side generation step up (GSU) voltages are outside known limits, or assumed to be outside generator steady state limits, or have reached the generator ride through voltage limit. Include in the assessment any assumptions made.
Tri-State Generation & Transmission	No	Rather than specifically call out induction motor loads, we recommend changing the second sentence to "Stability analysis shall include models that represent the expected dynamic behavior of system elements that could impact the study area."
GTC	No	We have concerns for including induction motor representations in the load models without any study or bench-marking activities to meet the requirements of R2.4.1. This information should be supplied by the LSE as part of the MOD standard. We understand that the proposed standard will accept an aggregate system load model which represents the overall dynamic behavior of the load to relieve the burden of trying to develop specific induction motor load representation at each load bus. However this modeled system response will be considerably different compared to the actual system response which will open up the

Organization	Yes or No	Question 6 Comment
		industry to unwarranted scrutiny and possible compliance violation investigations.
Consolidated Edison Co. of New York, Inc.	No	There is insufficient information and experience regarding dynamic load modeling. It may also be included as a "sensitivity" analysis in 3.2, rather than requiring and expecting accurate representation of a dynamic load model. If this requirement is kept, a modeling standard should be written that is specific to dynamic loads. This change belongs in a modeling standard, not in TPL-001.
NBSO	No	By implication, the response of induction motor load would need to be considered when modeling the expected dynamic behaviour of loads that could impact the study area. NBSO suggests re-wording parts of R2.4.1 as follows: System peak load levels shall include a model which represents the expected dynamic behaviour of loads that could impact the study area. An aggregate system load model which represents the overall expected dynamic behaviour of load is acceptable.
Central Maine Power Company New York State Electric & Gas New York Independent System Operator	No	We have not determined a need to model dynamic loads, and therefore have not benchmarked any such models. We recommend that prior to this requirement being in place, a modeling standard should exist that is specific to dynamic loads.
ERCOT ISO	No	ERCOT ISO suggests adding "best available" as a descriptor to load models. Distribution Providers (DPs)/Load Serving Entities (LSEs) are the appropriate NERC functional entities to provide dynamic load data. Accordingly, Planning Coordinators (PCs) and Transmission Planners (TPs) must rely on those entities for that data. Despite reliance on DPs/LSEs for this data, the Standard proposes to impose an obligation on PCs and TPs to include a load model representative of "expected" dynamic behavior. Simply put, PCs and TPs do not have this information and should not be subject to compliance liability risk for an issue that is beyond their control. This change will still accomplish the goal of reflecting dynamic data in the relevant models, while mitigating PC/TP compliance risk by basing their compliance on information that is within their control - i.e. the "best available" information. Based on this change, the language should read - "System peak Load levels shall include best available Load models which represent the expected dynamic behavior of Loads that could impact the study area, considering the behavior of induction motor Loads". This language is also a more accurate reflection of the Consideration of Comments by the Standard Drafting Team after the March 2010 comment period.To address this issue in the most appropriate manner, the Standard should be revised to establish an appropriate process for collection, reporting and use of dynamic data based on assigning obligations to the appropriate functional entities. In essence, DPs/LSEs should be required to collect the data and report it to TPs. Because TP models are the basis for PC models, the dynamic data will be included in PC models as part of the process. However, DPs and TPs should still only be required to use the "best available" data. Continued use of this language will mitigate the liability risk associated with a

Organization	Yes or No	Question 6 Comment
		requirement related to data that is within the control of a third party. Even under a construct where DPs/LSEs are required to collect and report dynamic data, there is no guarantee they will do so and PCs/TPs should not be held accountable in those circumstances. Accordingly, PC/TP compliance risk will be mitigated by use of a "best available" standard.
GDS Associates, Inc.	No	We disagree with the content of this requirement based on several facts:- We believe that the dynamic behavior of the load cannot be accurately estimated beyond current time. We are concern about the effort required to ascertain the dynamic response of the load- The requirement references "Loads that could impact the study area" without specifying how an entity will identify these loads. Perhaps the standard should provide guidelines to determine which loads would impact the study area.
MidAmerican Energy	No	MidAmerican questions if the widespread use of composite load models really provides significant benefits to additional dynamic analyses over generic load conversion assumptions which have been historically used. The use of composite load models may result in more precise individual load models, but no more accurate dynamic simulations. This poorly worded requirement should be deleted in its entirety as providing additional burden without any additional reliability benefits. If the composite load model requirement must be kept, it should be modified to include the following bolded text:"...System peak Load levels shall include a Load model which represents the expected dynamic behavior of Loads that could impact the study area, considering the behavior of induction motor Loads, but without requiring a detailed load survey be conducted..."
Platte River Power Authority	Yes	For consistency, use the qualifier "expected" in the second sentence of Part 2.4.1 also, such that it reads "...represents the overall expected dynamic behavior..."
Xcel Energy	Yes	For consistency, use the qualifier "expected" in the second sentence of Part 2.4.1 also, such that it reads "...represents the overall *expected* dynamic behavior..."
SERC Planning Standards Subcommittee	Yes	
SERC Dynamics Review Subcommittee	Yes	
MRO's NERC Standards Review Subcommittee	Yes	

Organization	Yes or No	Question 6 Comment
Pepco Holings, Inc - Affiliates	Yes	
IRC Standards Review Committee	Yes	
Bonneville Power Administration	Yes	
Southern Company	Yes	
Western Electricity Coordinating Council	Yes	
Arizona Public Service Company	Yes	
Florida Reliability Coordinating Council, Inc - Transmission Working Group	Yes	
Western Area Power Administration	Yes	
PacifiCorp	Yes	
Duke Energy	Yes	
NorthWestern Energy (NWMT)	Yes	
Lakeland Electric	Yes	
PNM	Yes	
FirstEnergy	Yes	
Orlando Utilities Commission	Yes	

Organization	Yes or No	Question 6 Comment
Minnesota Power	Yes	
TVA Transmission Planning & Compliance	Yes	
Independent Electricity System Operator	Yes	
South Carolina and Gas	Yes	
SRP	Yes	
California ISO	Yes	
Seattle City Light	Yes	
California Energy Commission	Yes	
ISO New England Inc.	Yes	
Los Angeles Department of Water and Power	Yes	
Idaho Power Co	Yes	
United Illuminating	Yes	
National Grid	Yes	
American Transmission Company	Yes	
American Electric Power (AEP)	Yes	

Organization	Yes or No	Question 6 Comment
Lakeland Electric	Yes	
Pacific Gas and Electric Company	Yes	
Northeast Utilities	Yes	
Modesto Irrigation District	Yes	
Oncor Electric Delivery	Yes	
Progress Energy	Yes	
Tucson Electric Power Company	Yes	
Puget Sound Energy	Yes	
Sacramento Municipal Utility District	Yes	
Southern California Edison Company	Yes	

3.4 Requirement R2, Part 2.5 – material clarification:

Summary Consideration:

The majority of respondents agree with the changes to these requirements and no changes to these requirements have been made based on stakeholder comments.

The SDT discussed defining 'material change' but did not believe that such a definition was appropriate in a continent-wide standard. With the wide variety in sizes and types of systems, the number of parameters that need to be considered, etc., there are too many variables involved. With the inclusion of Requirement R8 and the sharing of information, there is an opportunity for open discussion on such matters.

The SDT notes that Part 2.6.2 allows an entity to rely on a past study with a material change if "a technical rationale can be provided to demonstrate that System changes do not impact the performance results in the study area". Therefore, it is up to the entities performing the study to provide the rationale based on changes, such as Load growth.

The SDT did not pose questions for items that were not redlined, i.e., changed, in this posting since those items not redlined were considered by the SDT as sufficiently vetted by the industry through the various phases of the project to date. However, the SDT has reviewed all comments regardless of whether specific questions were asked and has considered the comments.

Organization	Yes or No	Question 7 Comment
Exelon Transmission Planning	No	The term 'material changes' is subjective. It is very difficult to determine a base case to study combinations of generator additions on a changing transmission network in the 6 to 10 year time period to be used for dynamic simulations. Dynamic studies should be performed whenever new generator interconnections are proposed and it is at that time where meaningful calculations can be performed. The long term six to ten year out dynamic studies for groupings of potential units should be done at a high level, if at all.
Florida Reliability Coordinating Council, Inc - Transmission Working Group	No	This change does not clarify material. Material should be quantified somehow. We recommend changing the phrase "material generation additions or changes" to "generation in the vicinity with additions of changes larger than 200 MW".
Lakeland Electric	No	Please consider removing R2.6.2. The "any material change" language can cause utilities perform studies due to material changes outside of and remote to its system.

Organization	Yes or No	Question 7 Comment
Orlando Utilities Commission	No	I agree with what I think is the intent. The word "Material" is meant to allow for changes in model to occur that are "small" relative to the TP/PC. For example the 400 MW generator that might be built in 10 years by another utility over a hundred miles, several dozen buses and generators away to not force new study work. However as written in 2.5 it requires you to define what a material change is, and could be applied to mean every change must be identified and explained rather then an overarching rationale that would only have you looking for changes that meet the material criteria. But then in 2.6.2 the word material is used with no obligation to explain what material is, only to explain if a material change would not impact the results in a study area. I recommend leaving the term material, but setting a requirement, measure, or definition that requires the TP/PC to define what they consider material specific to their system and circumstance. Since this will by the hetreogenous nature of the grid be different for each it may not be reasonable to pre-define what is reliable. Just as was done with many items in the ATC (MOD) standards, require that it be documented and questions on that rationale be answered. If a specific level of technical oversight is desired, consider requiring that description to be on file with the regional entity and approved by their planning committee. I think the team is heading in a good direction, it's just how the words will be applied that concern me. This may be a case where an Example or two would go a long way towards providing guidance to entities and auditors.
Manitoba Hydro	No	Adding the word “material” does not clarify Part 2.5. The word “material” can be interpreted in many ways and is subjective. In order to have a consistent approach by all TPs, the drafting team should add a definition of the term “material”. One TP may consider a new 200 MW unit as not being material because there are several larger units in the TPs system.
US Bureau of Reclamation	No	The term "material" is arbitrary. It is suggested that a specific value be used to trigger the assessment.
CenterPoint Energy	No	The SDT did not incorporate CenterPoint Energy's previous comments regarding R2; therefore, CenterPoint Energy's concerns remain.
Progress Energy	No	PE agrees in general with the changes made to R2.5. PE disagrees, however, with the language stipulating that current and past studies be qualified by the language in R2.6 Part 2.6.2 (see notes for Question 3.1 regarding recommending changes with regard to R2.6.2).
Tucson Electric Power Company	No	If a material change (generator addition/retirement, new generator models based on unit testing, or transmission line or non-distribution transformer addition) is not planned for the longer-term planning horizon, do the longer-term stability studies need to be performed? TEP's agreement/disagreement with Part 2.4.1 is

Organization	Yes or No	Question 7 Comment
		dependent on the response to this question. If the answer is the studies do not need to be performed, then TEP supports these changes.
GDS Associates, Inc.	No	We are not sure what will be included in these "material generation additions or changes". Perhaps the standard should provide guidelines to determine what are these material changes or additions?
Xcel Energy	No	It appears that the requirement appended at the end of Part 2.5 "…and shall include documentation to support the technical rationale for determining material changes." is duplicative of Part 2.6.2. Please address this apparent redundancy.
NERC staff	Yes	NERC staff supports inserting the word "material" in the reference to assessing the impact of proposed generation. We have some concern that this change leaves this part of the requirement open to interpretation, but we also understand the need to permit some degree of engineering judgment to be applied. It would not be appropriate to require that every potential generation addition be included in the assessment where some proposed additions may by inspection be deemed to be immaterial due to size and/or interconnection location.
IRC Standards Review Committee	Yes	However, the requirement infers that a subjective judgment from a compliance auditor will be required.
Bonneville Power Administration	Yes	It should be noted that if there is more generation proposed in an area than there load and export capability, all proposed material generation additions would not be represented. Determining what future generation additions to include in the Long-Term Transmission Planning Horizon may be based on a non-technical rationale rather than a technical rationale.
Western Area Power Administration	Yes	The drafting team could provide guidance on what is "material". In Part 2.5, should "annually" be inserted after "shall be assessed" to make it consistent with Parts 2.1, 2.2, 2.3 and 2.4? If the omission is intentional in 2.5, please explain why.
Platte River Power Authority	Yes	I like the flexibility you give the PC and TP to define what 'material' means in their 'documentation to support the technical rationale for determining material changes.' In Part 2.5 this rationale will decide whether or not any Long-Term Stability studies are required for the Planning Assessment. And in Part 2.6.2 this rationale will be a factor in qualifying a past study.
Independent Electricity System	Yes	We do not have a concern with this change but we don't think it is necessary. It is not a requirement, and

Organization	Yes or No	Question 7 Comment
Operator		appropriate wording in the Measures can take care of it.
SERC Planning Standards Subcommittee	Yes	
Northeast Power Coordinating Council	Yes	
Hydro One Networks Inc.	Yes	
SERC Dynamics Review Subcommittee	Yes	
MRO's NERC Standards Review Subcommittee	Yes	
Pepco Holings, Inc - Affiliates	Yes	
Southern Company	Yes	
PacifiCorp	Yes	
Duke Energy	Yes	
NorthWestern Energy (NWMT)	Yes	
FirstEnergy	Yes	
Minnesota Power	Yes	
TVA Transmission Planning & Compliance	Yes	
South Carolina and Gas	Yes	

Organization	Yes or No	Question 7 Comment
SRP	Yes	
California ISO	Yes	
Seattle City Light	Yes	
California Energy Commission	Yes	
ISO New England Inc.	Yes	
Los Angeles Department of Water and Power	Yes	
Idaho Power Co	Yes	
United Illuminating	Yes	
Ameren	Yes	
Hydro-Quebec TransEnergie	Yes	
LCRA TSC	Yes	
National Grid	Yes	
American Transmission Company	Yes	
American Electric Power (AEP)	Yes	
Tri-State Generation & Transmission	Yes	
Lakeland Electric	Yes	

Organization	Yes or No	Question 7 Comment
GTC	Yes	
Northeast Utilities	Yes	
Consolidated Edison Co. of New York, Inc.	Yes	
NBSO	Yes	
Central Maine Power Company	Yes	
Oncor Electric Delivery	Yes	
New York State Electric & Gas Corp	Yes	
ERCOT ISO	Yes	
New York Independent System Operator	Yes	
MidAmerican Energy	Yes	
Sacramento Municipal Utility District	Yes	
Southern California Edison Company	Yes	

4. The SDT has revised the header notes based on industry comments to the initial ballot. If you do not support these changes, please specify why you disagree and include specific alternative language to resolve your concern.

Summary Consideration:

The SDT clarified the language of header note 'i' as a result of comments received as follows:

i. The response of voltage sensitive Load ~~including Load~~ that is disconnected from the System by end-user equipment associated with an event shall not be used to meet steady state performance requirements.

The majority of respondents agree with the changes to the header notes and no other changes to the header notes have been made based on stakeholder comments.

Requirements cannot be 'hidden' in the Table because the Table is specifically cited in the requirements text and is thus part of the requirements.

The SDT did not pose questions for items that were not redlined, i.e., changed, in this posting since those items not redlined were considered by the SDT as sufficiently vetted by the industry through the various phases of the project to date. However, the SDT has reviewed all comments regardless of whether specific questions were asked and has considered the comments.

Organization	Yes or No	Question 8 Comment
Northeast Power Coordinating Council	No	Header note (i) in the first Table 1 (p. 10) could imply that voltage-varying load shall not be used to meet steady state performance requirements. Steady state load models in use include voltage-varying loads. The explicit representation of (voltage-dependent) load models is perfectly consistent with the requirements defined in R1 (which calls for a comprehensive representation of system components and their expected operating status in the planning assessment period) and the impetus to the creation of more specific load models in dynamic assessments found Requirement 2.4 of this draft of TPL-001-2. It is a known that depressed voltage conditions cause certain system elements to perform below their rated capacity. For example, capacitors provide less voltage support and voltage controlling transformers are impeded by their finite tap range to direct VAR flow into areas affected by low voltage conditions. Certain load types, on the other hand, provide a self-compensating relief to depressed voltage by naturally decreasing demand in a manner proportional to their characteristics, without operator intervention. Choosing to negate the voltage-dependence of one of these system elements (load, in our case) results in an inaccurate system representation that, in turn, may lead to erroneous assessments of the reliability state of the interconnected system and, potentially, to the implementation of unwarranted system upgrades. This note should be revised

Organization	Yes or No	Question 8 Comment
		to only reference loads which are disconnected due to voltage.
Transmission Issues Subcommittee	No	Delete the word "voltage" from the last header note J concerning Stability Only. All types of transient stability must be observed.
LCRA TSC	No	The third bullet of 4.3.1 requires the addition of relay models for stability studies. This type of analysis is performed today by scripting the tripping of multiple lines due to breaker failure events. The inclusion of relay models into the stability study will result in added complexity and an over reliance on relay models for system stability assessment. The stability assessment should assess stability resulting from the operation of relays as opposed to reliance on a relay model for proper system representations. Assurance of the proper operation of relays results from the analysis performed to set relays not from stability studies. From Section 4.3.1:"Tripping of Transmission lines and transformers where transient swings cause Protection System operation based on generic or actual relay models." Section 4.5 requires that "The rationale for those Contingencies selected for evaluation shall be available as supporting information." This will have to be developed. Requirement R5 requires the establishment of criteria for transient voltage response of the system. This seems unnecessary given the proposed changes to Table 1. The proposed changes to table 1 seem to make clear the type of system response that is allowable through its specification of what is allowable in terms of interruptions to Firm Transmission and Non-Consequential loads. R5 states: "Each Transmission Planner and Planning Coordinator shall have criteria for acceptable System steady state voltage limits, post-Contingency voltage deviations, and the transient voltage response for its System. For transient voltage response, the criteria shall at a minimum, specify a low voltage level and a maximum length of time that transient voltages may remain below that level."
Consolidated Edison Co. of New York, Inc.	No	o Header note (i) in the first Table 1 (p. 10) The explicit representation of (voltage-dependent) load models is perfectly consistent with the requirements defined in R1 (which calls for a comprehensive representation of system components and their expected operating status in the planning assessment period) and the impetus to the creation of more specific load models in dynamic assessments found Requirement 2.4 of this draft of TPL-001-2. It is a known that depressed voltage conditions cause certain system elements to perform below their rated capacity. For example, capacitors provide less voltage support and voltage controlling transformers are impeded by their finite tap range to direct VAR flow into areas affected by low voltage conditions. Certain load types, on the other hand, provide a self-compensating relief to depressed voltage by naturally decreasing demand in a manner proportional to their characteristics, without operator intervention. Choosing to negate the voltage-dependence of one of these system elements (load, in this case) results in an inaccurate system representation that, in turn, may lead to erroneous assessments of the reliability state of the interconnected

Organization	Yes or No	Question 8 Comment
		system and, potentially, to the implementation of unwarranted system upgrades.
Central Maine Power Company New York State Electric & Gas Corp New York Independent System Operator	No	Header note (i) in the first Table 1 could imply that voltage-varying load shall not be used to meet steady state performance requirements. NYISO steady state load models include voltage-varying loads. This note should be revised to only reference loads which are disconnected due to voltage.
MidAmerican Energy	No	The reference to BES should be placed back into Note a in the header above table 1.
Xcel Energy	No	Although we support the revised header notes, we believe that the following additional changes are needed to enhance clarity and improve consistency: We are unable to see the compelling need and/or the value of separating the header notes in three categories. Since the applicability of each header to either one or both steady-state and stability performance is obvious from its respective verbiage, we suggest eliminating the categorization. This will also allow the header notes to be reordered/regrouped as per related functionality, thus improving the Table 1 readability. Following is a suggested re-ordering of header notes: a. Applicable Facility Ratings shall not be exceeded. The System shall remain stable. Cascading and uncontrolled islanding shall not occur. b. Planning event P0 is applicable to steady state only. c. Consequential Load Loss as well as generation loss is acceptable as a consequence of any event except P0. d. The response of voltage sensitive Load including Load that is disconnected from the System by end-user equipment as a consequence of any event shall not be used to meet steady state performance requirements. e. System steady state voltages and post-Contingency voltage deviations shall be within acceptable limits established by the Planning Coordinator and Transmission Planner. f. Transient voltage response shall be within acceptable limits as established by the Planning Coordinator and Transmission Planner. g. Planned System adjustments such as Transmission configuration changes and re-dispatch of generation are allowed if such adjustments are executable within the time duration applicable to the Facility Ratings. h. Simulate the removal of all elements that Protection Systems and other controls are expected

Organization	Yes or No	Question 8 Comment
		to automatically disconnect for each event. Simulate Normal Clearing unless otherwise specified.
MRO's NERC Standards Review Subcommittee American Transmission Company	Yes	We offer the major suggestion that Requirements not be created in the Performance Table and be absent from the Requirement section. Requirements should only be referred to in the Performance Table after they already exist in the Requirement section. a. Notes “f” and “g” under “Steady State Only” section in the Table 1 header create requirements (e.g. use the verb, “shall”) that do not appear in the Requirements section. We suggest adding R3.3.5, which could read, “Applicable System Operating Limits for the planning horizon shall not be exceeded.” [After R3.3.5 is added, Notes “f” and “g” should be revised and refer to R3.3.5.]. b. Note “i” under “Steady State Only” section in the Table 1 header creates a requirement (e.g. use the verb, “shall”) that does not appear in the Requirements section. We suggest adding R3.3.6, which could read, “The response of voltage sensitive Load including Load that is disconnected from the System by end-user equipment associated with an event shall not be used to meet steady state voltage requirements.” [After R3.3.6 is added, Note “d” should be revised to refer to R3.3.6. c. Note “j” under the “Stability Only” section in the Table 1 header creates a requirement (e.g. use the verb, “shall”) that does not appear in the Requirements section. We suggest adding R4.1.4, which could read, “Transient voltage response shall be within acceptable limits established by the Planning Coordinator and the Transmission Planner”. [After R4.1.4 is added, Note “j” should be revised to refer to R4.1.4.]
Western Area Power Administration	Yes	Following is a suggested re-ordering of header notes to replace of the three categories concept - same information: a. Applicable Facility Ratings shall not be exceeded. The System shall remain stable. Cascading and uncontrolled islanding shall not occur. b. Planning event P0 is applicable to steady state only. c. Consequential Load Loss as well as generation loss is acceptable as a consequence of any event except P0. d. The response of voltage sensitive Load including Load that is disconnected from the System by end-user equipment as a consequence of any event shall not be used to meet steady state performance requirements. e. System steady state voltages and post-Contingency voltage deviations shall be within acceptable limits established by the Planning Coordinator and Transmission Planner. f. Transient voltage response shall be within acceptable limits as established by the Planning Coordinator and Transmission Planner. g. Planned System adjustments such as Transmission configuration changes and re-dispatch of generation are allowed if such adjustments are executable within the time duration applicable to the Facility Ratings. h. Simulate the removal of all elements that Protection Systems and other controls are expected to automatically disconnect for each event. Simulate Normal Clearing unless otherwise specified.
NERC staff	Yes	NERC staff supports the changes to the header notes in Table 1.

Organization	Yes or No	Question 8 Comment
Florida Reliability Coordinating Council, Inc - Transmission Working Group	Yes	We support the changes to the performance tables.
Platte River Power Authority	Yes	I like the flexibility you give the PC and TP in Requirements R3 and R4 to develop their rationale for the Contingencies they select for evaluation.
Orlando Utilities Commission	Yes	I am assuming you mean the header notes on the performance table
Progress Energy	Yes	PE assumes the term “header notes” is referring to the “Planning Performance Events” at the top of Table 1. If this is the case, PE has no concerns with the present language.
SERC Planning Standards Subcommittee	Yes	
Hydro One Networks Inc.	Yes	
SERC Dynamics Review Subcommittee	Yes	
Pepco Holings, Inc - Affiliates	Yes	
IRC Standards Review Committee	Yes	
Bonneville Power Administration	Yes	
Exelon Transmission Planning	Yes	
Southern Company	Yes	
Western Electricity Coordinating Council	Yes	

Organization	Yes or No	Question 8 Comment
Arizona Public Service Company	Yes	
PacifiCorp	Yes	
Duke Energy	Yes	
NorthWestern Energy (NWMT)	Yes	
Lakeland Electric	Yes	
PNM	Yes	
FirstEnergy	Yes	
Manitoba Hydro	Yes	
Minnesota Power	Yes	
CenterPoint Energy	Yes	
TVA Transmission Planning & Compliance	Yes	
Independent Electricity System Operator	Yes	
South Carolina and Gas	Yes	
SRP	Yes	
California ISO	Yes	
Seattle City Light	Yes	

Organization	Yes or No	Question 8 Comment
California Energy Commission	Yes	
ISO New England Inc.	Yes	
Los Angeles Department of Water and Power	Yes	
Idaho Power Co	Yes	
United Illuminating	Yes	
Ameren	Yes	
Hydro-Quebec TransEnergie	Yes	
National Grid	Yes	
American Electric Power (AEP)	Yes	
Tri-State Generation & Transmission	Yes	
Lakeland Electric	Yes	
GTC	Yes	
Pacific Gas and Electric Company	Yes	
Northeast Utilities	Yes	
Modesto Irrigation District	Yes	
NBSO	Yes	

Organization	Yes or No	Question 8 Comment
Oncor Electric Delivery	Yes	
ERCOT ISO	Yes	
Tucson Electric Power Company	Yes	
GDS Associates, Inc.	Yes	
Puget Sound Energy	Yes	
Sacramento Municipal Utility District	Yes	
Southern California Edison Company	Yes	

5.

The SDT has revised the performance table (including the list of extreme events and footnotes) based on industry comments to the initial ballot. If you do not support these changes, please specify why you disagree and include specific alternative language to resolve your concern.

Summary Consideration:

The SDT has made the following clarifying changes to address concerns raised in the comments:

- P0 – delete superscript 9 in column 6: No[9]
- P5 event description: Delayed Fault –Clearing —due to the failure of a non-redundant relay[13] protecting the Faulted element to operate as designed, for one of the following:
- Extreme events language for Stability events has been made consistent with P5.
- Added 'Breaker' to the Bus-tie and non-Bus-tie phrases in P2 and P4

No other changes were made to the Performance Table based on stakeholder comments.

The SDT fully realizes that Project 2010-11 must reach resolution prior to finalizing TPL-001-2 and stated same in the information attached with the fifth posting of Project 2006-02.

The SDT has made the language in Requirement R2, part 2.8.2 consistent with that in Requirement R2, part 2.7.4:

> **2.8.2** Be reviewed in subsequent annual Planning Assessments for continued validity and implementation status of identified System Facilities and Operating Procedures.

The SDT did not pose questions for items that were not redlined, i.e., changed, in this posting since those items not redlined were considered by the SDT as sufficiently vetted by the industry through the various phases of the project to date. However, the SDT has reviewed all comments regardless of whether specific questions were asked and has considered the comments.

Organization	Yes or No	Question 9 Comment
NERC staff		NERC staff is concerned with P5 and footnote 9 and thus cannot support these changes in their entirety. First, a revision to the Draft 4 definition of P5 should be used in lieu of the current Draft 5 version: "Loss of multiple elements caused by the Fault clearing consistent with failure of a single Protection System while clearing a fault on one of the following: . . ."After reviewing the P5 contingency throughout various drafts of this standard, along with existing Table 1 for TPL-001 through TPL-004, NERC staff's primary concern is that this most recent version is going in the wrong direction by becoming too limiting regarding which Protection System component failures are covered. Draft 5 is an improvement because it removes the reference to loss of

Organization	Yes or No	Question 9 Comment
		multiple elements in Draft 4 (which defined P5 as “Loss of multiple elements caused by the failure of a single Protection System while clearing a fault on one of the following: . . .”). Draft 5 takes a step backward, however, by referring to Delayed Fault Clearing. The advantage of not referring to Delayed Fault Clearing is that for cases where redundant protection systems are provided, the fault clearing may not be delayed even when a single Protection System failure occurs. Ideally, NERC staff believes that P5 should refer to “failure of any component of a Protection System,” but NERC staff recognizes that we cannot get there until the term Protection System is redefined and Project 2009-07-Reliability of Protection Systems is underway. Until that change is possible, NERC staff encourages the SDT to use the revised version of P5 proposed above. A second concern is with footnote 9, which is used numerous times in Table 1. System adjustments may be used in two different settings: the first is to address the aftermath of a particular Contingency; the second is to prepare for the next Contingency.Staff suggests that the current footnote 9 have this language added: “Post-Contingency Ccurtailment of Firm Transmission Service to address the simulated contingency, when coupled with ....” Footnote 9 is used in the column labeled “Interruption of Firm Transmission Service Allowed” whenever a “No” is provided. The footnote 9 in this column has to do with System adjustments that address the aftermath of the Contingency that is being simulated. Therefore, no footnote 9 appears appropriate for category P0 (No Contingency). The reference in footnote 9 to no load loss and staying within applicable Facility rating, including those on a neighboring system, is sufficient for addressing the aftermath of the Contingency being simulated. To address next Contingency, an additional footnote is needed in the “Initial System Condition” column for category P3 and category P6. The following is suggested: “System adjustments to prepare for the next Contingency must be completed within 30 minutes.” Footnote 9 is used in the column labeled “Initial System Condition” for category P3 and category P6, and these two categories define the loss of an Element “followed by System adjustments” and then followed by the loss of a second Element. It is unclear whether the intent in footnote 9 in these two cases is meant to address the same issue referenced above (i.e. the aftermath of the Contingency being simulated) or whether it is intended to address the next Contingency. Thus, both situations need to be addressed using the suggestions indicated above.
Northeast Power Coordinating Council Consolidated Edison Co. of New York, Inc.		To support the change to P5, other items need to also be modified. In Table 1 - Steady State & Stability Performance Extreme Events (p. 12), in the Stability Section, the language should be made similar to wording in P5. Protection System should be removed and replaced with the words “relay failure”. This change should be made for 2a through 2d:2. Local or wide area events affecting the Transmission System such as: a. 3Ã˜ fault on generator with stuck breaker10 or a relay failure resulting in Delayed Fault Clearing. b. 3Ã˜ fault on Transmission circuit with stuck breaker10 or a relay failure resulting in Delayed Fault Clearing. c. 3Ã˜ fault on transformer with stuck breaker10 or a relay failure resulting in Delayed Fault Clearing. d. 3Ã˜ fault on bus section with stuck breaker10 or a relay failure resulting in Delayed Fault Clearing.

Organization	Yes or No	Question 9 Comment
		Note 11 (p. 14) needs clarification as shown: Excludes circuits that share a common structure (Planning event P7, Extreme event steady state 2a) or common Right-of-Way (Extreme event, steady state 2b) for a total of 1 mile or less. There are two tables labeled “Table 1”. Suggest that the extreme events table be renamed “Table 2”.
MRO's NERC Standards Review Subcommittee		We offer the major suggestion that the P3 Category performance criteria be modified to apply only to the loss of two generators. The SDT properly recognizes that generator outages are significantly more probable than line or transformer outages and should be “higher” in the category list. However given the clearly higher probability of generator outages, the probability of the loss of two generators is clearly higher than the loss of a generator and line or the loss of a generator and transformer. Therefore, if the loss of two generators is in the P3 category, then the loss of a generator and line or transformer should be clearly “lower” in the category list. We suggest the listing of: the loss of a generator and some other element (e.g. transmission circuit, transformer, shunt device, and single pole of DC line) be moved to a lower event category, such as the P6 Category by adding “1. Generator” to the listing in the Initial System Condition (Loss of . . .) column. Item 2.a in the Extreme Events, Steady State section - Clarify the meaning of the loss of multiple circuits in Item 2.a by using wording similar to P7. We suggest this text: “a. Loss of three or more circuits that share a common structure.” Footnote 6 - Further clarify the applicable shunt devices in Footnote 6 with this suggested text: “6. Requirements which are applicable to shunt devices, also apply to FACTS devices that are connected to ground, but not instrument voltage transformers or surge arresters.”
Bonneville Power Administration		Table 1, P5 currently requires the study of “[d]elayed Fault Clearing due to the failure of a relay13 protecting the Faulted element to operate as designed”. As written, this requirement does not recognize the use of redundant relays for primary protection. In some cases side by side relays are used to provide primary fault tripping if one relay fails to operate. Per the requirement as stated, the redundant relay would provide no value in meeting this requirement. Please revise to acknowledge backup relays: “Single failure of a protection relay13 protecting the Faulted element to operate as designed, resulting in backup relay actions or Delayed Fault Clearing, for one of the following”. In Table 1, P2 and P3, the last column “Non-Consequential Load Loss Allowed” where the requirement "No12" appears, and in footnote 12, the standard as proposed does not allow for any Non-Consequential Load Loss. When the Non-Consequential Load Loss (footnote b) issue is clarified in Project 2010-11 this requirement may be changed. Therefore the proposed footnote 12 should include a provision to default to the existing footnote “b” in TPL-002-0 until Project 2010-11 is decided. Please revise footnote 12 to read, “Note: Non-Consequential Load Loss is being decided in Project 2010-11. When that project is finalized, the resolution will be copied here. In the interim, planned or controlled interruption of electric supply to radial

Organization	Yes or No	Question 9 Comment
		customers or some local Network customers, connected to or supplied by the Faulted element or by the affected area, may occur in certain areas without impacting the overall reliability of the interconnected transmission systems. To prepare for the next contingency, system adjustments are permitted, including curtailments of contracted Firm (non-recallable reserved) electric power Transfers."
Exelon Transmission Planning		Comments: The term 'HV' in the performance table should be defined as 'Bulk Electric System elements up to 300 kV, not simply all elements 'below 300 kV'. Footnote 12 should be clarified to specifically state the requirements before voting takes place. The performance criteria should be based on the voltage level of the element experiencing stress due to the contingency, not based on the voltage level of the outaged element. It does not seem to make sense that the loss of a 500 kV bus would not allow for any non-consequential load shedding unless the bus contained a 500 to 230 kV transformer, in which case additional load shedding would be allowed. If outages on a 230 kV system, such as bus fault with stuck breaker, were to cause overloads on a 500 kV network it is acceptable to shed load, but if the outages were on the 500 kV system originally it would not be acceptable to shed additional load. It seems as if it should be the severity of the situation and the elements involved that would dictate allowable remedial actions and not the initial cause of the disturbance. If, for example, there was a 500 kV contingency outage that caused problems on the 230 kV system there would be a problem that may require load shedding on the 230 kV system. If there were a 230 kV contingency or series of contingencies that caused overloads on the 500 kV system, it would be more difficult to find enough lower voltage load to shed to bring the 500 kV system back to applicable ratings or conditions. The inability to shed non-consequential load could theoretically be resolved by hanging a small EHV / HV transformer on a particular bus, or by tapping a EHV line with an auto transformer.
Southern Company		NO. We wish to make a comment on the stability extreme event table: Changes were made in planning event P5 to narrow the focus to specific relay failures. The same changes are needed for stability extreme event 2a, 2b, 2c, and 2d.
Western Electricity Coordinating Council Arizona Public Service Company PNM SRP California Energy Commission Los Angeles Department of		Table 1, P5 currently requires the study of "[d]elayed Fault Clearing due to the failure of a relay13 protecting the Faulted element to operate as designed". As written, this requirement does not recognize the use of redundant relays for primary protection. In some cases side by side relays are used to provide primary fault tripping if one relay fails to operate. Per the requirement as stated, the redundant relay would provide no value in meeting this requirement. Please revise to acknowledge backup relays: "Single failure of a protection relay13 protecting the Faulted element to operate as designed, resulting in backup relay actions or Delayed Fault Clearing, for one of the following". In Table 1, P2 and P3, the last column "Non-Consequential Load Loss Allowed" where the requirement "No12" appears, and in footnote 12, the standard as proposed does not allow for any Non-Consequential

Organization	Yes or No	Question 9 Comment
Water and Power Pacific Gas and Electric Company Modesto Irrigation District Puget Sound Energy Sacramento Municipal Utility District		Load Loss. When the Non-Consequential Load Loss (footnote b) issue is clarified in Project 2010-11 this requirement may be changed. Therefore, if this proposed Standard is enforced before Project 2010-11 is completed, entities will be required to meet this No Non-Consequential Load Loss requirement without the exception allowed in the existing TPL-002-0, footnote “b”. This will require immediate redesigns to meet this particular requirement. The unintended consequence could be that operators of local systems that are currently networked may opt to begin operation as radial systems, and future designs for local systems may be radial, at any voltage level. We suggest that the proposed footnote 12 include a provision to default to the existing footnote “b” in TPL-002-0 until Project 2010-11 is decided. Please revise footnote 12 to read, “Note: Non-Consequential Load Loss is being decided in Project 2010-11. When that project is finalized, the resolution will be copied here. In the interim, planned or controlled interruption of electric supply to radial customers or some local Network customers, connected to or supplied by the Faulted element or by the affected area, may occur in certain areas without impacting the overall reliability of the interconnected transmission systems. To prepare for the next contingency, system adjustments are permitted, including curtailments of contracted Firm (non-recallable reserved) electric power Transfers.” Timing of this project and project 2010-11 is critical. It would be very difficult to vote to approve the proposed TPL-001-2 prior to knowing the outcome of Project 2010-11 (footnote b issue).
E.ON U.S.		E.ON U.S. believes that Table 1 should be formatted to avoid having the tables split by page breakers. In addition, tables spanning across multiple pages should have headers at the top of each page.
Florida Reliability Coordinating Council, Inc - Transmission Working Group		Footnote 12 performance requirements of Table 1 should allow the loss of non-consequential load for all contingency categories except for P0. The disallowance of load loss does not provide any real benefit to the reliability of the BES and is an unnecessary overreach into local quality of service issues that are best addressed by State, Provincial or Municipal authorities. There may be circumstances such as high local transmission costs or local opposition to transmission construction where prohibition of non-consequential load loss represents a poor cost/benefit or quality of life tradeoff. Having a provision at the regional level that a PA or TP can have a certain amount of non-consequential load loss designed or planned in to its system that would be reasonable if it is acceptable to the RE and does not have an adverse impact on the remaining BES. In lieu of such a RE provision, providing a quantitative cap in non-consequential load loss such as 100 MW may be rationale compromise in the goal of limiting load loss for the more probable outage events. Our preference would be to retain the capability of limited non-consequential load loss. Footnote 9 should also be under consideration as part of Project 2010-11 and should be noted as such for clarification.
Western Area Power Administration		In footnotes 9 and 12, two critical issues are being addressed in large part via these "clarifying" footnotes. These are curtailment of "Firm Transmission Service" (which seems primarily to be a contract/scheduling issue) and the loss of "Non-Consequential Load." Perhaps these issues should receive more attention in the

Organization	Yes or No	Question 9 Comment
		actual requirements. In P5 the term “Protection System” was removed and replaced with “relay”. How are protection system elements other than relays accounted for? In studying a multiple contingency event with a communication system or control circuitry failure would it be necessary demonstrate P1 performance levels? These details could become critical as industry deals with issues such as FERC’s interpretation of TPL-002-0 Requirement R1.3.10 (RM10-6-000). In Table 1 - Extreme Events - Stability - Items 2a-2d, change “Protection System failure” to “relay failure” to be consistent with changes in P5. Table 1, P5 currently requires the study of “[d]elayed Fault Clearing due to the failure of a relay13 protecting the Faulted element to operate as designed”. As written, this requirement does not recognize the use of redundant relays for primary protection. In some cases side by side relays are used to provide primary fault tripping if one relay fails to operate. Per the requirement as stated, the redundant relay would provide no value in meeting this requirement. Please revise to acknowledge backup relays: “Single failure of a protection relay13 protecting the Faulted element to operate as designed, resulting in backup relay actions or Delayed Fault Clearing, for one of the following”. Footnote 13 - Delete “voltage (#27, #59)” since the under/over voltage relays are not called upon to provide the primary protection for fault clearing on Transmission elements. Suggest modifying Event P4 description to be more consistent with Event P5 description by including Delayed Fault Clearing in the description in lieu of “Loss of multiple elements”. Suggested Event P4 description is: “Delayed Fault Clearing caused by a stuck non Bus-tie Breaker attempting to clear a fault on one of the following:” In Table 1, P2 and P3, the last column “Non-Consequential Load Loss Allowed” where the requirement "No12" appears, and in footnote 12, the standard as proposed does not allow for any Non-Consequential Load Loss. When the Non-Consequential Load Loss (footnote b) issue is clarified in Project 2010-11 this requirement may be changed. Therefore, if this proposed Standard is enforced before Project 2010-11 is completed, entities will be required to meet this No Non-Consequential Load Loss requirement without the exception allowed in the existing TPL-002-0, footnote “b”. This will require immediate redesigns to meet this particular requirement. The unintended consequence could be that operators of local systems that are currently networked may opt to begin operation as radial systems, and future designs for local systems may be radial, at any voltage level. We suggest that the proposed footnote 12 include a provision to default to the existing footnote “b” in TPL-002-0 until Project 2010-11 is decided. Please revise footnote 12 to read, “Note: Non-Consequential Load Loss is being decided in Project 2010-11. When that project is finalized, the resolution will be copied here. In the interim, planned or controlled interruption of electric supply to radial customers or some local Network customers, connected to or supplied by the Faulted element or by the

Organization	Yes or No	Question 9 Comment
		affected area, may occur in certain areas without impacting the overall reliability of the interconnected transmission systems. To prepare for the next contingency, system adjustments are permitted, including curtailments of contracted Firm (non-recallable reserved) electric power Transfers." Timing of this project and project 2010-11 is critical. It would be very difficult to vote to approve the proposed TPL-001-2 prior to knowing the outcome of Project 2010-11 (footnote b issue).
PacifiCorp		Under Category P2 (Single Contingency) and Normal System Conditions, the performance table indicates that, for both HV and EHV, interruption of firm transmission service and non-consequential load loss are not allowed following the opening of a line section without a fault. This section of the performance table should distinguish between EHV and HV - performance requirements following the opening of a line section without a fault should be the same as those for a bus section fault. As with the bus section fault, interruption of firm transmission service and non-consequential load loss should be allowed for HV.
NorthWestern Energy (NWMT) Idaho Power Co		Table 1, P5 currently requires the study of "[d]elayed Fault Clearing due to the failure of a relay13 protecting the Faulted element to operate as designed". As written, this requirement does not recognize the use of redundant relays for primary protection. In some cases side by side relays are used to provide primary fault tripping if one relay fails to operate. Per the requirement as stated, the redundant relay would provide no value in meeting this requirement. Please revise to acknowledge backup relays: "Single failure of a protection relay13 protecting the Faulted element to operate as designed, resulting in backup relay actions or Delayed Fault Clearing, for one of the following". In Table 1, P2 and P3, the last column "Non-Consequential Load Loss Allowed" where the requirement "No12" appears, and in footnote 12, the standard as proposed does not allow for any Non-Consequential Load Loss. When the Non-Consequential Load Loss (footnote b) issue is clarified in Project 2010-11 this requirement may be changed. Therefore, if this proposed Standard is enforced before Project 2010-11 is completed, entities will be required to meet this No Non-Consequential Load Loss requirement without the exception allowed in the existing TPL-002-0, footnote "b". This will require immediate redesigns to meet this particular requirement. The unintended consequence could be that operators of local systems that are currently networked may opt to begin operation as radial systems, and future designs for local systems may be radial, at any voltage level. We suggest that the proposed footnote 12 include a provision to default to the existing footnote "b" in TPL-002-0 until Project 2010-11 is decided. Please revise footnote 12 to read, "Note: Non-Consequential Load Loss is being decided in Project 2010-11. When that project is finalized, the resolution will be copied here. In the interim, planned or controlled interruption of electric supply to radial customers or some local Network customers, connected to or supplied by the Faulted element or by the affected area, may occur in certain areas without impacting the overall reliability of the interconnected transmission systems. To prepare for the next contingency, system adjustments are permitted, including curtailments of contracted Firm (non-recallable reserved) electric power Transfers."

Organization	Yes or No	Question 9 Comment
Lakeland Electric		The performance requirements of Table 1 do not allow the loss of non-consequential load for single and multiple contingency events. The disallowance of load loss does not provide any real benefit to the reliability of the BES and is an unnecessary overreach into local quality of service issues that are best addressed by State, Provincial or Municipal authorities. There may be circumstances such as high local transmission costs or local opposition to transmission construction where prohibition of non-consequential load loss represents a poor cost/benefit or quality of life tradeoff. Having a provision at the regional level that a PA or TP can have a certain amount of non-consequential load loss designed or planned in to its system that would be reasonable if it is acceptable to the RE and does not have an adverse impact on the remaining BES. In lieu of such a RE provision, providing a quantitative cap in non-consequential load loss such as 100 MW may be rationale compromise in the goal of limiting load loss for the more probable outage events. Our preference would be to retain the capability of limited non-consequential load loss. It is our understanding that footnote 9 is under consideration as part of Project 2010-11 and should be noted as such for clarification.
FirstEnergy		Table 1, P5 currently requires the study of "[d]elayed Fault Clearing due to the failure of a relay (footnote 13) protecting the Faulted element to operate as designed". To the extent fully redundant relaying exists with no expected delay in Fault Clearing its understood that the P5 event would not be a concern for the redundant system design. The drafting team has taken appropriate steps within the TPL standard to focus on relaying failures to provide clarity in what is required for P5 planning event.
Platte River Power Authority		No. Table 1, P5 currently requires the study of "[d]elayed Fault Clearing due to the failure of a relay13 protecting the Faulted element to operate as designed". As written, this requirement does not recognize the use of redundant relays for primary protection. In some cases side by side relays are used to provide primary fault tripping if one relay fails to operate. Per the requirement as stated, the redundant relay would provide no value in meeting this requirement. Please revise to acknowledge backup relays: "Single failure of a protection relay13 protecting the Faulted element to operate as designed, resulting in backup relay actions or Delayed Fault Clearing, for one of the following". In Table 1, P2 and P3, the last column "Non-Consequential Load Loss Allowed" where the requirement "No12" appears, and in footnote 12, the standard as proposed does not allow for any Non-Consequential Load Loss. When the Non-Consequential Load Loss (footnote b) issue is clarified in Project 2010-11 this requirement may be changed. Therefore, if this proposed Standard is enforced before Project 2010-11 is completed, entities will be required to meet this No Non-Consequential Load Loss requirement without the exception allowed in the existing TPL-002-0, footnote "b". This will require immediate redesigns to meet this particular requirement. The unintended consequence could be that operators of local systems that are currently networked may opt to begin operation as radial systems, and future designs for local systems may be radial, at any voltage level. We suggest that the proposed footnote 12 include a provision to default to the existing footnote "b" in TPL-002-0 until Project 2010-11 is decided. Please revise footnote 12 to read, "Note:

Organization	Yes or No	Question 9 Comment
		Non-Consequential Load Loss is being decided in Project 2010-11. When that project is finalized, the resolution will be copied here. In the interim, planned or controlled interruption of electric supply to radial customers or some local Network customers, connected to or supplied by the Faulted element or by the affected area, may occur in certain areas without impacting the overall reliability of the interconnected transmission systems. To prepare for the next contingency, system adjustments are permitted, including curtailments of contracted Firm (non-recallable reserved) electric power Transfers." Timing of this project and project 2010-11 is critical. It would be very difficult to vote to approve the proposed TPL-001-2 prior to knowing the outcome of Project 2010-11 (footnote b issue). In Table 1 - Planning Events - Suggest changing the description for Events P2-3, P2-4, P4 and P4-6 to use the term 'Bus-tie Breaker' or 'non-Bus-tie Breaker' as applicable. In Table 1 - Extreme Events - Stability - Items 2a-2d, do you mean 'Protection System failure' here, or do you want to change to 'relay failure' to be consistent with changes in P5?
Orlando Utilities Commission		I generally agree with the direction the team has gone. Footnote 9 should also be highlighted as being part of the project 2010-11 discussion just as footnote 12 is.
Manitoba Hydro		In point g, violations are noted in terms of post-Contingency voltage deviations rather than post-Contingency voltage limits. This may lead to confusion, as some utilities evaluate performance based on a post-Contingency voltage deviation criterion while other utilities evaluate performance based on post-Contingency voltage limits. This same comment applies to Requirement R5.Suggested rewording for point g:System steady state voltages and post-Contingency voltages or voltage deviations shall be within acceptable limits as established by the Planning Coordinator and the Transmission Planner. Suggested rewording for the first sentence in Requirement R5:Each Transmission Planner and Planning Coordinator shall have criteria for acceptable System steady state voltage limits, post-Contingency voltages or voltage deviations, and the transient voltage response for its System. Note 12 states that an outstanding issue related to non-consequential load loss is being discussed. This will create a lot of uncertainty. Manitoba Hydro could not support this standard unless the resolution of Note B is known.
CenterPoint Energy		CenterPoint Energy appreciates the effort put forth by the SDT in revising the performance table. The current draft of P5 is preferable to previous versions.
TVA Transmission Planning & Compliance		TVA is concerned about footnote 12 (known as footnote b in existing TPL standards). TVA believes that utilities should be given some freedom in dropping local load in response to N-1 events as long as overall

Organization	Yes or No	Question 9 Comment
		BES reliability is not impacted. Otherwise significant capital improvements will be required that will have no overall reliability gain for the Bulk Electric System. TVA does agree with the revisions made specifically to the P5 event. TVA wishes to make a comment on the stability extreme event table: Changes were made in planning event P5 to narrow the focus to specific relay failures. The same changes are needed for stability extreme event 2a, 2b, 2c, and 2d.
SMUD		For the Western Interconnection, the performance level for a Bus-tie breaker fault under TPL-001-2, Table 1, Item P2-4, Notes (a) and (f), requires no thermal overloads and no cascading. While, FAC-010-2.1, R1.2, R2.5-R2.6, as modified by E1.1, E1.1.7, E1.3, and E1.3.1 requires a different performance level of no cascading. Please explain why this regional variance is not included under TPL-001-2, Item E.
California ISO		We support these changes, although we suggest that the proposed footnote 12 include an interim provision to default to the existing footnote “b” in TPL-002-0 until Project 2010-11 is decided. Please revise footnote 12 to read, “Note: Non-Consequential Load Loss is being decided in Project 2010-11. When that project is finalized, the resolution will be copied here. In the interim, planned or controlled interruption of electric supply to radial customers or some local Network customers, connected to or supplied by the Faulted element or by the affected area, may occur in certain areas without impacting the overall reliability of the interconnected transmission systems. To prepare for the next contingency, system adjustments are permitted, including curtailments of contracted Firm (non-recallable reserved) electric power Transfers.”
Seattle City Light		Table 1, P5 does not recognize the existence of redundant (or backup) relays. These are an integral part of the protection system design and should be considered in analysis of SLG faults. The TPL standard should encourage redundant, fail-safe systems, not ignore them. In Table 1, P2 and P3, we have a concern about not allowing non-consequential load loss. Project 2010-11 is deciding on this issue, but is not completed (see footnote 12). Should the standard become effective before this project is completed, no non-consequential load loss would be allowed, requiring many transmission additions and reconfigurations. Please change the "NO" in the last column to "YES" until the completion of Project 2010-11.
ISO New England Inc.		We are supportive of the change to P5. However, in making this modification, other items need to also be changed. In Table 1 - Stability, the language should be made similar to wording in P5. Protection System should be removed and replaced with the words “relay failure”. This change should be made for 2a through 2d:2. Local or wide area events affecting the Transmission System such as: a. 3Ã˜ fault on generator with stuck breaker10 or a relay failure resulting in Delayed Fault Clearing. b. 3Ã˜ fault on Transmission circuit with

Organization	Yes or No	Question 9 Comment
		stuck breaker10 or a relay failure resulting in Delayed Fault Clearing. c. 3Ã˜ fault on transformer with stuck breaker10 or a relay failure resulting in Delayed Fault Clearing. d. 3Ã˜ fault on bus section with stuck breaker10 or a relay failure resulting in Delayed Fault Clearing. We also believe that Note 11 needs clarifying wording as shown below:"Excludes circuits that share a common structure (Planning event P7, Extreme event steady state 2a) or common Right-of-Way (Extreme event, steady state 2b) for a total of 1 mile or less"
United Illuminating National Grid Central Maine Power Company New York State Electric & Gas Corp		In Table 1 - Stability, Make language similar to wording in P5. "Protection System" should be removed and replaced with the words "relay failure". This would avoid future interpretation issues about the intent of this requirement (as we understand it) to exclude more severe though less likely failures such as battery systems. This change should be made for 2a through 2d on page 12).In Note 11 (page 14) ADD the wording shown in "quotes" below: Excludes circuits that share a common structure (Planning event P7, Extreme event steady state 2a) or common Right-of-Way (Extreme event, steady state 2b) for "a total of" 1 mile or less.
Hydro-Quebec TransEnergie		In table 1 on page 12 (Stability section), Relay failure should replace Protection System
LCRA TSC		An important footnote to Table 1 is omitted from this proposed revision. This omission prevents adequate evaluation of the footnote. Footnote 12 in Table 1 is no longer applied to P2.1, P2.2, P2.3, P4, and P5. The footnote states: “Non-Consequential Load Loss is being decided in Project 2010-11. When that project is finalized, the resolution will be copied here.” The footnote should be removed from the proposed revision until Project 2010-11 is concluded.
American Transmission Company		We offer the major suggestion that the P3 Category performance criteria be modified to apply only to the loss of two generators. The SDT properly recognizes that generator outages are significantly more probable than line or transformer outages and should be “higher” in the category list. However given the clearly higher probability of generator outages, the probability of the loss of two generators is clearly higher than the loss of a generator and line or the loss of a generator and transformer. Therefore, if the loss of two generators is in the P3 category, then the loss of a generator and line or transformer should be clearly “lower” in the category list. We suggest the listing of: the loss of a generator and some other element (e.g. transmission circuit, transformer, shunt device, and single pole of DC line) be moved to a lower event category, such as the P6 Category by adding “1. Generator” to the listing in the Initial System Condition (Loss of . . .) column. We offer the minor suggestion that Item 2.a in the Extreme Events, Steady State section - Clarify the meaning of the loss of multiple circuits in Item 2.a by using wording similar to P7. We suggest this text: “a. Loss of three or more circuits that share a common structure.”

Organization	Yes or No	Question 9 Comment
		We offer the minor suggestion that Footnote 6 - Further clarify the applicable shunt devices in Footnote 6 with this suggested text: "6. Requirements which are applicable to shunt devices, also apply to FACTS devices that are connected to ground, but not instrument voltage transformers or surge arresters." ATC has significant concerns with Q3.2 (R2.1.4 & R2.4.3), Q4 (Table requirements) and Q5 (P3 scope), as noted above. In addition, ATC offers the following suggestions to promote proper Reliability Standard quality and content. (1.) Revise the Planning Assessment definition to more explicitly apply to the BES and the TPL-001 requirements. We suggest text of: "Planning Assessment: Documented evaluation of future Transmission System performance and Corrective Action Plans to remedy identified deficiencies in the BES from the steady state and stability performance requirements set forth in the TPL-001 standard." 2.) R2.1.5 - We propose replacing the term 'major Transmission' with "BES" because BES is a well defined term, while the term 'major Transmission' is not. (3.) Add R2.3.1 - We suggest the addition of a R2.3.1 requirement to emulate the distinction between the requirement to perform a short circuit assessment and conduct required studies or analysis to support the assessment (e.g. R2.1/R2.1.1 and R2.2/R2.2.1). We propose wording such as, "Perform an analysis for at least one year in the Near Term Transmission Planning Horizon." This requirement would set an expectation that an analysis should be conducted to at least one or more years in the near-term planning horizon, rather than imply that an analysis of all five years in the near-term planning horizon must be conducted. 4.) R2.7.4 - We suggest that the wording of R2.7.4 be the same as R.2.8.2. Otherwise, we propose that R2.7.4 and R2.8.2 be revised with wording like, ". . . implementation status of identified Corrective Action Plans for System Facilities and Operating Procedures." to clarify that the identified system facilities and operating procedures refer only to those that were in the previous year's Corrective Action Plans. (5.) R3.3.1 - The term of 'controls' is ambiguous and not defined, unlike the term, 'Protection Systems', which is defined. Therefore, we suggest that this item be defined or more clearly described to avoid the risk of different and possibly contradictory interpretations by TPs, PCs, and auditors. (6.) R3.3., bullet #1 - We suggest qualifying which generating units to consider and which voltage limits to simulate with revised wording like, "Trip generating units that are connected to the BES when actual or assumed minimum generator steady state or ride through voltage limits are known and simulations show voltages may fall below the voltage limit. If assumed voltage limits are used, then they should be included in the assessment". The requirement should not apply to all relevant generating units until one of the MOD standards requires all Generator Owners to provide their minimum generating unit voltage limits to the TP and PC. If the wording of R3.3.1, bullet #1 must be different from its counterpart, R4.3.1, then please explain the reasons for any differences.

Organization	Yes or No	Question 9 Comment
		(7.) R3.4.1 - Compliance with the requirement "to coordinate" is problematic and non-measurable. We suggest replacing it with the requirement "to communicate". 8.) R3.5 - We interpret that R3.5 requires the TP and PC to conduct an evaluation of possible actions to reduce the likelihood or impact of extreme events, which produce the more severe impacts, if cascading outages may occur. Does the drafting team intend for the TP and PC to fulfill this requirement for at least one event in each of the five categories (i.e. 3 steady state and 2 stability) or in each of the 21 categories/sub-categories (i.e. 14 steady state and 7 stability). Also, if the resulting cascading outages do not result in any overloads, under-voltages, voltage collapse, or loss of generator synchronization, then should the evaluation of possible actions to reduce likelihood or impact be required? (9.) R4.1.1 - We suggest that there should be some qualification of which generating units are referred to in this requirement. We propose that the requirement say, "No generating unit connected to the BES shall pull out of synchronism." For example, some utilities include smaller generation units that are connected at voltages below 100 kV and even down to distribution voltage in their base cases. (10.) R4.1.2 - We propose that the wording of this requirement be revised to reflect the same BES qualification of the generating unit that we noted in R4.1.1 above. (11.) R4.3.1 - This requirement refers to high speed reclosing and we presume that this is special high speed reclosing that is completed in several cycles, rather than the normal high speed reclosing that is completed in a number of seconds. We recommend that the term high speed reclosing be more clearly defined for this sub-requirement. (12.) R5 - We propose removing the criteria item, "post-Contingency voltage deviation", because this criterion has not been developed and used widely enough in the industry to be introduced into the standards. (13.) R7 - Revise part of the requirement text to read, ". . . identify each entity's individual and joint responsibilities . . ." to provide better clarity. Perhaps this requirement should be listed at the beginning of the Requirements section, instead being mentioned near the end of this section. (14.) Change the forward referencing to backward referencing. We agree with R2.6, R3.1, R3.5, R4.1, and 4.2. However, we suggest that the requirements be ordered so that all of the references refer back to earlier text, rather later text to be consistent with the rest of this standard and other referencing in this standard (e.g. R2.1.3, R2.1.4, R2.4.3, R3, R3.3, R3.5, R4, R4.3, R4.4, R4.5), as well as other standards.
Tri-State Generation & Transmission		Table 1, P5 does not seem to account for redundant relays in the Protection System to mitigate potential relay failure. We recommend changing the "Event" to "Delayed Fault Clearing due to the failure of a relay to operate as designed, if that is the only relay protecting the Faulted element, for one of the following:" In Table 1, P2 and P3, the last column "Non-Consequential Load Loss Allowed" where the requirement

Organization	Yes or No	Question 9 Comment
		"No12" appears, and in footnote 12, the standard as proposed does not allow for any Non-Consequential Load Loss. When the Non-Consequential Load Loss (footnote b) issue is clarified in Project 2010-11 this requirement may be changed. Therefore, if this proposed Standard is enforced before Project 2010-11 is completed, entities will be required to meet this No Non-Consequential Load Loss requirement without the exception allowed in the existing TPL-002-0, footnote "b". This will require immediate redesigns to meet this particular requirement. The unintended consequence could be that operators of local systems that are currently networked may opt to begin operation as radial systems, and future designs for local systems may be radial, at any voltage level. We suggest that the proposed footnote 12 include a provision to default to the existing footnote "b" in TPL-002-0 until Project 2010-11 is decided. Please revise footnote 12 to read, "Note: Non-Consequential Load Loss is being decided in Project 2010-11. When that project is finalized, the resolution will be copied here. In the interim, planned or controlled interruption of electric supply to radial customers or some local Network customers, connected to or supplied by the Faulted element or by the affected area, may occur in certain areas without impacting the overall reliability of the interconnected transmission systems. To prepare for the next contingency, system adjustments are permitted, including curtailments of contracted Firm (non-recallable reserved) electric power Transfers." Timing of this project and project 2010-11 is critical. It would be very difficult to vote to approve the proposed TPL-001-2 prior to knowing the outcome of Project 2010-11 (footnote b issue). Second, we are unclear why voltage relays are included in footnote 13 and think they can be removed. Third, in the Extreme Events - Stability section of Table 1, items 2a-2d "Protection System failure" should be changed to "relay failure" to be consistent with Table 1, Category P5.
Lakeland Electric		The performance requirements of Table 1 do not allow the loss of non-consequential load for single and multiple contingency events. The disallowance of load loss does not provide any real benefit to the reliability of the BES and is an unnecessary overreach into local quality of service issues that are best addressed by State, Provincial or Municipal authorities. There may be circumstances such as high local transmission costs or local opposition to transmission construction where prohibition of non-consequential load loss represents a poor cost/benefit or quality of life tradeoff. Having a provision at the regional level that a PA or TP can have a certain amount of non-consequential load loss designed or planned in to its system that would be reasonable if it is acceptable to the RE and does not have an adverse impact on the remaining BES. In lieu of such a RE provision, providing a quantitative cap in non-consequential load loss such as 100 MW may be rationale compromise in the goal of limiting load loss for the more probable outage events. Our preference would be to retain the capability of limited non-consequential load loss.It is our understanding that footnote 9 is under consideration as part of Project 2010-11 and should be noted as such for clarification.
NBSO		For consistency, 'Protection System' should be replaced with 'relay' on Table 1 (p12) Stability Section, items

Organization	Yes or No	Question 9 Comment
		2a-2d.
Progress Energy		PE remains concerned with the present draft of TPL-001-2 regarding the presence or absence of footnotes in particular events. PE believes that, for all events in Table 1 except P0, any "No" designation in the "Non-Consequential Load Loss allowed" column should have Footnote 12 appended to it. Several events do append footnote 12 to a "No" answer, but several do not. PE does not see why certain events should be denied the use of Footnote 12 as long as Footnote 12 is worded in a manner such that the BES will not be adversely affected.PE has additional concerns regarding two Footnotes. Footnote 9 contains language regarding firm transmission service that is very similar to language presently under review in NERC Project 2010-11. PE feels that Footnote 9 should have had a statement at the end similar to that of Footnote 12, such as "Note: Firm Transmission Service is being decided in Project 2010-11. When that project is finalized, the resolution will be copied into Footnote 9." Without such a statement, PE cannot understand why the Firm Transmission language in footnote (b) under Project 2010-11 is being reviewed, while it is apparently no longer being reviewed in Project 2006-02.Footnote 12 contains the following language as a place holder: "Note: Non-Consequential Load Loss is being decided in Project 2010-11. When that project is finalized, the resolution will be copied here." PE has filed substantial comments on the footnote (b) issue in previous drafts, pointing out that disallowance of curtailment of non-consequential load is a local load issue and not a BES concern. PE therefore cannot make any positive determination as to whether the draft Standard, TPL-001-2, and its associated Table 1, will be a viable Standard until the language in Footnote 12 is resolved via Project 2010-11. Given the potential for unresolved and confusing issues regarding the parallel development of Project 2006-02 and 2010-11, PE encourages NERC to resolve all issues within Project 2010-11 before taking the draft Standard TPL-001-2 to ballot in Project 2006-02.
Tucson Electric Power Company		Table 1, P5 currently requires the study of "[d]elayed Fault Clearing due to the failure of a relay13 protecting the Faulted element to operate as designed". As written, this requirement does not recognize the use of redundant relays for primary protection. In some cases side by side relays are used to provide primary fault tripping if one relay fails to operate. Per the requirement as stated, the redundant relay would provide no value in meeting this requirement. Please revise to acknowledge backup relays: "Single failure of a protection relay13 protecting the Faulted element to operate as designed, resulting in backup relay actions or Delayed Fault Clearing, for one of the following". In Table 1, P2 and P3, the last column "Non-Consequential Load Loss Allowed" where the requirement "No12" appears, and in footnote 12, the standard as proposed does not allow for any Non-Consequential Load Loss. When the Non-Consequential Load Loss (footnote b) issue is clarified in Project 2010-11 this requirement may be changed. Therefore, if this proposed Standard is enforced before Project 2010-11 is completed, entities will be required to meet this No Non-Consequential Load Loss requirement without the exception allowed in the existing TPL-002-0, footnote "b". This will require immediate redesigns to meet this

Organization	Yes or No	Question 9 Comment
		particular requirement. The unintended consequence could be that operators of local systems that are currently networked may opt to begin operation as radial systems, and future designs for local systems may be radial, at any voltage level. We suggest that the proposed footnote 12 include a provision to default to the existing footnote “b” in TPL-002-0 until Project 2010-11 is decided. Please revise footnote 12 to read, “Note: Non-Consequential Load Loss is being decided in Project 2010-11. When that project is finalized, the resolution will be copied here. In the interim, planned or controlled interruption of electric supply to radial customers or some local Network customers, connected to or supplied by the Faulted element or by the affected area, may occur in certain areas without impacting the overall reliability of the interconnected transmission systems. To prepare for the next contingency, system adjustments are permitted, including curtailments of contracted Firm (non-recallable reserved) electric power Transfers.” Timing of this project and project 2010-11 is critical. It would be very difficult to vote to approve the proposed TPL-001-2 prior to knowing the outcome of Project 2010-11 (footnote b issue).Non-Consequential Load Loss and curtailment of Firm Transmission Service should be allowed for loss of EHV BES elements for Category P4 and P5 events.
New York Independent System Operator		There are two tables labeled “Table 1”. The extreme events table should be renamed “Table 2”.
MidAmerican Energy		Voting "no" - Footnote 6 - Further clarify the applicable shunt devices in Footnote 6 with this suggested text: 6. Requirements which are applicable to shunt devices, also apply to FACTS devices that are connected to ground, but not instrument voltage transformers or surge arresters
Southern California Edison Company		SCE supports the revised performance table.
Omaha Public Power District		Why is Footnote 12 used for some occurrences of the word "No" in the last column of Table 1 but not other occurrences of the word "No"?
Hydro One Networks Inc.		No selection boxes in this question. Yes, we support.
SERC Dynamics Review Subcommittee		Yes. The SERC DRS supports the revisions.
Duke Energy		We support the changes.

Organization	Yes or No	Question 9 Comment
South Carolina and Gas		Yes
Xcel Energy		The defined term "Bus-tie Breaker" is not used per se anywhere in the Requirements or in Table 1. Suggest changing the description for Events P2-3, P2-4, P4 and P4-6 to use the term Bus-tie Breaker or non-Bus-tie Breaker, as applicable. Existing P5 event description needs improvement since the phrase "…failure of relay protecting the Faulted element to operate as designed…" reads awkwardly and also includes some superfluous verbiage that can be omitted. For example, isn't "protecting the faulted element" the basic function of every protective relay? Also, isn't "(failure) to operate as designed" inherent in the definition of Delayed Fault Clearing? Suggested P5 event description is: "Delayed Fault Clearing due to the operation failure of a primary protection relay[13] when attempting to clear a fault on one of the following:" Footnote 13 – Delete "voltage (#27, #59)" since the under/over voltage relays are not called upon to provide the primary protection for fault clearing on Transmission elements. In Table 1 – Extreme Events – Stability – Items 2a-2d, change "Protection System failure" to "relay failure" to be consistent with changes in P5. Suggest modifying Event P4 description to be more consistent with Event P5 description by including Delayed Fault Clearing in the description in lieu of "Loss of multiple elements". Suggested Event P4 description is: "Delayed Fault Clearing caused by a stuck non Bus-tie Breaker attempting to clear a fault on one of the following:"

6. The SDT has revised the Measures based on industry comments to the initial ballot. If you do not support these changes, please specify why you disagree and include specific alternative language to resolve your concern.

Summary Consideration:

The SDT has made the following changes due to industry comments:

M1. Each Transmission Planner and Planning Coordinator shall provide evidence, in electronic or hard copy format, that it is maintaining System models within their respective area, using ~~the latest~~ data consistent with MOD-010 and MOD-012, including items represented in the Corrective Action Plan, representing projected System conditions, and that the models represent the required information in accordance with Requirement R1.

R6. Each Transmission Planner and Planning Coordinator shall define and document, within their Planning Assessment, ~~any~~ the criteria or methodology used in the analysis to identify System instability for conditions such as Cascading, voltage instability, or uncontrolled islanding.

M8. Each Planning Coordinator and Transmission Planner shall provide evidence, such as email notices, documentation of updated web pages, postal receipts showing recipient and date; or a demonstration of a public posting, that it has distributed its Planning Assessment results to adjacent Planning Coordinators, adjacent Transmission Planners, and any functional entity who has indicated a reliability need and that the ~~functional entity~~ Planning Coordinator or Transmission Planner has provided a documented response to comments received on Planning Assessment results within 90 calendar days of receipt of those comments in accordance with Requirement R8.

Data retention for R7 - The current, in force documentation for the agreement(s) on roles and responsibilities, as well as ~~all such~~ documentation for the agreements in force since the last compliance audit, in accordance with Requirement R7 and Measure M7.

Conforming changes were made to M6 and the data retention for R6/M6. Conforming changes were made to R1 to eliminate the phrase, “the latest.” The majority of respondents agree with the changes to the Measures and no other changes to the Measures have been made based on stakeholder comments.

The SDT did not pose questions for items that were not redlined, i.e., changed, in this posting since those items not redlined were considered by the SDT as sufficiently vetted by the industry through the various phases of the project to date. However, the SDT has reviewed all comments regardless of whether specific questions were asked and has considered the comments.

Organization	Yes or No	Question 10 Comment

Organization	Yes or No	Question 10 Comment
Florida Reliability Coordinating Council, Inc - Transmission Working Group	No	It appears that there is a disagreement between R8 and M8, regarding public posting. We Agree with M8 posting option.
NorthWestern Energy (NWMT)	No	Measure M6 is too vague. It is unclear how to identify the conditions of Cascading, voltage instability, or uncontrolled islanding. The Glossary of Terms defines Cascading as "The uncontrolled successive loss of system elements triggered by an incident at any location. Cascading results in widespread electric service interruption that cannot be restrained from sequentially spreading beyond an area predetermined by studies." Does the loss of system elements have to extend beyond the Control Area to be considered "Cascading"? Is there a Megawatt threshold that must be satisfied? Is there a time duration involved? Also, "cascading outages" needs to be defined. In addition, "voltage instability" and "uncontrolled islanding" should both be defined.
Lakeland Electric	No	please consider remove "the latest" from M1
Ameren	No	For measurements M3 and M4, there is some question as to what is to be provided as evidence of a study. Would the study results alone provide sufficient evidence, or does the entire powerflow, stability, or short circuit effort need to be documented in a formal study report? There are no measures for the creation and coordination of contingency lists that are to be developed in R3.4, R3.5, R4.4, and R4.5. Are these contingency lists required to be a documented part of the study?
MidAmerican Energy	No	Revise measures to be consistent with requirements. 1. R6 Delete "any". The use of the word any in standards should not be allowed. 2. Revise the Planning Assessment definition to more explicitly apply to the BES and the TPL-001 requirements. We suggest text of: "Planning Assessment: Documented evaluation of future Transmission System performance and Corrective Action Plans to remedy identified deficiencies in the BES from the steady state and stability performance requirements set forth in the TPL-001 standard." 3. R2.1.5 - We propose replacing the term 'major Transmission' with "BES" because BES is a well defined term, while the term, 'major Transmission', is not. 4. Add R2.3.1 - We suggest the addition of a R2.3.1 requirement to emulate the distinction between the requirement to perform a short circuit assessment and conduct required studies or analysis to support the assessment (e.g. R2.1/R2.1.1 and R2.2/R2.2.1). We propose wording such as, "Perform an analysis for at least one year in the Near Term Transmission Planning Horizon." This requirement would set an expectation

Organization	Yes or No	Question 10 Comment
		that an analysis should be conducted to at least one or more years in the near-term planning horizon, rather than imply that an analysis of all five years in the near-term planning horizon must be conducted. 5. R2.7.2 - Delete 2.7.2. With regard to "include actions to resolve performance deficiencies identified in multiple sensitivity studies", mitigation plans should not be required for deficiencies found in multiple sensitivity studies because the conditions in some sensitivity studies are more extreme and less likely than base case conditions. Some of the sensitivity study conditions are not credible. 6. R2.7.4 - We suggest that the wording of R2.7.4 be the same as R.2.8.2. 7. R3.5 - We interpret that R3.5 requires the TP and PC to conduct an evaluation of possible actions to reduce the likelihood or impact of extreme events, which produce the more severe impacts, if cascading outages may occur. Does the drafting team intend for the TP and PC to fulfill this requirement for at least one event in each of the five categories (i.e. 3 steady state and 2 stability) or in each of the 21 categories/sub-categories (i.e. 14 steady state and 7 stability). Also, if the resulting cascading outages do not result in any overloads, under-voltages, voltage collapse, or loss of generator synchronization, then should the evaluation of possible actions to reduce likelihood or impact be required? 8. R4.1.1 - We suggest that there should be some qualification of which generating units are referred to in this requirement. We propose that the requirement say, “No generating unit with a Point of Interconnection connected to the BES shall pull out of synchronism.” For example, some utilities include smaller generation units that are connected at voltages below 100 kV and even down to distribution voltage in their base cases. 9. R4.1.2 - We propose that the wording of this requirement be revised to reflect the same BES qualification of the generating unit that we noted in R4.1.1 above. 10. R4.3.1 - This requirement refers to high speed reclosing and we presume that this is special high speed reclosing that is completed in several cycles, rather than the normal high speed reclosing that is completed in a number of seconds. We recommend that the term high speed reclosing be more clearly defined for this sub-requirement. 11. R.4.3.2 - We suggest qualifying which generating units to consider and which voltage limits to simulate with revised wording like, “Trip generating units that are connected to the BES when actual or assumed minimum generator transient voltage limits are known and simulations show voltages may fall below the voltage limit. If assumed voltage limits are used, then they should be included in the assessment”. The requirement should not apply to all relevant generating units until one of the MOD standards requires all Generator Owners to provide their minimum generating unit voltage limits to the TP and PC. If the wording of R4.3.2 must be different from its counterpart, R3.3.2, then please explain the reasons for any differences. 12. R5 - This requirement should allow the applicable entity (such as the TOP / TO) to define a “Post-Contingency Voltage Deviation” as this criteria is not used widely enough in the industry to be a well

Organization	Yes or No	Question 10 Comment
		established criteria. 13. Revise R8 to limit the need to provide the Planning Assessment as follows “adjacent Planning Coordinators and adjacent Transmission Planners and to any registered functional entity...” 14. Data Retention for R3, R5, R6, & R7 - The MRO NSRS proposes that the wording in these elements be revised to change “All” to “The”. The word “All” is unnecessary and could encourage over-the-top compliance monitoring and enforcement. The revised data retention would read as follows: “The studies performed in support....”
NERC staff	Yes	NERC staff supports the changes to the Measures.
SERC Planning Standards Subcommittee	Yes	
Northeast Power Coordinating Council	Yes	
Hydro One Networks Inc.	Yes	
SERC Dynamics Review Subcommittee	Yes	
MRO's NERC Standards Review Subcommittee	Yes	
Pepco Holings, Inc - Affiliates	Yes	
IRC Standards Review Committee	Yes	
Exelon Transmission Planning	Yes	
Southern Company	Yes	
Western Area Power	Yes	

Organization	Yes or No	Question 10 Comment
Administration		
PacifiCorp	Yes	
Duke Energy	Yes	
FirstEnergy	Yes	
Platte River Power Authority	Yes	
Orlando Utilities Commission	Yes	
Manitoba Hydro	Yes	
Minnesota Power	Yes	
TVA Transmission Planning & Compliance	Yes	
Independent Electricity System Operator	Yes	
South Carolina and Gas	Yes	
California ISO	Yes	
Seattle City Light	Yes	
ISO New England Inc.	Yes	
Los Angeles Department of Water and Power	Yes	
Idaho Power Co	Yes	

Organization	Yes or No	Question 10 Comment
United Illuminating	Yes	
Hydro-Quebec TransEnergie	Yes	
National Grid	Yes	
American Transmission Company	Yes	
American Electric Power (AEP)	Yes	
Tri-State Generation & Transmission	Yes	
GTC	Yes	
Pacific Gas and Electric Company	Yes	
Northeast Utilities	Yes	
Consolidated Edison Co. of New York, Inc.	Yes	
NBSO	Yes	
Central Maine Power Company	Yes	
Oncor Electric Delivery	Yes	
New York State Electric & Gas Corp	Yes	
Progress Energy	Yes	

Organization	Yes or No	Question 10 Comment
ERCOT ISO	Yes	
Tucson Electric Power Company	Yes	
New York Independent System Operator	Yes	
Xcel Energy	Yes	
Southern California Edison Company	Yes	

7. The SDT has revised the Requirement R8 VSL based on industry comments to the initial ballot. If you do not support these changes, please specify why you disagree and include specific alternative language to resolve your concern.

Summary Consideration:

The SDT made the following clarification due to industry comments:

> **4.3.1, bullet #1**: Successful high speed (less than one second) reclosing and unsuccessful high speed reclosing into a Fault where high speed reclosing is utilized.

The VSL was not changed as the majority response was that the industry is in general agreement with the VSL.

The SDT did not pose questions for items that were not redlined, i.e., changed, in this posting since those items not redlined were considered by the SDT as sufficiently vetted by the industry through the various phases of the project to date. However, the SDT has reviewed all comments regardless of whether specific questions were asked and has considered the comments.

Organization	Yes or No	Question 11 Comment
Northeast Power Coordinating Council Consolidated Edison Co. of New York, Inc.	No	Requirement 8 is an administrative burden to TPs and PCs that adds no value to Bulk Power System reliability. PCs should be including TPs, neighboring PCs and interested parties in its planning processes when developing the Planning Assessments. Therefore, the inclusion of a set of VSLs for Requirement 8 is unnecessary. Should the VSLs for Requirement 8 remain, Requirement 8.1 should be revised to reflect that comments only to the final Assessment (not drafts developed during a process) need a response as follows:If a recipient of the planning assessment final results provides documented comments on the results, the respective Planning Coordinator or Transmission Planner shall provide a documented response to such recipient within 90 calendar days of receipt of those comments.If Requirement 8 and 8.1 are retained, they should be revised to reflect that comments only to the final Assessment (not drafts developed during a process) need a response and there should be a limit on the comment period as follows:If a recipient of the planning assessment final results provides documented comments on the results within 90 days of receipt, the respective Planning Coordinator or Transmission Planner shall provide a documented response to such recipient within 90 calendar days of receipt of those comments. Other comments not addressed by this Comment Form as follows: Section 3.3 - The last sentence of 3.3.1 should be removed. This is addressed in PRC-023. Line ratings are addressed in PRC-023. PRC-023 requires coordination with the Reliability Coordinator. Remove “Tripping of Transmission elements where relay loadability limits are exceeded.” Section 4.3 - High speed reclosing is not defined, and to help eliminate any confusion that it may introduce

Organization	Yes or No	Question 11 Comment
		into the standard it will be worthwhile for the SDT to define this term. Several specific examples from previous comments on sensitivity analysis and guidance for base case assumptions: The requirements for sensitivity analysis already address issues going beyond what is expected to meet reliability requirements. Requiring extreme event analysis is requiring two layers of event analysis beyond what is required and there is no requirement for corrective action if anything is identified. The standard is referring to requirements for sensitivity and other issues without a reference to base assumptions. The standard must describe base assumptions. To define a sensitivity condition, NERC must define base assumptions. As for allowing con-consequential load loss for Categories P1 through P5, suggest approval at the Regional level, with a concept of allowing it in a "local area" that does not impact BPS reliability. All references to 300 kV in document should be replaced with EHV (for example in the Introduction, Section 5).The first phrase of Note 3 on p. 14 should be revised as follows: "Bulk Electric System (BES) level references include extra-high voltage (EHV) Facilities defined as those representing the backbone of the System, generally at voltage greater than 300 kV, and high voltage (HV) Facilities defined as those not representing the backbone of the System, as determined by the Planning Coordinator and approved by Regional Entity."
IRC Standards Review Committee	No	(AESO is not a party to the following comments since its VSLs are set by the Alberta regulatory authority.)Requirement 8 is an administrative burden to TPs and PCs that adds no value to reliability. PCs should be including TPs, neighboring PCs and interested parties in its planning processes when developing the Planning Assessments. Therefore, the inclusion of a set of VSLs for Requirement 8 is unnecessary.Should the SDT decide to leave the VSLs for Requirement 8, Requirement 8.1 should be revised to reflect that comments only to the final Assessment (not drafts developed during a process) need a response as follows: 8.1 If a recipient of the planning assessment final results provides documented comments on the results, the respective Planning Coordinator or Transmission Planner shall provide a documented response to such recipient within 90 calendar days of receipt of those comments.For a Planning Coordinator (PC) who distributes the Planning Assessment to many different entities (to adjacent PCs, TPs, and other functional entities), a concern regarding the Requirement R8 VSL is that it is overly restrictive to apply a violation for failing to distribute the results of its Planning Assessment to only one PC, TP, or functional entity (and to apply a High VSL for failing to distribute to more than one entity), particularly since an entity's contact is subject to change over time, and since Measure M8 allows for publicly posting the results of its Planning Assessment to its website. Should the SDT decide to include the VSLs for Requirement 8, we would recommend revising to use a percentage approach rather than applying a violation to a Planning

Organization	Yes or No	Question 11 Comment
		Coordinator who fails to provide the results of its Planning Assessment to one PC, TP, or other functional entity (or applying a High VSL for failing to distribute to more than one entity.) Recommend applying a similar percentage approach to the VSLs drafted by NERC Staff for Project #2007-23 VSLs (e.g., for FAC-013-1) to be considered for the TPL-001-2 R8 VSLs. For example, o Lower VSL: The responsible entity failed to provide the Planning Assessment final results to 5% or less of the required entities. o Moderate VSL: The responsible entity failed to provide the Planning Assessment final results to more than 5% up to (and including) 10% of the required entities. o High VSL: The responsible entity failed to provide the Planning Assessment final results to more than 10% up to (and including) 15% of the required entities. o Severe VSL: The responsible entity failed to provide the Planning Assessment final results to more than 15% of the required entities OR [the existing language for the Severe VSL].Explanation: The VSLs were modified for consistency with other standards and VSLs.Reference: Link to VSLs drafted by NERC Staff for Project #2007-23 VSLs (e.g., for FAC-013-1):http://www.nerc.com/docs/standards/sar/Staff_Proposed_VSLs_2010July27.pdf
Southern Company	No	We wish to make a comment on R4.3.1: it appears that this requires stability simulations of both successful and unsuccessful high-speed reclosing for all contingency simulations regardless of whether high-speed reclosing is used on the faulted line. We suggest the following wording be used to replace the first bullet: "Successful high-speed reclosing and unsuccessful high-speed reclosing onto a fault, where such reclosing is applied, and where such additional simulations are deemed appropriate by the PC or TP." Also, we wish to make a comment on footnote #13 of Table 1. 13. Applies to any of the following relay functions or types: pilot (#85), distance (#21), differential (#87), current (#50, 51, & 67), voltage (#27 & 59), directional (#32 & 67), and associated tripping (#86 & 94) relays.
Florida Reliability Coordinating Council, Inc - Transmission Working Group	No	The requirement to distribute the Planning Assessment should be more flexible and allow for making the Planning Assessment available, such that those entities that desire the information can have it readily available. R8 should be modified to replace distribute with "make available:, so the new requirement would read as follows: Each Planning Coordinator and Transmission Planner shall make available its Planning Assessment results to adjacent Planning Coordinators and Transmission Planners and to any functional entity that indicates a reliability related need for the Planning Assessment results.
PacifiCorp	No	The language for Requirement R8 is ambiguous with regard to which adjacent entities must request in writing the results of the Planning Assessment. The language should be clarified to read: "Upon request made in

Organization	Yes or No	Question 11 Comment
		writing, each Planning Coordinator and Transmission Planner shall distribute its Planning Assessment results to adjacent Planning Coordinators, adjacent Transmission Planners, and any other functional entity that has a reliability related need." The Requirement R8 VSL language should also be revised accordingly.
ReliabilityFirst	No	TPL-001-2 Draft 5 is much better than Draft 4.There is still one significant concern, that I do not believe the drafting team adequately addressed. It is unclear as to what "Planning Assessment results" and "results of its Planning Assessment" entail. The Draft 5 response that "Planning Assessment" is a defined term does not fully address this concern. "Planning Assessment results" or "results of its Planning Assessment" is not necessarily the same thing as "Planning Assessment". As written, "Planning Assessment results" or "results of its Planning Assessment" could be anything from a single sentence, to a few brief high level paragraphs, to a detailed and technically complete Planning Assessment. The Standard needs to more clearly state what is required in the report to other entities. Based on the drafting team response in Draft 4, it seems that replacement of "Planning Assessment results" or "results of its Planning Assessment" with the term "Planning Assessment" or "its Planning Assessment" would be appropriate. Violation Severity Levels: R8The failure to provide documented responses to documented comments to "Planning Assessment results" is deemed to be a higher severity level than failing to distribute "results of its Planning Assessment". Failure to distribute denies functional entities an opportunity to comment, and could prevent coordinated planning, and thus should be deemed to be more severe than failing to provide documented responses to documented comments.
Lakeland Electric	No	The requirement to distribute the Planning Assessment should be more flexible and allow for making the Planning Assessment available, such that those entities that desire the information can have it readily available. R8 should be modified as follows: Each Planning Coordinator and Transmission Planner shall make available its Planning Assessment results to adjacent Planning Coordinators and Transmission Planners and to any functional entity that indicates a reliability related need for the Planning Assessment results.
Orlando Utilities Commission	No	R8 should require that the PC and TP make available it's planning assessment results when requested, rather then requring the preemptive transmittal. There is no reliablity purpose served by providing unsolicited information.
US Bureau of Reclamation	No	The language implies that the responsible entity may choose to not distribute it is feels the entity making the request does not have a "reliability related need". It is not clear why that distinction is being made?
California ISO	No	Requirement 8 is an administrative burden to TPs and PCs that adds no value to reliability. PCs should be including TPs, neighboring PCs and interested parties in its planning processes when developing the

Organization	Yes or No	Question 11 Comment
		Planning Assessments. Therefore, the inclusion of a set of VSLs for Requirement 8 is unnecessary.Should the SDT decide to leave the VSLs for Requirement 8, Requirement 8.1 should be revised to reflect that comments only to the final Assessment (not drafts developed during a process) need a response as follows: 8.1 If a recipient of the planning assessment final results provides documented comments on the results, the respective Planning Coordinator or Transmission Planner shall provide a documented response to such recipient within 90 calendar days of receipt of those comments.For a Planning Coordinator (PC) who distributes the Planning Assessment to many different entities (to adjacent PCs, TPs, and other functional entities), a concern regarding the Requirement R8 VSL is that it is overly restrictive to apply a violation for failing to distribute the results of its Planning Assessment to only one PC, TP, or functional entity (and to apply a High VSL for failing to distribute to more than one entity), particularly since an entity's contact is subject to change over time, and since Measure M8 allows for publicly posting the results of its Planning Assessment to its website.Should the SDT decide to include the VSLs for Requirement 8, would recommend revising to use a percentage approach rather than applying a violation to a Planning Coordinator who fails to provide the results of its Planning Assessment to one PC, TP, or other functional entity (or applying a High VSL for failing to distribute to more than one entity.) Recommend applying a similar percentage approach to the VSLs drafted by NERC Staff for Project #2007-23 VSLs (e.g., for FAC-013-1) to be considered for the TPL-001-2 R8 VSLs. For example, o Lower VSL: The responsible entity failed to provide the Planning Assessment final results to 5% or less of the required entities. o Moderate VSL: The responsible entity failed to provide the Planning Assessment final results to more than 5% up to (and including) 10% of the required entities. o High VSL: The responsible entity failed to provide the Planning Assessment final results to more than 10% up to (and including) 15% of the required entities. o Severe VSL: The responsible entity failed to provide the Planning Assessment final results to more than 15% of the required entities OR [the existing language for the Severe VSL].Explanation: The VSLs were modified for consistency with other standards and VSLs.Reference: Link to VSLs drafted by NERC Staff for Project #2007-23 VSLs (e.g., for FAC-013-1):http://www.nerc.com/docs/standards/sar/Staff_Proposed_VSLs_2010July27.pdf
Ameren	No	The sharing issues of requirement R8 are still not clear, therefore the R8 VSL is not clear. It is not clear if the intent of the SDT is for the PC to share the assessments with PCs and TPs are to share the assessments with TPs, or whether the intent is for the TP to share its assessments with its PC. Will posting the assessment to a secure web-site meet the intent of the requirement? Although the comment form is not designed to allow for such, we need to comment on R4.3.1: As written, it appears that this requires stability simulations of both successful and unsuccessful high-speed reclosing for all contingency simulations, regardless of whether high-speed reclosing is actually implemented. A suggested wording change for the first bullet: "Successful high-speed reclosing and unsuccessful high-speed reclosing onto a fault, where such reclosing is applied, and where such additional simulations are deemed appropriate by the PC or TP."

Organization	Yes or No	Question 11 Comment
		Another comment needs to be made regarding the stability extreme event table: Changes were made in planning event P5 to concentrate on specific relay failures. The same changes need to be made for stability extreme events 2a, 2b, 2c, and 2d.The proposed standard will significantly increase the amount of work required to develop more detailed and complex system models, to perform and document the engineering studies to meet the performance requirements, and to develop the assessments necessary for compliance. All of these increased engineering activities are perceived to provide marginal benefit to the reliability of the bulk electric system, but will require significant increases in manpower across the industry. Further, the manpower is presently not available to develop these more detailed models and to perform these studies with any reasonable assuredness. It will be a continuing challenge to the industry to obtain and keep the engineering talent needed to perform these compliance activities for such marginal benefits.
Central Maine Power Company New York State Electric & Gas Corp	No	Requirement 8 is an administrative burden to TPs and PCs that adds no value to reliability. PCs should be including TPs, neighboring PCs and interested parties in its planning processes when developing the Planning Assessments. Therefore, the inclusion of a set of VSLs for Requirement 8 is unnecessary.Furthermore, the requirement lacks a specified time frame to receive comments, thereby implying that TPs and PCs would be required to reply to comments forever following the finalization of a Planning Assessment. The NYISO proposes a limit of six months.Should the SDT decide to leave the VSLs for Requirement 8, Requirement 8.1 should be revised to reflect that comments only to the final Assessment (not drafts developed during a process) need a response as follows:If a recipient of the planning assessment final results provides documented comments on the results within 180 calendar days of the issuance of those final results, the respective Planning Coordinator or Transmission Planner shall provide a documented response to such recipient within 90 calendar days of receipt of those comments. We also have other comments not addressed by this Comment Form as follows - Section 2.7, Section 3.3, Section 4.3, and overall:Section 2.7 requires that Corrective Action Plans are included in each Planning Assessment and states “Such actions may include...” followed by a list of actions. Restricting allowable actions, and excluding runback/tripping of HVDC would have a direct impact on multiple existing facilities in New York and would adversely impact the reliability planning of the NYCA. Runback/tripping of HVDC must be added to the list. Section 3.3 - We feel that the last sentence of 3.3.1 should be removed. This is handled by PRC-023. Line ratings are addressed by PRC-023. PRC-023 requires coordination with the Reliability Coordinator. Remove “Tripping of Transmission elements where relay loadability limits are exceeded.” Section 4.3 - High speed reclosing is not defined.Overall - We have previously made comments which have not been addressed in the current version of the proposed standard. Support for the standard can at most be limited without addressing comments.

Organization	Yes or No	Question 11 Comment
		We have previously commented on sensitivity analysis and guidance for base case assumptions. Also, extreme event analysis should not be mandated in this standard as no corrective action is required. The requirements for sensitivity analysis already address issues going beyond what is expected to meet reliability requirements. Requiring extreme event analysis is requiring two layers of event analysis beyond what is required, and there is no requirement for corrective action if anything is identified. The standard is referring to requirements for sensitivity and other issues without a reference to base assumptions. The standard must describe base assumptions. To define a sensitivity condition, NERC must define base assumptions.
New York Independent System Operator	No	Requirement 8 is an administrative burden to TPs and PCs that adds no value to reliability. PCs should be including TPs, neighboring PCs and interested parties in its planning processes when developing the Planning Assessments. Therefore, the inclusion of a set of VSLs for Requirement 8 is unnecessary.Furthermore, the requirement lacks a specified time frame to receive comments, thereby implying that TPs and PCs would be required to reply to comments forever following the finalization of a Planning Assessment. The NYISO proposes a limit of six months.Should the SDT decide to leave the VSLs for Requirement 8, Requirement 8.1 should be revised to reflect that comments only to the final Assessment (not drafts developed during a process) need a response as follows:If a recipient of the planning assessment final results provides documented comments on the results within 180 calendar days of the issuance of those final results, the respective Planning Coordinator or Transmission Planner shall provide a documented response to such recipient within 90 calendar days of receipt of those comments.
NERC staff	Yes	NERC staff supports the changes to the VSL for Requirement R8.
SERC Planning Standards Subcommittee	Yes	Comments: We wish to make a comment on R4.3.1: it appears that this requires stability simulations of both successful and unsuccessful high-speed reclosing for all contingency simulations regardless of whether high-speed reclosing is used on the faulted line. We suggest the following wording be used to replace the first bullet: “Successful high-speed reclosing and unsuccessful high-speed reclosing onto a fault, where such reclosing is applied, and where such additional simulations are deemed appropriate by the PC or TP.” We wish to make a comment on the stability extreme event table: Changes were made in planning event P5 to narrow the focus to specific relay failures. The same changes are needed for stability extreme event 2a, 2b, 2c, and 2d.
Hydro One Networks Inc.	Yes	Requirement 8 is an administrative burden and adds little or no value to the BPS reliability. Therefore, the inclusion of a set of VSLs for Requirement 8 is unnecessary.
SERC Dynamics Review	Yes	We wish to make a comment on R4.3.1: it appears that this requires stability simulations of both successful

Organization	Yes or No	Question 11 Comment
Subcommittee		and unsuccessful high-speed reclosing for all contingency simulations regardless of whether high-speed reclosing is used on the faulted line. We suggest the following wording be used to replace the first bullet: “Successful high-speed reclosing and unsuccessful high-speed reclosing onto a fault, where such reclosing is applied."We wish to make a comment on the stability extreme event table: Changes were made in planning event P5 to narrow the focus to specific relay failures. The same changes are needed for stability extreme event 2a, 2b, 2c, and 2d.
MRO's NERC Standards Review Subcommittee	Yes	Other Comments:1. How are backup relays handled (TPL-002-0, R1.3.10 & TPL-001-2 R1 & P5)? What does FERC construe as normal system for a protection system. The TPL-001-2 R1 & P5, this standard doesn’t appear to address primary protection and how this handled. 2. Revise the Planning Assessment definition to more explicitly apply to the BES and the TPL-001 requirements. We suggest text of: “Planning Assessment: Documented evaluation of future Transmission System performance and Corrective Action Plans to remedy identified deficiencies in the BES from the steady state and stability performance requirements set forth in the TPL-001 standard.” 3. R2.1.5 - We propose replacing the term ‘major Transmission’ with “BES” because BES is a well defined term, while the term, ‘major Transmission’, is not. 4. Add R2.3.1 - We suggest the addition of a R2.3.1 requirement to emulate the distinction between the requirement to perform a short circuit assessment and conduct required studies or analysis to support the assessment (e.g. R2.1/R2.1.1 and R2.2/R2.2.1). We propose wording such as, “Perform an analysis for at least one year in the Near Term Transmission Planning Horizon.” This requirement would set an expectation that an analysis should be conducted to at least one or more years in the near-term planning horizon, rather than imply that an analysis of all five years in the near-term planning horizon must be conducted. 5. R2.7.4 - We suggest that the wording of R2.7.4 be the same as R.2.8.2. Otherwise, we propose that R2.7.4 and R2.8.2 be revised with wording like, “. . . implementation status of identified Corrective Action Plans for System Facilities and Operating Procedures.” to clarify that the identified system facilities and operating procedures refer only to those that were in the previous year’s Corrective Action Plans. 6. R3.3.1 - The term of ‘controls’ is ambiguous and not defined, unlike the term, ‘Protection Systems’, which is defined. Therefore, we suggest that this item be defined or more clearly described to avoid the risk of different and possibly contradictory interpretations by TPs, PCs, and auditors. 7. R3.3.1, bullet #1 - We suggest qualifying which generating units to consider and which voltage limits to simulate with revised wording like, “Trip generating units that are connected to the BES when actual or assumed minimum generator steady state or ride through voltage limits are known and simulations show voltages may fall below the voltage limit. If assumed voltage limits are used, then they should be included in the assessment”. The requirement should not apply to all relevant generating units until one of the MOD

Organization	Yes or No	Question 11 Comment
		standards requires all Generator Owners to provide their minimum generating unit voltage limits to the TP and PC. If the wording of R3.3.1 bullet #1 must be different from its counterpart, R4.3.1 bullet #2, then please explain the reasons for any differences. 8. R3.4.1 - Compliance with the requirement “to coordinate” is problematic and non-measureable We suggest replacing it with the requirement “to communicate”. 9. R3.5 - We interpret that R3.5 requires the TP and PC to conduct an evaluation of possible actions to reduce the likelihood or impact of extreme events, which produce the more severe impacts, if cascading outages may occur. Does the drafting team intend for the TP and PC to fulfill this requirement for at least one event in each of the five categories (i.e. 3 steady state and 2 stability) or in each of the 21 categories/sub-categories (i.e. 14 steady state and 7 stability). Also, if the resulting cascading outages do not result in any overloads, under-voltages, voltage collapse, or loss of generator synchronization, then should the evaluation of possible actions to reduce likelihood or impact be required? 10. R4.1.1 - We suggest that there should be some qualification of which generating units are referred to in this requirement. We propose that the requirement say, “No generating unit connected to the BES shall pull out of synchronism.” For example, some utilities include smaller generation units that are connected at voltages below 100 kV and even down to distribution voltage in their base cases. 11. R4.1.2 - We propose that the wording of this requirement be revised to reflect the same BES qualification of the generating unit that we noted in R4.1.1 above. 12. R4.3.1 - This requirement refers to high speed reclosing and we presume that this is special high speed reclosing that is completed in several cycles, rather than the normal high speed reclosing that is completed in a number of seconds. We recommend that the term high speed reclosing be more clearly defined for this sub-requirement. 13. R5 - This requirement should remove the criterion item, “post-Contingency voltage deviation”, because this criterion is not used widely enough in the industry to be well established criterion. 14. R8 - This requirement should be revised to limit the need to provide the Planning Assessment as follows “adjacent Planning Coordinators and adjacent Transmission Planners and to any registered functional entity...” This suggestion is added to the requirement to clarify that the word adjacent also applies to Transmission Planners and to clarify that the functional entity must be registered in order for the entity to be applicable to the requirement.
TVA Transmission Planning & Compliance	Yes	Additional TVA comments:TVA wishes to make a comment on R4.3.1: it appears that this requires stability simulations of both successful and unsuccessful high-speed reclosing for all contingency simulations. Does high speed reclosing occur in less than 60 cycles or 60 seconds? If a utility does not have reclosing on a

Organization	Yes or No	Question 11 Comment
		transmission line - then must the utility still perform stability studies assuming that there is reclosing? TVA suggests the following wording be used to replace the first bullet: "Successful high-speed reclosing and unsuccessful high-speed reclosing onto a fault, where such reclosing is applied, and where such additional simulations are deemed appropriate by the PC or TP." In R4.1.1, TVA is concerned that no generating unit shall pull out of synchronism in a local area only (thus not impacting the overall reliability of the BES) for Planning Event P1, while the standard does allow generator runback/tripping for the same event. Thus the generating unit may be tripped by a special protection scheme - but may not be tripped by an out of step relay. TVA believes that out of step relaying should be allowed for this unit tripping as long as this does not affect the overall reliability of the BES.
South Carolina and Gas	Yes	We wish to make a comment on the revisions to R4.3.1. We believe that the analysis of both successful and unsuccessful high speed reclosing for all cases is not justified and should be left to the discretion of the Transmission Planner.
ISO New England Inc.	Yes	Requirement 8 and 8.1, should be revised to reflect that comments only to the final Assessment (not drafts developed during a process) need a response and there should be a limit on the comment period as follows:If a recipient of the planning assessment final results provides documented comments on the results within 90 days of receipt, the respective Planning Coordinator or Transmission Planner shall provide a documented response to such recipient within 90 calendar days of receipt of those comments. We have other comments not addressed by this Comment Form as follows - Sections 2.7, 3.3, 4.3 and overall. R2.7 requires that Corrective Action Plans are included in each Planning Assessment and states "Such actions may include..." followed by a list of actions. Runback/tripping of HVDC should be added to the list. Section 3.3 - We feel that the last sentence of 3.3.1 should be removed. This is handled by PRC-023. Line ratings are addressed by PRC-023. PRC-023 requires coordination with the Reliability Coordinator. Remove "Tripping of Transmission elements where relay loadability limits are exceeded." Section 4.3 - High speed reclosing needs to be defined.
Hydro-Quebec TransEnergie	Yes	o All references to 300 kV in document should be replaced with EHV (In the introduction, section 5) o The first phrase of Note 3 on p 14 should be revised as follows: "Bulk Electric System (BES) level references include extra-high voltage (EHV) Facilities defined as those representing the backbone of the System, generally at voltage greater than 300 kV, and high voltage (HV) Facilities defined as those not representing the backbone of the System, as determined by the Planning Coordinator and approved by Regional Entity."

Organization	Yes or No	Question 11 Comment
National Grid	Yes	Other Comments:Section 3.3 - We feel that the last sentence of 3.3.1 should be removed. This is handled by PRC-023. Line ratings are addressed by PRC-023. PRC-023 requires coordination with the Reliability Coordinator. Remove "Tripping of Transmission elements where relay loadability limits are exceeded." Section 4.3 - High speed reclosing is not defined. We have previously commented on sensitivity analysis and guidance for base case assumptions. Also, extreme event analysis should not be mandated in this standard as no corrective action is required.
Tri-State Generation & Transmission	Yes	None regarding R8. The following comments refer to parts of the proposed standard for which no questions are asked.R4, Part 4.1.2: The response to our previous comment indicated that our description was for a system Stability issue. R4 is addressing system Stability and we believe the comment still applies and that it was not answered in the response. We have two issues with 4.1.2: Sometimes out-of-step (loss of generator synchronism) is better mitigated through islanding by tripping transmission rather than by tripping generators; the second point is that the ability of present modeling programs does not include the capability to model all types of impedance relays and their associated OOS blocking and tripping capabilities that are available. R4, Part 4.3.1: The third bullet implies that all impedance relays (and perhaps others) will need to be modeled in the stability databases. We question whether the existing simulation programs can accommodate this large magnitude of data inclusion and whether there is any benefit to BES reliability. Certainly using generic models rather than actual models would be of no benefit. We recommend changing the third bullet to "Evaluation of Protection System behavior when transient power swings are detected or predicted to have impedance characteristics that may approach relay operating characteristics."
Northeast Utilities	Yes	No comments on Question 7.Other Comments: As detailed below, NU has other comments that are not addressed by this Comment Form as follows - Section 3.3, Section 4.3, Non-Consequential Load Loss as referenced in the events Table 1 and studies using extreme event contingencies. Section 3.3 - NU believes that the last sentence of Part 3.3.1 should be removed since this is handled by PRC-023. Line ratings are addressed by PRC-023 which requires coordination with the Reliability Coordinator. NU suggests the removal of the following sentence: "Tripping of Transmission elements where relay loadability limits are exceeded." Section 4.3 - High speed reclosing is not defined and to help eliminate any confusion that it may introduce into the standard it will be worthwhile for the SDT to define this term. Non-Consequential Load Loss - Depending upon the resolution of "Project 2010-11, TPL Table 1, Footnote b" NU may have additional comments regarding this issue. Studies Using Extreme Event Contingencies: The requirements for sensitivity analysis already address issues

Organization	Yes or No	Question 11 Comment
		going beyond what is expected to meet the reliability requirements of the standard. Therefore, requiring extreme event analysis is requiring two layers of event analysis beyond what is required and there is no requirement for corrective action if a concern is identified.
NBSO	Yes	NBSO suggests considering rewording the VSL so that they address the failure to distribute the final results of planning assessments.
ERCOT ISO	Yes	ADDITIONAL COMMENTS: Short circuit analysis (R2.3 and R2.8) should only be applicable to TPs. Fault duty issues are typically local in nature and it would be an overlap for PCs to perform this same analysis done by the local Transmission Planner. Furthermore, R7 should be deleted and the responsibilities of each entity should be explicitly stated within the specific requirements. Previous Comment Unaddressed : Requirement 2.6.2: Reads as if a change is being made to an existing study. It is confusing. Possibly restate: "2.6.2 For steady state, short circuit, or stability analysis: previous studies can be used only if a material change to the system has not occurred or if a change that did occur does not impact the study area." R4.1.2 - Planning Coordinators do not perform protection coordination nor do they have access to the relay settings information required to do this analysis. This requirement should apply to Transmission Planners only because they perform system protection.The substantive scope of the standard is relative to Long-Term Transmission Planning Horizon and Near-Term Transmission Planning Horizon. The Purpose section is described in terms of the “planning horizon” generally. It may be worthwhile aligning the two to mitigate the potential for any confusion. ERCOT proposes the following revisions to the Purpose section: 3.Purpose: Establish Transmission system planning performance requirements within the relevant planning horizon (i.e. Long-Term or Near-Term) to develop a Bulk Electric System (BES) that will operate reliably over a broad spectrum of System conditions and following a wide range of probable Contingencies .In addition, the “Time Horizon” for the Standard is “Long-Term Planning”. Obviously, this necessarily encompasses both Long-Term and Near-Term Transmission Planning Horizons. However, the scope of the Long-Term Planning time horizon is not readily apparent. ERCOT recommends appropriate revisions that clearly define the applicable time horizons.
MidAmerican Energy	Yes	

Organization	Yes or No	Question 11 Comment
Southern California Edison Company	Yes	
Pepco Holings, Inc - Affiliates	Yes	
Exelon Transmission Planning	Yes	
Western Area Power Administration	Yes	
Duke Energy	Yes	
NorthWestern Energy (NWMT)	Yes	
FirstEnergy	Yes	
Platte River Power Authority	Yes	
Manitoba Hydro	Yes	
Minnesota Power	Yes	
Independent Electricity System Operator	Yes	
Seattle City Light	Yes	
Los Angeles Department of Water and Power	Yes	
Idaho Power Co	Yes	
American Transmission Company	Yes	

Organization	Yes or No	Question 11 Comment
American Electric Power (AEP)	Yes	
GTC	Yes	
Oncor Electric Delivery	Yes	
Progress Energy	Yes	
Xcel Energy	Yes	
Tucson Electric Power Company	Yes	

Standard Development Roadmap

This section is maintained by the drafting team during the development of the standard and will be removed when the standard becomes effective.

Development Steps Completed:

1. Version 1 of SAR posted for comment from April 2, 2002 through May 3, 2002.
2. Version 2 of SAR posted for comment from May 5, 2004 through June 5, 2004.
3. Version 3 of SAR posted on November 18, 2005.
4. SAR approved on April 30, 2006.
5. Version 1 of Supplemental SAR posted for comment from February 15, 2007 through March 16, 2007.
6. Version 2 of Supplemental SAR posted on April 9, 2007.
7. Version 1 of revised standard(s) posted for comment on September 17, 2007.
8. Version 2 of the revised standards posted for comment on August 15, 2008.
9. Version 3 of the revised standards posted for comment on May 26, 2009.
10. Version 4 of the revised standards posted for comment on September 16, 2009.
11. Initial ballot completed on March 1, 2010.
12. Version 5 of the revised standard posted for comment on August 3, 2010.

Proposed Action Plan and Description of Current Draft:
The SDT has established a schedule of meetings and conference calls that allows for steady progress through the standards development process in anticipation of completing their assignment in 1Q10. The current draft is the second iteration of the revision of existing standards TPL-001 through TPL-006 and includes one revised standard, TPL-001-1, replacing TPL-001-0, TPL-002-0, TPL-003-0 and TPL-004-0. TPL-005 & -006 issues are addressed in this fifth draft and those standards will also be replaced by TPL-001-2.

Future Development Plan:

Anticipated Actions	Anticipated Date
1. Conduct ballot	TBD
2. Submit standard(s) to BOT.	2Q11
3. Submit to regulatory authorities for approval.	3Q11

Definitions of Terms Used in Standard

This section includes all newly defined or revised terms used in the proposed standard. Terms already defined in the Reliability Standards Glossary of Terms are not repeated here. New or revised definitions listed below become approved when the proposed standard is approved. When the standard becomes effective, these defined terms will be removed from the individual standard and added to the Glossary.

Bus-tie Breaker: A circuit breaker that is positioned to connect two individual substation bus configurations.

Consequential Load Loss: All Load that is no longer served by the Transmission system as a result of Transmission Facilities being removed from service by a Protection System operation designed to isolate the fault.

Long-Term Transmission Planning Horizon: Transmission planning period that covers years six through ten or beyond when required to accommodate any known longer lead time projects that may take longer than ten years to complete.

Near-Term Transmission Planning Horizon: Transmission planning period that covers Years One through five.

Non-Consequential Load Loss: Non-Interruptible Load loss that does not include: (1) Consequential Load Loss, (2) the response of voltage sensitive Load, or (3) Load that is disconnected from the System by end-user equipment.

Planning Assessment: Documented evaluation of future Transmission system performance and Corrective Action Plans to remedy identified deficiencies.

Year One: The first twelve month period that a Planning Coordinator or a Transmission Planner is responsible for assessing. For the Planning Assessment started in a given calendar year, Year One includes the forecasted peak Load period for one of the following two calendar years. For example, if a Planning Assessment was started in 2011, then Year One includes the forecasted peak Load period for either 2012 or 2013.

A. Introduction

1. **Title:** **Transmission System Planning Performance Requirements**

2. **Number:** **TPL-001-2**

3. **Purpose:** Establish Transmission system planning performance requirements within the planning horizon to develop a Bulk Electric System (BES) that will operate reliably over a broad spectrum of System conditions and following a wide range of probable Contingencies.

4. **Applicability:**

   4.1. Functional Entity

   4.1.1. Planning Coordinator.

   4.1.2. Transmission Planner.

5. **Effective Date:** Requirements R1 and R7 shall become effective on the first day of the first calendar quarter, 12 months after applicable regulatory approval. In those jurisdictions where no regulatory approval is required, Requirements R1 and R7 become effective on the first day of the first calendar quarter, 12 months after Board of Trustees adoption.

   Except as indicated below, Requirements R2 through R6 and Requirement R8 shall become effective on the first day of the first calendar quarter, 24 months after applicable regulatory approval. In those jurisdictions where no regulatory approval is required, all requirements, except as noted below, go into effect on the first day of the first calendar quarter, 24 months after Board of Trustees adoption.

   For 84 calendar months beginning the first day of the first calendar quarter following applicable regulatory approval, or in those jurisdictions where no regulatory approval is required on the first day of the first calendar quarter 84 months after Board of Trustees adoption, Corrective Action Plans applying to the following categories of Contingencies and events identified in TPL-001-2, Table 1 are allowed to include Non-Consequential Load Loss and curtailment of Firm Transmission Service (in accordance with Requirement R2, Part 2.7.3.) that would not otherwise be permitted by the requirements of TPL-001-2:

   - P1-2 (for controlled interruption of electric supply to local network customers connected to or supplied by the Faulted element)
   - P1-3 (for controlled interruption of electric supply to local network customers connected to or supplied by the Faulted element)
   - P2-1, P2-2 (above 300 kV)
   - P2-3 (above 300 kV)
   - P3-1 through P3-5
   - P4-1 through P4-5 (above 300 kV)
   - P5 (above 300 kV)

B. Requirements

R1. Each Transmission Planner and Planning Coordinator shall maintain System models within its respective area for performing the studies needed to complete its Planning Assessment. The models shall use data consistent with that provided in accordance with the MOD-010 and MOD-012 standards, supplemented by other sources as needed, including items represented in the Corrective Action Plan, and shall represent projected System conditions. This establishes P0 as the normal System condition in Table 1. *[Violation Risk Factor: Medium] [Time Horizon: Long-term Planning]*

1.1. System models shall represent:

1.1.1. Existing Facilities

1.1.2. Known outage(s) of generation or Transmission Facility(ies) with a duration of at least six months.

1.1.3. New planned Facilities and changes to existing Facilities

1.1.4. Real and reactive Load forecasts

1.1.5. Known commitments for Firm Transmission Service and Interchange

1.1.6. Resources (supply or demand side) required for Load

R2. Each Transmission Planner and Planning Coordinator shall prepare an annual Planning Assessment of its portion of the BES. This Planning Assessment shall use current or qualified past studies (as indicated in Requirement R2, Part 2.6), document assumptions, summarize documented results, and cover steady state analyses, short circuit analyses, and Stability analyses. *[Violation Risk Factor: Medium] [Time Horizon: Long-term Planning]*

2.1. The Near-Term Transmission Planning Horizon portion of the steady state analysis shall be assessed annually and be supported by current annual studies or qualified past studies as indicated in Requirement R2, Part 2.6, as follows:

2.1.1. System peak Load for either Year One or year two, and for year five.

2.1.2. System Off-Peak Load for one of the five years.

2.1.3. P1 events in Table 1, with known outages modeled as in Requirement R1, Part 1.1.2, under those System peak or Off-Peak conditions when known outages are scheduled.

2.1.4. For each of the studies described in Requirement R2, Parts 2.1.1 and 2.1.2, sensitivity case(s) shall be utilized to demonstrate the impact of changes to the basic assumptions used in the model. To accomplish this, the sensitivity analysis in the Planning Assessment must vary one or more of the following conditions by a sufficient amount to stress the System within a range of credible conditions that demonstrate a measurable change in System response :

- Real and reactive forecasted Load.
- Expected transfers.
- Expected in service dates of new or modified Transmission Facilities.
- Reactive resource capability.
- Generation additions, retirements, or other dispatch scenarios.
- Controllable Loads and Demand Side Management.
- Duration or timing of known Transmission outages.

2.1.5. When an entity's spare equipment strategy could result in the unavailability of major Transmission equipment that has a lead time of one year or more (such as a transformer), the impact of this possible unavailability on System performance shall be studied. The studies shall be performed for the P0, P1, and P2 categories identified in Table 1 with the conditions that the System is expected to experience during the possible unavailability of the long lead time equipment.

2.2. The Long-Term Transmission Planning Horizon portion of the steady state analysis shall be assessed annually and be supported by the following annual current study, supplemented with qualified past studies as indicated in Requirement R2, Part 2.6:

2.2.1. A current study assessing expected System peak Load conditions for one of the years in the Long-Term Transmission Planning Horizon and the rationale for why that year was selected.

2.3. The short circuit analysis portion of the Planning Assessment shall be conducted annually addressing the Near-Term Transmission Planning Horizon and can be supported by current or past studies as qualified in Requirement R2, Part 2.6. The analysis shall be used to determine whether circuit breakers have interrupting capability for Faults that they will be expected to interrupt using the System short circuit model with any planned generation and Transmission Facilities in service which could impact the study area.

2.4. The Near-Term Transmission Planning Horizon portion of the Stability analysis shall be assessed annually and be supported by current or past studies as qualified in Requirement R2, Part2.6. The following studies are required:

2.4.1. System peak Load for one of the five years. System peak Load levels shall include a Load model which represents the expected dynamic behavior of Loads that could impact the study area, considering the behavior of induction motor Loads. An aggregate System Load model which represents the overall dynamic behavior of the Load is acceptable.

2.4.2. System Off-Peak Load for one of the five years.

2.4.3. For each of the studies described in Requirement R2, Parts 2.4.1 and 2.4.2, sensitivity case(s) shall be utilized to demonstrate the impact of changes to the basic assumptions used in the model. To accomplish this, the sensitivity analysis in the Planning Assessment must vary one or more of the following conditions by a sufficient amount to stress the System within a range of credible conditions that demonstrate a measurable change in performance:

- Load level, Load forecast, or dynamic Load model assumptions.
- Expected transfers.
- Expected in service dates of new or modified Transmission Facilities.
- Reactive resource capability.
- Generation additions, retirements, or other dispatch scenarios.

2.5. The Long-Term Transmission Planning Horizon portion of the Stability analysis shall be assessed to address the impact of proposed material generation additions or changes in that timeframe and be supported by current or past studies as qualified in Requirement R2, Part2.6 and shall include documentation to support the technical rationale for determining material changes.

2.6. Past studies may be used to support the Planning Assessment if they meet the following requirements:

2.6.1. For steady state, short circuit, or Stability analysis: the study shall be five calendar years old or less, unless a technical rationale can be provided to demonstrate that the results of an older study are still valid.

2.6.2. For steady state, short circuit, or Stability analysis: no material changes have occurred to the System represented in the study. Include documentation to support the technical rationale for determining material changes.

2.7. For planning events shown in Table 1, when the analysis indicates an inability of the System to meet the performance requirements in Table 1, the Planning Assessment shall include Corrective Action Plan(s) addressing how the performance requirements will be met. Revisions to the Corrective Action Plan(s) are allowed in subsequent Planning Assessments but the planned System shall continue to meet the performance requirements in Table 1. Corrective Action Plan(s) do not need to be developed solely to meet the performance requirements for a single sensitivity case analyzed in accordance with Requirements R2, Parts 2.1.4 and 2.4.3. The Corrective Action Plan(s) shall:

2.7.1. List System deficiencies and the associated actions needed to achieve required System performance. Examples of such actions include:

- Installation, modification, retirement, or removal of Transmission and generation Facilities and any associated equipment.
- Installation, modification, or removal of Protection Systems or Special Protection Systems
- Installation or modification of automatic generation tripping as a response to a single or multiple Contingency to mitigate Stability performance violations.
- Installation or modification of manual and automatic generation runback/tripping as a response to a single or multiple Contingency to mitigate steady state performance violations.
- Use of Operating Procedures specifying how long they will be needed as part of the Corrective Action Plan.
- Use of rate applications, DSM, new technologies, or other initiatives.

2.7.2. Include actions to resolve performance deficiencies identified in multiple sensitivity studies or provide a rationale for why actions were not necessary.

2.7.3. If situations arise that are beyond the control of the Transmission Planner or Planning Coordinator that prevent the implementation of a Corrective Action Plan in the required timeframe, then the Transmission Planner or Planning Coordinator is permitted to utilize Non-Consequential Load Loss and curtailment of Firm Transmission Service to correct the situation that would normally not be permitted in Table 1, provided that the Transmission Planner or Planning Coordinator documents that they are taking actions to resolve the situation. The Transmission Planner or Planning Coordinator shall document the situation causing the problem, alternatives evaluated, and the use of Non-Consequential Load Loss or curtailment of Firm Transmission Service.

2.7.4. Be reviewed in subsequent annual Planning Assessments for continued validity and implementation status of identified System Facilities and Operating Procedures.

2.8. For short circuit analysis, if the short circuit current interrupting duty on circuit breakers determined in Requirement R2, Part 2.3 exceeds their Equipment Rating, the

Planning Assessment shall include a Corrective Action Plan to address the Equipment Rating violations. The Corrective Action Plan shall:

2.8.1. List System deficiencies and the associated actions needed to achieve required System performance.

2.8.2. Be reviewed in subsequent annual Planning Assessments for continued validity and implementation status of identified System Facilities and Operating Procedures.

R3. For the steady state portion of the Planning Assessment, each Transmission Planner and Planning Coordinator shall perform studies for the Near-Term and Long-Term Transmission Planning Horizons in Requirement R2, Parts 2.1, and 2.2. The studies shall be based on computer simulation models using data provided in Requirement R1. *[Violation Risk Factor: Medium] [Time Horizon: Long-term Planning]*

3.1. Studies shall be performed for planning events to determine whether the BES meets the performance requirements in Table 1 based on the Contingency list created in Requirement R3, Part 3.4.

3.2. Studies shall be performed to assess the impact of the extreme events which are identified by the list created in Requirement R3, Part 3.5.

3.3. Contingency analyses for Requirement R3, Parts 3.1 & 3.2 shall:

3.3.1. Simulate the removal of all elements that the Protection System and other automatic controls are expected to disconnect for each Contingency without operator intervention. The analyses shall include the impact of subsequent:

- Tripping of generators where simulations show generator bus voltages or high side of the generation step up (GSU) voltages are less than known or assumed minimum generator steady state or ride through voltage limitations. Include in the assessment any assumptions made.
- Tripping of Transmission elements where relay loadability limits are exceeded.

3.3.2. Simulate the expected automatic operation of existing and planned devices designed to provide steady state control of electrical system quantities when such devices impact the study area. These devices may include equipment such as phase-shifting transformers, load tap changing transformers, and switched capacitors and inductors.

3.4. Those planning events in Table 1, that are expected to produce more severe System impacts on its portion of the BES, shall be identified and a list of those Contingencies to be evaluated for System performance in Requirement R3, Part 3.1 created. The rationale for those Contingencies selected for evaluation shall be available as supporting information.

3.4.1. The Planning Coordinator and Transmission Planner shall coordinate with adjacent Planning Coordinators and Transmission Planners to ensure that Contingencies on adjacent Systems which may impact their Systems are included in the Contingency list.

3.5. Those extreme events in Table 1 that are expected to produce more severe System impacts shall be identified and a list created of those events to be evaluated in Requirement R3, Part 3.2. The rationale for those Contingencies selected for evaluation shall be available as supporting information. If the analysis concludes

there is Cascading caused by the occurrence of extreme events, an evaluation of possible actions designed to reduce the likelihood or mitigate the consequences and adverse impacts of the event(s) shall be conducted.

R4. For the Stability portion of the Planning Assessment, as described in Requirement R2, Parts 2.4 and 2.5, each Transmission Planner and Planning Coordinator shall perform the Contingency analyses listed in Table 1. The studies shall be based on computer simulation models using data provided in Requirement R1. *[Violation Risk Factor: Medium] [Time Horizon: Long-term Planning]*

4.1. Studies shall be performed for planning events to determine whether the BES meets the performance requirements in Table 1 based on the Contingency list created in Requirement R4, Part 4.4.

4.1.1. For planning event P1: No generating unit shall pull out of synchronism. A generator being disconnected from the System by fault clearing action or by a Special Protection System is not considered pulling out of synchronism.

4.1.2. For planning events P2 through P7: When a generator pulls out of synchronism in the simulations, the resulting apparent impedance swings shall not result in the tripping of any Transmission system elements other than the generating unit and its directly connected Facilities.

4.1.3. For planning events P1 through P7: Power oscillations shall exhibit acceptable damping as established by the Planning Coordinator and Transmission Planner.

4.2. Studies shall be performed to assess the impact of the extreme events which are identified by the list created in Requirement R4, Part 4.5.

4.3. Contingency analyses for Requirement R4, Parts 4.1 and 4.2 shall :

4.3.1. Simulate the removal of all elements that the Protection System and other automatic controls are expected to disconnect for each Contingency without operator intervention. The analyses shall include the impact of subsequent:

- Successful high speed (less than one second) reclosing and unsuccessful high speed reclosing into a Fault where high speed reclosing is utilized.
- Tripping of generators where simulations show generator bus voltages or high side of the GSU voltages are less than known or assumed generator low voltage ride through capability. Include in the assessment any assumptions made.
- Tripping of Transmission lines and transformers where transient swings cause Protection System operation based on generic or actual relay models.

4.3.2. Simulate the expected automatic operation of existing and planned devices designed to provide dynamic control of electrical system quantities when such devices impact the study area. These devices may include equipment such as generation exciter control and power system stabilizers, static var compensators, power flow controllers, and DC Transmission controllers.

4.4. Those planning events in Table 1 that are expected to produce more severe System impacts on its portion of the BES, shall be identified, and a list created of those Contingencies to be evaluated in Requirement R4, Part 4.1. The rationale for those Contingencies selected for evaluation shall be available as supporting information.

4.4.1. Each Planning Coordinator and Transmission Planner shall coordinate with adjacent Planning Coordinators and Transmission Planners to ensure that Contingencies on adjacent Systems which may impact their Systems are included in the Contingency list.

4.5. Those extreme events in Table 1 that are expected to produce more severe System impacts shall be identified and a list created of those events to be evaluated in Requirement R4, Part 4.2. The rationale for those Contingencies selected for evaluation shall be available as supporting information. If the analysis concludes there is Cascading caused by the occurrence of extreme events, an evaluation of possible actions designed to reduce the likelihood or mitigate the consequences of the event(s) shall be conducted.

R5. Each Transmission Planner and Planning Coordinator shall have criteria for acceptable System steady state voltage limits, post-Contingency voltage deviations, and the transient voltage response for its System. For transient voltage response, the criteria shall at a minimum, specify a low voltage level and a maximum length of time that transient voltages may remain below that level. *[Violation Risk Factor: Medium] [Time Horizon: Long-term Planning]*

R6. Each Transmission Planner and Planning Coordinator shall define and document, within their Planning Assessment, the criteria or methodology used in the analysis to identify System instability for conditions such as Cascading, voltage instability, or uncontrolled islanding. *[Violation Risk Factor: Low] [Time Horizon: Long-term Planning]*

R7. Each Planning Coordinator, in conjunction with each of its Transmission Planners, shall determine and identify each entity's individual and joint responsibilities for performing the required studies for the Planning Assessment. *[Violation Risk Factor: Low] [Time Horizon: Long-term Planning]*

R8. Each Planning Coordinator and Transmission Planner shall distribute its Planning Assessment results to adjacent Planning Coordinators, adjacent Transmission Planners, and any functional entity that has a reliability related need and that functional entity submits a written request for the information. *[Violation Risk Factor: Low] [Time Horizon: Long-term Planning]*

8.1. If a recipient of the Planning Assessment results provides documented comments on the results, the respective Planning Coordinator or Transmission Planner shall provide a documented response to that recipient within 90 calendar days of receipt of those comments.

Table 1 – Steady State & Stability Performance Planning Events

Steady State & Stability:

a. The System shall remain stable. Cascading and uncontrolled islanding shall not occur.

b. Consequential Load Loss as well as generation loss is acceptable as a consequence of any event excluding P0.

c. Simulate the removal of all elements that Protection Systems and other controls are expected to automatically disconnect for each event.

d. Simulate Normal Clearing unless otherwise specified.

e. Planned System adjustments such as Transmission configuration changes and re-dispatch of generation are allowed if such adjustments are executable within the time duration applicable to the Facility Ratings.

Steady State Only:

f. Applicable Facility Ratings shall not be exceeded.

g. System steady state voltages and post-Contingency voltage deviations shall be within acceptable limits as established by the Planning Coordinator and the Transmission Planner.

h. Planning event P0 is applicable to steady state only.

i. The response of voltage sensitive Load that is disconnected from the System by end-user equipment associated with an event shall not be used to meet steady state performance requirements.

Stability Only:

j. Transient voltage response shall be within acceptable limits established by the Planning Coordinator and the Transmission Planner.

Category	Initial Condition	Event [1]	Fault Type [2]	BES Level [3]	Interruption of Firm Transmission Service Allowed [4]	Non-Consequential Load Loss Allowed
P0 No Contingency	Normal System	None	N/A	EHV, HV	No	No
P1 Single Contingency	Normal System	Loss of one of the following: 1. Generator 2. Transmission Circuit 3. Transformer [5] 4. Shunt Device [6]	3Ø	EHV, HV	No[9]	No[12]
		5. Single Pole of a DC line	SLG			
P2 Single Contingency	Normal System	1. Opening of a line section w/o a fault [7]	N/A	EHV, HV	No[9]	No[12]
		2. Bus Section Fault	SLG	EHV	No[9]	No
				HV	Yes	Yes
		3. Internal Breaker Fault [8]	SLG	EHV	No[9]	No

		(non-Bus-tie Breaker)		HV	Yes	Yes
		4. Internal Breaker Fault (Bus-tie Breaker)[8]	SLG	EHV, HV	Yes	Yes
Category	**Initial Condition**	**Event** [1]	**Fault Type** [2]	**BES Level** [3]	**Interruption of Firm Transmission Service Allowed** [4]	**Non-Consequential Load Loss Allowed**
P3 Multiple Contingency	Loss of generator unit followed by System adjustments[9]	Loss of one of the following: 1. Generator 2. Transmission Circuit 3. Transformer [5] 4. Shunt Device [6]	3Ø	EHV, HV	No[9]	No[12]
		5. Single pole of a DC line	SLG			
P4 Multiple Contingency *(Fault plus stuck breaker[10])*	Normal System	Loss of multiple elements caused by a stuck breaker [10](non-Bus-tie Breaker) attempting to clear a Fault on one of the following: 1. Generator 2. Transmission Circuit 3. Transformer [5] 4. Shunt Device [6] 5. Bus Section	SLG	EHV	No[9]	No
				HV	Yes	Yes
		6. Loss of multiple elements caused by a stuck breaker[10] (Bus-tie Breaker) attempting to clear a Fault on the associated bus	SLG	EHV, HV	Yes	Yes
P5 Multiple Contingency *(Fault plus relay failure to operate)*	Normal System	Delayed Fault Clearing due to the failure of a non-redundant relay[13] protecting the Faulted element to operate as designed, for one of the following: 1. Generator 2. Transmission Circuit 3. Transformer [5] 4. Shunt Device [6] 5. Bus Section	SLG	EHV	No[9]	No
				HV	Yes	Yes

P6 Multiple Contingency *(Two overlapping singles)*	Loss of one of the following followed by System adj.[9]: 1. Transmission Circuit 2. Transformer [5] 3. Shunt Device[6] 4. Single pole of a DC line	Loss of one of the following: 1. Transmission Circuit 2. Transformer [5] 3. Shunt Device [6]	3Ø	EHV, HV	Yes	Yes
		4. Single pole of a DC line	SLG	EHV, HV	Yes	Yes
P7 Multiple Contingency *(Common Structure)*	Normal System	The loss of: 1. Any two adjacent (vertically or horizontally) circuits on common structure [11] 2. Loss of a bipolar DC line	SLG	EHV, HV	Yes	Yes

Table 1 – Steady State & Stability Performance Extreme Events

Steady State & Stability

For all extreme events evaluated:

a. Simulate the removal of all elements that Protection Systems and automatic controls are expected to disconnect for each Contingency.

b. Simulate Normal Clearing unless otherwise specified.

Steady State

1. Loss of a single generator, Transmission Circuit, single pole of a DC Line, shunt device, or transformer forced out of service followed by another single generator, Transmission Circuit, single pole of a different DC Line, shunt device, or transformer forced out of service prior to System adjustments.
2. Local area events affecting the Transmission System such as:
   a. Loss of a tower line with three or more circuits.[11]
   b. Loss of all Transmission lines on a common Right-of-Way[11].
   c. Loss of a switching station or substation (loss of one voltage level plus transformers).
   d. Loss of all generating units at a generating station.
   e. Loss of a large Load or major Load center.
3. Wide area events affecting the Transmission System based on System topology such as:

Stability

1. With an initial condition of a single generator, Transmission circuit, single pole of a DC line, shunt device, or transformer forced out of service, apply a 3Ø fault on another single generator, Transmission circuit, single pole of a different DC line, shunt device, or transformer prior to System adjustments.
2. Local or wide area events affecting the Transmission System such as:
   a. 3Ø fault on generator with stuck breaker[10] or a relay failure[13] resulting in Delayed Fault Clearing.
   b. 3Ø fault on Transmission circuit with stuck breaker[10] or a relay failure[13] resulting in Delayed Fault Clearing.
   c. 3Ø fault on transformer with stuck breaker[10] or a relay failure[13] resulting in Delayed Fault Clearing.
   d. 3Ø fault on bus section with stuck breaker[10] or a relay failure[13] resulting in Delayed Fault Clearing.

a. Loss of two generating stations resulting from conditions such as: i. Loss of a large gas pipeline into a region or multiple regions that have significant gas-fired generation. ii. Loss of the use of a large body of water as the cooling source for generation. iii. Wildfires. iv. Severe weather, e.g., hurricanes, tornadoes, etc. v. A successful cyber attack. vi. Shutdown of a nuclear power plant(s) and related facilities for a day or more for common causes such as problems with similarly designed plants. b. Other events based upon operating experience that may result in wide area disturbances.	e. 3Ø internal breaker fault. f. Other events based upon operating experience, such as consideration of initiating events that experience suggests may result in wide area disturbances

Table 1 – Steady State & Stability Performance Footnotes (Planning Events and Extreme Events)
1. If the event analyzed involves BES elements at multiple System voltage levels, the lowest System voltage level of the element(s) removed for the analyzed event determines the stated performance criteria regarding allowances for interruptions of Firm Transmission Service and Non-Consequential Load Loss.
2. Unless specified otherwise, simulate Normal Clearing of faults. Single line to ground (SLG) or three-phase (3Ø) are the fault types that must be evaluated in Stability simulations for the event described. A 3Ø or a double line to ground fault study indicating the criteria are being met is sufficient evidence that a SLG condition would also meet the criteria.
3. Bulk Electric System (BES) level references include extra-high voltage (EHV) Facilities defined as greater than 300kV and high voltage (HV) Facilities defined as the 300kV and lower voltage Systems. The designation of EHV and HV is used to distinguish between stated performance criteria allowances for interruption of Firm Transmission Service and Non-Consequential Load Loss.
4. Curtailment of Conditional Firm Transmission Service is allowed when the conditions and/or events being studied formed the basis for the Conditional Firm Transmission Service.
5. For non-generator step up transformer outage events, the reference voltage, as used in footnote 1, applies to the low-side winding (excluding tertiary windings). For generator and Generator Step Up transformer outage events, the reference voltage applies to the BES connected voltage (high-side of the Generator Step Up transformer). Requirements which are applicable to transformers also apply to variable frequency transformers and phase shifting transformers.
6. Requirements which are applicable to shunt devices also apply to FACTS devices that are connected to ground.
7. Opening one end of a line section without a fault on a normally networked Transmission circuit such that the line is possibly serving Load radial from a single source point.
8. An internal breaker fault means a breaker failing internally, thus creating a System fault which must be cleared by protection on both sides of the breaker.
9. Curtailment of Firm Transmission Service, when coupled with the appropriate re-dispatch of resources obligated to re-dispatch, is allowed both as a System adjustment (as identified in the column entitled 'Initial Conditions') and a corrective action, where it can be demonstrated that Facilities remain within applicable Facility Ratings and those adjustments do not result in the shedding of any firm Demand. Where limited options for re-dispatch exist, sensitivities associated with the availability of those resources should be considered. Where Facilities external to the Transmission Planner's planning region are relied upon, Facility Ratings in those regions should also be respected.
10. A stuck breaker means that for a gang-operated breaker, all three phases of the breaker have remained closed. For an independent pole operated (IPO) or an independent pole tripping (IPT) breaker, only one pole is assumed to remain closed. A stuck breaker results in Delayed Fault Clearing.
11. Excludes circuits that share a common structure (Planning event P7, Extreme event steady state 2a) or common Right-of-Way (Extreme event, steady state 2b) for 1 mile or less.
12. Note: Non-Consequential Load Loss is being decided in Project 2010-11. When that project is finalized, the resolution will be copied here.
13. Applies to the following relay functions or types: pilot (#85), distance (#21), differential (#87), current (#50, 51, and 67), voltage (#27 & 59), directional (#32, & 67), and tripping (#86, & 94).

C. Measures

M1. Each Transmission Planner and Planning Coordinator shall provide evidence, in electronic or hard copy format, that it is maintaining System models within their respective area, using data consistent with MOD-010 and MOD-012, including items represented in the Corrective Action Plan, representing projected System conditions, and that the models represent the required information in accordance with Requirement R1.

M2. Each Transmission Planner and Planning Coordinator shall provide evidence, such as electronic or hard copies of its annual Planning Assessment, that it has prepared an annual Planning Assessment of its portion of the BES in accordance with Requirement R2.

M3. Each Transmission Planner and Planning Coordinator shall provide evidence, such as electronic or hard copies of the studies utilized in preparing the Planning Assessment, in accordance with Requirement R3.

M4. Each Transmission Planner and Planning Coordinator shall provide evidence, such as electronic or hard copies of the studies utilized in preparing the Planning Assessment in accordance with Requirement R4.

M5. Each Transmission Planner and Planning Coordinator shall provide evidence such as electronic or hard copies of the documentation specifying the criteria for acceptable System steady state voltage limits, post-Contingency voltage deviations, and the transient voltage response for its System in accordance with Requirement R5.

M6. Each Transmission Planner and Planning Coordinator shall provide evidence, such as electronic or hard copies of documentation specifying the criteria or methodology used in the analysis to identify System instability for conditions such as Cascading, voltage instability, or uncontrolled islanding that was utilized in preparing the Planning Assessment in accordance with Requirement R6.

M7. Each Planning Coordinator, in conjunction with each of its Transmission Planners, shall provide dated documentation on roles and responsibilities, such as meeting minutes, agreements, and e-mail correspondence that identifies that agreement has been reached on individual and joint responsibilities for performing the required studies and Assessments in accordance with Requirement R7.

M8. Each Planning Coordinator and Transmission Planner shall provide evidence, such as email notices, documentation of updated web pages, postal receipts showing recipient and date; or a demonstration of a public posting, that it has distributed its Planning Assessment results to adjacent Planning Coordinators, adjacent Transmission Planners, and any functional entity who has indicated a reliability need and that the Planning Coordinator or Transmission Planner has provided a documented response to comments received on Planning Assessment results within 90 calendar days of receipt of those comments in accordance with Requirement R8.

D. Compliance

1. Compliance Monitoring Process

1.1 Compliance Enforcement Authority

Regional Entity

1.2 Compliance Monitoring and Enforcement Processes:

Compliance Audits

Self-Certifications

Spot Checking

Compliance Violation Investigations

Self-Reporting

Complaints

1.3 Data Retention

The Transmission Planner and Planning Coordinator shall each retain data or evidence to show compliance as identified unless directed by its Compliance Enforcement Authority to retain specific evidence for a longer period of time as part of an investigation:

- The models utilized in the current Planning Assessment and one previous Planning Assessment in accordance with Requirement R1 and Measure M1.
- The Planning Assessments performed since the last compliance audit in accordance with Requirement R2 and Measure M2.
- The studies performed in support of its Planning Assessments since the last compliance audit in accordance with Requirement R3 and Measure M3.
- The studies performed in support of its Planning Assessments since the last compliance audit in accordance with Requirement R4 and Measure M4.
- The documentation specifying the criteria since the last compliance audit in accordance with Requirement R5 and Measure M5.
- The documentation specifying the criteria or methodology utilized in support of its Planning Assessments since the last compliance audit in accordance with Requirement R6 and Measure M6.
- The current, in force documentation for the agreement(s) on roles and responsibilities, as well as documentation for the agreements in force since the last compliance audit, in accordance with Requirement R7 and Measure M7.

The Planning Coordinator shall retain data or evidence to show compliance as identified unless directed by its Compliance Enforcement Authority to retain specific evidence for a longer period of time as part of an investigation:

- Three calendar years of the notifications employed in accordance with Requirement R8 and Measure M8.

If a Transmission Planner or Planning Coordinator is found non-compliant, it shall keep information related to the non-compliance until found compliant or the time periods specified above, whichever is longer.

1.4 Additional Compliance Information

None.

2. Violation Severity Levels

	Lower VSL	Moderate VSL	High VSL	Severe VSL
R1	The responsible entity's System model failed to represent one of the Requirement R1, Parts 1.1.1 through 1.1.6.	The responsible entity's System model failed to represent two of the Requirement R1, Parts 1.1.1 through 1.1.6. OR The responsible entity's System model did not use the latest data consistent with the data provided in accordance with the MOD-010 and MOD-012 standards and other sources, including items represented in the Corrective Action Plan.	The responsible entity's System model failed to represent three of the Requirement R1, Parts 1.1.1 through 1.1.6.	The responsible entity's System model failed to represent four or more of the Requirement R1, Parts 1.1.1 through 1.1.6. OR The responsible entity's System model did not represent projected System conditions as described in Requirement R1.
R2	The responsible entity failed to comply with Requirement R2, Part 2.6.	The responsible entity failed to comply with Requirement R2, Part 2.3 or Part 2.8.	The responsible entity failed to comply with one of the following Parts of Requirement R2: Part 2.1, Part 2.2, Part 2.4, Part 2.5, or Part 2.7.	The responsible entity failed to comply with two or more of the following Parts of Requirement R2: Part 2.1, Part 2.2, Part 2.4, or Part 2.7.
R3	The responsible entity did not identify planning events as described in Requirement R3, Part 3.4 or extreme events as described in Requirement R3, Part 3.5.	The responsible entity did not perform studies as specified in Requirement R3, Part 3.1 to determine that the BES meets the performance requirements for one of the categories (P2 through P7) in Table 1. OR The responsible entity did not perform studies as specified in Requirement R3, Part 3.2 to assess the impact of extreme events. OR The responsible entity did not base its	The responsible entity did not perform studies as specified in Requirement R3, Part 3.1 to determine that the BES meets the performance requirements for two of the categories (P2 through P7) in Table 1. OR The responsible entity did not perform Contingency analysis as described in Requirement R3, Part 3.3.	The responsible entity did not perform studies as specified in Requirement R3, Part 3.1 to determine that the BES meets the performance requirements for three or more of the categories (P2 through P7) in Table 1. OR The responsible entity did not perform studies to determine that the BES meets the performance requirements for the P0 or P1 categories in Table 1.

	Lower VSL	Moderate VSL	High VSL	Severe VSL
		studies on computer simulation models using data provided in Requirement R1.		
R4	The responsible entity did not identify planning events as described in Requirement R4, Part 4.4 or extreme events as described in Requirement R4, Part 4.5.	The responsible entity did not perform studies as specified in Requirement R4, Part 4.1 to determine that the BES meets the performance requirements for one of the categories (P1 through P7) in Table 1. OR The responsible entity did not perform studies as specified in Requirement R4, Part 4.2 to assess the impact of extreme events. OR The responsible entity did not base its studies on computer simulation models using data provided in Requirement R1.	The responsible entity did not perform studies as specified in Requirement R4, Part 4.1 to determine that the BES meets the performance requirements for two of the categories (P1 through P7) in Table 1. OR The responsible entity did not perform Contingency analysis as described in Requirement R4, Part 4.3.	The responsible entity did not perform studies as specified in Requirement R4, Part 4.1 to determine that the BES meets the performance requirements for three or more of the categories (P1 through P7) in Table 1.
R5	N/A	N/A	N/A	The responsible entity does not have criteria for acceptable System steady state voltage limits, post-Contingency voltage deviations, or the transient voltage response for its System.
R6	N/A	N/A	N/A	The responsible entity failed to define and document the criteria or methodology for System instability used within its analysis as described in Requirement R6.
R7	N/A	N/A	N/A	The Planning Coordinator, in conjunction with each of its

	Lower VSL	Moderate VSL	High VSL	Severe VSL
				Transmission Planners, failed to determine and identify individual or joint responsibilities for performing required studies.
R8	The responsible entity failed to distribute the results of its Planning Assessment to one of its adjacent Transmission Planners, one adjacent Planning Coordinator, or to one functional entity that has a reliability related need and that has submitted a written request for the information, respectively in accordance with Requirement R8.	N/A	The responsible entity failed to distribute the results of its Planning Assessment to more than one of its adjacent Transmission Planners, adjacent Planning Coordinators, or functional entities that have a reliability related need and that have submitted a written request for the information, respectively in accordance with Requirement R8.	The responsible entity failed to provide a documented response to a recipient of the Planning Assessment results who provided documented comments on the results within 90 calendar days of receipt of those comments in accordance with Requirement R8.

E. Regional Variances

None.

Version History

Version	Date	Action	Change Tracking
1	TBD	Revision of TPL-001-0 as per Project 2006-02; includes merging requirements of TPL-001-0, TPL-002-0, TPL-003-0, and TPL-004-0 into one, single, comprehensive, coordinated standard: TPL-001-1	Not employed due to scope of revision

Standard Development Roadmap

This section is maintained by the drafting team during the development of the standard and will be removed when the standard becomes effective.

Development Steps Completed:

1. Version 1 of SAR posted for comment from April 2, 2002 through May 3, 2002.
2. Version 2 of SAR posted for comment from May 5, 2004 through June 5, 2004.
3. Version 3 of SAR posted on November 18, 2005.
4. SAR approved on April 30, 2006.
5. Version 1 of Supplemental SAR posted for comment from February 15, 2007 through March 16, 2007.
6. Version 2 of Supplemental SAR posted on April 9, 2007.
7. Version 1 of revised standard(s) posted for comment on September 17, 2007.
8. Version 2 of the revised standards posted for comment on August 15, 2008.
9. Version 3 of the revised standards posted for comment on May 26, 2009.
10. Version 4 of the revised standards posted for comment on September 16, 2009.
11. Initial ballot completed on March 1, 2010.
~~11.~~12. Version 5 of the revised standard posted for comment on August 3, 2010.

Proposed Action Plan and Description of Current Draft:
The SDT has established a schedule of meetings and conference calls that allows for steady progress through the standards development process in anticipation of completing their assignment in 1Q10. The current draft is the second iteration of the revision of existing standards TPL-001 through TPL-006 and includes one revised standard, TPL-001-1, replacing TPL-001-0, TPL-002-0, TPL-003-0 and TPL-004-0. TPL-005 & -006 issues are addressed in this fifth draft and those standards will also be replaced by TPL-001-2.

Future Development Plan:

Anticipated Actions	Anticipated Date
~~Post fifth version of standard.~~	~~3Q10~~
1. Conduct ballot	TBD
~~Respond to comments and determine next step~~	~~TBD~~
2. Submit standard(s) to BOT.	2Q11
3. Submit to regulatory authorities for approval.	3Q11

Definitions of Terms Used in Standard

This section includes all newly defined or revised terms used in the proposed standard. Terms already defined in the Reliability Standards Glossary of Terms are not repeated here. New or revised definitions listed below become approved when the proposed standard is approved. When the standard becomes effective, these defined terms will be removed from the individual standard and added to the Glossary.

Bus-tie Breaker: A circuit breaker that is positioned to connect two individual substation bus configurations.

Consequential Load Loss: All Load that is no longer served by the Transmission system as a result of Transmission Facilities being removed from service by a Protection System operation designed to isolate the fault.

Long-Term Transmission Planning Horizon: Transmission planning period that covers years six through ten or beyond when required to accommodate any known longer lead time projects that may take longer than ten years to complete.

Near-Term Transmission Planning Horizon: Transmission planning period that covers Years One through five.

Non-Consequential Load Loss: Non-Interruptible Load loss that does not include: (1) Consequential Load Loss, (2) the response of voltage sensitive Load, or (3) Load that is disconnected from the System by end-user equipment.

Planning Assessment: Documented evaluation of future Transmission system performance and Corrective Action Plans to remedy identified deficiencies.

Year One: The first twelve month period that a Planning Coordinator or a Transmission Planner is responsible for assessing. For the Planning Assessment started in a given calendar year, Year One ~~must~~ includes the forecasted peak Load period for one of the following two calendar years. For example, if a Planning Assessment was started in 2011, then Year One ~~must~~ includes the forecasted peak Load period for either 2012 or 2013.

A. Introduction

1. **Title:** **Transmission System Planning Performance Requirements**

2. **Number:** **TPL-001-2**

3. **Purpose:** Establish Transmission system planning performance requirements within the planning horizon to develop a Bulk Electric System (BES) that will operate reliably over a broad spectrum of System conditions and following a wide range of probable Contingencies.

4. **Applicability:**

   4.1. Functional Entity

   4.1.1. Planning Coordinator.

   4.1.2. Transmission Planner.

5. **Effective Date:** Requirements R1 and R7 shall become effective on the first day of the first calendar quarter, 12 months after applicable regulatory approval. In those jurisdictions where no regulatory approval is required, Requirements R1 and R7 become effective on the first day of the first calendar quarter, 12 months after Board of Trustees adoption.

   Except as indicated below, Requirements R2 through R6 and Requirement R8 shall become effective on the first day of the first calendar quarter, 24 months after applicable regulatory approval. In those jurisdictions where no regulatory approval is required, all requirements, except as noted below, go into effect on the first day of the first calendar quarter, 24 months after Board of Trustees adoption.

   For 84 calendar months beginning the first day of the first calendar quarter following applicable regulatory approval, or in those jurisdictions where no regulatory approval is required on the first day of the first calendar quarter 84 months after Board of Trustees adoption, Corrective Action Plans applying to the following categories of Contingencies and events identified in TPL-001-2, Table 1 are allowed to include Non-Consequential Load Loss and curtailment of Firm Transmission Service (in accordance with Requirement R2, Part 2.7.3.) that would not otherwise be permitted by the requirements of TPL-001-2:

   - P1-2 (for controlled interruption of electric supply to local network customers connected to or supplied by the Faulted element)
   - P1-3 (for controlled interruption of electric supply to local network customers connected to or supplied by the Faulted element)
   - P2-1, P2-2 (above 300 kV)
   - P2-3 (above 300 kV)
   - P3-1 through P3-5
   - P4-1 through P4-5 (above 300 kV)
   - P5 (above 300 kV)

B. Requirements

R1. Each Transmission Planner and Planning Coordinator shall maintain System models within its respective area for performing the studies needed to complete its Planning Assessment. The models shall use ~~the latest~~ data consistent with that provided in accordance with the MOD-010 and MOD-012 standards, supplemented by other sources as needed, including items represented in the Corrective Action Plan, and shall represent projected System conditions. This establishes P0 as the normal ~~s~~System condition in Table 1. *[Violation Risk Factor: Medium] [Time Horizon: Long-term Planning]*

1.1. System models shall represent:

1.1.1. Existing Facilities

1.1.2. Known outage(s) of generation or Transmission Facility(ies) with a duration of at least six months.

1.1.3. New planned Facilities and changes to existing Facilities

1.1.4. Real and reactive Load forecasts

1.1.5. Known commitments for Firm Transmission Service and Interchange

1.1.6. Resources (supply or demand side) required for Load

R2. Each Transmission Planner and Planning Coordinator shall prepare an annual Planning Assessment of its portion of the BES. This Planning Assessment shall use current or qualified past studies (as indicated in Requirement R2, Part 2.6), document assumptions, summarize documented results, and cover steady state analyses, short circuit analyses, and Stability analyses. *[Violation Risk Factor: Medium] [Time Horizon: Long-term Planning]*

2.1. The Near-Term Transmission Planning Horizon portion of the steady state analysis shall be assessed annually and be supported by current annual ~~-~~studies or qualified past studies as indicated in Requirement R2, Part 2.6, as follows:

2.1.1. System peak Load for either Year One or year two, and for year five.

2.1.2. System Off-Peak Load for one of the five years.

2.1.3. P1 events in Table 1, with known outages modeled as in Requirement R1, Part 1.1.2, under those System peak or Off-Peak conditions when known outages are scheduled.

2.1.4. For each of the studies described in Requirement R2, Parts 2.1.1 and 2.1.2, sensitivity case(s) shall be utilized to demonstrate the impact of changes to the basic assumptions used in the model. To accomplish this, the sensitivity analysis in the Planning Assessment must vary one or more of the following conditions by a sufficient amount to stress the System within a range of credible conditions that demonstrate a measurable change in System response ~~performance~~:

- Real and reactive forecasted Load.
- Expected transfers.
- Expected in service dates of new or modified Transmission Facilities.
- Reactive resource capability.
- Generation additions, retirements, or other dispatch scenarios.
- Controllable Loads and Demand Side Management.
- Duration or timing of ~~planned~~ known Transmission outages.

2.1.5. When an entity's spare equipment strategy could result in the unavailability of major Transmission equipment that has a lead time of one year or more (such as a transformer), the impact of this possible unavailability on System performance shall be studied. The studies shall be performed for the P0, P1, and P2 categories identified in Table 1 with the conditions that the System is expected to experience during the possible unavailability of the long lead time equipment.

2.2. The Long-Term Transmission Planning Horizon portion of the steady state analysis shall be assessed annually and be supported by the following annual current study, supplemented with qualified past studies as indicated in Requirement R2, Part 2.6:

2.2.1. A current study assessing expected System peak Load conditions for one of the years in the Long-Term Transmission Planning Horizon and the rationale for why that year was selected.

2.3. The short circuit analysis portion of the Planning Assessment shall be conducted annually addressing the Near-Term Transmission Planning Horizon and can be supported by current or past studies as qualified in Requirement R2, Part 2.6. The analysis shall be used to determine whether circuit breakers have interrupting capability for Faults that they will be expected to interrupt using the System short circuit model with any planned generation and Transmission Facilities in service which could impact the study area.

2.4. The Near-Term Transmission Planning Horizon portion of the Stability analysis shall be assessed annually and be supported by current or past studies as qualified in Requirement R2, Part2.6. The following studies are required:

2.4.1. System peak Load for one of the five years. System peak Load levels shall include a Load model which represents the expected dynamic behavior of Loads that could impact the study area, considering the behavior of induction motor Loads. An aggregate System Load model which represents the overall dynamic behavior of the Load is acceptable.

2.4.2. System Off-Peak Load for one of the five years.

2.4.3. For each of the studies described in Requirement R2, Parts 2.4.1 and 2.4.2, sensitivity case(s) shall be utilized to demonstrate the impact of changes to the basic assumptions used in the model. To accomplish this, the sensitivity analysis in the Planning Assessment must vary one or more of the following conditions by a sufficient amount to stress the System within a range of credible conditions that demonstrate a measurable change in performance:

- Load level, Load forecast, or dynamic Load model assumptions.
- Expected transfers.
- Expected in service dates of new or modified Transmission Facilities.
- Reactive resource capability.
- Generation additions, retirements, or other dispatch scenarios.

2.5. The Long-Term Transmission Planning Horizon portion of the Stability analysis shall be assessed to address the impact of proposed material generation additions or changes in that timeframe and be supported by current or past studies as qualified in Requirement R2, Part2.6 and shall include documentation to support the technical rationale for determining material changes.

2.6. Past studies may be used to support the Planning Assessment if they meet the following requirements:

2.6.1. For steady state, short circuit, or Stability analysis: the study shall be five calendar years old or less, unless a technical rationale can be provided to demonstrate that the results of an older study are still valid.

2.6.2. For steady state, short circuit, or Stability analysis: no material changes have occurred to the System represented in the study. ~~shall not include any material changes unless a technical rationale can be provided to demonstrate that System changes do not impact the performance results in the study area.~~ Include documentation to support the technical rationale for determining material changes.

2.7. For planning events shown in Table 1, when the analysis indicates an inability of the System to meet the performance requirements in Table 1, the Planning Assessment shall include Corrective Action Plan(s) addressing how the performance requirements will be met. Revisions to the Corrective Action Plan(s) are allowed in subsequent Planning Assessments but the planned System shall continue to meet the performance requirements in Table 1. Corrective Action Plan(s) do not need to be developed solely to meet the performance requirements for a single sensitivity case analyzed in accordance with Requirements R2, Parts 2.1.4 and 2.4.3. The Corrective Action Plan(s) shall:

2.7.1. List System deficiencies and the associated actions needed to achieve required System performance. Examples of ~~S~~such actions ~~may~~ include:

- Installation, modification, retirement, or removal of Transmission and generation Facilities and any associated equipment.
- Installation, modification, or removal of Protection Systems or Special Protection Systems
- Installation or modification of automatic generation tripping as a response to a single or multiple Contingency to mitigate Stability performance violations.
- Installation or modification of manual and automatic generation runback/tripping as a response to a single or multiple Contingency to mitigate steady state performance violations.
- Use of Operating Procedures specifying how long they will be needed as part of the Corrective Action Plan.
- Use of rate applications, DSM, new technologies, or other initiatives.

2.7.2. Include actions to resolve performance deficiencies identified in multiple sensitivity studies or provide a rationale for why actions were not necessary.

2.7.3. If situations arise that are beyond the control of the Transmission Planner or Planning Coordinator that prevent the implementation of a Corrective Action Plan in the required timeframe, then the Transmission Planner or Planning Coordinator is permitted to utilize Non-Consequential Load Loss and curtailment of Firm Transmission Service to correct the situation that would normally not be permitted in Table 1, provided that the Transmission Planner or Planning Coordinator documents that they are taking actions to resolve the situation. The Transmission Planner or Planning Coordinator shall document the situation causing the problem, alternatives evaluated, and the use of Non-Consequential Load Loss or curtailment of Firm Transmission Service.

2.7.4. Be reviewed in subsequent annual Planning Assessments for continued validity and implementation status of identified System Facilities and Operating Procedures.

2.8. For short circuit analysis, if the short circuit current interrupting duty on circuit breakers determined in Requirement R2, Part 2.3 exceeds their Equipment Rating, the Planning Assessment shall include a Corrective Action Plan to address the Equipment Rating violations. The Corrective Action Plan shall:

2.8.1. List System deficiencies and the associated actions needed to achieve required System performance.

2.8.2. Be reviewed in subsequent annual Planning Assessments for continued validity and implementation status of identified System Facilities and Operating Procedures.

R3. For the steady state portion of the Planning Assessment, each Transmission Planner and Planning Coordinator shall perform studies for the Near-Term and Long-Term Transmission Planning Horizons in Requirement R2, Parts 2.1, and 2.2. The studies shall be based on computer simulation models using data provided in Requirement R1. *[Violation Risk Factor: Medium] [Time Horizon: Long-term Planning]*

3.1. Studies shall be performed for planning events to determine whether the BES meets the performance requirements in Table 1 based on the Contingency list created in Requirement R3, Part 3.4.

3.2. Studies shall be performed to assess the impact of the extreme events which are identified by the list created in Requirement R3, Part 3.5.

3.3. Contingency analyses for Requirement R3, Parts 3.1 & 3.2 shall:

3.3.1. Simulate the removal of all elements that the Protection System and other automatic controls are expected to disconnect for each Contingency without operator intervention. The analyses shall include the impact of subsequent:

- Tripping of generators where simulations show generator bus voltages or high side of the generation step up (GSU) voltages are less than known or assumed minimum generator steady state or ride through voltage limitations. Include in the assessment any assumptions made.
- Tripping of Transmission elements where relay loadability limits are exceeded.

3.3.2. Simulate the expected automatic operation of existing and planned devices designed to provide steady state control of electrical system quantities when such devices impact the study area. These devices may include equipment such as phase-shifting transformers, load tap changing transformers, and switched capacitors and inductors.

3.4. Those planning events in Table 1, that are expected to produce more severe System impacts on its portion of the BES, shall be identified and a list of those Contingencies to be evaluated for System performance in Requirement R3, Part 3.1 created. The rationale for those Contingencies selected for evaluation shall be available as supporting information.

3.4.1. The Planning Coordinator and Transmission Planner shall coordinate with adjacent Planning Coordinators and Transmission Planners to ensure that Contingencies on adjacent Systems which may impact their Systems are included in the Contingency list.

3.5. Those extreme events in Table 1 that are expected to produce more severe System impacts shall be identified and a list created of those events to be evaluated in

Requirement R3, Part 3.2. The rationale for those Contingencies selected for evaluation shall be available as supporting information. If the analysis concludes there is Cascading caused by the occurrence of extreme events, an evaluation of possible actions designed to reduce the likelihood or mitigate the consequences and adverse impacts of the event(s) shall be conducted.

R4. For the Stability portion of the Planning Assessment, as described in Requirement R2, Parts 2.4 and 2.5, each Transmission Planner and Planning Coordinator shall perform the Contingency analyses listed in Table 1. The studies shall be based on computer simulation models using data provided in Requirement R1. *[Violation Risk Factor: Medium] [Time Horizon: Long-term Planning]*

4.1. Studies shall be performed for planning events to determine whether the BES meets the performance requirements in Table 1 based on the Contingency list created in Requirement R4, Part 4.4.

4.1.1. For planning event P1: No generating unit shall pull out of synchronism. A generator being disconnected from the System by fault clearing action or by a Special Protection System is not considered pulling out of synchronism.

4.1.2. For planning events P2 through P7: When a generator pulls out of synchronism in the simulations, the resulting apparent impedance swings shall not result in the tripping of any Transmission system elements other than the generating unit and its directly connected Facilities.

4.1.3. For planning events P1 through P7: Power oscillations shall exhibit acceptable damping as established by the Planning Coordinator and Transmission Planner.

4.2. Studies shall be performed to assess the impact of the extreme events which are identified by the list created in Requirement R4, Part 4.5.

4.3. Contingency analyses for Requirement R4, Parts 4.1 and 4.2 shall :

4.3.1. Simulate the removal of all elements that the Protection System and other automatic controls are expected to disconnect for each Contingency without operator intervention. The analyses shall include the impact of subsequent:

- Successful high speed (less than one second) reclosing and unsuccessful high speed reclosing into a Fault where high speed reclosing is utilized.
- Tripping of generators where simulations show generator bus voltages or high side of the GSU voltages are less than known or assumed generator low voltage ride through capability. Include in the assessment any assumptions made.
- Tripping of Transmission lines and transformers where transient swings cause Protection System operation based on generic or actual relay models.

4.3.2. Simulate the expected automatic operation of existing and planned devices designed to provide dynamic control of electrical system quantities when such devices impact the study area. These devices may include equipment such as generation exciter control and power system stabilizers, static var compensators, power flow controllers, and DC Transmission controllers.

4.4. Those planning events in Table 1 that are expected to produce more severe System impacts on its portion of the BES, shall be identified, and a list created of those

Contingencies to be evaluated in Requirement R4, Part 4.1. The rationale for those Contingencies selected for evaluation shall be available as supporting information.

4.4.1. Each Planning Coordinator and Transmission Planner shall coordinate with adjacent Planning Coordinators and Transmission Planners to ensure that Contingencies on adjacent Systems which may impact their Systems are included in the Contingency list.

4.5. Those extreme events in Table 1 that are expected to produce more severe System impacts shall be identified and a list created of those events to be evaluated in Requirement R4, Part 4.2. The rationale for those Contingencies selected for evaluation shall be available as supporting information. If the analysis concludes there is Cascading caused by the occurrence of extreme events, an evaluation of possible actions designed to reduce the likelihood or mitigate the consequences of the event(s) shall be conducted.

R5. Each Transmission Planner and Planning Coordinator shall have criteria for acceptable System steady state voltage limits, post-Contingency voltage deviations, and the transient voltage response for its System. For transient voltage response, the criteria shall at a minimum, specify a low voltage level and a maximum length of time that transient voltages may remain below that level. *[Violation Risk Factor: Medium] [Time Horizon: Long-term Planning]*

R6. Each Transmission Planner and Planning Coordinator shall define and document, within their Planning Assessment, ~~any~~ the criteria or methodology used in the analysis to identify System instability for conditions such as Cascading, voltage instability, or uncontrolled islanding. *[Violation Risk Factor: Low] [Time Horizon: Long-term Planning]*

R7. Each Planning Coordinator, in conjunction with each of its Transmission Planners, shall determine and identify each entity's individual and joint responsibilities for performing the required studies for the Planning Assessment. *[Violation Risk Factor: Low] [Time Horizon: Long-term Planning]*

R8. Each Planning Coordinator and Transmission Planner shall distribute its Planning Assessment results to adjacent Planning Coordinators, adjacent Transmission Planners, and any functional entity that has a reliability related need and that functional entity submits a written request for the information. *[Violation Risk Factor: Low] [Time Horizon: Long-term Planning]*

8.1. If a recipient of the Planning Assessment results provides documented comments on the results, the respective Planning Coordinator or Transmission Planner shall provide a documented response to that recipient within 90 calendar days of receipt of those comments.

Table 1 – Steady State & Stability Performance Planning Events

Steady State & Stability:

a. The System shall remain stable. Cascading and uncontrolled islanding shall not occur.

b. Consequential Load Loss as well as generation loss is acceptable as a consequence of any event excluding P0.

c. Simulate the removal of all elements that Protection Systems and other controls are expected to automatically disconnect for each event.

d. Simulate Normal Clearing unless otherwise specified.

e. Planned System adjustments such as Transmission configuration changes and re-dispatch of generation are allowed if such adjustments are executable within the time duration applicable to the Facility Ratings.

Steady State Only:

f. Applicable Facility Ratings shall not be exceeded.

g. System steady state voltages and post-Contingency voltage deviations shall be within acceptable limits as established by the Planning Coordinator and the Transmission Planner.

h. Planning event P0 is applicable to steady state only.

i. The response of voltage sensitive Load ~~including Load~~ that is disconnected from the System by end-user equipment associated with an event shall not be used to meet steady state performance requirements.

Stability Only:

j. Transient voltage response shall be within acceptable limits established by the Planning Coordinator and the Transmission Planner.

Category	Initial ~~System~~ Condition	Event [1]	Fault Type [2]	BES Level [3]	Interruption of Firm Transmission Service Allowed [4]	Non-Consequential Load Loss Allowed
P0 No Contingency	Normal System	None	N/A	EHV, HV	No[9]	No
P1 Single Contingency	Normal System	Loss of one of the following: 1. Generator 2. Transmission Circuit 3. Transformer [5] 4. Shunt Device [6]	3Ø	EHV, HV	No[9]	No[12]
		5. Single Pole of a DC line	SLG			
P2 Single Contingency	Normal System	1. Opening of a line section w/o a fault [7]	N/A	EHV, HV	No[9]	No[12]
		2. Bus Section Fault	SLG	EHV	No[9]	No
				HV	Yes	Yes
		3. Internal Breaker Fault [8]	SLG	EHV	No[9]	No

		(~~N~~non-Bus-tie Breaker)		HV	Yes	Yes
		4. Internal Breaker Fault (Bus-tie Breaker)[8]	SLG	EHV, HV	Yes	Yes
Category	**Initial ~~System~~ Condition**	**Event [1]**	**Fault Type [2]**	**BES Level [3]**	**Interruption of Firm Transmission Service Allowed [4]**	**Non-Consequential Load Loss Allowed**
P3 Multiple Contingency	Loss of generator unit followed by System adjustments[9]	Loss of one of the following: 1. Generator 2. Transmission Circuit 3. Transformer [5] 4. Shunt Device [6]	3Ø	EHV, HV	No[9]	No[12]
		5. Single pole of a DC line	SLG			
P4 Multiple Contingency *(Fault plus stuck breaker[10])*	Normal System	Loss of multiple elements caused by a stuck breaker [10](non-Bus-tie Breaker) attempting to clear a Fault on one of the following: 1. Generator 2. Transmission Circuit 3. Transformer [5] 4. Shunt Device [6] 5. Bus Section	SLG	EHV	No[9]	No
				HV	Yes	Yes
		6. Loss of multiple elements caused by a stuck breaker[10] (Bus-tie Breaker) attempting to clear a Fault on the associated bus	SLG	EHV, HV	Yes	Yes
P5 Multiple Contingency *(Fault plus relay failure to operate)*	Normal System	Delayed Fault Clearing due to the failure of a non-redundant relay[13] protecting the Faulted element to operate as designed, for one of the following: 1. Generator 2. Transmission Circuit 3. Transformer [5] 4. Shunt Device [6] 5. Bus Section	SLG	EHV	No[9]	No
				HV	Yes	Yes

P6 Multiple Contingency *(Two overlapping singles)*	Loss of one of the following followed by System adj.[9]: 1. Transmission Circuit 2. Transformer [5] 3. Shunt Device[6] 4. Single pole of a DC line	Loss of one of the following: 1. Transmission Circuit 2. Transformer [5] 3. Shunt Device [6]	3Ø	EHV, HV	Yes	Yes
		4. Single pole of a DC line	SLG	EHV, HV	Yes	Yes
P7 Multiple Contingency *(Common Structure)*	Normal System	The loss of: 1. Any two adjacent (vertically or horizontally) circuits on common structure [11] 2. Loss of a bipolar DC line	SLG	EHV, HV	Yes	Yes

Table 1 – Steady State & Stability Performance Extreme Events

Steady State & Stability

For all extreme events evaluated:

a. Simulate the removal of all elements that Protection Systems and automatic controls are expected to disconnect for each Contingency.

b. Simulate Normal Clearing unless otherwise specified.

Steady State

1. Loss of a single generator, Transmission Circuit, single pole of a DC Line, shunt device, or transformer forced out of service followed by another single generator, Transmission Circuit, single pole of a different DC Line, shunt device, or transformer forced out of service prior to System adjustments.
2. Local area events affecting the Transmission System such as:
   a. Loss of a tower line with three or more circuits.[11]
   b. Loss of all Transmission lines on a common Right-of-Way[11].
   c. Loss of a switching station or substation (loss of one voltage level plus transformers).
   d. Loss of all generating units at a generating station.
   e. Loss of a large Load or major Load center.
3. Wide area events affecting the Transmission System based on System topology such as:

Stability

1. With an initial condition of a single generator, Transmission circuit, single pole of a DC line, shunt device, or transformer forced out of service, apply a 3Ø fault on another single generator, Transmission circuit, single pole of a different DC line, shunt device, or transformer prior to System adjustments.
2. Local or wide area events affecting the Transmission System such as:
   a. 3Ø fault on generator with stuck breaker[10] or a ~~Protection System~~ relay failure[13] resulting in Delayed Fault Clearing.
   b. 3Ø fault on Transmission circuit with stuck breaker[10] or a ~~Protection System~~ relay failure[13] resulting in Delayed Fault Clearing.
   c. 3Ø fault on transformer with stuck breaker[10] or a ~~Protection System~~ relay failure[13] resulting in Delayed Fault Clearing.
   d. 3Ø fault on bus section with stuck breaker[10] or a ~~Protection~~

a. Loss of two generating stations resulting from conditions such as: i. Loss of a large gas pipeline into a region or multiple regions that have significant gas-fired generation. ii. Loss of the use of a large body of water as the cooling source for generation. iii. Wildfires. iv. Severe weather, e.g., hurricanes, tornadoes, etc. v. A successful cyber attack. vi. Shutdown of a nuclear power plant(s) and related facilities for a day or more for common causes such as problems with similarly designed plants. b. Other events based upon operating experience that may result in wide area disturbances.	~~System~~ relay failure[13] resulting in Delayed Fault Clearing. e. 3Ø internal breaker fault. f. Other events based upon operating experience, such as consideration of initiating events that experience suggests may result in wide area disturbances

Table 1 – Steady State & Stability Performance Footnotes (Planning Events and Extreme Events)
1. If the event analyzed involves BES elements at multiple System voltage levels, the lowest System voltage level of the element(s) removed for the analyzed event determines the stated performance criteria regarding allowances for interruptions of Firm Transmission Service and Non-Consequential Load Loss.
2. Unless specified otherwise, simulate Normal Clearing of faults. Single line to ground (SLG) or three-phase (3Ø) are the fault types that must be evaluated in Stability simulations for the event described. A 3Ø or a double line to ground fault study indicating the criteria are being met is sufficient evidence that a SLG condition would also meet the criteria.
3. Bulk Electric System (BES) level references include extra-high voltage (EHV) Facilities defined as greater than 300kV and high voltage (HV) Facilities defined as the 300kV and lower voltage Systems. The designation of EHV and HV is used to distinguish between stated performance criteria allowances for interruption of Firm Transmission Service and Non-Consequential Load Loss.
4. Curtailment of Conditional Firm Transmission Service is allowed when the conditions and/or events being studied formed the basis for the Conditional Firm Transmission Service.
5. For non-generator step up transformer outage events, the reference voltage, as used in footnote 1, applies to the low-side winding (excluding tertiary windings). For generator and Generator Step Up transformer outage events, the reference voltage applies to the BES connected voltage (high-side of the Generator Step Up transformer). Requirements which are applicable to transformers also apply to variable frequency transformers and phase shifting transformers.
6. Requirements which are applicable to shunt devices also apply to FACTS devices that are connected to ground.
7. Opening one end of a line section without a fault on ~~-~~a normally networked Transmission circuit such that the line is possibly serving Load radial from a single source point.
8. An internal breaker fault means a breaker failing internally, thus creating a System fault which must be cleared by protection on both sides of the breaker.
9. Curtailment of Firm Transmission Service, when coupled with the appropriate re-dispatch of resources obligated to re-dispatch, is allowed both as a System adjustment (as identified in the column entitled 'Initial ~~System~~ Conditions') and a corrective action, where it can be demonstrated that Facilities remain within applicable Facility Ratings and those adjustments do not result in the shedding of any firm Demand. Where limited options for re-dispatch exist, sensitivities associated with the availability of those resources should be considered. Where Facilities external to the Transmission Planner's planning region are relied upon, Facility Ratings in those regions should also be respected.
10. A stuck breaker means that for a gang-operated breaker, all three phases of the breaker have remained closed. For an independent pole operated (IPO) or an independent pole tripping (IPT) breaker, only one pole is assumed to remain closed. A stuck breaker results in Delayed Fault Clearing.
11. Excludes circuits that share a common structure (Planning event P7, Extreme event steady state 2a) or common Right-of-Way (Extreme event, steady state 2b) for 1 mile or less.
12. Note: Non-Consequential Load Loss is being decided in Project 2010-11. When that project is finalized, the resolution will be copied here.
13. Applies to the following relay functions or types: pilot (#85), distance (#21), differential (#87), current (#50, 51, and 67), voltage (#27 & 59), directional (#32, & 67), and tripping (#86, & 94).

C. Measures

M1. Each Transmission Planner and Planning Coordinator shall provide evidence, in electronic or hard copy format, that it is maintaining System models within their respective area, using ~~the latest~~ data consistent with MOD-010 and MOD-012, including items represented in the Corrective Action Plan, representing projected System conditions, and that the models represent the required information in accordance with Requirement R1.

M2. Each Transmission Planner and Planning Coordinator shall provide evidence, such as electronic or hard copies of its annual Planning Assessment, that it has prepared an annual Planning Assessment of its portion of the BES in accordance with Requirement R2.

M3. Each Transmission Planner and Planning Coordinator shall provide evidence, such as electronic or hard copies of the studies utilized in preparing the Planning Assessment, in accordance with Requirement R3.

M4. Each Transmission Planner and Planning Coordinator shall provide evidence, such as electronic or hard copies of the studies utilized in preparing the Planning Assessment in accordance with Requirement R4.

M5. Each Transmission Planner and Planning Coordinator shall provide evidence such as electronic or hard copies of the documentation specifying the criteria for acceptable System steady state voltage limits, post-Contingency voltage deviations, and the transient voltage response for its System in accordance with Requirement R5.

M6. Each Transmission Planner and Planning Coordinator shall provide evidence, such as electronic or hard copies of documentation specifying ~~any~~the criteria or methodology used in the analysis to identify System instability for conditions such as Cascading, voltage instability, or uncontrolled islanding that was utilized in preparing the Planning Assessment in accordance with Requirement R6.

M7. Each Planning Coordinator, in conjunction with each of its Transmission Planners, shall provide dated documentation on roles and responsibilities, such as meeting minutes, agreements, and e-mail correspondence that identifies that agreement has been reached on individual and joint responsibilities for performing the required studies and Assessments in accordance with Requirement R7.

M8. Each Planning Coordinator and Transmission Planner shall provide evidence, such as email notices, documentation of updated web pages, postal receipts showing recipient and date; or a demonstration of a public posting, that it has ~~-~~distributed its Planning Assessment results to adjacent Planning Coordinators, adjacent Transmission Planners, and any functional entity who has indicated a reliability need and that the ~~functional entity~~ Planning Coordinator or Transmission Planner has provided a documented response to comments received on Planning Assessment results within 90 calendar days of receipt of those comments in accordance with Requirement R8.

D. Compliance

1. Compliance Monitoring Process

1.1 Compliance Enforcement Authority

Regional Entity

~~**1.2 Compliance Monitoring Period and Reset Timeframe**~~

~~Not applicable.~~

~~1.3~~1.2 Compliance Monitoring and Enforcement Processes:

Compliance Audits

Self-Certifications

Spot Checking

Compliance Violation Investigations

Self-Reporting

Complaints

~~1.4~~1.3 Data Retention

The Transmission Planner and Planning Coordinator shall each retain data or evidence to show compliance as identified unless directed by its Compliance Enforcement Authority to retain specific evidence for a longer period of time as part of an investigation:

- The models utilized in the current Planning Assessment and one previous Planning Assessment in accordance with Requirement R1 and Measure M1.
- The Planning Assessments performed since the last compliance audit in accordance with Requirement R2 and Measure M2.
- The studies performed in support of its Planning Assessments since the last compliance audit in accordance with Requirement R3 and Measure M3.
- The studies performed in support of its Planning Assessments since the last compliance audit in accordance with Requirement R4 and Measure M4.
- The documentation specifying the criteria since the last compliance audit in accordance with Requirement R5 and Measure M5.
- The documentation specifying ~~any~~the criteria or methodology utilized in support of its Planning Assessments since the last compliance audit in accordance with Requirement R6 and Measure M6.
- The current, in force documentation for the agreement(s) on roles and responsibilities, as well as ~~all such~~ documentation for the agreements in force since the last compliance audit, in accordance with Requirement R7 and Measure M7.

The Planning Coordinator shall retain data or evidence to show compliance as identified unless directed by its Compliance Enforcement Authority to retain specific evidence for a longer period of time as part of an investigation:

- Three calendar years of the notifications employed in accordance with Requirement R8 and Measure M8.

If a Transmission Planner or Planning Coordinator is found non-compliant, it shall keep information related to the non-compliance until found compliant or the time periods specified above, whichever is longer.

~~1.5~~1.4 Additional Compliance Information

None.

2. Violation Severity Levels

	Lower VSL	Moderate VSL	High VSL	Severe VSL
R1	The responsible entity's System model failed to represent one of the Requirement R1, Parts 1.1.1 through 1.1.6.	The responsible entity's System model failed to represent two of the Requirement R1, Parts 1.1.1 through 1.1.6. OR The responsible entity's System model did not use the latest data consistent with the data provided in accordance with the MOD-010 and MOD-012 standards and other sources, including items represented in the Corrective Action Plan.	The responsible entity's System model failed to represent three of the Requirement R1, Parts 1.1.1 through 1.1.6.	The responsible entity's System model failed to represent four or more of the Requirement R1, Parts 1.1.1 through 1.1.6. OR The responsible entity's System model did not represent projected System conditions as described in Requirement R1.
R2	The responsible entity failed to comply with Requirement R2, Part 2.6.	The responsible entity failed to comply with Requirement R2, Part 2.3 or Part 2.8.	The responsible entity failed to comply with one of the following Parts of Requirement R2: Part 2.1, Part 2.2, Part 2.4, Part 2.5, or Part 2.7.	The responsible entity failed to comply with two or more of the following Parts of Requirement R2: Part 2.1, Part 2.2, Part 2.4, or Part 2.7.
R3	The responsible entity did not identify planning events as described in Requirement R3, Part 3.4 or extreme events as described in Requirement R3, Part 3.5.	The responsible entity did not perform studies as specified in Requirement R3, Part 3.1 to determine that the BES meets the performance requirements for one of the categories (P2 through P7) in Table 1. OR The responsible entity did not perform studies as specified in Requirement R3, Part 3.2 to assess the impact of extreme events. OR The responsible entity did not base its	The responsible entity did not perform studies as specified in Requirement R3, Part 3.1 to determine that the BES meets the performance requirements for two of the categories (P2 through P7) in Table 1. OR The responsible entity did not perform Contingency analysis as described in Requirement R3, Part 3.3.	The responsible entity did not perform studies as specified in Requirement R3, Part 3.1 to determine that the BES meets the performance requirements for three or more of the categories (P2 through P7) in Table 1. OR The responsible entity did not perform studies to determine that the BES meets the performance requirements for the P0 or P1 categories in Table 1.

	Lower VSL	Moderate VSL	High VSL	Severe VSL
		studies on computer simulation models using data provided in Requirement R1.		
R4	The responsible entity did not identify planning events as described in Requirement R4, Part 4.4 or extreme events as described in Requirement R4, Part 4.5.	The responsible entity did not perform studies as specified in Requirement R4, Part 4.1 to determine that the BES meets the performance requirements for one of the categories (P1 through P7) in Table 1. OR The responsible entity did not perform studies as specified in Requirement R4, Part 4.2 to assess the impact of extreme events. OR The responsible entity did not base its studies on computer simulation models using data provided in Requirement R1.	The responsible entity did not perform studies as specified in Requirement R4, Part 4.1 to determine that the BES meets the performance requirements for two of the categories (P1 through P7) in Table 1. OR The responsible entity did not perform Contingency analysis as described in Requirement R4, Part 4.3.	The responsible entity did not perform studies as specified in Requirement R4, Part 4.1 to determine that the BES meets the performance requirements for three or more of the categories (P1 through P7) in Table 1.
R5	N/A	N/A	N/A	The responsible entity does not have criteria for acceptable System steady state voltage limits, post-Contingency voltage deviations, or the transient voltage response for its System.
R6	N/A	N/A	N/A	The responsible entity failed to define and document the criteria or methodology for System instability used within its analysis as described in Requirement R6.
R7	N/A	N/A	N/A	The Planning Coordinator, in conjunction with each of its

	Lower VSL	Moderate VSL	High VSL	Severe VSL
				Transmission Planners, failed to determine and identify individual or joint responsibilities for performing required studies.
R8	The responsible entity failed to distribute the results of its Planning Assessment to one of its adjacent Transmission Planners, one adjacent Planning Coordinator, or to one functional entity that has a reliability related need and that has submitted a written request for the information, respectively in accordance with Requirement R8.	N/A	The responsible entity failed to distribute the results of its Planning Assessment to more than one of its adjacent Transmission Planners, adjacent Planning Coordinators, or functional entities that have a reliability related need and that have submitted a written request for the information, respectively in accordance with Requirement R8.	The responsible entity failed to provide a documented response to a recipient of the Planning Assessment results who provided documented comments on the results within 90 calendar days of receipt of those comments in accordance with Requirement R8.

E. Regional Variances

None.

Version History

Version	Date	Action	Change Tracking
1	TBD	Revision of TPL-001-0 as per Project 2006-02; includes merging requirements of TPL-001-0, TPL-002-0, TPL-003-0, and TPL-004-0 into one, single, comprehensive, coordinated standard: TPL-001-1	Not employed due to scope of revision

NERC
NORTH AMERICAN ELECTRIC RELIABILITY CORPORATION

Standards Announcement

Response to Comments Posted

Available at: http://www.nerc.com/filez/standards/Assess-Transmission-Future-Needs.html

Project 2006-02 - Assess Transmission Future Needs and Develop Transmission Plans

The standard drafting team working on Project 2006-02 (ATFN SDT) has posted its response to comments to Draft 5 of TPL-001-2 and a preliminary, informational draft of Draft 6 of TPL-001-2. Formal comments will be solicited at a later time.
TPL-001-1 is designed to be a single, comprehensive, and coordinated standard that merges the requirements of four existing standards: TPL-001-0, TPL-002-0, TPL-003-0, and TPL-004-0. The proposed standard includes several new definitions.

The standard drafting team working on Project 2006-02 (AFTN SDT) solicited comments from industry on the fifth posting of the revised TPL-001-2 through an informal comment period that ended on September 2, 2010. That posting represented the changes made to the revised standard based on industry comments received on the initial ballot of TPL-001-2 with one exception – inclusion of a final solution for Project 2010-11 TPL Table 1 (footnote 'b'). The revisions to Table 1 footnote 'b' are being addressed under Project 2010-11, and that project is still in progress. The objective of the AFTN SDT is to adapt the technical tenets of the final solution for footnote 'b' for inclusion in TPL-001-2.

Project 2006-02 can't move forward until Project 2010-11 is complete however the ATFN SDT believes that there is benefit to posting the other changes made in response to industry comments as quickly as possible. Therefore, the AFTN SDT has posted its consideration of comments report showing the comments received in response to the fifth posting of the standard and the proposed revisions to TPL-001-2 associated with those comments. Posting now will allow interested stakeholders to observe the progress being made in achieving consensus on the standard.

Project Background

The purpose of the proposed standard is to establish transmission system planning performance requirements within the planning horizon to develop a bulk electric system that will operate reliably over a broad spectrum of system conditions and following a wide range of probable contingencies. TPL-001-1 — Transmission System Planning Performance Requirements is an update and consolidation of the following standards:

- TPL-001-0 — System Performance under Normal Conditions
- TPL-002-0 — System Performance Following Loss of a Single BES Element
- TPL-003-0 — System Performance Following Loss of Two or More BES Elements
- TPL-004-0 — System Performance Following Extreme BES Events

- TPL-005-0 — Regional and Interregional Self-Assessment Reliability Reports
- TPL-006-0 — Data from the Regional Reliability Organization Needed to Assess Reliability

More information is available on the project page: http://www.nerc.com/filez/standards/Assess-Transmission-Future-Needs.html

Applicability of Standards in Project
Planning Coordinator
Transmission Planner

Proposed Additions to Glossary of Terms
Bus-tie Breaker
Consequential Load Loss
Long-Term Transmission Planning Horizon
Near-Term Transmission Planning Horizon
Non-Consequential Load Loss
Planning Assessment
Year One

Standards Process

The Standard Processes Manual contains all the procedures governing the standards development process. The success of the NERC standards development process depends on stakeholder participation. We extend our thanks to all those who participate.

For more information or assistance, please contact Monica Benson, Standards Process Administrator, at monica.benson@nerc.net or at 609.452.8060.

North American Electric Reliability Corporation
116-390 Village Blvd.
Princeton, NJ 08540
609.452.8060 | www.nerc.com

A. Introduction

1. **Title:** **Data From the Regional Reliability Organization Needed to Assess Reliability**

2. **Number:** TPL-006-0.1

3. **Purpose:** To ensure that each Regional Reliability Organization complies with planning criteria, for assessing the overall reliability (Adequacy and Security) of the interconnected Bulk Electric Systems, both existing and as planned.

4. **Applicability:**

   4.1. Regional Reliability Organization

5. **Effective Date:** April 1, 2005

B. Requirements

R1. Each Regional Reliability Organization shall provide, as requested (seasonally, annually, or as otherwise specified) by NERC, system data, including past, existing, and future facility and Bulk Electric System data, reports, and system performance information, necessary to assess reliability and compliance with the NERC Reliability Standards and the respective Regional planning criteria.

The facility and Bulk Electric System data, reports, and system performance information shall include, but not be limited to, one or more of the following types of information as outlined below:

R1.1. Electric Demand and Net Energy for Load (actual and projected demands and Net Energy for Load, forecast methodologies, forecast assumptions and uncertainties, and treatment of Demand-Side Management.)

R1.2. Resource Adequacy and supporting information (Regional assessment reports, existing and planned resource data, resource availability and characteristics, and fuel types and requirements.)

R1.3. Demand-Side resources and their characteristics (program ratings, effects on annual system loads and load shapes, contractual arrangements, and program durations.)

R1.4. Supply-side resources and their characteristics (existing and planned generator units, Ratings, performance characteristics, fuel types and availability, and real and reactive capabilities.)

R1.5. Transmission system and supporting information (thermal, voltage, and Stability Limits, contingency analyses, system restoration, system modeling and data requirements, and protection systems.)

R1.6. System operations and supporting information (extreme weather impacts, Interchange Transactions, and Congestion impacts on the reliability of the interconnected Bulk Electric Systems.)

R1.7. Environmental and regulatory issues and impacts (air and water quality issues, and impacts of existing, new, and proposed regulations and legislation.)

Measures

M1. The Regional Reliability Organization shall provide evidence to its Compliance Monitor that it provided Regional system data, reports, and system performance information per Reliability Standard TPL-006-0_R1.

C. Compliance

1. Compliance Monitoring Process

1.1. Compliance Monitoring Responsibility

Compliance Monitor: NERC.

1.2. Compliance Monitoring Period and Reset Timeframe

Annually.

1.3. Data Retention

None specified.

1.4. Additional Compliance Information

None.

2. Levels of Non-Compliance

2.1. Level 1: Requested Regional system data, reports, or system performance information were incomplete.

2.2. Level 2: Not applicable.

2.3. Level 3: Not applicable.

2.4. Level 4: Requested Regional system data, reports, or system performance information were not provided.

D. Regional Differences

1. None identified.

Version History

Version	Date	Action	Change Tracking
0	April 1, 2005	Effective Date	New
0.1	April 15, 2009	Corrected formatting for M1.	Errata

A. Introduction

1. **Title:** **Regional and Interregional Self-Assessment Reliability Reports**

2. **Number:** TPL-005-0

3. **Purpose:** To ensure that each Regional Reliability Organization complies with planning criteria, for assessing the overall reliability (Adequacy and Security) of the interconnected Bulk Electric Systems, both existing and as planned.

4. **Applicability:**

   4.1. Regional Reliability Organization

5. **Effective Date:** April 1, 2005

B. Requirements

R1. Each Regional Reliability Organization shall annually conduct reliability assessments of its respective existing and planned Regional Bulk Electric System (generation and transmission facilities) for:

R1.1. Current year:

R1.1.1. Winter.

R1.1.2. Summer.

R1.1.3. Other system conditions as deemed appropriate by the Regional Reliability Organization.

R1.2. Near-term planning horizons (years one through five). Detailed assessments shall be conducted.

R1.3. Longer-term planning horizons (years six through ten). Assessment shall focus on the analysis of trends in resources and transmission Adequacy, other industry trends and developments, and reliability concerns.

R1.4. Inter-Regional reliability assessments to demonstrate that the performance of these systems is in compliance with NERC Reliability Standards TPL-001-0, TPL-002-0, TPL-003-0, TPL-004-0 and respective Regional transmission and generation criteria. These assessments shall also identify key reliability issues and the risks and uncertainties affecting Adequacy and Security.

R2. The Regional Reliability Organization shall provide its Regional and Inter-Regional seasonal, near-term, and longer-term reliability assessments to NERC on an annual basis.

R3. The Regional Reliability Organization shall perform special reliability assessments as requested by NERC or the NERC Board of Trustees under their specific directions and criteria. Such assessments may include, but are not limited to:

R3.1. Security assessments.

R3.2. Operational assessments.

R3.3. Evaluations of emergency response preparedness.

R3.4. Adequacy of fuel supply and hydro conditions.

R3.5. Reliability impacts of new or proposed environmental rules and regulations.

R3.6. Reliability impacts of new or proposed legislation that affects, has affected, or has the potential to affect the Adequacy of the interconnected Bulk Electric Systems in North America.

C. Measures

M1. The Regional Reliability Organization shall provide evidence to its Compliance Monitor that annual Regional and Inter-Regional assessments of reliability for seasonal, near-term, and longer-term planning horizons, and special assessments, were developed and provided as requested by other Regional Reliability Organizations or NERC.

D. Compliance

1. Compliance Monitoring Process

1.1. Compliance Monitoring Responsibility

Compliance Monitor: NERC.

1.2. Compliance Monitoring Period and Reset Timeframe

Annually.

1.3. Data Retention

None specified.

1.4. Additional Compliance Information

None.

2. Levels of Non-Compliance

2.1. Level 1: Regional, Inter-Regional, and/or special reliability assessments were provided as requested, but were incomplete.

2.2. Level 2: Not applicable.

2.3. Level 3: Not applicable.

2.4. Level 4: Regional, Inter-Regional, and/or special reliability assessments were not provided.

E. Regional Differences

1. None identified.

Version History

Version	Date	Action	Change Tracking
0	April 1, 2005	Effective Date	New

A. Introduction

1. Title: System Performance Following Extreme Events Resulting in the Loss of Two or More Bulk Electric System Elements (Category D)

2. Number: TPL-004-1

3. Purpose: System simulations and associated assessments are needed periodically to ensure that reliable systems are developed that meet specified performance requirements, with sufficient lead time and continue to be modified or upgraded as necessary to meet present and future System needs.

4. Applicability:

4.1. Planning Authority

4.2. Transmission Planner

5. Effective Date: The application of revised Footnote 'b' in Table 1 will take effect on the first day of the first calendar quarter, 60 months after applicable regulatory approval. In those jurisdictions where no regulatory approval is required, the effective date will be the first day of the first calendar quarter, 60 months after Board of Trustees adoption. All other requirements remain in effect per previous approvals. The existing Footnote 'b' remains in effect until the revised Footnote 'b' becomes effective

B. Requirements

R1. The Planning Authority and Transmission Planner shall each demonstrate through a valid assessment that its portion of the interconnected transmission system is evaluated for the risks and consequences of a number of each of the extreme contingencies that are listed under Category D of Table I. To be valid, the Planning Authority's and Transmission Planner's assessment shall:

R1.1. Be made annually.

R1.2. Be conducted for near-term (years one through five).

R1.3. Be supported by a current or past study and/or system simulation testing that addresses each of the following categories, showing system performance following Category D contingencies of Table I. The specific elements selected (from within each of the following categories) for inclusion in these studies and simulations shall be acceptable to the associated Regional Reliability Organization(s).

R1.3.1. Be performed and evaluated only for those Category D contingencies that would produce the more severe system results or impacts. The rationale for the contingencies selected for evaluation shall be available as supporting information. An explanation of why the remaining simulations would produce less severe system results shall be available as supporting information.

R1.3.2. Cover critical system conditions and study years as deemed appropriate by the responsible entity.

R1.3.3. Be conducted annually unless changes to system conditions do not warrant such analyses.

R1.3.4. Have all projected firm transfers modeled.

R1.3.5. Include existing and planned facilities.

R1.3.6. Include Reactive Power resources to ensure that adequate reactive resources are available to meet system performance.

R1.3.7. Include the effects of existing and planned protection systems, including any backup or redundant systems.

R1.3.8. Include the effects of existing and planned control devices.

R1.3.9. Include the planned (including maintenance) outage of any bulk electric equipment (including protection systems or their components) at those demand levels for which planned (including maintenance) outages are performed.

R1.4. Consider all contingencies applicable to Category D.

R2. The Planning Authority and Transmission Planner shall each document the results of its reliability assessments and shall annually provide the results to its entities' respective NERC Regional Reliability Organization(s), as required by the Regional Reliability Organization.

C. Measures

M1. The Planning Authority and Transmission Planner shall have a valid assessment for its system responses as specified in Reliability Standard TPL-004-1_R1.

M2. The Planning Authority and Transmission Planner shall provide evidence to its Compliance Monitor that it reported documentation of results of its reliability assessments per Reliability Standard TPL-004-1_R1.

D. Compliance

1. Compliance Monitoring Process

1.1. Compliance Monitoring Responsibility

Compliance Monitor: Regional Reliability Organization.

Each Compliance Monitor shall report compliance and violations to NERC via the NERC Compliance Reporting Process.

1.2. Compliance Monitoring Period and Reset Timeframe

Annually.

1.3. Data Retention

None specified.

1.4. Additional Compliance Information

None.

2. Levels of Non-Compliance

2.1. Level 1: A valid assessment, as defined above, for the near-term planning horizon is not available.

2.2. Level 2: Not applicable.

2.3. Level 3: Not applicable.

2.4. Level 4: Not applicable.

B. Regional Differences

1. None identified.

Version History

Version	Date	Action	Change Tracking
0	April 1, 2005	Effective Date	New
1	Approved by the Board of Trustees February 17, 2011	Revised footnote ‘b’ pursuant to FERC Order RM06-16-009.	Revised (Project 2010-11)

Table I. Transmission System Standards – Normal and Emergency Conditions

Category	Contingencies	System Limits or Impacts		
	Initiating Event(s) and Contingency Element(s)	System Stable and both Thermal and Voltage Limits within Applicable Rating [a]	Loss of Demand or Curtailed Firm Transfers	Cascading Outages
A No Contingencies	All Facilities in Service	Yes	No	No
B Event resulting in the loss of a single element.	Single Line Ground (SLG) or 3-Phase (3Ø) Fault, with Normal Clearing: 1. Generator 2. Transmission Circuit 3. Transformer Loss of an Element without a Fault.	Yes Yes Yes Yes	No [b] No [b] No [b] No [b]	No No No No
	Single Pole Block, Normal Clearing [e]: 4. Single Pole (dc) Line	Yes	No [b]	No
C Event(s) resulting in the loss of two or more (multiple) elements.	SLG Fault, with Normal Clearing [e]: 1. Bus Section 2. Breaker (failure or internal Fault)	Yes Yes	Planned/ Controlled [c] Planned/ Controlled [c]	No No
	SLG or 3Ø Fault, with Normal Clearing [e], Manual System Adjustments, followed by another SLG or 3Ø Fault, with Normal Clearing [e]: 3. Category B (B1, B2, B3, or B4) contingency, manual system adjustments, followed by another Category B (B1, B2, B3, or B4) contingency	Yes	Planned/ Controlled [c]	No
	Bipolar Block, with Normal Clearing [e]: 4. Bipolar (dc) Line Fault (non 3Ø), with Normal Clearing [e]: 5. Any two circuits of a multiple circuit towerline [f]	Yes Yes	Planned/ Controlled [c] Planned/ Controlled [c]	No No
	SLG Fault, with Delayed Clearing [e] (stuck breaker or protection system failure): 6. Generator 7. Transformer 8. Transmission Circuit 9. Bus Section	Yes Yes Yes Yes	Planned/ Controlled [c] Planned/ Controlled [c] Planned/ Controlled [c] Planned/ Controlled [c]	No No No No

D [d] Extreme event resulting in two or more (multiple) elements removed or Cascading out of service	3Ø Fault, with Delayed Clearing[e] (stuck breaker or protection system failure): 1. Generator 2. Transmission Circuit 3. Transformer 4. Bus Section 3Ø Fault, with Normal Clearing[e]: 5. Breaker (failure or internal Fault) 6. Loss of towerline with three or more circuits 7. All transmission lines on a common right-of way 8. Loss of a substation (one voltage level plus transformers) 9. Loss of a switching station (one voltage level plus transformers) 10. Loss of all generating units at a station 11. Loss of a large Load or major Load center 12. Failure of a fully redundant Special Protection System (or remedial action scheme) to operate when required 13. Operation, partial operation, or misoperation of a fully redundant Special Protection System (or Remedial Action Scheme) in response to an event or abnormal system condition for which it was not intended to operate 14. Impact of severe power swings or oscillations from Disturbances in another Regional Reliability Organization.	Evaluate for risks and consequences. ▪ May involve substantial loss of customer Demand and generation in a widespread area or areas. ▪ Portions or all of the interconnected systems may or may not achieve a new, stable operating point. ▪ Evaluation of these events may require joint studies with neighboring systems.

a) Applicable rating refers to the applicable Normal and Emergency facility thermal Rating or System Voltage Limit as determined and consistently applied by the system or facility owner. Applicable Ratings may include Emergency Ratings applicable for short durations as required to permit operating steps necessary to maintain system control. All Ratings must be established consistent with applicable NERC Reliability Standards addressing Facility Ratings.

b) An objective of the planning process should be to minimize the likelihood and magnitude of interruption of firm transfers or Firm Demand following Contingency events. Curtailment of firm transfers is allowed when achieved through the appropriate re-dispatch of resources obligated to re-dispatch, where it can be demonstrated that Facilities, internal and external to the Transmission Planner's planning region, remain within applicable Facility Ratings and the re-dispatch does not result in the shedding of any Firm Demand. It is recognized that Firm Demand will be interrupted if it is: (1) directly served by the Elements removed from service as a result of the Contingency, or (2) Interruptible Demand or Demand-Side Management Load. Furthermore, in limited circumstances Firm Demand may need to be interrupted to address BES performance requirements. When interruption of Firm Demand is utilized within the planning process to address BES performance requirements, such interruption is limited to circumstances where the use of Demand interruption are documented, including alternatives evaluated; and where the Demand interruption is subject to review in an open and transparent stakeholder process that includes addressing stakeholder comments.

c) Depending on system design and expected system impacts, the controlled interruption of electric supply to customers (load shedding), the planned removal from service of certain generators, and/or the curtailment of contracted Firm (non-recallable reserved) electric power Transfers may be necessary to maintain the overall reliability of the interconnected transmission systems.

d) A number of extreme contingencies that are listed under Category D and judged to be critical by the transmission planning entity(ies) will be selected for evaluation. It is not expected that all possible facility outages under each listed contingency of Category D will be evaluated.

e) Normal clearing is when the protection system operates as designed and the Fault is cleared in the time normally expected with proper functioning of the installed protection systems. Delayed clearing of a Fault is due to failure of any protection system component such as a relay, circuit breaker, or current transformer, and not because of an intentional design delay.

f) System assessments may exclude these events where multiple circuit towers are used over short distances (e.g., station entrance, river crossings) in accordance with Regional exemption criteria.

A. Introduction

1. Title: **System Performance Following Loss of Two or More Bulk Electric System Elements (Category C)**

2. Number: TPL-003-1a

3. Purpose: System simulations and associated assessments are needed periodically to ensure that reliable systems are developed that meet specified performance requirements, with sufficient lead time and continue to be modified or upgraded as necessary to meet present and future System needs.

4. Applicability:

4.1. Planning Authority

4.2. Transmission Planner

5. Effective Date: The application of revised Footnote 'b' in Table 1 will take effect on the first day of the first calendar quarter, 60 months after applicable regulatory approval. In those jurisdictions where no regulatory approval is required, the effective date will be the first day of the first calendar quarter, 60 months after Board of Trustees adoption. All other requirements remain in effect per previous approvals. The existing Footnote 'b' remains in effect until the revised Footnote 'b' becomes effective.

B. Requirements

R1. The Planning Authority and Transmission Planner shall each demonstrate through a valid assessment that its portion of the interconnected transmission systems is planned such that the network can be operated to supply projected customer demands and projected Firm (non-recallable reserved) Transmission Services, at all demand Levels over the range of forecast system demands, under the contingency conditions as defined in Category C of Table I (attached). The controlled interruption of customer Demand, the planned removal of generators, or the Curtailment of firm (non-recallable reserved) power transfers may be necessary to meet this standard. To be valid, the Planning Authority and Transmission Planner assessments shall:

R1.1. Be made annually.

R1.2. Be conducted for near-term (years one through five) and longer-term (years six through ten) planning horizons.

R1.3. Be supported by a current or past study and/or system simulation testing that addresses each of the following categories, showing system performance following Category C of Table 1 (multiple contingencies). The specific elements selected (from each of the following categories) for inclusion in these studies and simulations shall be acceptable to the associated Regional Reliability Organization(s).

R1.3.1. Be performed and evaluated only for those Category C contingencies that would produce the more severe system results or impacts. The rationale for the contingencies selected for evaluation shall be available as supporting information. An explanation of why the remaining simulations would produce less severe system results shall be available as supporting information.

R1.3.2. Cover critical system conditions and study years as deemed appropriate by the responsible entity.

R1.3.3. Be conducted annually unless changes to system conditions do not warrant such analyses.

R1.3.4. Be conducted beyond the five-year horizon only as needed to address identified marginal conditions that may have longer lead-time solutions.

R1.3.5. Have all projected firm transfers modeled.

R1.3.6. Be performed and evaluated for selected demand levels over the range of forecast system demands.

R1.3.7. Demonstrate that System performance meets Table 1 for Category C contingencies.

R1.3.8. Include existing and planned facilities.

R1.3.9. Include Reactive Power resources to ensure that adequate reactive resources are available to meet System performance.

R1.3.10. Include the effects of existing and planned protection systems, including any backup or redundant systems.

R1.3.11. Include the effects of existing and planned control devices.

R1.3.12. Include the planned (including maintenance) outage of any bulk electric equipment (including protection systems or their components) at those Demand levels for which planned (including maintenance) outages are performed.

R1.4. Address any planned upgrades needed to meet the performance requirements of Category C.

R1.5. Consider all contingencies applicable to Category C.

R2. When system simulations indicate an inability of the systems to respond as prescribed in Reliability Standard TPL-003-1_R1, the Planning Authority and Transmission Planner shall each:

R2.1. Provide a written summary of its plans to achieve the required system performance as described above throughout the planning horizon:

R2.1.1. Including a schedule for implementation.

R2.1.2. Including a discussion of expected required in-service dates of facilities.

R2.1.3. Consider lead times necessary to implement plans.

R2.2. Review, in subsequent annual assessments, (where sufficient lead time exists), the continuing need for identified system facilities. Detailed implementation plans are not needed.

R3. The Planning Authority and Transmission Planner shall each document the results of these Reliability Assessments and corrective plans and shall annually provide these to its respective NERC Regional Reliability Organization(s), as required by the Regional Reliability Organization.

C. Measures

M1. The Planning Authority and Transmission Planner shall have a valid assessment and corrective plans as specified in Reliability Standard TPL-003-1_R1 and TPL-003-1_R2.

M2. The Planning Authority and Transmission Planner shall have evidence it reported documentation of results of its reliability assessments and corrective plans per Reliability Standard TPL-003-1_R3.

D. Compliance

1. Compliance Monitoring Process

1.1. Compliance Monitoring Responsibility

Compliance Monitor: Regional Reliability Organizations.

1.2. Compliance Monitoring Period and Reset Timeframe

Annually.

1.3. Data Retention

None specified.

1.4. Additional Compliance Information

None.

2. Levels of Non-Compliance

2.1. Level 1: Not applicable.

2.2. Level 2: A valid assessment and corrective plan for the longer-term planning horizon is not available.

2.3. Level 3: Not applicable.

2.4. Level 4: A valid assessment and corrective plan for the near-term planning horizon is not available.

E. Regional Differences

1. None identified.

Version History

Version	Date	Action	Change Tracking
0	April 1, 2005	Effective Date	New
0	April 1, 2005	Add parenthesis to item “e” on page 8.	Errata
0a	October 23, 2008	Added Appendix 1 – Interpretation of TPL-002-0 Requirements R1.3.2 and R1.3.12 and TPL-003-0 Requirements R1.3.2 and R1.3.12 for Ameren and MISO	Revised
1a	Approved by the Board of Trustees February 17, 2011	Revised footnote ‘b’ pursuant to FERC Order RM06-16-009.	Revised (Project 2010-11)

Table I. Transmission System Standards – Normal and Emergency Conditions

Category	Contingencies	System Limits or Impacts		
	Initiating Event(s) and Contingency Element(s)	System Stable and both Thermal and Voltage Limits within Applicable Rating [a]	Loss of Demand or Curtailed Firm Transfers	Cascading [c] Outages
A No Contingencies	All Facilities in Service	Yes	No	No
B Event resulting in the loss of a single element.	Single Line Ground (SLG) or 3-Phase (3Ø) Fault, with Normal Clearing: 1. Generator 2. Transmission Circuit 3. Transformer Loss of an Element without a Fault.	Yes Yes Yes Yes	No [b] No [b] No [b] No [b]	No No No No
	Single Pole Block, Normal Clearing[e]: 4. Single Pole (dc) Line	Yes	No[b]	No
C Event(s) resulting in the loss of two or more (multiple) elements.	SLG Fault, with Normal Clearing[e]: 1. Bus Section 2. Breaker (failure or internal Fault)	Yes Yes	Planned/ Controlled[c] Planned/ Controlled[c]	No No
	SLG or 3Ø Fault, with Normal Clearing[e], Manual System Adjustments, followed by another SLG or 3Ø Fault, with Normal Clearing[e]: 3. Category B (B1, B2, B3, or B4) contingency, manual system adjustments, followed by another Category B (B1, B2, B3, or B4) contingency	Yes	Planned/ Controlled[c]	No
	Bipolar Block, with Normal Clearing[e]: 4. Bipolar (dc) Line Fault (non 3Ø), with Normal Clearing[e]: 5. Any two circuits of a multiple circuit towerline[f]	Yes Yes	Planned/ Controlled[c] Planned/ Controlled[c]	No No
	SLG Fault, with Delayed Clearing[e] (stuck breaker or protection system failure): 6. Generator 7. Transformer 8. Transmission Circuit 9. Bus Section	Yes Yes Yes Yes	Planned/ Controlled[c] Planned/ Controlled[c] Planned/ Controlled[c] Planned/ Controlled[c]	No No No No

D [d] Extreme event resulting in two or more (multiple) elements removed or Cascading out of service	3Ø Fault, with Delayed Clearing [e] (stuck breaker or protection system failure): 1. Generator 2. Transmission Circuit 3. Transformer 4. Bus Section 3Ø Fault, with Normal Clearing[e]: 5. Breaker (failure or internal Fault) 6. Loss of towerline with three or more circuits 7. All transmission lines on a common right-of way 8. Loss of a substation (one voltage level plus transformers) 9. Loss of a switching station (one voltage level plus transformers) 10. Loss of all generating units at a station 11. Loss of a large Load or major Load center 12. Failure of a fully redundant Special Protection System (or remedial action scheme) to operate when required 13. Operation, partial operation, or misoperation of a fully redundant Special Protection System (or Remedial Action Scheme) in response to an event or abnormal system condition for which it was not intended to operate 14. Impact of severe power swings or oscillations from Disturbances in another Regional Reliability Organization.	Evaluate for risks and consequences. ▪ May involve substantial loss of customer Demand and generation in a widespread area or areas. ▪ Portions or all of the interconnected systems may or may not achieve a new, stable operating point. ▪ Evaluation of these events may require joint studies with neighboring systems.

a) Applicable rating refers to the applicable Normal and Emergency facility thermal Rating or system voltage limit as determined and consistently applied by the system or facility owner. Applicable Ratings may include Emergency Ratings applicable for short durations as required to permit operating steps necessary to maintain system control. All Ratings must be established consistent with applicable NERC Reliability Standards addressing Facility Ratings.

b) An objective of the planning process should be to minimize the likelihood and magnitude of interruption of firm transfers or Firm Demand following Contingency events. Curtailment of firm transfers is allowed when achieved through the appropriate re-dispatch of resources obligated to re-dispatch, where it can be demonstrated that Facilities, internal and external to the Transmission Planner's planning region, remain within applicable Facility Ratings and the re-dispatch does not result in the shedding of any Firm Demand. It is recognized that Firm Demand will be interrupted if it is: (1) directly served by the Elements removed from service as a result of the Contingency, or (2) Interruptible Demand or Demand-Side Management Load. Furthermore, in limited circumstances Firm Demand may need to be interrupted to address BES performance requirements. When interruption of Firm Demand is utilized within the planning process to address BES performance requirements, such interruption is limited to circumstances where the use of Demand interruption are documented, including alternatives evaluated; and where the Demand interruption is subject to review in an open and transparent stakeholder process that includes addressing stakeholder comments.

c) Depending on system design and expected system impacts, the controlled interruption of electric supply to customers (load shedding), the planned removal from service of certain generators, and/or the curtailment of contracted Firm (non-recallable reserved) electric power transfers may be necessary to maintain the overall reliability of the interconnected transmission systems.

d) A number of extreme contingencies that are listed under Category D and judged to be critical by the transmission planning entity(ies) will be selected for evaluation. It is not expected that all possible facility outages under each listed contingency of Category D will be evaluated.

e) Normal clearing is when the protection system operates as designed and the Fault is cleared in the time normally expected with proper functioning of the installed protection systems. Delayed clearing of a Fault is due to failure of any protection system component such as a relay, circuit breaker, or current transformer, and not because of an intentional design delay.

f) System assessments may exclude these events where multiple circuit towers are used over short distances (e.g., station entrance, river crossings) in accordance with Regional exemption criteria.

Appendix 1

Interpretation of TPL-002-0 Requirements R1.3.2 and R1.3.12 and TPL-003-0 Requirements R1.3.2 and R1.3.12 for Ameren and MISO

NERC received two requests for interpretation of identical requirements (Requirements R1.3.2 and R1.3.12) in TPL-002-0 and TPL-003-0 from the Midwest ISO and Ameren. These requirements state:

TPL-002-0:

[To be valid, the Planning Authority and Transmission Planner assessments shall:]

R1.3 Be supported by a current or past study and/or system simulation testing that addresses each of the following categories, showing system performance following Category B of Table 1 (single contingencies). The specific elements selected (from each of the following categories) for inclusion in these studies and simulations shall be acceptable to the associated Regional Reliability Organization(s).

R1.3.2 Cover critical system conditions and study years as deemed appropriate by the responsible entity.

R1.3.12 Include the planned (including maintenance) outage of any bulk electric equipment (including protection systems or their components) at those demand levels for which planned (including maintenance) outages are performed.

TPL-003-0:

[To be valid, the Planning Authority and Transmission Planner assessments shall:]

R1.3 Be supported by a current or past study and/or system simulation testing that addresses each of the following categories, showing system performance following Category C of Table 1 (multiple contingencies). The specific elements selected (from each of the following categories) for inclusion in these studies and simulations shall be acceptable to the associated Regional Reliability Organization(s).

R1.3.2 Cover critical system conditions and study years as deemed appropriate by the responsible entity.

R1.3.12 Include the planned (including maintenance) outage of any bulk electric equipment (including protection systems or their components) at those demand levels for which planned (including maintenance) outages are performed.

Requirement R1.3.2

Request for Interpretation of TPL-002-0 and TPL-003-0 Requirement R1.3.2 Received from Ameren on July 25, 2007:

Ameren specifically requests clarification on the phrase, 'critical system conditions' in R1.3.2. Ameren asks if compliance with R1.3.2 requires multiple contingent generating unit Outages as part of possible generation dispatch scenarios describing critical system conditions for which the system shall be planned and modeled in accordance with the contingency definitions included in Table 1.

Request for Interpretation of TPL-002-0 and TPL-003-0 Requirement R1.3.2 Received from MISO on August 9, 2007:

MISO asks if the TPL standards require that any specific dispatch be applied, other than one that is representative of supply of firm demand and transmission service commitments, in the modeling of system contingencies specified in Table 1 in the TPL standards.

MISO then asks if a variety of possible dispatch patterns should be included in planning analyses including a probabilistically based dispatch that is representative of generation deficiency scenarios, would it be an appropriate application of the TPL standard to apply the transmission contingency conditions in Category B of Table 1 to these possible dispatch pattern.

The following interpretation of TPL-002-0 and TPL-003-0 Requirement R1.3.2 was developed by the NERC Planning Committee on March 13, 2008:

The selection of a credible generation dispatch for the modeling of critical system conditions is within the discretion of the Planning Authority. The Planning Authority was renamed "Planning Coordinator" (PC) in the Functional Model dated February 13, 2007. (TPL -002 and -003 use the former "Planning Authority" name, and the Functional Model terminology was a change in name only and did not affect responsibilities.)

- Under the Functional Model, the Planning Coordinator "Provides and informs Resource Planners, Transmission Planners, and adjacent Planning Coordinators of the methodologies and tools for the simulation of the transmission system" while the Transmission Planner "Receives from the Planning Coordinator methodologies and tools for the analysis and development of transmission expansion plans." A PC's selection of "critical system conditions" and its associated generation dispatch falls within the purview of "methodology."

Furthermore, consistent with this interpretation, a Planning Coordinator would formulate critical system conditions that may involve a range of critical generator unit outages as part of the possible generator dispatch scenarios.

Both TPL-002-0 and TPL-003-0 have a similar measure M1:

> **M1.** The Planning Authority and Transmission Planner shall have a valid assessment and corrective plans as specified in Reliability Standard TPL-002-0_R1 [or TPL-003-0_R1] and TPL-002-0_R2 [or TPL-003-0_R2]."

The Regional Reliability Organization (RRO) is named as the Compliance Monitor in both standards. Pursuant to Federal Energy Regulatory Commission (FERC) Order 693, FERC eliminated the RRO as the appropriate Compliance Monitor for standards and replaced it with the Regional Entity (RE). See paragraph 157 of Order 693. Although the referenced TPL standards still include the reference to the RRO, to be consistent with Order 693, the RRO is replaced by the RE as the Compliance Monitor for this interpretation. As the Compliance Monitor, the RE determines what a "valid assessment" means when evaluating studies based upon specific sub-requirements in R1.3 selected by the Planning Coordinator and the Transmission Planner. If a PC has Transmission Planners in more than one region, the REs must coordinate among themselves on compliance matters.

Requirement R1.3.12

Request for Interpretation of TPL-002-0 and TPL-003-0 Requirement R1.3.12 Received from Ameren on July 25, 2007:

Ameren also asks how the inclusion of planned outages should be interpreted with respect to the contingency definitions specified in Table 1 for Categories B and C. Specifically, Ameren asks if R1.3.12 requires that the system be planned to be operated during those conditions associated with planned outages consistent with the performance requirements described in Table 1 plus any unidentified outage.

Request for Interpretation of TPL-002-0 and TPL-003-0 Requirement R1.3.12 Received from MISO on August 9, 2007:

MISO asks if the term "planned outages" means only already known/scheduled planned outages that may continue into the planning horizon, or does it include potential planned outages not yet scheduled that may occur at those demand levels for which planned (including maintenance) outages are performed?

If the requirement does include not yet scheduled but potential planned outages that could occur in the planning horizon, is the following a proper interpretation of this provision?

The system is adequately planned and in accordance with the standard if, in order for a system operator to potentially schedule such a planned outage on the future planned system, planning studies show that a system adjustment (load shed, re-dispatch of generating units in the interconnection, or system reconfiguration) would be required concurrent with taking such a planned outage in order to prepare for a Category B contingency (single element forced out of service)? In other words, should the system in effect be planned to be operated as for a Category C3 n-2 event, even though the first event is a planned base condition?

If the requirement is intended to mean only known and scheduled planned outages that will occur or may continue into the planning horizon, is this interpretation consistent with the original interpretation by NERC of the standard as provided by NERC in response to industry questions in the Phase I development of this standard1?

The following interpretation of TPL-002-0 and TPL-003-0 Requirement R1.3.12 was developed by the NERC Planning Committee on March 13, 2008:

This provision was not previously interpreted by NERC since its approval by FERC and other regulatory authorities. TPL-002-0 and TPL-003-0 explicitly provide that the inclusion of planned (including maintenance) outages of any bulk electric equipment at demand levels for which the planned outages are required. For studies that include planned outages, compliance with the contingency assessment for TPL-002-0 and TPL-003-0 as outlined in Table 1 would include any necessary system adjustments which might be required to accommodate planned outages since a planned outage is not a "contingency" as defined in the *NERC Glossary of Terms Used in Standards*.

A. Introduction

1. Title: **System Performance Following Loss of a Single Bulk Electric System Element (Category B)**

2. Number: TPL-002-1b

3. Purpose: System simulations and associated assessments are needed periodically to ensure that reliable systems are developed that meet specified performance requirements with sufficient lead time, and continue to be modified or upgraded as necessary to meet present and future system needs.

4. Applicability:

4.1. Planning Authority

4.2. Transmission Planner

5. Effective Date: The application of revised Footnote 'b' in Table 1 will take effect on the first day of the first calendar quarter, 60 months after applicable regulatory approval. In those jurisdictions where no regulatory approval is required, the effective date will be the first day of the first calendar quarter, 60 months after Board of Trustees adoption. All other requirements remain in effect per previous approvals. The existing Footnote 'b' remains in effect until the revised Footnote 'b' becomes effective.

B. Requirements

R1. The Planning Authority and Transmission Planner shall each demonstrate through a valid assessment that its portion of the interconnected transmission system is planned such that the Network can be operated to supply projected customer demands and projected Firm (non-recallable reserved) Transmission Services, at all demand levels over the range of forecast system demands, under the contingency conditions as defined in Category B of Table I. To be valid, the Planning Authority and Transmission Planner assessments shall:

R1.1. Be made annually.

R1.2. Be conducted for near-term (years one through five) and longer-term (years six through ten) planning horizons.

R1.3. Be supported by a current or past study and/or system simulation testing that addresses each of the following categories, showing system performance following Category B of Table 1 (single contingencies). The specific elements selected (from each of the following categories) for inclusion in these studies and simulations shall be acceptable to the associated Regional Reliability Organization(s).

R1.3.1. Be performed and evaluated only for those Category B contingencies that would produce the more severe System results or impacts. The rationale for the contingencies selected for evaluation shall be available as supporting information. An explanation of why the remaining simulations would produce less severe system results shall be available as supporting information.

R1.3.2. Cover critical system conditions and study years as deemed appropriate by the responsible entity.

R1.3.3. Be conducted annually unless changes to system conditions do not warrant such analyses.

R1.3.4. Be conducted beyond the five-year horizon only as needed to address identified marginal conditions that may have longer lead-time solutions.

R1.3.5. Have all projected firm transfers modeled.

R1.3.6. Be performed and evaluated for selected demand levels over the range of forecast system Demands.

R1.3.7. Demonstrate that system performance meets Category B contingencies.

R1.3.8. Include existing and planned facilities.

R1.3.9. Include Reactive Power resources to ensure that adequate reactive resources are available to meet system performance.

R1.3.10. Include the effects of existing and planned protection systems, including any backup or redundant systems.

R1.3.11. Include the effects of existing and planned control devices.

R1.3.12. Include the planned (including maintenance) outage of any bulk electric equipment (including protection systems or their components) at those demand levels for which planned (including maintenance) outages are performed.

R1.4. Address any planned upgrades needed to meet the performance requirements of Category B of Table I.

R1.5. Consider all contingencies applicable to Category B.

R2. When System simulations indicate an inability of the systems to respond as prescribed in Reliability Standard TPL-002-1_R1, the Planning Authority and Transmission Planner shall each:

R2.1. Provide a written summary of its plans to achieve the required system performance as described above throughout the planning horizon:

R2.1.1. Including a schedule for implementation.

R2.1.2. Including a discussion of expected required in-service dates of facilities.

R2.1.3. Consider lead times necessary to implement plans.

R2.2. Review, in subsequent annual assessments, (where sufficient lead time exists), the continuing need for identified system facilities. Detailed implementation plans are not needed.

R3. The Planning Authority and Transmission Planner shall each document the results of its Reliability Assessments and corrective plans and shall annually provide the results to its respective Regional Reliability Organization(s), as required by the Regional Reliability Organization.

C. Measures

M1. The Planning Authority and Transmission Planner shall have a valid assessment and corrective plans as specified in Reliability Standard TPL-002-1_R1 and TPL-002-1_R2.

M2. The Planning Authority and Transmission Planner shall have evidence it reported documentation of results of its reliability assessments and corrective plans per Reliability Standard TPL-002-1_R3.

D. Compliance

1. Compliance Monitoring Process

1.1. Compliance Monitoring Responsibility

Compliance Monitor: Regional Reliability Organizations.
Each Compliance Monitor shall report compliance and violations to NERC via the NERC Compliance Reporting Process.

1.2. Compliance Monitoring Period and Reset Timeframe

Annually.

1.3. Data Retention

None specified.

1.4. Additional Compliance Information

None.

2. Levels of Non-Compliance

2.1. Level 1: Not applicable.

2.2. Level 2: A valid assessment and corrective plan for the longer-term planning horizon is not available.

2.3. Level 3: Not applicable.

2.4. Level 4: A valid assessment and corrective plan for the near-term planning horizon is not available.

E. Regional Differences

1. None identified.

Version History

Version	Date	Action	Change Tracking
0	April 1, 2005	Effective Date	New
0a	October 23, 2008	Added Appendix 1 – Interpretation of TPL-002-0 Requirements R1.3.2 and R1.3.12 and TPL-003-0 Requirements R1.3.2 and R1.3.12 for Ameren and MISO	Revised
0b	November 5, 2009	Added Appendix 2 – Interpretation of R1.3.10 approved by BOT on November 5, 2009	Addition
1b	Approved by the Board of Trustees February 17, 2011	Revised footnote ‘b’ pursuant to FERC Order RM06-16-009	Revised (Project 2010-11)

Table I. Transmission System Standards — Normal and Emergency Conditions

Category	Contingencies	System Limits or Impacts		
	Initiating Event(s) and Contingency Element(s)	System Stable and both Thermal and Voltage Limits within Applicable Rating [a]	Loss of Demand or Curtailed Firm Transfers	Cascading Outages
A No Contingencies	All Facilities in Service	Yes	No	No
B Event resulting in the loss of a single element.	Single Line Ground (SLG) or 3-Phase (3Ø) Fault, with Normal Clearing: 1. Generator 2. Transmission Circuit 3. Transformer Loss of an Element without a Fault.	Yes Yes Yes Yes	No [b] No [b] No [b] No [b]	No No No No
	Single Pole Block, Normal Clearing [e]: 4. Single Pole (dc) Line	Yes	No [b]	No
C Event(s) resulting in the loss of two or more (multiple) elements.	SLG Fault, with Normal Clearing [e]: 1. Bus Section 2. Breaker (failure or internal Fault)	Yes Yes	Planned/ Controlled [c] Planned/ Controlled [c]	No No
	SLG or 3Ø Fault, with Normal Clearing [e], Manual System Adjustments, followed by another SLG or 3Ø Fault, with Normal Clearing [e]: 3. Category B (B1, B2, B3, or B4) contingency, manual system adjustments, followed by another Category B (B1, B2, B3, or B4) contingency	Yes	Planned/ Controlled [c]	No
	Bipolar Block, with Normal Clearing [e]: 4. Bipolar (dc) Line Fault (non 3Ø), with Normal Clearing [e]: 5. Any two circuits of a multiple circuit towerline [f]	Yes Yes	Planned/ Controlled [c] Planned/ Controlled [c]	No No
	SLG Fault, with Delayed Clearing [e] (stuck breaker or protection system failure): 6. Generator 7. Transformer 8. Transmission Circuit 9. Bus Section	Yes Yes Yes Yes	Planned/ Controlled [c] Planned/ Controlled [c] Planned/ Controlled [c] Planned/ Controlled [c]	No No No No

D [d] Extreme event resulting in two or more (multiple) elements removed or Cascading out of service	3Ø Fault, with Delayed Clearing[e] (stuck breaker or protection system failure): 1. Generator 2. Transmission Circuit 3. Transformer 4. Bus Section 3Ø Fault, with Normal Clearing[e]: 5. Breaker (failure or internal Fault) 6. Loss of towerline with three or more circuits 7. All transmission lines on a common right-of way 8. Loss of a substation (one voltage level plus transformers) 9. Loss of a switching station (one voltage level plus transformers) 10. Loss of all generating units at a station 11. Loss of a large Load or major Load center 12. Failure of a fully redundant Special Protection System (or remedial action scheme) to operate when required 13. Operation, partial operation, or misoperation of a fully redundant Special Protection System (or Remedial Action Scheme) in response to an event or abnormal system condition for which it was not intended to operate 14. Impact of severe power swings or oscillations from Disturbances in another Regional Reliability Organization.	Evaluate for risks and consequences. ▪ May involve substantial loss of customer Demand and generation in a widespread area or areas. ▪ Portions or all of the interconnected systems may or may not achieve a new, stable operating point. ▪ Evaluation of these events may require joint studies with neighboring systems.

a) Applicable rating refers to the applicable Normal and Emergency facility thermal Rating or system voltage limit as determined and consistently applied by the system or facility owner. Applicable Ratings may include Emergency Ratings applicable for short durations as required to permit operating steps necessary to maintain system control. All Ratings must be established consistent with applicable NERC Reliability Standards addressing Facility Ratings.

b) An objective of the planning process should be to minimize the likelihood and magnitude of interruption of firm transfers or Firm Demand following Contingency events. Curtailment of firm transfers is allowed when achieved through the appropriate re-dispatch of resources obligated to re-dispatch, where it can be demonstrated that Facilities, internal and external to the Transmission Planner's planning region, remain within applicable Facility Ratings and the re-dispatch does not result in the shedding of any Firm Demand. It is recognized that Firm Demand will be interrupted if it is: (1) directly served by the Elements removed from service as a result of the Contingency, or (2) Interruptible Demand or Demand-Side Management Load. Furthermore, in limited circumstances Firm Demand may need to be interrupted to address BES performance requirements. When interruption of Firm Demand is utilized within the planning process to address BES performance requirements, such interruption is limited to circumstances where the use of Demand interruption are documented, including alternatives evaluated; and where the Demand interruption is subject to review in an open and transparent stakeholder process that includes addressing stakeholder comments.

c) Depending on system design and expected system impacts, the controlled interruption of electric supply to customers (load shedding), the planned removal from service of certain generators, and/or the curtailment of contracted Firm (non-recallable reserved) electric power Transfers may be necessary to maintain the overall reliability of the interconnected transmission systems.

d) A number of extreme contingencies that are listed under Category D and judged to be critical by the transmission planning entity(ies) will be selected for evaluation. It is not expected that all possible facility outages under each listed contingency of Category D will be evaluated.

e) Normal clearing is when the protection system operates as designed and the Fault is cleared in the time normally expected with proper functioning of the installed protection systems. Delayed clearing of a Fault is due to failure of any protection system component such as a relay, circuit breaker, or current transformer, and not because of an intentional design delay.

f) System assessments may exclude these events where multiple circuit towers are used over short distances (e.g., station entrance, river crossings) in accordance with Regional exemption criteria.

Appendix 1

Interpretation of TPL-002-0 Requirements R1.3.2 and R1.3.12 and TPL-003-0 Requirements R1.3.2 and R1.3.12 for Ameren and MISO

NERC received two requests for interpretation of identical requirements (Requirements R1.3.2 and R1.3.12) in TPL-002-0 and TPL-003-0 from the Midwest ISO and Ameren. These requirements state:

TPL-002-0:

[To be valid, the Planning Authority and Transmission Planner assessments shall:]

R1.3 Be supported by a current or past study and/or system simulation testing that addresses each of the following categories, showing system performance following Category B of Table 1 (single contingencies). The specific elements selected (from each of the following categories) for inclusion in these studies and simulations shall be acceptable to the associated Regional Reliability Organization(s).

R1.3.2 Cover critical system conditions and study years as deemed appropriate by the responsible entity.

R1.3.12 Include the planned (including maintenance) outage of any bulk electric equipment (including protection systems or their components) at those demand levels for which planned (including maintenance) outages are performed.

TPL-003-0:

[To be valid, the Planning Authority and Transmission Planner assessments shall:]

R1.3 Be supported by a current or past study and/or system simulation testing that addresses each of the following categories, showing system performance following Category C of Table 1 (multiple contingencies). The specific elements selected (from each of the following categories) for inclusion in these studies and simulations shall be acceptable to the associated Regional Reliability Organization(s).

R1.3.2 Cover critical system conditions and study years as deemed appropriate by the responsible entity.

R1.3.12 Include the planned (including maintenance) outage of any bulk electric equipment (including protection systems or their components) at those demand levels for which planned (including maintenance) outages are performed.

Requirement R1.3.2

Request for Interpretation of TPL-002-0 and TPL-003-0 Requirement R1.3.2 Received from Ameren on July 25, 2007:

Ameren specifically requests clarification on the phrase, 'critical system conditions' in R1.3.2. Ameren asks if compliance with R1.3.2 requires multiple contingent generating unit Outages as part of possible generation dispatch scenarios describing critical system conditions for which the system shall be planned and modeled in accordance with the contingency definitions included in Table 1.

Request for Interpretation of TPL-002-0 and TPL-003-0 Requirement R1.3.2 Received from MISO on August 9, 2007:

MISO asks if the TPL standards require that any specific dispatch be applied, other than one that is representative of supply of firm demand and transmission service commitments, in the modeling of system contingencies specified in Table 1 in the TPL standards.

MISO then asks if a variety of possible dispatch patterns should be included in planning analyses including a probabilistically based dispatch that is representative of generation deficiency scenarios, would it be an appropriate application of the TPL standard to apply the transmission contingency conditions in Category B of Table 1 to these possible dispatch pattern.

The following interpretation of TPL-002-0 and TPL-003-0 Requirement R1.3.2 was developed by the NERC Planning Committee on March 13, 2008:

The selection of a credible generation dispatch for the modeling of critical system conditions is within the discretion of the Planning Authority. The Planning Authority was renamed "Planning Coordinator" (PC) in the Functional Model dated February 13, 2007. (TPL -002 and -003 use the former "Planning Authority" name, and the Functional Model terminology was a change in name only and did not affect responsibilities.)

– Under the Functional Model, the Planning Coordinator "Provides and informs Resource Planners, Transmission Planners, and adjacent Planning Coordinators of the methodologies and tools for the simulation of the transmission system" while the Transmission Planner "Receives from the Planning Coordinator methodologies and tools for the analysis and development of transmission expansion plans." A PC's selection of "critical system conditions" and its associated generation dispatch falls within the purview of "methodology."

Furthermore, consistent with this interpretation, a Planning Coordinator would formulate critical system conditions that may involve a range of critical generator unit outages as part of the possible generator dispatch scenarios.

Both TPL-002-0 and TPL-003-0 have a similar measure M1:

> **M1.** The Planning Authority and Transmission Planner shall have a valid assessment and corrective plans as specified in Reliability Standard TPL-002-0_R1 [or TPL-003-0_R1] and TPL-002-0_R2 [or TPL-003-0_R2]."

The Regional Reliability Organization (RRO) is named as the Compliance Monitor in both standards. Pursuant to Federal Energy Regulatory Commission (FERC) Order 693, FERC eliminated the RRO as the appropriate Compliance Monitor for standards and replaced it with the Regional Entity (RE). See paragraph 157 of Order 693. Although the referenced TPL standards still include the reference to the RRO, to be consistent with Order 693, the RRO is replaced by the RE as the Compliance Monitor for this interpretation. As the Compliance Monitor, the RE determines what a "valid assessment" means when evaluating studies based upon specific sub-requirements in R1.3 selected by the Planning Coordinator and the Transmission Planner. If a PC has Transmission Planners in more than one region, the REs must coordinate among themselves on compliance matters.

Requirement R1.3.12

Request for Interpretation of TPL-002-0 and TPL-003-0 Requirement R1.3.12 Received from Ameren on July 25, 2007:

Ameren also asks how the inclusion of planned outages should be interpreted with respect to the contingency definitions specified in Table 1 for Categories B and C. Specifically, Ameren asks if R1.3.12 requires that the system be planned to be operated during those conditions associated with planned outages consistent with the performance requirements described in Table 1 plus any unidentified outage.

Request for Interpretation of TPL-002-0 and TPL-003-0 Requirement R1.3.12 Received from MISO on August 9, 2007:

MISO asks if the term "planned outages" means only already known/scheduled planned outages that may continue into the planning horizon, or does it include potential planned outages not yet scheduled that may occur at those demand levels for which planned (including maintenance) outages are performed?

If the requirement does include not yet scheduled but potential planned outages that could occur in the planning horizon, is the following a proper interpretation of this provision?

The system is adequately planned and in accordance with the standard if, in order for a system operator to potentially schedule such a planned outage on the future planned system, planning studies show that a system adjustment (load shed, re-dispatch of generating units in the interconnection, or system reconfiguration) would be required concurrent with taking such a planned outage in order to prepare for a Category B contingency (single element forced out of service)? In other words, should the system in effect be planned to be operated as for a Category C3 n-2 event, even though the first event is a planned base condition?

If the requirement is intended to mean only known and scheduled planned outages that will occur or may continue into the planning horizon, is this interpretation consistent with the original interpretation by NERC of the standard as provided by NERC in response to industry questions in the Phase I development of this standard1?

The following interpretation of TPL-002-0 and TPL-003-0 Requirement R1.3.12 was developed by the NERC Planning Committee on March 13, 2008:

This provision was not previously interpreted by NERC since its approval by FERC and other regulatory authorities. TPL-002-0 and TPL-003-0 explicitly provide that the inclusion of planned (including maintenance) outages of any bulk electric equipment at demand levels for which the planned outages are required. For studies that include planned outages, compliance with the contingency assessment for TPL-002-0 and TPL-003-0 as outlined in Table 1 would include any necessary system adjustments which might be required to accommodate planned outages since a planned outage is not a "contingency" as defined in the *NERC Glossary of Terms Used in Standards.*

Appendix 2

Requirement Number and Text of Requirement
R1.3. Be supported by a current or past study and/or system simulation testing that addresses each of the following categories, showing system performance following **Category B of Table 1** (single contingencies). The specific elements selected (from each of the following categories) for inclusion in these studies and simulations shall be acceptable to the associated Regional Reliability Organization(s). **R1.3.10.** Include the effects of existing and planned protection systems, including any backup or redundant systems.
Background Information for Interpretation
Requirement R1.3 and sub-requirement R1.3.10 of standard TPL-002-0a contain three key obligations: 1. That the assessment is supported by "study and/or system simulation testing that addresses each the following categories, showing system performance following Category B of Table 1 (single contingencies)." 2. "…these studies and simulations shall be acceptable to the associated Regional Reliability Organization(s)." 3. "Include the effects of existing and planned protection systems, including any backup or redundant systems." *Category B of Table 1 (single Contingencies) specifies:* Single Line Ground (SLG) or 3-Phase (3Ø) Fault, with Normal Clearing: 1. Generator 2. Transmission Circuit 3. Transformer Loss of an Element without a Fault. Single Pole Block, Normal Clearing[e]: 4. Single Pole (dc) Line *Note e specifies*: e) Normal Clearing is when the protection system operates as designed and the Fault is cleared in the time normally expected with proper functioning of the installed protection systems. Delayed clearing of a Fault is due to failure of any protection system component such as a relay, circuit breaker, or current transformer, and not because of an intentional design delay. The NERC Glossary of Terms defines Normal Clearing as "A protection system operates as designed and the fault is cleared in the time normally expected with proper functioning of the installed protection systems."
Conclusion
TPL-002-0a requires that System studies or simulations be made to assess the impact of single Contingency operation with Normal Clearing. TPL-002-0a R1.3.10 does require that all elements expected to be removed from service through normal operations of the Protection Systems be removed in simulations. This standard does not require an assessment of the Transmission System performance due to a Protection System failure or Protection System misoperation. Protection System failure or Protection System misoperation is addressed in TPL-003-0 — System Performance following Loss of Two or More Bulk

Electric System Elements (Category C) and TPL-004-0 — System Performance Following Extreme Events Resulting in the Loss of Two or More Bulk Electric System Elements (Category D).

TPL-002-0a R1.3.10 does not require simulating anything other than Normal Clearing when assessing the impact of a Single Line Ground (SLG) or 3-Phase (3Ø) Fault on the performance of the Transmission System.

In regards to PacifiCorp's comments on the material impact associated with this interpretation, the interpretation team has the following comment:

Requirement R2.1 requires "a written summary of plans to achieve the required system performance," including a schedule for implementation and an expected in-service date that considers lead times necessary to implement the plan. Failure to provide such summary may lead to noncompliance that could result in penalties and sanctions.

A. Introduction

1. **Title:** System Performance Under Normal (No Contingency) Conditions (Category A)

2. **Number:** TPL-001-1

3. **Purpose:** System simulations and associated assessments are needed periodically to ensure that reliable systems are developed that meet specified performance requirements with sufficient lead time, and continue to be modified or upgraded as necessary to meet present and future system needs.

4. **Applicability:**

4.1. Planning Authority

4.2. Transmission Planner

5. **Effective Date:** The application of revised Footnote 'b' in Table 1 will take effect on the first day of the first calendar quarter, 60 months after applicable regulatory approval. In those jurisdictions where no regulatory approval is required, the effective date will be the first day of the first calendar quarter, 60 months after Board of Trustees adoption. All other requirements remain in effect per previous approvals. The existing Footnote 'b' remains in effect until the revised Footnote 'b' becomes effective.

B. Requirements

R1. The Planning Authority and Transmission Planner shall each demonstrate through a valid assessment that its portion of the interconnected transmission system is planned such that, with all transmission facilities in service and with normal (pre-contingency) operating procedures in effect, the Network can be operated to supply projected customer demands and projected Firm (non- recallable reserved) Transmission Services at all Demand levels over the range of forecast system demands, under the conditions defined in Category A of Table I. To be considered valid, the Planning Authority and Transmission Planner assessments shall:

R1.1. Be made annually.

R1.2. Be conducted for near-term (years one through five) and longer-term (years six through ten) planning horizons.

R1.3. Be supported by a current or past study and/or system simulation testing that addresses each of the following categories, showing system performance following Category A of Table 1 (no contingencies). The specific elements selected (from each of the following categories) shall be acceptable to the associated Regional Reliability Organization(s).

R1.3.1. Cover critical system conditions and study years as deemed appropriate by the entity performing the study.

R1.3.2. Be conducted annually unless changes to system conditions do not warrant such analyses.

R1.3.3. Be conducted beyond the five-year horizon only as needed to address identified marginal conditions that may have longer lead-time solutions.

R1.3.4. Have established normal (pre-contingency) operating procedures in place.

R1.3.5. Have all projected firm transfers modeled.

R1.3.6. Be performed for selected demand levels over the range of forecast system demands.

R1.3.7. Demonstrate that system performance meets Table 1 for Category A (no contingencies).

R1.3.8. Include existing and planned facilities.

R1.3.9. Include Reactive Power resources to ensure that adequate reactive resources are available to meet system performance.

R1.4. Address any planned upgrades needed to meet the performance requirements of Category A.

R2. When system simulations indicate an inability of the systems to respond as prescribed in Reliability Standard TPL-001-1_R1, the Planning Authority and Transmission Planner shall each:

R2.1. Provide a written summary of its plans to achieve the required system performance as described above throughout the planning horizon.

R2.1.1. Including a schedule for implementation.

R2.1.2. Including a discussion of expected required in-service dates of facilities.

R2.1.3. Consider lead times necessary to implement plans.

R2.2. Review, in subsequent annual assessments, (where sufficient lead time exists), the continuing need for identified system facilities. Detailed implementation plans are not needed.

R3. The Planning Authority and Transmission Planner shall each document the results of these reliability assessments and corrective plans and shall annually provide these to its respective NERC Regional Reliability Organization(s), as required by the Regional Reliability Organization.

C. Measures

M1. The Planning Authority and Transmission Planner shall have a valid assessment and corrective plans as specified in Reliability Standard TPL-001-1_R1 and TPL-001-1_R2.

M2. The Planning Authority and Transmission Planner shall have evidence it reported documentation of results of its Reliability Assessments and corrective plans per Reliability Standard TPL-001-1_R3.

D. Compliance

1. Compliance Monitoring Process

1.1. Compliance Monitoring Responsibility
Compliance Monitor: Regional Reliability Organization.
Each Compliance Monitor shall report compliance and violations to NERC via the NERC Compliance Reporting Process.

1.2. Compliance Monitoring Period and Reset Time Frame
Annually

1.3. Data Retention
None specified.

1.4. Additional Compliance Information

2. Levels of Non-Compliance

2.1. Level 1: Not applicable.

2.2. Level 2: A valid assessment and corrective plan for the longer-term planning horizon is not available.

2.3. Level 3: Not applicable.

2.4. Level 4: A valid assessment and corrective plan for the near-term planning horizon is not available.

E. Regional Differences

1. None identified.

Version History

Version	Date	Action	Change Tracking
0	April 1, 2005	Effective Date	New
0	February 8, 2005	BOT Approval	Revised
0	June 3, 2005	Fixed reference in M1 to read TPL-001-0 R2.1 and TPL-001-0 R2.2	Errata
0	July 24, 2007	Corrected reference in M1. to read TPL-001-0 R1 and TPL-001-0 R2.	Errata
0.1	October 29, 2008	BOT adopted errata changes; updated version number to “0.1”	Errata
0.1	May 13, 2009	FERC Approved – Updated Effective Date and Footer	Revised
1	Approved by Board of Trustees February 17, 2011	Revised footnote ‘b’ pursuant to FERC Order RM06-16-009	Revised (Project 2010-11)

Table I. Transmission System Standards – Normal and Emergency Conditions

Category	Contingencies	System Limits or Impacts		
	Initiating Event(s) and Contingency Element(s)	System Stable and both Thermal and Voltage Limits within Applicable Rating [a]	Loss of Demand or Curtailed Firm Transfers	Cascading Outages
A No Contingencies	All Facilities in Service	Yes	No	No
B Event resulting in the loss of a single element.	Single Line Ground (SLG) or 3-Phase (3Ø) Fault, with Normal Clearing: 1. Generator 2. Transmission Circuit 3. Transformer Loss of an Element without a Fault	Yes Yes Yes Yes	No [b] No [b] No [b] No [b]	No No No No
	Single Pole Block, Normal Clearing[e]: 4. Single Pole (dc) Line	Yes	No[b]	No
C Event(s) resulting in the loss of two or more (multiple) elements.	SLG Fault, with Normal Clearing[e]: 1. Bus Section 2. Breaker (failure or internal Fault)	Yes Yes	Planned/ Controlled[c] Planned/ Controlled[c]	No No
	SLG or 3Ø Fault, with Normal Clearing[e], Manual System Adjustments, followed by another SLG or 3Ø Fault, with Normal Clearing[e]: 3. Category B (B1, B2, B3, or B4) contingency, manual system adjustments, followed by another Category B (B1, B2, B3, or B4) contingency	Yes	Planned/ Controlled[c]	No
	Bipolar Block, with Normal Clearing[e]: 4. Bipolar (dc) Line Fault (non 3Ø), with Normal Clearing[e]: 5. Any two circuits of a multiple circuit towerline[f]	Yes Yes	Planned/ Controlled[c] Planned/ Controlled[c]	No No
	SLG Fault, with Delayed Clearing[e] (stuck breaker or protection system failure): 6. Generator 7. Transformer 8. Transmission Circuit 9. Bus Section	Yes Yes Yes Yes	Planned/ Controlled[c] Planned/ Controlled[c] Planned/ Controlled[c] Planned/ Controlled[c]	No No No No

D [d] Extreme event resulting in two or more (multiple) elements removed or Cascading out of service.	3Ø Fault, with Delayed Clearing [e] (stuck breaker or protection system failure): 1. Generator 2. Transmission Circuit 3. Transformer 4. Bus Section 3Ø Fault, with Normal Clearing[e]: 5. Breaker (failure or internal Fault) 6. Loss of towerline with three or more circuits 7. All transmission lines on a common right-of way 8. Loss of a substation (one voltage level plus transformers) 9. Loss of a switching station (one voltage level plus transformers) 10. Loss of all generating units at a station 11. Loss of a large Load or major Load center 12. Failure of a fully redundant Special Protection System (or remedial action scheme) to operate when required 13. Operation, partial operation, or misoperation of a fully redundant Special Protection System (or Remedial Action Scheme) in response to an event or abnormal system condition for which it was not intended to operate 14. Impact of severe power swings or oscillations from Disturbances in another Regional Reliability Organization.	Evaluate for risks and consequences. ▪ May involve substantial loss of customer Demand and generation in a widespread area or areas. ▪ Portions or all of the interconnected systems may or may not achieve a new, stable operating point. ▪ Evaluation of these events may require joint studies with neighboring systems.

a) Applicable rating refers to the applicable Normal and Emergency facility thermal Rating or system voltage limit as determined and consistently applied by the system or facility owner. Applicable Ratings may include Emergency Ratings applicable for short durations as required to permit operating steps necessary to maintain system control. All Ratings must be established consistent with applicable NERC Reliability Standards addressing Facility Ratings.

b) An objective of the planning process should be to minimize the likelihood and magnitude of interruption of firm transfers or Firm Demand following Contingency events. Curtailment of firm transfers is allowed when achieved through the appropriate re-dispatch of resources obligated to re-dispatch, where it can be demonstrated that Facilities, internal and external to the Transmission Planner's planning region, remain within applicable Facility Ratings and the re-dispatch does not result in the shedding of any Firm Demand. It is recognized that Firm Demand will be interrupted if it is: (1) directly served by the Elements removed from service as a result of the Contingency, or (2) Interruptible Demand or Demand-Side Management Load. Furthermore, in limited circumstances Firm Demand may need to be interrupted to address BES performance requirements. When interruption of Firm Demand is utilized within the planning process to address BES performance requirements, such interruption is limited to circumstances where the use of Demand interruption are documented, including alternatives evaluated; and where the Demand interruption is subject to review in an open and transparent stakeholder process that includes addressing stakeholder comments.

c) Depending on system design and expected system impacts, the controlled interruption of electric supply to customers (load shedding), the planned removal from service of certain generators, and/or the curtailment of contracted Firm (non-recallable reserved) electric power Transfers may be necessary to maintain the overall reliability of the interconnected transmission systems.

d) A number of extreme contingencies that are listed under Category D and judged to be critical by the transmission planning entity(ies) will be selected for evaluation. It is not expected that all possible facility outages under each listed contingency of Category D will be evaluated.

e) Normal clearing is when the protection system operates as designed and the Fault is cleared in the time normally expected with proper functioning of the installed protection systems. Delayed clearing of a Fault is due to failure of any protection system component such as a relay, circuit breaker, or current transformer, and not because of an intentional design delay.

f) System assessments may exclude these events where multiple circuit towers are used over short distances (e.g., station entrance, river crossings) in accordance with Regional exemption criteria.

Comment Form for 6th Draft of Standard TPL-001-1
Assess Transmission Future Needs (Project 2006-02)

Please **DO NOT** use this form to submit comments on the 6th draft of the TPL-001-2 standard for Assess Transmission Future Needs (Project 2006-02). This comment form must be completed by **May 31, 2011.**

If you have questions please contact Ed Dobrowolski at ed.dobrowolski@nerc.net or by telephone at 609-947-3673.

Background Information
TPL-001-1 Transmission System Planning Performance Requirements

Comments on the 5th draft of the TPL-001-2 Transmission System Planning Performance Requirements standard were received from the industry through September 2, 2010. The Drafting Team received feedback on a number of issues, and the SDT appreciates the tremendous industry participation in the process. Below is a brief overview of the 6th draft of the standard highlighting areas where the SDT made changes based on stakeholder feedback as well as the Standards Quality Review Team. The team's objectives remain unchanged - to create a single Transmission planning standard: 1) with clear, concise requirements set at an appropriate level to ensure reliability, and 2) that fully addresses all issues raised by FERC Orders 693 and 890, and industry inputs, including the SAR scope document.

6th Draft Overview:

The following changes were made due to industry comments:

1. The definitions of Near-Term Transmission Planning Horizon and Year One have been deleted as the same definition has already been filed by another project.
2. The following requirements were changed:
    a. Several grammatical changes for clarity.
    b. R1 – Establish P0 as the normal system condition.
    c. R2 – The VRF has been changed to High to reflect the importance of the Planning Assessment and to meet the latest guidelines.
    d. R2, part 2.1.4 – Change from 'performance' to 'System response'. .
    e. R2, part 2.1.4, bullet #7 –Change 'planned' to 'known'.
    f. R2, part 2.6.2 – Added documentation of technical rationale.
    g. R2, part 2.8 2– Added '…of identified System Facilities and Operating Procedures'.
    h. R4, part 4.3.1 – Provided timing criteria and added that it is only applicable when high speed reclosing is utilized.
    i. R8 – Changed VRF from Low to Medium to meet latest guidelines.
3. Header note changes:
    a. Deleted 'including Load' as a redundant phrase.
4. Performance table changes:
    a. Changed Column 2 heading to 'Initial Condition'.

   b. Deleted superscript for footnote 9 in P0, column 6
   c. Added 'Breaker' to P2 Event column, parts 3 & 4 and P4 Event for clarity.
   d. Added 'non-redundant' to P5 Event for clarity.
   e. Spelled out 'adjustments' to P6 Initial Condition for clarity.

5. Extreme event – Stability 2 – Changed Protection System' to 'relay' for clarity and added footnote 13 reference.
6. Footnote changes:
   a. #9 – Added resolutions from footnote 'b' clarification (Project 2010-11).
   b. #12 – Added resolutions from footnote 'b' clarification (Project 2010-11).
7. Measurement changes:
   a. Updated to reflect changes in requirements.
8. Data Retention – grammatical changes for clarity.

The following changes were made due to the Quality Review:

1. Added 'Category' to Requirement R1 for clarity.
2. Made grammatical changes to requirement R2 for clarity.
3. Added 'For the Planning Assessment' and made grammatical changes to Requirement R2 for clarity.
4. Added 'For the Planning Assessment' to Requirement R2, parts 2.2, 2.4, and 2.5 for clarity.
5. Added timing elements to Requirement R8 and adjusted Measure M8 and the VSL accordingly.
6. Added 'dated' to Measures M2, M3, M4, M5, and M6 to conform to the latest guidelines.
7. Added 'in-force' to Data retention for Requirement R1 and Measure M1 to conform to the latest guidelines.
8. Moved one item from Moderate to Severe in the VSL for Requirements R1, R2, and R4 to conform to the latest guidelines.

You do not have to answer all questions. Enter All Comments in Simple Text Format.

Insert a "check" mark in the appropriate boxes by double-clicking the gray areas.

1. The SDT has made revisions to the requirements language of TPL-001-2 based on industry comments and the Quality Review. Do you agree with these changes? If you do not support these changes or you agree in general but feel that alternative language would be more appropriate, please provide specific suggestions in your comments with clear indications as to which requirement you are commenting on.

   Yes:

   No:

   Comments:

2. The SDT has made revisions to the VRF and VSL of TPL-001-2 which will be part of a non-binding poll with this posting based on industry comments and the Quality Review. Do you agree with these changes? If you do not support these changes or you agree in general but feel that alternative language would be more appropriate, please provide specific suggestions in your comments.

   Yes:

   No:

   Comments:

3. If you have any other comments on this Standard that you have not already provided in response to the prior questions, please provide them here.

   Comments:

Implementation Plan for TPL-001-2

Prerequisite Approvals

There are no other Reliability Standards or Standard Authorization Requests (SARs), in progress or approved, that must be implemented before this standard can be implemented.

TPL-001-2 — Transmission System Planning Performance Requirements

In revising the TPL standards, the SDT is assuming that planners will receive valid data from the MOD standards link described in TPL-001-2, Requirement R1. Furthermore, there is a tacit assumption that future revisions of the MOD standards will include steps to validate MOD based data.

Revision to Sections of Approved Standards and Definitions

There are multiple new definitions in the proposed standard.

Bus-tie Breaker: A circuit breaker that is positioned to connect two individual substation bus configurations.

Consequential Load Loss: All Load that is no longer served by the Transmission system as a result of Transmission Facilities being removed from service by a Protection System operation designed to isolate the fault.

Long-Term Transmission Planning Horizon: Transmission planning period that covers years six through ten or beyond when required to accommodate any known longer lead time projects that may take longer than ten years to complete.

Non-Consequential Load Loss: Non-Interruptible Load loss that does not include: (1) Consequential Load Loss, (2) the response of voltage sensitive Load, or (3) Load that is disconnected from the System by end-user equipment.

Planning Assessment: Documented evaluation of future Transmission System performance and Corrective Action Plans to remedy identified deficiencies.

Compliance with Standards

Standard	Functions That Must Comply With the Associated Requirements	
	Transmission Planner	Planning Coordinator
TPL-001-2 — Transmission System Planning Performance Requirements	X	X

Effective Dates

The effective date is the date entities are expected to meet the performance identified in this standard.

Except as indicated below**,** all Requirements and associated parts shall become effective on the first day of the first calendar quarter, 24 months after applicable regulatory approval. In those jurisdictions where

no regulatory approval is required, all requirements go into effect on the first day of the first calendar quarter, 24 months after Board of Trustees adoption.

TPL-001-0, TPL-002-0a, TPL-003-0a, and TPL-004-0 are being retired as they are replaced in their entirety by TPL-001-2. TPL-005-0 and TPL-006-0 are being retired because their requirements are adequately covered by the revised TPL-001-2 and NERC's Rules of Procedure, Section 800. However, during this 24-month period, all aspects of TPL-001-0 through TPL-006-0 shall remain in effect for compliance monitoring. This 24 month period is to allow entities to develop, perform and/or validate new and/or modified studies, methodologies, assessments, procedures, etc. necessary to implement and meet the TPL-001-2 requirements. The specified effective dates are expected to allow sufficient time for proper assessment of the available options necessary to create a viable Corrective Action Plan that is compliant with the new Standard.

> R1. This Requirement is related to maintaining System models and the data needed to do so. This requirement shall become effective on the first day of the first calendar quarter, 12 months after applicable regulatory approval. In those jurisdictions where no regulatory approval is required, this requirement goes into effect on the first day of the first calendar quarter, 12 months after Board of Trustees adoption.
>
> R7. This Requirement identifies an obligation to determine individual and joint responsibilities for performing studies needed to do the Planning Assessment. This requirement shall become effective on the first day of the first calendar quarter, 12 months after applicable regulatory approval. In those jurisdictions where no regulatory approval is required, this requirement goes into effect on the first day of the first calendar quarter, 12 months after Board of Trustees adoption.

TPL-001-2 'raises the bar' in several areas where performance requirements have been changed in the new Standard versus those in existing TPL-001-0, TPL-002-0a, TPL-003-0a and TPL-004-0 because loss of Non-Consequential Load or interruption of firm transfers is no longer allowed for certain events, whereas the existing Standards were interpreted by many to allow such actions. As shown in Table 1 of TPL-001-2, the performance requirements associated with the following events represent "raising the bar":

- P1-2 (for controlled interruption of electric supply to local network customers connected to or supplied by the Faulted element)
- P1-3 (for controlled interruption of electric supply to local network customers connected to or supplied by the Faulted element)
- P2-1
- P2-2 (above 300 kV)
- P2-3 (above 300 kV)
- P3-1 through P3-5
- P4-1 through P4-5 (above 300 kV)
- P5 (above 300 kV)

This "raising the bar" is beyond the control of the Transmission Planner and Planning Coordinator and may have significant budget, siting, permitting, and construction impacts on many Transmission Owners. To provide stakeholders with sufficient time to implement changes, a timeframe coincident with the end of the Near-Term Transmission Planning Horizon will be provided as follows:

- For 84 months after the first day of the first calendar quarter following applicable regulatory approval, or in those jurisdictions where no regulatory approval is required on the first day of the first calendar quarter, 84 months after Board of Trustees adoption, Corrective Action Plans

applying to performance elements P1-2 and P1-3 (for controlled interruption of electric supply to local network customers connected to or supplied by the Faulted element), P2-1, P2-2 (above 300 kV), P2-3 (above 300 kV), P3-1 through P3-5, P4-1 through P4-5 (above 300 kV), and P5 (above 300 kV) are allowed to include tripping of Non-Consequential Load and curtailment of Firm Transmission Service (in accordance with Requirement R2.7.3) that would not otherwise be permitted by the requirements of TPL-001-2.

Any entity which cannot eliminate the need to trip Non-Consequential Load or curtail Firm Transmission Service for these performance elements by that date shall submit a mitigation plan to its Regional Entity outlining the steps it will take to correct the problem. If the entities follow the established ERO procedure for mitigation, it is the intent of the SDT that no penalties will be assessed.

Standard Development Roadmap

This section is maintained by the drafting team during the development of the standard and will be removed when the standard becomes effective.

Development Steps Completed:

1. Version 1 of SAR posted for comment from April 2, 2002 through May 3, 2002.
2. Version 2 of SAR posted for comment from May 5, 2004 through June 5, 2004.
3. Version 3 of SAR posted on November 18, 2005.
4. SAR approved on April 30, 2006.
5. Version 1 of Supplemental SAR posted for comment from February 15, 2007 through March 16, 2007.
6. Version 2 of Supplemental SAR posted on April 9, 2007.
7. Version 1 of revised standard(s) posted for comment on September 17, 2007.
8. Version 2 of the revised standards posted for comment on August 15, 2008.
9. Version 3 of the revised standards posted for comment on May 26, 2009.
10. Version 4 of the revised standards posted for comment on September 16, 2009.
11. Initial ballot completed on March 1, 2010.
12. Version 5 of the revised standard posted for comment on August 3, 2010.
13. Version 6 of the revised standard posted for information on October 19, 2010.

Proposed Action Plan and Description of Current Draft:
The SDT has established a schedule of meetings and conference calls that allows for steady progress through the standards development process in anticipation of completing their assignment in 1Q11. The current draft is the sixth iteration of the revision of existing standards TPL-001 through TPL-006 and includes one revised standard, TPL-001-2, replacing TPL-001-0, TPL-002-0, TPL-003-0 and TPL-004-0. TPL-005 & -006 issues are addressed in this sixth draft and those standards will also be replaced by TPL-001-2.

Future Development Plan:

Anticipated Actions	Anticipated Date
1. Conduct ballot	1Q11
2. Submit standard(s) to BOT.	2Q11
3. Submit to regulatory authorities for approval.	3Q11

Definitions of Terms Used in Standard

This section includes all newly defined or revised terms used in the proposed standard. Terms already defined in the Reliability Standards Glossary of Terms are not repeated here. New or revised definitions listed below become approved when the proposed standard is approved. When the standard becomes effective, these defined terms will be removed from the individual standard and added to the Glossary.

Bus-tie Breaker: A circuit breaker that is positioned to connect two individual substation bus configurations.

Consequential Load Loss: All Load that is no longer served by the Transmission system as a result of Transmission Facilities being removed from service by a Protection System operation designed to isolate the fault.

Long-Term Transmission Planning Horizon: Transmission planning period that covers years six through ten or beyond when required to accommodate any known longer lead time projects that may take longer than ten years to complete.

Non-Consequential Load Loss: Non-Interruptible Load loss that does not include: (1) Consequential Load Loss, (2) the response of voltage sensitive Load, or (3) Load that is disconnected from the System by end-user equipment.

Planning Assessment: Documented evaluation of future Transmission system performance and Corrective Action Plans to remedy identified deficiencies.

A. Introduction

1. **Title:** **Transmission System Planning Performance Requirements**

2. **Number:** **TPL-001-2**

3. **Purpose:** Establish Transmission system planning performance requirements within the planning horizon to develop a Bulk Electric System (BES) that will operate reliably over a broad spectrum of System conditions and following a wide range of probable Contingencies.

4. **Applicability:**

   4.1. Functional Entity

   4.1.1. Planning Coordinator.

   4.1.2. Transmission Planner.

5. **Effective Date:** Requirements R1 and R7 shall become effective on the first day of the first calendar quarter, 12 months after applicable regulatory approval. In those jurisdictions where no regulatory approval is required, Requirements R1 and R7 become effective on the first day of the first calendar quarter, 12 months after Board of Trustees adoption.

   Except as indicated below, Requirements R2 through R6 and Requirement R8 shall become effective on the first day of the first calendar quarter, 24 months after applicable regulatory approval. In those jurisdictions where no regulatory approval is required, all requirements, except as noted below, go into effect on the first day of the first calendar quarter, 24 months after Board of Trustees adoption.

   For 84 calendar months beginning the first day of the first calendar quarter following applicable regulatory approval, or in those jurisdictions where no regulatory approval is required on the first day of the first calendar quarter 84 months after Board of Trustees adoption, Corrective Action Plans applying to the following categories of Contingencies and events identified in TPL-001-2, Table 1 are allowed to include Non-Consequential Load Loss and curtailment of Firm Transmission Service (in accordance with Requirement R2, Part 2.7.3.) that would not otherwise be permitted by the requirements of TPL-001-2:

   - P1-2 (for controlled interruption of electric supply to local network customers connected to or supplied by the Faulted element)
   - P1-3 (for controlled interruption of electric supply to local network customers connected to or supplied by the Faulted element)
   - P2-1, P2-2 (above 300 kV)
   - P2-3 (above 300 kV)
   - P3-1 through P3-5
   - P4-1 through P4-5 (above 300 kV)
   - P5 (above 300 kV)

B. Requirements

R1. Each Transmission Planner and Planning Coordinator shall maintain System models within its respective area for performing the studies needed to complete its Planning Assessment. The models shall use data consistent with that provided in accordance with the MOD-010 and MOD-012 standards, supplemented by other sources as needed, including items represented in the Corrective Action Plan, and shall represent projected System conditions. This establishes Category P0 as the normal System condition in Table 1. *[Violation Risk Factor: Medium] [Time Horizon: Long-term Planning]*

1.1. System models shall represent:

1.1.1. Existing Facilities

1.1.2. Known outage(s) of generation or Transmission Facility(ies) with a duration of at least six months.

1.1.3. New planned Facilities and changes to existing Facilities

1.1.4. Real and reactive Load forecasts

1.1.5. Known commitments for Firm Transmission Service and Interchange

1.1.6. Resources (supply or demand side) required for Load

R2. Each Transmission Planner and Planning Coordinator shall prepare an annual Planning Assessment of its portion of the BES. This Planning Assessment shall use current or qualified past studies (as indicated in Requirement R2, Part 2.6), document assumptions, and document summarized results of the steady state analyses, short circuit analyses, and Stability analyses. *[Violation Risk Factor: High] [Time Horizon: Long-term Planning]*

2.1. For the Planning Assessment, the Near-Term Transmission Planning Horizon portion of the steady state analysis shall be assessed annually and be supported by current annual studies or qualified past studies (as indicated in Requirement R2, Part 2.6). Qualifying studies need to include the following conditions:

2.1.1. System peak Load for either Year One or year two, and for year five.

2.1.2. System Off-Peak Load for one of the five years.

2.1.3. P1 events in Table 1, with known outages modeled as in Requirement R1, Part 1.1.2, under those System peak or Off-Peak conditions when known outages are scheduled.

2.1.4. For each of the studies described in Requirement R2, Parts 2.1.1 and 2.1.2, sensitivity case(s) shall be utilized to demonstrate the impact of changes to the basic assumptions used in the model. To accomplish this, the sensitivity analysis in the Planning Assessment must vary one or more of the following conditions by a sufficient amount to stress the System within a range of credible conditions that demonstrate a measurable change in System response :

- Real and reactive forecasted Load.
- Expected transfers.
- Expected in service dates of new or modified Transmission Facilities.
- Reactive resource capability.
- Generation additions, retirements, or other dispatch scenarios.
- Controllable Loads and Demand Side Management.
- Duration or timing of known Transmission outages.

2.1.5. When an entity's spare equipment strategy could result in the unavailability of major Transmission equipment that has a lead time of one year or more (such as a transformer), the impact of this possible unavailability on System performance shall be studied. The studies shall be performed for the P0, P1, and P2 categories identified in Table 1 with the conditions that the System is

expected to experience during the possible unavailability of the long lead time equipment.

2.2. For the Planning Assessment, the Long-Term Transmission Planning Horizon portion of the steady state analysis shall be assessed annually and be supported by the following annual current study, supplemented with qualified past studies as indicated in Requirement R2, Part 2.6:

2.2.1. A current study assessing expected System peak Load conditions for one of the years in the Long-Term Transmission Planning Horizon and the rationale for why that year was selected.

2.3. The short circuit analysis portion of the Planning Assessment shall be conducted annually addressing the Near-Term Transmission Planning Horizon and can be supported by current or past studies as qualified in Requirement R2, Part 2.6. The analysis shall be used to determine whether circuit breakers have interrupting capability for Faults that they will be expected to interrupt using the System short circuit model with any planned generation and Transmission Facilities in service which could impact the study area.

2.4. For the Planning Assessment, the Near-Term Transmission Planning Horizon portion of the Stability analysis shall be assessed annually and be supported by current or past studies as qualified in Requirement R2, Part2.6. The following studies are required:

2.4.1. System peak Load for one of the five years. System peak Load levels shall include a Load model which represents the expected dynamic behavior of Loads that could impact the study area, considering the behavior of induction motor Loads. An aggregate System Load model which represents the overall dynamic behavior of the Load is acceptable.

2.4.2. System Off-Peak Load for one of the five years.

2.4.3. For each of the studies described in Requirement R2, Parts 2.4.1 and 2.4.2, sensitivity case(s) shall be utilized to demonstrate the impact of changes to the basic assumptions used in the model. To accomplish this, the sensitivity analysis in the Planning Assessment must vary one or more of the following conditions by a sufficient amount to stress the System within a range of credible conditions that demonstrate a measurable change in performance:

- Load level, Load forecast, or dynamic Load model assumptions.
- Expected transfers.
- Expected in service dates of new or modified Transmission Facilities.
- Reactive resource capability.
- Generation additions, retirements, or other dispatch scenarios.

2.5. For the Planning Assessment, the Long-Term Transmission Planning Horizon portion of the Stability analysis shall be assessed to address the impact of proposed material generation additions or changes in that timeframe and be supported by current or past studies as qualified in Requirement R2, Part2.6 and shall include documentation to support the technical rationale for determining material changes.

2.6. Past studies may be used to support the Planning Assessment if they meet the following requirements:

2.6.1. For steady state, short circuit, or Stability analysis: the study shall be five calendar years old or less, unless a technical rationale can be provided to demonstrate that the results of an older study are still valid.

2.6.2. For steady state, short circuit, or Stability analysis: no material changes have occurred to the System represented in the study. Documentation to support the technical rationale for determining material changes shall be included.

2.7. For planning events shown in Table 1, when the analysis indicates an inability of the System to meet the performance requirements in Table 1, the Planning Assessment shall include Corrective Action Plan(s) addressing how the performance requirements will be met. Revisions to the Corrective Action Plan(s) are allowed in subsequent Planning Assessments but the planned System shall continue to meet the performance requirements in Table 1. Corrective Action Plan(s) do not need to be developed solely to meet the performance requirements for a single sensitivity case analyzed in accordance with Requirements R2, Parts 2.1.4 and 2.4.3. The Corrective Action Plan(s) shall:

2.7.1. List System deficiencies and the associated actions needed to achieve required System performance. Examples of such actions include:

- Installation, modification, retirement, or removal of Transmission and generation Facilities and any associated equipment.
- Installation, modification, or removal of Protection Systems or Special Protection Systems
- Installation or modification of automatic generation tripping as a response to a single or multiple Contingency to mitigate Stability performance violations.
- Installation or modification of manual and automatic generation runback/tripping as a response to a single or multiple Contingency to mitigate steady state performance violations.
- Use of Operating Procedures specifying how long they will be needed as part of the Corrective Action Plan.
- Use of rate applications, DSM, new technologies, or other initiatives.

2.7.2. Include actions to resolve performance deficiencies identified in multiple sensitivity studies or provide a rationale for why actions were not necessary.

2.7.3. If situations arise that are beyond the control of the Transmission Planner or Planning Coordinator that prevent the implementation of a Corrective Action Plan in the required timeframe, then the Transmission Planner or Planning Coordinator is permitted to utilize Non-Consequential Load Loss and curtailment of Firm Transmission Service to correct the situation that would normally not be permitted in Table 1, provided that the Transmission Planner or Planning Coordinator documents that they are taking actions to resolve the situation. The Transmission Planner or Planning Coordinator shall document the situation causing the problem, alternatives evaluated, and the use of Non-Consequential Load Loss or curtailment of Firm Transmission Service.

2.7.4. Be reviewed in subsequent annual Planning Assessments for continued validity and implementation status of identified System Facilities and Operating Procedures.

2.8. For short circuit analysis, if the short circuit current interrupting duty on circuit breakers determined in Requirement R2, Part 2.3 exceeds their Equipment Rating, the Planning Assessment shall include a Corrective Action Plan to address the Equipment Rating violations. The Corrective Action Plan shall:

2.8.1. List System deficiencies and the associated actions needed to achieve required System performance.

2.8.2. Be reviewed in subsequent annual Planning Assessments for continued validity and implementation status of identified System Facilities and Operating Procedures.

R3. For the steady state portion of the Planning Assessment, each Transmission Planner and Planning Coordinator shall perform studies for the Near-Term and Long-Term Transmission Planning Horizons in Requirement R2, Parts 2.1, and 2.2. The studies shall be based on computer simulation models using data provided in Requirement R1. *[Violation Risk Factor: Medium] [Time Horizon: Long-term Planning]*

3.1. Studies shall be performed for planning events to determine whether the BES meets the performance requirements in Table 1 based on the Contingency list created in Requirement R3, Part 3.4.

3.2. Studies shall be performed to assess the impact of the extreme events which are identified by the list created in Requirement R3, Part 3.5.

3.3. Contingency analyses for Requirement R3, Parts 3.1 & 3.2 shall:

3.3.1. Simulate the removal of all elements that the Protection System and other automatic controls are expected to disconnect for each Contingency without operator intervention. The analyses shall include the impact of subsequent:

- Tripping of generators where simulations show generator bus voltages or high side of the generation step up (GSU) voltages are less than known or assumed minimum generator steady state or ride through voltage limitations. Include in the assessment any assumptions made.
- Tripping of Transmission elements where relay loadability limits are exceeded.

3.3.2. Simulate the expected automatic operation of existing and planned devices designed to provide steady state control of electrical system quantities when such devices impact the study area. These devices may include equipment such as phase-shifting transformers, load tap changing transformers, and switched capacitors and inductors.

3.4. Those planning events in Table 1, that are expected to produce more severe System impacts on its portion of the BES, shall be identified and a list of those Contingencies to be evaluated for System performance in Requirement R3, Part 3.1 created. The rationale for those Contingencies selected for evaluation shall be available as supporting information.

3.4.1. The Planning Coordinator and Transmission Planner shall coordinate with adjacent Planning Coordinators and Transmission Planners to ensure that

Contingencies on adjacent Systems which may impact their Systems are included in the Contingency list.

3.5. Those extreme events in Table 1 that are expected to produce more severe System impacts shall be identified and a list created of those events to be evaluated in Requirement R3, Part 3.2. The rationale for those Contingencies selected for evaluation shall be available as supporting information. If the analysis concludes there is Cascading caused by the occurrence of extreme events, an evaluation of possible actions designed to reduce the likelihood or mitigate the consequences and adverse impacts of the event(s) shall be conducted.

R4. For the Stability portion of the Planning Assessment, as described in Requirement R2, Parts 2.4 and 2.5, each Transmission Planner and Planning Coordinator shall perform the Contingency analyses listed in Table 1. The studies shall be based on computer simulation models using data provided in Requirement R1. *[Violation Risk Factor: Medium] [Time Horizon: Long-term Planning]*

4.1. Studies shall be performed for planning events to determine whether the BES meets the performance requirements in Table 1 based on the Contingency list created in Requirement R4, Part 4.4.

4.1.1. For planning event P1: No generating unit shall pull out of synchronism. A generator being disconnected from the System by fault clearing action or by a Special Protection System is not considered pulling out of synchronism.

4.1.2. For planning events P2 through P7: When a generator pulls out of synchronism in the simulations, the resulting apparent impedance swings shall not result in the tripping of any Transmission system elements other than the generating unit and its directly connected Facilities.

4.1.3. For planning events P1 through P7: Power oscillations shall exhibit acceptable damping as established by the Planning Coordinator and Transmission Planner.

4.2. Studies shall be performed to assess the impact of the extreme events which are identified by the list created in Requirement R4, Part 4.5.

4.3. Contingency analyses for Requirement R4, Parts 4.1 and 4.2 shall :

4.3.1. Simulate the removal of all elements that the Protection System and other automatic controls are expected to disconnect for each Contingency without operator intervention. The analyses shall include the impact of subsequent:

- Successful high speed (less than one second) reclosing and unsuccessful high speed reclosing into a Fault where high speed reclosing is utilized.
- Tripping of generators where simulations show generator bus voltages or high side of the GSU voltages are less than known or assumed generator low voltage ride through capability. Include in the assessment any assumptions made.
- Tripping of Transmission lines and transformers where transient swings cause Protection System operation based on generic or actual relay models.

4.3.2. Simulate the expected automatic operation of existing and planned devices designed to provide dynamic control of electrical system quantities when such devices impact the study area. These devices may include equipment

such as generation exciter control and power system stabilizers, static var compensators, power flow controllers, and DC Transmission controllers.

4.4. Those planning events in Table 1 that are expected to produce more severe System impacts on its portion of the BES, shall be identified, and a list created of those Contingencies to be evaluated in Requirement R4, Part 4.1. The rationale for those Contingencies selected for evaluation shall be available as supporting information.

4.4.1. Each Planning Coordinator and Transmission Planner shall coordinate with adjacent Planning Coordinators and Transmission Planners to ensure that Contingencies on adjacent Systems which may impact their Systems are included in the Contingency list.

4.5. Those extreme events in Table 1 that are expected to produce more severe System impacts shall be identified and a list created of those events to be evaluated in Requirement R4, Part 4.2. The rationale for those Contingencies selected for evaluation shall be available as supporting information. If the analysis concludes there is Cascading caused by the occurrence of extreme events, an evaluation of possible actions designed to reduce the likelihood or mitigate the consequences of the event(s) shall be conducted.

R5. Each Transmission Planner and Planning Coordinator shall have criteria for acceptable System steady state voltage limits, post-Contingency voltage deviations, and the transient voltage response for its System. For transient voltage response, the criteria shall at a minimum, specify a low voltage level and a maximum length of time that transient voltages may remain below that level. *[Violation Risk Factor: Medium] [Time Horizon: Long-term Planning]*

R6. Each Transmission Planner and Planning Coordinator shall define and document, within their Planning Assessment, the criteria or methodology used in the analysis to identify System instability for conditions such as Cascading, voltage instability, or uncontrolled islanding. *[Violation Risk Factor: Low] [Time Horizon: Long-term Planning]*

R7. Each Planning Coordinator, in conjunction with each of its Transmission Planners, shall determine and identify each entity's individual and joint responsibilities for performing the required studies for the Planning Assessment. *[Violation Risk Factor: Low] [Time Horizon: Long-term Planning]*

R8. Each Planning Coordinator and Transmission Planner shall distribute its Planning Assessment results to adjacent Planning Coordinators and adjacent Transmission Planners within 90 calendar days of completing its Planning Assessment, and to any functional entity that has a reliability related need and submits a written request for the information within 30 days of such a request. *[Violation Risk Factor: Medium] [Time Horizon: Long-term Planning]*

8.1. If a recipient of the Planning Assessment results provides documented comments on the results, the respective Planning Coordinator or Transmission Planner shall provide a documented response to that recipient within 90 calendar days of receipt of those comments.

Table 1 – Steady State & Stability Performance Planning Events

Steady State & Stability:

a. The System shall remain stable. Cascading and uncontrolled islanding shall not occur.
b. Consequential Load Loss as well as generation loss is acceptable as a consequence of any event excluding P0.
c. Simulate the removal of all elements that Protection Systems and other controls are expected to automatically disconnect for each event.
d. Simulate Normal Clearing unless otherwise specified.
e. Planned System adjustments such as Transmission configuration changes and re-dispatch of generation are allowed if such adjustments are executable within the time duration applicable to the Facility Ratings.

Steady State Only:

f. Applicable Facility Ratings shall not be exceeded.
g. System steady state voltages and post-Contingency voltage deviations shall be within acceptable limits as established by the Planning Coordinator and the Transmission Planner.
h. Planning event P0 is applicable to steady state only.
i. The response of voltage sensitive Load that is disconnected from the System by end-user equipment associated with an event shall not be used to meet steady state performance requirements.

Stability Only:

j. Transient voltage response shall be within acceptable limits established by the Planning Coordinator and the Transmission Planner.

Category	Initial Condition	Event [1]	Fault Type [2]	BES Level [3]	Interruption of Firm Transmission Service Allowed [4]	Non-Consequential Load Loss Allowed
P0 No Contingency	Normal System	None	N/A	EHV, HV	No	No
P1 Single Contingency	Normal System	Loss of one of the following: 1. Generator 2. Transmission Circuit 3. Transformer [5] 4. Shunt Device [6]	3Ø	EHV, HV	No[9]	No[12]
		5. Single Pole of a DC line	SLG			
P2 Single Contingency	Normal System	1. Opening of a line section w/o a fault [7]	N/A	EHV, HV	No[9]	No[12]
		2. Bus Section Fault	SLG	EHV	No[9]	No
				HV	Yes	Yes
		3. Internal Breaker Fault [8]	SLG	EHV	No[9]	No

		(non-Bus-tie Breaker)		HV	Yes	Yes
		4. Internal Breaker Fault (Bus-tie Breaker)[8]	SLG	EHV, HV	Yes	Yes
Category	**Initial Condition**	**Event** [1]	**Fault Type** [2]	**BES Level** [3]	**Interruption of Firm Transmission Service Allowed** [4]	**Non-Consequential Load Loss Allowed**
P3 Multiple Contingency	Loss of generator unit followed by System adjustments[9]	Loss of one of the following: 1. Generator 2. Transmission Circuit 3. Transformer [5] 4. Shunt Device [6]	3Ø	EHV, HV	No[9]	No[12]
		5. Single pole of a DC line	SLG			
P4 Multiple Contingency *(Fault plus stuck breaker[10])*	Normal System	Loss of multiple elements caused by a stuck breaker [10](non-Bus-tie Breaker) attempting to clear a Fault on one of the following: 1. Generator 2. Transmission Circuit 3. Transformer [5] 4. Shunt Device [6] 5. Bus Section	SLG	EHV	No[9]	No
				HV	Yes	Yes
		6. Loss of multiple elements caused by a stuck breaker[10] (Bus-tie Breaker) attempting to clear a Fault on the associated bus	SLG	EHV, HV	Yes	Yes
P5 Multiple Contingency *(Fault plus relay failure to operate)*	Normal System	Delayed Fault Clearing due to the failure of a non-redundant relay[13] protecting the Faulted element to operate as designed, for one of the following: 1. Generator 2. Transmission Circuit 3. Transformer [5] 4. Shunt Device [6] 5. Bus Section	SLG	EHV	No[9]	No
				HV	Yes	Yes

P6 Multiple Contingency *(Two overlapping singles)*	Loss of one of the following followed by System adjustments.[9] 1. Transmission Circuit 2. Transformer [5] 3. Shunt Device[6] 4. Single pole of a DC line	Loss of one of the following: 1. Transmission Circuit 2. Transformer [5] 3. Shunt Device [6]	3Ø	EHV, HV	Yes	Yes
		4. Single pole of a DC line	SLG	EHV, HV	Yes	Yes
P7 Multiple Contingency *(Common Structure)*	Normal System	The loss of: 1. Any two adjacent (vertically or horizontally) circuits on common structure [11] 2. Loss of a bipolar DC line	SLG	EHV, HV	Yes	Yes

Table 1 – Steady State & Stability Performance Extreme Events

Steady State & Stability

For all extreme events evaluated:

a. Simulate the removal of all elements that Protection Systems and automatic controls are expected to disconnect for each Contingency.

b. Simulate Normal Clearing unless otherwise specified.

Steady State

1. Loss of a single generator, Transmission Circuit, single pole of a DC Line, shunt device, or transformer forced out of service followed by another single generator, Transmission Circuit, single pole of a different DC Line, shunt device, or transformer forced out of service prior to System adjustments.
2. Local area events affecting the Transmission System such as:
   a. Loss of a tower line with three or more circuits.[11]
   b. Loss of all Transmission lines on a common Right-of-Way[11].
   c. Loss of a switching station or substation (loss of one voltage level plus transformers).
   d. Loss of all generating units at a generating station.
   e. Loss of a large Load or major Load center.
3. Wide area events affecting the Transmission System based on System topology such as:
   a. Loss of two generating stations resulting from conditions such as:
      i. Loss of a large gas pipeline into a region or multiple regions that have significant gas-fired generation.
      ii. Loss of the use of a large body of water as the cooling source for generation.
      iii. Wildfires.
      iv. Severe weather, e.g., hurricanes, tornadoes, etc.
      v. A successful cyber attack.
      vi. Shutdown of a nuclear power plant(s) and related facilities for a day or more for common causes such as problems with similarly designed plants.
   b. Other events based upon operating experience that may result in wide area disturbances.

Stability

1. With an initial condition of a single generator, Transmission circuit, single pole of a DC line, shunt device, or transformer forced out of service, apply a 3Ø fault on another single generator, Transmission circuit, single pole of a different DC line, shunt device, or transformer prior to System adjustments.
2. Local or wide area events affecting the Transmission System such as:
   a. 3Ø fault on generator with stuck breaker[10] or a relay failure[13] resulting in Delayed Fault Clearing.
   b. 3Ø fault on Transmission circuit with stuck breaker[10] or a relay failure[13] resulting in Delayed Fault Clearing.
   c. 3Ø fault on transformer with stuck breaker[10] or a relay failure[13] resulting in Delayed Fault Clearing.
   d. 3Ø fault on bus section with stuck breaker[10] or a relay failure[13] resulting in Delayed Fault Clearing.
   e. 3Ø internal breaker fault.
   f. Other events based upon operating experience, such as consideration of initiating events that experience suggests may result in wide area disturbances

Table 1 – Steady State & Stability Performance Footnotes (Planning Events and Extreme Events)
1. If the event analyzed involves BES elements at multiple System voltage levels, the lowest System voltage level of the element(s) removed for the analyzed event determines the stated performance criteria regarding allowances for interruptions of Firm Transmission Service and Non-Consequential Load Loss.
2. Unless specified otherwise, simulate Normal Clearing of faults. Single line to ground (SLG) or three-phase (3Ø) are the fault types that must be evaluated in Stability simulations for the event described. A 3Ø or a double line to ground fault study indicating the criteria are being met is sufficient evidence that a SLG condition would also meet the criteria.
3. Bulk Electric System (BES) level references include extra-high voltage (EHV) Facilities defined as greater than 300kV and high voltage (HV) Facilities defined as the 300kV and lower voltage Systems. The designation of EHV and HV is used to distinguish between stated performance criteria allowances for interruption of Firm Transmission Service and Non-Consequential Load Loss.
4. Curtailment of Conditional Firm Transmission Service is allowed when the conditions and/or events being studied formed the basis for the Conditional Firm Transmission Service.
5. For non-generator step up transformer outage events, the reference voltage, as used in footnote 1, applies to the low-side winding (excluding tertiary windings). For generator and Generator Step Up transformer outage events, the reference voltage applies to the BES connected voltage (high-side of the Generator Step Up transformer). Requirements which are applicable to transformers also apply to variable frequency transformers and phase shifting transformers.
6. Requirements which are applicable to shunt devices also apply to FACTS devices that are connected to ground.
7. Opening one end of a line section without a fault on a normally networked Transmission circuit such that the line is possibly serving Load radial from a single source point.
8. An internal breaker fault means a breaker failing internally, thus creating a System fault which must be cleared by protection on both sides of the breaker.
9. An objective of the planning process should be to minimize the likelihood and magnitude of interruption of Firm Transmission Service following Contingency events. Curtailment of Firm Transmission Service is allowed both as a System adjustment (as identified in the column entitled 'Initial Condition') and a corrective action when achieved through the appropriate re-dispatch of resources obligated to re-dispatch, where it can be demonstrated that Facilities, internal and external to the Transmission Planner's planning region, remain within applicable Facility Ratings and the re-dispatch does not result in any Non-Consequential Load Loss. Where limited options for re-dispatch exist, sensitivities associated with the availability of those resources should be considered.
10. A stuck breaker means that for a gang-operated breaker, all three phases of the breaker have remained closed. For an independent pole operated (IPO) or an independent pole tripping (IPT) breaker, only one pole is assumed to remain closed. A stuck breaker results in Delayed Fault Clearing.
11. Excludes circuits that share a common structure (Planning event P7, Extreme event steady state 2a) or common Right-of-Way (Extreme event, steady state 2b) for 1 mile or less.
12. An objective of the planning process should be to minimize the likelihood and magnitude of Non-Consequential Load Loss following Contingency events. However, in limited circumstances Non-Consequential Load Loss may be needed to address BES performance requirements. When Non-Consequential Load Loss is utilized within the planning process to address BES performance requirements, such interruption is limited to circumstances where the Non-Consequential Load Loss is documented, including alternatives evaluated; and where the utilization of Non-Consequential Load Loss is subject to review in an open and transparent stakeholder process that includes addressing stakeholder comments.
13. Applies to the following relay functions or types: pilot (#85), distance (#21), differential (#87), current (#50, 51, and 67), voltage (#27 & 59), directional (#32, & 67), and tripping (#86, & 94).

C. Measures

M1. Each Transmission Planner and Planning Coordinator shall provide evidence, in electronic or hard copy format, that it is maintaining System models within their respective area, using data consistent with MOD-010 and MOD-012, including items represented in the Corrective Action Plan, representing projected System conditions, and that the models represent the required information in accordance with Requirement R1.

M2. Each Transmission Planner and Planning Coordinator shall provide dated evidence, such as electronic or hard copies of its annual Planning Assessment, that it has prepared an annual Planning Assessment of its portion of the BES in accordance with Requirement R2.

M3. Each Transmission Planner and Planning Coordinator shall provide dated evidence, such as electronic or hard copies of the studies utilized in preparing the Planning Assessment, in accordance with Requirement R3.

M4. Each Transmission Planner and Planning Coordinator shall provide dated evidence, such as electronic or hard copies of the studies utilized in preparing the Planning Assessment in accordance with Requirement R4.

M5. Each Transmission Planner and Planning Coordinator shall provide dated evidence such as electronic or hard copies of the documentation specifying the criteria for acceptable System steady state voltage limits, post-Contingency voltage deviations, and the transient voltage response for its System in accordance with Requirement R5.

M6. Each Transmission Planner and Planning Coordinator shall provide dated evidence, such as electronic or hard copies of documentation specifying the criteria or methodology used in the analysis to identify System instability for conditions such as Cascading, voltage instability, or uncontrolled islanding that was utilized in preparing the Planning Assessment in accordance with Requirement R6.

M7. Each Planning Coordinator, in conjunction with each of its Transmission Planners, shall provide dated documentation on roles and responsibilities, such as meeting minutes, agreements, and e-mail correspondence that identifies that agreement has been reached on individual and joint responsibilities for performing the required studies and Assessments in accordance with Requirement R7.

M8. Each Planning Coordinator and Transmission Planner shall provide evidence, such as email notices, documentation of updated web pages, postal receipts showing recipient and date; or a demonstration of a public posting, that it has distributed its Planning Assessment results to adjacent Planning Coordinators and adjacent Transmission Planners within 90 days of having completed its Planning Assessment, and to any functional entity who has indicated a reliability need within 30 days of a written request and that the Planning Coordinator or Transmission Planner has provided a documented response to comments received on Planning Assessment results within 90 calendar days of receipt of those comments in accordance with Requirement R8.

D. Compliance

1. Compliance Monitoring Process

1.1 Compliance Enforcement Authority

Regional Entity

1.2 Compliance Monitoring Period and Reset Timeframe

Not applicable.

1.3 Compliance Monitoring and Enforcement Processes:

Compliance Audits

Self-Certifications

Spot Checking

Compliance Violation Investigations

Self-Reporting

Complaints

1.4 Data Retention

The Transmission Planner and Planning Coordinator shall each retain data or evidence to show compliance as identified unless directed by its Compliance Enforcement Authority to retain specific evidence for a longer period of time as part of an investigation:

- The models utilized in the current in-force Planning Assessment and one previous Planning Assessment in accordance with Requirement R1 and Measure M1.
- The Planning Assessments performed since the last compliance audit in accordance with Requirement R2 and Measure M2.
- The studies performed in support of its Planning Assessments since the last compliance audit in accordance with Requirement R3 and Measure M3.
- The studies performed in support of its Planning Assessments since the last compliance audit in accordance with Requirement R4 and Measure M4.
- The documentation specifying the criteria since the last compliance audit in accordance with Requirement R5 and Measure M5.
- The documentation specifying the criteria or methodology utilized in support of its Planning Assessments since the last compliance audit in accordance with Requirement R6 and Measure M6.
- The current, in force documentation for the agreement(s) on roles and responsibilities, as well as documentation for the agreements in force since the last compliance audit, in accordance with Requirement R7 and Measure M7.

The Planning Coordinator shall retain data or evidence to show compliance as identified unless directed by its Compliance Enforcement Authority to retain specific evidence for a longer period of time as part of an investigation:

- Three calendar years of the notifications employed in accordance with Requirement R8 and Measure M8.

If a Transmission Planner or Planning Coordinator is found non-compliant, it shall keep information related to the non-compliance until found compliant or the time periods specified above, whichever is longer.

1.5 Additional Compliance Information

None.

2. Violation Severity Levels

	Lower VSL	Moderate VSL	High VSL	Severe VSL
R1	The responsible entity's System model failed to represent one of the Requirement R1, Parts 1.1.1 through 1.1.6.	The responsible entity's System model failed to represent two of the Requirement R1, Parts 1.1.1 through 1.1.6.	The responsible entity's System model failed to represent three of the Requirement R1, Parts 1.1.1 through 1.1.6.	The responsible entity's System model failed to represent four or more of the Requirement R1, Parts 1.1.1 through 1.1.6. OR The responsible entity's System model did not represent projected System conditions as described in Requirement R1. OR The responsible entity's System model did not use the latest data consistent with the data provided in accordance with the MOD-010 and MOD-012 standards and other sources, including items represented in the Corrective Action Plan.
R2	The responsible entity failed to comply with Requirement R2, Part 2.6.	The responsible entity failed to comply with Requirement R2, Part 2.3 or Part 2.8.	The responsible entity failed to comply with one of the following Parts of Requirement R2: Part 2.1, Part 2.2, Part 2.4, Part 2.5, or Part 2.7.	The responsible entity failed to comply with two or more of the following Parts of Requirement R2: Part 2.1, Part 2.2, Part 2.4, or Part 2.7. OR, The responsible entity does not have a completed annual Planning Assessment.
R3	The responsible entity did not identify planning events as described in Requirement R3, Part 3.4 or extreme events as described in Requirement	The responsible entity did not perform studies as specified in Requirement R3, Part 3.1 to determine that the BES meets the performance requirements for one of the	The responsible entity did not perform studies as specified in Requirement R3, Part 3.1 to determine that the BES meets the performance requirements for two of the categories	The responsible entity did not perform studies as specified in Requirement R3, Part 3.1 to determine that the BES meets the performance requirements for three or more of the

	Lower VSL	Moderate VSL	High VSL	Severe VSL
	R3, Part 3.5.	categories (P2 through P7) in Table 1. OR The responsible entity did not perform studies as specified in Requirement R3, Part 3.2 to assess the impact of extreme events.	(P2 through P7) in Table 1. OR The responsible entity did not perform Contingency analysis as described in Requirement R3, Part 3.3.	categories (P2 through P7) in Table 1. OR The responsible entity did not perform studies to determine that the BES meets the performance requirements for the P0 or P1 categories in Table 1. OR The responsible entity did not base its studies on computer simulation models using data provided in Requirement R1.
R4	The responsible entity did not identify planning events as described in Requirement R4, Part 4.4 or extreme events as described in Requirement R4, Part 4.5.	The responsible entity did not perform studies as specified in Requirement R4, Part 4.1 to determine that the BES meets the performance requirements for one of the categories (P1 through P7) in Table 1. OR The responsible entity did not perform studies as specified in Requirement R4, Part 4.2 to assess the impact of extreme events.	The responsible entity did not perform studies as specified in Requirement R4, Part 4.1 to determine that the BES meets the performance requirements for two of the categories (P1 through P7) in Table 1. OR The responsible entity did not perform Contingency analysis as described in Requirement R4, Part 4.3.	The responsible entity did not perform studies as specified in Requirement R4, Part 4.1 to determine that the BES meets the performance requirements for three or more of the categories (P1 through P7) in Table 1. OR The responsible entity did not base its studies on computer simulation models using data provided in Requirement R1.
R5	N/A	N/A	N/A	The responsible entity does not have criteria for acceptable System steady state voltage limits, post-Contingency voltage deviations, or the transient

	Lower VSL	Moderate VSL	High VSL	Severe VSL
				voltage response for its System.
R6	N/A	N/A	N/A	The responsible entity failed to define and document the criteria or methodology for System instability used within its analysis as described in Requirement R6.
R7	N/A	N/A	N/A	The Planning Coordinator, in conjunction with each of its Transmission Planners, failed to determine and identify individual or joint responsibilities for performing required studies.
R8	The responsible entity distributed its Planning Assessment to adjacent Planning Coordinators and adjacent Transmission Planners but it was more than 90 days but less than or equal to 120 days following its completion. OR, The responsible entity distributed its Planning Assessment to functional entities having a reliability related need who requested the Planning Assessment in writing but it was more than 30 days but less than or equal to 40 days following the request.	The responsible entity distributed its Planning Assessment to adjacent Planning Coordinators and adjacent Transmission Planners but it was more than 120 days but less than or equal to 130 days following its completion. OR, The responsible entity distributed its Planning Assessment to functional entities having a reliability related need who requested the Planning Assessment in writing but it was more than 40 days but less than or equal to 50 days following the request.	The responsible entity distributed its Planning Assessment to adjacent Planning Coordinators and adjacent Transmission Planners but it was more than 130 days but less than or equal to 140 days following its completion. OR, The responsible entity distributed its Planning Assessment to functional entities having a reliability related need who requested the Planning Assessment in writing but it was more than 50 days but less than or equal to 60 days following the request.	The responsible entity distributed its Planning Assessment to adjacent Planning Coordinators and adjacent Transmission Planners but it was more than 140 days following its completion. OR The responsible entity did not distribute its Planning Assessment to adjacent Planning Coordinators and adjacent Transmission Planners. OR The responsible entity distributed its Planning Assessment to functional entities having a reliability related need who requested the Planning Assessment in writing but it was more than 60 days following the request.

	Lower VSL	Moderate VSL	High VSL	Severe VSL
				OR The responsible entity did not distribute its Planning Assessment to functional entities having a reliability related need who requested the Planning Assessment in writing.

E. Regional Variances

None.

Version History

Version	Date	Action	Change Tracking
1	TBD	Revision of TPL-001-0 as per Project 2006-02; includes merging requirements of TPL-001-0, TPL-002-0, TPL-003-0, and TPL-004-0 into one, single, comprehensive, coordinated standard: TPL-001-2	Not employed due to scope of revision

Standard Development Roadmap

This section is maintained by the drafting team during the development of the standard and will be removed when the standard becomes effective.

Development Steps Completed:

1. Version 1 of SAR posted for comment from April 2, 2002 through May 3, 2002.
2. Version 2 of SAR posted for comment from May 5, 2004 through June 5, 2004.
3. Version 3 of SAR posted on November 18, 2005.
4. SAR approved on April 30, 2006.
5. Version 1 of Supplemental SAR posted for comment from February 15, 2007 through March 16, 2007.
6. Version 2 of Supplemental SAR posted on April 9, 2007.
7. Version 1 of revised standard(s) posted for comment on September 17, 2007.
8. Version 2 of the revised standards posted for comment on August 15, 2008.
9. Version 3 of the revised standards posted for comment on May 26, 2009.
10. Version 4 of the revised standards posted for comment on September 16, 2009.
11. Initial ballot completed on March 1, 2010.
12. Version 5 of the revised standard posted for comment on August 3, 2010.
13. Version 6 of the revised standard posted for information on October 19, 2010.

Proposed Action Plan and Description of Current Draft:
The SDT has established a schedule of meetings and conference calls that allows for steady progress through the standards development process in anticipation of completing their assignment in ~~1Q10~~1Q11. The current draft is the ~~second~~sixth iteration of the revision of existing standards TPL-001 through TPL-006 and includes one revised standard, TPL-001-~~1~~2, replacing TPL-001-0, TPL-002-0, TPL-003-0 and TPL-004-0. TPL-005 & -006 issues are addressed in this ~~fifth~~sixth draft and those standards will also be replaced by TPL-001-2.

Future Development Plan:

Anticipated Actions	Anticipated Date
~~1. Post fifth version of standard.~~	~~3Q10~~
~~2.~~1. Conduct ballot	~~TBD~~1Q11
~~3. Respond to comments and determine next step~~	~~TBD~~
~~4.~~2. Submit standard(s) to BOT.	2Q11
~~5.~~3. Submit to regulatory authorities for approval.	3Q11

Definitions of Terms Used in Standard

This section includes all newly defined or revised terms used in the proposed standard. Terms already defined in the Reliability Standards Glossary of Terms are not repeated here. New or revised definitions listed below become approved when the proposed standard is approved. When the standard becomes effective, these defined terms will be removed from the individual standard and added to the Glossary.

Bus-tie Breaker: A circuit breaker that is positioned to connect two individual substation bus configurations.

Consequential Load Loss: All Load that is no longer served by the Transmission system as a result of Transmission Facilities being removed from service by a Protection System operation designed to isolate the fault.

Long-Term Transmission Planning Horizon: Transmission planning period that covers years six through ten or beyond when required to accommodate any known longer lead time projects that may take longer than ten years to complete.

~~**Near-Term Transmission Planning Horizon:** Transmission planning period that covers Years One through five.~~

Non-Consequential Load Loss: Non-Interruptible Load loss that does not include: (1) Consequential Load Loss, (2) the response of voltage sensitive Load, or (3) Load that is disconnected from the System by end-user equipment.

Planning Assessment: Documented evaluation of future Transmission system performance and Corrective Action Plans to remedy identified deficiencies.

~~**Year One:** The first twelve month period that a Planning Coordinator or a Transmission Planner is responsible for assessing. For the Planning Assessment started in a given calendar year, Year One must include the forecasted peak Load period for one of the following two calendar years. For example, if a Planning Assessment was started in 2011, then Year One must include the forecasted peak Load period for either 2012 or 2013.~~

A. Introduction

1. **Title:** **Transmission System Planning Performance Requirements**

2. **Number:** **TPL-001-2**

3. **Purpose:** Establish Transmission system planning performance requirements within the planning horizon to develop a Bulk Electric System (BES) that will operate reliably over a broad spectrum of System conditions and following a wide range of probable Contingencies.

4. **Applicability:**

   4.1. Functional Entity

   4.1.1. Planning Coordinator.

   4.1.2. Transmission Planner.

5. **Effective Date:** Requirements R1 and R7 shall become effective on the first day of the first calendar quarter, 12 months after applicable regulatory approval. In those jurisdictions where no regulatory approval is required, Requirements R1 and R7 become effective on the first day of the first calendar quarter, 12 months after Board of Trustees adoption.

   Except as indicated below, Requirements R2 through R6 and Requirement R8 shall become effective on the first day of the first calendar quarter, 24 months after applicable regulatory approval. In those jurisdictions where no regulatory approval is required, all requirements, except as noted below, go into effect on the first day of the first calendar quarter, 24 months after Board of Trustees adoption.

   For 84 calendar months beginning the first day of the first calendar quarter following applicable regulatory approval, or in those jurisdictions where no regulatory approval is required on the first day of the first calendar quarter 84 months after Board of Trustees adoption, Corrective Action Plans applying to the following categories of Contingencies and events identified in TPL-001-2, Table 1 are allowed to include Non-Consequential Load Loss and curtailment of Firm Transmission Service (in accordance with Requirement R2, Part 2.7.3.) that would not otherwise be permitted by the requirements of TPL-001-2:

   - P1-2 (for controlled interruption of electric supply to local network customers connected to or supplied by the Faulted element)
   - P1-3 (for controlled interruption of electric supply to local network customers connected to or supplied by the Faulted element)
   - P2-1, P2-2 (above 300 kV)
   - P2-3 (above 300 kV)
   - P3-1 through P3-5
   - P4-1 through P4-5 (above 300 kV)
   - P5 (above 300 kV)

B. Requirements

R1. Each Transmission Planner and Planning Coordinator shall maintain System models within its respective area for performing the studies needed to complete its Planning Assessment. The models shall use ~~the latest~~ data consistent with that provided in accordance with the MOD-010 and MOD-012 standards, supplemented by other sources as needed, including items represented in the Corrective Action Plan, and shall represent projected System conditions. This establishes Category P0 as the normal System condition in Table 1. *[Violation Risk Factor: Medium] [Time Horizon: Long-term Planning]*

1.1. System models shall represent:

1.1.1. Existing Facilities

1.1.2. Known outage(s) of generation or Transmission Facility(ies) with a duration of at least six months.

1.1.3. New planned Facilities and changes to existing Facilities

1.1.4. Real and reactive Load forecasts

1.1.5. Known commitments for Firm Transmission Service and Interchange

1.1.6. Resources (supply or demand side) required for Load

R2. Each Transmission Planner and Planning Coordinator shall prepare an annual Planning Assessment of its portion of the BES. This Planning Assessment shall use current or qualified past studies (as indicated in Requirement R2, Part 2.6), document assumptions, ~~summarize documented~~and document summarized results~~, and cover~~ of the steady state analyses, short circuit analyses, and Stability analyses. *[Violation Risk Factor: ~~Medium~~High] [Time Horizon: Long-term Planning]*

2.1. For the Planning Assessment, the Near-Term Transmission Planning Horizon portion of the steady state analysis shall be assessed annually and be supported by current annual studies or qualified past studies (as indicated in Requirement R2, Part 2.6~~, as follows~~). Qualifying studies need to include the following conditions:

2.1.1. System peak Load for either Year One or year two, and for year five.

2.1.2. System Off-Peak Load for one of the five years.

2.1.3. P1 events in Table 1, with known outages modeled as in Requirement R1, Part 1.1.2, under those System peak or Off-Peak conditions when known outages are scheduled.

2.1.4. For each of the studies described in Requirement R2, Parts 2.1.1 and 2.1.2, sensitivity case(s) shall be utilized to demonstrate the impact of changes to the basic assumptions used in the model. To accomplish this, the sensitivity analysis in the Planning Assessment must vary one or more of the following conditions by a sufficient amount to stress the System within a range of credible conditions that demonstrate a measurable change in ~~performance~~System response :

- Real and reactive forecasted Load.
- Expected transfers.
- Expected in service dates of new or modified Transmission Facilities.
- Reactive resource capability.
- Generation additions, retirements, or other dispatch scenarios.
- Controllable Loads and Demand Side Management.
- Duration or timing of ~~planned~~known Transmission outages.

2.1.5. When an entity's spare equipment strategy could result in the unavailability of major Transmission equipment that has a lead time of one year or more (such as a transformer), the impact of this possible unavailability on System performance shall be studied. The studies shall be performed for the P0, P1, and P2 categories identified in Table 1 with the conditions that the System is

expected to experience during the possible unavailability of the long lead time equipment.

2.2. For the Planning Assessment, the Long-Term Transmission Planning Horizon portion of the steady state analysis shall be assessed annually and be supported by the following annual current study, supplemented with qualified past studies as indicated in Requirement R2, Part 2.6:

2.2.1. A current study assessing expected System peak Load conditions for one of the years in the Long-Term Transmission Planning Horizon and the rationale for why that year was selected.

2.3. The short circuit analysis portion of the Planning Assessment shall be conducted annually addressing the Near-Term Transmission Planning Horizon and can be supported by current or past studies as qualified in Requirement R2, Part 2.6. The analysis shall be used to determine whether circuit breakers have interrupting capability for Faults that they will be expected to interrupt using the System short circuit model with any planned generation and Transmission Facilities in service which could impact the study area.

2.4. For the Planning Assessment, the Near-Term Transmission Planning Horizon portion of the Stability analysis shall be assessed annually and be supported by current or past studies as qualified in Requirement R2, Part2.6. The following studies are required:

2.4.1. System peak Load for one of the five years. System peak Load levels shall include a Load model which represents the expected dynamic behavior of Loads that could impact the study area, considering the behavior of induction motor Loads. An aggregate System Load model which represents the overall dynamic behavior of the Load is acceptable.

2.4.2. System Off-Peak Load for one of the five years.

2.4.3. For each of the studies described in Requirement R2, Parts 2.4.1 and 2.4.2, sensitivity case(s) shall be utilized to demonstrate the impact of changes to the basic assumptions used in the model. To accomplish this, the sensitivity analysis in the Planning Assessment must vary one or more of the following conditions by a sufficient amount to stress the System within a range of credible conditions that demonstrate a measurable change in performance:

- Load level, Load forecast, or dynamic Load model assumptions.
- Expected transfers.
- Expected in service dates of new or modified Transmission Facilities.
- Reactive resource capability.
- Generation additions, retirements, or other dispatch scenarios.

2.5. For the Planning Assessment, the Long-Term Transmission Planning Horizon portion of the Stability analysis shall be assessed to address the impact of proposed material generation additions or changes in that timeframe and be supported by current or past studies as qualified in Requirement R2, Part2.6 and shall include documentation to support the technical rationale for determining material changes.

2.6. Past studies may be used to support the Planning Assessment if they meet the following requirements:

2.6.1. For steady state, short circuit, or Stability analysis: the study shall be five calendar years old or less, unless a technical rationale can be provided to demonstrate that the results of an older study are still valid.

2.6.2. For steady state, short circuit, or Stability analysis: no material changes have occurred to the System represented in the study~~ shall not include any material changes unless a~~. Documentation to support the technical rationale ~~can be provided to demonstrate that System~~for determining material changes ~~do not impact the performance results in the study area.~~shall be included.

2.7. For planning events shown in Table 1, when the analysis indicates an inability of the System to meet the performance requirements in Table 1, the Planning Assessment shall include Corrective Action Plan(s) addressing how the performance requirements will be met. Revisions to the Corrective Action Plan(s) are allowed in subsequent Planning Assessments but the planned System shall continue to meet the performance requirements in Table 1. Corrective Action Plan(s) do not need to be developed solely to meet the performance requirements for a single sensitivity case analyzed in accordance with Requirements R2, Parts 2.1.4 and 2.4.3. The Corrective Action Plan(s) shall:

2.7.1. List System deficiencies and the associated actions needed to achieve required System performance. Examples of such actions ~~may~~ include:

- Installation, modification, retirement, or removal of Transmission and generation Facilities and any associated equipment.
- Installation, modification, or removal of Protection Systems or Special Protection Systems
- Installation or modification of automatic generation tripping as a response to a single or multiple Contingency to mitigate Stability performance violations.
- Installation or modification of manual and automatic generation runback/tripping as a response to a single or multiple Contingency to mitigate steady state performance violations.
- Use of Operating Procedures specifying how long they will be needed as part of the Corrective Action Plan.
- Use of rate applications, DSM, new technologies, or other initiatives.

2.7.2. Include actions to resolve performance deficiencies identified in multiple sensitivity studies or provide a rationale for why actions were not necessary.

2.7.3. If situations arise that are beyond the control of the Transmission Planner or Planning Coordinator that prevent the implementation of a Corrective Action Plan in the required timeframe, then the Transmission Planner or Planning Coordinator is permitted to utilize Non-Consequential Load Loss and curtailment of Firm Transmission Service to correct the situation that would normally not be permitted in Table 1, provided that the Transmission Planner or Planning Coordinator documents that they are taking actions to resolve the situation. The Transmission Planner or Planning Coordinator shall document the situation causing the problem, alternatives evaluated, and the use of Non-Consequential Load Loss or curtailment of Firm Transmission Service.

2.7.4. Be reviewed in subsequent annual Planning Assessments for continued validity and implementation status of identified System Facilities and Operating Procedures.

2.8. For short circuit analysis, if the short circuit current interrupting duty on circuit breakers determined in Requirement R2, Part 2.3 exceeds their Equipment Rating, the Planning Assessment shall include a Corrective Action Plan to address the Equipment Rating violations. The Corrective Action Plan shall:

2.8.1. List System deficiencies and the associated actions needed to achieve required System performance.

2.8.2. Be reviewed in subsequent annual Planning Assessments for continued validity and implementation status of identified System Facilities and Operating Procedures.

R3. For the steady state portion of the Planning Assessment, each Transmission Planner and Planning Coordinator shall perform studies for the Near-Term and Long-Term Transmission Planning Horizons in Requirement R2, Parts 2.1, and 2.2. The studies shall be based on computer simulation models using data provided in Requirement R1. *[Violation Risk Factor: Medium] [Time Horizon: Long-term Planning]*

3.1. Studies shall be performed for planning events to determine whether the BES meets the performance requirements in Table 1 based on the Contingency list created in Requirement R3, Part 3.4.

3.2. Studies shall be performed to assess the impact of the extreme events which are identified by the list created in Requirement R3, Part 3.5.

3.3. Contingency analyses for Requirement R3, Parts 3.1 & 3.2 shall:

3.3.1. Simulate the removal of all elements that the Protection System and other automatic controls are expected to disconnect for each Contingency without operator intervention. The analyses shall include the impact of subsequent:

- Tripping of generators where simulations show generator bus voltages or high side of the generation step up (GSU) voltages are less than known or assumed minimum generator steady state or ride through voltage limitations. Include in the assessment any assumptions made.
- Tripping of Transmission elements where relay loadability limits are exceeded.

3.3.2. Simulate the expected automatic operation of existing and planned devices designed to provide steady state control of electrical system quantities when such devices impact the study area. These devices may include equipment such as phase-shifting transformers, load tap changing transformers, and switched capacitors and inductors.

3.4. Those planning events in Table 1, that are expected to produce more severe System impacts on its portion of the BES, shall be identified and a list of those Contingencies to be evaluated for System performance in Requirement R3, Part 3.1 created. The rationale for those Contingencies selected for evaluation shall be available as supporting information.

3.4.1. The Planning Coordinator and Transmission Planner shall coordinate with adjacent Planning Coordinators and Transmission Planners to ensure that

Contingencies on adjacent Systems which may impact their Systems are included in the Contingency list.

3.5. Those extreme events in Table 1 that are expected to produce more severe System impacts shall be identified and a list created of those events to be evaluated in Requirement R3, Part 3.2. The rationale for those Contingencies selected for evaluation shall be available as supporting information. If the analysis concludes there is Cascading caused by the occurrence of extreme events, an evaluation of possible actions designed to reduce the likelihood or mitigate the consequences and adverse impacts of the event(s) shall be conducted.

R4. For the Stability portion of the Planning Assessment, as described in Requirement R2, Parts 2.4 and 2.5, each Transmission Planner and Planning Coordinator shall perform the Contingency analyses listed in Table 1. The studies shall be based on computer simulation models using data provided in Requirement R1. *[Violation Risk Factor: Medium] [Time Horizon: Long-term Planning]*

4.1. Studies shall be performed for planning events to determine whether the BES meets the performance requirements in Table 1 based on the Contingency list created in Requirement R4, Part 4.4.

4.1.1. For planning event P1: No generating unit shall pull out of synchronism. A generator being disconnected from the System by fault clearing action or by a Special Protection System is not considered pulling out of synchronism.

4.1.2. For planning events P2 through P7: When a generator pulls out of synchronism in the simulations, the resulting apparent impedance swings shall not result in the tripping of any Transmission system elements other than the generating unit and its directly connected Facilities.

4.1.3. For planning events P1 through P7: Power oscillations shall exhibit acceptable damping as established by the Planning Coordinator and Transmission Planner.

4.2. Studies shall be performed to assess the impact of the extreme events which are identified by the list created in Requirement R4, Part 4.5.

4.3. Contingency analyses for Requirement R4, Parts 4.1 and 4.2 shall :

4.3.1. Simulate the removal of all elements that the Protection System and other automatic controls are expected to disconnect for each Contingency without operator intervention. The analyses shall include the impact of subsequent:

- Successful high speed (less than one second) reclosing and unsuccessful high speed reclosing into a Fault where high speed reclosing is utilized.
- Tripping of generators where simulations show generator bus voltages or high side of the GSU voltages are less than known or assumed generator low voltage ride through capability. Include in the assessment any assumptions made.
- Tripping of Transmission lines and transformers where transient swings cause Protection System operation based on generic or actual relay models.

4.3.2. Simulate the expected automatic operation of existing and planned devices designed to provide dynamic control of electrical system quantities when such devices impact the study area. These devices may include equipment

such as generation exciter control and power system stabilizers, static var compensators, power flow controllers, and DC Transmission controllers.

4.4. Those planning events in Table 1 that are expected to produce more severe System impacts on its portion of the BES, shall be identified, and a list created of those Contingencies to be evaluated in Requirement R4, Part 4.1. The rationale for those Contingencies selected for evaluation shall be available as supporting information.

4.4.1. Each Planning Coordinator and Transmission Planner shall coordinate with adjacent Planning Coordinators and Transmission Planners to ensure that Contingencies on adjacent Systems which may impact their Systems are included in the Contingency list.

4.5. Those extreme events in Table 1 that are expected to produce more severe System impacts shall be identified and a list created of those events to be evaluated in Requirement R4, Part 4.2. The rationale for those Contingencies selected for evaluation shall be available as supporting information. If the analysis concludes there is Cascading caused by the occurrence of extreme events, an evaluation of possible actions designed to reduce the likelihood or mitigate the consequences of the event(s) shall be conducted.

R5. Each Transmission Planner and Planning Coordinator shall have criteria for acceptable System steady state voltage limits, post-Contingency voltage deviations, and the transient voltage response for its System. For transient voltage response, the criteria shall at a minimum, specify a low voltage level and a maximum length of time that transient voltages may remain below that level. *[Violation Risk Factor: Medium] [Time Horizon: Long-term Planning]*

R6. Each Transmission Planner and Planning Coordinator shall define and document, within their Planning Assessment, ~~any~~the criteria or methodology used in the analysis to identify System instability for conditions such as Cascading, voltage instability, or uncontrolled islanding. *[Violation Risk Factor: Low] [Time Horizon: Long-term Planning]*

R7. Each Planning Coordinator, in conjunction with each of its Transmission Planners, shall determine and identify each entity's individual and joint responsibilities for performing the required studies for the Planning Assessment. *[Violation Risk Factor: Low] [Time Horizon: Long-term Planning]*

R8. Each Planning Coordinator and Transmission Planner shall distribute its Planning Assessment results to adjacent Planning Coordinators~~,~~ and adjacent Transmission Planners~~, and~~ within 90 calendar days of completing its Planning Assessment, and to any functional entity that has a reliability related need and ~~that functional entity~~ submits a written request for the information~~.~~ within 30 days of such a request. *[Violation Risk Factor: ~~Low~~Medium] [Time Horizon: Long-term Planning]*

8.1. If a recipient of the Planning Assessment results provides documented comments on the results, the respective Planning Coordinator or Transmission Planner shall provide a documented response to that recipient within 90 calendar days of receipt of those comments.

Table 1 – Steady State & Stability Performance Planning Events

Steady State & Stability:

a. The System shall remain stable. Cascading and uncontrolled islanding shall not occur.

b. Consequential Load Loss as well as generation loss is acceptable as a consequence of any event excluding P0.

c. Simulate the removal of all elements that Protection Systems and other controls are expected to automatically disconnect for each event.

d. Simulate Normal Clearing unless otherwise specified.

e. Planned System adjustments such as Transmission configuration changes and re-dispatch of generation are allowed if such adjustments are executable within the time duration applicable to the Facility Ratings.

Steady State Only:

f. Applicable Facility Ratings shall not be exceeded.

g. System steady state voltages and post-Contingency voltage deviations shall be within acceptable limits as established by the Planning Coordinator and the Transmission Planner.

h. Planning event P0 is applicable to steady state only.

i. The response of voltage sensitive Load ~~including Load~~ that is disconnected from the System by end-user equipment associated with an event shall not be used to meet steady state performance requirements.

Stability Only:

j. Transient voltage response shall be within acceptable limits established by the Planning Coordinator and the Transmission Planner.

Category	Initial ~~System~~ Condition	Event [1]	Fault Type [2]	BES Level [3]	Interruption of Firm Transmission Service Allowed [4]	Non-Consequential Load Loss Allowed
P0 No Contingency	Normal System	None	N/A	EHV, HV	~~No~~[9]No	No
P1 Single Contingency	Normal System	Loss of one of the following: 1. Generator 2. Transmission Circuit 3. Transformer [5] 4. Shunt Device [6]	3Ø	EHV, HV	No[9]	No[12]
		5. Single Pole of a DC line	SLG			
P2 Single Contingency	Normal System	1. Opening of a line section w/o a fault [7]	N/A	EHV, HV	No[9]	No[12]
		2. Bus Section Fault	SLG	EHV	No[9]	No
				HV	Yes	Yes
		3. Internal Breaker Fault [8]	SLG	EHV	No[9]	No

		(non-Bus-tie Breaker)		HV	Yes	Yes
		4. Internal Breaker Fault (Bus-tie Breaker)[8]	SLG	EHV, HV	Yes	Yes
Category	**Initial ~~System~~ Condition**	**Event [1]**	**Fault Type [2]**	**BES Level [3]**	**Interruption of Firm Transmission Service Allowed [4]**	**Non-Consequential Load Loss Allowed**
P3 Multiple Contingency	Loss of generator unit followed by System adjustments[9]	Loss of one of the following: 1. Generator 2. Transmission Circuit 3. Transformer [5] 4. Shunt Device [6]	3Ø	EHV, HV	No[9]	No[12]
		5. Single pole of a DC line	SLG			
P4 Multiple Contingency *(Fault plus stuck breaker[10])*	Normal System	Loss of multiple elements caused by a stuck breaker [10](non-Bus-tie Breaker) attempting to clear a Fault on one of the following: 1. Generator 2. Transmission Circuit 3. Transformer [5] 4. Shunt Device [6] 5. Bus Section	SLG	EHV	No[9]	No
				HV	Yes	Yes
		6. Loss of multiple elements caused by a stuck breaker[10] (Bus-tie Breaker) attempting to clear a Fault on the associated bus	SLG	EHV, HV	Yes	Yes
P5 Multiple Contingency *(Fault plus relay failure to operate)*	Normal System	Delayed Fault Clearing due to the failure of a non-redundant relay[13] protecting the Faulted element to operate as designed, for one of the following: 1. Generator 2. Transmission Circuit 3. Transformer [5] 4. Shunt Device [6] 5. Bus Section	SLG	EHV	No[9]	No
				HV	Yes	Yes

P6 Multiple Contingency *(Two overlapping singles)*	Loss of one of the following followed by System ~~adj~~adjustments.[9]~~:~~ 1. Transmission Circuit 2. Transformer [5] 3. Shunt Device[6] 4. Single pole of a DC line	Loss of one of the following: 1. Transmission Circuit 2. Transformer [5] 3. Shunt Device [6]	3Ø	EHV, HV	Yes	Yes
		4. Single pole of a DC line	SLG	EHV, HV	Yes	Yes
P7 Multiple Contingency *(Common Structure)*	Normal System	The loss of: 1. Any two adjacent (vertically or horizontally) circuits on common structure [11] 2. Loss of a bipolar DC line	SLG	EHV, HV	Yes	Yes

Table 1 – Steady State & Stability Performance Extreme Events

Steady State & Stability

For all extreme events evaluated:

a. Simulate the removal of all elements that Protection Systems and automatic controls are expected to disconnect for each Contingency.

b. Simulate Normal Clearing unless otherwise specified.

Steady State

1. Loss of a single generator, Transmission Circuit, single pole of a DC Line, shunt device, or transformer forced out of service followed by another single generator, Transmission Circuit, single pole of a different DC Line, shunt device, or transformer forced out of service prior to System adjustments.
2. Local area events affecting the Transmission System such as:
   a. Loss of a tower line with three or more circuits.[11]
   b. Loss of all Transmission lines on a common Right-of-Way[11].
   c. Loss of a switching station or substation (loss of one voltage level plus transformers).
   d. Loss of all generating units at a generating station.
   e. Loss of a large Load or major Load center.
3. Wide area events affecting the Transmission System based on System topology such as:
   a. Loss of two generating stations resulting from conditions such as:
      i. Loss of a large gas pipeline into a region or multiple regions that have significant gas-fired generation.
      ii. Loss of the use of a large body of water as the cooling source for generation.
      iii. Wildfires.
      iv. Severe weather, e.g., hurricanes, tornadoes, etc.
      v. A successful cyber attack.
      vi. Shutdown of a nuclear power plant(s) and related facilities for a day or more for common causes such as problems with similarly designed plants.
   b. Other events based upon operating experience that may result in wide area disturbances.

Stability

1. With an initial condition of a single generator, Transmission circuit, single pole of a DC line, shunt device, or transformer forced out of service, apply a 3Ø fault on another single generator, Transmission circuit, single pole of a different DC line, shunt device, or transformer prior to System adjustments.
2. Local or wide area events affecting the Transmission System such as:
   a. 3Ø fault on generator with stuck breaker[10] or a ~~Protection System failure~~relay failure[13] resulting in Delayed Fault Clearing.
   b. 3Ø fault on Transmission circuit with stuck breaker[10] or a ~~Protection System failure~~relay failure[13] resulting in Delayed Fault Clearing.
   c. 3Ø fault on transformer with stuck breaker[10] or a ~~Protection System failure~~relay failure[13] resulting in Delayed Fault Clearing.
   d. 3Ø fault on bus section with stuck breaker[10] or a ~~Protection System failure~~relay failure[13] resulting in Delayed Fault Clearing.
   e. 3Ø internal breaker fault.
   f. Other events based upon operating experience, such as consideration of initiating events that experience suggests may result in wide area disturbances

Table 1 – Steady State & Stability Performance Footnotes
(Planning Events and Extreme Events)

1. If the event analyzed involves BES elements at multiple System voltage levels, the lowest System voltage level of the element(s) removed for the analyzed event determines the stated performance criteria regarding allowances for interruptions of Firm Transmission Service and Non-Consequential Load Loss.
2. Unless specified otherwise, simulate Normal Clearing of faults. Single line to ground (SLG) or three-phase (3Ø) are the fault types that must be evaluated in Stability simulations for the event described. A 3Ø or a double line to ground fault study indicating the criteria are being met is sufficient evidence that a SLG condition would also meet the criteria.
3. Bulk Electric System (BES) level references include extra-high voltage (EHV) Facilities defined as greater than 300kV and high voltage (HV) Facilities defined as the 300kV and lower voltage Systems. The designation of EHV and HV is used to distinguish between stated performance criteria allowances for interruption of Firm Transmission Service and Non-Consequential Load Loss.
4. Curtailment of Conditional Firm Transmission Service is allowed when the conditions and/or events being studied formed the basis for the Conditional Firm Transmission Service.
5. For non-generator step up transformer outage events, the reference voltage, as used in footnote 1, applies to the low-side winding (excluding tertiary windings). For generator and Generator Step Up transformer outage events, the reference voltage applies to the BES connected voltage (high-side of the Generator Step Up transformer). Requirements which are applicable to transformers also apply to variable frequency transformers and phase shifting transformers.
6. Requirements which are applicable to shunt devices also apply to FACTS devices that are connected to ground.
7. Opening one end of a line section without a fault on a normally networked Transmission circuit such that the line is possibly serving Load radial from a single source point.
8. An internal breaker fault means a breaker failing internally, thus creating a System fault which must be cleared by protection on both sides of the breaker.
9. An objective of the planning process should be to minimize the likelihood and magnitude of interruption of Firm Transmission Service following Contingency events. Curtailment of Firm Transmission Service ~~, when coupled with the appropriate re-dispatch of resources obligated to re-dispatch,~~ is allowed both as a System adjustment (as identified in the column entitled 'Initial ~~System Conditions'~~Condition') and a corrective action~~,~~ when achieved through the appropriate re-dispatch of resources obligated to re-dispatch, where it can be demonstrated that Facilities, internal and external to the Transmission Planner's planning region, remain within applicable Facility Ratings and ~~those adjustments do~~the re-dispatch does not result in ~~the shedding of~~ any ~~firm Demand~~Non-Consequential Load Loss. Where limited options for re-dispatch exist, sensitivities associated with the availability of those resources should be considered. ~~Where Facilities external to the Transmission Planner's planning region are relied upon, Facility Ratings in those regions should also be respected.~~
10. A stuck breaker means that for a gang-operated breaker, all three phases of the breaker have remained closed. For an independent pole operated (IPO) or an independent pole tripping (IPT) breaker, only one pole is assumed to remain closed. A stuck breaker results in Delayed Fault Clearing.
11. Excludes circuits that share a common structure (Planning event P7, Extreme event steady state 2a) or common Right-of-Way (Extreme event, steady state 2b) for 1 mile or less.

~~12. Note: Non-Consequential Load Loss is being decided in Project 2010-11. When that project is finalized, the resolution will be copied here.~~

12. An objective of the planning process should be to minimize the likelihood and magnitude of Non-Consequential Load Loss following Contingency events. However, in limited circumstances Non-Consequential Load Loss may be needed to address BES performance requirements. When Non-Consequential Load Loss is utilized within the planning process to address BES performance requirements, such interruption is limited to circumstances where the Non-Consequential Load Loss is documented, including alternatives evaluated; and where the utilization of Non-Consequential Load Loss is subject to review in

Table 1 – Steady State & Stability Performance Footnotes (Planning Events and Extreme Events)
an open and transparent stakeholder process that includes addressing stakeholder comments.
13. Applies to the following relay functions or types: pilot (#85), distance (#21), differential (#87), current (#50, 51, and 67), voltage (#27 & 59), directional (#32, & 67), and tripping (#86, & 94).

C. Measures

M1. Each Transmission Planner and Planning Coordinator shall provide evidence, in electronic or hard copy format, that it is maintaining System models within their respective area, using ~~the latest~~ data consistent with MOD-010 and MOD-012, including items represented in the Corrective Action Plan, representing projected System conditions, and that the models represent the required information in accordance with Requirement R1.

M2. Each Transmission Planner and Planning Coordinator shall provide dated evidence, such as electronic or hard copies of its annual Planning Assessment, that it has prepared an annual Planning Assessment of its portion of the BES in accordance with Requirement R2.

M3. Each Transmission Planner and Planning Coordinator shall provide dated evidence, such as electronic or hard copies of the studies utilized in preparing the Planning Assessment, in accordance with Requirement R3.

M4. Each Transmission Planner and Planning Coordinator shall provide dated evidence, such as electronic or hard copies of the studies utilized in preparing the Planning Assessment in accordance with Requirement R4.

M5. Each Transmission Planner and Planning Coordinator shall provide dated evidence such as electronic or hard copies of the documentation specifying the criteria for acceptable System steady state voltage limits, post-Contingency voltage deviations, and the transient voltage response for its System in accordance with Requirement R5.

M6. Each Transmission Planner and Planning Coordinator shall provide dated evidence, such as electronic or hard copies of documentation specifying ~~any~~the criteria or methodology used in the analysis to identify System instability for conditions such as Cascading, voltage instability, or uncontrolled islanding that was utilized in preparing the Planning Assessment in accordance with Requirement R6.

M7. Each Planning Coordinator, in conjunction with each of its Transmission Planners, shall provide dated documentation on roles and responsibilities, such as meeting minutes, agreements, and e-mail correspondence that identifies that agreement has been reached on individual and joint responsibilities for performing the required studies and Assessments in accordance with Requirement R7.

M8. Each Planning Coordinator and Transmission Planner shall provide evidence, such as email notices, documentation of updated web pages, postal receipts showing recipient and date; or a demonstration of a public posting, that it has distributed its Planning Assessment results to adjacent Planning Coordinators~~,~~ and adjacent Transmission Planners~~, and~~ within 90 days of having completed its Planning Assessment, and to any functional entity who has indicated a reliability need within 30 days of a written request and that ~~functional entity~~the Planning Coordinator or Transmission Planner has provided a documented response to comments received on Planning Assessment results within 90 calendar days of receipt of those comments in accordance with Requirement R8.

D. Compliance

1. Compliance Monitoring Process

1.1 Compliance Enforcement Authority

Regional Entity

1.2 Compliance Monitoring Period and Reset Timeframe

Not applicable.

1.3 Compliance Monitoring and Enforcement Processes:

Compliance Audits

Self-Certifications

Spot Checking

Compliance Violation Investigations

Self-Reporting

Complaints

1.4 Data Retention

The Transmission Planner and Planning Coordinator shall each retain data or evidence to show compliance as identified unless directed by its Compliance Enforcement Authority to retain specific evidence for a longer period of time as part of an investigation:

- The models utilized in the current in-force Planning Assessment and one previous Planning Assessment in accordance with Requirement R1 and Measure M1.
- The Planning Assessments performed since the last compliance audit in accordance with Requirement R2 and Measure M2.
- The studies performed in support of its Planning Assessments since the last compliance audit in accordance with Requirement R3 and Measure M3.
- The studies performed in support of its Planning Assessments since the last compliance audit in accordance with Requirement R4 and Measure M4.
- The documentation specifying the criteria since the last compliance audit in accordance with Requirement R5 and Measure M5.
- The documentation specifying ~~any~~the criteria or methodology utilized in support of its Planning Assessments since the last compliance audit in accordance with Requirement R6 and Measure M6.
- The current, in force documentation for the agreement(s) on roles and responsibilities, as well as ~~all such~~ documentation for the agreements in force since the last compliance audit, in accordance with Requirement R7 and Measure M7.

The Planning Coordinator shall retain data or evidence to show compliance as identified unless directed by its Compliance Enforcement Authority to retain specific evidence for a longer period of time as part of an investigation:

- Three calendar years of the notifications employed in accordance with Requirement R8 and Measure M8.

If a Transmission Planner or Planning Coordinator is found non-compliant, it shall keep information related to the non-compliance until found compliant or the time periods specified above, whichever is longer.

1.5 Additional Compliance Information

None.

2. Violation Severity Levels

	Lower VSL	Moderate VSL	High VSL	Severe VSL
R1	The responsible entity's System model failed to represent one of the Requirement R1, Parts 1.1.1 through 1.1.6.	The responsible entity's System model failed to represent two of the Requirement R1, Parts 1.1.1 through 1.1.6. ~~OR~~ ~~The responsible entity's System model did not use the latest data consistent with the data provided in accordance with the MOD-010 and MOD-012 standards and other sources, including items represented in the Corrective Action Plan.~~	The responsible entity's System model failed to represent three of the Requirement R1, Parts 1.1.1 through 1.1.6.	The responsible entity's System model failed to represent four or more of the Requirement R1, Parts 1.1.1 through 1.1.6. OR The responsible entity's System model did not represent projected System conditions as described in Requirement R1. OR The responsible entity's System model did not use the latest data consistent with the data provided in accordance with the MOD-010 and MOD-012 standards and other sources, including items represented in the Corrective Action Plan.
R2	The responsible entity failed to comply with Requirement R2, Part 2.6.	The responsible entity failed to comply with Requirement R2, Part 2.3 or Part 2.8.	The responsible entity failed to comply with one of the following Parts of Requirement R2: Part 2.1, Part 2.2, Part 2.4, Part 2.5, or Part 2.7.	The responsible entity failed to comply with two or more of the following Parts of Requirement R2: Part 2.1, Part 2.2, Part 2.4, or Part 2.7. OR, The responsible entity does not have a completed annual Planning Assessment.
R3	The responsible entity did not identify planning events as described in Requirement R3, Part 3.4 or extreme events as described in Requirement	The responsible entity did not perform studies as specified in Requirement R3, Part 3.1 to determine that the BES meets the performance requirements for one of the	The responsible entity did not perform studies as specified in Requirement R3, Part 3.1 to determine that the BES meets the performance requirements for two of the categories	The responsible entity did not perform studies as specified in Requirement R3, Part 3.1 to determine that the BES meets the performance requirements for three or more of the

	Lower VSL	Moderate VSL	High VSL	Severe VSL
	R3, Part 3.5.	categories (P2 through P7) in Table 1. OR The responsible entity did not perform studies as specified in Requirement R3, Part 3.2 to assess the impact of extreme events. ~~OR~~ ~~The responsible entity did not base its studies on computer simulation models using data provided in Requirement R1.~~	(P2 through P7) in Table 1. OR The responsible entity did not perform Contingency analysis as described in Requirement R3, Part 3.3.	categories (P2 through P7) in Table 1. OR The responsible entity did not perform studies to determine that the BES meets the performance requirements for the P0 or P1 categories in Table 1. OR The responsible entity did not base its studies on computer simulation models using data provided in Requirement R1.
R4	The responsible entity did not identify planning events as described in Requirement R4, Part 4.4 or extreme events as described in Requirement R4, Part 4.5.	The responsible entity did not perform studies as specified in Requirement R4, Part 4.1 to determine that the BES meets the performance requirements for one of the categories (P1 through P7) in Table 1. OR The responsible entity did not perform studies as specified in Requirement R4, Part 4.2 to assess the impact of extreme events. ~~OR~~ ~~The responsible entity did not base its studies on computer simulation models using data provided in Requirement R1.~~	The responsible entity did not perform studies as specified in Requirement R4, Part 4.1 to determine that the BES meets the performance requirements for two of the categories (P1 through P7) in Table 1. OR The responsible entity did not perform Contingency analysis as described in Requirement R4, Part 4.3.	The responsible entity did not perform studies as specified in Requirement R4, Part 4.1 to determine that the BES meets the performance requirements for three or more of the categories (P1 through P7) in Table 1. OR The responsible entity did not base its studies on computer simulation models using data provided in Requirement R1.

	Lower VSL	Moderate VSL	High VSL	Severe VSL
R5	N/A	N/A	N/A	The responsible entity does not have criteria for acceptable System steady state voltage limits, post-Contingency voltage deviations, or the transient voltage response for its System.
R6	N/A	N/A	N/A	The responsible entity failed to define and document the criteria or methodology for System instability used within its analysis as described in Requirement R6.
R7	N/A	N/A	N/A	The Planning Coordinator, in conjunction with each of its Transmission Planners, failed to determine and identify individual or joint responsibilities for performing required studies.
R8	The responsible entity ~~failed to distribute the results of~~distributed its Planning Assessment to ~~one of its~~ adjacent Planning Coordinators and adjacent Transmission Planners~~, one adjacent Planning Coordinator,~~ but it was more than 90 days but less than or ~~to one~~ equal to 120 days following its completion. OR, The responsible entity distributed its Planning Assessment to functional ~~entity that has~~entities having a reliability related need ~~and that has submitted a written~~ who requested the Planning Assessment in writing	~~N/A~~ The responsible entity distributed its Planning Assessment to adjacent Planning Coordinators and adjacent Transmission Planners but it was more than 120 days but less than or equal to 130 days following its completion. OR, The responsible entity distributed its Planning Assessment to functional entities having a reliability related need who requested the Planning Assessment in writing but it was more than 40 days but less than or equal to 50 days following the request.	The responsible entity ~~failed to distribute the results of~~distributed its Planning Assessment to ~~more than one of its adjacent Transmission Planners,~~ adjacent Planning Coordinators~~,~~ and adjacent Transmission Planners but it was more than 130 days but less than or equal to 140 days following its completion. OR, The responsible entity distributed its Planning Assessment to functional entities ~~that have~~having a reliability related need ~~and that have submitted a written~~ who requested the Planning	The responsible entity ~~failed~~ distributed its Planning Assessment to ~~provide a documented response~~adjacent Planning Coordinators and adjacent Transmission Planners but it was more than 140 days following its completion. OR The responsible entity did not distribute its Planning Assessment to ~~a recipient of~~adjacent Planning Coordinators and adjacent Transmission Planners. OR

	Lower VSL	Moderate VSL	High VSL	Severe VSL
	but it was more than 30 days but less than or equal to 40 days following the request ~~for the information, respectively in accordance with Requirement R8~~.		Assessment in writing but it was more than 50 days but less than or equal to 60 days following the request ~~for the information, respectively in accordance with Requirement R8~~.	The responsible entity distributed its Planning Assessment to functional entities having a reliability related need who requested the Planning Assessment ~~results who provided documented comments on~~in writing but it was more than 60 days following the ~~results within 90 calendar days of receipt of those comments in accordance with Requirement R8~~request. OR The responsible entity did not distribute its Planning Assessment to functional entities having a reliability related need who requested the Planning Assessment in writing.

E. Regional Variances

None.

Version History

Version	Date	Action	Change Tracking
1	TBD	Revision of TPL-001-0 as per Project 2006-02; includes merging requirements of TPL-001-0, TPL-002-0, TPL-003-0, and TPL-004-0 into one, single, comprehensive, coordinated standard: TPL-001-~~1~~2	Not employed due to scope of revision

Standard Development Roadmap

This section is maintained by the drafting team during the development of the standard and will be removed when the standard becomes effective.

Development Steps Completed:

1. Version 1 of SAR posted for comment from April 2, 2002 through May 3, 2002.
2. Version 2 of SAR posted for comment from May 5, 2004 through June 5, 2004.
3. Version 3 of SAR posted on November 18, 2005.
4. SAR approved on April 30, 2006.
5. Version 1 of Supplemental SAR posted for comment from February 15, 2007 through March 16, 2007.
6. Version 2 of Supplemental SAR posted on April 9, 2007.
7. Version 1 of revised standard(s) posted for comment on September 17, 2007.
8. Version 2 of the revised standards posted for comment on August 15, 2008.
9. Version 3 of the revised standards posted for comment on May 26, 2009.
10. Version 4 of the revised standards posted for comment on September 16, 2009.
11. Initial ballot completed on March 1, 2010.
12. Version 5 of the revised standard posted for comment on August 3, 2010.
13. Version 6 of the revised standard posted for information on October 19, 2010.

Proposed Action Plan and Description of Current Draft:
The SDT has established a schedule of meetings and conference calls that allows for steady progress through the standards development process in anticipation of completing their assignment in 1Q1~~0~~1. The current draft is the ~~second~~sixth iteration of the revision of existing standards TPL-001 through TPL-006 and includes one revised standard, TPL-001-~~1~~2, replacing TPL-001-0, TPL-002-0, TPL-003-0 and TPL-004-0. TPL-005 & -006 issues are addressed in this ~~f~~s~~i~~~~f~~xth draft and those standards will also be replaced by TPL-001-~~1.~~ 2.

Future Development Plan:

Anticipated Actions	Anticipated Date
1. Conduct ballot	1Q11
~~1.~~2. Submit standard(s) to BOT.	2Q1~~0~~1
~~2.~~3. Submit to regulatory authorities for approval.	3Q1~~0~~1

Definitions of Terms Used in Standard

This section includes all newly defined or revised terms used in the proposed standard. Terms already defined in the Reliability Standards Glossary of Terms are not repeated here. New or revised definitions listed below become approved when the proposed standard is approved. When the standard becomes effective, these defined terms will be removed from the individual standard and added to the Glossary.

Bus-tie Breaker: A circuit breaker that is positioned to connect two individual substation bus configurations.

Consequential Load Loss: All Load that is no longer served by the Transmission system as a result of Transmission Facilities being removed from service by a Protection System operation designed to isolate the fault.

Long-Term Transmission Planning Horizon: Transmission planning period that covers years six through ten or beyond when required to accommodate any known longer lead time projects that may take longer than ten years to complete.

~~**Near-Term Transmission Planning Horizon:** Transmission planning period that covers Years One through five.~~

Non-Consequential Load Loss: Non-Interruptible Load loss that does not include: (1) Consequential Load Loss, (2) the response of voltage sensitive Load, or (3) Load that is disconnected from the System by end-user equipment.

Planning Assessment: Documented evaluation of future Transmission system performance and Corrective Action Plans to remedy identified deficiencies.

~~**Year One:** The first year that a Planning Coordinator or a Transmission Planner is responsible for assessing. This is further defined as the planning window that begins 12-18 months from the end of the current calendar year.~~

A. Introduction

1. **Title:** **Transmission System Planning Performance Requirements**

2. **Number:** **TPL-001-~~1~~2**

3. **Purpose:** Establish Transmission system planning performance requirements within the planning horizon to develop a Bulk Electric System (BES) that will operate reliably over a broad spectrum of System conditions and following a wide range of probable Contingencies.

4. **Applicability:**

   4.1. Functional Entity

   4.1.1. Planning Coordinator.

   4.1.2. Transmission Planner.

5. **Effective Date:** Requirements R1 and R7 shall become effective on the first day of the first calendar quarter, 12 months after applicable regulatory approval. In those jurisdictions where no regulatory approval is required, Requirements R1 and R7 become effective on the first day of the first calendar quarter, 12 months after Board of Trustees adoption.

   Except as indicated below, Requirements R2 through R6 and Requirement R8 shall become effective on the first day of the first calendar quarter, 24 months after applicable regulatory approval. In those jurisdictions where no regulatory approval is required, all requirements, except as noted below, go into effect on the first day of the first calendar quarter, 24 months after Board of Trustees adoption.

   For ~~60~~84 calendar months beginning the first day of the first calendar quarter following applicable regulatory approval, or in those jurisdictions where no regulatory approval is required on the first day of the first calendar quarter 84 months after Board of Trustees adoption, Corrective Action Plans applying to the following categories of Contingencies and events identified in TPL-001-~~1~~2, Table 1 are allowed to include Non-Consequential Load Loss and curtailment of Firm Transmission Service (in accordance with Requirement R2, Part 2.7.3.) that would not otherwise be permitted by the requirements of TPL-001-~~1~~2:

   - P1-2 (for controlled interruption of electric supply to local network customers connected to or supplied by the Faulted element)
   - P1-3 (for controlled interruption of electric supply to local network customers connected to or supplied by the Faulted element)
   - P2-1, P2-2 (above 300 kV)
   - P2-3 (above 300 kV)
   - P3-1 through P3-5
   - P4-1 through P4-5 (above 300 kV)
   - P5 (above 300 kV)

B. Requirements

R1. Each Transmission Planner and Planning Coordinator shall maintain System models within its respective area for performing the studies needed to complete its Planning Assessment. The models shall use ~~the latest~~ data consistent with that provided in accordance with the MOD-010 and MOD-012 standards, supplemented by other sources as needed, including items represented in the Corrective Action Plan, and shall represent projected System conditions.

This establishes Category P0 as the normal System condition in Table 1. *[Violation Risk Factor: Medium] [Time Horizon: Long-term Planning]*

1.1. System models shall represent:

1.1.1. Existing Facilities

1.1.2. Known outage(s) of generation or Transmission Facility(ies) with a duration of at least six months.

1.1.3. New planned Facilities and changes to existing Facilities

1.1.4. Real and reactive Load forecasts

1.1.5. Known commitments for Firm Transmission Service and Interchange

1.1.6. Resources (supply or demand side) required for Load

R2. Each Transmission Planner and Planning Coordinator shall prepare an annual Planning Assessment of its portion of the BES. This Planning Assessment shall use current or qualified past studies~~,~~ (as indicated in Requirement R2, Part 2.6), document assumptions, ~~summarize documented~~and document summarized results~~, and cover~~ of the steady state analyses, short circuit analyses, and Stability analyses. *[Violation Risk Factor: ~~Medium~~High] [Time Horizon: Long-term Planning]*

2.1. For the Planning Assessment, the Near-Term Transmission Planning Horizon portion of the steady state analysis shall be assessed annually and be supported by ~~the following annual~~ current annual studies~~, supplemented with~~ or qualified past studies (as indicated in Requirement R2, Part 2.6). Qualifying studies need to include the following conditions:

2.1.1. System peak Load for either Year One or year two, and for year five.

2.1.2. System Off-Peak Load for one of the five years.

2.1.3. P1 events in Table 1, with known outages modeled~~,~~ as in Requirement R1, Part 1.1.2, under those System peak or Off-Peak conditions when known outages are scheduled.

2.1.4. For each of the studies described in Requirement R2, Parts 2.1.1 and 2.1.2, sensitivity case(s) shall be utilized to demonstrate the impact of changes to the basic assumptions used in the model. To accomplish this, the sensitivity analysis in the Planning Assessment must vary one or more of the following conditions ~~not already included in the studies~~ by a sufficient amount to stress the System within a range of credible conditions that demonstrate a measurable change in ~~performance~~System response :

- Real and reactive forecasted Load.
- Expected transfers.
- Expected in service dates of new or modified Transmission Facilities.
- Reactive resource capability.
- Generation additions, retirements, or other dispatch scenarios.
- Controllable Loads and Demand Side Management.
- Duration or timing of ~~planned~~known Transmission outages.

2.1.5. When an entity's spare equipment strategy could result in the unavailability of major Transmission equipment that has a lead time of one year or more (such as a transformer), the impact of this possible unavailability on System performance shall be ~~assessed~~studied. The ~~Planning Assessment~~studies shall ~~reflect~~be performed for the P0, P1, and P2 categories identified in Table 1 ~~during~~with the conditions that the System is expected to experience ~~due to~~during the possible unavailability of the long lead time equipment.

2.2. For the Planning Assessment, the Long-Term Transmission Planning Horizon portion of the steady state analysis shall be assessed annually and be supported by the following annual current study, supplemented with qualified past studies as indicated in Requirement R2, Part 2.6:

2.2.1. A current study assessing expected System peak Load conditions for one of the years in the Long-Term Transmission Planning Horizon and the rationale for why that year was selected.

2.3. The short circuit analysis portion of the Planning Assessment shall be conducted annually addressing the Near-Term Transmission Planning Horizon and can be supported by current or past studies as qualified in Requirement R2, Part 2.6. The analysis shall be used to determine whether circuit breakers have interrupting capability for Faults that they will be expected to interrupt using the System short circuit model with any planned generation and Transmission Facilities in service which could impact the study area.

2.4. For the Planning Assessment, the Near-Term Transmission Planning Horizon portion of the Stability analysis shall be assessed annually and be supported by current or past studies as qualified in Requirement R2, Part2.6. The following studies are required:

2.4.1. System peak Load for one of the five years. System peak Load levels shall include a Load model which represents the expected dynamic behavior of Loads that could impact the study area, considering the behavior of induction motor Loads. An aggregate System Load model which represents the overall dynamic behavior of the Load is acceptable.

2.4.2. System Off-Peak Load for one of the five years.

2.4.3. For each of the studies described in Requirement R2, Parts 2.4.1 and 2.4.2, sensitivity case(s) shall be utilized to demonstrate the impact of changes to the basic assumptions used in the model. To accomplish this, the sensitivity analysis in the Planning Assessment must vary one or more of the following conditions ~~not already included in the studies~~ by a sufficient amount to stress the System within a range of credible conditions that demonstrate a measurable change in performance:

- Load level, Load forecast, or dynamic Load model assumptions.
- Expected transfers.
- Expected in service dates of new or modified Transmission Facilities.
- Reactive resource capability.
- Generation additions, retirements, or other dispatch scenarios.

2.5. For the Planning Assessment, the Long-Term Transmission Planning Horizon portion of the Stability analysis shall be assessed to address the impact of proposed material generation additions or changes in that timeframe and be supported by current or past

studies as qualified in Requirement R2, ~~part 2.6.~~Part2.6 and shall include documentation to support the technical rationale for determining material changes.

2.6. Past studies may be used to support the Planning Assessment if they meet the following requirements:

2.6.1. For steady state, short circuit, or Stability analysis: the study shall be five calendar years old or less, unless a technical rationale can be provided to demonstrate that the results of an older study are still valid.

2.6.2. For steady state, short circuit, or Stability analysis: no material changes have occurred to the System represented in the study~~ shall not include any material changes unless a~~. Documentation to support the technical rationale ~~can be provided to demonstrate that System~~for determining material changes ~~do not impact the performance results in the study area.~~shall be included.

2.7. For planning events shown in Table 1, when the analysis indicates an inability of the System to meet the performance requirements in Table 1, the Planning Assessment shall include Corrective Action Plan(s) addressing how the performance requirements will be met. Revisions to the Corrective Action Plan(s) are allowed in subsequent Planning Assessments but the planned System shall continue to meet the performance requirements in Table 1. Corrective Action Plan(s) do not need to be developed solely to meet the performance requirements for a single sensitivity case analyzed in accordance with Requirements R2, Parts 2.1.4 and 2.4.3. The Corrective Action Plan(s) shall:

2.7.1. List System deficiencies and the associated actions needed to achieve required System performance. Examples of such actions ~~may~~ include:

- Installation, modification, retirement, or removal of Transmission and generation Facilities and any associated equipment.
- Installation, modification, or removal of Protection Systems or Special Protection Systems
- Installation or modification of automatic generation tripping as a response to a single or multiple Contingency to mitigate Stability performance violations.
- Installation or modification of manual and automatic generation runback/tripping as a response to a single or multiple Contingency to mitigate steady state performance violations.
- Use of Operating Procedures specifying how long they will be needed as part of the Corrective Action Plan.
- Use of rate applications, DSM, new technologies, or other initiatives.

2.7.2. Include actions to resolve performance deficiencies identified in multiple sensitivity studies or provide a rationale for why actions were not necessary.

2.7.3. If situations arise that are beyond the control of the Transmission Planner or Planning Coordinator that prevent the implementation of a Corrective Action Plan in the required timeframe, then the Transmission Planner or Planning Coordinator is permitted to utilize Non-Consequential Load Loss and curtailment of Firm Transmission Service to correct the situation that would

normally not be permitted in Table 1, provided that the Transmission Planner or Planning Coordinator documents that they are taking actions to resolve the situation. The Transmission Planner or Planning Coordinator shall document the situation causing the problem, alternatives evaluated, and the use of Non-Consequential Load Loss or curtailment of Firm Transmission Service.

2.7.4. Be reviewed in subsequent annual Planning Assessments for continued validity and implementation status of identified System Facilities and Operating Procedures.

2.8. For short circuit analysis, if the short circuit current interrupting duty on circuit breakers determined in Requirement R2, Part 2.3 exceeds their Equipment Rating, the Planning Assessment shall include a Corrective Action Plan to address the Equipment Rating violations. The Corrective Action Plan shall:

2.8.1. List System deficiencies and the associated actions needed to achieve required System performance.

2.8.2. Be reviewed in subsequent annual Planning Assessments for continued validity and implementation status of identified System Facilities and Operating Procedures.

R3. For the steady state portion of the Planning Assessment, each Transmission Planner and Planning Coordinator shall perform studies for the Near-Term and Long-Term Transmission Planning Horizons in Requirement R2, Parts 2.1, and 2.2. The studies shall be based on computer simulation models using data provided in Requirement R1. *[Violation Risk Factor: Medium] [Time Horizon: Long-term Planning]*

3.1. Studies shall be performed for planning events to determine whether the BES meets the performance requirements in Table 1 based on the Contingency list created in Requirement R3, Part 3.4.

3.2. Studies shall be performed to assess the impact of the extreme events which are identified by the list created in Requirement R3, Part 3.5.

3.3. Contingency analyses for Requirement R3, Parts 3.1 & 3.2 shall:

3.3.1. Simulate the removal of all elements that the Protection System and other automatic controls are expected to disconnect for each Contingency without operator intervention. The analyses shall include the impact of subsequent:

- ~~Trip~~Tripping of generators where simulations show generator bus voltages or high side of the generation step up (GSU) ~~transformer~~ voltages are less than known or assumed minimum generator steady state or ride through voltage limitations. Include in the assessment any assumptions made.
- ~~Trip~~Tripping of Transmission elements whe~~n~~re relay loadability limits are exceeded.

3.3.2. Simulate the expected automatic operation of existing and planned devices designed to provide steady state control of electrical system quantities when such devices impact the study area. These devices may include equipment such as phase-shifting transformers, load tap changing transformers, and switched capacitors and inductors.

3.4. Those planning events in Table 1, that are expected to produce more severe System impacts on its portion of the BES, shall be identified and a list of those Contingencies to be evaluated for System performance in Requirement R3, Part 3.1 created. The rationale for those Contingencies selected for evaluation shall be available as supporting information.

3.4.1. The Planning Coordinator and Transmission Planner shall coordinate with adjacent Planning Coordinators and Transmission Planners to ensure that Contingencies on adjacent Systems which may impact their Systems are included in the Contingency list.

3.5. Those extreme events in Table 1 that are expected to produce more severe System impacts shall be identified and a list created of those events to be evaluated ~~for System performance~~ in Requirement R3, Part 3.2 ~~created~~. The rationale for those Contingencies selected for evaluation shall be available as supporting information. If the analysis concludes there is Cascading caused by the occurrence of extreme events, an evaluation of possible actions designed to reduce the likelihood or mitigate the consequences and adverse impacts of the event(s) shall be conducted.

R4. For the Stability portion of the Planning Assessment, as described in Requirement R2, Parts 2.4 and 2.5, each Transmission Planner and Planning Coordinator shall perform the Contingency analyses listed in Table 1. The studies shall be based on computer simulation models using data provided in Requirement R1. *[Violation Risk Factor: Medium] [Time Horizon: Long-term Planning]*

4.1. Studies shall be performed for planning events to determine whether the BES meets the performance requirements in Table 1 based on the Contingency list created in Requirement R4, Part 4.4.

4.1.1. For planning event P1: No generating unit shall pull out of synchronism. A generator being disconnected from the System by fault clearing action or by a Special Protection System is not considered pulling out of synchronism.

4.1.2. For planning events P2 through P7: When a generator pulls out of synchronism in the simulations, the resulting apparent impedance swings shall not result in the tripping of any Transmission system elements other than the generating unit and its directly connected Facilities.

4.1.3. For planning events P1 through P7: Power oscillations shall exhibit acceptable damping as established by the Planning Coordinator and Transmission Planner.

4.2. Studies shall be performed to assess the impact of the extreme events which are identified by the list created in Requirement R4, Part 4.5.

4.3. Contingency analyses for Requirement R4, Parts 4.1 and 4.2 shall :

4.3.1. Simulate the removal of all elements that the Protection System and other automatic controls are expected to disconnect for each Contingency without operator intervention ~~while also considering~~. The analyses shall include the impact of ~~successful or unsuccessful high speed reclosing.~~subsequent:

- ~~Trip~~Successful high speed (less than one second) reclosing and unsuccessful high speed reclosing into a Fault where high speed reclosing is utilized.

- Tripping of generators where simulations show generator bus voltages or high side of the GSU ~~transformer~~ voltages are less than known or assumed generator low voltage ride through capability. Include in the assessment any assumptions made.
- ~~Simulate the impact~~Tripping of Transmission lines and transformers where transient swings ~~on~~cause Protection System operation ~~for Transmission lines and transformers~~based on generic or actual relay models.

4.3.2. Simulate the expected automatic operation of existing and planned devices designed to provide dynamic control of electrical system quantities when such devices impact the study area. These devices may include equipment such as generation exciter control and power system stabilizers, static var compensators, power flow controllers, and DC Transmission controllers.

4.4. Those planning events in Table 1 that are expected to produce more severe System impacts on its portion of the BES, shall be identified, and a list created of those Contingencies to be evaluated ~~for System performance~~ in Requirement R4, Part 4.1 ~~created~~. The rationale for those Contingencies selected for evaluation shall be available as supporting information.

4.4.1. Each Planning Coordinator and Transmission Planner shall coordinate with adjacent Planning Coordinators and Transmission Planners to ensure that Contingencies on adjacent Systems which may impact their Systems are included in the Contingency list.

4.5. Those extreme events in Table 1 that are expected to produce more severe System impacts shall be identified and a list created of those events to be evaluated ~~for System performance~~ in Requirement R4, Part 4.2 ~~created~~. The rationale for those Contingencies selected for evaluation shall be available as supporting information. If the analysis concludes there is Cascading caused by the occurrence of extreme events, an evaluation of possible actions designed to reduce the likelihood or mitigate the consequences of the event(s) shall be conducted.

R5. Each Transmission Planner and Planning Coordinator shall ~~define and document, within its Planning Assessment,~~have criteria for acceptable System steady state voltage limits, post-Contingency voltage deviations, and the transient voltage response for its System. For transient voltage response, the criteria shall at a minimum, specify a low voltage level and a maximum length of time that transient voltages may remain below that level. *[Violation Risk Factor: Medium] [Time Horizon: Long-term Planning]*

R6. Each Transmission Planner and Planning Coordinator shall define and document, within ~~its~~their Planning Assessment, ~~any~~the criteria or methodology used in the analysis to identify System instability for conditions such as Cascading, voltage instability, or uncontrolled islanding. *[Violation Risk Factor: Low] [Time Horizon: Long-term Planning]*

R7. Each Planning Coordinator, in conjunction with each of its Transmission Planners, shall determine and identify each entity's individual and joint responsibilities for performing the required studies for the Planning Assessment. *[Violation Risk Factor: Low] [Time Horizon: Long-term Planning]*

R8. Each Planning Coordinator and Transmission Planner shall distribute its Planning Assessment results to adjacent Planning Coordinators~~,~~ and adjacent Transmission Planners~~, and~~ within 90 calendar days of completing its Planning Assessment, and to any functional entity that has a

reliability related need and submits a written request for the information~~.~~ within 30 days of such a request. *[Violation Risk Factor: ~~Low~~Medium] [Time Horizon: Long-term Planning]*

8.1. If a recipient of the Planning Assessment results provides documented comments on the results, the respective Planning Coordinator or Transmission Planner shall provide a documented response to that recipient within 90 calendar days of receipt of those comments.

Table 1 – Steady State & Stability Performance Planning Events

Steady State & Stability:

a. ~~BES Transmission voltage instability,~~The System shall remain stable. Cascading~~,~~ and uncontrolled islanding shall not occur.

b. Consequential Load Loss as well as generation loss is acceptable as a consequence of any ~~planning or extreme~~ event excluding P0.

c. Simulate the removal of all elements that Protection Systems and other controls are expected to automatically disconnect for each event.

d. Simulate Normal Clearing unless otherwise specified.

e. ~~For all planning events,~~ Planned System adjustments such as Transmission configuration changes and re-dispatch of generation are allowed if such adjustments are executable within the time duration applicable to the Facility Ratings.

Steady State Only:

f. Applicable Facility Ratings shall not be exceeded.

g. System steady state voltages and post-Contingency voltage deviations shall be within acceptable limits as established by the Planning Coordinator and the Transmission Planner.

h. Planning event P0 is applicable to steady state only.

i. The response of voltage sensitive ~~Load including~~ Load that is disconnected from the System by end-user equipment associated with an event shall not be used to meet steady state performance requirements.

Stability Only:

~~j. The System shall remain stable.~~

~~k.~~j. Transient voltage response shall be within acceptable limits established by the Planning Coordinator and the Transmission Planner.

Category	Initial ~~System~~ Condition	Event [1]	Fault Type [2]	BES Level [3]	Interruption of Firm Transmission Service Allowed [4]	Non-Consequential Load Loss Allowed
P0 No Contingency	Normal System	None	N/A	EHV, HV	~~No[9]~~No	No
P1 Single Contingency	Normal System	Loss of one of the following: 1. Generator 2. Transmission Circuit 3. Transformer [5] 4. Shunt Device [6]	3Ø	EHV, HV	No[9]	~~No~~No[12]
		5. Single Pole of a DC line	SLG			
P2 Single Contingency	Normal System	1. Opening of a line section w/o a fault [7]	N/A	EHV, HV	No[9]	~~No~~No[12]
		2. Bus Section Fault	SLG	EHV	No[9]	No
				HV	Yes	Yes
		3. Internal Breaker Fault [8]	SLG	EHV	No[9]	No

		(non-Bus-tie Breaker)		HV	Yes	Yes
		4. Internal Breaker Fault (Bus-tie Breaker)[8]	SLG	EHV, HV	Yes	Yes
Category	**Initial ~~System~~ Condition**	**Event** [1]	**Fault Type** [2]	**BES Level** [3]	**Interruption of Firm Transmission Service Allowed** [4]	**Non-Consequential Load Loss Allowed**
P3 Multiple Contingency	Loss of generator unit followed by System adjustments[9]	Loss of one of the following: 1. Generator 2. Transmission Circuit 3. Transformer [5] 4. Shunt Device [6]	3Ø	EHV, HV	No[9]	No[12]
		5. Single pole of a DC line	SLG			
P4 Multiple Contingency *(Fault plus stuck breaker[10])*	Normal System	Loss of multiple elements caused by a stuck breaker [10](non-Bus-tie Breaker) attempting to clear a Fault on one of the following: 1. Generator 2. Transmission Circuit 3. Transformer [5] 4. Shunt Device [6] 5. Bus Section	SLG	EHV	No[9]	No
				HV	Yes	Yes
		6. Loss of multiple elements caused by a stuck breaker[10] (Bus-tie Breaker) attempting to clear a Fault on the associated bus	SLG	EHV, HV	Yes	Yes
P5 Multiple Contingency *(Fault plus ~~Protection System~~relay failure to operate)*	Normal System	~~Failure of a single Protection System that results in~~ Delayed Fault Clearing ~~on~~due to the failure of a non-redundant relay[13] protecting the Faulted element to operate as designed, for one of the following: 1. Generator 2. Transmission Circuit 3. Transformer [5] 4. Shunt Device [6] 5. Bus Section	SLG	EHV	No[9]	No
				HV	Yes	Yes

P6 Multiple Contingency *(Two overlapping singles)*	Loss of one of the following followed by System ~~adj~~adjustments.[9]~~:~~ 1. Transmission Circuit 2. Transformer [5] 3. Shunt Device[6] 4. Single pole of a DC line	Loss of one of the following: 1. Transmission Circuit 2. Transformer [5] 3. Shunt Device [6]	3Ø	EHV, HV	Yes	Yes
		4. Single pole of a DC line	SLG	EHV, HV	Yes	Yes
P7 Multiple Contingency *(Common Structure)*	Normal System	The loss of: 1. Any two adjacent (vertically or horizontally) circuits on common structure [11] 2. Loss of a bipolar DC line	SLG	EHV, HV	Yes	Yes

Table 1 – Steady State & Stability Performance Extreme Events	
Steady State & Stability For all extreme events evaluated: a. Simulate the removal of all elements that Protection Systems and automatic controls are expected to disconnect for each Contingency. b. Simulate Normal Clearing unless otherwise specified.	
Steady State 1. Loss of a single generator, Transmission Circuit, single pole of a DC Line, shunt device, or transformer forced out of service followed by another single generator, Transmission Circuit, single pole of a different DC Line, shunt device, or transformer forced out of service prior to System adjustments. 2. Local area events affecting the Transmission System such as: a. Loss of a tower line with three or more circuits.[11] b. Loss of all Transmission lines on a common Right-of-Way[11]. c. Loss of a switching station or substation (loss of one voltage level plus transformers). d. Loss of all generating units at a generating station. e. Loss of a large Load or major Load center. 3. Wide area events affecting the Transmission System based on System topology such as: a. Loss of two generating stations resulting from conditions such as: i. Loss of a large gas pipeline into a region or multiple regions that have significant gas-fired generation. ii. Loss of the use of a large body of water as the cooling source for generation. iii. Wildfires. iv. Severe weather, e.g., hurricanes, tornadoes, etc. v. A successful cyber attack. vi. Shutdown of a nuclear power plant(s) and related facilities for a day or more for common causes such as problems with similarly designed plants. b. Other events based upon operating experience that may result in wide area disturbances.	**Stability** 1. With an initial condition of a single generator, Transmission circuit, single pole of a DC line, shunt device, or transformer forced out of service, apply a 3Ø fault on another single generator, Transmission circuit, single pole of a different DC line, shunt device, or transformer prior to System adjustments. 2. Local or wide area events affecting the Transmission System such as: a. 3Ø fault on generator with stuck breaker[10] or a ~~Protection System failure~~relay failure[13] resulting in Delayed Fault Clearing. b. 3Ø fault on Transmission circuit with stuck breaker[10] or a ~~Protection System failure~~relay failure[13] resulting in Delayed Fault Clearing. c. 3Ø fault on transformer with stuck breaker[10] or a ~~Protection System failure~~relay failure[13] resulting in Delayed Fault Clearing. d. 3Ø fault on bus section with stuck breaker[10] or a ~~Protection System failure~~relay failure[13] resulting in Delayed Fault Clearing. e. 3Ø internal breaker fault. f. Other events based upon operating experience, such as consideration of initiating events that experience suggests may result in wide area disturbances

Table 1 – Steady State & Stability Performance Footnotes (Planning Events and Extreme Events)
1. If the event analyzed involves BES elements at multiple System voltage levels, the lowest System voltage level of the element(s) removed for the analyzed event determines the stated performance criteria regarding allowances for interruptions of Firm Transmission Service and Non-Consequential Load Loss.
2. Unless specified otherwise, simulate Normal Clearing of faults. Single line to ground (SLG) or three-phase (3Ø) are the fault types that must be evaluated in Stability simulations for the event described. A 3Ø or a double line to ground fault study indicating the criteria are being met is sufficient evidence that a SLG condition would also meet the criteria.
3. Bulk Electric System (BES) level references include extra-high voltage (EHV) Facilities defined as greater than 300kV and high voltage (HV) Facilities defined as the 300kV and lower voltage Systems. The designation of EHV and HV is used to distinguish between stated performance criteria allowances for interruption of Firm Transmission Service and Non-Consequential Load Loss.
4. Curtailment of Conditional Firm Transmission Service is allowed when the conditions and/or events being studied formed the basis for the Conditional Firm Transmission Service.
5. For non-generator step up transformer outage events, the reference voltage, as used in footnote 1, applies to the low-side winding (excluding tertiary windings). For generator and Generator Step Up transformer outage events, the reference voltage applies to the BES connected voltage (high-side of the Generator Step Up transformer). Requirements which are applicable to transformers also apply to variable frequency transformers and phase shifting transformers.
6. Requirements which are applicable to shunt devices also apply to FACTS devices that are connected to ground.
7. Opening one end of a line section without a fault on a normally networked Transmission circuit such that the line is possibly serving Load radial from a single source point.
8. An internal breaker fault means a breaker failing internally, thus creating a System fault which must be cleared by protection on both sides of the breaker.
9. An objective of the planning process should be to minimize the likelihood and magnitude of interruption of Firm Transmission Service following Contingency events. Curtailment of Firm Transmission Service ~~, when coupled with the appropriate re-dispatch of resources obligated to re-dispatch,~~ is allowed both as a System adjustment (as identified in the column entitled 'Initial ~~System Conditions'~~Condition') and a corrective action~~,~~ when achieved through the appropriate re-dispatch of resources obligated to re-dispatch, where it can be demonstrated that Facilities, internal and external to the Transmission Planner's planning region, remain within applicable Facility Ratings and ~~those adjustments do~~the re-dispatch does not result in ~~the shedding of~~ any ~~firm Demand~~Non-Consequential Load Loss. Where limited options for re-dispatch exist, sensitivities associated with the availability of those resources should be considered. ~~Where Facilities external to the Transmission Planner's planning region are relied upon, Facility Ratings in those regions should also be respected.~~
10. A stuck breaker means that for a gang-operated breaker, all three phases of the breaker have remained closed. For an independent pole operated (IPO) or an independent pole tripping (IPT) breaker, only one pole is assumed to remain closed. A stuck breaker results in Delayed Fault Clearing.
11. Excludes circuits that share a common structure (Planning event P7, Extreme event steady state 2a) or common Right-of-Way (Extreme event, steady state 2b) for 1 mile or less.
12. An objective of the planning process should be to minimize the likelihood and magnitude of Non-Consequential Load Loss following Contingency events. However, in limited circumstances Non-Consequential Load Loss may be needed to address BES performance requirements. When Non-Consequential Load Loss is utilized within the planning process to address BES performance requirements, such interruption is limited to circumstances where the Non-Consequential Load Loss is documented, including alternatives evaluated; and where the utilization of Non-Consequential Load Loss is subject to review in an open and transparent stakeholder process that includes addressing stakeholder comments.

Table 1 – Steady State & Stability Performance Footnotes (Planning Events and Extreme Events)
~~11.~~13. Applies to the following relay functions or types: pilot (#85), distance (#21), differential (#87), current (#50, 51, and 67), voltage (#27 & 59), directional (#32, & 67), and tripping (#86, & 94).

C. Measures

M1. Each Transmission Planner and Planning Coordinator shall provide evidence, in electronic or hard copy format, that it is maintaining System models within ~~its~~their respective area, using ~~the latest~~ data consistent with MOD-010 and MOD-012, including items represented in the Corrective Action Plan, representing projected System conditions, and that the models represent the required information in accordance with Requirement R1.

M2. Each Transmission Planner and Planning Coordinator shall provide dated evidence, such as electronic or hard copies of its annual Planning Assessment, that it has prepared an annual Planning Assessment of its portion of the BES in accordance with Requirement R2.

M3. Each Transmission Planner and Planning Coordinator shall provide dated evidence, such as electronic or hard copies of the studies utilized in preparing the Planning Assessment, in accordance with Requirement R3.

M4. Each Transmission Planner and Planning Coordinator shall provide dated evidence, such as electronic or hard copies of the studies utilized in preparing the Planning Assessment in accordance with Requirement R4.

M5. Each Transmission Planner and Planning Coordinator shall provide dated evidence such as electronic or hard copies of the documentation specifying the criteria for acceptable System steady state voltage limits, post-Contingency voltage deviations, and the transient voltage response for its System in accordance with Requirement R5.

M6. Each Transmission Planner and Planning Coordinator shall provide dated evidence, such as electronic or hard copies of documentation specifying ~~any~~the criteria or methodology used in the analysis to identify System instability for conditions such as Cascading, voltage instability, or uncontrolled islanding that was utilized in preparing the Planning Assessment in accordance with Requirement R6.

M7. Each Planning Coordinator, in conjunction with each of its Transmission Planners, shall provide dated documentation on roles and responsibilities, such as meeting minutes, agreements, and e-mail correspondence that identifies that agreement has been reached on individual and joint responsibilities for performing the required studies and ~~the Planning~~ Assessments in accordance with Requirement R7.

M8. Each Planning Coordinator and Transmission Planner shall provide evidence, such as email notices, documentation of updated web pages, postal receipts showing recipient~~, date,~~ and ~~contents,~~date; or a demonstration of a public posting, that it has distributed its Planning Assessment results to adjacent Planning Coordinators~~,~~ and adjacent Transmission Planners~~, and~~ within 90 days of having completed its Planning Assessment, and to any functional entity ~~that~~who has indicated a reliability need ~~and~~within 30 days of a written request and that the Planning Coordinator or Transmission Planner has provided a documented response to comments received on Planning Assessment results within 90 calendar days of receipt of those comments in accordance with Requirement R8.

D. Compliance

1. ~~1.~~ Compliance Monitoring Process

1.1 Compliance Enforcement Authority

Regional Entity~~.~~

1.2 Compliance Monitoring Period and Reset Timeframe

Not applicable.

1.3 Compliance Monitoring and Enforcement Processes:

Compliance Audits

Self-Certifications

Spot Checking

Compliance Violation Investigations

Self-Reporting

Complaints

1.4 Data Retention

The Transmission Planner and Planning Coordinator shall each retain data or evidence to show compliance as identified unless directed by its Compliance Enforcement Authority to retain specific evidence for a longer period of time as part of an investigation:

- The models utilized in the current in-force Planning Assessment and one previous Planning Assessment in accordance with Requirement R1 and Measure M1.
- The Planning Assessments performed since the last compliance audit in accordance with Requirement R2 and Measure M2.
- The studies performed in support of its Planning Assessments since the last compliance audit in accordance with Requirement R3 and Measure M3.
- The studies performed in support of its Planning Assessments since the last compliance audit in accordance with Requirement R4 and Measure M4.
- The documentation specifying the criteria since the last compliance audit in accordance with Requirement R5 and Measure M5.
- The documentation specifying ~~any~~the criteria or methodology utilized in support of its Planning Assessments since the last compliance audit in accordance with Requirement R6 and Measure M6.
- The current, in force documentation for the agreement(s) on roles and responsibilities, as well as ~~all such~~ documentation for the agreements in force since the last compliance audit, in accordance with Requirement R7 and Measure M7.

The Planning Coordinator shall retain data or evidence to show compliance as identified unless directed by its Compliance Enforcement Authority to retain specific evidence for a longer period of time as part of an investigation:

- Three calendar years of the ~~notices and other documentation~~notifications employed in accordance with Requirement R8 and Measure M8.

If a Transmission Planner or Planning Coordinator is found non-compliant, it shall keep information related to the non-compliance until found compliant or the time periods specified above, whichever is longer.

1.5 Additional Compliance Information

None.

2. Violation Severity Levels

	Lower VSL	Moderate VSL	High VSL	Severe VSL
R1	The responsible entity's System model failed to represent one of the Requirement R1, Parts 1.1.1 through 1.1.6.	The responsible entity's System model failed to represent two of the Requirement R1, Parts 1.1.1 through 1.1.6. ~~OR~~ ~~The responsible entity's System model did not use the latest data consistent with the data provided in accordance with the MOD-010 and MOD-012 standards and other sources, including items represented in the Corrective Action Plan.~~	The responsible entity's System model failed to represent three of the Requirement R1, Parts 1.1.1 through 1.1.6.	The responsible entity's System model failed to represent four or more of the Requirement R1, Parts 1.1.1 through 1.1.6. OR The responsible entity's System model did not represent projected System conditions as described in Requirement R1. OR The responsible entity's System model did not use the latest data consistent with the data provided in accordance with the MOD-010 and MOD-012 standards and other sources, including items represented in the Corrective Action Plan.
R2	The responsible entity failed to comply with Requirement R2, Part 2.6.	The responsible entity failed to comply with Requirement R2, Part 2.3 or Part 2.8.	The responsible entity failed to comply with one of the following Parts of Requirement R2: Part 2.1, Part 2.2, Part 2.4, Part 2.5, or Part 2.7.	The responsible entity failed to comply with two or more of the following Parts of Requirement R2: Part 2.1, Part 2.2, Part 2.4, or Part 2.7. OR, The responsible entity does not have a completed annual Planning Assessment.
R3	The responsible entity did not identify planning events as described in Requirement R3, Part 3.4 or extreme events as described in Requirement	The responsible entity did not perform studies as specified in Requirement R3, Part 3.1 to determine that the BES meets the performance requirements for one of the	The responsible entity did not perform studies as specified in Requirement R3, Part 3.1 to determine that the BES meets the performance requirements for two of the categories	The responsible entity did not perform studies as specified in Requirement R3, Part 3.1 to determine that the BES meets the performance requirements for three or more of the

	Lower VSL	Moderate VSL	High VSL	Severe VSL
	R3, Part 3.5.	categories (P2 through P7) in Table 1. OR The responsible entity did not perform studies as specified in Requirement R3, Part 3.2 to assess the impact of extreme events. ~~OR~~ ~~The responsible entity did not base its studies on computer simulation models using data provided in Requirement R1.~~	(P2 through P7) in Table 1. OR The responsible entity did not perform Contingency analysis as described in Requirement R3, Part 3.3.	categories (P2 through P7) in Table 1. OR The responsible entity did not perform studies to determine that the BES meets the performance requirements for the P0 or P1 categories in Table 1. OR The responsible entity did not base its studies on computer simulation models using data provided in Requirement R1.
R4	The responsible entity did not identify planning events as described in Requirement R4, Part 4.4 or extreme events as described in Requirement R4, Part 4.5.	The responsible entity did not perform studies as specified in Requirement R4, Part 4.1 to determine that the BES meets the performance requirements for one of the categories (P1 through P7) in Table 1. OR The responsible entity did not perform studies as specified in Requirement R4, Part 4.2 to assess the impact of extreme events. ~~OR~~ ~~The responsible entity did not base its studies on computer simulation models using data provided in Requirement R1.~~	The responsible entity did not perform studies as specified in Requirement R4, Part 4.1 to determine that the BES meets the performance requirements for two of the categories (P1 through P7) in Table 1. OR The responsible entity did not perform Contingency analysis as described in Requirement R4, Part 4.3.	The responsible entity did not perform studies as specified in Requirement R4, Part 4.1 to determine that the BES meets the performance requirements for three or more of the categories (P1 through P7) in Table 1. OR The responsible entity did not base its studies on computer simulation models using data provided in Requirement R1.

	Lower VSL	Moderate VSL	High VSL	Severe VSL
R5	N/A	N/A	N/A	The responsible entity ~~failed to define and document its~~does not have criteria for acceptable System steady state voltage limits, post-Contingency voltage deviations, or the transient voltage response for its System.
R6	N/A	N/A	N/A	The responsible entity failed to define and document the criteria or methodology for System instability used within its analysis as described in Requirement R6.
R7	N/A	N/A	N/A	The Planning Coordinator, in conjunction with each of its Transmission Planners, failed to determine and identify individual or joint responsibilities for performing required studies.
R8	The responsible entity ~~failed to distribute the results of~~distributed its Planning Assessment to ~~one of its adjacent Transmission Planners or~~ adjacent Planning Coordinators~~,~~ and ~~to one~~ adjacent Transmission Planners but it was more than 90 days but less than or equal to 120 days following its completion. OR, The responsible entity distributed its Planning Assessment to functional ~~entity that has~~entities having a	~~N/A~~ The responsible entity distributed its Planning Assessment to adjacent Planning Coordinators and adjacent Transmission Planners but it was more than 120 days but less than or equal to 130 days following its completion. OR, The responsible entity distributed its Planning Assessment to functional entities having a reliability related need who requested the Planning Assessment in writing but it was more than 40 days but less than or equal to	The responsible entity ~~failed to distribute the results of~~distributed its Planning Assessment to ~~its adjacent Transmission Planners or~~ adjacent Planning Coordinators~~,~~ and ~~to any~~ adjacent Transmission Planners but it was more than 130 days but less than or equal to 140 days following its completion. OR, The responsible entity distributed its Planning Assessment to functional ~~entity that has~~entities having a	The responsible entity ~~failed~~ distributed its Planning Assessment to ~~provide a documented response~~adjacent Planning Coordinators and adjacent Transmission Planners but it was more than 140 days following its completion. OR The responsible entity did not distribute its Planning Assessment to ~~a recipient of~~adjacent Planning Coordinators and adjacent

	Lower VSL	Moderate VSL	High VSL	Severe VSL
	reliability related need ~~and has submitted a written~~ who requested the Planning Assessment in writing but it was more than 30 days but less than or equal to 40 days following the request ~~for the information, respectively in accordance with Requirement R8~~.	50 days following the request.	reliability related need ~~and has submitted a written~~ who requested the Planning Assessment in writing but it was more than 50 days but less than or equal to 60 days following the request ~~for the information, respectively in accordance with Requirement R8~~.	Transmission Planners. OR The responsible entity distributed its Planning Assessment to functional entities having a reliability related need who requested the Planning Assessment ~~results who provided documented comments on~~in writing but it was more than 60 days following the ~~results within 90 calendar days of receipt of those comments in accordance with Requirement R8~~request. OR The responsible entity did not distribute its Planning Assessment to functional entities having a reliability related need who requested the Planning Assessment in writing.

E. ~~E.~~ Regional Variances

None.

Version History

Version	Date	Action	Change Tracking
1	TBD	Revision of TPL-001-0 as per Project 2006-02; includes merging requirements of TPL-001-0, TPL-002-0, TPL-003-0, ~~TPL-004-0, TPL-005,~~ and TPL-~~006~~004-0 into one, single, comprehensive, coordinated standard: TPL-001-~~1~~2	Not employed due to scope of revision

NERC
NORTH AMERICAN ELECTRIC RELIABILITY CORPORATION

Standards Announcement

Project 2006-02 Assess Transmission Future Needs
Ballot Pool Window Open: April 18 – May 18, 2011
Successive Formal Comment Period Open: April 18 – May 31, 2011

Now available at: http://www.nerc.com/filez/standards/Assess-Transmission-Future-Needs.html

The standard drafting team working on Project 2006-02 (ATFN SDT) is seeking comments on revisions to TPL-001-2 after submitting Draft 6 of the standard and supporting documents for quality review, and now that TPL Table 1 footnote 'b' changes have been approved by the ballot pool and filed with FERC. Clean and redline versions of the standard showing revisions since the last posting, along with the associated implementation plan, are posted on the project page. No redline of the implementation plan has been posted since only formatting changes have been made since the last posting.

Ballot Pool Open through 8 a.m. on May 18, 2011

A new ballot pool is being formed for the balloting of revisions to TPL-001-2. The Standards Committee has authorized posting the standard and implementation plan for a formal comment period with a successive ballot and concurrent non-binding poll conducted during the last 10 days of that comment period. The Standards Committee also authorized forming a new ballot pool because the last ballot of this project was conducted more than a year ago.

The ballot pool will be open through 8 a.m. on May 18, 2011, and the ballot window will be from 8 a.m. Eastern on May 18 through 8 p.m. Eastern on May 31, 2011.

Instructions for Joining the New Ballot Pool for Project 2006-02

Registered Ballot Body members may join the ballot pool to be eligible to vote in the upcoming ballot at the following page: https://standards.nerc.net/BallotPool.aspx

During the pre-ballot window, members of the ballot pool may communicate with one another by using their "ballot pool list server." (Once the balloting begins, ballot pool members are prohibited from using the ballot pool list servers.) The list server for this ballot pool is: bp-2006-02_TPL_sb_in@nerc.com

Members who join the ballot pool to vote on the standard will automatically be entered in a separate pool to participate in the non-binding poll of the associated violation risk factor (VRF) and violation severity levels (VSLs).

Instructions for Commenting

Please use this electronic form to submit comments. If you experience any difficulties in using the electronic form, please contact Monica Benson at monica.benson@nerc.net. An off-line, unofficial copy of the comment form is posted on the project page: http://www.nerc.com/filez/standards/Assess-Transmission-Future-Needs.html

Next Steps

A successive ballot of draft 7 of TPL-001-2, and a concurrent non-binding poll of the associated VRFs and VSLs, will begin on May 18, 2011 and end at 8 p.m. Eastern on Tuesday, May 31, 2011.

Background

TPL-001-1 is designed to be a single, comprehensive, and coordinated standard that merges the requirements of four existing standards: TPL-001-0, TPL-002-0, TPL-003-0, and TPL-004-0. The proposed standard includes several new definitions. The purpose of the proposed standard is to establish transmission system planning performance requirements within the planning horizon to develop a bulk electric system that will operate reliably over a broad spectrum of system conditions and following a wide range of probable contingencies.

The AFTN SDT solicited comments from the industry on the fifth posting of the revised TPL-001-2 through an informal comment period that ended on September 2, 2010. The team revised the standard in response to comments received, and posted Draft 6 for information, while awaiting the outcome of Project 2010-11 TPL Table 1 (footnote 'b'). The revisions to Table 1 footnote 'b' have been approved by the NERC Board of Trustees and filed with FERC. The AFTN SDT adopted the technical tenets of the final solution for footnote 'b' for inclusion in TPL-001-2.

For more information or assistance, please contact Monica Benson, Standards Process Administrator, at monica.benson@nerc.net or at 404-446-2560.

North American Electric Reliability Corporation
116-390 Village Blvd.
Princeton, NJ 08540
609.452.8060 | www.nerc.com

NERC
NORTH AMERICAN ELECTRIC RELIABILITY CORPORATION

Revised Standards Announcement

Project 2006-02 Assess Transmission and Future Needs
Successive Ballot and Non-Binding Poll Now Open
May 18 – 31, 2011

Now available at: https://standards.nerc.net/CurrentBallots.aspx

A successive ballot for the proposed standard, TPL-001-2 — Transmission System Planning Performance Requirements, and a concurrent, non-binding poll of the revised VRFs and VSLs are being conducted through **8:00 pm Eastern on Tuesday, May 31, 2011**.

Since the last time this standard was balloted was prior to the approval of footnote 'b', a redline showing all changes made to the standard since the last balloted version of the standard has been added to the project page: http://www.nerc.com/filez/standards/Assess-Transmission-Future-Needs.html

Instructions

Members of the ballot pool associated with this project may log in and submit their votes from the following page: https://standards.nerc.net/CurrentBallots.aspx.

Special Instructions for Submitting Comments With a Ballot or Non-Binding Poll

Comments submitted with ballots are extremely valuable to help the drafting team revise its work. In an effort to reduce the burden on stakeholders providing comments, the drafting team requests that all comments (both those submitted with a ballot and those submitted by stakeholders not balloting) be submitted through the electronic comment form. Note that question 2 asks specifically about revisions the team has made to the VRFs and VSLs, and members of the ballot pool who wish to enter comments to support their opinion in the non-binding poll may provide them in response to question 2.

This approach will ensure that stakeholders only provide a single set of comments, but have an opportunity to notify the drafting team if they have provided comments. During the successive ballot window, members of the ballot pool associated with this project may log in and submit their votes from the following page: https://standards.nerc.net/CurrentBallots.aspx. When submitting a ballot with comments, simply record a "Comments submitted" in the comments field of the ballot to indicate that comments were submitted.

Documents for this project, including an off-line unofficial copy of the questions listed in the comment forms are posted at the following site: http://www.nerc.com/filez/standards/Assess-Transmission-Future-Needs.html

Next Steps

The drafting team will consider all comments received during the formal comment period, ballot, and non-binding poll, and will determine whether to make additional changes to the standard and its implementation plan

Background

TPL-001-2 is designed to be a single, comprehensive, and coordinated standard that merges the requirements of four existing standards: TPL-001-0, TPL-002-0, TPL-003-0, and TPL-004-0. The proposed standard includes several new definitions. The purpose of the proposed standard is to establish transmission system planning performance requirements within the planning horizon to develop a bulk electric system that will operate reliably over a broad spectrum of system conditions and following a wide range of probable contingencies.

The AFTN SDT solicited comments from the industry on the fifth posting of the revised TPL-001-2 through an informal comment period that ended on September 2, 2010. The team revised the standard in response to comments received, and posted Draft 6 for information, while awaiting the outcome of Project 2010-11 TPL Table 1 (footnote 'b'). The revisions to Table 1 footnote 'b' have been approved by the NERC Board of Trustees and filed with FERC. The AFTN SDT adopted the technical tenets of the final solution for footnote 'b' for inclusion in TPL-001-2.

Additional information about this project is available on the project page at:
http://www.nerc.com/filez/standards/Assess-Transmission-Future-Needs.html.

Standards Development Process

The Standard Processes Manual contains all the procedures governing the standards development process. The success of the NERC standards development process depends on stakeholder participation. We extend our thanks to all those who participate. For more information or assistance, please contact Monica Benson at monica.benson@nerc.net.

For more information or assistance, please contact Monica Benson, Standards Process Administrator, at monica.benson@nerc.net or at 404-446-2560.

North American Electric Reliability Corporation
116-390 Village Blvd.
Princeton, NJ 08540
609.452.8060 | www.nerc.com

Individual or group. (44 Responses)
Name (30 Responses)
Organization (30 Responses)
Group Name (14 Responses)
Question 1 (43 Responses)
Question 1 Comments (44 Responses)
Question 2 (36 Responses)
Question 2 Comments (44 Responses)
Question 3 (0 Responses)
Question 3 Comments (44 Responses)

Group
SERC Planning Standards Subcommittee
Yes
Yes
R1 does not seem to address issues where data errors have been introduced into the latest model data. Also, R1 and its VSL may be interpreted to exclude the use of past studies. The Implementation Plan should include a five-year delay in the effective date for short circuit studies (R2 parts 2.3 and 2.8) since these studies are not required in the current version 0 standards. The comments expressed herein represent a consensus of the views of the above-named members of the SERC EC Planning Standards Subcommittee only and should not be construed as the position of SERC Reliability Corporation, its board, or its officers.
Group
Progress Energy
First, Progress Energy ("PE") notes that many changes to the Requirements language have been appropriate or have improved upon the language of the previous drafts, and PE commends the SDT in this. PE does have concerns, however, with the language in R8 and its corresponding Measure M8, and therefore must select 'no' for Q1 and provide comments. PE disagrees with the language of R8 primarily to the extent that the use of the verb “distribute” with respect to communicating Planning Assessments leads the reader to M8, which lacks language that would provide for the optimal correlation with R8. Regarding the M8 language, PE feels that the term “demonstration of a public posting” is a valid action in demonstrating compliance with R8 and thus should be more clearly described as one of several acceptable methods of distributing Planning Assessments. In addition, given the appropriate concern that NERC and FERC have recently raised regarding Cyber threats and the need for additional Cyber Security measures, PE feels that the public posting language should contain a qualification regarding the security of CEII information. PE thus recommends that an appropriate phrase to use would be “demonstration of a secure public posting”, thereby making clear that a public posting would not be a website accessible to just anyone due to CEII concerns.
Yes
Group
Northeast Power Coordinating Council
No
The wording of Part 1.1.2, “known outages...with a duration of at least 6 months” should be revised to “...at least 1 year”. Also for consideration is that “known outages...with a duration of at least 6 months” are dealt with in operational studies rather than planning studies. Any adverse impacts that these outages might have are mitigated by operational decisions rather than planning decisions within a 6 month horizon. Moving this requirement out of the TPL Standard to an operational standard should be considered. Make the wording consistent between 2.1 and 2.2 as it relates to qualified past studies. Specifically: Parts 2.1.2, 2.1.4, 2.1.5 The language of requirements 2.1.4 and 2.4.3 allowing the performance of one or more sensitivities appears to be inconsistent with language in 2.7.2. 2.7.2

requires multiple sensitivities to determine if actions to resolve performance deficiencies are necessary. Will varying only one measurable quantity several times in multiple simulations satisfy multiple sensitivity studies or just one sensitivity study? The numbers and types of required sensitivity studies is unclear, and subject to interpretation by PCs and TPs. The current wording in Part 2.1.5, "spare strategy", appears to be open-ended regarding the number of permutations to be analyzed. It should be restricted to assessing only one piece of equipment being unavailable or outaged at a time. 2.1.5 should be consistent with R2 and 2.1 regarding the use of the terms assessment and studies. As with the preceding comment regarding Part 1.1.2, moving this requirement out of the TPL Standard and to an operational standard should be considered. It is unclear if the last sentence of R2.1.5 allows for the curtailment of firm transmission service before the application of category P0, P1 and P2 events. This last sentence states: "…with the conditions that the System is expected to experience during the possible unavailability of the long lead time equipment." The wording in Part 2.2 "be supported by the following annual current study, supplemented with qualified past studies" should be replaced with the similar statement in Part 2.1: "be supported by current annual studies or qualified past studies". Part 2.7.1 lists potential system actions to address System deficiencies. It is suggested that this list be moved to a guideline or white paper. The wording in Part 8.1 needs to be amended to restrict comments to the most recent assessment only. Contingencies on back to back HVDC installations are not mentioned in the standard. The treatment of combined cycle facilities (all units in outage?) needs to be clarified, as well as Footnote 7 of Table 1 requiring clarification. In Table 1, Event 1 of Category P2 and related Footnote 7 are not clear because of the use of the word "possibly". If the intension is to simulate the line end opening condition of tapped lines, this should be clearly stated in the table (without reference to "Opening of a line section" and use of different language in the footnote). From Table 1b: "Consequential Load Loss as well as generation loss is acceptable as a consequence of any event excluding P0." Firm Transmission Services Loss is also acceptable and should be added (particularly in P1 loss of a single pole of a DC line for which the transfer is reduced accordingly to the remaining pole capability).

Individual

John Bussman

Associated Electric Cooperative Inc

No

R2.4.1: The SDT has put a stronger emphasis on dynamic load behavior in stability studies (FIDVR, induction motor loads, etc) to be included in the peak models. The standard does indicate that "An aggregate System Load model which represents the overall dynamic behavior of the Load is acceptable." We feel that this should be clarified to ensure that the current modeling processes address what NERC desires with this requirement. At a minimum, we recommend that a grace period be implemented to account for any regional modeling practices which need time to implement dynamic load behavior per the draft standard. R2.5: It is our understanding that the Long-Term Transmission Planning Horizon does not require the sensitivity analysis which is required in R2.4 for the Near-Term Transmission Planning Horizon for the stability portion of the studies. R2.7: It is our understanding that Corrective Action Plan(s) do not need to be developed for performance violations observed in the sensitivity analysis (steady state and stability) unless the violation is observed in several sensitivities as it is indicated in R2.7.2: "Include actions to resolve performance deficiencies indentified in multiple sensitivity studies or provide rationale for why actions were not necessary". We feel that this needs to be further clarified. R3.3.1: This requirement indicates that steady state analysis should include the effect of ride-through voltage limitations of generating units. We are having difficulty seeing how this is a steady-state issue. Generally one would expect a generator to experience ride-through voltage issues during faults. Per Table 1, P1.1 already require generator outages be taken – wouldn't that cover this issue? We feel that this needs to be further clarified. R3.4.1: This requirement states that "Transmission Planners shall coordinate with adjacent Planning Coordinators and Transmission Planners to ensure that Contingencies on adjacent Systems which may impact their Systems are included in the Contingency list". We feel that the coordination requirement should be removed from the standard as this will result in a massive increase in workload/time required to perform the TPL studies. AECI has several ties to adjacent Transmission Planners and Planning Coordinators – it will be a very time intensive task to coordinate with all of these parties. If the standard wants to ensure that the Contingencies overlap – we can agree to that, however we feel

that the SDT needs to give some firm clarity on how far to go with it (how many buses away, only include ties, etc?). R4.1.2: We would like clarification on what is mean by “apparent impedance swings”. R4.3.1: Is the intent of the SDT to require that generic or actual relay models be added to the stability models? We feel that this needs to be further clarified. R8: This requirement states that the Planning Assessments shall be distributed within 90 days of their completion to adjacent Planning Coordinators, Transmission Planners, and functional entities that have a reliability need (3rd Interconnection Customers?). We do not agree with the mandatory requirement of distributing the results of our TPL studies: We consider this information to be CEII We can agree to distribute the results upon request, but do not agree with the 30 day timeframe as more time will be needed to sign applicable Non-Disclosure Agreements, etc.
Individual
Thad Ness
American Electric Power
Yes
Yes
Individual
Greg Rowland
Duke Energy
Yes
Yes
Group
SPP Reliability Standards Development Team
Yes
Yes
A5 It would seem that 84 months wouldn’t be universally attainable due to different system configurations, terrain, geography, and permitting issues that are required to complete a corrective action plan. In 2.4.1 we would like to see better clarity on what an Aggregate system load model is and how granular it should be. If the answer is a very detailed representation of the load system then it may take a longer time to implement. In section 2.7 we would to see clarification on the sensitivity analysis. Is this in reference to seasonal models and differences in fuel availability? We need more detail on how this is to be done so that it won’t be left up to interpretation. We would like for clarification of the planning assessment and who is performing which tasks. We would also like to utilize a regional assessment due to limited resources. Under which criteria should the assessment fall under the regional entity or the individual companies? In section 3.4.1 this type of coordination could be difficult due to other adjacent entities on different schedules and some possibly couldn’t have the amount of detail to incorporate into another’s processes. We know this is generally covered in coordination of real time operations and wonder if it is appropriate to require this type of coordination in the long term process. Is there already an operational standard that covers this? Would it be better to address this in the operational standards? PC’s between regions are already coordinating for long term studies. Should this standard fall more on the back of the PC’s rather than the TP Can we get a bright line definition of what apparent impedance swings means? R4.3.1 will the detailed amount of data then be incorporated back into the NERC modeling processes and create a more detailed model with better accuracy? R8 We do not agree that we should provide the assessment to every adjacent

PC and TP. We do agree however that if requested by these entities we would provide the assessment. We don't mind sharing information with requestors but would like a longer duration than 30 days due to the fact that we would like to know what type of "reliability need" any entity would have considering that some of the information could be considered CEII. Non disclosure agreements may be needed in order to provide this information.
Individual
Bernie Pasternack
Transmission Strategies, LLC
Yes
Yes
The SDT, Observers, and the Industry as a whole have put a tremendous amount of thought and work into the development of this latest draft. While nobody should claim that this latest version is perfect, it is far clearer, more in tune with current industry needs, and much improved compared to the existing approved Standards that it will replace.
Group
Arizona Public Service Company
Yes
No
With regards to R2, it appears that the VRF has changed from Medium to High without any justification; and with the time horizon of long term planning, AZPS believes there is no justification for changing it from Medium to High.
AZPS would like to reiterate its "Affirmative" voting recommendation with regard to the proposed revisions to the Standard. AZPS erroneously entered a "Negative" Standard vote for one of its voting segments.
Individual
Joe O'Brien
NIPSCO
Yes
Yes
1.1.2. Known outage(s) of generation or Transmission Facility(ies) with a duration of at least six months. This is a little confusing to me. Does this mean the outage must last at least six months? Or does this mean at least model outages that last six months or more. If it is the latter then, I'm not sure that is stringent enough. There may be known critical outages occurring over peak that do not last 6 months. If non-consequential load loss is not allowed for loss of one element, then what about the next contingency? Couldn't that result in having to interrupt Firm service? Is that okay as a corrective action plan in the outage coordination horizon? Does this apply to both near-term and long-term planning? If so, we probably need to model additional unplanned potential outages on top of n-1 conditions. Lastly. in section 2.1.4 should there be a category for high/low wind conditions?
Individual
Scott Bos
Muscatine Power and Water
Yes
No
MP&W would like to recommend that the VRF for Requirement 8 remain "Low", rather than "Medium." It is our belief that there is not a significant risk to the reliability of the BES if an annual Planning Assessment is not distributed to another entities or a documented response to Planning Assessment

comments is not provided within 90 days of a request. This is more administrative in nature. The findings in an assessment report are not urgent, but address system needs that will emerge over years in the future. Additionally, entities with a reliability-related need for Planning Assessment information generally have the ability to perform their own independent planning assessment of adjacent systems or other areas of interest.
MP&W recommends that the term “System” be replaced with “BES” in various places throughout the standard when the reference should not be to the collective generation, transmission, and distribution systems. This is the current definition of the NERC Glossary term “System”. The locations where “System” can be found in the Standard are: R2.1.4, R2.1.5, R2.4.3, R2.6.2, R2.7, R2.7.1, R2.7.4, R2.8.1, R2.8.2, R3.5, R4.5, R5, and R6.
Individual
Sunitha Kothapalli
Puget Sound Energy, Inc.
Yes
We Appreciate SDTs efforts in bringing clarity to the TPL standards.
Yes
Group
Bonneville Power Administration
Yes
1. If current study is performed to assess the system, there is no need to supplement with past studies. • Suggested language for R2.2:- For the planning Assessment, the Long-Term Transmission Planning Horizon portion of the steady state analysis shall be assessed and be supported by the following annual current study or qualified past studies as indicated in Requirement R2, Part 2.6 2. Load models should be consistent across the region • Suggested language for R2.4.1:- System peak load for one of the five years. System peak load levels shall include a the latest load model developed by the regional planning coordinator which represents the expected dynamic behavior of loads that could impact the study area, considering the behavior of induction motor loads. 3. R2.5 is redundant and should be deleted. It is already included in R1.1.3 and R2.6.2. 4. R3.5: This standard requires mitigating the consequences of extreme events. Requiring potentially very costly mitigation actions for very low probability event is unnecessary burden to utilities. • Suggested language for R3.5. Those extreme events in Table 1 that are expected to produce more severe System impacts shall be identified and a list created of those events to be evaluated in Requirement R3, Part 3.2. The rationale for those Contingencies selected for evaluation shall be available as supporting information. Evaluation of the risk, consequences and adverse impacts of the event(s) shall be conducted.
No
The VRF for R2 was changed from Medium to High without any explanation. Since the time horizon for R2 is Long Term Planning, BPA believes that the VRF should be Medium, as are the VRFs for the other requirements related to conducting the assessments, rather than High.
Group
Tri-State Generation & Transmission
Yes
No
Many of the sub-requirements of R2 do not warrant high risk VRFs, yet violation of any R2 sub-requirement would result in a “High Risk Factor” violation assessment. We believe that having so many sub-requirements can result in inaccurate overall severity classification. For example, skipping one study defined in R2.1.2 (Planning Assessments) for a particular time frame or load level would probably not result in a direct actual degradation in system performance, but would still result in a High Violation Risk Factor.
Change R1.1 to “System models used for Steady State and Stability Analysis shall represent:” Much

of what is in R1.1 is unnecessary for Short Circuit studies. In contrast, there are items not mentioned in R1.1 that are necessary for short circuit studies. R2.1.4 requires sensitivity analysis to study “a range of credible conditions that demonstrate a measurable change”. How will the required actions in R2.1.4 be documented or measured, and what is accomplished by performing sensitivity analysis in the context of a system performance assessment? In R2.3, change the first sentence to read “The short circuit analysis portion of the Planning Assessment shall be conducted annually, using one of the cases described in 2.1.1, addressing the Near-Term Transmission Planning Horizon and can be supported by current or past studies as qualified in Requirement R2, Part 2.6.” There appears to be no reason to perform short circuit studies for all three Near-Term Transmission Planning Horizon cases. R2.4.3 requires sensitivity analysis to study “a range of credible conditions that demonstrate a measurable change”. How will the required actions in R2.4.3 be documented or measured, and what is accomplished by performing sensitivity analysis in the context of a system performance assessment? R2.7.1 remove the last bullet. We believe these programs are already factored into the load forecast, as they are associated with resource scheduling and planning load serving, and not transmission planning. In particular, DSM measures would fall under R2.4.1, and the term “new technologies, or other initiatives” The language of Requirement 3 unnecessarily repeats the language of R1 and R2. As now written, R3 states “For the steady state portion of the Planning Assessment, each Transmission Planner and Planning Coordinator shall perform studies for the Near-Term and Long-Term Transmission Planning Horizons in Requirement R2, Parts 2.1, and 2.2. The studies shall be based on computer simulation models using data provided in Requirement R1.” R3 We recommend that the introductory language in Requirement R3 be changed to read “The studies in Requirement R2, Parts 2.1, and 2.2 shall be performed using models as defined in Requirement R1 in accordance with the following criteria.” We believe that Requirements 3.1 and 3.4 should be combined into R3.1, eliminating R3.4. It is redundant to have Requirement 3.1 say “perform R3.4”. We recommend that R3.4 be deleted and that R3.1 be replaced with: R3.1 Planning event studies shall be performed in accordance with “Table 1 – Steady State & Stability Performance Planning Events;” and shall be based on a supportable Contingency list. Comment: The content of 3.4.1 was intentionally omitted as it is redundant with R7. Also, the language “…more severe System impacts…” was intentionally omitted as it could be subject to a wide range of interpretations. Similarly, we recommend that R3.5 be deleted and that R3.2 be replaced with: R3.2 Extreme event studies shall be performed in accordance with “Table 1 – Steady State & Stability Extreme Events;” and shall be based on a supportable Contingency list. We recommend the following new requirement be inserted after the revised R3.2 language: Should the extreme event studies identify potential Cascading, an evaluation of possible actions designed to reduce the likelihood or mitigate the consequences and adverse impacts of the event(s) shall be conducted. Comment: As before, the language “…more severe System impacts…” was intentionally omitted as it could be subject to a wide range of interpretations. We recommend removing the second bullet of R3.3.1, “Tripping of Transmission elements where relay loadability limits are exceeded” for the following reasons: 1. There is currently no tool to model relay loadability characteristics in Steady State analysis. 2. Requirement R3.3.1 would require inclusion of relay models in modeling data that are not currently provided. MOD-012 does not require impedance or overcurrent relay models to be submitted. 3. In Requirement 3.3.1, the second bullet, it is impossible to model complete and accurate relay loadability using present-day steady state simulation tools. At best an individual point could be chosen to model relays based on a selected power factor. We recommend changing the opening text of Requirement R.3.3.2 to say “Simulate the expected automatic or manual operation…” Subrequirement R4.1.2 represents a tremendous increase in dynamic modeling complexity. Modeling relay action during apparent impedance swings would require inclusion of impedance relay models in modeling data that are not required to be submitted in MOD-012. If such modeling is necessary, then the corresponding data requirements need to be addressed in MOD standards. We believe that Requirements 4.1 and 4.4 should be combined into R4.1 as shown below and R4.4 should be deleted. It is redundant to have Requirement 4.1 say “perform R4.4.” We recommend R4.1 language be revised to read as follows: R4.1 Planning event studies shall be performed in accordance with “Table 1 – Steady State & Stability Performance Planning Events;” and shall be based on a supportable Contingency list. Comment: The content of 4.4.1 should be omitted as it is redundant with R7. Also, the language “…more severe System impacts…” should be omitted as it could be subject to a wide range of interpretations. Similarly, R4.5 should be deleted and R4.2 should be replaced with: R4.2 Extreme event studies shall be performed in accordance with “Table 1 – Steady State & Stability Extreme Events;” and shall be based on a supportable Contingency list. We recommend the following new requirement be inserted after the revised R4.2: Should the extreme

event studies identify potential Cascading, an evaluation of possible actions designed to reduce the likelihood or mitigate the consequences and adverse impacts of the even(s) shall be conducted. Comment: As before, the language "…more severe System impacts…" was intentionally omitted as it could be subject to a wide range of interpretations. Clarify the first bullet in Requirement R4, part 4.3.1 by changing it to "High-speed (less than 1 second) reclosing, where the fault has cleared, and high-speed reclosing into the permanent fault , but in each case only if high-speed reclosing is utilized". In Requirement R4, part 4.3.1, third bullet, it is impossible to model complete and accurate relay loadability using present-day steady state simulation tools. Existing applications do have impedance relay models, but these models do not model many relay capabilities– for example, non-circular protection regions and load-encroachment. We recommend removing this bullet. The comment statement we made above referring to R4.1.2 also applies to R4.3.1. MOD-012 does not require reclosing relay model data to be submitted. If such modeling is necessary, then the corresponding data requirements need to be addressed in MOD standards. Furthermore, there is not a standard built-in reclosing relay model in current stability simulation tools. Comments regarding Table 1- We assume the headnote i. to Table 1 - "The response of voltage sensitive Load…" - means that studies must not rely on end-user load tripping to meet the performance requirements defined in TPL-001-2 but that it should be modeled (when known) so that its occurrence would be evident. We don't see the need to apply Footnote 12 to only certain contingency categories or certain events in categories. Recommend putting the footnote in the column header just as with Footnotes 1, 2, 3, and 4. Recommend changing "utilized" in Measurement M3 to "performed." Recommend changing "utilized" in Measurement M4 to "performed." Modify Measurement M7 to "Each Planning Coordinator shall provide dated documentation on roles and responsibilities of its Transmission Planners, such as…" The deleted phrase, "in conjunction with each of its Transmission Planners," appears to be unnecessary.
Individual
Anthony Jablonski
ReliabilityFirst
Yes
1. In requirement 4.3, the high speed recloser time of 1 second is too restrictive. We suggest that the time be expanded to 2 seconds to capture all reclosing operations that might impact stability studies. We interpret the use of bullet points in Requirement 4.3.1 to mean that any one of the statements can be included in the analyses. In this requirement, the use of bullet points should be removed and replaced with language that requires all of the statements to be included in the analyses. We strongly believe that the language needs amended in requirement 4.3.1, such that, we will reconsider our voting position. 2. In Table 1 labeled Steady State and Stability Performance Extreme Events we contend that the change to "relay failure" is unnecessarily limiting. The previous use of Protection system was satisfactory. Protection System is a defined term and encompasses many components that may fail and not just the relay. 3. In table 1 Steady State & Stability Performance Planning Events under P5 "non-redundant" needs to be better defined. We suggest saying in a footnote that two devices do not need to be identical in order to be redundant. Redundant relays or relay schemes need to have the same performance level to be considered redundant but do not need to be identical equipment.
No
ReliabilityFirst generally agrees with the Violation Risk Factors (VRFs) but disagrees with the Violation Severity Levels (VSLs) for the following reasons: 1. VSL for R1 a. Under the last "Severe" VSL, the word "latest" should be removed to be consistent with the language in Requirement 1. This is a violation of the FERC Guideline 3: "Violation Severity Level Assignment Should Be Consistent with the Corresponding Requirement" 2. VSLs for R2 a. To be consistent with the language in Requirement 2, suggest modifying the last "Severe" VSL to state "The responsible entity failed to prepare an annual Planning Assessment of its portion of the BES" 3. VSLs for R3 a. Under the last VSL under the "High" category, the word "perform" should be replaced with "simulate" to be consistent with the requirement. (e.g. "The responsible entity did not simulate Contingency analysis as described in Requirement R3, Part 3.3.") 4. VSL's for R4 a. Under the last VSL under the "High" category, the word "perform" should be replaced with "simulate" to be consistent with the requirement (e.g. "The responsible entity did not simulate Contingency analysis as described in Requirement R4, Part 4.3."). 5. VSLs for R6 a. To be consistent with the language in Requirement 6, suggest modifying the "Severe" VSL to state "The responsible entity failed to define and document, within their Planning

Assessment, the criteria or methodology used in the analysis to identify System instability for conditions, as described in Requirement R6." 6. VSLs for R7 a. Suggest adding the following language to the end of the "Severe" VSL; "for the Planning Assessment", to be consistent with the requirement. 7. VSL for R8 a. Under all four categories of VSLs, any reference to "Planning Assessment" should be changed to "Planning Assessment results" to be consistent with the language in Requirement 8 (or more appropriately, the term "results" should be removed from Requirement 8). This is a violation of the FERC Guideline 3: "Violation Severity Level Assignment Should Be Consistent with the Corresponding Requirement" b. Under the "Lower" VSL, it is unclear why there is a 30 day timeframe for the first VSL, while the "Moderate", and "High" VSLs have a 10 day timeframe. Based on FERC recommendations, suggest making the timeframe for all four VSL s, 10 day increments. c. VSLs need to be developed to deal with a violation of Part 8.1 (i.e. the PC or TP failed to provide a documented response to that recipient within 90 calendar days of receipt of those comments)
1. Requirement 8 and 8.1 uses the language of "Planning Assessment results". This language is not defined in the section of the standard that defines the terms of use. For consistency "Planning Assessment results" should be replaced with "Planning Assessment". 2. Requirement 2.1.5 has statements that are ambiguous. What is considered major transmission equipment? What is an entity's "spare equipment strategy"? The requirement is not clear as to how many power flow models are required (one per piece of "major transmission equipment" without a spare, or one model with every piece of "major transmission equipment" without a spare being out of service)? As written, if an entity has no "spare equipment strategy" they could be exempt from this requirement. 3. We interpret the use of bullet points in Requirement 3.3.1 to mean that either one of the statements can be chosen. This requirement should be written where all the bulleted statements are included in the analyses.
Group
MRO's NERC Standards Review Forum
Yes
No
The NSRF recommends that the VRF for Requirement 8 remain "Low", rather than be changed to "Medium". We do not believe that there is significant risk to the reliability of the BES if an annual Planning Assessment is not distributed to another entities or a documented response to Planning Assessment comments is not provided within 90 days of a request. The findings in an assessment report are not urgent, but address system needs that will emerge over years in the future. In addition, entities with a reliability related need for Planning Assessment information generally have the means to make their own independent planning assessment of adjacent systems or other areas of interest.
The NSRF recommends that the term, "System" be replaced with "BES" in various places throughout the standard when the reference should not be to the collective generation, transmission, and distribution systems, which is the definition of the NERC Glossary term, "System". These locations are: R2.1.4, R2.1.5, R2.4.3, R2.6.2, R2.7, R2.7.1, R2.7.4, R2.8.1, R2.8.2, R3.5, R4.5, R5, and R6
Individual
Michael Moltane
ITC
Yes
No
ITC recommends revising R8 VSLs as follows: Lower VSL The responsible entity distributed its Planning Assessment to known adjacent Planning Coordinators and known adjacent Transmission Planners but it was more than 90 days but less than or equal to 120 days following its completion. OR, The responsible entity distributed its Planning Assessment to functional entities having a reliability related need who requested the Planning Assessment in writing but it was more than 30 days but less than or equal to 40 days following the request. Moderate VSLs The responsible entity distributed its Planning Assessment more than 30days but less than 60 days after subsequent requests by adjacent Planning Coordinators or adjacent Transmission Planners who were not sent copies upon completion of the Planning Assessment. OR, The responsible entity distributed its

Planning Assessment to functional entities having a reliability related need who requested the Planning Assessment in writing but it was more than 40 days but less than or equal to 50 days following the request High VSLs - eliminate this section. i.e., no high VSLs only lower,moderate and severe Severe VSLs The responsible entity distributed its Planning Assessment to functional entities having a reliability related need, adjacent Transmission Planners and adjacent Planning coordinators who requested the Planning Assessment in writing but it was more than 60 days following the request.
ITC COMMENTS on TPL-001 vote ITC will reluctantly vote to approve the draft standard. While we have concerns, we are voting to approve this standard because we believe the positive elements outweigh the portions of the draft standard that we object to. It is important that the improved requirements that effectively “raise the bar” over the existing standard should become effective sooner rather than later. A negative vote, which might cause a further delay in implementation of the standard, would be the least desirable outcome. However, we still believe that the VSL that would find that an entity had committed a “severe” violation for failure to distribute its planning assessment to an adjacent Transmission Planner or Planning Coordinator has the potential to overly punish a simple error in oversight. We would agree that willfully withholding an assessment from a neighbor or a valid requestor justifies a severe violation but an administrative or clerical oversight does not. For example, it might escape our attention that an entity, particularly a smaller one, registers as a TP or TP. As far as we know, there is no requirement that a registrant, or even one who de-registers, must notify an “adjacent” TP or PC of their change in status. As written, the standard requires you be found in “severe” violation, even if that new entity fails to notify you of their change in status. You would still be in severe violation even if they later ask for your planning assessment. Even if the standard passes, we request that this VSL be fixed to make the distinction between an administrative error and willful neglect. Our response to question 2 offers a suggested method to do this.
Individual
RoLynda Shumpert
South Carolina Electric and Gas
Yes
Yes
R1 does not seem to address errors in data that have been introduced in the latest model data. In addition, R1 and its VSL may be interpreted to exclude the use of past studies. The Implementation Plan should include a five year delay in the effective date for short circuit studies for parts 2.3 and 2.8 of R2 because these studies are not required in the current Version 0 standards.
Individual
Joe Petaski
Manitoba Hydro
No
-R2.1.4 and R2.4.3: ‘Expected transfers’ should be replaced with ‘Firm Transmission Service and Interchange’ to correlate to R1 (R1.1.5 states ‘Known commitments for Firm Transmission Service and Interchange’ must be represented in system models). -R2.1.4 and R2.4.3: ‘Generation additions, retirements, or other dispatch scenarios’ should be deleted since generator connections are required to be studied as specified in FAC-002. -R2.1.5: The Standard Drafting Team needs to clarify R2.1.5 for a scenario where a spare transformer is available but is used to replace a failed transformer say one month before the expected system peak. If this scenario occurs, does the Transmission Planner need to study the impact of the unavailability of a transformer to cover the situation that could occur if a second transformer failure occurs before the expected system peak? -R2.4 and R2.5: ‘current or past studies’ should be replaced with ‘current annual studies or qualified past studies’ to be consistent with R2.1. -R2.5: The wording allows the PC/TP to determine what is ‘material’. This could lead to large differences in generator additions or changes that would be included. The Standard Drafting Team should consider registration criteria to set size limits for this sensitivity. -R2.7.3: What is the required timeframe? How long will Non-Consequential Load Loss or curtailment of Firm Transmission Service be allowed with this exception? -R3.3.1 Second bullet: If relay loadability limits are exceeded, the protection would be in violation of PRC-023. This standard should assume this situation would not

occur. -R3.5 and R4.5: What is the point of identifying mitigating measures for extreme events when there is no Requirement to implement such measures? -R4: The first sentence in R4 requires one to perform the Contingencies in Table 1. This sentence should read 'For the Stability portion of the Planning Assessment, as described in Requirement R2, -Parts 2.4 and 2.5, each Transmission Planner and Planning Coordinator shall perform Contingency analyses based on the list of Table 1 Contingencies defined in Requirement R4, Part 1'. -R4.1.2: A generator should not be allowed to pull out of synchronism for P2.1. -R4.1.3: The Planning Coordinator and Transmission Planner should have to document the damping criteria used to access 'acceptable damping'. -R8: Why 30 days for 'any functional entity that has a reliability related need and submits a written request'? The timeframe should be 90 days as it is for 'adjacent Planning Coordinators and adjacent Transmission Planners'. -Table 1-Steady State and Stability Performance Planning Events, Category P5, now includes "non-redundant" relay in the Event column. What is meant by non-redundant relay? The term "non-redundant" is not a defined term. -Regarding Note 12- An objective of the planning process should be to minimize the likelihood and magnitude of Non-Consequential Load Loss following Contingency events. However, in limited circumstances Non-Consequential Load Loss may be needed to address BES performance requirements. When Non-Consequential Load Loss is utilized within the planning process to address BES performance requirements, such interruption is limited to circumstances where the Non-Consequential Load Loss is documented, including alternatives evaluated; and where the utilization of Non-Consequential Load Loss is subject to review in an open and transparent stakeholder process that includes addressing stakeholder comments. -Non-Consequential Load Loss is only allowed in very unlikely scenarios as a last resort that would cause local load issues. When used as intended by the drafting team (ie. as a last resort) Non-Consequential Load Loss would have no negative effect on the network since it would only be used to improve network conditions like low voltage or line overloads. Should NERC be worried about documenting this use of Non-Consequential Load Loss? NERC should focus on network issues, not local load issues. -NERC should remove the last part of Note 12: "and where the utilization of Non-Consequential Load Loss is subject to review in an open and transparent stakeholder process that includes addressing stakeholder comments." It is inappropriate for NERC to mandate an open stakeholder process and Manitoba Hydro cannot support this mandate. In addition, it is unclear how NERC can mandate an open stakeholder process and who that might include. FERC has defined such a process in Order 890. Is that what is envisioned?
No
-The language "latest data" is used in the Severe VSL for R1, however "latest" was removed from R1 and M1. "Latest" should also be removed from the Severe VSL for consistency. -What is the rationale for changing the preparation of the Planning Assessment (R2) VRF to High from Medium? The R2 VRF should remain at Medium. The R2 Time Horizon is Long-term Planning, an entity can rely on qualified past studies to complete the Planning Assessment and the actual performance of studies (R3 and R4) have Medium VRFs. -Please explain the phrase 'completed annual Planning Assessment' used in the Severe VSL for R2. What is the reason for the change in VSL for having a 'completed annual Planning Assessment'? -Can the drafting team please explain why defining the criteria for steady-state voltage limits etc. in R5 has a VRF of medium? Criteria development is administrative, therefore the VRF for R5 should be Low. Setting the VRF for R5 to Low would be consistent with the Low VRF for R6 that relates to defining the criteria for cascading. -Requirement 8 is an administrative burden that adds little to improve reliability. The revisions made to the VRF and VSL for Requirement 8 further exacerbate this administrative burden. One could conclude from observation of the VSLs and VRFs, that Requirement 8 was the most important requirement of TPL-001-2. The drafting team should simplify the VSLs and revert R8 back to a low VRF. Where are the timeframes used in the VSLs for Requirement 8 coming from? Requirement R8 does not specify these timeframes.
-Why was the Near Team Transmission Planning Horizon definition moved to the Glossary prior to TPL-001-2 approval? -The definition of Non-Consequential Load Loss should not contain '(2) the response of voltage sensitive Load' because voltage sensitive load is not load that is lost (it is load that is still served). -M8: Why 30 days for 'any functional entity who has indicated a reliability need'? The timeframe should be 90 days as it is for adjacent Planning Coordinators and adjacent Transmission Planners.
Group
Hydro One Networks Inc.
No
Other than a few changes related to Footnotes 9 and 12 of Table 1 and VSLs, the other changes in the

April 15, 2011, draft are minor. The concerns of the industry on several important issues have not been sufficiently addressed in this draft (see our response to Question 3).
A. Regarding Requirement 1.1.2, assessment of “known outages... with a duration of at least 6 months”, are dealt with in the operational studies rather than planning studies. In addition, any adverse impact that these outages might have, are mitigated by operational decisions rather than “planning” decisions within a 6-month horizon. It is suggested to move this requirement out of TPL standards and instead include it a relevant operational standards. B. The statement in R 2.1.4, “must vary one or more of the following conditions by a sufficient amount to stress the System within a range of credible conditions that demonstrate a measurable change in System response”, leaves room for very different interpretations by PCs and TPs as to the number and type of required sensitivity studies. Are all interpretations, based on the engineering judgment of the PC and TP, acceptable? C. The language of R 2.1.4 and 2.4.3 allowing to perform one or more sensitivities appears to be inconsistent with the language in R 2.7.2 which requires multiple sensitivities to determine if actions to resolve performance deficiencies are necessary. Will varying only one measurable quantity several times in multiple simulations constitute multiple sensitivity studies or one sensitivity study? D. The language of Requirement 2.1.5, “spare strategy”, appears to be open-ended regarding the number of permutations to be analyzed. It is suggested to move this requirement out of TPL standard and instead have this issue dealt with in the operational standards. E. In R 2.2, the statement “be supported by the following annual current study, supplemented with qualified past studies” should be replaced with a similar statement in R 2.1 which says: “be supported by current annual studies or qualified past studies”. F. In R 4.1.1, “For planning event P1: No generating unit shall pull out of synchronism” is too restrictive. In many cases a P1 event may result in instability of a small nearby generator without a significant impact on the reliability of BES. The same requirement states that “A generator being disconnected from the System … by a Special Protection System is not considered pulling out of synchronism”. If rejection of ANY generator by SPS is acceptable, why should instability of a small generator, resulting in its disconnection by its protection without a severe impact on the system, be unacceptable in all circumstances? If this requirement is unchanged, it dictates the addition of an SPS (Generation Rejection) for any unit that might go unstable without any benefit for the reliability of the BES. G. In Table 1, Event 1 of Category P2 and related Footnote 7 (simulation of LEO condition) are not clear (concern with the use of the word “possibly”). If the intension is to simulate LEO condition of tapped lines, this should be clearly stated in the table (without reference to “Opening of a line section” and use of different language in the footnote).
Individual
Tony Eddleman
Nebraska Public Power District
No
The existing TPL-001 through TPL-004 Standards and Requirements are clear and concise. The new merged TPL-001-1 Standard and Requirements is no longer clear and concise. Further, the modification made to allow an SPS to trip a remote generator for an N-1 (TPL-002) type of event is a degradation of system reliability. Transmission system facilities should be added to maintain stability for a new generator interconnection for any N-1 Category B event. An SPS should not be relied upon for a Category B event, an SPS should only be allowed for Category C & D (TPL-003 & TPL-004) type events.
No
No comments.
N/A
Individual
Robert Casey
Georgia Transmission Corporation
Yes
Yes

All of our prior issues have been addressed.
Group
BC Hydro
Yes
BC Hydro agrees with merging the standards together into one and we feel the new version brings further clarity to the annual planning assessment. BC Hydro would vote Affirmative for bringing clarity, however we do not believe the rewording in Footnote 9 is clear which is why we are voting Negative. Footnote B, as approved by the NERC Board of Trustees on February 17, 2011 was reworded as Foot Note 9 in the proposed TPL 001-2 draft 7 amendment. This rewording still does not clearly define what impact the proposed revision would have on the curtailment of firm transfers in the regional entities.
Individual
Jonathan Appelbaum
United Illuminating
No
a. 2.6.2 - What was the intent of this change? The old language seemed to work. The language should not be changed from the previous version. b. For 2.8.2 - Was the phrase changed to reflect modifications of facilities? If so the requirement should be modified to read “Be reviewed in subsequent annual Planning Assessments for continued validity and implementation status of identified System Facilities and Operating Procedures with respect to modifications of facilities. Otherwise the requirement is unclear. c. For Section R8.1 - the proposed requirement conflicts with a long standing stakeholder process in our area which posts study results and allows comment within a defined period before studies are finalized. If this section is to be retained then it should be modified to only allow comments on Transmission studies less than one-year old. Requirement 8 and 8.1, should be revised to include a limit on the comment period as follows: If a recipient of the planning assessment final results provides documented comments on the results within 90 days of receipt, the respective Planning Coordinator or Transmission Planner shall provide a documented response to such recipient within 90 calendar days of receipt of those comments. d. With respect to Table 1 – We suggest adding an event 6 to P1 to address the contingent loss of back to back HVDC Facilities. If not added to P1 then this event needs to be added somewhere in the standard. e. We don’t agree with footnote 7 specifying that only one end of the line should be open for this condition. If the SDT is to keep this concept make P2 event 1 simply say “Opening one end of a line section w/o a fault” and delete the footnote. The existing footnote is unclear due to the use of language such as “possibly”.
Yes
Individual
Andrew Z.Pusztai
American Transmission Company, LLC
Yes
No
ATC recommends that the VRF for Requirement 8 remain “Low”, rather than be changed to “Medium”. ATC does not believe that there is significant risk to the reliability of the BES if an annual Planning Assessment is not distributed to another entities or a documented response to Planning Assessment comments is not provided within 90 days of a request. The findings in an assessment report are not urgent, but address system needs that will emerge over years in the future. In addition, entities with a reliability related need for Planning Assessment information generally have the means to make their own independent planning assessment of adjacent systems or other areas of interest.
Individual

Michael Jones
National Grid
No
R2.8.2 We recommend this requirement be clarified with the following modification: The Corrective Action Plan shall: 2.8.1. List System deficiencies and the associated actions needed to achieve required System performance. 2.8.2. Be reviewed in subsequent annual Planning Assessments for continued validity and implementation status of planned modifications to System Facilities and Operating Procedures.
No
R 2.0 We recommend that the VRF for this Planning Requirement remain at “Medium”. The risks associated with Planning Requirements have a longer time horizon for corrective action than, for example, those risks associated with much shorter Operational time frames.
R 1.1.2 We recommend the known facility outage duration be defined as facility outage durations lasting at least twelve months. R 1.1. (page 4) System models shall represent: 1.1.1. Existing Facilities 1.1.2. Known outage(s) of generation or Transmission Facility(ies) with a duration of at least six twelve months. 1.1.3 ..... R 2.1.4 We recommend that this requirement be eliminated. We do not see the value of this additional analysis when the number, type and severity of the sensitivity tests are not well defined. These tests are then used to define Corrective Action Plans in cases only where multiple tests show performance deficiencies. R 2.1.5 Spare equipment strategies are typically designed to prevent long outages (possibility a year or more) of equipment with very long lead times. Any such strategy “could” result in these long outages depending upon the number of failures that may be postulated. This requirement is misleading and we thus recommend it be eliminated. R 2.2 We recommend the language for R 2.2 should be consistent with 2.1 for example - use "current or qualified past studies" instead of "the following annual current study." R 2.6.2 We recommend that the wording of this requirement remain unchanged. R 2.7.1 This portion of the requirement provides a list of “acceptable” Corrective Action Plans. It provides equal weight to infrastructure reinforcements and Special Protection Systems as means to mitigate violations resulting form single or multiple contingencies at both the EHV and HV levels. National Grid’s position is that a national standard should not endorse the use of Special Protection Systems as corrective actions to mitigate single contingency violations. Local Northeast Planning Criteria indicates that special protection systems (SPS) shall be used judiciously and may be used to provide protection for infrequent contingencies, or for temporary conditions that may exist such as project delays, unusual combinations of system demand and equipment outages or availability, or specific equipment maintenance outages. A SPS may also be applied to preserve system integrity in the event of severe facility outages and extreme contingencies. The decision to employ a SPS shall take into account the complexity of the scheme and the consequences of correct or incorrect operation as well as its benefits. We are further of the opinion that specific methods of correcting system performance deficiencies should not be specified in a National Standard. We thus recommend that the Corrective Action List be eliminated from this requirement as illustrated below. 2.7.1. List System deficiencies and the associated actions needed to achieve required System performance. R 2.7.2 We feel that this requirement and requirement R 2.1.4 adds ambiguity to the process as we have indicated above. We thus recommend that this requirement be eliminated. R 3.3.1 We feel that the last sentence of 3.3.1 should be removed. This is handled by PRC-023. Line ratings are addressed by PRC-023. PRC-023 requires coordination with the Reliability Coordinator. Remove “Tripping of Transmission elements where relay loadability limits are exceeded” Contingency analyses for Requirement R3, Parts 3.1 & 3.2 shall: 3.3.1. Simulate the removal of all elements that the Protection System and other automatic controls are expected to disconnect for each Contingency without operator intervention. The analyses shall include the impact of subsequent: • Tripping of generators where simulations show generator bus voltages or high side of the generation step up (GSU) voltages are less than known or assumed minimum generator steady state or ride through voltage limitations. Include in the assessment any assumptions made. R 3.4.1 We would recommend the following addition as a clarification to the required information exchange: 3.4. Those planning events in Table 1, that are expected to produce more severe System impacts on its portion of the BES, shall be identified and a list of those Contingencies to be evaluated for System performance in Requirement R3, Part 3.1 created. The rationale for those Contingencies selected for evaluation shall be available as supporting information. 3.4.1. The Planning Coordinator and Transmission Planner shall coordinate with adjacent Planning Coordinators and Transmission Planners to ensure that Contingencies on adjacent Systems which may impact their respective Systems are

included in the Contingency list. R 8.1 National Grid's concern regarding this requirement stems from the apparent open ended time frame afforded report recipients in their review of the Planning Assessment. This has the potential to stall the review process. National Grid thus recommends that any recipient of the Planning Assessments be given a specific time period for their response as indicated in R 8.1 below. R8. Each Planning Coordinator and Transmission Planner shall distribute its Planning Assessment results to adjacent Planning Coordinators, and adjacent Transmission Planners, within 90 calendar days of completing its Planning Assessment, and to any functional entity that has a reliability related need and submits a written request for the information within 30 days of such a request. [Violation Risk Factor: LowMedium] [Time Horizon: Long-term Planning] 8.1. The recipient of the Planning Assessment results shall provides documented final comments on the results within 90 calendar days of receipt of the Planning Assessment. The respective Planning Coordinator or Transmission Planner shall provide a documented response to that recipient within 90 calendar days of receipt of those comments. Table 1 Steady State & Stability Performance Planning Events (Page10). The event description for Category P2 Event 1. along with the accompanying footnote 7 (Page 14) creates some confusion for multi-terminal lines. We recommend that Footnote 7 be eliminated and the event description be changed as follows: Category Initial Conditions Event P2 Normal System 1. Opening of a single load interrupting device at one terminal of a line without a fault. Table 1 (Planning Events and Extreme Events) Footnote 12 (Page 14). We are concerned that additional stakeholder process indicated in Footnote 12 has the potential to stall the Planning Assessment review process. We recommend that reference to this new process be eliminated from the Footnote. Our additional, concerns with Footnote 12 are addressed in comments originally provided by ISO-NE. We agree with their following comments : The following language for Footnote 12 is proposed: "Planned or controlled interruption of electric supply to radial customers or some local Network customers, connected to or supplied by the Faulted element or by the affected area, may occur in certain areas without impacting the overall reliability of the interconnected transmission systems." If Footnote 12 in Table 1 must be retained, the following language is proposed: "An objective of the planning process shall be to minimize the likelihood and magnitude of interruption of Demand, (excluding Interruptible Demand or Demand-Side Management), following Contingency events. However, it is recognized that Demand will be interrupted if it is directly served by the Elements removed from service as a result of the Contingency. Furthermore, in limited circumstances Demand may need to be interrupted to address BES performance requirements. When interruption of Demand is utilized within the planning process to address BES performance requirements, such interruption is limited to: a. Interruptible Demand or Demand-Side Management b. Circumstances where the uses of Demand interruption not directly interrupted by the contingency are documented c. Curtailment of firm transfers is allowed to meet BES performance requirements and meet applicable Facility Ratings, where it can be demonstrated it does not result in the interruption of any Demand (other than Interruptible Demand or Demand Side Management)"

Individual

Tim E. Ponseti, VP

TVA TP&C

Yes

Yes

TVA - has following comments: TVA is concerned about footnote 12 (known as footnote b in existing TPL standards). TVA believes that utilities should be given some freedom in dropping local load in response to N-1 events as long as overall BES reliability is not impacted. Otherwise significant capital improvements will be required that will have no overall reliability gain for the Bulk Electric System. In R4.1.1, TVA is concerned that no generating unit (including distributed generation) shall pull out of synchronism in a local area only (thus not impacting the overall reliability of the BES) for Planning Event P1, while the standard does allow generator runback/tripping for the same event. Thus the generating unit may be tripped by a special protection scheme - but may not be tripped by an out of step relay. TVA believes that out of step relaying should be allowed for this unit tripping as long as this does not affect the overall reliability of the BES. Table 1 contains both planning events and extreme events. Suggest labeling the planning events as Table 1 and the extreme events as Table 2 to help reduce confusion. VSL for R1 does not seem to address issues where data errors have been

introduced into the latest model data. Also, R1 and its VSL may be interpreted to exclude the use of past models. The Implementation Plan should include a five-year delay in the effective date for short circuit studies (R2 parts 2.3 and 2.8) since these studies are a new TPL requirement and are not required in the current version 0 standards.
Group
Entergy Services
Yes
Yes
Footnote 12 to Table 1 concerning non-consequential load loss should be clarified. The existing language will result in difficulties in proving compliance. Suggested language would be: “Planned or controlled interruption of Demand supplied by Transmission Facilities made temporarily radial as a result of a P1 or P2 event and where the location of the planned loss of Demand is limited to those Transmission Facilities made radial.
Individual
Michael Falvo
Independent Electricity System Operator
No
IESO is generally supportive of the draft of TPL-001-2 as evidenced by our previous AFFIRMATIVE vote during the last ballot. Further, IESO also supported the revisions to Footnote ‘b’ to Table 1 of the TPL standards under Project 2010-11. That revision was balloted and approved by the ballot pool in February 2011 and filed with FERC for approval in March 2011. The revised footnote has been incorporated into the current draft of TPL-001-2 as Footnotes 9 and 12 but the Commission, by letter to NERC dated May 17, 2011, has requested NERC to provide supplemental information before the revised Footnote ‘b’ could be approved. In light of FERC’s request and the uncertainty regarding the final provisions of these footnotes, coupled with the ongoing work on Project 2010-17 for the revision of the BES definition and development of an Exception Process and the impact that may have, we respectfully suggest that the drafting team delay further work on TPL-001-2 pending FERC’s ruling on NERC’s petition seeking approval of the transmission planning standards that contain the revised Footnote ‘b’ to Table 1.
No
See our response to Q1.
See our response to Q1.
Individual
Alex Rost
NBSO
No
Items that, if not addressed, will likely cause a negative vote from NBSO: R2.2 differs from R2.1, R2.3, R2.4 and R2.5 since R2.2 does not state that the annual assessment of the Long-Term Transmission Planning Horizon portion of the steady state analysis can be supported by qualified past studies. Likely this omission is an oversight, but unresolved it can cause significant burden with little gain in reliability. Individual items that, if not addressed, may not cause NBSO to vote Negative, but in combination may result in a negative vote: The language of requirements R2.1.4 and R2.4.3 allowing the performance of one or more sensitivities appears to be inconsistent with language in R2.7.2 that requires multiple sensitivities to determine if actions to resolve performance deficiencies are necessary. R7 (and M7) seem to indicate that the PC is ultimately responsible for determining the individual and joint responsibilities for performing the required planning assessment studies, with the expectation to consult and come to agreement with its corresponding TPs, but this interpretation is not clear. The correct interpretation of this requirement is important for resolving situations where a PC and TP do not agree on the assignment of responsibilities. Suggested wording: “Each PC shall work in conjunction with each of its TPs to determine and identify…” The language in R8 is unclear. One point of confusion relates to which entity is responsible for sending their Planning assessments to other entities. For example, who does a PC distribute their planning assessments to?: -Adjacent PC?

(Seems to be clearly addressed) -TPs within its PC footprint? (Not clearly covered by the language in R8) -TPs adjacent to its PC footprint (Not clear if this is the responsibility of the PC, TP or both) In addition, the language in R8.1 appears to offer unlimited opportunity to request response to comments on any past assessment, long after their release. Providing limits in the langue of R8.1 is recommended in order to avoid unnecessary burden on PCs and TPs for little gain in reliability or constructive stakeholder involvement.

Items that, if not addressed, will likely cause a negative vote from NBSO: NBSO believes that R1.1.2 is more appropriately addressed in the operational timeframe. Perhaps more appropriate alternatives could include: -only considering planned outages with durations of one year or more (in-line with typical planning timeframes), or -requiring that facilities with planned outages lasting over the complete duration of time period being studied be modeled out of service. R2.1.5 may significantly increase the demands of the planning assessments with little gain in reliability. Depending on interpretation, R2.1.5 could exponentially increase the work load of the annual planning assessment. NBSO interprets the intent of R2.1.5 to require that entities have, review and evaluate their spare equipment strategies. Perhaps the assessment of a spare equipment strategy would be more appropriately addressed in a separate standard. Further, categories P0, P1 and P2 do not reference footnote 9 in the Initial Condition column. NBSO is unclear if the last sentence of R2.1.5 allows for the curtailment of firm transmission service under the N-1 conditions before the application of category P0, P1 and P2 events. This last sentence states: "…with the conditions that the System is expected to experience during the possible unavailability of the long lead time equipment." Table 1, note b should be modified to allow for the loss of Firm Transmission Service. This addresses cases where Firm Transmission Service is lost in direct consequence to the event (e.g. loss of one DC pole, an interface comprised of a single line, a bus fault that clears multiple lines in an interface, etc...) Individual items that, if not addressed, may not cause NBSO to vote Negative, but in combination may result in a negative vote: The definitions of "near-term transmission planning horizon" and "year one" have been removed from the standard, yet they are still used in draft 7. Further, the definition of these terms is being filed as part of another project. NBSO is concerned with endorsing a standard based on terms whose definitions may change independently of this project. For R7, NBSO is concerned that one entity may be found noncompliant should another entity fail to meet their agreed upon responsibilities. For example, a PC may be relying on the results from a TP's studies to complete its own planning assessment, but the TP did not meet their responsibilities. In this case, the PC should not be found non-compliant for an incomplete planning assessment due to the failure of the TP to meet their responsibilities. Contingencies on back to back HVDC facilities are not addressed in the standard.

Group

Western Area Power Administration

No

We concur that the standard is an improvement over previous drafts, but we vote "No" to the existing draft and request additional clarifications and/or modified language for a re-circulated vote prior to adoption. The following are areas where we suggest improvement or have questions: Please further define Consequential and/or Non-Consequential Load Loss: Does the Consequential Load Loss definition include underfrequency or undervoltage load shedding installed to protect transmission system reliability? Does the Consequential Load Loss definition include load tripped by a Special Protection System (SPS) or a Remedial Action Scheme (RAS)? Either how underfrequency and undervoltage load shedding or how load shedding by a RAS relates to Consequential Load Loss should be clear in the Consequential and/or Non-Consequential Load Loss definition of the approved version of this NERC standard. Why is Near-Term Tranmission Planning Horizon deleted from the definitions of Terms Used in this Standard, yet it is used throughout the standard? This definition should remain. R1.1.5: How are "known commitments for Firm Transmission Service" to be modeled and tracked in power flow cases? Is it acceptable for Transmission Planners to simply assume what the ultimate sources and ultimate sinks are for each firm transmission service commitment or are Transmission Planners to know exactly which ultimate sources and ultimate sinks are associated with each commitment and to track each one accordingly in each power flow case? Assuming the intent here is reliability based and not marketing based, is the application of Firm Transmission intended to apply to reliability designated 'paths'? Most all Firm Transmission service contracts have caveats for unplanned interruption and such agreements should qualify as "re-dispatch" per Footnote 9? R2.1.5: If a group

of utilities were to develop and manage among themselves a coordinated spare equipment program, such that the risk to any one of its participating entities of experiencing a significant unavailability for any major Transmission equipment that has a lead time of one year or more is deemed not significant, then would those utilities still have to do the studies required by R2.1.5 to evaluate the system impact of extended outages of such equipment? Scenario for Clarification: Short of spare equipment for items with a greater than 1 yr lead time, assessment studies are required to include sensitivities and operating plans for sustained loss of these equipment items, as a prior outage. For example, if an EHV facility is lost for more than 1 yr, and firm transmission interruption is not allowed, it appears the only compliant alternative (to a redundant facility) is a redispatch plan that is well documented and accepted by all stakeholders, per Footnote 9. R2.3: Is only the 5-year Near-Term Transmission Planning Horizon case required for the annual short-circuit analysis? R2.4.1: How is the dynamic modeling of induction motor Loads to be developed by the Transmission Planners? Is it acceptable for Transmission Planners to assume the same induction motor modeling as has generally been assumed and applied by most Transmission Planners throughout the Western Interconnection or will the induction motor modeling have to be based upon the type and amount of actual induction motors installed in the system? R2.5: Does NERC have a particular technical rationale about what determines “proposed material generation additions or changes?” R2.6.2: Does NERC have a particular technical rationale about what determines “material changes?” R2.7.3: Please define “beyond the control” under Definition of Terms Used in Standard. This is an important concept. Without NERC definition, this term is highly debatable and should be eliminated. Scenario for Clarification: If the stakeholder rate payers do not approve expenditures for facility improvements required to eliminate non-consequential load loss, is this beyond the control of the Transmission Planner? Rate payers should be able make the ultimate free market choice determination of risk versus cost associated with their reliability. Otherwise market interests (particularly generation) disproportionately pressure excessive reliability based improvements that must be borne by all rate payers. R3.3.1: Please define “relay loadability limit” under Definitions of Terms Used in Standard. This is an extremely important concept. This term has been used quite commonly for decades and is now used in this latest proposed standard. Without NERC definition, this term is highly debatable and should be eliminated. Scenario for Clarification: If PRC-023 is met whereby all “relay loadability limits” are set at least 150% of the highest thermal limiter (0.85 voltage and 30 lagging powerfactor) this sensitivity would justifiably not be needed so long as verification is shown that no element overloaded greater than 150%. R3.1 and R3.4: The interrelation between these two paragraphs needs additional clarification. R3.1 calls for verification via studies that the BES meets Table 1 performance criteria based on the contingency list resulting from R3.4. However, R3.4 states that the contingency list used to meet R3.1 only need include “Those planning events in Table 1, that are expected to produce more severe System impacts on…..the BES” and the associated “rationale” for those chosen contingencies. Is NERC suggesting that the studies do not need to include all contingencies based on Table 1, so long as ample “rationale” is provided? However, the Transmission Planner must provide studies to determine if every contingency of Table 1 meets performance requirements. How are the “more severe” contingencies determined if the Table 1 contingencies are not evaluated comprehensively? It seems R3.4 could be eliminated and the contingencies be based simply on Table 1. Please define “more severe”, relative to less severe under Definitions of Terms Used in Standard, in an effort to help evaluate the suitability of a particular contingency for inclusion on this list. Looking at context, it appears that the purpose of this statement is to ensure that the worst contingencies are studied. Is the intent here simply to allow a given contingency to cover for a less severe or similar contingency and avoid duplicate simulations? R3.4.1 and R4.4.1 Please include and define a reasonable number of contingent buses into adjacent systems that should be considered. No more than 2 are recommended for the standard. R3.5 and R4.5: How many of the “events in Table 1 that are expected to produce more severe system impacts” should the required evaluation identify and evaluate? To what extent should the evaluation focus on the “other” Extreme Events described under items 3.b and 2.f in Table 1, particularly if existing disturbance reports in the Western (or Eastern) Interconnection have recorded and evaluated the occurrence of particular events that have already created cascading? Because the requirement seems to involve a check for Cascading, perhaps some clarity could be provided with respect to the NERC definition of “Cascading.” In particular, in the Cascading definition, how widespread is “widespread;” is the phrase “electric service interruption” only about the loss of firm load or could it also be only about the loss of firm generation or only about the loss of firm transmission service or is it about some combination of loss of firm load, loss of firm generation, and loss of firm transmission service; how large an area is meant by the expression “spreading beyond an

area predetermined by studies" when the simulations that analyze the initiating Extreme Event will model the entire Western (or Eastern) Interconnection? So how does the study determine that the sequentially spreading service interruption has spread beyond the entire Western (or Eastern) Interconnection that is modeled in the simulation? Or is the term "area" meant to describe only that part of the Western (or Eastern) Interconnection that the Transmission Planner has evaluated for system impacts while ignoring impacts to the rest of the Interconnection? Table 1 – Planning Events, Steady State Only Note i: "The response of voltage sensitive Load that is disconnected from the System by end-user equipment associated with an event" seems to be included as items 2) and 3) under the Non-Consequential Load Loss definition. So, it seems acceptable to use this form of load loss to meet the stability performance requirements. However, the "Steady State Only" note i in Table 1 specifically does not allow its use to meet steady state performance requirements. Therefore, the "Steady State Only" note i in Table 1 should clarify why it seems acceptable to use it to meet stability performance requirements but not to meet steady state performance requirements. Table 1 – Planning Events, Category P2: Category P2 seems to include an unrelated mix of planning events ranging from a seemingly benign event (i.e., opening of a line section without a fault) to what would seem to be much more severe events (i.e., bus section fault or internal breaker fault). A clarification of why these planning events were lumped into the same Category P2 would be helpful to the Transmission Planner. Also, does the language in footnote 7 (i.e., "opening one end of a line section without a fault on a normally networked Transmission circuit …") mean that P2-1 ("opening of a line section without a fault") should be modeled as an open-ended line section? Table 1 – Planning Events, P2-2 (EHV) and P2-3 (EHV): For each of these planning events, its corresponding "Non-Consequential Load Loss Allowed" column should include a footnote 12 with each of the "No" boxes, similar to that allowed under the seemingly much less severe event P2-1 ("opening of a line section without a fault"). Otherwise, please explain why the seemingly much less severe P2 event (P2-1) has a footnote 12 exception for Non-Consequential Load Loss Allowed but the two seemingly more severe P2 events (P2-2 and P2-3) do not. Table 1 – Planning Events, P4-1 through P4-5 (EHV): For the stuck breaker planning events of P4-1 through P4-5 on the EHV system, their corresponding "Non-Consequential Load Loss Allowed" column should include a footnote 12 with their "No" box, similar to that allowed under the seemingly much less severe N 1 planning events (P1-1 through P1-5). Otherwise, please explain why the seemingly much less severe N 1 events (P1-1 through P1-5) have a footnote 12 exception for Non-Consequential Load Loss Allowed but the seemingly much more severe stuck breaker events (P4-1 through P4-5) do not. Table 1 – Planning Events, P5-1 through P5-5 (EHV): For the relay failure planning events of P5-1 through P5-5 on the EHV system, their corresponding "Non-Consequential Load Loss Allowed" column should include a footnote 12 with their "No" box, similar to that allowed under the seemingly much less severe N 1 events (P1-1 through P1-5). Otherwise, please explain why the seemingly much less severe N 1 events (P1-1 through P1-5) have a footnote 12 exception for Non-Consequential Load Loss Allowed but the seemingly much more severe relay failure events (P5-1 through P5-5) do not.

Individual

Alice Ireland

Xcel Energy

Yes

Effective Date: The effective date section seems to imply that Non-Consequential Load Loss will not be permitted after the 84 month implementation period. We do not believe that was the drafting team's intent and request that it be modified. Footnote # 12 in Table 1, in particular, seems to support our assumption that the team did not intend to disallow it. For reference, the footnote states: "12. An objective of the planning process should be to minimize the likelihood and magnitude of Non-Consequential Load Loss following Contingency events. However, in limited circumstances Non-Consequential Load Loss may be needed to address BES performance requirements. When Non-Consequential Load Loss is utilized within the planning process to address BES performance requirements, such interruption is limited to circumstances where the Non-Consequential Load Loss is documented, including alternatives evaluated; and where the utilization of Non-Consequential Load

Loss is subject to review in an open and transparent stakeholder process that includes addressing stakeholder comments." However, if it was the drafting team's intent to not allow Non-consequential Load Loss after the 84 month implementation period, we disagree and ask the team to reconsider. Particularly for rural areas, in some cases, this will be the only action possible. R2.1.4: a) We would like to see clarification on the term "sensitivity analysis". Is this in reference to seasonal models and differences in fuel availability? We would like more detail on how this is to be done so that it won't be left up to interpretation. b) We would like the drafting team to consider stratification of the tasks needed to perform a Planning Assessment. In our opinion, having both the TP and PC do exactly the same study produces tremendous and unnecessary duplication. Without stratification, the TPL-001 standard will continue to perpetuate the same paradigm used in the existing TPL-001 through TPL-004 standards. The NERC Functional Model makes a clear distinction between PC and TP functions/responsibilities. It is not clear why that distinction is not leveraged in the new TPL-001 standard. This will be particularly troublesome in areas where an ISO or RTO is the Planning Coordinator. In order for the RTO/ISO, as the PC, to be able to do their Planning Assessment, the Transmission Planners would have to provide a lot of detailed input data. So, in effect, both the PC and TP would be performing their assessment from the same data. It would make more sense if the RTO (as the PC) performed the required studies on the 500-345 kV network and the TP performed the required studies on everything below 230 KV. We also recommend the allowance for utilization of a regional assessment, instead of performing your own, due to individual entity resource constraints. R2.4.1: We would like to see better clarity on what an Aggregate system load model is and how granular it should be. If the intent is for the model to contain a very detailed representation of the load system, then it may take a longer time to implement. R3.4.1: a) This type of coordination could be difficult due to other adjacent entities on different schedules and some may not have the amount of detail to incorporate into another's processes. We know this is generally covered in coordination of real time operations and wonder if it is appropriate to require this type of coordination in the long term process. Is there already an operational standard that covers this? Would it be better to address this in the operational standards? We would like the roles of the coordinators vs. the planners to be clarified in order to ensure that no work is being duplicated. b) PC's between regions, such as RTOs, are already coordinating for long term studies. In these cases, we feel the PC should alone be responsible for the requirements, rather than also the TPs. c) Can we get a clear definition of what apparent impedance swings means? We interpret it as rotor angle stability. R4.3.1: We would like to see that the detailed data is incorporated back into the NERC modeling processes and create a more detailed model with better accuracy. R8: We do not agree with the requirement to provide the assessment to every adjacent PC and TP because we fail to see the reliability benefit in doing so. However, we do agree that the PC and TP should be required to provide the assessment to any of these entities, if requested. Additionally, for entities that make such requests, we would like to have 90 days instead of 30 to respond. In many cases a non-disclosure agreement will have to be executed due to CEII classification of some information, and this can take several months.
Individual
Christine Hasha
Electric Reliability Council of Texas, Inc.
No
ERCOT ISO believes that the revisions do not go far enough in addressing previously submitted comments. As written this standard would require restructuring of the functions in the ERCOT Region because several requirements are being assigned to the PC that are currently performed only by the TPs. It would not provide any reliability benefits to have the ERCOT PC assume these functions. Specifically, the following requirements should be modified: R2.1.5 should be clarified to be applicable to TPs only since the ERCOT PC does not have the information necessary to perform this analysis; R2.3 and R2.8 should be clarified to be applicable to TPs only since the ERCOT PC does not perform this analysis (it is performed by the TPs in ERCOT); R4.1.2 should be clarified to only apply to TPs because the ERCOT PC does not have the modeling information necessary to perform this analysis. Additionally, R2.1.4 and R2.4.3 should be removed because the requirements are subjective and there are no actions prescribed to be taken based on the sensitivity results. The Load model requirement should be removed from R2.4.1 because this would be better addressed in a MOD standard. Alternatively, R2.4.1 should be rewritten as "System peak Load for one of the five years with expected dynamic load models." A concurrent requirement should be incorporated to mandate DSPs and TPs to supply dynamic load model data to the PC to perform the required studies.

No
ERCOT ISO believes that the VRF for R8 should be “low”. The distribution of the Planning Assessment is administrative in nature, the failure to distribute the Planning Assessment does not necessarily equate to not communicating the content of the assessment, and the consequence of not distributing the Planning Assessment does not immediately impact the reliability of the BES; thus it does not warrant a ‘Medium’ risk factor.
Individual
Chris de Graffenried
Consolidated Edison Co. of NY, Inc.
No
Requirement R1.1.5: Delete “and Interchange.” The inclusion of other than Firm transactions (e.g. economic transactions in Interchange) in a base power flow case utilized for planning/designing the interconnected system blurs the boundary between reliability issues and purely economic issues. Reliability issues are issues that a Transmission Owner (TO) must address for the purpose of meeting its load demand, and are defined by the application of well established reliability standards and criteria that are based on the electrical characteristics of the interconnected system, but without economic considerations. Instead, economic transactions are types of transactions that a TO may enter into once its load obligations are met, and are evaluated based on economic parameters that are markedly different from the aforementioned reliability criteria (e.g. congestion costs). Modeling all types of transactions in a power flow case without distinction detracts from the accuracy and validity of either assessment (reliability and economic).
Individual
Kathleen Goodman
ISO New England Inc.
No
a. 2.6.2 - What was the intent of this change? The old language seemed to work. The language should not be changed from the previous version. b. For 2.8.2 - Was the phrase changed to reflect modifications of facilities? If so the requirement should be modified to read “Be reviewed in subsequent annual Planning Assessments for continued validity and implementation status of identified System Facilities and Operating Procedures with respect to modifications of facilities. Otherwise the requirement is unclear. c. For Section R8.1 - the proposed requirement conflicts with a long standing stakeholder process in our area which posts study results and allows comment within a defined period before studies are finalized. If this section is to be retained then it should be modified to only allow comments on Transmission studies less than one-year old. Requirement 8 and 8.1, should be revised to include a limit on the comment period as follows: If a recipient of the planning assessment final results provides documented comments on the results within 90 days of receipt, the respective Planning Coordinator or Transmission Planner shall provide a documented response to such recipient within 90 calendar days of receipt of those comments. d. With respect to Table 1 – We suggest adding an event 6 to P1 to address the contingent loss of back to back HVDC Facilities. If not added to P1 then this event needs to be added somewhere in the standard. e. We don’t agree with footnote 7 specifying that only one end of the line should be open for this condition. If the SDT is to keep this concept make P2 event 1 simply say “Opening one end of a line section w/o a fault” and delete the footnote. The existing footnote is unclear due to the use of language such as “possibly”.
Yes
We feel previous comments have largely been ignored by the Standards Drafting Team leading to a lack of support for the standard. Overall the standard should be more precise in its language. The following comments are provided for serious consideration with respect to revisions: Comments: From Section A.3 – the introduction please strike the word “probable” as shown below Purpose: Establish Transmission system planning performance requirements within the planning horizon to develop a Bulk Electric System (BES) that will operate reliably over a broad spectrum of System conditions and following a wide range of probable Contingencies This is deterministic contingency testing and this

word introduces probability into the standard where it does not belong. For R1.1 Part 1.1.2. With respect to known outages, there needs to be greater flexibility in the standards (e.g. more tolerance to non-consequential load shedding or limitations to the contingencies that need to be considered (e.g. P0, P1, & P2)). Regional allowances for load shedding under this condition should be acceptable. Duration of known outages should be increased from six months to one year. For R1.1 Part 1.1.6 Delete "required for Load". Resources may also be used for export to other areas, not just internal load. REMOVE INTERCHANGE from 1.1.5 - Definition of Interchange – The inclusion of Interchange requires designing for non-Firm service. In the NERC Glossary of Terms Used the term Interchange is defined as “Energy transfers that cross Balancing Authority boundaries.” It is meant to refer to energy transaction other than firm Transmission Service. While rigorous planning studies have been conducted to permit the uninterrupted implementation of firm Transmission Service without jeopardizing the reliable operation of the Interconnected System, other types of energy transaction only take place whenever system conditions permit them. They are usually of very short duration relative to planning assessment periods (usually spanning for a few hours to a few days) and are deemed highly interruptible and subject to reliability issues that may arise during operation of the system. In other words, the term Interchange refers to economic transactions that are permitted when the system is secure and there are reasonable reliability margins to effect dispatch changes to lower operating costs. As such, Interchange should not be reflected in system representation meant to assess system reliability under TPL-001. Part 2.1.4, requires an entity to vary one or more conditions to demonstrate a change in performance. If the cases were initially stressed, this may force an entity to simulate conditions with less severe stresses. At this point, there is limited or no value to this additional workload. Having a requirement to test at least one sensitivity as a blanket requirement may not be informative by itself and is more unclear since sensitivities are being required on an undefined base set of conditions. Additionally, our concern involves wording under 2.1.4 and 2.4.3 that sensitivities are required varying one or more conditions. Subsequently, in requirement 2.7.2 corrective action plans need to be developed to resolve performance deficiencies “only” if identified in multiple conditions or require a rationalization why no corrective action plan is necessary. Multiple condition sensitivities under 2.1.4 and 2.4.3 are necessary to satisfy requirement 2.7.2. Requirement 2.7.2 adds ambiguity and should be removed or revised as follows: 2.7.2. Corrective Action Plans are not required for performance deficiencies identified in a sensitivity analysis. We agree with R2.1 however with respect to R2.2 Language should be consistent with 2.1 for example - use "current or qualified past studies" instead of "the following annual current study." For 2.7.1 – We don’t believe this list provides value nor should it be included in the standard. Section 3.3 - We feel that the last sentence of 3.3.1 should be removed. This is handled by PRC-023. Line ratings are addressed by PRC-023. PRC-023 requires coordination with the Reliability Coordinator. Remove “Tripping of Transmission elements where relay loadability limits are exceeded.” In Table 1 - The fault descriptions must be clear. They must use “3-phase”, “single-phase-to ground”, or “2-phases-to ground” in the descriptions of a fault rather than SLG (a line is not a phase in electrical terms--single line to ground is not precise enough). In Table 1 - Where two elements are affected by a fault it must be clear whether the requirement is for a single-phase-to ground fault, or a 2-phase-to ground fault. They are different faults that will have different dynamic responses. For Table 1– add a footnote for the term generator to address the treatment of Combined Cycle Generators – “In addition to evaluating the loss of a single generator, the loss of all interrelated generators shall also be considered as a single contingency.” Operating experience has shown that trips of the entire CC facility often occur even on facilities that claim the combined cycle generators are independent. Where a category involves an initial condition representing the loss of a facility followed by an event represeting the loss of a facility such as P3, the standard must be clear as to the amount of time assumed between faults. An assumption may be 30 minutes, but the standard must not leave this unsaid. This clarity must be provided in the Table 1 Notes. In addition, the standard must be clear on the allowable re-adjustments between contingencies such as P3, or better, must be clearly limit the permissible re-adjustments. For example, it is not realistic to assume an unlimited amount of re-dispatch between faults—e.g. the allowable re-adjustment should be limited to actions that can be effectively implemented in less than 30 minutes, such as a, b, c, d, ..., and the amount of generation re-dispatch must not exceed the amount of future planned contingency reserve, or similar language. This clarity must be derivable from the Table 1 Notes.

Individual

Claudiu Cadar

GDS Associates, Inc.
No
1. Footnote a. Footnote should state “Draft 7” instead 2. Requirement R1 a. Time Horizon should include both Near-term and Long-term Planning 3. Requirement R2 a. Time Horizon should include both Near-term and Long-term Planning b. Requirement R2, Part 2.1 • The inclusion of the words "For the Planning Assessment" it seem unnecessary as long as main requirement R2 is only about the Planning Assessment and nothing else. • The term “Qualifying studies” from the last sentence is referring to the qualified past studies, or the annual studies, or both actually? Suggesting adjusting the verbiage so it would not create confusion. • Subpart 2.1.4 - Requirement R2, Part 2.1.1 and Part 2.1.2 are referring to system conditions, not studies. The second sentence may be subject of non-objective interpretations and may generate burdensome and unrealistic amount of work. The requirement should state instead "For each of the system conditions described in Requirement R2, Part 2.1.1 and Part 2.1.2, the studies shall include sensitivity cases utilized to demonstrate whether there is any significant impact due to changes on the basic assumptions used in the model. The analysis, by case, may contemplate varying one or more of the following conditions:” • Subpart 2.1.5 - We suggest adjusting the time threshold of potential equipment unavailability in order to be consistent with the time frame for the "known Transmission outages". c. Requirement R2, Part 2.2 • The inclusion of the words "For the Planning Assessment" it seem unnecessary as long as main requirement R2 is only about the Planning Assessment and nothing else. • While the Near-Term portion of the Planning Assessment details the premises of the study, the Long-Term is lacking in such thing. d. Requirement R2, Part 2.3 • Although both the steady-state and transient stability studies are required for the Near-Term and Long-Term, the short-circuit study is required only for the Near-Term. This is big disconnect, because there can be stability analyses conducted without a short-circuit assessment. • Breakers should be checked for their breaking capability, as well as to withstand the fault. All other disconnecting equipment, as well as current transformers in particular shall be also verified for their withstand capabilities. The current statement should be replaced with "The short circuit analysis portion of the Planning Assessment shall be conducted annually addressing the Near-Term and Long-Term Transmission Planning Horizon and can be supported by current or past studies as indicated in Requirement R2, part 2.6. The analysis shall be used to assess performances of transmission elements affected by a potential increase of short-circuit contributions to fault” e. Requirement R2, Part 2.4 • The inclusion of the words "For the Planning Assessment" it seem unnecessary as long as main requirement R2 is only about the Planning Assessment and nothing else. • Similar with 2.1, the last sentence should read "The studies should include the following conditions:" • Subpart 2.4.1 - We believe that the dynamic behavior of the load cannot be accurately estimated beyond current time. We are concerned about the effort required to ascertain the dynamic response of the load. As for the “Loads that could impact the study area” the standard doesn't include any directions in how an entity will identify these loads. Perhaps the standard should provide guidelines to determine which loads would impact the study area. • Subpart 2.4.3 - See comments from Subpart 2.1.4 f. Requirement R2, Part 2.5 • The inclusion of the words "For the Planning Assessment" it seem unnecessary as long as main requirement R2 is only about the Planning Assessment and nothing else. g. Requirement R2, Part 2.6 • Subpart 2.6.2 - We agree with the suggested changes as responding to previous comments h. Requirement R2, Part 2.7 • Subpart 2.7.1 - We disagree with the implemented changes. The standard should not include examples. If needed, a white paper can accompany the standard. We suggest adjusting the last sentence to read “Such actions may include, but are not limited to, the following:” i. Requirement R2, Part 2.8 • This should apply to all disconnecting equipment and CT in particular with respect not only to their interrupting duty, but to their withstand capabilities also. See comment on Part 2.3. 4. Table 1 a. Footnote 9 • With respect to the Curtailment of Firm Transmission Service we suggest SDT to revise the language in order to be consistent with the Implementation Plan. 5. Measure M1 a. This measure it is hard to read. For simplicity, we suggest adjusting this measure to read "Each Transmission Planner and Planning Coordinator shall provide evidence, in electronic or hard copy format that it is maintaining System models within their respective area, using data consistent with MOD-010 and MOD-012, and the models reflect the System conditions in accordance with Requirement R1." 6. Measure M7 a. The measure encompasses the particular scenario where the parties involved have reached an agreement for performing the required studies. In order to cover situations where the parties have not reach an agreement, the measure should read "Each Planning Coordinator, in conjunction with each of its Transmission Planners, shall provide dated documentation on roles and responsibilities, such as meeting minutes, agreements, and e-mail correspondence that identifies all individual and joint responsibilities for

performing the required studies and Assessments in accordance with Requirement R7." 7. Compliance a. Data retention • The 5th bullet should read "The documentation specifying the criteria for acceptable System steady state voltage limits, post-Contingency voltage deviations, and the transient voltage response since the last compliance audit in accordance with Requirement R5 and Measure M5." • The 6th bullet should read "The documentation specifying the criteria or methodology used to identify System instability for conditions such as Cascading, voltage instability, or uncontrolled islanding since the last compliance audit in accordance with Requirement R6 and Measure M6." • The 7th bullet should be reworded in accordance with suggested changes at M7.
Yes
Agree in general.
N/A
Individual
David Thorne
Pepco Holdings Inc
Yes
Pepco Holdings Inc supports the proposed revisions.
Yes
Individual
Michael Lombardi
Northeast Utilities
No
Definition of Terms Used in the Standard The definitions of “Near-Term Transmission Planning Horizon” and “Year One” have been deleted from the standard, yet they are still used in draft 7. NU is concerned about voting in favor of this standard with these terms being defined by another project without a full discussion of the impact to this proposed standard. NU suggests repeating the definitions in this proposed standard. Requirement R1 NU believes that the Normal System Conditions as stated in Requirement R1 should establish the base case conditions to be used for the assessment studies. However, a more detailed guideline for developing base cases should be addressed by the requirements. By just modifying the language of requirement R1 to indicate that “P0” constitutes the initial system conditions does not address this concern in Draft #7. A more detailed guideline for base case development is needed. Requirement R8 The wording in requirement R8 needs to be amended to restrict comments to the most recent assessment only, for a limited period (say 3 months) after its release. The current wording appears to offer unlimited opportunity to comment on past assessments, long after their release. Footnote 7 It appears there is a discrepancy between Footnote 7 and Event P2-1. Footnote 7 could be eliminated by rewording Event P2-1 as follows: “Opening one end of a line section w/o a fault”. Footnote 12 NU did not agree with the clarification of Table 1 Footnote B of TPL-002 and did not vote for its approval. Therefore, NU does not agree with the same clarification being applied here for Non-Consequential Load Loss. For reference, below is NU’s comment on TPL-002 Table 1, Footnote B: “The revised language of Footnote b suggests that non-consequential demand interruption (load that is not directly served by the elements removed from service as a result of the contingency) could be used to mitigate reliability concerns arising from NERC Category B contingency events (i.e., single element contingencies). This language seems to encourage operational workarounds and adds burdens for operators of the system. NU believes this is not consistent with planning a highly reliable bulk electric system and thus does not support this weaker language”. General comment NU believes that a standard should contain statements and requirements that are direct and measurable. TPL-001-2 should not be an exception to this rule. Therefore, statements like “An objective” which appears in Footnotes 9 and 12 shall not be used.
Yes
The following previous comments that were filed by NU were not addressed by the SDT in the current draft. For NU to support the standard these comments should be addressed or reasons should be provided why they have not been addressed. Repeated below are NU’s comments that were filed for

the previous draft. Requirement R1, Part 1.1.2 NU requests that the six month duration stated by Requirement R1, Part 1.1.2 should be modified to one year duration to eliminate outages that occur within the “operational planning timeframe”. Requirement R1, Part 1.1.6 The phrase "required for Load" should be deleted as this confuses the issue. Requirement R2, Part 2.2 The language of Requirement R2 Part 2.2 seems to suggest that current annual studies are always required for the long-term steady state assessment. This may have been an oversight, for consistency Requirement R2 Part 2.2 should be modified to similarly read as Requirement R2, Part 2.1. Requirement R2, Parts 2.1.4 & 2.4.3 1) The standard is referring to requirements for sensitivity and other issues without a reference to base assumptions. The standard must describe base assumptions. To define a sensitivity condition, NERC must define base assumptions. 2) Requirement R2, Part 2.1.4 and Part 2.4.3 should clarify what is meant by multiple sensitivity studies and one sensitivity study. Will varying only one measurable quantity several times in multiple simulations constitute multiple sensitivity studies or one sensitivity study? Requirement R3, Part 3.3.1 NU feels that the last sentence of Requirement R3, Part 3.3.1 should be removed since this is handled by PRC-023. Line ratings are addressed by PRC-023 which requires coordination with the Reliability Coordinator. NU suggests the removal of the following sentence: “Tripping of Transmission elements where relay loadability limits are exceeded.”

Individual

Marie Knox

MISO

Yes

No

Regarding Requirement 8, we do not believe that there is significant risk to the reliability of the BES if an annual Planning Assessment is not distributed to another entity or if a documented response to Planning Assessment comments is not provided within 90 days of a request. Requirement 8 is an administrative requirement that adds little to improve reliability. We recommend that the VRF for Requirement 8 remain “Low”, rather than be changed to “Medium”.

Overall, we remain concerned that the revisions to the TPL standard are not on balance an improvement to the original. The document is not well organized topically, making it more difficult to navigate and understand. If the primary improvements sought in requirements for reliability planning were to increase system performance levels (no loss of firm demand) for certain multiple contingency events, and to ensure more stressed system sensitivities are analyzed, this can be accomplished in a much simpler revision. We do not believe that this standard as written improves the clarity of what is required, and therefore provides an opportunity for greater disputes between compliance monitors and applicable entities, and this is not a positive outcome. We also believe that the standard is too prescriptive as to what critical system conditions must be modeled, as these conditions vary considerably from system to system and within large systems. Table 1-Steady State and Stability Performance Planning Events, Category P5, now includes “non-redundant” relay in the Event column. What is meant by non-redundant relay? It is unclear if the SDT’s intent is to provide distinction between a back-up relay and a redundant relay. We recommend that the SDT provide a definition for the term “non-redundant”.

Group

Imperial Irrigation District

Yes

Yes

Previous TPL Standard balloting included the FERC Order that clarified footnote ‘b’, regarding the planned or controlled interruption of electric supply for an N-1 situation. In our view, board of directors/Public Utility should have the determination what level of service is acceptable and with what associated cost. This view is captured in footnote #12 of Table 1 in the TPL Standard and will be crucial to maintaining an Affirmative vote. 1. R2 (2.5): The value of assessing system stability for years 6-10 is questionable. Stability studies should be conducted for new generation interconnections or for planned major transmission system improvements that have regional impact. 2. R8 requirement to distribute all Planning Assessment results to adjacent PCs and TPs are excessive and

cumbersome. Regarding R8, IID suggest the following languages: Each Planning Coordinator and Transmission Planner shall distribute its Planning Assessment results to adjacent Planning Coordinators and adjacent Transmission Planners in accordance with the overseeing Reliability Coordinator requirements. Any functional entity that has a reliability related need and submits a written request for the Planning Assessment results, the Transmission Planner and Planning Coordinator shall provide the latest Planning Assessment results within 30 days of such request.
Individual
Gregory Campoli
New York Independent System Operator
No
If the following recommended revisions are made to the requirements listed, subject to other unforeseen material changes, NYISO would no longer oppose the approval of this standard. Requirement R2.1.5 The current requirement language can be interpreted to require evaluation of the simultaneous unavailability of multiple long-lead-time components. Also, as a transformer outage is already evaluated as part of category P6 in Table 1, additional studies should not be required, however spare equipment strategies could be ASSESSED in the context of the Planning Assessment. NYISO thus recommends this requirement be revised as follows: R 2.1.5 When an entity's spare equipment strategy could result in the unavailability of a major Transmission component that has a lead time of one year or more (such as a transformer), the impact of this possible unavailability on System performance shall be assessed with due regard to categories P0, P1, and P2 identified in Table 1. Requirement R2.2 The language in this requirement is materially inconsistent with R2.1, unnecessarily requiring a current study. NYISO requests that R2.2 and the sub-requirement be revised as follows: 2.2. For the Planning Assessment, the Long-Term Transmission Planning Horizon portion of the steady state analysis shall be assessed annually and be supported by current annual studies or qualified past studies as indicated in Requirement R2, Part 2.6. Qualifying studies shall include: 2.2.1. Expected System peak Load conditions for one of the years in the Long-Term Transmission Planning Horizon and the rationale for why that year was selected. Requirement R8.1 There is an apparent open ended time frame afforded report recipients in their review of any Planning Assessment. This requirement should apply to only the most recent Planning Assessment. NYISO thus recommends the following language: 8.1. If a recipient of the most recent Planning Assessment results provides documented comments on the results, the respective Planning Coordinator or Transmission Planner shall provide a documented response to that recipient within 90 calendar days of receipt of those comments.
No
Requirement 8 is an administrative burden that adds no value to reliability. Comments have been provided on several past drafts highlighting this effect. The revisions made to the VRF and VSL for Requirement 8 further exacerbate this burden. One could conclude from observation of the VSLs and VRFs, that Requirement 8 was the most important requirement of TPL-001-1. Many Planning Coordinators and Transmission Planners have stakeholder processes that govern participation and notification. Further, FERC Order 890 requires stakeholder participation and transparent processes.
Requirement R2.4.1 The NYISO, along with many other systems, has not determined a need to model dynamic loads, and therefore has not benchmarked any such models. The NYISO recommends that prior to the implementation of this requirement a modeling standard should exist that is specific to dynamic loads, including as assessment for the need for dynamic load models.
Group
Tri-State Generation and Transmission Assn., Inc.
Yes
In general, revisions are editorial and seem to have improved the overall document.
No
Many of the sub-requirements of R2 do not warrant high risk VRFs, yet violation of any R2 sub-requirement would result in a "High Risk Factor" violation assessment. We believe that having so many sub-requirements can result in inaccurate overall severity classification. For example, skipping one study defined in R2.1.2 (Planning Assessments) for a particular time frame or load level would probably not result in a direct actual degradation in system performance, but would still result in a High Violation Risk Factor.

R1.1 to “System models used for Steady State and Stability Analysis shall represent:” Much of what is in R1.1 is unnecessary for Short Circuit studies. In contrast, there are items not mentioned in R1.1 that are necessary for short circuit studies. R2.1.4 requires sensitivity analysis to study “a range of credible conditions that demonstrate a measurable change”. How will the required actions in R2.1.4 be documented or measured, and what is accomplished by performing sensitivity analysis in the context of a system performance assessment? In R2.3, change the first sentence to read “The short circuit analysis portion of the Planning Assessment shall be conducted annually, using one of the cases described in 2.1.1, addressing the Near-Term Transmission Planning Horizon and can be supported by current or past studies as qualified in Requirement R2, Part 2.6.” There appears to be no reason to perform short circuit studies for all three Near-Term Transmission Planning Horizon cases. R2.4.3 requires sensitivity analysis to study “a range of credible conditions that demonstrate a measurable change”. How will the required actions in R2.4.3 be documented or measured, and what is accomplished by performing sensitivity analysis in the context of a system performance assessment? R2.7.1 remove the last bullet. We believe these programs are already factored into the load forecast, as they are associated with resource scheduling and planning load serving, and not transmission planning. In particular, DSM measures would fall under R2.4.1, and the term “new technologies, or other initiatives” The language of Requirement 3 unnecessarily repeats the language of R1 and R2. As now written, R3 states “For the steady state portion of the Planning Assessment, each Transmission Planner and Planning Coordinator shall perform studies for the Near-Term and Long-Term Transmission Planning Horizons in Requirement R2, Parts 2.1, and 2.2. The studies shall be based on computer simulation models using data provided in Requirement R1.” R3 We recommend that the introductory language in Requirement R3 be changed to read “The studies in Requirement R2, Parts 2.1, and 2.2 shall be performed using models as defined in Requirement R1 in accordance with the following criteria.” We believe that Requirements 3.1 and 3.4 should be combined into R3.1, eliminating R3.4. It is redundant to have Requirement 3.1 say “perform R3.4”. We recommend that R3.4 be deleted and that R3.1 be replaced with: R3.1 Planning event studies shall be performed in accordance with “Table 1 – Steady State & Stability Performance Planning Events;” and shall be based on a supportable Contingency list. Comment: The content of 3.4.1 was intentionally omitted as it is redundant with R7. Also, the language “…more severe System impacts…” was intentionally omitted as it could be subject to a wide range of interpretations. Similarly, we recommend that R3.5 be deleted and that R3.2 be replaced with: R3.2 Extreme event studies shall be performed in accordance with “Table 1 – Steady State & Stability Extreme Events;” and shall be based on a supportable Contingency list. We recommend the following new requirement be inserted after the revised R3.2 language: Should the extreme event studies identify potential Cascading, an evaluation of possible actions designed to reduce the likelihood or mitigate the consequences and adverse impacts of the event(s) shall be conducted. Comment: As before, the language “…more severe System impacts…” was intentionally omitted as it could be subject to a wide range of interpretations. We recommend removing the second bullet of R3.3.1, “Tripping of Transmission elements where relay loadability limits are exceeded” for the following reasons: 1. There is currently no tool to model relay loadability characteristics in Steady State analysis. 2. Requirement R3.3.1 would require inclusion of relay models in modeling data that are not currently provided. MOD-012 does not require impedance or overcurrent relay models to be submitted. 3. In Requirement 3.3.1, the second bullet, it is impossible to model complete and accurate relay loadability using present-day steady state simulation tools. At best an individual point could be chosen to model relays based on a selected power factor. We recommend changing the opening text of Requirement R.3.3.2 to say “Simulate the expected automatic or manual operation…” Subrequirement R4.1.2 represents a tremendous increase in dynamic modeling complexity. Modeling relay action during apparent impedance swings would require inclusion of impedance relay models in modeling data that are not required to be submitted in MOD-012. If such modeling is necessary, then the corresponding data requirements need to be addressed in MOD standards. We believe that Requirements 4.1 and 4.4 should be combined into R4.1 as shown below and R4.4 should be deleted. It is redundant to have Requirement 4.1 say “perform R4.4.” We recommend R4.1 language be revised to read as follows: R4.1 Planning event studies shall be performed in accordance with “Table 1 – Steady State & Stability Performance Planning Events;” and shall be based on a supportable Contingency list. Comment: The content of 4.4.1 should be omitted as it is redundant with R7. Also, the language “…more severe System impacts…” should be omitted as it could be subject to a wide range of interpretations. Similarly, R4.5 should be deleted and R4.2 should be replaced with: R4.2 Extreme event studies shall be performed in accordance with “Table 1 – Steady State & Stability Extreme Events;” and shall be based on a supportable Contingency list. We

recommend the following new requirement be inserted after the revised R4.2: Should the extreme event studies identify potential Cascading, an evaluation of possible actions designed to reduce the likelihood or mitigate the consequences and adverse impacts of the even(s) shall be conducted. Comment: As before, the language "…more severe System impacts…" was intentionally omitted as it could be subject to a wide range of interpretations. Clarify the first bullet in Requirement R4, part 4.3.1 by changing it to "High-speed (less than 1 second) reclosing, where the fault has cleared, and high-speed reclosing into the permanent fault , but in each case only if high-speed reclosing is utilized". In Requirement R4, part 4.3.1, third bullet, it is impossible to model complete and accurate relay loadability using present-day steady state simulation tools. Existing applications do have impedance relay models, but these models do not model many relay capabilities– for example, non-circular protection regions and load-encroachment. We recommend removing this bullet. The comment statement we made above referring to R4.1.2 also applies to R4.3.1. MOD-012 does not require reclosing relay model data to be submitted. If such modeling is necessary, then the corresponding data requirements need to be addressed in MOD standards. Furthermore, there is not a standard built-in reclosing relay model in current stability simulation tools. Comments regarding Table 1- We assume the headnote i. to Table 1 - "The response of voltage sensitive Load…" - means that studies must not rely on end-user load tripping to meet the performance requirements defined in TPL-001-2 but that it should be modeled (when known) so that its occurrence would be evident. We don't see the need to apply Footnote 12 to only certain contingency categories or certain events in categories. Recommend putting the footnote in the column header just as with Footnotes 1, 2, 3, and 4. Recommend changing "utilized" in Measurement M3 to "performed." Recommend changing "utilized" in Measurement M4 to "performed." Modify Measurement M7 to "Each Planning Coordinator shall provide dated documentation on roles and responsibilities of its Transmission Planners, such as…" The deleted phrase, "in conjunction with each of its Transmission Planners," appears to be unnecessary.
Individual
Kirit Shah
Ameren
No
There were a number of comments made on the previous draft of TPL-001-2 for which there were few, if any, changes made to the latest draft of the standard. Specifically: Requirement R1 does not address normal (pre-contingency) operating procedures or system configurations. Language should be added to the requirement (possibly as an additional Requirement R1.1.7) to include normal operating procedures or system configurations in place prior to any contingency occurring. Requirement R2.4.1, which addresses dynamic load modeling, has been a cause for concern because of the lack of guidance regarding reasonable induction motor representation as opposed to generic load models. While it is recognized that the effort to simulate the effects of induction motor loads is important, it is premature to include such modeling as part of the requirements for this standard. In addition, it appears that only the peak load model in R2.4.1 is required to represent expected dynamic behavior of Load. Such load models, if adopted should represent dynamic behavior of the load for all dynamic studies.
No
The VRF for Requirement R8 should remain Low. There is no significant risk to the reliability of the BES if a Planning Assessment is not distributed to another entity, or if a documented response is not provided within 90 days of a request. The assignment of some VRFs are inconsistent with the importance of the requirements. R2 requires the development of an assessment and it is determined to have a high VRF. However, R3 and R4 require that studies be performed and these studies are determined to have a medium VRF. Performing the studies is essential to developing an assessment and more important to maintaining reliability. If the VRFs for R3 and R4 are correct, then the VRF for R2 should be no higher than medium. The VRF for R5 to develop a steady-state voltage criteria is determined to be medium. However, the VRF for R6 to develop instability criteria is determined to be low. If the VRF for R6 is correct, then the VRF for R5 should also be low.
With respect to Requirement R8, will posting the assessment to a secure web site meet the intent of the requirement? What are the Planning Assessment results identified in R8, and how are they different from the Planning Assessment? It appears that the language for R8 is inconsistent with the VSL for R8. The revised language for the VSL for R8 has removed the word "results". For

Measurements M3 and M4, there is still some question as to what is to be provided as sufficient evidence of a study. It is not clear whether the study results would be sufficient, or whether the entire powerflow, stability, or short circuit effort needs to be documented in a formal study report. For example, it is not clear whether contingency lists used in performing the study work would need to be retained as part of the documentation. The items listed as 4.1.1 through 4.1.3 are not requirements but are performance criteria and should be included in the Table 1 only, consistent with the other performance criteria. Overall, we believe that this standard does not improve the clarity of what is required, and would give additional occasions for disputes between compliance monitors and various registered entities. The standard as written is too prescriptive with regard to critical system conditions which are to be modeled. Such conditions would vary considerably for different systems across the continent.
Individual
Darryl Curtis
Oncor Electric Delivery Company LLC
Yes
Yes

NERC
NORTH AMERICAN ELECTRIC RELIABILITY CORPORATION

Ballot Results	
Non-Binding Poll Name:	Project 2006-02 ATFN non-binding April 2011
Poll Period:	5/18/2011 - 5/31/2011
Total # Opinions:	210
Total Ballot Pool:	333
Summary Results:	86.79% of those who registered to participate provided an opinion; 71.9% of those who provided an opinion indicated support for the VRFs and VSLs.

Individual Ballot Pool Results

Segment	Organization	Member	Opinions	Comments
1	Ameren Services	Kirit S. Shah	Abstain	
1	American Electric Power	Paul B. Johnson	Affirmative	View
1	American Transmission Company, LLC	Andrew Z Pusztai	Abstain	
1	Arizona Public Service Co.	Robert D Smith	Negative	
1	Associated Electric Cooperative, Inc.	John Bussman	Negative	View
1	Austin Energy	James Armke	Abstain	
1	Avista Corp.	Scott Kinney	Abstain	
1	Balancing Authority of Northern California NCR11118	Kevin Smith	Negative	View
1	BC Hydro and Power Authority	Patricia Robertson	Abstain	
1	Beaches Energy Services	Joseph S. Stonecipher	Negative	View
1	Black Hills Corp	Eric Egge	Negative	View
1	Bonneville Power Administration	Donald S. Watkins	Affirmative	
1	Brazos Electric Power Cooperative, Inc.	Tony Kroskey		
1	CenterPoint Energy Houston Electric	Dale G Bodden	Negative	
1	Central Maine Power Company	Kevin L Howes	Negative	
1	City of Tacoma, Department of Public Utilities, Light Division, dba Tacoma	Chang G Choi	Affirmative	

	Power			
1	City of Vero Beach	Randall McCamish	Affirmative	
1	Clark Public Utilities	Jack Stamper	Affirmative	
1	Colorado Springs Utilities	Paul Morland	Affirmative	
1	Consolidated Edison Co. of New York	Christopher L de Graffenried	Abstain	View
1	Dairyland Power Coop.	Robert W. Roddy	Affirmative	
1	Dayton Power & Light Co.	Hertzel Shamash	Affirmative	
1	Deseret Power	James Tucker	Negative	View
1	Dominion Virginia Power	Michael S Crowley		
1	Duke Energy Carolina	Douglas E. Hils	Affirmative	
1	East Kentucky Power Coop.	George S. Carruba	Affirmative	
1	Empire District Electric Co.	Ralph Frederick Meyer		
1	Entergy Services, Inc.	Edward J Davis	Affirmative	
1	FirstEnergy Energy Delivery	Robert Martinko	Affirmative	
1	Florida Keys Electric Cooperative Assoc.	Dennis Minton	Negative	
1	Gainesville Regional Utilities	Luther E. Fair	Abstain	
1	GDS Associates, Inc.	Claudiu Cadar	Abstain	View
1	Georgia Transmission Corporation	Harold Taylor, II		
1	Grand River Dam Authority	James M Stafford		
1	Great River Energy	Gordon Pietsch		
1	Hoosier Energy Rural Electric Cooperative, Inc.	Robert Solomon	Affirmative	
1	Hydro One Networks, Inc.	Ajay Garg	Negative	View
1	Hydro-Quebec TransEnergie	Bernard Pelletier		
1	Idaho Power Company	Ronald D. Schellberg	Negative	View

1	Imperial Irrigation District	Tino Zaragoza	Affirmative	
1	International Transmission Company Holdings Corp	Michael Moltane	Negative	View
1	Kansas City Power & Light Co.	Michael Gammon		
1	Keys Energy Services	Stan T. Rzad	Affirmative	View
1	Lake Worth Utilities	Walt Gill	Affirmative	
1	Lakeland Electric	Larry E Watt	Negative	
1	Lee County Electric Cooperative	John W Delucca	Abstain	
1	Lincoln Electric System	Doug Bantam		
1	Lone Star Transmission, LLC	Julius Horvath	Affirmative	
1	Long Island Power Authority	Robert Ganley	Abstain	
1	Los Angeles Department of Water & Power	Ly M Le		
1	Lower Colorado River Authority	Martyn Turner		
1	Manitoba Hydro	Joe D Petaski	Negative	View
1	MEAG Power	Danny Dees	Affirmative	
1	Mid-Continent Area Power Pool	Larry E. Brusseau	Abstain	
1	MidAmerican Energy Co.	Terry Harbour	Negative	View
1	Minnkota Power Coop. Inc.	Richard Burt	Affirmative	View
1	National Grid	Saurabh Saksena		
1	Nevada Power Co.	James McMorran	Affirmative	
1	New Brunswick Power Transmission Corporation	Randy MacDonald	Negative	
1	New York Power Authority	Arnold J. Schuff	Affirmative	
1	New York State Electric & Gas Corp.	Raymond P Kinney		
1	Northeast Utilities	David H. Boguslawski	Abstain	
1	Northern Indiana Public Service Co.	Kevin M Largura	Affirmative	

1	NorthWestern Energy	John Canavan	Affirmative	
1	Ohio Valley Electric Corp.	Robert Mattey	Affirmative	
1	Oklahoma Gas and Electric Co.	Marvin E VanBebber	Abstain	
1	Omaha Public Power District	Douglas G Peterchuck	Affirmative	
1	Orlando Utilities Commission	Brad Chase	Affirmative	
1	Pacific Gas and Electric Company	Bangalore Vijayraghavan	Affirmative	
1	PacifiCorp	Colt Norrish		
1	PECO Energy	Ronald Schloendorn	Affirmative	
1	Platte River Power Authority	John C. Collins	Negative	View
1	Portland General Electric Co.	Frank F. Afranji	Affirmative	
1	Potomac Electric Power Co.	David Thorne	Affirmative	
1	PowerSouth Energy Cooperative	Larry D. Avery	Affirmative	
1	PPL Electric Utilities Corp.	Brenda L Truhe	Affirmative	
1	Progress Energy Carolinas	Sammy Roberts		
1	Public Service Electric and Gas Co.	Kenneth D. Brown	Abstain	
1	Public Utility District No. 1 of Okanogan County	Dale Dunckel	Abstain	
1	Puget Sound Energy, Inc.	Denise M Lietz	Affirmative	
1	Rochester Gas and Electric Corp.	John C. Allen	Affirmative	
1	Sacramento Municipal Utility District	Tim Kelley	Negative	View
1	Salt River Project	Robert Kondziolka	Affirmative	
1	San Diego Gas & Electric	Will Speer	Abstain	View
1	Santee Cooper	Terry L. Blackwell	Affirmative	
1	SCE&G	Henry Delk, Jr.	Affirmative	
1	Seattle City Light	Pawel Krupa	Affirmative	
1	Sierra Pacific Power Co.	Rich Salgo	Abstain	

1	South Texas Electric Cooperative	Richard McLeon	Negative	
1	Southern California Edison Co.	Dana Cabbell	Affirmative	
1	Southern Company Services, Inc.	Robert A Schaffeld		
1	Southern Illinois Power Coop.	William G. Hutchison	Affirmative	
1	Southwest Transmission Cooperative, Inc.	James L. Jones	Affirmative	
1	Sunflower Electric Power Corporation	Noman Lee Williams	Affirmative	
1	Tampa Electric Co.	Beth Young	Affirmative	
1	Tennessee Valley Authority	Larry Akens	Abstain	
1	Tri-State G & T Association, Inc.	Tracy Sliman	Affirmative	View
1	Tucson Electric Power Co.	John Tolo	Negative	View
1	United Illuminating Co.	Jonathan Appelbaum	Affirmative	
1	Western Area Power Administration	Brandy A Dunn	Negative	
1	Xcel Energy, Inc.	Gregory L Pieper		
2	Alberta Electric System Operator	Mark B Thompson	Abstain	View
2	BC Hydro	Venkataramakrishnan Vinnakota	Abstain	
2	California ISO	Richard K Vine	Negative	View
2	Electric Reliability Council of Texas, Inc.	Chuck B Manning	Negative	View
2	Independent Electricity System Operator	Kim Warren	Negative	View
2	ISO New England, Inc.	Kathleen Goodman		
2	Midwest ISO, Inc.	Marie Knox		
2	New Brunswick System Operator	Alden Briggs	Abstain	
2	New York Independent System Operator	Gregory Campoli	Abstain	
2	PJM Interconnection, L.L.C.	Tom Bowe	Affirmative	

2	Southwest Power Pool	Charles H Yeung	Abstain	
3	Ameren Services	Mark Peters		
3	APS	Steven Norris	Negative	
3	Atlantic City Electric Company	NICOLE BUCKMAN	Affirmative	
3	Avista Corp.	Robert Lafferty	Abstain	
3	Bandera Electric Cooperative	Brian D Bartos	Abstain	
3	BC Hydro and Power Authority	Pat G. Harrington	Abstain	
3	Bonneville Power Administration	Rebecca Berdahl	Affirmative	
3	City of Austin dba Austin Energy	Andrew Gallo	Affirmative	View
3	City of Green Cove Springs	Gregg R Griffin	Affirmative	View
3	City of Redding	Bill Hughes	Affirmative	
3	Cleco Corporation	Michelle A Corley	Negative	
3	Colorado Springs Utilities	Lisa Cleary	Affirmative	
3	ComEd	Bruce Krawczyk	Affirmative	
3	Consolidated Edison Co. of New York	Peter T Yost	Abstain	
3	Consumers Energy	David A. Lapinski	Negative	View
3	Cowlitz County PUD	Russell A Noble	Abstain	
3	Delmarva Power & Light Co.	Michael R. Mayer	Affirmative	
3	Detroit Edison Company	Kent Kujala	Affirmative	
3	Dominion Resources Services	Michael F Gildea	Abstain	
3	Duke Energy Carolina	Henry Ernst-Jr	Affirmative	
3	East Kentucky Power Coop.	Sally Witt	Affirmative	
3	Entergy	Joel T Plessinger	Affirmative	
3	FirstEnergy Solutions	Kevin Querry	Affirmative	
3	Florida Power and Light / NextEra Energy	Chantel Haswell	Abstain	

3	Florida Power Corporation	Lee Schuster	Affirmative	View
3	Gainesville Regional Utilities	Kenneth Simmons	Affirmative	
3	Georgia Systems Operations Corporation	William N Phinney	Abstain	
3	Great River Energy	Sam Kokkinen	Negative	
3	Hydro One Networks, Inc.	David L Kiguel	Negative	View
3	Imperial Irrigation District	Jesus S. Alcaraz	Affirmative	
3	JEA	Garry Baker	Affirmative	
3	Kansas City Power & Light Co.	Charles Locke		
3	Kissimmee Utility Authority	Gregory David Woessner	Negative	
3	Lakeland Electric	Mace Hunter	Affirmative	
3	Lincoln Electric System	Bruce Merrill	Negative	View
3	Louisville Gas and Electric Co.	Charles A. Freibert	Affirmative	
3	Manitoba Hydro	Greg C. Parent	Negative	View
3	MidAmerican Energy Co.	Thomas C. Mielnik	Negative	View
3	Municipal Electric Authority of Georgia	Steven M. Jackson	Affirmative	
3	Muscatine Power & Water	John S Bos	Affirmative	
3	Nebraska Public Power District	Tony Eddleman	Negative	View
3	New York Power Authority	Marilyn Brown	Affirmative	
3	Niagara Mohawk (National Grid Company)	Michael Schiavone	Affirmative	
3	Northern Indiana Public Service Co.	William SeDoris	Affirmative	
3	Orlando Utilities Commission	Ballard Keith Mutters	Abstain	
3	Owensboro Municipal Utilities	Thomas T Lyons	Affirmative	
3	Pacific Gas and Electric Company	John H Hagen	Affirmative	
3	PacifiCorp	John Apperson	Abstain	

3	Platte River Power Authority	Terry L Baker	Negative	View
3	Potomac Electric Power Co.	Robert Reuter	Affirmative	
3	Progress Energy Carolinas	Sam Waters	Affirmative	View
3	Public Service Electric and Gas Co.	Jeffrey Mueller	Abstain	
3	Public Utility District No. 2 of Grant County	Greg Lange	Affirmative	
3	Sacramento Municipal Utility District	James Leigh-Kendall	Negative	View
3	Salt River Project	John T. Underhill		
3	Seattle City Light	Dana Wheelock	Affirmative	
3	Seminole Electric Cooperative, Inc.	James R Frauen	Affirmative	
3	South Carolina Electric & Gas Co.	Hubert C Young		
3	Southern California Edison Co.	David Schiada	Affirmative	
3	Tacoma Public Utilities	Travis Metcalfe	Affirmative	
3	Tampa Electric Co.	Ronald L Donahey		
3	Tennessee Valley Authority	Ian S Grant	Abstain	
3	Tri-State G & T Association, Inc.	Janelle Marriott	Negative	View
3	Xcel Energy, Inc.	Michael Ibold		
4	American Municipal Power	Kevin Koloini	Negative	View
4	Blue Ridge Power Agency	Duane S Dahlquist		
4	Central Lincoln PUD	Shamus J Gamache		
4	City of New Smyrna Beach Utilities Commission	Timothy Beyrle	Affirmative	
4	City of Redding	Nicholas Zettel	Affirmative	
4	City Utilities of Springfield, Missouri	John Allen	Abstain	
4	Cowlitz County PUD	Rick Syring	Abstain	
4	Detroit Edison Company	Daniel Herring	Affirmative	
4	Florida Municipal Power Agency	Frank Gaffney	Affirmative	View

4	Fort Pierce Utilities Authority	Thomas W. Richards	Abstain	
4	Georgia System Operations Corporation	Guy Andrews	Abstain	
4	Imperial Irrigation District	Diana U Torres	Affirmative	
4	Integrys Energy Group, Inc.	Christopher Plante	Abstain	
4	LaGen	Richard Comeaux	Abstain	
4	Madison Gas and Electric Co.	Joseph G. DePoorter	Abstain	
4	Modesto Irrigation District	Spencer Tacke		
4	Ohio Edison Company	Douglas Hohlbaugh	Affirmative	
4	Old Dominion Electric Coop.	Mark Ringhausen	Abstain	
4	Public Utility District No. 1 of Douglas County	Henry E. LuBean		
4	Public Utility District No. 1 of Snohomish County	John D. Martinsen	Abstain	
4	Sacramento Municipal Utility District	Mike Ramirez	Negative	View
4	Seattle City Light	Hao Li	Affirmative	
4	Seminole Electric Cooperative, Inc.	Steven R Wallace		
4	Tacoma Public Utilities	Keith Morisette	Affirmative	
4	Wisconsin Energy Corp.	Anthony Jankowski	Abstain	
5	AEP Service Corp.	Brock Ondayko	Affirmative	View
5	Amerenue	Sam Dwyer		
5	Arizona Public Service Co.	Edward Cambridge	Negative	
5	Avista Corp.	Edward F. Groce	Abstain	
5	BC Hydro and Power Authority	Clement Ma	Abstain	
5	Black Hills Corp	George Tatar	Affirmative	
5	Boise-Kuna Irrigation District/dba Lucky peak power plant project	Mike D Kukla	Affirmative	
5	Bonneville Power Administration	Francis J. Halpin	Affirmative	View

5	BrightSource Energy, Inc.	Chifong Thomas	Affirmative	
5	City and County of San Francisco	Daniel Mason	Abstain	
5	City of Austin dba Austin Energy	Jeanie Doty	Affirmative	View
5	City of Redding	Paul A Cummings	Affirmative	
5	City of Tacoma, Department of Public Utilities, Light Division, dba Tacoma Power	Max Emrick	Abstain	
5	Colorado Springs Utilities	Jennifer Eckels	Affirmative	
5	Consolidated Edison Co. of New York	Wilket (Jack) Ng	Abstain	
5	Consumers Energy	James B Lewis	Negative	View
5	Cowlitz County PUD	Bob Essex	Abstain	
5	Detroit Edison Company	Christy Wicke	Affirmative	
5	Dominion Resources, Inc.	Mike Garton		
5	Duke Energy	Dale Q Goodwine	Affirmative	
5	East Kentucky Power Coop.	Stephen Ricker	Affirmative	
5	Exelon Nuclear	Michael Korchynsky	Affirmative	
5	ExxonMobil Research and Engineering	Martin Kaufman		
5	FirstEnergy Solutions	Kenneth Dresner	Affirmative	
5	Florida Municipal Power Agency	David Schumann	Affirmative	View
5	Great River Energy	Preston L Walsh	Negative	
5	I do not represent an Entity	Bruce Paggeot	Abstain	
5	Indeck Energy Services, Inc.	Rex A Roehl	Negative	
5	JEA	John J Babik	Affirmative	
5	Kansas City Power & Light Co.	Scott Heidtbrink		
5	Kissimmee Utility Authority	Mike Blough	Negative	
5	Lakeland Electric	Jim M Howard	Abstain	

5	Lincoln Electric System	Dennis Florom	Negative	View
5	Los Angeles Department of Water & Power	Kenneth Silver	Affirmative	
5	Luminant Generation Company LLC	Mike Laney	Negative	
5	Manitoba Hydro	S N Fernando	Negative	View
5	MEAG Power	Steven Grego	Affirmative	
5	MidAmerican Energy Co.	Christopher Schneider	Negative	View
5	Muscatine Power & Water	Mike Avesing	Affirmative	
5	Nebraska Public Power District	Don Schmit	Abstain	
5	New York Power Authority	Gerald Mannarino	Affirmative	
5	Northern Indiana Public Service Co.	William O Thompson	Affirmative	
5	Occidental Chemical	Michelle DAntuono	Abstain	
5	Omaha Public Power District	Mahmood Z. Safi	Affirmative	
5	Orlando Utilities Commission	Richard Kinas		
5	Pacific Gas and Electric Company	Richard J. Padilla		
5	PacifiCorp	Sandra L. Shaffer	Abstain	
5	Platte River Power Authority	Pete Ungerman	Negative	View
5	Portland General Electric Co.	Gary L Tingley		
5	PPL Generation LLC	Annette M Bannon	Affirmative	
5	Progress Energy Carolinas	Wayne Lewis	Affirmative	View
5	Proven Compliance Solutions	Mitchell E Needham		
5	PSEG Fossil LLC	Mikhail Falkovich	Abstain	
5	Puget Sound Energy, Inc.	Tom Flynn	Affirmative	
5	Reedy Creek Energy Services	Bernie Budnik		
5	Sacramento Municipal Utility District	Bethany Hunter	Negative	View
5	Salt River Project	Glen Reeves	Affirmative	

5	Santee Cooper	Lewis P Pierce	Affirmative	
5	Seattle City Light	Michael J. Haynes	Affirmative	
5	Seminole Electric Cooperative, Inc.	Brenda K. Atkins	Affirmative	
5	Snohomish County PUD No. 1	Sam Nietfeld	Abstain	
5	Southern California Edison Co.	Denise Yaffe	Affirmative	
5	Southern Company Generation	William D Shultz	Affirmative	
5	Tampa Electric Co.	RJames Rocha	Affirmative	
5	Tenaska, Inc.	Scott M. Helyer	Abstain	
5	Tennessee Valley Authority	David Thompson	Abstain	
5	Tri-State G & T Association, Inc.	Barry Ingold	Negative	
5	U.S. Bureau of Reclamation	Martin Bauer P.E.		
5	Wisconsin Public Service Corp.	Leonard Rentmeester	Abstain	
5	Xcel Energy, Inc.	Liam Noailles		
6	AEP Marketing	Edward P. Cox	Affirmative	View
6	Arizona Public Service Co.	Justin Thompson	Negative	
6	Bonneville Power Administration	Brenda S. Anderson	Affirmative	View
6	City of Redding	Marvin Briggs	Affirmative	
6	Cleco Power LLC	Robert Hirchak	Negative	
6	Colorado Springs Utilities	Lisa C Rosintoski	Affirmative	
6	Consolidated Edison Co. of New York	Nickesha P Carrol	Abstain	
6	Constellation Energy Commodities Group	Brenda Powell	Abstain	
6	Dominion Resources, Inc.	Louis S. Slade	Abstain	
6	Duke Energy Carolina	Walter Yeager	Affirmative	
6	Entergy Services, Inc.	Terri F Benoit	Affirmative	
6	Exelon Power Team	Pulin Shah	Affirmative	

6	FirstEnergy Solutions	Mark S Travaglianti	Affirmative	
6	Florida Municipal Power Agency	Richard L. Montgomery	Affirmative	View
6	Florida Municipal Power Pool	Thomas E Washburn	Negative	View
6	Florida Power & Light Co.	Silvia P. Mitchell	Abstain	
6	Imperial Irrigation District	Cathy Bretz	Affirmative	
6	Kansas City Power & Light Co.	Jessica L Klinghoffer		
6	Lakeland Electric	Paul Shipps	Abstain	
6	Lincoln Electric System	Eric Ruskamp	Negative	View
6	Los Angeles Department of Water & Power	Brad Packer	Abstain	
6	Luminant Energy	Brad Jones	Affirmative	
6	Manitoba Hydro	Daniel Prowse	Negative	View
6	MidAmerican Energy Co.	Dennis Kimm	Abstain	
6	New York Power Authority	William Palazzo	Affirmative	
6	Northern Indiana Public Service Co.	Joseph O'Brien	Affirmative	
6	Omaha Public Power District	David Ried	Affirmative	
6	PacifiCorp	Scott L Smith	Abstain	
6	Platte River Power Authority	Carol Ballantine	Negative	View
6	PPL EnergyPlus LLC	Mark A Heimbach	Affirmative	
6	Progress Energy	John T Sturgeon	Affirmative	View
6	PSEG Energy Resources & Trade LLC	Peter Dolan	Abstain	View
6	Sacramento Municipal Utility District	Claire Warshaw	Negative	View
6	Salt River Project	Steven J Hulet	Abstain	
6	Santee Cooper	Suzanne Ritter	Affirmative	
6	Seattle City Light	Dennis Sismaet	Abstain	
6	Seminole Electric Cooperative, Inc.	Trudy S. Novak	Affirmative	

6	South California Edison Company	Lujuanna Medina	Affirmative	
6	Tacoma Public Utilities	Michael C Hill	Affirmative	
6	Tampa Electric Co.	Benjamin F Smith II	Affirmative	
6	Tennessee Valley Authority	Marjorie S. Parsons	Abstain	
6	Xcel Energy, Inc.	David F. Lemmons		
8		James A Maenner	Abstain	
8		Roger C Zaklukiewicz	Affirmative	
8		Edward C Stein	Affirmative	
8	INTELLIBIND	Kevin Conway	Abstain	
8	JDRJC Associates	Jim D. Cyrulewski	Affirmative	
8	Transmission Strategies, LLC	Bernie M Pasternack	Affirmative	View
8	Utility Services, Inc.	Brian Evans-Mongeon	Abstain	
9	California Energy Commission	William Mitchell Chamberlain	Affirmative	
9	Commonwealth of Massachusetts Department of Public Utilities	Donald E. Nelson	Affirmative	
9	National Association of Regulatory Utility Commissioners	Diane J. Barney	Affirmative	
9	Utah Public Service Commission	Ric Campbell	Affirmative	
10	Florida Reliability Coordinating Council	Linda Campbell		
10	Midwest Reliability Organization	James D Burley	Abstain	
10	New York State Reliability Council	Alan Adamson	Affirmative	
10	Northeast Power Coordinating Council, Inc.	Guy V. Zito	Affirmative	
10	ReliabilityFirst Corporation	Anthony E Jablonski	Negative	View
10	SERC Reliability Corporation	Carter B. Edge	Abstain	
10	Southwest Power Pool Regional Entity	Stacy Dochoda	Affirmative	View

10	Texas Reliability Entity	Larry D. Grimm	Affirmative	
10	Western Electricity Coordinating Council	Steven L. Rueckert	Abstain	View

User Name
Password
Log in
Register

-Ballot Pools
-Current Ballots
-Ballot Results
-Registered Ballot Body
-Proxy Voters

Home Page

Ballot Results

Ballot Name:	Project 2006-02 Assess Transmission Future Needs April 2011_in
Ballot Period:	5/18/2011 - 5/31/2011
Ballot Type:	Initial
Total # Votes:	325
Total Ballot Pool:	353
Quorum:	**92.07 % The Quorum has been reached**
Weighted Segment Vote:	73.99 %
Ballot Results:	**The standard will proceed to recirculation ballot.**

Summary of Ballot Results

Segment	Ballot Pool	Segment Weight	Affirmative # Votes	Affirmative Fraction	Negative # Votes	Negative Fraction	Abstain # Votes	No Vote
1 - Segment 1.	103	1	66	0.759	21	0.241	7	9
2 - Segment 2.	11	1	3	0.273	8	0.727	0	0
3 - Segment 3.	73	1	52	0.8	13	0.2	5	3
4 - Segment 4.	27	1	13	0.813	3	0.188	6	5
5 - Segment 5.	72	1	44	0.746	15	0.254	6	7
6 - Segment 6.	46	1	30	0.732	11	0.268	3	2
7 - Segment 7.	0	0	0	0	0	0	0	0
8 - Segment 8.	8	0.4	4	0.4	0	0	3	1
9 - Segment 9.	4	0.4	4	0.4	0	0	0	0
10 - Segment 10.	9	0.8	7	0.7	1	0.1	0	1
Totals	**353**	**7.6**	**223**	**5.623**	**72**	**1.978**	**30**	**28**

Individual Ballot Pool Results

Segment	Organization	Member	Ballot	Comments
1	Ameren Services	Kirit S. Shah	Negative	View
1	American Electric Power	Paul B. Johnson	Affirmative	View
1	American Transmission Company, LLC	Andrew Z Pusztai	Affirmative	View
1	Arizona Public Service Co.	Robert D Smith	Affirmative	View
1	Associated Electric Cooperative, Inc.	John Bussman	Negative	View
1	Austin Energy	James Armke	Affirmative	
1	Avista Corp.	Scott Kinney	Affirmative	
1	Balancing Authority of Northern California NCR11118	Kevin Smith	Affirmative	

1	BC Hydro and Power Authority	Patricia Robertson	Negative	View
1	Beaches Energy Services	Joseph S. Stonecipher	Negative	View
1	Black Hills Corp	Eric Egge	Affirmative	
1	Bonneville Power Administration	Donald S. Watkins	Affirmative	View
1	Brazos Electric Power Cooperative, Inc.	Tony Kroskey		
1	CenterPoint Energy Houston Electric	Dale G Bodden	Negative	
1	Central Maine Power Company	Kevin L Howes	Negative	
1	City of Tacoma, Department of Public Utilities, Light Division, dba Tacoma Power	Chang G Choi	Affirmative	
1	City of Vero Beach	Randall McCamish	Affirmative	View
1	Clark Public Utilities	Jack Stamper	Affirmative	View
1	Colorado Springs Utilities	Paul Morland	Affirmative	
1	Consolidated Edison Co. of New York	Christopher L de Graffenried	Negative	View
1	Dairyland Power Coop.	Robert W. Roddy	Affirmative	
1	Dayton Power & Light Co.	Hertzel Shamash	Affirmative	
1	Deseret Power	James Tucker	Affirmative	
1	Dominion Virginia Power	Michael S Crowley	Affirmative	
1	Duke Energy Carolina	Douglas E. Hils	Affirmative	
1	East Kentucky Power Coop.	George S. Carruba	Affirmative	
1	Empire District Electric Co.	Ralph Frederick Meyer		
1	Entergy Services, Inc.	Edward J Davis	Affirmative	View
1	FirstEnergy Energy Delivery	Robert Martinko	Affirmative	
1	Florida Keys Electric Cooperative Assoc.	Dennis Minton	Negative	
1	Gainesville Regional Utilities	Luther E. Fair	Affirmative	View
1	GDS Associates, Inc.	Claudiu Cadar	Negative	View
1	Georgia Transmission Corporation	Harold Taylor, II	Affirmative	View
1	Grand River Dam Authority	James M Stafford		
1	Great River Energy	Gordon Pietsch		
1	Hoosier Energy Rural Electric Cooperative, Inc.	Robert Solomon	Affirmative	
1	Hydro One Networks, Inc.	Ajay Garg	Negative	View
1	Hydro-Quebec TransEnergie	Bernard Pelletier	Negative	View
1	Idaho Power Company	Ronald D. Schellberg	Affirmative	
1	Imperial Irrigation District	Tino Zaragoza	Affirmative	View
1	International Transmission Company Holdings Corp	Michael Moltane	Affirmative	View
1	Kansas City Power & Light Co.	Michael Gammon		
1	Keys Energy Services	Stan T. Rzad	Affirmative	View
1	Lake Worth Utilities	Walt Gill	Affirmative	
1	Lakeland Electric	Larry E Watt	Negative	View
1	Lee County Electric Cooperative	John W Delucca	Affirmative	
1	Lincoln Electric System	Doug Bantam		
1	Lone Star Transmission, LLC	Julius Horvath	Affirmative	
1	Long Island Power Authority	Robert Ganley	Abstain	
1	Los Angeles Department of Water & Power	Ly M Le	Affirmative	
1	Lower Colorado River Authority	Martyn Turner	Affirmative	View
1	Manitoba Hydro	Joe D Petaski	Negative	View
1	MEAG Power	Danny Dees	Affirmative	
1	Mid-Continent Area Power Pool	Larry E. Brusseau	Abstain	
1	MidAmerican Energy Co.	Terry Harbour	Affirmative	View
1	Minnkota Power Coop. Inc.	Richard Burt	Affirmative	
1	National Grid	Saurabh Saksena	Affirmative	View
1	Nevada Power Co.	James McMorran		
1	New Brunswick Power Transmission Corporation	Randy MacDonald	Negative	View
1	New York Power Authority	Arnold J. Schuff	Affirmative	
1	New York State Electric & Gas Corp.	Raymond P Kinney		
1	Northeast Utilities	David H. Boguslawski	Negative	View
1	Northern Indiana Public Service Co.	Kevin M Largura	Affirmative	
1	NorthWestern Energy	John Canavan	Affirmative	
1	Ohio Valley Electric Corp.	Robert Mattey	Affirmative	
1	Oklahoma Gas and Electric Co.	Marvin E VanBebber	Abstain	
1	Omaha Public Power District	Douglas G Peterchuck	Affirmative	
1	Orlando Utilities Commission	Brad Chase	Affirmative	
1	Pacific Gas and Electric Company	Bangalore Vijayraghavan	Affirmative	
1	PacifiCorp	Colt Norrish		
1	PECO Energy	Ronald Schloendorn	Affirmative	
1	Platte River Power Authority	John C. Collins	Negative	View

1	Portland General Electric Co.	Frank F. Afranji	Affirmative	
1	Potomac Electric Power Co.	David Thorne	Affirmative	
1	PowerSouth Energy Cooperative	Larry D. Avery	Affirmative	
1	PPL Electric Utilities Corp.	Brenda L Truhe	Affirmative	
1	Progress Energy Carolinas	Sammy Roberts	Affirmative	View
1	Public Service Electric and Gas Co.	Kenneth D. Brown	Affirmative	
1	Public Utility District No. 1 of Chelan County	Chad Bowman	Affirmative	View
1	Public Utility District No. 1 of Okanogan County	Dale Dunckel	Abstain	
1	Puget Sound Energy, Inc.	Denise M Lietz	Affirmative	
1	Rochester Gas and Electric Corp.	John C. Allen	Negative	View
1	Sacramento Municipal Utility District	Tim Kelley	Affirmative	
1	Salt River Project	Robert Kondziolka	Affirmative	View
1	San Diego Gas & Electric	Will Speer	Abstain	View
1	Santee Cooper	Terry L. Blackwell	Affirmative	
1	SCE&G	Henry Delk, Jr.	Affirmative	
1	Seattle City Light	Pawel Krupa	Affirmative	
1	Sierra Pacific Power Co.	Rich Salgo	Affirmative	View
1	South Texas Electric Cooperative	Richard McLeon	Negative	
1	Southern California Edison Co.	Dana Cabbell	Affirmative	
1	Southern Company Services, Inc.	Robert A Schaffeld	Affirmative	
1	Southern Illinois Power Coop.	William G. Hutchison	Abstain	
1	Southwest Transmission Cooperative, Inc.	James L. Jones	Affirmative	
1	Sunflower Electric Power Corporation	Noman Lee Williams	Affirmative	
1	Tampa Electric Co.	Beth Young	Affirmative	
1	Tennessee Valley Authority	Larry Akens	Negative	View
1	Tri-State G & T Association, Inc.	Tracy Sliman	Affirmative	View
1	Tucson Electric Power Co.	John Tolo	Negative	View
1	United Illuminating Co.	Jonathan Appelbaum	Affirmative	
1	Westar Energy	Allen Klassen	Abstain	
1	Western Area Power Administration	Brandy A Dunn	Negative	View
1	Xcel Energy, Inc.	Gregory L Pieper	Affirmative	
2	Alberta Electric System Operator	Mark B Thompson	Affirmative	View
2	BC Hydro	Venkataramakrishnan Vinnakota	Negative	View
2	California ISO	Richard K Vine	Affirmative	
2	Electric Reliability Council of Texas, Inc.	Chuck B Manning	Negative	View
2	Independent Electricity System Operator	Kim Warren	Negative	View
2	ISO New England, Inc.	Kathleen Goodman	Negative	View
2	Midwest ISO, Inc.	Marie Knox	Negative	View
2	New Brunswick System Operator	Alden Briggs	Negative	View
2	New York Independent System Operator	Gregory Campoli	Negative	View
2	PJM Interconnection, L.L.C.	Tom Bowe	Affirmative	
2	Southwest Power Pool	Charles H Yeung	Negative	
3	Alabama Power Company	Richard J. Mandes	Affirmative	
3	Ameren Services	Mark Peters		
3	APS	Steven Norris	Affirmative	View
3	Atlantic City Electric Company	NICOLE BUCKMAN	Affirmative	
3	Avista Corp.	Robert Lafferty	Affirmative	
3	Bandera Electric Cooperative	Brian D Bartos	Negative	
3	BC Hydro and Power Authority	Pat G. Harrington	Negative	View
3	Bonneville Power Administration	Rebecca Berdahl	Affirmative	View
3	City of Austin dba Austin Energy	Andrew Gallo	Affirmative	
3	City of Green Cove Springs	Gregg R Griffin	Affirmative	View
3	City of Redding	Bill Hughes	Affirmative	
3	Clatskanie People's Utility District	Brian Fawcett	Abstain	
3	Cleco Corporation	Michelle A Corley	Negative	
3	Colorado Springs Utilities	Lisa Cleary	Affirmative	
3	ComEd	Bruce Krawczyk	Affirmative	
3	Consolidated Edison Co. of New York	Peter T Yost	Negative	View
3	Consumers Energy	David A. Lapinski	Negative	View
3	Cowlitz County PUD	Russell A Noble	Abstain	
3	Delmarva Power & Light Co.	Michael R. Mayer	Affirmative	
3	Detroit Edison Company	Kent Kujala	Affirmative	
3	Dominion Resources Services	Michael F Gildea	Affirmative	
3	Duke Energy Carolina	Henry Ernst-Jr	Affirmative	
3	East Kentucky Power Coop.	Sally Witt	Affirmative	
3	Entergy	Joel T Plessinger	Affirmative	

3	FirstEnergy Solutions	Kevin Querry	Affirmative	
3	Florida Power and Light / NextEra Energy	Chantel Haswell	Abstain	
3	Florida Power Corporation	Lee Schuster	Affirmative	View
3	Gainesville Regional Utilities	Kenneth Simmons	Affirmative	
3	Georgia Power Company	Anthony L Wilson	Affirmative	
3	Georgia Systems Operations Corporation	William N Phinney	Abstain	
3	Grays Harbor PUD	Wesley W Gray	Affirmative	
3	Great River Energy	Sam Kokkinen	Negative	
3	Gulf Power Company	Paul C Caldwell	Affirmative	
3	Hydro One Networks, Inc.	David L Kiguel	Negative	View
3	Imperial Irrigation District	Jesus S. Alcaraz	Affirmative	View
3	JEA	Garry Baker	Affirmative	
3	Kansas City Power & Light Co.	Charles Locke		
3	Kissimmee Utility Authority	Gregory David Woessner	Negative	
3	Lakeland Electric	Mace Hunter	Abstain	
3	Lincoln Electric System	Bruce Merrill	Affirmative	
3	Louisville Gas and Electric Co.	Charles A. Freibert	Affirmative	
3	Manitoba Hydro	Greg C. Parent	Negative	View
3	MidAmerican Energy Co.	Thomas C. Mielnik	Affirmative	View
3	Mississippi Power	Don Horsley	Affirmative	
3	Municipal Electric Authority of Georgia	Steven M. Jackson	Affirmative	
3	Muscatine Power & Water	John S Bos	Affirmative	
3	Nebraska Public Power District	Tony Eddleman	Negative	View
3	New York Power Authority	Marilyn Brown	Affirmative	
3	Niagara Mohawk (National Grid Company)	Michael Schiavone	Affirmative	
3	Northern Indiana Public Service Co.	William SeDoris	Affirmative	
3	Omaha Public Power District	Blaine R. Dinwiddie	Affirmative	
3	Orlando Utilities Commission	Ballard Keith Mutters	Affirmative	
3	Owensboro Municipal Utilities	Thomas T Lyons	Affirmative	
3	Pacific Gas and Electric Company	John H Hagen	Affirmative	View
3	PacifiCorp	John Apperson	Affirmative	
3	Platte River Power Authority	Terry L Baker	Negative	View
3	Potomac Electric Power Co.	Robert Reuter	Affirmative	
3	Progress Energy Carolinas	Sam Waters	Affirmative	View
3	Public Service Electric and Gas Co.	Jeffrey Mueller	Affirmative	
3	Public Utility District No. 1 of Chelan County	Kenneth R. Johnson	Affirmative	
3	Public Utility District No. 2 of Grant County	Greg Lange	Affirmative	
3	Sacramento Municipal Utility District	James Leigh-Kendall	Affirmative	
3	Salt River Project	John T. Underhill	Affirmative	View
3	Santee Cooper	James M Poston	Affirmative	
3	Seattle City Light	Dana Wheelock	Affirmative	
3	Seminole Electric Cooperative, Inc.	James R Frauen	Affirmative	
3	South Carolina Electric & Gas Co.	Hubert C Young	Affirmative	
3	Southern California Edison Co.	David Schiada	Affirmative	
3	Tacoma Public Utilities	Travis Metcalfe	Affirmative	
3	Tampa Electric Co.	Ronald L Donahey	Affirmative	
3	Tennessee Valley Authority	Ian S Grant	Negative	View
3	Tri-State G & T Association, Inc.	Janelle Marriott	Negative	View
3	Xcel Energy, Inc.	Michael Ibold		
4	American Municipal Power	Kevin Koloini	Abstain	
4	Blue Ridge Power Agency	Duane S Dahlquist		
4	Central Lincoln PUD	Shamus J Gamache		
4	City of New Smyrna Beach Utilities Commission	Timothy Beyrle	Affirmative	
4	City of Redding	Nicholas Zettel	Affirmative	
4	City Utilities of Springfield, Missouri	John Allen	Negative	View
4	Consumers Energy	David Frank Ronk	Negative	View
4	Cowlitz County PUD	Rick Syring	Abstain	
4	Detroit Edison Company	Daniel Herring	Affirmative	
4	Florida Municipal Power Agency	Frank Gaffney	Affirmative	View
4	Fort Pierce Utilities Authority	Thomas W. Richards	Affirmative	View
4	Georgia System Operations Corporation	Guy Andrews	Abstain	
4	Imperial Irrigation District	Diana U Torres	Affirmative	
4	Integrys Energy Group, Inc.	Christopher Plante	Abstain	
4	LaGen	Richard Comeaux	Abstain	
4	Madison Gas and Electric Co.	Joseph G. DePoorter	Affirmative	View
4	Modesto Irrigation District	Spencer Tacke	Negative	View

4	Ohio Edison Company	Douglas Hohlbaugh	Affirmative	
4	Old Dominion Electric Coop.	Mark Ringhausen	Affirmative	
4	Public Utility District No. 1 of Douglas County	Henry E. LuBean		
4	Public Utility District No. 1 of Snohomish County	John D. Martinsen	Affirmative	View
4	Sacramento Municipal Utility District	Mike Ramirez	Affirmative	
4	Seattle City Light	Hao Li	Affirmative	
4	Seminole Electric Cooperative, Inc.	Steven R Wallace		
4	South Mississippi Electric Power Association	Steve McElhaney		
4	Tacoma Public Utilities	Keith Morisette	Affirmative	
4	Wisconsin Energy Corp.	Anthony Jankowski	Abstain	
5	AEP Service Corp.	Brock Ondayko	Affirmative	View
5	Amerenue	Sam Dwyer	Negative	
5	Arizona Public Service Co.	Edward Cambridge	Negative	View
5	Avista Corp.	Edward F. Groce	Affirmative	
5	BC Hydro and Power Authority	Clement Ma	Negative	View
5	Black Hills Corp	George Tatar	Affirmative	
5	Boise-Kuna Irrigation District/dba Lucky peak power plant project	Mike D Kukla	Affirmative	
5	Bonneville Power Administration	Francis J. Halpin	Affirmative	View
5	BrightSource Energy, Inc.	Chifong Thomas	Affirmative	
5	City and County of San Francisco	Daniel Mason	Abstain	
5	City of Austin dba Austin Energy	Jeanie Doty	Affirmative	View
5	City of Redding	Paul A Cummings	Affirmative	
5	City of Tacoma, Department of Public Utilities, Light Division, dba Tacoma Power	Max Emrick	Affirmative	
5	Colorado Springs Utilities	Jennifer Eckels	Affirmative	
5	Consolidated Edison Co. of New York	Wilket (Jack) Ng	Negative	View
5	Consumers Energy	James B Lewis	Negative	View
5	Cowlitz County PUD	Bob Essex	Abstain	
5	Detroit Edison Company	Christy Wicke	Affirmative	
5	Dominion Resources, Inc.	Mike Garton		
5	Duke Energy	Dale Q Goodwine	Affirmative	
5	East Kentucky Power Coop.	Stephen Ricker	Affirmative	
5	Exelon Nuclear	Michael Korchynsky	Affirmative	
5	ExxonMobil Research and Engineering	Martin Kaufman		
5	FirstEnergy Solutions	Kenneth Dresner	Affirmative	
5	Florida Municipal Power Agency	David Schumann	Affirmative	View
5	Great River Energy	Preston L Walsh	Negative	
5	I do not represent an Entity	Bruce Paggeot	Abstain	
5	Indeck Energy Services, Inc.	Rex A Roehl	Abstain	
5	JEA	John J Babik	Affirmative	
5	Kansas City Power & Light Co.	Scott Heidtbrink		
5	Kissimmee Utility Authority	Mike Blough	Negative	
5	Lakeland Electric	Jim M Howard	Affirmative	
5	Lincoln Electric System	Dennis Florom	Affirmative	
5	Los Angeles Department of Water & Power	Kenneth Silver	Affirmative	
5	Lower Colorado River Authority	Tom Foreman	Affirmative	View
5	Luminant Generation Company LLC	Mike Laney	Negative	View
5	Manitoba Hydro	S N Fernando	Negative	View
5	MEAG Power	Steven Grego	Affirmative	
5	MidAmerican Energy Co.	Christopher Schneider	Negative	View
5	Muscatine Power & Water	Mike Avesing	Affirmative	View
5	Nebraska Public Power District	Don Schmit	Negative	View
5	New York Power Authority	Gerald Mannarino	Affirmative	
5	Northern Indiana Public Service Co.	William O Thompson	Affirmative	
5	Occidental Chemical	Michelle DAntuono	Abstain	
5	Omaha Public Power District	Mahmood Z. Safi	Affirmative	
5	Orlando Utilities Commission	Richard Kinas	Affirmative	
5	Pacific Gas and Electric Company	Richard J. Padilla		
5	PacifiCorp	Sandra L. Shaffer	Affirmative	
5	Platte River Power Authority	Pete Ungerman	Negative	View
5	Portland General Electric Co.	Gary L Tingley	Affirmative	
5	PPL Generation LLC	Annette M Bannon	Affirmative	
5	Progress Energy Carolinas	Wayne Lewis	Affirmative	View
5	Proven Compliance Solutions	Mitchell E Needham		
5	PSEG Fossil LLC	Mikhail Falkovich	Affirmative	
5	Puget Sound Energy, Inc.	Tom Flynn	Affirmative	

5	Reedy Creek Energy Services	Bernie Budnik		
5	Sacramento Municipal Utility District	Bethany Hunter	Affirmative	
5	Salt River Project	Glen Reeves	Affirmative	
5	Santee Cooper	Lewis P Pierce	Affirmative	
5	Seattle City Light	Michael J. Haynes	Affirmative	
5	Seminole Electric Cooperative, Inc.	Brenda K. Atkins	Affirmative	
5	Snohomish County PUD No. 1	Sam Nietfeld	Affirmative	View
5	Southern California Edison Co.	Denise Yaffe	Affirmative	
5	Southern Company Generation	William D Shultz	Affirmative	
5	Tampa Electric Co.	RJames Rocha	Affirmative	
5	Tenaska, Inc.	Scott M. Helyer	Affirmative	
5	Tennessee Valley Authority	David Thompson	Negative	View
5	Tri-State G & T Association, Inc.	Barry Ingold	Negative	
5	U.S. Army Corps of Engineers	Melissa Kurtz	Affirmative	
5	U.S. Bureau of Reclamation	Martin Bauer P.E.		
5	Wisconsin Public Service Corp.	Leonard Rentmeester	Abstain	
5	Xcel Energy, Inc.	Liam Noailles	Negative	View
6	AEP Marketing	Edward P. Cox	Affirmative	View
6	Arizona Public Service Co.	Justin Thompson	Affirmative	
6	Bonneville Power Administration	Brenda S. Anderson	Affirmative	View
6	City of Redding	Marvin Briggs	Affirmative	
6	Cleco Power LLC	Robert Hirchak	Negative	
6	Colorado Springs Utilities	Lisa C Rosintoski	Affirmative	
6	Consolidated Edison Co. of New York	Nickesha P Carrol	Negative	View
6	Constellation Energy Commodities Group	Brenda Powell	Abstain	
6	Dominion Resources, Inc.	Louis S. Slade	Affirmative	
6	Duke Energy Carolina	Walter Yeager	Affirmative	
6	Entergy Services, Inc.	Terri F Benoit	Affirmative	View
6	Eugene Water & Electric Board	Daniel Mark Bedbury		
6	Exelon Power Team	Pulin Shah	Affirmative	
6	FirstEnergy Solutions	Mark S Travaglianti	Affirmative	
6	Florida Municipal Power Agency	Richard L. Montgomery	Affirmative	View
6	Florida Municipal Power Pool	Thomas E Washburn	Negative	View
6	Florida Power & Light Co.	Silvia P. Mitchell	Abstain	
6	Imperial Irrigation District	Cathy Bretz	Affirmative	
6	Kansas City Power & Light Co.	Jessica L Klinghoffer		
6	Lakeland Electric	Paul Shipps	Affirmative	
6	Lincoln Electric System	Eric Ruskamp	Affirmative	
6	Los Angeles Department of Water & Power	Brad Packer	Affirmative	
6	Luminant Energy	Brad Jones	Negative	View
6	Manitoba Hydro	Daniel Prowse	Negative	View
6	MidAmerican Energy Co.	Dennis Kimm	Abstain	
6	New York Power Authority	William Palazzo	Affirmative	
6	Northern Indiana Public Service Co.	Joseph O'Brien	Affirmative	View
6	Omaha Public Power District	David Ried	Affirmative	
6	Orlando Utilities Commission	Claston Augustus Sunanon	Affirmative	
6	PacifiCorp	Scott L Smith	Affirmative	
6	Platte River Power Authority	Carol Ballantine	Negative	View
6	Powerex Corp.	Daniel W. O'Hearn	Negative	View
6	PPL EnergyPlus LLC	Mark A Heimbach	Affirmative	
6	Progress Energy	John T Sturgeon	Affirmative	View
6	PSEG Energy Resources & Trade LLC	Peter Dolan	Affirmative	View
6	Sacramento Municipal Utility District	Claire Warshaw	Affirmative	
6	Salt River Project	Steven J Hulet	Affirmative	View
6	Santee Cooper	Suzanne Ritter	Affirmative	
6	Seattle City Light	Dennis Sismaet	Affirmative	
6	Seminole Electric Cooperative, Inc.	Trudy S. Novak	Affirmative	
6	South California Edison Company	Lujuanna Medina	Affirmative	
6	Tacoma Public Utilities	Michael C Hill	Negative	
6	Tampa Electric Co.	Benjamin F Smith II	Affirmative	
6	Tennessee Valley Authority	Marjorie S. Parsons	Negative	View
6	Western Area Power Administration - UGP Marketing	Peter H Kinney	Negative	View
6	Xcel Energy, Inc.	David F. Lemmons	Negative	View
8		James A Maenner	Abstain	View
8		Roger C Zaklukiewicz	Affirmative	
8		Edward C Stein	Affirmative	

8	INTELLIBIND	Kevin Conway	Abstain	
8	JDRJC Associates	Jim D. Cyrulewski	Affirmative	
8	Transmission Strategies, LLC	Bernie M Pasternack	Affirmative	View
8	Utility Services, Inc.	Brian Evans-Mongeon	Abstain	
8	Volkmann Consulting, Inc.	Terry Volkmann		
9	California Energy Commission	William Mitchell Chamberlain	Affirmative	
9	Commonwealth of Massachusetts Department of Public Utilities	Donald E. Nelson	Affirmative	
9	National Association of Regulatory Utility Commissioners	Diane J. Barney	Affirmative	
9	Utah Public Service Commission	Ric Campbell	Affirmative	
10	Florida Reliability Coordinating Council	Linda Campbell		
10	Midwest Reliability Organization	James D Burley	Affirmative	
10	New York State Reliability Council	Alan Adamson	Negative	View
10	Northeast Power Coordinating Council, Inc.	Guy V. Zito	Affirmative	View
10	ReliabilityFirst Corporation	Anthony E Jablonski	Affirmative	View
10	SERC Reliability Corporation	Carter B. Edge	Affirmative	
10	Southwest Power Pool Regional Entity	Stacy Dochoda	Affirmative	
10	Texas Reliability Entity	Larry D. Grimm	Affirmative	
10	Western Electricity Coordinating Council	Steven L. Rueckert	Affirmative	View

Legal and Privacy : 609.452.8060 voice : 609.452.9550 fax : 116-390 Village Boulevard : Princeton, NJ 08540-5721
Washington Office: 1120 G Street, N.W. : Suite 990 : Washington, DC 20005-3801

Account Log-In/Register

Copyright © 2010 by the North American Electric Reliability Corporation. : All rights reserved.
A New Jersey Nonprofit Corporation

NERC
NORTH AMERICAN ELECTRIC RELIABILITY CORPORATION

Standards Announcement

Project 2006-02 Assess Transmission Future Needs
Successive Ballot and Non-binding Poll Results

Now available at: https://standards.nerc.net/Ballots.aspx

A successive ballot on revisions to TPL-001-2 Transmission System Planning Performance Requirements, and a concurrent non-binding poll of associated VRFs and VSLs, concluded on May 31, 2011. The standard was approved by the ballot pool with an approval rating of 73.99% and a quorum of 92.07%.

Ballot Results for Revisions to TPL-001-2

Voting statistics are listed below, and the Ballot Results Web page provides a link to the detailed results:
Quorum: 92.07 %
Approval: 73.99 %

Non-binding Poll Results for Associated VRF and VSLs

Of those who registered to participate, 86.79% provided an opinion; 71.9% of those who provided an opinion indicated support for the VRFs and VSLs that were proposed.

Next Steps

The drafting team will consider all comments received during the formal comment period, ballot, and non-binding poll, and will determine whether to make additional changes to the standard and its implementation plan and associated VRFs and VSLs. If the team makes substantive changes to address issues raised in comments, an additional 30-day formal comment period will be conducted with a successive ballot during the last ten days of the comment period. If the team makes only minor clarifying changes to address issues identified in comments, a recirculation ballot may be conducted.

Background:

TPL-001-2 is designed to be a single, comprehensive, and coordinated standard that merges the requirements of four existing standards: TPL-001-0, TPL-002-0, TPL-003-0, and TPL-004-0. The proposed standard includes several new definitions. The purpose of the proposed standard is to establish transmission system planning performance requirements within the planning horizon to develop a bulk electric system that will operate reliably over a broad spectrum of system conditions and following a wide range of probable contingencies.

The AFTN SDT solicited comments from the industry on the fifth posting of the revised TPL-001-2 through an informal comment period that ended on September 2, 2010. The team revised the standard in response to comments received, and posted Draft 6 for information, while awaiting the outcome of Project 2010-11 TPL Table 1 (footnote 'b'). The revisions to Table 1 footnote 'b' have been approved by the NERC Board of Trustees and filed with FERC. The AFTN SDT adopted the technical tenets of the final solution for footnote 'b' for inclusion in TPL-001-2.
Additional information about this project is available on the project page at:

http://www.nerc.com/filez/standards/Assess-Transmission-Future-Needs.html.

Standards Process

The Standard Processes Manual contains all the procedures governing the standards development process. The success of the NERC standards development process depends on stakeholder participation. We extend our thanks to all those who participate.

For more information or assistance, please contact Monica Benson, Standards Process Administrator, at monica.benson@nerc.net or at 404-446-2560.

North American Electric Reliability Corporation
116-390 Village Blvd.
Princeton, NJ 08540
609.452.8060 | www.nerc.com

NERC
NORTH AMERICAN ELECTRIC RELIABILITY CORPORATION

Consideration of Comments on Assess Transmission Future Needs and Develop Transmission Plans — Project 2006-02

The Assess Transmission Future Needs and Develop Transmission Plans Drafting Team thanks all commenters who submitted comments on the 6th draft of the TPL-001-2 standard for Assess Transmission Future Needs (Project 2006-02). These standards and associated documents were posted for a 45-day public comment period from April 18, 2011 through May 31, 2011. Stakeholders were asked to provide feedback on the standards and associated documents through a special electronic comment form. There were 43 sets of comments, including comments from approximately 78 different people and approximately 69 companies representing 8 of the 10 Industry Segments as shown in the table on the following pages.

No changes were made to the text of any Requirement. The SDT made several changes in response to comments submitted during the formal comment period and successive ballot that ended May 31, 2011.

- The 5th and 6th bullets of the Data Retention section to make the language in the data retention statements consistent with the language in the requirements.
- The third part of the Severe VSL for Requirement R1 to make the language consistent with the requirement.
- The VSL for Requirement R8 to make the language consistent with the language in the requirement.
- The Effective Date section of the Implementation Plan to make the language consistent with the language in the Effective Date section in the proposed TPL-001-2.
- The bullets in Requirement R3, Part 3.3.1 were replaced with numbers because the bullets were inconsistent with NERC's protocol on the use of bullets in Requirements.
- The bullets in Requirement R4, Part 4.3.1 were replaced with numbers because the bullets were inconsistent with NERC's protocol on the use of bullets in Requirements.

The SDT is requesting that this project be moved to the recirculation ballot stage.

All comments submitted may be reviewed in their original format on the standard's project page:

http://www.nerc.com/filez/standards/Assess-Transmission-Future-Needs.html

If you feel that your comment has been overlooked, please let us know immediately. Our goal is to give every comment serious consideration in this process! If you feel there has been an error or omission, you can contact the Vice President and Director of Standards, Herb Schrayshuen, at 609-452-8060 or at herb.schrayshuen@nerc.net. In addition, there is a NERC Reliability Standards Appeals Process.[1]

[1] The appeals process is in the Reliability Standards Development Procedures: http://www.nerc.com/standards/newstandardsprocess.html.

Index to Questions, Comments, and Responses

1. The SDT has made revisions to the requirements language of TPL-001-2 based on industry comments and the Quality Review. Do you agree with these changes? If you do not support these changes or you agree in general but feel that alternative language would be more appropriate, please provide specific suggestions in your comments with clear indications as to which requirement you are commenting on. …..... 10
2. The SDT has made revisions to the VRF and VSL of TPL-001-2 which will be part of a non-binding poll with this posting based on industry comments and the Quality Review. Do you agree with these changes? If you do not support these changes or you agree in general but feel that alternative language would be more appropriate, please provide specific suggestions in your comments. …..... 39
3. If you have any other comments on this Standard that you have not already provided in response to the prior questions, please provide them here. …..... 54

The Industry Segments are:

1 — Transmission Owners
2 — RTOs, ISOs
3 — Load-serving Entities
4 — Transmission-dependent Utilities
5 — Electric Generators
6 — Electricity Brokers, Aggregators, and Marketers
7 — Large Electricity End Users
8 — Small Electricity End Users
9 — Federal, State, Provincial Regulatory or other Government Entities
10 — Regional Reliability Organizations, Regional Entities

Group/Individual		Commenter	Organization	Registered Ballot Body Segment									
				1	2	3	4	5	6	7	8	9	10
1.	Group	Charles W. Long	SERC Planning Standards Subcommittee	X									X

	Additional Member	Additional Organization	Region	Segment Selection
1.	Pat Huntley	SERC Reliability Corporation	SERC	10
2.	Bob Jones	Southern Company Services	SERC	1
3.	Darrin Church	Tennessee Valley Authority	SERC	1
4.	Phil Kleckley	South Carolina Electric & Gas Co.	SERC	1
5.	John Sullivan	Ameren Services Co.	SERC	1
6.	Charles Long	Entergy Services, Inc.	SERC	1

2.	Group	Guy Zito	Northeast Power Coordinating Council										X

	Additional Member	Additional Organization	Region	Segment Selection
1.	Alan Adamson	New York State Reliability Council, LLC	NPCC	10
2.	Gregory Campoli	New York Independent System Operator	NPCC	2
3.	Kurtis Chong	Independent Electricity System Operator	NPCC	2
4.	Sylvain Clermont	Hydro-Quebec TransEnergie	NPCC	1

Group/Individual		Commenter	Organization		Registered Ballot Body Segment									
					1	2	3	4	5	6	7	8	9	10
5.	Chris de Graffenried	Consolidated Edison Co. of New York, Inc.	NPCC	1										
6.	Gerry Dunbar	Northeast Power Coordinating Council	NPCC	10										
7.	Brian Evans-Mongeon	Utility Services	NPCC	8										
8.	Mike Garton	Dominion Resources Services, Inc.	NPCC	5										
9.	Brian L. Gooder	Ontario Power Generation Incorporated	NPCC	5										
10.	Kathleen Goodman	ISO - New England	NPCC	2										
11.	Chantel Haswell	FPL Group, Inc.	NPCC	5										
12.	David Kiguel	Hydro One Networks Inc.	NPCC	1										
13.	Michael R. Lombardi	Northeast Utilities	NPCC	1										
14.	Randy MacDonald	Nerw Brunswick Power Transmission	NPCC	1										
15.	Bruce Metruck	New York Power Authority	NPCC	6										
16.	Lee Pedowicz	Northeast Power Coordinating Council	NPCC	10										
17.	Robert Pellegrini	The United Illuminating Company	NPCC	1										
18.	Si Truc Phan	Hydro-Quebec TransEnergie	NPCC	1										
19.	Saurabh Saksena	National Grid	NPCC	1										
20.	Michael Schiavone	National Grid	NPCC	1										
21.	Wayne Sipperly	New York Power Authority	NPCC	5										
22.	Donald Weaver	New Brunswick System Operator	NPCC	1										
23.	Ben Wu	Orange and Rockland Utilities	NPCC	1										
24.	Peter Yost	Consolidated Edison Co. of New York, Inc.	NPCC	3										
3.	Group	Jonathan Hayes	SPP Reliability Standards Development Team		X	X	X	X	X					

	Additional Member	Additional Organization	Region	Segment Selection
1.	Charles Yeung	SPP	SPP	2
2.	John Allen	City Utilities of Springfield	SPP	1, 4
3.	John Fulton	Xcel Energy	SPP	1, 3, 5
4.	Mark Hamilton	Oklahoma Gas & Electric	SPP	1, 3, 5
5.	Michelle Corley	CLECO	SPP	1, 3, 5

Group/Individual	Commenter	Organization	Registered Ballot Body Segment									
			1	2	3	4	5	6	7	8	9	10
6. Nathan McNeil	Midwest Energy	SPP 1, 3										
7. Tony Gott	Associated Electric Coop, Inc	SERC 1, 3, 5										
8. Matt Bordelon	CLECO	SPP 1, 3, 5										
9. Valerie Pinamonti	American Electric Power	SPP 1, 3, 5										
4. Group	Denise Koehn	Bonneville Power Administration	X		X		X	X				
Additional Member	**Additional Organization**	**Region**	**Segment Selection**									
1. Berhanu Tesema	BPA, Transmission Planning	WECC	1									
2. Chuck Matthews	BPA, Transmission Planning	WECC	1									
3. Kyle Kohne	BPA, Transmission Planning	WECC	1									
4. Patrick Rochelle	BPA, Transmission Planning	WECC	1									
5. Kendall Rydell	BPA, Transmission Planning	WECC	1									
5. Group	Carol Gerou	MRO's NERC Standards Review Forum										X
Additional Member	**Additional Organization**	**Region**	**Segment Selection**									
1. Mahmood Safi	Omaha Public Utility District	MRO	1, 3, 5, 6									
2. Chuck Lawrence	American Transmission Company	MRO	1									
3. Tom Webb	Wisconsin Public Service Corporation	MRO	3, 4, 5, 6									
4. Jodi Jenson	Western Area Power Administration	MRO	1, 6									
5. Ken Goldsmith	Alliant Energy	MRO	4									
6. Alice Ireland	Xcel Energy	MRO	1, 3, 5, 6									
7. Dave Rudolph	Basin Electric Power Cooperative	MRO	1, 3, 5, 6									
8. Eric Ruskamp	Lincoln Electric System	MRO	1, 3, 5, 6									
9. Joe DePoorter	Madison Gas & Electric	MRO	3, 4, 5, 6									
10. Scott Nickels	Rochester Public Utilties	MRO	4									
11. Terry Harbour	MidAmerican Energy Company	MRO	1, 3, 5, 6									
12. Marie Knox	Midwest ISO Inc.	MRO	2									
13. Lee Kittelson	Otter Tail Power Company	MRO										
14. Scott Bos	Muscatine Power & Water	MRO										

Group/Individual		Commenter	Organization		Registered Ballot Body Segment									
					1	2	3	4	5	6	7	8	9	10
15.	Tony Eddleman	Nebraska Public Power District	MRO	1, 3, 5										
16.	Mike Brytowski	Great River Energy	MRO	1, 3, 5, 6										
17.	Richard Burt	Minnkota Power Cooperative, Inc.	MRO	1, 3, 5, 6										
6.	Group	Patricia Robertson	BC Hydro		X									
	Additional Member	Additional Organization	Region	Segment Selection										
1.	Venkataramakrishnan Vinnakota	BC Hydro	WECC	2										
2.	Pat Harrington	BC Hydro	WECC	3										
3.	Clement Ma	BC Hydro	WECC	5										
4.	Daniel O'Hearn	BC Hydro	WECC	6										
7.	Group	Ed Davis	Entergy Services		X		X		X	X				
	Additional Member	Additional Organization	Region	Segment Selection										
1.	Stan Jaskot	Entergy Services	SERC	5										
2.	Terry Benoit	Entergy Services	SERC	6										
3.	Joel Plessinger	Entergy Services	SERC	3										
4.	Ed Davis	Entergy Services	SERC	1										
8.	Group	Brandy A. Dunn	Western Area Power Administration		X					X				
	Additional Member	Additional Organization	Region	Segment Selection										
1.	Pete Kinney	Western Area Power Administration	MRO	6										
9.	Group	Sammy Alcaraz	Imperial Irrigation District		X		X	X		X				
	Additional Member	Additional Organization	Region	Segment Selection										
1.	David Barajas		WECC											
2.	Marcela Caballero		WECC											
3.	Tino Zaragoza		WECC	1										
4.	Jesus Alcaraz		WECC	3										
5.	Diana Torres		WECC	4										

Group/Individual		Commenter	Organization	Registered Ballot Body Segment									
				1	2	3	4	5	6	7	8	9	10
6. Cathy Bretz			WECC 6										
10.	Group	Bill Middaugh	Tri-State Generation and Transmission Assn., Inc.	X		X		X					
	Additional Member	Additional Organization	Region Segment Selection										
1.	Mark Graham	Tri-State G&T	WECC 1										
2.	Chris Pink	Tri-State G&T	WECC 1										
11.	Individual	David Kiguel	Hydro One Networks Inc.	X		X							
12.	Individual	Jim Eckelkamp	Progress Energy	X		X		X	X				
13.	Individual	Janet Smith	Arizona Public Service Company	X		X		X	X				
14.	Individual	John Bussman	Associated Electric Cooperative Inc	X		X		X	X				
15.	Individual	Thad Ness	American Electric Power	X		X		X	X				
16.	Individual	Greg Rowland	Duke Energy	X		X		X	X				
17.	Individual	Bernie Pasternack	Transmission Strategies, LLC								X		
18.	Individual	Joe O'Brien	NIPSCO	X		X		X	X				
19.	Individual	Scott Bos	Muscatine Power and Water	X		X		X	X				
20.	Individual	Sunitha Kothapalli	Puget Sound Energy, Inc.	X		X		X					
21.	Individual	Anthony Jablonski	ReliabilityFirst										X

Group/Individual		Commenter	Organization	Registered Ballot Body Segment									
				1	2	3	4	5	6	7	8	9	10
22.	Individual	Michael Moltane	ITC	X									
23.	Individual	RoLynda Shumpert	South Carolina Electric and Gas	X		X		X	X				
24.	Individual	Joe Petaski	Manitoba Hydro	X		X		X	X				
25.	Individual	Tony Eddleman	Nebraska Public Power District	X		X		X					
26.	Individual	Robert Casey	Georgia Transmission Corporation	X									
27.	Individual	Jonathan Appelbaum	United Illuminating	X									
28.	Individual	Andrew Z.Pusztai	American Transmission Company, LLC	X									
29.	Individual	Michael Jones	National Grid	X		X							
30.	Individual	Tim E. Ponseti, VP	TVA TP&C	X									
31.	Individual	Michael Falvo	Independent Electricity System Operator		X								
32.	Individual	Alex Rost	NBSO		X								
33.	Individual	Alice Ireland	Xcel Energy	X		X		X	X				
34.	Individual	Christine Hasha	Electric Reliability Council of Texas, Inc.		X								
35.	Individual	Chris de Graffenried	Consolidated Edison Co. of NY, Inc.	X		X		X	X				
36.	Individual	Kathleen Goodman	ISO New England Inc.		X								

Group/Individual		Commenter	Organization	Registered Ballot Body Segment									
				1	2	3	4	5	6	7	8	9	10
37.	Individual	Claudiu Cadar	GDS Associates, Inc.	X									
38.	Individual	David Thorne	Pepco Holdings Inc	X		X							
39.	Individual	Michael Lombardi	Northeast Utilities	X		X		X					
40.	Individual	Marie Knox	MISO		X								
41.	Individual	Gregory Campoli	New York Independent System Operator		X								
42.	Individual	Kirit Shah	Ameren	X		X		X	X				
43.	Individual	Darryl Curtis	Oncor Electric Delivery Company LLC	X									

1. **The SDT has made revisions to the requirements language of TPL-001-2 based on industry comments and the Quality Review. Do you agree with these changes? If you do not support these changes or you agree in general but feel that alternative language would be more appropriate, please provide specific suggestions in your comments with clear indications as to which requirement you are commenting on.**

Summary Consideration: Several commenters stated that Requirement R1, Part 1.1.5 should not include interchange because interchange introduces economic considerations into a Reliability Standard. The SDT explained that the requirement is to include known commitments for interchange and therefore the requirement is not for economic purposes, but rather planning to meet obligations.

A number of commenters stated that they believed that there was an inconsistency between Requirement R2, Parts 2.1 and 2.2, since qualified studies were not allowed for the Long-Term Transmission Planning Horizon case. The SDT believes that the requirement to conduct the annual study on one of the study years in the Long-Term Transmission Planning Horizon ensures that the planner conducts a new study annually to evaluate the System improvement needs in the Long-Term Transmission Planning Horizon, even if they utilize qualified past studies for the Near-Term Transmission Planning Horizon cases.

Several commenters stated that they believed that Requirement R2, Part 2.1.5 was ambiguous since it was not clear that the planner did not have to include multiple outages of long lead time components simultaneously. The SDT explained that Requirement R2, Part 2.1.5 does not require simultaneous outages of multiple long lead time components.

Some commenters expressed concerns with Requirement R2, Part 2.4.1 since they were concerned with the ability for planners to adequately model the dynamic behavior of Load. The SDT explained that since it is important to correctly model the characteristics of the Load, it believes that the requirement to represent the dynamic behavior of the Load is needed to ensure BES reliability.

A number of commenters expressed concern that Requirement R7 was administrative and was not required. The SDT explained that it believes that the requirement is necessary to ensure that there are no gaps created between the Transmission Planners and the Planning Coordinators when they determine their individual responsibilities.

Several commenters stated that they had concerns with Requirement R8. These concerns are that the requirements create excessive work and should include time limits on requesting the Planning Assessment, are ambiguous, and should include the ability to post the Planning Assessment. The SDT explained that the requirements are only to distribute the Planning Assessment, which should not require a large amount of work, and the requirements are clear that the planners must distribute to adjacent Transmission Planners and Planning Coordinators and others with a reliability need. The SDT further explained that posting the Planning Assessment could meet the requirement to distribute.

Several commenters stated that they believed that Table 1, P2-1 was inconsistent with Footnote 7. The SDT explained that Footnote 7 was included to clarify that "Opening a line section without a fault" could include, but does not always, creating a radial line section with Load and that the planner must evaluate this situation as a part of P2-1.

A number of commenters expressed concern that Footnote 12 was not appropriate or that this standard should be delayed until FERC approved TPL-002-1 Footnote 'b'. The SDT explained that Footnote 12 was consistent with language in the recent NERC Board of Trustees approved TPL-002-1 Footnote 'b" and that this standard should not be delayed until FERC rules on the other standard.

No changes were made to requirements due to industry comments to question 1. However changes were made to the wording of the Implementation Plan to make it consistent with the language in the Effective Date section of the standard. Also, the language in the data retention section was changed for bullets five and six to make it consistent with the language in the requirements – no changes were made to the timeframe for data retention.

DR, 5th bullet: The documentation specifying the criteria for acceptable System steady state voltage limits, post-Contingency voltage deviations, and transient voltage response since the last compliance audit in accordance with Requirement R5 and Measure M5.

DR, 6th bullet: The documentation specifying the criteria or methodology utilized in the analysis to identify System instability for conditions such as Cascading, voltage instability, or uncontrolled islanding in support of its Planning Assessments since the last compliance audit in accordance with Requirement R6 and Measure M6.

Organization	Yes / No	Question 1 Comment
Lower Colorado River Authority	Ballot Comment	1. R2 (2.5): The requirement for stability assessment in years 6-10 should be limited for new generation interconnections or for planned major transmission system improvements that have regional impact. The standard should clarify the 'material changes' that would necessitate stability planning assessments and documentation. 2. R8 requirement to distribute all Planning Assessment results to adjacent PCs and TPs are excessive and cumbersome. Regarding R8, LCRA TSC suggests the following language: Each Planning Coordinator and Transmission Planner shall distribute its Planning Assessment results to adjacent Planning Coordinators and adjacent Transmission Planners in accordance with the overseeing Reliability Coordinator requirements. Any functional entity that has a reliability related need and submits a written request for the Planning Assessment results, the Transmission Planner and Planning Coordinator shall provide the latest Planning Assessment results within 30 days of such request.

Organization	Yes / No	Question 1 Comment
Response: For Requirement R2, Part 2.5, the SDT believes it is important to evaluate Stability when the planners are evaluating new generation additions or changes which can be more than 5 years in the future, as required in NERC Standard FAC-001-0. The SDT discussed defining 'material change' but did not believe that such a definition was appropriate in a continent-wide standard. With the wide variety in sizes and types of systems, the number of parameters that need to be considered, etc., there are too many variables involved. No change made. For Requirement R8, the SDT disagrees that the requirement is excessive and cumbersome and did not make the suggested change. In addition, the proposed language would place requirements on the Reliability Coordinators, who are not included in the Applicability for this standard, and they should not be involved in determining the extent of the distribution of the Planning Assessments.		
Florida Municipal Power Agency	Ballot Comment	FMPA has minor comments to help improve the clarity of the standard. R7 is not needed and administrative in nature. Instead is should say that an entity can use as evidence another entity's study, but not in the requirement and rather in the measures. R8 is ambiguous, does the requirement require submitting the Planning Assessment only after receiving a written request, or automatic distribution to neighboring PCs and TPs without a written request, and to others with a reliability related need following a written request? Table 1, under first heading of "Steady State and Stability", bullet c should be removed since it is duplicative of the standard, and not entirely consistent with the standard (e.g., open to interpretation whereas the standard better clarifies how to study protection system operation)
Response: Requirement R7 ensures that there are no gaps between Transmission Planners or the Planning Coordinators that may cause reliability concerns. No change made. Requirement R8 requires the automatic distribution to neighboring Planning Coordinators and Transmission Planners without a written request and to others with a reliability related need following a written request. The SDT believes this is an important considerations and not ambiguous. No change made. Table 1, bullet c under first heading, is not in conflict with the requirements. The SDT decided to include additional details in Table 1 so that it would have the basic information necessary for the planner to develop the simulations for their studies without always referring back to the requirements language. No change made.		
Madison Gas and Electric Co.	Ballot Comment	Please revise the words "System" to "system" or preface with BES System. NERC defines System to include distribution components. Plus this Standard is only applicable to PCs and TPs.

Organization	Yes / No	Question 1 Comment
MidAmerican Energy Co.	Ballot Comment	Resolve the conflict between R2 and other requirements in the TPL standards by replacing the term, "System" with "BES" in various places throughout the standard when the reference should not be to the collective generation, transmission, and distribution systems, which is the definition of the NERC Glossary term, "System". These locations are: R2.1.4, R2.1.5, R2.4.3, R2.6.2, R2.7, R2.7.1, R2.7.4, R2.8.1, R2.8.2, R3.5, R4.5, R5, and R6.
Response: Even though the capitalized term "System" includes distribution components, the SDT believes that its usage within this standard is correct because the Reliability Standards apply only to the BES. Therefore, adding additional qualifiers is not needed. No change made.		
City of Austin dba Austin Energy Lower Colorado River Authority	Ballot Comment	Previous TPL Standard balloting included the FERC Order that clarified footnote 'b', regarding the planned or controlled interruption of electric supply for an N-1 situation. In our view, a Registered Entity's Board of Directors, local public utility commission, and/or its customers should determine what level of service is acceptable and with what associated cost. This view is captured in footnote #12 of Table 1 in the TPL Standard and will be crucial to maintaining an Affirmative vote. Regarding R2 (2.5): The value of annually assessing system stability for years 6-10 is questionable. The requirement for stability assessment in years 6-10 should be limited to new generation interconnections or planned major transmission system improvements with regional impact. The standard should clarify the 'material changes' that would necessitate stability planning assessments and documentation. Regarding the R8 requirement to distribute all Planning Assessment results to adjacent Planning Coordinators and Transmission Planners is excessive and cumbersome. Regarding R8, we suggest the following language: Each Planning Coordinator and Transmission Planner shall distribute its Planning Assessment results to adjacent Planning Coordinators and Transmission Planners in accordance with the requirements of the applicable Reliability Coordinator. Any Registered Entity with a reliability-related need may submit a written request for the Planning Assessment results and the Transmission Planner or Planning Coordinator shall provide the latest Planning Assessment results within 30 days of such request.
Response: The SDT incorporated the language in Footnote 12 that was approved in Project 2010-11 TPL Table 1 Footnote B. For Requirement R2, Part 2.5, the SDT believes it is important to evaluate Stability when the planners are evaluating new generation additions or changes which can be more than 5 years in the future, as required in NERC Standard FAC-001-0. The SDT discussed defining 'material change' but did not believe that such a definition was appropriate in a continent-wide standard. With the wide variety in sizes and types of systems, the number of parameters that need to be considered, etc., there are too many variables involved. No change made.		

Organization	Yes / No	Question 1 Comment
For Requirement R8, the SDT disagrees that the requirement is excessive and cumbersome and did not make the suggested change. In addition, the proposed language would place requirements on the Reliability Coordinators, who are not included in the Applicability for this standard, and they should not be involved in determining the extent of the distribution of the Planning Assessments.		
City of Green Cove Springs City of Vero Beach Fort Pierce Utilities Authority Keys Energy Services	Ballot Comment	R7is not needed and administrative in nature. Instead is should say that an entity can use as evidence another entity's study, but not in the requirement and rather in the measures. R8 is ambiguous, does the requirement require submitting the Planning Assessment only after receiving a written request, or automatic distribution to neighboring PCs and TPs without a written request, and to others with a reliability related need following a written request? Table 1, under first heading of "Steady State and Stability", bullet c should be removed since it is duplicative of the standard, and not entirely consistent with the standard (e.g., open to interpretation whereas the standard better clarifies how to study protection system operation)
Response: Requirement R7 ensures that there are no gaps between Transmission Planners or the Planning Coordinators that may cause reliability concerns. No change made. Requirement R8 requires the automatic distribution to neighboring Planning Coordinators and Transmission Planners without a written request and to others with a reliability related need following a written request. The SDT believes this is an important considerations and not ambiguous. No change made.		
Alberta Electric System Operator	Ballot Comment	With respect to R2, Part 2.7.1 which lists system deficiencies and the associated actions needed to achieve System performance, the 3rd and 4th bullet identify the following actions as being acceptable. :Installation or modification of automatic generation tripping as a response to a single or multiple contingency to mitigate Stability performance violations. :Installation or modification of manual and automatic generation runback/tripping as a response to a single or multiple Contingency to mitigate steady state performance violations. The current Alberta transmission policy does not allow for the tripping or runback of generation for a single contingency; however for multiple contingencies it is acceptable. The AESO will bring TPL-001-2, with any modifications, through the standard development consultation process in Alberta and ultimately to the Alberta Utilities Commission for approval.
Response: The list in Requirement R2, Part 2.7.1 are examples of actions that are acceptable under the NERC Reliability Standard, however, certain actions may not be acceptable under state, provincial, or other regulatory policies or requirements and are not intended to supersede other regulations or policies.		

Organization	Yes / No	Question 1 Comment
ReliabilityFirst	Yes	1. In requirement 4.3, the high speed recloser time of 1 second is too restrictive. We suggest that the time be expanded to 2 seconds to capture all reclosing operations that might impact stability studies.We interpret the use of bullet points in Requirement 4.3.1 to mean that any one of the statements can be included in the analyses. In this requirement, the use of bullet points should be removed and replaced with language that requires all of the statements to be included in the analyses. We strongly believe that the language needs amended in requirement 4.3.1, such that, we will reconsider our voting position. 2. In Table 1 labeled Steady State and Stability Performance Extreme Events we contend that the change to "relay failure" is unnecessarily limiting. The previous use of Protection system was satisfactory. Protection System is a defined term and encompasses many components that may fail and not just the relay. 3. In table 1 Steady State & Stability Performance Planning Events under P5 "non-redundant" needs to be better defined. We suggest saying in a footnote that two devices do not need to be identical in order to be redundant. Redundant relays or relay schemes need to have the same performance level to be considered redundant but do not need to be identical equipment.
Response: The SDT believes that high speed reclosing is less than one second and has not received other comments that the time should be extended. The SDT believes that the language is clear that any of the three items shall be included in the analyses, if applicable. No change made. Table 1, Extreme Events, Stability Item 2 – The SDT made the language consistent with the language in the Planning Events to ensure that the planner was evaluating Stability based on performance of the System after the failure of a relay to operate and the planner should not address the many component failures that could create different failure modes. No change made. The SDT believes that non-redundant is understood by the industry. No change made.		
Bonneville Power Administration	Yes	1. If current study is performed to assess the system, there is no need to supplement with past studies. o Suggested language for R2.2:- For the planning Assessment, the Long-Term Transmission Planning Horizon portion of the steady state analysis shall be assessed and be supported by the following annual current study or qualified past studies as indicated in Requirement R2, Part 2.6 2. Load models should be consistent across the region o Suggested language for R2.4.1:- System peak load for one of the five years. System peak load levels shall include a the latest load model developed by the regional planning coordinator which represents the expected dynamic behavior of loads that could impact the study area, considering the behavior of induction motor loads. 3. R2.5 is redundant and should be deleted. It is already included in R1.1.3 and R2.6.2.4. R3.5: This

Organization	Yes / No	Question 1 Comment
		standard requires mitigating the consequences of extreme events. Requiring potentially very costly mitigation actions for very low probability event is unnecessary burden to utilities. o Suggested language for R3.5. Those extreme events in Table 1 that are expected to produce more severe System impacts shall be identified and a list created of those events to be evaluated in Requirement R3, Part 3.2. The rationale for those Contingencies selected for evaluation shall be available as supporting information. Evaluation of the risk, consequences and adverse impacts of the event(s) shall be conducted.
Response: For Requirement R2, Part 2 - If the planner chooses to annually complete current studies to assess the system, the planner is not required to use past studies, but rather is allowed to use information from past studies in lieu of completing additional current studies. No change made. For Requirement R2, Part 2.4.1 – Not all Transmission Planners and Planning Coordinators are under a regional Planning Coordinator. However, for areas with a regional Planning Coordinator, that regional Planning Coordinator may have a requirement for all Transmission Planners and Planning Coordinators in its area utilize the regional Load model. No change made. Requirement R2, Part 2.5 is not redundant since the referenced requirements do not require the planner to assess the impact in the Long-Term Transmission Planning Horizon. The requirement is that the planners assess the impact of proposed material changes and have corrective action plans to resolve concerns from those proposed changes. The planner is not required to implement the corrective action plans unless the proposed material changes occur and the issues remain unresolved. No change made. Requirement R3, Part 3.5 – The SDT does not believe that the suggested language adds clarity and is also concerned that evaluation of possible actions to reduce the likelihood or mitigate the consequences and adverse impacts of the event are not required by the proposed language. No change made.		
Ameren Services	Ballot Comment	(1) Requirement R2.4.1, which addresses dynamic load modeling, has been a cause for concern because of the lack of guidance regarding reasonable induction motor representation as opposed to generic load models. While it is recognized that the effort to simulate the effects of induction motor loads is important, it is premature to include such modeling as part of the requirements for this standard. (2) For Measurements M3 and M4, there is still some question as to what is to be provided as sufficient evidence of a study. It is not clear whether the study results would be sufficient, or whether the entire powerflow, stability, or short circuit effort needs to be documented in a formal study report. For example, it is not clear whether contingency lists used in performing the study work would need to be retained as part of the documentation. (3) The standard as written is too prescriptive with regard to critical system conditions which are to be modeled. Such conditions would vary considerably for different systems across the continent. (4) Overall,

Organization	Yes / No	Question 1 Comment
		we believe that this standard does not improve the clarity of what is required, and would give additional occasions for disputes between compliance monitors and various registered entities.
Response: For Requirement R2, Part 2.4.1, the SDT believes that there are models available that account for the dynamic nature of the Load. No change made. For Measurements M3 and M4, the planner is required to retain evidence that they completed the tasks required in each sub-part of Requirements R3 & R4. These sub-parts require evidence including steady state power flow, Stability and short circuit. Further, the Contingency lists are specifically required in Requirement R3, Parts 3.4 & 3.5 and Requirement R4, Parts 4.4 & 4.5. No change made. The SDT disagrees that the standard is too restrictive about the system conditions to be evaluated. The SDT believes that this standard is a significant improvement and adds needed clarity to the existing TPL standards. No change made.		
New York State Reliability Council	Ballot Comment	1. In R1.1.5, known commitments for Firm Transmission Service, plus other Interchange that does not violate reliability constraints - it is imperative to model other Interchange after accounting for all existing and planned Firm Transmission Service to ensure that reliability-based transactions are not confused with economic interchange. 2. In R2.2.5, the current requirement language can be interpreted to require evaluation of the simultaneous unavailability of multiple long-lead-time components. Also, as a transformer outage is already evaluated as part of category P6 in Table 1, additional studies should not be required; however, spare equipment strategies could be assessed in the context of the planning assessment. 3. In R2.2, the language in this requirement is materially inconsistent with R2.1, unnecessarily requiring a current study.
Response: The SDT selected known commitments for Firm Transmission Service and Interchange to separate the planning requirements of commitments from the economic transactions. No change made. In Requirement R2, Part 2.1.5, the requirement is for the planner to make an assessment of the loss of long lead time (>1 year) equipment, unless the entity's spare equipment strategy can mitigate the issue in less than one year. Therefore, in those instances, the system will be evaluated against the system with the component out of service (multiple Contingencies). While P6 will simulate the same set of outages, the requirements of P1 and P2 are different than P6. Therefore, the planner needs to make an assessment of their system under the more stringent performance requirements. No change made. Requirement R2, Part 2.1 and 2.2 – The SDT left the requirement to conduct the annual study on one of the study years in the Long-Term Planning Horizon to ensure that the planner would conduct a new study annually to evaluate the System improvement needs in the Long-Term Planning Horizon. No change made.		

Organization	Yes / No	Question 1 Comment
Tennessee Valley Authority	Ballot Comment	1. TVA is concerned about the additional studies, modeling, and projects that must be performed to meet this proposed standard. TVA believes that this amount of work will have little overall improvement on the reliability of the BES. 2. TVA believes that the 7 year implementation plan allowed for "Raising the bar" facilities does not allow sufficient time for TVA to construct the required new facilities. TVA average time for constructing a new 500-kV line can be up to 10 years, given the lead time on ROW and following all NEPA requirements. TVA does understand that the team has language (R2.7.3) regarding the TP or PC inability to get the projects completed through no fault of its own; however, there is no safeguard that the entity will be found non-compliant if all the work cannot be accomplished in this time frame. 3. TVA believes that the footnotes b and c that allow for local load drop in the current TPL standards should still be allowed. TVA understands that this is addressed in FERC Order 693; however, the capital improvements to fix many of these issues will have little overall reliability gain for the Bulk Electric System. TVA believes that this is a local load reliability issue and not a BES concern. 4. TVA is concerned that no generating unit shall pull out of synchronism for Planning Event P1, while the standard does allow generator runback/tripping for the same event. TVA believes that this requirement is overly burdensome without providing any material improvement in system reliability. Does distributed generation have to meet the same requirements for not pulling out of synchronism as a large nuclear unit? 5. The Implementation Plan should include a five-year delay in the effective date for short circuit studies (R2 parts 2.3 and 2.8) since these studies are a new TPL requirement and are not required in the current version 0 standards.
Response: 1) The SDT appreciates the concern about additional work compared to the reliability benefits. The SDT believes that the changes within the proposed standard represent the appropriate work to ensure BES reliability. No change made. 2) The SDT believes that the Implementation Plan gives entities the necessary time to develop and implement Corrective Action Plans. No change made. 3) The SDT incorporated the language in Footnote 12 that was approved in Project 2010-11 TPL Table 1 Footnote B. No change made. 4) The SDT does not believe that any generator should pull out of synchronism for a single Contingency. No change made. 5) While short circuit study requirements may be new in the realm of mandatory enforceable standards, the SDT does not believe that they present a significant "raising of the bar" for industry. The SDT believes that prudent short circuit practices are effectively in place today to ensure safe operation of the equipment.		

Organization	Yes / No	Question 1 Comment
Therefore, no extension in the Implementation Plan was made in regard to short circuit studies.		
Florida Municipal Power Pool	Ballot Comment	A. Spare Equipment, R2.1.5 - The requirement reaches beyond the FERC directive. The directive was: "Accordingly, the Commission directs the ERO to modify the planning Reliability Standards to require the assessment of planned outages consistent with the entity's spare equipment strategy." So, the directive is only to address planned outage, not unplanned outages. Also note that the applicability to GSUs is ambiguous. "Transmission" is defined as: "An interconnected group of lines and associated equipment for the movement or transfer of electric energy between points of supply and points at which it is transformed for delivery to customers or is delivered to other electric systems." Is the "point of supply" the generator terminal, or the GSU high side terminal? B. Table 1, under first heading of "Steady State Only", bullet i is open to interpretation. Many utilities use steady state P-V analyses to study voltage stability and design UVLS systems in apart around those steady state analyses. Would this bullet essentially eliminate P-V and Q-V studies and the related use of UVLS? C. R7 is not needed and administrative in nature. Instead is should say that an entity can use as evidence another entity's study, but not in the requirement and rather in the measures. D. R8 is ambiguous, does the requirement require submitting the Planning Assessment only after receiving a written request, or automatic distribution to neighboring PCs and TPs without a written request, and to others with a reliability related need following a written request? E. Table 1, under first heading of "Steady State and Stability", bullet c should be removed since it is duplicative of the standard, and not entirely consistent with the standard (e.g., open to interpretation whereas the standard better clarifies how to study protection system operation)
Response: The SDT respectfully disagrees that the Commission directive regarding a spare equipment strategy is limited to planned outages. In Order 693, Par 1725, the Commission states in its discussion "Thus, if an entity's spare equipment strategy for the permanent loss of a transformer is to use a "hot spare" or to relocate a transformer from another location in a timely manner, the outage of the transformer need not be assessed under peak system conditions." The SDT believes FERC clearly intended the spare equipment strategy to cover a catastrophic loss of such long lead-time equipment. Further, the SDT believes it has appropriately limited this review to a small subset of the overall Planning Events – P0, P1, and P2 and for a loss that would be sustained for a year or longer. No change made. Table 1, Steady State and Stability, Item I does not restrict the use of UVLS since it only addresses equipment disconnected by end-user equipment. No change made.		

Organization	Yes / No	Question 1 Comment
Requirement R7 ensures that there are no gaps between Transmission Planners or the Planning Coordinators that may cause reliability concerns. No change made. Requirement R8 requires the automatic distribution to neighboring Planning Coordinators and Transmission Planners without a written request and to others with a reliability related need following a written request. The SDT believes this is an important consideration and not ambiguous. No change made. Table 1, Bullet c under first heading, is not in conflict with the requirements. The SDT decided to include additional details in Table 1 so that it would have the basic information necessary for the planner to develop their simulations for their studies without always referring back to the requirements language. No change made.		
Modesto Irrigation District	Ballot Comment	Both Sections 2.1.4 (seven sensitivities) and 2.4.3 (five sensitivities) require sensitivity studies to be run for all planning events and for all years specified , which increases the number of required studies beyond a reasonable and manageable limit. Also, both Section 2.1.4 and 2.4.3 specify that running studies over "...a range of credible conditions that demonstrate a measurable change in System response (performance)." must be completed, yet using "credible conditions" and also "demonstrating a measurable change in System response (performance)", may be mutually exclusive. "Measurable change in System response (performance)" is open to a broad interpretation, which increases the risk that the auditor may very likely interpret it differently than the utility system planner. The definition of the extreme events that have to be analyzed has been made nebulous, where in the existing standards they are quite specific. Requirement 2.1.5 requires the modeling of the loss of any system element that does not have a back-up or spare available sooner than 1 year, as part of the system normal state. It is not clear why using 1 year of loss of use for a system element is being used as the triggering point requiring further system enhancements. Thank you.
Response: Requirement R2, Part 2.1.4 and Part 2.4.3 do not require an unreasonable amount of sensitivities, since they both state the planner must “vary one or more of the following conditions”. No change made. Requirement R2, Parts 2.1.4 and Part 2.4.3 allow the planner to use engineering judgment to determine the sensitivities to be completed. No change made. Requirement R2, Part 2.1.5 uses one year as a typical definition of a long lead time for equipment, so that the planner will assess their system performance without that equipment over peak periods. No change made.		

Organization	Yes / No	Question 1 Comment
Hydro One Networks, Inc.	Ballot Comment	Hydro One Networks is casting a negative vote. Other than a few changes related to Footnotes 9 and 12 of Table 1 and VSLs, the other changes in the proposed draft are minor. The concerns of the industry on several important issues have not been sufficiently addressed in this draft. For detailed comments please refer to our submission through the on-line comment form.
Response: The SDT posted a redline draft against the last posted draft and also posted a redline draft against the previous ballot draft. The SDT addressed important issues that were raised during the first ballot. Please see specific responses to your comments where they were submitted.		
Luminant Energy	Ballot Comment	Our most significant concerns are related to the following: (1) The requirements for Sensitivity Analysis are not stringent enough. (2)Studies should include variations in the duration and timing of transmission outages. “Anticipated” outages should be included in the studies and not just “known” transmission outages. It is our experience that only including “known” outages drastically under represents the actual number of transmission outages. (3) Major equipment outages lasting three or more months, as a result of Spare equipment strategies should be included in studies. The time limit of one year as specified in the Standard is too lax. Specific suggested language: 1.1.2. Known outage(s) of generation or Transmission Facility(ies) with a duration of at least six months or any known outage(s) of generation or Transmission Facility(ies) that will extend into the high stress period of the BES. 2.1. For the Planning Assessment, the Near-Term Transmission Planning Horizon portion of the steady state analysis shall be assessed annually and be supported by current annual studies or qualified past studies (as indicated in Requirement R2, Part 2.6, as follows). Qualifying studies shall include the following conditions: Add language between 2.1.3 and 2.1.4 to account for generation limitations due to Ancillary Services. Suggested wording: All planning studies must recognize and make provision for secure delivery of each of the Ancillary Services (eg Operating Reserve). In no case shall these studies double count capacity as being available for congestion management and Ancillary Services unless processes are in place to allow for location specific deployment of these Ancillary Service reserves for congestion management purposes.

Organization	Yes / No	Question 1 Comment
		2.1.4 (bullet 7) Duration and timing of anticipated Transmission outages such as required maintenance activities. 2.1.4 (bullet 8 added) Reasonable variations of anticipated generator availability after accounting for equivalent forced outage rate. 2.1.5 If an entity's spare equipment strategy could result in the unavailability of major Transmission equipment that would cause an outage of three months or more, (such as a transformer) the impact of this outage on System performance shall be studied. 2.4.3. For each of the studies described in Requirement R2, Parts 2.4.1 and 2.4.2, sensitivity case(s) shall be utilized to demonstrate the impact of changes to the basic assumptions used in the model. To accomplish this, the sensitivity analysis in the Planning Assessment must vary one or more of the following conditions by a sufficient amount to stress the System within a range of credible conditions that demonstrate a measurable change in performance: â€¢ Load level, Load forecast, or dynamic Load model assumptions. â€¢ Expected transfers. â€¢ Expected in service dates of new or modified Transmission Facilities. â€¢ Reactive resource capability. â€¢ Generation additions, retirements, or other dispatch scenarios. â€¢ Duration or timing of anticipated Transmission outages such as required maintenance activities. â€¢ Reasonable variations of anticipated generator availability after accounting for equivalent forced outage rate. 2.4.4. P1 events in Table 1, with known outages modeled as in Requirement R1, Part 1.1.2, under those System peak or Off-Peak conditions when known outages are scheduled. 2.4.5 If an entity's spare equipment strategy could result in the unavailability of major Transmission equipment that would cause an outage of three months or more, (such as a transformer) the impact of this outage on System performance shall be studied.
Response: 1) The sensitivities addressed in Requirement R2, Parts 2.1.4 and Part 2.4.3 allow the planner to use engineering judgment to determine the sensitivities to be completed. Since sensitivities are included to ensure that the planner evaluates alternative conditions, it is necessary to allow flexibility to evaluate different types of changes that could occur. No change made. 2) Reliability Standards are the minimum requirements and if conditions warrant, entities may add additional outages to be evaluated in their planning studies.		

Organization	Yes / No	Question 1 Comment
No change made. 3) Requirement R2, Part 2.1.5 uses one year as a typical definition of a long lead time for equipment, so that the planner will assess their system performance without that equipment over peak periods. No change made. For Requirement R2, Part 2.1, the SDT did not add language between Parts 2.1.3 and 2.1.4 to account for generation limitations due to Ancillary Services. The proposed addition assumes a particular market structure and that market structure is not uniform across North America. The "projected System conditions" in Requirement R1 would be violated if an entity double counted its Ancillary Services. No change made. Requirement R2, Part 2.1.4, bullet 7 & 8 are examples of sensitivities and the examples provided would address those contemplated by the SDT. No change made. Requirement R2, Part 2.1.5 uses one year as a typical definition of a long lead time for equipment, so that the planner will assess their system performance without that equipment over peak periods. No change made. Requirement R2, Part 2.4.3 – Since the five conditions for sensitivities have been vetted through six postings, the SDT did not add the two proposed conditions. No change made. Requirement R2, proposed 2.4.4 – Since the known outages are already included in the cases, as required by Requirement R.1, Part 1.1.2, there is not a need to require specific studies that include them – No change made. Requirement R2, proposed Part 2.4.5 – The proposed requirement is already contained in Requirement 2, Part 2.1.5 and does not need to be duplicated here. The SDT has used the typical one year time period to define long lead time for equipment and believes that three months is too short a time period for this requirement. No change made.		
MidAmerican Energy Co.	Ballot Comment	Regarding Requirement 8, there is not a significant risk to the reliability of the BES if an annual Planning Assessment is not distributed to another entity or if a documented response to Planning Assessment comments is not provided within 90 days of a request. Requirement 8 is an administrative requirement that adds little to improve reliability. We recommend that the VRF for Requirement 8 remain "Low", rather than be changed to "Medium".
Response: The SDT believes that sharing the Planning Assessments with adjacent Transmission Planners and Planning Coordinators is an important component of the planning process. The SDT did not change the VRF. The previous change reflects the latest guidelines on the topic.		

Organization	Yes / No	Question 1 Comment
Consolidated Edison Co. of New York	Ballot Comment	Requirement R1.1.5: Delete “and Interchange.” The inclusion of other than Firm transactions (e.g. economic transactions in Interchange) in a base power flow case utilized for planning/designing the interconnected system blurs the boundary between reliability issues and purely economic issues. Reliability issues are issues that a Transmission Owner (TO) must address for the purpose of meeting its load demand, and are defined by the application of well established reliability standards and criteria that are based on the electrical characteristics of the interconnected system, but without economic considerations. Instead, economic transactions are types of transactions that a TO may enter into once its load obligations are met, and are evaluated based on economic parameters that are markedly different from the aforementioned reliability criteria (e.g. congestion costs). Modeling all types of transactions in a power flow case without distinction detracts from the accuracy and validity of either assessment (reliability and economic).
Response: Requirement R1, Part 1.5 does not require Interchange for economic purposes. The requirement is to represent “Known commitments”. No change made.		
Platte River Power Authority	Ballot Comment	Stability requirements R4.1.2, along with the second and third bullets of R4.3.1, could be misunderstood to require the development of comprehensive relaying models for all Facilities represented in the stability model. These requirements should be made clear that Stability studies are to simulate the effects of relaying (tripping certain Facilities) and not require relaying models to trigger and cause the effects.
Response: The SDT language in Requirement R4, Part 4.3.1 states “The analyses shall include the impact of subsequent” and does not require comprehensive relaying models. However, it does require that the planner take into account the effects of System Protection on System performance. No change made.		
GDS Associates, Inc.	No	1. Footnotea. Footnote should state “Draft 7” instead 2. Requirement R1a. Time Horizon should include both Near-term and Long-term Planning3. Requirement R2a. Time Horizon should include both Near-term and Long-term Planningb. Requirement R2, Part 2.1 o The inclusion of the words "For the Planning Assessment" it seem unnecessary as long as main requirement R2 is only about the Planning Assessment and nothing else. o The term “Qualifying studies” from the last sentence is referring to the qualified past studies, or the annual studies, or both actually? Suggesting adjusting the verbiage so it would not create confusion. o Subpart 2.1.4- Requirement R2, Part 2.1.1 and Part 2.1.2 are referring to system conditions, not studies. The second sentence may be subject of non-objective interpretations and may generate burdensome and

Organization	Yes / No	Question 1 Comment
		unrealistic amount of work. The requirement should state instead "For each of the system conditions described in Requirement R2, Part 2.1.1 and Part 2.1.2, the studies shall include sensitivity cases utilized to demonstrate whether there is any significant impact due to changes on the basic assumptions used in the model. The analysis, by case, may contemplate varying one or more of the following conditions:" o Subpart 2.1.5- We suggest adjusting the time threshold of potential equipment unavailability in order to be consistent with the time frame for the "known Transmission outages". c. Requirement R2, Part 2.2 o The inclusion of the words "For the Planning Assessment" it seem unnecessary as long as main requirement R2 is only about the Planning Assessment and nothing else. o While the Near-Term portion of the Planning Assessment details the premises of the study, the Long-Term is lacking in such thing. d. Requirement R2, Part 2.3 o Although both the steady-state and transient stability studies are required for the Near-Term and Long-Term, the short-circuit study is required only for the Near-Term. This is big disconnect, because there can be stability analyses conducted without a short-circuit assessment. o Breakers should be checked for their breaking capability, as well as to withstand the fault. All other disconnecting equipment, as well as current transformers in particular shall be also verified for their withstand capabilities. The current statement should be replaced with "The short circuit analysis portion of the Planning Assessment shall be conducted annually addressing the Near-Term and Long-Term Transmission Planning Horizon and can be supported by current or past studies as indicated in Requirement R2, part 2.6. The analysis shall be used to assess performances of transmission elements affected by a potential increase of short-circuit contributions to fault" e. Requirement R2, Part 2.4 o The inclusion of the words "For the Planning Assessment" it seem unnecessary as long as main requirement R2 is only about the Planning Assessment and nothing else. o Similar with 2.1, the last sentence should read "The studies should include the following conditions:" o Subpart 2.4.1- We believe that the dynamic behavior of the load cannot be accurately estimated beyond current time. We are concerned about the effort required to ascertain the dynamic response of the load. As for the "Loads that could impact the study area" the standard doesn't include any directions in how an entity will identify these loads. Perhaps the standard should provide guidelines to determine which loads would impact the study area. o Subpart 2.4.3- See comments from Subpart 2.1.4f.

Organization	Yes / No	Question 1 Comment
		Requirement R2, Part 2.5 o The inclusion of the words "For the Planning Assessment" it seem unnecessary as long as main requirement R2 is only about the Planning Assessment and nothing else. g. Requirement R2, Part 2.6 o Subpart 2.6.2- We agree with the suggested changes as responding to previous commentsh. Requirement R2, Part 2.7 o Subpart 2.7.1- We disagree with the implemented changes. The standard should not include examples. If needed, a white paper can accompany the standard. We suggest adjusting the last sentence to read “Such actions may include, but are not limited to, the following:” i. Requirement R2, Part 2.8 o This should apply to all disconnecting equipment and CT in particular with respect not only to their interrupting duty, but to their withstand capabilities also. See comment on Part 2.3.4. Table 1a. Footnote 9 o With respect to the Curtailment of Firm Transmission Service we suggest SDT to revise the language in order to be consistent with the Implementation Plan. 5. Measure M1a. This measure it is hard to read. For simplicity, we suggest adjusting this measure to read "Each Transmission Planner and Planning Coordinator shall provide evidence, in electronic or hard copy format that it is maintaining System models within their respective area, using data consistent with MOD-010 and MOD-012, and the models reflect the System conditions in accordance with Requirement R1." 6. Measure M7a. The measure encompasses the particular scenario where the parties involved have reached an agreement for performing the required studies. In order to cover situations where the parties have not reach an agreement, the measure should read "Each Planning Coordinator, in conjunction with each of its Transmission Planners, shall provide dated documentation on roles and responsibilities, such as meeting minutes, agreements, and e-mail correspondence that identifies all individual and joint responsibilities for performing the required studies and Assessments in accordance with Requirement R7." 7. Compliancea. Data retention o The 5th bullet should read "The documentation specifying the criteria for acceptable System steady state voltage limits, post-Contingency voltage deviations, and the transient voltage response since the last compliance audit in accordance with Requirement R5 and Measure M5." o The 6th bullet should read "The documentation specifying the criteria or methodology used to identify System instability for conditions such as Cascading, voltage instability, or uncontrolled islanding since the last compliance audit in accordance with Requirement R6 and Measure M6." o The 7th bullet should be reworded in accordance with suggested changes at M7.

Organization	Yes / No	Question 1 Comment
Response: 1. This is the sixth time that this standard has been posted for comments. The reference to a seventh posting on the web site is because the standard was posted once for informational purposes. No change made. 2. Requirement R1. Per the standards process, the Time Horizon for this standard is Long-term Planning; which includes both the Short-Term and Long-Term Planning Horizon. No change made. 3. Requirement R2, Part 2.1 – "For the Planning Assessment" were added in a previous draft for clarity – No change made. Requirement R2, Part 2.1 – "Qualifying Studies" could be either or both – No change made. Requirement R2, Part 2.1.4 – The requirement is for the planner to have a completed study for each of the conditions in Parts 2.1.1 & 2.1.2. The requirement to complete sensitivity studies has been included to ensure that the planner tests their system by stressing the system beyond what is within their base cases. Since the System conditions vary across North America, the relevant sensitivities are best determined by the planner. The proposed language does not convey the same intent. No change made. Requirement R2, Part 2.1.5 – The SDT determined that the impact of "known outages …" does not directly coorelate to the entity's spare equipment strategy. No change made. c. Requirement R2, Part 2.2 – "For the Planning Assessment" were added in a previous draft for clarity – No change made. Requirement R2, Part 2.2 - The SDT limited the requirements in the Long-Term to allow the planner more latitude in that time frame, while ensuring that the planner conducted a Long-Term assessment of their portion of the BES. No change made. d. Requirement R2, Part 2.3 - A planner may choose to complete a short circuit study in conjunction with its Long-Term Steady Steady State and Stability studies, but the SDT does not believe that the planner should be required to complete a short circuit study in the Long-Term Transmission Planning Horizon. No change made. The SDT agrees that any system element must be able to withstand the stresses that they may be subjected to, however, the standard must ensure BES reliability. Therefore, the SDT limited the requirement to the breakers since they protect other system elements from the fault. No change made. e. Requirement R2, Part 2.4 – "For the Planning Assessment" were added in a previous draft for clarity . The SDT does not believe that replacing the last sentence as proposed adds any additional clarity. No change made. Requirement R2, Part 2.4.1 – The SDT believes that the planner must consider the dynamic behavior of its System Load and develop a representative model, however, the SDT should not dictate "how" the Load should be modeled. Those specific details must be included in the model by the individual planner. No change made. Requirement R2, Part 2.4.3 - The requirement is for the planner to have a completed study for each of the conditions in Parts 2.4.1 & 2.4.2. The requirement to		

Organization	Yes / No	Question 1 Comment
complete sensitivity studies has been included to ensure that the planner tests their system by stressing the system beyond what is within their base cases. Since the System conditions vary across North America, the relevant sensitivities are best determined by the planner. The proposed language does not convey the same intent. No change made. Requirement R2, Part 2.5 – "For the Planning Assessment" were added in a previous draft for clarity – No change made. Requirement R2, Part 2.7.1 – The SDT has included limited examples where we believe that additional clarity is needed. Since the list is clearly marked as "examples", the SDT believes the phrase "but not limited to", is not required. No change made. Requirement R2, Part 2.8 - The SDT agrees that any system element must be able to withstand the stresses that they may be subjected to, however, the standard must ensure BES reliability. Therefore, the SDT limited the requirement to the breakers since they protect other system elements from the fault. No change made. The Implementation Plan has been revised as suggested although the SDT wishes to point out that no dates have been changed. Measure M1 – While the suggested langauage is shorter it does not contain all of the terminology of the matching requirement and thus violates a basic guideline for measures. No change made. 6. Measure 7 – The suggested langauge doesn't change the assumed scenario cited and provides no additional clarity. No change made. 7. Data retention, 5th bullet – The SDT agrees that for consistency the suggested terms should be added so that this bullet matches up with the language of the requirement. DR, 5th bullet: The documentation specifying the criteria for acceptable System steady state voltage limits, post-Contingency voltage deviations, and transient voltage response since the last compliance audit in accordance with Requirement R5 and Measure M5. Data retention, 6th bullet - The SDT agrees that for consistency the suggested terms should be added so that this bullet matches up with the language of the requirement. DR, 6th bullet: The documentation specifying the criteria or methodology utilized in the analysis to identify System instability for conditions such as Cascading, voltage instability, or uncontrolled islanding in support of its Planning Assessments since the last compliance audit in accordance with Requirement R6 and Measure M6. Data retention, 7th bullet – The SDT declined to make the suggested changes to Requirement R7 so no change is necessary for Measure M7.		
United Illuminating ISO New England Inc	No	a. 2.6.2 - What was the intent of this change? The old language seemed to work. The language should not be changed from the previous version. b. For 2.8.2 - Was the phrase changed to reflect modifications of facilities? If so the requirement should be

Organization	Yes / No	Question 1 Comment
		modified to read "Be reviewed in subsequent annual Planning Assessments for continued validity and implementation status of identified System Facilities and Operating Procedures with respect to modifications of facilities. Otherwise the requirement is unclear. c. For Section R8.1 - the proposed requirement conflicts with a long standing stakeholder process in our area which posts study results and allows comment within a defined period before studies are finalized. If this section is to be retained then it should be modified to only allow comments on Transmission studies less than one-year old. Requirement 8 and 8.1, should be revised to include a limit on the comment period as follows: If a recipient of the planning assessment final results provides documented comments on the results within 90 days of receipt, the respective Planning Coordinator or Transmission Planner shall provide a documented response to such recipient within 90 calendar days of receipt of those comments. d. With respect to Table 1 - We suggest adding an event 6 to P1 to address the contingent loss of back to back HVDC Facilities. If not added to P1 then this event needs to be added somewhere in the standard. e. We don't agree with footnote 7 specifying that only one end of the line should be open for this condition. If the SDT is to keep this concept make P2 event 1 simply say "Opening one end of a line section w/o a fault" and delete the footnote. The existing footnote is unclear due to the use of language such as "possibly".

Response: a. Requirement R2, Part 2.6.2 was revised in response to comments that a "qualified" study may have material changes remote from the area of study and the previous version would not have allowed the use of that study. No change made.

b. Requirement R2, Part 2.8.2 – The added phrase – "of identified System Facilities and Operating Procedures" was added to ensure that it was clear what "implementation status" was referencing. No change made.

c. Requirement R8, Part 8.1 - The SDT does not believe that the requirement conflicts with other stakeholder processes and does not believe that a time limit is required. Beyond responding to the comment, other actions by the planner are at the discretion of the planner. No change made.

d. Table 1, P1 back to back DC - The contingent loss of back to back HVDC facilities is included as a transformer. Footnote 5 states, in part, that "Requirements which are applicable to transformers also apply to variable frequency transformers and phase shifting transformers. Therefore, the SDT has not explicitly included back-to-back HVDC as a separate Contingency. No change made.

e. Table 1, footnote 7 – The SDT added the footnote to further explain its intent for P2-1 and to ensure that the planner assess the voltage of a load bus that was on a radial line. The word "possibly" was used since having load on a radial is not always the outcome of opening one end of a line section. No change made.

Organization	Yes / No	Question 1 Comment
Northeast Utilities	No	Definition of Terms Used in the StandardThe definitions of "Near-Term Transmission Planning Horizon" and "Year One" have been deleted from the standard, yet they are still used in draft 7. NU is concerned about voting in favor of this standard with these terms being defined by another project without a full discussion of the impact to this proposed standard. NU suggests repeating the definitions in this proposed standard. Requirement R1NU believes that the Normal System Conditions as stated in Requirement R1 should establish the base case conditions to be used for the assessment studies. However, a more detailed guideline for developing base cases should be addressed by the requirements. By just modifying the language of requirement R1 to indicate that "P0" constitutes the initial system conditions does not address this concern in Draft #7. A more detailed guideline for base case development is needed. Requirement R8The wording in requirement R8 needs to be amended to restrict comments to the most recent assessment only, for a limited period (say 3 months) after its release. The current wording appears to offer unlimited opportunity to comment on past assessments, long after their release. Footnote 7It appears there is a discrepancy between Footnote 7 and Event P2-1. Footnote 7 could be eliminated by rewording Event P2-1 as follows: "Opening one end of a line section w/o a fault". Footnote 12NU did not agree with the clarification of Table 1 Footnote B of TPL-002 and did not vote for its approval. Therefore, NU does not agree with the same clarification being applied here for Non-Consequential Load Loss. For reference, below is NU's comment on TPL-002 Table 1, Footnote B:"The revised language of Footnote b suggests that non-consequential demand interruption (load that is not directly served by the elements removed from service as a result of the contingency) could be used to mitigate reliability concerns arising from NERC Category B contingency events (i.e., single element contingencies). This language seems to encourage operational workarounds and adds burdens for operators of the system. NU believes this is not consistent with planning a highly reliable bulk electric system and thus does not support this weaker language". General commentNU believes that a standard should contain statements and requirements that are direct and measurable. TPL-001-2 should not be an exception to this rule. Therefore, statements like "An objective" which appears in Footnotes 9 and 12 shall not be used.
Response: Definitions of Near-Term Transmission Planning Horizon and Year One are now approved NERC Glossary Terms and are no longer needed in this proposed standard. The definitions have been vetted through this process through the 1st six postings of this standard and were approved by the Commission in		

Organization	Yes / No	Question 1 Comment
FAC-013. With the wide variety of system conditions and market structures across North America, the SDT chose not to establish a single set of conditions for a base case. Each planner shall establish their base case that meets their needs and their other regulatory requirements. No change made. Requirement R8, Part 8.1 - The SDT does not believe that a time limit for commenting on a Planning Assessment is required. Beyond responding to the comment, other actions by the planner are at the discretion of the planner. No change made. Table 1, P2-1 – The SDT does not agree that there is a discrepancy between the Contingency and Footnote 7. Footnote 7 was utilized to clarify a specific condition that would need to be evaluated as a part of P2-1. No change made. Footnotes 12 and 9 were translated from the BOT approved language from TPL-002-1, Footnote 'b'.		
Electric Reliability Council of Texas, Inc.	No	ERCOT ISO believes that the revisions do not go far enough in addressing previously submitted comments. As written this standard would require restructuring of the functions in the ERCOT Region because several requirements are being assigned to the PC that are currently performed only by the TPs. It would not provide any reliability benefits to have the ERCOT PC assume these functions. Specifically, the following requirements should be modified: R2.1.5 should be clarified to be applicable to TPs only since the ERCOT PC does not have the information necessary to perform this analysis; R2.3 and R2.8 should be clarified to be applicable to TPs only since the ERCOT PC does not perform this analysis (it is performed by the TPs in ERCOT); R4.1.2 should be clarified to only apply to TPs because the ERCOT PC does not have the modeling information necessary to perform this analysis. Additionally, R2.1.4 and R2.4.3 should be removed because the requirements are subjective and there are no actions prescribed to be taken based on the sensitivity results. The Load model requirement should be removed from R2.4.1 because this would be better addressed in a MOD standard. Alternatively, R2.4.1 should be rewritten as "System peak Load for one of the five years with expected dynamic load models." A concurrent requirement should be incorporated to mandate DSPs and TPs to supply dynamic load model data to the PC to perform the required studies.
Response: Requirement R2, Part 2.1.5 requires that studies be completed based on an entity's spare equipment strategy. The ERCOT Planning Coordinator could utilize Requirement R7 to document the individual and joint responsibilities for these studies and document the outcome of these studies. No change made.		

Organization	Yes / No	Question 1 Comment
Requirement R2, Parts 2.3 and 2.8 – The ERCOT Planning Coordinator could utilize Requirement R7 to document the individual and joint responsibilities for these studies and document the outcome of these studies. No change made. Requirement R4, Part 4.1.2 requires the Transmission Planner and Planning Coordinator to accurately represent the behavior of the system if a generator pulls out of synchronism. Therefore, this information is needed by each Transmission Planner and Planning Coordinator to ensure that the appropriate system response is modeled. No change made. Requirement R2, Parts 2.1.4 and R2.4.3 require the completion of sensitivity studies and allows the planner the discretion on which variables to vary. In addition, Requirement R2, Part 2.7 requires Corrective Action Plans to address issues that are present in multiple sensitivities. The MOD standards only require data to be submitted, and this requirement allows the variation of the forecasted load as one of the possible sensitivities. No change made. Requirement R2, Part 2.4.1 – The SDT believes that the drafted language more clearly explains the requirement than the proposed language. This requirement is for the planner to utilize models that reflect the dynamic nature of the load with an expectation that the planner will obtain the required information in Requirement R1 to determine how it is modeled. No change made.		
Independent Electricity System Operator	No	IESO is generally supportive of the draft of TPL-001-2 as evidenced by our previous AFFIRMATIVE vote during the last ballot. Further, IESO also supported the revisions to Footnote 'b' to Table 1 of the TPL standards under Project 2010-11. That revision was balloted and approved by the ballot pool in February 2011 and filed with FERC for approval in March 2011. The revised footnote has been incorporated into the current draft of TPL-001-2 as Footnotes 9 and 12 but the Commission, by letter to NERC dated May 17, 2011, has requested NERC to provide supplemental information before the revised Footnote 'b' could be approved. In light of FERC's request and the uncertainty regarding the final provisions of these footnotes, coupled with the ongoing work on Project 2010-17 for the revision of the BES definition and development of an Exception Process and the impact that may have, we respectfully suggest that the drafting team delay further work on TPL-001-2 pending FERC's ruling on NERC's petition seeking approval of the transmission planning standards that contain the revised Footnote 'b' to Table 1.
Response: The SDT believes that it is important to continue with the approval of this standard. If FERC directs changes based on TPL-002-1, Footnote 'b', they will be addressed with this project.		
New York Independent System Operator	No	If the following recommended revisions are made to the requirements listed, subject to other unforeseen material changes, NYISO would no longer oppose the approval of this standard. Requirement R2.1.5 The current requirement language can be interpreted to require evaluation of the simultaneous unavailability of multiple long-lead-time components. Also, as a transformer outage is already

Organization	Yes / No	Question 1 Comment
		evaluated as part of category P6 in Table 1, additional studies should not be required, however spare equipment strategies could be ASSESSED in the context of the Planning Assessment. NYISO thus recommends this requirement be revised as follows: R 2.1.5 When an entity's spare equipment strategy could result in the unavailability of a major Transmission component that has a lead time of one year or more (such as a transformer), the impact of this possible unavailability on System performance shall be assessed with due regard to categories P0, P1, and P2 identified in Table 1. Requirement R2.2The language in this requirement is materially inconsistent with R2.1, unnecessarily requiring a current study. NYISO requests that R2.2 and the sub-requirement be revised as follows:2.2. For the Planning Assessment, the Long-Term Transmission Planning Horizon portion of the steady state analysis shall be assessed annually and be supported by current annual studies or qualified past studies as indicated in Requirement R2, Part 2.6. Qualifying studies shall include: 2.2.1. Expected System peak Load conditions for one of the years in the Long-Term Transmission Planning Horizon and the rationale for why that year was selected. Requirement R8.1There is an apparent open ended time frame afforded report recipients in their review of any Planning Assessment. This requirement should apply to only the most recent Planning Assessment. NYISO thus recommends the following language: 8.1. If a recipient of the most recent Planning Assessment results provides documented comments on the results, the respective Planning Coordinator or Transmission Planner shall provide a documented response to that recipient within 90 calendar days of receipt of those comments.
Response: Requirement R2, Part 2.1.5 is not the same as P6 – Table 1, however, the analysis for P6 could be utilized, if the results show there will not be load loss. Except for the outages being evaluated under P0, P1, and P2 for individual components out of service without a long term spare, the requirement does not require the evaluation of the simultaneous loss of multiple long lead time components. The SDT believes that the language "with due regard to" is not as clear as the proposed language. No change made. Requirement R2, Part 2.1 and 2.2 – The SDT left the requirement to conduct the annual study on one of the study years in the Long-Term Planning Horizon to ensure that the planner would conduct a new study annually to evaluate the System improvement needs in the Long-Term Planning Horizon. No change made. Requirement R8, Part 8.1 - The SDT does not believe that a time limit for commenting on a Planning Assessment is required. Beyond responding to the comment, other actions by the planner are at the discretion of the planner. No change made.		
NBSO	No	Items that, if not addressed, will likely cause a negative vote from NBSO:R2.2 differs from R2.1, R2.3, R2.4 and R2.5 since R2.2 does not state that the annual assessment of the Long-Term Transmission Planning

Organization	Yes / No	Question 1 Comment
		Horizon portion of the steady state analysis can be supported by qualified past studies. Likely this omission is an oversight, but unresolved it can cause significant burden with little gain in reliability. Individual items that, if not addressed, may not cause NBSO to vote Negative, but in combination may result in a negative vote:The language of requirements R2.1.4 and R2.4.3 allowing the performance of one or more sensitivities appears to be inconsistent with language in R2.7.2 that requires multiple sensitivities to determine if actions to resolve performance deficiencies are necessary. R7 (and M7) seem to indicate that the PC is ultimately responsible for determining the individual and joint responsibilities for performing the required planning assessment studies, with the expectation to consult and come to agreement with its corresponding TPs, but this interpretation is not clear. The correct interpretation of this requirement is important for resolving situations where a PC and TP do not agree on the assignment of responsibilities. Suggested wording: “Each PC shall work in conjunction with each of its TPs to determine and identify...” The language in R8 is unclear. One point of confusion relates to which entity is responsible for sending their Planning assessments to other entities. For example, who does a PC distribute their planning assessments to?:-Adjacent PC? (Seems to be clearly addressed)-TPs within its PC footprint? (Not clearly covered by the language in R8)-TPs adjacent to its PC footprint (Not clear if this is the responsibility of the PC, TP or both)In addition, the language in R8.1 appears to offer unlimited opportunity to request response to comments on any past assessment, long after their release. Providing limits in the langue of R8.1 is recommended in order to avoid unnecessary burden on PCs and TPs for little gain in reliability or constructive stakeholder involvement.

Response: Requirement R2, Part 2.1 and 2.2 – The SDT left the requirement to conduct the annual study on one of the study years in the Long-Term Planning Horizon to ensure that the planner would conduct a new study annually to evaluate the System improvement needs in the Long-Term Planning Horizon. No change made.

Requirement R2, Parts 2.1.4 and 2.4.3 are not inconsistent with Requirement R2, Part 2.7.2. With the various requirements, the planners are required to conduct multiple sensitivities. Therefore, Requirement R2, Part 2.7.2 could be used when the results of these multiple sensitivities identify common concerns. No change made.

Requirement R7 – The SDT believes that the current language addresses the various arrangements that could exist between the Planning Coordinator and Transmission Planner, better than the proposed language. If agreement is not reached, both the Planning Coordinator and the Transmission Planner would be required individually to perform all of the required studies. No change made.

Organization	Yes / No	Question 1 Comment
Requirement R8 – Each planner is required to distribute its Planning Assessment to all adjacent planners (Transmission Planners and Planning Coordinators). Requirement R8, Part 8.1 - The SDT does not believe that a time limit for commenting on a Planning Assessment is required. Beyond responding to the comment, other actions by the planner are at the discretion of the planner. No change made.		
Hydro One Networks Inc.	No	Other than a few changes related to Footnotes 9 and 12 of Table 1 and VSLs, the other changes in the April 15, 2011, draft are minor. The concerns of the industry on several important issues have not been sufficiently addressed in this draft (see our response to Question 3).
Response: Please see the response to Question 3.		
Manitoba Hydro	No	-R2.1.4 and R2.4.3: 'Expected transfers' should be replaced with 'Firm Transmission Service and Interchange' to correlate to R1 (R1.1.5 states 'Known commitments for Firm Transmission Service and Interchange' must be represented in system mode
Response: Requirement R2, Parts 2.1.4 and R2, Part 2.4.3 use the more inclusive term - Expected transfers – for sensitivities. The SDT does not want to unnecessarily restrict the transfers that could be evaluated as a part of a sensitivity study. No change made.		
Associated Electric Cooperative Inc	No	R2.4.1:The SDT has put a stronger emphasis on dynamic load behavior in stability studies (FIDVR, induction motor loads, etc) to be included in the peak models. The standard does indicate that "An aggregate System Load model which represents the overall dynamic behavior of the Load is acceptable." We feel that this should be clarified to ensure that the current modeling processes address what NERC desires with this requirement. At a minimum, we recommend that a grace period be implemented to account for any regional modeling practices which need time to implement dynamic load behavior per the draft standard. R2.5:It is our understanding that the Long-Term Transmission Planning Horizon does not require the sensitivity analysis which is required in R2.4 for the Near-Term Transmission Planning Horizon for the stability portion of the studies. R2.7:It is our understanding that Corrective Action Plan(s) do not need to be developed for performance violations observed in the sensitivity analysis (steady state and stability) unless the violation is observed in several sensitivities as it is indicated in R2.7.2: "Include actions to resolve performance deficiencies indentified in multiple sensitivity studies or provide rationale for why actions were not necessary". We feel

Organization	Yes / No	Question 1 Comment
		that this needs to be further clarified. R3.3.1:This requirement indicates that steady state analysis should include the effect of ride-through voltage limitations of generating units. We are having difficulty seeing how this is a steady-state issue. Generally one would expect a generator to experience ride-through voltage issues during faults. Per Table 1, P1.1 already require generator outages be taken - wouldn't that cover this issue? We feel that this needs to be further clarified. R3.4.1:This requirement states that "Transmission Planners shall coordinate with adjacent Planning Coordinators and Transmission Planners to ensure that Contingencies on adjacent Systems which may impact their Systems are included in the Contingency list". We feel that the coordination requirement should be removed from the standard as this will result in a massive increase in workload/time required to perform the TPL studies. AECI has several ties to adjacent Transmission Planners and Planning Coordinators - it will be a very time intensive task to coordinate with all of these parties. If the standard wants to ensure that the Contingencies overlap - we can agree to that, however we feel that the SDT needs to give some firm clarity on how far to go with it (how many buses away, only include ties, etc?). R4.1.2:We would like clarification on what is mean by "apparent impedance swings". R4.3.1:Is the intent of the SDT to require that generic or actual relay models be added to the stability models? We feel that this needs to be further clarified. R8:This requirement states that the Planning Assessments shall be distributed within 90 days of their completion to adjacent Planning Coordinators, Transmission Planners, and functional entities that have a reliability need (3rd Interconnection Customers?). We do not agree with the mandatory requirement of distributing the results of our TPL studies: We consider this information to be CEII We can agree to distribute the results upon request, but do not agree with the 30 day timeframe as more time will be needed to sign applicable Non-Disclosure Agreements, etc.

Response: Requirement R2, Part 2.4.1 – The SDT has allowed flexibility for the planner to determine how to meet this requirement. The implementation plan has allowed at least 24 months for coordination and development of modeling practices. No change made.

Requirement R2, Part 2.5 – Sensitivities are not required for years in the Long-Term Transmission Planning Horizon.

Requirement R2, Part 2.7 – Your understanding of the need for Corrective Action Plans to address deficiencies identified by sensitivity studies is correct. The SDT believes that the proposed language is clear. No change made.

Organization	Yes / No	Question 1 Comment
Requirement R3, Part 3.3.1 – Within the steady state analysis, the planner is required to represent the actual state of each generator based on the system response to a contingency and this includes voltage ride-through for generators. Table 1, P1-1 does not address this issue, since it is only a single generator outage and the requirements of Requirement R3, Part 3.3.1 could be a generator out of service (because it doesn't ride-through) as a result of a more severe contingency. No change made. Requirement R3, Part 3.4.1 – The SDT added the requirement to coordinate Contingency lists to ensure that these lists do not omit Contingencies on adjacent systems that may cause performance concerns. The SDT believes that most planners are already considering outages on the fringes of their neighbors system to ensure that they meet the performance requirements. The SDT does not agree that this will be a massive increase in workload for planners. No change made. Requirement R4, Part 4.1.2 – The "apparent impedance swing" is the trajectory of changes in the apparent impedance seen by a distance relay for various system and fault conditions. In the case contemplated in Requirement R4, Part 4.1.2, it is the trajectory seen by the distance relay for the initial fault and the subsequent generator(s) pulling out of synchronism. If that trajectory were to come within the tripping characteristic of the relay for a sufficient length of time, the relay would cause its associated line to trip. No change made. Requirement R4, Part 4.3.1, bullet 3 – The planner may reflect the effects of either generic or actual relay models. No change made. Requirement R8 – The SDT believes that 30 days should be adequate time to get the necessary agreements in place to make the Planning Assessment available. No change made.		
National Grid	No	R2.8.2We recommend this requirement be clarified with the following modification: The Corrective Action Plan shall:2.8.1. List System deficiencies and the associated actions needed to achieve required System performance. 2.8.2. Be reviewed in subsequent annual Planning Assessments for continued validity and implementation status of planned modifications to System Facilities and Operating Procedures.
Response: The proposed change of "identified" to "planned modifications to" does not change the proposed requirement or add clarity. No change made.		
Consolidated Edison Co. of NY, Inc.	No	Requirement R1.1.5: Delete "and Interchange." The inclusion of other than Firm transactions (e.g. economic transactions in Interchange) in a base power flow case utilized for planning/designing the interconnected system blurs the boundary between reliability issues and purely economic issues. Reliability issues are issues that a Transmission Owner (TO) must address for the purpose of meeting its load demand, and are defined by the application of well established reliability standards and criteria that are based on the electrical characteristics of the interconnected system, but without economic considerations. Instead, economic transactions are types of transactions that a TO may enter into once its load obligations are met, and are evaluated based on economic parameters that are markedly different from the aforementioned reliability criteria (e.g. congestion costs). Modeling all types of transactions in a power flow

Organization	Yes / No	Question 1 Comment
		case without distinction detracts from the accuracy and validity of either assessment (reliability and economic).
Response: Requirement R1, Part 1.5 does not require Interchange for economic purposes. The requirement is to represent "Known commitments". No change made.		
Nebraska Public Power District	No	The existing TPL-001 through TPL-004 Standards and Requirements are clear and concise. The new merged TPL-001-1 Standard and Requirements is no longer clear and concise. Further, the modification made to allow an SPS to trip a remote generator for an N-1 (TPL-002) type of event is a degradation of system reliability. Transmission system facilities should be added to maintain stability for a new generator interconnection for any N-1 Category B event. An SPS should not be relied upon for a Category B event, an SPS should only be allowed for Category C & D (TPL-003 & TPL-004) type events.
Response: The SDT believes that there is much less ambiguity in the proposed standard than the existing standards. There is no restriction in the existing TPL-002-1 on a planner's ability to utilize an SPS to trip a remote generator for a Category B event and the SDT did not change this. No change made.		
Northeast Power Coordinating Council	No	The wording of Part 1.1.2, "known outages...with a duration of at least 6 months" should be revised to "...at least 1 year". Also for consideration is that "known outages...with a duration of at least 6 months" are dealt with in operational studies rather than planning studies. Any adverse impacts that these outages might have are mitigated by operational decisions rather than planning decisions within a 6 month horizon. Moving this requirement out of the TPL Standard to an operational standard should be considered. Make the wording consistent between 2.1 and 2.2 as it relates to qualified past studies. Specifically:Parts 2.1.2, 2.1.4, 2.1.5The language of requirements 2.1.4 and 2.4.3 allowing the performance of one or moresensitivities appears to be inconsistent with language in 2.7.2. 2.7.2 requires multiplesensitivities to determine if actions to resolve performance deficiencies are necessary.Will varying only one measurable quantity several times in multiple simulationssatisfy multiple sensitivity studies or just one sensitivity study? The numbers and types of required sensitivity studies is unclear, and subject to interpretation by PCs and TPs. The current wording in Part 2.1.5, "spare strategy", appears to be open-ended regarding the number of

Organization	Yes / No	Question 1 Comment
		permutations to be analyzed. It should be restricted to assessing only one piece of equipment being unavailable or outaged at a time. 2.1.5 should be consistent with R2 and 2.1 regarding the use of the terms assessment and studies. As with the preceding comment regarding Part 1.1.2, moving this requirement out of the TPL Standard and to an operational standard should be considered.It is unclear if the last sentence of R2.1.5 allows for the curtailment of firm transmission service before the application of category P0, P1 and P2 events. This last sentence states:"...with the conditions that the System is expected to experience during the possible unavailability of the long lead time equipment." The wording in Part 2.2 "be supported by the following annual current study, supplemented with qualified past studies" should be replaced with the similar statement in Part 2.1: "be supported by current annual studies or qualified past studies". Part 2.7.1 lists potential system actions to address System deficiencies. It is suggested that this list be moved to a guideline or white paper. The wording in Part 8.1 needs to be amended to restrict comments to the most recent assessment only. Contingencies on back to back HVDC installations are not mentioned in the standard. The treatment of combined cycle facilities (all units in outage?) needs to be clarified, as well as Footnote 7 of Table 1 requiring clarification. In Table 1, Event 1 of Category P2 and related Footnote 7 are not clear because of the use of the word "possibly". If the intension is to simulate the line end opening condition of tapped lines, this should be clearly stated in the table (without reference to "Opening of a line section" and use of different language in the footnote). From Table 1b: "Consequential Load Loss as well as generation loss is acceptable as a consequence of any event excluding P0." Firm Transmission Services Loss is also acceptable and should be added (particularly in P1 loss of a single pole of a DC line for which the transfer is reduced accordingly to the remaining pole capability).
Response: Requirement R1, Part 1.1.2 does not address the outages in the operational time frame. However, if a planner knows that a System component is going to be out of service for more than 6 months, the planner must model the component outage in the appropriate models and evaluate the System to ensure that the System meets the performance requirements of the standard. No change made. Requirement R2, Part 2.1 and 2.2 – The SDT left the requirement to conduct the annual study on one of the study years in the Long-Term Planning Horizon to		

Organization	Yes / No	Question 1 Comment
ensure that the planner would conduct a new study annually to evaluate the System improvement needs in the Long-Term Planning Horizon. No change made. Requirement R2, Part 2.1.4 and 2.4.3 each require two studies on sensitivity cases, but more studies can be performed by the planner. Requirement R2, Part 2.7.2 states that Corrective Action Plans are required (or rationale for why they are not needed) are required if performance deficiency exists in multiple sensitivity studies, not just one study. No change made. Requirement R2, Part 2.1.5 requires the study of each major Transmission equipment outage, consistent with spare equipment strategy, for System normal and P1 and P2 Contingencies. It does not require the study of P1 and P2 Contingencies with more than one major Transmission equipment, except for other equipment that are modeled out as "Known outages" consistent with Requirement R1, Part 1.1.2. No change made. Requirement R2, Part 2.1.5 is a planning requirement to ensure that an entity's spare equipment strategy is considered during the development of the Planning Assessment. The curtailment of Firm Transmission Service (FTS) for the situation outlined would be considered curtailing FTS for Normal System conditions and is not allowed. No change made. Requirement R2, Part 2.1 and 2.2 – The SDT left the requirement to conduct the annual study on one of the study years in the Long-Term Planning Horizon to ensure that the planner would conduct a new study annually to evaluate the System improvement needs in the Long-Term Planning Horizon. No change made. Requirement R2, Part 2.7.1 – The list represents examples, but not an exhaustive list of actions that could make up a Corrective Action Plan. No change made. Requirement R8, Part 8.1 - The SDT does not believe that a time limit for commenting on a Planning Assessment is required. Beyond responding to the comment, other actions by the planner are at the discretion of the planner. No change made. Table 1, P1 {back to back DC - The contingent loss of back to back HVDC facilities is included as a transformer. Footnote 5 states, in part, that "Requirements which are applicable to transformers also apply to variable frequency transformers and phase shifting transformers. Therefore, the SDT has not explicitly included back-to-back HVDC as a separate Contingency. No change made. Combined cycle generation outages are expected to be modeled in the manner that they would be tripped, per Requirement R3, Part 3.3.1 and Requirement R4, Part 4.3.1. Therefore, if the outage of one generator causes more generation to be lost (via the Protection System or other automatic controls are expected to disconnect), then, the entire amount of generation lost must be modeled for that specific contingency. No change made. Table 1, footnote 7 – The SDT added the footnote to further explain its intent for P2-1 and to ensure that the planner assess the voltage of a load bus that was on a radial line. The word "possibly" was used since having load on a radial is not always the outcome of opening one end of a line section. No change made. Table 1, Top note 1b – The SDT disagrees that Firm Transmission Service (FTS) may be interrupted for all events. The events where the interruption of FTS is not permitted are shown with a "No" in the column titled "Interruption of Firm Transmission Service Allowed", however, footnote 9 clarifies that interruption of Firm Transmission Service can be used as both a corrective action and system adjustment as permitted within Table 1. For the specific issue raised, loss of a single pole of a DC line, to the extent the availability of the DC pole is a condition of the transfer being viable, footnote 4 may also address the commenter's		

Organization	Yes / No	Question 1 Comment
concern. No change made.		
Ameren	No	There were a number of comments made on the previous draft of TPL-001-2 for which there were few, if any, changes made to the latest draft of the standard. Specifically:Requirement R1 does not address normal (pre-contingency) operating procedures or system configurations. Language should be added to the requirement (possibly as an additional Requirement R1.1.7) to include normal operating procedures or system configurations in place prior to any contingency occurring. Requirement R2.4.1, which addresses dynamic load modeling, has been a cause for concern because of the lack of guidance regarding reasonable induction motor representation as opposed to generic load models. While it is recognized that the effort to simulate the effects of induction motor loads is important, it is premature to include such modeling as part of the requirements for this standard. In addition, it appears that only the peak load model in R2.4.1 is required to represent expected dynamic behavior of Load. Such load models, if adopted should represent dynamic behavior of the load for all dynamic studies.
Response: The SDT posted a redline draft against the last posted draft and also posted a redline draft against the previous ballot draft. The SDT addressed many important issues that were raised during the first ballot. The SDT did not include all of the different procedures that are permitted. Normal operation procedures or system configuration may be utilized as long as they are consistent with the way the System would be operated and not inconsistent with the requirements within the standard. Requirement 2, Part 2.4.1 – One focus of dynamic Load model requirement in Part 2.4.1 is “considering the behavior of induction motor Load”. The areas of concern for induction motor Load are the Peak Load periods since Fault Induced Delayed Voltage Recovery (FIDVR) is primarily a concern at high Load levels with a high penetration of induction motor Loads. The SDT has spelled out this requirement in the Peak Load studies but did not include the explicit requirement, with focus on induction motor Load, for the other Load periods. Even though the standard doesn’t have the explicit requirement for other Load levels, Requirement R1 includes the statement “shall represent projected System conditions”, so the planner cannot ignore the dynamic behavior of the Load for those other Load periods. No change made.		
Western Area Power Administration	No	We concur that the standard is an improvement over previous drafts, but we vote "No" to the existing draft and request additional clarifications and/or modified language for a re-circulated vote prior to adoption. The following are areas where we suggest improvement or have questions:Please further define Consequential and/or Non-Consequential Load Loss: Does the Consequential Load Loss definition include underfrequency or undervoltage load shedding installed to protect transmission system reliability? Does the Consequential Load Loss definition include load tripped by a Special Protection System (SPS) or a

Organization	Yes / No	Question 1 Comment
		Remedial Action Scheme (RAS)? Either how underfrequency and undervoltage load shedding or how load shedding by a RAS relates to Consequential Load Loss should be clear in the Consequential and/or Non-Consequential Load Loss definition of the approved version of this NERC standard. Why is Near-Term Tranmission Planning Horizon deleted from the definitions of Terms Used in this Standard, yet it is used throughout the standard? This definition should remain. R1.1.5: How are “known commitments for Firm Transmission Service” to be modeled and tracked in power flow cases? Is it acceptable for Transmission Planners to simply assume what the ultimate sources and ultimate sinks are for each firm transmission service commitment or are Transmission Planners to know exactly which ultimate sources and ultimate sinks are associated with each commitment and to track each one accordingly in each power flow case?Assuming the intent here is reliability based and not marketing based, is the application of Firm Transmission intended to apply to reliability designated ‘paths’? Most all Firm Transmission service contracts have caveats for unplanned interruption and such agreements should qualify as “re-dispatch” per Footnote 9? R2.1.5: If a group of utilities were to develop and manage among themselves a coordinated spare equipment program, such that the risk to any one of its participating entities of experiencing a significant unavailability for any major Transmission equipment that has a lead time of one year or more is deemed not significant, then would those utilities still have to do the studies required by R2.1.5 to evaluate the system impact of extended outages of such equipment?Scenario for Clarification: Short of spare equipment for items with a greater than 1 yr lead time, assessment studies are required to include sensitivities and operating plans for sustained loss of these equipment items, as a prior outage. For example, if an EHV facility is lost for more than 1 yr, and firm transmission interruption is not allowed, it appears the only compliant alternative (to a redundant facility) is a redispatch plan that is well documented and accepted by all stakeholders, per Footnote 9. R2.3: Is only the 5-year Near-Term Transmission Planning Horizon case required for the annual short-circuit analysis? R2.4.1: How is the dynamic modeling of induction motor Loads to be developed by the Transmission Planners? Is it acceptable for Transmission Planners to assume the same induction motor modeling as has generally been assumed and applied by most Transmission Planners throughout the Western Interconnection or will the induction motor modeling have to be based upon the type and amount of actual

Organization	Yes / No	Question 1 Comment
		induction motors installed in the system? R2.5: Does NERC have a particular technical rationale about what determines “proposed material generation additions or changes?” R2.6.2: Does NERC have a particular technical rationale about what determines “material changes?” R2.7.3: Please define “beyond the control” under Definition of Terms Used in Standard. This is an important concept. Without NERC definition, this term is highly debatable and should be eliminated. Scenario for Clarification: If the stakeholder rate payers do not approve expenditures for facility improvements required to eliminate non-consequential load loss, is this beyond the control of the Transmission Planner? Rate payers should be able make the ultimate free market choice determination of risk versus cost associated with their reliability. Otherwise market interests (particularly generation) disproportionately pressure excessive reliability based improvements that must be borne by all rate payers. R3.3.1: Please define “relay loadability limit” under Definitions of Terms Used in Standard. This is an extremely important concept. This term has been used quite commonly for decades and is now used in this latest proposed standard. Without NERC definition, this term is highly debatable and should be eliminated. Scenario for Clarification: If PRC-023 is met whereby all “relay loadability limits” are set at least 150% of the highest thermal limiter (0.85 voltage and 30 lagging powerfactor) this sensitivity would justifiably not be needed so long as verification is shown that no element overloaded greater than 150%. R3.1 and R3.4: The interrelation between these two paragraphs needs additional clarification. R3.1 calls for verification via studies that the BES meets Table 1 performance criteria based on the contingency list resulting from R3.4. However, R3.4 states that the contingency list used to meet R3.1 only need include “Those planning events in Table 1, that are expected to produce more severe System impacts on.....the BES” and the associated “rationale” for those chosen contingencies. Is NERC suggesting that the studies do not need to include all contingencies based on Table 1, so long as ample “rationale” is provided? However, the Transmission Planner must provide studies to determine if every contingency of Table 1 meets performance requirements. How are the “more severe” contingencies determined if the Table 1 contingencies are not evaluated comprehensively? It seems R3.4 could be eliminated and the contingencies be based simply on Table 1. Please define “more severe”, relative to less severe under Definitions of Terms Used in Standard, in an effort to help evaluate the suitability of a particular contingency for inclusion on this list. Looking at context, it appears that the purpose of this statement is to ensure that the worst contingencies are studied. Is the intent here simply to allow a given contingency to cover for a less severe or similar contingency and avoid duplicate simulations?

Organization	Yes / No	Question 1 Comment
		R3.4.1 and R4.4.1 Please include and define a reasonable number of contingent buses into adjacent systems that should be considered. No more than 2 are recommended for the standard. R3.5 and R4.5: How many of the "events in Table 1 that are expected to produce more severe system impacts" should the required evaluation identify and evaluate? To what extent should the evaluation focus on the "other" Extreme Events described under items 3.b and 2.f in Table 1, particularly if existing disturbance reports in the Western (or Eastern) Interconnection have recorded and evaluated the occurrence of particular events that have already created cascading? Because the requirement seems to involve a check for Cascading, perhaps some clarity could be provided with respect to the NERC definition of "Cascading." In particular, in the Cascading definition, how widespread is "widespread;" is the phrase "electric service interruption" only about the loss of firm load or could it also be only about the loss of firm generation or only about the loss of firm transmission service or is it about some combination of loss of firm load, loss of firm generation, and loss of firm transmission service; how large an area is meant by the expression "spreading beyond an area predetermined by studies" when the simulations that analyze the initiating Extreme Event will model the entire Western (or Eastern) Interconnection? So how does the study determine that the sequentially spreading service interruption has spread beyond the entire Western (or Eastern) Interconnection that is modeled in the simulation? Or is the term "area" meant to describe only that part of the Western (or Eastern) Interconnection that the Transmission Planner has evaluated for system impacts while ignoring impacts to the rest of the Interconnection? Table 1 - Planning Events, Steady State Only Note i: "The response of voltage sensitive Load that is disconnected from the System by end-user equipment associated with an event" seems to be included as items 2) and 3) under the Non-Consequential Load Loss definition. So, it seems acceptable to use this form of load loss to meet the stability performance requirements. However, the "Steady State Only" note i in Table 1 specifically does not allow its use to meet steady state performance requirements. Therefore, the "Steady State Only" note i in Table 1 should clarify why it seems acceptable to use it to meet stability performance requirements but not to meet steady state performance requirements. Table 1 - Planning Events, Category P2: Category P2 seems to include an unrelated mix of planning events ranging from a seemingly benign event (i.e., opening of a line section without a fault) to what would seem to be much more severe events (i.e., bus section fault or internal breaker fault). A clarification of why these planning events were lumped into the same Category P2 would be helpful to the Transmission Planner. Also, does the language in footnote 7 (i.e., "opening one end of a line section without a fault on a normally networked Transmission circuit ...") mean that P2-1 ("opening of a line section without a fault") should be

Organization	Yes / No	Question 1 Comment
		modeled as an open-ended line section? Table 1 - Planning Events, P2-2 (EHV) and P2-3 (EHV): For each of these planning events, its corresponding "Non-Consequential Load Loss Allowed" column should include a footnote 12 with each of the "No" boxes, similar to that allowed under the seemingly much less severe event P2-1 ("opening of a line section without a fault"). Otherwise, please explain why the seemingly much less severe P2 event (P2-1) has a footnote 12 exception for Non-Consequential Load Loss Allowed but the two seemingly more severe P2 events (P2-2 and P2-3) do not. Table 1 - Planning Events, P4-1 through P4-5 (EHV): For the stuck breaker planning events of P4-1 through P4-5 on the EHV system, their corresponding "Non-Consequential Load Loss Allowed" column should include a footnote 12 with their "No" box, similar to that allowed under the seemingly much less severe N 1 planning events (P1-1 through P1-5). Otherwise, please explain why the seemingly much less severe N 1 events (P1-1 through P1-5) have a footnote 12 exception for Non-Consequential Load Loss Allowed but the seemingly much more severe stuck breaker events (P4-1 through P4-5) do not. Table 1 - Planning Events, P5-1 through P5-5 (EHV): For the relay failure planning events of P5-1 through P5-5 on the EHV system, their corresponding "Non-Consequential Load Loss Allowed" column should include a footnote 12 with their "No" box, similar to that allowed under the seemingly much less severe N 1 events (P1-1 through P1-5). Otherwise, please explain why the seemingly much less severe N 1 events (P1-1 through P1-5) have a footnote 12 exception for Non-Consequential Load Loss Allowed but the seemingly much more severe relay failure events (P5-1 through P5-5) do not.

Response: The definition of Consequential Load Loss does not include underfrequency or undervoltage load shedding, since this Load is not interrupted by the "Protection System operation designed to isolate the fault". No change made.

The definition of Consequential Load Loss does not include Load tripped by a Special Protection System (SPS) or a Remedial Action Scheme (RAS), since this Load is not interrupted by the "Protection System operation designed to isolate the fault". No change made.

The definition of Near-Term Transmission Planning Horizon is now an approved NERC Glossary Term. No change made.

Requirement R1, Part 1.1.5 (Known commitments for Firm Transmission Service and Interchange) is required to ensure that planners consider those transactions that have been committed to and meet the system performance requirements. "How" the planners account for these commitments should be developed by the planner in accordance to all of the regulatory and market rules that apply to them. No change made.

Requirement R2, Part 2.1.5 does not require a planner to study the unavailability of major long lead time equipment if the entity's spare equipment strategy could

Organization	Yes / No	Question 1 Comment
not result in the unavailability of that equipment for one year or more. No change made. Requirement R2, Part 2.3 requires the short circuit analysis only for the years of the Near-Term Transmission Planning Horizon. No change made. RequirementR2, Part 2.4.1 – The SDT believes that the planner must consider the dynamic behavior of its System load and develop a representative model, however, the SDT should not dictate "how" the load should be modeled. No change made. Requirement R2, Part 2.5 does not specify "how" an entity determines that "proposed material generation additions or changes" have occurred. It is up to each entity to develop its technical rationale for its determination. No change made. Requirement R2, Part 2.6.2 does not specify "how" an entity determines that "material changes" have occurred. It is up to each entity to develop its technical rationale for its determination. No change made. Requirement R2, Part 2.7.3 has been included to account that certain Corrective Action Plans may not be able to be implemented due to circumstances that the planner cannot control. The SDT expects that these situations will be limited and that the impact to BES will be limited to interrupting Non-Consequential Load if the Contingency were to occur. Due to the wide variety of circumstances across North America, the SDT did not believe that it was appropriate to articulate the acceptable set of conditions. No change made. Requirement R3, Part 3.3.1 utilizes the term "relay loadability limits" as it is utilized in the PRC standard. No change made. Requirement R3, Parts 3.1 and 3.4 together require the planner to create a list of the "more severe" Contingencies, along with the rationale for "why" those Contingencies were selected, that will be simulated to ensure that the System meets the performance requirements. This language was included to be consistent with the existing TPL standards that do not require the planner to run simulations of all possible Contingencies. No change made. Requirements R3, Part 3.4.1 and Requirement R4 Part 4.4.1 do not include "how" to define the Contingencies in adjacent systems that should be included since it will be variable based on the conditions of the System. It is the responsibility of the planners to coordinate the list of Contingencies to ensure BES reliability. No change made. Requirement R3, Part 3.5 and Requirement R4 Part 4.5 require the planner to identify the "events in Table 1 that are expected to produce more severe system impacts". The number of "events" that should be included in the list are a "how" that the planner must determine. No change made. Table 1, Extreme Events Steady State 3b and Stability 2f are included to ensure that the planner considers "operating experience" when determining the extent of Contingency analysis to conduct for the entity's Extreme Event simulations. The term "widespread" categorizes those events that are more far-reaching than the Local Area events identified in Extreme Events Steady State 2 a-e. No change made. Table 1, Top note 'i' Steady State Only does not apply to Stability studies. Therefore, voltage sensitive Load disconnected by end-user equipment may be used during Stability simulations. The planner should not depend on this voltage sensitive Load being disconnected to meet the performance requirements (steady state after the system transient reaction ends) but this Load should be disconnected from the System for the Stability simulations to accurately represent how the		

Organization	Yes / No	Question 1 Comment
System will respond. No change made. Table 1, P2 contains single Contingency events that have the same performance requirements. No change made. Table 1, P2-1 covers the opening of line section without a fault and Footnote 7 clarifies that the line section may be energized from one end and still serving Load. The expectation is that both situations are evaluated when appropriate. No change made. Table 1 P2-2 (EHV) and P2-3 (EHV) do not allow the exception allowed by Footnote 12. The SDT believes that the EHV system should be planned to handle these single Contingencies without Non-Consequential Load Loss. No change made. Table 1, P4-1 through P4-5 (EHV) does not allow the exception allowed by Footnote 12. The SDT believes that the EHV system should be planned to handle these Contingencies without Non-Consequential Load Loss. No change made. Table 1, P5-1 through P5-5 (EHV) does not allow the exception allowed by Footnote 12. The SDT believes that the EHV system should be planned to handle these Contingencies without Non-Consequential Load Loss. No change made.		
Progress Energy		First, Progress Energy ("PE") notes that many changes to the Requirements language have been appropriate or have improved upon the language of the previous drafts, and PE commends the SDT in this. PE does have concerns, however, with the language in R8 and its corresponding Measure M8, and therefore must select 'no' for Q1 and provide comments. PE disagrees with the language of R8 primarily to the extent that the use of the verb “distribute” with respect to communicating Planning Assessments leads the reader to M8, which lacks language that would provide for the optimal correlation with R8. Regarding the M8 language, PE feels that the term “demonstration of a public posting” is a valid action in demonstrating compliance with R8 and thus should be more clearly described as one of several acceptable methods of distributing Planning Assessments. In addition, given the appropriate concern that NERC and FERC have recently raised regarding Cyber threats and the need for additional Cyber Security measures, PE feels that the public posting language should contain a qualification regarding the security of CEII information. PE thus recommends that an appropriate phrase to use would be “demonstration of a secure public posting”, thereby making clear that a public posting would not be a website accessible to just anyone due to CEII concerns.
Response: Requirement R8 - The SDT agrees that posting is an acceptable method of distributing but the intent of the standard requirement is to ensure that affected parties obtain the Planning Assessment. Measure M8 clarifies that posting is acceptable but not the only way to meet the requirement. While the SDT recognizes that certain planning information is covered by CEII requirements, the responsibility to protect that information already resides with the entity and is therefore not needed within this standard. No change made.		

Organization	Yes / No	Question 1 Comment
SERC Planning Standards Subcommittee	Yes	
SPP Reliability Standards Development Team	Yes	
MRO's NERC Standards Review Forum	Yes	
BC Hydro	Yes	
Entergy Services	Yes	
Imperial Irrigation District	Yes	
Arizona Public Service Company	Yes	
American Electric Power	Yes	
Duke Energy	Yes	
Transmission Strategies, LLC	Yes	
NIPSCO	Yes	
Muscatine Power and Water	Yes	
ITC	Yes	
Tri-State Generation and Transmission Assn., Inc.	Yes	In general, revisions are editorial and seem to have improved the overall document.

Organization	Yes / No	Question 1 Comment
Pepco Holdings Inc	Yes	Pepco Holdings Inc supports the proposed revisions.
Puget Sound Energy, Inc.	Yes	We Appreciate SDTs efforts in bringing clarity to the TPL standards.
South Carolina Electric and Gas	Yes	
Georgia Transmission Corporation	Yes	
American Transmission Company, LLC	Yes	
TVA TP&C	Yes	
Xcel Energy	Yes	
MISO	Yes	
Consumers Energy	Ballot Comment	We agree with the comments of MISO.
Oncor Electric Delivery Company LLC	Yes	
Response: Thank you for your support.		

2. **The SDT has made revisions to the VRF and VSL of TPL-001-2 which will be part of a non-binding poll with this posting based on industry comments and the Quality Review. Do you agree with these changes? If you do not support these changes or you agree in general but feel that alternative language would be more appropriate, please provide specific suggestions in your comments.**

Summary Consideration: Comments received were predominantly about individual assessments of whether a VRF or VSL had been assigned correctly and some pointed out what they thought were incorrect interpretations of established guidelines by the SDT. The SDT followed guidelines established by FERC and NERC in these areas and therefore no changes were made in this regard.

In two particular instances, inconsistencies between wording in the requirement and VSL were pointed out and the SDT made the following changes due to those comments:

R1. VSL – Severe (third part): The responsible entity's System model did not use ~~the latest~~ data consistent with ~~the data~~that provided in accordance with the MOD-010 and MOD-012 standards and other sources, including items represented in the Corrective Action Plan.

R8 VSL	The responsible entity distributed its Planning Assessment results to adjacent Planning Coordinators and adjacent Transmission Planners but it was more than 90 days but less than or equal to 120 days following its completion. OR, The responsible entity distributed its Planning Assessment results to functional entities having a reliability related need who requested the Planning Assessment in writing but	The responsible entity distributed its Planning Assessment results to adjacent Planning Coordinators and adjacent Transmission Planners but it was more than 120 days but less than or equal to 130 days following its completion. OR, The responsible entity distributed its Planning Assessment results to functional entities having a reliability related need who requested the Planning Assessment in writing but	The responsible entity distributed its Planning Assessment results to adjacent Planning Coordinators and adjacent Transmission Planners but it was more than 130 days but less than or equal to 140 days following its completion. OR, The responsible entity distributed its Planning Assessment results to functional entities having a reliability related need who requested the Planning Assessment in writing but	The responsible entity distributed its Planning Assessment results to adjacent Planning Coordinators and adjacent Transmission Planners but it was more than 140 days following its completion. OR The responsible entity did not distribute its Planning Assessment results to adjacent Planning Coordinators and adjacent Transmission Planners.

	it was more than 30 days but less than or equal to 40 days following the request	it was more than 40 days but less than or equal to 50 days following the request.	it was more than 50 days but less than or equal to 60 days following the request.	OR The responsible entity distributed its Planning Assessment results to functional entities having a reliability related need who requested the Planning Assessment in writing but it was more than 60 days following the request. OR The responsible entity did not distribute its Planning Assessment results to functional entities having a reliability related need who requested the Planning Assessment in writing.

Organization	Yes / No	Question 2 Comment
Consolidated Edison Co. of New York	Ballot Comment	Requirement R1.1.5: Delete “and Interchange.” The inclusion of other than Firm transactions (e.g. economic transactions in Interchange) in a base power flow case utilized for planning/designing the interconnected system blurs the boundary between reliability issues and purely economic issues. Reliability issues are issues that a Transmission Owner (TO) must address for the purpose of meeting its load demand, and are defined by the application of well established reliability standards and criteria that are based on the electrical characteristics of the interconnected system, but without economic considerations. Instead, economic transactions are types of transactions that a TO may enter into once its load obligations are met, and are

Organization	Yes / No	Question 2 Comment
		evaluated based on economic parameters that are markedly different from the aforementioned reliability criteria (e.g. congestion costs). Modeling all types of transactions in a power flow case without distinction detracts from the accuracy and validity of either assessment (reliability and economic).
Response: The SDT selected Known commitments for Firm Transmission Service and Interchange to separate the planning requirements of commitments from the economic transactions. No change made.		
San Diego Gas & Electric	Ballot Comment	The clarity of this standard is getting worse. Our earlier comments did not seem impacting. At this point, we believe the existing TPL-001-0.1, TPL-002-0a, TPL-003-0a and TPL-004-0 provide much better clarify for us to comply with the TPL standards.
Response: The SDT believes that there is much less ambiguity in the proposed standard than the existing standards, based on feedback from previous postings. . No change made.		
Alberta Electric System Operator	Ballot Comment	The AESO casts an abstain vote as the VSLs and VRFs in Alberta are established by provincial authorities.
Response: Thank you for your response.		
Western Electricity Coordinating Council	Ballot Comment	I'm not certain that I agree with changing the VRF for R2 from Medium to High. I understand that it is accordance with the VRF guidelines, but I guess I disagree with the guidelines. I don't believe that any requirement with a planning time frame, if violated, could directly cause or contribute to bulk electric system instability, separation, or a cascading sequence of failures, or could place the bulk electric system at an unacceptable risk of instability, separation, or cascading failures, or could hinder restoration to a normal condition.
Response: The SDT is required to follow the VRF guidelines established by FERC, which apply to both operations and planning on equal footing. No change made.		
Florida Municipal Power Agency	Ballot Comment	FMPA has minor comments to help improve the clarity of the standard. R7 is not needed and administrative in nature. Instead is should say that an entity can use as evidence another entity's study, but not in the requirement and rather in the measures.

Organization	Yes / No	Question 2 Comment
		R8 is ambiguous, does the requirement require submitting the Planning Assessment only after receiving a written request, or automatic distribution to neighboring PCs and TPs without a written request, and to others with a reliability related need following a written request? Table 1, under first heading of "Steady State and Stability", bullet c should be removed since it is duplicative of the standard, and not entirely consistent with the standard (e.g., open to interpretation whereas the standard better clarifies how to study protection system operation)
Keys Energy Services City of Green Cove Springs	Ballot Comment	R7 is not needed and administrative in nature. Instead is should say that an entity can use as evidence another entity's study, but not in the requirement and rather in the measures. R8 is ambiguous, does the requirement require submitting the Planning Assessment only after receiving a written request, or automatic distribution to neighboring PCs and TPs without a written request, and to others with a reliability related need following a written request? Table 1, under first heading of "Steady State and Stability", bullet c should be removed since it is duplicative of the standard, and not entirely consistent with the standard (e.g., open to interpretation whereas the standard better clarifies how to study protection system operation)
Response: Requirement R7 ensures that there are no gaps between Transmission Planners or the Planning Coordinators that may cause reliability concerns. No change made. Requirement R8 requires the automatic distribution to neighboring Planning Coordinators and Transmission Planners without a written request and to others with a reliability related need following a written request. The SDT believes this is an important consideration and not ambiguous. No change made. Table 1, Bullet c under first heading, is not in conflict with the requirements. The SDT decided to include additional details in Table 1 so that it would have the basic information necessary for the planner to develop their simulations for their studies without always referring back to the requirements language. No change made.		
City of Austin dba Austin Energy	Ballot Comment	Previous TPL Standard balloting included the FERC Order that clarified footnote "b" regarding the planned or controlled interruption of electric supply for an N-1 event. In our view, a Registered Entity's Board of Directors, local public utility commission or customers should determine the acceptable level of service and the associated cost. This view is captured in footnote #12 of Table 1 in the TPL Standard and will be crucial to maintaining an Affirmative vote. Additionally, with respect to R2 (2.5), the value of annually assessing system stability for years 6-10 is

Organization	Yes / No	Question 2 Comment
		questionable. The requirement for stability assessment in years 6-10 should be limited to new generation interconnections or planned major transmission system improvements with regional impact. The standard should clarify the "material changes" that would necessitate stability planning assessments and documentation. Finally, The R8 requirement to distribute all Planning Assessment results to adjacent Planning Coordinators and Transmission Planners is excessive and cumbersome. Regarding R8, we suggest the following language: "Each Planning Coordinator and Transmission Planner shall distribute its Planning Assessment results to adjacent Planning Coordinators and Transmission Planners in accordance with the requirements of the applicable Reliability Coordinator. Any Registered Entity with a reliability-related need may submit a written request for the Planning Assessment results and the Transmission Planner or Planning Coordinator shall provide the latest Planning Assessment results within 30 days of such request."
Response: Footnotes 12 and 9 were translated from the BOT approved language from TPL-002-1, Footnote 'b'. No change made. For Requirement R2, Part 2.5, the SDT believes it is important to evaluate Stability when the planners are evaluating new generation additions or changes which can be more than 5 years in the future, as required in NERC Standard FAC-001-0. The SDT discussed defining 'material change' but did not believe that such a definition was appropriate in a continent-wide standard. With the wide variety in sizes and types of systems, the number of parameters that need to be considered, etc., there are too many variables involved. No change made. For Requirement R8, the SDT disagrees that the requirement is excessive and cumbersome and did not make the suggested change. In addition, the proposed language would place requirements on the Reliability Coordinators, who are not included in the Applicability for this standard, and they should not be involved in determining the extent of the distribution of the Planning Assessments.		
Southwest Power Pool Regional Entity	Ballot Comment	I'm voting affirmative, but I'd prefer to avoid having VSLs where the only choice is Severe. I'd like to see either some gradation or we should use a different term to clarify that the requirement is either met or not (binary) instead of Severe VSL.
Response: The SDT is required to follow the guidelines established by NERC and FERC. No change made. No change made.		
Arizona Public Service Co.	Ballot Comment	While AZPS generally supports this standard, AZPS cannot support the violation severity levels that are proposed in the recirculation ballot. AZPS believes the time frames set forth in the proposed security levels are unreasonably short (10 days) and should be extended to 30 days between each elevation in severity level. For these reasons, AZPS has changed its vote to "negative."

Organization	Yes / No	Question 2 Comment
Response: The SDT has followed the accepted guidelines for timeframes in the proposed VSLs. The SDT is required to follow the guidelines established by NERC and FERC. . No change made.		
Balancing Authority of Northern California NCR11118	Ballot Comment	SMUD believes believes that the VRF should be Medium, as are the VRFs for the other requirements related to conducting the assessments, rather than High.
Response: The SDT is required to follow the VRF guidelines established by FERC,.. No change made.		
Black Hills Corp	Ballot Comment	Black Hills is voting against the proposed VRF/VSL's based on the fact that the VRF for R2 was changed from Medium to High without any explanation.
Deseret Power	Ballot Comment	R2 was moved from medium to high without reason. Since it is long term it should remain medium.
California ISO	Ballot Comment	The VRF for Requirement R2 was changed from Medium to High without explanation. The other VRF's for assessment requirements continue to have a Medium VRF designation, and for consistency it would be appropriate for Requirement R2 to continue to have a Medium VRF designation.
Bonneville Power Administration	No	The VRF for R2 was changed from Medium to High without any explanation. Since the time horizon for R2 is Long Term Planning, BPA believes that the VRF should be Medium, as are the VRFs for the other requirements related to conducting the assessments, rather than High.
Arizona Public Service Company	No	With regards to R2, it appears that the VRF has changed from Medium to High without any justification; and with the time horizon of long term planning, AZPS believes there is no justification for changing it from Medium to High.
Idaho Power Company	Ballot Comment	The VRF for R2 was changed from Medium to High without any explanation. The time horizon for R2 is Long Term Planning and the Idaho Power believes that the VRF should be Medium, as are the VRFs for the other requirements related to conducting the assessments, rather than High.
Tucson Electric Power Co.	Ballot	This recommendation is based on the fact that the VRF for R2 was changed from Medium to High without any

Organization	Yes / No	Question 2 Comment
	Comment	explanation. The time horizon for R2 is Long Term Planning and it is believed that the VRF should be Medium, as are the VRFs for the other requirements related to conducting the assessments, rather than High.
Response: In the comment form for this posting, the SDT did address this issue as shown below: R2 – The VRF has been changed to High to reflect the importance of the Planning Assessment and to meet the latest guidelines. No change made.		
MidAmerican Energy Co.	Ballot Comment	Regarding Requirement 8, we do not believe that there is significant risk to the reliability of the BES if an annual Planning Assessment is not distributed to another entity or if a documented response to Planning Assessment comments is not provided within 90 days of a request. Requirement 8 is an administrative requirement that adds little to improve reliability. We recommend that the VRF for Requirement 8 remain "Low", rather than be changed to "Medium".
Response: In assigning the VRF for Requirement R8, the SDT is required to follow the guidelines established by NERC and FERC. No change made.		
Independent Electricity System Operator	Ballot Comment	IESO is generally supportive of the draft of TPL-001-2 as evidenced by our previous AFFIRMATIVE vote during the last ballot. Further, IESO also supported the revisions to Footnote 'b' to Table 1 of the TPL standards under Project 2010-11. That revision was balloted and approved by the ballot pool in February 2011 and filed with FERC for approval in March 2011. The revised footnote has been incorporated into the current draft of TPL-001-2 as Footnotes 9 and 12 but the Commission, by letter to NERC dated May 17, 2011, has requested NERC to provide supplemental information before the revised Footnote 'b' could be approved. In light of FERC's request and the uncertainty regarding the final provisions of these footnotes, coupled with the ongoing work on Project 2010-17 for the revision of the BES definition and development of an Exception Process and the impact that may have, we respectfully suggest that the drafting team delay further work on TPL-001-2 pending FERC's ruling on NERC's petition seeking approval of the transmission planning standards that contain the revised Footnote 'b' to Table 1.
Response: The SDT believes that it is important to continue with the approval of this standard. If FERC directs changes based on TPL-002-1, Footnote 'b', they will be addressed with this project.		
Hydro One Networks, Inc.	Ballot	Hydro One Networks is casting a negative vote. Other than a few changes related to Footnotes 9 and 12 of Table 1 and VSLs, the other changes in the proposed draft are minor. The concerns of the industry on several

Organization	Yes / No	Question 2 Comment
	Comment	important issues have not been sufficiently addressed in this draft. For detailed comments please refer to our submission through the on-line comment form.
Response: Please see responses to on-line comments.		
Platte River Power Authority	Ballot Comment	VRF for R2 should be changed back to Medium. VRF for R8 should be changed back to Low.
Response: The SDT is required to follow the VRF guidelines established by NERC and FERC. . No change made.		
American Municipal Power	Ballot Comment	The VSLs appear to have a very low threshold for a SEVERE violation of the individual standard requirements for a planning standard. Please consider the impact of having arbitrarily low thresholds for SEVERE violations. The way the VSLs are set now, an honest interpretation or a small administrative mistake could result in a very high dollar penalty and would be construed as having a high correlation with causing a cascading outage by the media. I think we all just want the appropriate fines or sanctions for a violation and to have minimal fines or sanctions for accidental interpretations or menial paperwork based violations. Please consider another metric or raising the current thresholds.
Response: The SDT is required to follow the VSL guidelines established by NERC and FERC, which apply to both operations and planning on equal footing. No change made.VSL		
Florida Municipal Power Pool	Ballot Comment	A. Spare Equipment, R2.1.5 - The requirement reaches beyond the FERC directive. The directive was: "Accordingly, the Commission directs the ERO to modify the planning Reliability Standards to require the assessment of planned outages consistent with the entity's spare equipment strategy." So, the directive is only to address planned outage, not unplanned outages. Also note that the applicability to GSUs is ambiguous. "Transmission" is defined as: "An interconnected group of lines and associated equipment for the movement or transfer of electric energy between points of supply and points at which it is transformed for delivery to customers or is delivered to other electric systems." Is the "point of supply" the generator terminal, or the GSU high side terminal? B. Table 1, under first heading of "Steady State Only", bullet i is open to interpretation. Many utilities use steady state P-V analyses to study voltage stability and design UVLS systems in apart around those steady

Organization	Yes / No	Question 2 Comment
		state analyses. Would this bullet essentially eliminate P-V and Q-V studies and the related use of UVLS? C. R7 is not needed and administrative in nature. Instead is should say that an entity can use as evidence another entity's study, but not in the requirement and rather in the measures. D. R8 is ambiguous, does the requirement require submitting the Planning Assessment only after receiving a written request, or automatic distribution to neighboring PCs and TPs without a written request, and to others with a reliability related need following a written request? E. Table 1, under first heading of "Steady State and Stability", bullet c should be removed since it is duplicative of the standard, and not entirely consistent with the standard (e.g., open to interpretation whereas the standard better clarifies how to study protection system operation)
Response: Requirement R2, Part 2.1.5 ensures BES reliability by requiring the planner to assess the system for long lead time items based on the entities' spare equipment strategy. The footnotes in Table 1 clearly define the way transformers are evaluated. No change made. Table 1, Steady State and Stability, Item I does not restrict the use of UVLS since it only addresses equipment disconnected by end-user equipment. No change made. Requirement R7 ensures that there are no gaps between Transmission Planners or the Planning Coordinators that may cause reliability concerns. No change made. Requirement R8 requires the automatic distribution to neighboring Planning Coordinators and Transmission Planners without a written request and to others with a reliability related need following a written request. The SDT believes this is an important consideration and not ambiguous. No change made. Table 1, Bullet c under first heading, is not in conflict with the requirements. The SDT decided to include additional details in Table 1 so that it would have the basic information necessary for the planner to develop their simulations for their studies without always referring back to the requirements language. No change made.		
MRO's NERC Standards Review Forum	No	The NSRF recommends that the VRF for Requirement 8 remain "Low", rather than be changed to "Medium". We do not believe that there is significant risk to the reliability of the BES if an annual Planning Assessment is not distributed to another entities or a documented response to Planning Assessment comments is not provided within 90 days of a request. The findings in an assessment report are not urgent, but address system needs that will emerge over years in the future. In addition, entities with a reliability related need for Planning Assessment information generally have the means to make their own independent planning assessment of adjacent systems or other areas of interest.

Organization	Yes / No	Question 2 Comment
Minnkota Power Coop. Inc.	Ballot Comment	MPC echoes the comments of the MRO NSRS/F
Lincoln Electric System	Ballot Comment	Refer to comments submitted by the MRO NERC Standards Review Subcommittee.
Response: The SDT is required to follow the guidelines established by NERC and FERC.. No change made.		
Tri-State Generation and Transmission Assn., Inc.	No	Many of the sub-requirements of R2 do not warrant high risk VRFs, yet violation of any R2 sub-requirement would result in a "High Risk Factor" violation assessment. We believe that having so many sub-requirements can result in inaccurate overall severity classification. For example, skipping one study defined in R2.1.2 (Planning Assessments) for a particular time frame or load level would probably not result in a direct actual degradation in system performance, but would still result in a High Violation Risk Factor.
Response: The SDT is required to follow the VRF guidelines established by NERC and FERC, which apply to both operations and planning on equal footing.. No change made.		
Muscatine Power and Water	No	MP&W would like to recommend that the VRF for Requirement 8 remain "Low", rather than "Medium." It is our belief that there is not a significant risk to the reliability of the BES if an annual Planning Assessment is not distributed to another entities or a documented response to Planning Assessment comments is not provided within 90 days of a request. This is more administrative in nature. The findings in an assessment report are not urgent, but address system needs that will emerge over years in the future. Additionally, entities with a reliability-related need for Planning Assessment information generally have the ability to perform their own independent planning assessment of adjacent systems or other areas of interest.
American Transmission Company, LLC	No	ATC recommends that the VRF for Requirement 8 remain "Low", rather than be changed to "Medium". ATC does not believe that there is significant risk to the reliability of the BES if an annual Planning Assessment is not distributed to another entities or a documented response to Planning Assessment comments is not provided within 90 days of a request. The findings in an assessment report are not urgent, but address system needs that will emerge over years in the future. In addition, entities with a reliability related need for Planning Assessment information generally have the means to make their own independent planning assessment of adjacent systems or other areas of interest.

Organization	Yes / No	Question 2 Comment
Electric Reliability Council of Texas, Inc.	No	ERCOT ISO believes that the VRF for R8 should be "low". The distribution of the Planning Assessment is administrative in nature, the failure to distribute the Planning Assessment does not necessarily equate to not communicating the content of the assessment, and the consequence of not distributing the Planning Assessment does not immediately impact the reliability of the BES; thus it does not warrant a 'Medium' risk factor.
Response: The SDT is required to follow the VRF guidelines established by NERC and FERC. No change made.		
ReliabilityFirst	No	ReliabilityFirst generally agrees with the Violation Risk Factors (VRFs) but disagrees with the Violation Severity Levels (VSLs) for the following reasons:1. VSL for R1a. Under the last "Severe" VSL, the word "latest" should be removed to be consistent with the language in Requirement 1. This is a violation of the FERC Guideline 3: "Violation Severity Level Assignment Should Be Consistent with the Corresponding Requirement"2. VSLs for R2a. To be consistent with the language in Requirement 2, suggest modifying the last "Severe" VSL to state "The responsible entity failed to prepare an annual Planning Assessment of its portion of the BES" 3. VSLs for R3a. Under the last VSL under the "High" category, the word "perform" should be replaced with "simulate" to be consistent with the requirement. (e.g. "The responsible entity did not simulate Contingency analysis as described in Requirement R3, Part 3.3.") 4. VSL's for R4a. Under the last VSL under the "High" category, the word "perform" should be replaced with "simulate" to be consistent with the requirement (e.g. "The responsible entity did not simulate Contingency analysis as described in Requirement R4, Part 4.3."). 5. VSLs for R6a. To be consistent with the language in Requirement 6, suggest modifying the "Severe" VSL to state "The responsible entity failed to define and document, within their Planning Assessment, the criteria or methodology used in the analysis to identify System instability for conditions, as described in Requirement R6." 6. VSLs for R7a. Suggest adding the following language to the end of the "Severe" VSL; "for the Planning Assessment", to be consistent with the requirement. 7. VSL for R8a. Under all four categories of VSLs, any reference to "Planning Assessment" should be changed to "Planning Assessment results" to be consistent with the language in Requirement 8 (or more appropriately, the term "results" should be removed from Requirement 8). This is a violation of the FERC

Organization	Yes / No	Question 2 Comment
		Guideline 3: "Violation Severity Level Assignment Should Be Consistent with the Corresponding Requirement" b. Under the "Lower" VSL, it is unclear why there is a 30 day timeframe for the first VSL, while the "Moderate", and "High" VSLs have a 10 day timeframe. Based on FERC recommendations, suggest making the timeframe for all four VSL s, 10 day increments. c. VSLs need to be developed to deal with a violation of Part 8.1 (i.e. the PC or TP failed to provide a documented response to that recipient within 90 calendar days of receipt of those comments)

Response: 1. The SDT has corrected the language used as shown:

R1. VSL – Severe (third part): The responsible entity's System model did not use ~~the latest~~ data consistent with ~~the data~~that provided in accordance with the MOD-010 and MOD-012 standards and other sources, including items represented in the Corrective Action Plan.

2. The SDT believes that the wording shown must be taken in context and thus is clear. No change made.

3. & 4. The SDT believes the word 'perform' is consistent with the language used in the requirement. No change made.

5. The SDT sees the suggested change as unecessary and not providing any additional clarity as it is clear that the analysis is part of the Planning Assessment. No change made.

6. The entire standard is about the Planning Assessment and the SDT believes that this is clear in the language used. No change made.

7. The SDT has made the suggested change as shown below:

R8 VSL	The responsible entity distributed its Planning Assessment results to adjacent Planning Coordinators and adjacent Transmission Planners but it was more than 90 days but less than or equal to 120 days following its completion. OR,	The responsible entity distributed its Planning Assessment results to adjacent Planning Coordinators and adjacent Transmission Planners but it was more than 120 days but less than or equal to 130 days following its completion. OR,	The responsible entity distributed its Planning Assessment results to adjacent Planning Coordinators and adjacent Transmission Planners but it was more than 130 days but less than or equal to 140 days following its completion. OR,	The responsible entity distributed its Planning Assessment results to adjacent Planning Coordinators and adjacent Transmission Planners but it was more than 140 days following its completion. OR

Organization	Yes / No	Question 2 Comment			
		The responsible entity distributed its Planning Assessment results to functional entities having a reliability related need who requested the Planning Assessment in writing but it was more than 30 days but less than or equal to 40 days following the request.	The responsible entity distributed its Planning Assessment results to functional entities having a reliability related need who requested the Planning Assessment in writing but it was more than 40 days but less than or equal to 50 days following the request.	The responsible entity distributed its Planning Assessment results to functional entities having a reliability related need who requested the Planning Assessment in writing but it was more than 50 days but less than or equal to 60 days following the request.	The responsible entity did not distribute its Planning Assessment results to adjacent Planning Coordinators and adjacent Transmission Planners. OR The responsible entity distributed its Planning Assessment results to functional entities having a reliability related need who requested the Planning Assessment in writing but it was more than 60 days following the request. OR The responsible entity did not distribute its Planning Assessment results to functional entities having a reliability related need who requested the Planning Assessment in writing.

7b. The 30 days shown is according to the established guidelines as are the 10 day increments that follow. The SDT is required to follow the guidelines established by NERC and FERC. No change made.e.

7c. VSLs have been developed with regard to Requirement R8, part 8.1 and were shown in the posted version. No change made.

Organization	Yes / No	Question 2 Comment
ITC	No	ITC recommends revising R8 VSLs as follows:Lower VSLThe responsible entity distributed its Planning Assessment to known adjacent Planning Coordinators and known adjacent Transmission Planners but it was more than 90 days but less than or equal to 120 days following its completion. OR, The responsible entity distributed its Planning Assessment to functional entities having a reliability related need who requested the Planning Assessment in writing but it was more than 30 days but less than or equal to 40 days following the request. Moderate VSLsThe responsible entity distributed its Planning Assessment more than 30days but less than 60 days after subsequent requests by adjacent Planning Coordinators or adjacent Transmission Planners who were not sent copies upon completion of the Planning Assessment. OR, The responsible entity distributed its Planning Assessment to functional entities having a reliability related need who requested the Planning Assessment in writing but it was more than 40 days but less than or equal to 50 days following the request High VSLs - eliminate this section. i.e., no high VSLs only lower,moderate and severe Severe VSLsThe responsible entity distributed its Planning Assessment to functional entities having a reliability related need, adjacent Transmission Planners and adjacent Planning coordinators who requested the Planning Assessment in writing but it was more than 60 days following the request.
Response: 1. The suggested wording change is not consistent with the language used in the Requirement. Furthermore, the SDT does not believe that the word 'known' is necessary in this regard. No change made. 2. The suggested wording is not consistent with the language used in the requirement. Furthermore, the increment suggested would violate established guidelines. The SDT is required to follow the VSL guidelines established by FERC. No change made. 3. When dealing with incremental times in VSLs, the established guidelines indicate that all 4 types of VSL should be utilized. No change made. 4. The SDT believes the suggested change makes the VSL less clear. No change made.		
Manitoba Hydro	No	-The language "latest data" is used in the Severe VSL for R1, however "latest" was removed from R1 and M1. "Latest" should also be removed from the Severe VSL for consistency.-What is the rationale for changing the preparation of the Planning
Response: The SDT has corrected the language used as shown: **R1. VSL – Severe** (third part): The responsible entity's System model did not use ~~the latest~~ data consistent with ~~the data~~that provided in accordance with the		

Organization	Yes / No	Question 2 Comment
MOD-010 and MOD-012 standards and other sources, including items represented in the Corrective Action Plan.		
National Grid	No	R 2.0 We recommend that the VRF for this Planning Requirement remain at "Medium". The risks associated with Planning Requirements have a longer time horizon for corrective action than, for example, those risks associated with much shorter Operational time frames.
Response: The SDT is required to follow the VRF guidelines established by NERC and FERC. No change made.		
Independent Electricity System Operator	No	See our response to Q1.
Response: See response to Q1.		
Consumers Energy	Ballot Comment	We agree with comments submitted by MISO
MISO	No	Regarding Requirement 8, we do not believe that there is significant risk to the reliability of the BES if an annual Planning Assessment is not distributed to another entity or if a documented response to Planning Assessment comments is not provided within 90 days of a request. Requirement 8 is an administrative requirement that adds little to improve reliability. We recommend that the VRF for Requirement 8 remain "Low", rather than be changed to "Medium".
Response: The SDT is required to follow the VRF guidelines established by NERC and FERC. No change made.		
New York Independent System Operator	No	Requirement 8 is an administrative burden that adds no value to reliability. Comments have been provided on several past drafts highlighting this effect. The revisions made to the VRF and VSL for Requirement 8 further exacerbate this burden. One could conclude from observation of the VSLs and VRFs, that Requirement 8 was the most important requirement of TPL-001-1.Many Planning Coordinators and Transmission Planners have stakeholder processes that govern participation and notification. Further, FERC Order 890 requires stakeholder participation and transparent processes.
Response: The SDT is required to follow the VRF guidelines established by NERC and FERC.. No change made.		

Organization	Yes / No	Question 2 Comment
Ameren	No	The VRF for Requirement R8 should remain Low. There is no significant risk to the reliability of the BES if a Planning Assessment is not distributed to another entity, or if a documented response is not provided within 90 days of a request. The assignment of some VRFs are inconsistent with the importance of the requirements. R2 requires the development of an assessment and it is determined to have a high VRF. However, R3 and R4 require that studies be performed and these studies are determined to have a medium VRF. Performing the studies is essential to developing an assessment and more important to maintaining reliability. If the VRFs for R3 and R4 are correct, then the VRF for R2 should be no higher than medium. The VRF for R5 to develop a steady-state voltage criteria is determined to be medium. However, the VRF for R6 to develop instability criteria is determined to be low. If the VRF for R6 is correct, then the VRF for R5 should also be low.
Response: The SDT is required to follow the VRF guidelines established by NERC and FERC. No change made. The SDT agrees that studies are essential to the Planning Assessment but believes that the Planning Assessments are more than just the studies. For example, under the correct set of circumstances, an entity can use past studies in their Planning Assessment. Therefore, the SDT believes that the VRFs assigned are correct and in adherence with established guidelines. No change made. The SDT believes that having the criteria (Requirement R5) is more important for the reliability of the BES than documenting the methodology (Requirement R6). No change made.		
SERC Planning Standards Subcommittee	Yes	
SPP Reliability Standards Development Team	Yes	
Entergy Services	Yes	
Imperial Irrigation District	Yes	
Progress Energy	Yes	

Organization	Yes / No	Question 2 Comment
American Electric Power	Yes	
Duke Energy	Yes	
Transmission Strategies, LLC	Yes	
NIPSCO	Yes	
Puget Sound Energy, Inc.	Yes	
South Carolina Electric and Gas	Yes	
Georgia Transmission Corporation	Yes	
United Illuminating	Yes	
TVA TP&C	Yes	
ISO New England Inc.	Yes	
GDS Associates, Inc.	Yes	Agree in general.
Pepco Holdings Inc	Yes	
Northeast Utilities	Yes	
Oncor Electric Delivery Company LLC	Yes	
Response: Thank you for your support.		

3. **If you have any other comments on this Standard that you have not already provided in response to the prior questions, please provide them here.**

Summary Consideration: Several commenters stated that the SDT failed to address significant concerns and that only minor changes were made from the prior draft. The SDT believes that some stakeholders based their review on a red-line document of the TPL standard which only describes changes made following the Quality Review (QR) team review of the standard; shown as a red-line document http://www.nerc.com/docs/standards/sar/tpl-001-2_redline_to_last_posted_110415.pdf. A complete and thorough red-line of all changes made from the prior 3/01/10 ballot period to the version posted on the most recent ballot (concluded on 5/31/11) was posted and communicated after the start of the last comment period. A number of changes were made in response to industry feedback prior to the latest ballot. Those changes can be viewed at: http://www.nerc.com/docs/standards/sar/TPL-001-2_Redline_to_last_balloted.pdf.

A number of commenters indicated they cast a negative vote and recommended the SDT delay further work on TPL-001-2 pending FERC's ruling on the revised Footnote 'b' to Table 1 found in the existing TPL standards. The SDT believes concerns in process efficiency related to this project and FERC's on-going review of the revised footnote 'b' should not be the sole reason for a negative vote on the new proposed TPL standard and that an entity's vote should be based on the technical merits of the standard. The SDT has taken care to ensure footnotes 9 and 12 in combination are written consistently with footnote 'b'. The SDT encourages that any negative ballot based solely on FERC's pending ruling on footnote "b" be revisited.

Some commenters stated they find the new standard to be poorly organized and too prescriptively written and that the existing standards are preferred over the proposed TPL-001-2. The SDT and others in industry, as evidenced by the 74% ballot approval, hold a different opinion in regard to the standard. The SDT believes the comments of one stakeholder well articulate its view of the standard: "The SDT, Observers, and the Industry as a whole have put a tremendous amount of thought and work into the development of this latest draft. While nobody should claim that this latest version is perfect, it is far clearer, more in tune with current industry needs, and much improved compared to the existing approved Standards that it will replace." The SDT believes many important improvements in transmission planning are driven by the proposed TPL-001-2 that will further improve reliability of the Bulk Electric System.

A few commenters questioned the term "non-redundant relay" as used in planning event P5 and asked the SDT to clarify a distinction between a "back-up relay" and a "redundant relay" and proposed the SDT provide a definition for the term "non-redundant". The SDT clarifies that redundant means 'duplicate capability resulting in the same outcome.' A redundant relay is not the same as back-up relaying capability which may result in more Facilities being removed for failure of the primary/redundant relay to operate as designed. The SDT believes this concept is widely understood by most in industry and does not see the need for a NERC Glossary Definition.

Several commenters noted that the standard makes use of new capitalized "defined" terms, yet the definitions proposed in previous drafts were removed from the most recent draft of TPL-001-2. The SDT clarified that two previously proposed

definitions that were part of this project were moved to another standard development project – Project 2010-10, titled "FAC Order 729". The two definitions, "Near-Term Transmission Planning Horizon" and "Year One" were approved by the NERC Board of Trustees on January 24, 2011.

Some commenters indicated that the standard' Implementation Plan should be extended to permit a full 5-years implementation of any Corrective Action Plans required due to short circuit studies. The commenters indicate that these studies are not presently covered by a NERC Reliability Standard and they see this as a significant "raising of the bar" as characterized by other new requirements. The SDT clarified that while a short circuit study requirement is new to mandatory enforceable standards, the SDT does not believe the short circuit study requirements present a significant "raising of the bar" for industry and that good utility short circuit practices are already in place to ensure safe operation of equipment. No extension in the Implementation Plan was made in regard to short circuit studies.

Several commenters stated an opinion that Requirement R1, Part 1.1.2 indicating the models maintained by the Transmission Planners should reflect "known outages … with a duration of at least 6 months", are more appropriately dealt with in the operational studies rather than planning studies and that the item should be removed from the standard. The SDT disagrees with the view that outages of 6 months or more should only be reviewed in the operations timeframe. Such an outage could be for an upcoming construction project requiring certain Facilities to be removed from service for long durations of time one or more years in the future and those situations should be evaluated with sufficient lead time to determine any vulnerabilities and development of sufficient Corrective Action Plans as required. The SDT retained the requirement in the standard.

A number of commenters stated that they believed that there was an inconsistency between Requirement R2, Parts 2.1 and 2.2, since qualified past studies were not allowed for the Long-Term Transmission Planning Horizon case. The SDT clarifies that the requirement to conduct a current annual study for one of the study years in the Long-Term Transmission Planning Horizon is intentional to drive earlier identification of potential Transmission performance limitations and earlier development of Corrective Action Plans (CAP). The study results can be used as qualified past studies as they advance to later years, including moving to the Near-Term Transmission Planning Horizon.

Several commenters stated that they believed that Requirement R2, Part 2.1.5 was ambiguous since it was not clear that the planner did not have to include multiple outages of long lead time components simultaneously. The SDT explained that Requirement R2, Part 2.1.5 does not require simultaneous outages of multiple long lead time components.

Some commenters expressed concerns with Requirement R2, Part 2.4.1 since they were concerned with the ability of planners to adequately model the dynamic behavior of Load. The SDT explained that the "aggregate" dynamic Load model may include high-level assumptions on Load profiles for industrial, commercial, and residential Loads that are applied generically across the planning area study based on the planner's engineering judgment and system knowledge. The model is not required to be "bus" specific.

The SDT appreciates the concern raised by multiple commenters in regard to the inclusion of the 2nd bulleted item of Requirement R3, Part 3.3.1 that states the steady-state Contingency analysis should include subsequent "Tripping of

Transmission elements where relay loadability limits are exceeded". The commenters believe this concern is addressed by PRC-023 and should be removed from the standard. The SDT believes the item is warranted and that TPL studies may earlier identify and flag relay setting concerns based on required Long-Term Transmission Planning Horizon studies. Within the TPL standard, such a concern would have a Corrective Action Plan that would address the issue which would also meet the expectations of PRC-023. The SDT sees this as a defense in depth approach.

A number of commenters expressed concern that Requirement R7 was administrative and was not required. The SDT explained that it believes that the requirement is necessary to ensure that there are no gaps created between the Transmission Planners and the Planning Coordinators when they determine their individual responsibilities.

Several commenters stated that they had concerns with Requirement R8. These concerns are that the requirements create excessive work and should include time limits on requesting the Planning Assessment, are ambiguous, and should include the ability to post the Planning Assessment. The SDT explained that the requirements are only to distribute the Planning Assessment, which should not require a large amount of work, and the requirements are clear that the planners must distribute to adjacent Transmission Planners and Planning Coordinators and others with a reliability need. The SDT further explained that posting the Planning Assessment could meet the requirement to distribute.

Several commenters stated that they believed that Table 1, P2-1 was inconsistent with Footnote 7. The SDT explained that Footnote 7 was included to clarify that "Opening a line section without a fault" could include, but does not always, creating a radial line section with Load and that the planner must evaluate this situation as a part of P2-1.

No requirements were changed as a result of comments received. However, two bulleted items were marked as bullets incorrectly and that formatting has been corrected.

3.1.1 Tripping of generators where simulations show generator bus voltages or high side of the generation step up (GSU) voltages are less than known or assumed minimum generator steady state or ride through voltage limitations. Include in the assessment any assumptions made.

3.3.1.2 Tripping of Transmission elements where relay loadability limits are exceeded.

4.3.1.1 Successful high speed (less than one second) reclosing and unsuccessful high speed reclosing into a Fault where high speed reclosing is utilized.

4.3.1.2 Tripping of generators where simulations show generator bus voltages or high side of the GSU voltages are less than known or assumed generator low voltage ride through capability. Include in the assessment any assumptions made.

4.3.1.3 Tripping of Transmission lines and transformers where transient swings cause Protection System operation based on generic or actual relay models.

Organization	Yes/ No	Question 3 Comment
James A. Maenner	Ballot Comment	The medium VRF for R8 should remain at low. Not sharing planning assessments with other entities within 90 days doesn't create a serious or imminent threat to the BES.
Response: The change to a Medium VRF resulted from the Quality Review (QR) conducted by the independent QR team prior to the last ballot. This requirement is seen as more than simply an administrative response to a request but rather a proactive step required of the applicable planner to share results of its system assessment which may include and reflect potential system impacts to neighboring systems. The SDT is required to follow the VRF guidelines established by NERC and FERC. No change made.		
San Diego Gas & Electric	Ballot Comment	Clarity of this standard is getting worse. Our earlier comments did not seem impacting. At this point, we believe the existing TPL-001-0.1, TPL-002-0a, TPL-003-0a and TPL-004-0 provide much better clarify for us to comply with the TPL standards.
Response: The SDT respectfully disagrees with your view. According to results of the last ballot, 74% of the ballot poolsupport the proposed standard. The SDT believes the standard clarifies a number of expectations and that appropriate changes have been made to further improve the future planning and review of the Bulk Electric System's ability to reliably serve users of the system. No change made.		
Western Electricity Coordinating Council	Ballot Comment	It is unknown at this time what the outcome of the FERC request for additional infomation related to footnote B will be, but if if results in changes to the language of footnote B, that may change our support for this standard.
Salt River Project	Ballot Comment	Previous TPL Standard balloting included the FERC Order that clarified footnote 'b', regarding the planned or controlled interruption of electric supply for an N-1 situation. In SRP's view, a Registered Entity's Board of Directors, state Utilities Commission, and/or its customers should determine what level of service is acceptable and with what associated cost. This view is captured in footnote #12 of Table 1 in the TPL Standard and will be crucial to maintaining Affirmative vote.
Public Utility District No. 1 of Chelan County	Ballot Comment	Previous TPL Standard balloting included the FERC Order that clarified footnote 'b', regarding the planned or controlled interruption of electric supply for an N-1 situation. In our view, board of directors/Public Utility should have the determination what level of service is acceptable and with what associated cost. This view is captured in footnote #12 of Table 1 in the TPL Standard and will be crucial to maintaining an Affirmative vote.
Snohomish County PUD No. 1	Ballot	Previous TPL Standard balloting included the FERC Order that clarified footnote 'b', regarding the planned or

Organization	Yes/ No	Question 3 Comment
	Comment	controlled interruption of electric supply for an N-1 situation. In our view, a Registered Entity's Board of Directors, Utility Commission, and/or its customers should determine what level of service is acceptable and with what associated cost. This view is captured in footnote #12 of Table 1 in the TPL Standard and will be crucial to maintaining an Affirmative vote.
Public Utility District No. 1 of Chelan County	Ballot Comment	Previous TPL Standard balloting included the FERC Order that clarified footnote 'b', regarding the planned or controlled interruption of electric supply for an N-1 situation. In our view, board of directors/Public Utility should have the determination what level of service is acceptable and with what associated cost. This view is captured in footnote #12 of Table 1 in the TPL Standard and will be crucial to maintaining an Affirmative vote.
Clark Public Utilities	Ballot Comment	Previous TPL Standard balloting included the FERC Order that clarified footnote 'b', regarding the planned or controlled interruption of electric supply for an N-1 situation. In our view, the utility's elected board of commissioners should have the determination what level of service is acceptable and with what associated cost. This view is captured in footnote #12 of Table 1 in the TPL Standard and will be crucial to maintaining an Affirmative vote.
Response: The SDT has taken care to ensure consistency in footnote 12 (and footnote 9) with the prior footnote 'b' revision supported by industry, approved by the NERC Board of Trustees and submitted for regulatory approval. No change made.		
Imperial Irrigation District		Previous TPL Standard balloting included the FERC Order that clarified footnote 'b', regarding the planned or controlled interruption of electric supply for an N-1 situation. In our view, board of directors/Public Utility should have the determination what level of service is acceptable and with what associated cost. This view is captured in footnote #12 of Table 1 in the TPL Standard and will be crucial to maintaining an Affirmative vote. 1. R2 (2.5): The value of assessing system stability for years 6-10 is questionable. Stability studies should be conducted for new generation interconnections or for planned major transmission system improvements that have regional impact. 2. R8 requirement to distribute all Planning Assessment results to adjacent PCs and TPs are excessive and cumbersome. Regarding R8, IID suggest the following languages:Each Planning Coordinator and Transmission Planner shall distribute its Planning Assessment results to adjacent Planning Coordinators and adjacent Transmission Planners in accordance with the overseeing Reliability Coordinator requirements. Any functional entity that has a reliability related need and submits a written request for the Planning Assessment results, the Transmission Planner and Planning Coordinator shall provide the latest Planning Assessment

Organization	Yes/ No	Question 3 Comment
		results within 30 days of such request.
Response: The SDT has taken care to ensure consistency in footnote 12 (and footnote 9) with the prior footnote 'b' revision supported by industry, approved by the NERC Board of Trustees and submitted for regulatory approval. No change made. Regarding Requirement R2, Part 2.5, the SDT believes the requirement as written meets your perspective. For the long-term period, the stability assessment is only required to address "... the impact of proposed material generation additions or changes in that timeframe ...". No change made. Regarding Requirement R8, the SDT disagrees that the requirements for distributing assessment results should be based on requirements of the Reliability Coordinator. The Reliability Coordinator is primarily focused on real-time issues/concerns not planning horizon timeframes. The SDT does not see this requirement as overly burdensome as the results could be emailed to multiple entities in a single notification. Additionally, we do not see Requirement R8 as excessive as we believe it is important to communicate assessment results with others in industry whose systems for which they are responsible for may be impacted by the host analysis being communicated. No changes made.		
Gainesville Regional Utilities	Ballot Comment	I do have one point of concern for your consideration; This standard does raise the bar in some areas, most notably for an entity the size of GVL it applies performance requirements for long lead equipment emergency replacement. For example if we don't have the ability to replace a transformer at Parker within a few months of failure, then we would have to demonstrate that we can meet many (but not all) of the same performance criteria without the transformer that we can with the transformer.
Response: The commenter is referring to expectations stated in Requirement R2, Part 2.1.5 related to a spare equipment strategy regarding the potential unavailability of long lead time equipment that could be out of service for a year or more in the absence of a spare replacement. The SDT believes it has appropriately limited the analysis to address Planning Events P0, P1, and P2 as stated in Table 1. No change made.		
Beaches Energy Services	Ballot Comment	My biggest concern is the spare transformer issue. Beaches Energy Services is fine because our Transmission Planner (FMPA) actually run the assessments proposed in the new standard and we have excess transformer capacity; but, I'm concerned for other small entities. Essentially, the requirement will likely be interpreted as requiring us to meet the loss of a Bulk Electric System transformer, plus another contingency (two contingencies) to the same performance criteria as a single contingency, if we don't have a spare. This seems discriminatory to small entities.
Response: The commenter is referring to expectations stated in Requirement R2, Part 2.1.5 related to a spare equipment strategy regarding the potential unavailability of long lead time equipment that could be out of service for a year or more in the absence of a spare replacement. The SDT believes it has appropriately limited the analysis to address Planning Events P0, P1, and P2 as stated in Table 1. Any organization – large or small - meeting functional entity		

Organization	Yes/ No	Question 3 Comment
registration obligations has the potential to impact the Bulk Electric System and their assessments must include appropriate spare equipment strategies. No change made.		
Hydro One Networks, Inc.	Ballot Comment	Hydro One Networks is casting a negative vote. Other than a few changes related to Footnotes 9 and 12 of Table 1 and VSLs, the other changes in the proposed draft are minor. The concerns of the industry on several important issues have not been sufficiently addressed in this draft. For detailed comments please refer to our submission through the on-line comment form.
Response: The SDT believes the commenter's response is based on their review of red-line document of the TPL standard which only describe changes made following the Quality Review (QR) team review of the standard which was conducted prior to the last ballot. That red-line was shown as http://www.nerc.com/docs/standards/sar/tpl-001-2_redline_to_last_posted_110415.pdf. A complete and thorough red-line of the TPL standard showing all changes made from the prior 3/01/10 ballot period to the version posted on the most recent ballot (concluded on 5/31/11) was posted during the last comment/ballot period. A number of changes were made in response to industry feedback prior to the last ballot. Those changes can be viewed at: http://www.nerc.com/docs/standards/sar/TPL-001-2_Redline_to_last_balloted.pdf. The SDT's response to input provided by the on-line comment form is addressed in responses to Q1 and Q2 above. No change made.		
Hydro-Quebec TransEnergie	Ballot Comment	These are the two major concerns : * In Table 1 footnote 3 : Again, the definition of EHV facilities shoud be changed to something like : Bulk Electric System (BES) level references include extra-high voltage (EHV) Facilities defined as those representing the backbone of the System, generally at voltage greater than 300 kV, and high voltage (HV) Facilities defined as those not representing the backbone of the System, as determined by the Planning Coordinator and approved by Regional Entity. * In Table 1 b : "Consequential Load Loss as well as generation loss is acceptable as a a consequence of any event excluding P0". We should also add Firm Transmission Services Loss is also acceptable (particularly in P1 Loss of a single pole of a DC line for which the transfer is reduced accordingly to the remaining pole capability). "
Response: In regard to Table 1 footnote 3, the SDT respectfully disagrees and believes the footnote is clear in regards to what subset of Bulk Electric System Facilities are classified as EHV and that the remaining fall to HV Facilities. Anything not deemed Bulk Electric System by a Regional Entity is outside of the scope of footnote 3 and the footnote clarifies that Table 1 sometimes has unique performance requirements depending on the event studied. The SDT believes the categorization is correct. No change made. The SDT disagrees that Firm Transmission Service (FTS) may be interrupted for all events. The events where the interruption of FTS is not permitted are shown with a "No" in the column titled "Interruption of Firm Transmission Service Allowed", however, footnote 9 clarifies that interruption of Firm Transmission Service		

Organization	Yes/ No	Question 3 Comment
can be used as both a corrective action and system adjustment as permitted within Table 1. For the specific issue raised, loss of a single pole of a DC line, to the extent the availability of the DC pole is a condition of the transfer being viable, footnote 4 may also address the commenter's concern. No change made.		
Independent Electricity System Operator	Ballot Comment	IESO is generally supportive of the draft of TPL-001-2 as evidenced by our previous AFFIRMATIVE vote during the last ballot. Further, IESO also supported the revisions to Footnote 'b' to Table 1 of the TPL standards under Project 2010-11. That revision was balloted and approved by the ballot pool in February 2011 and filed with FERC for approval in March 2011. The revised footnote has been incorporated into the current draft of TPL-001-2 as Footnotes 9 and 12 but the Commission, by letter to NERC dated May 17, 2011, has requested NERC to provide supplemental information before the revised Footnote 'b' could be approved. In light of FERC's request and the uncertainty regarding the final provisions of these footnotes, coupled with the ongoing work on Project 2010-17 for the revision of the BES definition and development of an Exception Process and the impact that may have, we respectfully suggest that the drafting team delay further work on TPL-001-2 pending FERC's ruling on NERC's petition seeking approval of the transmission planning standards that contain the revised Footnote 'b' to Table 1.
Response: The SDT believes IESO's concerns in process efficiency related to this project and FERC's on-going review of the prior submittal of a revised footnote 'b' should not be the sole reason for a negative vote on the new proposed TPL standard and that IESO's vote should be based on the technical merits of the standard. The SDT encourages IESO to revisit its negative ballot position during the recirculation ballot. As stated in the comment provided, IESO finds footnotes 9 and 12 to be written consistently with footnote 'b' and if IESO supported footnote 'b', the SDT encourages continued support of the issue in the new proposed TPL-001-2 and doing so shows support of the standard on its technical merits. No change made.		
Lakeland Electric	Ballot Comment	LAK appreciates the hard work of the Standard Drafting team and applauds the significant improvement of clarity of the draft standard. FMPA believes we are almost there, but, there are a number of issues left to resolve. Issues that Cause FMPA to Recommend a Negative Vote A. Spare Equipment, R2.1.5 - The requirement reaches beyond the FERC directive. The directive was: "Accordingly, the Commission directs the ERO to modify the planning Reliability Standards to require the assessment of planned outages consistent with the entity's spare equipment strategy." So, the directive is only to address planned outage, not unplanned outages. Also note that the applicability to GSUs is ambiguous. "Transmission" is defined as: "An interconnected group of lines and associated equipment for the movement or transfer of electric energy between points of supply and points at which it is transformed for delivery to customers or is delivered to other electric systems." Is the "point of supply" the generator terminal, or the GSU high side terminal?

Organization	Yes/ No	Question 3 Comment
		B. Table 1, under first heading of "Steady State Only", bullet i is open to interpretation. Many utilities use steady state P-V analyses to study voltage stability and design UVLS systems in apart around those steady state analyses. Would this bullet essentially eliminate P-V and Q-V studies and the related use of UVLS?
Response: The SDT respectfully disagrees that the Commission directive regarding a spare equipment strategy is limited to planned outages. In Order 693, Par 1725, the Commission states in its discussion "Thus, if an entity's spare equipment strategy for the permanent loss of a transformer is to use a "hot spare" or to relocate a transformer from another location in a timely manner, the outage of the transformer need not be assessed under peak system conditions." The SDT believes FERC clearly intended the spare equipment strategy to cover a catastrophic loss of such long lead-time equipment. Further, the SDT believes it has appropriately limited this review to a small subset of the overall Planning Events – P0, P1, and P2 and for a loss that would be sustained for a year or longer. No change made. The SDT refers the commenter to footnote 5 in regards to the applicability of GSU transformers. The "point of supply" is irrelevant in regards to planning a Transmission system for potential generation loss. The applicable generation is any unit deemed to be BES generation supply by the applicable regional entity. No change made. The SDT points out that Table 1 header note "i" applies to steady-state only and is intended to prevent any reduction in non-consequential Load due to what the planner believes to be sensitive Load loss that may drop out as voltage declines. It is the understanding of the SDT that most utilities only reflect or account for such reduction in Load in the transient timeframe and that planning decisions based on steady-state analysis would appropriately account for serving the non-consequential Load unless subject to interruption per that studied planning event. The bullet does not eliminate P-V or Q-V studies nor does it prohibit use of UVLS as a mitigating action where non-consequential load interruption is permitted. No change made.		
New Brunswick Power Transmission Corporation	Ballot Comment	Foot Note 12: Rather than requiring planning entities to have a open and transparent planning stakeholder process, which could require significant costs and administration, the foot note should focus on ensuring that affected loads/entities are aware of the possible risks of load loss and alternatives and provide for affected stakeholder feedback
Response: The SDT believes the open and transparent stakeholder process described by footnote 12 provides an efficient platform for which the affected end-users and other registered entities would be made aware of instances where non-consequential Load loss is being considered as a Corrective Action Plan and provides the best opportunity for feedback. The process envisioned is already in place in various areas across the various Interconnections in which the NERC Reliability Standards are enforceable. No change made.		
Powerex Corp.	Ballot Comment	Powerex has submitted a negative ballot for Draft #6 of Standard TPL-001 because Powerex has concerns regarding Footnotes 9 and 4 that need to be addressed. Details of our concerns are summarized below.

Organization	Yes/ No	Question 3 Comment
		Background: The work that transmission planners do to ensure Firm Transmission Service is tremendously important for the reliability of the Bulk Electric System and forms a key part of the foundation upon which system operators and energy market participants interact. As a Purchasing-Selling Entity, Powerex is primarily concerned about Footnote 9 that conditions when interruption of Firm Transmission Service may allowed. We believe that the goals of maintaining system reliability and enhancing market participation will both be best served if the conditions for interrupting Firm Transmission Service become clear and unambiguous in the TPL-001-2 Standard. In our experience, Transmission Providers have different interpretations of the TPL-001 Performance Table and because of latitude previously granted by Footnote B have different perspectives of when Interuptions of Firm Transfers is acceptable. Below we describe the two interpretations using the language of the proposed TPL-001 standard. Interpretation #1: Following loss of the most critical transmission element under stressed conditions, the transmission provider plans to supply the forecast peak loads and Firm Transmission Service indefinitely. o Typically this is achieved by assuming that the System Operators would, within a few minutes of the P1 Single Contingency, curtail all non-firm transmission service and then arm Special Protection Schemes that could result in Interruption of Firm Transmission Service or Non-Consequential Load Loss in the event of a P6 Multiple contingency. Interpretation #2: Following loss of the most critical transmission element under stressed conditions, the transmission provider plans to supply the forecast peak loads indefinitely but may curtail all Firm Transmission Service within 20 minutes if required. o Typically this occurs on systems where there are no Special Protection Schemes to address P6 Multiple contingencies, consequently, the transmission planners assume that curtailment of all non-firm AND as much Firm Transmission Service as required will occur within ~20 minutes of the P1 Single Contingency because the Operators must prepare their transmission system to withstand the next worst contingency. Currently, Purchasing-Selling Entities must plan for situations where they could see their Firm Transmission Service on certain paths curtailed within 20 minutes of a P1 contingency. The less stringent interpretation of the TPL-001 Performance Table that allowed a P1 contingency to change into a P6 contingency within the same operating hour, has resulted in situations where the Firm Transmission Service for inter-regional transfers face significantly greater risks of interruption than the Firm Transmission Service provided to local Load Serving Entities. Powerex recommends that the Standards Drafting Team revise TPL-001 such that all Transmission Planners will know that they should plan for Firm Transmission Service to be sustained indefinitely following P1 contingencies. Specific Comments on TPL-001-2: Footnote 9: Deviation from the Approved Footnote B Powerex believes that the Footnote B, as approved by the NERC Board of Trustees on February 17, 2011, is more stringent than the previous Footnote B and will have the effect of ensuring that Firm Transmission Service can be sustained indefinitely following P1 contingencies. The key difference of the proposed Footnote 9 is that it adds

Organization	Yes/ No	Question 3 Comment
		the phrase "as a System adjustment" to the approved version of Footnote B. We believe this addition would cause the practice of curtailing Firm Transmission Service within 20 minutes of P1 contingencies to continue. Consequently, we recommend that the proposed Footnote 9 maintain the approved wording as follows: Footnote 9: An objective of the planning process should be to minimize the likelihood and magnitude of interruption of Firm Transmission Service following Contingency events. Curtailment of Firm Transmission Service is allowed (deletion)[as] a corrective action when achieved through the appropriate re-dispatch of resources obligated to re-dispatch.... For consistency, Table 1 should also be modified to remove the Footnote 9 reference from the Initial Condition Column for the P3-Multiple Contingency and P6 Multiple Contingency Categories. Footnote 9: Clarity on what is meant by "Resources obligated to re-dispatch" It is unclear to many parties what is meant by an obligation to re-dispatch. Some interpret this as a right to direct the Source to curtail energy scheduled on Firm Transmission Service. Our belief is that "an obligation to re-dispatch" should correspond to a formal agreement with a Generation Owner, located on the load side of a transmission constraint, to resupply the load that had been receiving energy from a remote source before the Firm Transmission Service was curtailed. Consequently, we recommend that Footnote 9 be revised as follows: Footnote 9: ..... a corrective action when achieved through the appropriate re-dispatch of resources obligated to re-dispatch [to ensure uninterrupted energy supply to the Load-Serving Entity(ies)], where it can be demonstrated that Facilities, internal and external to the Transmission Planner's planning region, remain within applicable Facility Ratings and the re-dispatch does not result in any Non-Consequential Load Loss.... Footnote 4: Conditional Firm Transmission Service Footnote 4: "Curtailment of Conditional Firm Transmission Service is allowed when the conditions and/or events being studied formed the basis for the Conditional Firm Transmission Service." In a sense, offering conditional firm transmission service is analogous to selling land in a known flood plane - this can be a perfectly acceptable option provided all parties involved in current and future transactions can quantify the risks and manage them appropriately. There needs to be coordination between the planners, operators and marketers to ensure that the conditions that could lead to curtailment of Conditional Firm Transmission Service are understood and the associated risks properly managed. We are concerned that in the absence of coordination, specifically additional requirements included in the BAL and INT standards, energy that is scheduled on conditional firm could actually be marketed as firm and as a result the counterparties to some transactions may not be aware of the curtailment risks they could face.
Response: Footnote 9 - The SDT believes that footnote 9 appropriately allows interruption of Firm Transmission Service as both a corrective action to the initial event studied and as a permissible intermediate "system adjustment" when evaluating a multiple Contingency event such as P3 or P6. The key is that there must		

Organization	Yes/ No	Question 3 Comment
be no loss of Load and the planner must be able to show that the curtailment is supported by a valid re-dispatch of generation that would be "obligated to re-dispatch." Therefore, the planner cannot simply re-dispatch units outside the area of control for the transmission system for which it is reviewing – the re-dispatch must be valid and realistic. The commenter indicates an opinion that footnote 9 introduces a difference from the revised footnote 'b' because footnote 9 is applied to multiple Contingency planning events P3 and P6 as an intermediate step – system adjustment. However, the SDT believes that footnote 'b' is consistent as it does not explicitly distinguish between the two – corrective action or system adjustment following the single Contingency event that may precede a multiple Contingency event. No change made. Footnote 4 – The SDT agrees with the commenter that the specifics of Conditional Firm Transmission service including the potential/rights for curtailments need to be well understood by all parties involved but the SDT has not identified any BES reliability gaps. No change made.		
Tucson Electric Power Co.	Ballot Comment	The definition for Near Term Planning Horizon was deleted, but the formal term is used in other sections such as R2.2.1. There should be a linkage to MOD standard (e.g. 028, 029 & 030) definitions such as 13 months, etc.
Response: Two previously proposed definitions that were part of this project were moved to another standard development project – Project 2010-10 titled "FAC Order 729". The two definitions, "Near-term Transmission Planning Horizon" and "Year One" were approved by the Board of Trustees on January 24, 2011.		
Western Area Power Administration	Ballot Comment	Standard is improved over previous drafts, but would like to see further changes. Please see suggestions and comments provided on the Official Comment Form.
Response: Please see the SDT's response to your suggestions in Question 1.		
SERC Planning Standards Subcommittee		R1 does not seem to address issues where data errors have been introduced into the latest model data. Also, R1 and its VSL may be interpreted to exclude the use of past studies. The Implementation Plan should include a five-year delay in the effective date for short circuit studies (R2 parts 2.3 and 2.8) since these studies are not required in the current version 0 standards. The comments expressed herein represent a consensus of the views of the above-named members of the SERC EC Planning Standards Subcommittee only and should not be construed as the position of SERC Reliability Corporation, its board, or its officers.
Response: Requirement R1 of the new TPL standard requires the Transmission Planner and Planning Coordinator to maintain System models within its		

Organization	Yes/ No	Question 3 Comment
respective area of responsibility. The requirement indicates that information received via MOD-010 and MOD-012 shall be "supplemented by other sources as needed" and to the extent errors and omissions were either discovered by, or brought to the attention of, the Transmission Planner or Planning Coordinator Requirement R1 establishes an expectation that these "other sources" would be utilized to accurately "represent the project System conditions" being studied. No change made. Requirement R1 is applicable to models used for both current and past studies. No change made. Implementation Plan, Short Circuit Studies – While short circuit study requirements may be new in the realm of mandatory enforceable standards, the SDT does not believe that they present a significant "raising of the bar" for industry. The SDT believes that prudent short circuit practices are effectively in place today to ensure safe operation of the equipment. Therefore, no extension in the Implementation Plan was made in regard to short circuit studies.		
SPP Reliability Standards Development Team		A5 It would seem that 84 months wouldn't be universally attainable due to different system configurations, terrain, geography, and permitting issues that are required to complete a corrective action plan. In 2.4.1 we would like to see better clarity on what an Aggregate system load model is and how granular it should be. If the answer is a very detailed representation of the load system then it may take a longer time to implement. In section 2.7 we would to see clarification on the sensitivity analysis. Is this in reference to seasonal models and differences in fuel availability? We need more detail on how this is to be done so that it won't be left up to interpretation. We would like for clarification of the planning assessment and who is performing which tasks. We would also like to utilize a regional assessment due to limited resources. Under which criteria should the assessment fall under the regional entity or the individual companies? In section 3.4.1 this type of coordination could be difficult due to other adjacent entities on different schedules and some possibly couldn't have the amount of detail to incorporate into another's processes. We know this is generally covered in coordination of real time operations and wonder if it is appropriate to require this type of coordination in the long term process. Is there already an operational standard that covers this? Would it be better to address this in the operational standards? PC's between regions are already coordinating for long term studies. Should this standard fall more on the back of the PC's rather than the TP Can we get a bright line definition of what apparent impedance swings means? R4.3.1 will the detailed amount of data then be incorporated back into the NERC modeling processes and create a more detailed model with better accuracy?

Organization	Yes/ No	Question 3 Comment
		R8 We do not agree that we should provide the assessment to every adjacent PC and TP. We do agree however that if requested by these entities we would provide the assessment. We don't mind sharing information with requestors but would like a longer duration than 30 days due to the fact that we would like to know what type of "reliability need" any entity would have considering that some of the information could be considered CEII. Non disclosure agreements may be needed in order to provide this information.

Response: Effective Date (A5) – The SDT believes the 7 year (84 month) transition to areas where the standard significantly raises planning expectations over the existing standard is more than sufficient for the vast majority of the continent and for most Corrective Action Plans. To the extent additional time is required an entity would need to submit a timely mitigation plan with its Regional Entity organization. No change made.

The "aggregate" dynamic Load model may include high-level assumptions on Load profiles for industrial, commercial, and residential Loads that are applied generically across the planning area study based on the planner's engineering judgment and system knowledge. The model is not required to be "bus" specific. No change made.

In Requirement R2, Part 2.7, it is stated that a Corrective Action Plan is not required solely for a "single sensitivity study". The standard envisions a portfolio of sensitivity analyses being established for a planning area and the standard does not require Corrective Action Plans for single sensitivity results that may have placed the system in a greater stressed analysis (i.e., heavy system transfers) for its initial (P0) sensitivity model over other models that did not identify performance criteria violations for the same Contingency event studied. No change made.

If a Regional Entity acts as your "Planning Coordinator" then tasks between the Planning Coordinator and Transmission Planner are to be defined as part of Requirement R7. The standard does not prohibit the use of valid studies performed by 3rd parties for a given planning area. No change made.

In regards to Requirement R3, Part 3.4.1, the SDT envisions that knowledge of the applicable Contingencies on neighboring systems would develop over time and be discovered with the results being distributed in Requirement R8. The SDT believes that this is an important improvement to the planning timeframe analysis and that system information learned in the operations environment should most certainly be considered to the extent it improves the robustness of the Planning Assessment. No change made.

Both the registered Transmission Planner and Planning Coordinator have functional entity responsibility for Transmission system planning as defined by NERC's Functional Model. The SDT believes the new TPL-001-2 is appropriately aimed at both throughout the standard. Additionally, Requirement R7 should address the commenter's concern and if greater responsibility can be agreed upon for the Planning Coordinator for a particular area of the continent the standard would not prohibit such a determination. No change made.

The "apparent impedance swing" is the trajectory of changes in the apparent impedance seen by a distance relay for various system and fault conditions. In the case contemplated in Requirement R4, Part 4.1.2, it is the trajectory seen by the distance relay for the initial fault and the subsequent generator(s) pulling out of synchronism. If that trajectory were to come within the tripping characteristic of the relay for a sufficient length of time, the relay would cause its associated line

Organization	Yes/ No	Question 3 Comment
to trip. No change made. This standard does not address the studies performed by NERC or its model building practices. The SDT and (based on the recent ballot approval of 74%) the majority of industry support Requirement R8 – no change made.		
MRO's NERC Standards Review Forum		The NSRF recommends that the term, "System" be replaced with "BES" in various places throughout the standard when the reference should not be to the collective generation, transmission, and distribution systems, which is the definition of the NERC Glossary term, "System". These locations are: R2.1.4, R2.1.5, R2.4.3, R2.6.2, R2.7, R2.7.1, R2.7.4, R2.8.1, R2.8.2, R3.5, R4.5, R5, and R6
Muscatine Power and Water		MP&W recommends that the term "System" be replaced with "BES" in various places throughout the standard when the reference should not be to the collective generation, transmission, and distribution systems. This is the current definition of the NERC Glossary term "System". The locations where "System" can be found in the Standard are: R2.1.4, R2.1.5, R2.4.3, R2.6.2, R2.7, R2.7.1, R2.7.4, R2.8.1, R2.8.2, R3.5, R4.5, R5, and R6.
Response: Even though the capitalized term "System" includes distribution components, the SDT believes that its usage within this standard is correct because the Reliability Standards apply only to the BES. Therefore, adding additional qualifiers is not needed. No change made.		
BC Hydro		BC Hydro agrees with merging the standards together into one and we feel the new version brings further clarity to the annual planning assessment. BC Hydro would vote Affirmative for bringing clarity, however we do not believe the rewording in Footnote 9 is clear which is why we are voting Negative. Footnote B, as approved by the NERC Board of Trustees on February 17, 2011 was reworded as Foot Note 9 in the proposed TPL 001-2 draft 7 amendment. This rewording still does not clearly define what impact the proposed revision would have on the curtailment of firm transfers in the regional entities.
Response: The equivalent of the revised footnote 'b' as approved by the NERC Board of Trustees on February 17, 2011 is addressed by the combination of two footnotes – footnote 9 and footnote 12 – in the new proposed TPL-001-2 standard. The SDT believes that footnote 9 appropriately allows interruption of Firm Transmission Service as both a corrective action to the initial event studied and as a permissible intermediate "system adjustment" when evaluating a multiple Contingency event such as P3 or P6. The reliance on the interruption of Firm Transmission Service in the Planning Horizon is limited in two ways. First, there must be no planned use of firm Load shedding and second, the planner must be able to demonstrate that the curtailment is supported by a valid re-dispatch of generation that would be "obligated to re-dispatch." Therefore, the planner cannot simply re-dispatch units outside the area of control for the transmission system for which it is reviewing – the re-dispatch must be valid and realistic. No change made.		

Organization	Yes/ No	Question 3 Comment
Entergy Services		Footnote 12 to Table 1 concerning non-consequential load loss should be clarified. The existing language will result in difficulties in proving compliance. Suggested language would be:"Planned or controlled interruption of Demand supplied by Transmission Facilities made temporarily radial as a result of a P1 or P2 event and where the location of the planned loss of Demand is limited to those Transmission Facilities made radial.
Response: The SDT in a separate standards development project - Project 2010-11 TPL Table 1 Order – attempted the radial concept described by the commenter in its revision of footnote 'b' as used in the existing set of TPL standards. The proposed "radial" footnote 'b' was presented for industry ballot from 05/17/10 through 05/27/10 and failed at 63.8%. Following an industry technical conference, the SDT continued to work on footnote 'b' and a revised version was approved by the NERC Board of Trustees on February 17, 2011. The combination of footnotes 9 and 12 consistently apply the industry approved revised footnote 'b' in the new standard. No change made.		
Tri-State Generation and Transmission Assn., Inc.		R1.1 to "System models used for Steady State and Stability Analysis shall represent:" Much of what is in R1.1 is unnecessary for Short Circuit studies. In contrast, there are items not mentioned in R1.1 that are necessary for short circuit studies. R2.1.4 requires sensitivity analysis to study "a range of credible conditions that demonstrate a measurable change". How will the required actions in R2.1.4 be documented or measured, and what is accomplished by performing sensitivity analysis in the context of a system performance assessment? In R2.3, change the first sentence to read "The short circuit analysis portion of the Planning Assessment shall be conducted annually, using one of the cases described in 2.1.1, addressing the Near-Term Transmission Planning Horizon and can be supported by current or past studies as qualified in Requirement R2, Part 2.6." There appears to be no reason to perform short circuit studies for all three Near-Term Transmission Planning Horizon cases. R2.4.3 requires sensitivity analysis to study "a range of credible conditions that demonstrate a measurable change". How will the required actions in R2.4.3 be documented or measured, and what is accomplished by performing sensitivity analysis in the context of a system performance assessment? R2.7.1 remove the last bullet. We believe these programs are already factored into the load forecast, as they are associated with resource scheduling and planning load serving, and not transmission planning. In particular, DSM measures would fall under R2.4.1, and the term "new technologies, or other initiatives" The language of Requirement 3 unnecessarily repeats the language of R1 and R2. As now written, R3 states "For the steady state portion of the Planning Assessment, each Transmission Planner and Planning

Organization	Yes/ No	Question 3 Comment
		Coordinator shall perform studies for the Near-Term and Long-Term Transmission Planning Horizons in Requirement R2, Parts 2.1, and 2.2. The studies shall be based on computer simulation models using data provided in Requirement R1." R3 We recommend that the introductory language in Requirement R3 be changed to read "The studies in Requirement R2, Parts 2.1, and 2.2 shall be performed using models as defined in Requirement R1 in accordance with the following criteria." We believe that Requirements 3.1 and 3.4 should be combined into R3.1, eliminating R3.4. It is redundant to have Requirement 3.1 say "perform R3.4". We recommend that R3.4 be deleted and that R3.1 be replaced with:R3.1 Planning event studies shall be performed in accordance with "Table 1 - Steady State & Stability Performance Planning Events;" and shall be based on a supportable Contingency list. Comment: The content of 3.4.1 was intentionally omitted as it is redundant with R7. Also, the language "...more severe System impacts..." was intentionally omitted as it could be subject to a wide range of interpretations.Similarly, we recommend that R3.5 be deleted and that R3.2 be replaced with:R3.2 Extreme event studies shall be performed in accordance with "Table 1 - Steady State & Stability Extreme Events;" and shall be based on a supportable Contingency list. We recommend the following new requirement be inserted after the revised R3.2 language:Should the extreme event studies identify potential Cascading, an evaluation of possible actions designed to reduce the likelihood or mitigate the consequences and adverse impacts of the event(s) shall be conducted. Comment: As before, the language "...more severe System impacts..." was intentionally omitted as it could be subject to a wide range of interpretations. We recommend removing the second bullet of R3.3.1, "Tripping of Transmission elements where relay loadability limits are exceeded" for the following reasons:1. There is currently no tool to model relay loadability characteristics in Steady State analysis. 2. Requirement R3.3.1 would require inclusion of relay models in modeling data that are not currently provided. MOD-012 does not require impedance or overcurrent relay models to be submitted.3. In Requirement 3.3.1, the second bullet, it is impossible to model complete and accurate relay loadability using present-day steady state simulation tools. At best an individual point could be chosen to model relays based on a selected power factor. We recommend changing the opening text of Requirement R.3.3.2 to say "Simulate the expected automatic or manual operation..." Subrequirement R4.1.2 represents a tremendous increase in dynamic modeling complexity. Modeling relay

Organization	Yes/ No	Question 3 Comment
		action during apparent impedance swings would require inclusion of impedance relay models in modeling data that are not required to be submitted in MOD-012. If such modeling is necessary, then the corresponding data requirements need to be addressed in MOD standards. We believe that Requirements 4.1 and 4.4 should be combined into R4.1 as shown below and R4.4 should be deleted. It is redundant to have Requirement 4.1 say "perform R4.4." We recommend R4.1 language be revised to read as follows:R4.1 Planning event studies shall be performed in accordance with "Table 1 - Steady State & Stability Performance Planning Events;" and shall be based on a supportable Contingency list.Comment: The content of 4.4.1 should be omitted as it is redundant with R7. Also, the language "...more severe System impacts..." should be omitted as it could be subject to a wide range of interpretations. Similarly, R4.5 should be deleted and R4.2 should be replaced with:R4.2 Extreme event studies shall be performed in accordance with "Table 1 - Steady State & Stability Extreme Events;" and shall be based on a supportable Contingency list. We recommend the following new requirement be inserted after the revised R4.2:Should the extreme event studies identify potential Cascading, an evaluation of possible actions designed to reduce the likelihood or mitigate the consequences and adverse impacts of the even(s) shall be conducted. Comment: As before, the language "...more severe System impacts..." was intentionally omitted as it could be subject to a wide range of interpretations. Clarify the first bullet in Requirement R4, part 4.3.1 by changing it to "High-speed (less than 1 second) reclosing, where the fault has cleared, and high-speed reclosing into the permanent fault , but in each case only if high-speed reclosing is utilized". In Requirement R4, part 4.3.1, third bullet, it is impossible to model complete and accurate relay loadability using present-day steady state simulation tools. Existing applications do have impedance relay models, but these models do not model many relay capabilities- for example, non-circular protection regions and load-encroachment. We recommend removing this bullet. The comment statement we made above referring to R4.1.2 also applies to R4.3.1. MOD-012 does not require reclosing relay model data to be submitted. If such modeling is necessary, then the corresponding data requirements need to be addressed in MOD standards. Furthermore, there is not a standard built-in reclosing relay model in current stability simulation tools. Comments regarding Table 1-We assume the headnote i. to Table 1 - "The response of voltage sensitive Load..." - means that studies must not rely on end-user load tripping to meet the performance requirements defined in TPL-001-2 but that it should be modeled (when known) so that its occurrence would be evident.

Organization	Yes/ No	Question 3 Comment
		We don't see the need to apply Footnote 12 to only certain contingency categories or certain events in categories. Recommend putting the footnote in the column header just as with Footnotes 1, 2, 3, and 4.Recommend changing "utilized" in Measurement M3 to "performed."Recommend changing "utilized" in Measurement M4 to "performed."Modify Measurement M7 to "Each Planning Coordinator shall provide dated documentation on roles and responsibilities of its Transmission Planners, such as..." The deleted phrase, "in conjunction with each of its Transmission Planners," appears to be unnecessary.

Response: Requirement R1, Part 1.1 – The SDT believes that the planners must have the general information in Requirement R1, Part 1.1 in order to conduct the necessary studies for steady state, stability, and short circuit. The requirement states that the planner shall maintain System models, not to have a single model that covers all three categories. The SDT believes that the planner will need the items in Requirement R1, Part 1.1 to develop the smaller set of items that are necessary for their short circuit models. No change made.

Requirement R2, Part 2.1.4 – This item requires the planner to show evidence of one or more sensitivity studies which show appreciable change from the prior projected (P0) system condition (pre-sensitivity adjustment). Measurable changes for the revised P0 system condition could be evidenced by line or transformer flows, voltages, a change in dispatch, load increase, etc., assuming the change places additional stress on a portion of the system being reviewed for the sensitivity studied. The sensitivity analysis is important for the applicable entity to better understand their system's vulnerability to alternate "base (P0)" conditions. The intent is to develop a portfolio of potential credible conditions so that the planner better understands potential vulnerabilities. In the Corrective Action Plans (CAP) area of the standard, Requirement R2, Part 2.7, a CAP may be required if a Planning Event shows performance criteria concerns for one or more sensitivity scenarios. No change made.

Requirement R2, Part 2.3 – The standard states that the planner shall maintain System models, not to have a single model that covers all three categories - for steady state, stability, and short circuit. It is common within many organizations that separate models are maintained for short circuit analysis since they require breaker configuration details not contained within steady-state load flows. Additionally, short circuit models may not have end-use Load represented but rather emphasis is on system topology, impedance, generation dispatch, fault location etc. No change made.

Requirement R2, Part 2.4.3 – same response as Requirement R2, Part 2.1.4 above.

Requirement R2, Part 2.7.1 – The SDT disagrees that the last bulleted item which includes use of a rate application or DSM program would be inclusive to the forecasted Load within the model studied. No change made.

Requirement R3 – The SDT clarifies that Requirement R2 refers to an "annual assessment" which collectively includes current or past studies, Corrective Action Plans, etc. required for steady-state, stability, and short circuit analysis. Requirement R3 deals with a portion of the overall assessment and is focused on the

Organization	Yes/ No	Question 3 Comment
steady-state "study" requirements for the Near-Term and Long-Term Transmission Planning Horizons. No change made. Requirement R3, Part 3.1 – The SDT did not receive any significant industry objection to having Parts 3.1 and 3.4 separated. The proposed change is based on a formatting and style preference and does not address a reliability gap in the standard. No change made. Requirement R3, Part 3.2 – The SDT did not receive any significant industry objection to having Parts 3.2 and 3.5 separated. The proposed change is based on a formatting and style preference and does not address a reliability gap in the standard. No change made. Requirement R3, Part 3.4.1 and Requirement R7 are uniquely different and not redundant as suggested by the commenter. No change made. Requirement R3, Part 3.5 (proposed new 3.2 by commenter) – The commenter finds the term "more severe System impacts" too open to interpretation and suggests a focus on Cascading conditions. The SDT believes the requirement is clear as written and that the statement "more severe System impacts" is used to describe the latitude in engineering judgment afforded to the planner in developing its extreme Contingency list. Action is only required on the subset of items that show the potential for Cascading. No change made. Requirement R3, Part 3.3.1, bullet 2 – this does not require an "automatic" modeling feature but rather it could be further subsequent manual analysis performed as needed for a given Planning Event. For example, if a line flow shows >150% loading the planner may need to trip the circuit to see if a stable condition results and what performance criteria issues may be present. To the extent this could be automated through programming the planner may do so at their discretion. No change made. For similar reasons stated in the response to Requirement R3, Part 3.5, the SDT does not find the phrase "more severe System impacts" as vague and open to interpretation. No change made. Requirement R3, Part 3.3.1 - The SDT language does not require comprehensive relaying models. No change made. Requirement R3, Part 3.3.2 - The SDT does not believe the proposed wording changes provide any clarity and finds the item clear as stated. No change made. Requirement R4, Part 4.1.2 – The "apparent impedance swing" is the trajectory of changes in the apparent impedance seen by a distance relay for various system and Fault conditions. In the case contemplated in Requirement R4, Part 4.1.2, it is the trajectory seen by the distance relay for the initial Fault and the subsequent generator(s) pulling out of synchronism. If that trajectory were to come within the tripping characteristic of the relay for a sufficient length of time, the relay would cause its associated line to trip. With that explanation, the SDT does not believe the modeling requirements are overly complex or difficult to achieve. No change		

Organization	Yes/ No	Question 3 Comment
made. Requirement R4, Parts 4.1 and 4.4 - The SDT did not receive any significant industry objection to having Parts 4.1 and 4.4 separated. The proposed change is based on a formatting and style preference and does not address a reliability gap in the standard. No change made. Requirement R4, Part 4.5 - the SDT does not believe the proposed wording changes are warranted and finds the item clear as stated. No change made. Requirement R4, Part 4.3.1, first bullet – the SDT does not believe the proposed wording changes are warranted and finds the item clear as stated. No change made. Requirement R4, Part 4.3.1, third bullet – The SDT language in Requirement R4, Part 4.3.1 states "The analyses shall include the impact of subsequent" and does not require comprehensive relaying models. However, it does require that the planner take into account the effects of System Protection on System performance. No change made. Table 1 header note "i" – The SDT notes that this item only applies to steady-state load flow analysis and no assumed shedding of non-consequential sensitive Load is permitted for the steady-state analysis unless it is to be intentionally dropped as part of a Corrective Action Plan where warranted. No change made.		
Hydro One Networks Inc.		A. Regarding Requirement 1.1.2, assessment of "known outages... with a duration of at least 6 months", are dealt with in the operational studies rather than planning studies. In addition, any adverse impact that these outages might have, are mitigated by operational decisions rather than "planning" decisions within a 6-month horizon. It is suggested to move this requirement out of TPL standards and instead include it a relevant operational standards. B. The statement in R 2.1.4, "must vary one or more of the following conditions by a sufficient amount to stress the System within a range of credible conditions that demonstrate a measurable change in System response", leaves room for very different interpretations by PCs and TPs as to the number and type of required sensitivity studies. Are all interpretations, based on the engineering judgment of the PC and TP, acceptable? C. The language of R 2.1.4 and 2.4.3 allowing to perform one or more sensitivities appears to be inconsistent with the language in R 2.7.2 which requires multiple sensitivities to determine if actions to resolve performance deficiencies are necessary. Will varying only one measurable quantity several times in multiple simulations constitute multiple sensitivity studies or one sensitivity study?

Organization	Yes/ No	Question 3 Comment
		D. The language of Requirement 2.1.5, "spare strategy", appears to be open-ended regarding the number of permutations to be analyzed. It is suggested to move this requirement out of TPL standard and instead have this issue dealt with in the operational standards. E. In R 2.2, the statement "be supported by the following annual current study, supplemented with qualified past studies" should be replaced with a similar statement in R 2.1 which says: "be supported by current annual studies or qualified past studies". F. In R 4.1.1, "For planning event P1: No generating unit shall pull out of synchronism" is too restrictive. In many cases a P1 event may result in instability of a small nearby generator without a significant impact on the reliability of BES. The same requirement states that "A generator being disconnected from the System ... by a Special Protection System is not considered pulling out of synchronism". If rejection of ANY generator by SPS is acceptable, why should instability of a small generator, resulting in its disconnection by its protection without a severe impact on the system, be unacceptable in all circumstances? If this requirement is unchanged, it dictates the addition of an SPS (Generation Rejection) for any unit that might go unstable without any benefit for the reliability of the BES. G. In Table 1, Event 1 of Category P2 and related Footnote 7 (simulation of LEO condition) are not clear (concern with the use of the word "possibly"). If the intension is to simulate LEO condition of tapped lines, this should be clearly stated in the table (without reference to "Opening of a line section" and use of different language in the footnote).

Response: A: The SDT disagrees with the view that outages of 6-months or more should only be reviewed in the operations timeframe. Such an outage could be for an upcoming construction project requiring certain facilities to be removed from service for long durations of time and those situations should be evaluated with sufficient lead time to determine any vulnerabilities and development of sufficient Corrective Action Plans as required. No change made.

B. The standard does not mandate the number of sensitivity analyses performed nor the number of adjustments made and engineering judgment of the Transmission Planner and Planning Coordinator is acceptable. No change made.

C. Requirement R2, Parts 2.1.4 and 2.4.3 are not inconsistent with Requirement R2, Part 2.7.2. With the various requirements, the planners are required to conduct multiple sensitivities. Therefore, Requirement R2, Part 2.7.2 could be used when the results of these multiple sensitivities identify common concerns. The situation described ~~would~~ could be considered multiple sensitivity studies, if the multiple simulations represent more than one of the studies in Requirement R2, Part 2.1.1 and 2.1.2 or Requirement R2, Part 2.4.1 and 2.4.2. No change made.

D. The spare equipment strategy is an important planning aspect to better assist operations. The SDT disagrees that the number of permutations is open-ended. The evaluation is simply a new P0 condition starting with a long lead-time (one year or more) facility removed from service followed by an analysis

Organization	Yes/ No	Question 3 Comment
covering the P0, P1 and P2 studies. No change made. E. The requirement for an annual current steady-state study in the Long-term Transmission Planning Horizon is intentional to drive earlier identification of potential transmission performance limitations and earlier development of Corrective Action Plans. The study results can be used as qualified studies as they advance to later years, including moving to the Near-Term Transmission Planning Horizon. No change made. F. The SDT respectfully disagrees with the commenter. For a P1 single Contingency event, the SDT believes, and a majority of industry stakeholders find it reasonable, that no Bulk Electric System (BES) generation unit be pulled out of synchronism due to the P1 event studied. If the "small" nearby unit is served below threshold kV and MW size limitations set by your Regional Entity to qualify as a BES unit, the unit would not be within scope of the standard. No change made. G. Table 1, footnote 7 – The SDT added the footnote to further explain its intent for P2-1 and to ensure that the planner assess the voltage of a load bus that was on a radial line. The word "possibly" was used since having load on a radial is not always the outcome of opening one end of a line section. No change made.		
Arizona Public Service Company		AZPS would like to reiterate its "Affirmative" voting recommendation with regard to the proposed revisions to the Standard. AZPS erroneously entered a "Negative" Standard vote for one of its voting segments.
Transmission Strategies, LLC		The SDT, Observers, and the Industry as a whole have put a tremendous amount of thought and work into the development of this latest draft. While nobody should claim that this latest version is perfect, it is far clearer, more in tune with current industry needs, and much improved compared to the existing approved Standards that it will replace.
Response: Thank you for your support.		
NIPSCO		1.1.2. Known outage(s) of generation or Transmission Facility(ies) with a duration of at least six months. This is a little confusing to me. Does this mean the outage must last at least six months?Or does this mean at least model outages that last six months or more. If it is the latter then, I'm not sure that is stringent enough.There may be known critical outages occurring over peak that do not last 6 months. If non-consequential load loss is not allowed for loss of one element, then what about the next contingency? Couldn't that result in having to interrupt Firm service? Is that okay as a corrective action plan in the outage coordination horizon?Does this apply to both near-term and long-term planning? If so, we probably need to model additional unplanned potential outages on top of n-1 conditions.

Organization	Yes/ No	Question 3 Comment
		Lastly. in section 2.1.4 should there be a category for high/low wind conditions?
Response: Requirement R1, Part 1.1.2 is related to known existing conditions or known future conditions of facilities being removed from service; i.e., a construction project that requires an existing facility to be de-energized for a period of 6-months or more. This requirement should not be confused with hypothetical situations that could result in an extended loss of a facility. Those situations are the intended purpose of a sound spare equipment strategy. The standard only requires analysis of known or planned outages of 6-months or greater to be included within a P0 system condition. The planner could review shorter duration planned outages as part of its sensitivity analysis portfolio. No change made. The SDT does not believe there is a need to account for a high/low wind condition situation. The intended purpose of this suggested condition within the sensitivity portfolio is not clear. No change made.		
ReliabilityFirst		1. Requirement 8 and 8.1 uses the language of "Planning Assessment results". This language is not defined in the section of the standard that defines the terms of use. For consistency "Planning Assessment results" should be replaced with "Planning Assessment". 2. Requirement 2.1.5 has statements that are ambiguous. What is considered major transmission equipment? What is an entity's "spare equipment strategy"? The requirement is not clear as to how many power flow models are required (one per piece of "major transmission equipment" without a spare, or one model with every piece of "major transmission equipment" without a spare being out of service)? As written, if an entity has no "spare equipment strategy" they could be exempt from this requirement. 3. We interpret the use of bullet points in Requirement 3.3.1 to mean that either one of the statements can be chosen. This requirement should be written where all the bulleted statements are included in the analyses.
Response: 1. The SDT sees no reliability reason or clarity for the change suggested. No change made. 2. Requirement R2, Part 2.1.5 is intended to analyze the removal of a single piece of long lead time equipment (one year or more) to the extent there is no existing spare equipment strategy to provide a means of returning to service (in a less than one year) a comparable replacement. If this condition exists, then the facility (single element) in question must be removed in the model to establish a new P0 system condition and studies must then be run for P0, P1, and P2 for the new system scenario. The spare equipment strategy must be reviewed for the entity's system exposure to catastrophic failures resulting in the long lead-time facility outages, however, only one facility must be removed at a time if the condition exists for multiple facilities. A Transmission Planner may have no spare equipment strategy if they are able to demonstrate they are not responsible for any facilities which they believe could place them in a "long lead-time" scenario. No change made.		

Organization	Yes/ No	Question 3 Comment
3. The bulleted items of Requirement R3, Part 3.3.1 were meant to be inclusive. This means that the use of bullets here was incorrect and the items should be numbered elements. This same change was made to Requirement R4, Part 4.3.1. **3.3.1.1** Tripping of generators where simulations show generator bus voltages or high side of the generation step up (GSU) voltages are less than known or assumed minimum generator steady state or ride through voltage limitations. Include in the assessment any assumptions made. **3.3.1.2** Tripping of Transmission elements where relay loadability limits are exceeded. **4.3.1.1** Successful high speed (less than one second) reclosing and unsuccessful high speed reclosing into a Fault where high speed reclosing is utilized. **4.3.1.2** Tripping of generators where simulations show generator bus voltages or high side of the GSU voltages are less than known or assumed generator low voltage ride through capability. Include in the assessment any assumptions made. **4.3.1.3** Tripping of Transmission lines and transformers where transient swings cause Protection System operation based on generic or actual relay models.		
ITC		ITC COMMENTS on TPL-001 voteITC will reluctantly vote to approve the draft standard. While we have concerns, we are voting to approve this standard because we believe the positive elements outweigh the portions of the draft standard that we object to. It is important that the improved requirements that effectively "raise the bar" over the existing standard should become effective sooner rather than later. A negative vote, which might cause a further delay in implementation of the standard, would be the least desirable outcome. However, we still believe that the VSL that would find that an entity had committed a "severe" violation for failure to distribute its planning assessment to an adjacent Transmission Planner or Planning Coordinator has the potential to overly punish a simple error in oversight. We would agree that willfully withholding an assessment from a neighbor or a valid requestor justifies a severe violation but an administrative or clerical oversight does not. For example, it might escape our attention that an entity, particularly a smaller one, registers as a TP or TP. As far as we know, there is no requirement that a registrant, or even one who de-registers, must notify an "adjacent" TP or PC of their change in status. As written, the standard requires you be found in "severe" violation, even if that new entity fails to notify you of their change in status. You would still be in severe violation even if they later ask for your planning assessment. Even if the standard passes, we request that this VSL be fixed to make the distinction between an administrative error and willful neglect. Our response to question 2 offers a suggested method to do this.
Response: Requirement R8 is an important aspect of the new TPL-001-2 standard to communicate results with neighboring systems and those demonstrating a reliability need. The SDT notes that the VSL Guidelines require a Severe VSL for each and every requirement but encourages graded (multiple level) VSLs where		

Organization	Yes/ No	Question 3 Comment
possible. In regard to Requirement R8, the SDT has established four VSLs. It is noted that an entity can be up to 120 days (~ 4 months) late in its delivery of the information and remain in the Lower VSL category before being exposed to the Severe VSL category. The 10 day increment in the other VSL categories, above the 120 day Lower VSL, conforms to NERC's VSL Guidelines. See the response to your suggested VSL changes in Question 2, however, it is noted that no changes were made to the Requirement R8 VSLs. No change made.		
South Carolina Electric and Gas		R1 does not seem to address errors in data that have been introduced in the latest model data. In addition, R1 and its VSL may be interpreted to exclude the use of past studies. The Implementation Plan should include a five year delay in the effective date for short circuit studies for parts 2.3 and 2.8 of R2 because these studies are not required in the current Version 0 standards.
Response: Requirement R1 of the new TPL-001-2 standard requires the Transmission Planner and Planning Coordinator to maintain System models within its respective area of responsibility. The requirement indicates that information received via MOD-010 and MOD-012 shall be "supplemented by other sources as needed" and to the extent errors and omissions were to be discovered by, or brought to the attention of, the Transmission Planner or Planning Coordinator Requirement R1 establishes an expectation that these "other sources" would be utilized to accurately "represent the project System conditions" being studied. No change made. Requirement R1 is applicable to models used for both current and past studies. No change made. Implementation Plan, Short Circuit Studies – While short circuit study requirements may be new in the realm of mandatory enforceable standards, the SDT does not believe that they present a significant "raising of the bar" for industry. The SDT believes that prudent short circuit practices are effectively in place today to ensure safe operation of the equipment. Therefore, no extension in the Implementation Plan was made in regard to short circuit studies.		
Manitoba Hydro		-Why was the Near Team Transmission Planning Horizon definition moved to the Glossary prior to TPL-001-2 approval?- The definition of Non-Consequential Load Loss should not contain '(2) the response of voltage sensitive Load' because voltage sensitive
Response: Two previously proposed definitions that were part of this project were moved to another standard development project – Project 2010-10 titled "FAC Order 729". The two definitions, "Near-term Transmission Planning Horizon" and "Year One" were approved by the Board of Trustees on January 24, 2011. The statement related to the "Non-Consequential Load Loss" definition is incomplete. No change made.		

Organization	Yes/ No	Question 3 Comment
National Grid		R 1.1.2 We recommend the known facility outage duration be defined as facility outage durations lasting at least twelve months. R 1.1. (page 4) System models shall represent: 1.1.1. Existing Facilities 1.1.2. Known outage(s) of generation or Transmission Facility(ies) with a duration of at least six twelve months. 1.1.3 ..... R 2.1.4 We recommend that this requirement be eliminated. We do not see the value of this additional analysis when the number, type and severity of the sensitivity tests are not well defined. These tests are then used to define Corrective Action Plans in cases only where multiple tests show performance deficiencies. R 2.1.5 Spare equipment strategies are typically designed to prevent long outages (possibility a year or more) of equipment with very long lead times. Any such strategy “could” result in these long outages depending upon the number of failures that may be postulated.This requirement is misleading and we thus recommend it be eliminated. R 2.2 We recommend the language for R 2.2 should be consistent with 2.1 for example - use "current or qualified past studies" instead of "the following annual current study." R 2.6.2 We recommend that the wording of this requirement remain unchanged. R 2.7.1 This portion of the requirement provides a list of “acceptable” Corrective Action Plans. It provides equal weight to infrastructure reinforcements and Special Protection Systems as means to mitigate violations resulting form single or multiple contingencies at both the EHV and HV levels.National Grid’s position is that a national standard should not endorse the use of Special Protection Systems as corrective actions to mitigate single contingency violations.Local Northeast Planning Criteria indicates that special protection systems (SPS) shall be used judiciously and may be used to provide protection for infrequent contingencies, or for temporary conditions that may exist such as project delays, unusual combinations of system demand and equipment outages or availability, or specific equipment maintenance outages. A SPS may also be applied to preserve system integrity in the event of severe facility outages and extreme contingencies. The decision to employ a SPS shall take into account the complexity of the scheme and the consequences of correct or incorrect operation as well as its benefits. We are further of the opinion that specific methods of correcting system performance deficiencies should not be specified in a National Standard. We thus recommend that the Corrective Action List be eliminated from this requirement as illustrated below. 2.7.1. List System deficiencies and the associated actions needed to achieve required System performance. R 2.7.2 We feel that this requirement and requirement R 2.1.4 adds ambiguity to the process as we have

Organization	Yes/ No	Question 3 Comment
		indicated above. We thus recommend that this requirement be eliminated. R 3.3.1 We feel that the last sentence of 3.3.1 should be removed. This is handled by PRC-023. Line ratings are addressed by PRC-023. PRC-023 requires coordination with the Reliability Coordinator. Remove "Tripping of Transmission elements where relay loadability limits are exceeded" Contingency analyses for Requirement R3, Parts 3.1 & 3.2 shall: 3.3.1. Simulate the removal of all elements that the Protection System and other automatic controls are expected to disconnect for each Contingency without operator intervention. The analyses shall include the impact of subsequent: o Tripping of generators where simulations show generator bus voltages or high side of the generation step up (GSU) voltages are less than known or assumed minimum generator steady state or ride through voltage limitations. Include in the assessment any assumptions made. R 3.4.1 We would recommend the following addition as a clarification to the required information exchange: 3.4. Those planning events in Table 1, that are expected to produce more severe System impacts on its portion of the BES, shall be identified and a list of those Contingencies to be evaluated for System performance in Requirement R3, Part 3.1 created. The rationale for those Contingencies selected for evaluation shall be available as supporting information. 3.4.1. The Planning Coordinator and Transmission Planner shall coordinate with adjacent Planning Coordinators and Transmission Planners to ensure that Contingencies on adjacent Systems which may impact their respective Systems are included in the Contingency list. R 8.1 National Grid's concern regarding this requirement stems from the apparent open ended time frame afforded report recipients in their review of the Planning Assessment. This has the potential to stall the review process. National Grid thus recommends that any recipient of the Planning Assessments be given a specific time period for their response as indicated in R 8.1 below. R8. Each Planning Coordinator and Transmission Planner shall distribute its Planning Assessment results to adjacent Planning Coordinators, and adjacent Transmission Planners, within 90 calendar days of completing its Planning Assessment, and to any functional entity that has a reliability related need and submits a written request for the information within 30 days of sucha request. [Violation Risk Factor: LowMedium] [Time Horizon: Long-term Planning] 8.1. The recipient of the Planning Assessment results shall provides documented final comments on the results within 90 calendar days of receipt of the Planning Assessment. The respective Planning Coordinator or Transmission Planner shall provide a documented response to that recipient within 90 calendar days of receipt of those comments. Table 1 Steady State & Stability Performance Planning Events (Page10). The event description for

Organization	Yes/ No	Question 3 Comment
		Category P2 Event 1. along with the accompanying footnote 7 (Page 14) creates some confusion for multi-terminal lines. We recommend that Footnote 7 be eliminated and the event description be changed as follows: Category Initial Conditions Event P2 Normal System 1. Opening of a single load interrupting device at one terminal of a line without a fault. Table 1 (Planning Events and Extreme Events) Footnote 12 (Page 14).We are concerned that additional stakeholder process indicated in Footnote 12 has the potential to stall the Planning Assessment review process. We recommend that reference to this new process be eliminated from the Footnote.Our additional, concerns with Footnote 12 are addressed in comments originally provided by ISO-NE. We agree with their following comments : The following language for Footnote 12 is proposed:"Planned or controlled interruption of electric supply to radial customers or some local Network customers, connected to or supplied by the Faulted element or by the affected area, may occur in certain areas without impacting the overall reliability of the interconnected transmission systems."If Footnote 12 in Table 1 must be retained, the following language is proposed: "An objective of the planning process shall be to minimize the likelihood and magnitude of interruption of Demand, (excluding Interruptible Demand or Demand-Side Management), following Contingency events. However, it is recognized that Demand will be interrupted if it is directly served by the Elements removed from service as a result of the Contingency. Furthermore, in limited circumstances Demand may need to be interrupted to address BES performance requirements. When interruption of Demand is utilized within the planning process to address BES performance requirements, such interruption is limited to: a. Interruptible Demand or Demand-Side Managementb. Circumstances where the uses of Demand interruption not directly interrupted by the contingency are documentedc. Curtailment of firm transfers is allowed to meet BES performance requirements and meet applicable Facility Ratings, where it can be demonstrated it does not result in the interruption of any Demand (other than Interruptible Demand or Demand Side Management)"

Response: Requirement R1, Part 1.1.2 – The SDT and a majority of industry stakeholder support the 6-month period stated in the requirement. No change made.

Requirement R1, Part 1.1 – Same comment as above. No change made.

Requirement R2, Part 2.1.4 – Requirement R2, Parts 2.1.4 and 2.4.3 are not inconsistent with Requirement R2, Part 2.7.2. With the various requirements, the planners are required to conduct multiple sensitivities. Therefore, Requirement R2, Part 2.7.2 could be used when the results of these multiple sensitivities identify common concerns. No change made.

Requirement R2, Part 2.1.5 is intended to analyze the removal of a single piece of long lead time equipment (one year or more) to the extent there is no existing

Organization	Yes/ No	Question 3 Comment
spare equipment strategy to provide a means of returning to service (in less than one year) a comparable replacement. If this condition exists, then the facility (single element) in question must be removed in the model to establish a new P0 system condition and studies must then be run for P0, P1, and P2 for the new system scenario. The spare equipment strategy must be reviewed for the entity's system exposure to catastrophic failures resulting in the long lead-time facility outages, however, only one facility must be removed at a time if the condition exists for multiple facilities. A Transmission Planner may have no spare equipment strategy if they are able to demonstrate they are not responsible for any facilities which they believe could place them in a "long lead-time" scenario. No change made. Requirement R2, Part 2.2 - The requirement for an annual current steady-state study in the Long-Term Transmission Planning Horizon is intentional to drive earlier identification of potential Transmission performance limitations and earlier development of Corrective Action Plans. The study results can be used as qualified studies as they advance to later years, including moving to the Near-Term Transmission Planning Horizon. No change made. Requirement R2, Part 2.6 – The changes made to this requirement in the last draft were essentially style changes and the most substantive change is the introduction of documentation required to support the technical rationale for determining whether or not material changes have occurred. This was a recommendation made by the Quality Review process and agreed to by the SDT. No change made. Requirement R2, R2.7.1 – The SDT respectfully disagrees that actions that could be part of a Corrective Action Plan (CAP) should be eliminated. In regard to the concern of allowing SPS within the CAP, this view is not shared across the continent-wide footprint and National Grid and its Regional Entity always have the ability to go above and beyond the requirements of a NERC standard if they believe such action is warranted. No change made. Requirement R2, Part 2.7.2 - Requirement R2, Parts 2.1.4 and 2.4.3 are not inconsistent with Requirement R2, Part 2.7.2. With the various requirements, the planners are required to conduct multiple sensitivities. Therefore, Requirement R2, Part 2.7.2 could be used when the results of these multiple sensitivities identify common concerns. No change made. Requirement R3, Part 3.3.1 – The SDT appreciates the concern raised; however, it believes the subsequent tripping of "Transmission elements where relay loadability limits are exceeded" is warranted. The TPL studies may earlier identify and flag relay setting concerns based on required Long-Term Transmission Planning Horizon studies. Within the TPL standard, such a concern would have a Corrective Action Plan that would address the issue which would also meet the expectations of PRC-023. The SDT sees this as a defense in depth approach. No change made. Requirement R3, Part 3.4.1 – The additional information suggested was not implemented as it did not add to reliability or clarify the issue beyond the present wording. No change made. Requirement R8, Part 8.1 – The SDT does not see a reliability related need for the suggestion and believes a response regarding a Planning Assessment is warranted no matter when raised by the reviewing party. No change made.		

Organization	Yes/ No	Question 3 Comment
Table 1, footnote 7 – The SDT added the footnote to further explain its intent for P2-1 and to ensure that the planner assess the voltage of a load bus that was on a radial line. The word "possibly" was used since having load on a radial is not always the outcome of opening one end of a line section. No change made. Table 1, Footnote 12 – The SDT believes the stakeholder process provides a level of transparency needed when an entity intends to utilize provisions offered by footnote 12 (and footnote 9). No change made.		
TVA TP&C		TVA - has following comments:TVA is concerned about footnote 12 (known as footnote b in existing TPL standards). TVA believes that utilities should be given some freedom in dropping local load in response to N-1 events as long as overall BES reliability is not impacted. Otherwise significant capital improvements will be required that will have no overall reliability gain for the Bulk Electric System. In R4.1.1, TVA is concerned that no generating unit (including distributed generation) shall pull out of synchronism in a local area only (thus not impacting the overall reliability of the BES) for Planning Event P1, while the standard does allow generator runback/tripping for the same event. Thus the generating unit may be tripped by a special protection scheme - but may not be tripped by an out of step relay. TVA believes that out of step relaying should be allowed for this unit tripping as long as this does not affect the overall reliability of the BES. Table 1 contains both planning events and extreme events. Suggest labeling the planning events as Table 1 and the extreme events as Table 2 to help reduce confusion. VSL for R1 does not seem to address issues where data errors have been introduced into the latest model data. Also, R1 and its VSL may be interpreted to exclude the use of past models. The Implementation Plan should include a five-year delay in the effective date for short circuit studies (R2 parts 2.3 and 2.8) since these studies are a new TPL requirement and are not required in the current version 0 standards.
Response: The SDT has taken care to ensure consistency in footnote 12 (and footnote 9) with the prior footnote 'b' revision supported by industry, approved by the NERC Board of Trustees, and submitted for regulatory approval. No change made. Requirement R4, Part 4.1.1 - The SDT respectfully disagrees with the commenter. For a P1 single Contingency event, the SDT believes, and a majority of industry stakeholders find it reasonable, that no Bulk Electric System (BES) generation unit be pulled out of synchronism due to the P1 event studied. If the "small" nearby unit is served below threshold kV and MW size limitations set by the Regional Entity to qualify as a BES unit, the unit would not be within scope of the standard. No change made.		

Organization	Yes/ No	Question 3 Comment
Desire for Two Tables – This has been vetted within industry in prior comment/ballot periods. The majority of stakeholders support the current format. No change made. Requirement R1 VSL – The requirement indicates that supplied data may have to be supplemented as appropriate. The SDT believes that this covers correcting any data errors. The SDT sees no reason why the current language invalidates the use of past models as long as they meet the requirements. No change made. While short circuit study requirements may be new in the realm of mandatory enforceable standards, the SDT does not believe that they present a significant "raising of the bar" for industry. The SDT believes that prudent short circuit practices are effectively in place today to ensure safe operation of the equipment. Therefore, no extension in the Implementation Plan was made in regard to short circuit studies.		
Independent Electricity System Operator		See our response to Q1.
Response: See response to Q1.		
NBSO		Items that, if not addressed, will likely cause a negative vote from NBSO: NBSO believes that R1.1.2 is more appropriately addressed in the operational timeframe. Perhaps more appropriate alternatives could include:-only considering planned outages with durations of one year or more (in-line with typical planning timeframes), or -requiring that facilities with planned outages lasting over the complete duration of time period being studied be modeled out of service. R2.1.5 may significantly increase the demands of the planning assessments with little gain in reliability. Depending on interpretation, R2.1.5 could exponentially increase the work load of the annual planning assessment. NBSO interprets the intent of R2.1.5 to require that entities have, review and evaluate their spare equipment strategies. Perhaps the assessment of a spare equipment strategy would be more appropriately addressed in a separate standard. Further, categories P0, P1 and P2 do not reference footnote 9 in the Initial Condition column. NBSO is unclear if the last sentence of R2.1.5 allows for the curtailment of firm transmission service under the N-1 conditions before the application of category P0, P1 and P2 events. This last sentence states:"...with the conditions that the System is expected to experience during the possible unavailability of the long lead time equipment." Table 1, note b should be modified to allow for the loss of Firm Transmission Service. This addresses cases where Firm Transmission Service is lost in direct consequence to the event (e.g. loss of one DC pole, an

Organization	Yes/ No	Question 3 Comment
		interface comprised of a single line, a bus fault that clears multiple lines in an interface, etc...) Individual items that, if not addressed, may not cause NBSO to vote Negative, but in combination may result in a negative vote:The definitions of “near-term transmission planning horizon” and “year one” have been removed from the standard, yet they are still used in draft 7. Further, the definition of these terms is being filed as part of another project. NBSO is concerned with endorsing a standard based on terms whose definitions may change independently of this project. For R7, NBSO is concerned that one entity may be found noncompliant should another entity fail to meet their agreed upon responsibilities. For example, a PC may be relying on the results from a TP’s studies to complete its own planning assessment, but the TP did not meet their responsibilities. In this case, the PC should not be found non-compliant for an incomplete planning assessment due to the failure of the TP to meet their responsibilities.Contingencies on back to back HVDC facilities are not addressed in the standard.

Response: Requirement R1, Part 1.1.2 - The SDT disagrees with the view that outages of 6 months or more should only be reviewed in the operations timeframe. Such an outage could be for an upcoming construction project requiring certain facilities to be removed from service for long durations of time and those situations should be evaluated with sufficient lead time to determine any vulnerabilities and development of sufficient Corrective Action Plans as required. No change made.

Requirement R2, Part 2.1.5 is intended to analyze the removal of a single piece of long lead time equipment (one year or more) to the extent there is no existing spare equipment strategy to provide a means of returning to service (in a less than one year) a comparable replacement. If this condition exists, then the facility (single element) in question must be removed in the model to establish a new P0 system condition and studies must then be run for P0, P1, and P2 for the new system scenario. The spare equipment strategy must be reviewed for the entity’s system exposure to catastrophic failures resulting in the long lead-time facility outages, however, only one facility must be removed at a time if the condition exists for multiple facilities. A Transmission Planner may have no spare equipment strategy if they are able to demonstrate they are not responsible for any facilities which they believe could place them in a “long lead-time” scenario. No change made.

Requirement R2, Part 2.1.5 & Footnote 9 – Footnote 9 is not applicable to the Initial Condition (Pre-contingency) of P0, P1, and P2 even with a long lead-time device out of service. No change made.

Table 1, footnote ‘b’ - The SDT believes the concern should be addressed by footnote 4, Conditional Firm Transmission Service. No change made.

Removal of Definitions - Two previously proposed definitions that were part of this project were moved to another standard development project – Project 2010-10 titled “FAC Order 729”. The two definitions, “Near-Term Transmission Planning Horizon” and “Year One” were approved by the Board of Trustees on January 24, 2011.

Requirement R7 – The SDT disagrees, having documented clear lines of responsibility should protect against the concern raised. No change made.

Organization	Yes/ No	Question 3 Comment
Back to Back HVDC – The contingent loss of back to back HVDC facilities is included as a transformer. Footnote 5 states, in part, that "Requirements which are applicable to transformers also apply to variable frequency transformers and phase shifting transformers. Therefore, the SDT has not explicitly included back-to-back HVDC as a separate Contingency. No change made.		
Xcel Energy		Effective Date: The effective date section seems to imply that Non-Consequential Load Loss will not be permitted after the 84 month implementation period. We do not believe that was the drafting team's intent and request that it be modified. Footnote # 12 in Table 1, in particular, seems to support our assumption that the team did not intend to disallow it. For reference, the footnote states:"12. An objective of the planning process should be to minimize the likelihood and magnitude of Non-Consequential Load Loss following Contingency events. However, in limited circumstances Non-Consequential Load Loss may be needed to address BES performance requirements. When Non-Consequential Load Loss is utilized within the planning process to address BES performance requirements, such interruption is limited to circumstances where the Non-Consequential Load Loss is documented, including alternatives evaluated; and where the utilization of Non-Consequential Load Loss is subject to review in an open and transparent stakeholder process that includes addressing stakeholder comments." However, if it was the drafting team's intent to not allow Non-consequential Load Loss after the 84 month implementation period, we disagree and ask the team to reconsider. Particularly for rural areas, in some cases, this will be the only action possible. R2.1.4: a) We would like to see clarification on the term "sensitivity analysis". Is this in reference to seasonal models and differences in fuel availability? We would like more detail on how this is to be done so that it won't be left up to interpretation. b) We would like the drafting team to consider stratification of the tasks needed to perform a Planning Assessment. In our opinion, having both the TP and PC do exactly the same study produces tremendous and unnecessary duplication. Without stratification, the TPL-001 standard will continue to perpetuate the same paradigm used in the existing TPL-001 through TPL-004 standards. The NERC Functional Model makes a clear distinction between PC and TP functions/responsibilities. It is not clear why that distinction is not leveraged in the new TPL-001 standard. This will be particularly troublesome in areas where an ISO or RTO is the Planning Coordinator. In order for the RTO/ISO, as the PC, to be able to do their Planning Assessment, the Transmission Planners would have to provide a lot of detailed input data. So, in effect, both the PC and TP would be performing their assessment from the same data. It would make more sense if the RTO (as the PC) performed the required studies on the 500-345 kV network and the TP performed the required studies on everything below 230 KV.

Organization	Yes/ No	Question 3 Comment
		We also recommend the allowance for utilization of a regional assessment, instead of performing your own, due to individual entity resource constraints. R2.4.1: We would like to see better clarity on what an Aggregate system load model is and how granular it should be. If the intent is for the model to contain a very detailed representation of the load system, then it may take a longer time to implement. R3.4.1: a) This type of coordination could be difficult due to other adjacent entities on different schedules and some may not have the amount of detail to incorporate into another's processes. We know this is generally covered in coordination of real time operations and wonder if it is appropriate to require this type of coordination in the long term process. Is there already an operational standard that covers this? Would it be better to address this in the operational standards? We would like the roles of the coordinators vs. the planners to be clarified in order to ensure that no work is being duplicated. b) PC's between regions, such as RTOs, are already coordinating for long term studies. In these cases, we feel the PC should alone be responsible for the requirements, rather than also the TPs. c) Can we get a clear definition of what apparent impedance swings means? We interpret it as rotor angle stability. R4.3.1: We would like to see that the detailed data is incorporated back into the NERC modeling processes and create a more detailed model with better accuracy. R8: We do not agree with the requirement to provide the assessment to every adjacent PC and TP because we fail to see the reliability benefit in doing so. However, we do agree that the PC and TP should be required to provide the assessment to any of these entities, if requested. Additionally, for entities that make such requests, we would like to have 90 days instead of 30 to respond. In many cases a non-disclosure agreement will have to be executed due to CEII classification of some information, and this can take several months.
Response: Effective Date - The SDT believes the Effective Date section is sufficiently clear. The use of Non-Consequential Load Loss while discouraged by the standard is permitted when justified and presented in a transparent manner to other stakeholders (footnote 12). No change made. Sensitivity Analysis – This analysis should be viewed as a modified study of the Peak or off-peak studies required in Requirement R2, Parts 2.1.1 and 2.1.2. The SDT believes the examples provided in the bulleted list of Requirement R2, Part 2.1.4 are sufficiently clear as examples of what could be modified to create the sensitivity model. No change made.		

Organization	Yes/ No	Question 3 Comment
Delineation of tasks between Transmission Planner and Planning Coordinator – The issue raised is addressed by Requirement R7. No change made. Regional Assessments – The standard does not prohibit the use of valid studies performed by 3rd parties for use in the assessment results. No change made. Requirement R2, Part 2.4.1 - The "aggregate" dynamic Load model may include high-level assumptions on Load profiles for industrial, commercial, and residential Loads that are applied generically across the planning area study based on the planner's engineering judgment and system knowledge. The model is not required to be "bus" specific. No change made. Requirement R3, Part 3.4.1 - The SDT envisions that knowledge of the applicable Contingencies on neighboring systems would develop over time and be discovered with the results being distributed in Requirement R8. The SDT believes that this is an important improvement to the planning timeframe analysis and that system information learned in the operations environment should most certainly be considered to the extent it improves the robustness of the planning assessment. No change made. Planning Coordinator responsibility – NERC's Functional Model clearly places Transmission planning responsibility both on the Transmission Planner and Planning Coordinator. Requirement R7 should help alleviate any overlap concerns in responsibility. No change made. Apparent Impedance Swings - The "apparent impedance swing" is the trajectory of changes in the apparent impedance seen by a distance relay for various system and Fault conditions. In the case contemplated in Requirement R4, Part 4.1.2, it is the trajectory seen by the distance relay for the initial Fault and the subsequent generator(s) pulling out of synchronism. If that trajectory were to come within the tripping characteristic of the relay for a sufficient length of time, the relay would cause its associated line to trip. No change made. NERC Modeling Process – The standard does not govern NERC actions as they are not a registered entity. To the extent NERC pulls information from a model building process such as MMWG (ERAG) then the models used by NERC will likely contain the information desired. No change made. Requirement R8 – The SDT and a majority of industry support Requirement R8. No change made.		
ISO New England Inc.		We feel previous comments have largely been ignored by the Standards Drafting Team leading to a lack of support for the standard. Overall the standard should be more precise in its language. The following comments are provided for serious consideration with respect to revisions:Comments: From Section A.3 - the introduction please strike the word "probable" as shown below Purpose: Establish Transmission system planning performance requirements within the planning horizon to develop a Bulk Electric System (BES) that will operate reliably over a broad spectrum of System conditions and following a wide range of probable Contingencies This is deterministic contingency testing and this word introduces probability into the standard where it does not belong. For R1.1 Part 1.1.2. With respect to known outages, there needs to be greater flexibility in the standards (e.g. more tolerance to non-consequential load shedding or limitations to the contingencies that need to be

Organization	Yes/ No	Question 3 Comment
		considered (e.g. P0, P1, & P2)). Regional allowances for load shedding under this condition should be acceptable. Duration of known outages should be increased from six months to one year. For R1.1 Part 1.1.6 Delete "required for Load". Resources may also be used for export to other areas, not just internal load. REMOVE INTERCHANGE from 1.1.5 - Definition of Interchange - The inclusion of Interchange requires designing for non-Firm service.In the NERC Glossary of Terms Used the term Interchange is defined as "Energy transfers that cross Balancing Authority boundaries." It is meant to refer to energy transaction other than firm Transmission Service. While rigorous planning studies have been conducted to permit the uninterrupted implementation of firm Transmission Service without jeopardizing the reliable operation of the Interconnected System, other types of energy transaction only take place whenever system conditions permit them. They are usually of very short duration relative to planning assessment periods (usually spanning for a few hours to a few days) and are deemed highly interruptible and subject to reliability issues that may arise during operation of the system. In other words, the term Interchange refers to economic transactions that are permitted when the system is secure and there are reasonable reliability margins to effect dispatch changes to lower operating costs. As such, Interchange should not be reflected in system representation meant to assess system reliability under TPL-001. Part 2.1.4, requires an entity to vary one or more conditions to demonstrate a change in performance. If the cases were initially stressed, this may force an entity to simulate conditions with less severe stresses. At this point, there is limited or no value to this additional workload. Having a requirement to test at least one sensitivity as a blanket requirement may not be informative by itself and is more unclear since sensitivities are being required on an undefined base set of conditions. Additionally, our concern involves wording under 2.1.4 and 2.4.3 that sensitivities are required varying one or more conditions. Subsequently, in requirement 2.7.2 corrective action plans need to be developed to resolve performance deficiencies "only" if identified in multiple conditions or require a rationalization why no corrective action plan is necessary. Multiple condition sensitivities under 2.1.4 and 2.4.3 are necessary to satisfy requirement 2.7.2. Requirement 2.7.2 adds ambiguity and should be removed or revised as follows: 2.7.2. Corrective Action Plans are not required for performance deficiencies identified in a sensitivity analysis. We agree with R2.1 however with respect to R2.2 Language should be consistent with 2.1 for example - use "current or qualified past studies" instead of "the following annual current study." For 2.7.1 - We don't believe this list provides value nor should it be included in the standard. Section 3.3 - We feel that the last sentence of 3.3.1 should be removed. This is handled by PRC-023. Line

Organization	Yes/ No	Question 3 Comment
		ratings are addressed by PRC-023. PRC-023 requires coordination with the Reliability Coordinator. Remove "Tripping of Transmission elements where relay loadability limits are exceeded." In Table 1 - The fault descriptions must be clear. They must use "3-phase", "single-phase-to ground", or "2-phases-to ground" in the descriptions of a fault rather than SLG (a line is not a phase in electrical terms--single line to ground is not precise enough). In Table 1 - Where two elements are affected by a fault it must be clear whether the requirement is for a single-phase-to ground fault, or a 2-phase-to ground fault. They are different faults that will have different dynamic responses. For Table 1- add a footnote for the term generator to address the treatment of Combined Cycle Generators - "In addition to evaluating the loss of a single generator, the loss of all interrelated generators shall also be considered as a single contingency." Operating experience has shown that trips of the entire CC facility often occur even on facilities that claim the combined cycle generators are independent. Where a category involves an initial condition representing the loss of a facility followed by an event represeting the loss of a facility such as P3, the standard must be clear as to the amount of time assumed between faults. An assumption may be 30 minutes, but the standard must not leave this unsaid. This clarity must be provided in the Table 1 Notes.In addition, the standard must be clear on the allowable re-adjustments between contingencies such as P3, or better, must be clearly limit the permissible re-adjustments. For example, it is not realistic to assume an unlimited amount of re-dispatch between faults-e.g. the allowable re-adjustment should be limited to actions that can be effectively implemented in less than 30 minutes, such as a, b, c, d, ..., and the amount of generation re-dispatch must not exceed the amount of future planned contingency reserve, or similar language. This clarity must be derivable from the Table 1 Notes.

Response: A.3 Purpose Statement – While admittedly "probable" is somewhat in the eye of the beholder the intent is that Bulk Electric System (BES) should operate reliably for the more "probable" or "credible" Contingencies, i.e., Planning Events (Table 1), and that the BES reliability performance expectation is lower for the less "probable" extreme events. The SDT does not see this statement as defining the standard as probabilistic Contingency planning and agrees that the standard is deterministic planning. No change made.

Requirement R2, Part 1.1.2 – The SDT disagrees that the duration of known outages should be increased from 6 months to one year. The intent is to ensure review of an upcoming construction project requiring certain facilities to be removed from service for long durations of time and those situations should be evaluated with sufficient lead time to determine any vulnerabilities and development of sufficient Corrective Action Plans (CAP) as required. The SDT believes it is

Organization	Yes/ No	Question 3 Comment
		appropriate to study all planning events for the projected system and not limit it to just P0, P1. or P2. Load shedding could be part of a "temporary" CAP when justified by the use of footnote 12. No change made. Requirement R1, Part 1.1.6 - The SDT does not believe the phrase "required for Load" is confusing. Without the statement, in theory, one could have a model with lots of supply resources but none which are dispatched to serve the Load. The term Load does not depict whether it is located internal or external to the Transmission system footprint. No change made. Requirement R1, Part 1.1.5 – Both firm and non-firm transfers of power should be modeled to the extent they are "known commitments" in the Planning Horizon. The short duration transactions described would likely not be known and therefore should not be included in a planning model. No change made. Requirement R2, Part 2.1.4 – the commenter has missed the key phrase "… by a sufficient amount to stress the System …". So, by definition of the requirement the sensitivity analysis is not intended to lower the overall stress of the system being analyzed. Additionally, Requirement R2, Parts 2.1.4 and 2.4.3 are not inconsistent with Requirement R2, Part 2.7.2. With the various requirements, the planners are required to conduct multiple sensitivities. Therefore, Requirement R2, Part 2.7.2 could be used when the results of these multiple sensitivities identify common concerns. No change made. Requirement R2, Part 2.2 - The requirement for an annual current steady-state study in the Long-Term Transmission Planning Horizon is intentional to drive earlier identification of potential transmission performance limitations and earlier development of Corrective Action Plans (CAPs). The study results can be used as qualified studies as they advance to later years, including moving to the Near-Term Transmission Planning Horizon. No change made. Requirement R2, R2.7.1 – The SDT respectfully disagrees that example actions that could be part of a Corrective Action Plan (CAP) should be eliminated. If an entity takes issue with the use of one of the stated items as part of a CAP, they are always free to go above and beyond the requirements of a NERC standard if they believe such action is warranted. No change made. Requirement R3, Part 3.3.1 – The SDT appreciates the concern raised; however, it believes the subsequent tripping of "Transmission elements where relay loadability limits are exceeded" is warranted. The TPL studies may earlier identify and flag relay setting concerns based on required Long-Term Transmission Planning Horizon studies. Within the TPL standard, such a concern would have a CAP that would address the issue which would also meet the expectations of PRC-023. The SDT sees this as a defense in depth approach. No change made. Fault Types – Only single line to ground (SLG) and three-phase (3PH) fault types are covered by the standard. See Table 1, footnote 2 for further information on fault types and standard expectations. No change made. Combined Cycle Plants – If the planner believes it is appropriate to model the tripping of the combined cycle generation as a set then they should do so. Recall, in planning assessments, you are analyzing Contingency events based on electrical Faults and the SDT reminds the commenter that adherence to introductory Table 1 note "c" is required. Additionally, to the extent the combined cycle units deliver their power via a common GSU transformer the loss of the GSU should also address the concern. No change made. System Adjustments – The timing between events which are not common mode events (P3, P6) is not defined by the standard. Engineering judgment should

Organization	Yes/ No	Question 3 Comment
prevail and if the planner believes a susceptibility to an N-2 event of quick duration places their system at risk then the use of automatic controls should be considered. The only qualifier on System adjustments is that Facility Ratings must be adhered to during the adjustment. So, if you are adhering to a 30-minute Emergency Rating, but are exceeding a 24-hour Emergency Rating then the adjustment must be completed within the time limitation of the rating. No change made.		
Northeast Utilities		The following previous comments that were filed by NU were not addressed by the SDT in the current draft. For NU to support the standard these comments should be addressed or reasons should be provided why they have not been addressed. Repeated below are NU's comments that were filed for the previous draft. Requirement R1, Part 1.1.2 NU requests that the six month duration stated by Requirement R1, Part 1.1.2 should be modified to one year duration to eliminate outages that occur within the "operational planning timeframe". Requirement R1, Part 1.1.6The phrase "required for Load" should be deleted as this confuses the issue.Requirement R2, Part 2.2The language of Requirement R2 Part 2.2 seems to suggest that current annual studies are always required for the long-term steady state assessment. This may have been an oversight, for consistency Requirement R2 Part 2.2 should be modified to similarly read as Requirement R2, Part 2.1. Requirement R2, Parts 2.1.4 & 2.4.31) The standard is referring to requirements for sensitivity and other issues without a reference to base assumptions. The standard must describe base assumptions. To define a sensitivity condition, NERC must define base assumptions. 2) Requirement R2, Part 2.1.4 and Part 2.4.3 should clarify what is meant by multiple sensitivity studies and one sensitivity study. Will varying only one measurable quantity several times in multiple simulations constitute multiple sensitivity studies or one sensitivity study? Requirement R3, Part 3.3.1NU feels that the last sentence of Requirement R3, Part 3.3.1 should be removed since this is handled by PRC-023. Line ratings are addressed by PRC-023 which requires coordination with the Reliability Coordinator. NU suggests the removal of the following sentence: "Tripping of Transmission elements where relay loadability limits are exceeded."
Response: Requirement R1, Part 1.1.2 - The SDT disagrees with the view that outages of 6 months or more should only be reviewed in the operations timeframe. Such an outage could be for an upcoming construction project requiring certain Facilities to be removed from service for a long durations of time and those situations should be evaluated with sufficient lead time to determine any vulnerabilities and development of sufficient Corrective Action Plans as required. The		

Organization	Yes/ No	Question 3 Comment
review of known and planned construction items should not be delayed until the operations timeframe. No change made. Requirement R1, Part 1.1.6 - The SDT does not believe the phrase "required for Load" is confusing. Without the statement, in theory, one could have a model with lots of supply resources but none which are dispatched to serve the load. No change made. Requirement R2, Part 2.2 - The requirement for an annual current steady-state study in the Long-term Transmission Planning Horizon is intentional to drive earlier identification of potential Transmission performance limitations and earlier development of Corrective Action Plans (CAP). The study results can be used as qualified studies as they advance to later years, including moving to the Near-Term Transmission Planning Horizon. No change made. Requirement R2, Parts 2.1.4 & 2.4.3 – The "base case" assumption is described in Requirement R1 by the fact that the P0 model "shall represent the projected System conditions" for the study period. That essentially establishes the "base case" condition. The sensitivity analysis in Requirement R2, Part 2.1.4 is intended to address some potential "what if" conditions that the planner should consider as an alternate base P0 condition. The SDT believes Requirement R2, Part 2.1.4 provides sufficient detail and clarity of the intended purpose of a sensitivity study and defers to engineering judgment in how the alternate base (sensitivity) model is established. Varying one variable multiple times would cover multiple sensitivities. For example, one may vary the Load modeled. If the base condition is a 50/50 forecast model, one sensitivity may be an 80/20 forecast, while yet another is a 90/10 forecast model. No change made. Requirement R3, Part 3.3.1 – The SDT appreciates the concern raised; however, it believes the subsequent tripping of "Transmission elements where relay loadability limits are exceeded" is warranted. The TPL studies may earlier identify and flag relay setting concerns based on required Long-Term Transmission Planning Horizon studies. Within the TPL standard, such a concern would have a CAP that would address the issue which would also meet the expectations of PRC-023. The SDT sees this as a defense in depth approach. No change made.		
MISO		Overall, we remain concerned that the revisions to the TPL standard are not on balance an improvement to the original. The document is not well organized topically, making it more difficult to navigate and understand. If the primary improvements sought in requirements for reliability planning were to increase system performance levels (no loss of firm demand) for certain multiple contingency events, and to ensure more stressed system sensitivities are analyzed, this can be accomplished in a much simpler revision. We do not believe that this standard as written improves the clarity of what is required, and therefore provides an opportunity for greater disputes between compliance monitors and applicable entities, and this is not a positive outcome. We also believe that the standard is too prescriptive as to what critical system conditions must be modeled, as these conditions vary considerably from system to system and within large systems. Table 1-Steady State and Stability Performance Planning Events, Category P5, now includes "non-redundant" relay in the Event column. What is meant by non-redundant relay? It is unclear if the SDT's intent is to provide distinction between a back-up relay and a redundant relay. We recommend that the SDT provide a definition for the term "non-redundant".

Organization	Yes/ No	Question 3 Comment
Consumers Energy	Ballot Comment	We agree with comments submitted by MISO
Response: The SDT and others in industry hold a different opinion in regards to the standard. The SDT refers you to the comments provided by Transmission Strategies, LLC which well articulates what it believe is the opinion of many in industry evidenced by the 74% approval during the last ballot. Transmission Strategies, LLC states "The SDT, Observers, and the Industry as a whole have put a tremendous amount of thought and work into the development of this latest draft. While nobody should claim that this latest version is perfect, it is far clearer, more in tune with current industry needs, and much improved compared to the existing approved Standards that it will replace". No change made. Redundant Relay – Redundant means duplicate capability resulting in the same outcome. The redundant relay is not the same as a back-up relaying capability which may result in more Facilities being removed for failure of the primary/redundant relay to operate as designed. The SDT believes this concept is widely understood by most in industry and does not see the need for a NERC Glossary Definition. No change made.		
New York Independent System Operator		Requirement R2.4.1The NYISO, along with many other systems, has not determined a need to model dynamic loads, and therefore has not benchmarked any such models. The NYISO recommends that prior to the implementation of this requirement a modeling standard should exist that is specific to dynamic loads, including as assessment for the need for dynamic load models.
Response: Requirement 2, Part 2.4.1 – One focus of the dynamic Load model requirement in Requirement R2, Part 2.4.1 is "considering the behavior of induction motor load". The areas of concern for induction motor load are the Peak load periods since Fault Induced Delayed Voltage Recovery (FIDVR) is primarily a concern at a high load levels with a high penetration of induction motor loads. The SDT has spelled out this requirement in the Peak Load studies but did not include the explicit requirement, with focus on induction motor load, for the other load periods. Even though the standard doesn't have the explicit requirement for other load levels, Requirement R1 includes the statement "shall represent projected System conditions", so the planner cannot ignore the dynamic behavior of the load for those other load periods. No change made.		
Ameren		With respect to Requirement R8, will posting the assessment to a secure web site meet the intent of the requirement? What are the Planning Assessment results identified in R8, and how are they different from the Planning Assessment? It appears that the language for R8 is inconsistent with the VSL for R8. The revised language for the VSL for R8 has removed the word "results". For Measurements M3 and M4, there is still some question as to what is to be provided as sufficient evidence of a study. It is not clear whether the study results would be sufficient, or whether the entire powerflow,

Organization	Yes/ No	Question 3 Comment
		stability, or short circuit effort needs to be documented in a formal study report. For example, it is not clear whether contingency lists used in performing the study work would need to be retained as part of the documentation. The items listed as 4.1.1 through 4.1.3 are not requirements but are performance criteria and should be included in the Table 1 only, consistent with the other performance criteria. Overall, we believe that this standard does not improve the clarity of what is required, and would give additional occasions for disputes between compliance monitors and various registered entities. The standard as written is too prescriptive with regard to critical system conditions which are to be modeled. Such conditions would vary considerably for different systems across the continent.

Response: Requirement R8 – Posting results to a secure website with adequate communication that the results are available for review would suffice for Requirement R8. The "Planning Assessment" and "Planning Assessment results" are one and the same. No change made.

Measures M3 and M4 – The evidence could be a combination of summary documented results, the power flow case itself, the Contingency lists, output files showing evidence of the Contingency analysis being performed, etc. No change made.

The SDT believes the items in Requirement R4, Parts 4.1.1 through 4.1.3 are properly located. The standard is the sum of the parts – requirements and the Table and the location of the highlighted items is not critical to the desired outcome. No change made.

Clarity of the standard - The SDT and others in industry hold a different opinion in regard to the standard. The SDT refers you to the comments provided by Transmission Strategies, LLC which well articulates what it believes is the opinion of many in industry evidenced by the 74% approval during the last ballot. Transmission Strategies, LLC states "The SDT, Observers, and the Industry as a whole have put a tremendous amount of thought and work into the development of this latest draft. While nobody should claim that this latest version is perfect, it is far clearer, more in tune with current industry needs, and much improved compared to the existing approved Standards that it will replace". No change made.

A. Introduction

1. **Title:** **Data From the Regional Reliability Organization Needed to Assess Reliability**

2. **Number:** TPL-006-0.1

3. **Purpose:** To ensure that each Regional Reliability Organization complies with planning criteria, for assessing the overall reliability (Adequacy and Security) of the interconnected Bulk Electric Systems, both existing and as planned.

4. **Applicability:**

   4.1. Regional Reliability Organization

5. **Effective Date:** April 1, 2005

B. Requirements

R1. Each Regional Reliability Organization shall provide, as requested (seasonally, annually, or as otherwise specified) by NERC, system data, including past, existing, and future facility and Bulk Electric System data, reports, and system performance information, necessary to assess reliability and compliance with the NERC Reliability Standards and the respective Regional planning criteria.

The facility and Bulk Electric System data, reports, and system performance information shall include, but not be limited to, one or more of the following types of information as outlined below:

R1.1. Electric Demand and Net Energy for Load (actual and projected demands and Net Energy for Load, forecast methodologies, forecast assumptions and uncertainties, and treatment of Demand-Side Management.)

R1.2. Resource Adequacy and supporting information (Regional assessment reports, existing and planned resource data, resource availability and characteristics, and fuel types and requirements.)

R1.3. Demand-Side resources and their characteristics (program ratings, effects on annual system loads and load shapes, contractual arrangements, and program durations.)

R1.4. Supply-side resources and their characteristics (existing and planned generator units, Ratings, performance characteristics, fuel types and availability, and real and reactive capabilities.)

R1.5. Transmission system and supporting information (thermal, voltage, and Stability Limits, contingency analyses, system restoration, system modeling and data requirements, and protection systems.)

R1.6. System operations and supporting information (extreme weather impacts, Interchange Transactions, and Congestion impacts on the reliability of the interconnected Bulk Electric Systems.)

R1.7. Environmental and regulatory issues and impacts (air and water quality issues, and impacts of existing, new, and proposed regulations and legislation.)

Measures

M1. The Regional Reliability Organization shall provide evidence to its Compliance Monitor that it provided Regional system data, reports, and system performance information per Reliability Standard TPL-006-0_R1.

C. Compliance

1. Compliance Monitoring Process

1.1. Compliance Monitoring Responsibility

Compliance Monitor: NERC.

1.2. Compliance Monitoring Period and Reset Timeframe

Annually.

1.3. Data Retention

None specified.

1.4. Additional Compliance Information

None.

2. Levels of Non-Compliance

2.1. Level 1: Requested Regional system data, reports, or system performance information were incomplete.

2.2. Level 2: Not applicable.

2.3. Level 3: Not applicable.

2.4. Level 4: Requested Regional system data, reports, or system performance information were not provided.

D. Regional Differences

1. None identified.

Version History

Version	Date	Action	Change Tracking
0	April 1, 2005	Effective Date	New
0.1	April 15, 2009	Corrected formatting for M1.	Errata

A. Introduction

1. **Title:** **Regional and Interregional Self-Assessment Reliability Reports**

2. **Number:** TPL-005-0

3. **Purpose:** To ensure that each Regional Reliability Organization complies with planning criteria, for assessing the overall reliability (Adequacy and Security) of the interconnected Bulk Electric Systems, both existing and as planned.

4. **Applicability:**

   4.1. Regional Reliability Organization

5. **Effective Date:** April 1, 2005

B. Requirements

R1. Each Regional Reliability Organization shall annually conduct reliability assessments of its respective existing and planned Regional Bulk Electric System (generation and transmission facilities) for:

R1.1. Current year:

R1.1.1. Winter.

R1.1.2. Summer.

R1.1.3. Other system conditions as deemed appropriate by the Regional Reliability Organization.

R1.2. Near-term planning horizons (years one through five). Detailed assessments shall be conducted.

R1.3. Longer-term planning horizons (years six through ten). Assessment shall focus on the analysis of trends in resources and transmission Adequacy, other industry trends and developments, and reliability concerns.

R1.4. Inter-Regional reliability assessments to demonstrate that the performance of these systems is in compliance with NERC Reliability Standards TPL-001-0, TPL-002-0, TPL-003-0, TPL-004-0 and respective Regional transmission and generation criteria. These assessments shall also identify key reliability issues and the risks and uncertainties affecting Adequacy and Security.

R2. The Regional Reliability Organization shall provide its Regional and Inter-Regional seasonal, near-term, and longer-term reliability assessments to NERC on an annual basis.

R3. The Regional Reliability Organization shall perform special reliability assessments as requested by NERC or the NERC Board of Trustees under their specific directions and criteria. Such assessments may include, but are not limited to:

R3.1. Security assessments.

R3.2. Operational assessments.

R3.3. Evaluations of emergency response preparedness.

R3.4. Adequacy of fuel supply and hydro conditions.

R3.5. Reliability impacts of new or proposed environmental rules and regulations.

R3.6. Reliability impacts of new or proposed legislation that affects, has affected, or has the potential to affect the Adequacy of the interconnected Bulk Electric Systems in North America.

C. Measures

M1. The Regional Reliability Organization shall provide evidence to its Compliance Monitor that annual Regional and Inter-Regional assessments of reliability for seasonal, near-term, and longer-term planning horizons, and special assessments, were developed and provided as requested by other Regional Reliability Organizations or NERC.

D. Compliance

1. Compliance Monitoring Process

1.1. Compliance Monitoring Responsibility

Compliance Monitor: NERC.

1.2. Compliance Monitoring Period and Reset Timeframe

Annually.

1.3. Data Retention

None specified.

1.4. Additional Compliance Information

None.

2. Levels of Non-Compliance

2.1. Level 1: Regional, Inter-Regional, and/or special reliability assessments were provided as requested, but were incomplete.

2.2. Level 2: Not applicable.

2.3. Level 3: Not applicable.

2.4. Level 4: Regional, Inter-Regional, and/or special reliability assessments were not provided.

E. Regional Differences

1. None identified.

Version History

Version	Date	Action	Change Tracking
0	April 1, 2005	Effective Date	New

A. Introduction

1. Title: System Performance Following Extreme Events Resulting in the Loss of Two or More Bulk Electric System Elements (Category D)

2. Number: TPL-004-1

3. Purpose: System simulations and associated assessments are needed periodically to ensure that reliable systems are developed that meet specified performance requirements, with sufficient lead time and continue to be modified or upgraded as necessary to meet present and future System needs.

4. Applicability:

4.1. Planning Authority

4.2. Transmission Planner

5. Effective Date: The application of revised Footnote 'b' in Table 1 will take effect on the first day of the first calendar quarter, 60 months after applicable regulatory approval. In those jurisdictions where no regulatory approval is required, the effective date will be the first day of the first calendar quarter, 60 months after Board of Trustees adoption. All other requirements remain in effect per previous approvals. The existing Footnote 'b' remains in effect until the revised Footnote 'b' becomes effective

B. Requirements

R1. The Planning Authority and Transmission Planner shall each demonstrate through a valid assessment that its portion of the interconnected transmission system is evaluated for the risks and consequences of a number of each of the extreme contingencies that are listed under Category D of Table I. To be valid, the Planning Authority's and Transmission Planner's assessment shall:

R1.1. Be made annually.

R1.2. Be conducted for near-term (years one through five).

R1.3. Be supported by a current or past study and/or system simulation testing that addresses each of the following categories, showing system performance following Category D contingencies of Table I. The specific elements selected (from within each of the following categories) for inclusion in these studies and simulations shall be acceptable to the associated Regional Reliability Organization(s).

R1.3.1. Be performed and evaluated only for those Category D contingencies that would produce the more severe system results or impacts. The rationale for the contingencies selected for evaluation shall be available as supporting information. An explanation of why the remaining simulations would produce less severe system results shall be available as supporting information.

R1.3.2. Cover critical system conditions and study years as deemed appropriate by the responsible entity.

R1.3.3. Be conducted annually unless changes to system conditions do not warrant such analyses.

R1.3.4. Have all projected firm transfers modeled.

R1.3.5. Include existing and planned facilities.

R1.3.6. Include Reactive Power resources to ensure that adequate reactive resources are available to meet system performance.

R1.3.7. Include the effects of existing and planned protection systems, including any backup or redundant systems.

R1.3.8. Include the effects of existing and planned control devices.

R1.3.9. Include the planned (including maintenance) outage of any bulk electric equipment (including protection systems or their components) at those demand levels for which planned (including maintenance) outages are performed.

R1.4. Consider all contingencies applicable to Category D.

R2. The Planning Authority and Transmission Planner shall each document the results of its reliability assessments and shall annually provide the results to its entities' respective NERC Regional Reliability Organization(s), as required by the Regional Reliability Organization.

C. Measures

M1. The Planning Authority and Transmission Planner shall have a valid assessment for its system responses as specified in Reliability Standard TPL-004-1_R1.

M2. The Planning Authority and Transmission Planner shall provide evidence to its Compliance Monitor that it reported documentation of results of its reliability assessments per Reliability Standard TPL-004-1_R1.

D. Compliance

1. Compliance Monitoring Process

1.1. Compliance Monitoring Responsibility

Compliance Monitor: Regional Reliability Organization.

Each Compliance Monitor shall report compliance and violations to NERC via the NERC Compliance Reporting Process.

1.2. Compliance Monitoring Period and Reset Timeframe

Annually.

1.3. Data Retention

None specified.

1.4. Additional Compliance Information

None.

2. Levels of Non-Compliance

2.1. Level 1: A valid assessment, as defined above, for the near-term planning horizon is not available.

2.2. Level 2: Not applicable.

2.3. Level 3: Not applicable.

2.4. Level 4: Not applicable.

B. Regional Differences

1. None identified.

Version History

Version	Date	Action	Change Tracking
0	April 1, 2005	Effective Date	New
1	Approved by the Board of Trustees February 17, 2011	Revised footnote ‘b’ pursuant to FERC Order RM06-16-009.	Revised (Project 2010-11)

Table I. Transmission System Standards – Normal and Emergency Conditions

Category	Contingencies	System Limits or Impacts		
	Initiating Event(s) and Contingency Element(s)	System Stable and both Thermal and Voltage Limits within Applicable Rating [a]	Loss of Demand or Curtailed Firm Transfers	Cascading Outages
A No Contingencies	All Facilities in Service	Yes	No	No
B Event resulting in the loss of a single element.	Single Line Ground (SLG) or 3-Phase (3Ø) Fault, with Normal Clearing: 1. Generator 2. Transmission Circuit 3. Transformer Loss of an Element without a Fault.	Yes Yes Yes Yes	No [b] No [b] No [b] No [b]	No No No No
	Single Pole Block, Normal Clearing [e]: 4. Single Pole (dc) Line	Yes	No [b]	No
C Event(s) resulting in the loss of two or more (multiple) elements.	SLG Fault, with Normal Clearing [e]: 1. Bus Section 2. Breaker (failure or internal Fault)	Yes Yes	Planned/ Controlled [c] Planned/ Controlled [c]	No No
	SLG or 3Ø Fault, with Normal Clearing [e], Manual System Adjustments, followed by another SLG or 3Ø Fault, with Normal Clearing [e]: 3. Category B (B1, B2, B3, or B4) contingency, manual system adjustments, followed by another Category B (B1, B2, B3, or B4) contingency	Yes	Planned/ Controlled [c]	No
	Bipolar Block, with Normal Clearing [e]: 4. Bipolar (dc) Line Fault (non 3Ø), with Normal Clearing [e]: 5. Any two circuits of a multiple circuit towerline [f]	Yes Yes	Planned/ Controlled [c] Planned/ Controlled [c]	No No
	SLG Fault, with Delayed Clearing [e] (stuck breaker or protection system failure): 6. Generator 7. Transformer 8. Transmission Circuit 9. Bus Section	Yes Yes Yes Yes	Planned/ Controlled [c] Planned/ Controlled [c] Planned/ Controlled [c] Planned/ Controlled [c]	No No No No

D [d] Extreme event resulting in two or more (multiple) elements removed or Cascading out of service	3Ø Fault, with Delayed Clearing[e] (stuck breaker or protection system failure): 1. Generator 2. Transmission Circuit 3. Transformer 4. Bus Section 3Ø Fault, with Normal Clearing[e]: 5. Breaker (failure or internal Fault) 6. Loss of towerline with three or more circuits 7. All transmission lines on a common right-of way 8. Loss of a substation (one voltage level plus transformers) 9. Loss of a switching station (one voltage level plus transformers) 10. Loss of all generating units at a station 11. Loss of a large Load or major Load center 12. Failure of a fully redundant Special Protection System (or remedial action scheme) to operate when required 13. Operation, partial operation, or misoperation of a fully redundant Special Protection System (or Remedial Action Scheme) in response to an event or abnormal system condition for which it was not intended to operate 14. Impact of severe power swings or oscillations from Disturbances in another Regional Reliability Organization.	Evaluate for risks and consequences. ▪ May involve substantial loss of customer Demand and generation in a widespread area or areas. ▪ Portions or all of the interconnected systems may or may not achieve a new, stable operating point. ▪ Evaluation of these events may require joint studies with neighboring systems.

a) Applicable rating refers to the applicable Normal and Emergency facility thermal Rating or System Voltage Limit as determined and consistently applied by the system or facility owner. Applicable Ratings may include Emergency Ratings applicable for short durations as required to permit operating steps necessary to maintain system control. All Ratings must be established consistent with applicable NERC Reliability Standards addressing Facility Ratings.

b) An objective of the planning process should be to minimize the likelihood and magnitude of interruption of firm transfers or Firm Demand following Contingency events. Curtailment of firm transfers is allowed when achieved through the appropriate re-dispatch of resources obligated to re-dispatch, where it can be demonstrated that Facilities, internal and external to the Transmission Planner's planning region, remain within applicable Facility Ratings and the re-dispatch does not result in the shedding of any Firm Demand. It is recognized that Firm Demand will be interrupted if it is: (1) directly served by the Elements removed from service as a result of the Contingency, or (2) Interruptible Demand or Demand-Side Management Load. Furthermore, in limited circumstances Firm Demand may need to be interrupted to address BES performance requirements. When interruption of Firm Demand is utilized within the planning process to address BES performance requirements, such interruption is limited to circumstances where the use of Demand interruption are documented, including alternatives evaluated; and where the Demand interruption is subject to review in an open and transparent stakeholder process that includes addressing stakeholder comments.

c) Depending on system design and expected system impacts, the controlled interruption of electric supply to customers (load shedding), the planned removal from service of certain generators, and/or the curtailment of contracted Firm (non-recallable reserved) electric power Transfers may be necessary to maintain the overall reliability of the interconnected transmission systems.

d) A number of extreme contingencies that are listed under Category D and judged to be critical by the transmission planning entity(ies) will be selected for evaluation. It is not expected that all possible facility outages under each listed contingency of Category D will be evaluated.

e) Normal clearing is when the protection system operates as designed and the Fault is cleared in the time normally expected with proper functioning of the installed protection systems. Delayed clearing of a Fault is due to failure of any protection system component such as a relay, circuit breaker, or current transformer, and not because of an intentional design delay.

f) System assessments may exclude these events where multiple circuit towers are used over short distances (e.g., station entrance, river crossings) in accordance with Regional exemption criteria.

A. Introduction

1. Title: **System Performance Following Loss of Two or More Bulk Electric System Elements (Category C)**

2. Number: TPL-003-1a

3. Purpose: System simulations and associated assessments are needed periodically to ensure that reliable systems are developed that meet specified performance requirements, with sufficient lead time and continue to be modified or upgraded as necessary to meet present and future System needs.

4. Applicability:

4.1. Planning Authority

4.2. Transmission Planner

5. Effective Date: The application of revised Footnote 'b' in Table 1 will take effect on the first day of the first calendar quarter, 60 months after applicable regulatory approval. In those jurisdictions where no regulatory approval is required, the effective date will be the first day of the first calendar quarter, 60 months after Board of Trustees adoption. All other requirements remain in effect per previous approvals. The existing Footnote 'b' remains in effect until the revised Footnote 'b' becomes effective.

B. Requirements

R1. The Planning Authority and Transmission Planner shall each demonstrate through a valid assessment that its portion of the interconnected transmission systems is planned such that the network can be operated to supply projected customer demands and projected Firm (non-recallable reserved) Transmission Services, at all demand Levels over the range of forecast system demands, under the contingency conditions as defined in Category C of Table I (attached). The controlled interruption of customer Demand, the planned removal of generators, or the Curtailment of firm (non-recallable reserved) power transfers may be necessary to meet this standard. To be valid, the Planning Authority and Transmission Planner assessments shall:

R1.1. Be made annually.

R1.2. Be conducted for near-term (years one through five) and longer-term (years six through ten) planning horizons.

R1.3. Be supported by a current or past study and/or system simulation testing that addresses each of the following categories, showing system performance following Category C of Table 1 (multiple contingencies). The specific elements selected (from each of the following categories) for inclusion in these studies and simulations shall be acceptable to the associated Regional Reliability Organization(s).

R1.3.1. Be performed and evaluated only for those Category C contingencies that would produce the more severe system results or impacts. The rationale for the contingencies selected for evaluation shall be available as supporting information. An explanation of why the remaining simulations would produce less severe system results shall be available as supporting information.

R1.3.2. Cover critical system conditions and study years as deemed appropriate by the responsible entity.

R1.3.3. Be conducted annually unless changes to system conditions do not warrant such analyses.

R1.3.4. Be conducted beyond the five-year horizon only as needed to address identified marginal conditions that may have longer lead-time solutions.

R1.3.5. Have all projected firm transfers modeled.

R1.3.6. Be performed and evaluated for selected demand levels over the range of forecast system demands.

R1.3.7. Demonstrate that System performance meets Table 1 for Category C contingencies.

R1.3.8. Include existing and planned facilities.

R1.3.9. Include Reactive Power resources to ensure that adequate reactive resources are available to meet System performance.

R1.3.10. Include the effects of existing and planned protection systems, including any backup or redundant systems.

R1.3.11. Include the effects of existing and planned control devices.

R1.3.12. Include the planned (including maintenance) outage of any bulk electric equipment (including protection systems or their components) at those Demand levels for which planned (including maintenance) outages are performed.

R1.4. Address any planned upgrades needed to meet the performance requirements of Category C.

R1.5. Consider all contingencies applicable to Category C.

R2. When system simulations indicate an inability of the systems to respond as prescribed in Reliability Standard TPL-003-1_R1, the Planning Authority and Transmission Planner shall each:

R2.1. Provide a written summary of its plans to achieve the required system performance as described above throughout the planning horizon:

R2.1.1. Including a schedule for implementation.

R2.1.2. Including a discussion of expected required in-service dates of facilities.

R2.1.3. Consider lead times necessary to implement plans.

R2.2. Review, in subsequent annual assessments, (where sufficient lead time exists), the continuing need for identified system facilities. Detailed implementation plans are not needed.

R3. The Planning Authority and Transmission Planner shall each document the results of these Reliability Assessments and corrective plans and shall annually provide these to its respective NERC Regional Reliability Organization(s), as required by the Regional Reliability Organization.

C. Measures

M1. The Planning Authority and Transmission Planner shall have a valid assessment and corrective plans as specified in Reliability Standard TPL-003-1_R1 and TPL-003-1_R2.

M2. The Planning Authority and Transmission Planner shall have evidence it reported documentation of results of its reliability assessments and corrective plans per Reliability Standard TPL-003-1_R3.

D. Compliance

1. Compliance Monitoring Process

1.1. Compliance Monitoring Responsibility

Compliance Monitor: Regional Reliability Organizations.

1.2. Compliance Monitoring Period and Reset Timeframe

Annually.

1.3. Data Retention

None specified.

1.4. Additional Compliance Information

None.

2. Levels of Non-Compliance

2.1. Level 1: Not applicable.

2.2. Level 2: A valid assessment and corrective plan for the longer-term planning horizon is not available.

2.3. Level 3: Not applicable.

2.4. Level 4: A valid assessment and corrective plan for the near-term planning horizon is not available.

E. Regional Differences

1. None identified.

Version History

Version	Date	Action	Change Tracking
0	April 1, 2005	Effective Date	New
0	April 1, 2005	Add parenthesis to item “e” on page 8.	Errata
0a	October 23, 2008	Added Appendix 1 – Interpretation of TPL-002-0 Requirements R1.3.2 and R1.3.12 and TPL-003-0 Requirements R1.3.2 and R1.3.12 for Ameren and MISO	Revised
1a	Approved by the Board of Trustees February 17, 2011	Revised footnote ‘b’ pursuant to FERC Order RM06-16-009.	Revised (Project 2010-11)

Table I. Transmission System Standards – Normal and Emergency Conditions

Category	Contingencies	System Limits or Impacts		
	Initiating Event(s) and Contingency Element(s)	System Stable and both Thermal and Voltage Limits within Applicable Rating [a]	Loss of Demand or Curtailed Firm Transfers	Cascading [c] Outages
A No Contingencies	All Facilities in Service	Yes	No	No
B Event resulting in the loss of a single element.	Single Line Ground (SLG) or 3-Phase (3Ø) Fault, with Normal Clearing: 1. Generator 2. Transmission Circuit 3. Transformer Loss of an Element without a Fault.	Yes Yes Yes Yes	No [b] No [b] No [b] No [b]	No No No No
	Single Pole Block, Normal Clearing[e]: 4. Single Pole (dc) Line	Yes	No[b]	No
C Event(s) resulting in the loss of two or more (multiple) elements.	SLG Fault, with Normal Clearing[e]: 1. Bus Section 2. Breaker (failure or internal Fault)	Yes Yes	Planned/ Controlled[c] Planned/ Controlled[c]	No No
	SLG or 3Ø Fault, with Normal Clearing[e], Manual System Adjustments, followed by another SLG or 3Ø Fault, with Normal Clearing[e]: 3. Category B (B1, B2, B3, or B4) contingency, manual system adjustments, followed by another Category B (B1, B2, B3, or B4) contingency	Yes	Planned/ Controlled[c]	No
	Bipolar Block, with Normal Clearing[e]: 4. Bipolar (dc) Line Fault (non 3Ø), with Normal Clearing[e]: 5. Any two circuits of a multiple circuit towerline[f]	Yes Yes	Planned/ Controlled[c] Planned/ Controlled[c]	No No
	SLG Fault, with Delayed Clearing[e] (stuck breaker or protection system failure): 6. Generator 7. Transformer 8. Transmission Circuit 9. Bus Section	Yes Yes Yes Yes	Planned/ Controlled[c] Planned/ Controlled[c] Planned/ Controlled[c] Planned/ Controlled[c]	No No No No

D [d] Extreme event resulting in two or more (multiple) elements removed or Cascading out of service	3Ø Fault, with Delayed Clearing [e] (stuck breaker or protection system failure): 1. Generator 2. Transmission Circuit 3. Transformer 4. Bus Section 3Ø Fault, with Normal Clearing[e]: 5. Breaker (failure or internal Fault) 6. Loss of towerline with three or more circuits 7. All transmission lines on a common right-of way 8. Loss of a substation (one voltage level plus transformers) 9. Loss of a switching station (one voltage level plus transformers) 10. Loss of all generating units at a station 11. Loss of a large Load or major Load center 12. Failure of a fully redundant Special Protection System (or remedial action scheme) to operate when required 13. Operation, partial operation, or misoperation of a fully redundant Special Protection System (or Remedial Action Scheme) in response to an event or abnormal system condition for which it was not intended to operate 14. Impact of severe power swings or oscillations from Disturbances in another Regional Reliability Organization.	Evaluate for risks and consequences. ▪ May involve substantial loss of customer Demand and generation in a widespread area or areas. ▪ Portions or all of the interconnected systems may or may not achieve a new, stable operating point. ▪ Evaluation of these events may require joint studies with neighboring systems.

a) Applicable rating refers to the applicable Normal and Emergency facility thermal Rating or system voltage limit as determined and consistently applied by the system or facility owner. Applicable Ratings may include Emergency Ratings applicable for short durations as required to permit operating steps necessary to maintain system control. All Ratings must be established consistent with applicable NERC Reliability Standards addressing Facility Ratings.

b) An objective of the planning process should be to minimize the likelihood and magnitude of interruption of firm transfers or Firm Demand following Contingency events. Curtailment of firm transfers is allowed when achieved through the appropriate re-dispatch of resources obligated to re-dispatch, where it can be demonstrated that Facilities, internal and external to the Transmission Planner's planning region, remain within applicable Facility Ratings and the re-dispatch does not result in the shedding of any Firm Demand. It is recognized that Firm Demand will be interrupted if it is: (1) directly served by the Elements removed from service as a result of the Contingency, or (2) Interruptible Demand or Demand-Side Management Load. Furthermore, in limited circumstances Firm Demand may need to be interrupted to address BES performance requirements. When interruption of Firm Demand is utilized within the planning process to address BES performance requirements, such interruption is limited to circumstances where the use of Demand interruption are documented, including alternatives evaluated; and where the Demand interruption is subject to review in an open and transparent stakeholder process that includes addressing stakeholder comments.

c) Depending on system design and expected system impacts, the controlled interruption of electric supply to customers (load shedding), the planned removal from service of certain generators, and/or the curtailment of contracted Firm (non-recallable reserved) electric power transfers may be necessary to maintain the overall reliability of the interconnected transmission systems.

d) A number of extreme contingencies that are listed under Category D and judged to be critical by the transmission planning entity(ies) will be selected for evaluation. It is not expected that all possible facility outages under each listed contingency of Category D will be evaluated.

e) Normal clearing is when the protection system operates as designed and the Fault is cleared in the time normally expected with proper functioning of the installed protection systems. Delayed clearing of a Fault is due to failure of any protection system component such as a relay, circuit breaker, or current transformer, and not because of an intentional design delay.

f) System assessments may exclude these events where multiple circuit towers are used over short distances (e.g., station entrance, river crossings) in accordance with Regional exemption criteria.

Appendix 1

Interpretation of TPL-002-0 Requirements R1.3.2 and R1.3.12 and TPL-003-0 Requirements R1.3.2 and R1.3.12 for Ameren and MISO

NERC received two requests for interpretation of identical requirements (Requirements R1.3.2 and R1.3.12) in TPL-002-0 and TPL-003-0 from the Midwest ISO and Ameren. These requirements state:

TPL-002-0:

[To be valid, the Planning Authority and Transmission Planner assessments shall:]

R1.3 Be supported by a current or past study and/or system simulation testing that addresses each of the following categories, showing system performance following Category B of Table 1 (single contingencies). The specific elements selected (from each of the following categories) for inclusion in these studies and simulations shall be acceptable to the associated Regional Reliability Organization(s).

R1.3.2 Cover critical system conditions and study years as deemed appropriate by the responsible entity.

R1.3.12 Include the planned (including maintenance) outage of any bulk electric equipment (including protection systems or their components) at those demand levels for which planned (including maintenance) outages are performed.

TPL-003-0:

[To be valid, the Planning Authority and Transmission Planner assessments shall:]

R1.3 Be supported by a current or past study and/or system simulation testing that addresses each of the following categories, showing system performance following Category C of Table 1 (multiple contingencies). The specific elements selected (from each of the following categories) for inclusion in these studies and simulations shall be acceptable to the associated Regional Reliability Organization(s).

R1.3.2 Cover critical system conditions and study years as deemed appropriate by the responsible entity.

R1.3.12 Include the planned (including maintenance) outage of any bulk electric equipment (including protection systems or their components) at those demand levels for which planned (including maintenance) outages are performed.

Requirement R1.3.2

Request for Interpretation of TPL-002-0 and TPL-003-0 Requirement R1.3.2 Received from Ameren on July 25, 2007:

Ameren specifically requests clarification on the phrase, 'critical system conditions' in R1.3.2. Ameren asks if compliance with R1.3.2 requires multiple contingent generating unit Outages as part of possible generation dispatch scenarios describing critical system conditions for which the system shall be planned and modeled in accordance with the contingency definitions included in Table 1.

Request for Interpretation of TPL-002-0 and TPL-003-0 Requirement R1.3.2 Received from MISO on August 9, 2007:

MISO asks if the TPL standards require that any specific dispatch be applied, other than one that is representative of supply of firm demand and transmission service commitments, in the modeling of system contingencies specified in Table 1 in the TPL standards.

MISO then asks if a variety of possible dispatch patterns should be included in planning analyses including a probabilistically based dispatch that is representative of generation deficiency scenarios, would it be an appropriate application of the TPL standard to apply the transmission contingency conditions in Category B of Table 1 to these possible dispatch pattern.

The following interpretation of TPL-002-0 and TPL-003-0 Requirement R1.3.2 was developed by the NERC Planning Committee on March 13, 2008:

The selection of a credible generation dispatch for the modeling of critical system conditions is within the discretion of the Planning Authority. The Planning Authority was renamed "Planning Coordinator" (PC) in the Functional Model dated February 13, 2007. (TPL -002 and -003 use the former "Planning Authority" name, and the Functional Model terminology was a change in name only and did not affect responsibilities.)

- Under the Functional Model, the Planning Coordinator "Provides and informs Resource Planners, Transmission Planners, and adjacent Planning Coordinators of the methodologies and tools for the simulation of the transmission system" while the Transmission Planner "Receives from the Planning Coordinator methodologies and tools for the analysis and development of transmission expansion plans." A PC's selection of "critical system conditions" and its associated generation dispatch falls within the purview of "methodology."

Furthermore, consistent with this interpretation, a Planning Coordinator would formulate critical system conditions that may involve a range of critical generator unit outages as part of the possible generator dispatch scenarios.

Both TPL-002-0 and TPL-003-0 have a similar measure M1:

> **M1.** The Planning Authority and Transmission Planner shall have a valid assessment and corrective plans as specified in Reliability Standard TPL-002-0_R1 [or TPL-003-0_R1] and TPL-002-0_R2 [or TPL-003-0_R2]."

The Regional Reliability Organization (RRO) is named as the Compliance Monitor in both standards. Pursuant to Federal Energy Regulatory Commission (FERC) Order 693, FERC eliminated the RRO as the appropriate Compliance Monitor for standards and replaced it with the Regional Entity (RE). See paragraph 157 of Order 693. Although the referenced TPL standards still include the reference to the RRO, to be consistent with Order 693, the RRO is replaced by the RE as the Compliance Monitor for this interpretation. As the Compliance Monitor, the RE determines what a "valid assessment" means when evaluating studies based upon specific sub-requirements in R1.3 selected by the Planning Coordinator and the Transmission Planner. If a PC has Transmission Planners in more than one region, the REs must coordinate among themselves on compliance matters.

Requirement R1.3.12

Request for Interpretation of TPL-002-0 and TPL-003-0 Requirement R1.3.12 Received from Ameren on July 25, 2007:

Ameren also asks how the inclusion of planned outages should be interpreted with respect to the contingency definitions specified in Table 1 for Categories B and C. Specifically, Ameren asks if R1.3.12 requires that the system be planned to be operated during those conditions associated with planned outages consistent with the performance requirements described in Table 1 plus any unidentified outage.

Request for Interpretation of TPL-002-0 and TPL-003-0 Requirement R1.3.12 Received from MISO on August 9, 2007:

MISO asks if the term "planned outages" means only already known/scheduled planned outages that may continue into the planning horizon, or does it include potential planned outages not yet scheduled that may occur at those demand levels for which planned (including maintenance) outages are performed?

If the requirement does include not yet scheduled but potential planned outages that could occur in the planning horizon, is the following a proper interpretation of this provision?

The system is adequately planned and in accordance with the standard if, in order for a system operator to potentially schedule such a planned outage on the future planned system, planning studies show that a system adjustment (load shed, re-dispatch of generating units in the interconnection, or system reconfiguration) would be required concurrent with taking such a planned outage in order to prepare for a Category B contingency (single element forced out of service)? In other words, should the system in effect be planned to be operated as for a Category C3 n-2 event, even though the first event is a planned base condition?

If the requirement is intended to mean only known and scheduled planned outages that will occur or may continue into the planning horizon, is this interpretation consistent with the original interpretation by NERC of the standard as provided by NERC in response to industry questions in the Phase I development of this standard1?

The following interpretation of TPL-002-0 and TPL-003-0 Requirement R1.3.12 was developed by the NERC Planning Committee on March 13, 2008:

This provision was not previously interpreted by NERC since its approval by FERC and other regulatory authorities. TPL-002-0 and TPL-003-0 explicitly provide that the inclusion of planned (including maintenance) outages of any bulk electric equipment at demand levels for which the planned outages are required. For studies that include planned outages, compliance with the contingency assessment for TPL-002-0 and TPL-003-0 as outlined in Table 1 would include any necessary system adjustments which might be required to accommodate planned outages since a planned outage is not a "contingency" as defined in the *NERC Glossary of Terms Used in Standards*.

A. Introduction

1. Title: **System Performance Following Loss of a Single Bulk Electric System Element (Category B)**

2. Number: TPL-002-1b

3. Purpose: System simulations and associated assessments are needed periodically to ensure that reliable systems are developed that meet specified performance requirements with sufficient lead time, and continue to be modified or upgraded as necessary to meet present and future system needs.

4. Applicability:

4.1. Planning Authority

4.2. Transmission Planner

5. Effective Date: The application of revised Footnote 'b' in Table 1 will take effect on the first day of the first calendar quarter, 60 months after applicable regulatory approval. In those jurisdictions where no regulatory approval is required, the effective date will be the first day of the first calendar quarter, 60 months after Board of Trustees adoption. All other requirements remain in effect per previous approvals. The existing Footnote 'b' remains in effect until the revised Footnote 'b' becomes effective.

B. Requirements

R1. The Planning Authority and Transmission Planner shall each demonstrate through a valid assessment that its portion of the interconnected transmission system is planned such that the Network can be operated to supply projected customer demands and projected Firm (non-recallable reserved) Transmission Services, at all demand levels over the range of forecast system demands, under the contingency conditions as defined in Category B of Table I. To be valid, the Planning Authority and Transmission Planner assessments shall:

R1.1. Be made annually.

R1.2. Be conducted for near-term (years one through five) and longer-term (years six through ten) planning horizons.

R1.3. Be supported by a current or past study and/or system simulation testing that addresses each of the following categories, showing system performance following Category B of Table 1 (single contingencies). The specific elements selected (from each of the following categories) for inclusion in these studies and simulations shall be acceptable to the associated Regional Reliability Organization(s).

R1.3.1. Be performed and evaluated only for those Category B contingencies that would produce the more severe System results or impacts. The rationale for the contingencies selected for evaluation shall be available as supporting information. An explanation of why the remaining simulations would produce less severe system results shall be available as supporting information.

R1.3.2. Cover critical system conditions and study years as deemed appropriate by the responsible entity.

R1.3.3. Be conducted annually unless changes to system conditions do not warrant such analyses.

R1.3.4. Be conducted beyond the five-year horizon only as needed to address identified marginal conditions that may have longer lead-time solutions.

R1.3.5. Have all projected firm transfers modeled.

R1.3.6. Be performed and evaluated for selected demand levels over the range of forecast system Demands.

R1.3.7. Demonstrate that system performance meets Category B contingencies.

R1.3.8. Include existing and planned facilities.

R1.3.9. Include Reactive Power resources to ensure that adequate reactive resources are available to meet system performance.

R1.3.10. Include the effects of existing and planned protection systems, including any backup or redundant systems.

R1.3.11. Include the effects of existing and planned control devices.

R1.3.12. Include the planned (including maintenance) outage of any bulk electric equipment (including protection systems or their components) at those demand levels for which planned (including maintenance) outages are performed.

R1.4. Address any planned upgrades needed to meet the performance requirements of Category B of Table I.

R1.5. Consider all contingencies applicable to Category B.

R2. When System simulations indicate an inability of the systems to respond as prescribed in Reliability Standard TPL-002-1_R1, the Planning Authority and Transmission Planner shall each:

R2.1. Provide a written summary of its plans to achieve the required system performance as described above throughout the planning horizon:

R2.1.1. Including a schedule for implementation.

R2.1.2. Including a discussion of expected required in-service dates of facilities.

R2.1.3. Consider lead times necessary to implement plans.

R2.2. Review, in subsequent annual assessments, (where sufficient lead time exists), the continuing need for identified system facilities. Detailed implementation plans are not needed.

R3. The Planning Authority and Transmission Planner shall each document the results of its Reliability Assessments and corrective plans and shall annually provide the results to its respective Regional Reliability Organization(s), as required by the Regional Reliability Organization.

C. Measures

M1. The Planning Authority and Transmission Planner shall have a valid assessment and corrective plans as specified in Reliability Standard TPL-002-1_R1 and TPL-002-1_R2.

M2. The Planning Authority and Transmission Planner shall have evidence it reported documentation of results of its reliability assessments and corrective plans per Reliability Standard TPL-002-1_R3.

D. Compliance

1. Compliance Monitoring Process

1.1. Compliance Monitoring Responsibility

Compliance Monitor: Regional Reliability Organizations.
Each Compliance Monitor shall report compliance and violations to NERC via the NERC Compliance Reporting Process.

1.2. Compliance Monitoring Period and Reset Timeframe

Annually.

1.3. Data Retention

None specified.

1.4. Additional Compliance Information

None.

2. Levels of Non-Compliance

2.1. Level 1: Not applicable.

2.2. Level 2: A valid assessment and corrective plan for the longer-term planning horizon is not available.

2.3. Level 3: Not applicable.

2.4. Level 4: A valid assessment and corrective plan for the near-term planning horizon is not available.

E. Regional Differences

1. None identified.

Version History

Version	Date	Action	Change Tracking
0	April 1, 2005	Effective Date	New
0a	October 23, 2008	Added Appendix 1 – Interpretation of TPL-002-0 Requirements R1.3.2 and R1.3.12 and TPL-003-0 Requirements R1.3.2 and R1.3.12 for Ameren and MISO	Revised
0b	November 5, 2009	Added Appendix 2 – Interpretation of R1.3.10 approved by BOT on November 5, 2009	Addition
1b	Approved by the Board of Trustees February 17, 2011	Revised footnote ‘b’ pursuant to FERC Order RM06-16-009	Revised (Project 2010-11)

Table I. Transmission System Standards — Normal and Emergency Conditions

Category	Contingencies	System Limits or Impacts		
	Initiating Event(s) and Contingency Element(s)	System Stable and both Thermal and Voltage Limits within Applicable Rating [a]	Loss of Demand or Curtailed Firm Transfers	Cascading Outages
A No Contingencies	All Facilities in Service	Yes	No	No
B Event resulting in the loss of a single element.	Single Line Ground (SLG) or 3-Phase (3Ø) Fault, with Normal Clearing: 1. Generator 2. Transmission Circuit 3. Transformer Loss of an Element without a Fault.	Yes Yes Yes Yes	No [b] No [b] No [b] No [b]	No No No No
	Single Pole Block, Normal Clearing [e]: 4. Single Pole (dc) Line	Yes	No [b]	No
C Event(s) resulting in the loss of two or more (multiple) elements.	SLG Fault, with Normal Clearing [e]: 1. Bus Section 2. Breaker (failure or internal Fault)	Yes Yes	Planned/ Controlled [c] Planned/ Controlled [c]	No No
	SLG or 3Ø Fault, with Normal Clearing [e], Manual System Adjustments, followed by another SLG or 3Ø Fault, with Normal Clearing [e]: 3. Category B (B1, B2, B3, or B4) contingency, manual system adjustments, followed by another Category B (B1, B2, B3, or B4) contingency	Yes	Planned/ Controlled [c]	No
	Bipolar Block, with Normal Clearing [e]: 4. Bipolar (dc) Line Fault (non 3Ø), with Normal Clearing [e]: 5. Any two circuits of a multiple circuit towerline [f]	Yes Yes	Planned/ Controlled [c] Planned/ Controlled [c]	No No
	SLG Fault, with Delayed Clearing [e] (stuck breaker or protection system failure): 6. Generator 7. Transformer 8. Transmission Circuit 9. Bus Section	Yes Yes Yes Yes	Planned/ Controlled [c] Planned/ Controlled [c] Planned/ Controlled [c] Planned/ Controlled [c]	No No No No

D [d] Extreme event resulting in two or more (multiple) elements removed or Cascading out of service	3Ø Fault, with Delayed Clearing[e] (stuck breaker or protection system failure): 1. Generator 2. Transmission Circuit 3. Transformer 4. Bus Section 3Ø Fault, with Normal Clearing[e]: 5. Breaker (failure or internal Fault) 6. Loss of towerline with three or more circuits 7. All transmission lines on a common right-of way 8. Loss of a substation (one voltage level plus transformers) 9. Loss of a switching station (one voltage level plus transformers) 10. Loss of all generating units at a station 11. Loss of a large Load or major Load center 12. Failure of a fully redundant Special Protection System (or remedial action scheme) to operate when required 13. Operation, partial operation, or misoperation of a fully redundant Special Protection System (or Remedial Action Scheme) in response to an event or abnormal system condition for which it was not intended to operate 14. Impact of severe power swings or oscillations from Disturbances in another Regional Reliability Organization.	Evaluate for risks and consequences. ▪ May involve substantial loss of customer Demand and generation in a widespread area or areas. ▪ Portions or all of the interconnected systems may or may not achieve a new, stable operating point. ▪ Evaluation of these events may require joint studies with neighboring systems.

a) Applicable rating refers to the applicable Normal and Emergency facility thermal Rating or system voltage limit as determined and consistently applied by the system or facility owner. Applicable Ratings may include Emergency Ratings applicable for short durations as required to permit operating steps necessary to maintain system control. All Ratings must be established consistent with applicable NERC Reliability Standards addressing Facility Ratings.

b) An objective of the planning process should be to minimize the likelihood and magnitude of interruption of firm transfers or Firm Demand following Contingency events. Curtailment of firm transfers is allowed when achieved through the appropriate re-dispatch of resources obligated to re-dispatch, where it can be demonstrated that Facilities, internal and external to the Transmission Planner's planning region, remain within applicable Facility Ratings and the re-dispatch does not result in the shedding of any Firm Demand. It is recognized that Firm Demand will be interrupted if it is: (1) directly served by the Elements removed from service as a result of the Contingency, or (2) Interruptible Demand or Demand-Side Management Load. Furthermore, in limited circumstances Firm Demand may need to be interrupted to address BES performance requirements. When interruption of Firm Demand is utilized within the planning process to address BES performance requirements, such interruption is limited to circumstances where the use of Demand interruption are documented, including alternatives evaluated; and where the Demand interruption is subject to review in an open and transparent stakeholder process that includes addressing stakeholder comments.

c) Depending on system design and expected system impacts, the controlled interruption of electric supply to customers (load shedding), the planned removal from service of certain generators, and/or the curtailment of contracted Firm (non-recallable reserved) electric power Transfers may be necessary to maintain the overall reliability of the interconnected transmission systems.

d) A number of extreme contingencies that are listed under Category D and judged to be critical by the transmission planning entity(ies) will be selected for evaluation. It is not expected that all possible facility outages under each listed contingency of Category D will be evaluated.

e) Normal clearing is when the protection system operates as designed and the Fault is cleared in the time normally expected with proper functioning of the installed protection systems. Delayed clearing of a Fault is due to failure of any protection system component such as a relay, circuit breaker, or current transformer, and not because of an intentional design delay.

f) System assessments may exclude these events where multiple circuit towers are used over short distances (e.g., station entrance, river crossings) in accordance with Regional exemption criteria.

Appendix 1

Interpretation of TPL-002-0 Requirements R1.3.2 and R1.3.12 and TPL-003-0 Requirements R1.3.2 and R1.3.12 for Ameren and MISO

NERC received two requests for interpretation of identical requirements (Requirements R1.3.2 and R1.3.12) in TPL-002-0 and TPL-003-0 from the Midwest ISO and Ameren. These requirements state:

TPL-002-0:

[To be valid, the Planning Authority and Transmission Planner assessments shall:]

R1.3 Be supported by a current or past study and/or system simulation testing that addresses each of the following categories, showing system performance following Category B of Table 1 (single contingencies). The specific elements selected (from each of the following categories) for inclusion in these studies and simulations shall be acceptable to the associated Regional Reliability Organization(s).

R1.3.2 Cover critical system conditions and study years as deemed appropriate by the responsible entity.

R1.3.12 Include the planned (including maintenance) outage of any bulk electric equipment (including protection systems or their components) at those demand levels for which planned (including maintenance) outages are performed.

TPL-003-0:

[To be valid, the Planning Authority and Transmission Planner assessments shall:]

R1.3 Be supported by a current or past study and/or system simulation testing that addresses each of the following categories, showing system performance following Category C of Table 1 (multiple contingencies). The specific elements selected (from each of the following categories) for inclusion in these studies and simulations shall be acceptable to the associated Regional Reliability Organization(s).

R1.3.2 Cover critical system conditions and study years as deemed appropriate by the responsible entity.

R1.3.12 Include the planned (including maintenance) outage of any bulk electric equipment (including protection systems or their components) at those demand levels for which planned (including maintenance) outages are performed.

Requirement R1.3.2

Request for Interpretation of TPL-002-0 and TPL-003-0 Requirement R1.3.2 Received from Ameren on July 25, 2007:

Ameren specifically requests clarification on the phrase, 'critical system conditions' in R1.3.2. Ameren asks if compliance with R1.3.2 requires multiple contingent generating unit Outages as part of possible generation dispatch scenarios describing critical system conditions for which the system shall be planned and modeled in accordance with the contingency definitions included in Table 1.

Request for Interpretation of TPL-002-0 and TPL-003-0 Requirement R1.3.2 Received from MISO on August 9, 2007:

MISO asks if the TPL standards require that any specific dispatch be applied, other than one that is representative of supply of firm demand and transmission service commitments, in the modeling of system contingencies specified in Table 1 in the TPL standards.

MISO then asks if a variety of possible dispatch patterns should be included in planning analyses including a probabilistically based dispatch that is representative of generation deficiency scenarios, would it be an appropriate application of the TPL standard to apply the transmission contingency conditions in Category B of Table 1 to these possible dispatch pattern.

The following interpretation of TPL-002-0 and TPL-003-0 Requirement R1.3.2 was developed by the NERC Planning Committee on March 13, 2008:

The selection of a credible generation dispatch for the modeling of critical system conditions is within the discretion of the Planning Authority. The Planning Authority was renamed "Planning Coordinator" (PC) in the Functional Model dated February 13, 2007. (TPL -002 and -003 use the former "Planning Authority" name, and the Functional Model terminology was a change in name only and did not affect responsibilities.)

– Under the Functional Model, the Planning Coordinator "Provides and informs Resource Planners, Transmission Planners, and adjacent Planning Coordinators of the methodologies and tools for the simulation of the transmission system" while the Transmission Planner "Receives from the Planning Coordinator methodologies and tools for the analysis and development of transmission expansion plans." A PC's selection of "critical system conditions" and its associated generation dispatch falls within the purview of "methodology."

Furthermore, consistent with this interpretation, a Planning Coordinator would formulate critical system conditions that may involve a range of critical generator unit outages as part of the possible generator dispatch scenarios.

Both TPL-002-0 and TPL-003-0 have a similar measure M1:

> **M1.** The Planning Authority and Transmission Planner shall have a valid assessment and corrective plans as specified in Reliability Standard TPL-002-0_R1 [or TPL-003-0_R1] and TPL-002-0_R2 [or TPL-003-0_R2]."

The Regional Reliability Organization (RRO) is named as the Compliance Monitor in both standards. Pursuant to Federal Energy Regulatory Commission (FERC) Order 693, FERC eliminated the RRO as the appropriate Compliance Monitor for standards and replaced it with the Regional Entity (RE). See paragraph 157 of Order 693. Although the referenced TPL standards still include the reference to the RRO, to be consistent with Order 693, the RRO is replaced by the RE as the Compliance Monitor for this interpretation. As the Compliance Monitor, the RE determines what a "valid assessment" means when evaluating studies based upon specific sub-requirements in R1.3 selected by the Planning Coordinator and the Transmission Planner. If a PC has Transmission Planners in more than one region, the REs must coordinate among themselves on compliance matters.

Requirement R1.3.12

Request for Interpretation of TPL-002-0 and TPL-003-0 Requirement R1.3.12 Received from Ameren on July 25, 2007:

Ameren also asks how the inclusion of planned outages should be interpreted with respect to the contingency definitions specified in Table 1 for Categories B and C. Specifically, Ameren asks if R1.3.12 requires that the system be planned to be operated during those conditions associated with planned outages consistent with the performance requirements described in Table 1 plus any unidentified outage.

Request for Interpretation of TPL-002-0 and TPL-003-0 Requirement R1.3.12 Received from MISO on August 9, 2007:

MISO asks if the term "planned outages" means only already known/scheduled planned outages that may continue into the planning horizon, or does it include potential planned outages not yet scheduled that may occur at those demand levels for which planned (including maintenance) outages are performed?

If the requirement does include not yet scheduled but potential planned outages that could occur in the planning horizon, is the following a proper interpretation of this provision?

The system is adequately planned and in accordance with the standard if, in order for a system operator to potentially schedule such a planned outage on the future planned system, planning studies show that a system adjustment (load shed, re-dispatch of generating units in the interconnection, or system reconfiguration) would be required concurrent with taking such a planned outage in order to prepare for a Category B contingency (single element forced out of service)? In other words, should the system in effect be planned to be operated as for a Category C3 n-2 event, even though the first event is a planned base condition?

If the requirement is intended to mean only known and scheduled planned outages that will occur or may continue into the planning horizon, is this interpretation consistent with the original interpretation by NERC of the standard as provided by NERC in response to industry questions in the Phase I development of this standard1?

The following interpretation of TPL-002-0 and TPL-003-0 Requirement R1.3.12 was developed by the NERC Planning Committee on March 13, 2008:

This provision was not previously interpreted by NERC since its approval by FERC and other regulatory authorities. TPL-002-0 and TPL-003-0 explicitly provide that the inclusion of planned (including maintenance) outages of any bulk electric equipment at demand levels for which the planned outages are required. For studies that include planned outages, compliance with the contingency assessment for TPL-002-0 and TPL-003-0 as outlined in Table 1 would include any necessary system adjustments which might be required to accommodate planned outages since a planned outage is not a "contingency" as defined in the *NERC Glossary of Terms Used in Standards.*

Appendix 2

Requirement Number and Text of Requirement
R1.3. Be supported by a current or past study and/or system simulation testing that addresses each of the following categories, showing system performance following **Category B of Table 1** (single contingencies). The specific elements selected (from each of the following categories) for inclusion in these studies and simulations shall be acceptable to the associated Regional Reliability Organization(s). **R1.3.10.** Include the effects of existing and planned protection systems, including any backup or redundant systems.
Background Information for Interpretation
Requirement R1.3 and sub-requirement R1.3.10 of standard TPL-002-0a contain three key obligations: 1. That the assessment is supported by "study and/or system simulation testing that addresses each the following categories, showing system performance following Category B of Table 1 (single contingencies)." 2. "…these studies and simulations shall be acceptable to the associated Regional Reliability Organization(s)." 3. "Include the effects of existing and planned protection systems, including any backup or redundant systems." *Category B of Table 1 (single Contingencies) specifies:* Single Line Ground (SLG) or 3-Phase (3Ø) Fault, with Normal Clearing: 1. Generator 2. Transmission Circuit 3. Transformer Loss of an Element without a Fault. Single Pole Block, Normal Clearing[e]: 4. Single Pole (dc) Line *Note e specifies*: e) Normal Clearing is when the protection system operates as designed and the Fault is cleared in the time normally expected with proper functioning of the installed protection systems. Delayed clearing of a Fault is due to failure of any protection system component such as a relay, circuit breaker, or current transformer, and not because of an intentional design delay. The NERC Glossary of Terms defines Normal Clearing as "A protection system operates as designed and the fault is cleared in the time normally expected with proper functioning of the installed protection systems."
Conclusion
TPL-002-0a requires that System studies or simulations be made to assess the impact of single Contingency operation with Normal Clearing. TPL-002-0a R1.3.10 does require that all elements expected to be removed from service through normal operations of the Protection Systems be removed in simulations. This standard does not require an assessment of the Transmission System performance due to a Protection System failure or Protection System misoperation. Protection System failure or Protection System misoperation is addressed in TPL-003-0 — System Performance following Loss of Two or More Bulk

Electric System Elements (Category C) and TPL-004-0 — System Performance Following Extreme Events Resulting in the Loss of Two or More Bulk Electric System Elements (Category D).

TPL-002-0a R1.3.10 does not require simulating anything other than Normal Clearing when assessing the impact of a Single Line Ground (SLG) or 3-Phase (3Ø) Fault on the performance of the Transmission System.

In regards to PacifiCorp's comments on the material impact associated with this interpretation, the interpretation team has the following comment:

Requirement R2.1 requires "a written summary of plans to achieve the required system performance," including a schedule for implementation and an expected in-service date that considers lead times necessary to implement the plan. Failure to provide such summary may lead to noncompliance that could result in penalties and sanctions.

A. Introduction

1. **Title:** System Performance Under Normal (No Contingency) Conditions (Category A)

2. **Number:** TPL-001-1

3. **Purpose:** System simulations and associated assessments are needed periodically to ensure that reliable systems are developed that meet specified performance requirements with sufficient lead time, and continue to be modified or upgraded as necessary to meet present and future system needs.

4. **Applicability:**

4.1. Planning Authority

4.2. Transmission Planner

5. **Effective Date:** The application of revised Footnote 'b' in Table 1 will take effect on the first day of the first calendar quarter, 60 months after applicable regulatory approval. In those jurisdictions where no regulatory approval is required, the effective date will be the first day of the first calendar quarter, 60 months after Board of Trustees adoption. All other requirements remain in effect per previous approvals. The existing Footnote 'b' remains in effect until the revised Footnote 'b' becomes effective.

B. Requirements

R1. The Planning Authority and Transmission Planner shall each demonstrate through a valid assessment that its portion of the interconnected transmission system is planned such that, with all transmission facilities in service and with normal (pre-contingency) operating procedures in effect, the Network can be operated to supply projected customer demands and projected Firm (non- recallable reserved) Transmission Services at all Demand levels over the range of forecast system demands, under the conditions defined in Category A of Table I. To be considered valid, the Planning Authority and Transmission Planner assessments shall:

R1.1. Be made annually.

R1.2. Be conducted for near-term (years one through five) and longer-term (years six through ten) planning horizons.

R1.3. Be supported by a current or past study and/or system simulation testing that addresses each of the following categories, showing system performance following Category A of Table 1 (no contingencies). The specific elements selected (from each of the following categories) shall be acceptable to the associated Regional Reliability Organization(s).

R1.3.1. Cover critical system conditions and study years as deemed appropriate by the entity performing the study.

R1.3.2. Be conducted annually unless changes to system conditions do not warrant such analyses.

R1.3.3. Be conducted beyond the five-year horizon only as needed to address identified marginal conditions that may have longer lead-time solutions.

R1.3.4. Have established normal (pre-contingency) operating procedures in place.

R1.3.5. Have all projected firm transfers modeled.

R1.3.6. Be performed for selected demand levels over the range of forecast system demands.

R1.3.7. Demonstrate that system performance meets Table 1 for Category A (no contingencies).

R1.3.8. Include existing and planned facilities.

R1.3.9. Include Reactive Power resources to ensure that adequate reactive resources are available to meet system performance.

R1.4. Address any planned upgrades needed to meet the performance requirements of Category A.

R2. When system simulations indicate an inability of the systems to respond as prescribed in Reliability Standard TPL-001-1_R1, the Planning Authority and Transmission Planner shall each:

R2.1. Provide a written summary of its plans to achieve the required system performance as described above throughout the planning horizon.

R2.1.1. Including a schedule for implementation.

R2.1.2. Including a discussion of expected required in-service dates of facilities.

R2.1.3. Consider lead times necessary to implement plans.

R2.2. Review, in subsequent annual assessments, (where sufficient lead time exists), the continuing need for identified system facilities. Detailed implementation plans are not needed.

R3. The Planning Authority and Transmission Planner shall each document the results of these reliability assessments and corrective plans and shall annually provide these to its respective NERC Regional Reliability Organization(s), as required by the Regional Reliability Organization.

C. Measures

M1. The Planning Authority and Transmission Planner shall have a valid assessment and corrective plans as specified in Reliability Standard TPL-001-1_R1 and TPL-001-1_R2.

M2. The Planning Authority and Transmission Planner shall have evidence it reported documentation of results of its Reliability Assessments and corrective plans per Reliability Standard TPL-001-1_R3.

D. Compliance

1. Compliance Monitoring Process

1.1. Compliance Monitoring Responsibility
Compliance Monitor: Regional Reliability Organization.
Each Compliance Monitor shall report compliance and violations to NERC via the NERC Compliance Reporting Process.

1.2. Compliance Monitoring Period and Reset Time Frame
Annually

1.3. Data Retention
None specified.

1.4. Additional Compliance Information

2. Levels of Non-Compliance

2.1. Level 1: Not applicable.

2.2. Level 2: A valid assessment and corrective plan for the longer-term planning horizon is not available.

2.3. Level 3: Not applicable.

2.4. Level 4: A valid assessment and corrective plan for the near-term planning horizon is not available.

E. Regional Differences

1. None identified.

Version History

Version	Date	Action	Change Tracking
0	April 1, 2005	Effective Date	New
0	February 8, 2005	BOT Approval	Revised
0	June 3, 2005	Fixed reference in M1 to read TPL-001-0 R2.1 and TPL-001-0 R2.2	Errata
0	July 24, 2007	Corrected reference in M1. to read TPL-001-0 R1 and TPL-001-0 R2.	Errata
0.1	October 29, 2008	BOT adopted errata changes; updated version number to “0.1”	Errata
0.1	May 13, 2009	FERC Approved – Updated Effective Date and Footer	Revised
1	Approved by Board of Trustees February 17, 2011	Revised footnote ‘b’ pursuant to FERC Order RM06-16-009	Revised (Project 2010-11)

Table I. Transmission System Standards – Normal and Emergency Conditions

Category	Contingencies	System Limits or Impacts		
	Initiating Event(s) and Contingency Element(s)	System Stable and both Thermal and Voltage Limits within Applicable Rating [a]	Loss of Demand or Curtailed Firm Transfers	Cascading Outages
A No Contingencies	All Facilities in Service	Yes	No	No
B Event resulting in the loss of a single element.	Single Line Ground (SLG) or 3-Phase (3Ø) Fault, with Normal Clearing: 1. Generator 2. Transmission Circuit 3. Transformer Loss of an Element without a Fault	Yes Yes Yes Yes	No [b] No [b] No [b] No [b]	No No No No
	Single Pole Block, Normal Clearing[e]: 4. Single Pole (dc) Line	Yes	No[b]	No
C Event(s) resulting in the loss of two or more (multiple) elements.	SLG Fault, with Normal Clearing[e]: 1. Bus Section 2. Breaker (failure or internal Fault)	Yes Yes	Planned/ Controlled[c] Planned/ Controlled[c]	No No
	SLG or 3Ø Fault, with Normal Clearing[e], Manual System Adjustments, followed by another SLG or 3Ø Fault, with Normal Clearing[e]: 3. Category B (B1, B2, B3, or B4) contingency, manual system adjustments, followed by another Category B (B1, B2, B3, or B4) contingency	Yes	Planned/ Controlled[c]	No
	Bipolar Block, with Normal Clearing[e]: 4. Bipolar (dc) Line Fault (non 3Ø), with Normal Clearing[e]: 5. Any two circuits of a multiple circuit towerline[f]	Yes Yes	Planned/ Controlled[c] Planned/ Controlled[c]	No No
	SLG Fault, with Delayed Clearing[e] (stuck breaker or protection system failure): 6. Generator 7. Transformer 8. Transmission Circuit 9. Bus Section	Yes Yes Yes Yes	Planned/ Controlled[c] Planned/ Controlled[c] Planned/ Controlled[c] Planned/ Controlled[c]	No No No No

D [d] Extreme event resulting in two or more (multiple) elements removed or Cascading out of service.	3Ø Fault, with Delayed Clearing [e] (stuck breaker or protection system failure): 1. Generator 2. Transmission Circuit 3. Transformer 4. Bus Section 3Ø Fault, with Normal Clearing[e]: 5. Breaker (failure or internal Fault) 6. Loss of towerline with three or more circuits 7. All transmission lines on a common right-of way 8. Loss of a substation (one voltage level plus transformers) 9. Loss of a switching station (one voltage level plus transformers) 10. Loss of all generating units at a station 11. Loss of a large Load or major Load center 12. Failure of a fully redundant Special Protection System (or remedial action scheme) to operate when required 13. Operation, partial operation, or misoperation of a fully redundant Special Protection System (or Remedial Action Scheme) in response to an event or abnormal system condition for which it was not intended to operate 14. Impact of severe power swings or oscillations from Disturbances in another Regional Reliability Organization.	Evaluate for risks and consequences. ▪ May involve substantial loss of customer Demand and generation in a widespread area or areas. ▪ Portions or all of the interconnected systems may or may not achieve a new, stable operating point. ▪ Evaluation of these events may require joint studies with neighboring systems.

a) Applicable rating refers to the applicable Normal and Emergency facility thermal Rating or system voltage limit as determined and consistently applied by the system or facility owner. Applicable Ratings may include Emergency Ratings applicable for short durations as required to permit operating steps necessary to maintain system control. All Ratings must be established consistent with applicable NERC Reliability Standards addressing Facility Ratings.

b) An objective of the planning process should be to minimize the likelihood and magnitude of interruption of firm transfers or Firm Demand following Contingency events. Curtailment of firm transfers is allowed when achieved through the appropriate re-dispatch of resources obligated to re-dispatch, where it can be demonstrated that Facilities, internal and external to the Transmission Planner's planning region, remain within applicable Facility Ratings and the re-dispatch does not result in the shedding of any Firm Demand. It is recognized that Firm Demand will be interrupted if it is: (1) directly served by the Elements removed from service as a result of the Contingency, or (2) Interruptible Demand or Demand-Side Management Load. Furthermore, in limited circumstances Firm Demand may need to be interrupted to address BES performance requirements. When interruption of Firm Demand is utilized within the planning process to address BES performance requirements, such interruption is limited to circumstances where the use of Demand interruption are documented, including alternatives evaluated; and where the Demand interruption is subject to review in an open and transparent stakeholder process that includes addressing stakeholder comments.

c) Depending on system design and expected system impacts, the controlled interruption of electric supply to customers (load shedding), the planned removal from service of certain generators, and/or the curtailment of contracted Firm (non-recallable reserved) electric power Transfers may be necessary to maintain the overall reliability of the interconnected transmission systems.

d) A number of extreme contingencies that are listed under Category D and judged to be critical by the transmission planning entity(ies) will be selected for evaluation. It is not expected that all possible facility outages under each listed contingency of Category D will be evaluated.

e) Normal clearing is when the protection system operates as designed and the Fault is cleared in the time normally expected with proper functioning of the installed protection systems. Delayed clearing of a Fault is due to failure of any protection system component such as a relay, circuit breaker, or current transformer, and not because of an intentional design delay.

f) System assessments may exclude these events where multiple circuit towers are used over short distances (e.g., station entrance, river crossings) in accordance with Regional exemption criteria.

VRFs and VSLs for TPL-001-2 – Transmission System Planning Performance Requirements					
R#	VRF	Lower VSL	Moderate VSL	High VSL	Severe VSL
R1	Medium	The responsible entity's System model failed to represent one of the Requirement R1, Parts 1.1.1 through 1.1.6.	The responsible entity's System model failed to represent two of the Requirement R1, Parts 1.1.1 through 1.1.6.	The responsible entity's System model failed to represent three of the Requirement R1, Parts 1.1.1 through 1.1.6.	The responsible entity's System model failed to represent four or more of the Requirement R1, Parts 1.1.1 through 1.1.6. OR The responsible entity's System model did not represent projected System conditions as described in Requirement R1. OR The responsible entity's System model did not use data consistent with that provided in accordance with the MOD-010 and MOD-012 standards and other sources, including items represented in the Corrective Action Plan.
R2	High	The responsible entity failed to comply with Requirement R2, Part 2.6.	The responsible entity failed to comply with Requirement R2, Part 2.3 or Part 2.8.	The responsible entity failed to comply with one of the following Parts of Requirement R2: Part 2.1, Part 2.2, Part 2.4, Part 2.5, or Part 2.7.	The responsible entity failed to comply with two or more of the following Parts of Requirement R2: Part 2.1, Part 2.2, Part 2.4, or Part 2.7. OR, The responsible entity does not have a completed annual Planning Assessment.
R3	Medium	The responsible entity did not identify planning events as described in Requirement R3, Part 3.4 or extreme events as	The responsible entity did not perform studies as specified in Requirement R3, Part 3.1 to determine that the BES meets the	The responsible entity did not perform studies as specified in Requirement R3, Part 3.1 to determine that the BES meets the	The responsible entity did not perform studies as specified in Requirement R3, Part 3.1 to determine that the BES meets the

VRFs and VSLs for TPL-001-2 – Transmission System Planning Performance Requirements					
R#	VRF	Lower VSL	Moderate VSL	High VSL	Severe VSL
		described in Requirement R3, Part 3.5.	performance requirements for one of the categories (P2 through P7) in Table 1. OR The responsible entity did not perform studies as specified in Requirement R3, Part 3.2 to assess the impact of extreme events.	performance requirements for two of the categories (P2 through P7) in Table 1. OR The responsible entity did not perform Contingency analysis as described in Requirement R3, Part 3.3.	performance requirements for three or more of the categories (P2 through P7) in Table 1. OR The responsible entity did not perform studies to determine that the BES meets the performance requirements for the P0 or P1 categories in Table 1. OR The responsible entity did not base its studies on computer simulation models using data provided in Requirement R1.
R4	Medium	The responsible entity did not identify planning events as described in Requirement R4, Part 4.4 or extreme events as described in Requirement R4, Part 4.5.	The responsible entity did not perform studies as specified in Requirement R4, Part 4.1 to determine that the BES meets the performance requirements for one of the categories (P1 through P7) in Table 1. OR The responsible entity did not perform studies as specified in Requirement R4, Part 4.2 to assess the impact of extreme events.	The responsible entity did not perform studies as specified in Requirement R4, Part 4.1 to determine that the BES meets the performance requirements for two of the categories (P1 through P7) in Table 1. OR The responsible entity did not perform Contingency analysis as described in Requirement R4, Part 4.3.	The responsible entity did not perform studies as specified in Requirement R4, Part 4.1 to determine that the BES meets the performance requirements for three or more of the categories (P1 through P7) in Table 1. OR The responsible entity did not base its studies on computer simulation models using data provided in Requirement R1.
R5	Medium	N/A	N/A	N/A	The responsible entity does not have criteria for acceptable System steady state voltage limits, post-Contingency voltage

VRFs and VSLs for TPL-001-2 – Transmission System Planning Performance Requirements					
R#	VRF	Lower VSL	Moderate VSL	High VSL	Severe VSL
					deviations, or the transient voltage response for its System.
R6	Low	N/A	N/A	N/A	The responsible entity failed to define and document the criteria or methodology for System instability used within its analysis as described in Requirement R6.
R7	Low	N/A	N/A	N/A	The Planning Coordinator, in conjunction with each of its Transmission Planners, failed to determine and identify individual or joint responsibilities for performing required studies.
R8	Medium	The responsible entity distributed its Planning Assessment results to adjacent Planning Coordinators and adjacent Transmission Planners but it was more than 90 days but less than or equal to 120 days following its completion. OR, The responsible entity distributed its Planning Assessment results to functional entities having a reliability related need who requested the Planning Assessment in writing but it was more than 30 days but less than or equal to 40 days following the request.	The responsible entity distributed its Planning Assessment results to adjacent Planning Coordinators and adjacent Transmission Planners but it was more than 120 days but less than or equal to 130 days following its completion. OR, The responsible entity distributed its Planning Assessment results to functional entities having a reliability related need who requested the Planning Assessment in writing but it was more than 40 days but less than or equal to 50 days following the request.	The responsible entity distributed its Planning Assessment results to adjacent Planning Coordinators and adjacent Transmission Planners but it was more than 130 days but less than or equal to 140 days following its completion. OR, The responsible entity distributed its Planning Assessment results to functional entities having a reliability related need who requested the Planning Assessment in writing but it was more than 50 days but less than or equal to 60 days following the request.	The responsible entity distributed its Planning Assessment results to adjacent Planning Coordinators and adjacent Transmission Planners but it was more than 140 days following its completion. OR The responsible entity did not distribute its Planning Assessment results to adjacent Planning Coordinators and adjacent Transmission Planners. OR The responsible entity distributed

VRFs and VSLs for TPL-001-2 – Transmission System Planning Performance Requirements					
R#	VRF	Lower VSL	Moderate VSL	High VSL	Severe VSL
					its Planning Assessment results to functional entities having a reliability related need who requested the Planning Assessment in writing but it was more than 60 days following the request. OR The responsible entity did not distribute its Planning Assessment results to functional entities having a reliability related need who requested the Planning Assessment in writing.

Project 2006-02 Assess Transmission and Future Needs

New Definitions for Approval:

Bus-tie Breaker: A circuit breaker that is positioned to connect two individual substation bus configurations.

Consequential Load Loss: All Load that is no longer served by the Transmission system as a result of Transmission Facilities being removed from service by a Protection System operation designed to isolate the fault.

Long-Term Transmission Planning Horizon: Transmission planning period that covers years six through ten or beyond when required to accommodate any known longer lead time projects that may take longer than ten years to complete.

Non-Consequential Load Loss: Non-Interruptible Load loss that does not include: (1) Consequential Load Loss, (2) the response of voltage sensitive Load, or (3) Load that is disconnected from the System by end-user equipment.

Planning Assessment: Documented evaluation of future Transmission system performance and Corrective Action Plans to remedy identified deficiencies.

Implementation Plan for TPL-001-2

Prerequisite Approvals

There are no other Reliability Standards or Standard Authorization Requests (SARs), in progress or approved, that must be implemented before this standard can be implemented.

TPL-001-2 — Transmission System Planning Performance Requirements

In revising the TPL standards, the SDT is assuming that planners will receive valid data from the MOD standards link described in TPL-001-2, Requirement R1. Furthermore, there is a tacit assumption that future revisions of the MOD standards will include steps to validate MOD based data.

Revision to Sections of Approved Standards and Definitions

There are multiple new definitions in the proposed standard.

Bus-tie Breaker: A circuit breaker that is positioned to connect two individual substation bus configurations.

Consequential Load Loss: All Load that is no longer served by the Transmission system as a result of Transmission Facilities being removed from service by a Protection System operation designed to isolate the fault.

Long-Term Transmission Planning Horizon: Transmission planning period that covers years six through ten or beyond when required to accommodate any known longer lead time projects that may take longer than ten years to complete.

Non-Consequential Load Loss: Non-Interruptible Load loss that does not include: (1) Consequential Load Loss, (2) the response of voltage sensitive Load, or (3) Load that is disconnected from the System by end-user equipment.

Planning Assessment: Documented evaluation of future Transmission System performance and Corrective Action Plans to remedy identified deficiencies.

Compliance with Standards

Standard	Functions That Must Comply With the Associated Requirements	
TPL-001-2 — Transmission System Planning Performance Requirements	Transmission Planner	Planning Coordinator
	X	X

Effective Dates

The effective date is the date entities are expected to meet the performance identified in this standard.

Note – The changes shown below were done solely to make the effective date language used in the Implementation Plan consistent with that shown in the proposed standard effective date section. No changes were made to the content or context of the dates, durations, or requirements.

Requirements R1 and R7 as well as the definitions shall become effective on the first day of the first calendar quarter, 12 months after applicable regulatory approval. In those jurisdictions where no regulatory approval is required, Requirements R1 and R7 become effective on the first day of the first calendar quarter, 12 months after Board of Trustees adoption.

Except as indicated below, Requirements R2 through R6 and Requirement R8 shall become effective on the first day of the first calendar quarter 24 months after applicable regulatory approval. In those jurisdictions where no regulatory approval is required, all requirements, except as noted below, go into effect on the first day of the first calendar quarter, 24 months after Board of Trustees adoption.

For 84 calendar months beginning the first day of the first calendar quarter following applicable regulatory approval, or in those jurisdictions where no regulatory approval is required on the first day of the first calendar quarter 84 months after Board of Trustees adoption, Corrective Action Plans applying to the following categories of Contingencies and events identified in TPL-001-2, Table 1 are allowed to include Non-Consequential Load Loss and curtailment of Firm Transmission Service (in accordance with Requirement R2, Part 2.7.3.) that would not otherwise be permitted by the requirements of TPL-001-2:

- P1-2 (for controlled interruption of electric supply to local network customers connected to or supplied by the Faulted element)
- P1-3 (for controlled interruption of electric supply to local network customers connected to or supplied by the Faulted element)
- P2-1
- P2-2 (above 300 kV)
- P2-3 (above 300 kV)
- P3-1 through P3-5
- P4-1 through P4-5 (above 300 kV)
- P5 (above 300 kV)

TPL-001-1, TPL-002-1b, TPL-003-1a, and TPL-004-1 are being retired at midnight the day before TPL-001-2 becomes effective as they are replaced in their entirety by TPL-001-2. TPL-005-0 and TPL-006-0.1 are being retired at midnight the day before TPL-001-2 becomes effective because their requirements are adequately covered by the revised TPL-001-2 and NERC's Rules of Procedure, Section 800. However, during this 24-month period, all aspects of the latest enforceable versions of TPL-001 through TPL-006 shall remain in effect for compliance monitoring. This 24 month period is to allow entities to develop, perform and/or validate new and/or modified studies, methodologies, assessments, procedures, etc. necessary to implement and meet the TPL-001-2 requirements. The specified effective dates are expected to allow sufficient time for proper assessment of the available options necessary to create a viable Corrective Action Plan that is compliant with the new Standard.

R1. This Requirement is related to maintaining System models and the data needed to do so. This requirement shall become effective on the first day of the first calendar quarter, 12 months after applicable regulatory approval. In those jurisdictions where no regulatory approval is required, this requirement goes into effect on the first day of the first calendar quarter, 12 months after Board of Trustees adoption.

R7. This Requirement identifies an obligation to determine individual and joint responsibilities for performing studies needed to do the Planning Assessment. This requirement shall become effective on the first day of the first calendar quarter, 12 months after applicable regulatory approval. In those jurisdictions where no regulatory approval is required, this requirement goes into effect on the first day of the first calendar quarter, 12 months after Board of Trustees adoption.

TPL-001-2 'raises the bar' in several areas where performance requirements have been changed in the new Standard versus those in existing TPL-001-1, TPL-002-1b, TPL-003-1a and TPL-004-1 because loss of Non-Consequential Load or interruption of firm transfers is no longer allowed for certain events, whereas the existing Standards were interpreted by many to allow such actions. As shown in Table 1 of TPL-001-2, the performance requirements associated with the following events represent "raising the bar":

- P1-2 (for controlled interruption of electric supply to local network customers connected to or supplied by the Faulted element)
- P1-3 (for controlled interruption of electric supply to local network customers connected to or supplied by the Faulted element)
- P2-1
- P2-2 (above 300 kV)
- P2-3 (above 300 kV)
- P3-1 through P3-5
- P4-1 through P4-5 (above 300 kV)
- P5 (above 300 kV)

This "raising the bar" is beyond the control of the Transmission Planner and Planning Coordinator and may have significant budget, siting, permitting, and construction impacts on many Transmission Owners. To provide stakeholders with sufficient time to implement changes, a timeframe coincident with the end of the Near-Term Transmission Planning Horizon has been provided

Any entity which cannot eliminate the need to trip Non-Consequential Load or curtail Firm Transmission Service for these performance elements by that date shall submit a mitigation plan to its Regional Entity outlining the steps it will take to correct the problem. If the entities follow the established ERO procedure for mitigation, it is the intent of the SDT that no penalties will be assessed.

Implementation Plan for TPL-001-2

Prerequisite Approvals

There are no other Reliability Standards or Standard Authorization Requests (SARs), in progress or approved, that must be implemented before this standard can be implemented.

TPL-001-2 — Transmission System Planning Performance Requirements

In revising the TPL standards, the SDT is assuming that planners will receive valid data from the MOD standards link described in TPL-001-2, Requirement R1. Furthermore, there is a tacit assumption that future revisions of the MOD standards will include steps to validate MOD based data.

Revision to Sections of Approved Standards and Definitions

There are multiple new definitions in the proposed standard.

Bus-tie Breaker: A circuit breaker that is positioned to connect two individual substation bus configurations.

Consequential Load Loss: All Load that is no longer served by the Transmission system as a result of Transmission Facilities being removed from service by a Protection System operation designed to isolate the fault.

Long-Term Transmission Planning Horizon: Transmission planning period that covers years six through ten or beyond when required to accommodate any known longer lead time projects that may take longer than ten years to complete.

Non-Consequential Load Loss: Non-Interruptible Load loss that does not include: (1) Consequential Load Loss, (2) the response of voltage sensitive Load, or (3) Load that is disconnected from the System by end-user equipment.

Planning Assessment: Documented evaluation of future Transmission System performance and Corrective Action Plans to remedy identified deficiencies.

Compliance with Standards

Standard	Functions That Must Comply With the Associated Requirements	
	Transmission Planner	Planning Coordinator
TPL-001-2 — Transmission System Planning Performance Requirements	X	X

Effective Dates

The effective date is the date entities are expected to meet the performance identified in this standard.

Note – The changes shown below were done solely to make the effective date language used in the Implementation Plan consistent with that shown in the proposed standard effective date section. No changes were made to the content or context of the dates, durations, or requirements.

~~Except as indicated below, all Requirements and associated parts shall become effective on the first day of the first calendar quarter, 24 months after applicable regulatory approval. In those jurisdictions where no regulatory approval is required, all requirements go into effect on the first day of the first calendar quarter, 24 months after Board of Trustees adoption.~~
Requirements R1 and R7 as well as the definitions shall become effective on the first day of the first calendar quarter, 12 months after applicable regulatory approval. In those jurisdictions where no regulatory approval is required, Requirements R1 and R7 become effective on the first day of the first calendar quarter, 12 months after Board of Trustees adoption.

Except as indicated below, Requirements R2 through R6 and Requirement R8 shall become effective on the first day of the first calendar quarter~~,~~ 24 months after applicable regulatory approval. In those jurisdictions where no regulatory approval is required, all requirements, except as noted below, go into effect on the first day of the first calendar quarter, 24 months after Board of Trustees adoption.

For 84 calendar months beginning the first day of the first calendar quarter following applicable regulatory approval, or in those jurisdictions where no regulatory approval is required on the first day of the first calendar quarter 84 months after Board of Trustees adoption, Corrective Action Plans applying to the following categories of Contingencies and events identified in TPL-001-2, Table 1 are allowed to include Non-Consequential Load Loss and curtailment of Firm Transmission Service (in accordance with Requirement R2, Part 2.7.3.) that would not otherwise be permitted by the requirements of TPL-001-2:

- P1-2 (for controlled interruption of electric supply to local network customers connected to or supplied by the Faulted element)
- P1-3 (for controlled interruption of electric supply to local network customers connected to or supplied by the Faulted element)
- P2-1
- P2-2 (above 300 kV)
- P2-3 (above 300 kV)
- P3-1 through P3-5
- P4-1 through P4-5 (above 300 kV)
- P5 (above 300 kV)

TPL-001-~~0~~1, TPL-002-~~0a~~1b, TPL-003-~~0a~~1a, and TPL-004-~~0~~ 1 are being retired at midnight the day before TPL-001-2 becomes effective as they are replaced in their entirety by TPL-001-2. TPL-005-0 and TPL-006-0.1 are being retired at midnight the day before TPL-001-2 becomes effective because their requirements are adequately covered by the revised TPL-001-2 and NERC's Rules of Procedure, Section 800. However, during this 24-month period, all aspects of the latest enforceable versions TPL-001-~~0~~ through TPL-006-~~0~~ shall remain in effect for compliance monitoring. This 24 month period is to allow entities to develop, perform and/or validate new and/or modified studies, methodologies, assessments, procedures, etc. necessary to implement and meet the TPL-001-2 requirements. The specified effective dates are expected to allow sufficient time for proper assessment of the available options necessary to create a viable Corrective Action Plan that is compliant with the new Standard.

R1. This Requirement is related to maintaining System models and the data needed to do so. This requirement shall become effective on the first day of the first calendar quarter, 12 months after applicable regulatory approval. In those jurisdictions where no regulatory approval is required,

this requirement goes into effect on the first day of the first calendar quarter, 12 months after Board of Trustees adoption.

R7. This Requirement identifies an obligation to determine individual and joint responsibilities for performing studies needed to do the Planning Assessment. This requirement shall become effective on the first day of the first calendar quarter, 12 months after applicable regulatory approval. In those jurisdictions where no regulatory approval is required, this requirement goes into effect on the first day of the first calendar quarter, 12 months after Board of Trustees adoption.

TPL-001-2 'raises the bar' in several areas where performance requirements have been changed in the new Standard versus those in existing TPL-001-~~0~~1, TPL-002-~~0~~a1b, TPL-003-~~0~~1a and TPL-004-~~0~~1 because loss of Non-Consequential Load or interruption of firm transfers is no longer allowed for certain events, whereas the existing Standards were interpreted by many to allow such actions. As shown in Table 1 of TPL-001-2, the performance requirements associated with the following events represent "raising the bar":

- P1-2 (for controlled interruption of electric supply to local network customers connected to or supplied by the Faulted element)
- P1-3 (for controlled interruption of electric supply to local network customers connected to or supplied by the Faulted element)
- P2-1
- P2-2 (above 300 kV)
- P2-3 (above 300 kV)
- P3-1 through P3-5
- P4-1 through P4-5 (above 300 kV)
- P5 (above 300 kV)

This "raising the bar" is beyond the control of the Transmission Planner and Planning Coordinator and may have significant budget, siting, permitting, and construction impacts on many Transmission Owners. To provide stakeholders with sufficient time to implement changes, a timeframe coincident with the end of the Near-Term Transmission Planning Horizon ~~will be~~has been provided ~~as follows:~~

- ~~For 84 months after the first day of the first calendar quarter following applicable regulatory approval, or in those jurisdictions where no regulatory approval is required on the first day of the first calendar quarter, 84 months after Board of Trustees adoption, Corrective Action Plans applying to performance elements P1-2 and P1-3 (for controlled interruption of electric supply to local network customers connected to or supplied by the Faulted element), P2-1, P2-2 (above 300 kV), P2-3 (above 300 kV), P3-1 through P3-5, P4-1 through P4-5 (above 300 kV), and P5 (above 300 kV) are allowed to include tripping of Non-Consequential Load and curtailment of Firm Transmission Service (in accordance with Requirement R2.7.3) that would not otherwise be permitted by the requirements of TPL-001-2.~~

Any entity which cannot eliminate the need to trip Non-Consequential Load or curtail Firm Transmission Service for these performance elements by that date shall submit a mitigation plan to its Regional Entity outlining the steps it will take to correct the problem. If the entities follow the established ERO procedure for mitigation, it is the intent of the SDT that no penalties will be assessed.

Standard Development Roadmap

This section is maintained by the drafting team during the development of the standard and will be removed when the standard becomes effective.

Development Steps Completed:

1. Version 1 of SAR posted for comment from April 2, 2002 through May 3, 2002.
2. Version 2 of SAR posted for comment from May 5, 2004 through June 5, 2004.
3. Version 3 of SAR posted on November 18, 2005.
4. SAR approved on April 30, 2006.
5. Version 1 of Supplemental SAR posted for comment from February 15, 2007 through March 16, 2007.
6. Version 2 of Supplemental SAR posted on April 9, 2007.
7. Version 1 of revised standard(s) posted for comment on September 17, 2007.
8. Version 2 of the revised standards posted for comment on August 15, 2008.
9. Version 3 of the revised standards posted for comment on May 26, 2009.
10. Version 4 of the revised standards posted for comment on September 16, 2009.
11. Initial ballot completed on March 1, 2010.
12. Version 5 of the revised standard posted for comment on August 3, 2010.
13. Version 6 of the revised standard posted for information on October 19, 2010.
14. Version 7 posted for a parallel comment and initial ballot ending May 31, 2011.

Proposed Action Plan and Description of Current Draft:
The current draft is the eighth iteration of the revision of existing standards TPL-001 through TPL-006 and includes one revised standard, TPL-001-2, replacing TPL-001, TPL-002, TPL-003 and TPL-004. TPL-005 & -006 issues are addressed in this sixth draft and those standards will also be replaced by TPL-001-2.

Future Development Plan:

Anticipated Actions	Anticipated Date
1. Conduct recirculation ballot	3Q11
2. Submit standard(s) to BOT.	3Q11
3. Submit to regulatory authorities for approval.	3Q11

Definitions of Terms Used in Standard

This section includes all newly defined or revised terms used in the proposed standard. Terms already defined in the Reliability Standards Glossary of Terms are not repeated here. New or revised definitions listed below become approved when the proposed standard is approved. When the standard becomes effective, these defined terms will be removed from the individual standard and added to the Glossary.

Bus-tie Breaker: A circuit breaker that is positioned to connect two individual substation bus configurations.

Consequential Load Loss: All Load that is no longer served by the Transmission system as a result of Transmission Facilities being removed from service by a Protection System operation designed to isolate the fault.

Long-Term Transmission Planning Horizon: Transmission planning period that covers years six through ten or beyond when required to accommodate any known longer lead time projects that may take longer than ten years to complete.

Non-Consequential Load Loss: Non-Interruptible Load loss that does not include: (1) Consequential Load Loss, (2) the response of voltage sensitive Load, or (3) Load that is disconnected from the System by end-user equipment.

Planning Assessment: Documented evaluation of future Transmission system performance and Corrective Action Plans to remedy identified deficiencies.

A. Introduction

1. **Title:** **Transmission System Planning Performance Requirements**

2. **Number:** **TPL-001-2**

3. **Purpose:** Establish Transmission system planning performance requirements within the planning horizon to develop a Bulk Electric System (BES) that will operate reliably over a broad spectrum of System conditions and following a wide range of probable Contingencies.

4. **Applicability:**

   4.1. Functional Entity

   4.1.1. Planning Coordinator.

   4.1.2. Transmission Planner.

5. **Effective Date:** Requirements R1 and R7 as well as the definitions shall become effective on the first day of the first calendar quarter, 12 months after applicable regulatory approval. In those jurisdictions where no regulatory approval is required, Requirements R1 and R7 become effective on the first day of the first calendar quarter, 12 months after Board of Trustees adoption.

   Except as indicated below, Requirements R2 through R6 and Requirement R8 shall become effective on the first day of the first calendar quarter, 24 months after applicable regulatory approval. In those jurisdictions where no regulatory approval is required, all requirements, except as noted below, go into effect on the first day of the first calendar quarter, 24 months after Board of Trustees adoption.

   For 84 calendar months beginning the first day of the first calendar quarter following applicable regulatory approval, or in those jurisdictions where no regulatory approval is required on the first day of the first calendar quarter 84 months after Board of Trustees adoption, Corrective Action Plans applying to the following categories of Contingencies and events identified in TPL-001-2, Table 1 are allowed to include Non-Consequential Load Loss and curtailment of Firm Transmission Service (in accordance with Requirement R2, Part 2.7.3.) that would not otherwise be permitted by the requirements of TPL-001-2:

   - P1-2 (for controlled interruption of electric supply to local network customers connected to or supplied by the Faulted element)
   - P1-3 (for controlled interruption of electric supply to local network customers connected to or supplied by the Faulted element)
   - P2-1
   - P2-2 (above 300 kV)
   - P2-3 (above 300 kV)
   - P3-1 through P3-5
   - P4-1 through P4-5 (above 300 kV)
   - P5 (above 300 kV)

B. Requirements

R1. Each Transmission Planner and Planning Coordinator shall maintain System models within its respective area for performing the studies needed to complete its Planning Assessment. The models shall use data consistent with that provided in accordance with the MOD-010 and MOD-012 standards, supplemented by other sources as needed, including items represented in the Corrective Action Plan, and shall represent projected System conditions. This establishes

Category P0 as the normal System condition in Table 1. *[Violation Risk Factor: Medium] [Time Horizon: Long-term Planning]*

1.1. System models shall represent:

1.1.1. Existing Facilities

1.1.2. Known outage(s) of generation or Transmission Facility(ies) with a duration of at least six months.

1.1.3. New planned Facilities and changes to existing Facilities

1.1.4. Real and reactive Load forecasts

1.1.5. Known commitments for Firm Transmission Service and Interchange

1.1.6. Resources (supply or demand side) required for Load

R2. Each Transmission Planner and Planning Coordinator shall prepare an annual Planning Assessment of its portion of the BES. This Planning Assessment shall use current or qualified past studies (as indicated in Requirement R2, Part 2.6), document assumptions, and document summarized results of the steady state analyses, short circuit analyses, and Stability analyses. *[Violation Risk Factor: High] [Time Horizon: Long-term Planning]*

2.1. For the Planning Assessment, the Near-Term Transmission Planning Horizon portion of the steady state analysis shall be assessed annually and be supported by current annual studies or qualified past studies as indicated in Requirement R2, Part 2.6. Qualifying studies need to include the following conditions:

2.1.1. System peak Load for either Year One or year two, and for year five.

2.1.2. System Off-Peak Load for one of the five years.

2.1.3. P1 events in Table 1, with known outages modeled as in Requirement R1, Part 1.1.2, under those System peak or Off-Peak conditions when known outages are scheduled.

2.1.4. For each of the studies described in Requirement R2, Parts 2.1.1 and 2.1.2, sensitivity case(s) shall be utilized to demonstrate the impact of changes to the basic assumptions used in the model. To accomplish this, the sensitivity analysis in the Planning Assessment must vary one or more of the following conditions by a sufficient amount to stress the System within a range of credible conditions that demonstrate a measurable change in System response :

- Real and reactive forecasted Load.
- Expected transfers.
- Expected in service dates of new or modified Transmission Facilities.
- Reactive resource capability.
- Generation additions, retirements, or other dispatch scenarios.
- Controllable Loads and Demand Side Management.
- Duration or timing of known Transmission outages.

2.1.5. When an entity's spare equipment strategy could result in the unavailability of major Transmission equipment that has a lead time of one year or more (such as a transformer), the impact of this possible unavailability on System performance shall be studied. The studies shall be performed for the P0, P1,

and P2 categories identified in Table 1 with the conditions that the System is expected to experience during the possible unavailability of the long lead time equipment.

2.2. For the Planning Assessment, the Long-Term Transmission Planning Horizon portion of the steady state analysis shall be assessed annually and be supported by the following annual current study, supplemented with qualified past studies as indicated in Requirement R2, Part 2.6:

2.2.1. A current study assessing expected System peak Load conditions for one of the years in the Long-Term Transmission Planning Horizon and the rationale for why that year was selected.

2.3. The short circuit analysis portion of the Planning Assessment shall be conducted annually addressing the Near-Term Transmission Planning Horizon and can be supported by current or past studies as qualified in Requirement R2, Part 2.6. The analysis shall be used to determine whether circuit breakers have interrupting capability for Faults that they will be expected to interrupt using the System short circuit model with any planned generation and Transmission Facilities in service which could impact the study area.

2.4. For the Planning Assessment, the Near-Term Transmission Planning Horizon portion of the Stability analysis shall be assessed annually and be supported by current or past studies as qualified in Requirement R2, Part2.6. The following studies are required:

2.4.1. System peak Load for one of the five years. System peak Load levels shall include a Load model which represents the expected dynamic behavior of Loads that could impact the study area, considering the behavior of induction motor Loads. An aggregate System Load model which represents the overall dynamic behavior of the Load is acceptable.

2.4.2. System Off-Peak Load for one of the five years.

2.4.3. For each of the studies described in Requirement R2, Parts 2.4.1 and 2.4.2, sensitivity case(s) shall be utilized to demonstrate the impact of changes to the basic assumptions used in the model. To accomplish this, the sensitivity analysis in the Planning Assessment must vary one or more of the following conditions by a sufficient amount to stress the System within a range of credible conditions that demonstrate a measurable change in performance:

- Load level, Load forecast, or dynamic Load model assumptions.
- Expected transfers.
- Expected in service dates of new or modified Transmission Facilities.
- Reactive resource capability.
- Generation additions, retirements, or other dispatch scenarios.

2.5. For the Planning Assessment, the Long-Term Transmission Planning Horizon portion of the Stability analysis shall be assessed to address the impact of proposed material generation additions or changes in that timeframe and be supported by current or past studies as qualified in Requirement R2, Part2.6 and shall include documentation to support the technical rationale for determining material changes.

2.6. Past studies may be used to support the Planning Assessment if they meet the following requirements:

2.6.1. For steady state, short circuit, or Stability analysis: the study shall be five calendar years old or less, unless a technical rationale can be provided to demonstrate that the results of an older study are still valid.

2.6.2. For steady state, short circuit, or Stability analysis: no material changes have occurred to the System represented in the study. Documentation to support the technical rationale for determining material changes shall be included.

2.7. For planning events shown in Table 1, when the analysis indicates an inability of the System to meet the performance requirements in Table 1, the Planning Assessment shall include Corrective Action Plan(s) addressing how the performance requirements will be met. Revisions to the Corrective Action Plan(s) are allowed in subsequent Planning Assessments but the planned System shall continue to meet the performance requirements in Table 1. Corrective Action Plan(s) do not need to be developed solely to meet the performance requirements for a single sensitivity case analyzed in accordance with Requirements R2, Parts 2.1.4 and 2.4.3. The Corrective Action Plan(s) shall:

2.7.1. List System deficiencies and the associated actions needed to achieve required System performance. Examples of such actions include:

- Installation, modification, retirement, or removal of Transmission and generation Facilities and any associated equipment.
- Installation, modification, or removal of Protection Systems or Special Protection Systems
- Installation or modification of automatic generation tripping as a response to a single or multiple Contingency to mitigate Stability performance violations.
- Installation or modification of manual and automatic generation runback/tripping as a response to a single or multiple Contingency to mitigate steady state performance violations.
- Use of Operating Procedures specifying how long they will be needed as part of the Corrective Action Plan.
- Use of rate applications, DSM, new technologies, or other initiatives.

2.7.2. Include actions to resolve performance deficiencies identified in multiple sensitivity studies or provide a rationale for why actions were not necessary.

2.7.3. If situations arise that are beyond the control of the Transmission Planner or Planning Coordinator that prevent the implementation of a Corrective Action Plan in the required timeframe, then the Transmission Planner or Planning Coordinator is permitted to utilize Non-Consequential Load Loss and curtailment of Firm Transmission Service to correct the situation that would normally not be permitted in Table 1, provided that the Transmission Planner or Planning Coordinator documents that they are taking actions to resolve the situation. The Transmission Planner or Planning Coordinator shall document the situation causing the problem, alternatives evaluated, and the use of Non-Consequential Load Loss or curtailment of Firm Transmission Service.

2.7.4. Be reviewed in subsequent annual Planning Assessments for continued validity and implementation status of identified System Facilities and Operating Procedures.

2.8. For short circuit analysis, if the short circuit current interrupting duty on circuit breakers determined in Requirement R2, Part 2.3 exceeds their Equipment Rating, the Planning Assessment shall include a Corrective Action Plan to address the Equipment Rating violations. The Corrective Action Plan shall:

2.8.1. List System deficiencies and the associated actions needed to achieve required System performance.

2.8.2. Be reviewed in subsequent annual Planning Assessments for continued validity and implementation status of identified System Facilities and Operating Procedures.

R3. For the steady state portion of the Planning Assessment, each Transmission Planner and Planning Coordinator shall perform studies for the Near-Term and Long-Term Transmission Planning Horizons in Requirement R2, Parts 2.1, and 2.2. The studies shall be based on computer simulation models using data provided in Requirement R1. *[Violation Risk Factor: Medium] [Time Horizon: Long-term Planning]*

3.1. Studies shall be performed for planning events to determine whether the BES meets the performance requirements in Table 1 based on the Contingency list created in Requirement R3, Part 3.4.

3.2. Studies shall be performed to assess the impact of the extreme events which are identified by the list created in Requirement R3, Part 3.5.

3.3. Contingency analyses for Requirement R3, Parts 3.1 & 3.2 shall:

3.3.1. Simulate the removal of all elements that the Protection System and other automatic controls are expected to disconnect for each Contingency without operator intervention. The analyses shall include the impact of subsequent:

3.3.1.1. Tripping of generators where simulations show generator bus voltages or high side of the generation step up (GSU) voltages are less than known or assumed minimum generator steady state or ride through voltage limitations. Include in the assessment any assumptions made.

3.3.1.2. Tripping of Transmission elements where relay loadability limits are exceeded.

3.3.2. Simulate the expected automatic operation of existing and planned devices designed to provide steady state control of electrical system quantities when such devices impact the study area. These devices may include equipment such as phase-shifting transformers, load tap changing transformers, and switched capacitors and inductors.

3.4. Those planning events in Table 1, that are expected to produce more severe System impacts on its portion of the BES, shall be identified and a list of those Contingencies to be evaluated for System performance in Requirement R3, Part 3.1 created. The rationale for those Contingencies selected for evaluation shall be available as supporting information.

3.4.1. The Planning Coordinator and Transmission Planner shall coordinate with adjacent Planning Coordinators and Transmission Planners to ensure that

Contingencies on adjacent Systems which may impact their Systems are included in the Contingency list.

3.5. Those extreme events in Table 1 that are expected to produce more severe System impacts shall be identified and a list created of those events to be evaluated in Requirement R3, Part 3.2. The rationale for those Contingencies selected for evaluation shall be available as supporting information. If the analysis concludes there is Cascading caused by the occurrence of extreme events, an evaluation of possible actions designed to reduce the likelihood or mitigate the consequences and adverse impacts of the event(s) shall be conducted.

R4. For the Stability portion of the Planning Assessment, as described in Requirement R2, Parts 2.4 and 2.5, each Transmission Planner and Planning Coordinator shall perform the Contingency analyses listed in Table 1. The studies shall be based on computer simulation models using data provided in Requirement R1. *[Violation Risk Factor: Medium] [Time Horizon: Long-term Planning]*

4.1. Studies shall be performed for planning events to determine whether the BES meets the performance requirements in Table 1 based on the Contingency list created in Requirement R4, Part 4.4.

4.1.1. For planning event P1: No generating unit shall pull out of synchronism. A generator being disconnected from the System by fault clearing action or by a Special Protection System is not considered pulling out of synchronism.

4.1.2. For planning events P2 through P7: When a generator pulls out of synchronism in the simulations, the resulting apparent impedance swings shall not result in the tripping of any Transmission system elements other than the generating unit and its directly connected Facilities.

4.1.3. For planning events P1 through P7: Power oscillations shall exhibit acceptable damping as established by the Planning Coordinator and Transmission Planner.

4.2. Studies shall be performed to assess the impact of the extreme events which are identified by the list created in Requirement R4, Part 4.5.

4.3. Contingency analyses for Requirement R4, Parts 4.1 and 4.2 shall :

4.3.1. Simulate the removal of all elements that the Protection System and other automatic controls are expected to disconnect for each Contingency without operator intervention. The analyses shall include the impact of subsequent:

4.3.1.1. Successful high speed (less than one second) reclosing and unsuccessful high speed reclosing into a Fault where high speed reclosing is utilized.

4.3.1.2. Tripping of generators where simulations show generator bus voltages or high side of the GSU voltages are less than known or assumed generator low voltage ride through capability. Include in the assessment any assumptions made.

4.3.1.3. Tripping of Transmission lines and transformers where transient swings cause Protection System operation based on generic or actual relay models.

4.3.2. Simulate the expected automatic operation of existing and planned devices designed to provide dynamic control of electrical system quantities when

such devices impact the study area. These devices may include equipment such as generation exciter control and power system stabilizers, static var compensators, power flow controllers, and DC Transmission controllers.

4.4. Those planning events in Table 1 that are expected to produce more severe System impacts on its portion of the BES, shall be identified, and a list created of those Contingencies to be evaluated in Requirement R4, Part 4.1. The rationale for those Contingencies selected for evaluation shall be available as supporting information.

4.4.1. Each Planning Coordinator and Transmission Planner shall coordinate with adjacent Planning Coordinators and Transmission Planners to ensure that Contingencies on adjacent Systems which may impact their Systems are included in the Contingency list.

4.5. Those extreme events in Table 1 that are expected to produce more severe System impacts shall be identified and a list created of those events to be evaluated in Requirement R4, Part 4.2. The rationale for those Contingencies selected for evaluation shall be available as supporting information. If the analysis concludes there is Cascading caused by the occurrence of extreme events, an evaluation of possible actions designed to reduce the likelihood or mitigate the consequences of the event(s) shall be conducted.

R5. Each Transmission Planner and Planning Coordinator shall have criteria for acceptable System steady state voltage limits, post-Contingency voltage deviations, and the transient voltage response for its System. For transient voltage response, the criteria shall at a minimum, specify a low voltage level and a maximum length of time that transient voltages may remain below that level. *[Violation Risk Factor: Medium] [Time Horizon: Long-term Planning]*

R6. Each Transmission Planner and Planning Coordinator shall define and document, within their Planning Assessment, the criteria or methodology used in the analysis to identify System instability for conditions such as Cascading, voltage instability, or uncontrolled islanding. *[Violation Risk Factor: Low] [Time Horizon: Long-term Planning]*

R7. Each Planning Coordinator, in conjunction with each of its Transmission Planners, shall determine and identify each entity's individual and joint responsibilities for performing the required studies for the Planning Assessment. *[Violation Risk Factor: Low] [Time Horizon: Long-term Planning]*

R8. Each Planning Coordinator and Transmission Planner shall distribute its Planning Assessment results to adjacent Planning Coordinators and adjacent Transmission Planners within 90 calendar days of completing its Planning Assessment, and to any functional entity that has a reliability related need and submits a written request for the information within 30 days of such a request. *[Violation Risk Factor: Medium] [Time Horizon: Long-term Planning]*

8.1. If a recipient of the Planning Assessment results provides documented comments on the results, the respective Planning Coordinator or Transmission Planner shall provide a documented response to that recipient within 90 calendar days of receipt of those comments.

Table 1 – Steady State & Stability Performance Planning Events

Steady State & Stability:

a. The System shall remain stable. Cascading and uncontrolled islanding shall not occur.
b. Consequential Load Loss as well as generation loss is acceptable as a consequence of any event excluding P0.
c. Simulate the removal of all elements that Protection Systems and other controls are expected to automatically disconnect for each event.
d. Simulate Normal Clearing unless otherwise specified.
e. Planned System adjustments such as Transmission configuration changes and re-dispatch of generation are allowed if such adjustments are executable within the time duration applicable to the Facility Ratings.

Steady State Only:

f. Applicable Facility Ratings shall not be exceeded.
g. System steady state voltages and post-Contingency voltage deviations shall be within acceptable limits as established by the Planning Coordinator and the Transmission Planner.
h. Planning event P0 is applicable to steady state only.
i. The response of voltage sensitive Load that is disconnected from the System by end-user equipment associated with an event shall not be used to meet steady state performance requirements.

Stability Only:

j. Transient voltage response shall be within acceptable limits established by the Planning Coordinator and the Transmission Planner.

Category	Initial Condition	Event [1]	Fault Type [2]	BES Level [3]	Interruption of Firm Transmission Service Allowed [4]	Non-Consequential Load Loss Allowed
P0 No Contingency	Normal System	None	N/A	EHV, HV	No	No
P1 Single Contingency	Normal System	Loss of one of the following: 1. Generator 2. Transmission Circuit 3. Transformer [5] 4. Shunt Device [6]	3Ø	EHV, HV	No[9]	No[12]
		5. Single Pole of a DC line	SLG			
P2 Single Contingency	Normal System	1. Opening of a line section w/o a fault [7]	N/A	EHV, HV	No[9]	No[12]
		2. Bus Section Fault	SLG	EHV	No[9]	No
				HV	Yes	Yes
		3. Internal Breaker Fault [8] (non-Bus-tie Breaker)	SLG	EHV	No[9]	No
				HV	Yes	Yes
		4. Internal Breaker Fault (Bus-tie Breaker) [8]	SLG	EHV, HV	Yes	Yes

Category	Initial Condition	Event [1]	Fault Type [2]	BES Level [3]	Interruption of Firm Transmission Service Allowed [4]	Non-Consequential Load Loss Allowed
P3 Multiple Contingency	Loss of generator unit followed by System adjustments[9]	Loss of one of the following: 1. Generator 2. Transmission Circuit 3. Transformer [5] 4. Shunt Device [6]	3Ø	EHV, HV	No[9]	No[12]
		5. Single pole of a DC line	SLG			
P4 Multiple Contingency *(Fault plus stuck breaker[10])*	Normal System	Loss of multiple elements caused by a stuck breaker [10](non-Bus-tie Breaker) attempting to clear a Fault on one of the following: 1. Generator 2. Transmission Circuit 3. Transformer [5] 4. Shunt Device [6] 5. Bus Section	SLG	EHV	No[9]	No
				HV	Yes	Yes
		6. Loss of multiple elements caused by a stuck breaker[10] (Bus-tie Breaker) attempting to clear a Fault on the associated bus	SLG	EHV, HV	Yes	Yes
P5 Multiple Contingency *(Fault plus relay failure to operate)*	Normal System	Delayed Fault Clearing due to the failure of a non-redundant relay[13] protecting the Faulted element to operate as designed, for one of the following: 1. Generator 2. Transmission Circuit 3. Transformer [5] 4. Shunt Device [6] 5. Bus Section	SLG	EHV	No[9]	No
				HV	Yes	Yes
P6 Multiple Contingency *(Two overlapping singles)*	Loss of one of the following followed by System adjustments.[9] 1. Transmission Circuit 2. Transformer [5] 3. Shunt Device[6] 4. Single pole of a DC line	Loss of one of the following: 1. Transmission Circuit 2. Transformer [5] 3. Shunt Device [6]	3Ø	EHV, HV	Yes	Yes
		4. Single pole of a DC line	SLG	EHV, HV	Yes	Yes

Category	Initial Condition	Event [1]	Fault Type [2]	BES Level [3]	Interruption of Firm Transmission Service Allowed [4]	Non-Consequential Load Loss Allowed
P7 Multiple Contingency *(Common Structure)*	Normal System	The loss of: 1. Any two adjacent (vertically or horizontally) circuits on common structure [11] 2. Loss of a bipolar DC line	SLG	EHV, HV	Yes	Yes

Table 1 – Steady State & Stability Performance Extreme Events

Steady State & Stability

For all extreme events evaluated:

a. Simulate the removal of all elements that Protection Systems and automatic controls are expected to disconnect for each Contingency.

b. Simulate Normal Clearing unless otherwise specified.

Steady State

1. Loss of a single generator, Transmission Circuit, single pole of a DC Line, shunt device, or transformer forced out of service followed by another single generator, Transmission Circuit, single pole of a different DC Line, shunt device, or transformer forced out of service prior to System adjustments.
2. Local area events affecting the Transmission System such as:
   a. Loss of a tower line with three or more circuits.[11]
   b. Loss of all Transmission lines on a common Right-of-Way[11].
   c. Loss of a switching station or substation (loss of one voltage level plus transformers).
   d. Loss of all generating units at a generating station.
   e. Loss of a large Load or major Load center.
3. Wide area events affecting the Transmission System based on System topology such as:
   a. Loss of two generating stations resulting from conditions such as:
      i. Loss of a large gas pipeline into a region or multiple regions that have significant gas-fired generation.
      ii. Loss of the use of a large body of water as the cooling source for generation.
      iii. Wildfires.
      iv. Severe weather, e.g., hurricanes, tornadoes, etc.
      v. A successful cyber attack.
      vi. Shutdown of a nuclear power plant(s) and related facilities for a day or more for common causes such as problems with similarly designed plants.
   b. Other events based upon operating experience that may result in wide area disturbances.

Stability

1. With an initial condition of a single generator, Transmission circuit, single pole of a DC line, shunt device, or transformer forced out of service, apply a 3Ø fault on another single generator, Transmission circuit, single pole of a different DC line, shunt device, or transformer prior to System adjustments.
2. Local or wide area events affecting the Transmission System such as:
   a. 3Ø fault on generator with stuck breaker[10] or a relay failure[13] resulting in Delayed Fault Clearing.
   b. 3Ø fault on Transmission circuit with stuck breaker[10] or a relay failure[13] resulting in Delayed Fault Clearing.
   c. 3Ø fault on transformer with stuck breaker[10] or a relay failure[13] resulting in Delayed Fault Clearing.
   d. 3Ø fault on bus section with stuck breaker[10] or a relay failure[13] resulting in Delayed Fault Clearing.
   e. 3Ø internal breaker fault.
   f. Other events based upon operating experience, such as consideration of initiating events that experience suggests may result in wide area disturbances

Table 1 – Steady State & Stability Performance Footnotes (Planning Events and Extreme Events)
1. If the event analyzed involves BES elements at multiple System voltage levels, the lowest System voltage level of the element(s) removed for the analyzed event determines the stated performance criteria regarding allowances for interruptions of Firm Transmission Service and Non-Consequential Load Loss.
2. Unless specified otherwise, simulate Normal Clearing of faults. Single line to ground (SLG) or three-phase (3Ø) are the fault types that must be evaluated in Stability simulations for the event described. A 3Ø or a double line to ground fault study indicating the criteria are being met is sufficient evidence that a SLG condition would also meet the criteria.
3. Bulk Electric System (BES) level references include extra-high voltage (EHV) Facilities defined as greater than 300kV and high voltage (HV) Facilities defined as the 300kV and lower voltage Systems. The designation of EHV and HV is used to distinguish between stated performance criteria allowances for interruption of Firm Transmission Service and Non-Consequential Load Loss.
4. Curtailment of Conditional Firm Transmission Service is allowed when the conditions and/or events being studied formed the basis for the Conditional Firm Transmission Service.
5. For non-generator step up transformer outage events, the reference voltage, as used in footnote 1, applies to the low-side winding (excluding tertiary windings). For generator and Generator Step Up transformer outage events, the reference voltage applies to the BES connected voltage (high-side of the Generator Step Up transformer). Requirements which are applicable to transformers also apply to variable frequency transformers and phase shifting transformers.
6. Requirements which are applicable to shunt devices also apply to FACTS devices that are connected to ground.
7. Opening one end of a line section without a fault on a normally networked Transmission circuit such that the line is possibly serving Load radial from a single source point.
8. An internal breaker fault means a breaker failing internally, thus creating a System fault which must be cleared by protection on both sides of the breaker.
9. An objective of the planning process should be to minimize the likelihood and magnitude of interruption of Firm Transmission Service following Contingency events. Curtailment of Firm Transmission Service is allowed both as a System adjustment (as identified in the column entitled 'Initial Condition') and a corrective action when achieved through the appropriate re-dispatch of resources obligated to re-dispatch, where it can be demonstrated that Facilities, internal and external to the Transmission Planner's planning region, remain within applicable Facility Ratings and the re-dispatch does not result in any Non-Consequential Load Loss. Where limited options for re-dispatch exist, sensitivities associated with the availability of those resources should be considered.
10. A stuck breaker means that for a gang-operated breaker, all three phases of the breaker have remained closed. For an independent pole operated (IPO) or an independent pole tripping (IPT) breaker, only one pole is assumed to remain closed. A stuck breaker results in Delayed Fault Clearing.
11. Excludes circuits that share a common structure (Planning event P7, Extreme event steady state 2a) or common Right-of-Way (Extreme event, steady state 2b) for 1 mile or less.
12. An objective of the planning process should be to minimize the likelihood and magnitude of Non-Consequential Load Loss following Contingency events. However, in limited circumstances Non-Consequential Load Loss may be needed to address BES performance requirements. When Non-Consequential Load Loss is utilized within the planning process to address BES performance requirements, such interruption is limited to circumstances where the Non-Consequential Load Loss is documented, including alternatives evaluated; and where the utilization of Non-Consequential Load Loss is subject to review in an open and transparent stakeholder process that includes addressing stakeholder comments.
13. Applies to the following relay functions or types: pilot (#85), distance (#21), differential (#87), current (#50, 51, and 67), voltage (#27 & 59), directional (#32, & 67), and tripping (#86, & 94).

C. Measures

M1. Each Transmission Planner and Planning Coordinator shall provide evidence, in electronic or hard copy format, that it is maintaining System models within their respective area, using data consistent with MOD-010 and MOD-012, including items represented in the Corrective Action Plan, representing projected System conditions, and that the models represent the required information in accordance with Requirement R1.

M2. Each Transmission Planner and Planning Coordinator shall provide dated evidence, such as electronic or hard copies of its annual Planning Assessment, that it has prepared an annual Planning Assessment of its portion of the BES in accordance with Requirement R2.

M3. Each Transmission Planner and Planning Coordinator shall provide dated evidence, such as electronic or hard copies of the studies utilized in preparing the Planning Assessment, in accordance with Requirement R3.

M4. Each Transmission Planner and Planning Coordinator shall provide dated evidence, such as electronic or hard copies of the studies utilized in preparing the Planning Assessment in accordance with Requirement R4.

M5. Each Transmission Planner and Planning Coordinator shall provide dated evidence such as electronic or hard copies of the documentation specifying the criteria for acceptable System steady state voltage limits, post-Contingency voltage deviations, and the transient voltage response for its System in accordance with Requirement R5.

M6. Each Transmission Planner and Planning Coordinator shall provide dated evidence, such as electronic or hard copies of documentation specifying the criteria or methodology used in the analysis to identify System instability for conditions such as Cascading, voltage instability, or uncontrolled islanding that was utilized in preparing the Planning Assessment in accordance with Requirement R6.

M7. Each Planning Coordinator, in conjunction with each of its Transmission Planners, shall provide dated documentation on roles and responsibilities, such as meeting minutes, agreements, and e-mail correspondence that identifies that agreement has been reached on individual and joint responsibilities for performing the required studies and Assessments in accordance with Requirement R7.

M8. Each Planning Coordinator and Transmission Planner shall provide evidence, such as email notices, documentation of updated web pages, postal receipts showing recipient and date; or a demonstration of a public posting, that it has distributed its Planning Assessment results to adjacent Planning Coordinators and adjacent Transmission Planners within 90 days of having completed its Planning Assessment, and to any functional entity who has indicated a reliability need within 30 days of a written request and that the Planning Coordinator or Transmission Planner has provided a documented response to comments received on Planning Assessment results within 90 calendar days of receipt of those comments in accordance with Requirement R8.

D. Compliance

1. Compliance Monitoring Process

1.1 Compliance Enforcement Authority

Regional Entity

1.2 Compliance Monitoring Period and Reset Timeframe

Not applicable.

1.3 Compliance Monitoring and Enforcement Processes:

Compliance Audits

Self-Certifications

Spot Checking

Compliance Violation Investigations

Self-Reporting

Complaints

1.4 Data Retention

The Transmission Planner and Planning Coordinator shall each retain data or evidence to show compliance as identified unless directed by its Compliance Enforcement Authority to retain specific evidence for a longer period of time as part of an investigation:

- The models utilized in the current in-force Planning Assessment and one previous Planning Assessment in accordance with Requirement R1 and Measure M1.
- The Planning Assessments performed since the last compliance audit in accordance with Requirement R2 and Measure M2.
- The studies performed in support of its Planning Assessments since the last compliance audit in accordance with Requirement R3 and Measure M3.
- The studies performed in support of its Planning Assessments since the last compliance audit in accordance with Requirement R4 and Measure M4.
- The documentation specifying the criteria for acceptable System steady state voltage limits, post-Contingency voltage deviations, and transient voltage response since the last compliance audit in accordance with Requirement R5 and Measure M5.
- The documentation specifying the criteria or methodology utilized in the analysis to identify System instability for conditions such as Cascading, voltage instability, or uncontrolled islanding in support of its Planning Assessments since the last compliance audit in accordance with Requirement R6 and Measure M6.
- The current, in force documentation for the agreement(s) on roles and responsibilities, as well as documentation for the agreements in force since the last compliance audit, in accordance with Requirement R7 and Measure M7.

The Planning Coordinator shall retain data or evidence to show compliance as identified unless directed by its Compliance Enforcement Authority to retain specific evidence for a longer period of time as part of an investigation:

- Three calendar years of the notifications employed in accordance with Requirement R8 and Measure M8.

If a Transmission Planner or Planning Coordinator is found non-compliant, it shall keep information related to the non-compliance until found compliant or the time periods specified above, whichever is longer.

1.5 Additional Compliance Information

None

2. Violation Severity Levels

	Lower VSL	Moderate VSL	High VSL	Severe VSL
R1	The responsible entity's System model failed to represent one of the Requirement R1, Parts 1.1.1 through 1.1.6.	The responsible entity's System model failed to represent two of the Requirement R1, Parts 1.1.1 through 1.1.6.	The responsible entity's System model failed to represent three of the Requirement R1, Parts 1.1.1 through 1.1.6.	The responsible entity's System model failed to represent four or more of the Requirement R1, Parts 1.1.1 through 1.1.6. OR The responsible entity's System model did not represent projected System conditions as described in Requirement R1. OR The responsible entity's System model did not use data consistent with that provided in accordance with the MOD-010 and MOD-012 standards and other sources, including items represented in the Corrective Action Plan.
R2	The responsible entity failed to comply with Requirement R2, Part 2.6.	The responsible entity failed to comply with Requirement R2, Part 2.3 or Part 2.8.	The responsible entity failed to comply with one of the following Parts of Requirement R2: Part 2.1, Part 2.2, Part 2.4, Part 2.5, or Part 2.7.	The responsible entity failed to comply with two or more of the following Parts of Requirement R2: Part 2.1, Part 2.2, Part 2.4, or Part 2.7. OR The responsible entity does not have a completed annual Planning Assessment.
R3	The responsible entity did not identify planning events as described in Requirement R3, Part 3.4 or extreme events as described in Requirement R3, Part 3.5.	The responsible entity did not perform studies as specified in Requirement R3, Part 3.1 to determine that the BES meets the performance requirements for one of the categories (P2 through P7) in Table 1.	The responsible entity did not perform studies as specified in Requirement R3, Part 3.1 to determine that the BES meets the performance requirements for two of the categories (P2 through P7) in	The responsible entity did not perform studies as specified in Requirement R3, Part 3.1 to determine that the BES meets the performance requirements for three or more of the categories (P2 through P7) in Table 1.

	Lower VSL	Moderate VSL	High VSL	Severe VSL
		OR The responsible entity did not perform studies as specified in Requirement R3, Part 3.2 to assess the impact of extreme events.	Table 1. OR The responsible entity did not perform Contingency analysis as described in Requirement R3, Part 3.3.	OR The responsible entity did not perform studies to determine that the BES meets the performance requirements for the P0 or P1 categories in Table 1. OR The responsible entity did not base its studies on computer simulation models using data provided in Requirement R1.
R4	The responsible entity did not identify planning events as described in Requirement R4, Part 4.4 or extreme events as described in Requirement R4, Part 4.5.	The responsible entity did not perform studies as specified in Requirement R4, Part 4.1 to determine that the BES meets the performance requirements for one of the categories (P1 through P7) in Table 1. OR The responsible entity did not perform studies as specified in Requirement R4, Part 4.2 to assess the impact of extreme events.	The responsible entity did not perform studies as specified in Requirement R4, Part 4.1 to determine that the BES meets the performance requirements for two of the categories (P1 through P7) in Table 1. OR The responsible entity did not perform Contingency analysis as described in Requirement R4, Part 4.3.	The responsible entity did not perform studies as specified in Requirement R4, Part 4.1 to determine that the BES meets the performance requirements for three or more of the categories (P1 through P7) in Table 1. OR The responsible entity did not base its studies on computer simulation models using data provided in Requirement R1.
R5	N/A	N/A	N/A	The responsible entity does not have criteria for acceptable System steady state voltage limits, post-Contingency voltage deviations, or the transient voltage response for its System.
R6	N/A	N/A	N/A	The responsible entity failed to define and document the criteria or methodology for System instability used within its analysis as described in Requirement R6.

	Lower VSL	Moderate VSL	High VSL	Severe VSL
R7	N/A	N/A	N/A	The Planning Coordinator, in conjunction with each of its Transmission Planners, failed to determine and identify individual or joint responsibilities for performing required studies.
R8	The responsible entity distributed its Planning Assessment results to adjacent Planning Coordinators and adjacent Transmission Planners but it was more than 90 days but less than or equal to 120 days following its completion. OR, The responsible entity distributed its Planning Assessment results to functional entities having a reliability related need who requested the Planning Assessment in writing but it was more than 30 days but less than or equal to 40 days following the request.	The responsible entity distributed its Planning Assessment results to adjacent Planning Coordinators and adjacent Transmission Planners but it was more than 120 days but less than or equal to 130 days following its completion. OR, The responsible entity distributed its Planning Assessment results to functional entities having a reliability related need who requested the Planning Assessment in writing but it was more than 40 days but less than or equal to 50 days following the request.	The responsible entity distributed its Planning Assessment results to adjacent Planning Coordinators and adjacent Transmission Planners but it was more than 130 days but less than or equal to 140 days following its completion. OR, The responsible entity distributed its Planning Assessment results to functional entities having a reliability related need who requested the Planning Assessment in writing but it was more than 50 days but less than or equal to 60 days following the request.	The responsible entity distributed its Planning Assessment results to adjacent Planning Coordinators and adjacent Transmission Planners but it was more than 140 days following its completion. OR The responsible entity did not distribute its Planning Assessment results to adjacent Planning Coordinators and adjacent Transmission Planners. OR The responsible entity distributed its Planning Assessment results to functional entities having a reliability related need who requested the Planning Assessment in writing but it was more than 60 days following the request. OR The responsible entity did not distribute its Planning Assessment results to functional entities having a reliability related need who requested the Planning Assessment in writing.

E. Regional Variances

None.

Version History

Version	Date	Action	Change Tracking
1	03/17/2001	Revision of TPL-001-0 to modify only Table 1 footnote b. Approved by Board of Trustees	Project 2006-02 – revision to address FERC directive
2	To be Determined	Revision of TPL-001-1; includes merging and upgrading requirements of TPL-001-0, TPL-002-0, TPL-003-0, and TPL-004-0 into one, single, comprehensive, coordinated standard: TPL-001-2; and retirement of TPL-005-0 and TPL-006-0.	Project 2006-02 – complete revision

Standard Development Roadmap

This section is maintained by the drafting team during the development of the standard and will be removed when the standard becomes effective.

Development Steps Completed:

1. Version 1 of SAR posted for comment from April 2, 2002 through May 3, 2002.
2. Version 2 of SAR posted for comment from May 5, 2004 through June 5, 2004.
3. Version 3 of SAR posted on November 18, 2005.
4. SAR approved on April 30, 2006.
5. Version 1 of Supplemental SAR posted for comment from February 15, 2007 through March 16, 2007.
6. Version 2 of Supplemental SAR posted on April 9, 2007.
7. Version 1 of revised standard(s) posted for comment on September 17, 2007.
8. Version 2 of the revised standards posted for comment on August 15, 2008.
9. Version 3 of the revised standards posted for comment on May 26, 2009.
10. Version 4 of the revised standards posted for comment on September 16, 2009.
11. Initial ballot completed on March 1, 2010.
12. Version 5 of the revised standard posted for comment on August 3, 2010.
13. Version 6 of the revised standard posted for information on October 19, 2010.
14. Version 7 posted for a parallel comment and initial ballot ending May 31, 2011.

Proposed Action Plan and Description of Current Draft:
The current draft is the eighth iteration of the revision of existing standards TPL-001 through TPL-006 and includes one revised standard, TPL-001-2, replacing TPL-001, TPL-002, TPL-003 and TPL-004. TPL-005 & -006 issues are addressed in this sixth draft and those standards will also be replaced by TPL-001-2.

Future Development Plan:

Anticipated Actions	Anticipated Date
1. Conduct recirculation ballot	3Q11
2. Submit standard(s) to BOT.	3Q11
3. Submit to regulatory authorities for approval.	3Q11

Definitions of Terms Used in Standard

This section includes all newly defined or revised terms used in the proposed standard. Terms already defined in the Reliability Standards Glossary of Terms are not repeated here. New or revised definitions listed below become approved when the proposed standard is approved. When the standard becomes effective, these defined terms will be removed from the individual standard and added to the Glossary.

Bus-tie Breaker: A circuit breaker that is positioned to connect two individual substation bus configurations.

Consequential Load Loss: All Load that is no longer served by the Transmission system as a result of Transmission Facilities being removed from service by a Protection System operation designed to isolate the fault.

Long-Term Transmission Planning Horizon: Transmission planning period that covers years six through ten or beyond when required to accommodate any known longer lead time projects that may take longer than ten years to complete.

Non-Consequential Load Loss: Non-Interruptible Load loss that does not include: (1) Consequential Load Loss, (2) the response of voltage sensitive Load, or (3) Load that is disconnected from the System by end-user equipment.

Planning Assessment: Documented evaluation of future Transmission system performance and Corrective Action Plans to remedy identified deficiencies.

A. Introduction

1. **Title:** **Transmission System Planning Performance Requirements**

2. **Number:** **TPL-001-2**

3. **Purpose:** Establish Transmission system planning performance requirements within the planning horizon to develop a Bulk Electric System (BES) that will operate reliably over a broad spectrum of System conditions and following a wide range of probable Contingencies.

4. **Applicability:**

   4.1. Functional Entity

   4.1.1. Planning Coordinator.

   4.1.2. Transmission Planner.

5. **Effective Date:** Requirements R1 and R7 as well as the definitions shall become effective on the first day of the first calendar quarter, 12 months after applicable regulatory approval. In those jurisdictions where no regulatory approval is required, Requirements R1 and R7 become effective on the first day of the first calendar quarter, 12 months after Board of Trustees adoption.

   Except as indicated below, Requirements R2 through R6 and Requirement R8 shall become effective on the first day of the first calendar quarter, 24 months after applicable regulatory approval. In those jurisdictions where no regulatory approval is required, all requirements, except as noted below, go into effect on the first day of the first calendar quarter, 24 months after Board of Trustees adoption.

   For 84 calendar months beginning the first day of the first calendar quarter following applicable regulatory approval, or in those jurisdictions where no regulatory approval is required on the first day of the first calendar quarter 84 months after Board of Trustees adoption, Corrective Action Plans applying to the following categories of Contingencies and events identified in TPL-001-2, Table 1 are allowed to include Non-Consequential Load Loss and curtailment of Firm Transmission Service (in accordance with Requirement R2, Part 2.7.3.) that would not otherwise be permitted by the requirements of TPL-001-2:

   - P1-2 (for controlled interruption of electric supply to local network customers connected to or supplied by the Faulted element)
   - P1-3 (for controlled interruption of electric supply to local network customers connected to or supplied by the Faulted element)
   - P2-1
   - ~~,~~P2-2 (above 300 kV)
   - P2-3 (above 300 kV)
   - P3-1 through P3-5
   - P4-1 through P4-5 (above 300 kV)
   - P5 (above 300 kV)

B. Requirements

R1. Each Transmission Planner and Planning Coordinator shall maintain System models within its respective area for performing the studies needed to complete its Planning Assessment. The models shall use data consistent with that provided in accordance with the MOD-010 and MOD-012 standards, supplemented by other sources as needed, including items represented in the Corrective Action Plan, and shall represent projected System conditions. This establishes

Category P0 as the normal System condition in Table 1. *[Violation Risk Factor: Medium] [Time Horizon: Long-term Planning]*

1.1. System models shall represent:

1.1.1. Existing Facilities

1.1.2. Known outage(s) of generation or Transmission Facility(ies) with a duration of at least six months.

1.1.3. New planned Facilities and changes to existing Facilities

1.1.4. Real and reactive Load forecasts

1.1.5. Known commitments for Firm Transmission Service and Interchange

1.1.6. Resources (supply or demand side) required for Load

R2. Each Transmission Planner and Planning Coordinator shall prepare an annual Planning Assessment of its portion of the BES. This Planning Assessment shall use current or qualified past studies (as indicated in Requirement R2, Part 2.6), document assumptions, and document summarized results of the steady state analyses, short circuit analyses, and Stability analyses. *[Violation Risk Factor: High] [Time Horizon: Long-term Planning]*

2.1. For the Planning Assessment, the Near-Term Transmission Planning Horizon portion of the steady state analysis shall be assessed annually and be supported by current annual studies or qualified past studies ~~(~~as indicated in Requirement R2, Part 2.6~~)~~.. Qualifying studies need to include the following conditions:

2.1.1. System peak Load for either Year One or year two, and for year five.

2.1.2. System Off-Peak Load for one of the five years.

2.1.3. P1 events in Table 1, with known outages modeled as in Requirement R1, Part 1.1.2, under those System peak or Off-Peak conditions when known outages are scheduled.

2.1.4. For each of the studies described in Requirement R2, Parts 2.1.1 and 2.1.2, sensitivity case(s) shall be utilized to demonstrate the impact of changes to the basic assumptions used in the model. To accomplish this, the sensitivity analysis in the Planning Assessment must vary one or more of the following conditions by a sufficient amount to stress the System within a range of credible conditions that demonstrate a measurable change in System response :

- Real and reactive forecasted Load.
- Expected transfers.
- Expected in service dates of new or modified Transmission Facilities.
- Reactive resource capability.
- Generation additions, retirements, or other dispatch scenarios.
- Controllable Loads and Demand Side Management.
- Duration or timing of known Transmission outages.

2.1.5. When an entity's spare equipment strategy could result in the unavailability of major Transmission equipment that has a lead time of one year or more (such as a transformer), the impact of this possible unavailability on System performance shall be studied. The studies shall be performed for the P0, P1,

and P2 categories identified in Table 1 with the conditions that the System is expected to experience during the possible unavailability of the long lead time equipment.

2.2. For the Planning Assessment, the Long-Term Transmission Planning Horizon portion of the steady state analysis shall be assessed annually and be supported by the following annual current study, supplemented with qualified past studies as indicated in Requirement R2, Part 2.6:

2.2.1. A current study assessing expected System peak Load conditions for one of the years in the Long-Term Transmission Planning Horizon and the rationale for why that year was selected.

2.3. The short circuit analysis portion of the Planning Assessment shall be conducted annually addressing the Near-Term Transmission Planning Horizon and can be supported by current or past studies as qualified in Requirement R2, Part 2.6. The analysis shall be used to determine whether circuit breakers have interrupting capability for Faults that they will be expected to interrupt using the System short circuit model with any planned generation and Transmission Facilities in service which could impact the study area.

2.4. For the Planning Assessment, the Near-Term Transmission Planning Horizon portion of the Stability analysis shall be assessed annually and be supported by current or past studies as qualified in Requirement R2, Part2.6. The following studies are required:

2.4.1. System peak Load for one of the five years. System peak Load levels shall include a Load model which represents the expected dynamic behavior of Loads that could impact the study area, considering the behavior of induction motor Loads. An aggregate System Load model which represents the overall dynamic behavior of the Load is acceptable.

2.4.2. System Off-Peak Load for one of the five years.

2.4.3. For each of the studies described in Requirement R2, Parts 2.4.1 and 2.4.2, sensitivity case(s) shall be utilized to demonstrate the impact of changes to the basic assumptions used in the model. To accomplish this, the sensitivity analysis in the Planning Assessment must vary one or more of the following conditions by a sufficient amount to stress the System within a range of credible conditions that demonstrate a measurable change in performance:

- Load level, Load forecast, or dynamic Load model assumptions.
- Expected transfers.
- Expected in service dates of new or modified Transmission Facilities.
- Reactive resource capability.
- Generation additions, retirements, or other dispatch scenarios.

2.5. For the Planning Assessment, the Long-Term Transmission Planning Horizon portion of the Stability analysis shall be assessed to address the impact of proposed material generation additions or changes in that timeframe and be supported by current or past studies as qualified in Requirement R2, Part2.6 and shall include documentation to support the technical rationale for determining material changes.

2.6. Past studies may be used to support the Planning Assessment if they meet the following requirements:

2.6.1. For steady state, short circuit, or Stability analysis: the study shall be five calendar years old or less, unless a technical rationale can be provided to demonstrate that the results of an older study are still valid.

2.6.2. For steady state, short circuit, or Stability analysis: no material changes have occurred to the System represented in the study. Documentation to support the technical rationale for determining material changes shall be included.

2.7. For planning events shown in Table 1, when the analysis indicates an inability of the System to meet the performance requirements in Table 1, the Planning Assessment shall include Corrective Action Plan(s) addressing how the performance requirements will be met. Revisions to the Corrective Action Plan(s) are allowed in subsequent Planning Assessments but the planned System shall continue to meet the performance requirements in Table 1. Corrective Action Plan(s) do not need to be developed solely to meet the performance requirements for a single sensitivity case analyzed in accordance with Requirements R2, Parts 2.1.4 and 2.4.3. The Corrective Action Plan(s) shall:

2.7.1. List System deficiencies and the associated actions needed to achieve required System performance. Examples of such actions include:

- Installation, modification, retirement, or removal of Transmission and generation Facilities and any associated equipment.
- Installation, modification, or removal of Protection Systems or Special Protection Systems
- Installation or modification of automatic generation tripping as a response to a single or multiple Contingency to mitigate Stability performance violations.
- Installation or modification of manual and automatic generation runback/tripping as a response to a single or multiple Contingency to mitigate steady state performance violations.
- Use of Operating Procedures specifying how long they will be needed as part of the Corrective Action Plan.
- Use of rate applications, DSM, new technologies, or other initiatives.

2.7.2. Include actions to resolve performance deficiencies identified in multiple sensitivity studies or provide a rationale for why actions were not necessary.

2.7.3. If situations arise that are beyond the control of the Transmission Planner or Planning Coordinator that prevent the implementation of a Corrective Action Plan in the required timeframe, then the Transmission Planner or Planning Coordinator is permitted to utilize Non-Consequential Load Loss and curtailment of Firm Transmission Service to correct the situation that would normally not be permitted in Table 1, provided that the Transmission Planner or Planning Coordinator documents that they are taking actions to resolve the situation. The Transmission Planner or Planning Coordinator shall document the situation causing the problem, alternatives evaluated, and the use of Non-Consequential Load Loss or curtailment of Firm Transmission Service.

2.7.4. Be reviewed in subsequent annual Planning Assessments for continued validity and implementation status of identified System Facilities and Operating Procedures.

2.8. For short circuit analysis, if the short circuit current interrupting duty on circuit breakers determined in Requirement R2, Part 2.3 exceeds their Equipment Rating, the Planning Assessment shall include a Corrective Action Plan to address the Equipment Rating violations. The Corrective Action Plan shall:

2.8.1. List System deficiencies and the associated actions needed to achieve required System performance.

2.8.2. Be reviewed in subsequent annual Planning Assessments for continued validity and implementation status of identified System Facilities and Operating Procedures.

R3. For the steady state portion of the Planning Assessment, each Transmission Planner and Planning Coordinator shall perform studies for the Near-Term and Long-Term Transmission Planning Horizons in Requirement R2, Parts 2.1, and 2.2. The studies shall be based on computer simulation models using data provided in Requirement R1. *[Violation Risk Factor: Medium] [Time Horizon: Long-term Planning]*

3.1. Studies shall be performed for planning events to determine whether the BES meets the performance requirements in Table 1 based on the Contingency list created in Requirement R3, Part 3.4.

3.2. Studies shall be performed to assess the impact of the extreme events which are identified by the list created in Requirement R3, Part 3.5.

3.3. Contingency analyses for Requirement R3, Parts 3.1 & 3.2 shall:

3.3.1. Simulate the removal of all elements that the Protection System and other automatic controls are expected to disconnect for each Contingency without operator intervention. The analyses shall include the impact of subsequent:

3.3.1.1. Tripping of generators where simulations show generator bus voltages or high side of the generation step up (GSU) voltages are less than known or assumed minimum generator steady state or ride through voltage limitations. Include in the assessment any assumptions made.

3.3.1.2. Tripping of Transmission elements where relay loadability limits are exceeded.

3.3.2. Simulate the expected automatic operation of existing and planned devices designed to provide steady state control of electrical system quantities when such devices impact the study area. These devices may include equipment such as phase-shifting transformers, load tap changing transformers, and switched capacitors and inductors.

3.4. Those planning events in Table 1, that are expected to produce more severe System impacts on its portion of the BES, shall be identified and a list of those Contingencies to be evaluated for System performance in Requirement R3, Part 3.1 created. The rationale for those Contingencies selected for evaluation shall be available as supporting information.

3.4.1. The Planning Coordinator and Transmission Planner shall coordinate with adjacent Planning Coordinators and Transmission Planners to ensure that

Contingencies on adjacent Systems which may impact their Systems are included in the Contingency list.

3.5. Those extreme events in Table 1 that are expected to produce more severe System impacts shall be identified and a list created of those events to be evaluated in Requirement R3, Part 3.2. The rationale for those Contingencies selected for evaluation shall be available as supporting information. If the analysis concludes there is Cascading caused by the occurrence of extreme events, an evaluation of possible actions designed to reduce the likelihood or mitigate the consequences and adverse impacts of the event(s) shall be conducted.

R4. For the Stability portion of the Planning Assessment, as described in Requirement R2, Parts 2.4 and 2.5, each Transmission Planner and Planning Coordinator shall perform the Contingency analyses listed in Table 1. The studies shall be based on computer simulation models using data provided in Requirement R1. *[Violation Risk Factor: Medium] [Time Horizon: Long-term Planning]*

4.1. Studies shall be performed for planning events to determine whether the BES meets the performance requirements in Table 1 based on the Contingency list created in Requirement R4, Part 4.4.

4.1.1. For planning event P1: No generating unit shall pull out of synchronism. A generator being disconnected from the System by fault clearing action or by a Special Protection System is not considered pulling out of synchronism.

4.1.2. For planning events P2 through P7: When a generator pulls out of synchronism in the simulations, the resulting apparent impedance swings shall not result in the tripping of any Transmission system elements other than the generating unit and its directly connected Facilities.

4.1.3. For planning events P1 through P7: Power oscillations shall exhibit acceptable damping as established by the Planning Coordinator and Transmission Planner.

4.2. Studies shall be performed to assess the impact of the extreme events which are identified by the list created in Requirement R4, Part 4.5.

4.3. Contingency analyses for Requirement R4, Parts 4.1 and 4.2 shall :

4.3.1. Simulate the removal of all elements that the Protection System and other automatic controls are expected to disconnect for each Contingency without operator intervention. The analyses shall include the impact of subsequent:

4.3.1.1. Successful high speed (less than one second) reclosing and unsuccessful high speed reclosing into a Fault where high speed reclosing is utilized.

4.3.1.2. Tripping of generators where simulations show generator bus voltages or high side of the GSU voltages are less than known or assumed generator low voltage ride through capability. Include in the assessment any assumptions made.

4.3.1.3. Tripping of Transmission lines and transformers where transient swings cause Protection System operation based on generic or actual relay models.

4.3.2. Simulate the expected automatic operation of existing and planned devices designed to provide dynamic control of electrical system quantities when

such devices impact the study area. These devices may include equipment such as generation exciter control and power system stabilizers, static var compensators, power flow controllers, and DC Transmission controllers.

4.4. Those planning events in Table 1 that are expected to produce more severe System impacts on its portion of the BES, shall be identified, and a list created of those Contingencies to be evaluated in Requirement R4, Part 4.1. The rationale for those Contingencies selected for evaluation shall be available as supporting information.

4.4.1. Each Planning Coordinator and Transmission Planner shall coordinate with adjacent Planning Coordinators and Transmission Planners to ensure that Contingencies on adjacent Systems which may impact their Systems are included in the Contingency list.

4.5. Those extreme events in Table 1 that are expected to produce more severe System impacts shall be identified and a list created of those events to be evaluated in Requirement R4, Part 4.2. The rationale for those Contingencies selected for evaluation shall be available as supporting information. If the analysis concludes there is Cascading caused by the occurrence of extreme events, an evaluation of possible actions designed to reduce the likelihood or mitigate the consequences of the event(s) shall be conducted.

R5. Each Transmission Planner and Planning Coordinator shall have criteria for acceptable System steady state voltage limits, post-Contingency voltage deviations, and the transient voltage response for its System. For transient voltage response, the criteria shall at a minimum, specify a low voltage level and a maximum length of time that transient voltages may remain below that level. *[Violation Risk Factor: Medium] [Time Horizon: Long-term Planning]*

R6. Each Transmission Planner and Planning Coordinator shall define and document, within their Planning Assessment, the criteria or methodology used in the analysis to identify System instability for conditions such as Cascading, voltage instability, or uncontrolled islanding. *[Violation Risk Factor: Low] [Time Horizon: Long-term Planning]*

R7. Each Planning Coordinator, in conjunction with each of its Transmission Planners, shall determine and identify each entity's individual and joint responsibilities for performing the required studies for the Planning Assessment. *[Violation Risk Factor: Low] [Time Horizon: Long-term Planning]*

R8. Each Planning Coordinator and Transmission Planner shall distribute its Planning Assessment results to adjacent Planning Coordinators and adjacent Transmission Planners within 90 calendar days of completing its Planning Assessment, and to any functional entity that has a reliability related need and submits a written request for the information within 30 days of such a request. *[Violation Risk Factor: Medium] [Time Horizon: Long-term Planning]*

8.1. If a recipient of the Planning Assessment results provides documented comments on the results, the respective Planning Coordinator or Transmission Planner shall provide a documented response to that recipient within 90 calendar days of receipt of those comments.

Table 1 – Steady State & Stability Performance Planning Events

Steady State & Stability:

a. The System shall remain stable. Cascading and uncontrolled islanding shall not occur.
b. Consequential Load Loss as well as generation loss is acceptable as a consequence of any event excluding P0.
c. Simulate the removal of all elements that Protection Systems and other controls are expected to automatically disconnect for each event.
d. Simulate Normal Clearing unless otherwise specified.
e. Planned System adjustments such as Transmission configuration changes and re-dispatch of generation are allowed if such adjustments are executable within the time duration applicable to the Facility Ratings.

Steady State Only:

f. Applicable Facility Ratings shall not be exceeded.
g. System steady state voltages and post-Contingency voltage deviations shall be within acceptable limits as established by the Planning Coordinator and the Transmission Planner.
h. Planning event P0 is applicable to steady state only.
i. The response of voltage sensitive Load that is disconnected from the System by end-user equipment associated with an event shall not be used to meet steady state performance requirements.

Stability Only:

j. Transient voltage response shall be within acceptable limits established by the Planning Coordinator and the Transmission Planner.

Category	Initial Condition	Event [1]	Fault Type [2]	BES Level [3]	Interruption of Firm Transmission Service Allowed [4]	Non-Consequential Load Loss Allowed
P0 No Contingency	Normal System	None	N/A	EHV, HV	No	No
P1 Single Contingency	Normal System	Loss of one of the following: 1. Generator 2. Transmission Circuit 3. Transformer [5] 4. Shunt Device [6]	3Ø	EHV, HV	No[9]	No[12]
		5. Single Pole of a DC line	SLG			
P2 Single Contingency	Normal System	1. Opening of a line section w/o a fault [7]	N/A	EHV, HV	No[9]	No[12]
		2. Bus Section Fault	SLG	EHV	No[9]	No
				HV	Yes	Yes
		3. Internal Breaker Fault [8] (non-Bus-tie Breaker)	SLG	EHV	No[9]	No
				HV	Yes	Yes
		4. Internal Breaker Fault (Bus-tie Breaker) [8]	SLG	EHV, HV	Yes	Yes

Category	Initial Condition	Event [1]	Fault Type [2]	BES Level [3]	Interruption of Firm Transmission Service Allowed [4]	Non-Consequential Load Loss Allowed
P3 Multiple Contingency	Loss of generator unit followed by System adjustments[9]	Loss of one of the following: 1. Generator 2. Transmission Circuit 3. Transformer [5] 4. Shunt Device [6]	3Ø	EHV, HV	No[9]	No[12]
		5. Single pole of a DC line	SLG			
P4 Multiple Contingency *(Fault plus stuck breaker[10])*	Normal System	Loss of multiple elements caused by a stuck breaker [10](non-Bus-tie Breaker) attempting to clear a Fault on one of the following: 1. Generator 2. Transmission Circuit 3. Transformer [5] 4. Shunt Device [6] 5. Bus Section	SLG	EHV	No[9]	No
				HV	Yes	Yes
		6. Loss of multiple elements caused by a stuck breaker[10] (Bus-tie Breaker) attempting to clear a Fault on the associated bus	SLG	EHV, HV	Yes	Yes
P5 Multiple Contingency *(Fault plus relay failure to operate)*	Normal System	Delayed Fault Clearing due to the failure of a non-redundant relay[13] protecting the Faulted element to operate as designed, for one of the following: 1. Generator 2. Transmission Circuit 3. Transformer [5] 4. Shunt Device [6] 5. Bus Section	SLG	EHV	No[9]	No
				HV	Yes	Yes
P6 Multiple Contingency *(Two overlapping singles)*	Loss of one of the following followed by System adjustments.[9] 1. Transmission Circuit 2. Transformer [5] 3. Shunt Device[6] 4. Single pole of a DC line	Loss of one of the following: 1. Transmission Circuit 2. Transformer [5] 3. Shunt Device [6]	3Ø	EHV, HV	Yes	Yes
		4. Single pole of a DC line	SLG	EHV, HV	Yes	Yes

Category	Initial Condition	Event [1]	Fault Type [2]	BES Level [3]	Interruption of Firm Transmission Service Allowed [4]	Non-Consequential Load Loss Allowed
P7 Multiple Contingency *(Common Structure)*	Normal System	The loss of: 1. Any two adjacent (vertically or horizontally) circuits on common structure [11] 2. Loss of a bipolar DC line	SLG	EHV, HV	Yes	Yes

Table 1 – Steady State & Stability Performance Extreme Events

Steady State & Stability

For all extreme events evaluated:

a. Simulate the removal of all elements that Protection Systems and automatic controls are expected to disconnect for each Contingency.

b. Simulate Normal Clearing unless otherwise specified.

Steady State

1. Loss of a single generator, Transmission Circuit, single pole of a DC Line, shunt device, or transformer forced out of service followed by another single generator, Transmission Circuit, single pole of a different DC Line, shunt device, or transformer forced out of service prior to System adjustments.
2. Local area events affecting the Transmission System such as:
   a. Loss of a tower line with three or more circuits.[11]
   b. Loss of all Transmission lines on a common Right-of-Way[11].
   c. Loss of a switching station or substation (loss of one voltage level plus transformers).
   d. Loss of all generating units at a generating station.
   e. Loss of a large Load or major Load center.
3. Wide area events affecting the Transmission System based on System topology such as:
   a. Loss of two generating stations resulting from conditions such as:
      i. Loss of a large gas pipeline into a region or multiple regions that have significant gas-fired generation.
      ii. Loss of the use of a large body of water as the cooling source for generation.
      iii. Wildfires.
      iv. Severe weather, e.g., hurricanes, tornadoes, etc.
      v. A successful cyber attack.
      vi. Shutdown of a nuclear power plant(s) and related facilities for a day or more for common causes such as problems with similarly designed plants.
   b. Other events based upon operating experience that may result in wide area disturbances.

Stability

1. With an initial condition of a single generator, Transmission circuit, single pole of a DC line, shunt device, or transformer forced out of service, apply a 3Ø fault on another single generator, Transmission circuit, single pole of a different DC line, shunt device, or transformer prior to System adjustments.
2. Local or wide area events affecting the Transmission System such as:
   a. 3Ø fault on generator with stuck breaker[10] or a relay failure[13] resulting in Delayed Fault Clearing.
   b. 3Ø fault on Transmission circuit with stuck breaker[10] or a relay failure[13] resulting in Delayed Fault Clearing.
   c. 3Ø fault on transformer with stuck breaker[10] or a relay failure[13] resulting in Delayed Fault Clearing.
   d. 3Ø fault on bus section with stuck breaker[10] or a relay failure[13] resulting in Delayed Fault Clearing.
   e. 3Ø internal breaker fault.
   f. Other events based upon operating experience, such as consideration of initiating events that experience suggests may result in wide area disturbances

Table 1 – Steady State & Stability Performance Footnotes (Planning Events and Extreme Events)
1. If the event analyzed involves BES elements at multiple System voltage levels, the lowest System voltage level of the element(s) removed for the analyzed event determines the stated performance criteria regarding allowances for interruptions of Firm Transmission Service and Non-Consequential Load Loss.
2. Unless specified otherwise, simulate Normal Clearing of faults. Single line to ground (SLG) or three-phase (3Ø) are the fault types that must be evaluated in Stability simulations for the event described. A 3Ø or a double line to ground fault study indicating the criteria are being met is sufficient evidence that a SLG condition would also meet the criteria.
3. Bulk Electric System (BES) level references include extra-high voltage (EHV) Facilities defined as greater than 300kV and high voltage (HV) Facilities defined as the 300kV and lower voltage Systems. The designation of EHV and HV is used to distinguish between stated performance criteria allowances for interruption of Firm Transmission Service and Non-Consequential Load Loss.
4. Curtailment of Conditional Firm Transmission Service is allowed when the conditions and/or events being studied formed the basis for the Conditional Firm Transmission Service.
5. For non-generator step up transformer outage events, the reference voltage, as used in footnote 1, applies to the low-side winding (excluding tertiary windings). For generator and Generator Step Up transformer outage events, the reference voltage applies to the BES connected voltage (high-side of the Generator Step Up transformer). Requirements which are applicable to transformers also apply to variable frequency transformers and phase shifting transformers.
6. Requirements which are applicable to shunt devices also apply to FACTS devices that are connected to ground.
7. Opening one end of a line section without a fault on a normally networked Transmission circuit such that the line is possibly serving Load radial from a single source point.
8. An internal breaker fault means a breaker failing internally, thus creating a System fault which must be cleared by protection on both sides of the breaker.
9. An objective of the planning process should be to minimize the likelihood and magnitude of interruption of Firm Transmission Service following Contingency events. Curtailment of Firm Transmission Service is allowed both as a System adjustment (as identified in the column entitled 'Initial Condition') and a corrective action when achieved through the appropriate re-dispatch of resources obligated to re-dispatch, where it can be demonstrated that Facilities, internal and external to the Transmission Planner's planning region, remain within applicable Facility Ratings and the re-dispatch does not result in any Non-Consequential Load Loss. Where limited options for re-dispatch exist, sensitivities associated with the availability of those resources should be considered.
10. A stuck breaker means that for a gang-operated breaker, all three phases of the breaker have remained closed. For an independent pole operated (IPO) or an independent pole tripping (IPT) breaker, only one pole is assumed to remain closed. A stuck breaker results in Delayed Fault Clearing.
11. Excludes circuits that share a common structure (Planning event P7, Extreme event steady state 2a) or common Right-of-Way (Extreme event, steady state 2b) for 1 mile or less.
12. An objective of the planning process should be to minimize the likelihood and magnitude of Non-Consequential Load Loss following Contingency events. However, in limited circumstances Non-Consequential Load Loss may be needed to address BES performance requirements. When Non-Consequential Load Loss is utilized within the planning process to address BES performance requirements, such interruption is limited to circumstances where the Non-Consequential Load Loss is documented, including alternatives evaluated; and where the utilization of Non-Consequential Load Loss is subject to review in an open and transparent stakeholder process that includes addressing stakeholder comments.
13. Applies to the following relay functions or types: pilot (#85), distance (#21), differential (#87), current (#50, 51, and 67), voltage (#27 & 59), directional (#32, & 67), and tripping (#86, & 94).

C. Measures

M1. Each Transmission Planner and Planning Coordinator shall provide evidence, in electronic or hard copy format, that it is maintaining System models within their respective area, using data consistent with MOD-010 and MOD-012, including items represented in the Corrective Action Plan, representing projected System conditions, and that the models represent the required information in accordance with Requirement R1.

M2. Each Transmission Planner and Planning Coordinator shall provide dated evidence, such as electronic or hard copies of its annual Planning Assessment, that it has prepared an annual Planning Assessment of its portion of the BES in accordance with Requirement R2.

M3. Each Transmission Planner and Planning Coordinator shall provide dated evidence, such as electronic or hard copies of the studies utilized in preparing the Planning Assessment, in accordance with Requirement R3.

M4. Each Transmission Planner and Planning Coordinator shall provide dated evidence, such as electronic or hard copies of the studies utilized in preparing the Planning Assessment in accordance with Requirement R4.

M5. Each Transmission Planner and Planning Coordinator shall provide dated evidence such as electronic or hard copies of the documentation specifying the criteria for acceptable System steady state voltage limits, post-Contingency voltage deviations, and the transient voltage response for its System in accordance with Requirement R5.

M6. Each Transmission Planner and Planning Coordinator shall provide dated evidence, such as electronic or hard copies of documentation specifying the criteria or methodology used in the analysis to identify System instability for conditions such as Cascading, voltage instability, or uncontrolled islanding that was utilized in preparing the Planning Assessment in accordance with Requirement R6.

M7. Each Planning Coordinator, in conjunction with each of its Transmission Planners, shall provide dated documentation on roles and responsibilities, such as meeting minutes, agreements, and e-mail correspondence that identifies that agreement has been reached on individual and joint responsibilities for performing the required studies and Assessments in accordance with Requirement R7.

M8. Each Planning Coordinator and Transmission Planner shall provide evidence, such as email notices, documentation of updated web pages, postal receipts showing recipient and date; or a demonstration of a public posting, that it has distributed its Planning Assessment results to adjacent Planning Coordinators and adjacent Transmission Planners within 90 days of having completed its Planning Assessment, and to any functional entity who has indicated a reliability need within 30 days of a written request and that the Planning Coordinator or Transmission Planner has provided a documented response to comments received on Planning Assessment results within 90 calendar days of receipt of those comments in accordance with Requirement R8.

D. Compliance

1. Compliance Monitoring Process

1.1 Compliance Enforcement Authority

Regional Entity

1.2 Compliance Monitoring Period and Reset Timeframe

Not applicable.

1.3 Compliance Monitoring and Enforcement Processes:

Compliance Audits

Self-Certifications

Spot Checking

Compliance Violation Investigations

Self-Reporting

Complaints

1.4 Data Retention

The Transmission Planner and Planning Coordinator shall each retain data or evidence to show compliance as identified unless directed by its Compliance Enforcement Authority to retain specific evidence for a longer period of time as part of an investigation:

- The models utilized in the current in-force Planning Assessment and one previous Planning Assessment in accordance with Requirement R1 and Measure M1.
- The Planning Assessments performed since the last compliance audit in accordance with Requirement R2 and Measure M2.
- The studies performed in support of its Planning Assessments since the last compliance audit in accordance with Requirement R3 and Measure M3.
- The studies performed in support of its Planning Assessments since the last compliance audit in accordance with Requirement R4 and Measure M4.
- The documentation specifying the criteria for acceptable System steady state voltage limits, post-Contingency voltage deviations, and transient voltage response since the last compliance audit in accordance with Requirement R5 and Measure M5.
- The documentation specifying the criteria or methodology utilized in the analysis to identify System instability for conditions such as Cascading, voltage instability, or uncontrolled islanding in support of its Planning Assessments since the last compliance audit in accordance with Requirement R6 and Measure M6.
- The current, in force documentation for the agreement(s) on roles and responsibilities, as well as documentation for the agreements in force since the last compliance audit, in accordance with Requirement R7 and Measure M7.

The Planning Coordinator shall retain data or evidence to show compliance as identified unless directed by its Compliance Enforcement Authority to retain specific evidence for a longer period of time as part of an investigation:

- Three calendar years of the notifications employed in accordance with Requirement R8 and Measure M8.

If a Transmission Planner or Planning Coordinator is found non-compliant, it shall keep information related to the non-compliance until found compliant or the time periods specified above, whichever is longer.

1.5 Additional Compliance Information

None.

2. Violation Severity Levels

	Lower VSL	Moderate VSL	High VSL	Severe VSL
R1	The responsible entity's System model failed to represent one of the Requirement R1, Parts 1.1.1 through 1.1.6.	The responsible entity's System model failed to represent two of the Requirement R1, Parts 1.1.1 through 1.1.6.	The responsible entity's System model failed to represent three of the Requirement R1, Parts 1.1.1 through 1.1.6.	The responsible entity's System model failed to represent four or more of the Requirement R1, Parts 1.1.1 through 1.1.6. OR The responsible entity's System model did not represent projected System conditions as described in Requirement R1. OR The responsible entity's System model did not use ~~the latest~~ data consistent with ~~the data~~that provided in accordance with the MOD-010 and MOD-012 standards and other sources, including items represented in the Corrective Action Plan.
R2	The responsible entity failed to comply with Requirement R2, Part 2.6.	The responsible entity failed to comply with Requirement R2, Part 2.3 or Part 2.8.	The responsible entity failed to comply with one of the following Parts of Requirement R2: Part 2.1, Part 2.2, Part 2.4, Part 2.5, or Part 2.7.	The responsible entity failed to comply with two or more of the following Parts of Requirement R2: Part 2.1, Part 2.2, Part 2.4, or Part 2.7. OR~~,~~ The responsible entity does not have a completed annual Planning Assessment.
R3	The responsible entity did not identify planning events as described in Requirement R3, Part 3.4 or extreme events as described in Requirement R3, Part 3.5.	The responsible entity did not perform studies as specified in Requirement R3, Part 3.1 to determine that the BES meets the performance requirements for one of the categories	The responsible entity did not perform studies as specified in Requirement R3, Part 3.1 to determine that the BES meets the performance requirements for two of the categories (P2 through P7) in	The responsible entity did not perform studies as specified in Requirement R3, Part 3.1 to determine that the BES meets the performance requirements for three or more of the categories (P2

	Lower VSL	Moderate VSL	High VSL	Severe VSL
		(P2 through P7) in Table 1. OR The responsible entity did not perform studies as specified in Requirement R3, Part 3.2 to assess the impact of extreme events.	Table 1. OR The responsible entity did not perform Contingency analysis as described in Requirement R3, Part 3.3.	through P7) in Table 1. OR The responsible entity did not perform studies to determine that the BES meets the performance requirements for the P0 or P1 categories in Table 1. OR The responsible entity did not base its studies on computer simulation models using data provided in Requirement R1.
R4	The responsible entity did not identify planning events as described in Requirement R4, Part 4.4 or extreme events as described in Requirement R4, Part 4.5.	The responsible entity did not perform studies as specified in Requirement R4, Part 4.1 to determine that the BES meets the performance requirements for one of the categories (P1 through P7) in Table 1. OR The responsible entity did not perform studies as specified in Requirement R4, Part 4.2 to assess the impact of extreme events.	The responsible entity did not perform studies as specified in Requirement R4, Part 4.1 to determine that the BES meets the performance requirements for two of the categories (P1 through P7) in Table 1. OR The responsible entity did not perform Contingency analysis as described in Requirement R4, Part 4.3.	The responsible entity did not perform studies as specified in Requirement R4, Part 4.1 to determine that the BES meets the performance requirements for three or more of the categories (P1 through P7) in Table 1. OR The responsible entity did not base its studies on computer simulation models using data provided in Requirement R1.
R5	N/A	N/A	N/A	The responsible entity does not have criteria for acceptable System steady state voltage limits, post-Contingency voltage deviations, or the transient voltage response for its System.
R6	N/A	N/A	N/A	The responsible entity failed to define and document the criteria or methodology for System instability used within its analysis as described in

	Lower VSL	Moderate VSL	High VSL	Severe VSL
				Requirement R6.
R7	N/A	N/A	N/A	The Planning Coordinator, in conjunction with each of its Transmission Planners, failed to determine and identify individual or joint responsibilities for performing required studies.
R8	The responsible entity distributed its Planning Assessment results to adjacent Planning Coordinators and adjacent Transmission Planners but it was more than 90 days but less than or equal to 120 days following its completion. OR, The responsible entity distributed its Planning Assessment results to functional entities having a reliability related need who requested the Planning Assessment in writing but it was more than 30 days but less than or equal to 40 days following the request.	The responsible entity distributed its Planning Assessment results to adjacent Planning Coordinators and adjacent Transmission Planners but it was more than 120 days but less than or equal to 130 days following its completion. OR, The responsible entity distributed its Planning Assessment results to functional entities having a reliability related need who requested the Planning Assessment in writing but it was more than 40 days but less than or equal to 50 days following the request.	The responsible entity distributed its Planning Assessment results to adjacent Planning Coordinators and adjacent Transmission Planners but it was more than 130 days but less than or equal to 140 days following its completion. OR, The responsible entity distributed its Planning Assessment results to functional entities having a reliability related need who requested the Planning Assessment in writing but it was more than 50 days but less than or equal to 60 days following the request.	The responsible entity distributed its Planning Assessment results to adjacent Planning Coordinators and adjacent Transmission Planners but it was more than 140 days following its completion. OR The responsible entity did not distribute its Planning Assessment results to adjacent Planning Coordinators and adjacent Transmission Planners. OR The responsible entity distributed its Planning Assessment results to functional entities having a reliability related need who requested the Planning Assessment in writing but it was more than 60 days following the request. OR The responsible entity did not distribute its Planning Assessment results to functional entities having a reliability related need who requested the Planning Assessment in writing.

E. Regional Variances

None.

Version History

Version	Date	Action	Change Tracking
1	03/17/2001	Revision of TPL-001-0 to modify only Table 1 footnote b. Approved by Board of Trustees	Project 2006-02 – revision to address FERC directive
~~1~~2	~~TBD~~To be Determined	Revision of TPL-001-~~0 as per Project 2006-02~~1; includes merging and upgrading requirements of TPL-001-0, TPL-002-0, TPL-003-0, and TPL-004-0 into one, single, comprehensive, coordinated standard: TPL-001-2; and retirement of TPL-005-0 and TPL-006-0.	~~Not employed due to scope of~~Project 2006-02 – complete revision

NERC
NORTH AMERICAN ELECTRIC RELIABILITY CORPORATION

Standards Announcement

Project 2006-02 Assess Transmission and Future Needs Recirculation Ballot Now Open July 13-July 22, 2011

Now available at: https://standards.nerc.net/CurrentBallots.aspx

A recirculation ballot for the proposed standard, TPL-001-2 — Transmission System Planning Performance Requirements is being conducted through **8:00 pm Eastern on Friday, July 22, 2011**.

The drafting team has made a number of non-substantive changes to address comments from the parallel comment period and successive ballot that concluded on May 31, 2011. No changes were made to the text of any Requirements; however, the team made the following minor modifications to the standard:

- Changed bullets under Requirements R3 and R4 to numbers
- Added more words to the evidence retention for Requirements R5 and R6 to align more closely with the language in the associated requirement
- Rearranged the wording of the third Severe VSL for R1 for clarity
- Added the word, "results" to all VSLs for Requirement R8 for closer alignment with the language in the associated requirement

The team also made the following minor modifications to the Implementation Plan:

- Rearranged content but did not change proposed phasing of requirements
- Added more specificity to the language identifying when the already approved standards will be retired. (Midnight the day before TPL-001-2 becomes effective)
- Corrected some typographical errors.

Documents for this project, including clean and redline versions of TPL-001-2 and the implementation plan are posted at the following site: http://www.nerc.com/filez/standards/Assess-Transmission-Future-Needs.html. Note that because TPL-001-2 incorporates requirements from several standards, it is not practical to produce a redline showing changes to the last approved version. The last approved versions of each of the following standards have been posted for reference: TPL-001-1; TPL-002-1b; TPL-003-1a; TPL-004-1; TPL-005-0; and TPL-006-0.1.

Instructions

In the recirculation ballot, votes are counted by exception. Only members of the ballot pool may cast a ballot; all ballot pool members may change their prior votes. A ballot pool member who failed to cast a ballot during the last ballot window may cast a ballot in the recirculation ballot window. If a ballot pool member does not

participate in the recirculation ballot, that member's last vote cast in the successive ballot that ended on May 31, 2011 will be carried over.

Members of the ballot pool associated with this project may log in and submit their votes from the following page: https://standards.nerc.net/CurrentBallots.aspx.

Next Steps

Voting results will be posted and announced after the ballot window closes. If the standard is approved by a two-thirds majority, it will be submitted for adoption by the NERC Board of Trustees prior to filing with regulatory authorities for approval.

Background

TPL-001-2 is designed to be a single, comprehensive, and coordinated standard that merges the requirements of four existing standards: TPL-001-1; TPL-002-1b; TPL-003-1a; TPL-004-1 and also results in the retirement of TPL-005 and TPL-006. The proposed standard includes several new definitions. The purpose of the proposed standard is to establish transmission system planning performance requirements within the planning horizon to develop a bulk electric system that will operate reliably over a broad spectrum of system conditions and following a wide range of probable contingencies.

Additional information about this project is available on the project page at http://www.nerc.com/filez/standards/Assess-Transmission-Future-Needs.html.

Standards Development Process

The Standard Processes Manual contains all the procedures governing the standards development process. The success of the NERC standards development process depends on stakeholder participation. We extend our thanks to all those who participate. For more information or assistance, please contact Monica Benson at monica.benson@nerc.net.

For more information or assistance, please contact Monica Benson, Standards Process Administrator, at monica.benson@nerc.net or at 404-446-2560.

North American Electric Reliability Corporation
116-390 Village Blvd.
Princeton, NJ 08540
609.452.8060 | www.nerc.com

NERC
NORTH AMERICAN ELECTRIC RELIABILITY CORPORATION

Consideration of Comments on Initial Ballot — Assess Transmission Future Needs and Develop Transmission Plans (Project 2006-02)
Date of Initial Ballot: July 13 – July 22, 2011

Summary Consideration:

If you feel that the drafting team overlooked your comments, please let us know immediately. Our goal is to give every comment serious consideration in this process. If you feel there has been an error or omission, you can contact the Vice President and Director of Standards, Herb Schrayshuen, at 609-452-8060 or at herb.schrayshuen@nerc.net. In addition, there is a NERC Reliability Standards Appeals Process.[1]

Voter	Entity	Segment	Vote	Comment
Brock Ondayko	AEP Service Corp.	5	Affirmative	Comments submitted via electronic form by Thad Ness on behalf of American Electric Power.
Mark B Thompson	Alberta Electric System Operator	2	Affirmative	With respect to R2, Part 2.7.1 which lists system deficiencies and the associated actions needed to achieve System performance, the 3rd and 4th bullet identify the following actions as being acceptable. :Installation or modification of automatic generation tripping as a response to a single or multiple contingency to mitigate Stability performance violations. :Installation or modification of manual and automatic generation runback/tripping as a response to a single or multiple Contingency to mitigate steady state performance violations. The current Alberta transmission policy does not allow for the tripping or runback of generation for a single contingency; however for multiple contingencies it is acceptable. The AESO will bring TPL-001-2, with any modifications, through the standard development consultation process in Alberta and ultimately to the Alberta Utilities Commission for approval.
Kirit Shah	Ameren Services	1	Negative	(1) Requirement R2.4.1, which addresses dynamic load modeling, has been a cause for concern because of the lack of guidance regarding reasonable induction motor representation as opposed to generic load models. While it is recognized that the effort to simulate the effects of induction motor loads is important, it is premature to include such modeling as part of the requirements for this standard. (2) For Measurements M3 and M4, there is still some question as to what is to be provided as sufficient evidence of a study. It is not clear whether the study results would be sufficient, or whether the entire powerflow, stability, or short circuit effort needs to be documented in a formal study report. For example, it is not clear whether contingency lists used in performing the study work would need to be

[1] The appeals process is in the Reliability Standards Development Procedure: http://www.nerc.com/files/RSDP_V6_1_12Mar07.pdf.

Voter	Entity	Segment	Vote	Comment
				retained as part of the documentation. (3) The standard as written is too prescriptive with regard to critical system conditions which are to be modeled. Such conditions would vary considerably for different systems across the continent. (4) Overall, we believe that this standard does not improve the clarity of what is required, and would give additional occasions for disputes between compliance monitors and various registered entities.
Paul B. Johnson	American Electric Power	1	Affirmative	Comments submitted by Thad Ness on behalf of American Electric Power
Steven Norris	APS	3	Affirmative	Comments submitted.
Robert Smith	Arizona Public Service Co.	1	Affirmative	Comments submitted.
Edward Cambridge	Arizona Public Service Co.	5	Negative	While AZPS generally supports this standard, AZPS cannot support the violation severity levels that are proposed in the recirculation ballot. AZPS believes the time frames set forth in the proposed security levels are unreasonably short (10 days) and should be extended to 30 days between each elevation in severity level. For these reasons, AZPS has changed its vote to “negative.”
John Bussman	Associated Electric Cooperative, Inc.	1	Negative	see comments
Kevin Smith	Balancing Authority of Northern California NCR11118	1	Affirmative	Previous TPL Standard balloting included the FERC Order that clarified footnote ‘b’, that addressed planned or controlled interruption of electric supply for N-1 conditions. Registered Entity’s Board of Directors, state Utilities Commission, and/or its customers should determine what level of service is acceptable with the associated cost. This point is captured in footnote #12 of Table 1 in the TPL Standard and is necessary for maintaining SMUD’s Affirmative vote.
Venkataramakrishnan Vinnakota	BC Hydro	2	Negative	Comments submitted.
Patricia Robertson	BC Hydro and Power Authority	1	Negative	Comments submitted
Pat G. Harrington	BC Hydro and Power	3	Negative	Comments Submitted

Voter	Entity	Segment	Vote	Comment
	Authority			
Clement Ma	BC Hydro and Power Authority	5	Negative	Comments submitted.
Donald S. Watkins	Bonneville Power Administration	1	Affirmative	comments submitted
Rebecca Berdahl	Bonneville Power Administration	3	Affirmative	BPA comments submitted separately.
Francis J. Halpin	Bonneville Power Administration	5	Affirmative	Comments have been submitted separately.
Brenda S. Anderson	Bonneville Power Administration	6	Affirmative	Comments have been submitted.
Jeanie Doty	City of Austin dba Austin Energy	5	Affirmative	Previous TPL Standard balloting included the FERC Order that clarified footnote 'b', regarding the planned or controlled interruption of electric supply for an N-1 situation. In our view, a Registered Entity's Board of Directors, local public utility commission, and/or its customers should determine what level of service is acceptable and with what associated cost. This view is captured in footnote #12 of Table 1 in the TPL Standard and will be crucial to maintaining an Affirmative vote. Regarding R2 (2.5): The value of annually assessing system stability for years 6-10 is questionable. The requirement for stability assessment in years 6-10 should be limited to new generation interconnections or planned major transmission system improvements with regional impact. The standard should clarify the 'material changes' that would necessitate stability planning assessments and documentation. Regarding the R8 requirement to distribute all Planning Assessment results to adjacent Planning Coordinators and Transmission Planners is excessive and cumbersome. Regarding R8, we suggest the following language: Each Planning Coordinator and Transmission Planner shall distribute its Planning Assessment results to adjacent Planning Coordinators and Transmission Planners in accordance with the requirements of the applicable Reliability Coordinator. Any Registered Entity with a reliability-related need may submit a written request for the Planning Assessment results and the

Voter	Entity	Segment	Vote	Comment
				Transmission Planner or Planning Coordinator shall provide the latest Planning Assessment results within 30 days of such request.
Gregg R Griffin	City of Green Cove Springs	3	Affirmative	R7 is not needed and administrative in nature. Instead is should say that an entity can use as evidence another entity's study, but not in the requirement and rather in the measures. R8 is ambiguous, does the requirement require submitting the Planning Assessment only after receiving a written request, or automatic distribution to neighboring PCs and TPs without a written request, and to others with a reliability related need following a written request? Table 1, under first heading of "Steady State and Stability", bullet c should be removed since it is duplicative of the standard, and not entirely consistent with the standard (e.g., open to interpretation whereas the standard better clarifies how to study protection system operation)
Bill Hughes	City of Redding	3	Affirmative	Registered Entity's Board of Directors, state Utilities Commission, and/or its customers should determine what level of service is acceptable and with what associated cost. We believe that this is a local load reliability issue and not a BES concern. This view is captured as footnote #12 that allows loss on Non-Consequential load loss under certain circumstances and is essential in maintaining an affirmative vote.
Nicholas Zettel	City of Redding	4	Affirmative	Registered Entity's Board of Directors, state Utilities Commission, and/or its customers should determine what level of service is acceptable and with what associated cost. We believe that this is a local load reliability issue and not a BES concern. This view is captured as footnote #12 that allows loss on Non-Consequential load loss under certain circumstances and is essential in maintaining an affirmative vote.
Paul Cummings	City of Redding	5	Affirmative	Registered Entity's Board of Directors, state Utilities Commission, and/or its customers should determine what level of service is acceptable and with what associated cost. We believe that this is a local load reliability issue and not a BES concern. This view is captured as footnote #12 that allows loss on Non-Consequential load loss under certain circumstances and is essential in maintaining an affirmative vote.
Marvin Briggs	City of Redding	6	Affirmative	Registered Entity's Board of Directors, state Utilities Commission, and/or its customers should determine what level of service is acceptable and with what associated cost. We believe that this is a local load reliability issue and not a BES concern. This view is captured as footnote #12 that allows loss on Non-Consequential load loss under certain circumstances and is essential in maintaining an affirmative vote.

Voter	Entity	Segment	Vote	Comment
Randall McCamish	City of Vero Beach	1	Affirmative	R7 is not needed and administrative in nature. Instead is should say that an entity can use as evidence another entity's study, but not in the requirement and rather in the measures. R8 is ambiguous, does the requirement require submitting the Planning Assessment only after receiving a written request, or automatic distribution to neighboring PCs and TPs without a written request, and to others with a reliability related need following a written request? Table 1, under first heading of "Steady State and Stability", bullet c should be removed since it is duplicative of the standard, and not entirely consistent with the standard (e.g., open to interpretation whereas the standard better clarifies how to study protection system operation).
Jack Stamper	Clark Public Utilities	1	Affirmative	Previous TPL Standard balloting included the FERC Order that clarified footnote 'b', regarding the planned or controlled interruption of electric supply for an N-1 situation. In our view, the utility's elected board of commissioners should have the determination what level of service is acceptable and with what associated cost. This view is captured in footnote #12 of Table 1 in the TPL Standard and will be crucial to maintaining an Affirmative vote.
Peter T Yost	Consolidated Edison Co. of New York	3	Negative	Requirement R1.1.5: Delete "and Interchange." The inclusion of other than Firm transactions (e.g. economic transactions in Interchange) in a base power flow case utilized for planning/designing the interconnected system blurs the boundary between reliability issues and purely economic issues. Reliability issues are issues that a Transmission Owner (TO) must address for the purpose of meeting its load demand, and are defined by the application of well established reliability standards and criteria that are based on the electrical characteristics of the interconnected system, but without economic considerations. Instead, economic transactions are types of transactions that a TO may enter into once its load obligations are met, and are evaluated based on economic parameters that are markedly different from the aforementioned reliability criteria (e.g. congestion costs). Modeling all types of transactions in a power flow case without distinction detracts from the accuracy and validity of either assessment (reliability and economic).
Wilket (Jack) Ng	Consolidated Edison Co. of New York	5	Negative	Requirement R1.1.5: Delete "and Interchange." The inclusion of other than Firm transactions (e.g. economic transactions in Interchange) in a base power flow case utilized for planning/designing the interconnected system blurs the boundary between reliability issues and purely economic issues. Reliability issues are issues that a Transmission Owner (TO) must address for the purpose of meeting its load demand, and are defined by the

Voter	Entity	Segment	Vote	Comment
				application of well established reliability standards and criteria that are based on the electrical characteristics of the interconnected system, but without economic considerations. Instead, economic transactions are types of transactions that a TO may enter into once its load obligations are met, and are evaluated based on economic parameters that are markedly different from the aforementioned reliability criteria (e.g. congestion costs). Modeling all types of transactions in a power flow case without distinction detracts from the accuracy and validity of either assessment (reliability and economic).
Nickesha P Carrol	Consolidated Edison Co. of New York	6	Negative	Requirement R1.1.5: Delete "and Interchange." The inclusion of other than Firm transactions (e.g. economic transactions in Interchange) in a base power flow case utilized for planning/designing the interconnected system blurs the boundary between reliability issues and purely economic issues. Reliability issues are issues that a Transmission Owner (TO) must address for the purpose of meeting its load demand, and are defined by the application of well established reliability standards and criteria that are based on the electrical characteristics of the interconnected system, but without economic considerations. Instead, economic transactions are types of transactions that a TO may enter into once its load obligations are met, and are evaluated based on economic parameters that are markedly different from the aforementioned reliability criteria (e.g. congestion costs). Modeling all types of transactions in a power flow case without distinction detracts from the accuracy and validity of either assessment (reliability and economic).
David A. Lapinski	Consumers Energy	3	Negative	We agree with the comments of MISO.
David Frank Ronk	Consumers Energy	4	Negative	We agree with comments submitted by MISO
James B Lewis	Consumers Energy	5	Negative	We endorse the comments of MISO.
Sally Witt	East Kentucky Power Coop.	3	Negative	(1) While the Planning Coordinator and Transmission Planner should share the results of their respective Planning Assessments with entities that have a reliability related need, Requirement R8 doesn't have a significant impact on reliability. The Violation Risk Factor should be changed to Lower. (2) Footnote 3, which applies to BES Level in Table 1, draws in non-BES facilities. It states that HV is defined as 300 kV and lower voltage systems, which includes all voltages below the traditional 100-kV cutoff for the BES.

Voter	Entity	Segment	Vote	Comment
				(3) Requirement R1 could be modified unintentionally and fundamentally change the requirement because R1 references MOD-010 and MOD-012 without a version number. Thus, all future updates to these standards directly modify TPL-001-2 Requirement R1 whether it was intended or not.
Stephen Ricker	East Kentucky Power Coop.	5	Negative	Comments on Project 2006-02 Assess Transmission Future Needs and Develop Transmission Plans Recirculation Ballot (1) While the Planning Coordinator and Transmission Planner should share the results of their respective Planning Assessments with entities that have a reliability related need, Requirement R8 doesn't have a significant impact on reliability. The Violation Risk Factor should be changed to Lower. (2) Footnote 3, which applies to BES Level in Table 1, draws in non-BES facilities. It states that HV is defined as 300 kV and lower voltage systems, which includes all voltages below the traditional 100-kV cutoff for the BES. (3) Requirement R1 could be modified unintentionally and fundamentally change the requirement because R1 references MOD-010 and MOD-012 without a version number. Thus, all future updates to these standards directly modify TPL-001-2 Requirement R1 whether it was intended or not.
Charles B Manning	Electric Reliability Council of Texas, Inc.	2	Negative	ERCOT's comments have been submitted via the online form.
Edward J Davis	Entergy Services, Inc.	1	Affirmative	Commens Submitted
Terri F Benoit	Entergy Services, Inc.	6	Affirmative	'Commits Submitted".
Lee Schuster	Florida Power Corporation	3	Affirmative	Comments Submitted
Luther E. Fair	Gainesville Regional Utilities	1	Affirmative	I do have one point of concern for your consideration; This standard does raise the bar in some areas, most notably for an entity the size of GVL it applies performance requirements for long lead equipment emergency replacement. For example if we don't have the ability to replace a transformer at Parker within a few months of failure, then we would have to demonstrate that we can meet many (but not all) of the same performance criteria without the transformer that we can with the transformer.

Voter	Entity	Segment	Vote	Comment
Harold Taylor	Georgia Transmission Corporation	1	Affirmative	All of our concerns have been addressed. Regards, Robert Casey Georgia Transmission Corporation
Ajay Garg	Hydro One Networks, Inc.	1	Negative	Hydro One Networks is casting a negative vote. Other than a few changes related to Footnotes 9 and 12 of Table 1 and VSLs, the other changes in the proposed draft are minor. The concerns of the industry on several important issues have not been sufficiently addressed in this draft. For detailed comments please refer to our submission through the on-line comment form.
David Kiguel	Hydro One Networks, Inc.	3	Negative	Hydro One Networks is casting a negative vote. Other than a few changes related to Footnotes 9 and 12 of Table 1 and VSLs, the other changes in the proposed draft are minor. The concerns of the industry on several important issues have not been sufficiently addressed in this draft. For detailed comments please refer to our submission through the on-line comment form.
Bernard Pelletier	Hydro-Quebec TransEnergie	1	Negative	These are the two major concerns : * In Table 1 footnote 3 : Again, the definition of EHV facilities shoud be changed to something like : Bulk Electric System (BES) level references include extra-high voltage (EHV) Facilities defined as those representing the backbone of the System, generally at voltage greater than 300 kV, and high voltage (HV) Facilities defined as those not representing the backbone of the System, as determined by the Planning Coordinator and approved by Regional Entity. * In Table 1 b : "Consequential Load Loss as well as generation loss is acceptable as a a consequence of any event excluding P0". We should also add Firm Transmission Services Loss is also acceptable (particularly in P1 Loss of a single pole of a DC line for which the transfer is reduced accordingly to the remaining pole capability). "
Tino Zaragoza	Imperial Irrigation District	1	Affirmative	Comments provided
Jesus S. Alcaraz	Imperial Irrigation District	3	Affirmative	IID submits a Affirmative vote with comments.
Kim Warren	Independent Electricity System Operator	2	Affirmative	We thank the drafting team for considering the concerns and suggestions submitted with our previous ballot. We reiterate our view that we have no issues with the standard per se and we agree that the current draft is a significant improvement over the currently approved TPL-001 through TPL-004 standards. We recognize that it is necessary to move forward with this

Voter	Entity	Segment	Vote	Comment
				important work. The uncertainties created as a result of the evolving BES definition and BES Exception Process, as well as regulatory review of the TPL-001-1 Footnote 'b' revision still persist and will not go away for some time to come. These are significant parallel developments that will define applicability of the TPL standard (and all NERC standards) and establish performance requirements. We do however believe that this lingering uncertainty is insufficient grounds for us to vote against a standard we otherwise fully support.
Michael Moltane	International Transmission Company Holdings Corp	1	Affirmative	Comments submitted.
Kathleen Goodman	ISO New England, Inc.	2	Negative	Please see the comments submitted along with this ballot.
Larry E Watt	Lakeland Electric	1	Negative	LAK appreciates the hard work of the Standard Drafting team and applauds the significant improvement of clarity of the draft standard. FMPA believes we are almost there, but, there are a number of issues left to resolve. Issues that Cause FMPA to Recommend a Negative Vote A. Spare Equipment, R2.1.5 - The requirement reaches beyond the FERC directive. The directive was: "Accordingly, the Commission directs the ERO to modify the planning Reliability Standards to require the assessment of planned outages consistent with the entity's spare equipment strategy." So, the directive is only to address planned outage, not unplanned outages. Also note that the applicability to GSUs is ambiguous. "Transmission" is defined as: "An interconnected group of lines and associated equipment for the movement or transfer of electric energy between points of supply and points at which it is transformed for delivery to customers or is delivered to other electric systems." Is the "point of supply" the generator terminal, or the GSU high side terminal? B. Table 1, under first heading of "Steady State Only", bullet i is open to interpretation. Many utilities use steady state P-V analyses to study voltage stability and design UVLS systems in apart around those steady state analyses. Would this bullet essentially eliminate P-V and Q-V studies and the related use of UVLS?
Martyn Turner	Lower Colorado River Authority	1	Affirmative	1. R2 (2.5): The requirement for stability assessment in years 6-10 should be limited for new generation interconnections or for planned major transmission system improvements that have regional impact. The standard should clarify the 'material changes' that would necessitate stability planning assessments and documentation. 2. R8 requirement to

Voter	Entity	Segment	Vote	Comment
				distribute all Planning Assessment results to adjacent PCs and TPs are excessive and cumbersome. Regarding R8, LCRA TSC suggests the following language: Each Planning Coordinator and Transmission Planner shall distribute its Planning Assessment results to adjacent Planning Coordinators and adjacent Transmission Planners in accordance with the overseeing Reliability Coordinator requirements. Any functional entity that has a reliability related need and submits a written request for the Planning Assessment results, the Transmission Planner and Planning Coordinator shall provide the latest Planning Assessment results within 30 days of such request.
Tom Foreman	Lower Colorado River Authority	5	Affirmative	Previous TPL Standard balloting included the FERC Order that clarified footnote 'b', regarding the planned or controlled interruption of electric supply for an N-1 situation. In our view, board of directors/Public Utility should have the determination what level of service is acceptable and with what associated cost. This view is captured in footnote #12 of Table 1 in the TPL Standard and will be crucial to maintaining an Affirmative vote. 1. R2 (2.5): The value of assessing system stability for years 6-10 is questionable. Stability studies should be conducted for new generation interconnections or for planned major transmission system improvements that have regional impact. 2. R8 requirement to distribute all Planning Assessment results to adjacent PCs and TPs are excessive and cumbersome. Regarding R8, LCRA suggests the following language: Each Planning Coordinator and Transmission Planner shall distribute its Planning Assessment results to adjacent Planning Coordinators and adjacent Transmission Planners in accordance with the overseeing Reliability Coordinator requirements. Any functional entity that has a reliability related need and submits a written request for the Planning Assessment results, the Transmission Planner and Planning Coordinator shall provide the latest Planning Assessment results within 30 days of such request.
Brad Jones	Luminant Energy	6	Negative	Our most significant concerns are related to the following: (1) The requirements for Sensitivity Analysis are not stringent enough. (2)Studies should include variations in the duration and timing of transmission outages. "Anticipated" outages should be included in the studies and not just "known" transmission outages. It is our experience that only including "known" outages drastically under represents the actual number of transmission outages. (3) Major equipment outages lasting three or more months, as a result of Spare equipment strategies should be included in studies. The time limit of one year as specified in the Standard is too lax. Specific suggested language: 1.1.2. Known outage(s) of generation or

Voter	Entity	Segment	Vote	Comment
				Transmission Facility(ies) with a duration of at least six months or any known outage(s) of generation or Transmission Facility(ies) that will extend into the high stress period of the BES. 2.1. For the Planning Assessment, the Near-Term Transmission Planning Horizon portion of the steady state analysis shall be assessed annually and be supported by current annual studies or qualified past studies (as indicated in Requirement R2, Part 2.6, as follows). Qualifying studies shall include the following conditions: Add language between 2.1.3 and 2.1.4 to account for generation limitations due to Ancillary Services. Suggested wording: All planning studies must recognize and make provision for secure delivery of each of the Ancillary Services (eg Operating Reserve). In no case shall these studies double count capacity as being available for congestion management and Ancillary Services unless processes are in place to allow for location specific deployment of these Ancillary Service reserves for congestion management purposes. 2.1.4 (bullet 7) Duration and timing of anticipated Transmission outages such as required maintenance activities. 2.1.4 (bullet 8 added) Reasonable variations of anticipated generator availability after accounting for equivalent forced outage rate. 2.1.5 If an entity's spare equipment strategy could result in the unavailability of major Transmission equipment that would cause an outage of three months or more, (such as a transformer) the impact of this outage on System performance shall be studied. 2.4.3. For each of the studies described in Requirement R2, Parts 2.4.1 and 2.4.2, sensitivity case(s) shall be utilized to demonstrate the impact of changes to the basic assumptions used in the model. To accomplish this, the sensitivity analysis in the Planning Assessment must vary one or more of the following conditions by a sufficient amount to stress the System within a range of credible conditions that demonstrate a measurable change in performance: o Load level, Load forecast, or dynamic Load model assumptions. o Expected transfers. o Expected in service dates of new or modified Transmission Facilities. o Reactive resource capability. o Generation additions, retirements, or other dispatch scenarios. o Duration or timing of anticipated Transmission outages such as required maintenance activities. o Reasonable variations of anticipated generator availability after accounting for equivalent forced outage rate. 2.4.4. P1 events in Table 1, with known outages modeled as in Requirement R1, Part 1.1.2, under those System peak or Off-Peak conditions when known outages are scheduled. 2.4.5 If an entity's spare equipment strategy could result in the unavailability of major Transmission equipment that would cause an outage of three months or more, (such as

Voter	Entity	Segment	Vote	Comment
				a transformer) the impact of this outage on System performance shall be studied.
Joe D Petaski	Manitoba Hydro	1	Negative	Please see Manitoba Hydro's comments submitted in the formal commenting period.
Greg C. Parent	Manitoba Hydro	3	Negative	Please see Manitoba Hydro's comments submitted in the formal commenting period.
S N Fernando	Manitoba Hydro	5	Negative	Please see Manitoba Hydro's comments submitted in the formal commenting period.
Daniel Prowse	Manitoba Hydro	6	Negative	Please see Manitoba Hydro's comments submitted in the formal commenting period.
Terry Harbour	MidAmerican Energy Co.	1	Affirmative	Resolve the conflict between R2 and other requirements in the TPL standards by replacing the term, "System" with "BES" in various places throughout the standard when the reference should not be to the collective generation, transmission, and distribution systems, which is the definition of the NERC Glossary term, "System". These locations are: R2.1.4, R2.1.5, R2.4.3, R2.6.2, R2.7, R2.7.1, R2.7.4, R2.8.1, R2.8.2, R3.5, R4.5, R5, and R6
Thomas C. Mielnik	MidAmerican Energy Co.	3	Affirmative	Resolve the conflict between R2 and other requirements in the TPL standards by replacing the term, "System" with "BES" in various places throughout the standard when the reference should not be to the collective generation, transmission, and distribution systems, which is the definition of the NERC Glossary term, "System". These locations are: R2.1.4, R2.1.5, R2.4.3, R2.6.2, R2.7, R2.7.1, R2.7.4, R2.8.1, R2.8.2, R3.5, R4.5, R5, and R6.
Marie Knox	Midwest ISO, Inc.	2	Negative	Comments. Regarding Requirement 8, we still do not believe that there is significant risk to the reliability of the BES if an annual Planning Assessment is not distributed to another entity or if a documented response to Planning Assessment comments is not provided within 90 days of a request. Requirement 8 is an administrative requirement that adds little to improve reliability. We recommend that the VRF for Requirement 8 remain "Low", rather than be changed to "Medium". We also believe that the standard is too prescriptive as to what critical system conditions must be modeled, as these conditions vary considerably from system to system and within large systems. Table 1-Steady State and Stability Performance Planning Events, Category P5, includes "non-redundant" relay in the Event column. It is unclear if the SDT's intent is to provide distinction between a

Voter	Entity	Segment	Vote	Comment
				back-up relay and a redundant relay. We still believe that a definition for the term “non-redundant” should be provided along with the standard.
Richard Burt	Minnkota Power Coop. Inc.	1	Negative	In general, MPC feels that this standard has some organizational issues and is unclear in many areas. General comments include the following: 1. Use of the word "stability" should be qualified as "dynamic stability" or "transient stability" to avoid confusion with small signal stability or voltage stability. 2. The term "Planning Events" should be relabeled. It's not descriptive enough. Somehow it should be identifiable as being "more likely to occur than Extreme Events." 3. There are numerous forward and backward references between the different requirements, e.g. between R4.1 and R4.4. I see no reason why these isolated sections can't be put under the same requirement. For instance, move the text of R4.4 to R4.1, and move the text of R4.5 to R4.2. 4. There are numerous references to "more severe System impacts" e.g. R3.4. This is vague unless there is some sort of definition included to quantify severity of impacts. The following comments correlate to specific requirements in the new TPL standard. R2.1.5 Need a definition of "major Transmission equipment." It is too open-ended otherwise. R2.7 What is meant by "Corrective Action Plan(s) do not need to be developed solely to meet the performance requirements for a single sensitivity case analyzed in accordance with ... 2.1.4 and 2.4.3"? Does it mean that if we can only find one condition that's problematic, we don't need a CAP? R2.7.2 What is meant by "multiple sensitivity studies"? R2.7.3 There should be further explanation of things that qualify as being "beyond the control of the Transmission Planner"? R4.1.2 Need more clarity on "its directly connected Facilities". R5 It's not clear what's meant by "post-Contingency voltage deviations". Why wouldn't they just be voltage limits instead of voltage deviations? Table 1 The notes at the beginning of Table 1 should be labeled as performance requirements or something similar, for convenient reference in discussion and reports. Perhaps they should be in a separate list rather than part of Table 1 itself. The Extreme Events list should be in a separate Table, not part of Table 1. In Table 1 footnote 13, it may be better to describe the protective system functions, such as "protective relays, associated communications, and auxiliary tripping outputs" instead of listing relay types.
Spencer Tacke	Modesto Irrigation District	4	Negative	Both Sections 2.1.4 (seven sensitivities) and 2.4.3 (five sensitivities) require sensitivity studies to be run for all planning events and for all years specified , which increases the number of required studies beyond a reasonable and manageable limit. Also, both Section 2.1.4 and 2.4.3

Voter	Entity	Segment	Vote	Comment
				specify that running studies over "...a range of credible conditions that demonstrate a measurable change in System response (performance)." must be completed, yet using "credible conditions" and also "demonstrating a measurable change in System response (performance)", may be mutually exclusive. "Measurable change in System response (performance)" is open to a broad interpretation, which increases the risk that the auditor may very likely interpret it differently than the utility system planner. The definition of the extreme events that have to be analyzed has been made nebulous, where in the existing standards they are quite specific. Requirement 2.1.5 requires the modeling of the loss of any system element that does not have a back-up or spare available sooner than 1 year, as part of the system normal state. It is not clear why using 1 year of loss of use for a system element is being used as the triggering point requiring further system enhancements. Thank you.
Mike Avesing	Muscatine Power & Water	5	Affirmative	no comments
Saurabh Saksena	National Grid	1	Affirmative	Comments submitted.
Tony Eddleman	Nebraska Public Power District	3	Negative	Comments submitted through electronic comment form.
Don Schmit	Nebraska Public Power District	5	Negative	Comments have been submitted by NPPD.
Randy MacDonald	New Brunswick Power Transmission Corporation	1	Negative	Foot Note 12: Rather than requiring planning entities to have a open and transparent planning stakeholder process, which could require significant costs and administration, the foot note should focus on ensuring that affected loads/entities are aware of the possible risks of load loss and alternatives and provide for affected stakeholder feedback
Alden Briggs	New Brunswick System Operator	2	Negative	See NBSO submitted comments
Gregory Campoli	New York Independent System Operator	2	Negative	Comments were provided

Voter	Entity	Segment	Vote	Comment
Alan Adamson	New York State Reliability Council	10	Negative	1. In R1.1.5, known commitments for Firm Transmission Service, plus other Interchange that does not violate reliability constraints - it is imperative to model other Interchange after accounting for all existing and planned Firm Transmission Service to ensure that reliability-based transactions are not confused with economic interchange. 2. In R2.2.5, the current requirement language can be interpreted to require evaluation of the simultaneous unavailability of multiple long-lead-time components. Also, as a transformer outage is already evaluated as part of category P6 in Table 1, additional studies should not be required; however, spare equipment strategies could be assessed in the context of the planning assessment. 3. In R2.2, the language in this requirement is materially inconsistent with R2.1, unnecessarily requiring a current study.
Guy V. Zito	Northeast Power Coordinating Council, Inc.	10	Affirmative	NPCC will be submitting a list of comments.
David Boguslawski	Northeast Utilities	1	Negative	Footnote 7 It appears there is a discrepancy between Footnote 7 and Event P2-1. Footnote 7 could be eliminated by rewording Event P2-1 as follows: “Opening one end of a line section w/o a fault”. Footnote 12 NU continues to disagree with the language for Footnote 12 (formerly Footnote b) - Specifically NU believes that the revised language of Footnote 12 suggests that non-consequential demand interruption (load that is not directly served by the elements removed from service as a result of the contingency) could be used to mitigate reliability concerns arising from NERC Category B contingency events (i.e., single element contingencies). This language seems to encourage operational workarounds and adds burdens for operators of the system. NU believes this is not consistent with planning a highly reliable bulk electric system and thus does not support this weaker language”. Requirement R1, Part 1.1.6 The phrase "required for Load" should be deleted as this confuses the issue. Requirement R2, Part 2.2 The language of Requirement R2 Part 2.2 seems to suggest that current annual studies are always required for the long-term steady state assessment. This may have been an oversight, for consistency Requirement R2 Part 2.2 should be modified to similarly read as Requirement R2, Part 2.1. Requirement R3, Part 3.3.1 NU feels that the last sentence of Requirement R3, Part 3.3.1 should be removed since this is handled by PRC-023. Line ratings are addressed by PRC-023 which requires coordination with the Reliability Coordinator. NU suggests the removal of the following sentence: “Tripping of Transmission elements

Voter	Entity	Segment	Vote	Comment
				where relay loadability limits are exceeded." General comment NU believes that a standard should contain statements and requirements that are direct and measurable. TPL-001-2 should not be an exception to this rule. Therefore, statements like "An objective" which appears in Footnotes 9 and 12 shall not be used.
Joseph O'Brien	Northern Indiana Public Service Co.	6	Affirmative	see comment form
John H Hagen	Pacific Gas and Electric Company	3	Affirmative	prior comments have been addressed
John C. Collins	Platte River Power Authority	1	Negative	Stability requirements R4.1.2, along with the second and third bullets of R4.3.1, could be misunderstood to require the development of comprehensive relaying models for all Facilities represented in the stability model. These requirements should be made clear that Stability studies are to simulate the effects of relaying (tripping certain Facilities) and not require relaying models to trigger and cause the effects.
Terry L Baker	Platte River Power Authority	3	Negative	Stability requirements R4.1.2, along with the second and third bullets of R4.3.1, could be misunderstood to require the development of comprehensive relaying models for all Facilities represented in the stability model. These requirements should be made clear that Stability studies are to simulate the effects of relaying (tripping certain Facilities) and not require relaying models to trigger and cause the effects.
Pete Ungerman	Platte River Power Authority	5	Negative	Stability requirements R4.1.2, along with the second and third bullets of R4.3.1, could be misunderstood to require the development of comprehensive relaying models for all Facilities represented in the stability model. These requirements should be made clear that Stability studies are to simulate the effects of relaying (tripping certain Facilities) and not require relaying models to trigger and cause the effects.
Daniel W. O'Hearn	Powerex Corp.	6	Negative	Powerex has submitted a negative ballot for Draft #6 of Standard TPL-001 because Powerex has concerns regarding Footnotes 9 and 4 that need to be addressed. Details of our concerns are summarized below. Background: The work that transmission planners do to ensure Firm Transmission Service is tremendously important for the reliability of the Bulk Electric System and forms a key part of the foundation upon which system operators and energy market participants interact. As a Purchasing-Selling Entity, Powerex is primarily concerned about Footnote 9 that conditions when interruption of Firm Transmission Service may allowed. We believe

Voter	Entity	Segment	Vote	Comment
				that the goals of maintaining system reliability and enhancing market participation will both be best served if the conditions for interrupting Firm Transmission Service become clear and unambiguous in the TPL-001-2 Standard. In our experience, Transmission Providers have different interpretations of the TPL-001 Performance Table and because of latitude previously granted by Footnote B have different perspectives of when Interuptions of Firm Transfers is acceptable. Below we describe the two interpretations using the language of the proposed TPL-001 standard. Interpretation #1: Following loss of the most critical transmission element under stressed conditions, the transmission provider plans to supply the forecast peak loads and Firm Transmission Service indefinitely. o Typically this is achieved by assuming that the System Operators would, within a few minutes of the P1 Single Contingency, curtail all non-firm transmission service and then arm Special Protection Schemes that could result in Interruption of Firm Transmission Service or Non-Consequential Load Loss in the event of a P6 Multiple contingency. Interpretation #2: Following loss of the most critical transmission element under stressed conditions, the transmission provider plans to supply the forecast peak loads indefinitely but may curtail all Firm Transmission Service within 20 minutes if required. o Typically this occurs on systems where there are no Special Protection Schemes to address P6 Multiple contingencies, consequently, the transmission planners assume that curtailment of all non-firm AND as much Firm Transmission Service as required will occur within ~20 minutes of the P1 Single Contingency because the Operators must prepare their transmission system to withstand the next worst contingency. Currently, Purchasing-Selling Entities must plan for situations where they could see their Firm Transmission Service on certain paths curtailed within 20 minutes of a P1 contingency. The less stringent interpretation of the TPL-001 Performance Table that allowed a P1 contingency to change into a P6 contingency within the same operating hour, has resulted in situations where the Firm Transmission Service for inter-regional transfers face significantly greater risks of interruption than the Firm Transmission Service provided to local Load Serving Entities. Powerex recommends that the Standards Drafting Team revise TPL-001 such that all Transmission Planners will know that they should plan for Firm Transmission Service to be sustained indefinitely following P1 contingencies. Specific Comments on TPL-001-2: Footnote 9: Deviation from the Approved Footnote B Powerex believes that the Footnote B, as approved by the NERC Board of Trustees on February 17, 2011, is more stringent than the previous Footnote B and

Voter	Entity	Segment	Vote	Comment
				will have the effect of ensuring that Firm Transmission Service can be sustained indefinitely following P1 contingencies. The key difference of the proposed Footnote 9 is that it adds the phrase “as a System adjustment” to the approved version of Footnote B. We believe this addition would cause the practice of curtailing Firm Transmission Service within 20 minutes of P1 contingencies to continue. Consequently, we recommend that the proposed Footnote 9 maintain the approved wording as follows: Footnote 9: An objective of the planning process should be to minimize the likelihood and magnitude of interruption of Firm Transmission Service following Contingency events. Curtailment of Firm Transmission Service is allowed (deletion)[as] a corrective action when achieved through the appropriate re-dispatch of resources obligated to re-dispatch…. For consistency, Table 1 should also be modified to remove the Footnote 9 reference from the Initial Condition Column for the P3-Multiple Contingency and P6 Multiple Contingency Categories. Footnote 9: Clarity on what is meant by “Resources obligated to re-dispatch” It is unclear to many parties what is meant by an obligation to re-dispatch. Some interpret this as a right to direct the Source to curtail energy scheduled on Firm Transmission Service. Our belief is that “an obligation to re-dispatch” should correspond to a formal agreement with a Generation Owner, located on the load side of a transmission constraint, to resupply the load that had been receiving energy from a remote source before the Firm Transmission Service was curtailed. Consequently, we recommend that Footnote 9 be revised as follows: Footnote 9: ….. a corrective action when achieved through the appropriate re-dispatch of resources obligated to re-dispatch [to ensure uninterrupted energy supply to the Load-Serving Entity(ies)], where it can be demonstrated that Facilities, internal and external to the Transmission Planner’s planning region, remain within applicable Facility Ratings and the re-dispatch does not result in any Non-Consequential Load Loss…. Footnote 4: Conditional Firm Transmission Service Footnote 4: “Curtailment of Conditional Firm Transmission Service is allowed when the conditions and/or events being studied formed the basis for the Conditional Firm Transmission Service.” In a sense, offering conditional firm transmission service is analogous to selling land in a known flood plane - this can be a perfectly acceptable option provided all parties involved in current and future transactions can quantify the risks and manage them appropriately. There needs to be coordination between the planners, operators and marketers to ensure that the conditions that could lead to curtailment of Conditional Firm Transmission Service are understood and the associated

Voter	Entity	Segment	Vote	Comment
				risks properly managed. We are concerned that in the absence of coordination, specifically additional requirements included in the BAL and INT standards, energy that is scheduled on conditional firm could actually be marketed as firm and as a result the counterparties to some transactions may not be aware of the curtailment risks they could face.
John T Sturgeon	Progress Energy	6	Affirmative	"Comments Submitted"
Sammy Roberts	Progress Energy Carolinas	1	Affirmative	Comments submitted.
Sam Waters	Progress Energy Carolinas	3	Affirmative	Comments submitted
Wayne Lewis	Progress Energy Carolinas	5	Affirmative	Comments Submitted
Peter Dolan	PSEG Energy Resources & Trade LLC	6	Affirmative	no comments
Chad Bowman	Public Utility District No. 1 of Chelan County	1	Affirmative	Previous TPL Standard balloting included the FERC Order that clarified footnote 'b', regarding the planned or controlled interruption of electric supply for an N-1 situation. In our view, board of directors/Public Utility should have the determination what level of service is acceptable and with what associated cost. This view is captured in footnote #12 of Table 1 in the TPL Standard and will be crucial to maintaining an Affirmative vote.
John D. Martinsen	Public Utility District No. 1 of Snohomish County	4	Affirmative	"Previous TPL Standard balloting included the FERC Order that clarified footnote 'b', regarding the planned or controlled interruption of electric supply for an N-1 situation. In our view, a Registered Entity's Board of Directors, Utility Commission, and/or its customers should determine what level of service is acceptable and with what associated cost. This view is captured in footnote #12 of Table 1 in the TPL Standard and will be crucial to maintaining an Affirmative vote."
Anthony E Jablonski	ReliabilityFirst Corporation	10	Affirmative	Comments submitted
Tim Kelley	Sacramento Municipal Utility District	1	Affirmative	Previous TPL Standard balloting included the FERC Order that clarified footnote 'b', that addressed planned or controlled interruption of electric supply for N-1 conditions. Registered Entity's Board of Directors, state

Voter	Entity	Segment	Vote	Comment
				Utilities Commission, and/or its customers should determine what level of service is acceptable with the associated cost. This point is captured in footnote #12 of Table 1 in the TPL Standard and is necessary for maintaining SMUD's Affirmative vote.
James Leigh-Kendall	Sacramento Municipal Utility District	3	Affirmative	Previous TPL Standard balloting included the FERC Order that clarified footnote 'b', that addressed planned or controlled interruption of electric supply for N-1 conditions. Registered Entity's Board of Directors, state Utilities Commission, and/or its customers should determine what level of service is acceptable with the associated cost. This point is captured in footnote #12 of Table 1 in the TPL Standard and is necessary for maintaining SMUD's Affirmative vote.
Mike Ramirez	Sacramento Municipal Utility District	4	Affirmative	Previous TPL Standard balloting included the FERC Order that clarified footnote 'b', that addressed planned or controlled interruption of electric supply for N-1 conditions. Registered Entity's Board of Directors, state Utilities Commission, and/or its customers should determine what level of service is acceptable with the associated cost. This point is captured in footnote #12 of Table 1 in the TPL Standard and is necessary for maintaining SMUD's Affirmative vote.
Bethany Hunter	Sacramento Municipal Utility District	5	Affirmative	Previous TPL Standard balloting included the FERC Order that clarified footnote 'b', that addressed planned or controlled interruption of electric supply for N-1 conditions. Registered Entity's Board of Directors, state Utilities Commission, and/or its customers should determine what level of service is acceptable with the associated cost. This point is captured in footnote #12 of Table 1 in the TPL Standard and is necessary for maintaining SMUD's Affirmative vote.
Claire Warshaw	Sacramento Municipal Utility District	6	Affirmative	Previous TPL Standard balloting included the FERC Order that clarified footnote 'b', that addressed planned or controlled interruption of electric supply for N-1 conditions. Registered Entity's Board of Directors, state Utilities Commission, and/or its customers should determine what level of service is acceptable with the associated cost. This point is captured in footnote #12 of Table 1 in the TPL Standard and is necessary for maintaining SMUD's Affirmative vote.
Robert Kondziolka	Salt River Project	1	Affirmative	Previous TPL Standard balloting included the FERC Order that clarified footnote 'b', regarding the planned or controlled interruption of electric supply for an N-1 situation. In SRP's view, a Registered Entity's Board of Directors, state Utilities Commission, and/or its customers should determine what level of service is acceptable and with what associated cost. This view is captured in footnote #12 of Table 1 in the TPL Standard and will be crucial to maintaining Affirmative vote.

Voter	Entity	Segment	Vote	Comment
John T. Underhill	Salt River Project	3	Affirmative	"Previous TPL Standard balloting included the FERC Order that clarified footnote 'b', regarding the planned or controlled interruption of electric supply for an N-1 situation. In SRP's view, a Registered Entity's Board of Directors, state Utilities Commission, and/or its customers should determine what level of service is acceptable and with what associated cost. This view is captured in footnote #12 of Table 1 in the TPL Standard and will be crucial to maintaining our Affirmative vote."
Steven J Hulet	Salt River Project	6	Affirmative	Previous TPL Standard balloting included the FERC Order that clarified footnote 'b', regarding the planned or controlled interruption of electric supply for an N-1 situation. In SRP's view, a Registered Entity's Board of Directors, state Utilities Commission, and/or its customers should determine what level of service is acceptable and with what associated cost. This view is captured in footnote #12 of Table 1 in the TPL Standard and will be crucial to maintaining our Affirmative vote.
Will Speer	San Diego Gas & Electric	1	Abstain	Clarity of this standard is getting worse. Our earlier comments did not seem impacting. At this point, we believe the existing TPL-001-0.1, TPL-002-0a, TPL-003-0a and TPL-004-0 provide much better clarify for us to comply with the TPL standards.
Rich Salgo	Sierra Pacific Power Co.	1	Affirmative	No additional comments submitted.
Sam Nietfeld	Snohomish County PUD No. 1	5	Affirmative	Previous TPL Standard balloting included the FERC Order that clarified footnote 'b', regarding the planned or controlled interruption of electric supply for an N-1 situation. In our view, a Registered Entity's Board of Directors, Utility Commission, and/or its customers should determine what level of service is acceptable and with what associated cost. This view is captured in footnote #12 of Table 1 in the TPL Standard and will be crucial to maintaining an Affirmative vote.
James Jones	Southwest Transmission Cooperative, Inc.	1	Negative	Requirement R1 puts registered entities at compliance risk for failure of a Regional Entity to take action and presents a conflict of interest for the Regional Entity. TPL-001-2 references MOD-010 and MOD-012 in Requirement R1. MOD-010 and MOD-012 require applicable registered entities to supply steady-state and dynamics data, respectively, per the Regional Reliability Organizations (RRO) procedures. MOD-011 and MOD-013 specify the RROs to establish procedures but are "fill-in-the-blank" standards that were not approved by the Commission. Thus, they are not enforceable. Since RROs were the predecessors to the Regional Entities (RE), it is commonly understood the standards that apply to the RRO would now apply to the RE. In summary, the TP and PC/PA are dependent on the

Voter	Entity	Segment	Vote	Comment
				RE to have the procedures but there are not penalties for the RE if it does not have them. Since the RE would be enforcing the penalty, it could directly contribute to a penalty that is used to offset its compliance budget. While the Planning Coordinator and Transmission Planner should share the results of its Planning Assessment with entities that have a reliability related need, Requirement R8 is purely administrative, does not have any direct impact on reliability, and, therefore, should be removed. At the very least, the VRF should be changed to Lower. This standard is full of double jeopardy issues. Based on the definition of Planning Assessment, Requirement R2 appears to be intended to document Near-Term Transmission Planning Horizon and Long-Term Transmission Planning Horizon studies and the evaluation and meaning of those study results. R3 and R4 require the TP and PC to conduct the steady-state and dynamic planning studies. Given the document/evidence centric ERO enforcement process, Requirement R3 and R4 have implicit obligations to document the study results. Otherwise, how do you prove you complied with R3 and R4? Thus, failure to have a planning assessment documenting your results will result in a simultaneous violation of R2, R3 and R4. In fact, both R3 and R4 even require studies to be completed according to Parts 2.1 and 2.2 for R3 and Parts 2.4 and 2.5 for R4. This further contributes to double jeopardy potential and blurs the line between assessment and study. Footnote 3 which applies to BES Level in Table 1 draws in non-BES facilities. It states that HV is defined as 300 kV and lower voltage systems which includes all voltages below the traditional 100-kV cutoff for the BES. TPL-001-2 Requirement R1 could be modified unintentionally and fundamentally change the requirement because R1 references MOD-010 and MOD-012 without a version number. Thus, all future updates to these standards directly modifies TPL-001-2 Requirement R1 whether it was intended or not. Generally, it is bad form to reference another standard for these reasons.
Larry Akens	Tennessee Valley Authority	1	Negative	1. TVA is concerned about the additional studies, modeling, and projects that must be performed to meet this proposed standard. TVA believes that this amount of work will have little overall improvement on the reliability of the BES. 2. TVA believes that the 7 year implementation plan allowed for “Raising the bar” facilities does not allow sufficient time for TVA to construct the required new facilities. TVA average time for constructing a new 500-kV line can be up to 10 years, given the lead time on ROW and following all NEPA requirements. TVA does understand that the team has language (R2.7.3) regarding the TP or PC inability to get the projects

Voter	Entity	Segment	Vote	Comment
				completed through no fault of its own; however, there is no safeguard that the entity will be found non-compliant if all the work cannot be accomplished in this time frame. 3. TVA believes that the footnotes b and c that allow for local load drop in the current TPL standards should still be allowed. TVA understands that this is addressed in FERC Order 693; however, the capital improvements to fix many of these issues will have little overall reliability gain for the Bulk Electric System. TVA believes that this is a local load reliability issue and not a BES concern. 4. TVA is concerned that no generating unit shall pull out of synchronism for Planning Event P1, while the standard does allow generator runback/tripping for the same event. TVA believes that this requirement is overly burdensome without providing any material improvement in system reliability. Does distributed generation have to meet the same requirements for not pulling out of synchronism as a large nuclear unit? 5. The Implementation Plan should include a five-year delay in the effective date for short circuit studies (R2 parts 2.3 and 2.8) since these studies are a new TPL requirement and are not required in the current version 0 standards.
Ian S Grant	Tennessee Valley Authority	3	Negative	TVA appreciates the work of the ATFN drafting team over the last several years in drafting this new standard. TVA does have concerns on several issues we believe should be corrected as we move forward with this standard. Therefore TVA is voting “Negative” on this proposed standard due to the following issues: 1. TVA is concerned about the additional studies, modeling, and projects that must be performed to meet this proposed standard. TVA believes that this amount of work will have little overall improvement on the reliability of the BES. 2. TVA believes that the 7 year implementation plan allowed for “Raising the bar” facilities does not allow sufficient time for TVA to construct the required new facilities. TVA average time for constructing a new 500-kV line can be up to 10 years, given the lead time on ROW and following all NEPA requirements. TVA does understand that the team has language (R2.7.3) regarding the TP or PC inability to get the projects completed through no fault of its own; however, there is no safeguard that the entity will be found non-compliant if all the work cannot be accomplished in this time frame. 3. TVA believes that the footnotes b and c that allow for local load drop in the current TPL standards should still be allowed. TVA understands that this is addressed in FERC Order 693; however, the capital improvements to fix many of these issues will have little overall reliability gain for the Bulk Electric System. TVA believes that this is a local load reliability issue and not a BES concern.

Voter	Entity	Segment	Vote	Comment
				4. TVA is concerned that no generating unit shall pull out of synchronism for Planning Event P1, while the standard does allow generator runback/tripping for the same event. TVA believes that this requirement is overly burdensome without providing any material improvement in system reliability. Does distributed generation have to meet the same requirements for not pulling out of synchronism as a large nuclear unit? 5. The Implementation Plan should include a five-year delay in the effective date for short circuit studies (R2 parts 2.3 and 2.8) since these studies are a new TPL requirement and are not required in the current version 0 standards.
David Thompson	Tennessee Valley Authority	5	Negative	TVA appreciates the work of the ATFN drafting team over the last several years in drafting this new standard. TVA does have concerns on several issues we believe should be corrected as we move forward with this standard. Therefore TVA is voting "Negative" on this proposed standard due to the following issues: 1. TVA is concerned about the additional studies, modeling, and projects that must be performed to meet this proposed standard. TVA believes that this amount of work will have little overall improvement on the reliability of the BES. 2. TVA believes that the 7 year implementation plan allowed for "Raising the bar" facilities does not allow sufficient time for TVA to construct the required new facilities. TVA average time for constructing a new 500-kV line can be up to 10 years, given the lead time on ROW and following all NEPA requirements. TVA does understand that the team has language (R2.7.3) regarding the TP or PC inability to get the projects completed through no fault of its own; however, there is no safeguard that the entity will be found non-compliant if all the work cannot be accomplished in this time frame. 3. TVA believes that the footnotes b and c that allow for local load drop in the current TPL standards should still be allowed. TVA understands that this is addressed in FERC Order 693; however, the capital improvements to fix many of these issues will have little overall reliability gain for the Bulk Electric System. TVA believes that this is a local load reliability issue and not a BES concern. 4. TVA is concerned that no generating unit shall pull out of synchronism for Planning Event P1, while the standard does allow generator runback/tripping for the same event. TVA believes that this requirement is overly burdensome without providing any material improvement in system reliability. Does distributed generation have to meet the same requirements for not pulling out of synchronism as a large nuclear unit? 5. The Implementation Plan should include a five-year delay in the effective date for short circuit studies (R2 parts 2.3 and 2.8) since these studies are a

Voter	Entity	Segment	Vote	Comment
				new TPL requirement and are not required in the current version 0 standards.
Marjorie S. Parsons	Tennessee Valley Authority	6	Negative	TVA appreciates the work of the ATFN drafting team over the last several years in drafting this new standard. TVA does have concerns on several issues we believe should be corrected as we move forward with this standard. Therefore TVA is voting "Negative" on this proposed standard due to the following issues: 1. TVA is concerned about the additional studies, modeling, and projects that must be performed to meet this proposed standard. TVA believes that this amount of work will have little overall improvement on the reliability of the BES. 2. TVA believes that the 7 year implementation plan allowed for "Raising the bar" facilities does not allow sufficient time for TVA to construct the required new facilities. TVA average time for constructing a new 500-kV line can be up to 10 years, given the lead time on ROW and following all NEPA requirements. TVA does understand that the team has language (R2.7.3) regarding the TP or PC inability to get the projects completed through no fault of its own; however, there is no safeguard that the entity will be found non-compliant if all the work cannot be accomplished in this time frame. 3. TVA believes that the footnotes b and c that allow for local load drop in the current TPL standards should still be allowed. TVA understands that this is addressed in FERC Order 693; however, the capital improvements to fix many of these issues will have little overall reliability gain for the Bulk Electric System. TVA believes that this is a local load reliability issue and not a BES concern. 4. TVA is concerned that no generating unit shall pull out of synchronism for Planning Event P1, while the standard does allow generator runback/tripping for the same event. TVA believes that this requirement is overly burdensome without providing any material improvement in system reliability. Does distributed generation have to meet the same requirements for not pulling out of synchronism as a large nuclear unit? 5. The Implementation Plan should include a five-year delay in the effective date for short circuit studies (R2 parts 2.3 and 2.8) since these studies are a new TPL requirement and are not required in the current version 0 standards.
Bernie M Pasternack	Transmission Strategies, LLC	8	Affirmative	Comments submitted
Tracy Sliman	Tri-State G & T Association,	1	Negative	Comments submitted

Voter	Entity	Segment	Vote	Comment
	Inc.			
Janelle Marriott	Tri-State G & T Association, Inc.	3	Negative	Comments submitted formally on Comment Form
John Tolo	Tucson Electric Power Co.	1	Negative	The definition for Near Term Planning Horizon was deleted, but the formal term is used in other sections such as R2.2.1. There should be a linkage to MOD standard (e.g. 028, 029 & 030) definitions such as 13 months, etc.
Brandy A Dunn	Western Area Power Administration	1	Negative	Standard is improved over previous drafts, but would like to see further changes. Please see suggestions and comments provided on the previously submitted Official Comment Form.
Peter H Kinney	Western Area Power Administration - UGP Marketing	6	Negative	See comments from WAPA made on official comment form.
Steven L. Rueckert	Western Electricity Coordinating Council	10	Affirmative	It is unknown at this time what the outcome of the FERC request for additional infomation related to footnote B will be, but if if results in changes to the language of footnote B, that may change our support for this standard.
Liam Noailles	Xcel Energy, Inc.	5	Negative	Xcel Energy's concerns are detailed in the formal comment submission
David F. Lemmons	Xcel Energy, Inc.	6	Negative	Xcel Energy's concerns are detailed in the formal comment submission.
Roger C Zaklukiewicz		8	Negative	Footnote #7: There appears to be a discrepency between Footnote 7 and Event P2-1; therefore, I recommend the elimination of Footnote 7. Footnote #12: I interpret Footnote 12 to suggest that non-consequential demand interruption could be used to mitigate reliability concerns arising from a NERC Category B contingency event (a single element contingency). The approval of such a reliability policy is inconsistent with a inter- or intra-regional or Area transmission plan than ensure the development of a reliable transmission grid. Such wording is unacceptable as it will lead to large scale inter-regional blackouts, similar to experienced in August, 2003. R1- Part 1.1.6: Delete the words "required for load". R2-Part 2.2: Clarify whether the current annual studies must always be performed as part of the long-term steady-state transmission assessment studies. The wording conveys such a requirement; however, it is not clear whether such studies

Voter	Entity	Segment	Vote	Comment
				are in fact required. Such a requirement would not always be necessary and an unwise use of valuable planning resources. R3-Part 3.3.1: Remove the last sentence since it is already addressed by PRC-023; therefore, it is not required in this document.

NERC
NORTH AMERICAN ELECTRIC RELIABILITY CORPORATION

Newsroom • Site Map • Contact NERC

SEARCH NERC.com
Advanced Search GO

About NERC | Standards | Compliance | Assessments & Trends | Events Analysis | Programs

User Name
Password
Log in
Register

-Ballot Pools
-Current Ballots
-Ballot Results
-Registered Ballot Body
-Proxy Voters

Home Page

Ballot Results

Ballot Name:	Project 2006-02 Assess Transmission Future Needs April 2011_rc
Ballot Period:	7/13/2011 - 7/22/2011
Ballot Type:	recirculation
Total # Votes:	333
Total Ballot Pool:	353
Quorum:	**94.33 % The Quorum has been reached**
Weighted Segment Vote:	75.37 %
Ballot Results:	**The Standard has Passed**

Summary of Ballot Results

Segment	Ballot Pool	Segment Weight	Affirmative # Votes	Affirmative Fraction	Negative # Votes	Negative Fraction	Abstain # Votes	No Vote
1 - Segment 1.	103	1	65	0.747	22	0.253	8	8
2 - Segment 2.	11	1	4	0.364	7	0.636	0	0
3 - Segment 3.	73	1	53	0.791	14	0.209	4	2
4 - Segment 4.	27	1	16	0.889	2	0.111	6	3
5 - Segment 5.	72	1	47	0.783	13	0.217	7	5
6 - Segment 6.	46	1	33	0.805	8	0.195	3	2
7 - Segment 7.	0	0	0	0	0	0	0	0
8 - Segment 8.	8	0.5	3	0.3	2	0.2	3	0
9 - Segment 9.	4	0.4	4	0.4	0	0	0	0
10 - Segment 10.	9	0.9	8	0.8	1	0.1	0	0
Totals	**353**	**7.8**	**233**	**5.879**	**69**	**1.921**	**31**	**20**

Individual Ballot Pool Results

Segment	Organization	Member	Ballot	Comments
1	Ameren Services	Kirit Shah	Negative	View
1	American Electric Power	Paul B. Johnson	Affirmative	View
1	American Transmission Company, LLC	Andrew Z Pusztai	Affirmative	
1	Arizona Public Service Co.	Robert Smith	Affirmative	View
1	Associated Electric Cooperative, Inc.	John Bussman	Negative	View
1	Austin Energy	James Armke	Affirmative	
1	Avista Corp.	Scott J Kinney	Affirmative	
1	Balancing Authority of Northern California NCR11118	Kevin Smith	Affirmative	View

1	BC Hydro and Power Authority	Patricia Robertson	Negative	View
1	Beaches Energy Services	Joseph S Stonecipher	Affirmative	
1	Black Hills Corp	Eric Egge	Affirmative	
1	Bonneville Power Administration	Donald S. Watkins	Affirmative	View
1	Brazos Electric Power Cooperative, Inc.	Tony Kroskey		
1	CenterPoint Energy Houston Electric	Dale Bodden	Negative	
1	Central Maine Power Company	Kevin L Howes	Affirmative	
1	City of Tacoma, Department of Public Utilities, Light Division, dba Tacoma Power	Chang G Choi	Affirmative	
1	City of Vero Beach	Randall McCamish	Affirmative	View
1	Clark Public Utilities	Jack Stamper	Affirmative	View
1	Colorado Springs Utilities	Paul Morland	Affirmative	
1	Consolidated Edison Co. of New York	Christopher L de Graffenried	Affirmative	
1	Dairyland Power Coop.	Robert W. Roddy	Affirmative	
1	Dayton Power & Light Co.	Hertzel Shamash	Affirmative	
1	Deseret Power	James Tucker	Affirmative	
1	Dominion Virginia Power	Michael S Crowley	Affirmative	
1	Duke Energy Carolina	Douglas E. Hils	Affirmative	
1	East Kentucky Power Coop.	George S. Carruba	Affirmative	
1	Empire District Electric Co.	Ralph F Meyer		
1	Entergy Services, Inc.	Edward J Davis	Affirmative	View
1	FirstEnergy Energy Delivery	Robert Martinko	Affirmative	
1	Florida Keys Electric Cooperative Assoc.	Michael Anderson	Negative	
1	Gainesville Regional Utilities	Luther E. Fair	Affirmative	View
1	GDS Associates, Inc.	Claudiu Cadar	Abstain	
1	Georgia Transmission Corporation	Harold Taylor	Affirmative	View
1	Grand River Dam Authority	James M Stafford		
1	Great River Energy	Gordon Pietsch	Negative	
1	Hoosier Energy Rural Electric Cooperative, Inc.	Robert Solomon	Affirmative	
1	Hydro One Networks, Inc.	Ajay Garg	Negative	View
1	Hydro-Quebec TransEnergie	Bernard Pelletier	Negative	View
1	Idaho Power Company	Ronald D. Schellberg	Affirmative	
1	Imperial Irrigation District	Tino Zaragoza	Affirmative	View
1	International Transmission Company Holdings Corp	Michael Moltane	Affirmative	View
1	Kansas City Power & Light Co.	Michael Gammon		
1	Keys Energy Services	Stanley T Rzad	Affirmative	
1	Lake Worth Utilities	Walt J Gill	Affirmative	
1	Lakeland Electric	Larry E Watt	Negative	View
1	Lee County Electric Cooperative	John W Delucca	Affirmative	
1	Lincoln Electric System	Doug Bantam		
1	Lone Star Transmission, LLC	Julius Horvath	Affirmative	
1	Long Island Power Authority	Robert Ganley	Abstain	
1	Los Angeles Department of Water & Power	Ly M Le	Affirmative	
1	Lower Colorado River Authority	Martyn Turner	Affirmative	View
1	Manitoba Hydro	Joe D Petaski	Negative	View
1	MEAG Power	Danny Dees	Affirmative	
1	Mid-Continent Area Power Pool	Larry E. Brusseau	Abstain	
1	MidAmerican Energy Co.	Terry Harbour	Affirmative	View
1	Minnkota Power Coop. Inc.	Richard Burt	Negative	View
1	National Grid	Saurabh Saksena	Affirmative	View
1	Nevada Power Co.	James McMorran		
1	New Brunswick Power Transmission Corporation	Randy MacDonald	Negative	View
1	New York Power Authority	Arnold J. Schuff	Affirmative	
1	New York State Electric & Gas Corp.	Raymond P Kinney		
1	Northeast Utilities	David Boguslawski	Negative	View
1	Northern Indiana Public Service Co.	Kevin M Largura	Affirmative	
1	NorthWestern Energy	John Canavan	Affirmative	
1	Ohio Valley Electric Corp.	Robert Mattey	Affirmative	
1	Oklahoma Gas and Electric Co.	Marvin E VanBebber	Abstain	
1	Omaha Public Power District	Doug Peterchuck	Affirmative	
1	Orlando Utilities Commission	Brad Chase	Affirmative	
1	Pacific Gas and Electric Company	Bangalore Vijayraghavan	Affirmative	
1	PacifiCorp	Colt Norrish		
1	PECO Energy	Ronald Schloendorn	Affirmative	
1	Platte River Power Authority	John C. Collins	Negative	View

1	Portland General Electric Co.	Frank F Afranji	Affirmative	
1	Potomac Electric Power Co.	David Thorne	Affirmative	
1	PowerSouth Energy Cooperative	Larry D Avery	Negative	
1	PPL Electric Utilities Corp.	Brenda L Truhe	Affirmative	
1	Progress Energy Carolinas	Sammy Roberts	Affirmative	View
1	Public Service Electric and Gas Co.	Kenneth D. Brown	Affirmative	
1	Public Utility District No. 1 of Chelan County	Chad Bowman	Affirmative	View
1	Public Utility District No. 1 of Okanogan County	Dale Dunckel	Abstain	
1	Puget Sound Energy, Inc.	Denise M Lietz	Affirmative	
1	Rochester Gas and Electric Corp.	John C. Allen	Affirmative	
1	Sacramento Municipal Utility District	Tim Kelley	Affirmative	View
1	Salt River Project	Robert Kondziolka	Affirmative	View
1	San Diego Gas & Electric	Will Speer	Abstain	View
1	Santee Cooper	Terry L. Blackwell	Affirmative	
1	SCE&G	Henry Delk, Jr.	Affirmative	
1	Seattle City Light	Pawel Krupa	Affirmative	
1	Sierra Pacific Power Co.	Rich Salgo	Affirmative	View
1	South Texas Electric Cooperative	Richard McLeon	Negative	
1	Southern California Edison Co.	Dana Cabbell	Affirmative	
1	Southern Company Services, Inc.	Robert Schaffeld	Affirmative	
1	Southern Illinois Power Coop.	William Hutchison	Abstain	
1	Southwest Transmission Cooperative, Inc.	James Jones	Negative	View
1	Sunflower Electric Power Corporation	Noman Lee Williams	Affirmative	
1	Tampa Electric Co.	Beth Young	Affirmative	
1	Tennessee Valley Authority	Larry Akens	Negative	View
1	Tri-State G & T Association, Inc.	Tracy Sliman	Negative	View
1	Tucson Electric Power Co.	John Tolo	Negative	View
1	United Illuminating Co.	Jonathan Appelbaum	Affirmative	
1	Westar Energy	Allen Klassen	Abstain	
1	Western Area Power Administration	Brandy A Dunn	Negative	View
1	Xcel Energy, Inc.	Gregory L Pieper	Negative	
2	Alberta Electric System Operator	Mark B Thompson	Affirmative	View
2	BC Hydro	Venkataramakrishnan Vinnakota	Negative	View
2	California ISO	Richard K Vine	Affirmative	
2	Electric Reliability Council of Texas, Inc.	Charles B Manning	Negative	View
2	Independent Electricity System Operator	Kim Warren	Affirmative	View
2	ISO New England, Inc.	Kathleen Goodman	Negative	View
2	Midwest ISO, Inc.	Marie Knox	Negative	View
2	New Brunswick System Operator	Alden Briggs	Negative	View
2	New York Independent System Operator	Gregory Campoli	Negative	View
2	PJM Interconnection, L.L.C.	Tom Bowe	Affirmative	
2	Southwest Power Pool	Charles Yeung	Negative	
3	Alabama Power Company	Richard J. Mandes	Affirmative	
3	Ameren Services	Mark Peters		
3	APS	Steven Norris	Affirmative	View
3	Atlantic City Electric Company	NICOLE BUCKMAN	Affirmative	
3	Avista Corp.	Robert Lafferty	Affirmative	
3	Bandera Electric Cooperative	Brian D Bartos	Negative	
3	BC Hydro and Power Authority	Pat G. Harrington	Negative	View
3	Bonneville Power Administration	Rebecca Berdahl	Affirmative	View
3	City of Austin dba Austin Energy	Andrew Gallo	Affirmative	
3	City of Green Cove Springs	Gregg R Griffin	Affirmative	View
3	City of Redding	Bill Hughes	Affirmative	View
3	Clatskanie People's Utility District	Brian Fawcett	Abstain	
3	Cleco Corporation	Michelle A Corley	Affirmative	
3	Colorado Springs Utilities	Lisa Cleary	Affirmative	
3	ComEd	Bruce Krawczyk	Affirmative	
3	Consolidated Edison Co. of New York	Peter T Yost	Negative	View
3	Consumers Energy	David A. Lapinski	Negative	View
3	Cowlitz County PUD	Russell A Noble	Abstain	
3	Delmarva Power & Light Co.	Michael R. Mayer	Affirmative	
3	Detroit Edison Company	Kent Kujala	Affirmative	
3	Dominion Resources Services	Michael F. Gildea	Affirmative	
3	Duke Energy Carolina	Henry Ernst-Jr	Affirmative	
3	East Kentucky Power Coop.	Sally Witt	Negative	View
3	Entergy	Joel T Plessinger	Affirmative	

3	FirstEnergy Solutions	Kevin Querry	Affirmative	
3	Florida Power and Light / NextEra Energy	Chantel Haswell	Abstain	
3	Florida Power Corporation	Lee Schuster	Affirmative	View
3	Gainesville Regional Utilities	Kenneth Simmons	Affirmative	
3	Georgia Power Company	Anthony L Wilson	Affirmative	
3	Georgia Systems Operations Corporation	William N Phinney	Abstain	
3	Grays Harbor PUD	Wesley W Gray	Affirmative	
3	Great River Energy	Sam Kokkinen	Negative	
3	Gulf Power Company	Paul C Caldwell	Affirmative	
3	Hydro One Networks, Inc.	David Kiguel	Negative	View
3	Imperial Irrigation District	Jesus S. Alcaraz	Affirmative	View
3	JEA	Garry Baker	Affirmative	
3	Kansas City Power & Light Co.	Charles Locke		
3	Kissimmee Utility Authority	Gregory D Woessner	Negative	
3	Lakeland Electric	Mace Hunter	Affirmative	
3	Lincoln Electric System	Bruce Merrill	Affirmative	
3	Louisville Gas and Electric Co.	Charles A. Freibert	Affirmative	
3	Manitoba Hydro	Greg C. Parent	Negative	View
3	MidAmerican Energy Co.	Thomas C. Mielnik	Affirmative	View
3	Mississippi Power	Don Horsley	Affirmative	
3	Municipal Electric Authority of Georgia	Steven M. Jackson	Affirmative	
3	Muscatine Power & Water	John S Bos	Affirmative	
3	Nebraska Public Power District	Tony Eddleman	Negative	View
3	New York Power Authority	Marilyn Brown	Affirmative	
3	Niagara Mohawk (National Grid Company)	Michael Schiavone	Affirmative	
3	Northern Indiana Public Service Co.	William SeDoris	Affirmative	
3	Omaha Public Power District	Blaine R. Dinwiddie	Affirmative	
3	Orlando Utilities Commission	Ballard K Mutters	Affirmative	
3	Owensboro Municipal Utilities	Thomas T Lyons	Affirmative	
3	Pacific Gas and Electric Company	John H Hagen	Affirmative	View
3	PacifiCorp	John Apperson	Affirmative	
3	Platte River Power Authority	Terry L Baker	Negative	View
3	Potomac Electric Power Co.	Robert Reuter	Affirmative	
3	Progress Energy Carolinas	Sam Waters	Affirmative	View
3	Public Service Electric and Gas Co.	Jeffrey Mueller	Affirmative	
3	Public Utility District No. 1 of Chelan County	Kenneth R. Johnson	Affirmative	
3	Public Utility District No. 2 of Grant County	Greg Lange	Affirmative	
3	Sacramento Municipal Utility District	James Leigh-Kendall	Affirmative	View
3	Salt River Project	John T. Underhill	Affirmative	View
3	Santee Cooper	James M Poston	Affirmative	
3	Seattle City Light	Dana Wheelock	Affirmative	
3	Seminole Electric Cooperative, Inc.	James R Frauen	Affirmative	
3	South Carolina Electric & Gas Co.	Hubert C Young	Affirmative	
3	Southern California Edison Co.	David Schiada	Affirmative	
3	Tacoma Public Utilities	Travis Metcalfe	Affirmative	
3	Tampa Electric Co.	Ronald L Donahey	Affirmative	
3	Tennessee Valley Authority	Ian S Grant	Negative	View
3	Tri-State G & T Association, Inc.	Janelle Marriott	Negative	View
3	Xcel Energy, Inc.	Michael Ibold	Negative	
4	American Municipal Power	Kevin Koloini	Abstain	
4	Blue Ridge Power Agency	Duane S Dahlquist		
4	Central Lincoln PUD	Shamus J Gamache		
4	City of New Smyrna Beach Utilities Commission	Tim Beyrle	Affirmative	
4	City of Redding	Nicholas Zettel	Affirmative	View
4	City Utilities of Springfield, Missouri	John Allen	Affirmative	
4	Consumers Energy	David Frank Ronk	Negative	View
4	Cowlitz County PUD	Rick Syring	Abstain	
4	Detroit Edison Company	Daniel Herring	Affirmative	
4	Florida Municipal Power Agency	Frank Gaffney	Affirmative	
4	Fort Pierce Utilities Authority	Thomas Richards	Affirmative	
4	Georgia System Operations Corporation	Guy Andrews	Abstain	
4	Imperial Irrigation District	Diana U Torres	Affirmative	
4	Integrys Energy Group, Inc.	Christopher Plante	Abstain	
4	LaGen	Richard Comeaux	Abstain	
4	Madison Gas and Electric Co.	Joseph DePoorter	Affirmative	
4	Modesto Irrigation District	Spencer Tacke	Negative	View

4	Ohio Edison Company	Douglas Hohlbaugh	Affirmative	
4	Old Dominion Electric Coop.	Mark Ringhausen	Affirmative	
4	Public Utility District No. 1 of Douglas County	Henry E. LuBean		
4	Public Utility District No. 1 of Snohomish County	John D. Martinsen	Affirmative	View
4	Sacramento Municipal Utility District	Mike Ramirez	Affirmative	View
4	Seattle City Light	Hao Li	Affirmative	
4	Seminole Electric Cooperative, Inc.	Steven R Wallace	Affirmative	
4	South Mississippi Electric Power Association	Steven McElhaney	Affirmative	
4	Tacoma Public Utilities	Keith Morisette	Affirmative	
4	Wisconsin Energy Corp.	Anthony Jankowski	Abstain	
5	AEP Service Corp.	Brock Ondayko	Affirmative	View
5	Amerenue	Sam Dwyer	Negative	
5	Arizona Public Service Co.	Edward Cambridge	Negative	View
5	Avista Corp.	Edward F. Groce	Affirmative	
5	BC Hydro and Power Authority	Clement Ma	Negative	View
5	Black Hills Corp	George Tatar	Affirmative	
5	Boise-Kuna Irrigation District/dba Lucky peak power plant project	Mike D Kukla	Affirmative	
5	Bonneville Power Administration	Francis J. Halpin	Affirmative	View
5	BrightSource Energy, Inc.	Chifong Thomas	Affirmative	
5	City and County of San Francisco	Daniel Mason	Abstain	
5	City of Austin dba Austin Energy	Jeanie Doty	Affirmative	View
5	City of Redding	Paul Cummings	Affirmative	View
5	City of Tacoma, Department of Public Utilities, Light Division, dba Tacoma Power	Max Emrick	Affirmative	
5	Colorado Springs Utilities	Jennifer Eckels	Affirmative	
5	Consolidated Edison Co. of New York	Wilket (Jack) Ng	Negative	View
5	Consumers Energy	James B Lewis	Negative	View
5	Cowlitz County PUD	Bob Essex	Abstain	
5	Detroit Edison Company	Christy Wicke	Affirmative	
5	Dominion Resources, Inc.	Mike Garton	Affirmative	
5	Duke Energy	Dale Q Goodwine	Affirmative	
5	East Kentucky Power Coop.	Stephen Ricker	Negative	View
5	Exelon Nuclear	Michael Korchynsky	Affirmative	
5	ExxonMobil Research and Engineering	Martin Kaufman		
5	FirstEnergy Solutions	Kenneth Dresner	Affirmative	
5	Florida Municipal Power Agency	David Schumann	Affirmative	
5	Great River Energy	Preston L Walsh	Negative	
5	I do not represent an Entity	Bruce Paggeot	Abstain	
5	Indeck Energy Services, Inc.	Rex A Roehl	Abstain	
5	JEA	John J Babik	Affirmative	
5	Kansas City Power & Light Co.	Scott Heidtbrink		
5	Kissimmee Utility Authority	Mike Blough	Affirmative	
5	Lakeland Electric	James M Howard	Affirmative	
5	Lincoln Electric System	Dennis Florom	Affirmative	
5	Los Angeles Department of Water & Power	Kenneth Silver	Affirmative	
5	Lower Colorado River Authority	Tom Foreman	Affirmative	View
5	Luminant Generation Company LLC	Mike Laney	Affirmative	
5	Manitoba Hydro	S N Fernando	Negative	View
5	MEAG Power	Steven Grego	Affirmative	
5	MidAmerican Energy Co.	Christopher Schneider	Affirmative	
5	Muscatine Power & Water	Mike Avesing	Affirmative	View
5	Nebraska Public Power District	Don Schmit	Negative	View
5	New York Power Authority	Gerald Mannarino	Affirmative	
5	Northern Indiana Public Service Co.	William O Thompson	Affirmative	
5	Occidental Chemical	Michelle R DAntuono	Abstain	
5	Omaha Public Power District	Mahmood Z. Safi	Affirmative	
5	Orlando Utilities Commission	Richard Kinas	Affirmative	
5	Pacific Gas and Electric Company	Richard J. Padilla		
5	PacifiCorp	Sandra L. Shaffer	Affirmative	
5	Platte River Power Authority	Pete Ungerman	Negative	View
5	Portland General Electric Co.	Gary L Tingley	Affirmative	
5	PPL Generation LLC	Annette M Bannon	Affirmative	
5	Progress Energy Carolinas	Wayne Lewis	Affirmative	View
5	Proven Compliance Solutions	Mitchell E Needham		
5	PSEG Fossil LLC	Mikhail Falkovich	Affirmative	
5	Puget Sound Energy, Inc.	Tom Flynn	Affirmative	

5	Reedy Creek Energy Services	Bernie Budnik	Abstain	
5	Sacramento Municipal Utility District	Bethany Hunter	Affirmative	View
5	Salt River Project	Glen Reeves	Affirmative	
5	Santee Cooper	Lewis P Pierce	Affirmative	
5	Seattle City Light	Michael J. Haynes	Affirmative	
5	Seminole Electric Cooperative, Inc.	Brenda K. Atkins	Affirmative	
5	Snohomish County PUD No. 1	Sam Nietfeld	Affirmative	View
5	Southern California Edison Co.	Denise Yaffe	Affirmative	
5	Southern Company Generation	William D Shultz	Affirmative	
5	Tampa Electric Co.	RJames Rocha	Affirmative	
5	Tenaska, Inc.	Scott M Helyer	Affirmative	
5	Tennessee Valley Authority	David Thompson	Negative	View
5	Tri-State G & T Association, Inc.	Barry Ingold	Negative	
5	U.S. Army Corps of Engineers	Melissa Kurtz	Affirmative	
5	U.S. Bureau of Reclamation	Martin Bauer		
5	Wisconsin Public Service Corp.	Leonard Rentmeester	Abstain	
5	Xcel Energy, Inc.	Liam Noailles	Negative	View
6	AEP Marketing	Edward P. Cox	Affirmative	
6	Arizona Public Service Co.	Justin Thompson	Affirmative	
6	Bonneville Power Administration	Brenda S. Anderson	Affirmative	View
6	City of Redding	Marvin Briggs	Affirmative	View
6	Cleco Power LLC	Robert Hirchak	Affirmative	
6	Colorado Springs Utilities	Lisa C Rosintoski	Affirmative	
6	Consolidated Edison Co. of New York	Nickesha P Carrol	Negative	View
6	Constellation Energy Commodities Group	Brenda Powell	Abstain	
6	Dominion Resources, Inc.	Louis S. Slade	Affirmative	
6	Duke Energy Carolina	Walter Yeager	Affirmative	
6	Entergy Services, Inc.	Terri F Benoit	Affirmative	View
6	Eugene Water & Electric Board	Daniel Mark Bedbury		
6	Exelon Power Team	Pulin Shah	Affirmative	
6	FirstEnergy Solutions	Mark S Travaglianti	Affirmative	
6	Florida Municipal Power Agency	Richard L. Montgomery	Affirmative	
6	Florida Municipal Power Pool	Thomas Washburn	Affirmative	
6	Florida Power & Light Co.	Silvia P. Mitchell	Abstain	
6	Imperial Irrigation District	Cathy Bretz	Affirmative	
6	Kansas City Power & Light Co.	Jessica L Klinghoffer		
6	Lakeland Electric	Paul Shipps	Affirmative	
6	Lincoln Electric System	Eric Ruskamp	Affirmative	
6	Los Angeles Department of Water & Power	Brad Packer	Affirmative	
6	Luminant Energy	Brad Jones	Negative	View
6	Manitoba Hydro	Daniel Prowse	Negative	View
6	MidAmerican Energy Co.	Dennis Kimm	Abstain	
6	New York Power Authority	William Palazzo	Affirmative	
6	Northern Indiana Public Service Co.	Joseph O'Brien	Affirmative	View
6	Omaha Public Power District	David Ried	Affirmative	
6	Orlando Utilities Commission	Claston Augustus Sunanon	Affirmative	
6	PacifiCorp	Scott L Smith	Affirmative	
6	Platte River Power Authority	Carol Ballantine	Affirmative	
6	Powerex Corp.	Daniel W. O'Hearn	Negative	View
6	PPL EnergyPlus LLC	Mark A Heimbach	Affirmative	
6	Progress Energy	John T Sturgeon	Affirmative	View
6	PSEG Energy Resources & Trade LLC	Peter Dolan	Affirmative	View
6	Sacramento Municipal Utility District	Claire Warshaw	Affirmative	View
6	Salt River Project	Steven J Hulet	Affirmative	View
6	Santee Cooper	Suzanne Ritter	Affirmative	
6	Seattle City Light	Dennis Sismaet	Affirmative	
6	Seminole Electric Cooperative, Inc.	Trudy S. Novak	Affirmative	
6	South California Edison Company	Lujuanna Medina	Affirmative	
6	Tacoma Public Utilities	Michael C Hill	Negative	
6	Tampa Electric Co.	Benjamin F Smith II	Affirmative	
6	Tennessee Valley Authority	Marjorie S. Parsons	Negative	View
6	Western Area Power Administration - UGP Marketing	Peter H Kinney	Negative	View
6	Xcel Energy, Inc.	David F. Lemmons	Negative	View
8		James A Maenner	Abstain	
8		Roger C Zaklukiewicz	Negative	View
8		Edward C Stein	Affirmative	

8	INTELLIBIND	Kevin Conway	Abstain	
8	JDRJC Associates	Jim Cyrulewski	Affirmative	
8	Transmission Strategies, LLC	Bernie M Pasternack	Affirmative	View
8	Utility Services, Inc.	Brian Evans-Mongeon	Abstain	
8	Volkmann Consulting, Inc.	Terry Volkmann	Negative	
9	California Energy Commission	William Mitchell Chamberlain	Affirmative	
9	Commonwealth of Massachusetts Department of Public Utilities	Donald E. Nelson	Affirmative	
9	National Association of Regulatory Utility Commissioners	Diane J Barney	Affirmative	
9	Utah Public Service Commission	Ric Campbell	Affirmative	
10	Florida Reliability Coordinating Council	Linda Campbell	Affirmative	
10	Midwest Reliability Organization	James D Burley	Affirmative	
10	New York State Reliability Council	Alan Adamson	Negative	View
10	Northeast Power Coordinating Council, Inc.	Guy V. Zito	Affirmative	View
10	ReliabilityFirst Corporation	Anthony E Jablonski	Affirmative	View
10	SERC Reliability Corporation	Carter B. Edge	Affirmative	
10	Southwest Power Pool Regional Entity	Stacy Dochoda	Affirmative	
10	Texas Reliability Entity, Inc.	Larry D Grimm	Affirmative	
10	Western Electricity Coordinating Council	Steven L. Rueckert	Affirmative	View

Legal and Privacy : 609.452.8060 voice : 609.452.9550 fax : 116-390 Village Boulevard : Princeton, NJ 08540-5721
Washington Office: 1120 G Street, N.W. : Suite 990 : Washington, DC 20005-3801

Account Log-In/Register

Copyright © 2010 by the North American Electric Reliability Corporation. : All rights reserved.
A New Jersey Nonprofit Corporation

NERC
NORTH AMERICAN ELECTRIC RELIABILITY CORPORATION

Standards Announcement

Project 2006-02 Assess Transmission and Future Needs Recirculation Ballot Results

Now available at: https://standards.nerc.net/Ballots.aspx

Ballot Results for Revisions to TPL-001-2

A recirculation ballot on revisions to TPL-001-2 — Transmission System Planning Performance Requirements concluded on Friday, July 22, 2011. The revised standard, TPL-001-2, was approved by the associated ballot pool.

Voting statistics are listed below, and the Ballot Results Web page provides a link to the detailed results:

Quorum: 94.33%
Approval: 75.37%

Next Steps

TPL-001-2 will be presented to the NERC Board of Trustees for adoption and filed with regulatory authorities.

Background

TPL-001-2 is designed to be a single, comprehensive, and coordinated standard that merges the requirements of four existing standards: TPL-001-1; TPL-002-1b; TPL-003-1a; TPL-004-1 and also results in the retirement of TPL-005 and TPL-006. The proposed standard includes several new definitions. The purpose of the proposed standard is to establish transmission system planning performance requirements within the planning horizon to develop a bulk electric system that will operate reliably over a broad spectrum of system conditions and following a wide range of probable contingencies.

Additional information about this project is available on the project page at http://www.nerc.com/filez/standards/Assess-Transmission-Future-Needs.html.

Standards Development Process

The Standard Processes Manual contains all the procedures governing the standards development process. The success of the NERC standards development process depends on stakeholder participation. We extend our thanks to all those who participate. For more information or assistance, please contact Monica Benson at monica.benson@nerc.net.

For more information or assistance, please contact Monica Benson, Standards Process Administrator, at monica.benson@nerc.net or at 404-446-2560.

North American Electric Reliability Corporation
116-390 Village Blvd.
Princeton, NJ 08540
609.452.8060 | www.nerc.com

Exhibit G

Standard Drafting Team Roster and Biographical Information

Drafting Team Roster
Project 2006-02 Assess Transmission and Future Needs

Name and Title	Company and Address	Contact Info	Bio
John Odom, Chair Vice President of Planning and Operations	Florida Reliability Coordinating Council, Inc. 1408 N. Westshore Blvd., Suite 1002 Tampa, FL 33607-4512	(813)207-7985 jodom@ frcc.com	John Odom is Vice President of Planning and Operations at the Florida Reliability Coordinating Council (FRCC). John joined FRCC in May 2005 after 26 years at Progress Energy Corporation (PEF). He is responsible for oversight of all Member Services Activities, including the FRCC standing committees, FRCC Reliability Coordinator, and Planning Authority function. Additionally, he oversees the Regional Entity functions of reliability assessment, situational awareness, training, certification of system operators, and event analysis. From 2001 – 2007, John was the FRCC Representative on the NERC Reliability Assessment Subcommittee (RAS). John is currently the chair of the Assess Future Transmission Needs Standards Drafting Team (AFTNSDT), which is re-writing the existing TPL-001 through TPL-006.
Douglas Hohlbaugh, Vice Chair Standards Development Manager	FirstEnergy Corp. 76 South Main Street 10th Floor Akron, Ohio 44308	(330) 384-4698 hohlbaughdg@ firstenergycorp. com	Doug Hohlbaugh holds a Bachelor of Science in Electrical Engineering from Akron University (1989) and a Professional Engineering license in the state of Ohio. His 20 plus years experience in the electric utility industry has involved the transmission business of FirstEnergy with a focus on transmission planning. His work experience includes various technical positions in transmission and distribution, as well as sales and marketing experience with FirstEnergy's (FE)unregulated energy services. His existing responsibilities include the Reliability Standards Development Lead of the FirstEnergy FERC Compliance Department including oversight of newly proposed and/or revised Reliability Standards governing the bulk electric transmission system. The responsibilities include overseeing and ensuring timely implementation of all new Reliability Standard development projects at both the North American Electric Reliability Corporation (NERC) and Reliability First Corporation (RFC) having impact on a variety of FE business units which support the reliable operation of the bulk transmission system.
D. Darrin Church Principal Engineer Bulk Transmission Planning	Tennessee Valley Authority 1101 Market Street MR 5G-C Chattanooga, Tennessee 37402-2801	423) 751-6899 (423) 751-3453 Fx ddchurch@tva. gov	Darrin Church is a Principal Bulk Planning Engineer in TVA's Transmission Planning Department. Darrin has 15 years experience in Bulk Transmission Planning along with 5 years previous experience in planning relaying and protection schemes. Responsibilities include ensuring reliability of TVA's 500 kV, 230 kV, 161 kV, and 115 kV transmission systems which include initiating capital projects required to maintain an adequate and reliable transmission system per NERC Reliability Standards.

Drafting Team Roster
Project 2006-02 Assess Transmission and Future Needs

William Harm Senior Consultant	PJM Interconnection, L.L.C. 955 Jefferson Ave Valley Forge Corporate Center Norristown, Pennsylvania 19403-2497	(610) 666-8868 harm@pjm.com	Bill Harm has over 35 years of industry experience with PJM through various assignments involving real time operation, operations planning, and transmission planning. Mr. Harm's current responsibilities involve performance assessment and policy development responsibilities. He either has or continues to represent PJM in various industry forums and groups, including RFC, NERC, and the ISO/RTO forums. He earned a Bachelor and Masters of Science Degree in Electrical Engineering from Drexel University and is a registered professional Engineer in the Commonwealth of PA.
Julius Horvath Director System Planning	Lone Star Transmission, LLC	(512)236-3135 julius.horvath@ lonestar-transmission.com	Julius Horvath is currently the Director of System Planning at Lone Star Transmission, LLC, in Austin, Texas. Julius has over ten years of utility experience at the Bonneville Power Administration, Wind Energy Transmission Texas, LLC and the Lower Colorado River Authority in Transmission Planning prior to Lone Star. Julius is a Registered Professional Engineer in the State of Texas.
Robert A. Jones Project Manager, Stability Studies	Southern Company Services P.O. Box 2641 Birmingham, Alabama 35291	(205) 257-6148 rajones@ southernco.com	Robert Jones obtained a BSEE degree from the University of Alabama in 1973 and a MSEE degree from University of Alabama – Birmingham in 1978. He has worked for 37 years for Southern Company Services. Eighteen of those years have been in Transmission Planning. The last 15 years, he has been responsible for stability studies for Southern Company.
Brian K. Keel Manager, Transmission System Planning	Salt River Project MS POB100 PO Box 52025 Phoenix, Arizona 85072	602-236-0970 brian.keel@ srpnet.com	Brian Keel has a Bachelor and Master Degrees in Electrical Engineering, specializing in power systems, from the University of Illinois. Brian was employed by Duke Power for over one year and PSI Energy for 8 years. Brian has been at SRP since 1998 and is currently the Manager of Transmission System Planning. Brian has Chaired four groups within WECC mainly concentrating on transmission reliability. Brian is a current member of the NERC TADS Work Group.
R. W. Mazur Manager System Planning Department	Manitoba Hydro 12-1146 Waverly Street P.O. Box 815 Winnipeg, Manitoba R3C 2P4	(204) 474-3113 rwmazur@ hydro.mb.ca	Ronald W. Mazur obtained his Bachelor of Science in Electrical Engineering degree in 1971, and his Masters of Science in Electrical Engineering degree in 1989, both from the University of Manitoba. Ron Mazur is a registered professional engineer with the Association of Professional Engineers and Geoscientists of Manitoba. Ron joined Manitoba Hydro in 1974, where he worked in station design for 5 years, and in system performance (operations) for 6 years, and in system planning since 1986. He is currently the Manager of the System Planning Department responsible for the expansion planning of Manitoba Hydro's transmission system (100 kV and above) and the HVDC system. Ron is a Canadian representative on the NERC Planning Committee, and Chair of the Planning Committee of the Midwest Reliability Organization.

Drafting Team Roster
Project 2006-02 Assess Transmission and Future Needs

Thomas C. Mielnik Manager Electric System Planning	MidAmerican Energy Co. 106 East Second Street Davenport, Iowa 52808	(563) 333-8129 tcmielnik@ midamerican.com	Thomas Mielnik has over 37 years experience in Electric Utility Planning. He has been the Manager of Electric System Planning for MEC from 1995 to the present. He was a member of the NERC ATC Working Group from 1996 to 1999 and is a Registered Professional Engineer.
Bernie M Pasternack, President, P.E.	Transmission Strategies 4347 Harborough Rd Upper Arlington, Ohio 43220	(614) 459-5806 bmpasternack@ att.net	Bernie Pasternack was employed by the AEP Service Corporation for over 41 years, where he spent his entire career in various aspects of transmission planning and asset management. After retiring from AEP in June 2010, he formed his own consulting practice, providing services to the electric utility industry. He holds BEE and MSEE degrees from Rensselaer Polytechnic Institute and an MBA from Fairleigh Dickinson University. Before retiring from AEP, Bernie was responsible for the planning and management of AEP's transmission assets. Bernie was also responsible for providing input to policy making decisions relative to AEP's transmission strategy and business plan. During his career, Bernie has made significant contributions to a variety of industry organizations including IEEE, CIGRE, EPRI, EEI, ECAR/RFC, and NERC. He was a member of the EEI Transmission Policy TF and AEP's representative on the Reliability First Corporation Reliability Committee. Bernie has also played an active role in many NERC activities over the past twenty years, including its Planning Committee and a number of its subcommittees, working groups, and standards drafting teams.
Bob Pierce Senior Engineer	Duke Energy 526 South Church Street MC EC10Q Charlotte, North Carolina 28201-1006	(980) 373-6480 bob.pierce@ duke- energy.com	Robert (Bob) Pierce is a Consulting Engineer at Duke Energy where he specializes in Bulk System Planning, NERC standards, and FERC regulations. He holds a B.S. in Nuclear Engineering from Pennsylvania State University and a M.S. in Electrical Engineering from the University of North Carolina-Charlotte. Mr. Pierce is a registered Professional Engineer with 13 years Transmission Planning experience and a total of 31 years of power system experience.

Drafting Team Roster
Project 2006-02 Assess Transmission and Future Needs

Chifong L. Thomas Principal Transmission Planning Engineer	Pacific Gas and Electric Company (now at Bright Source Energy)		Chifong Thomas is currently the Senior Director, Energy Markets and Strategy at Bright Source Energy, Inc. However, during the drafting of this standard, she was a Principal Transmission Planning Engineer at Pacific Gas and Electric Company (PG&E). She has more than 39 years of electric utility experience, more than 37 of which is in electric transmission planning. She has both conducted and supervised transmission planning studies to develop plans for the PG&E transmission system from 60 kV to 500 kV. She has participated in developing methodologies, policies and strategic plans, and in contract negotiations. Ms Thomas has also served as an expert witness in various regulatory and judicial forums. She has served on various technical organizations and work groups, including WECC, NERC Standards Drafting Teams, and Industry Advisory Committees of the California Energy Commission and of EPRI. She has also served on the Technical Advisory Committee (Electrical Engineering) to the California Board of Registration for Professional Engineers and Land Surveyors. Ms. Thomas holds a Bachelor of Science Degree in Electrical Engineering from Washington State University and is a registered Electrical Engineer in the State of California. She is also a senior member of the IEEE.
Dana Walters Manager Transmission Planning, Process, & Policy	National Grid 40 Sylvan Road Waltham, Massachusetts 01581	781-907-2501 dana.walters@ us.ngrid.com	Dana Walters is a Manager in the Transmission Planning group at National Grid. Mr. Walters has 34 year of experience in the Electric Utility industry. Most of his experience involves various aspects of Transmission Planning. This includes topics such as analytical studies of thermal, stability, short circuit, generator interconnections, and lightning protection. Other areas of experience include involvement in Investment Planning, tariff design, Consulting, Production Cost analysis, and Distribution Planning. In his role as a Transmission Planner, Mr. Walters has been involved in numerous committees and working groups at the NERC, NPCC, and ISO levels. Mr. Walters has a Masters in Engineering Management from Northeastern University and a Bachelor in Electrical Engineering with a focus in Power Systems also from Northeastern University. Mr. Walters is a registered professional engineer in New Hampshire and is a member of IEEE.